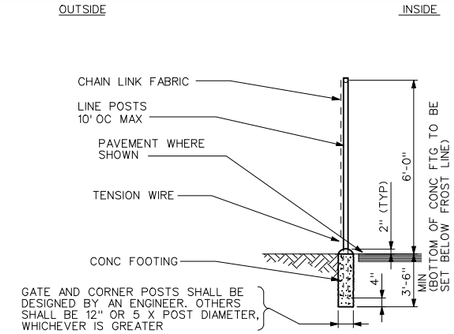

NOTES:

1. SEE SPECIFICATIONS FOR FENCE MATERIAL, COATINGS, AND INSTALLATION REQUIREMENTS
2. EXTENSION ARM MAY BE TURNED IN AT OPTION OF OWNER.

CHAIN LINK FENCE

REV 040302 C-101

NOTES:

1. SEE SPECIFICATIONS FOR FENCE MATERIAL, COATINGS, AND INSTALLATION REQUIREMENTS.
2. 3" MINIMUM CLEAR IN SNOW REGIONS. /2
3. 12" DIAMETER X 18" DEEP CONCRETE STOP W/ 6-#4 BARS, 20 GA STEEL PLUNGER SLEEVE DIA = ROD OD + ½".

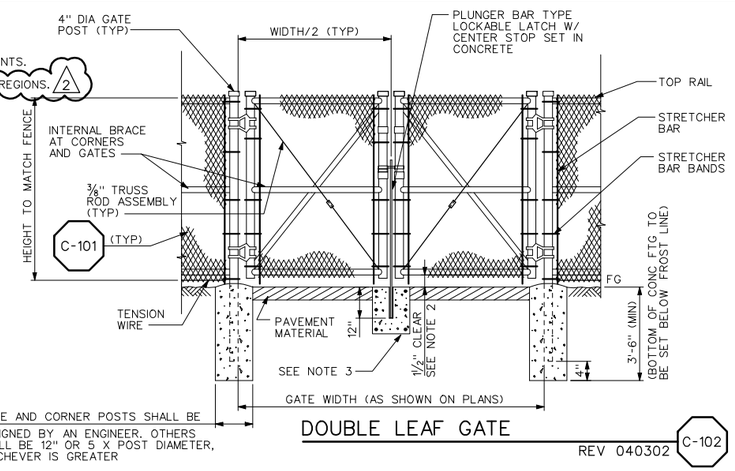

DOUBLE LEAF GATE

REV 040302 C-102

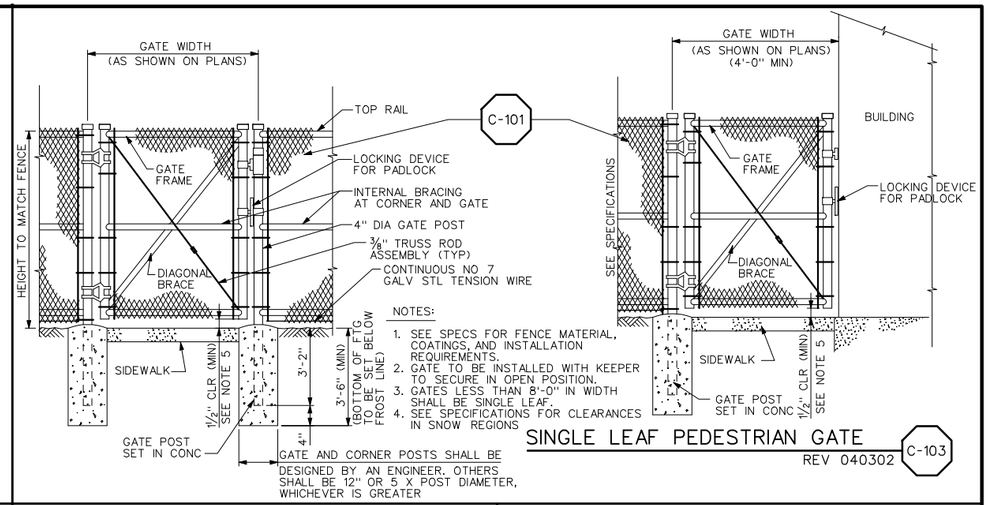

NOTES:

1. SEE SPECS FOR FENCE MATERIAL, COATINGS, AND INSTALLATION REQUIREMENTS.
2. GATE TO BE INSTALLED WITH KEEPER TO SECURE IN OPEN POSITION.
3. GATES LESS THAN 8'-0" IN WIDTH SHALL BE SINGLE LEAF.
4. SEE SPECIFICATIONS FOR CLEARANCES IN SNOW REGIONS

SINGLE LEAF PEDESTRIAN GATE

REV 040302 C-103

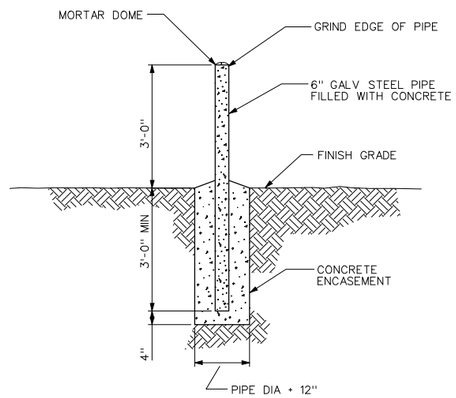

GUARD POST

REV 040302 C-114

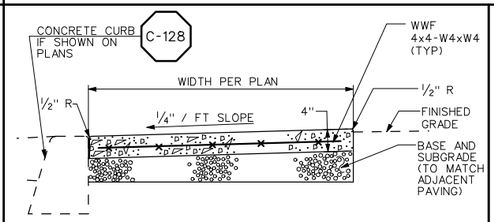

NOTES:

1. EXPANSION JOINTS OF ½" PREMOLDED JOINT FILLER SHALL BE PLACED AT 24'-0" MAXIMUM SPACING, AND WHEN ABUTTING EXISTING CONCRETE OR FIXED STRUCTURE.
2. SCORE LINES AT RIGHT ANGLES TO CENTERLINE SHALL BE MARKED AT 60" INTERVALS. ON WALKS EXCEEDING SIX FEET IN WIDTH, A CONTINUOUS SCORE LINE SHALL BE MARKED ON THE CENTERLINE.
3. SEE ARCHITECTURAL DRAWINGS FOR ADDITIONAL FINISH REQUIREMENTS.
4. WITH THE APPROVAL OF THE ENGINEER, FIBER REINFORCED CONCRETE MAY BE USED, AND THE REINFORCING SHOWN ABOVE MAY BE OMITTED. WHERE DRIVES CROSS SIDEWALKS, THE REINFORCING SHALL REMAIN.

CONCRETE SIDEWALK

REV 040302 C-120

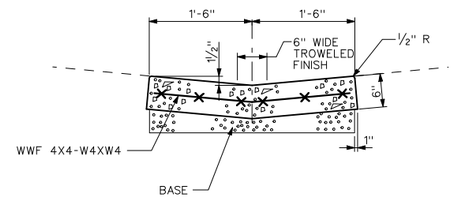

NOTES:

1. EXPANSION JOINTS OF ½" PREMOLDED JOINT FILLER SHALL BE PLACED 50 FOOT SPACING AND WHERE GUTTER BUTTS OTHER CONCRETE STRUCTURES
2. BASE AND SUBGRADE PREPARATION SHALL MATCH ADJACENT PAVING

CONCRETE CROSS GUTTER

REV 010300 C-127

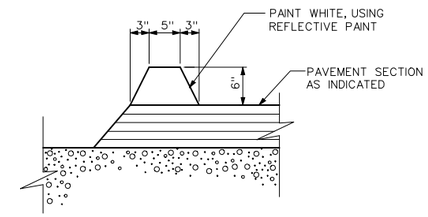

AC CURB

REV 010300 C-126

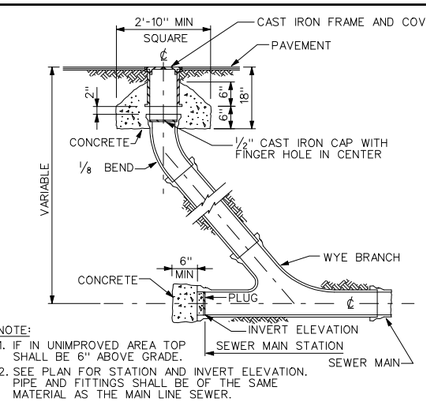

NOTE:

1. IF IN UNIMPROVED AREA TOP SHALL BE 6" ABOVE GRADE.
2. SEE PLAN FOR STATION AND INVERT ELEVATION. PIPE AND FITTINGS SHALL BE OF THE SAME MATERIAL AS THE MAIN LINE SEWER.

CLEANOUT TO GRADE (COTG)

REV 010500 C-302

REGISTERED PROFESSIONAL ENGINEER #5149 STANLEY S. POSTMA STATE OF UTAH

REV	DATE	BY	DESCRIPTION
R	3/07	MRW	RECORD DRAWING

SCALE: NONE

WARNING: 0 ½ 1 — IF THIS BAR DOES NOT MEASURE 1" THEN DRAWING IS NOT TO SCALE

DESIGNED MWH STD
DRAWN MWH STD
CHECKED S. POSTMA

RECORD DRAWING

This record drawing has been prepared, entirely or in part on the basis of unverified information compiled and furnished by others to the preparer who is not responsible for any inaccuracies, errors or omissions which may have been incorporated into the document as a result

MWH

UTAH DIVISION OF WILDLIFE RESOURCES
WHITEROCKS STATE FISH HATCHERY

STANDARD CIVIL DETAILS - 1

SHEET GC-1

1690703

File: wrfhgc01-RD.dgn Model: Default ColorTable: bw.ctb DesignScript: LightScreen.pen PlotScale: 1.999996:1 User: KalCrick Plot Date: 18-DEC-2007 09:36

A. FLEXIBLE PIPE REFERS TO ALL STEEL, DUCTILE-IRON AND PLASTIC PIPES.

B. TYPICAL TRENCH SECTIONS (I, II AND III) ARE TO BE USED ONLY WHERE STABLE, COMPACT SOIL CONDITIONS EXIST. IF BOULDER OR LARGE OBSTRUCTIONS WOULD BE ENCOUNTERED, TRENCH SECTIONS MAY BE DEEPER OR WIDER THAN SHOWN. THE ENGINEER SHOULD BE ADVISED SHOULD THIS OCCUR.

C. THE NEED FOR PROTECTIVE SYSTEMS, AND EXCAVATION SLOPES SHALL BE DETERMINED CONSIDERING APPLICABLE LOCAL, STATE AND FEDERAL (OSHA) SAFETY STANDARDS AND REGULATIONS AND GEOTECHNICAL CONSULTANTS' RECOMMENDATIONS.

D. PROTECTIVE SYSTEMS SHALL BE DESIGNED AND BUILT IN ACCORDANCE WITH THE APPLICABLE LOCAL, STATE AND FEDERAL (OSHA) SAFETY STANDARDS AND REGULATIONS.

E. SUPPORTING DOCUMENTATION SHALL BE SUBMITTED TO THE ENGINEER REGARDING PIPE DESIGN AND COMPLIANCE WITH APPLICABLE LOCAL, STATE AND FEDERAL (OSHA) SAFETY STANDARDS.

F. UNSUPPORTED VERTICAL AND/OR SLOPING TRENCH WALL SLOPES SHALL NOT BE STEEPER THAN ALLOWED BY APPLICABLE LOCAL, STATE AND FEDERAL (OSHA) SAFETY STANDARDS AND REGULATIONS, UNLESS SUPPORTING DOCUMENTATION IS SUBMITTED, ACCORDING TO AFOREMENTIONED SAFETY STANDARDS.

G. TRENCH SECTIONS OTHER THAN THE TYPICAL SECTIONS SHOWN MAY BE UTILIZED PROVIDED THEY COMPLY WITH APPLICABLE LOCAL, STATE AND FEDERAL (OSHA) SAFETY STANDARDS AND REGULATIONS. DOCUMENTATION SUPPORTING THIS COMPLIANCE AND PIPE DESIGN CALCULATIONS SHALL BE SUBMITTED TO THE ENGINEER.

H. IF OVER-EXCAVATION DUE TO POOR FOUNDATION MATERIAL IS ORDERED BY THE ENGINEER, THE BACKFILL MATERIAL SHALL BE ACCORDING TO THE EARTHWORK SECTION OF THE SPECIFICATIONS ARTICLE ENTITLED, "USE OF FILL, BACKFILL AND EMBANKMENT MATERIAL TYPES."

I. IF DURING CONSTRUCTION, THE WATER TABLE WILL BE DISCOVERED TO BE ABOVE THE TRENCH BOTTOM, THE ENGINEER SHALL BE NOTIFIED, AND APPROPRIATE DEWATERING SHALL BE IMPLEMENTED TO LOWER THE WATER LEVEL BELOW THE TRENCH BOTTOM. THE BACKFILL MATERIAL SHALL BE ACCORDING TO THE EARTHWORK SECTIONS OF THE SPECIFICATIONS, OR AS ORDERED BY THE ENGINEER.

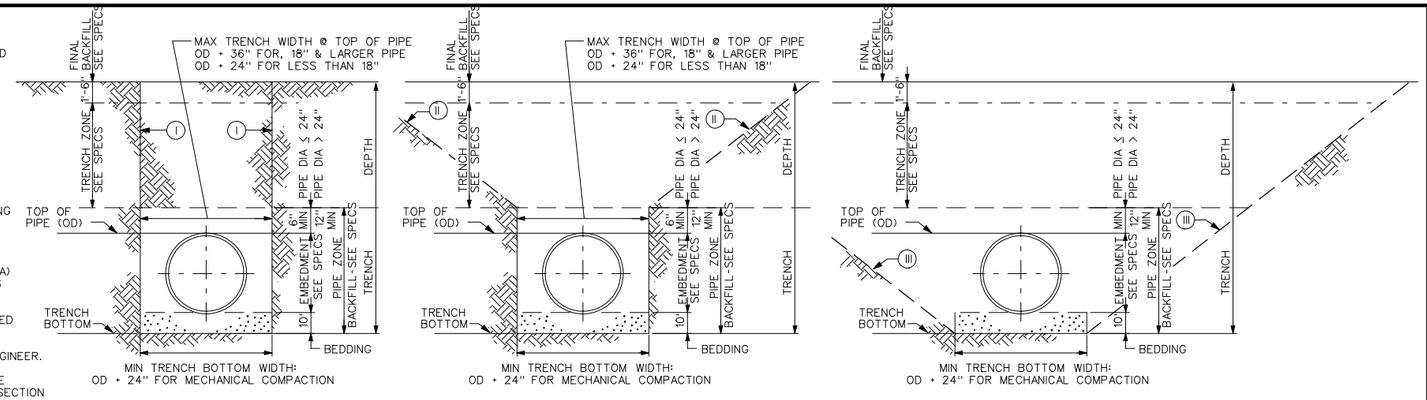

TRENCH SECTION - TYPE I

TRENCH SECTION - TYPE II

TRENCH SECTION - TYPE III

TRENCH SECTION
FLEXIBLE PIPE
REV 010301
C-601

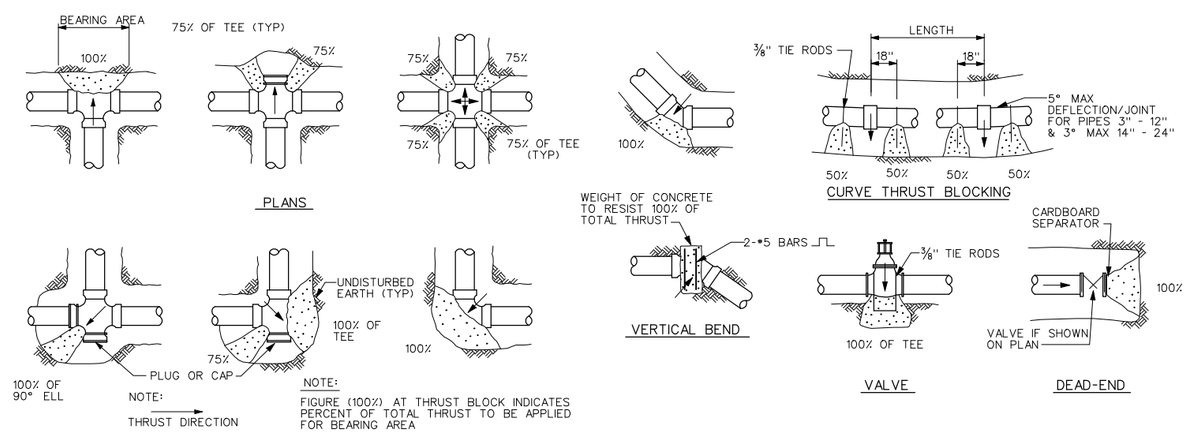

NOTE:
FIGURE (100%) AT THRUST BLOCK INDICATES PERCENT OF TOTAL THRUST TO BE APPLIED FOR BEARING AREA

THRUST PER PSI OF WATER PRESSURE AT VARIOUS FITTINGS				
PIPE SIZE	DEAD END OR TEE	90° ELBOW	45° ELBOW	22½° ELBOW
4	19	27	15	7
6	39	55	30	15
8	67	94	51	26
10	109	154	84	43
12	155	218	119	61
14	210	296	161	82
16	275	383	209	106
18	351	494	269	137
20	434	611	333	169
24	623	878	478	244

SIDE THRUST PER M 100 PSI PRESSURE PER DEGREE OF DEFLECTION			
PIPE SIZE	SIDE THRUST-lb	PIPE SIZE	SIDE THRUST-lb
4	35	14	377
6	72	16	486
8	122	18	665
10	197	20	790
12	278	24	1150

MULTIPLY THRUST BY DEGREE OF DEFLECTION TO OBTAIN TOTAL THRUST

EXAMPLE:
8-INCH 90° ELBOW, PRESSURE=200 PSF
FROM TABLE: THRUST = 94 X 200 = 18,800 lb
ASSUME BEARING STRENGTH OF SOIL = 2000 PSF

$\frac{18,800}{2000}$ =9.4 SQ FT= BEARING AREA REQUIRED FOR THRUST BLOCK

NOTES:

1. IN USING THE ABOVE TABLES, USE THE MAXIMUM INTERNAL PRESSURE ANTICIPATED (i.e. HYDROSTATIC TEST PRESSURE) POSSIBLE SURGE PRESSURE DUE TO PUMP SHUT-OFF, ETC.
2. SEE SOILS REPORT FOR BEARING STRENGTH OF SOIL IN THE ABSENCE OF A SOILS REPORT AN AVERAGE SOIL (SPADABLE MEDIUM CLAY) CAN BE ASSUMED TO HAVE A BEARING STRENGTH OF 2000 PSF
3. WITH SOLVENT WELDED JOINTS
4. USE LIGHTWEIGHT CONCRETE FOR HILL THRUST BLOCK.
5. CONCRETE FOR THRUST BLOCKS TO BE 2000 PSI.

CONCRETE THRUST BLOCKS
REV 051200
C-605

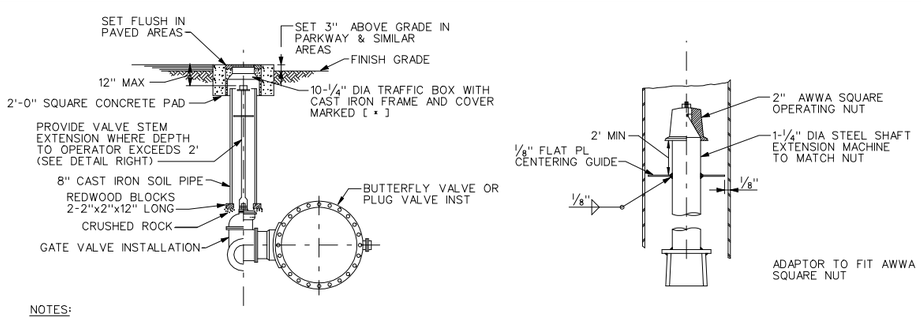

NOTES:
PROVIDE PROTECTIVE COATING TO EXTERIOR SURFACE OF VALVE BODY IN ACCORDANCE WITH SPECS.
FOR LUBRICATED PLUG VALVE, EXTEND LUBRICATION LINE TO GRADE PER MANUFACTURES' INSTRUCTIONS.

BURIED VALVE INSTALLATION
REV 011200
C-640

REGISTERED PROFESSIONAL ENGINEER #5149 STANLEY S. POSTMA STATE OF UTAH

REV	DATE	BY	DESCRIPTION
R	3/07	MRW	RECORD DRAWING

SCALE: NONE

WARNING: 0 ½ 1 — IF THIS BAR DOES NOT MEASURE 1" THEN DRAWING IS NOT TO SCALE

DESIGNED MWH STD
DRAWN MWH STD
CHECKED S. POSTMA

RECORD DRAWING
This record drawing has been prepared, entirely or in part on the basis of unverified information compiled and furnished by others to the preparer who is not responsible for any inaccuracies, errors or omissions which may have been incorporated into the document as a result

MWH

UTAH DIVISION OF WILDLIFE RESOURCES
WHITEROCKS STATE FISH HATCHERY

STANDARD CIVIL DETAILS - 2

SHEET GC-2
1690703

Plot Date: 18-DEC-2007 09:36
User: KaiCrick
PlotScale: 1.999996:1
DesignScript: LightScreen.pen
ColorTable: bw.ctb
Model: Default
File: wrfhgc02-RD.dgn

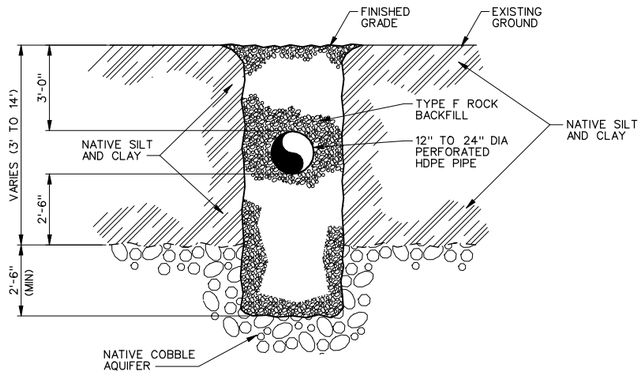

INFILTRATION GALLERY 1 / C-12

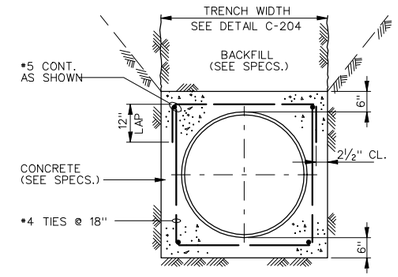

CONCRETE ENCASEMENT DETAIL 2 / VAR

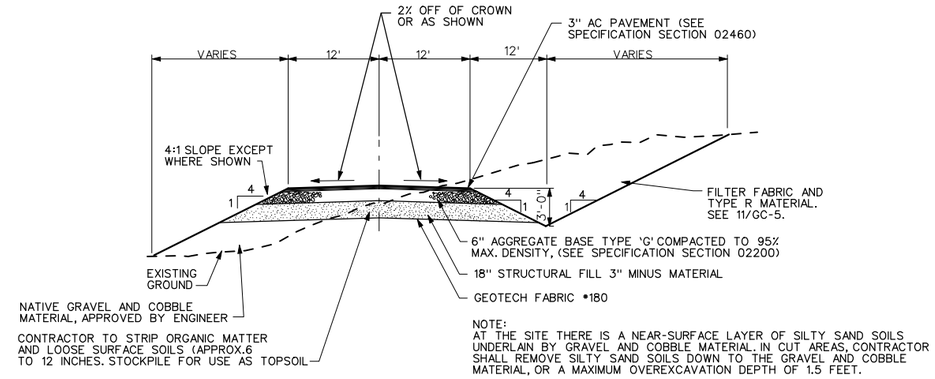

TYPICAL ROAD SECTION 3 / VAR

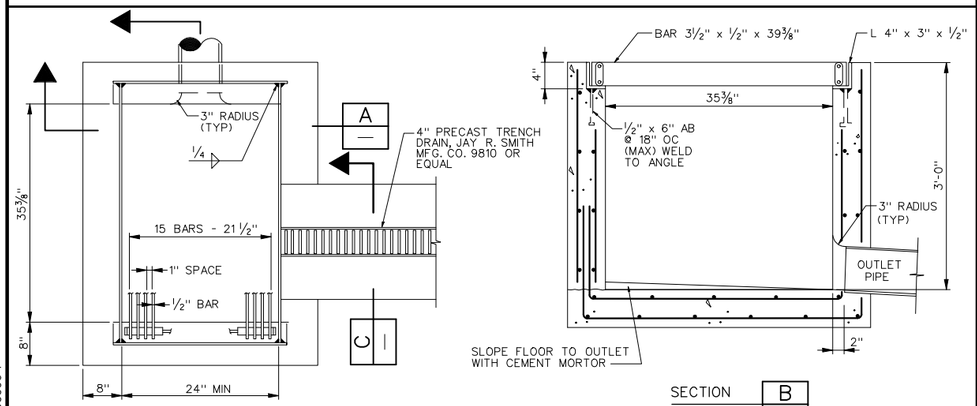

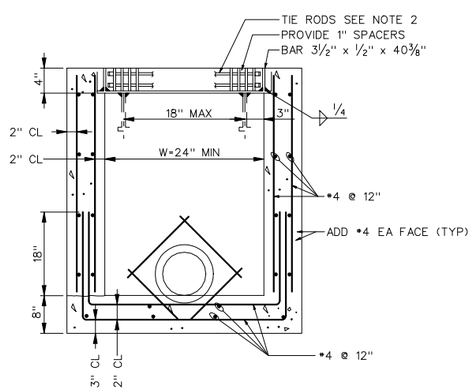

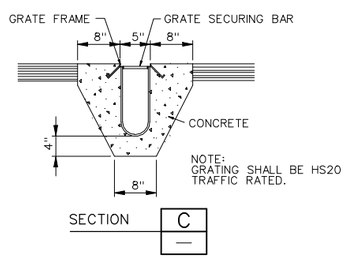

NOTES:

1. GRATING AND FRAME SHALL BE GALVANIZED AFTER FABRICATION. ALL DIMENSIONS ARE FINISH DIMENSIONS AND INCLUDE GALVANIZING.
2. TIE RODS FOR GRATING SHALL BE ½" DIA. x 23½" BOLT THREADED 1¼" ON BOTH ENDS. USE TWO ½" DIA. NUTS EACH END. ALL GALVANIZED.
3. FOR LOCATION OF OUTLET PIPE AND INLET PIPE IF REQUIRED SEE PLANS.
4. IF INSTALLED IN A TRAFFIC AREA, GRATING BARS SHALL BE ORIENTED PERPENDICULAR TO FLOW OF TRAFFIC.
5. IF CATCH BASIN IS 5 FEET OR DEEPER PROVIDE INDIVIDUAL RUNG LADDER OR FIXED LADDER CONFORMING TO OSHA REQUIREMENTS.

CATCH BASIN 4 / VAR

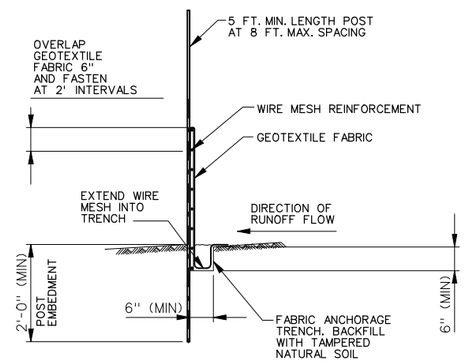

SILT FENCE DETAIL 5 / VAR

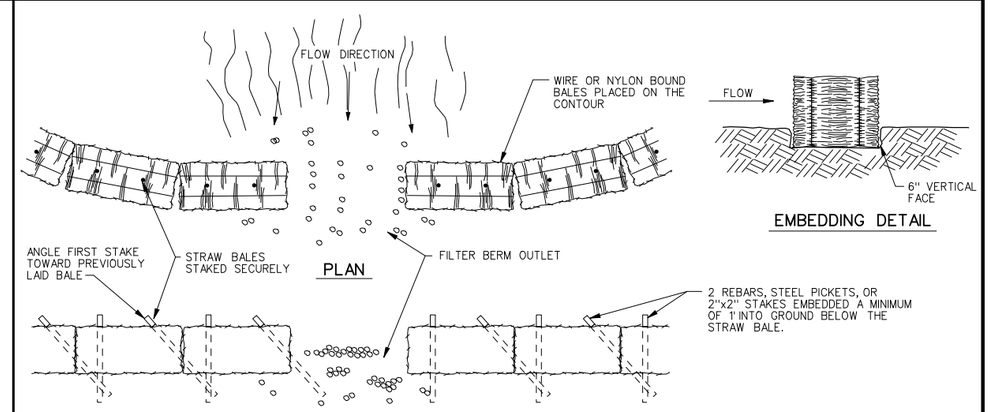

STRAW BALE BARRIER 6 / L-1

#5149 STANLEY S. POSTMA
REGISTERED PROFESSIONAL ENGINEER
STATE OF UTAH

REV	DATE	BY	DESCRIPTION
R	3/07	MRW	RECORD DRAWING

SCALE: NONE

WARNING: 0 ½ 1 — IF THIS BAR DOES NOT MEASURE 1" THEN DRAWING IS NOT TO SCALE

DESIGNED D. BARBEAU
DRAWN R. WALN
CHECKED S. POSTMA

RECORD DRAWING

This record drawing has been prepared, entirely or in part on the basis of unverified information compiled and furnished by others to the preparer who is not responsible for any inaccuracies, errors or omissions which may have been incorporated into the document as a result

MWH

UTAH DIVISION OF WILDLIFE RESOURCES
WHITEROCKS STATE FISH HATCHERY

MISCELLANEOUS CIVIL DETAILS - 1

SHEET GC-3
1690703

File: wrthgc03-RD.dgn Model: Default ColorTable: bw.ctb DesignScript: LightScreen.pen PlotScale: 1.999996:1 User: KaiCrick Plot Date: 18-DEC-2007 09:36

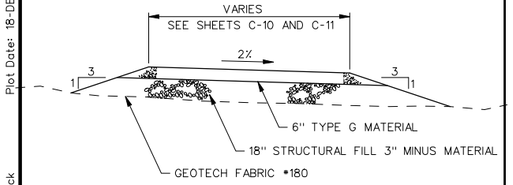

TYPICAL GRAVEL ROAD SECTION 1 / VAR

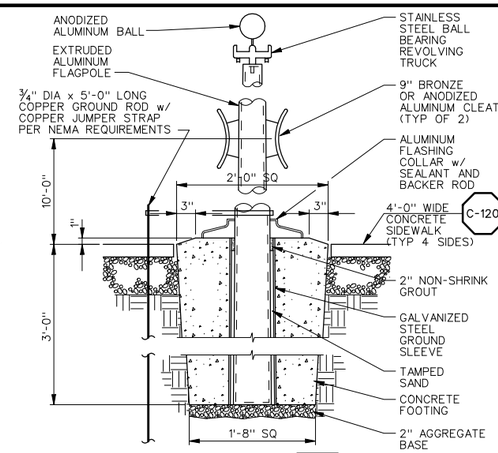

SECTION A / -

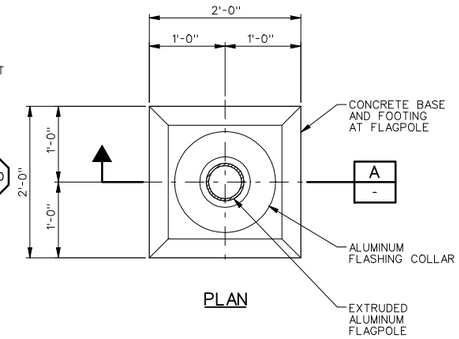

FLAGPOLE 2 / C-2

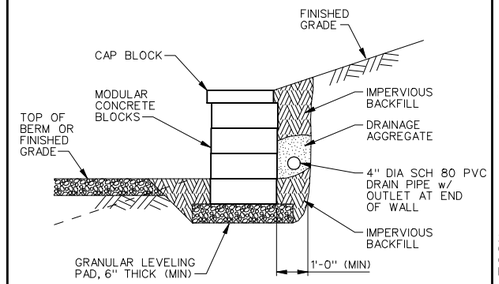

NOTE:
THE RETAINING WALL SHALL BE INSTALLED PER THE MODULAR CONCRETE BLOCK MANUFACTURER'S RECOMMENDATIONS. SEE SPECIFICATION 02165.

RETAINING WALL 3 / VAR

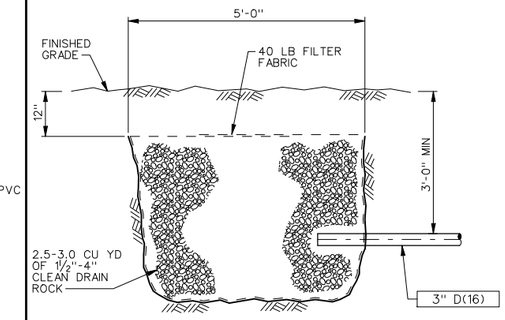

DRAIN AWAY 4 / C-15

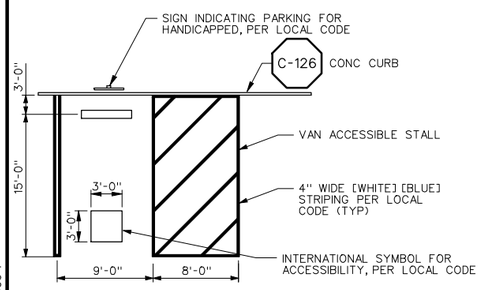

HANDICAP PARKING STALL 5 / C-2

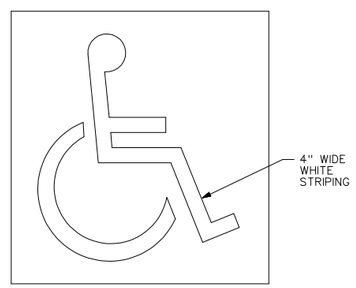

HANDICAP PARKING STALL 6 / C-2

REV	DATE	BY	DESCRIPTION
R	3/07	MRW	RECORD DRAWING

SCALE: NONE

WARNING: 0 ½ 1 — IF THIS BAR DOES NOT MEASURE 1" THEN DRAWING IS NOT TO SCALE

DESIGNED S. ROMNEY
DRAWN R. WALN
CHECKED S. POSTMA

RECORD DRAWING

This record drawing has been prepared, entirely or in part on the basis of unverified information compiled and furnished by others to the preparer who is not responsible for any inaccuracies, errors or omissions which may have been incorporated into the document as a result

MWH

UTAH DIVISION OF WILDLIFE RESOURCES
WHITEROCKS STATE FISH HATCHERY

MISCELLANEOUS CIVIL DETAILS - 2

SHEET GC-4
1690703

File: wrfhgc04-RD.dgn Model: Default ColorTable: bw.ctb DesignScript: LightScreen.pen PlotScale: 1.999996:1 User: KaiCrick Plot Date: 18-DEC-2007 09:37

User: KalCrick Plot Date: 18-DEC-2007 09:37
PlotScale: 9.99998:1 DesignScript: LightScreen.pen
ColorTable: bw.ctb Model: Default
File: wrthgc05-RD.dgn

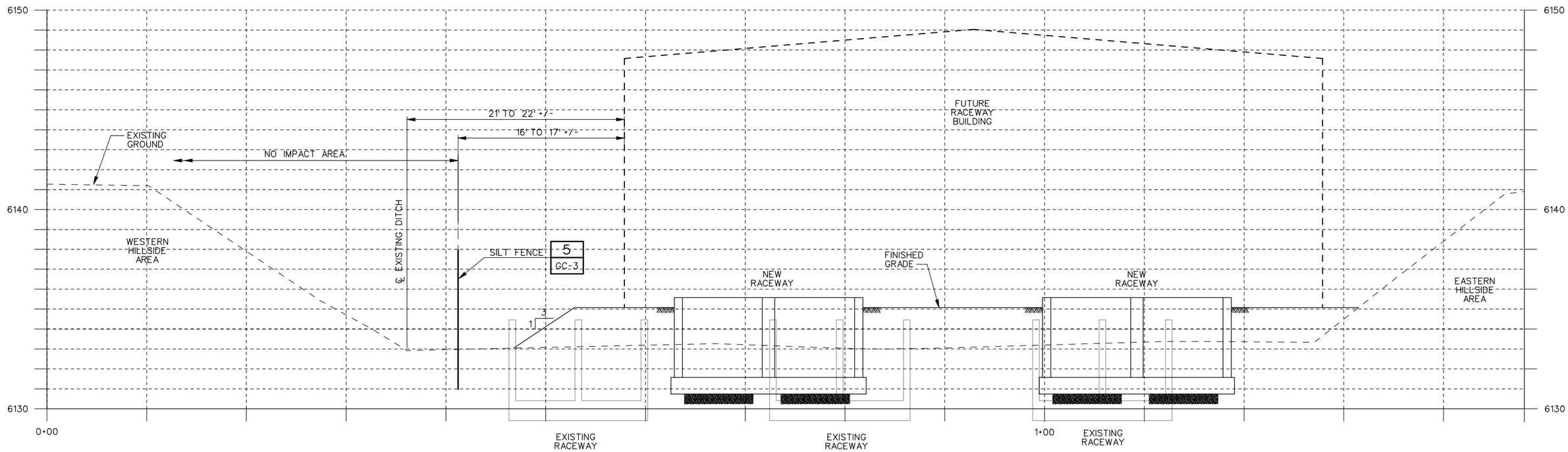

TYPICAL CROSS SECTION LOOKING NORTH

REGISTERED PROFESSIONAL ENGINEER #5149 STANLEY S. POSTMA STATE OF UTAH

REV	DATE	BY	DESCRIPTION
R	3/07	MRW	RECORD DRAWING

SCALE: 1"=10' HORIZ, 1"=5' VERTICAL

WARNING: 0 ½ 1 — IF THIS BAR DOES NOT MEASURE 1" THEN DRAWING IS NOT TO SCALE

DESIGNED D. BARBEAU
DRAWN R. WALN
CHECKED S. POSTMA

RECORD DRAWING

This record drawing has been prepared, entirely or in part on the basis of unverified information compiled and furnished by others to the preparer who is not responsible for any inaccuracies, errors or omissions which may have been incorporated into the document as a result

MWH

UTAH DIVISION OF WILDLIFE RESOURCES
WHITEROCKS STATE FISH HATCHERY

MISCELLANEOUS CIVIL DETAILS - 3

SHEET GC-5

1690703

Plot Date: 18-DEC-2007 09:37
User: KaiCrick
PlotScale: 119.99976:1
DesignScript: LightScreen.pen
ColorTable: bw.ctb
Model: Default
File: wrfhc01-RD.dgn

0 30 60 120 180 FT
SCALE: 1"=60'

FACILITIES LEGEND:

PHASE 1

- A — HATCHERY BUILDING
- B — AERATION STRUCTURE NO. 1
- C — LOX TANK
- D — TRUCK WASH STATION
- E — SEPTIC TANK
- F — SANITARY WASTEWATER LEACH FIELD
- G — HILLSIDE SPRING COLLECTION
- H — SPRING COLLECTION BOX
- I — AERATION STRUCTURE NO. 2
- J — PROPANE TANK
- K — LHO STRUCTURE
- R — FEED STORAGE BUILDING

PHASE 2

- L — LHO EQUIPMENT
- M — RACEWAYS
- N — RACEWAYS SOLIDS TREATMENT BASIN
- O — OUTFALL STRUCTURE
- P — AC PAVEMENT

PHASE 3

- S — FUTURE WELL
- T — FUTURE RESIDENCE (TYP OF 2)
- U — FUTURE RACEWAY BUILDING

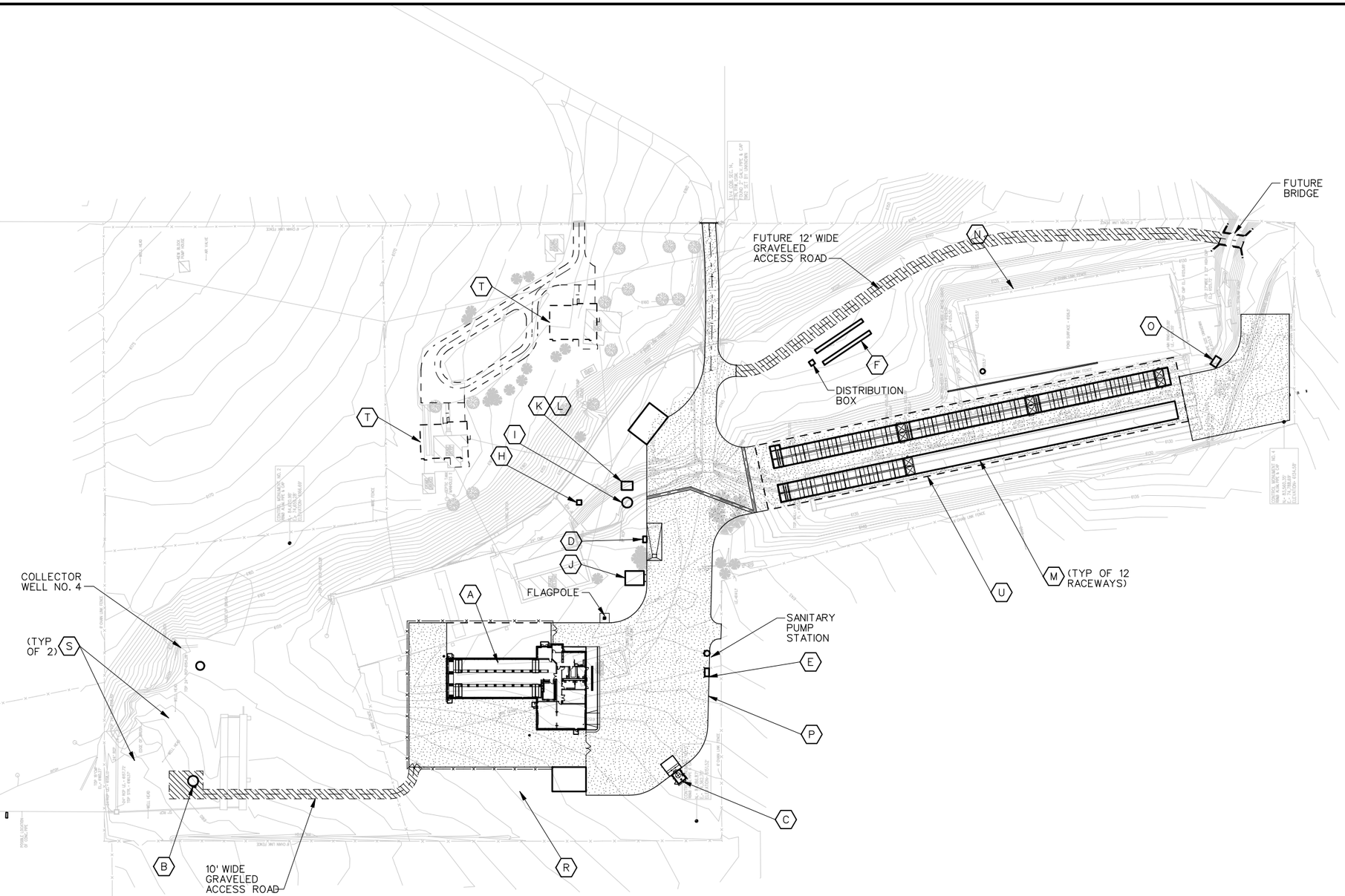

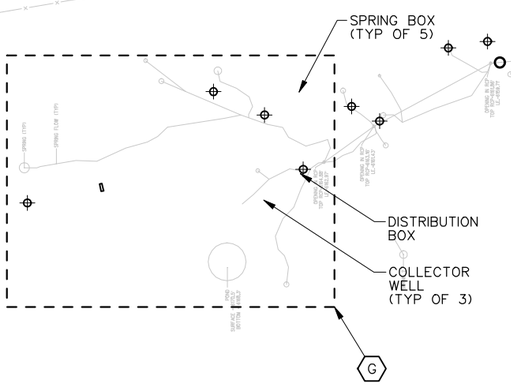

REGISTERED PROFESSIONAL ENGINEER #5149 STANLEY S. POSTMA STATE OF UTAH

REV	DATE	BY	DESCRIPTION
R	3/07	MRW	RECORD DRAWING

SCALE 1"=60'

WARNING 0 ½ 1 — IF THIS BAR DOES NOT MEASURE 1" THEN DRAWING IS NOT TO SCALE

DESIGNED
DRAWN R. WALN
CHECKED E. CRYER

RECORD DRAWING

This record drawing has been prepared, entirely or in part on the basis of unverified information compiled and furnished by others to the preparer who is not responsible for any inaccuracies, errors or omissions which may have been incorporated into the document as a result

MWH

UTAH DIVISION OF WILDLIFE RESOURCES
WHITEROCKS STATE FISH HATCHERY

OVERALL SITE PLAN

SHEET C-1

1690703

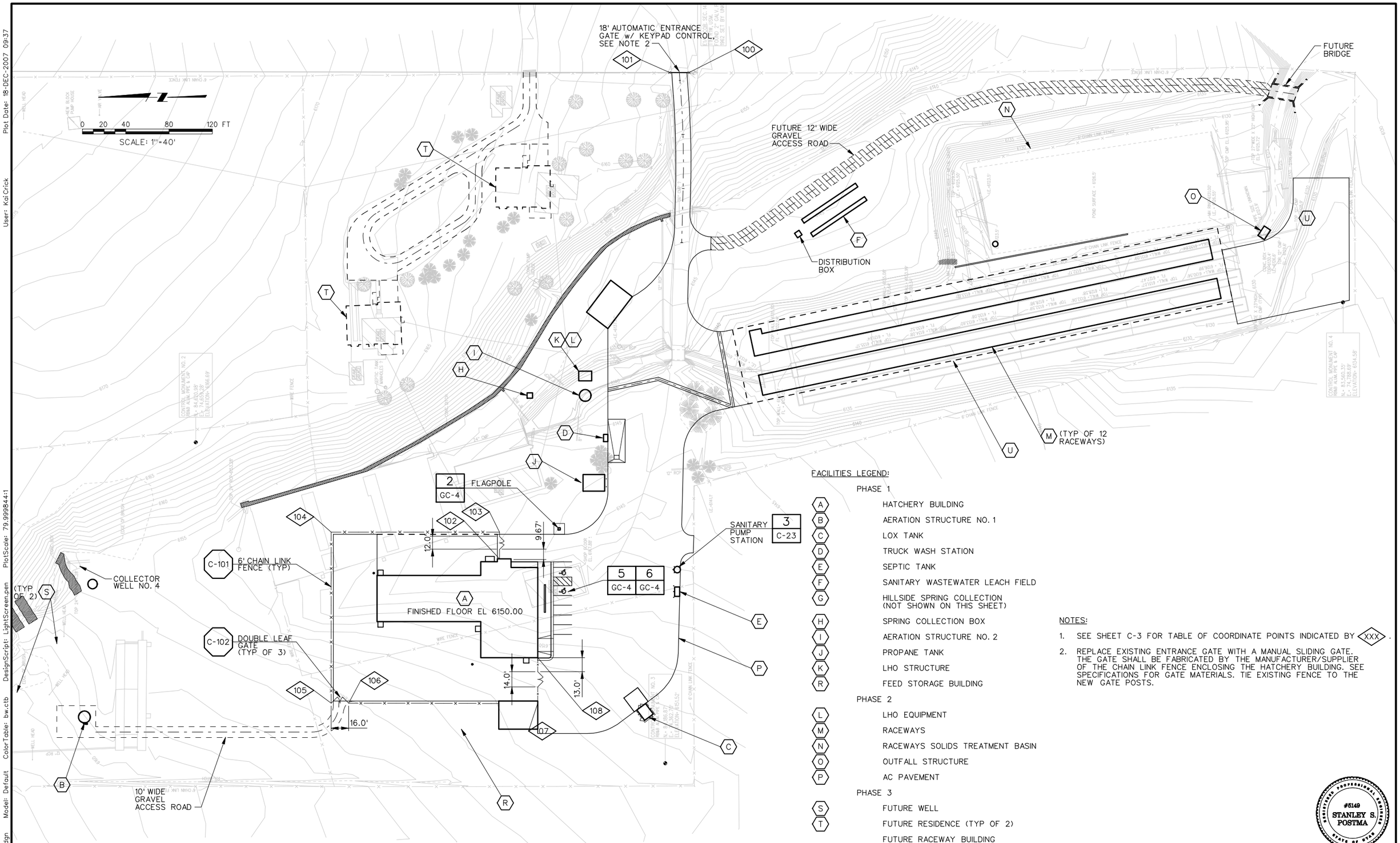

FACILITIES LEGEND:

PHASE 1

- A — HATCHERY BUILDING
- B — AERATION STRUCTURE NO. 1
- C — LOX TANK
- D — TRUCK WASH STATION
- E — SEPTIC TANK
- F — SANITARY WASTEWATER LEACH FIELD
- G — HILLSIDE SPRING COLLECTION (NOT SHOWN ON THIS SHEET)
- H — SPRING COLLECTION BOX
- I — AERATION STRUCTURE NO. 2
- J — PROPANE TANK
- K — LHO STRUCTURE
- R — FEED STORAGE BUILDING

PHASE 2

- L — LHO EQUIPMENT
- M — RACEWAYS
- N — RACEWAYS SOLIDS TREATMENT BASIN
- O — OUTFALL STRUCTURE
- P — AC PAVEMENT

PHASE 3

- S — FUTURE WELL
- T — FUTURE RESIDENCE (TYP OF 2)
- FUTURE RACEWAY BUILDING

NOTES:

1. SEE SHEET C-3 FOR TABLE OF COORDINATE POINTS INDICATED BY ⟨XXX⟩.
2. REPLACE EXISTING ENTRANCE GATE WITH A MANUAL SLIDING GATE. THE GATE SHALL BE FABRICATED BY THE MANUFACTURER/SUPPLIER OF THE CHAIN LINK FENCE ENCLOSING THE HATCHERY BUILDING. SEE SPECIFICATIONS FOR GATE MATERIALS. TIE EXISTING FENCE TO THE NEW GATE POSTS.

REGISTERED PROFESSIONAL ENGINEER #5149 STANLEY S. POSTMA STATE OF UTAH

REV	DATE	BY	DESCRIPTION
R	3/07	MRW	RECORD DRAWING

SCALE 1"=40'

WARNING 0 ½ 1 — IF THIS BAR DOES NOT MEASURE 1" THEN DRAWING IS NOT TO SCALE

DESIGNED ____
DRAWN R. WALN
CHECKED E. CRYER

RECORD DRAWING

This record drawing has been prepared, entirely or in part on the basis of unverified information compiled and furnished by others to the preparer who is not responsible for any inaccuracies, errors or omissions which may have been incorporated into the document as a result

MWH

UTAH DIVISION OF WILDLIFE RESOURCES
WHITEROCKS STATE FISH HATCHERY

HATCHERY SITE PLAN

SHEET C-2

1690703

File: wrfhc02-RD.dgn Model: Default ColorTable: bw.ctb DesignScript: LightScreen.pen PlotScale: 79.999844:1 User: KaiCrick Plot Date: 18-DEC-2007 09:37

POINT NO.	DESCRIPTION	NORTH	EAST	REMARKS
	SITE FEATURES - FENCE			
100	GATE POST	84164.89	75000.99	
101	GATE POST	84182.89	75000.99	
102	END POST	84340.11	74551.60	
103	CORNER POST	84340.11	74576.26	
104	CORNER POST	84495.78	74576.26	
105	CORNER/GATE POST	84495.78	74418.26	
106	GATE POST	84479.18	74418.26	
107	CORNER POST	84304.78	74418.26	
108	END POST	84304.78	74460.26	
	SITE FEATURES - ACCESS ROADS			
	MAIN ACCESS ROAD			
200	BEGIN ROAD, STA 0+00	84171.73	74843.87	
201	PC, STA 0+47.94	84170.44	74891.79	
202	PI	84169.25	74936.02	
203	PT, STA 1+36.35	84172.40	74980.15	
204	END ROAD, STA 1+56.58	84173.88	75000.84	
	WASTEWATER TREATMENT ACCESS ROAD			
210	BEGIN ROAD, STA 0+00	84171.73	74843.87	
211	STA 0+27.00	84144.75	74842.84	END AC PAVEMENT
212	STA 0+31.94	84139.81	74842.76	INTERSECTION w/
				FUTURE ACCESS
				ROAD
213	END ROAD, STA 2+82.09	83889.81	74834.05	
	FUTURE ACCESS ROAD			
220	BEGIN ROAD, PC, STA 0+00	84139.81	74842.76	
221	PI	84124.40	74842.22	
222	PT, STA 0+29.09	84112.11	74850.50	
223	PC, STA 1+82.46	83984.90	74936.18	
224	PI	83911.39	74985.69	
225	PT, STA 3+54.82	83822.77	74987.30	
226	PC, STA 4+87.90	83689.72	74989.72	
227	PI	83663.42	74990.19	
228	PT, STA 5+40.36	83637.45	74986.09	
229	END ROAD, STA 5+49.37	83627.87	74984.58	REAR FACE OF
				FUTURE BRIDGE
				ABUTMENT
	AERATION STRUCTURE NO. 1 ACCESS ROAD			
230	BEGIN ROAD, PC, STA 0+00	84713.42	74391.51	
231	PC, STA 1+99.64	84513.78	74391.51	
232	PI	84488.78	74391.51	
233	PT, STA 2+38.91	84488.78	74416.51	
234	END ROAD, STA 2+42.67	84488.78	74420.26	
	SITE FEATURES - AC PAVEMENT			
240	EDGE OF PAVEMENT, PC	84178.42	74855.41	FG EL 6147.57
241	CURVE CENTER POINT	84228.40	74856.75	
242	EDGE OF PAVEMENT, PT	84209.17	74810.60	FG EL 6145.68
243	NOT USED			
244	EDGE OF PAVEMENT, PT	84239.93	74764.45	FG EL 6144.43
245	EDGE OF PAVEMENT, PC	84239.93	74614.26	FG EL 6149.20
246	CURVE CENTER POINT	84279.93	74614.26	
247	EDGE OF PAVEMENT, PT	84279.93	74574.26	FG EL 6149.00
248	EDGE OF PAVEMENT, CORNER	84342.11	74574.26	FG EL 6149.00
249	EDGE OF PAVEMENT, CORNER	84342.11	74551.60	FG EL 6149.50
250	EDGE OF PAVEMENT, CORNER	84453.11	74535.92	FG EL 6150.00
251	EDGE OF PAVEMENT, CORNER	84453.44	74574.26	FG EL 6149.00
252	EDGE OF PAVEMENT, CORNER	84493.78	74574.26	FG EL 6149.00
253	EDGE OF PAVEMENT, CORNER	84493.78	74420.26	FG EL 6149.00
254	EDGE OF PAVEMENT, CORNER	84304.78	74420.26	FG EL 6149.29
255	CURVE CENTER POINT	84258.95	74440.26	FG EL 6149.00
256	EDGE OF PACEMENT, PT	84229.03	74400.21	FG EL 6149.00
257	EDGE OF PAVEMENT, PC	84194.99	74425.63	
258	CURVE CENTER POINT	84224.91	74465.69	FG EL 6148.36
259	EDGE OF PAVEMENT, PT	84174.93	74464.34	FG EL 6146.85
260	EDGE OF PAVEMENT, PC	84172.70	74547.39	TURNOUT TO
261	CURVE CENTER POINT	84162.70	74547.12	EXISTING GATE
262	EDGE OF PAVEMENT, PT	84162.43	74557.12	
263	EDGE OF PAVEMENT, PC	84162.00	74573.11	TURNOUT TO
264	CURVE CENTER POINT	84161.74	74583.11	EXISTING GATE
				FG EL 6145.77
265	EDGE OF PAVEMENT, PT	84171.73	74583.37	FG EL 6143.37
266	EDGE OF PAVEMENT, PC	84169.92	74650.87	
267	CURVE CENTER POINT	84129.93	74649.79	FG EL 6141.53
268	EDGE OF PAVEMENT, PT	84138.20	74688.93	
269	EDGE OF PAVEMENT	84110.32	74694.82	

POINT NO.	DESCRIPTION	NORTH	EAST	REMARKS
	SITE FEATURES - AC PAVEMENT (CONT.)			
270	EDGE OF PAVEMENT, CORNER	83662.21	74789.45	
271	EDGE OF PAVEMENT, CORNER	83657.81	74768.66	FG EL 6132.00
272	EDGE OF PAVEMENT, CORNER	83554.44	74790.49	FG EL 6133.80
273	EDGE OF PAVEMENT, CORNER	83554.74	74903.60	FG EL 6131.80
274	EDGE OF PAVEMENT, CORNER	83606.32	74903.46	FG EL 6131.00
275	EDGE OF PAVEMENT, PC	83606.27	74883.46	FG EL 6130.87
276	CURVE CENTER POINT	83646.26	74883.36	
277	EDGE OF PAVEMENT, PT	83638.00	74844.22	FG EL 6130.50
278	EDGE OF PAVEMENT, CORNER	83672.24	74836.99	FG EL 6132.16
279	EDGE OF PAVEMENT, CORNER	83676.67	74857.94	
280	EDGE OF PAVEMENT	84124.79	74763.30	
281	EDGE OF PAVEMENT, PC	84129.92	74762.22	FG EL 6141.00
282	CURVE CENTER POINT	84136.12	74791.57	
283	EDGE OF PAVEMENT, PT	84166.11	74792.38	FG EL 6145.00
284	EDGE OF PAVEMENT	84165.43	74817.70	FG EL 6146.00
	SITE FEATURES - STRUCTURES			
300	CENTER OF AERATION STRUCTURE NO. 1	84723.90	74405.51	TOP EL 6161.00
301	GRAVEL PAD	84713.42	74416.01	FG EL 6159.00
302	GRAVEL PAD	84749.40	74416.01	FG EL 6159.00
303	GRAVEL PAD	84749.40	74386.51	FG EL 6159.00
304	GRAVEL PAD	84713.42	74386.51	FG EL 6159.00
305	HATCHERY BUILDING	84453.11	74493.92	FF EL 6150.00
306	HATCHERY BUILDING	84357.11	74493.92	FF EL 6150.00
307	HATCHERY BUILDING	84357.11	74460.59	FF EL 6150.00
308	HATCHERY BUILDING	84305.11	74460.59	FF EL 6149.79
309	CENTER OF FLAGPOLE	84284.93	74579.26	SLAB EL 6149.00
310	SEPTIC TANK	84173.52	74516.99	TOP EL 6148.37
311	SEPTIC TANK	84173.52	74525.66	TOP EL 6148.37
312	BEGIN DRAIN FIELD LATERAL	84059.77	74863.53	
313	END DRAIN FIELD LATERAL	84010.00	74897.05	
314	BEGIN DRAIN FIELD LATERAL	84051.39	74851.09	
315	END DRAIN FIELD LATERAL	84001.62	74884.61	
316	LOX TANK APRON	84215.63	74410.21	SLAB EL 6148.50
317	LOX TANK APRON	84202.81	74419.79	SLAB EL 6148.50
318	LPG TANK SLAB	84262.93	74629.60	SLAB EL 6145.50
319	LPG TANK SLAB	84242.93	74629.60	SLAB EL 6145.50
320	NOT USED			
321	NOT USED			
322	NOT USED			
323	SPRING COLLECTION BOX	84314.65	74700.10	TOP EL 6147.00
324	SPRING COLLECTION BOX	84314.65	74705.10	TOP EL 6147.00
325	CENTER OF AERATION STRUCTURE NO. 2	84260.93	74702.60	TOP EL 6145.50
326	LHO STRUCTURE	84266.93	74716.06	TOP EL 6145.50
327	LHO STRUCTURE	84266.93	74725.06	TOP EL 6145.50
328	RACEWAY	84100.59	74721.32	WALL EL 6142.00
329	RACEWAY	83676.93	74810.79	WALL EL 6133.16
330	RACEWAY	84104.31	74738.93	WALL EL 6142.00
331	RACEWAY	83680.65	74828.40	WALL EL 6133.16
332	OUTFALL STRUCTURE	83632.98	74846.63	TOP EL 6130.50
333	OUTFALL STRUCTURE	83627.22	74855.41	TOP EL 6130.50
334	12" CMP CULVERT INLET	83659.30	74762.37	INV EL 6130.0
335	12" CMP CULVERT OUTLET	83623.81	74858.06	INV EL 6126.0
336	RETAINING WALL	83918.99	74820.69	
337	RETAINING WALL	83759.25	74851.20	
338	POND INLET BOX	83883.81	74839.68	TOP EL 6130.50
339	POND INLET BOX	83878.88	74840.56	TOP EL 6130.50
340	INLET STRUCTURE	83861.16	74907.66	INV EL 6120.00
341	DECANT STRUCTURE	83798.72	74864.41	TOP EL 6130.00
342	DECANT STRUCTURE	83793.79	74865.27	TOP EL 6130.00
343	TOP OF POND	83867.77	74852.76	FG EL 6130.00
344	TOP OF POND	83856.26	74845.01	FG EL 6130.00
345	TOP OF POND	83792.20	74856.26	FG EL 6130.00
346	TOP OF POND	83784.15	74868.22	FG EL 6130.00
347	TOP OF POND	83798.00	74932.54	FG EL 6130.00
348	TOP OF POND	83809.44	74940.06	FG EL 6130.00
349	TOP OF POND	83873.40	74928.81	FG EL 6130.00
350	TOP OF POND	83881.56	74916.85	FG EL 6130.00
351	TOP OF POND	83881.85	74845.12	FG EL 6130.00
352	TOP OF POND	83873.82	74857.06	FG EL 6130.00
353	TOP OF POND	83886.67	74916.85	FG EL 6130.00
354	TOP OF POND	83898.11	74924.60	FG EL 6130.00
355	BEGIN BACK OF CURB	84304.78	74482.10	TOC EL 6150.00
356	BACK OF CURB, PC	84294.78	74460.26	TOC EL 6150.00
357	BACK OF CURB, RADIUS POINT	84294.78	74462.26	
358	BACK OF CURB, PT	84292.78	74462.26	TOC EL 6150.00
359	END BACK OF CURB	84292.78	74548.78	TOC EL 6149.10
360	FEED STORAGE BUILDING	84340.78	74394.26	FF EL 6144.43
361	FEED STORAGE BUILDING	84357.44	74394.26	FF EL 6144.43
362	FUTURE RESIDENCE	84482.10	74785.38	
363	FUTURE RESIDENCE	84480.84	74749.23	
364	FUTURE RESIDENCE	84343.65	74912.90	
365	FUTURE RESIDENCE	84343.72	74876.74	
366	FUTURE RACEWAY BUILDING	84110.32	74694.82	
367	FUTURE RACEWAY BUILDING	83662.21	74789.45	
368	SANITARY PUMP STATION	84175.70	74541.66	TOC EL 6149.50
369	DISTRIBUTION BOX	84063.87	74851.73	TOC EL 6145.50
370				

POINT NO.	DESCRIPTION	NORTH	EAST	REMARKS
	SITE FEATURES - STRUCTURES (CONT)			
	SITE FEATURES - YARD PIPING			
400	NOT USED			
401	20" RSW, TEE	84786.68	74405.51	
402	20" RSW, TEE TO BYPASS	84737.74	74405.51	
403	NOT USED			
404	20" TSW, 90° ELBOW	84503.78	74405.51	
405	20" TSW, 20"x20"x12" TEE	84503.78	74496.10	
406	20" TSW, 20"x20"x12" TEE	84503.78	74534.10	
407	20" TSW, 90° ELBOW	84503.78	74594.60	
408	20" TSW, CAP PIPE END	84488.78	74594.60	
409	20" TSW, 45°ELBOW	84716.48	74412.93	
410	20" TSW, 90° ELBOW	84508.78	74412.93	
411	20" TSW, 90° ELBOW	84508.78	74599.60	CL OF MANHOLE
412	20" TSW, 45° ELBOW	84407.65	74599.60	TOP ELB 6143.49
413	20" TSW, 45° ELBOW	84312.15	74695.10	
414	NOT USED			
415	15" PC, CAP END	84805.42	74380.07	
416	15" PC, TEE	84805.24	74405.51	
417	15" PC, CAP END	84804.93	74450.08	
418	NOT USED			
419	NOT USED			
420	NOT USED			
421	NOT USED			
422	NOT USED			
423	24" PC, TEE AND REDUCERS			
424	NOT USED			
425	24" PC, 45° ELBOW	84332.28	74702.60	TOP EL 6140.74
426	15" PC, CAP END	84237.10	74836.20	
427	NOT USED			
428	20" TSW, 11 1/4° ELBOW	84121.03	74702.60	
429	12" RW, 90° ELBOW	84498.78	74507.01	
430	20" RW, 20"x20"x12" TEE	84498.78	74523.18	
431	20" RW, TEE	84498.78	74584.60	
432	20" RW, 90° ELBOW	84498.78	74589.60	
433	20" RW, CAP END	84488.78	74589.60	
434	20" RW, 90° ELBOW	84277.78	74584.60	INV EL 6140.75
435	20" RW, 90° ELBOW	84277.78	74720.56	
436	20" RW, 11 1/4° ELBOW	84244.93	74718.90	
437	20" RW, 11 1/4° ELBOW	84244.93	74722.23	
438	20" RW, 45° ELBOW	84139.82	74744.43	
439	20" RW, 45° ELBOW	84133.50	74754.14	
440	20" RW, 45° ELBOW	84094.35	74763.43	
441	20" RW, 45° ELBOW	84091.26	74768.17	
442	20" RW, 20"x20"x12" TEE	83972.41	74793.27	
443	20" RW, 20"x20"x12" TEE	83968.12	74794.17	INV EL 6129.47
444	20" RW, 20"x20"x12" TEE	83834.94	74822.30	
445	20" RW, 20"x20"x12" TEE	83830.65	74823.20	
446	20" RW, TEE w/ PLUG	83697.48	74858.65	
447	NOT USED			
448	NOT USED			
449	NOT USED			
450	12" SD, 90° ELBOW	84446.87	74579.60	
451	12" SD, 90° ELBOW	84272.78	74579.60	INV EL 6141.16
452	12" SD, 90° ELBOW	84272.78	74740.23	INV EL 6136.
453	NOT USED			
454	NOT USED			
455	12" SD, 90° ELBOW	83972.42	74800.59	INV EL 6129.47
456	NOT USED			
457	12" SD, CLEANOUT TO GRADE	83692.52	74859.70	
458	12" SD, 12"x12"x8" TEE	83697.48	74858.65	INV EL 6125.49
459	12" SD, 12"x12"x8" TEE	83834.95	74829.62	INV EL 6125.80
460	NOT USED			
461	NOT USED			
462	NOT USED			
463	NOT USED			
464	4" D, 45° LATERAL	84272.78	74511.70	
465	NOT USED			
466	NOT USED			
467	NOT USED			
468	NOT USED			
469	NOT USED			
470	NOT USED			
471	NOT USED			
472	2" PW, TEE	84282.78	74658.18	
473	2" PW, POST HYDRANT	84240.90	74658.18	
474	2" PW, 90° ELBOW	84282.78	74490.94	

POINT NO.	DESCRIPTION	NORTH	EAST	REMARKS
	SITE FEATURES - SURVEY CONTROL			
500	CONTROL MONUMENT NO. 2	84620.98	74659.28	EL 6166.69
501	CONTROL MONUMENT NO. 3	84186.87	74362.70	EL 6151.52
502	CONTROL MONUMENT NO. 4	83560.35	74788.69	EL 6134.58

REGISTERED PROFESSIONAL ENGINEER #5149 STANLEY S. POSTMA STATE OF UTAH

REV	DATE	BY	DESCRIPTION
R	3/07	MRW	RECORD DRAWING

SCALE: NONE

WARNING: 0 ½ 1 — IF THIS BAR DOES NOT MEASURE 1" THEN DRAWING IS NOT TO SCALE

DESIGNED
DRAWN R. WALN
CHECKED E. CRYER

RECORD DRAWING

This record drawing has been prepared, entirely or in part on the basis of unverified information compiled and furnished by others to the preparer who is not responsible for any inaccuracies, errors or omissions which may have been incorporated into the document as a result

MWH

UTAH DIVISION OF WILDLIFE RESOURCES
WHITEROCKS STATE FISH HATCHERY

SITE COORDINATES

SHEET C-3

1690703

File: wrfhc03-RD.dgn Model: Default ColorTable: bw.ctb DesignScript: LightScreen.pen PlotScale: 1.999996:1 User: KaiCrick Plot Date: 18-DEC-2007 09:37

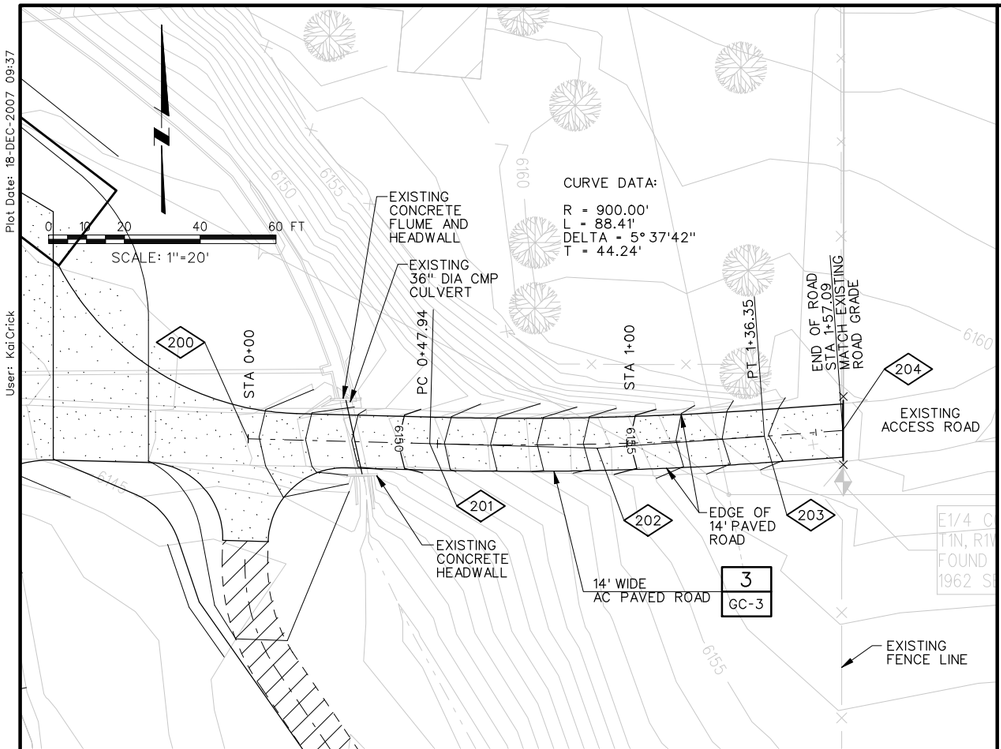

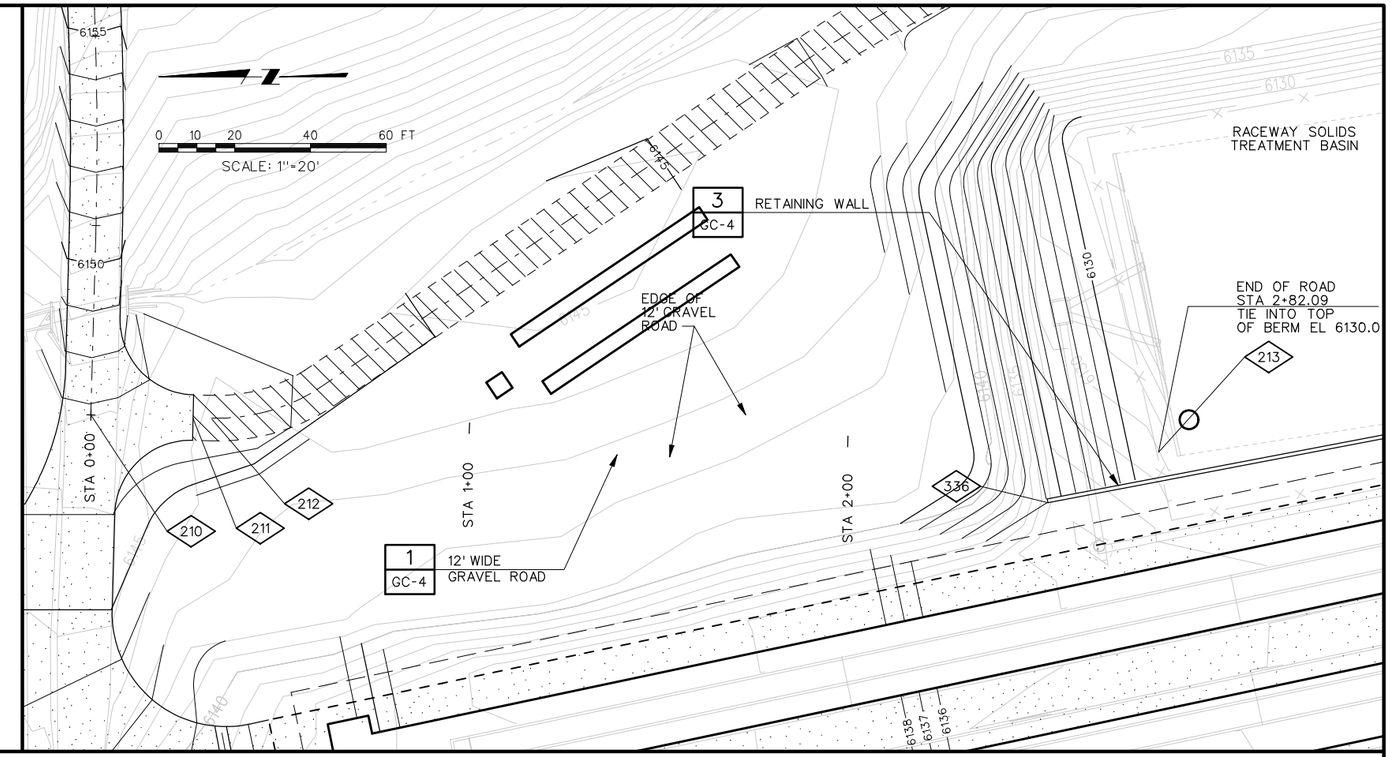

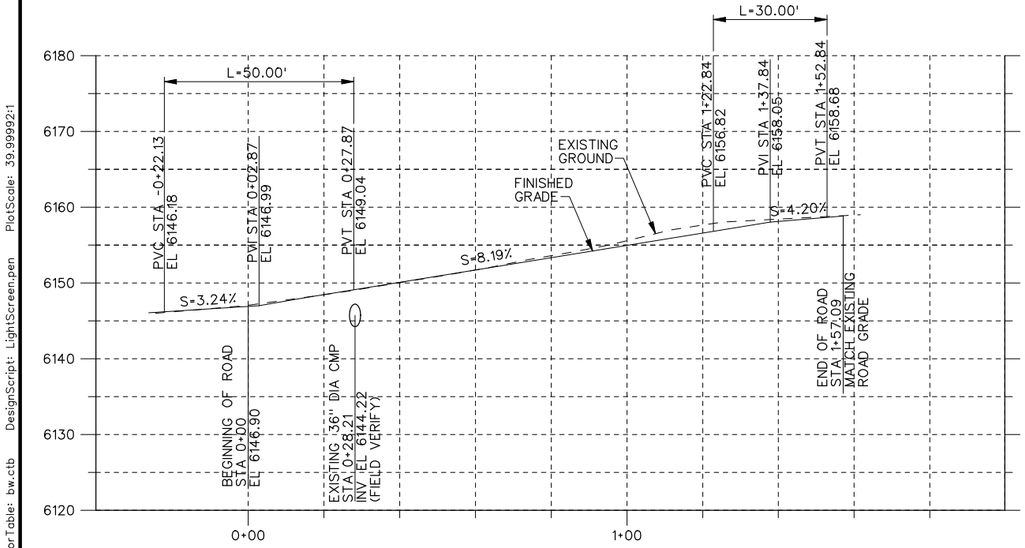

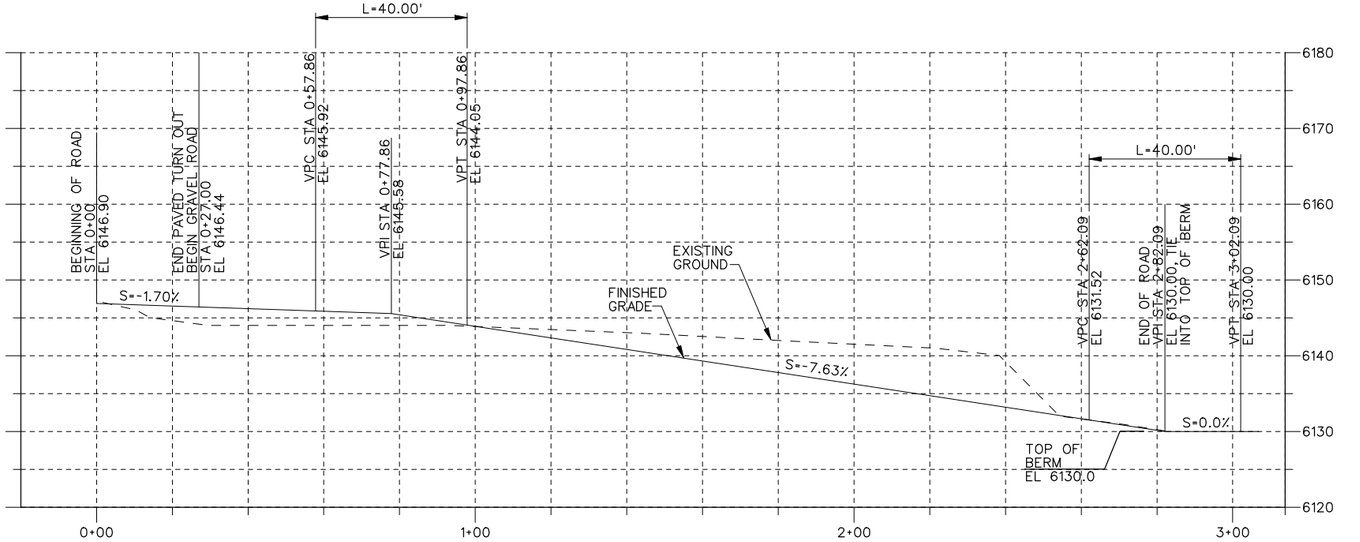

MAIN ACCESS ROAD PLAN AND PROFILE
STA 0+00 TO STA 1+57.09

WASTEWATER TREATMENT ACCESS ROAD PLAN AND PROFILE
SAT 0+00 TO STA 2+82.09

REGISTERED PROFESSIONAL ENGINEER #5149 STANLEY S. POSTMA STATE OF UTAH

REV	DATE	BY	DESCRIPTION
R	3/07	MRW	RECORD DRAWING

SCALE: 1"=20' HORIZ, 1"=10' VERT

WARNING: 0 ½ 1 — IF THIS BAR DOES NOT MEASURE 1" THEN DRAWING IS NOT TO SCALE

DESIGNED S. ROMNEY
DRAWN P. HUNTER
CHECKED S. POSTMA

RECORD DRAWING

This record drawing has been prepared, entirely or in part on the basis of unverified information compiled and furnished by others to the preparer who is not responsible for any inaccuracies, errors or omissions which may have been incorporated into the document as a result

MWH

UTAH DIVISION OF WILDLIFE RESOURCES
WHITEROCKS STATE FISH HATCHERY

ACCESS ROAD PLAN AND PROFILE - 1

SHEET C-4

1690703

File: wrfhc04-RD.dgn Model: Default ColorTable: bw.ctb DesignScript: LightScreen.pen PlotScale: 39.99992:1 User: KaiCrick Plot Date: 18-DEC-2007 09:37

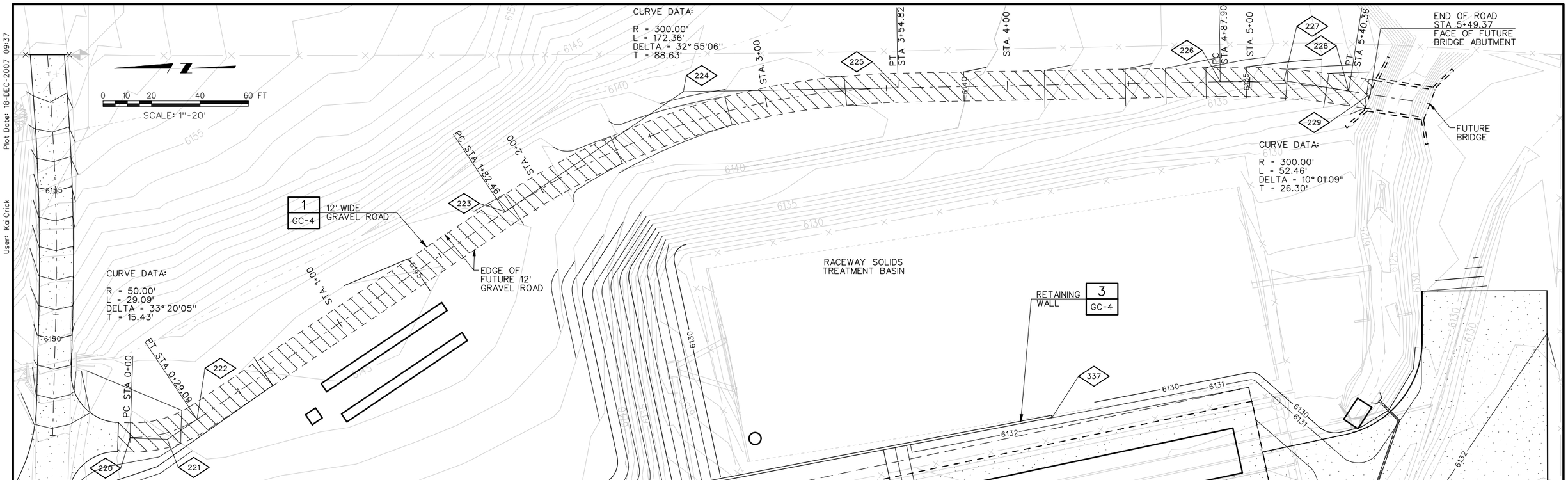

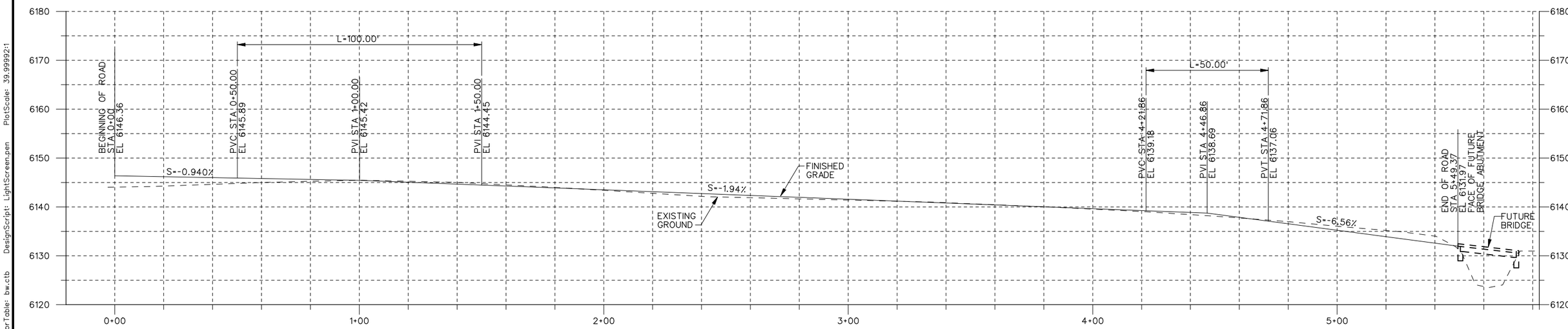

FUTURE ACCESS ROAD PLAN AND PROFILE

REGISTERED PROFESSIONAL ARCHITECT #5149 STANLEY S. POSTMA STATE OF UTAH

REV	DATE	BY	DESCRIPTION
R	3/07	MRW	RECORD DRAWING

SCALE: 1"=20' HORIZ, 1"=10' VERT

WARNING: 0 ½ 1 — IF THIS BAR DOES NOT MEASURE 1" THEN DRAWING IS NOT TO SCALE

DESIGNED S. ROMNEY
DRAWN P. HUNTER
CHECKED S. POSTMA

RECORD DRAWING

This record drawing has been prepared, entirely or in part on the basis of unverified information compiled and furnished by others to the preparer who is not responsible for any inaccuracies, errors or omissions which may have been incorporated into the document as a result

MWH

UTAH DIVISION OF WILDLIFE RESOURCES
WHITEROCKS STATE FISH HATCHERY

ACCESS ROAD PLAN AND PROFILE - 2
STATION 0+00 TO STATION 5+40.36

SHEET C-5

1690703

File: wrfnc05-RD.dgn Model: Default ColorTable: bw.ctb DesignScript: LightScreen.pen PlotScale: 39.99992:1 User: KaiCrick Plot Date: 18-DEC-2007 09:37

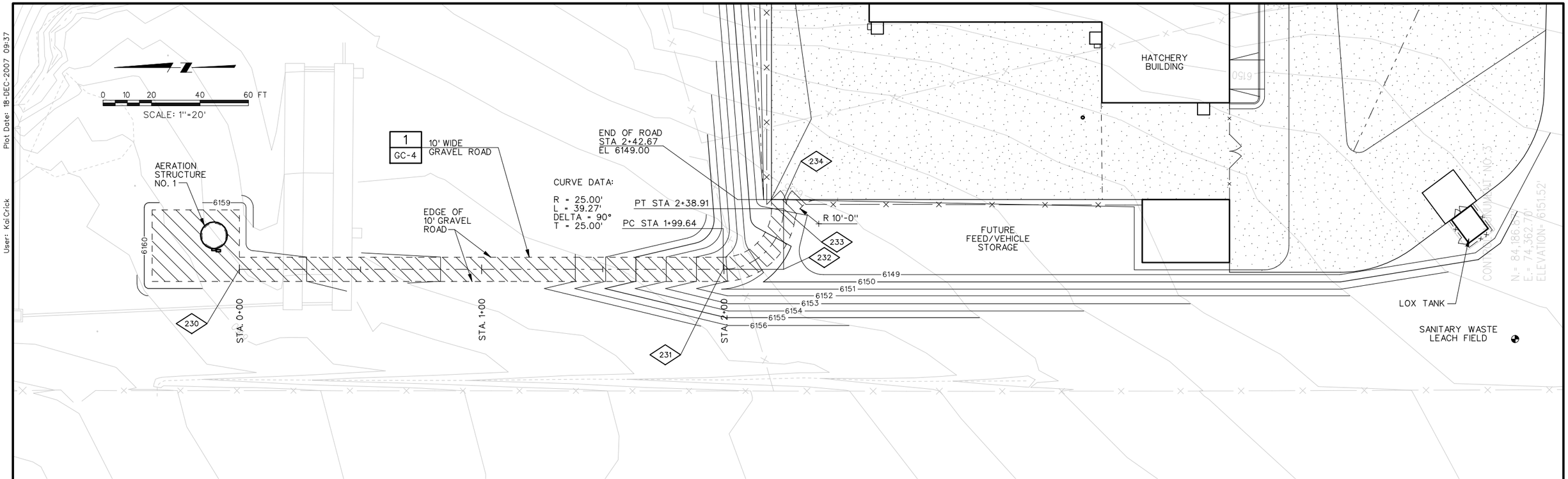

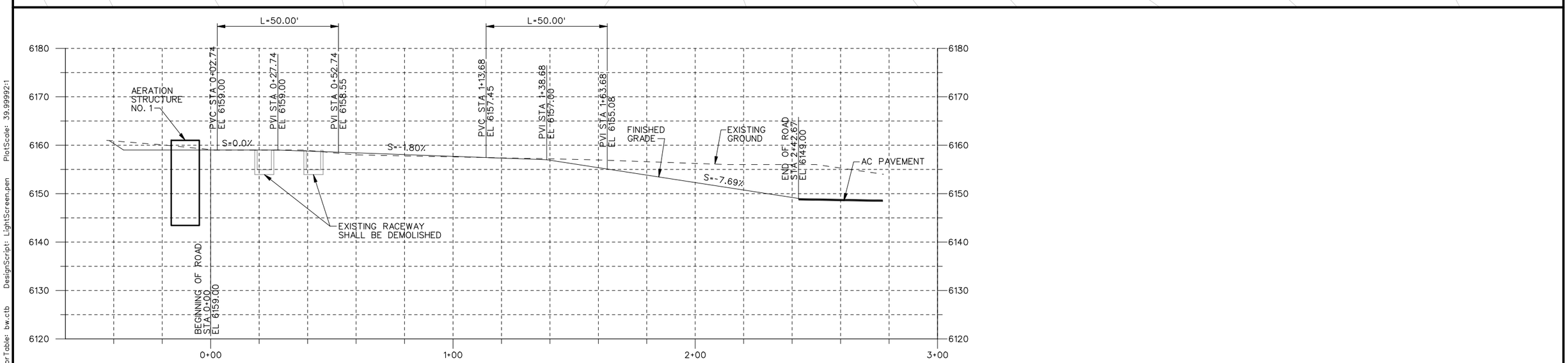

AERATION STRUCTURE NO. 1 ACCESS ROAD PLAN AND PROFILE

REGISTERED PROFESSIONAL ENGINEER #5149 STANLEY S. POSTMA STATE OF UTAH

REV	DATE	BY	DESCRIPTION
R	3/07	MRW	RECORD DRAWING

SCALE: 1"=20' HORIZ, 1"=10' VERT

WARNING: 0 ½ 1 — IF THIS BAR DOES NOT MEASURE 1" THEN DRAWING IS NOT TO SCALE

DESIGNED S. ROMNEY
DRAWN P. HUNTER
CHECKED S. POSTMA

RECORD DRAWING

This record drawing has been prepared, entirely or in part on the basis of unverified information compiled and furnished by others to the preparer who is not responsible for any inaccuracies, errors or omissions which may have been incorporated into the document as a result

MWH

UTAH DIVISION OF WILDLIFE RESOURCES
WHITEROCKS STATE FISH HATCHERY

ACCESS ROAD PLAN AND PROFILE - 3
STATION 0+00 TO STATION 2+42.67

SHEET C-6

1690703

File: wrfhc06-RD.dgn Model: Default ColorTable: bw.ctb DesignScript: LightScreen.pen PlotScale: 39.99992:1 User: KaiCrick Plot Date: 18-DEC-2007 09:37

User: KaiCrick Plot Date: 18-DEC-2007 09:38 Plot Date: 18-DEC-2007 09:38
File: wrfhc07-RD.dgn Model: Default ColorTable: bw.ctb DesignScript: LightScreen.pen PlotScale: 19.99996:1

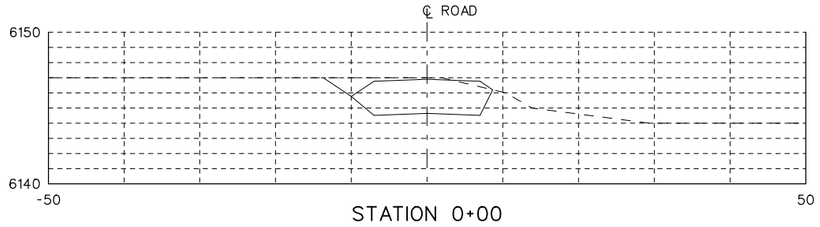

STATION 0+00

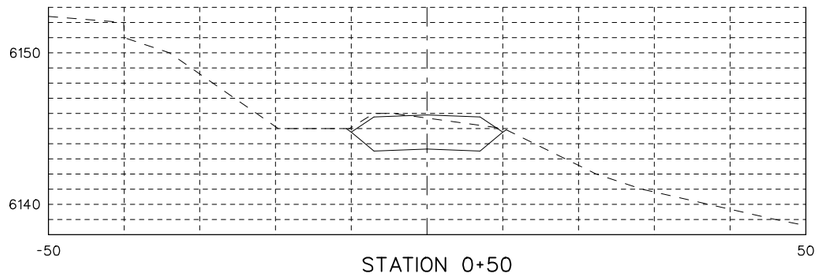

STATION 0+50

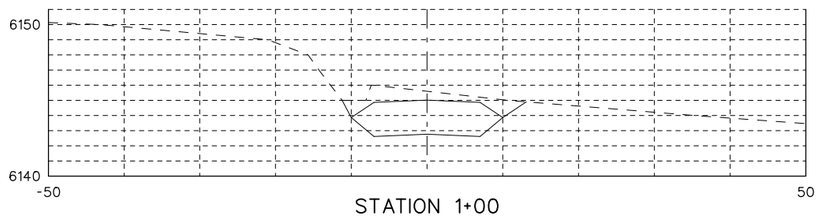

STATION 1+00

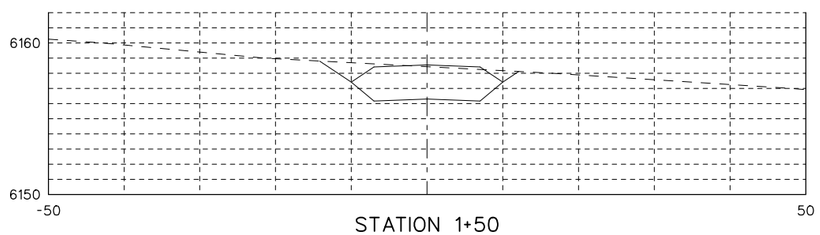

STATION 1+50

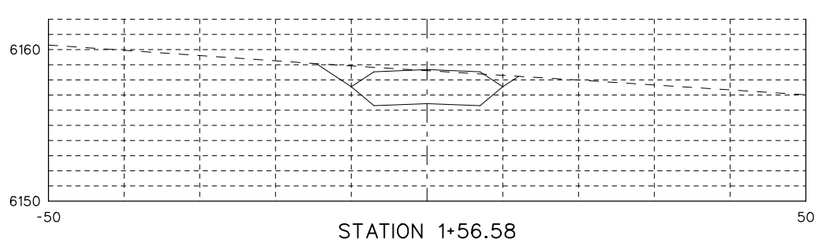

STATION 1+56.58

MAIN ACCESS ROAD

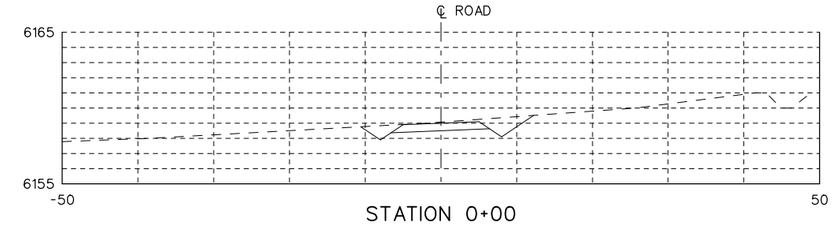

STATION 0+00

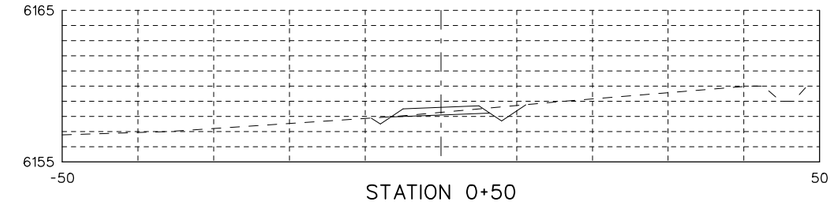

STATION 0+50

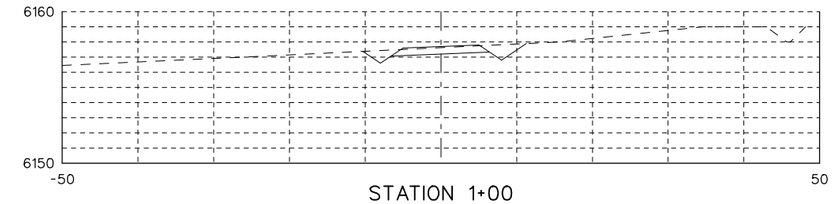

STATION 1+00

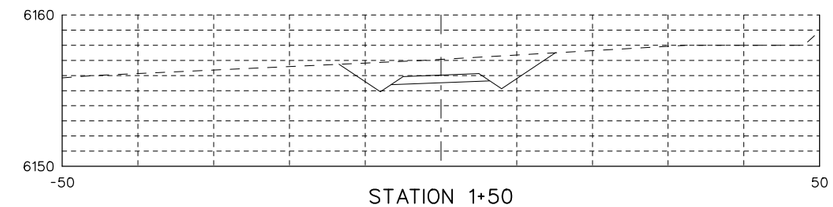

STATION 1+50

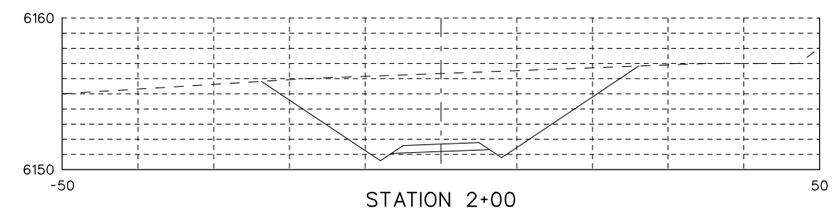

STATION 2+00

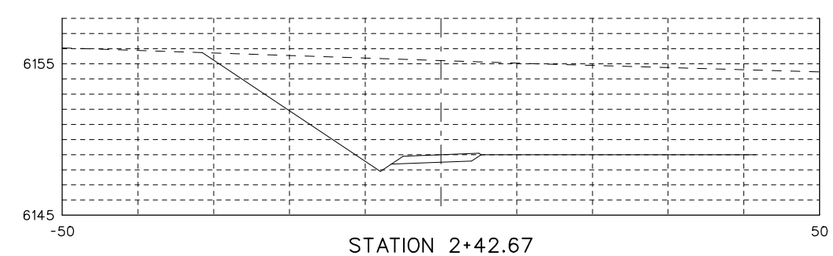

STATION 2+42.67

ACCESS ROAD TO AERATION STRUCTURE NO. 1

REGISTERED PROFESSIONAL ENGINEER #5149 STANLEY S. POSTMA STATE OF UTAH

REV	DATE	BY	DESCRIPTION
R	3/07	MRW	RECORD DRAWING

SCALE: 1"=10' HORIZ, 1"=5' VERT

WARNING: 0 ½ 1 — IF THIS BAR DOES NOT MEASURE 1" THEN DRAWING IS NOT TO SCALE

DESIGNED S. ROMNEY
DRAWN R. WALN
CHECKED S. POSTMA

RECORD DRAWING

This record drawing has been prepared, entirely or in part on the basis of unverified information compiled and furnished by others to the preparer who is not responsible for any inaccuracies, errors or omissions which may have been incorporated into the document as a result

MWH

UTAH DIVISION OF WILDLIFE RESOURCES
WHITEROCKS STATE FISH HATCHERY

ACCESS ROAD CROSS SECTIONS - 1

SHEET C-7

1690703

File: wrfhc08-RD.dgn Model: Default ColorTable: bw.ctb DesignScript: LightScreen.pen PlotScale: 19.99996:1 User: KaiCrick Plot Date: 18-DEC-2007 09:38

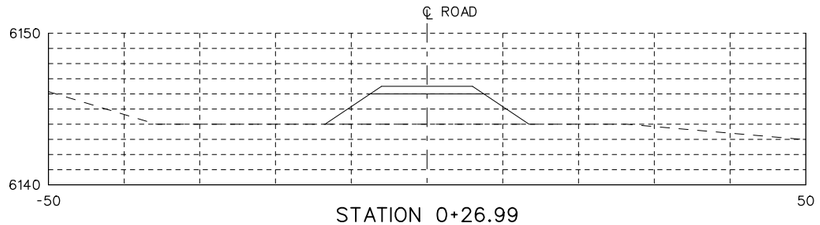

STATION 0+26.99

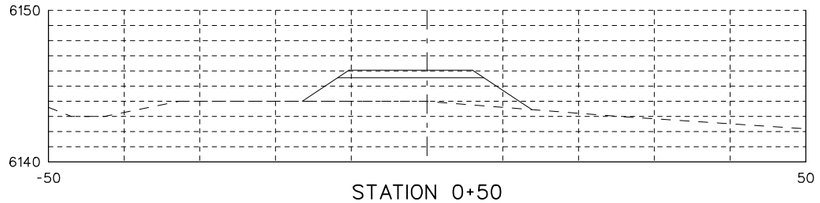

STATION 0+50

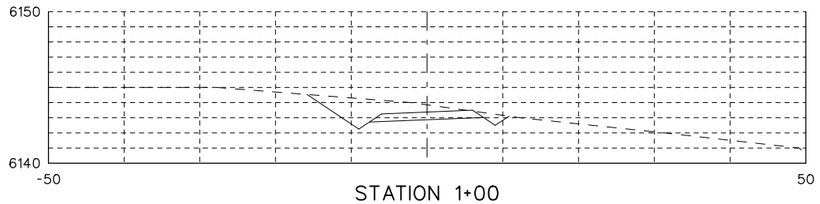

STATION 1+00

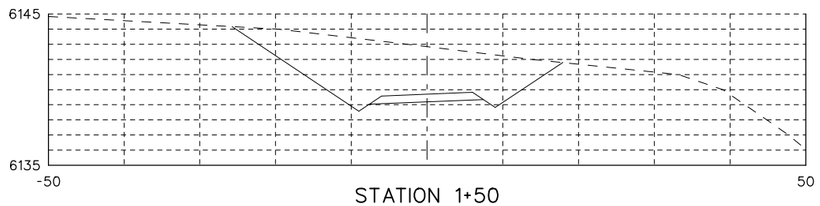

STATION 1+50

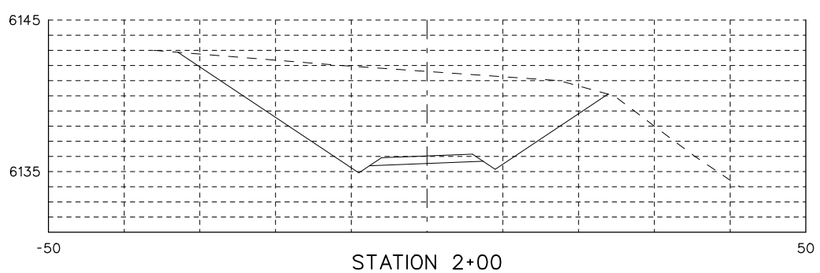

STATION 2+00

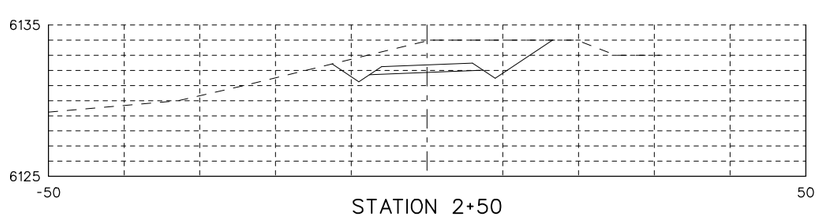

STATION 2+50

ACCESS ROAD TO WASTEWATER TREATMENT PONDS

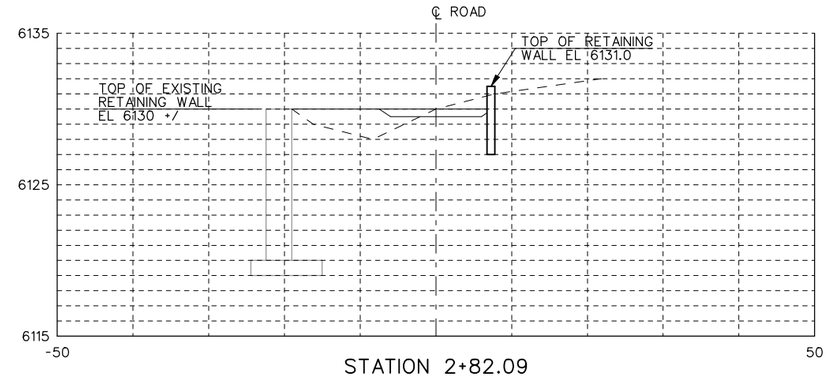

STATION 2+82.09

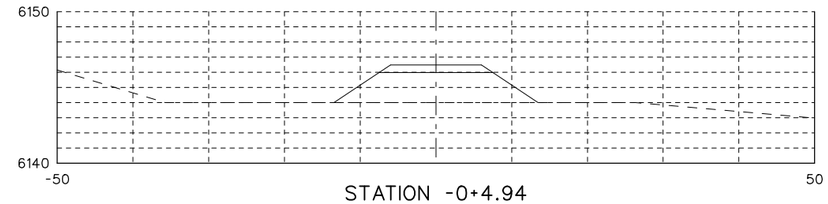

STATION -0+4.94

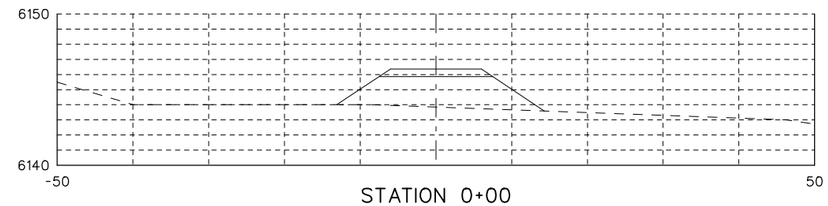

STATION 0+00

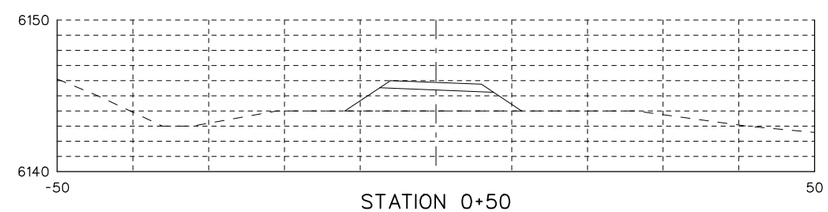

STATION 0+50

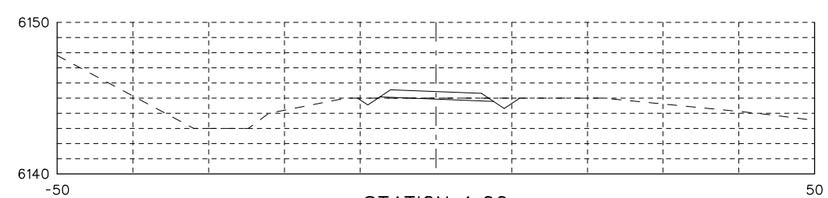

STATION 1+00

FUTURE ACCESS ROAD

REGISTERED PROFESSIONAL ENGINEER #5149 STANLEY S. POSTMA STATE OF UTAH

REV	DATE	BY	DESCRIPTION
R	3/07	MRW	RECORD DRAWING

SCALE: 1"=10' HORIZ, 1"=5' VERT

WARNING: 0 ½ 1 — IF THIS BAR DOES NOT MEASURE 1" THEN DRAWING IS NOT TO SCALE

DESIGNED S. ROMNEY
DRAWN R. WALN
CHECKED S. POSTMA

RECORD DRAWING

This record drawing has been prepared, entirely or in part on the basis of unverified information compiled and furnished by others to the preparer who is not responsible for any inaccuracies, errors or omissions which may have been incorporated into the document as a result

MWH

UTAH DIVISION OF WILDLIFE RESOURCES
WHITEROCKS STATE FISH HATCHERY

ACCESS ROAD CROSS SECTIONS - 2

SHEET C-8

1690703

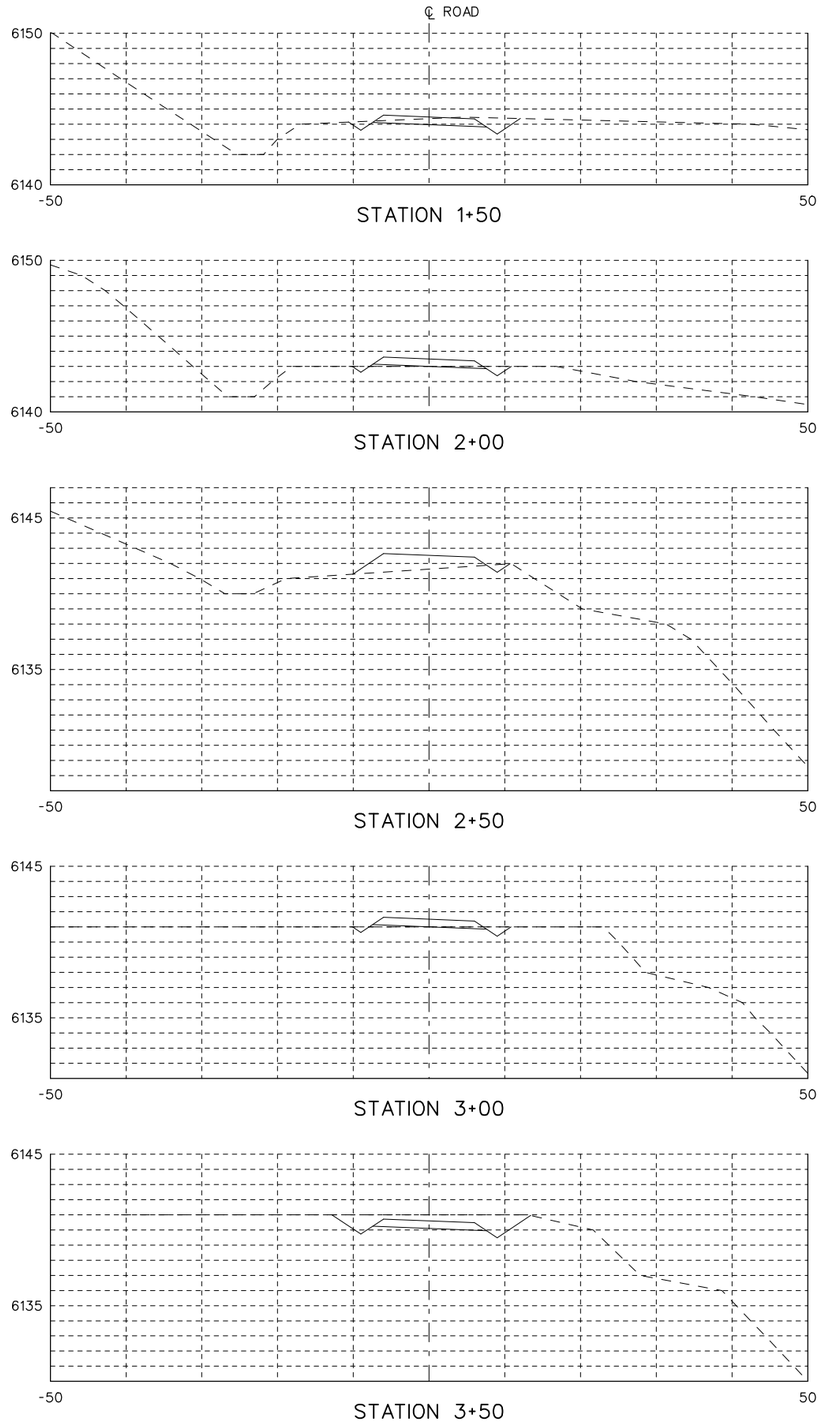

FUTURE ACCESS ROAD

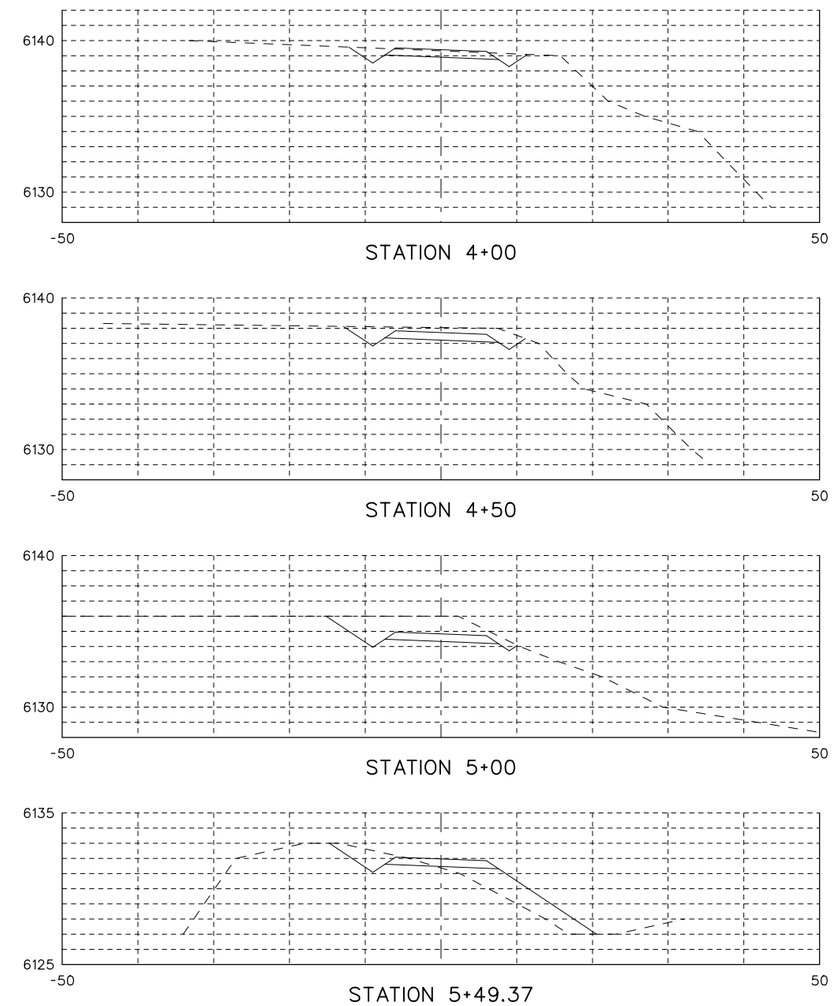

REV	DATE	BY	DESCRIPTION
R	3/07	MRW	RECORD DRAWING

SCALE: 1"=10' HORIZ, 1"=5' VERT

WARNING: 0 ½ 1 — IF THIS BAR DOES NOT MEASURE 1" THEN DRAWING IS NOT TO SCALE

DESIGNED S. ROMNEY
DRAWN R. WALN
CHECKED S. POSTMA

RECORD DRAWING

This record drawing has been prepared, entirely or in part on the basis of unverified information compiled and furnished by others to the preparer who is not responsible for any inaccuracies, errors or omissions which may have been incorporated into the document as a result

MWH

UTAH DIVISION OF WILDLIFE RESOURCES
WHITEROCKS STATE FISH HATCHERY

ACCESS ROAD CROSS SECTIONS - 3

SHEET C-9

1690703

File: wrfhc09-RD.dgn Model: Default ColorTable: bw.ctb DesignScript: LightScreen.pen PlotScale: 19.99996:1 User: KaiCrick Plot Date: 18-DEC-2007 09:38

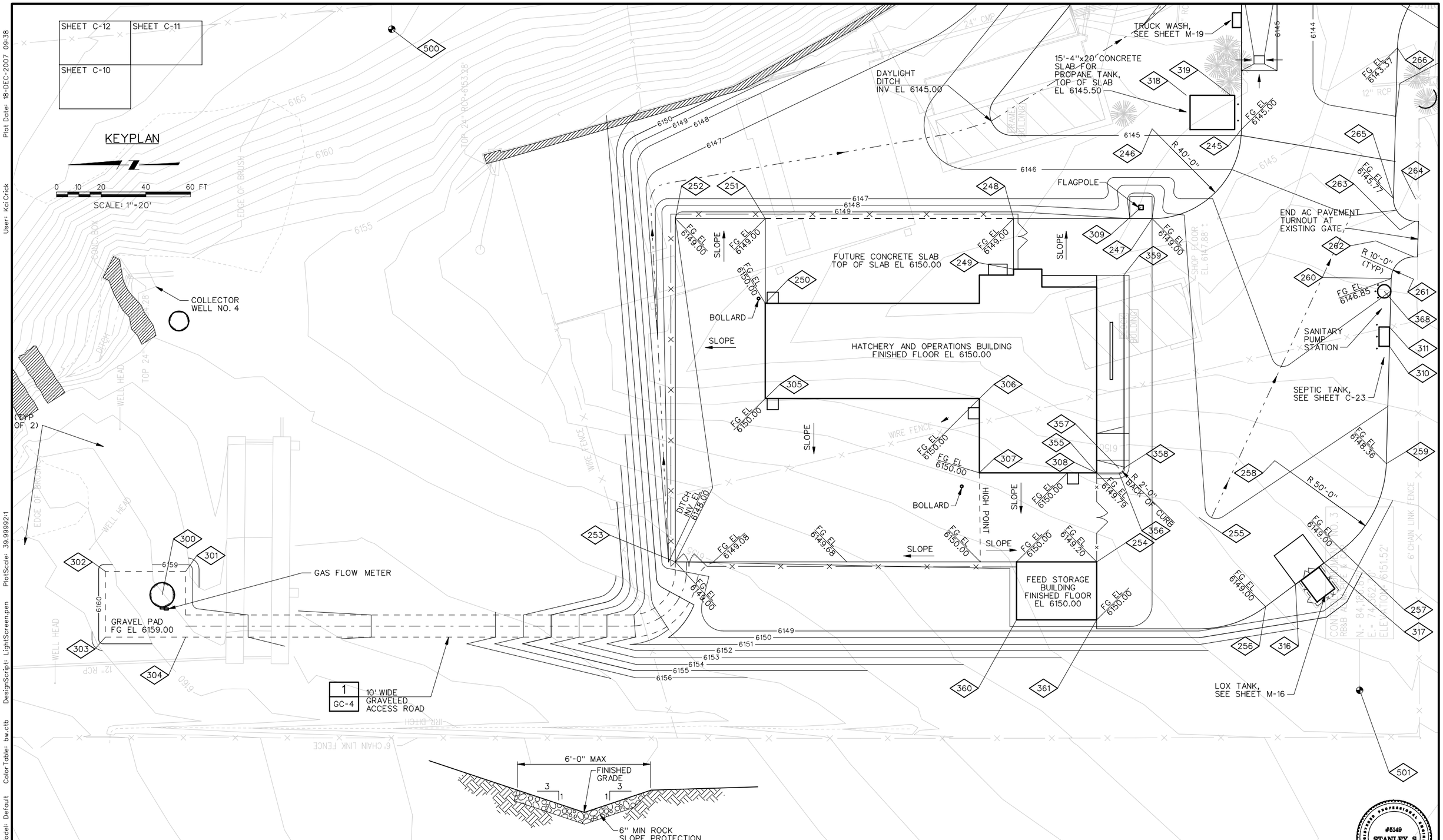

REV	DATE	BY	DESCRIPTION
R	3/07	MRW	RECORD DRAWING

SCALE 1"=20'

WARNING: 0 ½ 1 — IF THIS BAR DOES NOT MEASURE 1" THEN DRAWING IS NOT TO SCALE

DESIGNED S. ROMNEY
DRAWN R. WALN
CHECKED S. POSTMA

RECORD DRAWING

This record drawing has been prepared, entirely or in part on the basis of unverified information compiled and furnished by others to the preparer who is not responsible for any inaccuracies, errors or omissions which may have been incorporated into the document as a result

MWH

UTAH DIVISION OF WILDLIFE RESOURCES
WHITEROCKS STATE FISH HATCHERY

PAVING AND GRADING PLAN - 1

SHEET C-10

1690703

#5149 STANLEY S. POSTMA — REGISTERED PROFESSIONAL ENGINEER — STATE OF UTAH

File: wrfhc10-RD.dgn Model: Default ColorTable: bw.ctb DesignScript: LightScreen.pen PlotScale: 39.999921 User: KaiCrick Plot Date: 18-DEC-2007 09:38

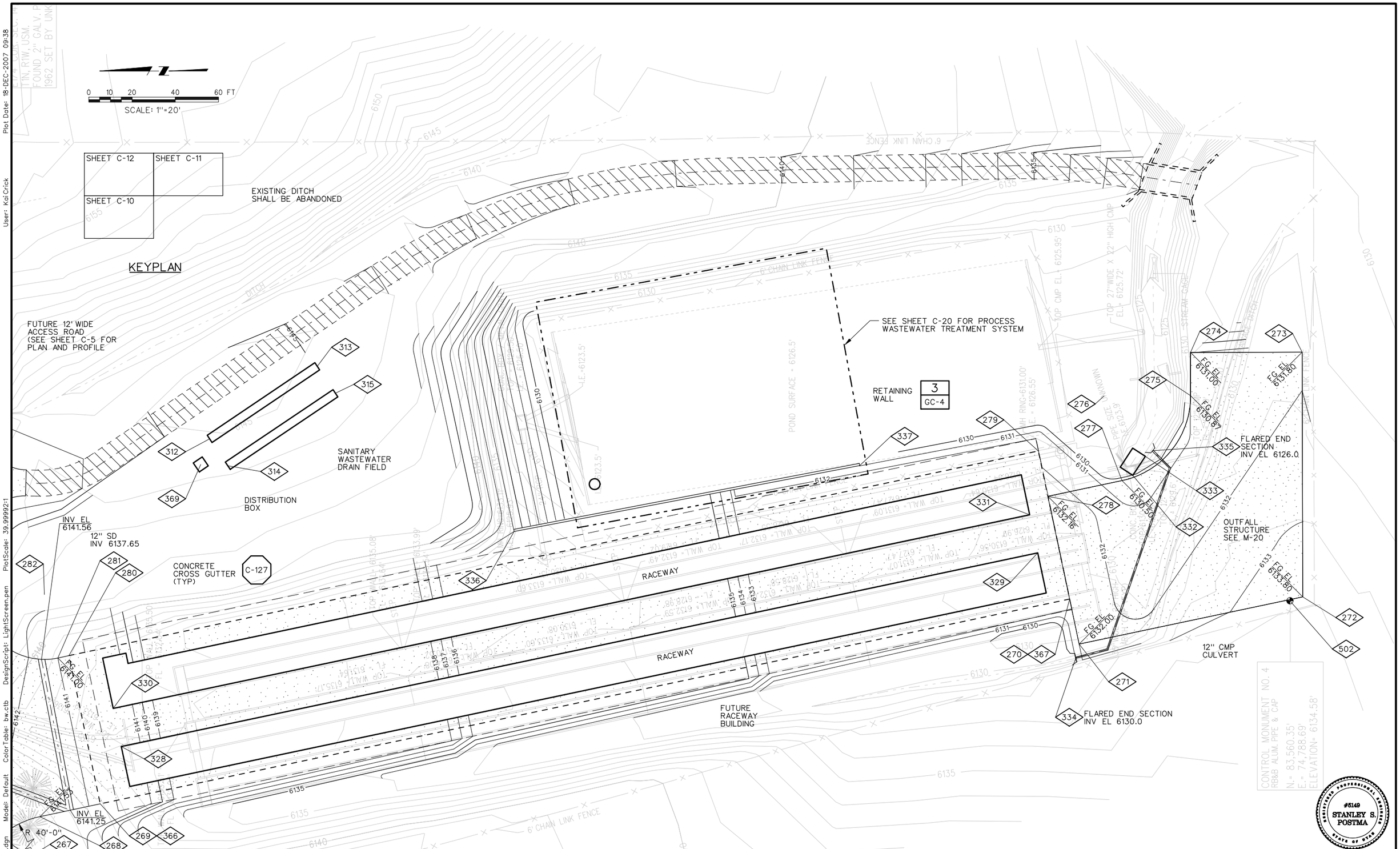

REV	DATE	BY	DESCRIPTION
R	3/07	MRW	RECORD DRAWING

SCALE 1"=20'

WARNING 0 ½ 1 IF THIS BAR DOES NOT MEASURE 1" THEN DRAWING IS NOT TO SCALE

DESIGNED S. ROMNEY
DRAWN R. WALN
CHECKED S. POSTMA

RECORD DRAWING

This record drawing has been prepared, entirely or in part on the basis of unverified information compiled and furnished by others to the preparer who is not responsible for any inaccuracies, errors or omissions which may have been incorporated into the document as a result

MWH

UTAH DIVISION OF WILDLIFE RESOURCES
WHITEROCKS STATE FISH HATCHERY

PAVING AND GRADING PLAN - 2

SHEET C-11

1690703

File: wrfhc11-RD.dgn Model: Default ColorTable: bw.ctb DesignScript: LightScreen.pen PlotScale: 39.99992:1 User: KaiCrick Plot Date: 18-DEC-2007 09:38

Plot Date: 18-DEC-2007 09:38
User: KaiCrick
PlotScale: 39.99992:1
DesignScript: LightScreen.pen
ColorTable: bw.ctb
Model: Default
File: wrfhc12-RD.dgn

0 10 20 40 60 FT
SCALE: 1"=20'

SHEET C-12 | SHEET C-11
SHEET C-10

KEYPLAN

WELL HEAD
NEW PUMP HOUSE
AIR VALVE
6' CHAIN LINK FENCE

FUTURE REALIGNMENT OF 12' WIDE ACCESS ROAD TO FUTURE RESIDENCES

14' WIDE ACCESS ROAD (SEE SHEET C-4 FOR PLAN AND PROFILE)

FRAME GARAGE
FUTURE RESIDENCE
FRAME HOUSE
SHED
CONC. PUMP HOUSE
4' CHAIN LINK FENCE
FEED BUILDING
TOW 6147 (TYP)
FF 6145.43
TOW 6145
FG EL 6147.57
FG EL 6146.00
FG EL 6145.68
FG EL 6145.00
FG EL 6144.43
LHO SEE M-18 EL 6145.50
INV EL 6143.50
C-127
364
365
241
240
242
284
283
244
327
326
325
324
323
322
362
363
6175
6170
6165
6160
6155
6150
6147
6146
6145
6144
6143
CONTROL MONUMENT NO. 2
RB&B ALUM. PIPE & CAP
N= 84,620.98'
E= 74,659.28'
ELEVATION= 6166.69'
WIRE FENCE
SEPTIC TANK MANHOLES ?
CONC. DITCH
FRAME GARAGE

REGISTERED PROFESSIONAL ENGINEER #5149 STANLEY S. POSTMA STATE OF UTAH

REV	DATE	BY	DESCRIPTION
R	3/07	MRW	RECORD DRAWING

SCALE 1"=20'

WARNING 0 ½ 1 IF THIS BAR DOES NOT MEASURE 1" THEN DRAWING IS NOT TO SCALE

DESIGNED S. ROMNEY
DRAWN R. WALN
CHECKED S. POSTMA

RECORD DRAWING

This record drawing has been prepared, entirely or in part on the basis of unverified information compiled and furnished by others to the preparer who is not responsible for any inaccuracies, errors or omissions which may have been incorporated into the document as a result

MWH

UTAH DIVISION OF WILDLIFE RESOURCES
WHITEROCKS STATE FISH HATCHERY

PAVING AND GRADING PLAN - 3

SHEET C-12

1690703

Plot Date: 18-DEC-2007 09:38
User: KaiCrick
PlotScale: 119.99976:1
DesignScript: LightScreen.pen
ColorTable: bw.ctb
Model: Default
File: wrfhc13-RD.dgn

0 30 60 120 180 FT
SCALE: 1"=60'

FACILITIES LEGEND:

PHASE 1

- A — HATCHERY BUILDING
- B — AERATION STRUCTURE NO. 1
- C — LOX TANK
- D — TRUCK WASH STATION
- E — SEPTIC TANK
- F — SANITARY WASTEWATER LEACH FIELD
- G — HILLSIDE SPRING COLLECTION
- H — SPRING COLLECTION BOX
- I — AERATION STRUCTURE NO. 2
- J — PROPANE TANK
- K — LHO STRUCTURE
- R — FEED STORAGE BUILDING

PHASE 2

- L — LHO EQUIPMENT
- M — RACEWAYS
- N — RACEWAYS SOLIDS TREATMENT BASIN
- O — OUTFALL STRUCTURE
- P — AC PAVEMENT

PHASE 3

- S — FUTURE WELL
- T — FUTURE RESIDENCE (TYP OF 2)
- U — FUTURE RACEWAY BUILDING

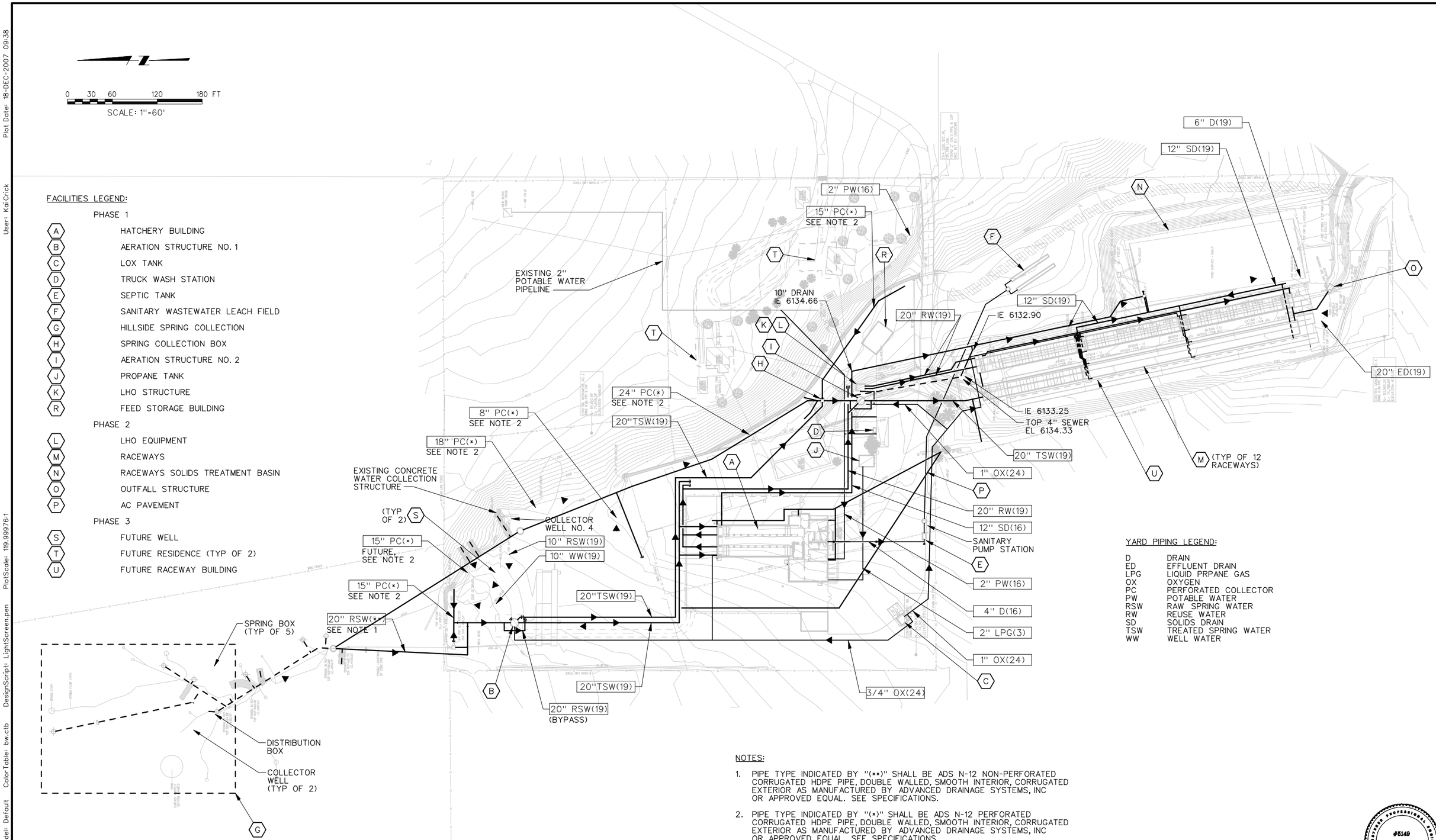

YARD PIPING LEGEND:

D	DRAIN
ED	EFFLUENT DRAIN
LPG	LIQUID PRPANE GAS
OX	OXYGEN
PC	PERFORATED COLLECTOR
PW	POTABLE WATER
RSW	RAW SPRING WATER
RW	REUSE WATER
SD	SOLIDS DRAIN
TSW	TREATED SPRING WATER
WW	WELL WATER

NOTES:

1. PIPE TYPE INDICATED BY "(**)" SHALL BE ADS N-12 NON-PERFORATED CORRUGATED HDPE PIPE, DOUBLE WALLED, SMOOTH INTERIOR, CORRUGATED EXTERIOR AS MANUFACTURED BY ADVANCED DRAINAGE SYSTEMS, INC OR APPROVED EQUAL. SEE SPECIFICATIONS.
2. PIPE TYPE INDICATED BY "(*)" SHALL BE ADS N-12 PERFORATED CORRUGATED HDPE PIPE, DOUBLE WALLED, SMOOTH INTERIOR, CORRUGATED EXTERIOR AS MANUFACTURED BY ADVANCED DRAINAGE SYSTEMS, INC OR APPROVED EQUAL. SEE SPECIFICATIONS.
3. GM / GC VALUE ENGINEERING CHANGE. PROVIDE 2 OXYGEN ISOLATION BALL VALVES AND 2 FIBERGLASS IRRIGATION VALVE BOXES. ONE AT AREATION #1, AND ONE AT AREATION #2.

REGISTERED PROFESSIONAL ENGINEER #5149 STANLEY S. POSTMA STATE OF UTAH

REV	DATE	BY	DESCRIPTION
R	3/07	MRW	RECORD DRAWING

SCALE 1"=60'

WARNING: 0 ½ 1 — IF THIS BAR DOES NOT MEASURE 1" THEN DRAWING IS NOT TO SCALE

DESIGNED
DRAWN R. WALN
CHECKED E. CRYER

RECORD DRAWING
This record drawing has been prepared, entirely or in part on the basis of unverified information compiled and furnished by others to the preparer who is not responsible for any inaccuracies, errors or omissions which may have been incorporated into the document as a result

MWH

UTAH DIVISION OF WILDLIFE RESOURCES
WHITEROCKS STATE FISH HATCHERY

OVERALL YARD PIPING PLAN

SHEET C-13
1690703

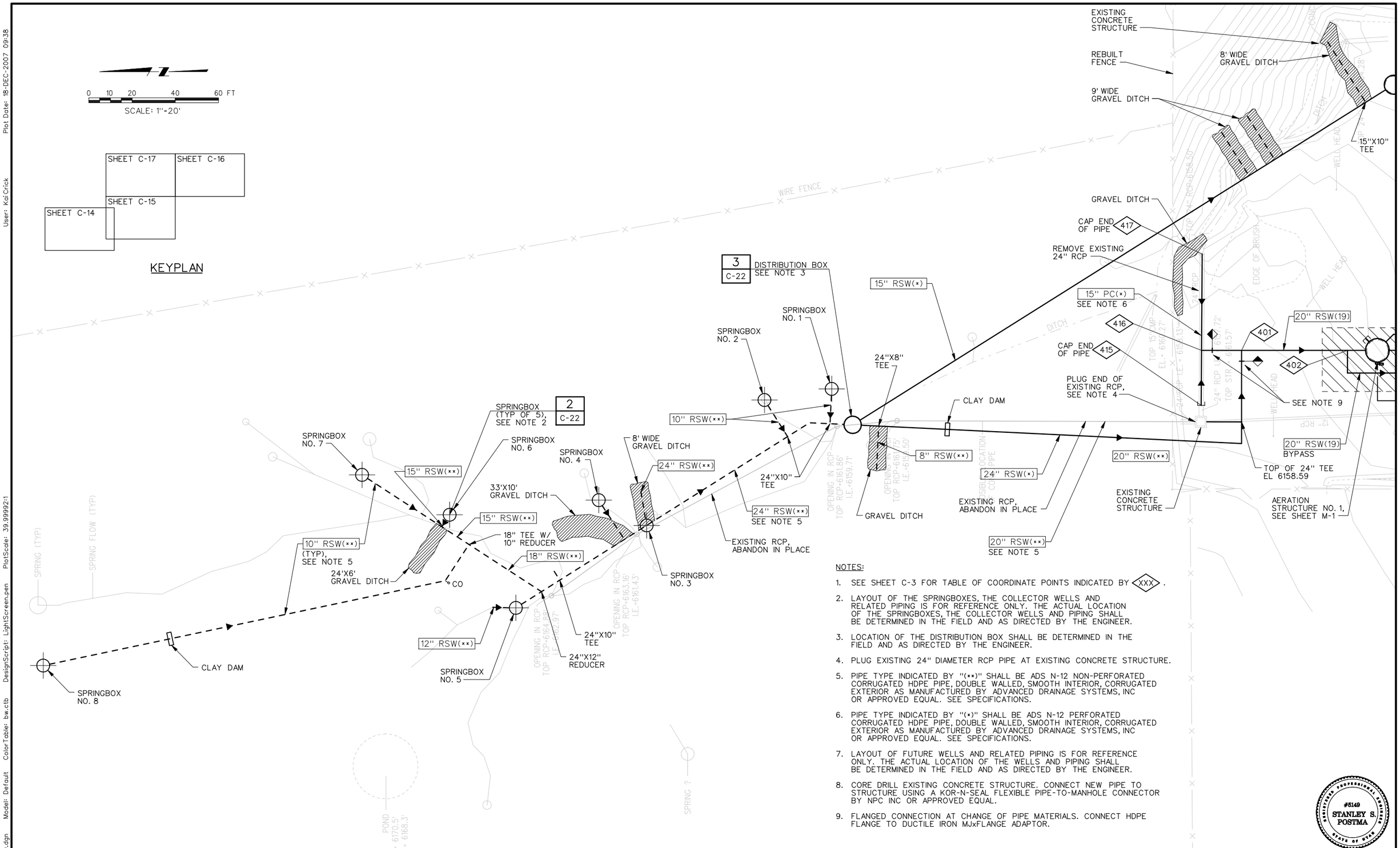

NOTES:

1. SEE SHEET C-3 FOR TABLE OF COORDINATE POINTS INDICATED BY XXX.
2. LAYOUT OF THE SPRINGBOXES, THE COLLECTOR WELLS AND RELATED PIPING IS FOR REFERENCE ONLY. THE ACTUAL LOCATION OF THE SPRINGBOXES, THE COLLECTOR WELLS AND PIPING SHALL BE DETERMINED IN THE FIELD AND AS DIRECTED BY THE ENGINEER.
3. LOCATION OF THE DISTRIBUTION BOX SHALL BE DETERMINED IN THE FIELD AND AS DIRECTED BY THE ENGINEER.
4. PLUG EXISTING 24" DIAMETER RCP PIPE AT EXISTING CONCRETE STRUCTURE.
5. PIPE TYPE INDICATED BY "(xx)" SHALL BE ADS N-12 NON-PERFORATED CORRUGATED HDPE PIPE, DOUBLE WALLED, SMOOTH INTERIOR, CORRUGATED EXTERIOR AS MANUFACTURED BY ADVANCED DRAINAGE SYSTEMS, INC OR APPROVED EQUAL. SEE SPECIFICATIONS.
6. PIPE TYPE INDICATED BY "(x)" SHALL BE ADS N-12 PERFORATED CORRUGATED HDPE PIPE, DOUBLE WALLED, SMOOTH INTERIOR, CORRUGATED EXTERIOR AS MANUFACTURED BY ADVANCED DRAINAGE SYSTEMS, INC OR APPROVED EQUAL. SEE SPECIFICATIONS.
7. LAYOUT OF FUTURE WELLS AND RELATED PIPING IS FOR REFERENCE ONLY. THE ACTUAL LOCATION OF THE WELLS AND PIPING SHALL BE DETERMINED IN THE FIELD AND AS DIRECTED BY THE ENGINEER.
8. CORE DRILL EXISTING CONCRETE STRUCTURE. CONNECT NEW PIPE TO STRUCTURE USING A KOR-N-SEAL FLEXIBLE PIPE-TO-MANHOLE CONNECTOR BY NPC INC OR APPROVED EQUAL.
9. FLANGED CONNECTION AT CHANGE OF PIPE MATERIALS. CONNECT HDPE FLANGE TO DUCTILE IRON MJxFLANGE ADAPTOR.

REGISTERED PROFESSIONAL ENGINEER #5149 STANLEY S. POSTMA STATE OF UTAH

REV	DATE	BY	DESCRIPTION
R	3/07	MRW	RECORD DRAWING

SCALE 1"=20'

WARNING 0 ½ 1 IF THIS BAR DOES NOT MEASURE 1" THEN DRAWING IS NOT TO SCALE

DESIGNED P. NAYLOR
DRAWN R. WALN
CHECKED S. POSTMA

RECORD DRAWING

This record drawing has been prepared, entirely or in part on the basis of unverified information compiled and furnished by others to the preparer who is not responsible for any inaccuracies, errors or omissions which may have been incorporated into the document as a result

MWH

UTAH DIVISION OF WILDLIFE RESOURCES

WHITEROCKS STATE FISH HATCHERY

HILLSIDE SPRING COLLECTION PIPING PLAN

SHEET C-14

1690703

File: wrfhc14-RD.dgn Model: Default ColorTable: bw.ctb DesignScript: LightScreen.pen PlotScale: 39.99992:1 User: KaiCrick Plot Date: 18-DEC-2007 09:38

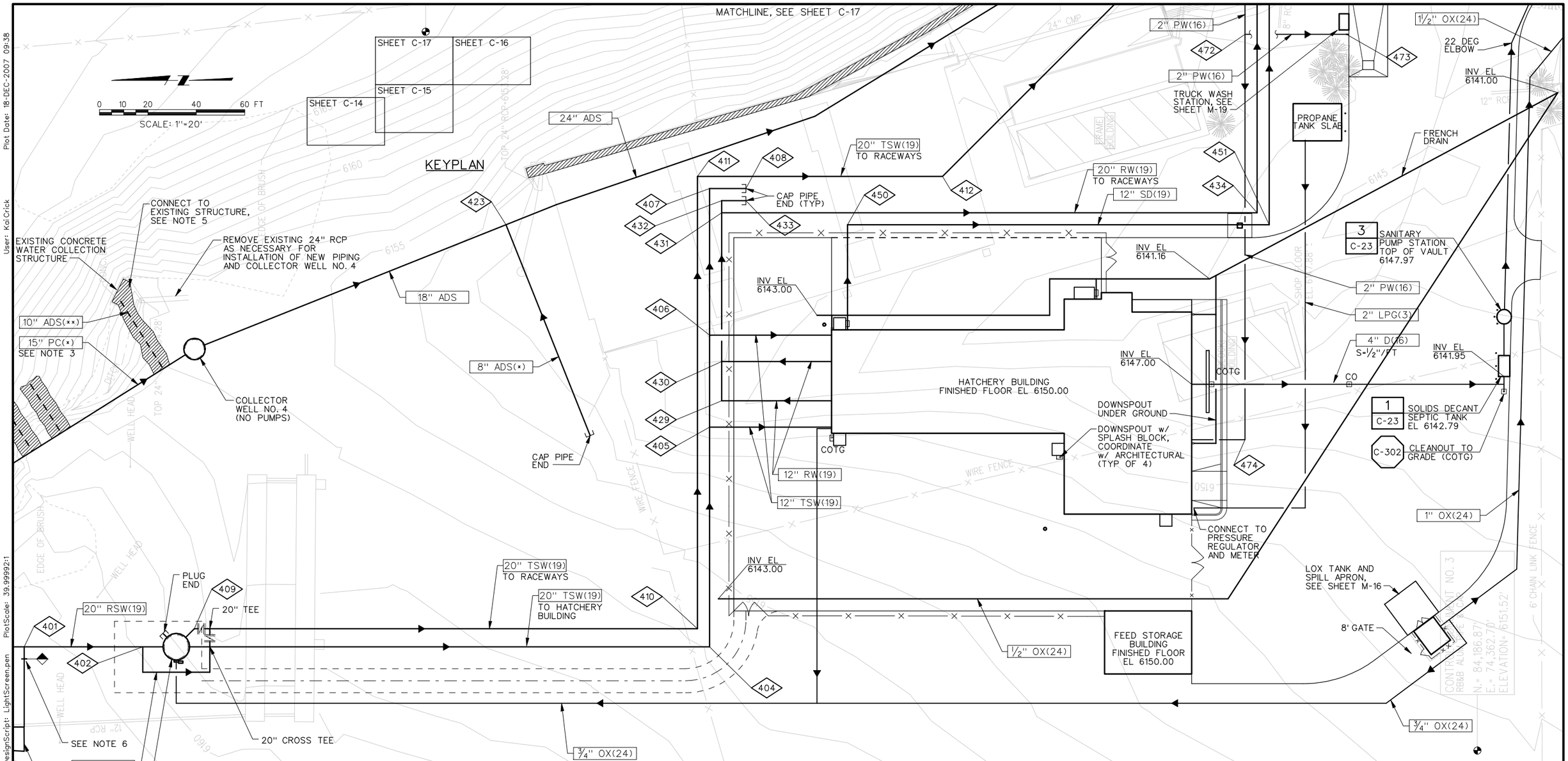

NOTES:

1. SEE SHEET C-3 FOR TABLE OF COORDINATE POINTS INDICATED BY ⟨XXX⟩.
2. PIPE TYPE INDICATED BY "(**)" SHALL BE ADS N-12 NON-PERFORATED CORRUGATED HDPE PIPE, DOUBLE WALLED, SMOOTH INTERIOR, CORRUGATED EXTERIOR AS MANUFACTURED BY ADVANCED DRAINAGE SYSTEMS, INC OR APPROVED EQUAL. SEE SPECIFICATIONS.
3. PIPE TYPE INDICATED BY "(*)" SHALL BE ADS N-12 PERFORATED CORRUGATED HDPE PIPE, DOUBLE WALLED, SMOOTH INTERIOR, CORRUGATED EXTERIOR AS MANUFACTURED BY ADVANCED DRAINAGE SYSTEMS, INC OR APPROVED EQUAL. SEE SPECIFICATIONS.
4. LAYOUT OF FUTURE WELLS AND RELATED PIPING IS FOR REFERENCE ONLY. THE ACTUAL LOCATION OF THE WELLS AND PIPING SHALL BE DETERMINED IN THE FIELD AND AS DIRECTED BY THE ENGINEER.
5. CORE DRILL EXISTING CONCRETE STRUCTURE. CONNECT NEW PIPE TO STRUCTURE USING A KOR-N-SEAL FLEXIBLE PIPE-TO-MANHOLE CONNECTOR BY NPC INC OR APPROVED EQUAL.
6. FLANGED CONNECTION AT CHANGE OF PIPE MATERIALS. CONNECT HDPE FLANGE TO DUCTILE IRON MJxFLANGE ADAPTOR.

REGISTERED PROFESSIONAL ENGINEER #5149 STANLEY S. POSTMA STATE OF UTAH

REV	DATE	BY	DESCRIPTION
R	3/07	MRW	RECORD DRAWING

SCALE 1"=20'

WARNING 0 ½ 1 — IF THIS BAR DOES NOT MEASURE 1" THEN DRAWING IS NOT TO SCALE

DESIGNED
DRAWN R. WALN
CHECKED E. CRYER

RECORD DRAWING

This record drawing has been prepared, entirely or in part on the basis of unverified information compiled and furnished by others to the preparer who is not responsible for any inaccuracies, errors or omissions which may have been incorporated into the document as a result

MWH

UTAH DIVISION OF WILDLIFE RESOURCES
WHITEROCKS STATE FISH HATCHERY

YARD PIPING PLAN - 1

SHEET C-15

1690703

Plot Date: 18-DEC-2007 09:38
User: KaiCrick
PlotScale: 39.99992:1
DesignScript: LightScreen.pen
ColorTable: bw.ctb
Model: Default
File: wrfhc15-RD.dgn

NOTES:

1. THE CONTRACTOR SHALL LOCATE EXISTING 12" PIPE, CONFIRM LOCATION AND POSSIBLE CONFLICTS.
2. THE CONTRACTOR SHALL CONNECT 12" D(19) BETWEEN THE EXISTING 12" PIPE AND 20" TWS(19). CAP EXISTING 12" PIPE DOWNSTREAM OF THE CONNECTION.
3. FOR PHASE 2 OF THE PROJECT THE CONTRACTOR SHALL CONNECT 12" SD(19), 2 PIPES, TO NEW MANHOLE LOCATED ON THE EXISTING 24" RCP. DEMOLISH EXISTING 24" RCP BETWEEN THE EXISTING MANHOLE AND THE NEW MANHOLE.

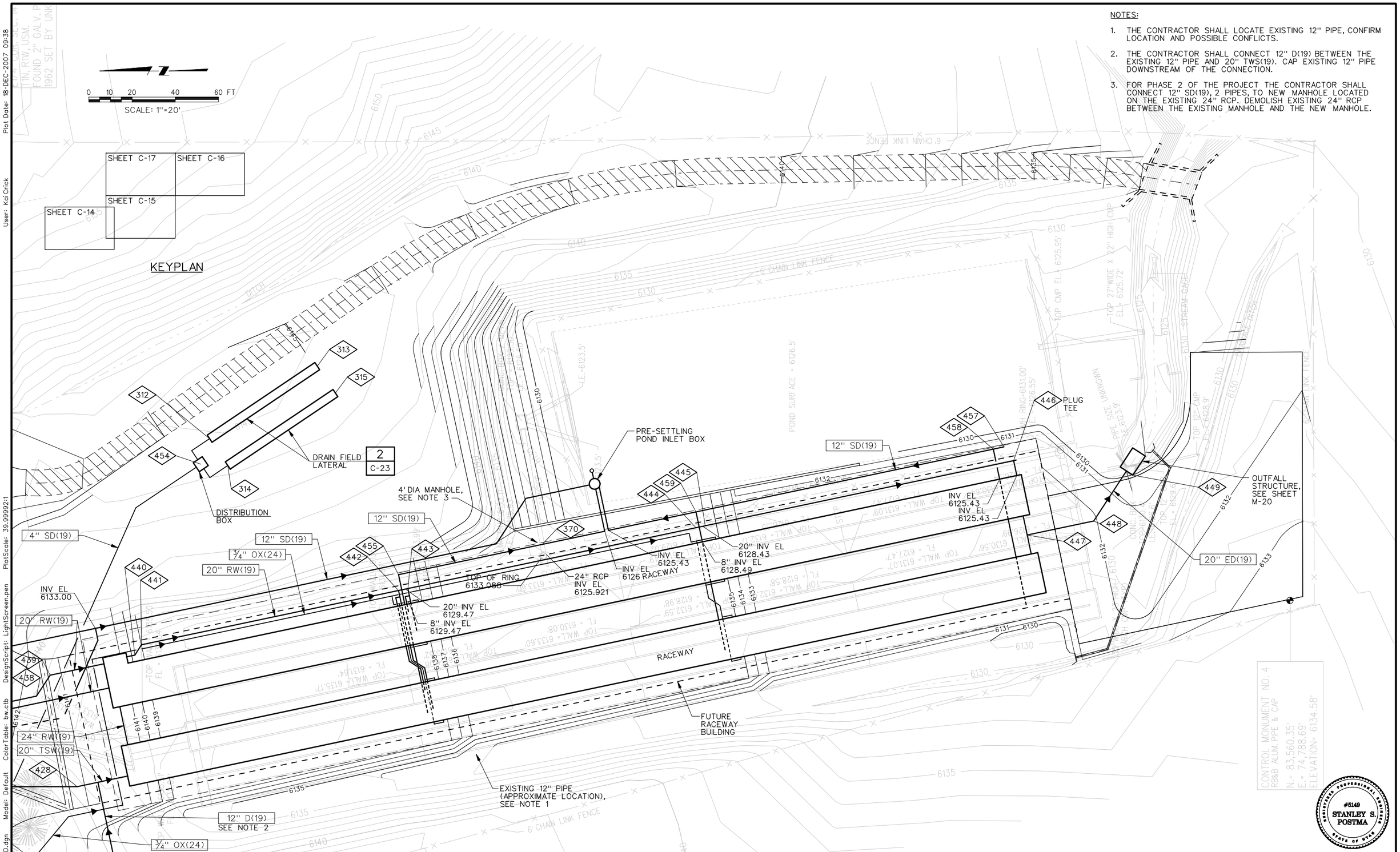

REV	DATE	BY	DESCRIPTION
R	3/07	MRW	RECORD DRAWING

SCALE 1"=20'

WARNING: 0 ½ 1 — IF THIS BAR DOES NOT MEASURE 1" THEN DRAWING IS NOT TO SCALE

DESIGNED S. ROMNEY
DRAWN R. WALN
CHECKED S. POSTMA

RECORD DRAWING

This record drawing has been prepared, entirely or in part on the basis of unverified information compiled and furnished by others to the preparer who is not responsible for any inaccuracies, errors or omissions which may have been incorporated into the document as a result

MWH

UTAH DIVISION OF WILDLIFE RESOURCES
WHITEROCKS STATE FISH HATCHERY

YARD PIPING PLAN - 2

SHEET C-16

1690703

File: wrfhc16-RD.dgn Model: Default ColorTable: bw.ctb DesignScript: LightScreen.pen PlotScale: 39.99992:1 User: KaiCrick Plot Date: 18-DEC-2007 09:38

Plot Date: 18-DEC-2007 09:39
User: KaiCrick
PlotScale: 39.99992:1
DesignScript: LightScreen.pen
ColorTable: bw.ctb
Model: Default
File: wrfhc17-RD.dgn

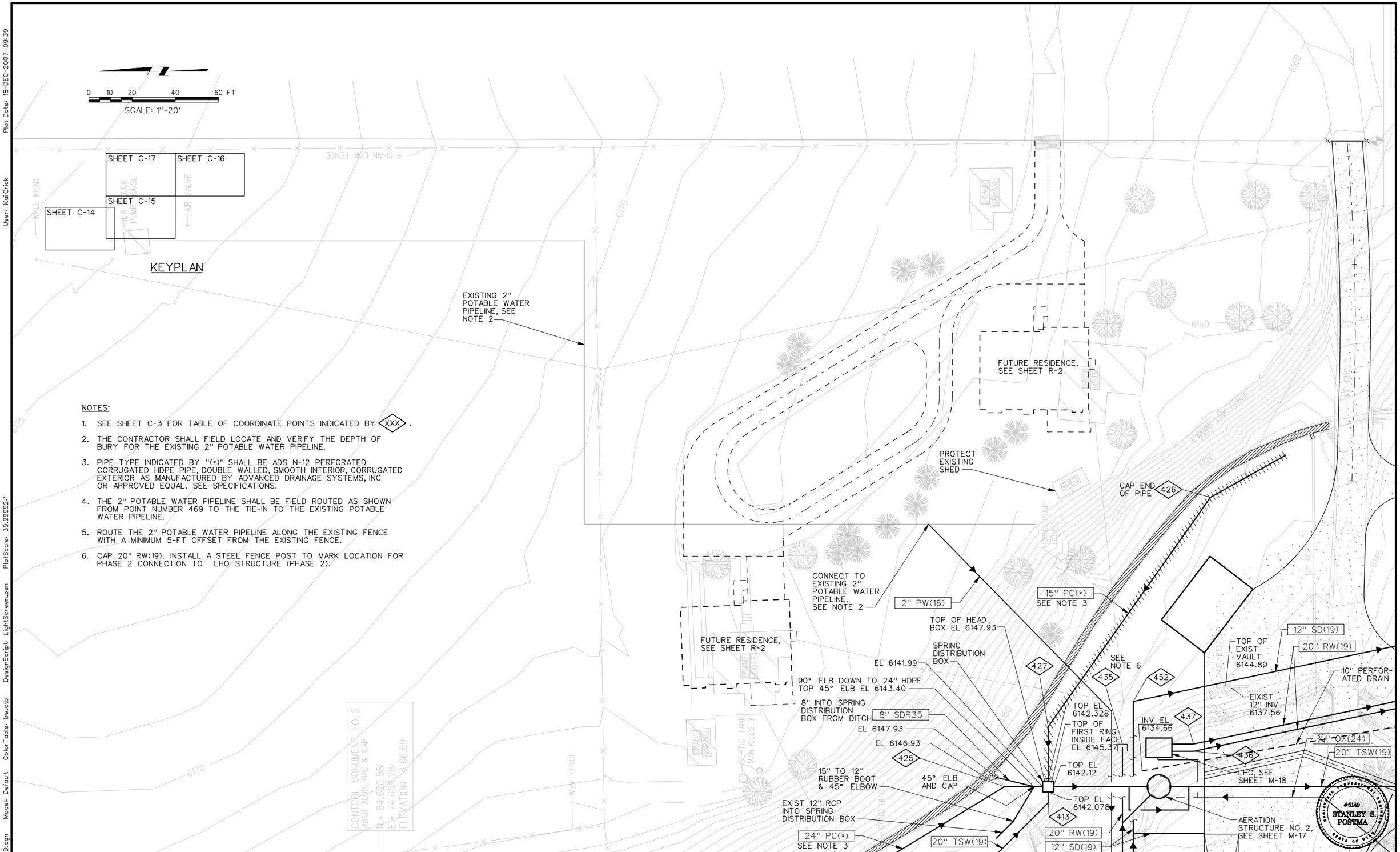

NOTES:

1. SEE SHEET C-3 FOR TABLE OF COORDINATE POINTS INDICATED BY ⟨XXX⟩.
2. THE CONTRACTOR SHALL FIELD LOCATE AND VERIFY THE DEPTH OF BURY FOR THE EXISTING 2" POTABLE WATER PIPELINE.
3. PIPE TYPE INDICATED BY "(*)" SHALL BE ADS N-12 PERFORATED CORRUGATED HDPE PIPE, DOUBLE WALLED, SMOOTH INTERIOR, CORRUGATED EXTERIOR AS MANUFACTURED BY ADVANCED DRAINAGE SYSTEMS, INC OR APPROVED EQUAL. SEE SPECIFICATIONS.
4. THE 2" POTABLE WATER PIPELINE SHALL BE FIELD ROUTED AS SHOWN FROM POINT NUMBER 469 TO THE TIE-IN TO THE EXISTING POTABLE WATER PIPELINE.
5. ROUTE THE 2" POTABLE WATER PIPELINE ALONG THE EXISTING FENCE WITH A MINIMUM 5-FT OFFSET FROM THE EXISTING FENCE.
6. CAP 20" RW(19). INSTALL A STEEL FENCE POST TO MARK LOCATION FOR PHASE 2 CONNECTION TO LHO STRUCTURE (PHASE 2).

REV	DATE	BY	DESCRIPTION
R	3/07	MRW	RECORD DRAWING

SCALE 1"=20'

WARNING: 0 ½ 1 — IF THIS BAR DOES NOT MEASURE 1" THEN DRAWING IS NOT TO SCALE

DESIGNED S. ROMNEY
DRAWN R. WALN
CHECKED S. POSTMA

RECORD DRAWING

This record drawing has been prepared, entirely or in part on the basis of unverified information compiled and furnished by others to the preparer who is not responsible for any inaccuracies, errors or omissions which may have been incorporated into the document as a result

MWH

UTAH DIVISION OF WILDLIFE RESOURCES
WHITEROCKS STATE FISH HATCHERY

YARD PIPING PLAN - 3

SHEET C-17

1690703

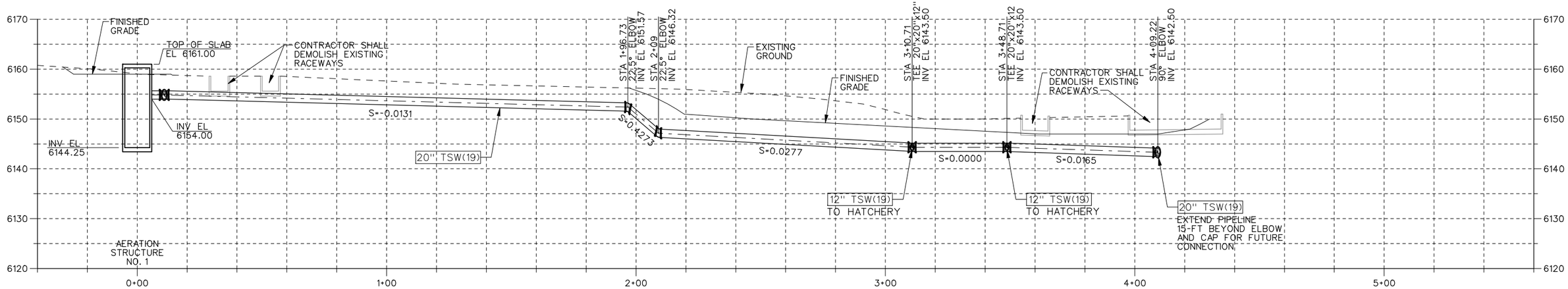

20" TSW PIPELINE PROFILE TO HATCHERY BUILDING

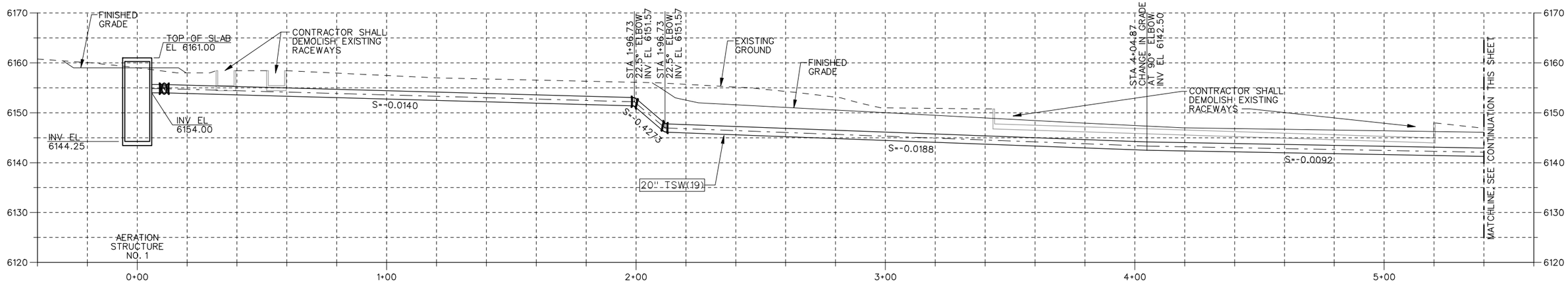

20" TSW PIPELINE PROFILE TO RACEWAYS 101, 102 AND 103

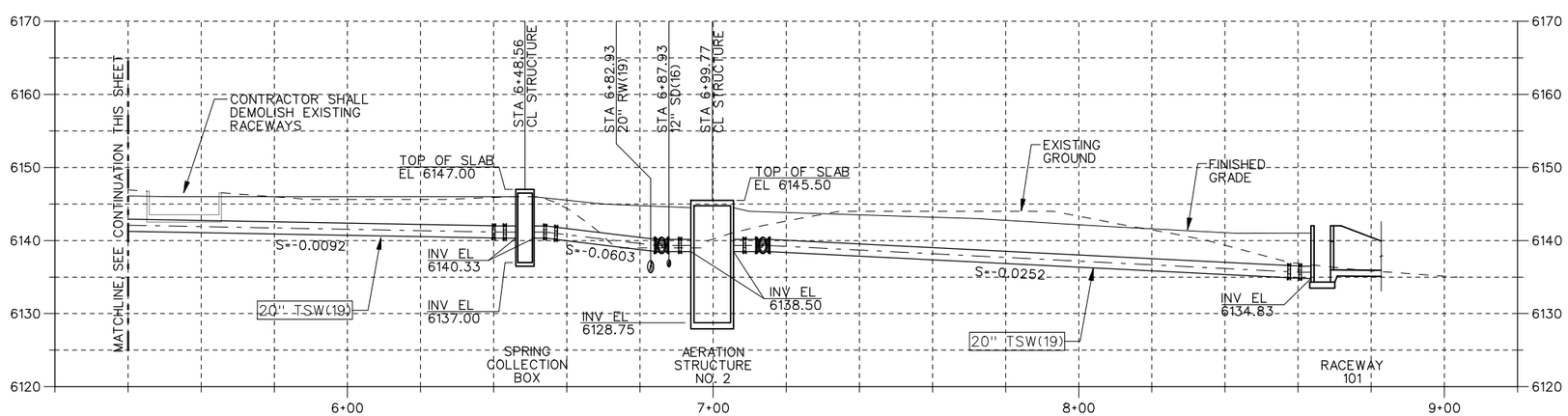

20" TSW PIPELINE PROFILE TO RACEWAYS 101, 102 AND 103

REGISTERED PROFESSIONAL ENGINEER #5149 STANLEY S. POSTMA STATE OF UTAH

REV	DATE	BY	DESCRIPTION
R	3/07	MRW	RECORD DRAWING

SCALE: 1"=20' HORIZ, 1"=10' VERT

WARNING: 0 ½ 1 — IF THIS BAR DOES NOT MEASURE 1" THEN DRAWING IS NOT TO SCALE

DESIGNED S. ROMNEY
DRAWN R. WALN
CHECKED S. POSTMA

RECORD DRAWING

This record drawing has been prepared, entirely or in part on the basis of unverified information compiled and furnished by others to the preparer who is not responsible for any inaccuracies, errors or omissions which may have been incorporated into the document as a result

MWH

UTAH DIVISION OF WILDLIFE RESOURCES
WHITEROCKS STATE FISH HATCHERY

YARD PIPING PROFILES - 1

SHEET C-18

1690703

File: wrfhc18-RD.dgn Model: Default ColorTable: bw.ctb DesignScript: LightScreen.pen PlotScale: 39.99992:1 User: KaiCrick Plot Date: 18-DEC-2007 09:39

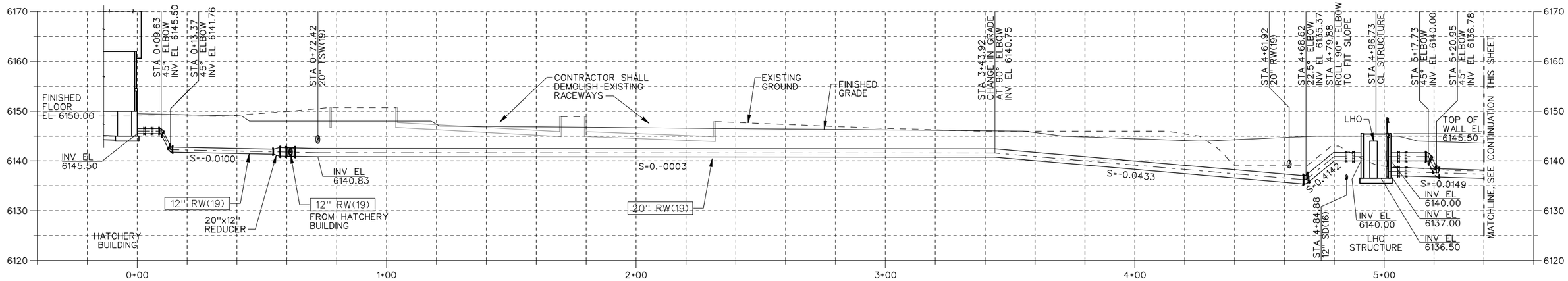

20" RW PIPELINE PROFILE TO RACEWAYS 201 THROUGH 403

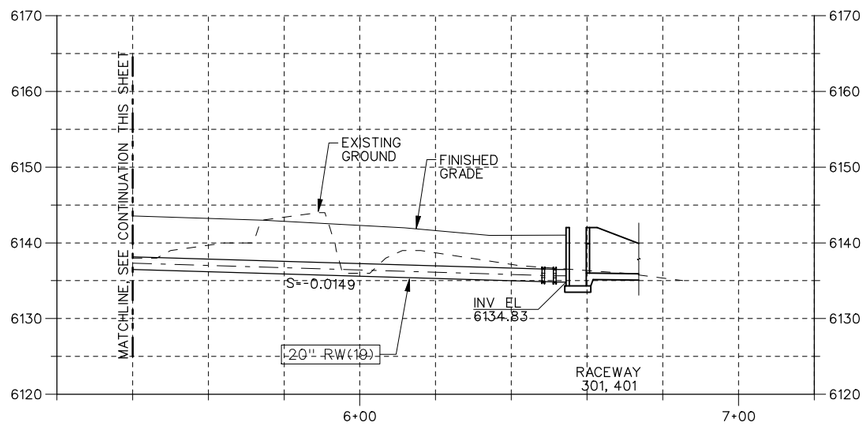

20" RW PIPELINE PROFILE TO RACEWAYS 201 THROUGH 403

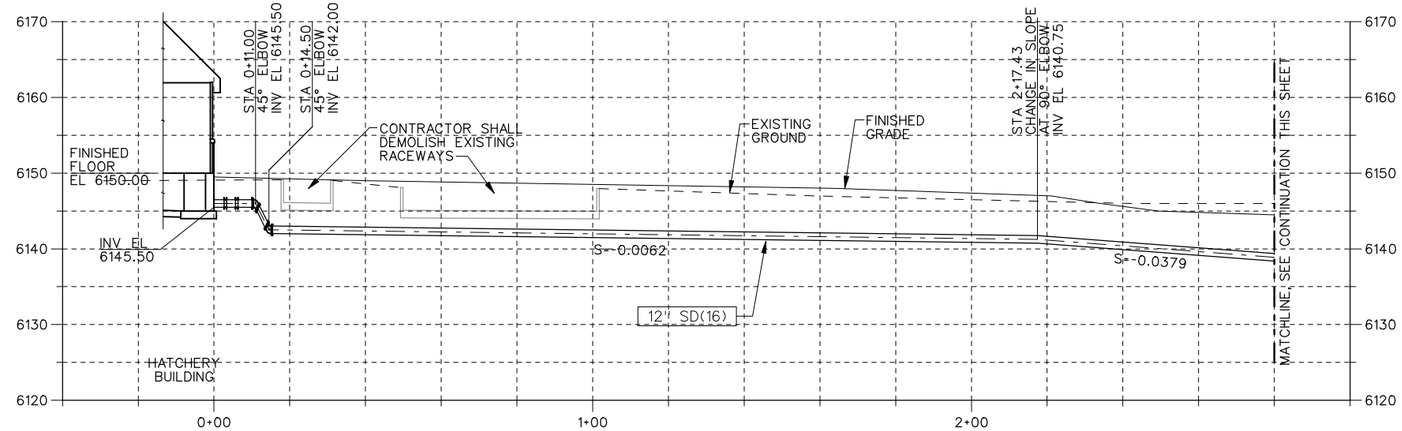

12" SD PIPELINE PROFILE TO PRE-SETTLING POND INLET BOX

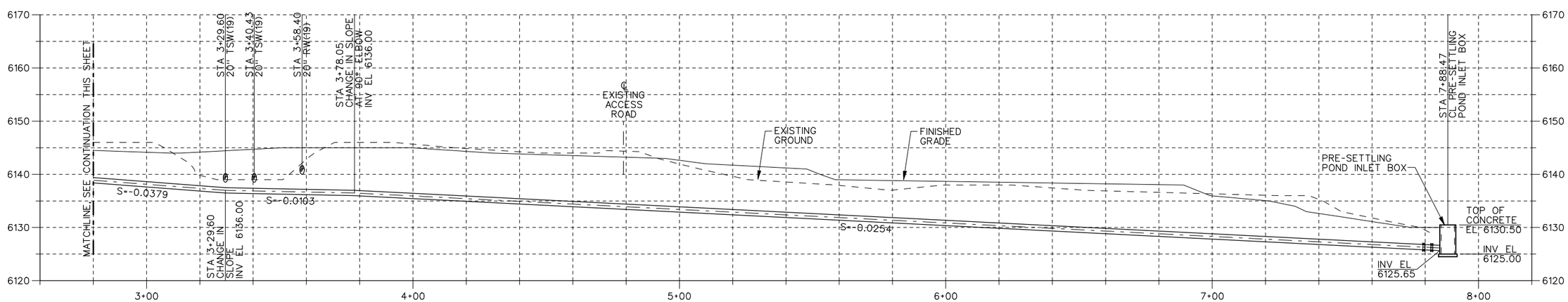

12" SD PIPELINE PROFILE TO PRE-SETTLING POND INLET BOX

REGISTERED PROFESSIONAL ENGINEER #5149 STANLEY S. POSTMA STATE OF UTAH

REV	DATE	BY	DESCRIPTION
R	3/07	MRW	RECORD DRAWING

SCALE: 1"=20' HORIZ, 1"=10' VERT

WARNING: 0 ½ 1 — IF THIS BAR DOES NOT MEASURE 1" THEN DRAWING IS NOT TO SCALE

DESIGNED S. ROMNEY
DRAWN R. WALN
CHECKED S. POSTMA

RECORD DRAWING

This record drawing has been prepared, entirely or in part on the basis of unverified information compiled and furnished by others to the preparer who is not responsible for any inaccuracies, errors or omissions which may have been incorporated into the document as a result

MWH

UTAH DIVISION OF WILDLIFE RESOURCES
WHITEROCKS STATE FISH HATCHERY

YARD PIPING PROFILES - 2

SHEET C-19

1690703

Plot Date: 18-DEC-2007 09:39
User: KaiCrick
PlotScale: 39.99992:1
DesignScript: LightScreen.pen
ColorTable: bw.ctb
Model: Default
File: wrfhc19-RD.dgn

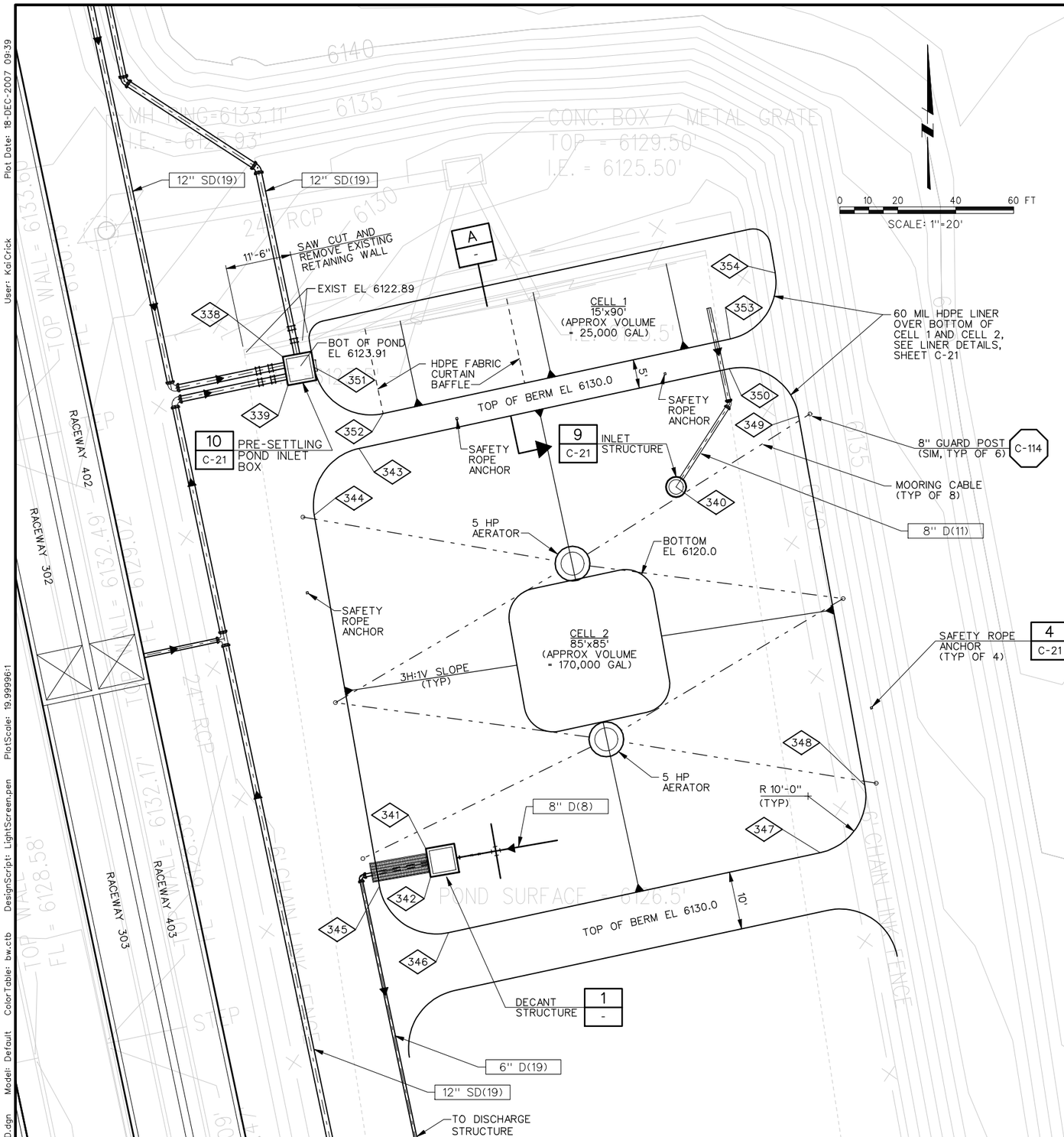

NOTES:

1. THE CONTRACTOR SHALL DRILL 5/8" DIA HOLES AT 12" ON CENTER ALONG BOTTOM OF 4" HDPE PIPE AND 2- 1/4" DIA HOLES ON TOP OF 4" DIA HDPE PIPE FOR AIR VENTS.
2. THE CONTRACTOR SHALL PROVIDE 6-FT LENGTH OF FLEXIBLE HOSE, SERIES H, WITH FLANGED ENDS, AS MANUFACTURED BY HOSE EXPRESS (866-397-4673) OR APPROVED EQUAL.
3. PROVIDE TWO SAFETY ROPES AT EACH POND SEE DETAIL 4/C-21.

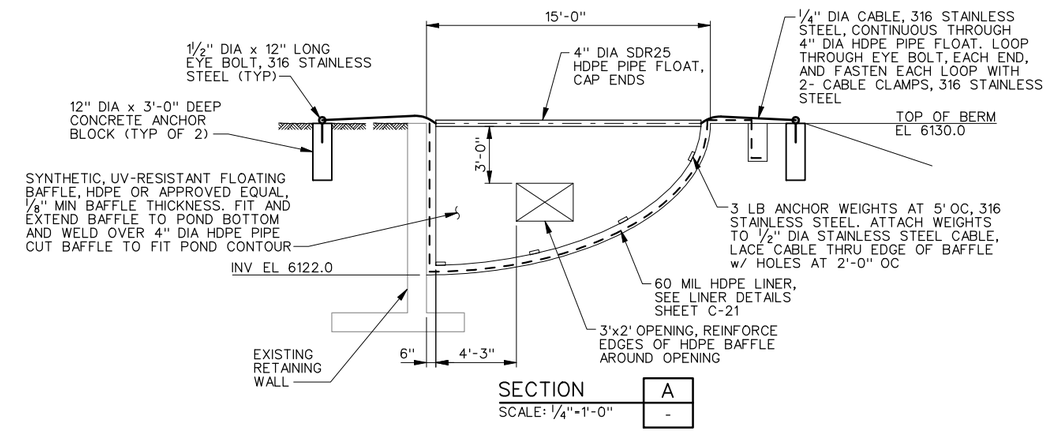

SECTION A -
SCALE: 1/4"=1'-0"

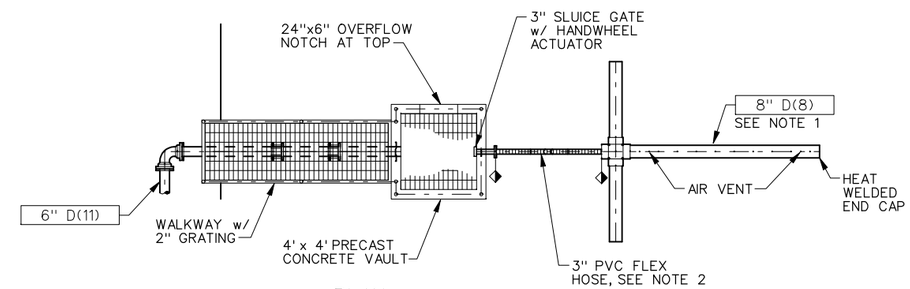

PLAN

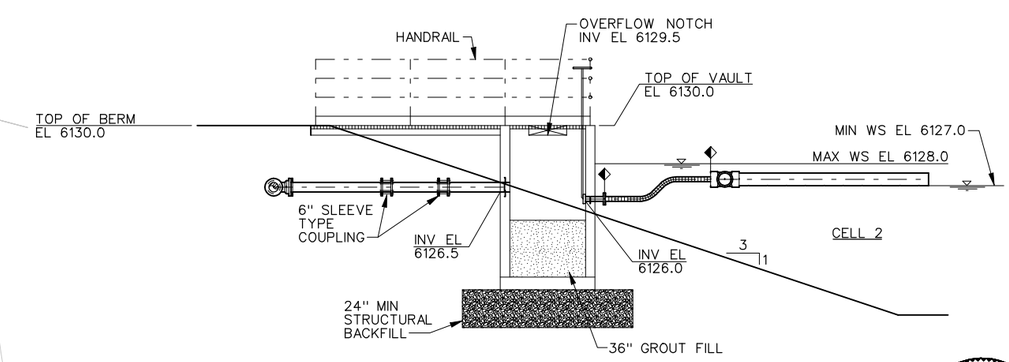

ELEVATION

DECANT STRUCTURE DETAIL 1 -
SCALE: 1/4"=1'-0"

REGISTERED PROFESSIONAL ENGINEER #5149 STANLEY S. POSTMA STATE OF UTAH

REV	DATE	BY	DESCRIPTION
R	3/07	MRW	RECORD DRAWING

SCALE 1"=10'

WARNING: 0 1/2 1 — IF THIS BAR DOES NOT MEASURE 1" THEN DRAWING IS NOT TO SCALE

DESIGNED D. BARBEAU
DRAWN R. WALN
CHECKED S. POSTMA

RECORD DRAWING

This record drawing has been prepared, entirely or in part on the basis of unverified information compiled and furnished by others to the preparer who is not responsible for any inaccuracies, errors or omissions which may have been incorporated into the document as a result

MWH

UTAH DIVISION OF WILDLIFE RESOURCES
WHITEROCKS STATE FISH HATCHERY

PROCESS WASTEWATER TREATMENT SYSTEM PLAN AND DETAIL

SHEET C-20

1690703

File: wrfhc20-RD.dgn Model: Default ColorTable: bw.ctb DesignScript: LightScreen.pen PlotScale: 19.99996:1 User: KaiCrick Plot Date: 18-DEC-2007 09:39

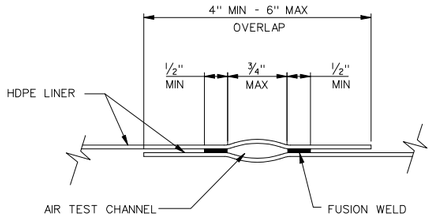

NOTE:

SEE SPECIFICATIONS FOR FUSION WELD REQUIREMENTS.

STANDARD FIELD JOINT 1 / -

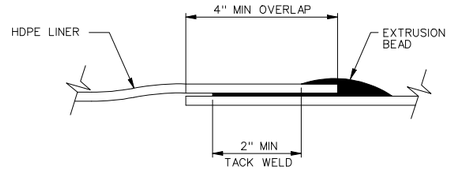

NOTES:
1. LINER SHEETS SHALL BE TACK-WELDED TOGETHER AT OVERLAP PRIOR TO EXTRUSION.
2. USE ONLY FOR REPAIRS, GAS VENTS, LINER ATTACHMENTS TO NEW CONCRETE, AND WHERE APPROVED BY ENGINEER.
3. SEE SPECIFICATIONS FOR EXTRUSION WELD REQUIREMENTS.

EXTRUSION WELD JOINT 2 / -

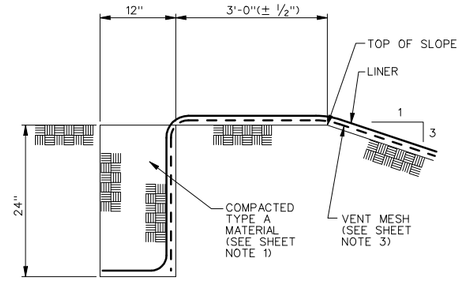

ANCHOR TRENCH 3 / -

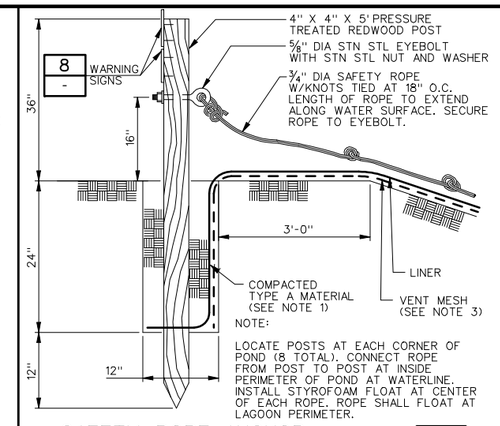

NOTE:

LOCATE POSTS AT EACH CORNER OF POND (8 TOTAL). CONNECT ROPE FROM POST TO POST AT INSIDE PERIMETER OF POND AT WATERLINE. INSTALL STYROFOAM FLOAT AT CENTER OF EACH ROPE. ROPE SHALL FLOAT AT LAGOON PERIMETER.

SAFETY ROPE ANCHOR 4 / -

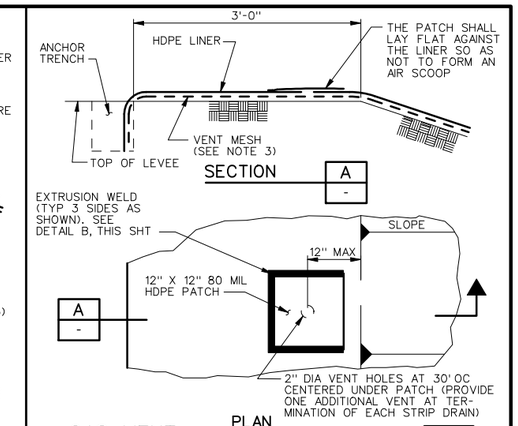

GAS VENT 5 / -

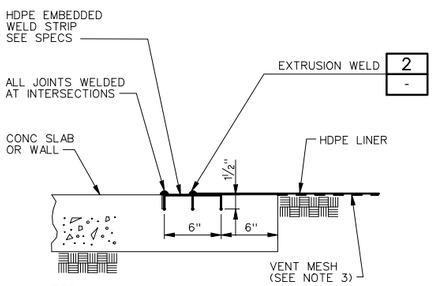

NOTE:

CONTRACTOR SHALL SUBMIT SHOP DRAWING FOR MODIFICATIONS TO ANCHOR DETAIL SHOWN. SOME LOCATIONS MAY REQUIRE SPECIAL ANCHOR CONFIGURATIONS. CONTRACTOR IS RESPONSIBLE FOR DETAILING.

TYPICAL LINER ATTACHMENT TO NEW CONCRETE 6 / -

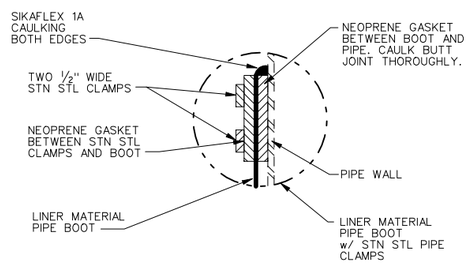

LINER BOOT DETAIL 7 / -

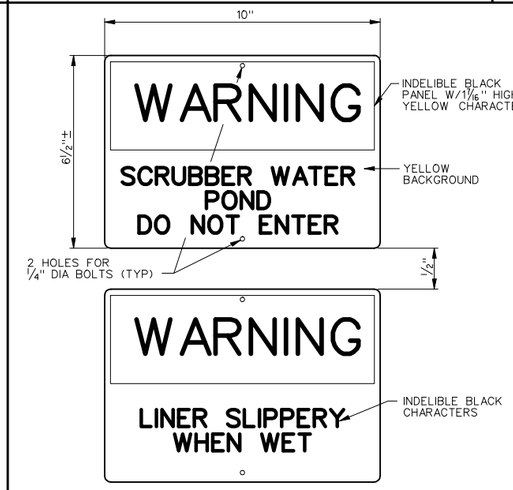

NOTES:

1. MATERIAL TO BE 1/8" THICK ACRYLIC OR PLASTIC, OR APPROVED EQUAL, AS MFR'D BY SETON NAME PLATE CORP., NEW HAVEN, CONN., 06505; W.H. BRADY CO., MILWAUKEE, WIS. 53201 OR EQUAL.
2. COLORS AND LETTER SIZES TO BE PER OSHA STDS. PAINT WITH HIGH-QUALITY SEMI-GLOSS EXTERIOR ALKYD ENAMEL.

WARNING SIGNS 8 / -

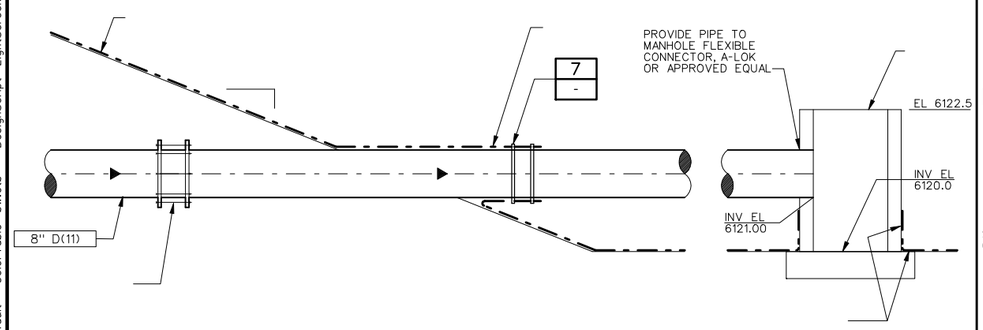

INLET STRUCTURE 9 / C-20

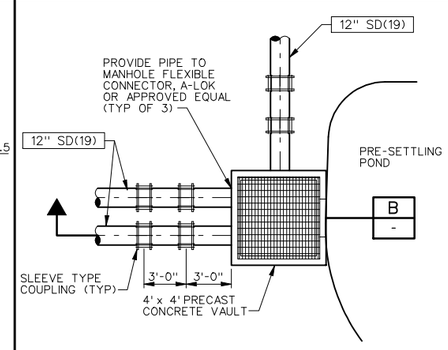

PLAN

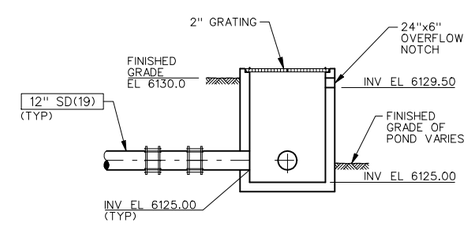

SECTION B / -

INLET STRUCTURE 10 / C-20

REGISTERED PROFESSIONAL ENGINEER #5149 STANLEY S. POSTMA STATE OF UTAH

REV	DATE	BY	DESCRIPTION
R	3/07	MRW	RECORD DRAWING

SCALE

WARNING: 0 1/2 1 — IF THIS BAR DOES NOT MEASURE 1" THEN DRAWING IS NOT TO SCALE

DESIGNED D. BARBEAU
DRAWN R. WALN
CHECKED S. POSTMA

RECORD DRAWING

This record drawing has been prepared, entirely or in part on the basis of unverified information compiled and furnished by others to the preparer who is not responsible for any inaccuracies, errors or omissions which may have been incorporated into the document as a result

MWH

UTAH DIVISION OF WILDLIFE RESOURCES
WHITEROCKS STATE FISH HATCHERY

PROCESS WASTEWATER TREATMENT SYSTEM DETAILS

SHEET C-21

1690703

File: wrfhc21-RD.dgn Model: Default ColorTable: bw.ctb DesignScript: LightScreen.pen PlotScale: 1.999996:1 User: KaiCrick Plot Date: 18-DEC-2007 09:39

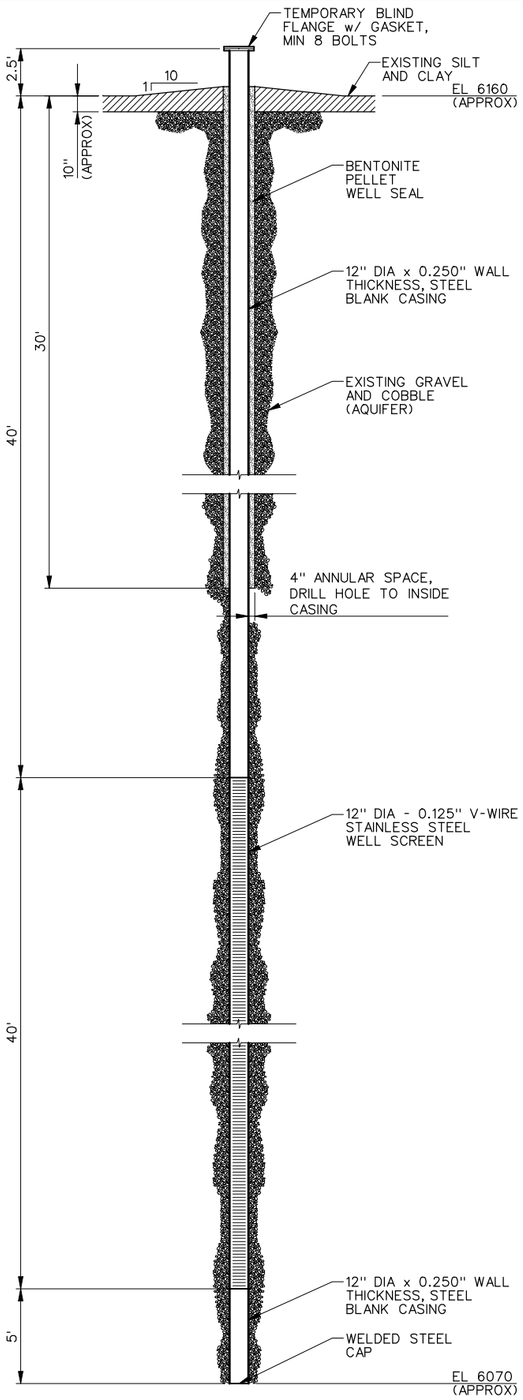

WELL CONSTRUCTION SECTION
(TYP OF 3)

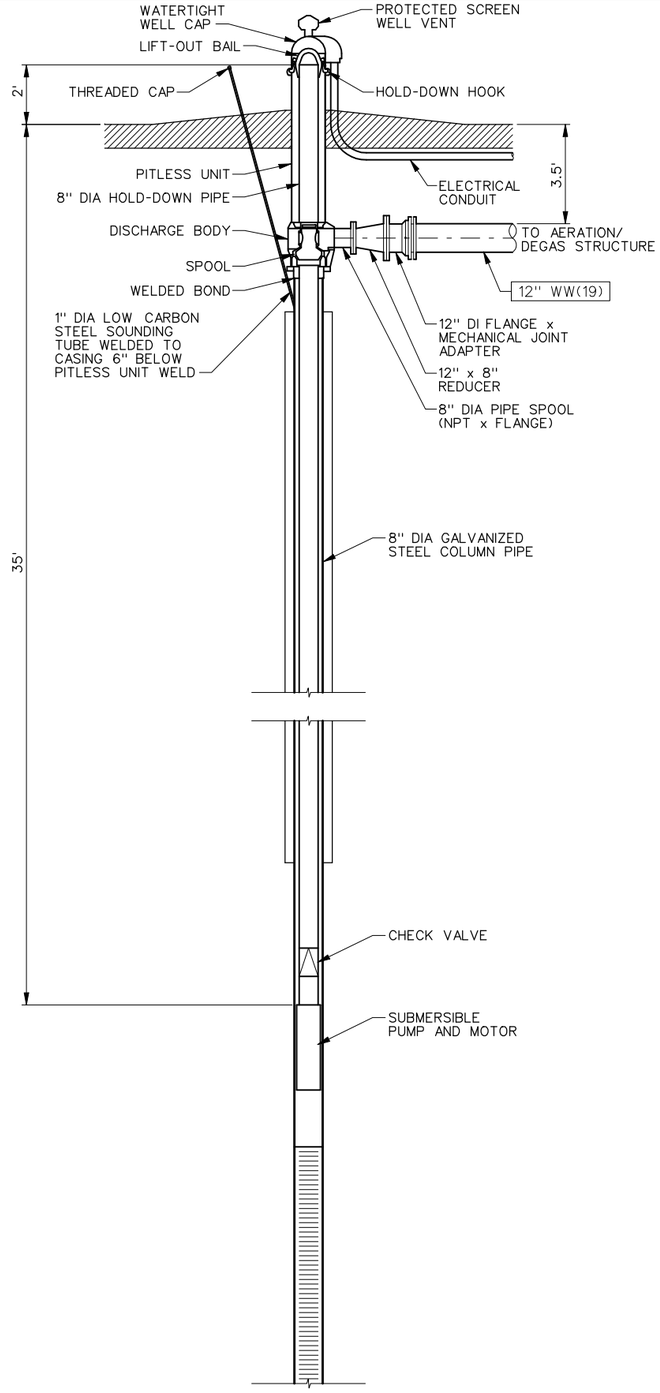

WELLHEAD AND PUMP DETAIL
(TYP OF 3)

1 / C-14

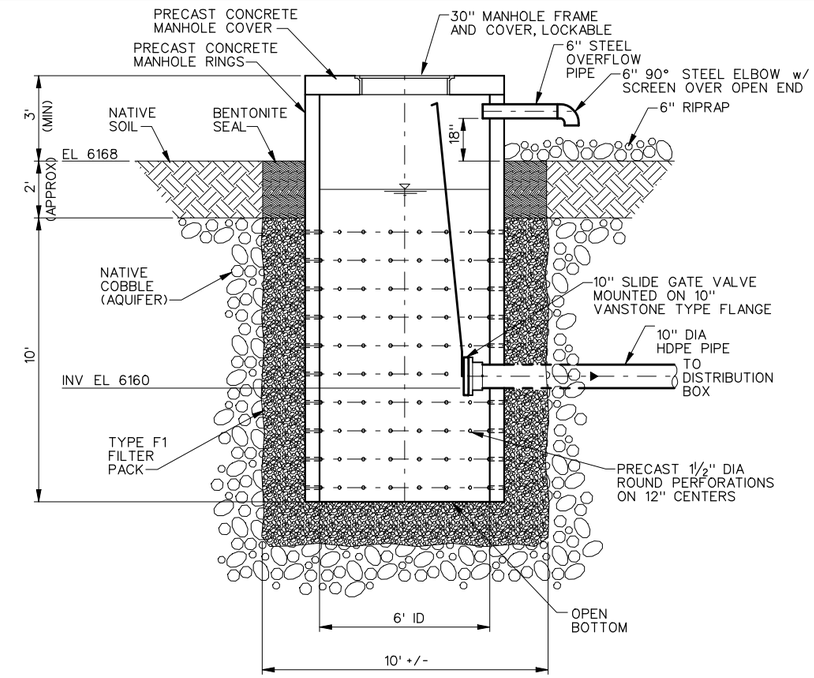

TYPICAL SPRINGBOX AND COLLECTOR WELL SECTION
(TYP OF 5 SPRINGBOXES AND 3 COLLECTOR WELLS)

2 / C-14

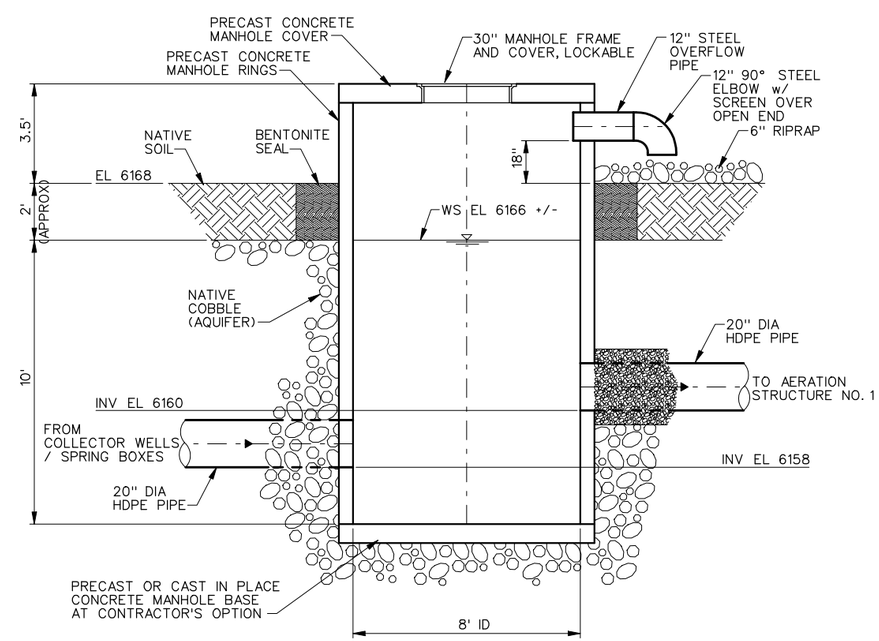

DISTRIBUTION BOX SECTION

3 / C-14

REGISTERED PROFESSIONAL ENGINEER #5149 STANLEY S. POSTMA STATE OF UTAH

REV	DATE	BY	DESCRIPTION
R	3/07	MRW	RECORD DRAWING

SCALE: NONE

WARNING: 0 ½ 1 — IF THIS BAR DOES NOT MEASURE 1" THEN DRAWING IS NOT TO SCALE

DESIGNED P. NAYLOR
DRAWN R. WALN
CHECKED S. POSTMA

RECORD DRAWING

This record drawing has been prepared, entirely or in part on the basis of unverified information compiled and furnished by others to the preparer who is not responsible for any inaccuracies, errors or omissions which may have been incorporated into the document as a result

MWH

UTAH DIVISION OF WILDLIFE RESOURCES

WHITEROCKS STATE FISH HATCHERY

FUTURE WELL DETAILS AND HILLSIDE SPRING COLLECTION DETAILS

SHEET C-22

1690703

File: wrfhc22-RD.dgn Model: Default ColorTable: bw.ctb DesignScript: LightScreen.pen PlotScale: 7.999984:1 User: KaiCrick Plot Date: 18-DEC-2007 09:39

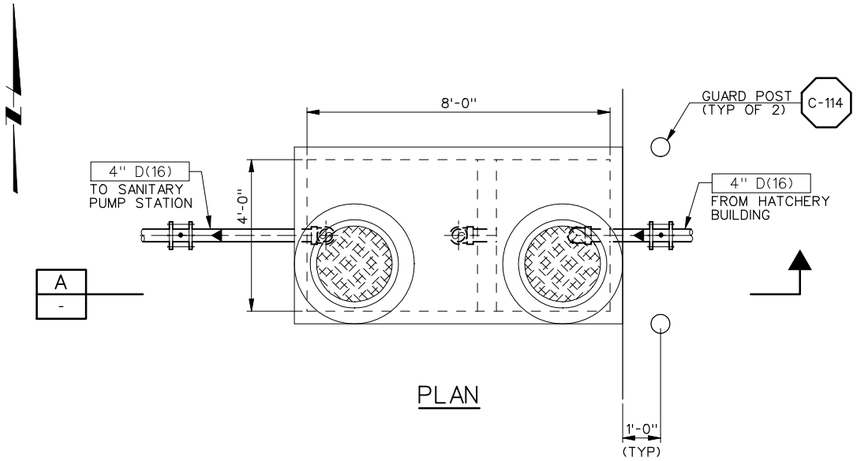

PLAN

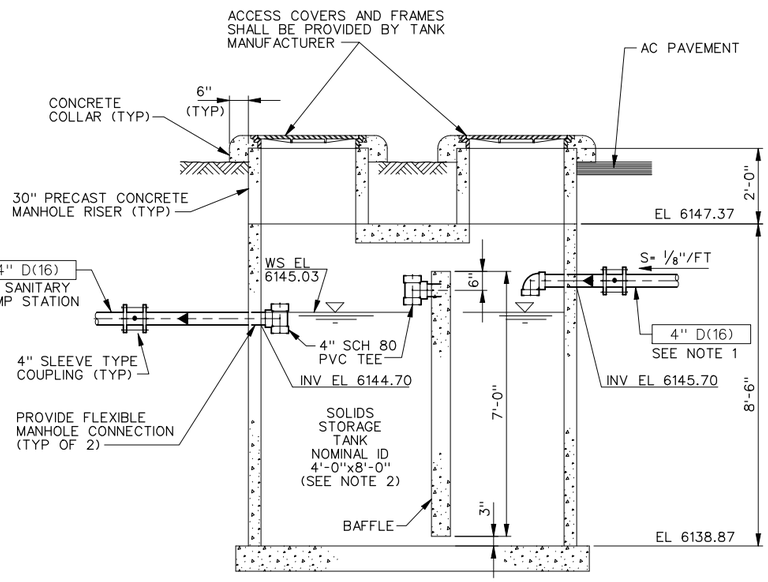

SECTION A
-

NOTES:

1. INVERT ELEVATIONS OF 4" D(16) SHALL BE DETERMINED AFTER APPROVAL OF PIPELINE ALIGNMENT AND APPROVAL OF PERMIT, WHICH SHALL BE OBTAINED BY THE CONTRACTOR.
2. SOLIDS STORAGE TANK SHALL BE PRECAST CONCRETE, H20 LOAD RATED, OR FRP CONSTRUCTION.

SOLIDS DECANT SEPTIC TANK — 1 / C-2
SCALE: 1/2"=1'-0"

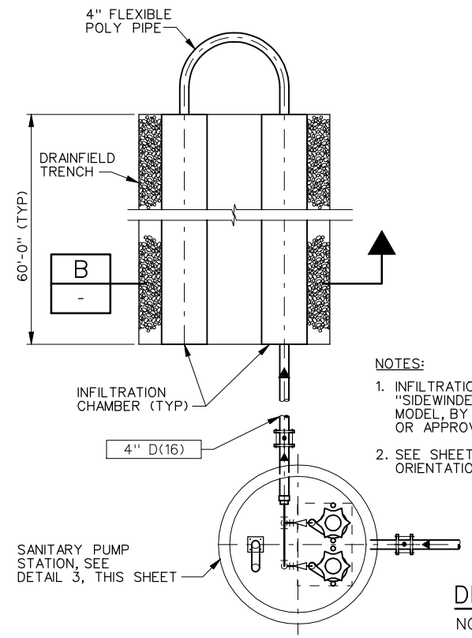

PLAN

NOTES:

1. INFILTRATION CHAMBER SHALL BE "SIDEWINDER CHAMBER", HIGH CAPACITY MODEL, BY INFILTRATOR SYSTEMS, INC., OR APPROVED EQUAL.
2. SEE SHEET C-15 FOR LOCATION AND ORIENTATION OF DRAIN FIELD LATERALS.

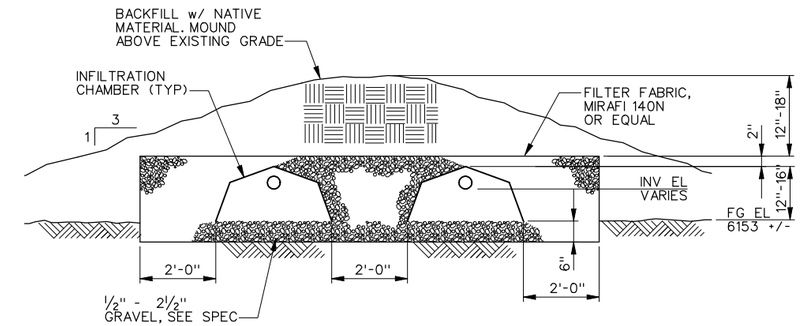

SECTION B
-

DRAIN FIELD LATERALS DETAIL — 2 / C-2
NOT TO SCALE

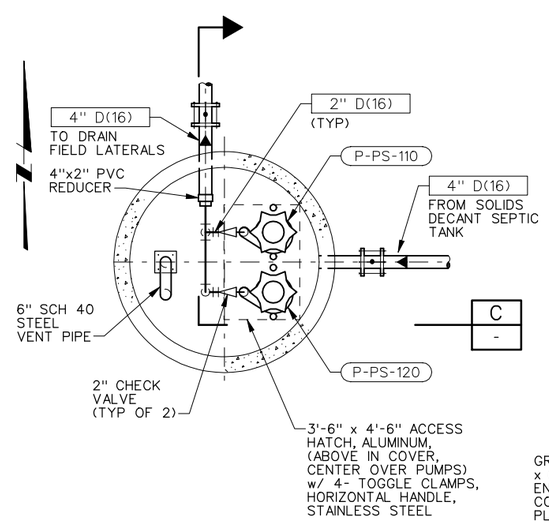

PLAN

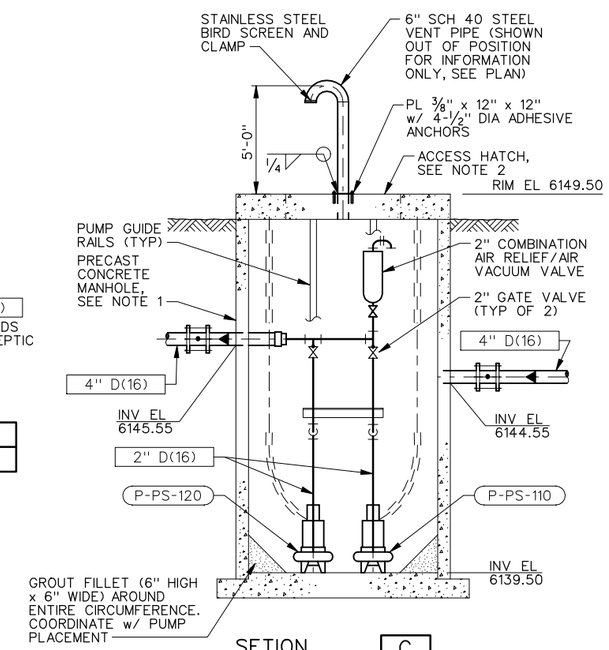

SETION C
-

NOTES:

1. SANITARY PUMP STATION VAULT SHALL BE CONSTRUCTED FROM 5'-0" DIAMETER (MIN) PRECAST CONCRETE MANHOLE RINGS. COVER SHALL BE PRECAST CONCRETE WITH A RECTANGULAR, ALUMINUM, HINGED ACCESS HATCH, AS SHOWN. COORDINATE VAULT LAYOUT WITH PUMP MANUFACTURER TO ENSURE THAT DIMENSIONS MATCH PUMPING SYSTEM REQUIREMENTS.
2. ACCESS HATCH SHALL BE DESIGNED FOR A 200 PSF LOADING. CONTRACTOR SHALL SUBMIT STRUCTURAL CALCULATIONS.
3. FINISHED GRADE SHALL BE 6" BELOW RIM. SLOPE GRADE AWAY FROM PUMP STATION ON ALL SIDES.
4. VAULT SHALL BE SIZED TO ACCOMODATE ALL EQUIPMENT, PIPING AND FITTINGS. REGULAR ACCESS IS NOT ANTICIPATED.

SANITARY PUMP STATION — 3 / C-2
NOT TO SCALE

REGISTERED PROFESSIONAL ENGINEER #5149 STANLEY S. POSTMA STATE OF UTAH

REV	DATE	BY	DESCRIPTION
R	3/07	MRW	RECORD DRAWING

SCALE: AS SHOWN

WARNING: 0 1/2 1 — IF THIS BAR DOES NOT MEASURE 1" THEN DRAWING IS NOT TO SCALE

DESIGNED D. BARBEAU
DRAWN R. WALN
CHECKED S. POSTMA

RECORD DRAWING
This record drawing has been prepared, entirely or in part on the basis of unverified information compiled and furnished by others to the preparer who is not responsible for any inaccuracies, errors or omissions which may have been incorporated into the document as a result

MWH

UTAH DIVISION OF WILDLIFE RESOURCES
WHITEROCKS STATE FISH HATCHERY

SEPTIC TANK AND DRAIN FIELD LATERALS PLANS AND SECTIONS

SHEET C-23
1690703

File: wrfhc23-RD.dgn Model: Default ColorTable: bw.ctb DesignScript: LightScreen.pen PlotScale: 3.999992:1 User: KaiCrick Plot Date: 18-DEC-2007 09:39

0 30 60 120 180 FT

SCALE: 1"=60'

FACILITIES LEGEND:

PHASE 1

- (A) HATCHERY BUILDING
- (B) AERATION STRUCTURE NO. 1
- (C) LOX TANK
- (D) TRUCK WASH STATION
- (E) SEPTIC TANK
- (F) SANITARY WASTEWATER LEACH FIELD
- (G) HILLSIDE SPRING COLLECTION
- (H) SPRING COLLECTION BOX
- (I) AERATION STRUCTURE NO. 2
- (J) PROPANE TANK
- (K) LHO STRUCTURE

PHASE 2

- (L) LHO EQUIPMENT
- (M) RACEWAYS
- (N) RACEWAYS SOLIDS TREATMENT BASIN
- (O) OUTFALL STRUCTURE
- (P) AC PAVEMENT

PHASE 3

- (R) FUTURE FEED/VEHICLE STORAGE
- (S) FUTURE WELL
- (T) FUTURE RESIDENCE (TYP OF 2)
- (U) FUTURE RACEWAY BUILDING

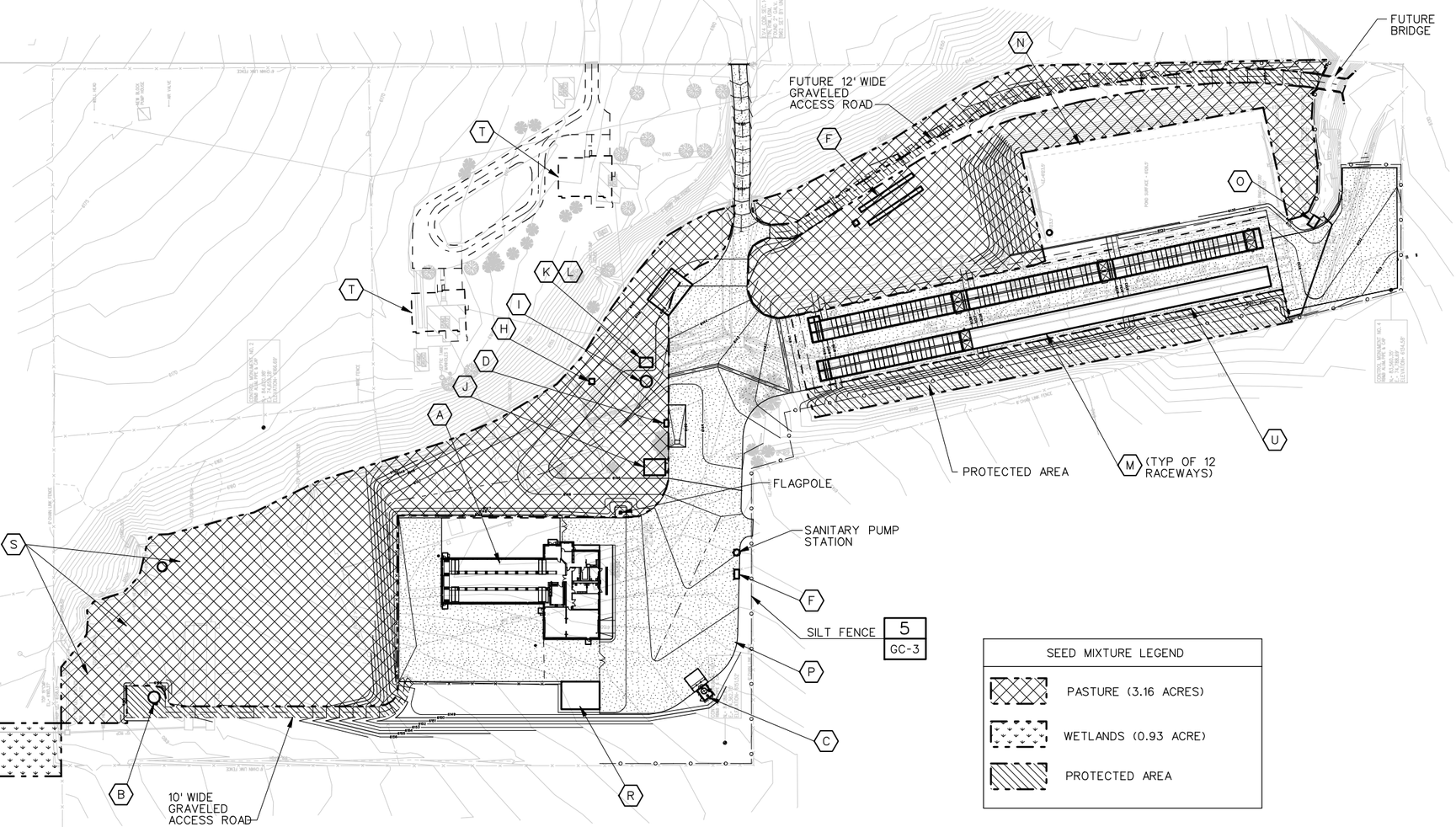

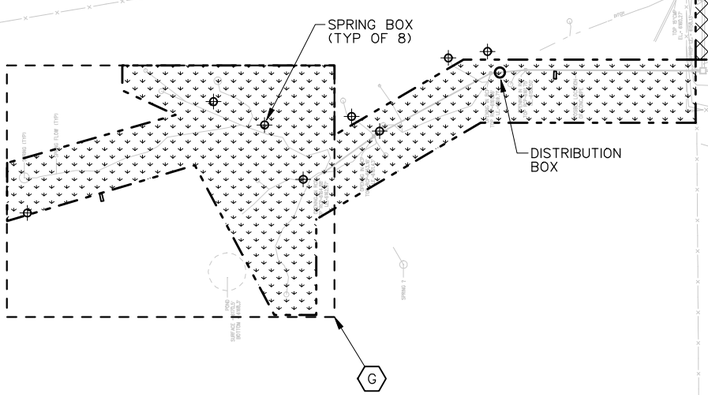

SEED MIXTURE LEGEND

- PASTURE (3.16 ACRES)
- WETLANDS (0.93 ACRE)
- PROTECTED AREA

NOTES:

1. THE CONTRACTOR SHALL INSTALL SILT FENCE, DETAIL 5/GC-3, OR STRAW ROLLS, DETAIL 6/GC-3, AROUND HILLSIDE SPRING COLLECTION AREA AS DIRECTED BY THE ON-SITE REPRESENTATIVE OF DFCM.
2. ADDITIONAL SILT FENCE SHALL BE INSTALLED AS DIRECTED BY THE ON-SITE REPRESENTATIVE OF DFCM.

REGISTERED PROFESSIONAL ENGINEER #5149 STANLEY S. POSTMA STATE OF UTAH

REV	DATE	BY	DESCRIPTION
R	3/07	MRW	RECORD DRAWING

SCALE 1"=60'

WARNING: 0 ½ 1 — IF THIS BAR DOES NOT MEASURE 1" THEN DRAWING IS NOT TO SCALE

DESIGNED C. WHITTAKER
DRAWN P. HUNTER/R. WALN
CHECKED S. POSTMA

RECORD DRAWING

This record drawing has been prepared, entirely or in part on the basis of unverified information compiled and furnished by others to the preparer who is not responsible for any inaccuracies, errors or omissions which may have been incorporated into the document as a result

MWH

UTAH DIVISION OF WILDLIFE RESOURCES
WHITEROCKS STATE FISH HATCHERY

OVERALL LANDSCAPE PLAN

SHEET L-1

1690703

File: wrfh101-RD.dgn Model: Default ColorTable: bw.ctb DesignScript: LightScreen.pen PlotScale: 119.99976:1 User: KaiCrick Plot Date: 17-DEC-2007 13:51

HATCHERY BUILDING ROOM FINISH SCHEDULE

ROOM NO.	ROOM NAME	FLOOR MATERIAL	BASE MATERIAL	NORTH WALL MATERIAL	NORTH WALL FINISH	EAST WALL MATERIAL	EAST WALL FINISH	SOUTH WALL MATERIAL	SOUTH WALL FINISH	WEST WALL MATERIAL	WEST WALL FINISH	CEILING MATERIAL	CEILING FINISH	CEILING HEIGHT	REMARKS
100	VESTIBULE 1	CONC	CMU	NA	NA	CMU	PREFIN	NA	NA	CMU	PREFIN	METAL	PREFIN	VARIES	EXTERIOR SPACE
101	VESTIBULE 2	QT	RB	GWB	P	GWB	P	GWB	P	GWB	P	GWB	P	9'-4"	
102	LOBBY	VCT	RB	GWB	P	GWB	P	CMU	P	GWB/CMU	P	SAC	NA	9'-4"	GN 7
103	FEED STORAGE	CONC	RB	GWB	P	GWB	P	CMU	P	GWB	P	GWB	P	9'-4"	
104	OFFICE	VCT	RB	GWB	P	NA	NA	GWB	P	NA	NA	SAC	NA	9'-4"	GN 7
105	BREAK ROOM	VCT	RB	GWB	P	GWB	P	GWB	P	NA	NA	SAC	NA	9'-4"	GN 7
106	JANITOR	VCT	RB	GWB	P	GWB	P	GWB	P	GWB	P	SAC	NA	9'-4"	GN 7
107	STORAGE	VCT	RB	GWB	P	GWB	P	GWB	P	GWB	P	SAC	NA	9'-4"	GN 7
108	WOMEN'S TOILET	CT	COVE CT	GWB	CT/P	GWB	CT/P	GWB	CT/P	GWB	CT/P	SAC	NA	9'-4"	GN 7
109	MEN'S TOILET	CT	COVE CT	GWB	CT/P	GWB	CT/P	GWB	CT/P	GWB	CT/P	SAC	NA	9'-4"	GN 7
110	TOILET	CT	CT	GWB	CT/P	GWB	CT/P	GWB	CT/P	GWB	CT/P	SAC	NA	9'-4"	GN 7
111	MECHANICAL ROOM	CONC	RB	CMU	P	GWB	P	GWB	P	CMU/GWB	P	GWB	P	12'-3"	
112	GARAGE AND SHOP	CONC	RB	CMU/GWB	P	GWB	P	GWB	P	GWB	P	GWB	P	12'-3"	
113	CORRIDOR	VCT	RB	NA	NA	GWB	P	CMU	P	CMU	P	SAC	NA	9'-4"	
114	JARS / TRAYS	CONC	RB	CMU	FRP	CMU	FRP	CMU	FRP	CMU	FRP	M.R. GWB	EP	12'-3"	
115	REARING	CONC	RB	CMU	NA	FRP	FRP	CMU	FRP	CMU	FRP	M.R. GWB	EP	11'-6"	
200	FEED STORAGE BUILDING	CONC	RB	CMU	GWB/EP	CMU	GWB/EP	CMU	GWB/EP	CMU	GWB/EP	GWB	EP	12'-8"	

FINISH SCHEDULE ABBREVIATIONS

CMU	CONCRETE MASONRY UNIT
CONC	CONCRETE SEALED
CT	CERAMIC TILE
EP	EPOXY PAINT
FRP	FIBERGLASS REINFORCED PANEL
GN	GENERAL NOTE
GWB	GYPSUM WALL BOARD
M.R.	MOISTURE RESISTANT
NA	NOT APPLICABLE
P	PAINT (LATEX OR BETTER)
QT	QUARRY TILE
RB	RESILIENT BASE
SAC	SUSPENDED ACOUSTICAL CEILING
VCT	VINYL COMPOSITION TILE

DOOR SCHEDULE

DOOR NUMBER	LOCATION	DOOR WIDTH	DOOR HEIGHT	DOOR THICKNESS	DOOR TYPE	DOOR MATERIAL	FRAME TYPE	FRAME MATERIAL	HARDWARE	HEAD DETAIL	JAMB DETAIL	SILL DETAIL	REMARKS
1	VESTIBULE	3'-0"	7'-0"	1-3/4"	A	ALUM.	1	ALUM.	1	5 SIM.	6 SIM.	10 SIM	INSULATED GLASS
2	LOBBY	3'-0"	7'-0"	1-3/4"	A	ALUM.	1	ALUM.	2	1 SIM.	2 & 3 SIM.	4 SIM.	INSULATED GLASS
3	FEED STORAGE	3'-0"	7'-0"	1-3/4"	B	HM	2	HM	3	1	2, 3	4	
4	CORRIDOR	3'-0"	7'-0"	1-3/4"	B	HM	2	HM	3	1	2, 3	4	
5	STORAGE	3'-0"	7'-0"	1-3/4"	B	HM	2	HM	4	1	2, 3	4	
6	JANITOR	3'-0"	7'-0"	1-3/4"	B	HM	2	HM	5	1	2, 3	4	
7	STAFF TOILET	3'-0"	7'-0"	1-3/4"	B	HM	2	HM	7	1	2, 3	4	
8	WOMEN'S TOILET	3'-0"	7'-0"	1-3/4"	B	HM	2	HM	6	5	6	10	INSULATED
9	MEN'S TOILET	3'-0"	7'-0"	1-3/4"	B	HM	2	HM	6	5	6	10	INSULATED
10	MECHANICAL	6'-0"	7'-0"	1-3/4"	B B	HM	3	HM	11	1	2	4	1 HR. RATED, INSULATED
11	CORRIDOR	3'-0"	7'-0"	1-3/4"	B	HM	2	HM	10	11	11	4 SIM	1 HR. RATED, INSULATED
12	REARING	6'-0"	7'-0"	1-3/4"	B	HM	3	HM	15	11	11SIM.	10	
13	JARS/TRAY	3'-8"	7'-0"	1-3/4"	C	HM	2	HM	14	11 SIM	11 SIM	10	
14	GARAGE AND SHOP	3'-0"	7'-0"	1-3/4"	B	HM	2	HM	13	5	6	10	INSULATED
15	GARAGE AND SHOP	12'-0"	10'-0"	N/A	D	MTL.	MFGR.	MFGR.	12	7	9	8	INSULATED
16	GARAGE AND SHOP	12'-0"	10'-0"	N/A	D	MTL.	MFGR.	MFGR.	12	7	9	8	INSULATED
17	GARAGE AND SHOP	3'-0"	7'-0"	1-3/4"	C	HM	2	HM	13	5	6	10	INSULATED
18	REARING	3'-0"	7'-0"	1-3/4"	C	HM	2	HM	17	12 SIM.	12 SIM.	10	INSULATED
19	REARING	10'-0"	10'-0"	N/A	D	MTL.	MFGR.	MFGR.	12	7	9	8	INSULATED
20	REARING	3'-0"	7'-0"	1-3/4"	C	HM	2	HM	17	12 SIM.	12 SIM.	10	INSULATED
21	FEED STORAGE	6'-0"	7'-0"	1-3/4"	B	HM	3	HM	17	5	6	10	INSULATED (SEE NOTE 1)
22	FEED STORAGE BLDG	3'-0"	7'-0"	1-3/4"	B	HM	3	HM	17	5	6	10	INSULATED
23	FEED STORAGE BLDG	10'-0"	10'-0"	N/A	D	MTL.	MFGR.	MFGR.	12	7	9	8	INSULATED

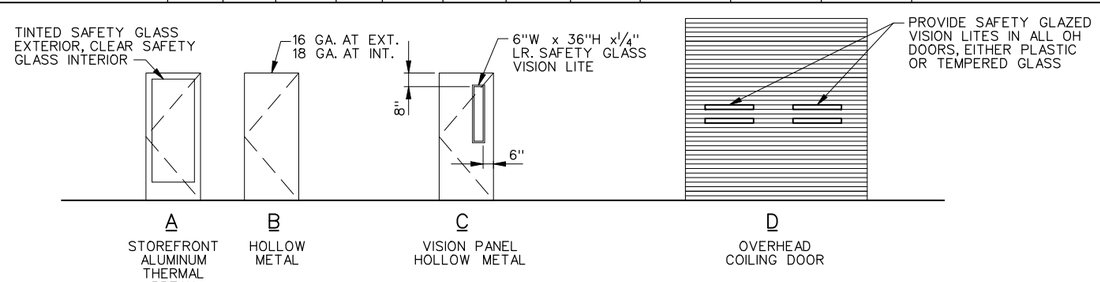

DOOR TYPES

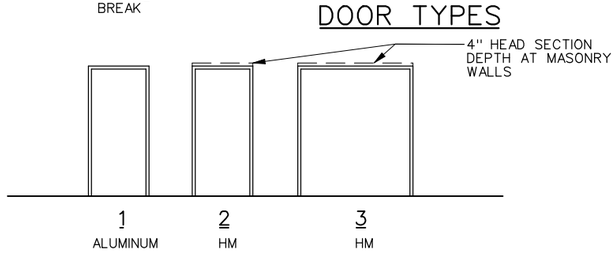

FRAME TYPES

NOTES:

1. WITH 12" x 4" TRANSFER GRILLE.
2. ALL HM DOORS AND FRAMES SHALL BE GALVANIZED METAL.

COLORS AND MATERIALS SELECTIONS

EXTERIOR FINISHES

ROOF:	PREFINISHED STANDING SEAM
ROOFTOP ITEMS:	FIELD PAINT TO MATCH ROOF
GUTTERS, DNSPOUTS:	PREFINISHED TO MATCH ROOF
GLASS:	INSULATED UNITS
CONCRETE BLOCK:	SPLIT-FACE (CMU-1)
CONCRETE BLOCK:	SMOOTH-FACE (CMU-2)
STOREFRONT:	ANODIZED ALUMINUM
HM DRS/FRAMES:	FIELD PAINT
OVERHEAD DOORS:	FIELD PAINT
LOUVERS:	ANODIZED ALUMINUM
VEHICLE BOLLARDS:	FIELD PAINT

NOTE: COLORS WILL BE SELECTED BY STATE OF UTAH FROM MANUFACTURER'S STANDARD OFFERING.

GENERAL NOTES

1. ALL VISIBLE GRILLES, DIFFUSERS, AND OTHER MECHANICAL RELATED FINISH OPENING DEVICES INCLUDING FIRE ALARMS SHALL BE PAINTED TO MATCH COLOR OF ADJACENT SURFACE.
2. REFER TO APPROPRIATE ARCHITECTURAL DRAWINGS AND DETAILS TO PROPERLY ASSESS THE FULL EXTENT OF WORK REQUIRED. SPECIFICALLY REFER TO THE REFLECTED CEILING PLANS AND BUILDING SECTIONS TO DETERMINE HEIGHTS OF REQUIRED WALL MATERIALS, SPECIAL CONDITIONS AND STRUCTURES, ETC.
3. PAINT ALL SOFFIT AND BULKHEAD CONDITIONS (TO INCLUDE, BUT NOT BE LIMITED TO GYPSUM BOARD AND CONCRETE MASONRY).
4. ALL GYPSUM BOARD CEILINGS SHALL BE PAINTED UNLESS OTHERWISE NOTED ON THE DRAWINGS OR IN THE SPECIFICATIONS. INCLUDES PLENUM CEILING.
5. WALL AND CEILING GWB SURFACES SHALL BE PAINTED WITH FLAT FINISH, TRIM SHALL BE SEMI-GLOSS.
6. PROVIDE 4' WIDE FIBERGLASS REINFORCED PANELS (FRP) WITH .030" WHITE TEXTURED FIBERGLASS LAMINATED TO 3/4" EXTERIOR GRADE PLYWOOD. PANELS SHALL BE FIBER-LITE CATALOG NO. F3P750 AS MANUFACTURED BY NUDO PRODUCTS INC. OR APPROVED EQUAL. INSTALL ACCORDING TO MANUFACTURER'S INSTRUCTIONS.

   A. INSTALL CEILING PANELS DIRECTLY TO BOTTOM OF WOOD JOISTS WITH STAINLESS STEEL SCREWS PER MANUFACTURER'S INSTRUCTIONS. PROVIDE JOINT BATTEN STRIPS AND OTHER TRIM AS NECESSARY. SEAL ALL DIVIDER JOINTS AND FASTENERS WITH SILICONE SEALANT.

   B. INSTALL WALL PANELS DIRECTLY OVER RIGID INSULATION WITH STAINLESS STEEL SCREWS. SCREW THROUGH PANEL AND RIGID INSULATION INTO CONCRETE BLOCK WALL PER MANUFACTURER'S INSTRUCTIONS. PROVIDE JOINT BATTEN STRIPS, CORNER TRIM AND OTHER TRIM AS NECESSARY. SEAL ALL DIVIDER JOINTS AND FASTENERS WITH SILICONE SEALANT.

   C. FRP GLUED STRAIGHT TO CMU ON ALL INTERIOR WALLS WITH NO WOOD BACKING.
7. PROVIDE 1/2" GYPSUM BOARD ATTACHED TO BOTTOM OF TRUSSES ABOVE LAY IN CEILING TILES. TAPE JOINTS TO SEAL SPACE OFF TO CREATE SEALED PLENUM AIR SPACE.

WINDOW SCHEDULE

MARK	LOCATION	NOMINAL SIZE (W X H)	FRAME TYPE	DESCRIPTION	SILL	HEAD DETAIL	SILL DETAIL
A	OFFICE/BREAK ROOM	4'-0" X 5'-4"	ALUM.	DBL HUNG INSUL, TINTED GLASS	RESIN	1/GA-4	2/GA-4
A	GARAGE	PR 4'-0" X 5'-4"	ALUM.	DBL HUNG INSUL, TINTED GLASS	RESIN	1/GA-4	2/GA-4
B	REARING	4'-0" X 4'-0"	ALUM.	FIXED, INSUL CLEAR GLASS, TEMPERED	RESIN	3/GA-4	4/GA-4
C	FEED STORAGE BLDG	4'-0" X 4'-0"	ALUM.	FIXED, INSUL, TINTED GLASS	RESIN	1/GA-4	2/GA-4

NOTES:

1. ALL WINDOWS BY SAME MANUFACTURER.
2. ALL WINDOW FRAMES ARE THERMAL BREAK.

REGISTERED PROFESSIONAL ENGINEER #5149 STANLEY S. POSTMA STATE OF UTAH

REV	DATE	BY	DESCRIPTION
R	3/07	MRW	RECORD DRAWING

SCALE: NONE

WARNING: 0 1/2 1 — IF THIS BAR DOES NOT MEASURE 1" THEN DRAWING IS NOT TO SCALE

DESIGNED
DRAWN R. WALN
CHECKED E. CRYER

RECORD DRAWING

This record drawing has been prepared, entirely or in part on the basis of unverified information compiled and furnished by others to the preparer who is not responsible for any inaccuracies, errors or omissions which may have been incorporated into the document as a result

MWH

UTAH DIVISION OF WILDLIFE RESOURCES

WHITEROCKS STATE FISH HATCHERY

FINISH SCHEDULE AND ABBREVIATIONS, COLORS AND MATERIALS SELECTIONS, DOOR SCHEDULE, DOOR TYPES AND FRAME TYPES, AND WINDOW SCHEDULE

SHEET GA-1

1690703

File: wrfhga01-RD.dgn Model: Default ColorTable: bw.ctb DesignScript: LightScreen.pen PlotScale: 1.999996:1 User: KaiCrick Plot Date: 17-DEC-2007 16:40

TOILET FIXTURES AND FEATURES INFORMATION

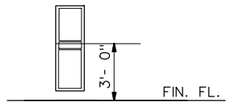

(4A) TOWEL DISPENSER AND WASTE RECEPTACLE, (SEMI-RECESSED)

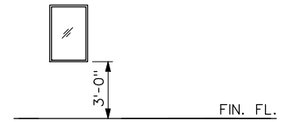

(5A) MIRROR TILTING

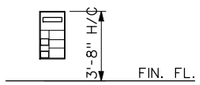

(11) W/C, DISP/COMB UNIT RECESSED

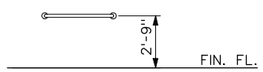

(12) GRAB BAR, 2-WALL WHEELCHAIR

1½" DIAMETER W/ 1½" CLEARANCE BETWEEN BAR AND WALL SIDE BAR 42" LONG W/ FRONT END 24" IN FRONT OF TOILET SEAT. REAR BAR 36" LONG.

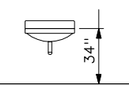

(31) LAVATORY:
MOUNTED WITH TOP AT 34" ABOVE FINISH FLOOR WITH 29" MIN CLEARANCE FROM FLR TO BOTTOM OF APRON. APRON TO WALL. DIMENSION SHALL BE 17" MIN. HOT WATER & DRAIN PIPE SHALL BE INSULATED WITH NO SHARP OR ABRASIVE EDGES.

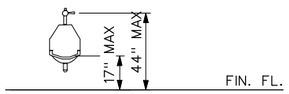

(32) URINAL:
MOUNTED WITH RIM AT 17" MAX ABOVE FINISH FLOOR WITH 14" PROJECTION FROM WALL. FLUSH CONTROL HEIGHT SHALL BE 44" MAX. PROVIDE 30"Wx48"D CLEAR SPACE INFRONT OF URINAL TO ALLOW FORWARD APPROACH.

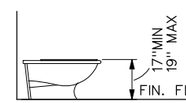

(33) WATER CLOSET:
HEIGHT OF SEAT SHALL BE FROM 17"TO 19" ABOVE FINISH FLOOR. DISTANCE FROM CENTER LINE OF SEAT TO THE CLOSEST ADJACENT WALL SHALL BE 18" MIN

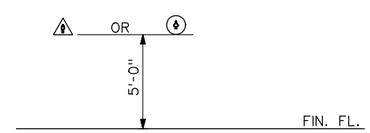

(35) RESTROOM GENDER SYMBOL SIGN:
SYMBOL SHALL BE MOUNTED AT 60" ABOVE FINISH FLOOR AND CENTERED ON DOOR. SYMBOL SHALL BE OF CONTRASTING COLOR.

WOMEN: ¼" THICK X 12" DIAMETER CIRCLE.
OR
MEN: ¼" THICK EQUILATERAL TRIANGLE WITH 12" SIDES AND VERTEX POINTED UP.
OR
UNISEX: COMBINATION OF BOTH SYMBOLS ABOVE.

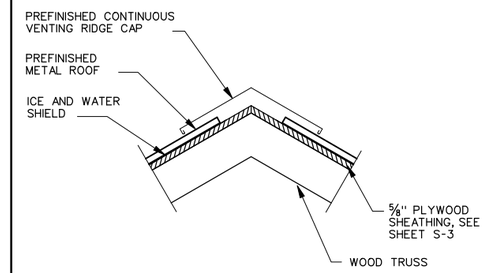

TYPICAL RIDGE SECTION 1 / A-4

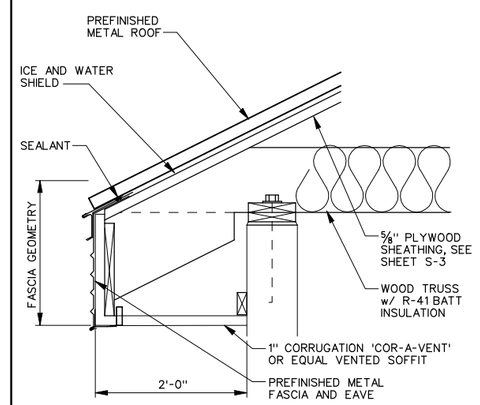

TYPICAL EAVE SECTION 2 / A-4

NOTES:

1. PROVIDE ICE AND WATER SHIELD ON TOP OF STRUCTURAL ROOF DECK. OVERLAP MINIMUM OF 6".
2. HEAT TRACE ALL GUTTERS AND DOWNSPOUTS.
3. SNOW CLIP SELECTION SHALL BE APPROVED BY THE ENGINEER/OWNER.

REGISTERED PROFESSIONAL ENGINEER #5149 STANLEY S. POSTMA STATE OF UTAH

REV	DATE	BY	DESCRIPTION
R	3/07	MRW	RECORD DRAWING

SCALE: NONE

WARNING: 0 ½ 1 — IF THIS BAR DOES NOT MEASURE 1" THEN DRAWING IS NOT TO SCALE

DESIGNED D. BARBEAU
DRAWN R. WALN
CHECKED

RECORD DRAWING

This record drawing has been prepared, entirely or in part on the basis of unverified information compiled and furnished by others to the preparer who is not responsible for any inaccuracies, errors or omissions which may have been incorporated into the document as a result

MWH

UTAH DIVISION OF WILDLIFE RESOURCES
WHITEROCKS STATE FISH HATCHERY

TOILET FIXTURES AND FEATURES INFORMATION AND ROOF DETAILS

SHEET GA-2

1690703

File: wrfhga02-RD.dgn Model: Default ColorTable: bw.ctb DesignScript: LightScreen.pen PlotScale: 1.999996:1 User: KaiCrick Plot Date: 17-DEC-2007 16:40

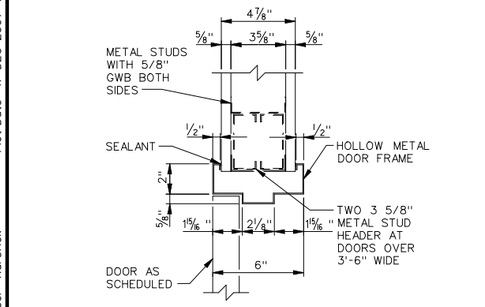

HEAD DETAIL — 1 / GA-1

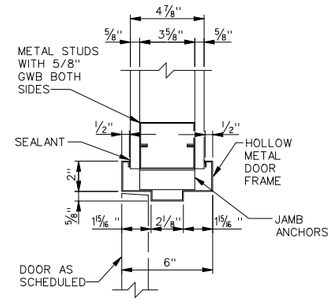

JAMB DETAIL — 2 / GA-1

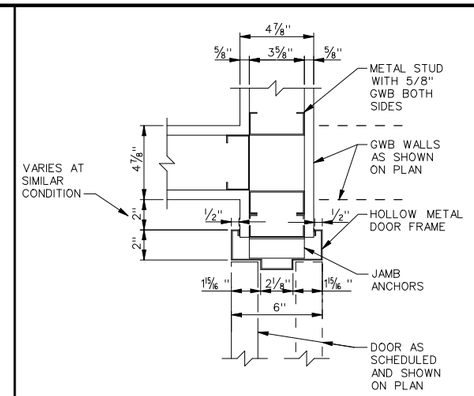

JAMB DETAIL — 3 / GA-1

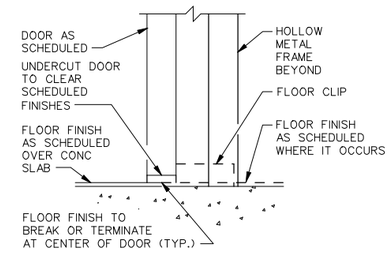

SILL DETAIL — 4 / GA-1

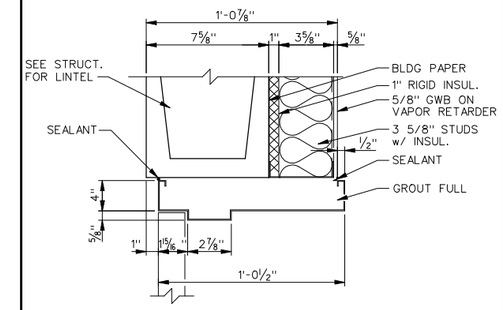

HEAD DETAIL — 5 / GA-1

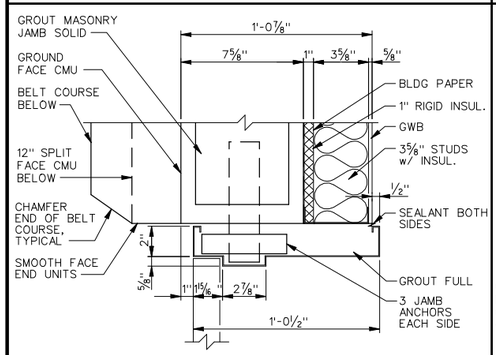

JAMB DETAIL — 6 / GA-1

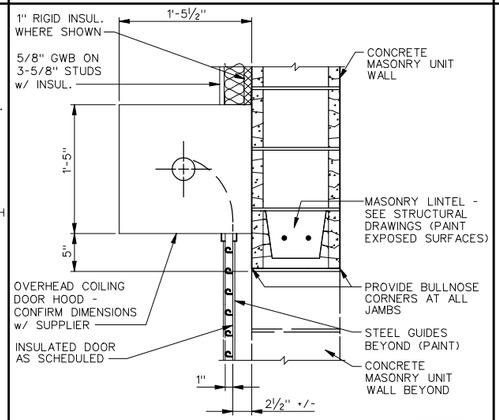

HEAD DETAIL (JAMB SIMILAR) — 7 / GA-1

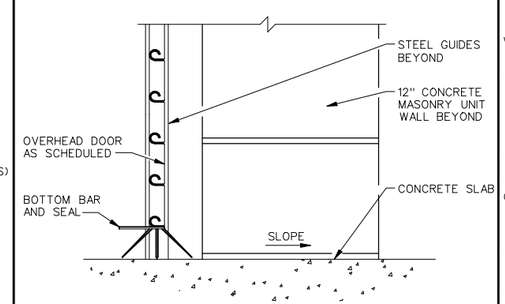

SILL DETAIL (OVERHEAD COILING) — 8 / GA-1

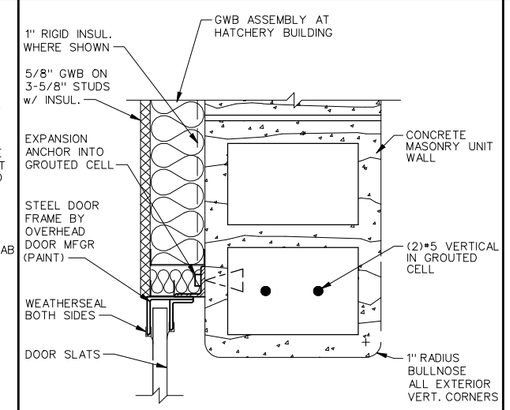

JAMB DETAIL (HEAD SIMILAR) — 9 / GA-1

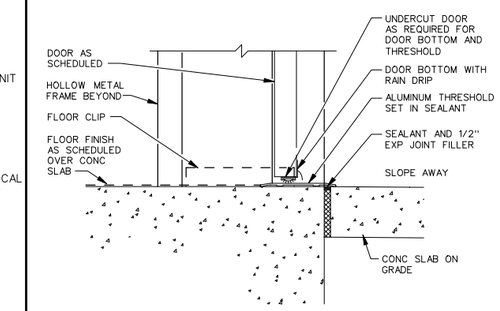

SILL DETAIL — 10 / GA-1

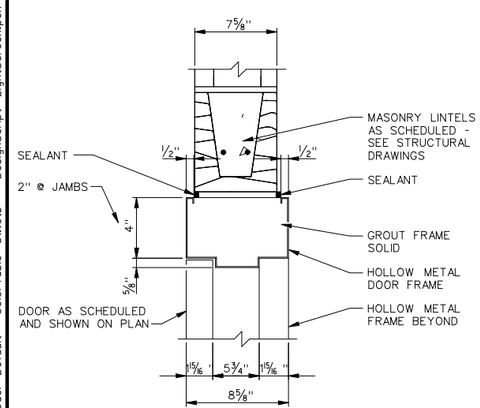

HEAD DETAIL (JAMB SIMILAR) — 11 / GA-1

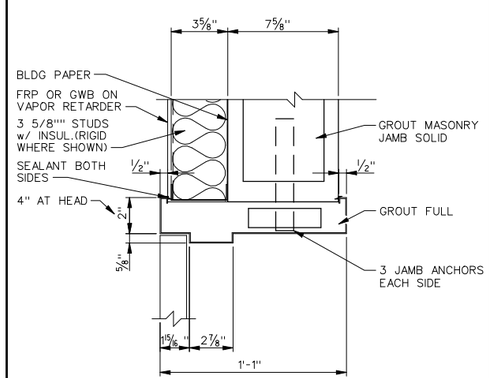

JAMB DETAIL (HEAD SIMILAR) — 12 / GA-1

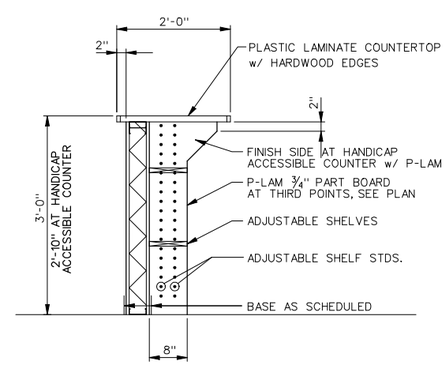

COUNTER DETAIL — 13 / A-2

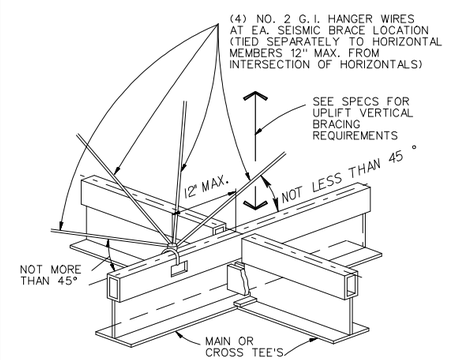

SUSPENDED ACOUS CLG LATERAL — 14 / A-3

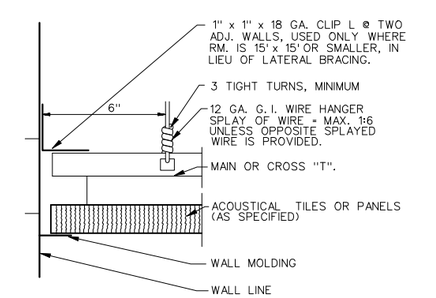

LATERAL DETAIL (SEISMIC BRACING) — 15 / A-3

REGISTERED PROFESSIONAL ENGINEER #5149 STANLEY S. POSTMA STATE OF UTAH

REV	DATE	BY	DESCRIPTION
R	3/07	MRW	RECORD DRAWING

SCALE: NONE

WARNING: 0 1/2 1 — IF THIS BAR DOES NOT MEASURE 1" THEN DRAWING IS NOT TO SCALE

DESIGNED D. BARBEAU
DRAWN R. WALN
CHECKED

RECORD DRAWING

This record drawing has been prepared, entirely or in part on the basis of unverified information compiled and furnished by others to the preparer who is not responsible for any inaccuracies, errors or omissions which may have been incorporated into the document as a result

MWH

UTAH DIVISION OF WILDLIFE RESOURCES
WHITEROCKS STATE FISH HATCHERY

ARCHITECTURAL DETAILS I

SHEET GA-3

1690703

File: wrfhga03-RD.dgn Model: Default ColorTable: bw.ctb DesignScript: LightScreen.pen PlotScale: 1.999996:1 User: KaiCrick Plot Date: 17-DEC-2007 16:40

ARCHITECTURAL ABBREVIATIONS

A

ACI	AMERICAN CONCRETE INSTITUTE
ACSR	ALUMINUM CONDUCTOR STEEL REINFORCED
ACST	ACOUSTIC
A.D.	ACCESS DOOR
AD	AREA DRAIN
AFF	ABOVE FINISH FLOOR
AGG	AGGREGATE
AHU	AIR HANDLING UNIT
AIC	AMPS INTERRUPTING CAPACITY (SYM RMS)
AISC	AMERICAN INSTITUTE OF STEEL CONSTRUCTION
A.L.	ACTIVE LEAF
ALT	ALTERNATE
AMP	AMPERE
ANOD	ANODIZED
AP	ACCESS PANEL
A.R.I.	AMERICAN REFRIGERATION INSTITUTE
ATC	ACOUSTICAL TILE CEILING
AUTO	AUTOMATIC
AVG	AVERAGE
AWG	AMERICAN WIRE GAUGE
∠	ANGLE
@	AT
+	AND

B

BATT INSUL	BATT INSULATION
BB	BULLETIN BOARD
BC	BOOKCASE
BDY	BOUNDARY
BIT	BITUMINOUS
BL	BUILDING LINE
B.O.	BOTTOM OF
BRCG	BRACING
BRDG	BRIDGING
BRG	BEARING
BRKT	BRACKET
BT	BENT
BTUH	BTU PER HOUR

C

C	CEILING FINISHES
C OR CND	CONDUIT (FOR RACEWAY-ELEC. SHTS.)
CATV	CABLE TELEVISION
CE	COVER ELEVATION
CHIM	CHIMNEY
CHNLS	CHANNELS
C.I.	CURB INLET
CIP	CAST-IN-PLACE
CIR	CIRCULAR
CKD	CHECKED
CKT	CIRCUIT
CKT BRK OR CB	CIRCUIT BREAKER
CLKG	CAULKING
CLO	CLOSET
CLOS	CLOSED
CL WG	CLEAR WIRE GLASS
CNTR	COUNTER
C.O.	CONTRACTING OFFICER
CO_2	CARBON DIOXIDE
COM	COMMON
COMB	COMBINATION
COMB	COMBUSTION
COMP	COMPRESSIBLE
CONC/P	CONCRETE PAINTED
CONC/S	CONCRETE SEALED
COR	CORNER
CORR	CORRIDOR
COV	COVERED
CPL	CEMENT PLASTER
C.P.S.	CYCLES PER SECOND (HERTZ)
CPT	CARPET
CRES	CORROSIVE RESISTANT STEEL
CRG	CARRIAGE
CRSE	COURSE
CS	COUNTER SINK
CSMT	CASEMENT
CT	CERAMIC TILE OR CURRENT TRANSFORMER
CU	CONDENSING UNIT
CUH	CABINET UNIT HEATER
CV	CEILING VENT
CW	COLD WATER

D

D	PENNY (as in nail - 10d)
d	DATUM
DA	DOUBLE ACTING
DB	DRY BULB
D.C.J.	DOWELED CONTROL JOINT
DCJ	DUMMY CONTROL JOINT
DCL	DOOR CLOSER
DEG	DEGREE
DEPR	DEPRESSION
DEPT	DEPARTMENT
DH	DOUBLE HUNG
DH	DUCT HEATER
DIM	DIMENSION
DISC	DISCONNECT
DIST	DISTRIBUTION
D & M	DRESSED & MATCHED
DP	DAMPPROOFING
DRN	DRAIN
DWLS	DOWELS
DX	DIRECT EXPANSION

E

EA	EXHAUST AIR
EAT	ENTERING AIR TEMPERATURE
EJ	EXPANSION JOINT
EL OR ELEV.	ELEVATION-GRADE OR BUILDING
ELEV	ELEVATOR
EMCS	ENERGY MGMT CONTROL SYSTEM
EMD	ESTIMATED MAXIMUM DEMAND
E.P.	EXPLOSION PROOF
EP	EPOXY PAINT
EST	ESTIMATE
EWT	ENTERING WATER TEMPERATURE
EXC	EXCAVATE
EXD	EXIT DEVICE
EXP	EXPOSED
EXPL	EXPLOSION
EXPN	EXPANSION

F

F	FLOOR MATERIAL COLOR
FA	FRESH AIR
FC	FOOT CANDLE
FCG	FACING
FCJ	FLOOR CONSTRUCTION JOINT
F.D.	FIRE DAMPER
FDN	FOUNDATION
FEB	FIRE EXTINGUISHER BRACKET
FEC	FIRE EXTINGUISHER CABINET
FHC	FIRE HOSE CABINET
FLASH	FLASHING
FLUOR	FLUORESCENT
F.O.	FINISH OPENING
FP	FIRE PROTECTION
FPRF	FIRE PROOF
FRG	FURRING
F.S.	FULL SIZE
FW	FIRE WATER

G

G	GAS
G.C.O.	GROUND CLEANOUT
GFE/CI	GOVERNMENT FURNISHED EQUIPMENT CONTRACTOR INSTALLED
GFE/GI	GOVERNMENT FURNISHED EQUIPMENT GOVERNMENT INSTALLED
GFE	GOVERNMENT FURNISHED EQUIPMENT
G.F.I. OR GFI	GROUND FAULT INTERRUPTOR
GND OR GRND	GROUND
GOVT.	GOVERNMENT
GR	GRADE
GRS	GALVANIZED RIGID STEEL CONDUIT
GWB	GYPSUM WALLBOARD

H

HB	HOSE BIBB
HBD	HARDBOARD
HC	HANDICAPPED
HD	HEAD
HDRL	HANDRAIL
HIP	HIGH PRESSURE
H.PT.	HIGH POINT
H.S.	HIGH STRENGTH
HT	HEIGHT
HW	HOT WATER
HWC	HOT WATER CIRCULATING
HZ	HERTZ

I

I OR EF	IRON
IC	INTERCOM
IES	ILLUMINATING ENGINEERING SOCIETY
INSUL	INSULATION
I.E.	INVERT ELEVATION

J

JB OR J-BOX	JUNCTION BOX
JC	JANITOR CLOSET
JCT	JUNCTION
JST	JOIST

K

K	KEY
Kcmil or KCM	KILO CIRCULAR MIL
KIP	KILOPOUND
KL	KEY LOCK
KP	KICK PLATE
KVA	KILOVOLTS AMPERES
Kvar	KILOVOLT AMPERES REACTIVE

L

L	LUMEN
LAM	LAMINATED FINISH/PLASTICLAMINATE
LAN	LOCAL AREA NETWORK
LAT	LEAVING AIR TEMPERATURE
LBR	LUMBER
LBS, #	POUNDS, POUND
LD	LOAD
LDG	LOADING
LIN	LINEAR
LOC	LOCATION
LONG	LONGITUDINAL
LP	LOW POINT
LPS	LIGHT PROOF SHADE
L.R.	LONG RADIUS
LTG	LIGHTING
LWT	LEAVING WATER TEMPERATURE

M

M	THOUSAND
MAS	MASONRY
MAT OR MAT'L	MATERIAL
MAT	ENTRY MAT
MAU	MAKE-UP AIR UNIT
M & B	MATCHED & BEADED
MCJ	MASONRY CONTROL JOINT
MER	MECHANICAL EQUIPMENT ROOM
MET OR MTL.	METAL
MEZZ	MEZZANINE
MFG	MANUFACTURING
MG	MOTOR GENERATOR
MIN	MINIMUM
ML	METAL LATH
MLDG	MOULDING
MONO	MONOLITHIC
MOT	MOTOR
MR	MOISTURE RESISTANT
MSTC	MASTIC

N

NA	NOT APPLICABLE
N.R.	NOT REQUIRED

O

OA	OUTSIDE AIR
OBSC	OBSCURE
OB WG	OBSCURE WIRE GLASS
OCEW	ON CENTERS EACH WAY
OHC	OVERHEAD COILING
OHE	OVERHEAD ELECTRICAL
OPP	OPPOSITE
OPP.H.	OPPOSITE HAND
OPS	OPERATIONS
O.R.	OBSERVATION RISER
OS & Y	OUTSIDE SCREW & YOKE

P

P	PAINT
PA	PUBLIC ADDRESS
PBS	PUSH BUTTON STATION
PC	PIECE
PC	PRECAST
PD	PAVEMENT DRAIN
PERF	PERFORATED
PH OR dia.	PHASE
P.I.V.	POST INDICATING VALVE
PLATF	PLATFORM
PLBG.	PLUMBING
PLG	PILING
PLY.WD.	PLYWOOD
POL	POLISH
PORC	PORCELAIN
PREFIN	PREFINISHED
PROJ	PROJECT
P.S.	PRESSED STEEL
PT	POINT or POTENTIAL (VOLTAGE) TRANSFORMER
PTD	PAINTED
PTN	PARTITION
PVMT	PAVEMENT
PW	PASS WINDOW

Q

QT	QUART
QTRS	QUARTERS

R

R OR RSR	RISER
RA	RETURN AIR
RAD OR R	RADIUS
RAR	RETURN AIR REGISTER
RB	RESILIENT BASE
RC	REMOTE CONTROL
RCVR	RECEIVER
RECP	RECEPTACLE
RECR	RECREATION
RECT.	RECTIFIER
REFR	REFRIGERATOR
REG	REGISTER
REINF	REINFORCEMENT
REM	REMOVABLE
RGE	RANGE
RGH	ROUGH
RUB	RUBBER

S

SA	SUPPLY AIR
SD	STORM DRAIN
SDI	STEEL DECK INSTITUTE
SDL	STORM DRAIN LEADER
SDVT	STATIC DISSIPATIVE VINYL TILE
SJI	STEEL JOIST INSTITUTE
SEQ	SEQUENCE
SHLD.	SHOULDER
S/O	SAND/OIL
SPF	SOUNDPROOF
SPH	SPACE HEATER
SPKR	SPEAKER
SPL	SPECIAL
STGR	STRINGER
STOR	STORAGE
STR OR STRUCT	STRUCTURAL
STWY	STAIRWAY
SUB FL	SUB FLOOR
SUSP	SUSPENDED
SW	SWITCH

T

T/TR	THREAD/THREADS
TAN	TANGENT
TBD	TACK BOARD
TEL	TELEPHONE
TERM	TERMINAL
TGL	TOGGLE
TH	THRESHOLD
TLP	TRANSLUCENT PANEL
T.O.	TOP OF
TOIL	TOILET
T.O.M.	TOP OF MASONRY
TOPO	TOPOGRAPHY
TP	TOILET PARTITION
TRANS	TRANSVERSE
T'STAT	THERMOSTAT

U

UC	UNIT COOLER
UGE	UNDERGROUND ELECTRICAL
UNEX	UNEXCAVATED
UNFIN	UNFINISHED
UPS	UNINTERRUPTABLE POWER SYSTEM
UT	UTILITY

V

VCT	VINYL COMPOSITION TILE
VD	VOLUME DAMPER
VEST	VESTIBULE
VT	VINYL TILE OR VOLTAGE TRANSFORMER

W

W	WALL FINISHES
W	WIRE
WB	WET BULB
W.D.	WASTE DRAIN
WD. BLK.	WOOD BLOCKING
WD. DR.	WOOD DOOR
WDW	WINDOW
WF	WIDE FLANGE
WG	WIRE GLASS OR WATER GAGE
WH	WALL HYDRANT
WHM	WATTHOUR METER
WHT	WHITE
WKSH	WORK SHOP
WM	WATERPROOF MEMBRANE
WNSCT	WAINSCOT
WP	WEATHER PROOF
WPF	WATER PROOF
WPFG	WATER PROOFING
WR	WATER RESISTANT
WRB	WARDROBE
WWF	WELDED WIRE FABRIC

X

XFMR	TRANSFORMER

Y

Y.D.	YARD DRAIN

GENERAL NOTES:

1. THESE ABBREVIATIONS ARE STANDARD AND ARE PERTINENT TO THE CONDITIONS ON THIS SET OF DRAWINGS TO THE EXTENT APPLICABLE.
2. NOT ALL ABBREVIATIONS ARE NECESSARILY USED IN THIS SET OF DRAWINGS.
3. ADDITIONAL ABBREVIATIONS MAY APPEAR IN THIS SET OF DRAWINGS TO INDICATE SPECIFIC CONDITIONS THAT MAY OR MAY NOT BE LISTED HERE.

BLDG CODE ANALYSIS

APPLICABLE CODES:

- INTERNATIONAL BUILDING CODE (2003)
- INTERNATIONAL MECHANICAL CODE (2003)
- INTERNATIONAL PLUMBING CODE (2003)
- INTERNATIONAL FIRE CODE (2003)
- INTERNATIONAL ENERGY CONSERVATION CODE (2003)
- NATIONAL ELECTRICAL CODE (2003)
- UNIFORM CODE FOR BUILDING CONSERVATION (2003)
- ADA ACCESSIBILITY GUIDELINES (2002)

OCCUPANCY AND GROUP:	MIXED OCCUPANCY
SEISMIC DESIGN CATEGORY:	C
DESIGN WIND SPEED:	90 MPH
TYPE OF CONSTRUCTION:	V-B
FIRE RESISTANCE RATING:	NONE
NON-SEPARATED USE (302.3.1):	U: OCCUPANCY MOST RESTRICTIVE
SPRINKLERS REQUIRED:	NONE
TYPE OF FIRE PROTECTION:	FIRE EXTINGUISHERS ONLY
NUMBER OF STORIES:	ONE
BUILDING HEIGHT:	30 FEET
ACTUAL AREA PER FLOOR:	8749 SF
ACTUAL AREA BY OCCUPANCY:	B: 1906 SF
	S-1: 1755 SF
NUMBER OF STORIES:	U: 5088 SF
TOTAL ALLOWABLE AREA FOR:	
ONE STORY:	9,625 SF

RM NO	ROOM NAME	OCCUPANCY AND USE		SF AREA	OCCUPANT LOAD		ACT AREA/ ALLOW AREA RATIO
101	VESTIBULE	B	ACCESSORY	112	NOT NORMALLY OCCUPIED	-	1.24
102	LOBBY	B	BUSINESS	126	100 OCCUPANTS/SF	2	1.40
103	FEED STORAGE	S-1	STORAGE	224	100 OCCUPANTS/SF	3*	2.49
104	OFFICE	B	BUSINESS	219	100 OCCUPANTS/SF	3	2.43
105	BREAK ROOM	B	BUSINESS	207	100 OCCUPANTS/SF	3	2.30
106	JANITOR	B	ACCESSORY	108	100 OCCUPANTS/SF	2	1.20
107	STORAGE	B	ACCESSORY	112	100 OCCUPANTS/SF	2	1.24
108	WOMEN'S TOILET	B	BUSINESS	132	100 OCCUPANTS/SF	2*	1.47
109	MEN'S TOILET	B	BUSINESS	131	100 OCCUPANTS/SF	2*	1.46
110	STAFF TOILET	B	BUSINESS	147	100 OCCUPANTS/SF	2	1.63
111	MECHANICAL ROOM	B	ACCESSORY	399	100 OCCUPANTS/SF	4*	4.43
112	GARAGE SHOP	S-1	PARKING/REPAIR SHOP	1531	200 OCCUPANTS/SF	8	17.01
113	CORRIDOR	B	ACCESSORY	213	NOT NORMALLY OCCUPIED	-	2.37
114	JAR/TRAY ROOM	U	TANKS	400	300 OCCUPANTS/SF	2	4.44
115	REARING	U	TANKS	4688	300 OCCUPANTS/SF	16	52.09
			TOTAL	8749 SF		51	97.21%

* EXITS DIRECTLY TO EXTERIOR

DESIGN OCCUPANT LOAD:	50 MAXIMUM
EXIT WIDTH REQUIRED:	10 INCHES (0.2/OCCUPANT LOAD)
EXIT WIDTH PROVIDED:	32 INCHES MINIMUM
ALLOWABLE TRAVEL DISTANCE:	200 FEET (WORST CASE 109 FEET)

MINIMUM NUMBER OF REQUIRED PLUMBING FACILITIES:

WATER CLOSETS REQUIRED:	1 M	1 F
WATER CLOSETS PROVIDED:	2 M	1 F
LAVATORIES REQUIRED:	1 M	1 F
LAVATORIES PROVIDED:	2 M	1 F
BATH TUBS OR SHOWERS:	0	
DRINKING FOUNTAINS:	1 (2 PROVIDED)	
SERVICE SINKS:	1 (1 PROVIDED)	

REGISTERED PROFESSIONAL ENGINEER #5149 STANLEY S. POSTMA STATE OF UTAH

REV	DATE	BY	DESCRIPTION
R	3/07	MRW	RECORD DRAWING

SCALE: NONE

WARNING: 0 ½ 1 — IF THIS BAR DOES NOT MEASURE 1" THEN DRAWING IS NOT TO SCALE

DESIGNED D. BARBEAU
DRAWN R. WALN
CHECKED

RECORD DRAWING

This record drawing has been prepared, entirely or in part on the basis of unverified information compiled and furnished by others to the preparer who is not responsible for any inaccuracies, errors or omissions which may have been incorporated into the document as a result

MWH

UTAH DIVISION OF WILDLIFE RESOURCES

WHITEROCKS STATE FISH HATCHERY

ARCHITECTURAL ABBREVIATIONS AND BUILDING CODE ANALYSIS

SHEET A-1

1690703

File: wrfha01-RD.dgn Model: Default ColorTable: bw.ctb DesignScript: LightScreen.pen PlotScale: 1.999996:1 User: KaiCrick Plot Date: 17-DEC-2007 16:40

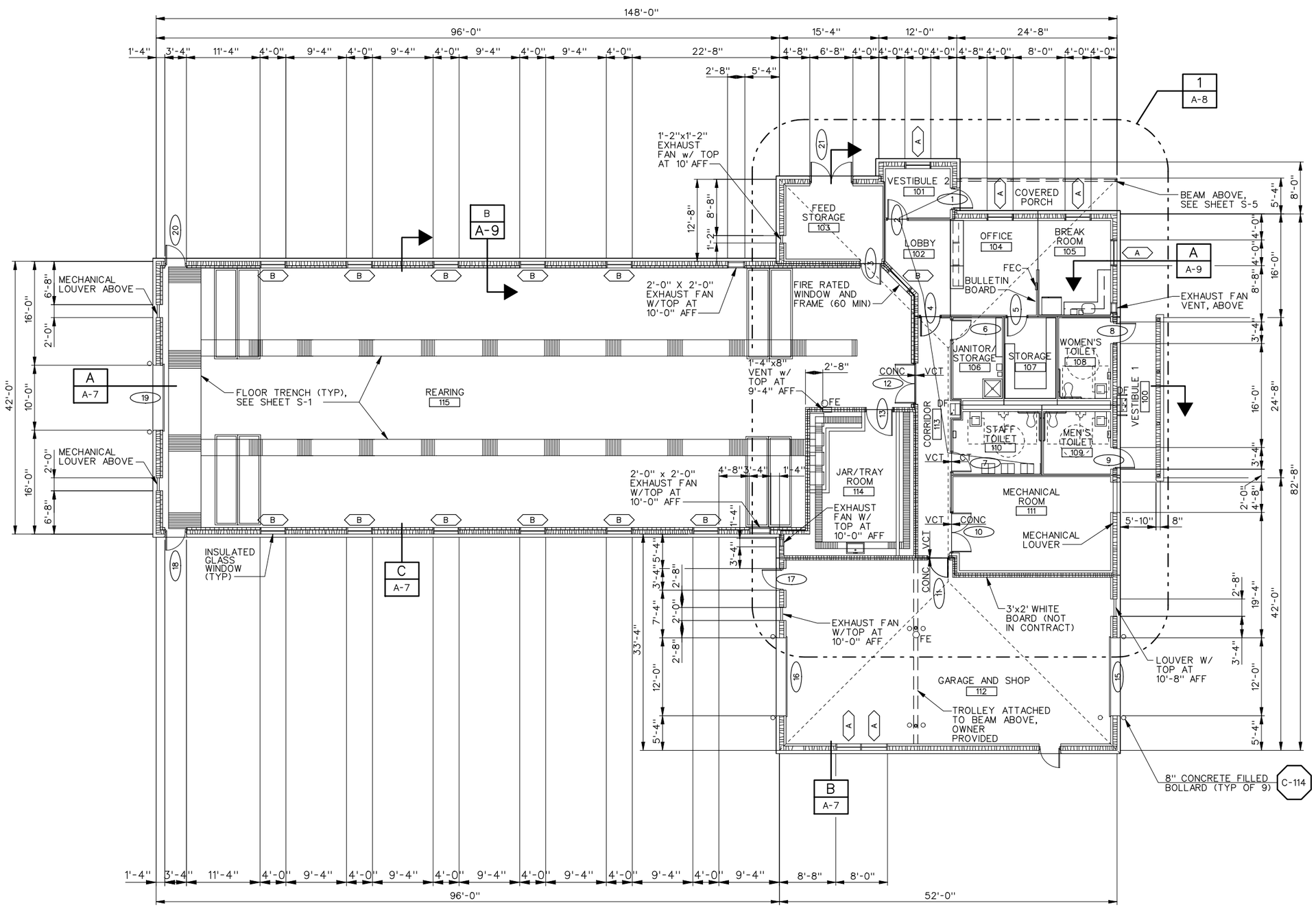

GENERAL NOTES:

1. EXTERIOR WALL DIMENSIONS ARE TO FACE OF 8" CMU ABOVE BELT COURSE.
2. THE HINGE SIDE OF DOORS IN STUD WALLS SHALL BE LOCATED 4" AWAY FROM ADJACENT PERPENDICULAR WALL UNLESS DIMENSIONED OTHERWISE.
3. ALL STEEL STUDS ARE 3-5/8" UNLESS INDICATED OTHERWISE.
4. SEE MECHANICAL FOR TANK LAYOUT IN REARING AREA.
5. SEE STRUCTURAL FOR FLOOR TRENCH LAYOUT IN REARING AREA.
6. BOLLARDS IN FRONT OF OH DOORS ARE 1" INTO THE WIDTH OF THE OPENING AND 12" FROM THE FACE OF WALL.

FINISHED FLOOR:

6150.00' CIVIL

LEGEND

- A — WINDOW TYPE
- 1 — DOOR NUMBER
- 101 — ROOM NUMBER
- STEEL STUD WALL
- CMU WALL
- CMU w/STEEL STUD WALL
- CMU w/FURRED OUT FIBERGLASS REINFORCED PANELS
- FEC — FIRE EXTINGUISHER CABINET (SEMI-RECESSED)

REGISTERED PROFESSIONAL ARCHITECT #5149 STANLEY S. POSTMA STATE OF UTAH

ARCHITECTURAL FLOOR PLAN

REV	DATE	BY	DESCRIPTION
R	3/07	MRW	RECORD DRAWING

SCALE 1/8"=1'-0"

WARNING 0 1/2 1 — IF THIS BAR DOES NOT MEASURE 1" THEN DRAWING IS NOT TO SCALE

DESIGNED D. BARBEAU
DRAWN R. WALN
CHECKED

RECORD DRAWING

This record drawing has been prepared, entirely or in part on the basis of unverified information compiled and furnished by others to the preparer who is not responsible for any inaccuracies, errors or omissions which may have been incorporated into the document as a result

MWH

UTAH DIVISION OF WILDLIFE RESOURCES
WHITEROCKS STATE FISH HATCHERY

HATCHERY AND OPERATIONS BUILDING
ARCHITECTURAL FLOOR PLAN

SHEET A-2

1690703

File: wrfha02-RD.dgn Model: Default ColorTable: bw.ctb DesignScript: LightScreen.pen PlotScale: 15.999968:1 User: KaiCrick Plot Date: 17-DEC-2007 16:40

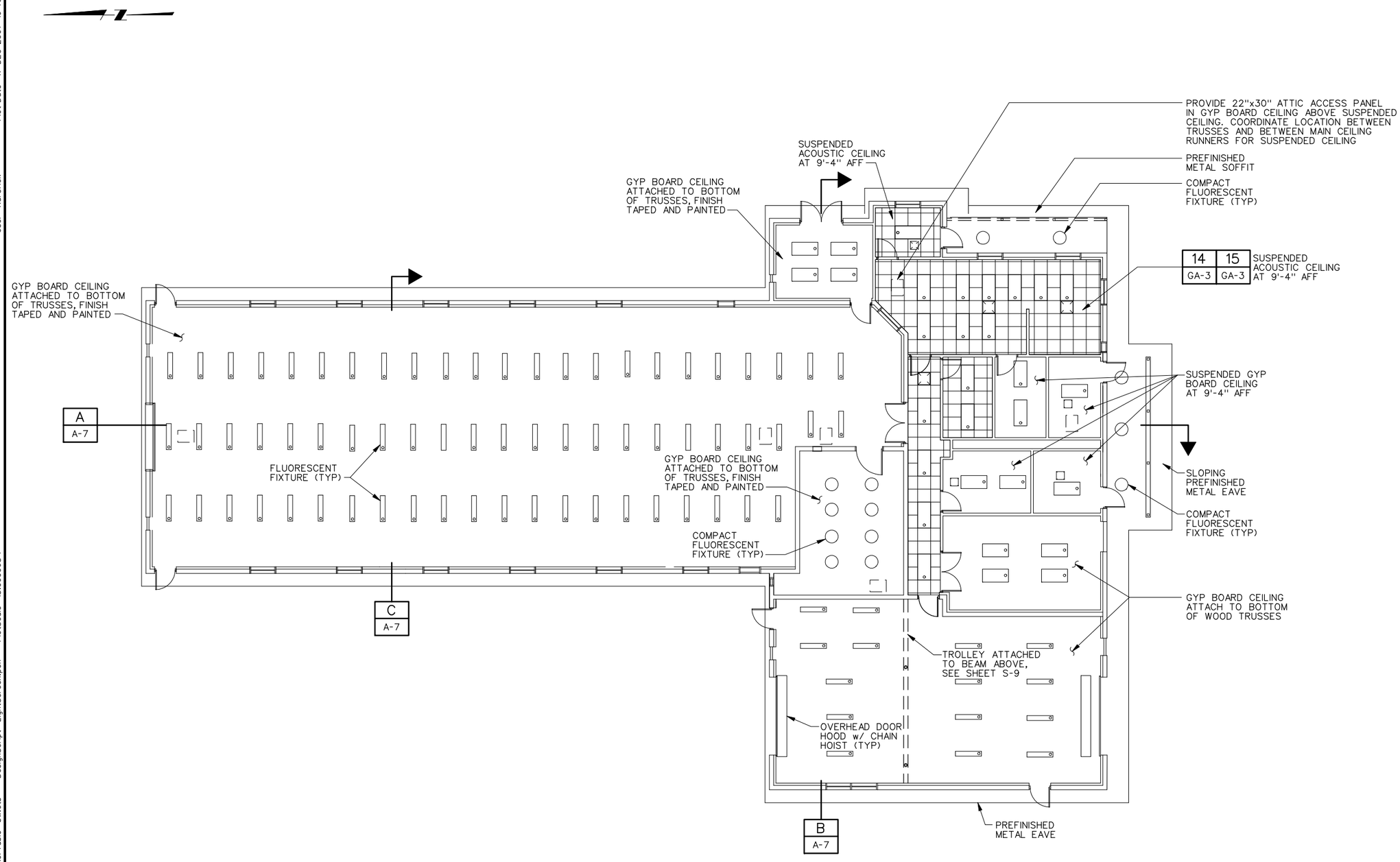

LEGEND

- AIR DIFFUSER
- SUSPENDED ACOUSTIC CEILING GRID
- FLUORESCENT FIXTURE (1'x4')
- COMPACT FLUORESCENT FIXTURE
- FLUORESCENT FIXTURE (2'x4')

NOTE:

FOR ALL SUSPENDED GYPSUM BOARD CEILINGS EXPOSED TO VIEW, PROVIDE 2-WAY CONTROL JOINTS AT 12'-0" O.C..

REFLECTED CEILING PLAN

REGISTERED PROFESSIONAL ENGINEER #5149 STANLEY S. POSTMA STATE OF UTAH

REV	DATE	BY	DESCRIPTION
R	3/07	MRW	RECORD DRAWING

SCALE: 1/8"=1'-0"

WARNING: 0 1/2 1 — IF THIS BAR DOES NOT MEASURE 1" THEN DRAWING IS NOT TO SCALE

DESIGNED D. BARBEAU
DRAWN R. WALN
CHECKED

RECORD DRAWING

This record drawing has been prepared, entirely or in part on the basis of unverified information compiled and furnished by others to the preparer who is not responsible for any inaccuracies, errors or omissions which may have been incorporated into the document as a result

MWH

UTAH DIVISION OF WILDLIFE RESOURCES

WHITEROCKS STATE FISH HATCHERY

HATCHERY AND OPERATIONS BUILDING
REFLECTED CEILING PLAN

SHEET A-3

1690703

File: wrfha03-RD.dgn Model: Default ColorTable: bw.ctb DesignScript: LightScreen.pen PlotScale: 15.999968:1 User: KaiCrick Plot Date: 17-DEC-2007 16:40

NOTES:

1. PROVIDE ICE AND WATER SHIELD ON TOP OF LOWERMOST STRUCTURAL ROOF DECK, BELOW SLEEPERS. OVERLAP MINIMUM OF 6".
2. HEAT TRACE ALL GUTTERS AND DOWNSPOUTS.
3. SNOW CLIP SELECTION SHALL BE APPROVED BY THE ENGINEER/OWNER.
4. DIRECT DRIVE EXHAUST FANS:
   GARAGE AND SHOP - 1/6HP, 1160 RPM
   OFFICE/ADMINISTRATION - 1/4HP, 1160 RPM
   REARING - 1/4HP, 1160 RPM
   FAN SIZE - 20" (MINIMUM) WITH TALL BASE, INSECT SCREEN AND ROOF CURB. PROVIDE ADJUSTABLE THERMOSTAT AND 60% HUMIDITY SWITCH FOR AUTOMATIC OPERATION.

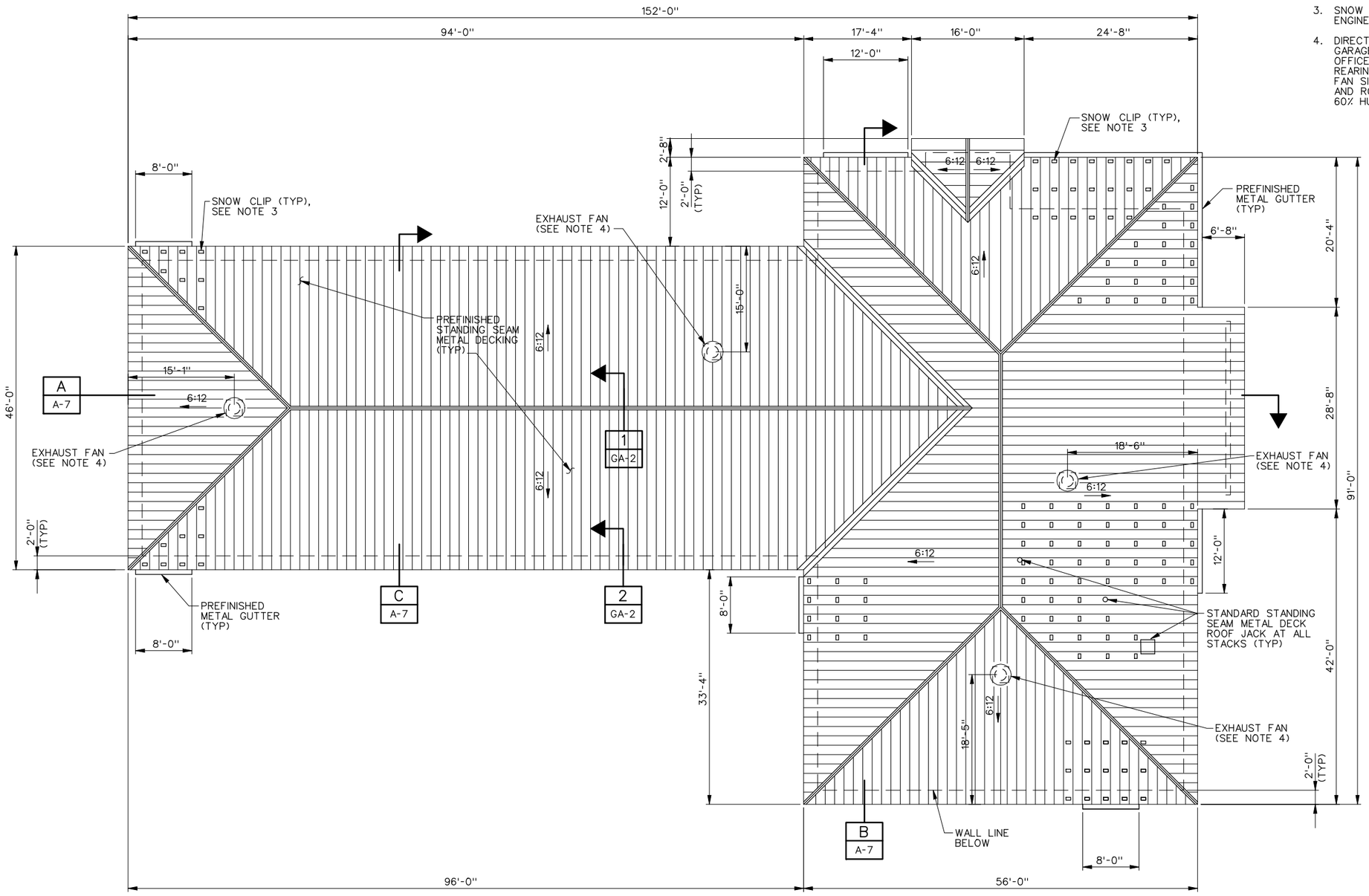

ARCHITECTURAL ROOF PLAN

SCALE: 1/8"=1'-0"

REV	DATE	BY	DESCRIPTION
R	3/07	MRW	RECORD DRAWING

SCALE: AS SHOWN

WARNING: 0 1/2 1 — IF THIS BAR DOES NOT MEASURE 1" THEN DRAWING IS NOT TO SCALE

DESIGNED D. BARBEAU
DRAWN R. WALN
CHECKED

RECORD DRAWING

This record drawing has been prepared, entirely or in part on the basis of unverified information compiled and furnished by others to the preparer who is not responsible for any inaccuracies, errors or omissions which may have been incorporated into the document as a result

MWH

UTAH DIVISION OF WILDLIFE RESOURCES
WHITEROCKS STATE FISH HATCHERY

HATCHERY AND OPERATIONS BUILDING
ARCHITECTURAL ROOF PLAN

SHEET A-4

1690703

REGISTERED PROFESSIONAL ENGINEER #5149 STANLEY S. POSTMA STATE OF UTAH

File: wrfha04-RD.dgn Model: Default ColorTable: bw.ctb DesignScript: LightScreen.pen PlotScale: 15.999968:1 User: KaiCrick Plot Date: 17-DEC-2007 16:40

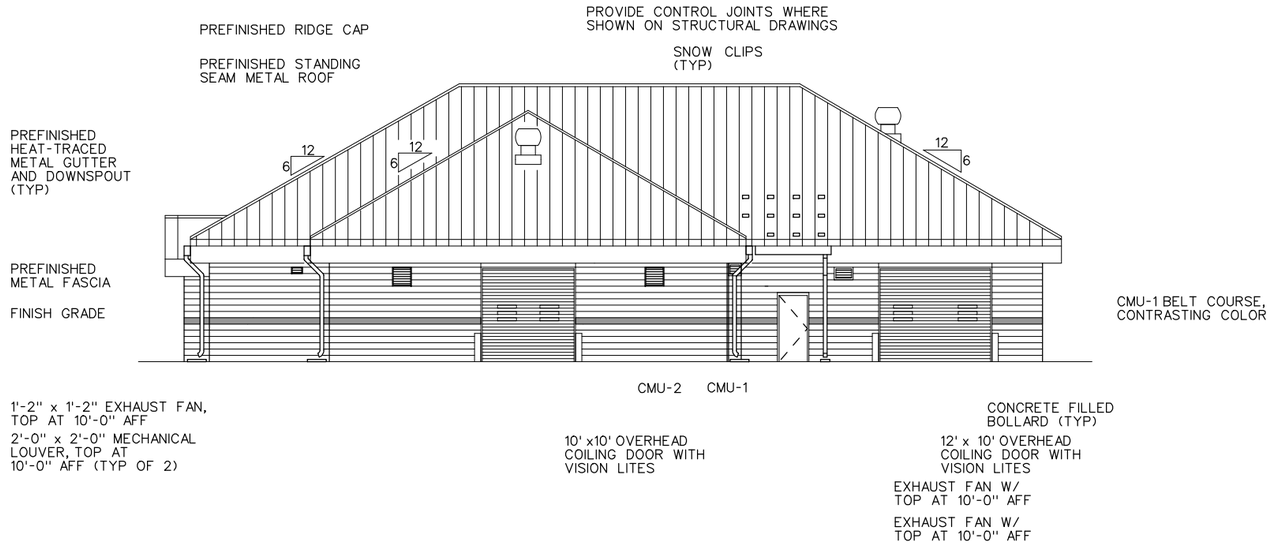

NORTH ELEVATION

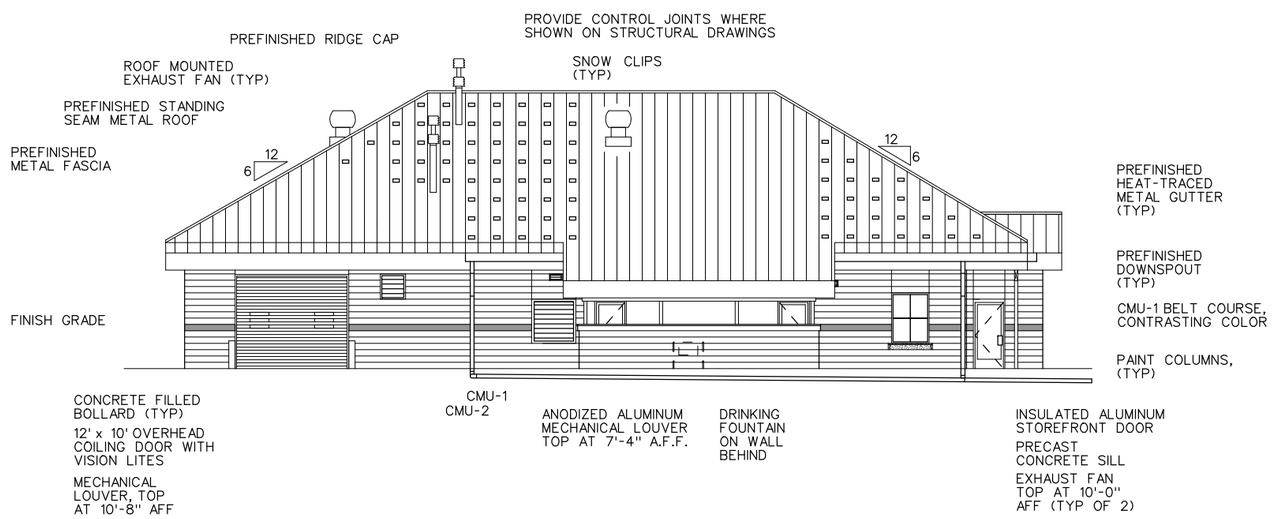

SOUTH ELEVATION

REGISTERED PROFESSIONAL ARCHITECT #5149 STANLEY S. POSTMA STATE OF UTAH

REV	DATE	BY	DESCRIPTION
R	3/07	MRW	RECORD DRAWING

SCALE: 1/8"=1'-0"

WARNING: 0 1/2 1 — IF THIS BAR DOES NOT MEASURE 1" THEN DRAWING IS NOT TO SCALE

DESIGNED D. BARBEAU
DRAWN R. WALN
CHECKED

RECORD DRAWING

This record drawing has been prepared, entirely or in part on the basis of unverified information compiled and furnished by others to the preparer who is not responsible for any inaccuracies, errors or omissions which may have been incorporated into the document as a result

MWH

UTAH DIVISION OF WILDLIFE RESOURCES

WHITEROCKS STATE FISH HATCHERY

HATCHERY AND OPERATIONS BUILDING
HATCHERY ELEVATIONS - 1

SHEET A-5

1690703

File: wrfha05-RD.dgn Model: Default ColorTable: bw.ctb DesignScript: LightScreen.pen PlotScale: 15.999968:1 User: KaiCrick Plot Date: 17-DEC-2007 16:40

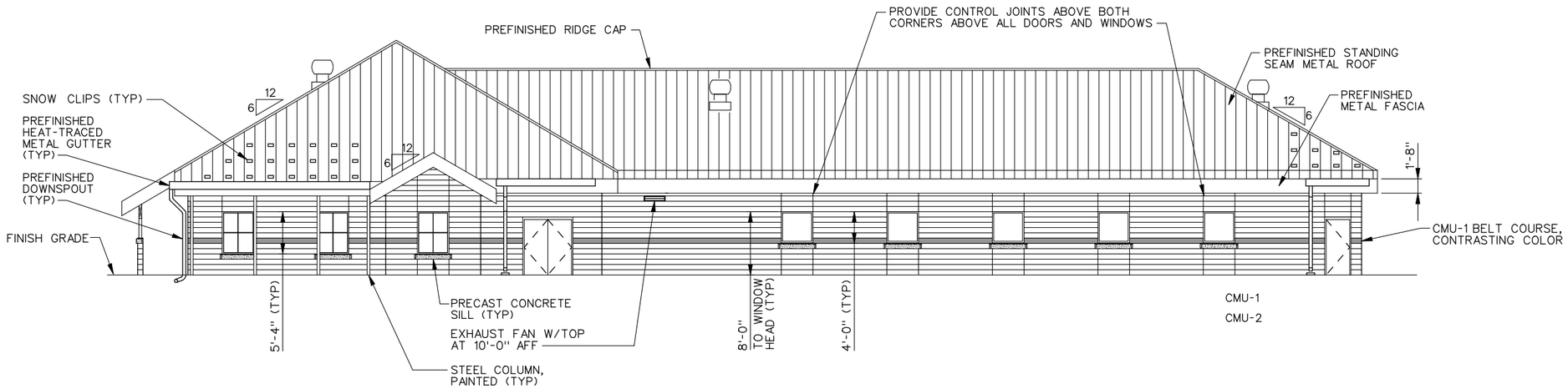

EAST ELEVATION

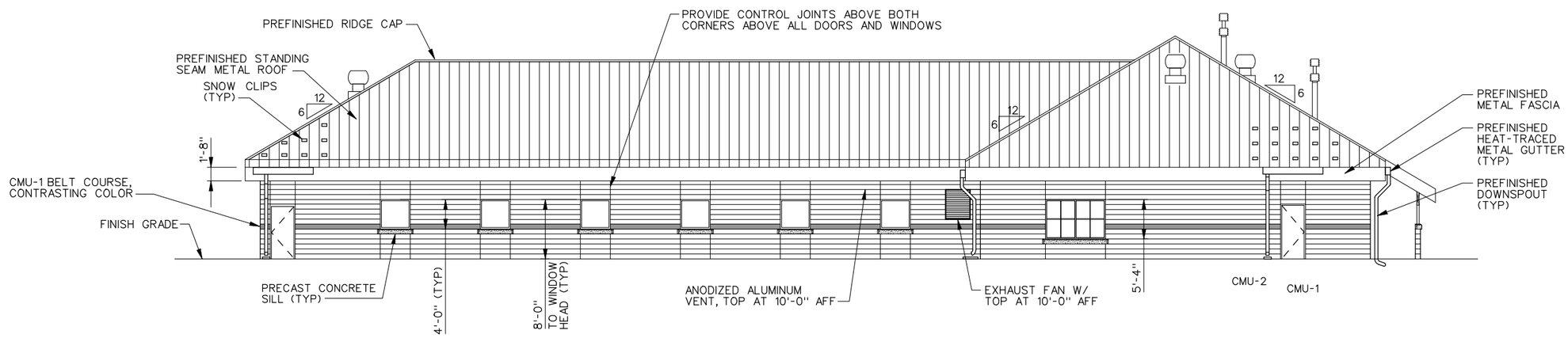

WEST ELEVATION

REGISTERED PROFESSIONAL ARCHITECT #5149 STANLEY S. POSTMA STATE OF UTAH

REV	DATE	BY	DESCRIPTION
R	3/07	MRW	RECORD DRAWING

SCALE: 1/8"=1'-0"

WARNING: 0 1/2 1 — IF THIS BAR DOES NOT MEASURE 1" THEN DRAWING IS NOT TO SCALE

DESIGNED D. BARBEAU
DRAWN R. WALN
CHECKED

RECORD DRAWING

This record drawing has been prepared, entirely or in part on the basis of unverified information compiled and furnished by others to the preparer who is not responsible for any inaccuracies, errors or omissions which may have been incorporated into the document as a result

MWH

UTAH DIVISION OF WILDLIFE RESOURCES

WHITEROCKS STATE FISH HATCHERY

HATCHERY AND OPERATIONS BUILDING
HATCHERY ELEVATIONS - 2

SHEET A-6

1690703

File: wrfha06-RD.dgn Model: Default ColorTable: bw.ctb DesignScript: LightScreen.pen PlotScale: 15.9999681 User: KaiCrick Plot Date: 17-DEC-2007 16:41

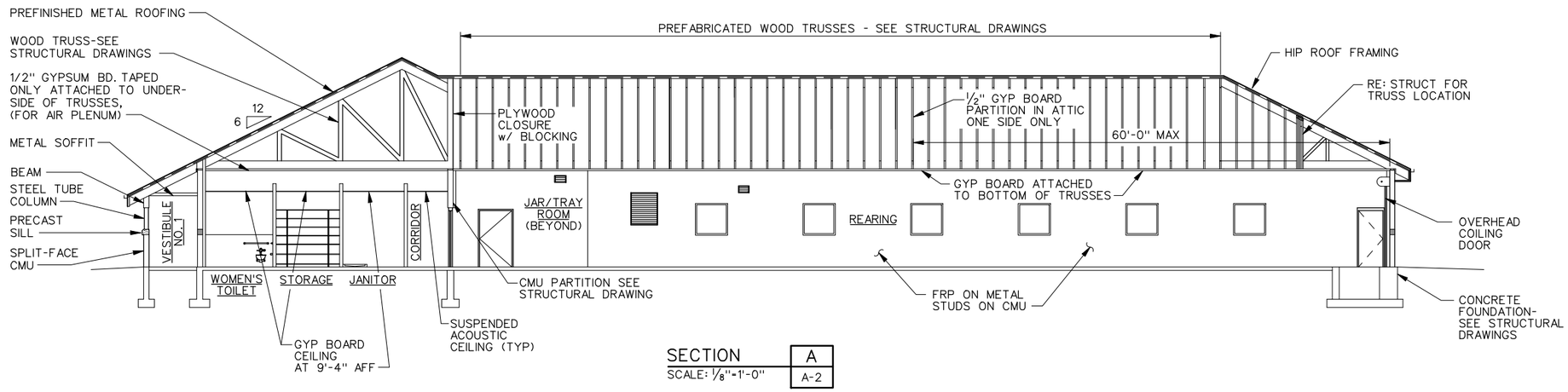

SECTION A
SCALE: 1/8"=1'-0"
A-2

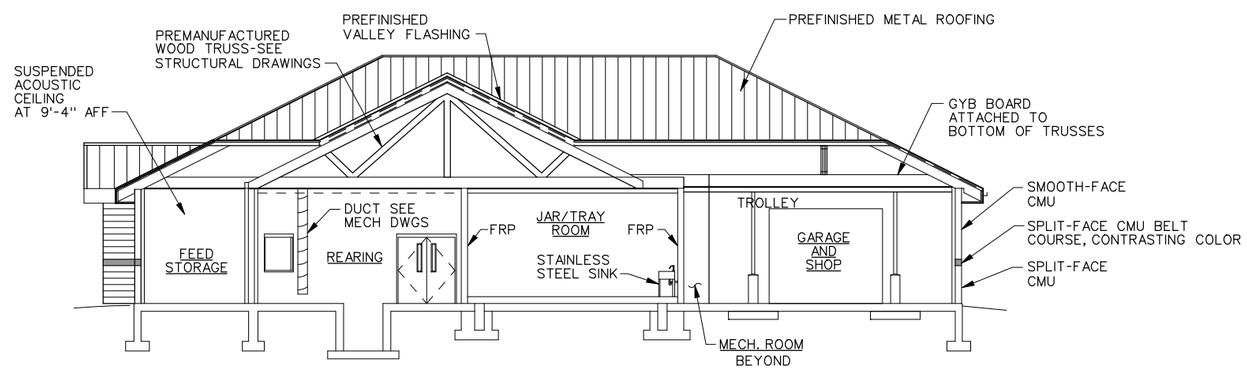

SECTION B
SCALE: 1/8"=1'-0"
A-2

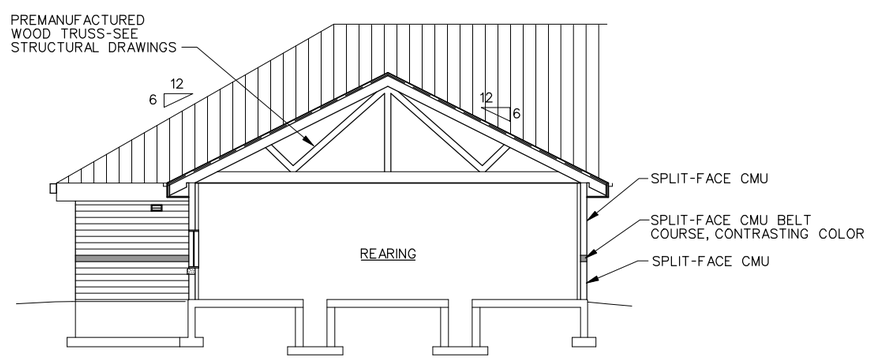

SECTION C
SCALE: 1/8"=1'-0"
A-2

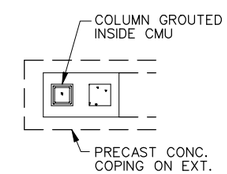

DETAIL 1
NOT TO SCALE
A-2

REGISTERED PROFESSIONAL ENGINEER #5149 STANLEY S. POSTMA STATE OF UTAH

REV	DATE	BY	DESCRIPTION
R	3/07	MRW	RECORD DRAWING

SCALE: AS SHOWN

WARNING: 0 1/2 1 — IF THIS BAR DOES NOT MEASURE 1" THEN DRAWING IS NOT TO SCALE

DESIGNED D. BARBEAU
DRAWN R. WALN
CHECKED

RECORD DRAWING

This record drawing has been prepared, entirely or in part on the basis of unverified information compiled and furnished by others to the preparer who is not responsible for any inaccuracies, errors or omissions which may have been incorporated into the document as a result

MWH

UTAH DIVISION OF WILDLIFE RESOURCES
WHITEROCKS STATE FISH HATCHERY

HATCHERY AND OPERATIONS BUILDING
BUILDING SECTIONS

SHEET A-7
1690703

File: wrfha07-RD.dgn Model: Default ColorTable: bw.ctb DesignScript: LightScreen.pen PlotScale: 15.999968:1 User: KaiCrick Plot Date: 17-DEC-2007 16:41

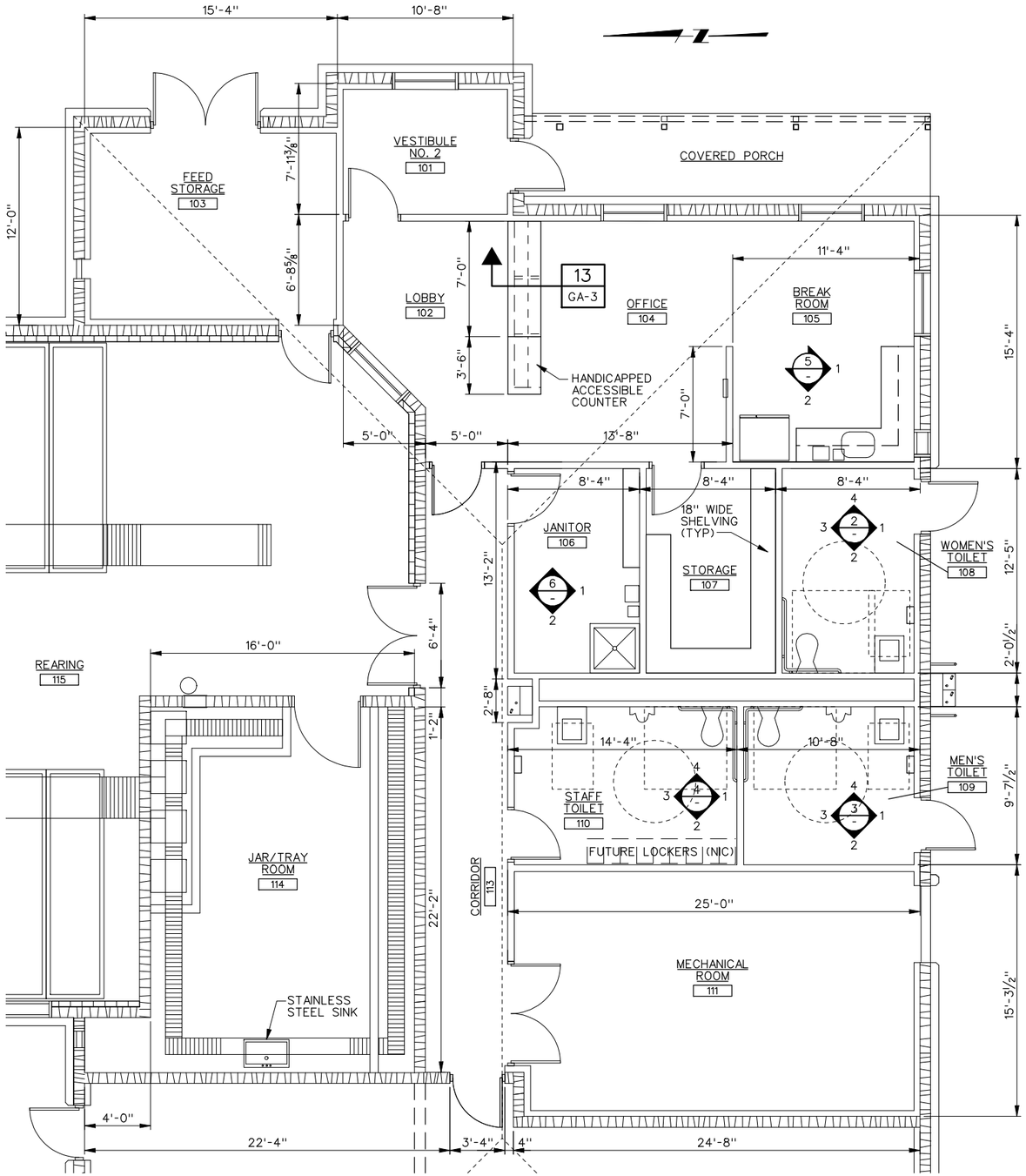

ENLARGED FLOOR PLAN 1
SCALE: 1/4"=1'-0" A-2

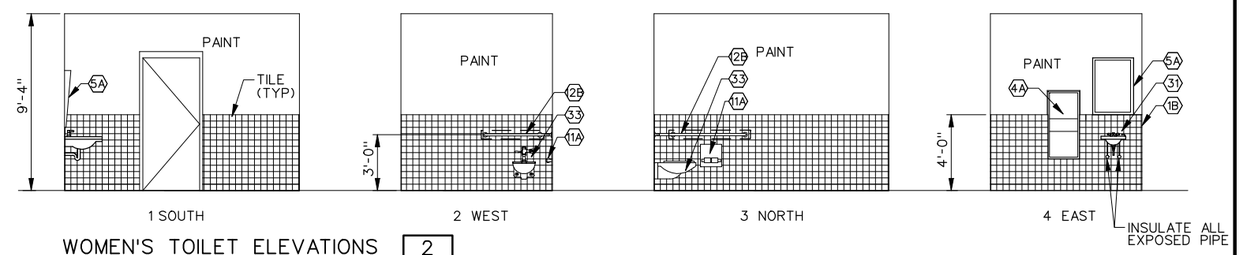

WOMEN'S TOILET ELEVATIONS 2
SCALE: 1/4"=1'-0" -

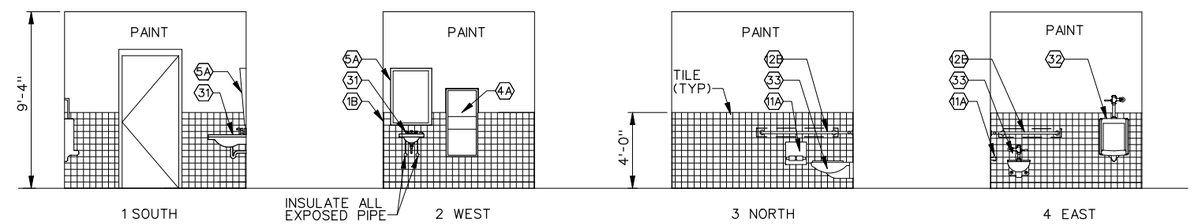

MEN'S TOILET ELEVATIONS 3
SCALE: 1/4"=1'-0" -

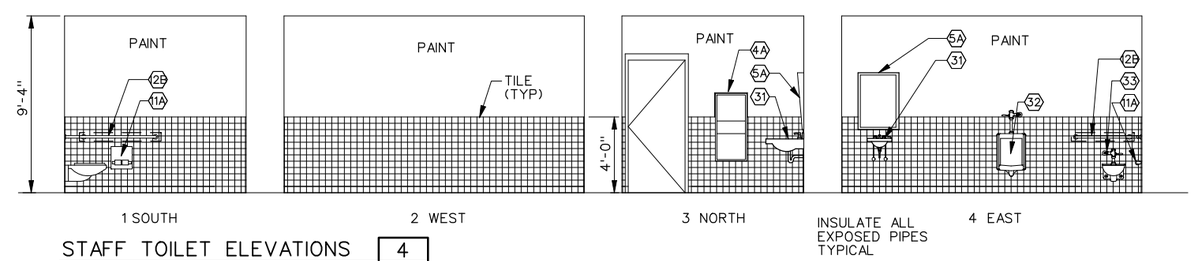

STAFF TOILET ELEVATIONS 4
SCALE: 1/4"=1'-0" -

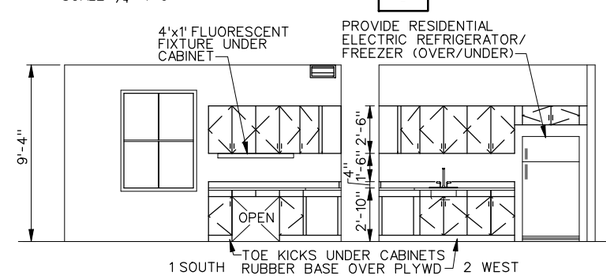

BREAK ROOM ELEVATIONS 5
SCALE: 1/4"=1'-0" -

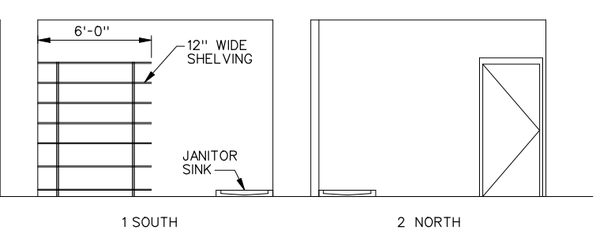

JANITOR ELEVATIONS 6
SCALE: 1/4"=1'-0" -

NOTES:

1. RE: SPECIFICATIONS FOR FIXTURE DESCRIPTIONS.
2. PROVIDE BLOCKING AS NEEDED FOR WALL MOUNTED FIXTURES, TYPICAL.
3. SEE LIST OF ACCESSORIES, SHEET GA-2, FOR ITEMS DESIGNATED BY ⟨•⟩.

REGISTERED PROFESSIONAL ENGINEER #5149 STANLEY S. POSTMA STATE OF UTAH

REV	DATE	BY	DESCRIPTION
R	3/07	MRW	RECORD DRAWING

SCALE 1/4"=1'-0"

WARNING 0 1/2 1 — IF THIS BAR DOES NOT MEASURE 1" THEN DRAWING IS NOT TO SCALE

DESIGNED D. BARBEAU
DRAWN R. WALN
CHECKED

RECORD DRAWING
This record drawing has been prepared, entirely or in part on the basis of unverified information compiled and furnished by others to the preparer who is not responsible for any inaccuracies, errors or omissions which may have been incorporated into the document as a result

MWH

UTAH DIVISION OF WILDLIFE RESOURCES
WHITEROCKS STATE FISH HATCHERY

HATCHERY AND OPERATIONS BUILDING
ENLARGED FLOOR PLAN AND
INTERIOR ELEVATIONS

SHEET A-8
1690703

File: wrfha08-RD.dgn Model: Default ColorTable: bw.ctb DesignScript: LightScreen.pen PlotScale: 7.999984:1 User: KaiCrick Plot Date: 17-DEC-2007 16:41

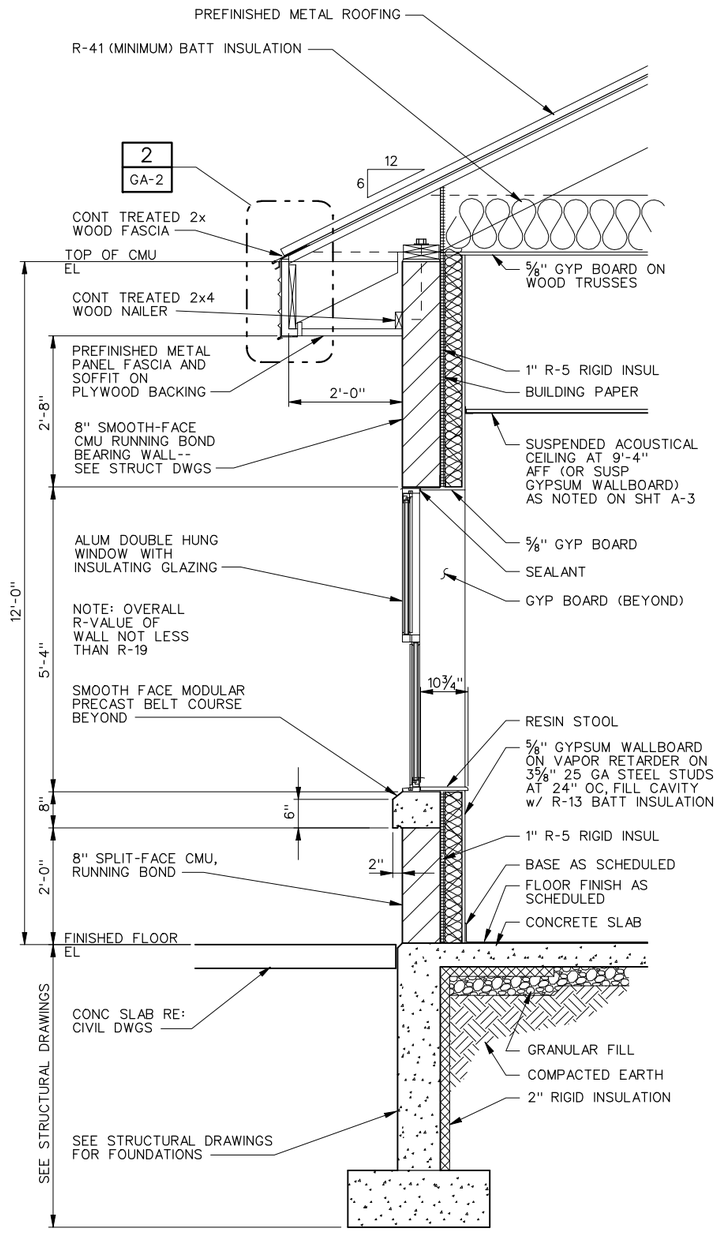

EXTERIOR WALL SECTION AT OPERATIONS AREA | A | A-2

SCALE: ¾"=1'-0"

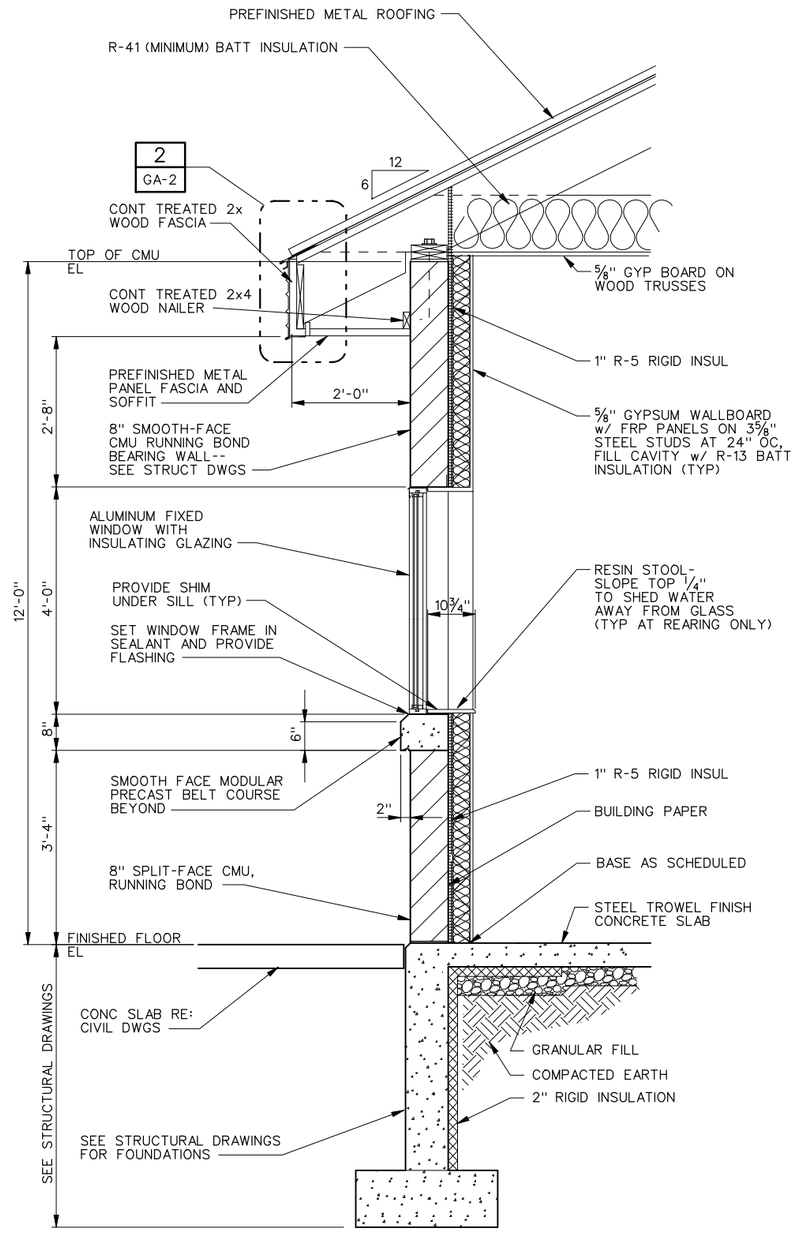

EXTERIOR WALL SECTION AT REARING | B | A-2

SCALE: ¾"=1'-0"

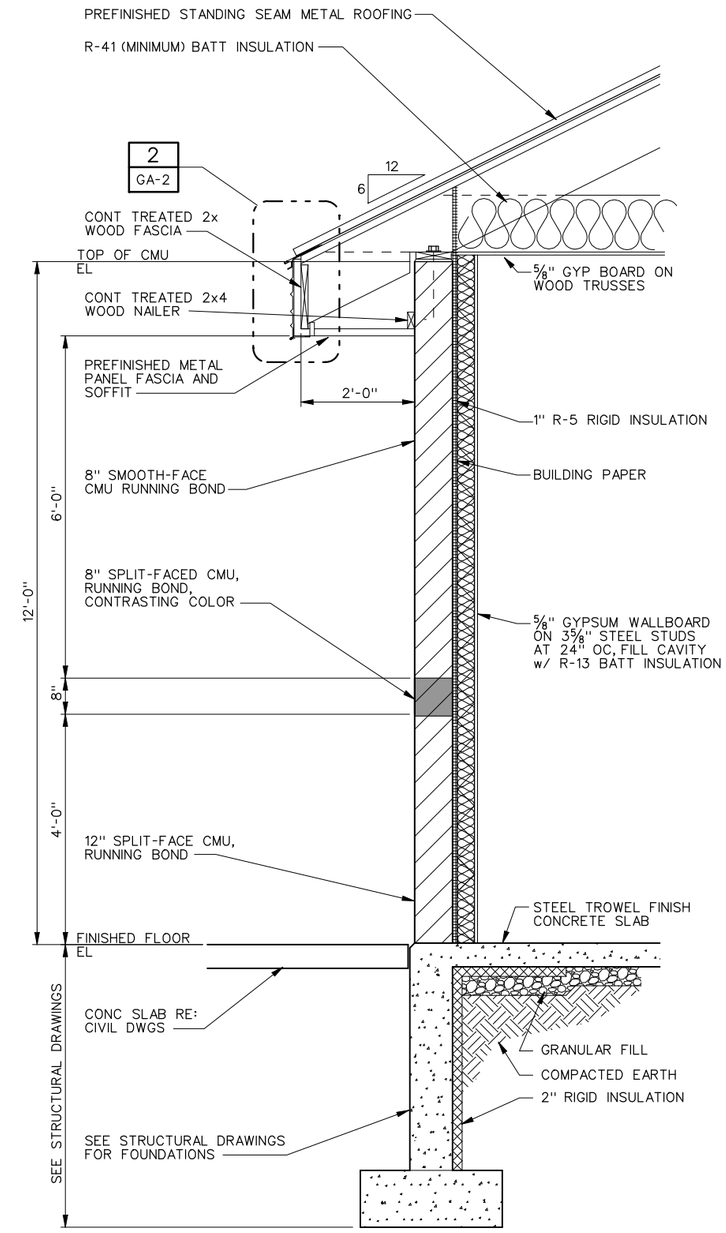

EXTERIOR WALL SECTION AT GARAGE AND SHOP | C | A-2

SCALE: ¾"=1'-0"

REGISTERED PROFESSIONAL ENGINEER #5149 STANLEY S. POSTMA STATE OF UTAH

REV	DATE	BY	DESCRIPTION
R	3/07	MRW	RECORD DRAWING

SCALE: ¾"=1'-0"

WARNING: 0 ½ 1 — IF THIS BAR DOES NOT MEASURE 1" THEN DRAWING IS NOT TO SCALE

DESIGNED D. BARBEAU
DRAWN R. WALN
CHECKED

RECORD DRAWING

This record drawing has been prepared, entirely or in part on the basis of unverified information compiled and furnished by others to the preparer who is not responsible for any inaccuracies, errors or omissions which may have been incorporated into the document as a result

MWH

UTAH DIVISION OF WILDLIFE RESOURCES

WHITEROCKS STATE FISH HATCHERY

HATCHERY AND OPERATION BUILDING WALL SECTIONS

SHEET A-9

1690703

File: wrfha09-RD.dgn Model: Default ColorTable: bw.ctb DesignScript: LightScreen.pen PlotScale: 2.666661:1 User: KaiCrick Plot Date: 17-DEC-2007 16:41

NOTES:

1. FOR ATTIC VENTING PROVIDE TWO 1-INCH DIAMETER HOLES IN 2X BLOCKING BETWEEN EACH TRUSS.
2. FEED STORAGE CEILING: ATTACH 2" R-10 RIGID POLYSTYRENE INSULATION TO BOTTOM OF WOOD TRUSSES WITH STAINLESS STEEL FASTENERS. BUTT EDGES TOGETHER TIGHTLY. TRIM PERIMETER TIGHT AGAINST WALL AND AGAINST ANY PENETRATIONS. INSTALL, FINISH, AND PAINT GWB ON RIGID INSULATION USING STAINLESS STEEL FASTENERS PER MANUFACTURER'S INSTRUCTIONS THROUGH INSULATION AND THEN INTO BOTTOM OF WOOD JOISTS.
3. PROVIDE ICE AND WATER SHIELD ON TOP OF LOWER MOST STRUCTURAL ROOF DECK BELOW SLEEPER. OVERLAP EDGES 6" MINIMUM.
4. SEE SHEET GA-1 FOR FINISH SCHEDULE, DOOR SCHEDULE AND WINDOW SCHEDULE.

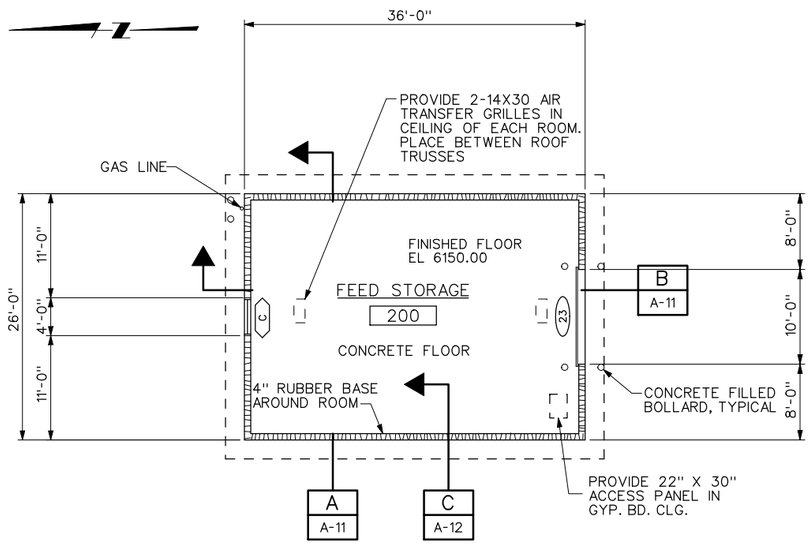

NOTE:

CEILING IS PAINTED GYPSUM BOARD ATTACHED TO UNDERSIDE OF WOOD TRUSSES THROUGHOUT.

FLOOR PLAN

SCALE: 1/8"=1'-0"

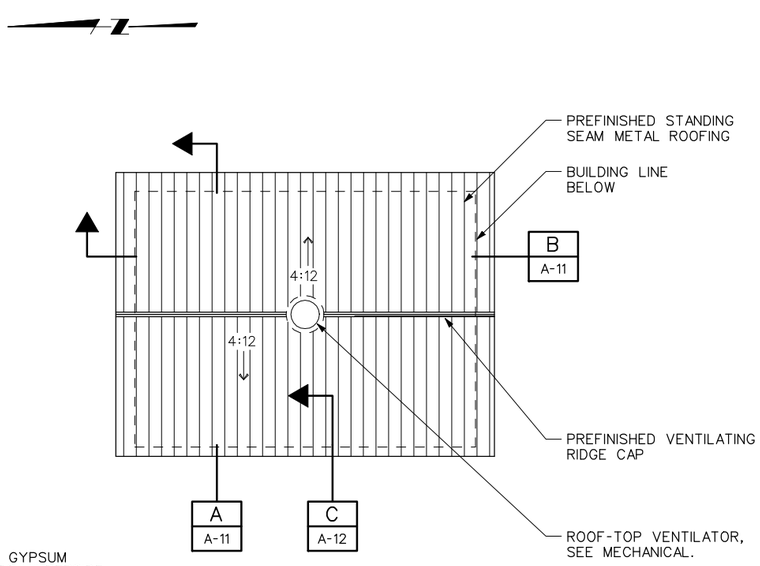

ROOF PLAN

SCALE: 1/8"=1'-0"

REGISTERED PROFESSIONAL ENGINEER #5149 STANLEY S. POSTMA STATE OF UTAH

REV	DATE	BY	DESCRIPTION
R	3/07	MRW	RECORD DRAWING

SCALE 1/8"=1'-0"

WARNING 0 1/2 1 IF THIS BAR DOES NOT MEASURE 1" THEN DRAWING IS NOT TO SCALE

DESIGNED
DRAWN R. WALN
CHECKED E. CRYER

RECORD DRAWING

This record drawing has been prepared, entirely or in part on the basis of unverified information compiled and furnished by others to the preparer who is not responsible for any inaccuracies, errors or omissions which may have been incorporated into the document as a result

MWH

UTAH DIVISION OF WILDLIFE RESOURCES

WHITEROCKS STATE FISH HATCHERY

FEED STORAGE BUILDING
FLOOR PLAN AND ROOF PLAN

SHEET A-10

1690703

File: wrfha10-RD.dgn Model: Default ColorTable: bw.ctb DesignScript: LightScreen.pen PlotScale: 15.999968:1 User: KaiCrick Plot Date: 17-DEC-2007 16:41

NOTES:

1. SEE SHEET GA-1 FOR FINISH SCHEDULE, DOOR SCHEDULE AND WINDOW SHEDULE.
2. SEE SHEET E-4 FOR LIGHTING FIXTURE SCHEDULE.

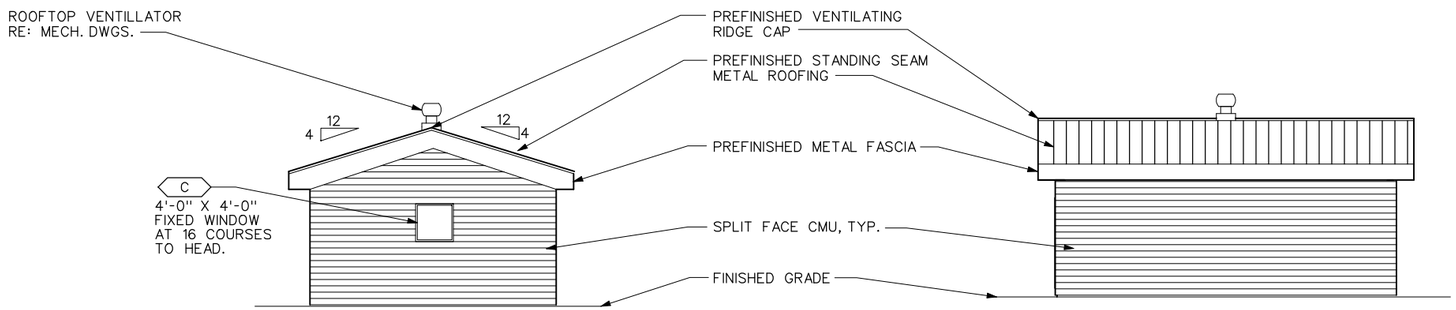

NORTH ELEVATION
SCALE: 1/8"=1'-0"

WEST ELEVATION
SCALE: 1/8"=1'-0"

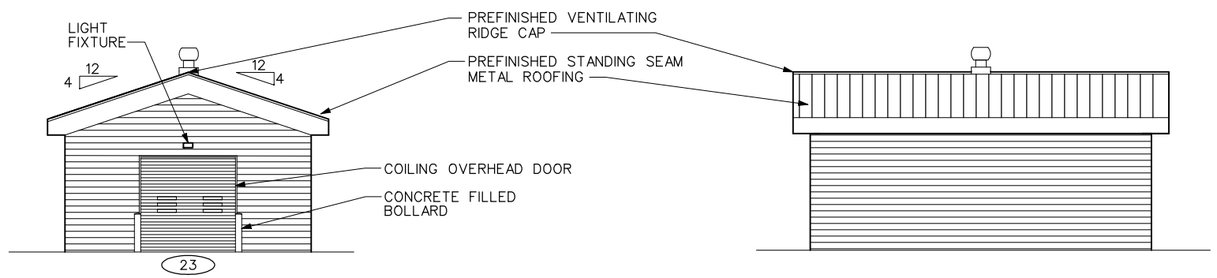

SOUTH ELEVATION
SCALE: 1/8"=1'-0"

EAST ELEVATION
SCALE: 1/8"=1'-0"

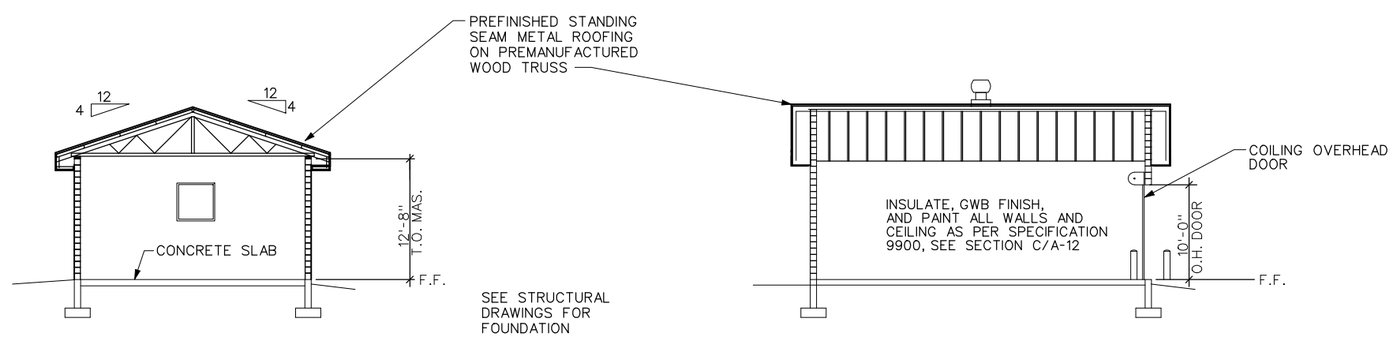

BUILDING SECTION LOOKING NORTH
SCALE: 1/8"=1'-0"
A
A-10

BUILDING SECTION LOOKING EAST
SCALE: 1/8"=1'-0"
B
A-10

REGISTERED PROFESSIONAL ARCHITECT #5149 STANLEY S. POSTMA STATE OF UTAH

REV	DATE	BY	DESCRIPTION
R	3/07	MRW	RECORD DRAWING

SCALE 1/8"=1'-0"

WARNING: 0 1/2 1 — IF THIS BAR DOES NOT MEASURE 1" THEN DRAWING IS NOT TO SCALE

DESIGNED
DRAWN R. WALN
CHECKED E. CRYER

RECORD DRAWING
This record drawing has been prepared, entirely or in part on the basis of unverified information compiled and furnished by others to the preparer who is not responsible for any inaccuracies, errors or omissions which may have been incorporated into the document as a result

MWH

UTAH DIVISION OF WILDLIFE RESOURCES
WHITEROCKS STATE FISH HATCHERY

FEED STORAGE BUILDING
EXTERIOR ELEVATIONS

SHEET
A-11
1690703

File: wrfha11-RD.dgn Model: Default ColorTable: bw.ctb DesignScript: LightScreen.pen PlotScale: 15.999968:1 User: KaiCrick Plot Date: 17-DEC-2007 16:41

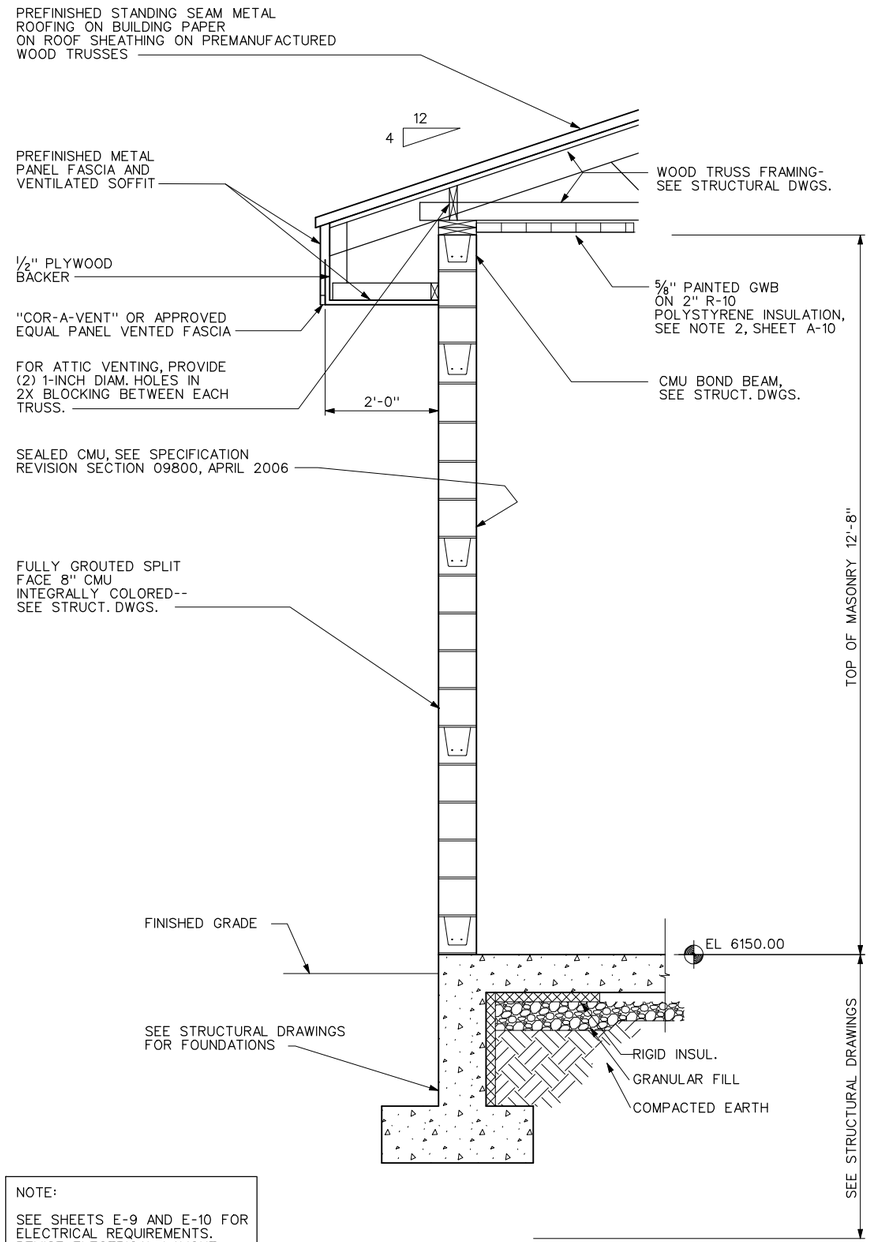

NOTE:

SEE SHEETS E-9 AND E-10 FOR ELECTRICAL REQUIREMENTS. REVISE ELECTRICAL LAYOUT TO MATCH STORAGE BUILDING CONFIGURATION AND LOCATION.

EXTERIOR WALL SECTION — C / A-10

SCALE: 3/4"=1'-0"

REGISTERED PROFESSIONAL ENGINEER #5149 STANLEY S. POSTMA STATE OF UTAH

REV	DATE	BY	DESCRIPTION
R	3/07	MRW	RECORD DRAWING

SCALE: 3/4"=1'-0"

WARNING: 0 1/2 1 — IF THIS BAR DOES NOT MEASURE 1" THEN DRAWING IS NOT TO SCALE

DESIGNED ____
DRAWN R. WALN
CHECKED E. CRYER

RECORD DRAWING

This record drawing has been prepared, entirely or in part on the basis of unverified information compiled and furnished by others to the preparer who is not responsible for any inaccuracies, errors or omissions which may have been incorporated into the document as a result

MWH

UTAH DIVISION OF WILDLIFE RESOURCES

WHITEROCKS STATE FISH HATCHERY

FEED STORAGE BUILDING
WALL SECTION

SHEET A-12

1690703

File: wrtha12-RD.dgn Model: Default ColorTable: bw.ctb DesignScript: LightScreen.pen PlotScale: 2.666661:1 User: KaiCrick Plot Date: 17-DEC-2007 16:41

GENERAL NOTES

GENERAL

THESE NOTES ARE GENERAL AND APPLY TO THE ENTIRE PROJECT EXCEPT WHERE SPECIFICALLY INDICATED OTHERWISE.

STRUCTURAL DIMENSIONS CONTROLLED BY OR RELATED TO MECHANICAL OR ELECTRICAL EQUIPMENT SHALL BE COORDINATED BY THE CONTRACTOR PRIOR TO CONSTRUCTION. BOLT SIZES, TYPES, AND PATTERNS SHALL BE VERIFIED WITH THE MANUFACTURER. ALL BOLT PATTERNS SHALL BE TEMPLATED TO INSURE ACCURACY OF PLACEMENT.

MECHANICAL AND ELECTRICAL EQUIPMENT SUPPORTS, ANCHORAGES, OPENINGS, RECESSES AND REVEALS NOT SHOWN ON THE STRUCTURAL DRAWINGS BUT REQUIRED BY OTHER CONTRACT DRAWINGS, SHALL BE PROVIDED FOR PRIOR TO PLACING CONCRETE.

STRUCTURAL DRAWINGS SHALL BE USED IN COORDINATION WITH MECHANICAL, ELECTRICAL, ARCHITECTURAL, CIVIL DRAWINGS AND SHOP DRAWINGS PROVIDED BY MANUFACTURES OF EQUIPMENT.

STRUCTURES HAVE BEEN DESIGNED FOR OPERATIONAL, HYDROSTATIC, AND BACKFILL LOADS ON THE COMPLETED STRUCTURES. THE STRUCTURES HAVE NOT BEEN DESIGNED TO RESIST THESE LOADS WHILE ONLY PARTIALLY CONSTRUCTED. DURING CONSTRUCTION, THE STRUCTURES SHALL BE PROTECTED FROM ALL CONSTRUCTION LOADS BY BRACING AND BALANCING UNTIL ALL STRUCTURAL ELEMENTS ARE IN PLACE, AND ALL CONCRETE HAS REACHED THE SPECIFIED 28 DAY COMPRESSIVE STRENGTH. OVERLOADING OF ANY STRUCTURAL ELEMENT IS PROHIBITED.

UNLESS OTHERWISE SHOWN, ON ALL STRUCTURAL DRAWINGS THE FINISHED GRADE AROUND STRUCTURES IS SHOWN THUS, INDICATING EITHER GROUND SURFACE, TOP OF CONCRETE SLAB, OR AC PAVEMENT. FOR DETAILS OF FINISH SURFACES SEE CIVIL AND ARCHITECTURAL DRAWINGS.

ALL CONSTRUCTION SHALL CONFORM TO THE 2003 EDITION OF THE INTERNATIONAL BUILDING CODE.

STRUCTURAL STEEL

STEEL CONSTRUCTION SHALL CONFORM TO THE SPECIFICATIONS AND STANDARDS AS CONTAINED IN THE LATEST EDITION OF THE LRFD MANUAL OF STEEL CONSTRUCTION.

STRUCTURAL WIDE FLANGE SHAPES SHALL BE STEEL MEETING ASTM A-992 SPECIFICATIONS.

OTHER SHAPES, BARS, PLATES AND SHEETS SHALL BE OF STEEL MEETING ASTM A-36 SPECIFICATIONS.

PIPE, PIPE COLUMNS, AND BOLLARDS SHALL BE OF STEEL MEETING ASTM A-53, TYPE E OR S, GRADE B STANDARD WEIGHT, UNO

HSS SHALL BE OF STEEL MEETING ASTM A-500 GRADE B.

STEEL JOISTS, BEAMS, AND GIRDERS SHALL NOT BE RELOCATED WITHOUT APPROVAL BY THE ENGINEER.

ALL WELDING SHALL BE BY THE SHIELDED ARC METHOD AND SHALL CONFORM TO AWS CODE FOR ARC AND GAS WELDING IN BUILDING CONSTRUCTION. QUALIFICATIONS OF WELDERS SHALL BE IN ACCORDANCE WITH THE SPECIFICATIONS FOR STANDARD QUALIFICATION PROCEDURE OF THE AWS.

CONCRETE (EXCEPT PRECAST CONCRETE)

UNLESS OTHERWISE NOTED OR SPECIFIED, ALL STRUCTURAL CONCRETE SHALL DEVELOP A MINIMUM COMPRESSIVE STRENGTH OF 4000 PSI IN 28 DAYS.

REINFORCEMENT STEEL SHALL BE DEFORMED BARS CONFORMING IN QUALITY TO THE REQUIREMENTS OF ASTM A-615, "SPECIFICATIONS FOR DEFORMED BILLET-STEEL BARS FOR CONCRETE REINFORCEMENT", GRADE 60

COLUMN SPIRALS SHALL CONFORM TO ASTM A-82, "SPECIFICATION FOR COLD-DRAWN STEEL WIRE FOR CONCRETE REINFORCEMENT".

ALL DETAILING, FABRICATION AND PLACING OF REINFORCING BARS, UNLESS OTHERWISE INDICATED, SHALL BE IN ACCORDANCE WITH ACI-315, "MANUAL OF STANDARD PRACTICE FOR DETAILING REINFORCED CONCRETE STRUCTURES", LATEST EDITION.

TOLERANCES IN PLACING REINFORCEMENT SHALL BE:

± ⅜ INCH FOR MEMBERS WITH D </= 8 INCHES
± ½ INCH FOR MEMBERS WITH D > 8 INCHES

ALL CONSTRUCTION JOINTS, SHALL BE ROUGH AND THOROUGHLY CLEANED FOR BOND.

LOCATION OF ALL CONSTRUCTION JOINTS SHALL BE AS SHOWN ON THE DRAWINGS OR APPROVED BY THE ENGINEER. ALL CONSTRUCTION JOINTS LOCATED ON THE DRAWINGS OR REQUIRED FOR CONSTRUCTION, BUT NOT SHOWN ON THE DRAWINGS, SHALL HAVE A 6" FLATSTRIP WATERSTOP, IF IN MEMBERS IN CONTACT WITH WATER. IN ADDITION, JOINTS IN ALL SLABS COVERED WITH WATER, SHALL HAVE BOTH A 6" FLATSTRIP WATERSTOP AND A SEALANT GROOVE.

DOWELS, PIPE, WATERSTOPS AND OTHER INSTALLED MATERIALS AND ACCESSORIES SHALL BE HELD SECURELY IN POSITION WHILE CONCRETE IS BEING PLACED.

UNLESS OTHERWISE INDICATED, ASIDE FROM NORMAL ACCESSORIES USED TO HOLD REINFORCING BARS FIRMLY IN POSITION, THE FOLLOWING SHALL BE ADDED:

A) IN SLABS #5 RISER BARS AT 36 INCHES OC MAXIMUM TO SUPPORT TOP REINFORCING BARS.

B) IN WALLS WITH 2 CURTAINS #3 U OR Z SHAPE SPACERS AT 6 FEET OC EACH WAY.

VERTICAL REINFORCEMENT FOR CONCRETE OR MASONRY SHALL BE SPLICED WITH DOWEL BARS OF THE SAME SIZE AND SPACING FROM THE FOUNDATION USING A STANDARD SPLICE LENGTH UNLESS INDICATED OTHERWISE.

SEALANT SHALL BE PLACED AT THE TOP OF ALL JOINTS RECEIVING EXPANSION JOINT FILLER. SEALANT DEPTH SHALL BE THE JOINT FILL THICKNESS OR ½", WHICHEVER IS LESS.

ALL GROUT SHALL BE NON-SHRINK GROUT, UNLESS INDICATED OTHERWISE.

UNLESS OTHERWISE SHOWN CONCRETE WALLS AND SLABS SHALL BE REINFORCED AS FOLLOWS: #4@12" EW, CENTER OF 6" SECTIONS; #5@12" EW, CENTER OF 8" SECTIONS; #4 @ 12" EW EF OF 10" SECTIONS; #5@12" EW EF OF 12" AND THICKER SECTIONS.

METAL CLIPS OR SUPPORTS SHALL NOT BE PLACED IN CONTACT WITH THE FORMS OR THE SUBGRADE. CONCRETE BLOCKS (OR DOBIES) SUPPORTING BARS ON SUBGRADE SHALL BE IN SUFFICIENT NUMBERS TO SUPPORT THE BARS WITHOUT SETTLEMENT, BUT IN NO CASE SHALL SUCH SUPPORT BE CONTINUOUS.

DOWELS SHALL BE WIRED OR OTHERWISE HELD IN POSITION. THEY SHALL NOT BE SHOVED INTO FRESHLY PLACED CONCRETE.

UNLESS OTHERWISE INDICATED ON THE DRAWINGS, LAPS OF REINFORCEMENT SHALL BE AS SHOWN ON DETAIL S-143.

LOCATE TWO ¾ INCH GALVANIZED RICHMOND ROCKET INSERTS, HOHMANN & BARNARD OR EQUAL, STRADDLING CENTERLINE OF EQUIPMENT OVER ALL PUMPS, METERS OR OTHER MECHANICAL UNITS OF MORE THAN 100 LBS,FOR INSERTING LIFTING EYES IF NOT OTHERWISE INDICATED.

REINFORCING BARS AND ACCESSORIES SHALL NOT BE IN CONTACT WITH AND PIPE, PIPE FLANGE OR METAL PARTS EMBEDDED IN CONCRETE, A MINIMUM OF 2 INCHES CLEARANCE SHALL BE PROVIDED AT ALL TIMES.

ALL ITEMS EMBEDDED IN CONCRETE SHALL BE SPACED ON CENTER AT LEAST 4 TIMES THEIR OUTSIDE DIMENSION. THE OUTSIDE DIMENSION SHALL NOT EXCEED ONE THIRD OF THE MEMBER THICKNESS

ELECTRICAL CONDUIT EMBEDDED IN CONCRETE SHALL NOT BE SPACED CLOSER THAN 3 OUTSIDE DIAMETERS ON CENTER.

UNLESS OTHERWISE SHOWN ON THE DRAWINGS CONCRETE COVER FOR REINFORCING BARS SHALL BE AS FOLLOWS:

FOR CONCRETE PLACED AGAINST EARTH
SEE CONSTRUCTION JOINT DETAILS FOR
THIN SLABS-ON-GRADE. BOTTOM COVER
MAY BE LESS THAN 3" IF SO INDICATED _____ 3"

FOR SURFACES IN CONTACT WITH WATER OR WEATHER
AND FORMED SURFACES IN CONTACT WITH EARTH _____ 2"

FOR CONCRETE NOT EXPOSED TO WEATHER,
OR IN CONTACT WITH WATER OR EARTH _____ ½"

UNLESS OTHERWISE NOTED, WALLS AND SLABS SHOWN WITH A SINGLE LAYER OF REINFORCEMENT SHALL HAVE THAT REINFORCEMENT CENTERED

SLABS WITH SLOPING SURFACES SHALL HAVE THE INDICATED SLAB THICKNESS MAINTAINED AS THE MINIMUM. SLAB BOTTOMS MAY EITHER SLOPE WITH THE TOP SURFACE OR BE LEVEL. REINFORCING IN SLABS WITH SLOPING SURFACES SHALL BE PLACED AT THE REQUIRED CLEARANCE FROM THE SLAB SURFACES.

TESTING HYDRAULIC STRUCTURES

WHEN FILLING THE STRUCTURES WITH WATER FOR THE TEST REQUIRED IN THE SPECIFICATIONS, ALL VARIOUS BASINS LOCATED IN THE SAME STRUCTURE SHALL BE FILLED SIMULTANEOUSLY AT THE SAME RATE IN ORDER TO KEEP THE SAME LEVEL IN EACH BASIN.

STRUCTURAL STANDARD DETAILS

DETAILS ON GS SHEETS ARE PART OF MWH'S STRUCTURAL STANDARD DETAILS.

THESE DETAILS ARE TO BE USED WHEN REFERRED TO OR WHEN NO OTHER MORE RESTRICTIVE OR DIFFERENT DETAILS ARE INDICATED ON THE DRAWINGS.

DETAILS NOT PERTAINING TO THE PROJECT ARE MARKED THUS

STRUCTURAL STANDARD DETAIL CALLOUT

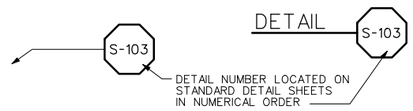

SECTION CALLOUT

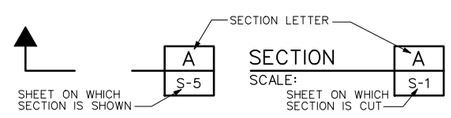

DETAIL CALLOUT

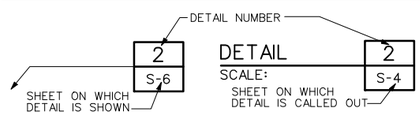

REV 063003

DESIGN CRITERIA

DESIGN IN ACCORDANCE WITH THE 2003 EDITION OF THE INTERNATIONAL BUILDING CODE, EXCEPT WHERE OTHER APPLICABLE CODES OR THE FOLLOWING NOTES ARE MORE RESTRICTIVE.

LOADINGS:

SOIL LOADS:

ALLOWABLE BEARING PRESSURE
DEAD PLUS LIVE (PSF): 2500
ALL LOADS (W/ WIND & SEISMIC) (PSF): 3333
FROST DEPTH (INCHES): 42
MINIMUM FOOTING WIDTH (INCHES): 18

FLOOR LIVE LOADS:

UNIFORM LIVE LOAD (PSF): 100
REDUCED LIVE LOAD (PSF): 100
CONCENTRATED LOAD (PSF): 2000
IMPACT LOAD (% OF LOAD): 25%

ROOF LIVE LOADS:

ROOF LIVE LOAD (PSF): 20

WIND LOADS:

BASE WIND SPEED (3 SEC - MPH): 90
WIND IMPORTANCE FACTOR (Iw): 1.0
BUILDING CATEGORY: III
EXPOSURE CATEGORY: C
INTERNAL PRESSURE COEFFICIENT: .18
COMPONENTS AND CLADDING (PSF): 35

SEISMIC LOADS:

SEISMIC USE GROUP: III
SPECTRAL RESPONSE COEFFICIENT (Sds): .37
SPECTRAL RESPONSE COEFFICIENT (Sd1): .10
SITE CLASS: C
SEISMIC DESIGN CATEGORY: C
SEISMIC IMPORTANCE FACTOR (Ie): 1.0
BASIC SEISMIC-FORCE-RESISTING SYSTEM: SPECIAL CMU SHEAR WALL
DESIGN BASE SHEAR: .06W
ANALYSIS PROCEDURE: EQUIV LATERAL FORCE

SNOW LOADS:

GROUND SNOW LOAD (Pg) (PSF): 58
FLAT ROOF SNOW LOAD (Ps) (PSF): 40
SNOW EXPOSURE FACTOR(Ce): 1.0
SNOW IMPORTANCE FACTOR (Is): 1.0
THERMAL FACTOR (Ct): 1.0

REGISTERED PROFESSIONAL ENGINEER #5149 STANLEY S. POSTMA STATE OF UTAH

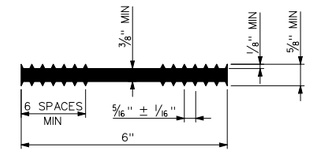

6" FLATSTRIP WATERSTOP S-105
REV 040699

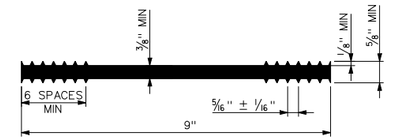

9" FLATSTRIP WATERSTOP S-106
REV 040699

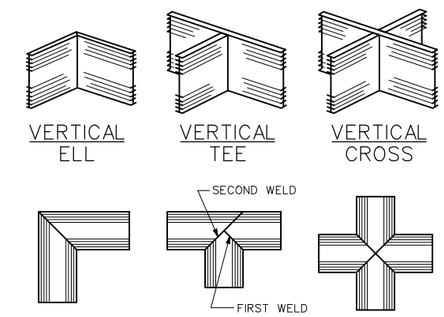

PREFABRICATED WATERSTOP JOINTS S-108
REV 040699

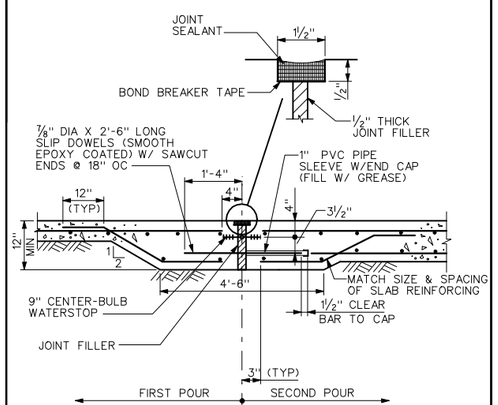

SLAB-ON-GRADE EXPANSION JOINT S-109
REV 081401

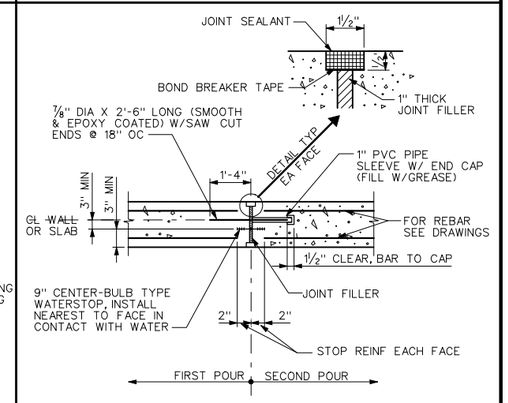

EXPANSION JOINT S-116
REV 081899

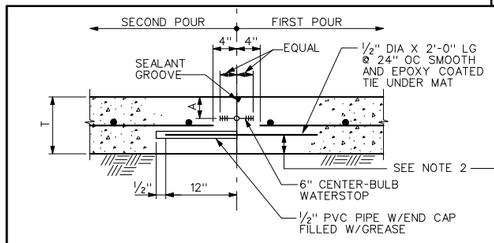

SINGLE MAT REINF - SLEEVE - TYPE JOINT
(TYP CONSTRUCTION JOINT UNLESS OTHERWISE NOTED)

WITH WATERSTOP AND SEALANT GROOVE S-110

NO WATERSTOP OR SEALANT GROOVE S-111

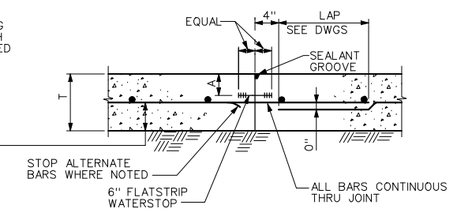

SINGLE MAT REINF - CONTINUOUS THRU JOINT
(ONLY WHEN SPECIFIED ON DRAWINGS)

WITH WATERSTOP AND SEALANT GROOVE S-112

NO WATERSTOP OR SEALANT GROOVE S-113

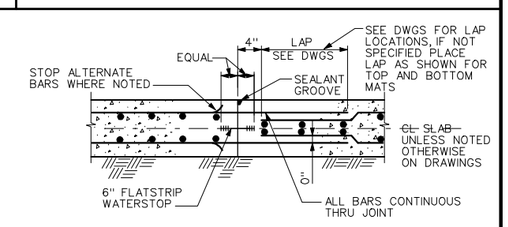

DOUBLE MAT REINF

WITH WATERSTOP AND SEALANT GROOVE S-114

NO WATERSTOP OR SEALANT GROOVE S-115

SLAB-ON-GRADE CONSTRUCTION JOINTS
REV 041202

T	A
6"	2"
7"	2½"
8"	2½"

NOTES:

1. WATERSTOPS AND SEALANT GROOVES TO BE PROVIDED IN ALL WATER RETAINING SLABS, SEE DRAWINGS, FOR OTHER LOCATIONS WHERE THEY MAY BE REQUIRED.
2. DIMENSIONS INDICATED ON DETAIL CONTROL MINIMUM COVER. FOR THIN SLABS, THE BOTTOM COVER MAY BE LESS THAN 3".
3. STAGGER SPLICES UNLESS NOTED OTHERWISE.

REV	DATE	BY	DESCRIPTION
R	3/07	MRW	RECORD DRAWING

SCALE: NONE

WARNING: 0 ½ 1 — IF THIS BAR DOES NOT MEASURE 1" THEN DRAWING IS NOT TO SCALE

DESIGNED B LEWIS
DRAWN B LEWIS
CHECKED C WILCOX

RECORD DRAWING

This record drawing has been prepared, entirely or in part on the basis of unverified information compiled and furnished by others to the preparer who is not responsible for any inaccuracies, errors or omissions which may have been incorporated into the document as a result

MWH

UTAH DIVISION OF WILDLIFE RESOURCES
WHITEROCKS STATE FISH HATCHERY

GENERAL STRUCTURAL DETAILS - 1

SHEET GS-1
1690703

File: wrfngs01-RD.dgn Model: Default ColorTable: bw.ctb DesignScript: LightScreen.pen PlotScale: 1.999996:1 User: KaiCrick Plot Date: 18-DEC-2007 09:48

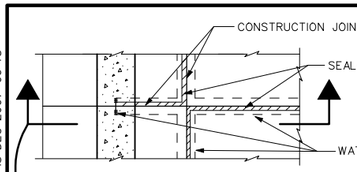

PLAN

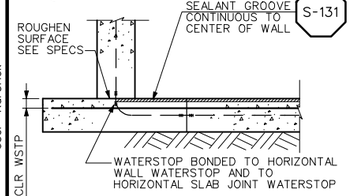

SECTION

NOTES:

1. SEALANT GROOVE SHALL BE CONTINUED UNDER WALL & SEALANT SHALL BOND WITH WALL WATERSTOP IN ALL CASES WHERE SUCH WATERSTOP OCCURS.
2. SEALANT UNDER WALL SHALL BE IN PLACE PRIOR TO PLACEMENT OF CONCRETE FOR WALL.
3. CONSTRUCTION JOINTS PASSING THROUGH VARIOUS MEMBERS OF A WATER RETAINING STRUCTURE SHALL BE SEALED WITH WATERSTOPS BONDED TOGETHER, SO AS TO PROVIDE A CONTINUOUS WATERTIGHT JOINT.

CONSTRUCTION JOINT WALL TO SLAB

REV 122900 S-118

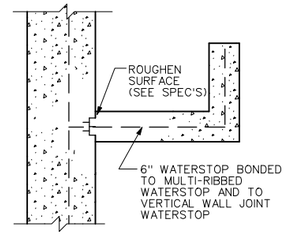

LAUNDER JOINT

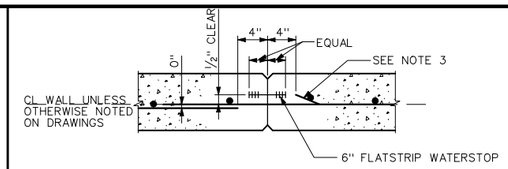

SINGLE CURTAIN REINF

WITH WATERSTOP S-121 NO WATERSTOP S-122

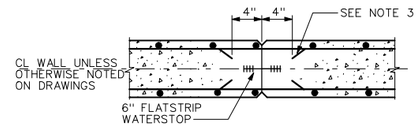

DOUBLE CURTAIN REINF

WITH WATERSTOP S-123 NO WATERSTOP S-124

NOTES:

1. WHERE WATERSTOP IS REQUIRED IN SINGLE CURTAIN WALL REINFORCEMENT, PLACE WATERSTOP ON WATER SIDE OF WALL
2. UNLESS OTHERWISE NOTED 3/4" CHAMFERS SHALL BE OMITTED IN SURFACES TO RECEIVE ARCHITECTURAL TREATMENT
3. UNLESS SPECIFICALLY NOTED OTHERWISE #5 AND LARGER BARS SHALL BE CONTINUOUS THRU JOINT. #4 AND SMALLER BARS SHALL STOP ALTERNATE BARS AT JOINT.
4. STAGGER SPLICES UNLESS NOTED OTHERWISE.

VERTICAL WALL CONSTRUCTION JOINT

REV 041202

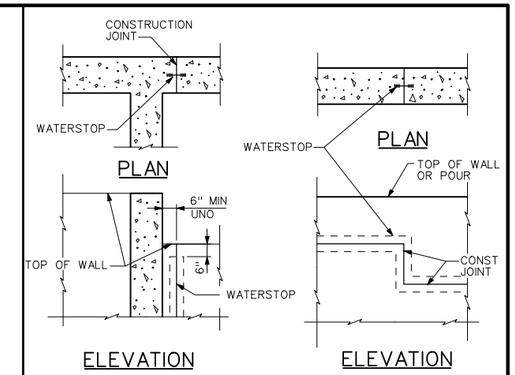

WATERSTOP DETAILS FOR WALL JOINTS

REV 082699 S-120

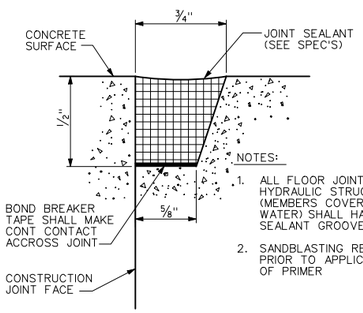

NOTES:

1. ALL FLOOR JOINTS OF HYDRAULIC STRUCTURES (MEMBERS COVERED WITH WATER) SHALL HAVE A SEALANT GROOVE
2. SANDBLASTING REQUIRED PRIOR TO APPLICATION OF PRIMER

SEALANT GROOVE

REV 041502 S-131

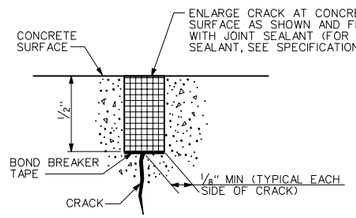

NOTES:

1. PRIOR TO FILLING, STRUCTURES TO CONTAIN WATER SHALL HAVE ALL CRACKS REPAIRED AS SHOWN IN THIS DETAIL.
2. CRACKS IN EXPOSED COVER SLABS NOT RECEIVING COATINGS SHALL BE REPAIRED AS SHOWN IN THIS DETAIL.

CONCRETE CRACK REPAIR

REV 070203 S-132

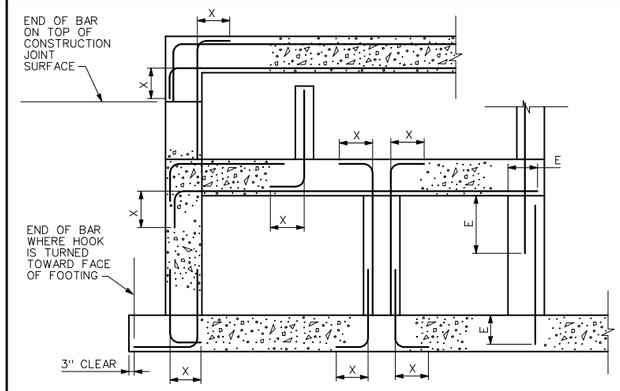

SECTION

LENGTH (*)			
BAR SIZE	HOOK X	LAP	EMBEDMENT E
#3	6"	16" (21")	12" (16")
#4	8"	16" (21")	12" (16")
#5	10"	20" (26")	15" (20")
#6	12"	28" (37")	22" (28")
#7	14"	48" (62")	37" (48")
#8	16"	62" (81")	48" (62")
#9	19"	79" (102")	61" (79")
#10	22"	100" (130")	77" (100")
#11	24"	123" (160")	95" (123")

* USE LENGTH IN PARENTHESIS FOR WALL HORIZONTAL REBARS AND SLAB BARS WITH 12" OR MORE OF FRESH CONCRETE UNDERNEATH

NOTES:

1. USE LAP LENGTHS AS DETERMINED FROM THESE TABLES UNLESS SHOWN OTHERWISE
2. THE TABLES SHOWN ARE FOR f'c=4000psi, fy=60,000psi, 1.5" MIN CONCRETE COVER AND 3" MIN BAR SPACING
3. MULTIPLY THE LAP AND E SHOWN IN THESE TABLES BY 1.5 FOR EPOXY COATED REINFORCING
4. WHEN BARS OF DIFFERENT SIZES ARE LAP SPLICED, LAP LENGTH SHALL BE THE LARGER OF:

   EMBEDMENT LENGTH OF LARGER BAR
   LAP LENGTH OF SMALLER BAR

5. UNLESS NOTED OTHERWISE USE REBAR COUPLERS FOR SPLICES OF #11 AND LARGER BARS
6. ALL DOWEL BARS SHALL EXTEND AN EMBEDMENT LENGTH E INTO ANOTHER MEMBER OR ACROSS A CONSTRUCTION JOINT UNLESS SHOWN TO SPLICE WITH OTHER BARS OR TO EXTEND TO THE FAR FACE OF THE MEMBER AND END WITH A STANDARD HOOK

STANDARD 90° BAR HOOKS, EMBEDMENT LENGTHS AND LAP LENGTHS

REV 091003 S-143

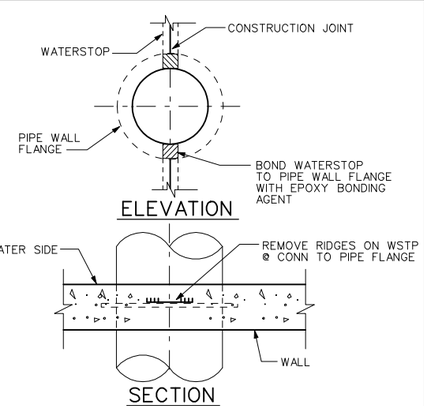

CONSTRUCTION JOINT AT PIPE OPENINGS

REV 122900 S-133

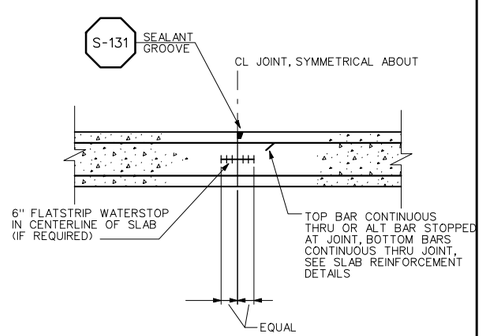

SUSPENDED SLAB CONSTRUCTION JOINT

REV 122900 S-137

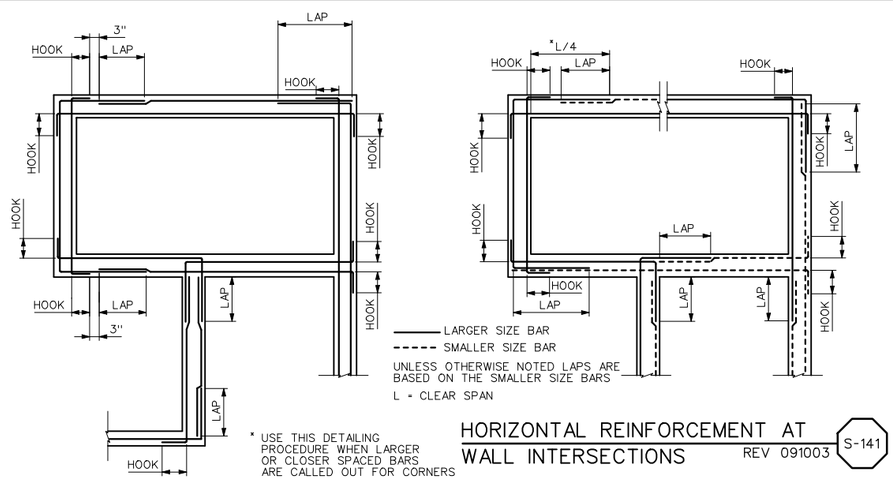

* USE THIS DETAILING PROCEDURE WHEN LARGER OR CLOSER SPACED BARS ARE CALLED OUT FOR CORNERS

HORIZONTAL REINFORCEMENT AT WALL INTERSECTIONS

REV 091003 S-141

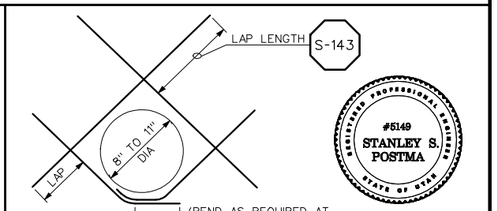

NOTES:

1. CUT NORMAL REINFORCEMENT 2" CLEAR OF OPENING
2. DIAGONAL BARS TO BE PLACED:
   A) AT CENTERLINE OF WALL OR SLAB WHERE ONE LAYER OF REINFORCEMENT IS PROVIDED
   B) AT EACH FACE OF WALL OR SLAB WHERE TWO LAYERS OF REINFORCEMENT ARE PROVIDED
3. UNLESS OTHERWISE NOTED, SIZE OF DIAGONAL BARS SHALL BE THE SIZE OF THE LARGEST NORMAL REINFORCING BAR CUT
4. THIS DETAIL TO BE USED WHEN CALLED FOR ON THE DRAWINGS OR WHEN NO OTHER DETAIL IS SPECIFIED

DIAGONAL REINFORCEMENT AT CIRCULAR OPENINGS

REV 091003 S-142

(8" - 11" DIA)

REV	DATE	BY	DESCRIPTION
R	3/07	MRW	RECORD DRAWING

SCALE: NONE

WARNING: 0 1/2 1 — IF THIS BAR DOES NOT MEASURE 1" THEN DRAWING IS NOT TO SCALE

DESIGNED B LEWIS
DRAWN B LEWIS
CHECKED C WILCOX

RECORD DRAWING

This record drawing has been prepared, entirely or in part on the basis of unverified information compiled and furnished by others to the preparer who is not responsible for any inaccuracies, errors or omissions which may have been incorporated into the document as a result

MWH

UTAH DIVISION OF WILDLIFE RESOURCES
WHITEROCKS STATE FISH HATCHERY

GENERAL STRUCTURAL DETAILS - 2

SHEET GS-2

1690703

File: wrfhgs02-RD.dgn Model: Default ColorTable: bw.ctb DesignScript: LightScreen.pen User: KaiCrick Plot Date: 18-DEC-2007 09:48 PlotScale: 1.999996:1

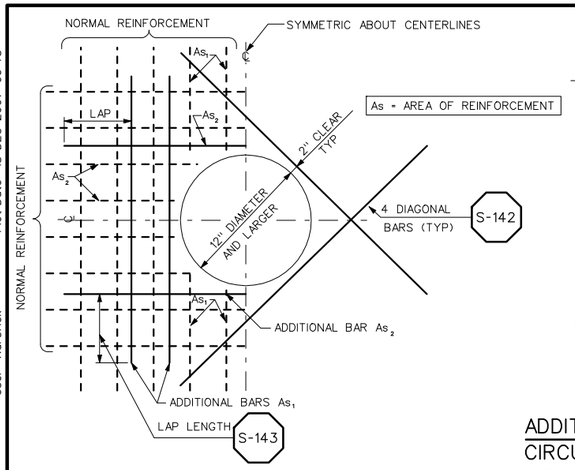

NOTES:

1. CUT NORMAL REINFORCEMENT AT OPENINGS: As_1 AND As_2 = 1/2 AREA OF CUT BARS TO BE ADDED ON EACH SIDE OF OPENING
2. ADDITIONAL BARS As_1 AND As_2 TO BE PLACED:
   A) AT CENTERLINE OF WALLS OR SLABS WHERE ONE LAYER OF REINFORCEMENT IS PROVIDED
   B) AT EACH FACE OF WALLS OR SLABS WHERE TWO LAYERS OF REINFORCEMENT ARE PROVIDED
3. INCREASE SIZE OF ADDITIONAL BARS AS NEEDED TO FIT WITHIN A DISTANCE OF 2 X WALL/SLAB THICKNESS FROM OPENING, PROVIDE 2" MIN CLEAR BETWEEN BARS
4. THIS DETAIL TO BE USED ONLY WHEN NO OTHER DETAIL IS INDICATED ON THE DRAWINGS
5. WHERE A SLAB OR INTERSECTING WALL CONNECTS WITHIN ONE WALL THICKNESS OF THE OPENING, ADDITIONAL BARS ON THAT SIDE MAY BE OMITTED

ADDITIONAL REINFORCEMENT AT CIRCULAR OPENINGS (12" DIA OR LARGER)

REV 070203 — S-144

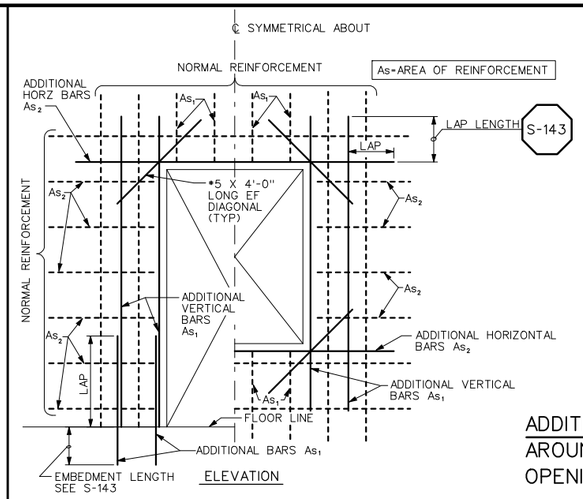

NOTES:

1. CUT NORMAL REINFORCEMENT AT OPENING: As_1 AND As_2 = 1/2 AREA OF CUT BARS TO BE ADDED ON EACH SIDE OF OPENING.
2. ADDITIONAL BARS As_1 AND As_2 TO BE PLACED:
   A) AT CENTERLINE OF WALLS OR SLABS WHERE ONE LAYER OF REINFORCEMENT IS PROVIDED.
   B) AT EACH FACE OF WALLS OR SLABS WHERE TWO LAYERS OF REINFORCEMENT ARE PROVIDED.
3. INCREASE SIZE OF ADDITIONAL BARS AS NEEDED TO FIT WITHIN A DISTANCE OF 2 X WALL/SLAB THICKNESS FROM OPENING. PROVIDE 2" MIN CLEAR BETWEEN BARS.
4. THIS DETAIL TO BE USED ONLY WHEN NO OTHER DETAIL IS INDICATED ON THE DRAWINGS.
5. WHERE A SLAB OR INTERSECTING WALL CONNECTS WITHIN ONE WALL THICKNESS OF THE OPENINGS, ADDITIONAL BARS ON THAT SIDE MAY BE OMITTED.

ADDITIONAL REINFORCEMENT AROUND RECTANGULAR OPENINGS

REV 091003 — S-148

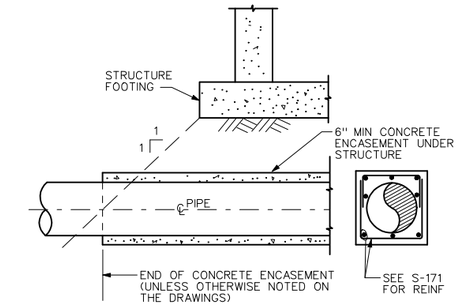

END OF PIPE ENCASEMENT UNDER STRUCTURES

REV 102303 — S-170

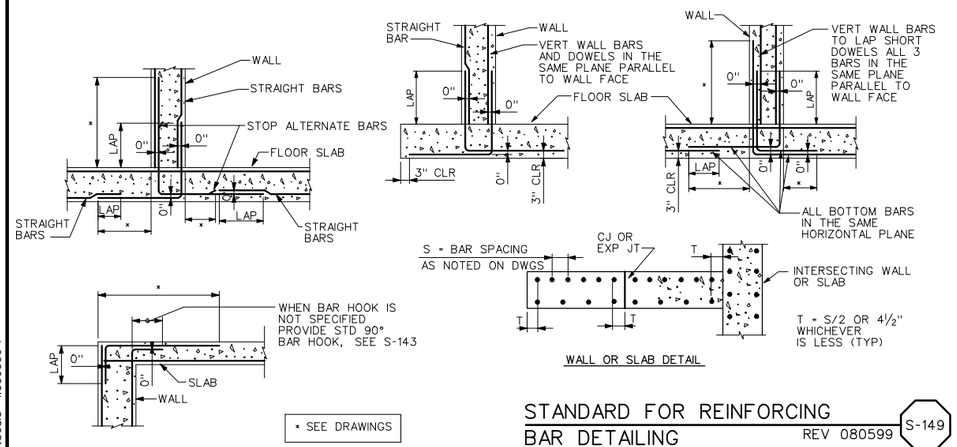

STANDARD FOR REINFORCING BAR DETAILING

REV 080599 — S-149

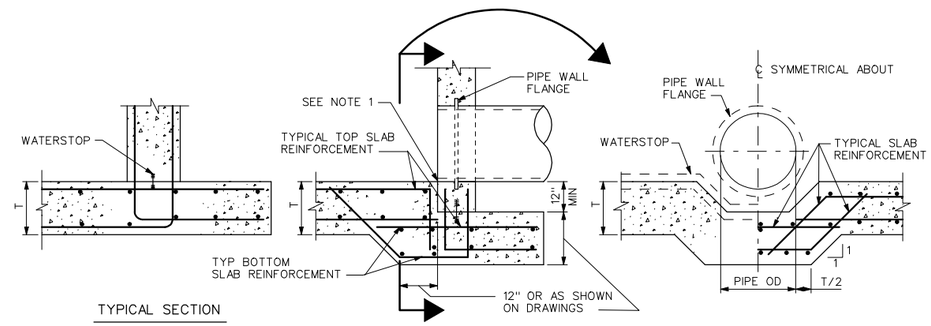

NOTES:

1. SET PIPE INVERT FLUSH WITH SLAB
2. DETAIL IS SIMILAR FOR RCP

FOOTING AT WALL PIPE CONNECTION

REV 010201 — S-150

#5149 STANLEY S. POSTMA — REGISTERED PROFESSIONAL ENGINEER — STATE OF UTAH

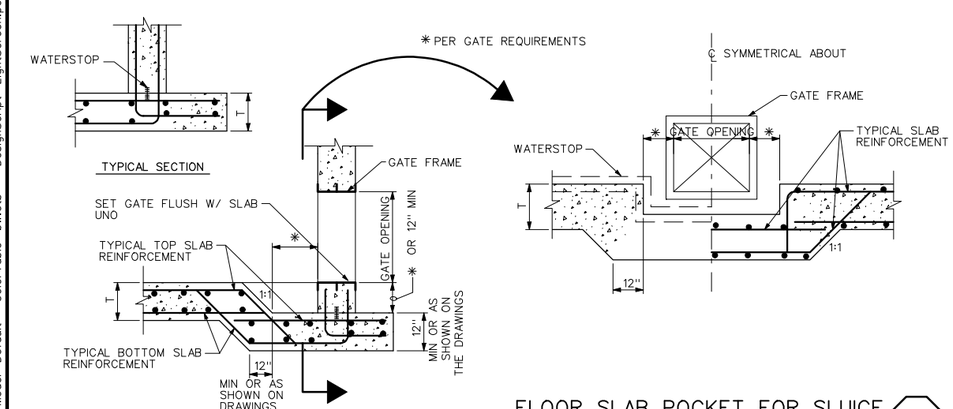

FLOOR SLAB POCKET FOR SLUICE GATE INSTALLATION

REV 081899 — S-151

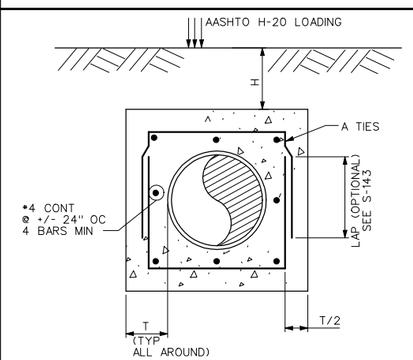

COVER H	PIPE OUTSIDE DIAMETER 8"-24" A	8"-24" T	30"-32" A	30"-32" T	36" A	36" T	42"-54" A	42"-54" T	60"-72" A	60"-72" T
2' MIN	*4@12"	6"	*4@12"	6"	*4@9"	6"	*5@12"	8"	*4@9"	12"
3'					*4@12"		*4@9"		*5@12"	8"
4'							*4@12"		*5@10"	
5'							*4@12"		*5@10"	
6'							*4@9"		*5@10"	
7'					*4@12"		*4@9"		*6@12"	
8'			*4@12"		*4@9"		*5@12"		*6@10"	8"
9'			*4@9"	6"	*4@9"	6"	*5@10"		*4@9"	12"
10'		6"	*4@12"	8"	*4@9"	8"	*5@10"	8"	*5@12"	
12'		8"		12"	*4@12"	12"	*4@9"	12"	*5@10"	
14'		12"			*4@12"		*4@9"		*6@12"	
16'					*4@12"		*5@12"		*6@10"	12"
18'			*4@12"		*4@9"	12"	*5@10"	12"	*6@10"	14"
20'	*4@12"	12"	*4@9"	12"	*4@9"	14"	*6@12"	14"	*6@10"	16"

NOTES:

1. WHERE ENCASEMENT PASSES UNDER SPREAD FOOTING OR MAT FOUNDATION, USE H-20' UNO
2. ALL ENCASEMENTS UNDER STRUCTURES SHALL BE SEPARATED FROM THE STRUCTURE FOUNDATIONS BY BACKFILL OR 2 LAYERS OF 40# FELT UNO
3. WHEN ENCASEMENTS TERMINATE @ STRUCTURE, ENCASEMENT REINFORCING SHALL BE DOWELED INTO THE STRUCTURE

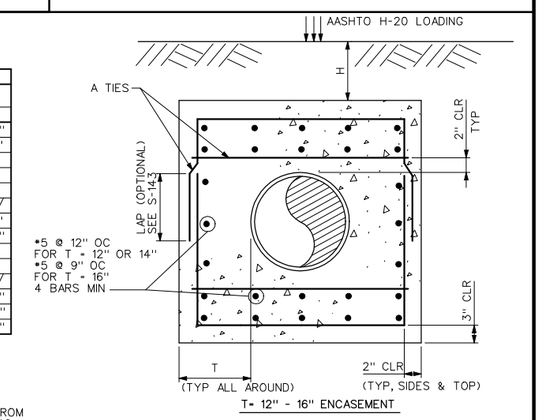

PIPE ENCASEMENT

REV 070203 — S-171

REV	DATE	BY	DESCRIPTION
R	3/07	MRW	RECORD DRAWING

SCALE: NONE

WARNING: 0 1/2 1 — IF THIS BAR DOES NOT MEASURE 1" THEN DRAWING IS NOT TO SCALE

DESIGNED B LEWIS
DRAWN B LEWIS
CHECKED C WILCOX

RECORD DRAWING

This record drawing has been prepared, entirely or in part on the basis of unverified information compiled and furnished by others to the preparer who is not responsible for any inaccuracies, errors or omissions which may have been incorporated into the document as a result

MWH

UTAH DIVISION OF WILDLIFE RESOURCES
WHITEROCKS STATE FISH HATCHERY

GENERAL STRUCTURAL DETAILS - 3

SHEET GS-3

1690703

File: wrfhgs03-RD.dgn Model: Default ColorTable: bw.ctb DesignScript: LightScreen.pen PlotScale: 1.999996:1 User: KaiCrick Plot Date: 18-DEC-2007 09:48

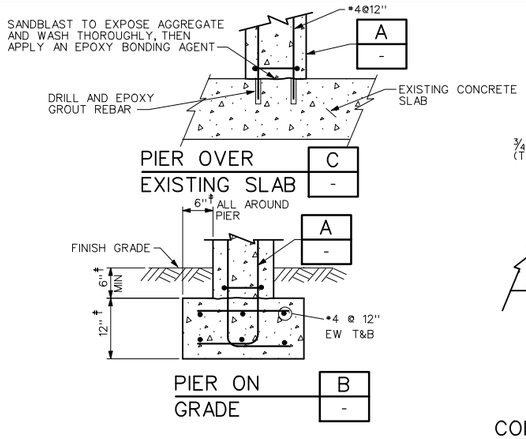

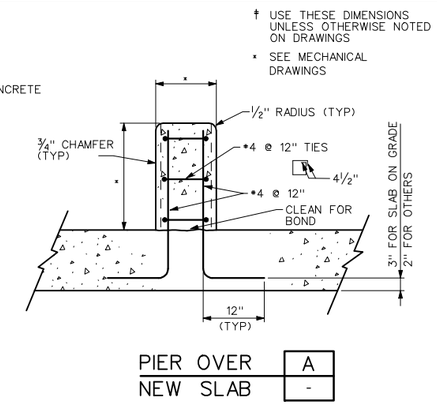

CONCRETE PIER FOR PIPE SUPPORT

REV 080699 S-181

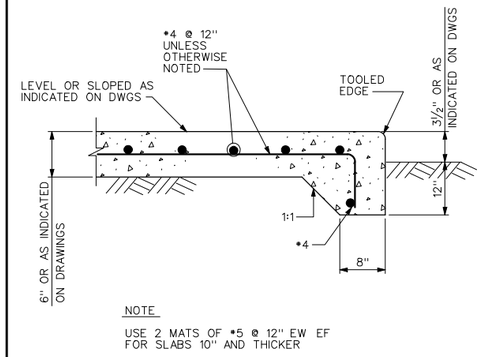

SLAB-ON-GRADE

REV 022504 S-190

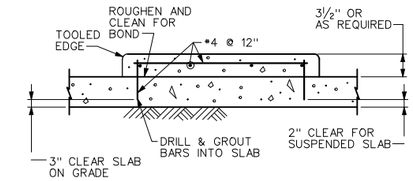

HOUSEKEEPING PAD

REV 041502 S-191

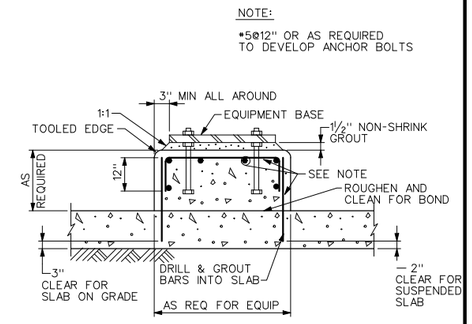

EQUIPMENT BASE

REV 080699 S-192

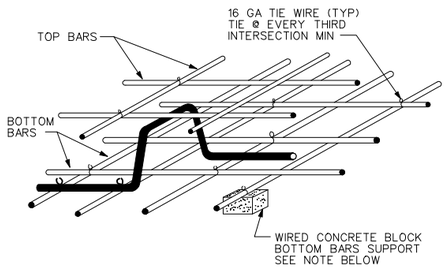

NOTE:
METAL BAR SUPPORTS, IF USED IN SLABS NOT ON GROUND, SHALL NOT MAKE CONTACT WITH FORMS

REINFORCEMENT SUPPORT

REV 060199 S-204

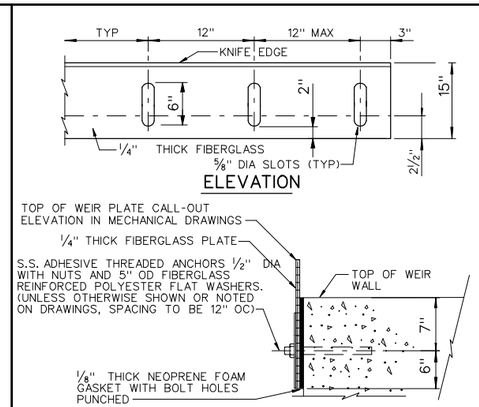

ADJUSTABLE WEIR DETAIL

REV 010196 S-310

NOTES:

1. ALL CUT EDGES SHALL BE SEALED WITH RESIN
2. ALL GRATING SHALL BE SECURED IN PLACE WITH REMOVABLE FASTENERS, SIMILAR TO DETAIL S-517
3. BONDING: USE EPOXY ADHESIVE BONDING AGENT
4. WEIGHT OF EACH SECTION OF GRATING SHALL NOT EXCEED 80 POUNDS
5. ALL FRAME COMPONENTS SHALL BE FIBERGLASS
6. T TO BE DETERMINED BY GRATING MFR & APPROVED BY ENGINEER IN ACCORDANCE LOADING REQUIREMENTS (SEE SPECS)

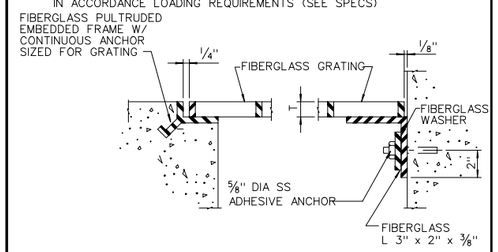

FIBERGLASS GRATING DETAILS

REV 010196 S-320

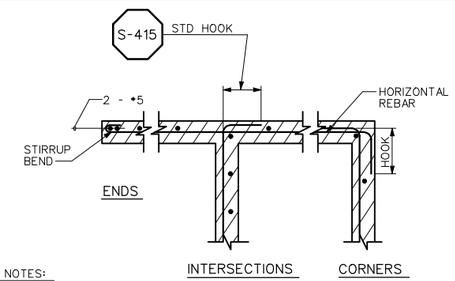

NOTES:

1. DEEP CUT BOND BEAM BLOCKS SHALL BE USED WHERE HORIZONTAL REINFORCING STEEL IS EMBEDDED, AND ABOVE ALL OPENINGS.
2. H-BLOCK BOND BEAMS MAY BE USED AT LOCATIONS OTHER THAN OPENINGS.
3. HOOKS SHALL BE TAKEN TO FAR FACE.

8" & 10" BLOCK WALL SECTIONS

REV 091703 S-401

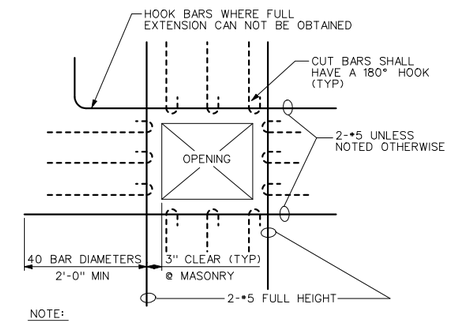

NOTE:
REINFORCING SHOWN IS IN ADDITION TO NORMAL REINFORCING AND SHALL BE PLACED WITH EACH LAYER OF BARS PROVIDED

REINFORCEMENT AT MASONRY WALL OPENINGS

REV 091803 S-410

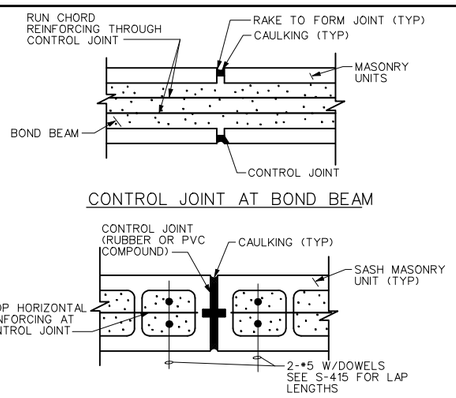

MASONRY CONTROL JOINTS

REV 102303 S-430

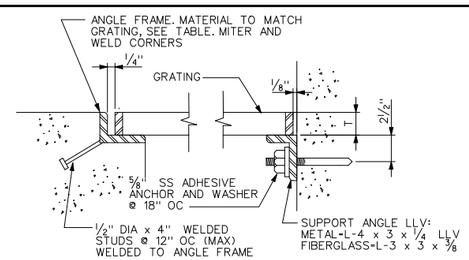

GRATING FRAME TABLE SIZED TO MATCH GRATING (FOR FIBERGLASS USE CONTINUOUS PULTRUDED FIBERGLASS SEAT & ANCHOR)				
GRATING DEPTH T	FRAME ANGLE (STEEL)		GRATING DEPTH T	FRAME ANGLE
1"	1 3/4 x 1 1/4 x 1/4 (1 1/4X 1 1/4X 1/4)		2"	*2 1/2 x 2 1/2 x 1/2
1 1/4"	2 x 1 1/2 x 1/4 (1 1/2X 1 1/2X 1/4)		2 1/4"	2 1/2 x 2 1/2 x 1/4
1 1/2"	1 3/4 x 1 3/4 x 1/4		2 1/2"	3 x 3 x 1/2
1 3/4"	2 x 2 x 1/4			

* OR USE 2 1/2 x 2 1/2 x 1/4 W/1/4" SHIM PLATE WELDED TO BOTTOM

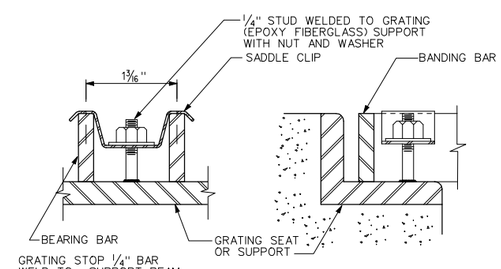

NOTES:

1. UNLESS INDICATED OTHERWISE, ALL GRATING SHALL BE ALUMINUM
2. GRATING DEPTH TO BE DETERMINED BY MANUFACTURER AND APPROVED BY ENGINEER (UNO)
3. ALL ENDS AND OPENINGS SHALL BE BANDED
4. WEIGHT OF GRATING SECTION SHALL NOT EXCEED 80 LBS
5. METAL BEARING BARS SHALL BE DEPTH T x 3/16" @ 1 3/16" OC CROSS BARS SHALL BE @ 4" OC
6. PROVIDE A MINIMUM OF 4 CLIPS PER GRATING PANEL, APPROX 4" FROM PANEL CORNERS. MAXIMUM CLIP SPACING AT 36" OC
7. MATERIALS:
   a. ALUMINUM GRATING - USE ALUMINUM ANGLE SUPPORTS AND STAINLESS STEEL BOLTS AND CLIPS
   b. GALVANIZED STEEL GRATING - USE STEEL ANGLE SUPPORTS, BOLTS AND CLIPS. GALVANIZE AFTER FABRICATION
   c. STAINLESS STEEL GRATING - USE STAINLESS STEEL ANGLE SUPPORTS, BOLTS AND CLIPS
   d. FIBERGLASS GRATING - USE FIBERGLASS FOR ALL COMPONENTS EXCEPT DRILLED ANCHORS: ALL CUT EDGES SHALL BE SEALED WITH RESIN: BONDING: USE EPOXY ADHESIVE BONDING AGENT

GRATING

REV 102403 S-501

REGISTERED PROFESSIONAL ENGINEER #5149 STANLEY S. POSTMA STATE OF UTAH

REV	DATE	BY	DESCRIPTION
R	3/07	MRW	RECORD DRAWING

SCALE: NONE

WARNING: 0 1/2 1 — IF THIS BAR DOES NOT MEASURE 1" THEN DRAWING IS NOT TO SCALE

DESIGNED B LEWIS
DRAWN B LEWIS
CHECKED C WILCOX

RECORD DRAWING

This record drawing has been prepared, entirely or in part on the basis of unverified information compiled and furnished by others to the preparer who is not responsible for any inaccuracies, errors or omissions which may have been incorporated into the document as a result

MWH

UTAH DIVISION OF WILDLIFE RESOURCES
WHITEROCKS STATE FISH HATCHERY

GENERAL STRUCTURAL DETAILS - 4

SHEET GS-4

1690703

File: wrfhgs04-RD.dgn Model: Default ColorTable: bw.ctb DesignScript: LightScreen.pen PlotScale: 1.999996:1 User: KaiCrick Plot Date: 18-DEC-2007 09:48

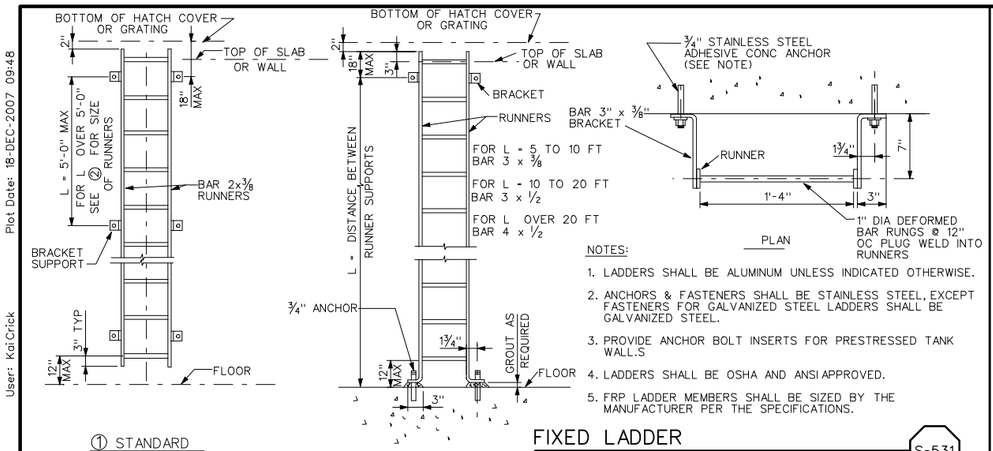

① STANDARD LADDER WITH RUNNER SUPPORTS AT 5'-0" OC MAX

② LADDER WITH RUNNER SUPPORTS OVER 5'-0" OC

NOTES:

1. LADDERS SHALL BE ALUMINUM UNLESS INDICATED OTHERWISE.
2. ANCHORS & FASTENERS SHALL BE STAINLESS STEEL, EXCEPT FASTENERS FOR GALVANIZED STEEL LADDERS SHALL BE GALVANIZED STEEL.
3. PROVIDE ANCHOR BOLT INSERTS FOR PRESTRESSED TANK WALL.S
4. LADDERS SHALL BE OSHA AND ANSI APPROVED.
5. FRP LADDER MEMBERS SHALL BE SIZED BY THE MANUFACTURER PER THE SPECIFICATIONS.

FIXED LADDER

REV 070203 — S-531

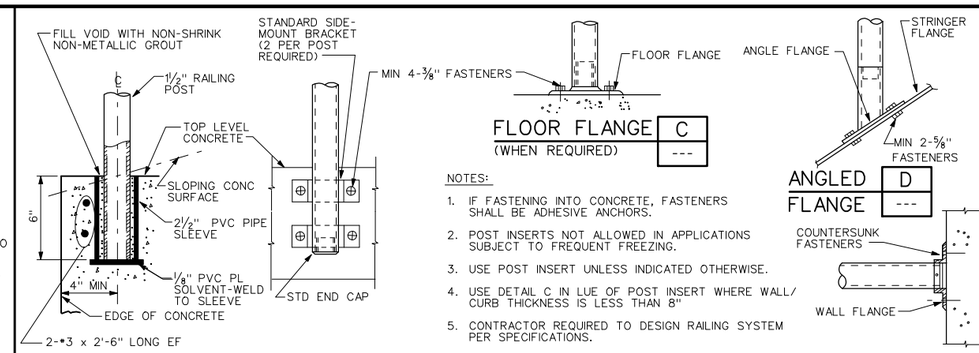

POST INSERT IN CONCRETE — A

SIDE-MOUNTING BRACKET — B

FLOOR FLANGE (WHEN REQUIRED) — C

ANGLED FLANGE — D

WALL FLANGE — E

NOTES:

1. IF FASTENING INTO CONCRETE, FASTENERS SHALL BE ADHESIVE ANCHORS.
2. POST INSERTS NOT ALLOWED IN APPLICATIONS SUBJECT TO FREQUENT FREEZING.
3. USE POST INSERT UNLESS INDICATED OTHERWISE.
4. USE DETAIL C IN LUE OF POST INSERT WHERE WALL/CURB THICKNESS IS LESS THAN 8"
5. CONTRACTOR REQUIRED TO DESIGN RAILING SYSTEM PER SPECIFICATIONS.

RAILING, GUARDRAIL AND HANDRAIL SUPPORT

REV 092303 — S-512

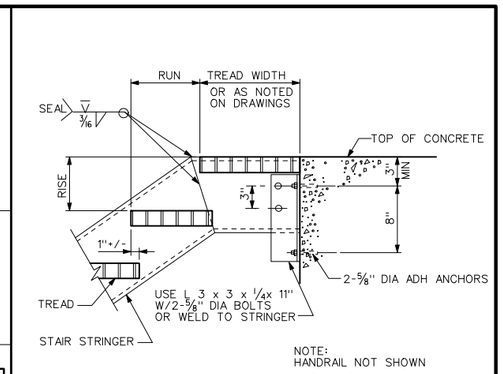

STAIR TOP CONNECTION TO CONCRETE

REV 081899 — S-541

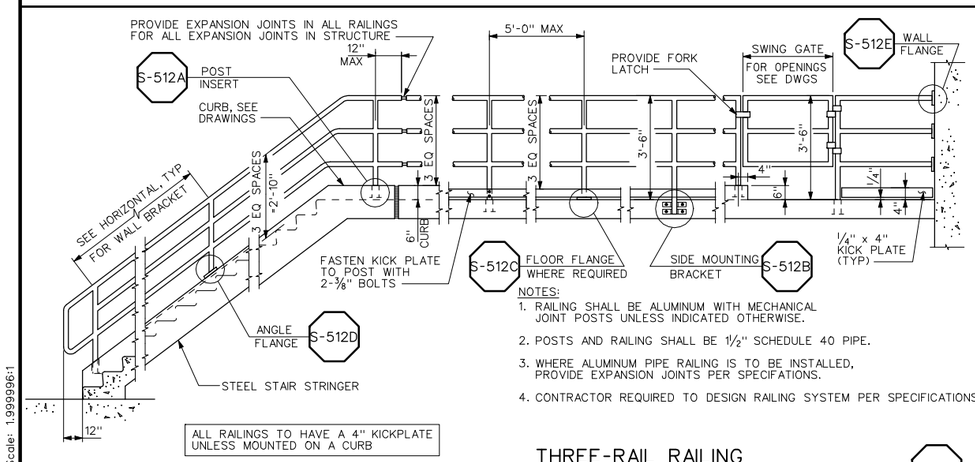

NOTES:

1. RAILING SHALL BE ALUMINUM WITH MECHANICAL JOINT POSTS UNLESS INDICATED OTHERWISE.
2. POSTS AND RAILING SHALL BE 1 1/2" SCHEDULE 40 PIPE.
3. WHERE ALUMINUM PIPE RAILING IS TO BE INSTALLED, PROVIDE EXPANSION JOINTS PER SPECIFATIONS.
4. CONTRACTOR REQUIRED TO DESIGN RAILING SYSTEM PER SPECIFICATIONS.

THREE-RAIL RAILING

REV 063003 — S-516

NOTES:

1. UNLESS OTHERWISE INDICATED, STAIRS SHALL CONSIST OF ALUMINUM C10x6.136 STRINGERS AND SERRATED ALUM GRATING TREADS.
2. STEEL STAIRS SHALL CONSIST OF STEEL C10x15.3 STRINGERS AND SERRATED ALUM GRATING TREADS
3. FRP STAIRS SHALL CONSIST OF ALUM C10x6.136 STRINGERS WITH FRP GRATING TREADS
4. ALL BOLTS AND CONCRETE ANCHORS SHALL BE SS
5. STAIR HANDRAIL NOT SHOWN FOR CLARITY

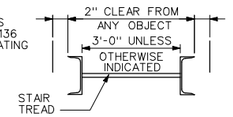

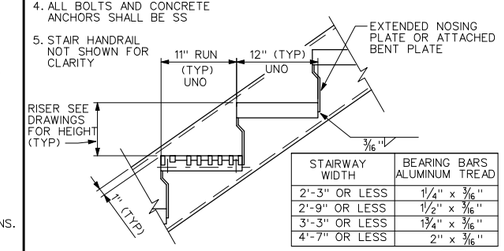

STAIRWAY WIDTH	BEARING BARS ALUMINUM TREAD
2'-3" OR LESS	1 1/4" x 3/16"
2'-9" OR LESS	1 1/2" x 3/16"
3'-3" OR LESS	1 3/4" x 3/16"
4'-7" OR LESS	2" x 3/16"

METAL STAIR

CLOSED RISERS

REV 091803 — S-543

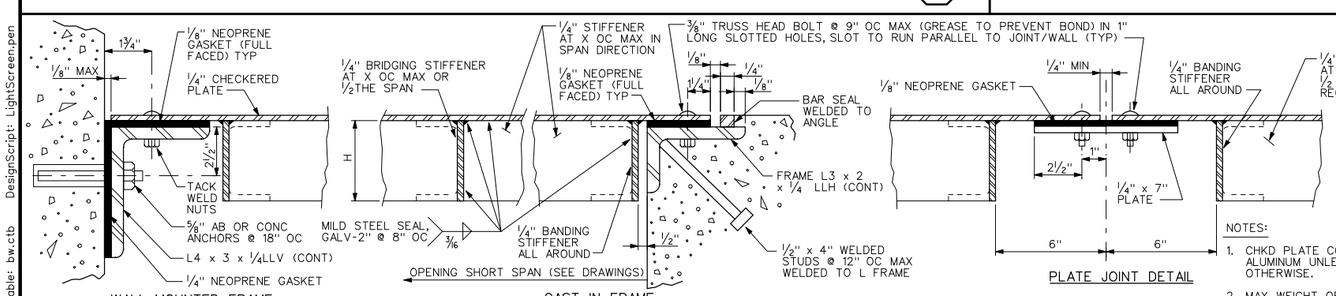

WALL MOUNTED FRAME

(USE ONLY WHERE CAST-IN FRAME CANNOT BE USED)

CAST IN FRAME

PLATE JOINT DETAIL

NOTES:

1. CHKD PLATE COVERS SHALL BE ALUMINUM UNLESS INDICATED OTHERWISE.
2. MAX WEIGHT OF PLATES = 80 LBS.
3. ALUM CHKD PLATE COVERS SHALL HAVE A ALUM FRAME AND STUDS, AND SS ANCHORS AND FASTENERS, INSTEAD OF TACK WELDING SS NUTS, USE BACKER PLATE 1/4 X 1 1/2 X 3/8 AND DRILL & TAP.
4. STEEL CHKD PLATE SHALL HAVE A STEEL FRAME AND ANCHORS, SEAL ALL WELDS, (GALV AFTER FABRICATION).
5. SS CHKD PLATE SHALL HAVE A SS FRAME AND ANCHORS.
6. NOTE: "X" = MAXIMUM SPAN OF UNSTIFFENED PLATE COVER.

MATERIAL	LOADING (PSF)	X MAX (IN)	MAXIMUM SPAN OF OPENING (FEET)				
			STIFFENER SIZE 1/4" X H				
			2"	3"	C4X2.331	C5X3.089	C6X4.030
ALUMINUM	100	25	4.5	5.5	6	7	8
	150	25	3.5	4.5	5.5	6.5	7.5
	200	20	3.5	4.5	5.5	6.5	7
	250	20	3	4	5	6	7
	300	20	3	3.5	5.0	5.5	6.5

MATERIAL	LOADING (PSF)	X MAX (IN)	MAXIMUM SPAN OF OPENING (FEET)						
			STIFFENER SIZE 1/4" X H						
			2"	3"	4"	5"	C6X8.2	C7X9.8	C8X11.5
STEEL	100	40	4.5	6	7	8.5	12	14	15.5
	150	35	4	5	6	7.5	11.5	13	14.5
	200	30	3.5	4.5	5.5	7	11	12.5	14
	250	30	3	4	5	6	10.5	12	13
	300	30	3	4	4.5	5.5	10	11.5	12.5

PLATE COVERED OPENING

REV 102403 — S-502

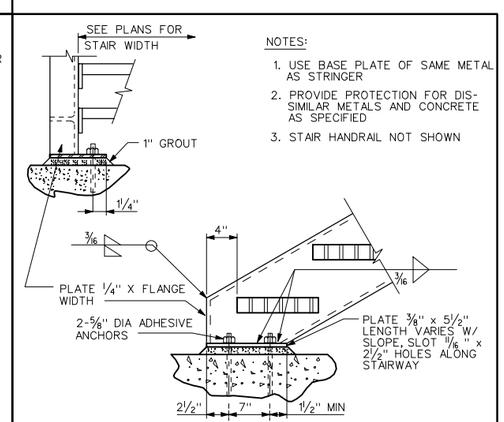

NOTES:

1. USE BASE PLATE OF SAME METAL AS STRINGER
2. PROVIDE PROTECTION FOR DIS-SIMILAR METALS AND CONCRETE AS SPECIFIED
3. STAIR HANDRAIL NOT SHOWN

STAIR BOTTOM TO CONCRETE CONNECTION

REV 081899 — S-545

REGISTERED PROFESSIONAL ENGINEER #5149 STANLEY S. POSTMA STATE OF UTAH

REV	DATE	BY	DESCRIPTION
R	3/07	MRW	RECORD DRAWING

SCALE: NONE

WARNING: 0 1/2 1 — IF THIS BAR DOES NOT MEASURE 1" THEN DRAWING IS NOT TO SCALE

DESIGNED B LEWIS
DRAWN B LEWIS
CHECKED C WILCOX

RECORD DRAWING

This record drawing has been prepared, entirely or in part on the basis of unverified information compiled and furnished by others to the preparer who is not responsible for any inaccuracies, errors or omissions which may have been incorporated into the document as a result

MWH

UTAH DIVISION OF WILDLIFE RESOURCES

WHITEROCKS STATE FISH HATCHERY

GENERAL STRUCTURAL DETAILS - 5

SHEET GS-5

1690703

Plot Date: 18-DEC-2007 09:48
User: KaiCrick
PlotScale: 1.999996:1
DesignScript: LightScreen.pen
ColorTable: bw.ctb
Model: Default
File: wrthgs05-RD.dgn

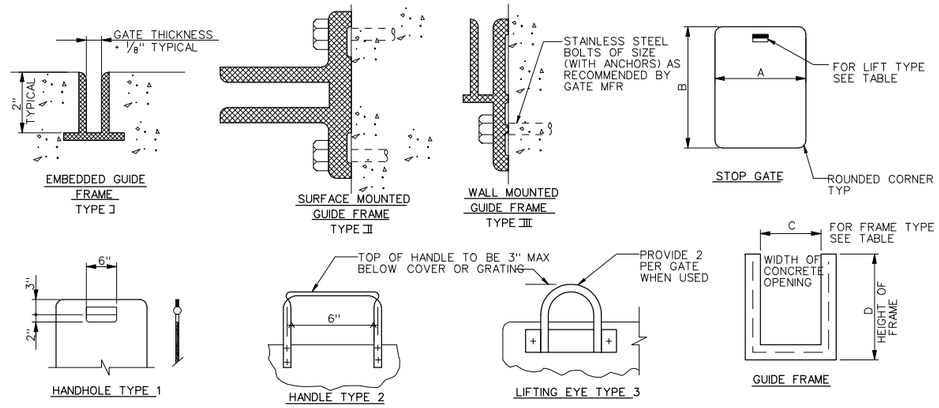

STOP GATE								GUIDE FRAME			
REF. SHEET NUMBER	GATE NO	NO REQ'D	THICKNESS	A	B	NO OF HANDLES	TYPE OF HANDLES	NO OF FRAMES	TYPE OF FRAMES	C	D
M-10 M-11	G-RW-610 G-RW-620 G-RW-630 G-RW-640 G-RW-650 G-RW-660	6	3/8"	2'-3"	2'-10"	2	1	6	I	2'-0"	2'-8"
M-10	G-RW-110 G-RW-210 G-RW-310 G-RW-410	4	3/8"	5'-3"	2'-2"	2	3	4	I	5'-0"	2'-8"
M-10	G-RW-510 G-RW-520	2	3/8"	4'-9"	2'-2"	2	3	4	I	4'-6"	2'-8"
M-10	G-RW-530	1	3/8"	4'-3"	2'-2"	2	3	4	I	4'-0"	2'-8"

ALUMINUM STOP GATE DETAILS

REV 051893 S-302

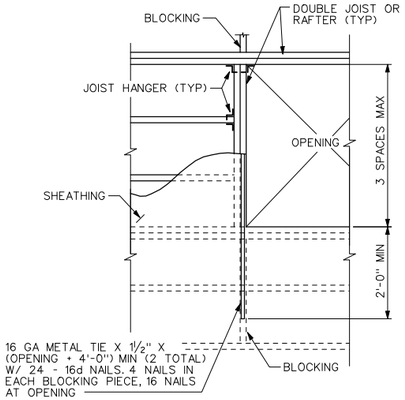

OPENING IN HORIZONTAL WOOD FRAMING

REV 091803 S-606

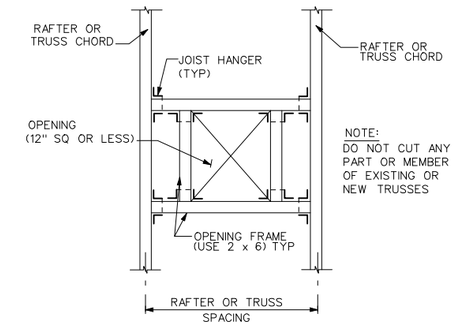

ROOF OPENING FRAMING

REV 081899 S-607

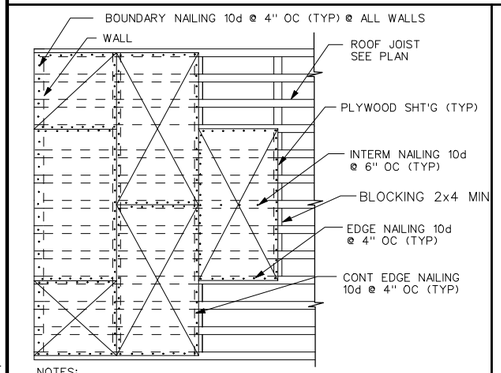

NOTES:

1. EDGE OF PLYWOOD ROOF OPENINGS SHALL BE BOUNDRY NAILING.
2. EACH PLYWOOD SHEET SHALL SPAN THREE BEARINGS MIN.
3. ALL EDGES OF PLYWOOD SHEET SHALL BE BLOCKED.

TYPICAL ROOF DIAPHRAGM

S-901

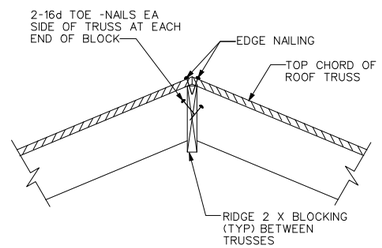

ROOF VALLEY AND RIDGE DETAIL

S-902

	8" CMU		10" CMU		12" CMU	
BAR SIZE	HOOK X	LAP	EMBEDMENT E	LAP	EMBEDMENT E	LAP	EMBEDMENT E
#3	6"	15" (36")	12" (29")	15" (36")	12" (29")	24"	19"
#4	8"	21" (63")	17" (51")	16" (63")	13" (51")	42"	34"
#5	10"	35" (99")	28" (79")	26" (99")	21" (79")	64"	51"
#6	12"	74" (199")	60" (159")	54" (199")	44" (159")	106"	85"
#7	14"	108" (270")	87" (216")	78" (270")	62" (216")	124"	99"
#8	16"	164" (378")	31" (303")	114" (378")	92" (303")	152"	121"
#9	18"	227" (401")	182" (321")	154" (401")	124" (321")	171"	137"

USE LENGTH IN PARENTHESIS FOR 8" AND 10" SINGLY REINFORCED CMU WHERE THERE ARE TWO BARS IN A CELL.

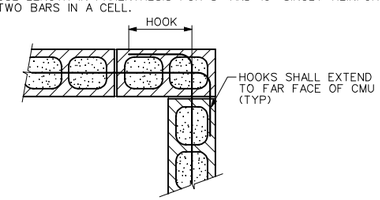

NOTES:

1. USE LAP LENGTHS AS DETERMINED FROM THESE TABLES UNLESS INDICATED OTHERWISE
2. THE TABLES SHOWN ARE FOR f'm=2000 PSI AND fy=60,000 PSI
3. WHEN BARS OF DIFFERENT SIZES ARE LAP SPLICED, LAP LENGTH SHALL BE THE LARGER OF THE EMBEDMENT LENGTH OF THE LARGER BAR, OR THE LAP LENGTH OF THE SMALLER BAR.
4. USE REBAR COUPLERS FOR SPLICES OF #10 AND LARGER BARS

LAPS, HOOKS AND EMBEDMENTS

FOR 8", 10" 12" CMU

REV 090303 S-415

REGISTERED PROFESSIONAL ENGINEER #5149 STANLEY S. POSTMA STATE OF UTAH

REV	DATE	BY	DESCRIPTION
R	3/07	MRW	RECORD DRAWING

SCALE: NONE

WARNING: 0 1/2 1 — IF THIS BAR DOES NOT MEASURE 1" THEN DRAWING IS NOT TO SCALE

DESIGNED B LEWIS
DRAWN B LEWIS
CHECKED C WILCOX

RECORD DRAWING

This record drawing has been prepared, entirely or in part on the basis of unverified information compiled and furnished by others to the preparer who is not responsible for any inaccuracies, errors or omissions which may have been incorporated into the document as a result

MWH

UTAH DIVISION OF WILDLIFE RESOURCES
WHITEROCKS STATE FISH HATCHERY

GENERAL STRUCTURAL DETAILS - 6

SHEET GS-6

1690703

File: wrfhgs06-RD.dgn Model: Default ColorTable: bw.ctb DesignScript: LightScreen.pen PlotScale: 1.999996:1 User: KalCrick Plot Date: 18-DEC-2007 09:48

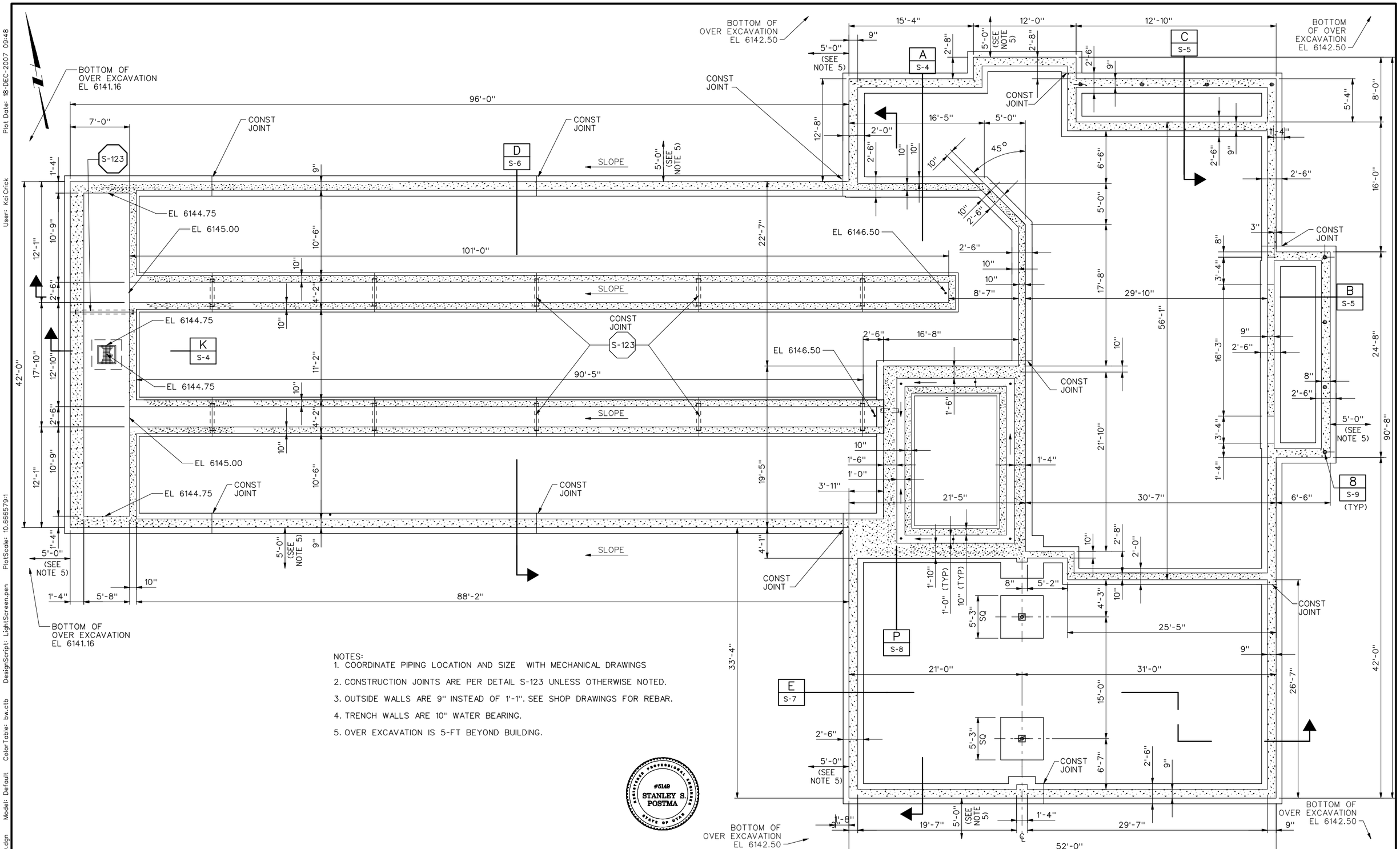

NOTES:
1. COORDINATE PIPING LOCATION AND SIZE WITH MECHANICAL DRAWINGS
2. CONSTRUCTION JOINTS ARE PER DETAIL S-123 UNLESS OTHERWISE NOTED.
3. OUTSIDE WALLS ARE 9" INSTEAD OF 1'-1". SEE SHOP DRAWINGS FOR REBAR.
4. TRENCH WALLS ARE 10" WATER BEARING.
5. OVER EXCAVATION IS 5-FT BEYOND BUILDING.

REV	DATE	BY	DESCRIPTION
R	3/07	MRW	RECORD DRAWING

SCALE: 3/16" = 1'-0"

WARNING: 0 1/2 1 — IF THIS BAR DOES NOT MEASURE 1" THEN DRAWING IS NOT TO SCALE

DESIGNED B LEWIS
DRAWN B LEWIS
CHECKED C WILCOX

RECORD DRAWING

This record drawing has been prepared, entirely or in part on the basis of unverified information compiled and furnished by others to the preparer who is not responsible for any inaccuracies, errors or omissions which may have been incorporated into the document as a result

MWH

UTAH DIVISION OF WILDLIFE RESOURCES
WHITEROCKS STATE FISH HATCHERY

HATCHERY AND OPERATIONS BUILDING
FOUNDATION PLAN

SHEET S-1
1690703

File: wrfhs01-RD.dgn Model: Default ColorTable: bw.ctb DesignScript: LightScreen.pen PlotScale: 10.666579:1 User: KaiCrick Plot Date: 18-DEC-2007 09:48

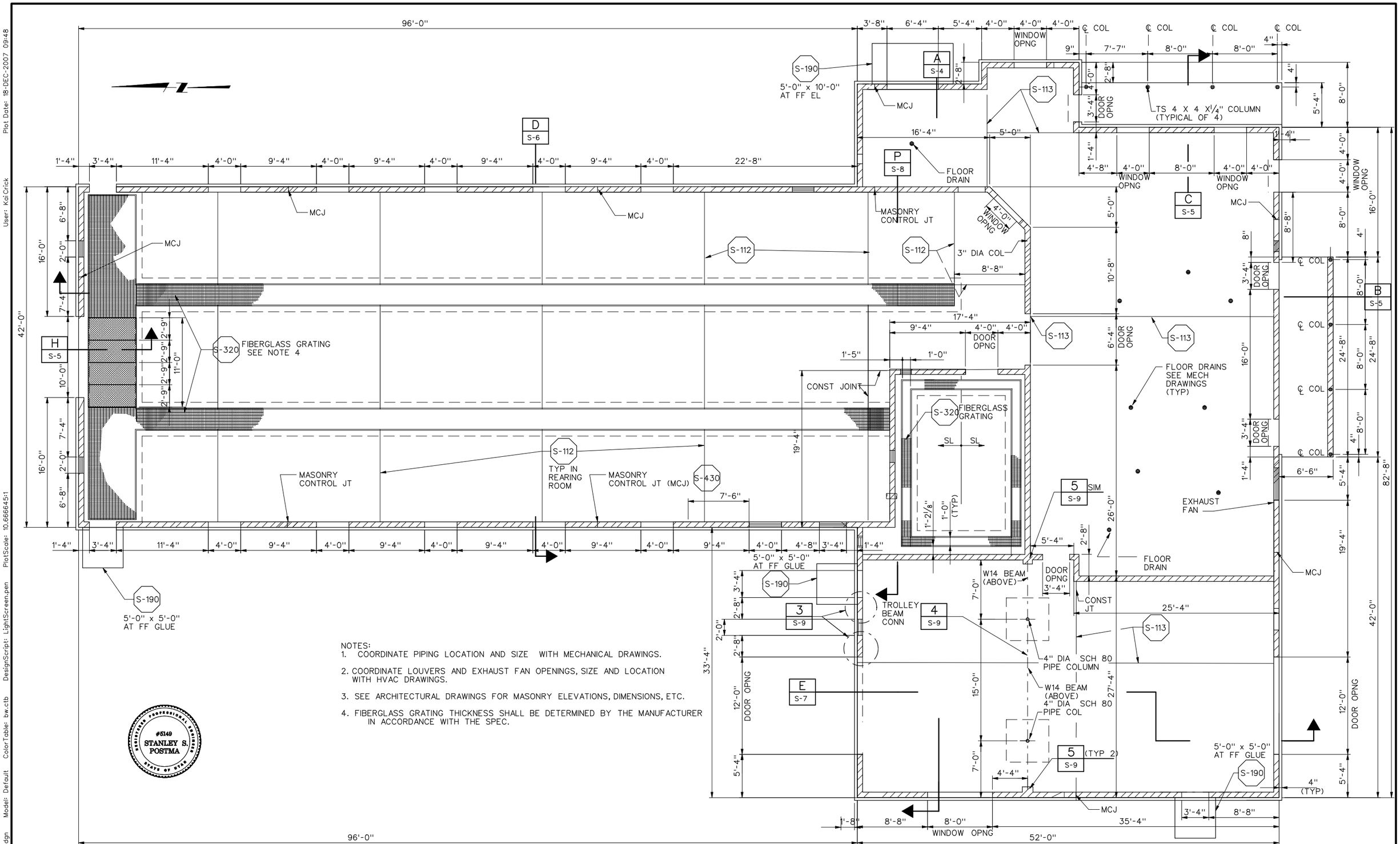

NOTES:
1. COORDINATE PIPING LOCATION AND SIZE WITH MECHANICAL DRAWINGS.
2. COORDINATE LOUVERS AND EXHAUST FAN OPENINGS, SIZE AND LOCATION WITH HVAC DRAWINGS.
3. SEE ARCHITECTURAL DRAWINGS FOR MASONRY ELEVATIONS, DIMENSIONS, ETC.
4. FIBERGLASS GRATING THICKNESS SHALL BE DETERMINED BY THE MANUFACTURER IN ACCORDANCE WITH THE SPEC.

REGISTERED PROFESSIONAL ENGINEER #5149 STANLEY S. POSTMA STATE OF UTAH

REV	DATE	BY	DESCRIPTION
R	3/07	MRW	RECORD DRAWING

SCALE: 3/16" - 1'-0"

WARNING: 0 1/2 1 — IF THIS BAR DOES NOT MEASURE 1" THEN DRAWING IS NOT TO SCALE

DESIGNED B LEWIS
DRAWN B LEWIS
CHECKED C WILCOX

RECORD DRAWING

This record drawing has been prepared, entirely or in part on the basis of unverified information compiled and furnished by others to the preparer who is not responsible for any inaccuracies, errors or omissions which may have been incorporated into the document as a result

MWH

UTAH DIVISION OF WILDLIFE RESOURCES
WHITEROCKS STATE FISH HATCHERY

HATCHERY AND OPERATIONS BUILDING
FLOOR PLAN

SHEET S-2

1690703

File: wrfhs02-RD.dgn Model: Default ColorTable: bw.ctb DesignScript: LightScreen.pen PlotScale: 10.666645:1 User: KaiCrick Plot Date: 18-DEC-2007 09:48

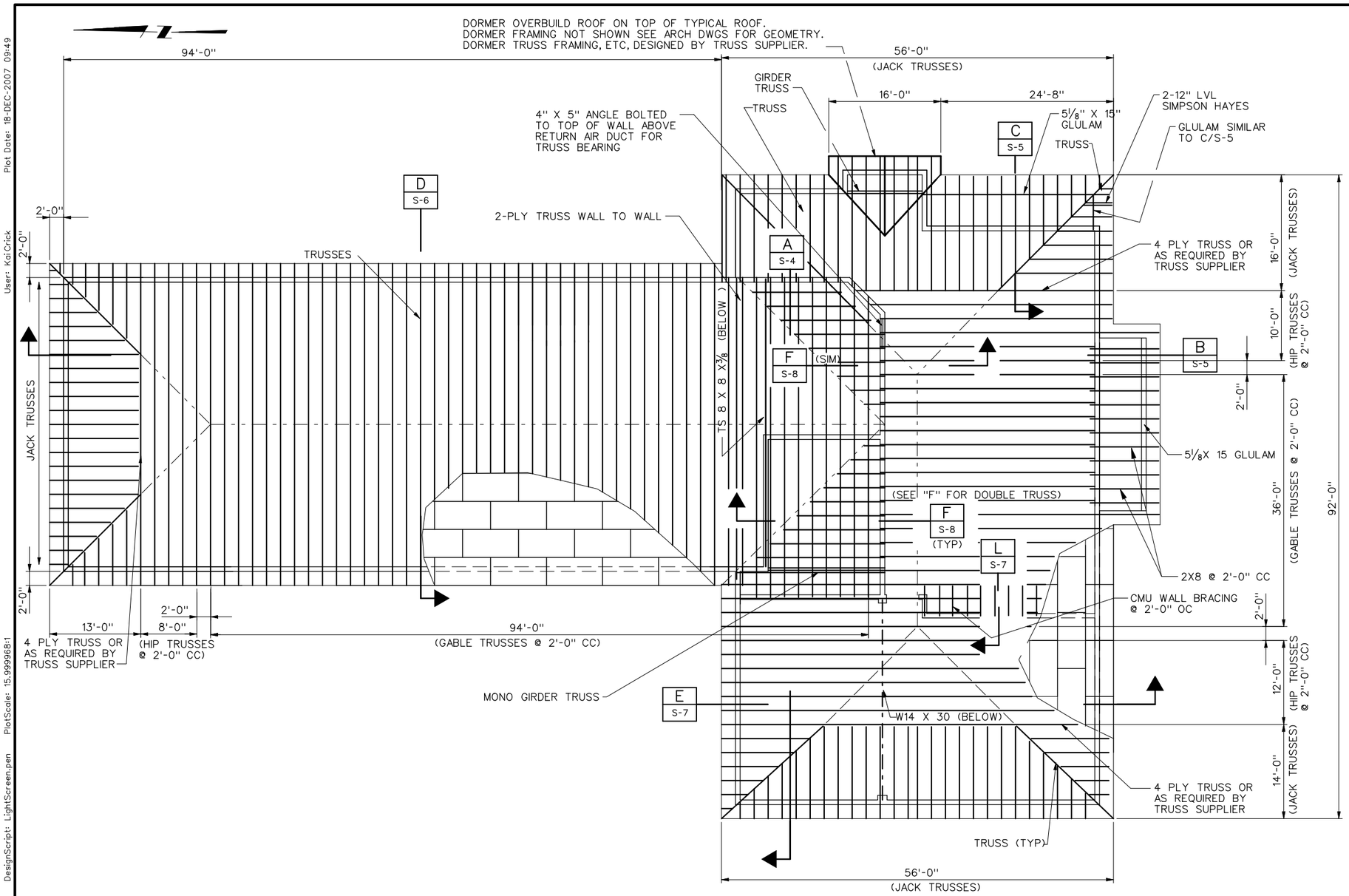

ROOF PLAN

NOTES:

1. ROOF SHEATHING SHALL BE ⅝" STRUCTURAL I EXTERIOR PLYWOOD NAILED DIRECTLY TO THE TRUSSES.

2. PLYWOOD NAILING SHALL BE 10d @ 4" CC ALL EDGES & 6" CC IN THE FIELD. SEE S-901 PROVIDE 2X4 FLAT BLOCKING AT UNSUPPORTED EDGES.

3. GABLE, HIP AND JACK TRUSSES ARE PREFABRICATED AND SHALL BE DESIGNED BY THE SUPPLIER. REFER TO THE SPECIFICATIONS.

4. ALL TRUSSES AND MEMBERS SHALL HAVE BLOCKING AT THEIR SUPPORTS.

5. FOR FRAMING AROUND OPENINGS IN ROOF, SEE S-606 AND S-607

6. METAL FRAMING DEVICES SHOWN ON THE DRAWINGS CAN BE REPLACED WITH EQUIVALENT DESIGN DEVICES SUBJECT TO THE APPROVAL OF THE ENGINEER.

7. TRUSS MANUFACTURER'S ENGINEER SHALL DESIGN ALL TRUSS CONNECTIONS. TRUSSES SHOWN ARE ONLY REPRESENTATIVE.

8. TRUSS SHALL BE DOUGLAS FIR AND DESIGNED BY THE MANUFACTURER FOR THE LOADINGS SHOWN ON GS-1 AS WELL AS A 28 PSF BOTTOM CHORD LOAD.

9. TRUSS DESIGN SHALL CONSIDER ALL MECHANICAL UNIT WEIGHTS AS PROVIDED BY THE EQUIPMENT SUPPLIER.

10. WIND LOADING SHALL BE PER THE DESIGN CRITERIA ON GS-1 AND BE PER IBC 2003.

11. BOTTOM CHORD SHALL BE DESIGNED FOR A 250 LB LOAD BETWEEN ANY PANEL POINT.

12. LOADS GIVEN ARE FOR ALLOWABLE STRESS DEISGN UNO.

REGISTERED PROFESSIONAL ENGINEER #5149 STANLEY S. POSTMA STATE OF UTAH

REV	DATE	BY	DESCRIPTION
R	3/07	MRW	RECORD DRAWING

SCALE ⅛" = 1'-0"

WARNING 0 ½ 1 IF THIS BAR DOES NOT MEASURE 1" THEN DRAWING IS NOT TO SCALE

DESIGNED B LEWIS
DRAWN B LEWIS
CHECKED C WILCOX

RECORD DRAWING

This record drawing has been prepared, entirely or in part on the basis of unverified information compiled and furnished by others to the preparer who is not responsible for any inaccuracies, errors or omissions which may have been incorporated into the document as a result

MWH

UTAH DIVISION OF WILDLIFE RESOURCES
WHITEROCKS STATE FISH HATCHERY

HATCHERY AND OPERATIONS BUILDING
ROOF PLAN

SHEET S-3

1690703

File: wrfhs03-RD.dgn Model: Default ColorTable: bw.ctb DesignScript: LightScreen.pen PlotScale: 15.999968:1 User: KaiCrick Plot Date: 18-DEC-2007 09:49

NOTES:

1. OVER-EXCAVATE TO NATIVE BOULDERS AND COBBLES. PROPERLY PLACE STRUCTURAL FILL IN ACCORDANCE W/ GEOTECHNICAL REPORT BY IGES DATED NOV. 16, 2004. GEOTECHNICAL ENGINEER SHALL OBSERVE SUBGRADE PRIOR TO PLACING STRUCTURAL FILL OR CONCRETE.

2. PROPERLY PLACE STRUCTURAL FILL DOWN TO SUITABLE UNDISTURBED MATERIAL IN ACCORDANCE W/ GEOTECHNICAL REPORT BY IGES DATED NOV. 16, 2004. GEOTECHNICAL ENGINEER SHALL OBSERVE SUBGRADE PRIOR TO PLACING STRUCTURAL FILL OR CONCRETE.

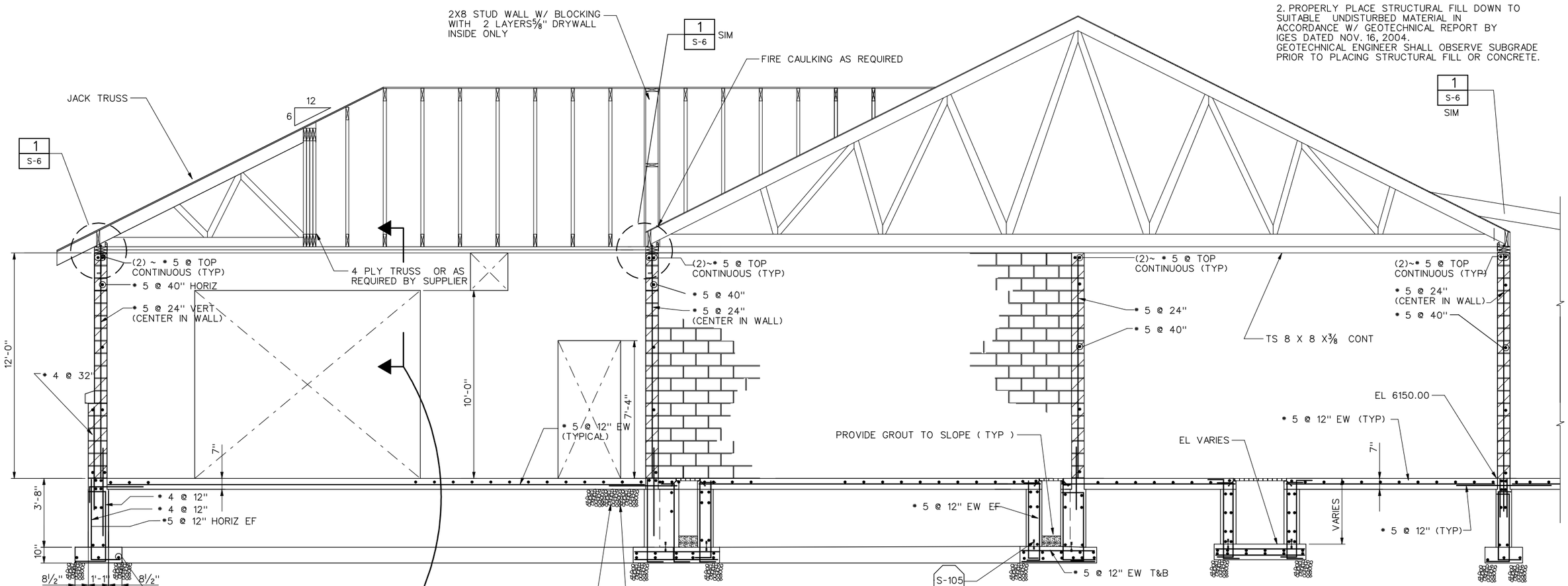

SECTION A
SCALE : 3/8" = 1'-0"
S-1
S-2
S-3

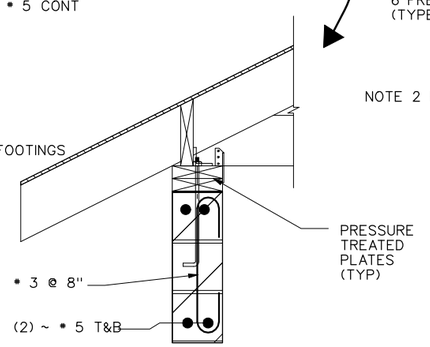

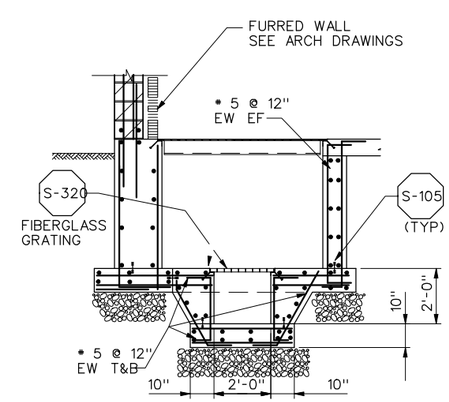

SECTION K
SCALE : 3/8" = 1'-0"
S-1

#5149 STANLEY S. POSTMA
REGISTERED PROFESSIONAL ENGINEER
STATE OF UTAH

REV	DATE	BY	DESCRIPTION
R	3/07	MRW	RECORD DRAWING

SCALE: AS SHOWN

WARNING: 0 1/2 1 — IF THIS BAR DOES NOT MEASURE 1" THEN DRAWING IS NOT TO SCALE

DESIGNED B LEWIS
DRAWN B LEWIS
CHECKED C WILCOX

RECORD DRAWING

This record drawing has been prepared, entirely or in part on the basis of unverified information compiled and furnished by others to the preparer who is not responsible for any inaccuracies, errors or omissions which may have been incorporated into the document as a result

MWH

UTAH DIVISION OF WILDLIFE RESOURCES
WHITEROCKS STATE FISH HATCHERY

HATCHERY AND OPERATIONS BUILDING
SECTIONS AND DETAILS - 1

SHEET S-4
1690703

File: wrfhs04-RD.dgn Model: Default ColorTable: bw.ctb DesignScript: LightScreen.pen PlotScale: 5.3333329:1 User: KaiCrick Plot Date: 18-DEC-2007 09:49

NOTES:1. OVER-EXCAVATE TO NATIVE BOULDERS AND COBBLES. PROPERLY PLACE STRUCTURAL FILL IN ACCORDANCE W/ GEOTECHNICAL REPORT BY IGES DATED NOV. 16, 2004. GEOTECHNICAL ENGINEER SHALL OBSERVE SUBGRADE PRIOR TO PLACING STRUCTURAL FILL OR CONCRETE.

2. PROPERLY PLACE STRUCTURAL FILL DOWN TO SUITABLE UNDISTURBED MATERIAL IN ACCORDANCE W/ GEOTECHNICAL REPORT BY IGES DATED NOV. 16, 2004. GEOTECHNICAL ENGINEER SHALL OBSERVE SUBGRADE PRIOR TO PLACING STRUCTURAL FILL OR CONCRETE.

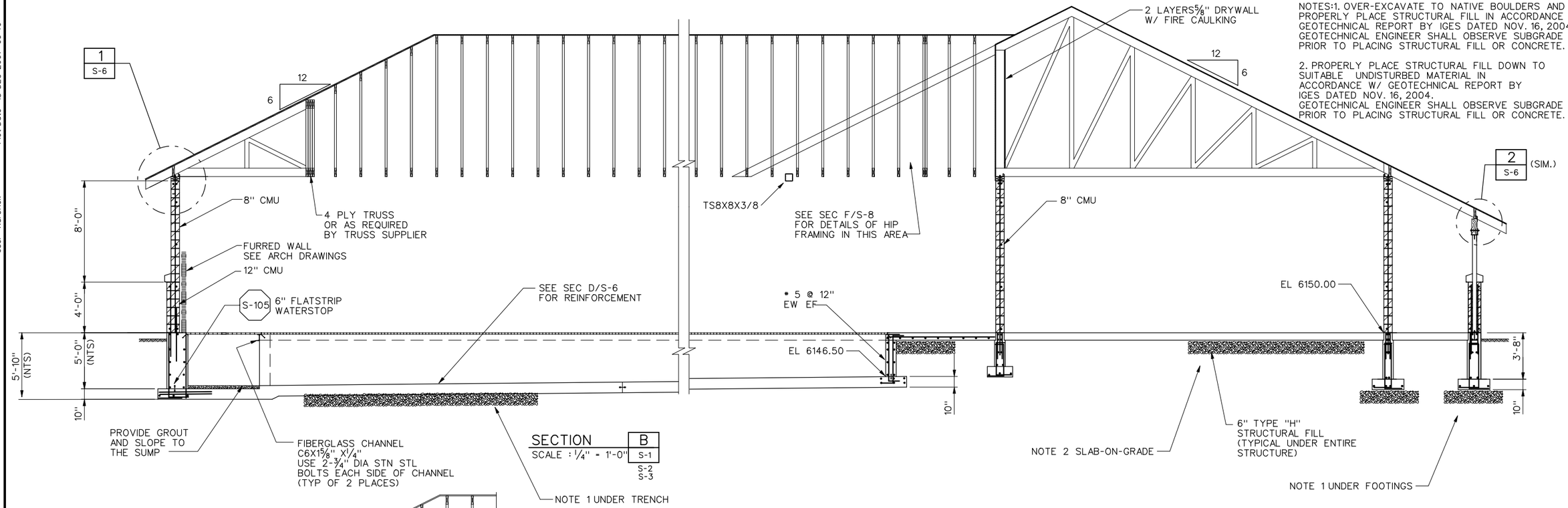

SECTION B
SCALE : 1/4" = 1'-0"
S-1
S-2
S-3

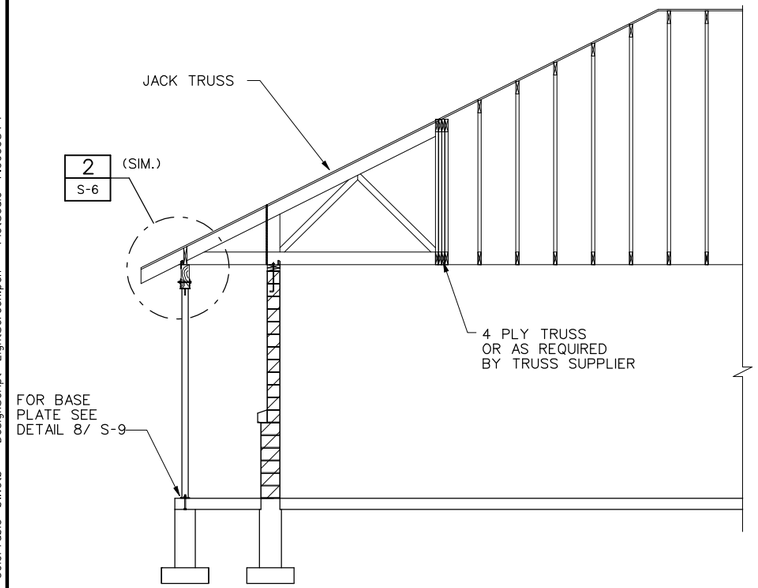

SECTION C
SCALE : 1/4" = 1'-0"
S-1
S-2
S-3

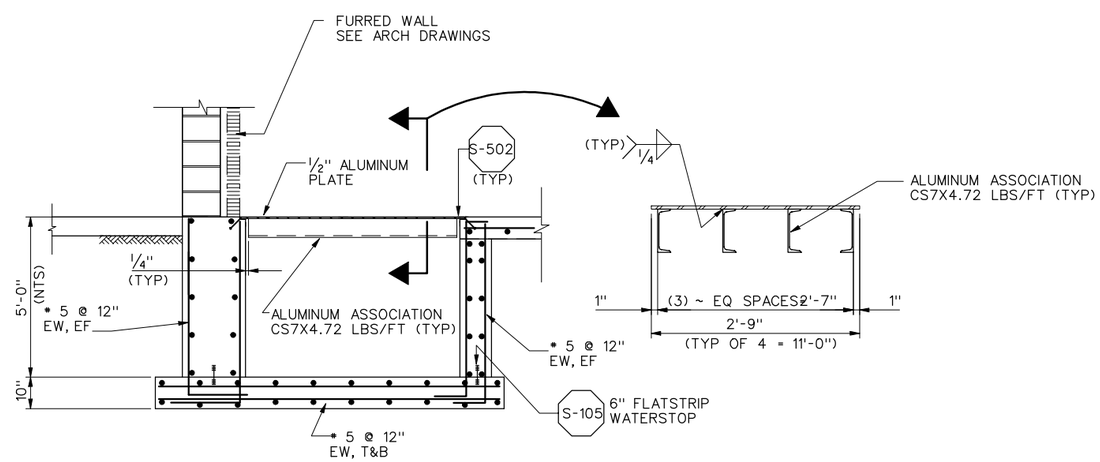

SECTION H
SCALE : 1/2"=1'-0"
S-2

REGISTERED PROFESSIONAL ENGINEER #5149 STANLEY S. POSTMA STATE OF UTAH

REV	DATE	BY	DESCRIPTION
R	3/07	MRW	RECORD DRAWING

SCALE: AS SHOWN

WARNING: 0 1/2 1 — IF THIS BAR DOES NOT MEASURE 1" THEN DRAWING IS NOT TO SCALE

DESIGNED B LEWIS
DRAWN B LEWIS
CHECKED C WILCOX

RECORD DRAWING

This record drawing has been prepared, entirely or in part on the basis of unverified information compiled and furnished by others to the preparer who is not responsible for any inaccuracies, errors or omissions which may have been incorporated into the document as a result

MWH

UTAH DIVISION OF WILDLIFE RESOURCES
WHITEROCKS STATE FISH HATCHERY

HATCHERY AND OPERATIONS BUILDING
SECTIONS AND DETAILS -2

SHEET S-5
1690703

File: wrfhs05-RD.dgn Model: Default ColorTable: bw.ctb DesignScript: LightScreen.pen PlotScale: 7.999984:1 User: KaiCrick Plot Date: 18-DEC-2007 09:49

NOTES:

1. OVER-EXCAVATE TO NATIVE BOULDERS AND COBBLES. PROPERLY PLACE STRUCTURAL FILL IN ACCORDANCE W/ GEOTECHNICAL REPORT BY IGES DATED NOV. 16, 2004. GEOTECHNICAL ENGINEER SHALL OBSERVE SUBGRADE PRIOR TO PLACING STRUCTURAL FILL OR CONCRETE.

2. PROPERLY PLACE STRUCTURAL FILL DOWN TO SUITABLE UNDISTURBED MATERIAL IN ACCORDANCE W/ GEOTECHNICAL REPORT BY IGES DATED NOV. 16, 2004. GEOTECHNICAL ENGINEER SHALL OBSERVE SUBGRADE PRIOR TO PLACING STRUCTURAL FILL OR CONCRETE.

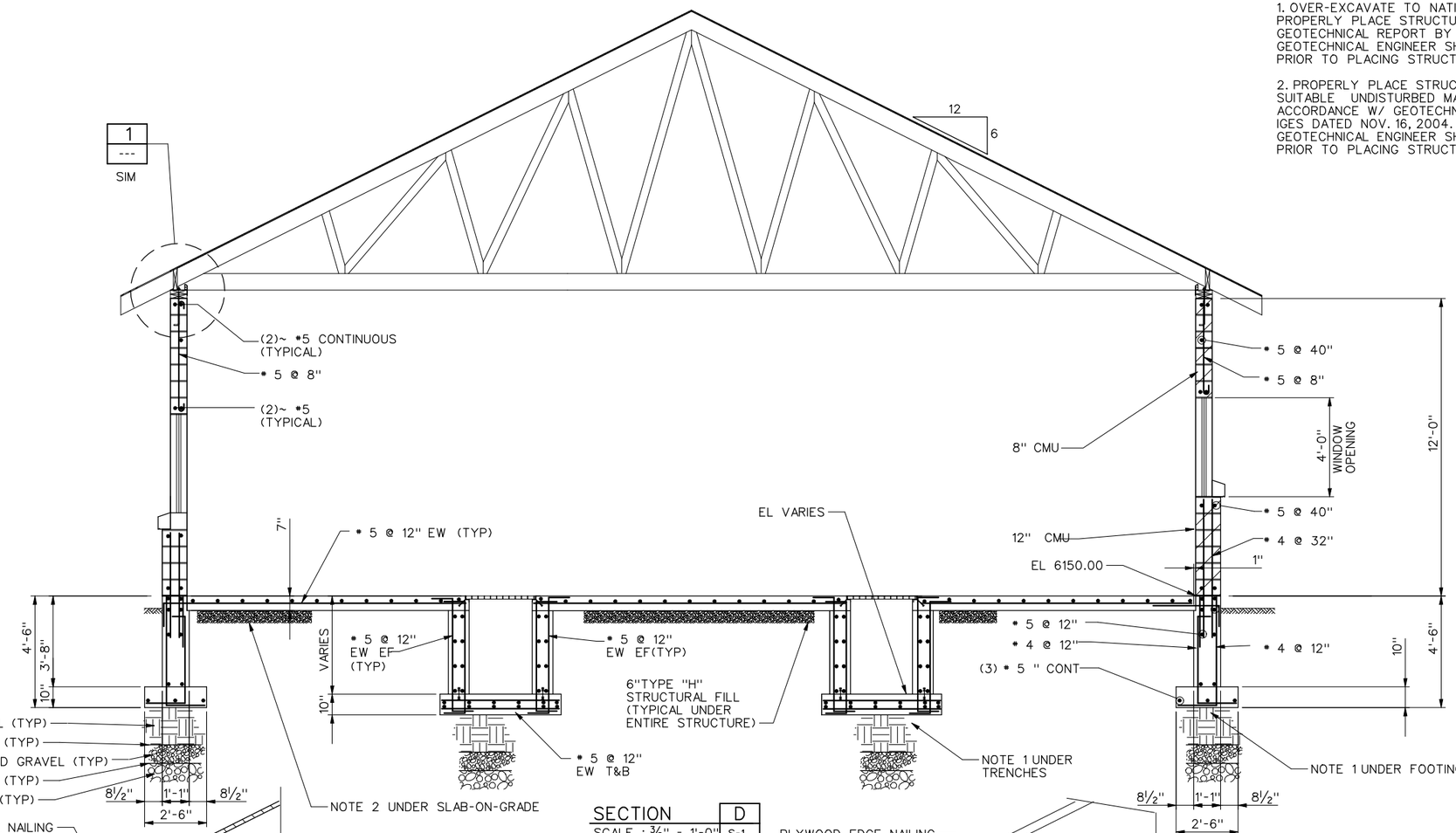

SECTION D
SCALE : ⅜" = 1'-0"
S-1
S-2
S-3

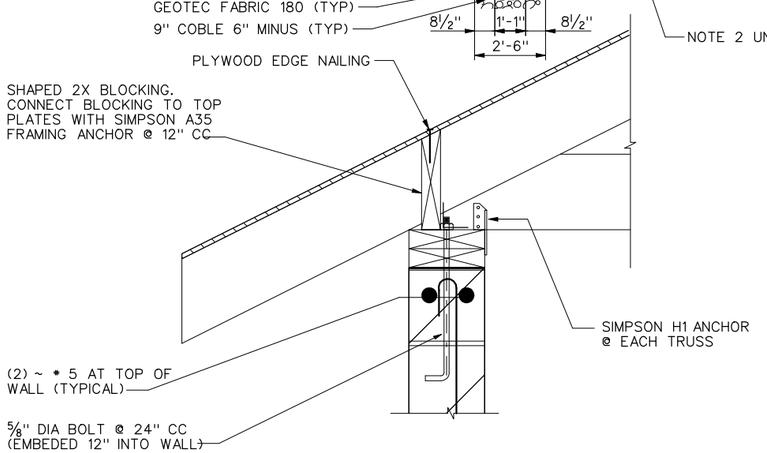

DETAIL 1
SCALE : 1½" =1'-0"

S-4
S-5
S-7

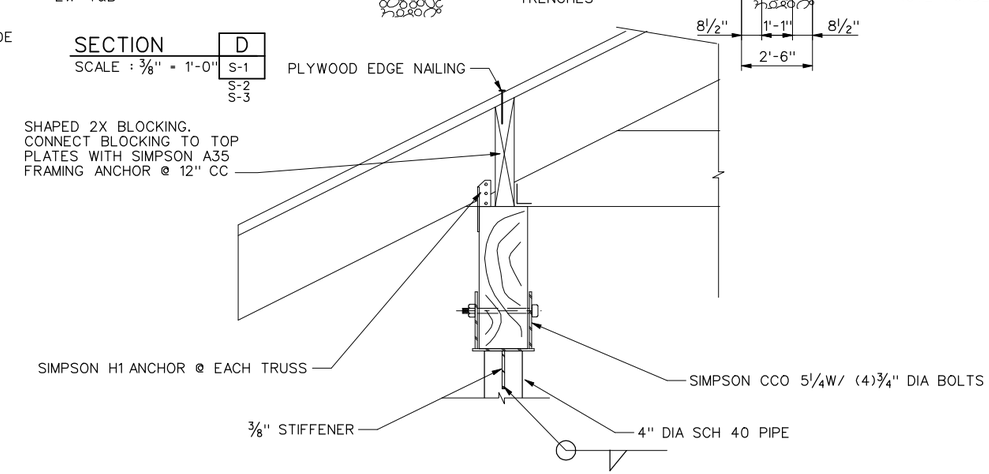

DETAIL 2
SCALE : 1½" =1'-0"
S-5

REGISTERED PROFESSIONAL ENGINEER #5149 STANLEY S. POSTMA STATE OF UTAH

REV	DATE	BY	DESCRIPTION
R	3/07	MRW	RECORD DRAWING

SCALE: AS SHOWN

WARNING: 0 ½ 1 — IF THIS BAR DOES NOT MEASURE 1" THEN DRAWING IS NOT TO SCALE

DESIGNED B LEWIS
DRAWN B LEWIS
CHECKED C WILCOX

RECORD DRAWING

This record drawing has been prepared, entirely or in part on the basis of unverified information compiled and furnished by others to the preparer who is not responsible for any inaccuracies, errors or omissions which may have been incorporated into the document as a result

MWH

UTAH DIVISION OF WILDLIFE RESOURCES
WHITEROCKS STATE FISH HATCHERY

HATCHERY AND OPERATIONS BUILDING
SECTIONS AND DETAILS - 3

SHEET S-6
1690703

File: wrfhs06-RD.dgn Model: Default ColorTable: bw.ctb DesignScript: LightScreen.pen PlotScale: 5.3333291 User: KaiCrick Plot Date: 18-DEC-2007 09:49

NOTES:

1. OVER-EXCAVATE TO NATIVE BOULDERS AND COBBLES. PROPERLY PLACE STRUCTURAL FILL IN ACCORDANCE W/ GEOTECHNICAL REPORT BY IGES DATED NOV. 16, 2004. GEOTECHNICAL ENGINEER SHALL OBSERVE SUBGRADE PRIOR TO PLACING STRUCTURAL FILL OR CONCRETE.

2. PROPERLY PLACE STRUCTURAL FILL DOWN TO SUITABLE UNDISTURBED MATERIAL IN ACCORDANCE W/ GEOTECHNICAL REPORT BY IGES DATED NOV. 16, 2004. GEOTECHNICAL ENGINEER SHALL OBSERVE SUBGRADE PRIOR TO PLACING STRUCTURAL FILL OR CONCRETE.

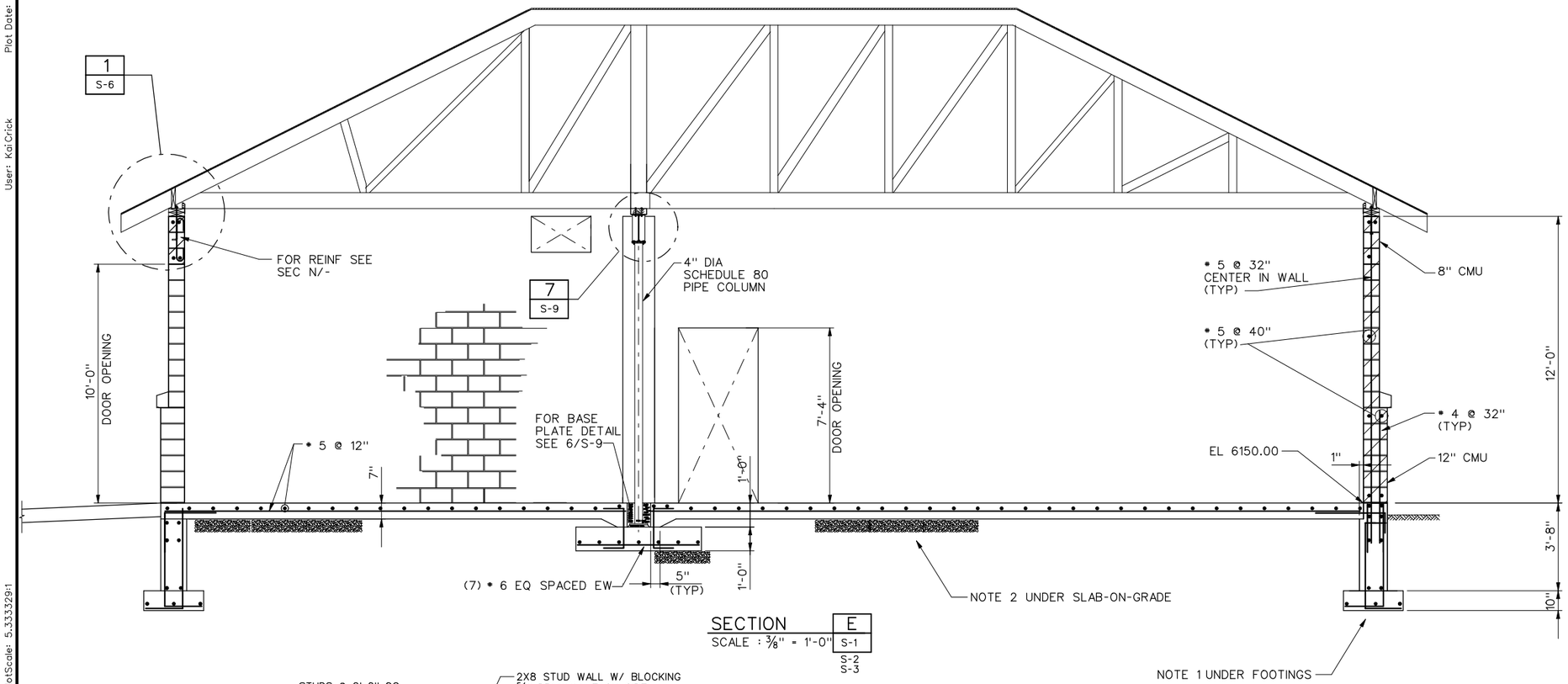

SECTION E
SCALE : 3/8" = 1'-0"
S-1
S-2
S-3

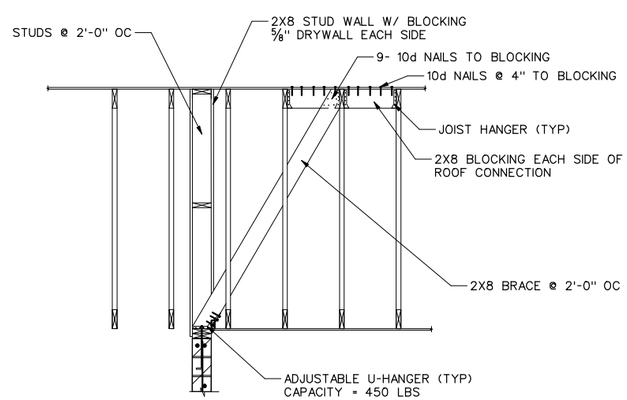

SECTION L
NO SCALE
S-3

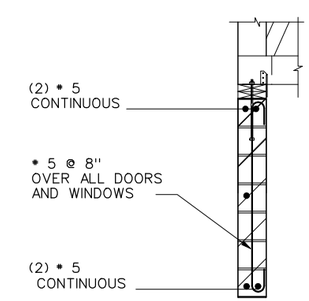

SECTION N
NO SCALE

REGISTERED PROFESSIONAL ENGINEER #5149 STANLEY S. POSTMA STATE OF UTAH

REV	DATE	BY	DESCRIPTION
R	3/07	MRW	RECORD DRAWING

SCALE: AS SHOWN

WARNING: 0 1/2 1 — IF THIS BAR DOES NOT MEASURE 1" THEN DRAWING IS NOT TO SCALE

DESIGNED B LEWIS
DRAWN B LEWIS
CHECKED C WILCOX

RECORD DRAWING
This record drawing has been prepared, entirely or in part on the basis of unverified information compiled and furnished by others to the preparer who is not responsible for any inaccuracies, errors or omissions which may have been incorporated into the document as a result

MWH

UTAH DIVISION OF WILDLIFE RESOURCES
WHITEROCKS STATE FISH HATCHERY

HATCHERY AND OPERATIONS BUILDING
SECTIONS AND DETAILS - 4

SHEET S-7
1690703

File: wrfhs07-RD.dgn Model: Default ColorTable: bw.ctb DesignScript: LightScreen.pen PlotScale: 5.333329:1 User: KaiCrick Plot Date: 18-DEC-2007 09:49

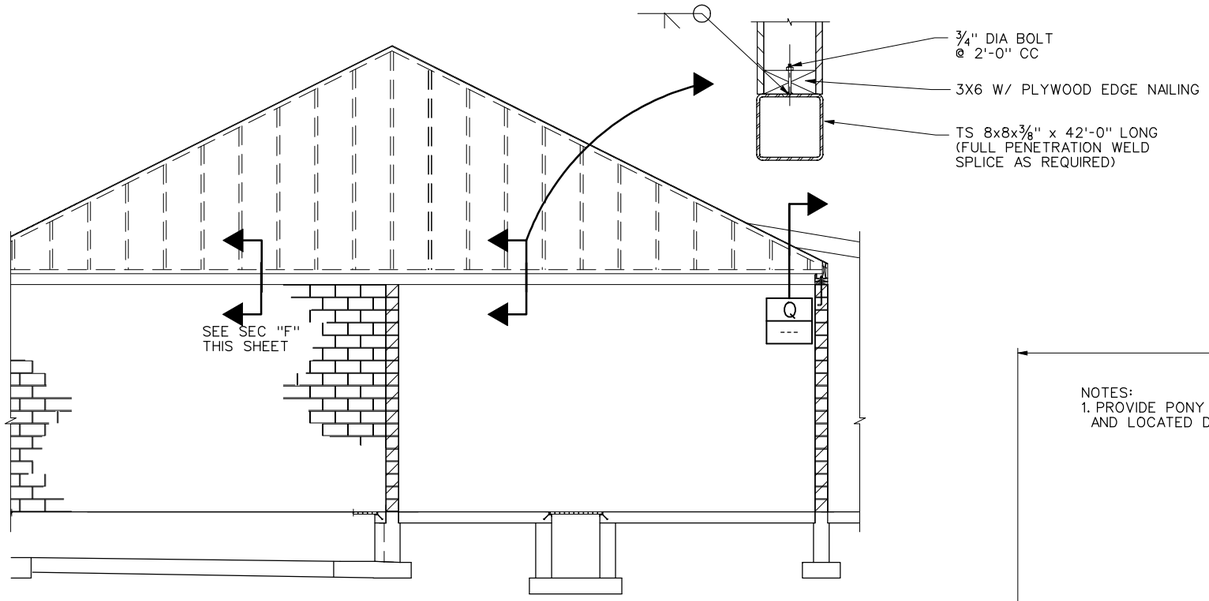

SECTION P
SCALE : 1/4" = 1'-0" S-1
S-2

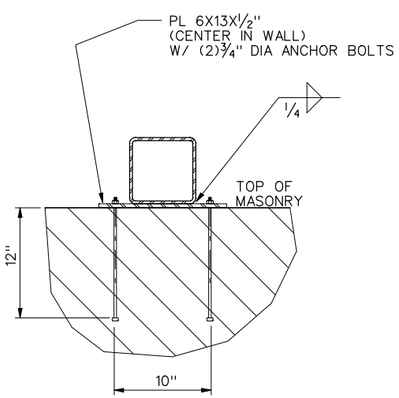

SECTION Q
NO SCALE ---

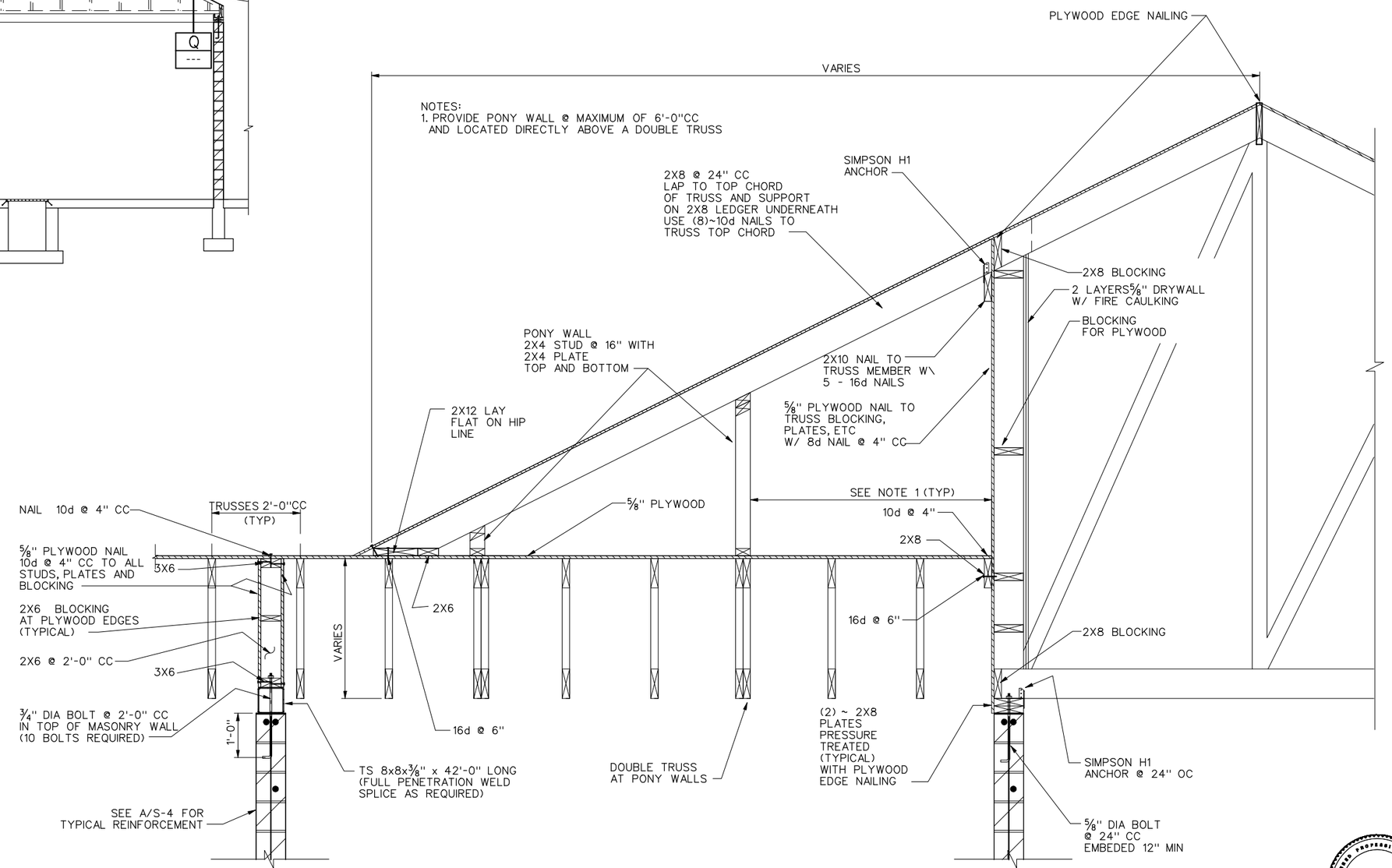

SECTION F
SCALE : 3/4" = 1'-0" S-3

REGISTERED PROFESSIONAL ENGINEER #5149 STANLEY S. POSTMA STATE OF UTAH

REV	DATE	BY	DESCRIPTION
R	3/07	MRW	RECORD DRAWING

SCALE: AS SHOWN

WARNING: 0 1/2 1 — IF THIS BAR DOES NOT MEASURE 1" THEN DRAWING IS NOT TO SCALE

DESIGNED B LEWIS
DRAWN B LEWIS
CHECKED C WILCOX

RECORD DRAWING

This record drawing has been prepared, entirely or in part on the basis of unverified information compiled and furnished by others to the preparer who is not responsible for any inaccuracies, errors or omissions which may have been incorporated into the document as a result

MWH

UTAH DIVISION OF WILDLIFE RESOURCES
WHITEROCKS STATE FISH HATCHERY

HATCHERY AND OPERATIONS BUILDING
SECTIONS AND DETAILS - 5

SHEET S-8
1690703

File: wrfhs08-RD.dgn Model: Default ColorTable: bw.ctb DesignScript: LightScreen.pen PlotScale: 2.666655:1 User: KaiCrick Plot Date: 18-DEC-2007 09:49

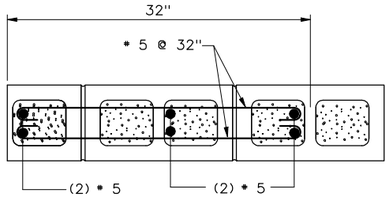

DETAIL 3
SCALE : 1½" = 1'-0" S-2

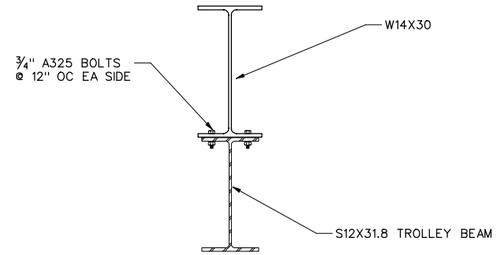

DETAIL 4
SCALE : 1½"=1'-0" S-2

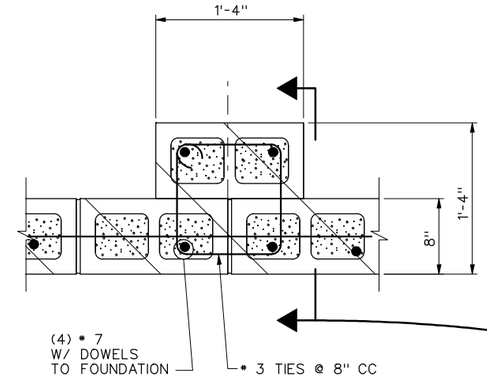

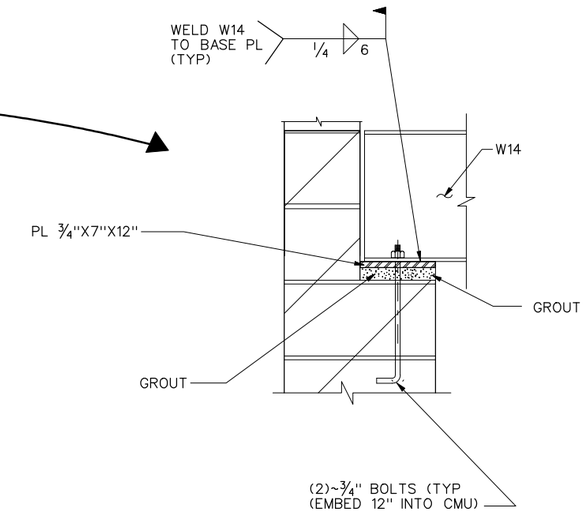

DETAIL 5
SCALE : 1½" = 1'-0 S-2

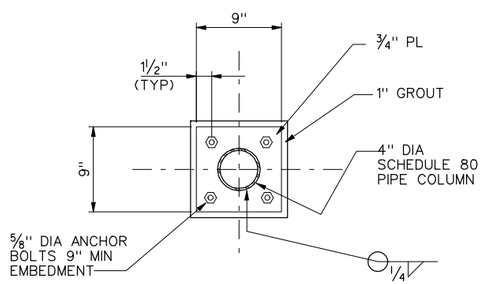

DETAIL 6
SCALE : 1½"=1'-0" S-7

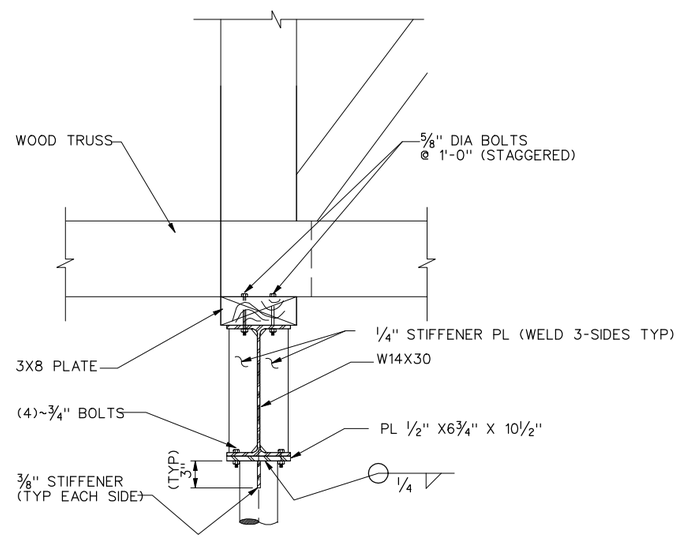

DETAIL 7
SCALE : 1½"=1'-0" S-7

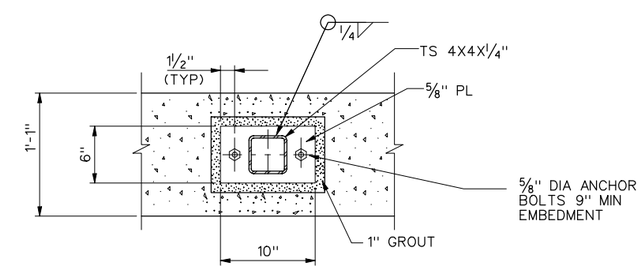

DETAIL 8
SCALE : 1½" = 1'-0 S-1

REGISTERED PROFESSIONAL ENGINEER #5149 STANLEY S. POSTMA STATE OF UTAH

REV	DATE	BY	DESCRIPTION
R	3/07	MRW	RECORD DRAWING

SCALE: AS SHOWN

WARNING: 0 ½ 1 — IF THIS BAR DOES NOT MEASURE 1" THEN DRAWING IS NOT TO SCALE

DESIGNED B LEWIS
DRAWN B LEWIS
CHECKED C WILCOX

RECORD DRAWING

This record drawing has been prepared, entirely or in part on the basis of unverified information compiled and furnished by others to the preparer who is not responsible for any inaccuracies, errors or omissions which may have been incorporated into the document as a result

MWH

UTAH DIVISION OF WILDLIFE RESOURCES
WHITEROCKS STATE FISH HATCHERY

HATCHERY AND OPERATION BUILDING
SECTIONS AND DETAILS - 6

SHEET S-9
1690703

File: wrfhs09-RD.dgn Model: Default ColorTable: bw.ctb DesignScript: LightScreen.pen PlotScale: 1.333337:1 User: KaiCrick Plot Date: 18-DEC-2007 09:49

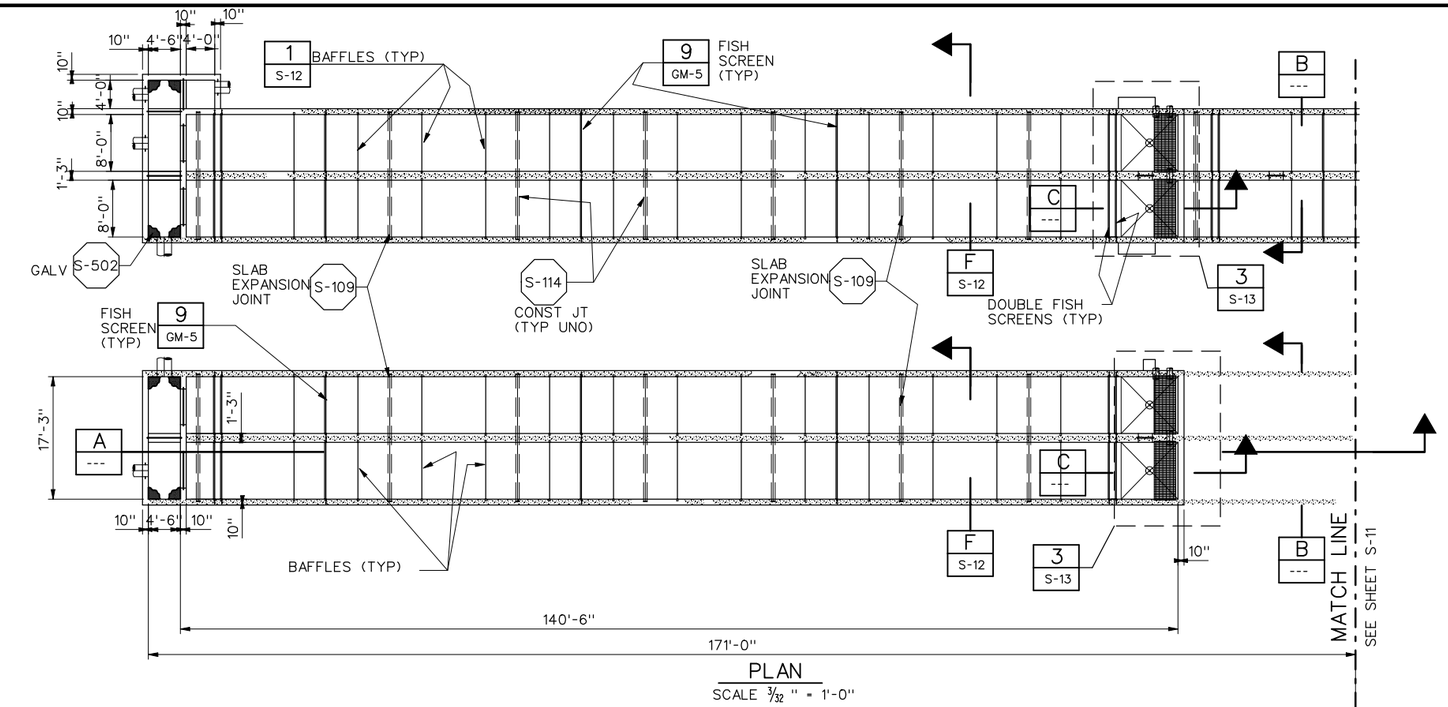

PLAN
SCALE 3/32" = 1'-0"

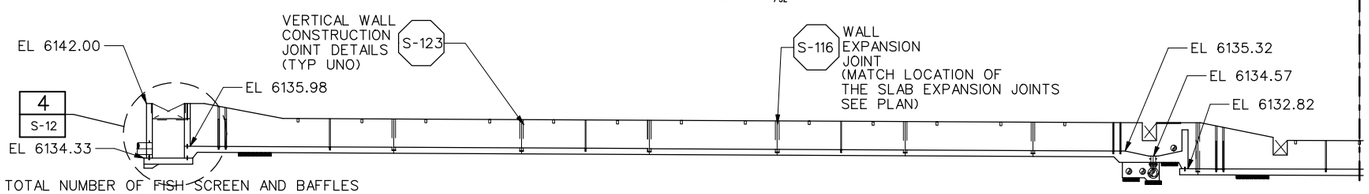

NOTES:
1. SEE SHEET M-12 FOR LOCATION AND TOTAL NUMBER OF FISH SCREEN AND BAFFLES
2. COORDINATE WITH MECHANICAL DRAWINGS FOR PIPING SIZE, LOCATION AND INVERT ELEVATIONS
3. TOLERANCES ON RACEWAY CONCRETE IS 1/8-INCH ON 5-FT OR LESS. FORMS FOR RACEWAYS SHALL BE 4-FT X 8-FT PANELS MINIMUM WITH 1-INCH TAPERED TIES. SEE SPECIFICATION SECTION 03300 FOR ADDITIONAL REQUIREMENTS.
4. PROPERLY PLACE STRUCTURAL FILL DOWN TO SUITABLE UNDISTURBED MATERIAL IN ACCORDANCE W/ GEOTECHNICAL REPORT BY IGES DATED NOV. 16, 2004. GEOTECHNICAL ENGINEER SHALL OBSERVE SUBGRADE PRIOR TO PLACING STRUCTURAL FILL OR CONCRETE.

SECTION A
NO SCALE

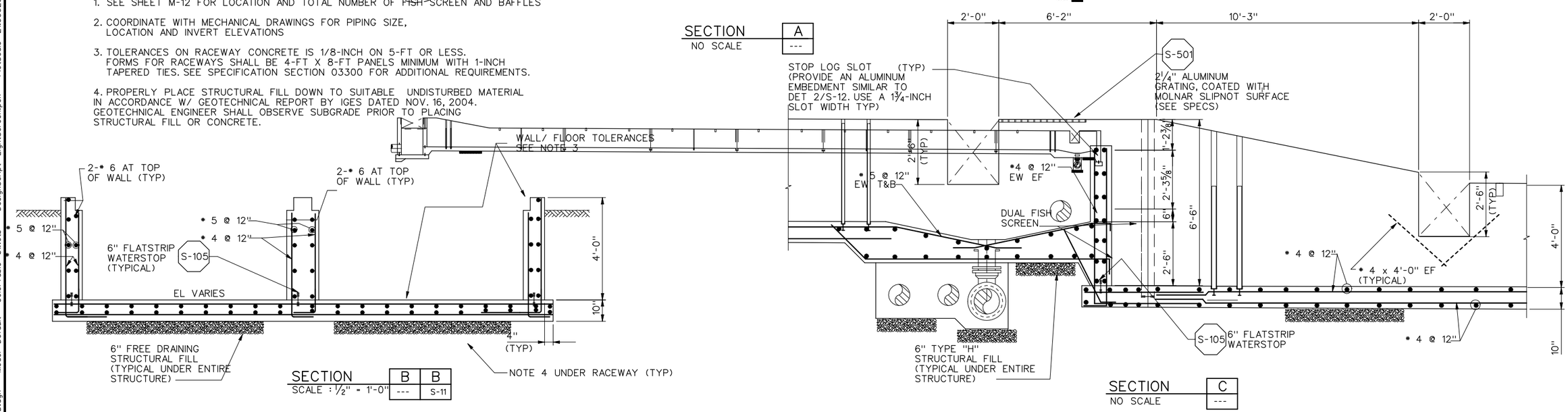

SECTION B B
SCALE : 1/2" = 1'-0" --- S-11

SECTION C
NO SCALE ---

REV	DATE	BY	DESCRIPTION
R	3/07	MRW	RECORD DRAWING

SCALE: AS SHOWN

WARNING: 0 1/2 1 — IF THIS BAR DOES NOT MEASURE 1" THEN DRAWING IS NOT TO SCALE

DESIGNED B LEWIS
DRAWN B LEWIS
CHECKED C WILCOX

RECORD DRAWING
This record drawing has been prepared, entirely or in part on the basis of unverified information compiled and furnished by others to the preparer who is not responsible for any inaccuracies, errors or omissions which may have been incorporated into the document as a result

MWH

UTAH DIVISION OF WILDLIFE RESOURCES
WHITEROCKS STATE FISH HATCHERY

RACEWAYS
PLAN AND SECTIONS - 1

SHEET S-10
1690703

REGISTERED PROFESSIONAL ENGINEER #5149 STANLEY S. POSTMA STATE OF UTAH

File: wrfhs10-RD.dgn Model: Default ColorTable: bw.ctb DesignScript: LightScreen.pen PlotScale: 21.333297:1 User: KaiCrick Plot Date: 18-DEC-2007 09:49

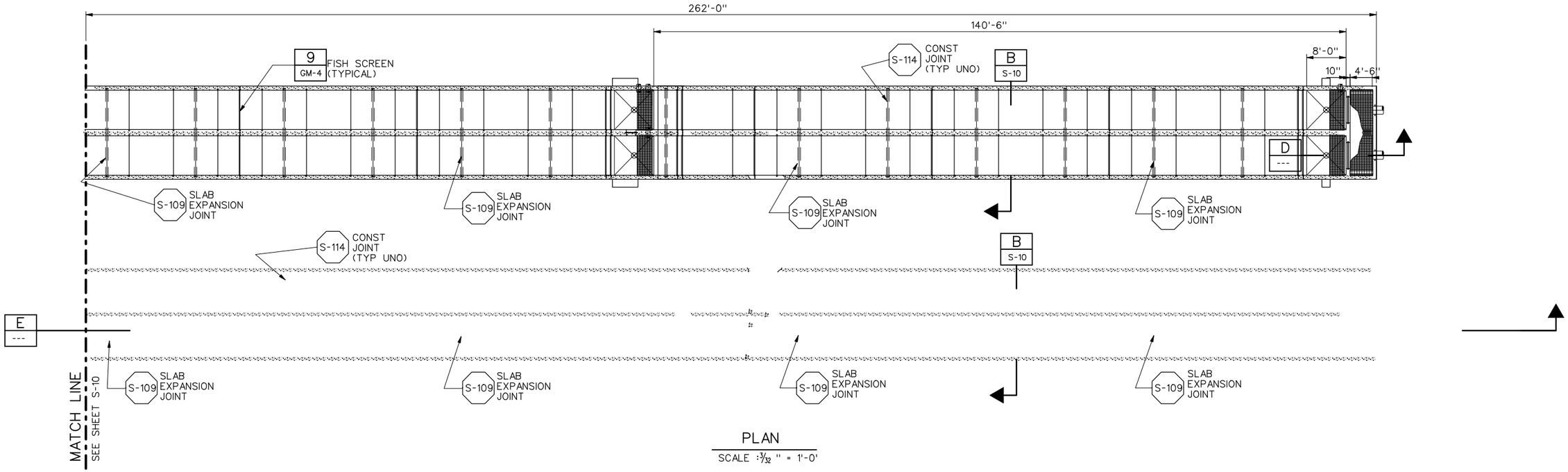

PLAN

SCALE : 3/32" = 1'-0"

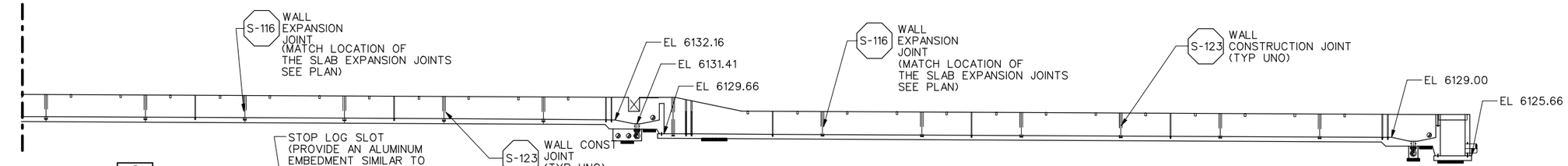

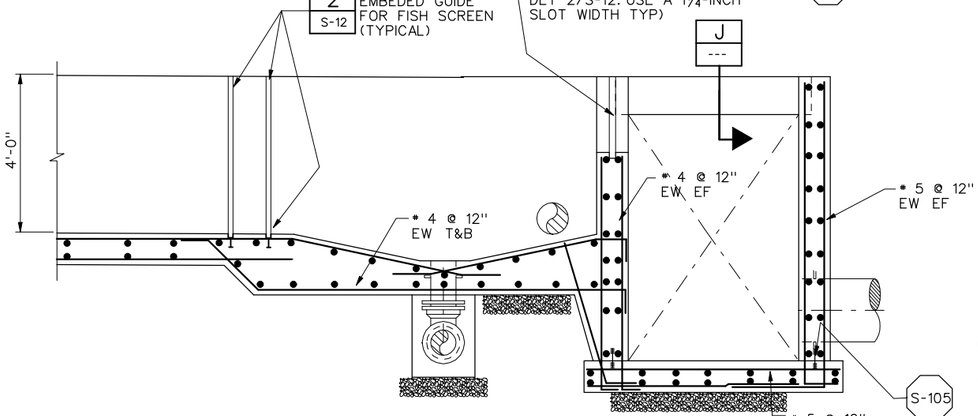

SECTION D

NO SCALE

SECTION E

NO SCALE

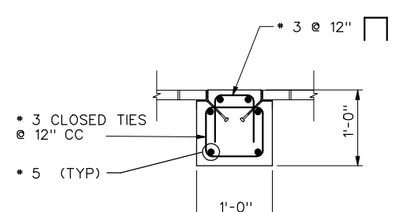

SECTION J

SCALE: 1" = 1'-0"

NOTES:

1. SEE SHEET M-12 FOR LOCATION AND TOTAL NUMBER OF FISH SCREEN AND BAFFLES
2. COORDINATE WITH MECHANICAL DRAWINGS FOR PIPING SIZE, LOCATION AND INVERT ELEVATIONS
3. TOLERANCES ON RACEWAY CONCRETE IS 1/8-INCH ON 5-FT OR 1/4" TOTAL. FORMS FOR RACEWAYS SHALL BE 4-FT X 8-FT PANELS MINIMUM WITH 1-INCH TAPERED TIES. SEE SPECIFICATION SECTION 03300 FOR ADDITIONAL REQUIREMENTS.

REGISTERED PROFESSIONAL ENGINEER #5149 STANLEY S. POSTMA STATE OF UTAH

REV	DATE	BY	DESCRIPTION
R	3/07	MRW	RECORD DRAWING

SCALE: AS SHOWN

WARNING: 0 1/2 1 — IF THIS BAR DOES NOT MEASURE 1" THEN DRAWING IS NOT TO SCALE

DESIGNED B LEWIS
DRAWN B LEWIS
CHECKED C WILCOX

RECORD DRAWING

This record drawing has been prepared, entirely or in part on the basis of unverified information compiled and furnished by others to the preparer who is not responsible for any inaccuracies, errors or omissions which may have been incorporated into the document as a result

MWH

UTAH DIVISION OF WILDLIFE RESOURCES

WHITEROCKS STATE FISH HATCHERY

RACEWAYS
PLAN AND SECTIONS - 2

SHEET S-11

1690703

File: wrfhs11-RD.dgn Model: Default ColorTable: bw.ctb DesignScript: LightScreen.pen PlotScale: 21.333357:1 User: KaiCrick Plot Date: 18-DEC-2007 09:50

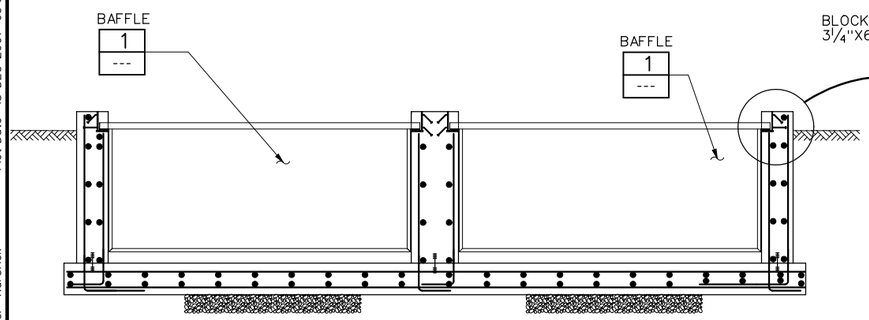

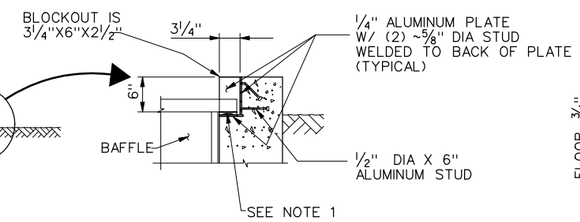

NOTE:
1 PROVIDE 2" HIGH WOODEN SHIM TYPICAL EACH SUPPORT. THE SHIM SHALL BE SLIGHTLY SMALLER THAN THE PLAN SIZE OF THE BLOCKOUT SO IT IS EASILY REMOVED. THE SHIM WILL PROVIDE HEIGHT ADJUSTMENT TO THE BAFFLE. THE SHIM SHALL BE REDWOOD OR PRESSURE TREATED DOUGLAS FIR.

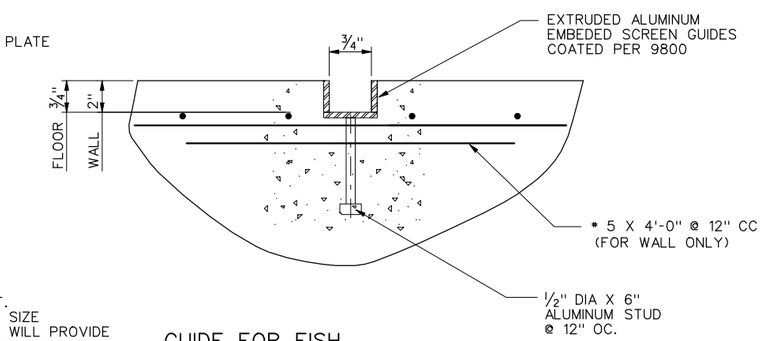

GUIDE FOR FISH SCREEN GUIDE DETAIL | 2 | S-11
NO SCALE
S-10

SECTION | F | S-10
SCALE : ½" = 1'-0"

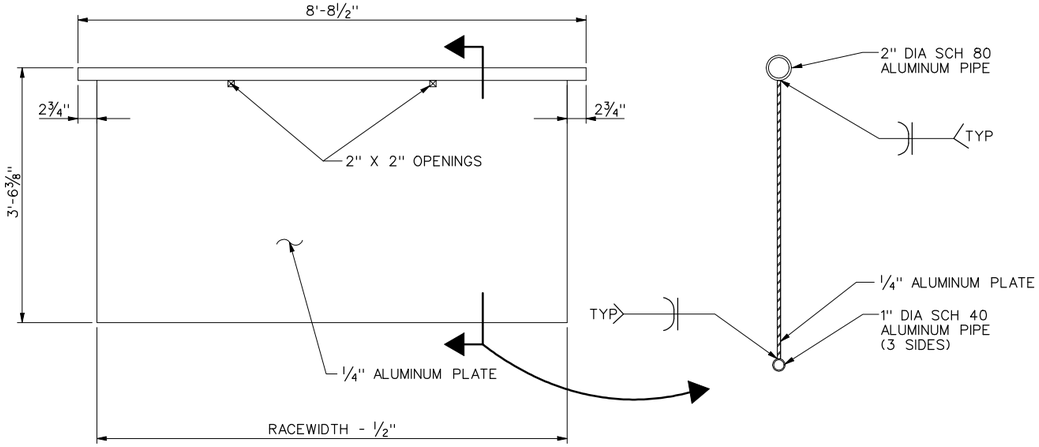

BAFFLE DETAIL | 1 | ---
SCALE : NTS

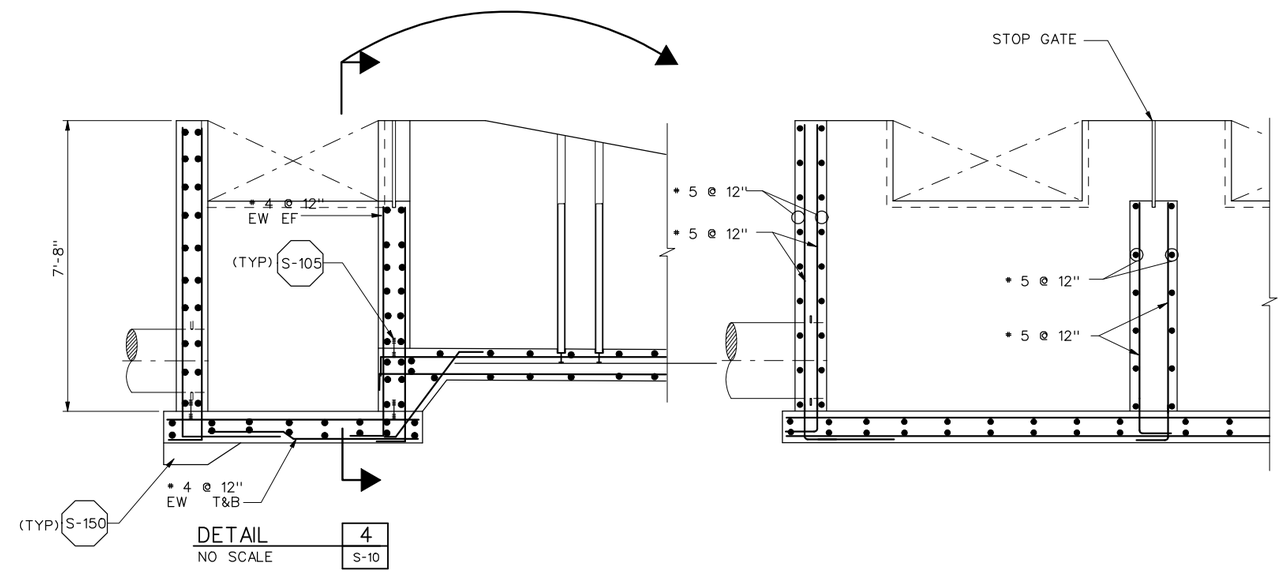

DETAIL | 4 | S-10
NO SCALE

#5149
STANLEY S. POSTMA
REGISTERED PROFESSIONAL ENGINEER
STATE OF UTAH

REV	DATE	BY	DESCRIPTION
R	3/07	MRW	RECORD DRAWING

SCALE: AS SHOWN

WARNING: 0 ½ 1 — IF THIS BAR DOES NOT MEASURE 1" THEN DRAWING IS NOT TO SCALE

DESIGNED B LEWIS
DRAWN B LEWIS
CHECKED C WILCOX

RECORD DRAWING
This record drawing has been prepared, entirely or in part on the basis of unverified information compiled and furnished by others to the preparer who is not responsible for any inaccuracies, errors or omissions which may have been incorporated into the document as a result

MWH

UTAH DIVISION OF WILDLIFE RESOURCES
WHITEROCKS STATE FISH HATCHERY

RACEWAYS
SECTIONS AND DETAILS - 1

SHEET S-12
1690703

File: wrfhs12-RD.dgn Model: Default ColorTable: bw.ctb DesignScript: LightScreen.pen PlotScale: 3.999992:1 User: KaiCrick Plot Date: 18-DEC-2007 09:50

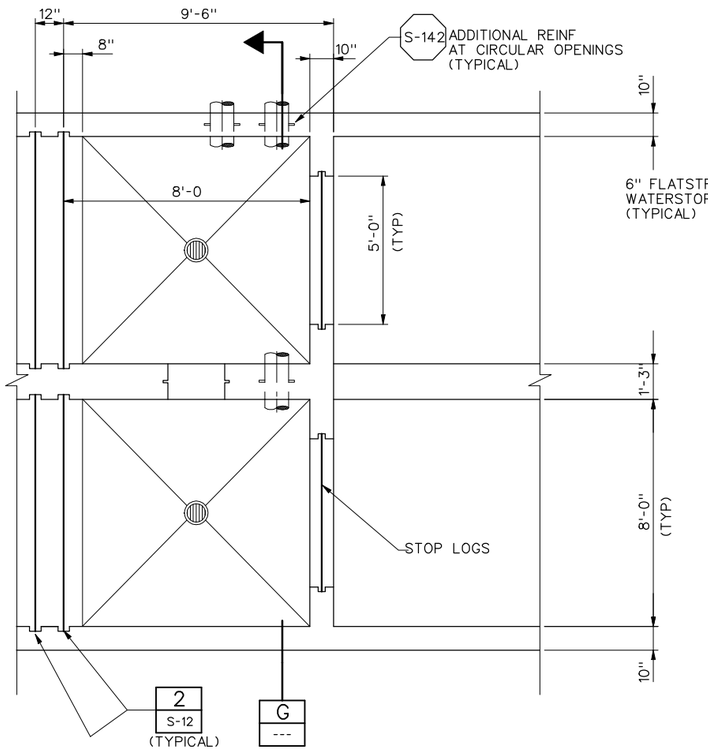

DETAIL 3 / S-10
SCALE : 3/8"=1'-0"

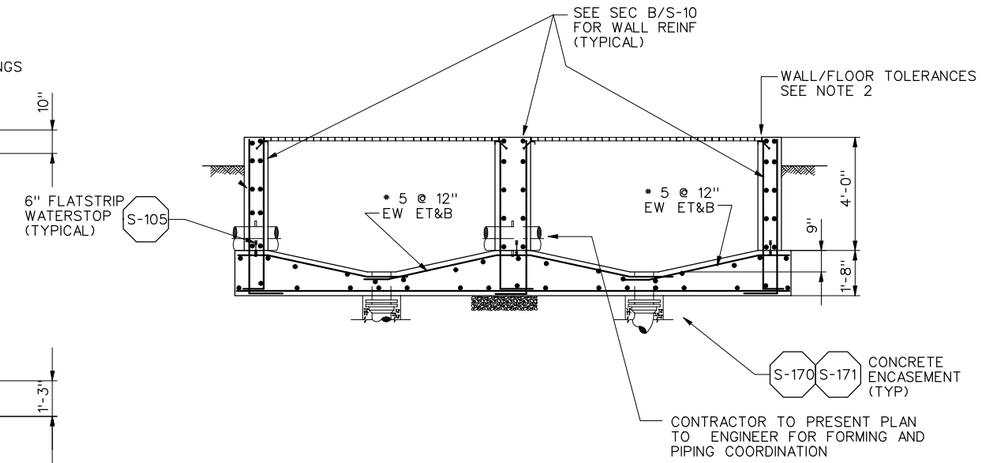

SECTION G
SCALE : 3/8" = 1'-0"

NOTES:
1. FOR PIPING SIZE AND LOCATION SEE MECHANICAL DRAWINGS.
2. TOLERANCES ON RACEWAY CONCRETE IS 1/8-INCH ON 5-FT OR LESS (1/4" TOTAL MAXIMUM). FORMS FOR RACEWAYS SHALL BE 4-FT X 8-FT PANELS MINIMUM WITH 1-INCH TAPERED TIES. SEE SPECIFICATION SECTION 03300 FOR ADDITIONAL REQUIREMENTS.

REGISTERED PROFESSIONAL ENGINEER #5149 STANLEY S. POSTMA STATE OF UTAH

REV	DATE	BY	DESCRIPTION
R	3/07	MRW	RECORD DRAWING

SCALE: AS SHOWN

WARNING: 0 1/2 1 — IF THIS BAR DOES NOT MEASURE 1" THEN DRAWING IS NOT TO SCALE

DESIGNED B LEWIS
DRAWN B LEWIS
CHECKED C WILCOX

RECORD DRAWING
This record drawing has been prepared, entirely or in part on the basis of unverified information compiled and furnished by others to the preparer who is not responsible for any inaccuracies, errors or omissions which may have been incorporated into the document as a result

MWH

UTAH DIVISION OF WILDLIFE RESOURCES
WHITEROCKS STATE FISH HATCHERY

RACEWAYS
SECTIONS AND DETAILS - 2

SHEET S-13
1690703

File: wrfhs13-RD.dgn Model: Default ColorTable: bw.ctb DesignScript: LightScreen.pen PlotScale: 5.333329:1 User: KaiCrick Plot Date: 18-DEC-2007 09:50

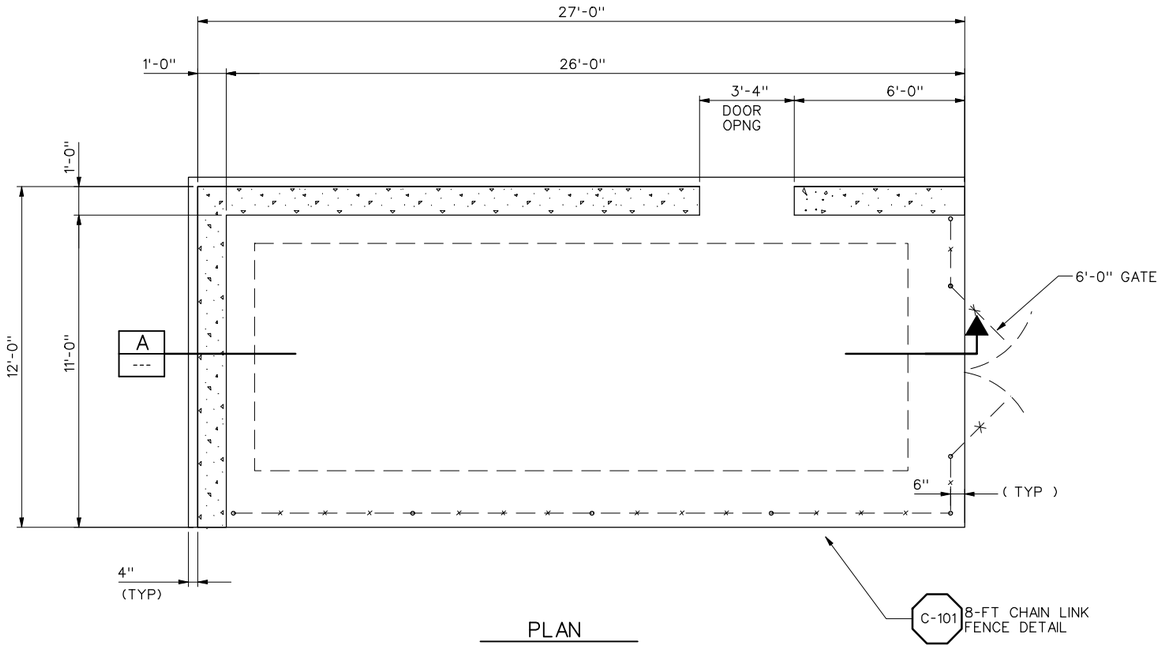

PLAN

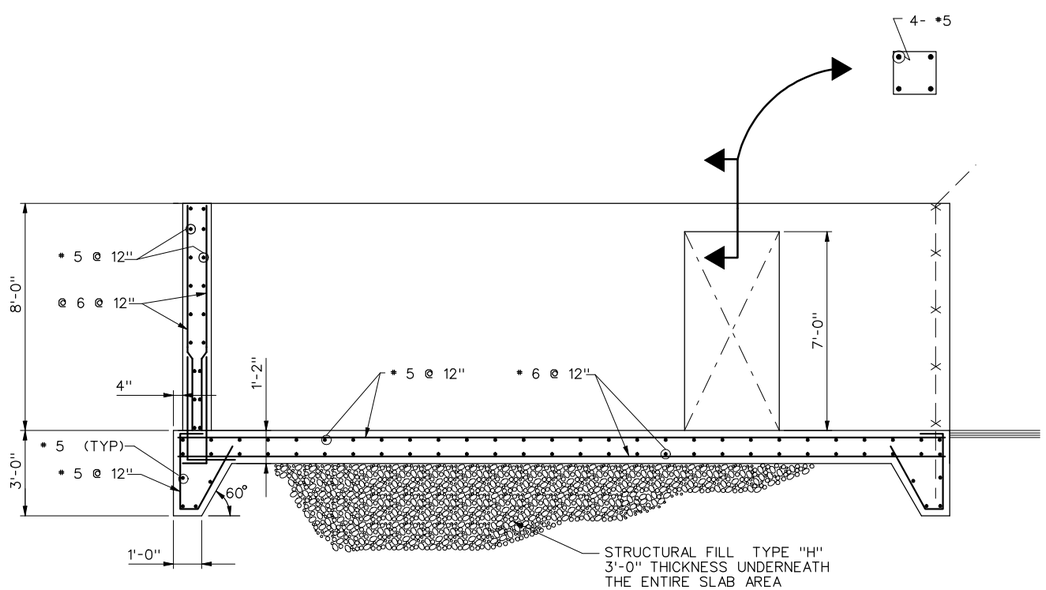

SECTION A
SCALE : 3/8" = 1'-0" ---

REV	DATE	BY	DESCRIPTION
R	3/07	MRW	RECORD DRAWING

SCALE: 3/8" = 1'-0"

WARNING: 0 1/2 1 — IF THIS BAR DOES NOT MEASURE 1" THEN DRAWING IS NOT TO SCALE

DESIGNED B LEWIS
DRAWN B LEWIS
CHECKED *

RECORD DRAWING

This record drawing has been prepared, entirely or in part on the basis of unverified information compiled and furnished by others to the preparer who is not responsible for any inaccuracies, errors or omissions which may have been incorporated into the document as a result

MWH

UTAH DIVISION OF WILDLIFE RESOURCES
WHITEROCKS STATE FISH HATCHERY

LOX TANK FOUNDATION AND BARRIER WALL
PLAN AND SECTION

SHEET S-14
1690703

File: wrfhs14-RD.dgn Model: Default ColorTable: bw.ctb DesignScript: LightScreen.pen PlotScale: 5.333323:1 User: KaiCrick Plot Date: 18-DEC-2007 09:50

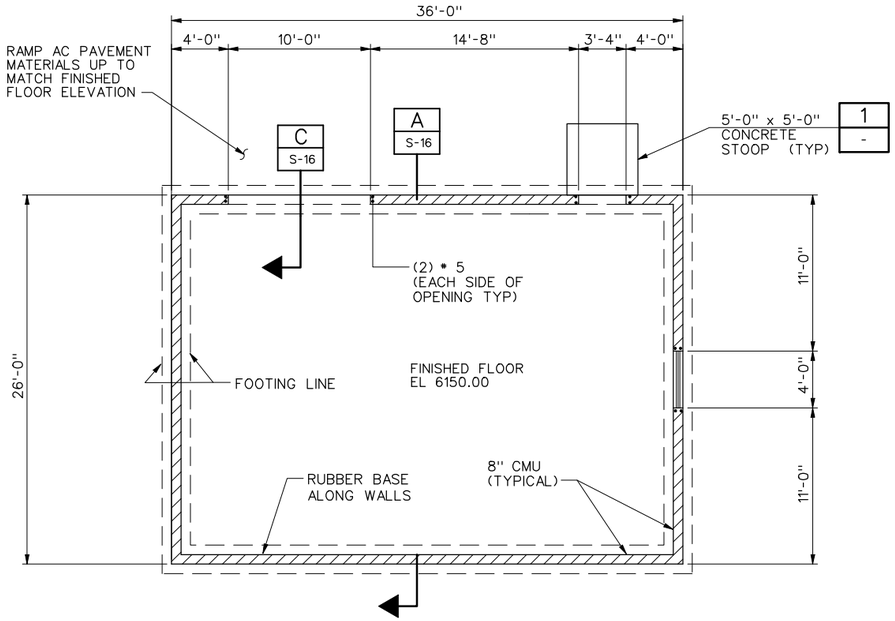

FLOOR PLAN

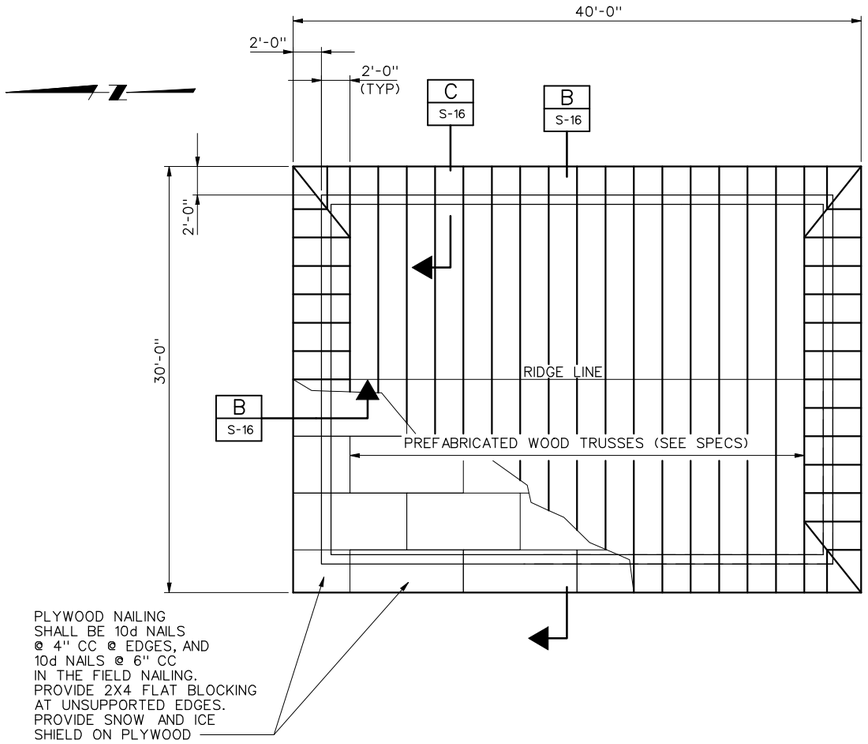

ROOF PLAN

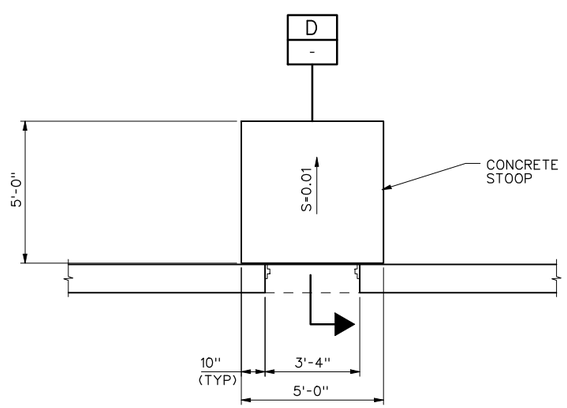

PLAN

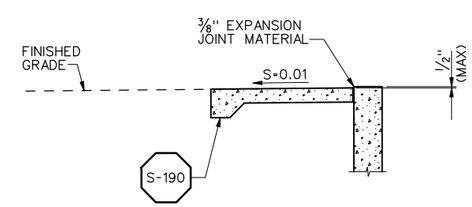

SECTION D -

DETAIL 1 -
SCALE: 3/8"=1'-0"

REV	DATE	BY	DESCRIPTION
R	3/07	MRW	RECORD DRAWING

SCALE 3/16"=1'-0"

WARNING 0 1/2 1 — IF THIS BAR DOES NOT MEASURE 1" THEN DRAWING IS NOT TO SCALE

DESIGNED
DRAWN R. WALN
CHECKED E. CRYER

RECORD DRAWING

This record drawing has been prepared, entirely or in part on the basis of unverified information compiled and furnished by others to the preparer who is not responsible for any inaccuracies, errors or omissions which may have been incorporated into the document as a result

MWH

UTAH DIVISION OF WILDLIFE RESOURCES
WHITEROCKS STATE FISH HATCHERY

FEED STORAGE BUILDING
FLOOR PLAN AND ROOF PLAN

SHEET S-15
1690703

REGISTERED PROFESSIONAL ENGINEER #5149 STANLEY S. POSTMA STATE OF UTAH

File: wrfhs15-RD.dgn Model: Default ColorTable: bw.ctb DesignScript: LightScreen.pen PlotScale: 10.666579:1 User: KaiCrick Plot Date: 18-DEC-2007 09:51

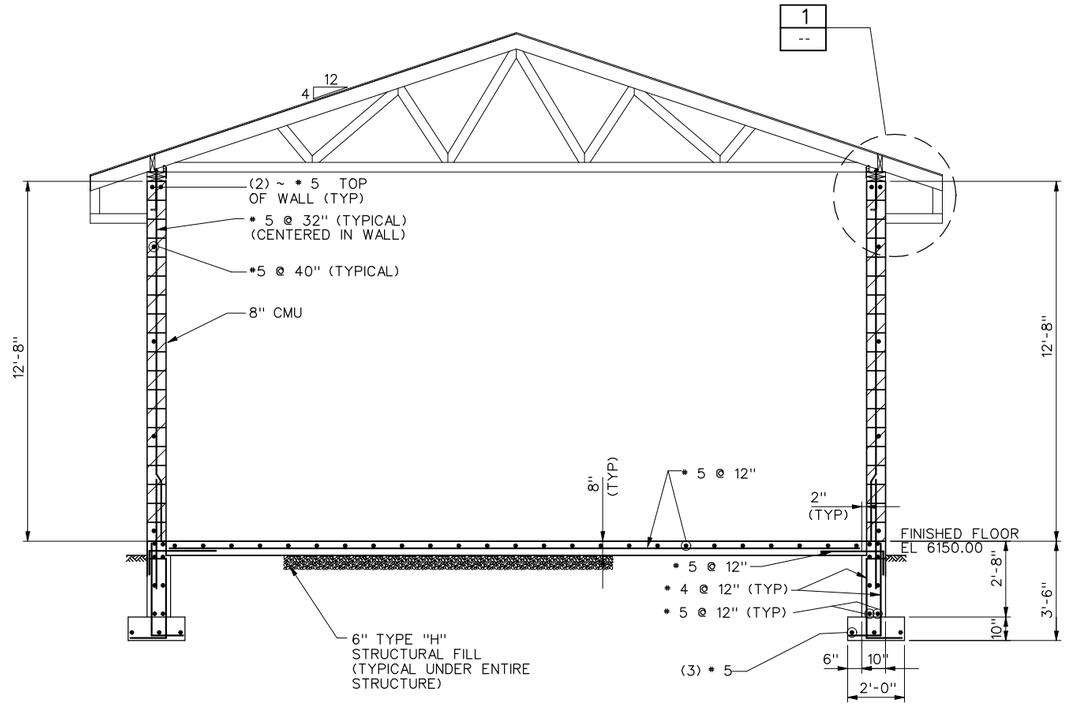

SECTION A
SCALE : 3/8" = 1'-0" S-15

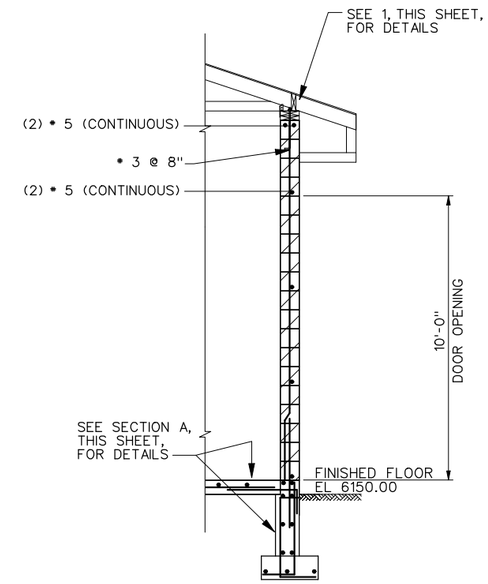

SECTION C
SCALE : 3/8" = 1'-0" S-15

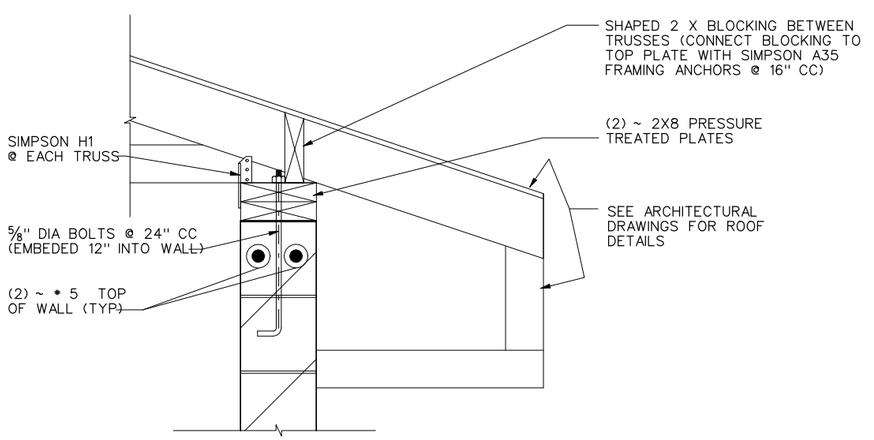

DETAIL 1
SCALE : 1 1/2"=1'-0" --

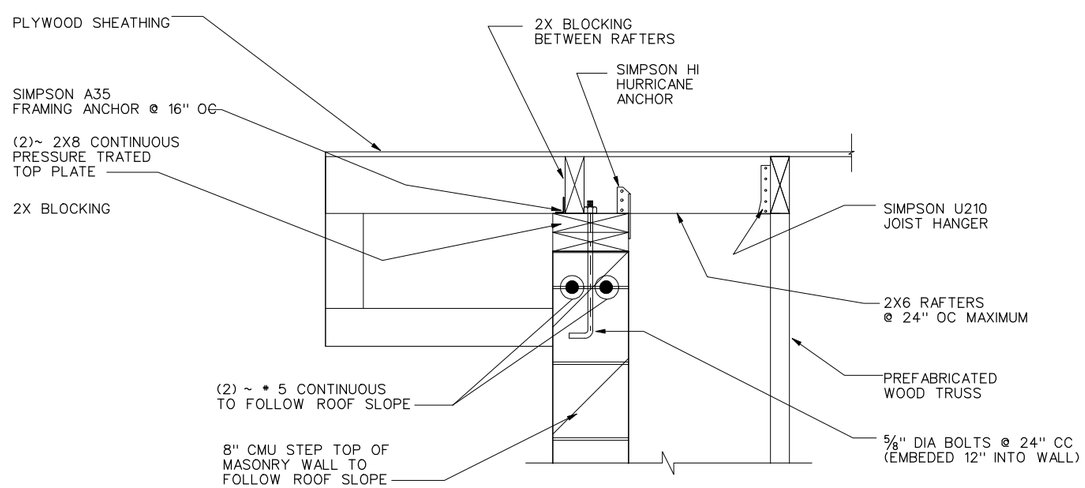

SECTION B
SCALE : 1 1/2"=1'-0" S-15

REGISTERED PROFESSIONAL ARCHITECT #5149 STANLEY S. POSTMA STATE OF UTAH

REV	DATE	BY	DESCRIPTION
R	3/07	MRW	RECORD DRAWING

SCALE: AS SHOWN

WARNING: 0 1/2 1 — IF THIS BAR DOES NOT MEASURE 1" THEN DRAWING IS NOT TO SCALE

DESIGNED
DRAWN R. WALN
CHECKED E. CRYER

RECORD DRAWING
This record drawing has been prepared, entirely or in part on the basis of unverified information compiled and furnished by others to the preparer who is not responsible for any inaccuracies, errors or omissions which may have been incorporated into the document as a result

MWH

UTAH DIVISION OF WILDLIFE RESOURCES
WHITEROCKS STATE FISH HATCHERY

FEED STORAGE BUILDING
SECTIONS AND DETAILS

SHEET S-16
1690703

File: wrfhs16-RD.dgn Model: Default ColorTable: bw.ctb DesignScript: LightScreen.pen PlotScale: 5.333329:1 User: KaiCrick Plot Date: 18-DEC-2007 09:51

PIPING SCHEDULE

PIPING MATERIALS (SEE SCHEDULE BELOW)		GROUP NO. EXPOSED PIPING (SEE NOTE 13,14 & 15)		GROUP NO. BURIED PIPING (SEE NOTE 13)		FIELD TEST REQUIREMENTS (SEE NOTE 3 AND NOTE 4)		
FLUID ABBREVIATION	FUNCTION	2" DIA. PIPE & SMALLER	2½" DIA. PIPE AND LARGER	2" DIA. PIPE AND SMALLER	2½" DIA. PIPE AND LARGER	MINIMUM TEST PRESSURE (PSI)	TEST MEDIUM	LEAKAGE ALLOWANCE (SEE NOTE 2)
D	DRAIN	16	16	16	11,19	NOTE 6	WATER	(B)
ED	EFFLUENT DRAIN	-	-	-	11,19	NOTE 6	WATER	(B)
LPG	LIQUIFIED PETROLEUM GAS	3	3	3	3	NOTE 7	AIR	-
OX	OXYGEN	24,34	-	24	-	125	N2	(A)
PC	PERFORATED COLLECTOR	-	-	-	*	50	WATER	(A)
PW	POTABLE WATER	2,16	2,16	2,16	2,16	125	WATER	(A)
RSW	RAW SPRING WATER	-	-	-	**	50	WATER	(A)
RW	REUSE WATER	-	16	-	11,19	50	WATER	(A)
SD	SOLIDS DRAIN	16	16	16	11,19	NOTE 6	WATER	(B)
SW	SUPPLY WATER	-	-	-	11,19	50	WATER	(A)
TE	TRAY EFFLUENT	16	16	-	-	50	WATER	(A)
TSW	TREATED SPRING WATER	16	16	16	16,19	125	WATER	(A)
UW	UTILITY WATER	2,16	2,16	-	-	125	WATER	(A)
WW	WELL WATER	-	-	-	11,19	125	WATER	(A)

NOTES:

1. PIPE TYPE INDICATED BY "(**)" SHALL BE ADS N-12 NON-PERFORATED CORRUGATED HDPE PIPE, DOUBLE WALLED, SMOOTH INTERIOR, CORRUGATED EXTERIOR AS MANUFACTURED BY ADVANCED DRAINAGE SYSTEMS, INC OR APPROVED EQUAL.
2. PIPE TYPE INDICATED BY "(*)" SHALL BE ADS N-12 PERFORATED CORRUGATED HDPE PIPE, DOUBLE WALLED, SMOOTH INTERIOR, CORRUGATED EXTERIOR AS MANUFACTURED BY ADVANCED DRAINAGE SYSTEMS, INC OR APPROVED EQUAL.

PIPING MATERIAL SCHEDULE

GROUP NO. (SEE NOTE 12)	PIPE (SEE NOTE 13)	FITTINGS	VALVES, 2.5 INCH DIA. AND SMALLER (SEE NOTE 1, NOTE 11, AND NOTE 16)
2	STEEL, ASTM A53/A120, SCHEDULE 40, GALVANIZED.	2½" AND SMALLER: MALLEABLE IRON, ANSI B16.3, THREADED, BANDED, GALVANIZED 150 PSI, 3" AND LARGER: CAST IRON, ANSI B16.1, 125 PSI FLANGED OR MECHANICAL COUPLING.	2½" AND SMALLER: ECCENTRIC PLUG, SYNTHETIC RUBBER FACED, DEZURIK 118S OR HOMESTEAD 1512, BALL, JENKINS NO. 900T OR JAMESBURY FLG. 11-1100 TT. 75 MM (3") AND LARGER: ECCENTRIC PLUG, SYNTHETIC RUBBER FACED, DEZURIK 118F OR HOMESTEAD 1522 OR 1532 EWG. GATE, AWWA C500. BUTTERFLY, AWWA,
3	STEEL, ASTM A106 OR A53, SCHEDULE 80, SEAMLESS, BLACK.	FORGED STEEL, ANSI B16.11, SOCKET WELDED OR THREADED, BLACK, 2000 PSI, OR STEEL, ANSI B16.9, BUTT WELDED, SCHEDULE 80.	CAST IRON, LUBRICATED PLUG, ROCKWELL FIG. 214 OR 305 OR POWELL FIG. 2210 OR 2211.
11	DUCTILE IRON, ANSI A21.51 (AWWA C151) OR CAST IRON ANSI A21.6, 150 PSI, BELL AND SPIGOT, MECHANICAL JOINTS, MECHANICAL COUPLINGS, OR 125 PSI FLANGED (TYPICAL SERVICE - WATER LINES).	DUCTILE IRON OR CAST IRON, ANSI A21.10 OR AWW C110, BELL AND SPIGOT, MECHANICAL COUPLINGS, FLANGED OR MECHANICAL JOINTS, 250 PSI (PRESSURE RATING) 12" AND SMALLER, 150 PSI (PRESSURE RATING) 14" AND LARGER, WITH 125 PSI, ANSI B16.1 FLANGES.	GATE, AWWA C500, 'O' RING SEALS, MECHANICAL JOINT ENDS, MUELLER A-2380-20, OR EDDY-IOWA (CLOW) F-5155, BUTTERFLY, AWWA, ECCENTRIC PLUG, DEZURIK SERIES 118 OR KEYSTONE 1512, OR BALL, PRATT OR W-K-M.
16	POLYVINYL CHLORIDE, SCH. 80, NORMAL IMPACT, SOLVENT WELDED, ASTM D1785.	SOCKET SOLVENT WELD JOINTS, ASTM D2467. POLYVINYL CHLORIDE, SCH. 80, NORMAL IMPACT, FLANGED JOINTS, 150 PSI.	
19	POLYVINYL CHLORIDE PRESSURE PIPE, ASTM D2241, WITH BELL AND SPIGOT JOINTS.	CAST IRON, 150 PSI, FOR POLYVINYL CHLORIDE PIPE, AWWA C110, CEMENT MORTAR LINED, AWWA C104.	
24	COPPER, ASTM B88, TYPE K, SOFT TEMPERED WHERE BURIED. HARD TEMPERED WHERE EXPOSED. CLEANED FOR OXYGEN USE.	SOLDER JOINT, 150 PSI WROUGHT COPPER OR CAST BRONZE, ANSI B 16.22.	BRONZE, SOLDER JOINT, BALL: CRANE NO. 9321 OR JAMESBURY, GLOBE: CRANE NO. 1320 OR STOCKHAM B-14, CHECK: CRANE NO. 1342 OR 36, OR STOCKHAM NO. B-309.
34	STAINLESS STEEL SEAMLESS ANNEALED TUBING, TYPE 316., ASTM A213. DIAMETER CALL-OUT ON DRAWINGS TO BE TUBING I.D., MINIMUM WALL THICKNESS OFF 0.065 INCHES.	ALL 316L STAINLESS STEEL COMPRESSION FITTINGS WITH THREADS ONLY AS REQUIRED: TYPE SWAGE-LOCK FITTINGS OR EQUAL.	SEE NOTE 16

NOTES:

GENERAL NOTE
ALTHOUGH SEVERAL PIPING MATERIALS ARE SHOWN THAT MAY BE USED FOR A GIVEN FUNCTION, ONLY THE CALLED PIPING MATERIAL SHOWN ON THE CONSTRUCTION DRAWINGS AND SPECIFICATIONS SHALL BE USED. THE CONTRACTOR DOES NOT HAVE THE OPTION TO USE A DIFFERENT MATERIAL.

NOTE 1
PROPRIETARY NAMES HAVE BEEN QUOTED FOR IDENTIFICATION PURPOSES ONLY. SUBSTITUTIONS WILL BE PERMITTED SUBJECT TO PROVISIONS OF THE SPECIFICATIONS.

NOTE 2
LEAKAGE ALLOWANCE IS AS FOLLOWS:
(A) PIPES SO DESIGNATED SHALL SHOW ZERO LEAKAGE.
(B) PIPES SO DESIGNATED SHALL SHOW ZERO LEAKAGE FOR UNBURIED PIPE AND NOT MORE THAN 0.02 GALLON PER HOUR PER INCH DIAMETER PER 100 FEET OF BURIED PIPE.
(C) PIPES SO DESIGNATED SHALL NOT SHOW A LEAKAGE OF MORE THAN 0.15 GALLON PER HOUR PER INCH OF DIAMETER PER 100 FEET OF PIPE
(D) PIPES SO DESIGNATED SHALL NOT SHOW A LOSS OF PRESSURE OF MORE THAN 5 PERCENT
(E) PIPE SO DESIGNATED SHALL NOT SHOW A LOSS OF VACUUM OF MORE THAN 4 INCHES MERCURY COLUMN

NOTE 3
FOR FIELD TEST PROCEDURES AND ADDITIONAL TEST REQUIREMENTS, SEE PIPING SECTION OF SPECIFICATIONS.

NOTE 4
ANY DEVIATION FROM THE PIPING MATERIALS OR FIELD TEST REQUIREMENTS SHOWN WILL BE NOTED IN THE SPECIFICATION OR ON THE DRAWINGS.

NOTE 5
PIPING GROUP NUMBER SHOWN THUS • SHALL BE INSULATED. SEE PIPING SECTION OF SPECIFICATIONS FOR INSULATING MATERIALS.

NOTE 6
STATIC WATER TEST WITH SURFACE 5 FEET ABOVE HIGH POINT OF PIPE.

NOTE 7
INSPECTION AND TESTING SHALL BE IN ACCORDANCE WITH APPLICABLE STATE OF TEXAS INDUSTRAL PLUMBING CODE.

NOTE 8
NO APPARENT LEAKS UNDER NORMAL OPERATING CONDITIONS.

NOTE 9
INSPECTION AND TESTING SHALL BE IN ACCORDANCE WITH APPLICABLE NATIONAL FIRE PROTECTION ASSOCIATION STANDARDS.

NOTE 10
PIPING MATERIALS SHALL BE IN ACCORDANCE WITH NATIONAL FIRE PROTECTION ASSOCIATION STANDARDS.

NOTE 11
FOR VALVES 8 INCHES AND LARGER SEE VALVE SCHEDULE FOR SPECIAL VALVES SEE SPECIFICATIONS.

NOTE 12
CHANGE IN PIPING MATERIAL GROUP NUMBER IS INDICATED THUS: ——◆

NOTE 13
FOR PIPE LINING AND COATING, SEE SPECIFICATIONS.

NOTE 14
EXPOSED PIPING SHALL BE PAINTED IN ACCORDANCE WITH SPECIFICATIONS. COLORS TO BE SELECTED BY ENGINEER.

NOTE 15
PIPING MATERIAL SHALL BE NON-ABRASIVE FLEXIBLE RUBBER HOSE AND QUICK CONNECTION COUPLINGS WITH GROUP NO 1 AT EQUIPMENT.

NOTE 16
VALVES 2½"AND SMALLER MAY HAVE SCREWED ENDS. VALVES 3" AND LARGER SHALL HAVE FLANGED ENDS UNLESS OTHERWISE INDICATED.

TYPICAL PIPE DESIGNATION

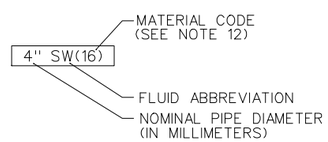

VALVE SCHEDULE
(8" AND LARGER)

EQUIPMENT NUMBER	LOCATION	TYPE	SIZE	COMMENTS
HV-AS1-110	AERATION STRUCTURE NO. 1	BUTTERFLY, MJxMJ, BURIED	20"	MANUAL, 2" SQUARE NUT AND VALVE BOX
HV-AS1-120	AERATION STRUCTURE NO. 1	BUTTERFLY, MJxMJ, BURIED	20"	MANUAL, 2" SQUARE NUT AND VALVE BOX
HV-AS1-130	AERATION STRUCTURE NO. 1	BUTTERFLY, MJxMJ, BURIED	20"	MANUAL, 2" SQUARE NUT AND VALVE BOX
HV-HB-110	HATCHERY BUILDING	BUTTERFLY, FLANGED	12"	MANUAL, HANDWHEEL
HV-HB-120	HATCHERY BUILDING	BUTTERFLY, FLANGED	12"	MANUAL, HANDWHEEL
HV-HB-130	HATCHERY BUILDING	BUTTERFLY, FLANGED	8"	MANUAL, CHAIN OPERATOR
HV-AS2-110	AERATION STRUCTURE NO. 2	BUTTERFLY, MJxMJ, BURIED	20"	MANUAL, 2" SQUARE NUT AND VALVE BOX
HV-AS2-120	AERATION STRUCTURE NO. 2	BUTTERFLY, MJxMJ, BURIED	20"	MANUAL, 2" SQUARE NUT AND VALVE BOX
HV-AS2-130	AERATION STRUCTURE NO. 2	BUTTERFLY, MJxMJ, BURIED	20"	MANUAL, 2" SQUARE NUT AND VALVE BOX
HV-RW-110	RACEWAY 401	GATE, FLANGED, BURIED	10"	MANUAL, 2" SQUARE NUT AND VALVE BOX
HV-RW-120	RACEWAY 401	GATE, FLANGED, BURIED	10"	MANUAL, 2" SQUARE NUT AND VALVE BOX
HV-RW-130	RACEWAY 401	GATE, FLANGED, BURIED	10"	MANUAL, 2" SQUARE NUT AND VALVE BOX
HV-RW-140	RACEWAY 401	GATE, FLANGED, BURIED	10"	MANUAL, 2" SQUARE NUT AND VALVE BOX
HV-RW-210	RACEWAY 402	GATE, FLANGED, BURIED	10"	MANUAL, 2" SQUARE NUT AND VALVE BOX
HV-RW-220	RACEWAY 402	GATE, FLANGED, BURIED	10"	MANUAL, 2" SQUARE NUT AND VALVE BOX
HV-RW-230	RACEWAY 402	GATE, FLANGED, BURIED	10"	MANUAL, 2" SQUARE NUT AND VALVE BOX
HV-RW-240	RACEWAY 402	GATE, FLANGED, BURIED	10"	MANUAL, 2" SQUARE NUT AND VALVE BOX
CKV-CW-110	COLLECTOR WELL NO. 4	SWING CHECK VALVE	8"	
HV-CW-120	COLLECTOR WELL NO. 4	BUTTERFLY, FLANGED	10"	MANUAL, 2" SQUARE NUT
HV-CW-130	COLLECTOR WELL NO. 4	BUTTERFLY, FLANGED	3"	MANUAL, 2" SQUARE NUT

PUMP SCHEDULE

EQUIPMENT NUMBER	LOCATION	TYPE	CAPACITY @ TDH	COMMENTS
P-HB-110	HATCHERY BUILDING	IMMERSIBLE, CLOSE COUPLED	150 GPM AT 25'	UTILITY WATER, TRUCK LOADING
P-CW-110	COLLECTOR WELL NO. 4	SUBMERSIBLE	1400 GPM AT 6'	RAW SPRING WATER
P-PS-110	SANITARY PUMP STATION	SUBMERSIBLE GRINDER	40 GPM AT 20'	3 HP (MIN), SEWAGE
P-PS-120	SANITARY PUMP STATION	SUBMERSIBLE GRINDER	40 GPM AT 20'	3 HP (MIN), SEWAGE

MECHANICAL EQUIPMENT SCHEDULE

EQUIPMENT NUMBER	LOCATION	TYPE	CAPACITY	COMMENTS
ME-HB-110	HATCHERY BUILDING	POTABLE WATER HEATER, LPG	40 GAL	
ME-LHO-110	LHO STRUCTURE	LOW HEAD OXYGENATOR	2240 GPM	
ME-RW-110 ME-RW-210 ME-RW-310 ME-RW-410	RACEWAY 102 RACEWAY 202 RACEWAY 302 RACEWAY 402	LOW HEAD OXYGENATOR	1000 GPM	
ME-RW-120 ME-RW-220 ME-RW-320 ME-RW-420	RACEWAY 103 RACEWAY 203 RACEWAY 303 RACEWAY 403	LOW HEAD OXYGENATOR	1000 GPM	

TANK SCHEDULE

EQUIPMENT NUMBER	LOCATION	TYPE	CAPACITY	COMMENTS
T-HB-110 THRU T-HB-152	HATCHERY BUILDING	FRP, DOUBLE WALLED, INSULATED FISH REARING	800 GAL (NOMINAL)	

ROTOMETER SCHEDULE

EQUIPMENT NUMBER	LOCATION	SERVICE	CAPACITY	COMMENTS
R-AS1-110	AERATION STRUCTURE NO. 1	OXYGEN	0-5.0 CFM	FLANGED, DIRECT READ, OXYGEN COMPATIBLE
R-AS2-110	AERATION STRUCTURE NO. 2	OXYGEN	0-5.0 CFM	FLANGED, DIRECT READ, OXYGEN COMPATIBLE
R-RW-110 R-RW-210 R-RW-310 R-RW-410	RACEWAY 102 RACEWAY 202 RACEWAY 302 RACEWAY 402	OXYGEN	0-2.0 GPM	FLANGED, DIRECT READ, OXYGEN COMPATIBLE
R-RW-120 R-RW-220 R-RW-320 R-RW-420	RACEWAY 103 RACEWAY 203 RACEWAY 303 RACEWAY 403	OXYGEN	0-2.0 GPM	FLANGED, DIRECT READ, OXYGEN COMPATIBLE

REGISTERED PROFESSIONAL ENGINEER #5149 STANLEY S. POSTMA STATE OF UTAH

REV	DATE	BY	DESCRIPTION
R	3/07	MRW	RECORD DRAWING

SCALE: NONE

WARNING: 0 ½ 1 — IF THIS BAR DOES NOT MEASURE 1" THEN DRAWING IS NOT TO SCALE

DESIGNED D. BARBEAU
DRAWN R. WALN
CHECKED S. POSTMA

RECORD DRAWING
This record drawing has been prepared, entirely or in part on the basis of unverified information compiled and furnished by others to the preparer who is not responsible for any inaccuracies, errors or omissions which may have been incorporated into the document as a result

MWH

UTAH DIVISION OF WILDLIFE RESOURCES
WHITEROCKS STATE FISH HATCHERY

MECHANICAL SCHEDULES

SHEET GM-1
1690703

File: wrfhgm01-RD.dgn Model: Default ColorTable: bw.ctb DesignScript: LightScreen.pen PlotScale: 1.999996:1 User: KaiCrick Plot Date: 18-DEC-2007 09:47

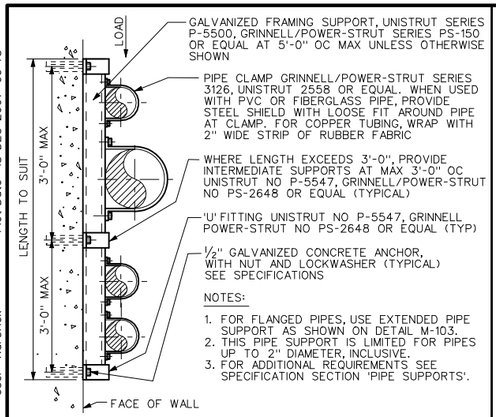

NOTES:

1. FOR FLANGED PIPES, USE EXTENDED PIPE SUPPORT AS SHOWN ON DETAIL M-103.
2. THIS PIPE SUPPORT IS LIMITED FOR PIPES UP TO 2" DIAMETER, INCLUSIVE.
3. FOR ADDITIONAL REQUIREMENTS SEE SPECIFICATION SECTION 'PIPE SUPPORTS'.

FLUSH MOUNTED PIPE SUPPORT

(FOR PIPE 4" DIAMETER AND SMALLER)

REV 042202 — M-102

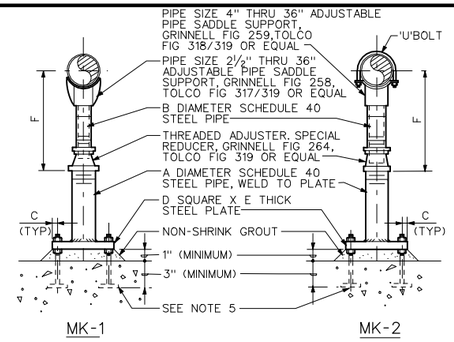

NOTES:

1. FOR ADDITIONAL REQUIREMENTS SEE SPEC SECTION 'PIPE SUPPORTS'.
2. GALVANIZE ALL PARTS AFTER FABRICATION.
3. WHERE PIPE SUPPORT OCCURS ON GRADE REFER TO STRUCTURAL DRAWINGS FOR DETAILS.
4. THIS PIPE SUPPORT IS LIMITED TO PIPE FROM 2½" DIAMETER TO 36" DIAMETER INCLUSIVE.
5. GALVANIZED ANCHOR BOLT OR CONCRETE ANCHOR WITH TWO NUTS AND ONE LOCKWASHER. PROVIDE BAR 4 X ½ X 4" WELDED TO BOLT. (TYP OF 4) SEE SPECIFICATIONS.

DIMENSIONS IN INCHES							
NOMINAL PIPE SIZE	A	B	C	D	E	F (APPROX) (MINIMUM)	F (APPROX) (MAXIMUM)
2½	2	1½	1	6	⅜	7	11½
3	2	1½	1	6	⅜	7 5/16	11 11/16
3½	2	1 1/2	1	6	⅜	7 9/16	12 1/16
4	3	*2½/3	1⅛	7½	½	10¼	14¾
6	3	*2½/3	1⅛	7½	½	11 9/16	16 1/16
8	3	*2½/3	1⅛	7½	½	13 9/16	18 1/16
10	3	*2½/3	1⅛	7½	½	14⅝	19⅛
12	3	*2½/3	1⅛	7½	½	15⅝	20⅛
14	4	3	1¼	9	⅝	18⅞	23⅜
16	4	3	1¼	9	⅝	19⅞	24⅜
18	6	4	1½	11	¾	22¼	26¾
20	6	4	1½	11	¾	23¼	27¾
24	6	4	1½	11	¾	26½	31
30	6	4	1½	11	¾	29⅝	34⅛
32	6	4	1½	11	¾	30⅝	35⅛
36	6	4	1½	11	¾	32⅝	37⅛

* SEE MANUFACTURER

ADJUSTABLE PIPE SUPPORT WITH OR WITHOUT 'U' BOLT

(FOR PIPE 36" DIAMETER AND SMALLER)

REV 011402 — M-108

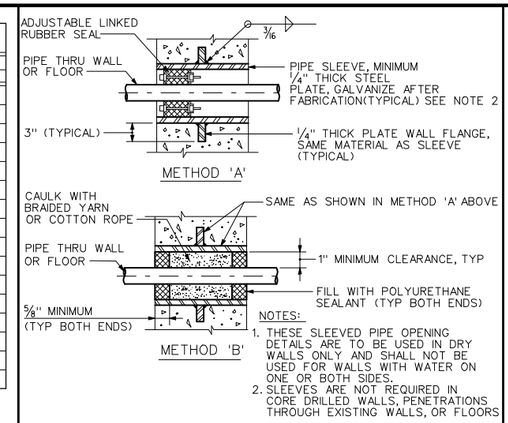

NOTES:

1. THESE SLEEVED PIPE OPENING DETAILS ARE TO BE USED IN DRY WALLS ONLY AND SHALL NOT BE USED FOR WALLS WITH WATER ON ONE OR BOTH SIDES.
2. SLEEVES ARE NOT REQUIRED IN CORE DRILLED WALLS, PENETRATIONS THROUGH EXISTING WALLS, OR FLOORS

SLEEVED PIPE OPENING

REV 011402 — M-111

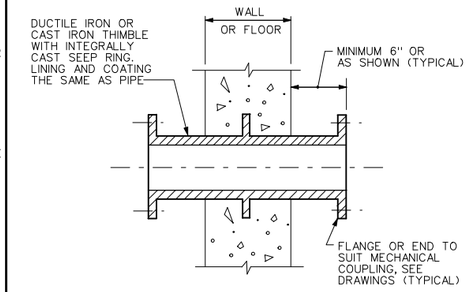

FLANGED OR GROOVED DUCTILE IRON OR CAST IRON PIPE THIMBLE

REV 061101 — M-116

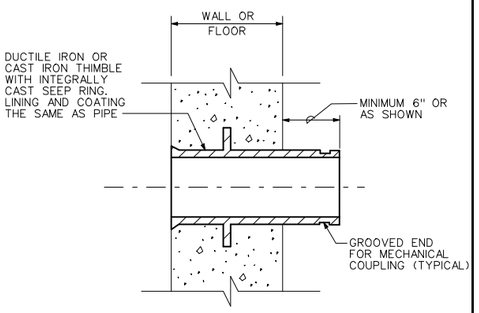

GROOVED AND SPIGOT DUCTILE IRON OR CAST IRON PIPE THIMBLE

REV 061101 — M-121

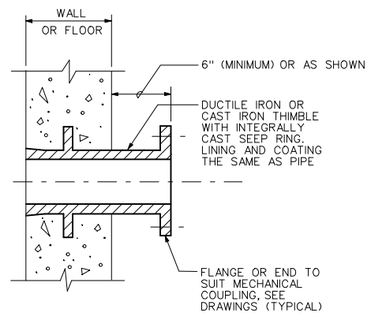

FLANGED AND SPIGOT DUCTILE IRON OR CAST IRON PIPE THIMBLE

REV 061101 — M-122

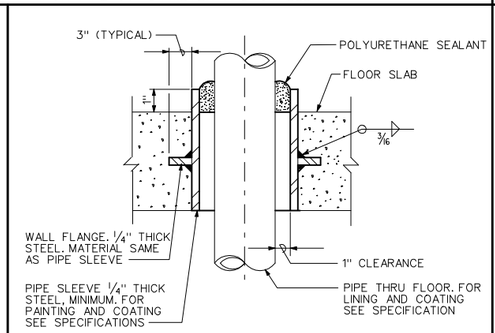

NOTE:

THIS SLEEVE IS TO BE USED BETWEEN DRY SPACES ONLY

FLOOR PIPE SLEEVE

REV 061101 — M-130

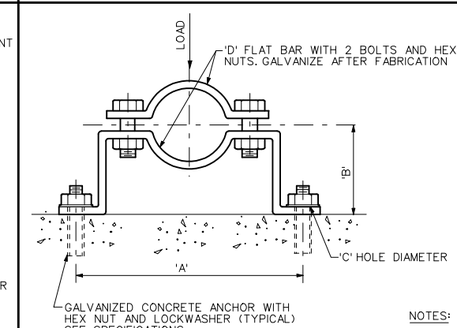

DIMENSIONS IN INCHES					
PIPE DIAMETER	'A'	'B' SEE NOTE 3 BELOW	'C' HOLE DIAMETER	'D' FLAT BAR SIZE	LOAD RATING LBS
¾	5 15/16	2½	7/16	3/16 X 1¼	190
1	6¼	2⅝	7/16	3/16 X 1¼	190
1¼	6 11/16	2¾	7/16	3/16 X 1¼	190
1½	6 15/16	3	7/16	3/16 X 1¼	190
2	8 5/16	3 3/16	7/16	¼ X 1¼	420
2½	8⅞	3 7/16	7/16	¼ X 1¼	420
3	9⅛	3¾	7/16	¼ X 1¼	420
3½	10 1/16	4	7/16	¼ X 1¼	420
4	10 9/16	4¼	9/16	¼ X 1½	610
5	11¾	4¾	9/16	¼ X 1½	610
6	14⅜	5 5/16	9/16	⅜ X 1½	870
8	16⅝	6 5/16	9/16	⅜ X 1½	870

NOTES:

1. WHERE SUBMERGED, PIPE CLAMP, ANCHORS, SHIELD, NUTS AND LOCKWASHER TO BE TYPE 316 STAINLESS STEEL.
2. WHEN USED WITH PVC OR FIBERGLASS PIPE, PROVIDE STEEL SHIELD WITH LOOSE FIT AROUND PIPE AT CLAMP. WRAP COPPER TUBING WITH 2" WIDE STRIP OF RUBBER AT CLAMP.
3. FOR FLANGED PIPING, INCREASE 'B' DIMENSION AS REQUIRED.
4. FOR PIPES SMALLER THAN ¾" SEE STANDARD M-142.

PIPE CLAMP FOR INDIVIDUAL PIPES

(FOR PIPE 8" DIAMETER AND SMALLER)

REV 011502 — M-131

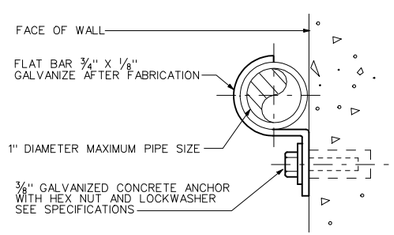

NOTES:

1. WHERE SUBMERGED, FLAT BAR, BOLT, WASHER, SHIELD AND CONCRETE ANCHOR TO BE TYPE 316 STAILESS STEEL
2. WHEN USED WITH PVC OR FIBERGLASS PIPE, PROVIDE STEEL SHIELD WITH LOOSE FIT AROUND PIPE AT CLAMP. WRAP COPPER TUBING WITH 2" WIDE STRIP OF RUBBER FABRIC AT CLAMP.
3. FOR ADDITIONAL REQUIREMENTS SEE SPECIFICATION SECTION 'PIPE SUPPORTS'

PIPE CLAMP FOR INDIVIDUAL PIPES

(FOR PIPE 1" DIAMETER AND SMALLER)

REV 072501 — M-142

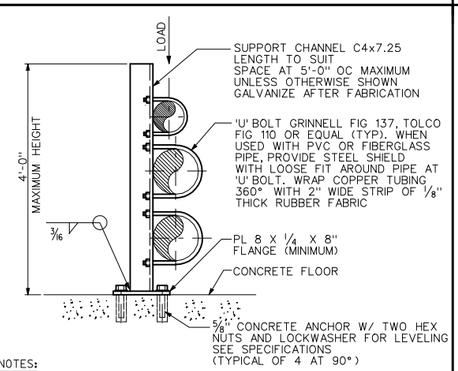

NOTES:

1. FOR ADDITIONAL REQUIREMENTS SEE SPECIFICATION SECTION 'PIPE SUPPORTS'.
2. THIS PIPE SUPPORT IS LIMITED TO PIPES ½" THRU 12" DIAMETER.

UPRIGHT PIPE SUPPORT

(FOR PIPE 12" DIAMETER AND SMALLER)

REV 072501 — M-150

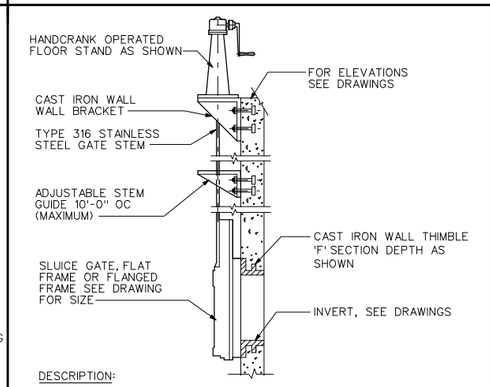

DESCRIPTION:

WALL-MOUNTED, FLAT OR FLANGED FRAME SLUICE GATE WITH CRANK OPERATED FLOOR STAND ON WALL BRACKET, DOWNWARD CLOSING.

SLUICE GATE

REV 061101 — M-209

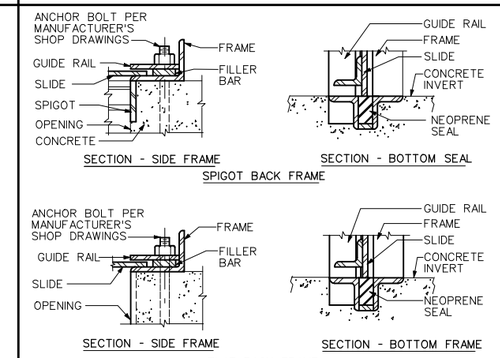

NOTES:

1. FOR ACTUAL DIMENSIONS SEE MANUFACTURER'S SHOP DRAWINGS.
2. MATERIALS AS SPECIFIED.

FLUSH BOTTOM SPIGOT OR FLAT BACK FRAME

REV 061401 — M-222

REGISTERED PROFESSIONAL ENGINEER #5149 STANLEY S. POSTMA STATE OF UTAH

REV	DATE	BY	DESCRIPTION
R	3/07	MRW	RECORD DRAWING

SCALE: NONE

WARNING: 0 ½ 1 — IF THIS BAR DOES NOT MEASURE 1" THEN DRAWING IS NOT TO SCALE

DESIGNED MWH STD
DRAWN MWH STD
CHECKED S. POSTMA

RECORD DRAWING

This record drawing has been prepared, entirely or in part on the basis of unverified information compiled and furnished by others to the preparer who is not responsible for any inaccuracies, errors or omissions which may have been incorporated into the document as a result

MWH

UTAH DIVISION OF WILDLIFE RESOURCES
WHITEROCKS STATE FISH HATCHERY

STANDARD MECHANICAL DETAILS - 1

SHEET GM-2

1690703

Plot Date: 18-DEC-2007 09:48
User: KaiCrick
PlotScale: 1.999996:1
DesignScript: LightScreen.pen
ColorTable: bw.ctb
Model: Default
File: wrfhgm02-RD.dgn

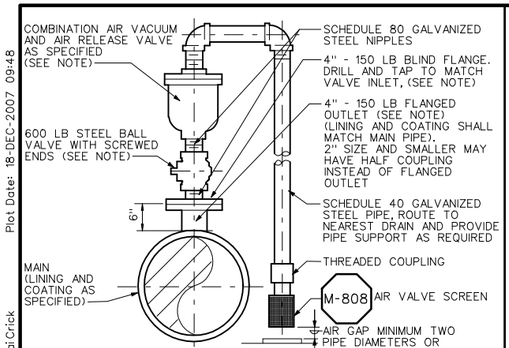

NOTE:

FOR PIPING SYSTEM WITH SERVICE PRESSURE CLASS GREATER THAN 150 PSI, ALL COMPONENTS FURNISHED SHALL BE SUITABLE FOR THE HIGHER PRESSURE

AIR-VACUUM AND AIR-RELEASE VALVE ASSEMBLY 3" AND SMALLER

REV 061801 M-804

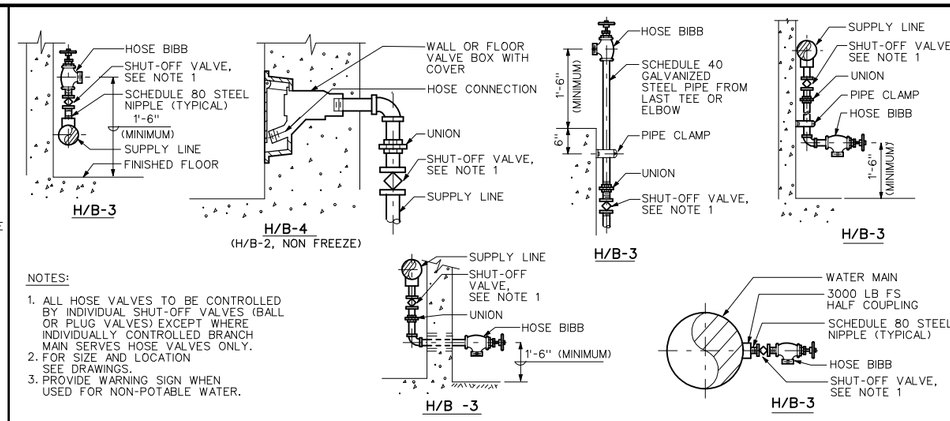

NOTES:

1. ALL HOSE VALVES TO BE CONTROLLED BY INDIVIDUAL SHUT-OFF VALVES (BALL OR PLUG VALVES) EXCEPT WHERE INDIVIDUALLY CONTROLLED BRANCH MAIN SERVES HOSE VALVES ONLY.
2. FOR SIZE AND LOCATION SEE DRAWINGS.
3. PROVIDE WARNING SIGN WHEN USED FOR NON-POTABLE WATER.

HOSE BIBBS

REV 062001 M-824

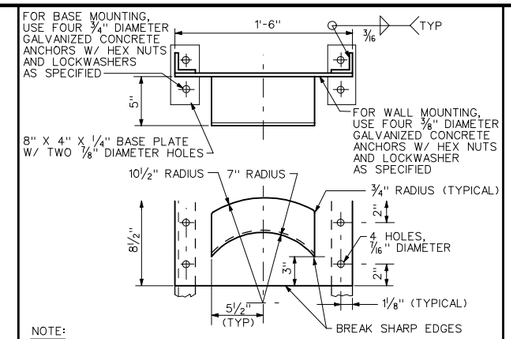

NOTE:

1. WHERE HOSE RACK IS FREE-STANDING, PROVIDE TWO STEEL ANGLES 2 X 2 X 1/4 W/BASE PLATES (OMIT BASE PLATES WHERE ANGLES CAN BE SET IN CONCRETE).
2. ALL WELDED CONSTRUCTION, 8 GAUGE STEEL SHEET GALVANIZED AFTER FABRICATION.

HOSE RACK

REV 061901 M-825

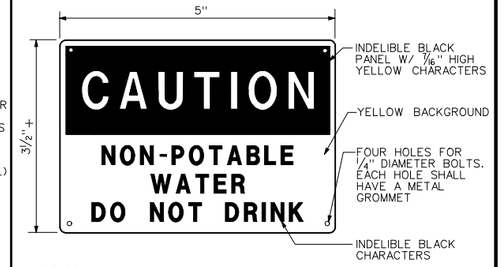

NOTES:

1. MATERIAL TO BE SEMI-RIGID BUTYRATE OR EQUAL.
2. COLORS AND LETTER SIZE TO BE PER OSHA STANDARDS FOR CAUTION SIGNS.
3. PROVIDE THIS SIGN AT ALL HOSE BIBB LOCATIONS WHERE WATER IS NON-POTABLE.

WARNING SIGN FOR NON-POTABLE WATER

REV 061901 M-832

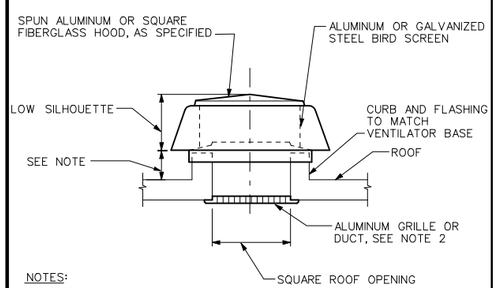

NOTES:

1. MINIMUM 12" IF USED AS AIR INTAKE. MINIMUM 6" IF USED AS RELIEF VENT.
2. WITH SUSPENDED CEILING INSTALL FULL-SIZE DUCT FROM ROOF OPENING TO CEILING GRILLE.

AIR INTAKE OR RELIEF VENT

REV 011602 M-514

REGISTERED PROFESSIONAL ENGINEER #5149 STANLEY S. POSTMA STATE OF UTAH

REV	DATE	BY	DESCRIPTION
R	3/07	MRW	RECORD DRAWING

SCALE: NONE

WARNING: 0 1/2 1 — IF THIS BAR DOES NOT MEASURE 1" THEN DRAWING IS NOT TO SCALE

DESIGNED MWH STD
DRAWN MWH STD
CHECKED S. POSTMA

RECORD DRAWING

This record drawing has been prepared, entirely or in part on the basis of unverified information compiled and furnished by others to the preparer who is not responsible for any inaccuracies, errors or omissions which may have been incorporated into the document as a result

MWH

UTAH DIVISION OF WILDLIFE RESOURCES
WHITEROCKS STATE FISH HATCHERY

STANDARD MECHANICAL DETAILS - 2

SHEET GM-3

1690703

File: wrfhgm03-RD.dgn Model: Default ColorTable: bw.ctb DesignScript: LightScreen.pen PlotScale: 1.999996:1 User: KalCrick Plot Date: 18-DEC-2007 09:48

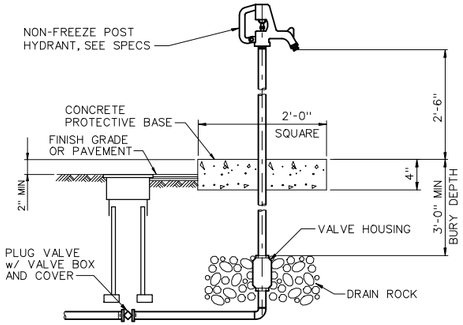

NOTES:
1. PROVIDE 2 CU FT DRAIN ROCK AROUND VALVE HOUSING FOR DRAINAGE.
2. SEE SPECIFICATIONS SECTION 15000.

SURFACE MOUNTED NON-FREEZE POST HYDRANT

1 / VAR

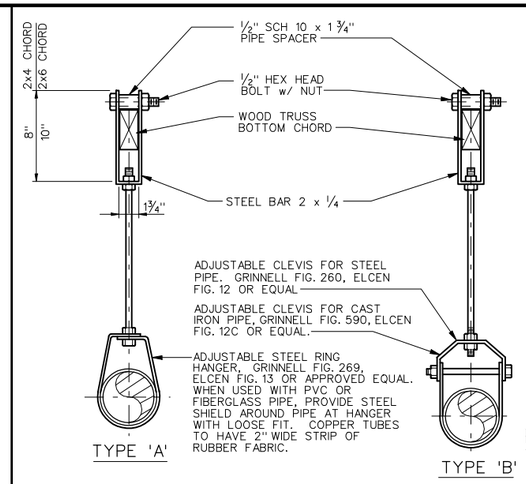

PIPE HANGER RODS AND SUPPORT SPACING					
PIPE DIA	ROD DIA	MAX SUPPORT SPACING (FEET)		WEIGHT LIMIT (LBS)	
(INCHES)	(INCHES)	STEEL PIPE	PVC PIPE	TYPE 'A'	TYPE 'B'
1/2	3/8	6	4	610	1700
3/4	3/8	8	4.5	610	1700
1	3/8	8	5	610	1700
1 1/4	3/8	10	5.5	610	1700
1 1/2	3/8	10	5.75	610	1700
2	3/8	10	6.25	610	1700
3	1/2	12	7.5	1130	3200
4	5/8	14	8.25	1430	3800
6	3/4	17	10	1430	3800
8	3/4	19	11	1430	3800
10	7/8	19	12.25	1430	3800
12	7/8	23	13.25	1430	3800
14	1	23	-	1430	3800
16	1	25	-	1430	3800

NOTES:
1. GALVANIZE ALL PARTS AFTER FABRICATION.

PIPE HANGER

2 / VAR

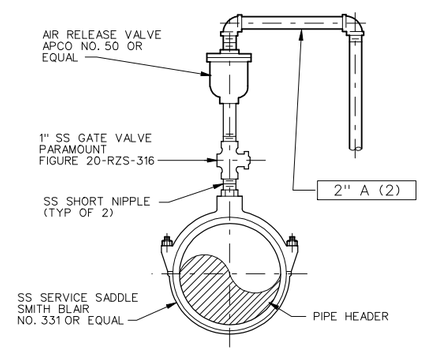

REARING ROOM HEADER AIR RELEASE ASSEMBLY

3 / VAR

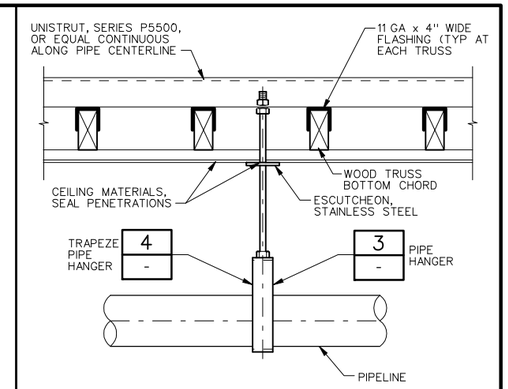

PIPE HANGER

4 / VAR

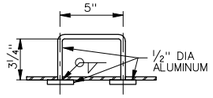

DETAIL "A"
LIFTING HANDLE

PERFORATED PLATES			
MARK NO.	SLOT DIMENSIONS LENGTH	SLOT DIMENSIONS WIDTH	QUANTITY
1	3/4"	1/8"	16
2	1"	3/16"	40
3	1 1/4"	3/8"	20

ALL SCREENS SHALL HAVE VERTICAL, SIDE STAGGERED SLOTS AND A MINIMUM OF 50% OPEN AREA.

NOTES:
1. ANGLE FRAME SHALL BE WELDED CONSTRUCTION. PERFORATED PLATE TO BE COMPATIBLE RIVETED TO FRAME @ 3" OC. FRAME SHALL BE 6061-T6 ALUMINUM. SCREEN SHALL BE 5052 ALUMINUM.
2. CONTRACTOR SHALL VERIFY SLOT WIDTH IN RACEWAYS PRIOR TO FISH SCREEN FABRICATION.
3. CONTRACTOR SHALL VERIFY PERFORATION SIZE PRIOR TO FABRICATION.

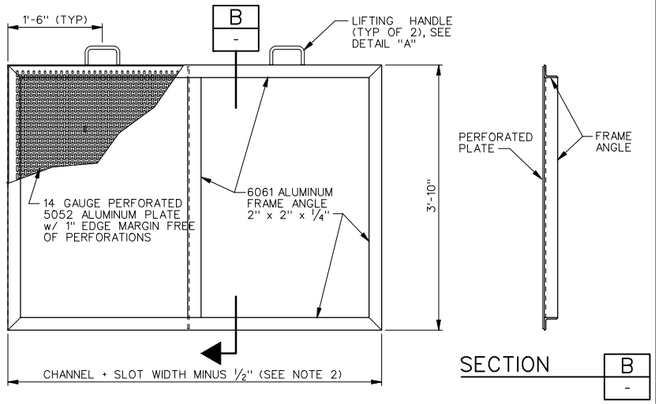

SECTION B / -

FISH SCREEN DETAIL

5 / VAR

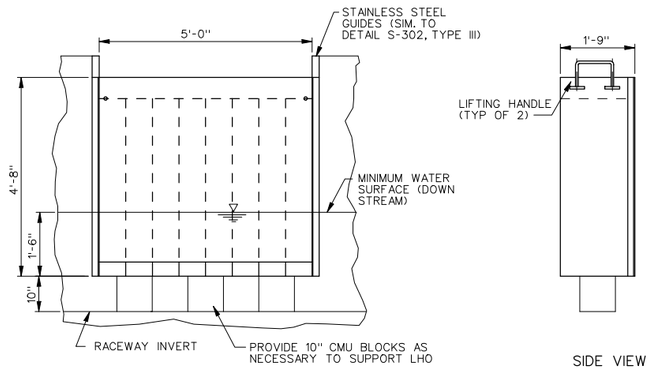

FRONT VIEW

SIDE VIEW

NOTE:
PROVIDE 12 LHO UNITS CONSTRUCTED OF 6061-T6 ALUMINUM. DRAWING SHOWS APPROXIMATE LAYOUT, EXACT DIMENSIONS AND LAYOUT SHALL BE THE RESPONSIBILITY OF LHO SUPPLIER.

LOW HEAD OXYGENATOR (LHO)

6 / VAR

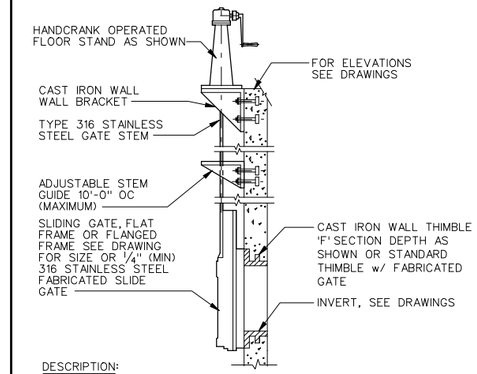

DESCRIPTION:
WALL-MOUNTED, FLAT OR FLANGED FRAME SLIDING GATE WITH CRANK OPERATED FLOOR STAND ON WALL BRACKET, DOWNWARD CLOSING.

SLIDING GATE

7 / M-X

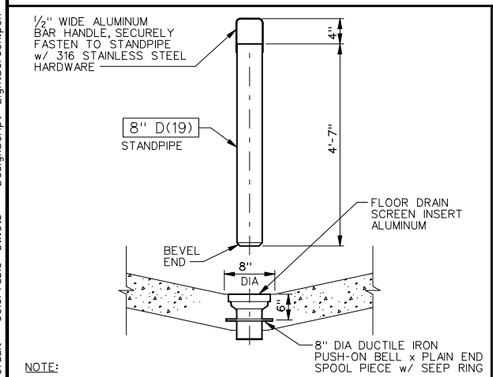

NOTE:
1 REQUIRED AT EACH RACEWAY.

STANDPIPE DRAIN

8 / M-13

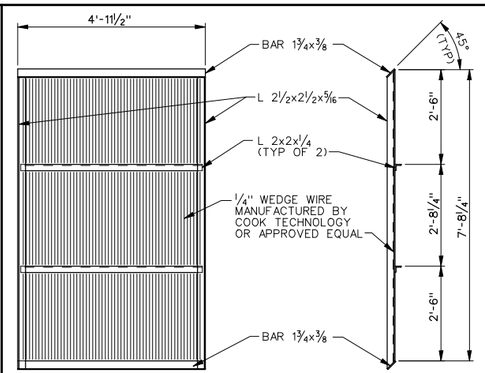

NOTE:
ALL MATERIALS SHALL BE 316 STAINLESS STEEL.
ALL WELDED FABRICATION.

EFFLUENT SCREEN

9 / M-20

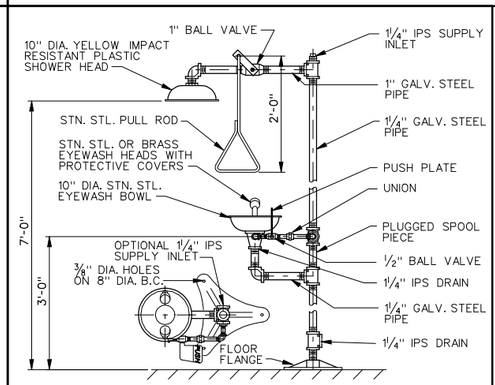

EMERGENCY SHOWER

10 / M-2

REGISTERED PROFESSIONAL ENGINEER #5149 STANLEY S. POSTMA STATE OF UTAH

REV	DATE	BY	DESCRIPTION
R	3/07	MRW	RECORD DRAWING

SCALE: NONE

WARNING: 0 1/2 1 — IF THIS BAR DOES NOT MEASURE 1" THEN DRAWING IS NOT TO SCALE

DESIGNED D. BARBEAU
DRAWN R. WALN
CHECKED S. POSTMA

RECORD DRAWING
This record drawing has been prepared, entirely or in part on the basis of unverified information compiled and furnished by others to the preparer who is not responsible for any inaccuracies, errors or omissions which may have been incorporated into the document as a result

MWH

UTAH DIVISION OF WILDLIFE RESOURCES
WHITEROCKS STATE FISH HATCHERY

MISCELLANEOUS MECHANICAL DETAILS - 1

SHEET GM-4
1690703

Plot Date: 18-DEC-2007 09:48
User: KalCrick
PlotScale: 1.999996:1
DesignScript: LightScreen.pen
ColorTable: bw.ctb
Model: Default
File: wrfngm04-RD.dgn

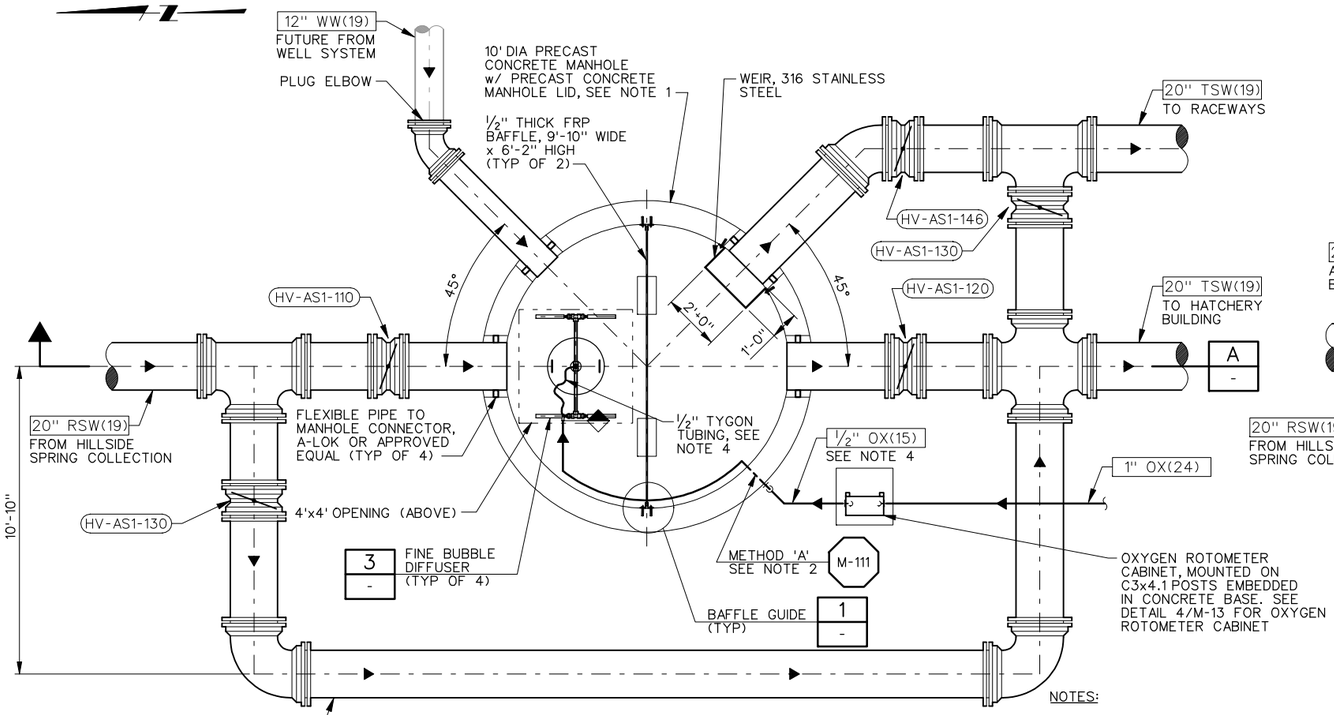

PLAN

SCALE: ⅜"=1'-0"

NOTES:

1. THE MANHOLE SHALL BE SEALED WITH MASTIC AT ALL JOINTS.
2. GROUT THE OUTSIDE OF THE PIPE PENETRATION FULL. THE INSIDE OF THE PENETRATION SHALL BE LEFT OPEN TO ALLOW ADJUSTMENT AND TIGHTENING OF THE ADJUSTABLE LINKED RUBBER SEAL.
3. FRP BAFFLE SHALL REST ON TOP OF QUICK RELEASE PINS AT BOTTOM OF EACH SET OF GUIDE ANGLES. QUICK RELEASE PINS AT TOP SHALL HOLD THE BAFFLE IN PLACE. THE QUICK RELEASE PINS SHALL NOT PENETRATE THE FRP BAFFLE.
4. SUPPORT ½" OX(15) INSIDE MANHOLE AT 12" ON CENTER. PROVIDE A ½" FEMALE NPT x HOSE ADAPTER AND HOSE CLAMP, 316 STAINLESS STEEL, FOR CONNECTION TO TYGON TUBING.

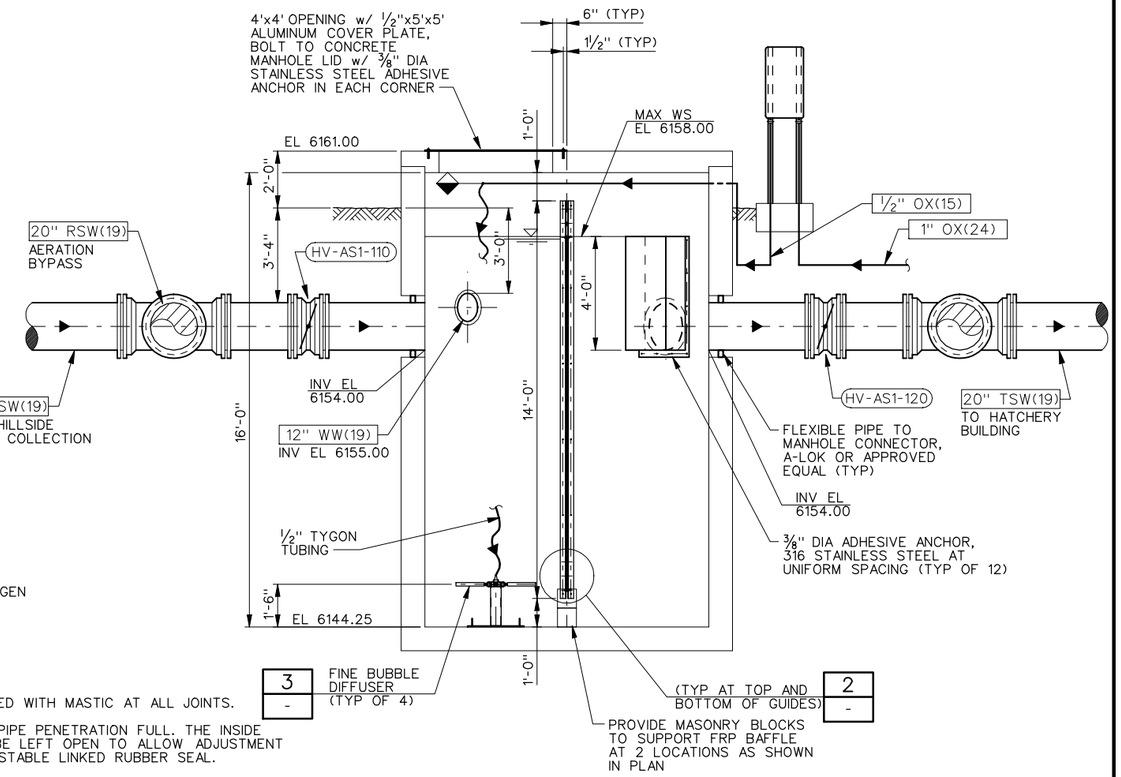

SECTION A

SCALE: ⅜"=1'-0"

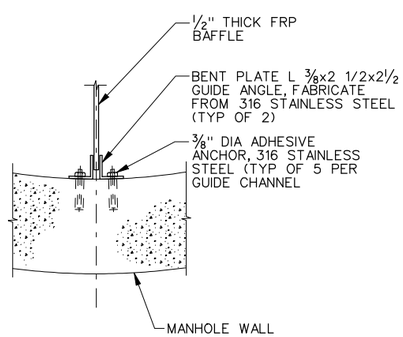

DETAIL 1

SCALE: 1½"=1'-0"

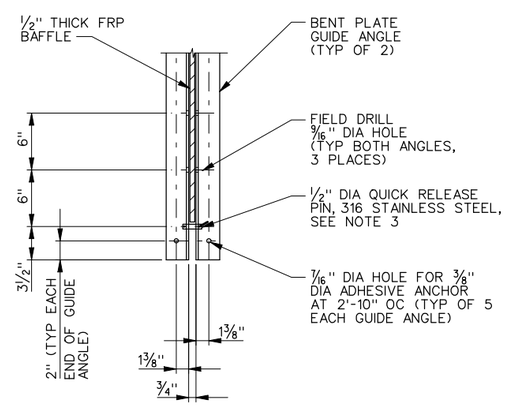

DETAIL 2

SCALE: 1½"=1'-0"

(SIMILAR AT TOP OF ANGLE GUIDES)

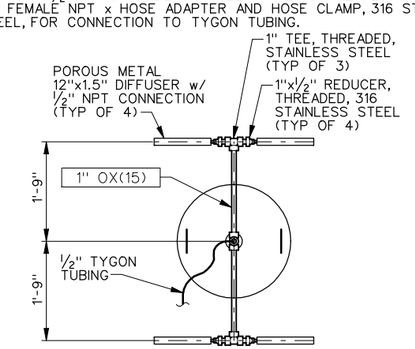

PLAN

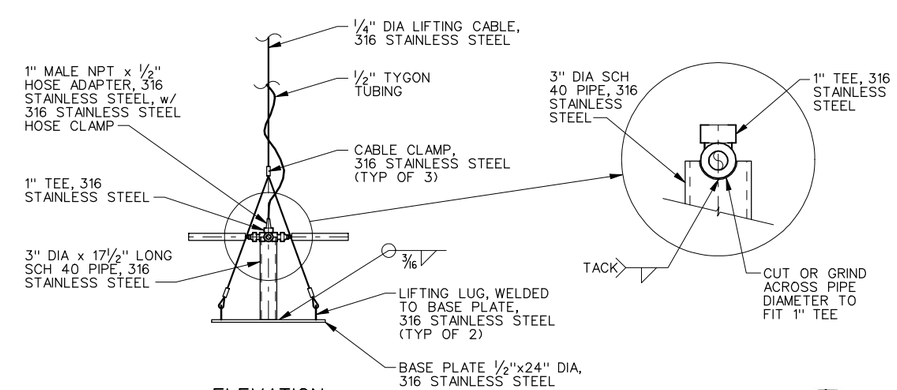

ELEVATION

DETAIL 3

SCALE: ¾"=1'-0"

REGISTERED PROFESSIONAL ENGINEER #5149 STANLEY S. POSTMA STATE OF UTAH

REV	DATE	BY	DESCRIPTION
R	3/07	MRW	RECORD DRAWING

SCALE: AS SHOWN

WARNING: 0 ½ 1 — IF THIS BAR DOES NOT MEASURE 1" THEN DRAWING IS NOT TO SCALE

DESIGNED E. CRYER
DRAWN R. WALN
CHECKED S. POSTMA

RECORD DRAWING

This record drawing has been prepared, entirely or in part on the basis of unverified information compiled and furnished by others to the preparer who is not responsible for any inaccuracies, errors or omissions which may have been incorporated into the document as a result

MWH

UTAH DIVISION OF WILDLIFE RESOURCES

WHITEROCKS STATE FISH HATCHERY

AERATION STRUCTURE NO. 1
PLANS, SECTION AND DETAILS

SHEET M-1

1690703

File: wrfhm01-RD.dgn Model: Default ColorTable: bw.ctb DesignScript: LightScreen.pen PlotScale: 5.333323:1 User: KaiCrick Plot Date: 18-DEC-2007 09:48

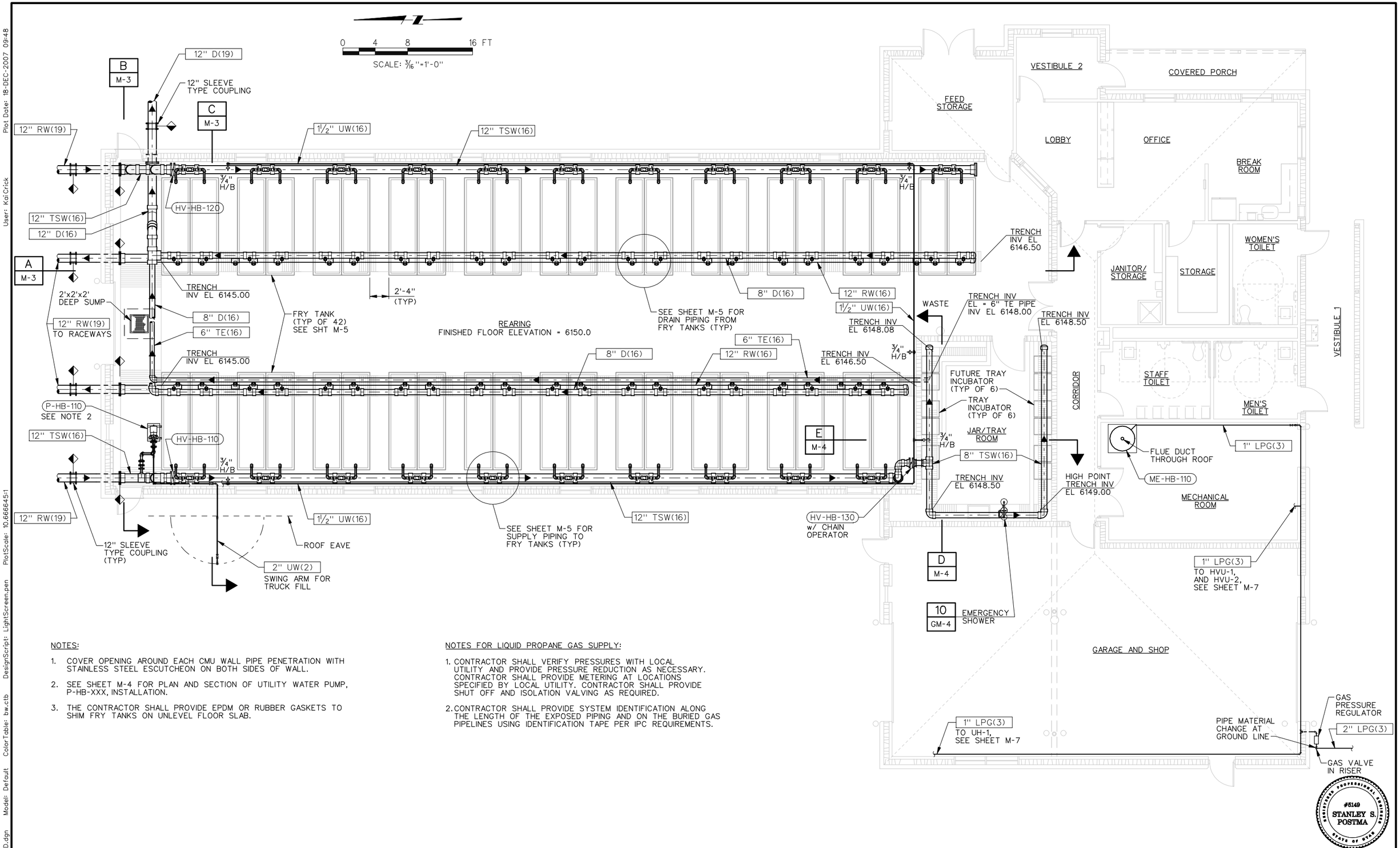

NOTES:

1. COVER OPENING AROUND EACH CMU WALL PIPE PENETRATION WITH STAINLESS STEEL ESCUTCHEON ON BOTH SIDES OF WALL.
2. SEE SHEET M-4 FOR PLAN AND SECTION OF UTILITY WATER PUMP, P-HB-XXX, INSTALLATION.
3. THE CONTRACTOR SHALL PROVIDE EPDM OR RUBBER GASKETS TO SHIM FRY TANKS ON UNLEVEL FLOOR SLAB.

NOTES FOR LIQUID PROPANE GAS SUPPLY:

1. CONTRACTOR SHALL VERIFY PRESSURES WITH LOCAL UTILITY AND PROVIDE PRESSURE REDUCTION AS NECESSARY. CONTRACTOR SHALL PROVIDE METERING AT LOCATIONS SPECIFIED BY LOCAL UTILITY. CONTRACTOR SHALL PROVIDE SHUT OFF AND ISOLATION VALVING AS REQUIRED.
2. CONTRACTOR SHALL PROVIDE SYSTEM IDENTIFICATION ALONG THE LENGTH OF THE EXPOSED PIPING AND ON THE BURIED GAS PIPELINES USING IDENTIFICATION TAPE PER IPC REQUIREMENTS.

REGISTERED PROFESSIONAL ENGINEER #5149 STANLEY S. POSTMA STATE OF UTAH

REV	DATE	BY	DESCRIPTION
R	3/07	MRW	RECORD DRAWING

SCALE: 3/16"=1'-0"

WARNING: 0 ½ 1 — IF THIS BAR DOES NOT MEASURE 1" THEN DRAWING IS NOT TO SCALE

DESIGNED D. BARBEAU
DRAWN R. WALN
CHECKED S. POSTMA

RECORD DRAWING

This record drawing has been prepared, entirely or in part on the basis of unverified information compiled and furnished by others to the preparer who is not responsible for any inaccuracies, errors or omissions which may have been incorporated into the document as a result

MWH

UTAH DIVISION OF WILDLIFE RESOURCES
WHITEROCKS STATE FISH HATCHERY

HATCHERY AND OPERATIONS BUILDING
MECHANICAL PLAN

SHEET M-2
1690703

File: wrfhm02-RD.dgn Model: Default ColorTable: bw.ctb DesignScript: LightScreen.pen PlotScale: 10.666645:1 User: KaiCrick Plot Date: 18-DEC-2007 09:48

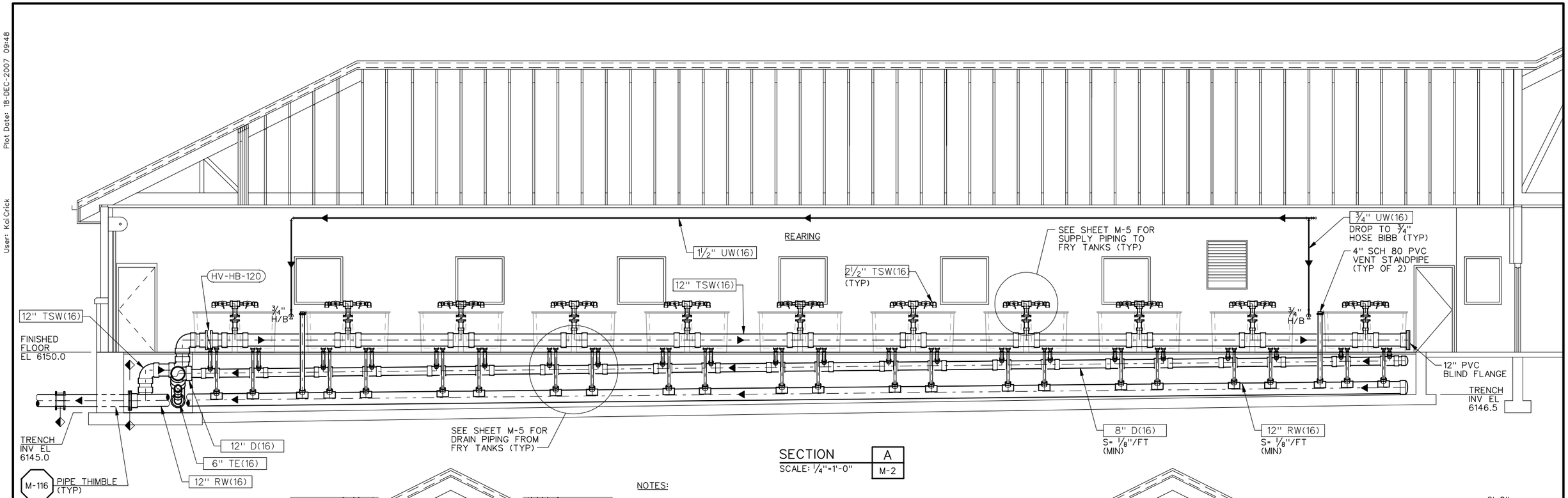

SECTION A M-2
SCALE: ¼"=1'-0"

NOTES:

1. PROVIDE TRUCK FILLING PIPE WITH SWIVEL JOINT. PIPE SHALL SWING BACK AGAINST HATCHERY BUILDING WHEN NOT IN USE. SWAY BRACING SHALL BE ADEQUATE TO SUPPORT PIPE, WEIGHT OF WATER AND THRUST FROM PRESSURE.
2. SWIVEL JOINT SHALL BE STYLE 20, STEEL, BY USA BLUE BOOK (1-800-548-1234), OR APPROVED EQUAL.
3. FLEXIBLE EXPANSION JOINT SHALL BE STYLE 451, BY MERCER RUBBER CO. (1-631-582-1524), OR APPROVED EQUAL.

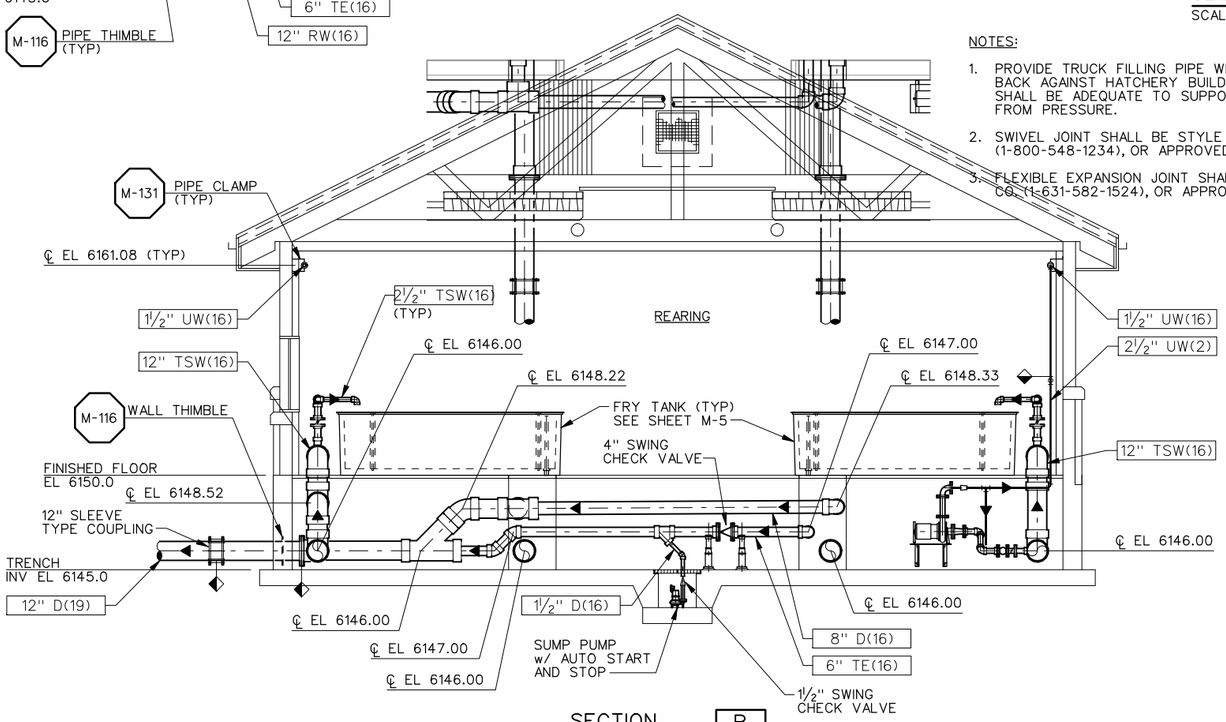

SECTION B M-2
SCALE: ¼"=1'-0"

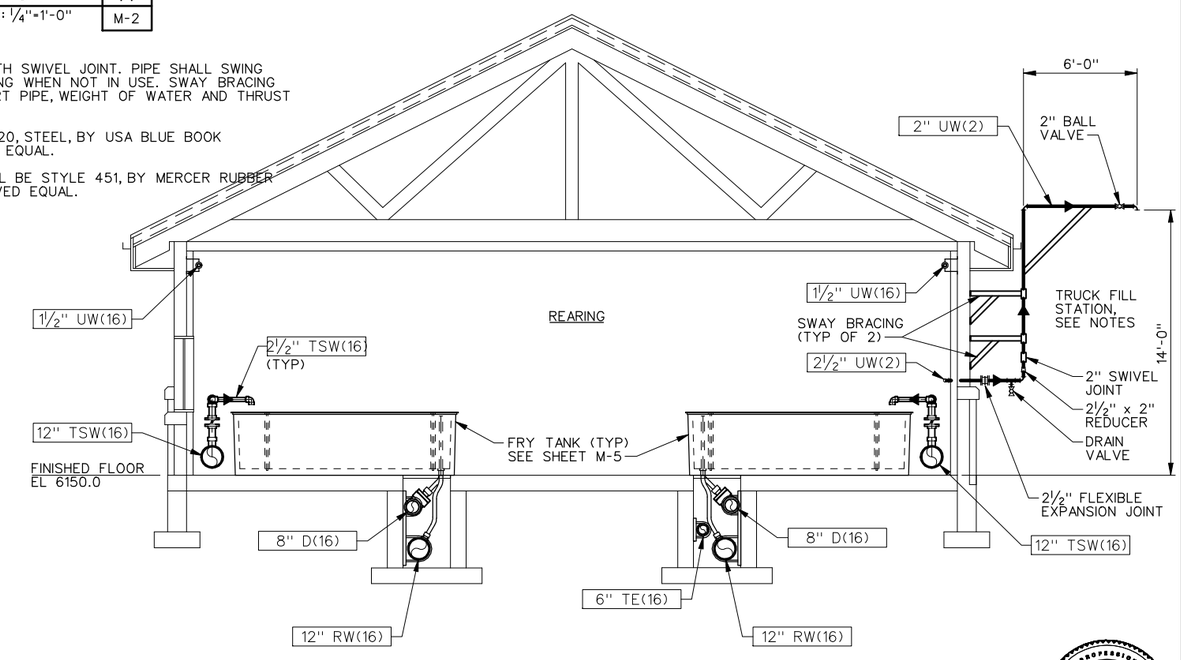

SECTION C M-2
SCALE: ¼"=1'-0"

REGISTERED PROFESSIONAL ENGINEER #5149 STANLEY S. POSTMA STATE OF UTAH

REV	DATE	BY	DESCRIPTION
R	3/07	MRW	RECORD DRAWING

SCALE: AS SHOWN

WARNING: 0 ½ 1 — IF THIS BAR DOES NOT MEASURE 1" THEN DRAWING IS NOT TO SCALE

DESIGNED D. BARBEAU
DRAWN R. WALN
CHECKED S. POSTMA

RECORD DRAWING

This record drawing has been prepared, entirely or in part on the basis of unverified information compiled and furnished by others to the preparer who is not responsible for any inaccuracies, errors or omissions which may have been incorporated into the document as a result

MWH

UTAH DIVISION OF WILDLIFE RESOURCES
WHITEROCKS STATE FISH HATCHERY

HATCHERY AND OPERATIONS BUILDING
SECTIONS - 1

SHEET M-3

1690703

File: wrfhm03-RD.dgn Model: Default ColorTable: bw.ctb DesignScript: LightScreen.pen PlotScale: 7.999984:1 User: KaiCrick Plot Date: 18-DEC-2007 09:48

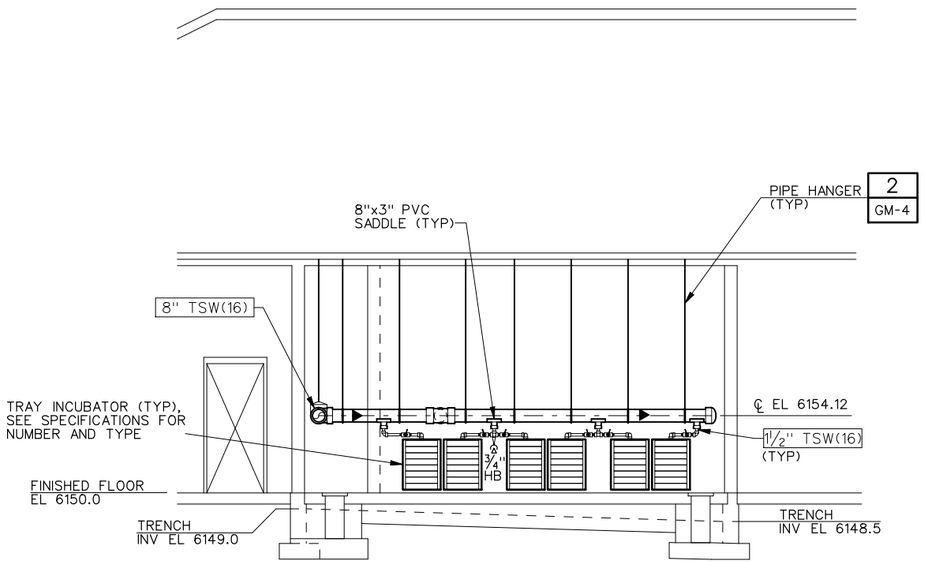

SECTION D
SCALE: ¼"=1'-0"
M-2

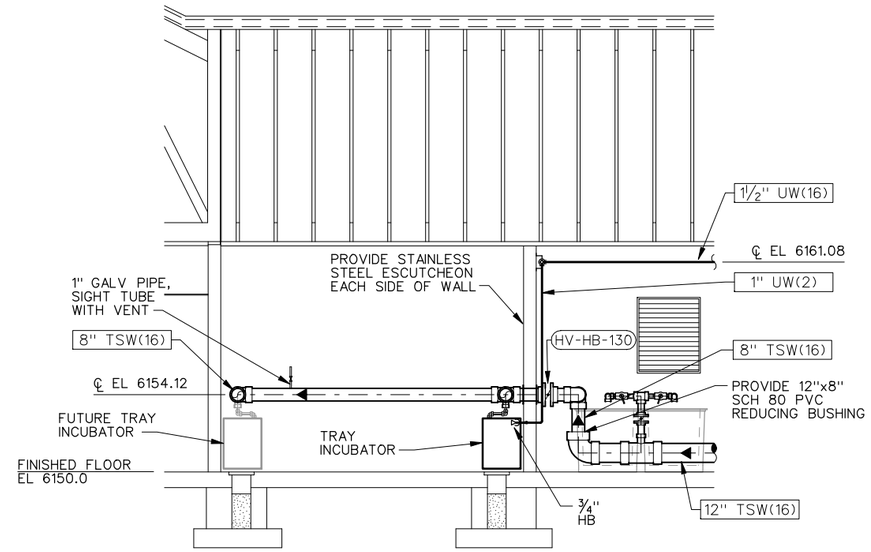

SECTION E
SCALE: ¼"=1'-0"
M-2

F
-

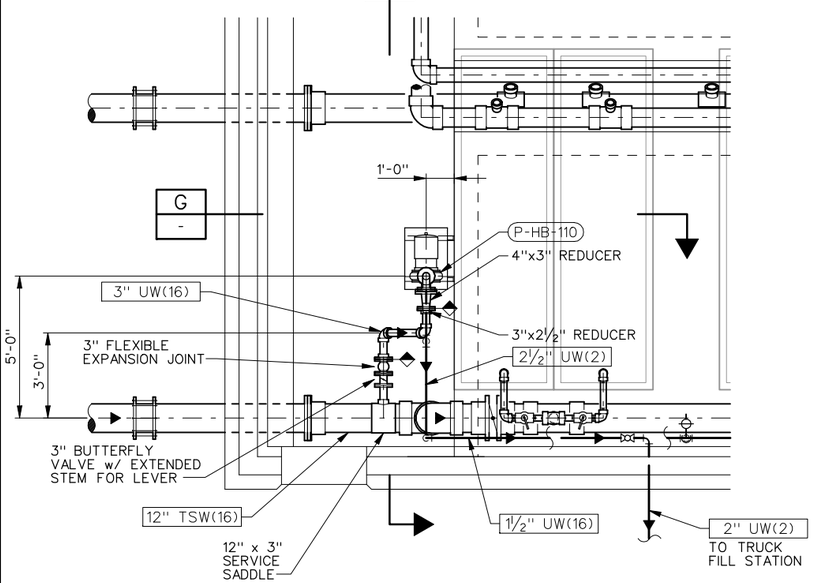

ENLARGED PLAN
SCALE: ⅜"=1'-0"

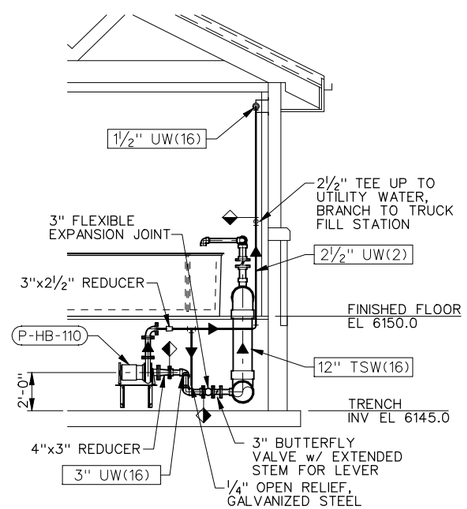

SECTION F
SCALE: ¼"=1'-0"
-

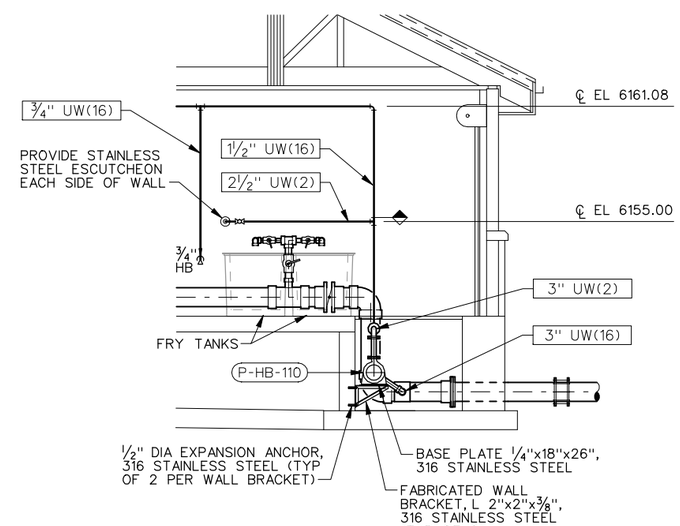

SECTION G
SCALE: ¼"=1'-0"
-

REGISTERED PROFESSIONAL ENGINEER #5149 STANLEY S. POSTMA STATE OF UTAH

REV	DATE	BY	DESCRIPTION
R	3/07	MRW	RECORD DRAWING

SCALE: AS SHOWN

WARNING: 0 ½ 1 — IF THIS BAR DOES NOT MEASURE 1" THEN DRAWING IS NOT TO SCALE

DESIGNED D. BARBEAU
DRAWN R. WALN
CHECKED S. POSTMA

RECORD DRAWING
This record drawing has been prepared, entirely or in part on the basis of unverified information compiled and furnished by others to the preparer who is not responsible for any inaccuracies, errors or omissions which may have been incorporated into the document as a result

MWH

UTAH DIVISION OF WILDLIFE RESOURCES
WHITEROCKS STATE FISH HATCHERY

HATCHERY AND OPERATIONS BUILDING
SECTIONS - 2

SHEET M-4
1690703

File: wrfhm04-RD.dgn Model: Default ColorTable: bw.ctb DesignScript: LightScreen.pen PlotScale: 7.999984:1 User: KaiCrick Plot Date: 18-DEC-2007 09:48

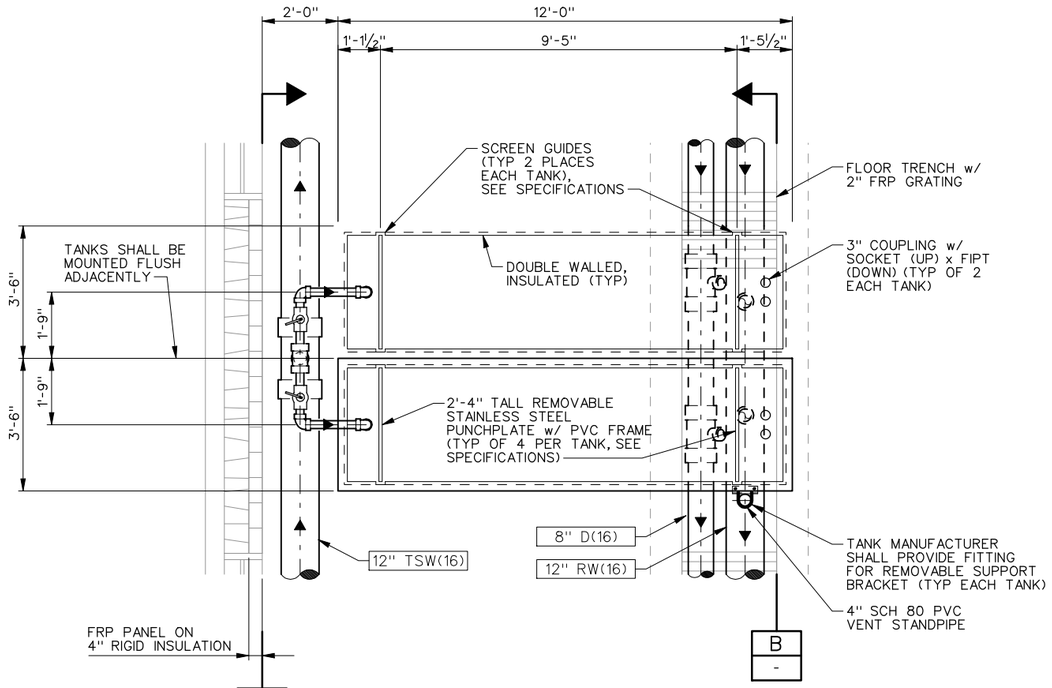

FRY TROUGH PLAN

SCALE: ½"=1'-0"

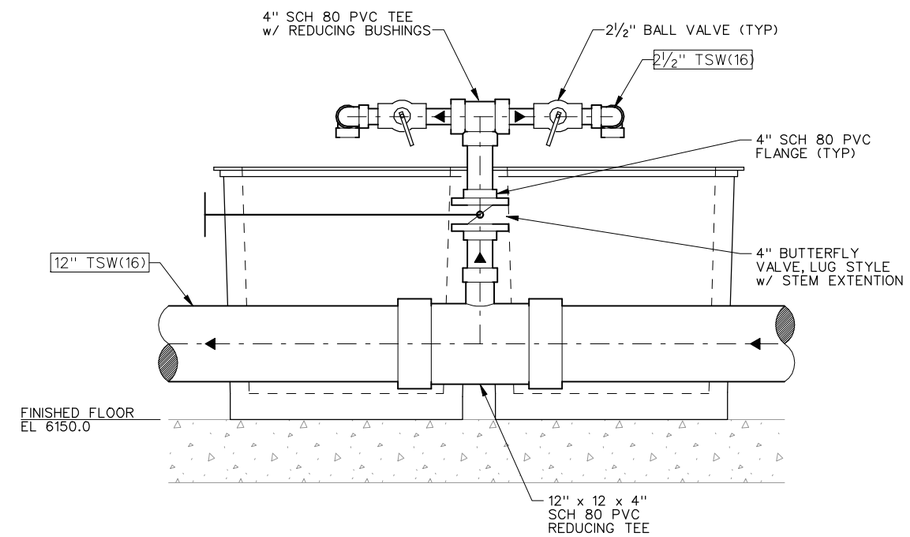

SECTION A

SCALE: 1"=1'-0"

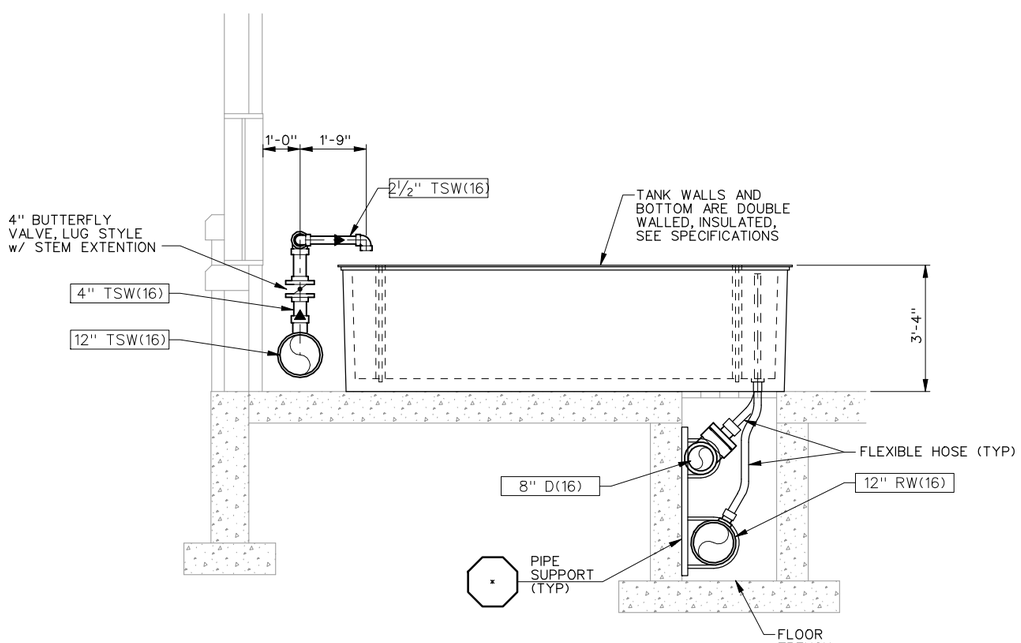

TYPICAL ELEVATION

SCALE: ½"=1'-0"

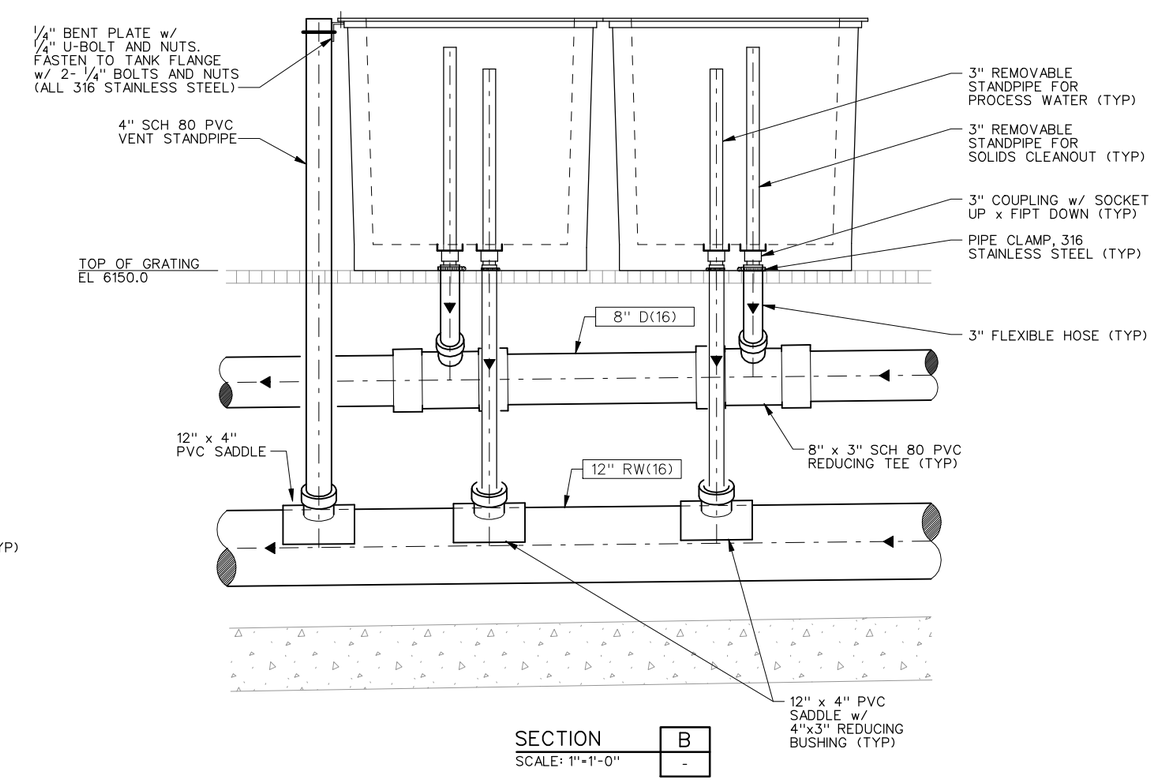

SECTION B

SCALE: 1"=1'-0"

REGISTERED PROFESSIONAL ENGINEER #5149 STANLEY S. POSTMA STATE OF UTAH

REV	DATE	BY	DESCRIPTION
R	3/07	MRW	RECORD DRAWING

SCALE: NONE

WARNING: 0 ½ 1 — IF THIS BAR DOES NOT MEASURE 1" THEN DRAWING IS NOT TO SCALE

DESIGNED D. BARBEAU
DRAWN R. WALN
CHECKED S. POSTMA

RECORD DRAWING

This record drawing has been prepared, entirely or in part on the basis of unverified information compiled and furnished by others to the preparer who is not responsible for any inaccuracies, errors or omissions which may have been incorporated into the document as a result

MWH

UTAH DIVISION OF WILDLIFE RESOURCES

WHITEROCKS STATE FISH HATCHERY

HATCHERY TANK DETAILS

SHEET M-5

1690703

File: wrfhm05-RD.dgn Model: Default ColorTable: bw.ctb DesignScript: LightScreen.pen PlotScale: 3.999992:1 User: KaiCrick Plot Date: 18-DEC-2007 09:48

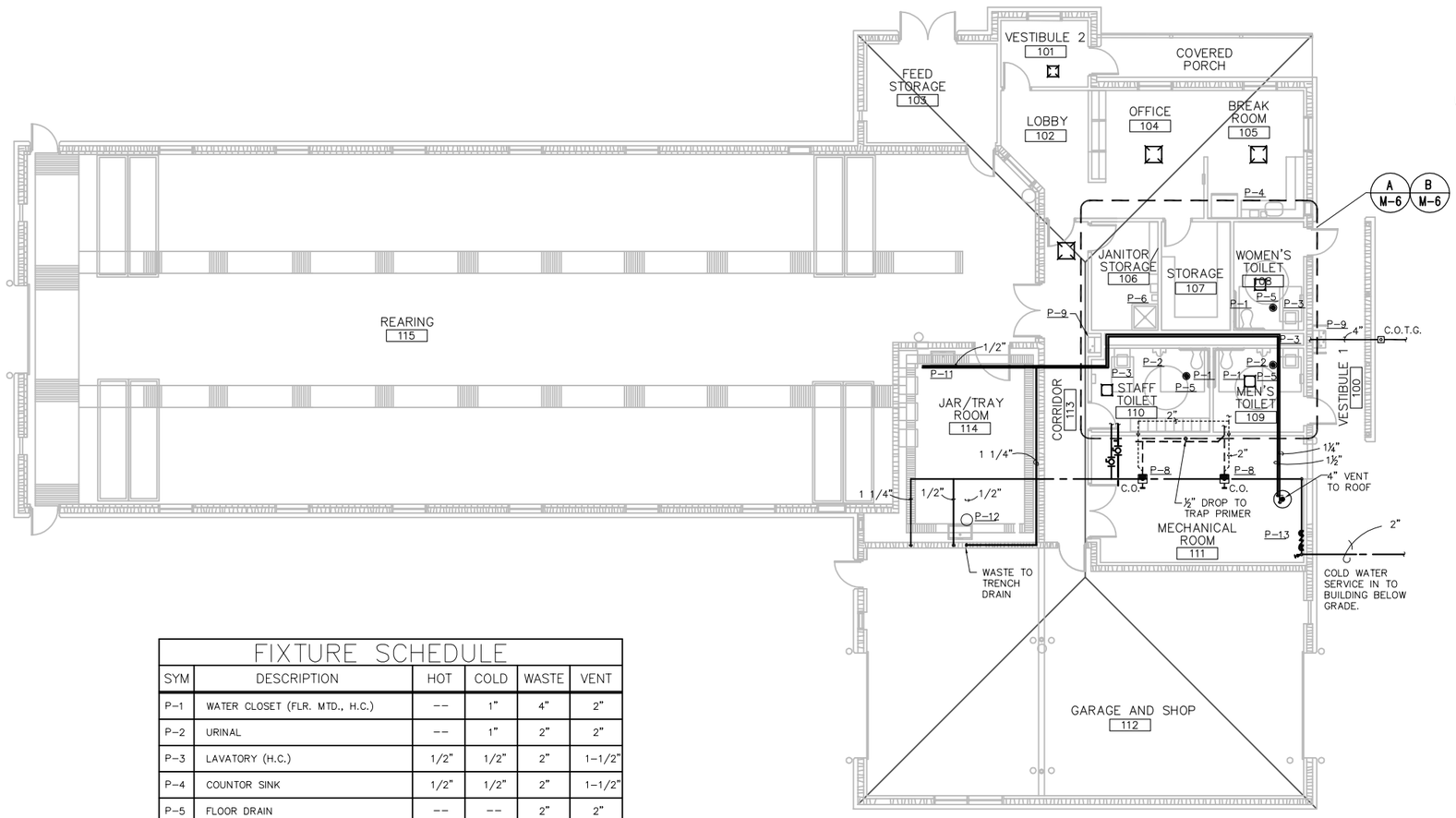

PLUMBING FLOOR PLAN

SCALE: 1/8" = 1'-0"

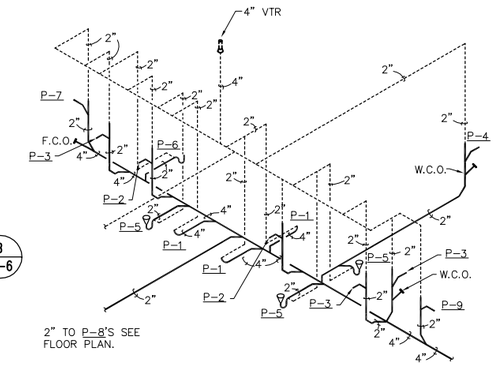

A/M-6 WASTE AND VENT PIPING SCHEMATIC

SCALE: N.T.S.

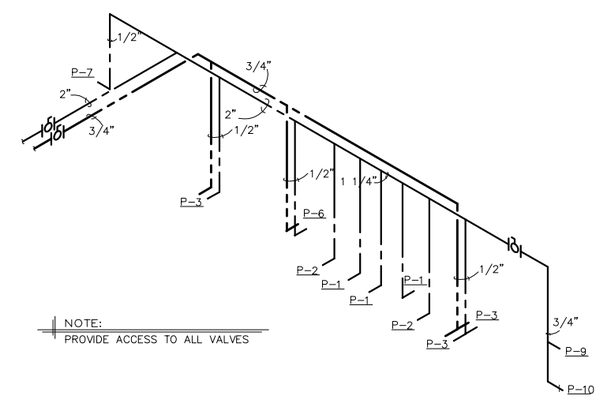

B/M-6 WATER PIPING SCHEMATIC

SCALE: N.T.S.

FIXTURE SCHEDULE

SYM	DESCRIPTION	HOT	COLD	WASTE	VENT
P-1	WATER CLOSET (FLR. MTD., H.C.)	--	1"	4"	2"
P-2	URINAL	--	1"	2"	2"
P-3	LAVATORY (H.C.)	1/2"	1/2"	2"	1-1/2"
P-4	COUNTOR SINK	1/2"	1/2"	2"	1-1/2"
P-5	FLOOR DRAIN	--	--	2"	2"
P-6	MOP SINK	1/2"	1/2"	2"	2"
P-7	DRINKING FOUNTAIN (INDOOR)	--	1/2"	2"	1-1/2"
P-8	FLOOR SINK	--	--	2"	2"
P-9	DRINKING FOUNTAIN (OUTDOOR)	--	1/2"	2"	1-1/2"
P-10	HOSE BIBB	--	3/4"	--	--
P-11	LAB SINK	1/2"	1/2"	2"	(1)
P-12	EYE SHOWER	--	1-1/4"	--	--
P-13	WATER HEATER	3/4"	3/4"	--	--
P-14	GARBAGE GRINDER	--	--	1-1/2"	--

(1) WASTE TO TRENCH DRAIN

LICENSED PROFESSIONAL ENGINEER No. 291696 MICHAEL L. WISDOM STATE OF UTAH

JOB #05002
Engineering Incorporate
2222 Broadway, Boise, Idaho 83706
(208)343-3683 FAX (208)343-8625

REV	DATE	BY	DESCRIPTION
R	3/07	MRW	RECORD DRAWING

Job No: 1690703

SCALE

WARNING
0 1/2 1
IF THIS BAR DOES NOT MEASURE 1" THEN DRAWING IS NOT TO SCALE

DESIGNED KT
DRAWN WB
CHECKED MW

RECORD DRAWING
This record drawing has been prepared, entirely or in part on the basis of unverified information compiled and furnished by others to the preparer who is not responsible for any inaccuracies, errors or omissions which may have been incorporated into the document as a result

MWH

UTAH DIVISION OF WILDLIFE RESOURCES
WHITEROCKS STATE FISH HATCHERY

HATCHERY AND OPERATIONS BUILDING
PLUMBING FLOOR PLAN

SHEET
M-6

12/18/07 - 9:20 am G:\Whiterocks Fit\Design\Record Drawings\mmc\M6.dwg

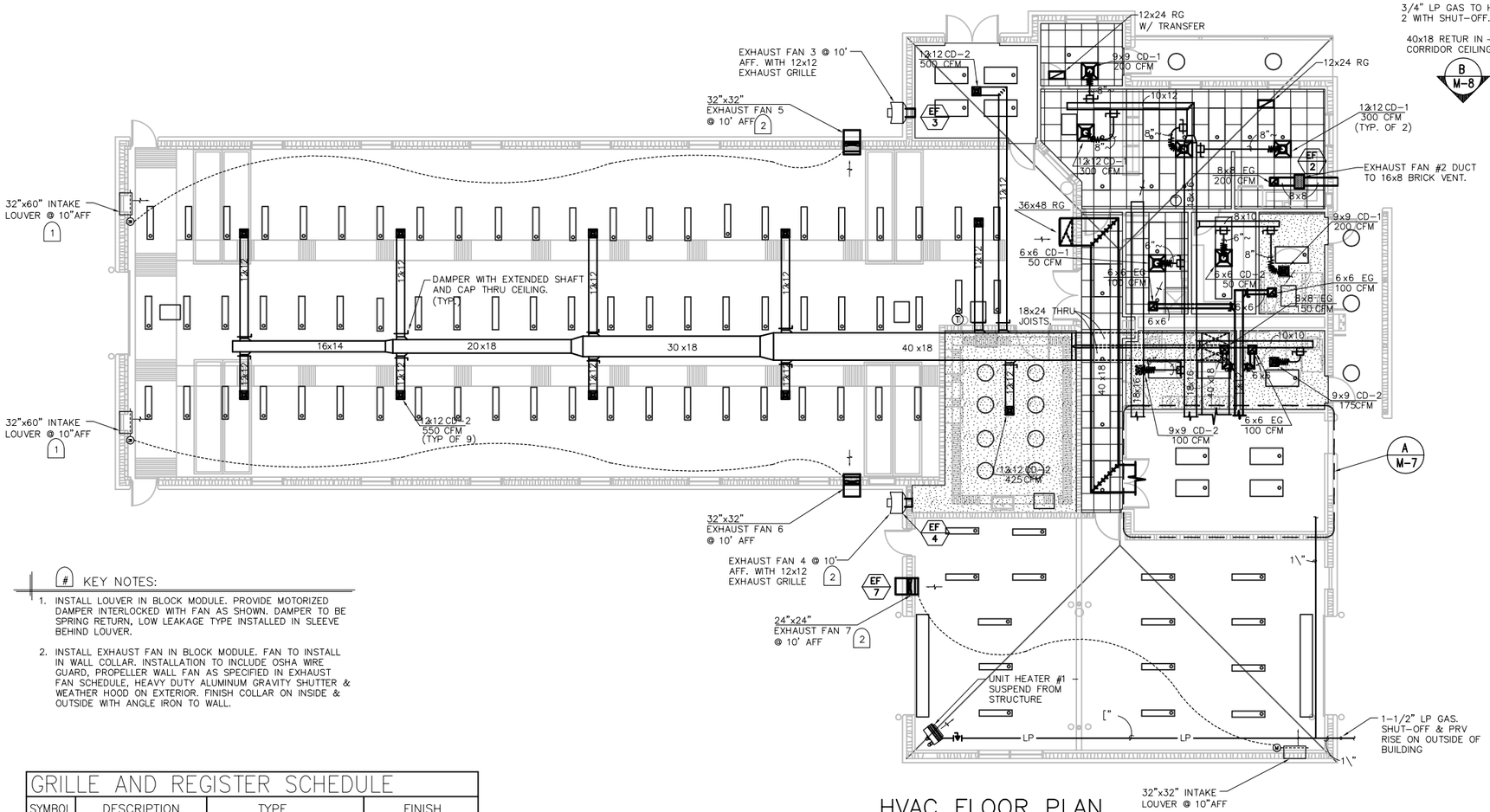

HVAC FLOOR PLAN

SCALE: 1/8" = 1'-0"

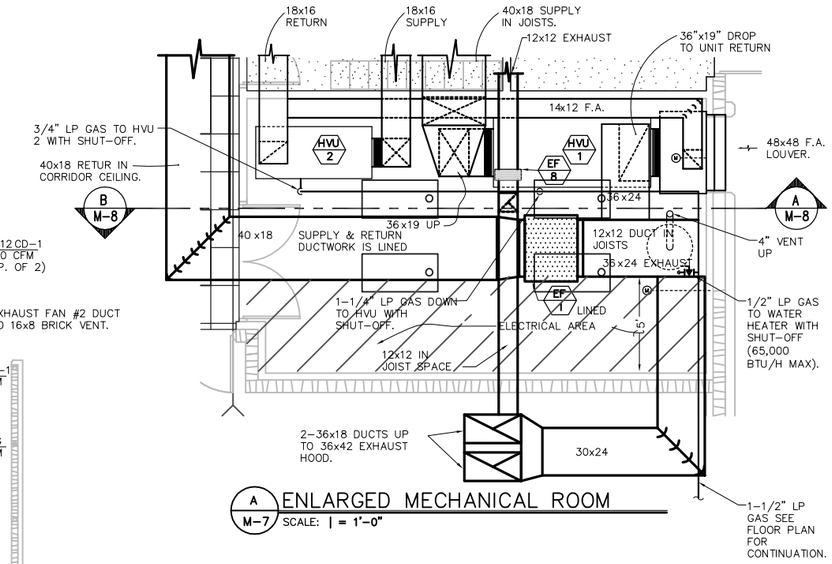

A M-7 ENLARGED MECHANICAL ROOM

SCALE: 1 = 1'-0"

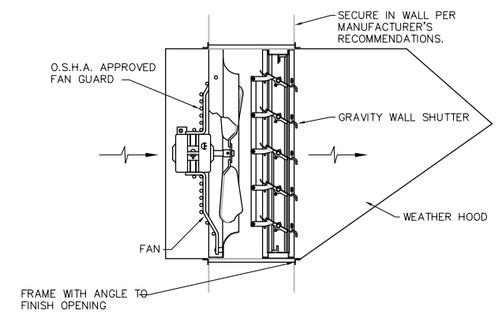

WALL-MOUNTED PROPELLER FAN

SCALE: N.T.S. (TYPICAL OF EXHAUST FANS 5,6&7)

KEY NOTES:

1. INSTALL LOUVER IN BLOCK MODULE. PROVIDE MOTORIZED DAMPER INTERLOCKED WITH FAN AS SHOWN. DAMPER TO BE SPRING RETURN, LOW LEAKAGE TYPE INSTALLED IN SLEEVE BEHIND LOUVER.
2. INSTALL EXHAUST FAN IN BLOCK MODULE. FAN TO INSTALL IN WALL COLLAR. INSTALLATION TO INCLUDE OSHA WIRE GUARD, PROPELLER WALL FAN AS SPECIFIED IN EXHAUST FAN SCHEDULE, HEAVY DUTY ALUMINUM GRAVITY SHUTTER & WEATHER HOOD ON EXTERIOR. FINISH COLLAR ON INSIDE & OUTSIDE WITH ANGLE IRON TO WALL.

GRILLE AND REGISTER SCHEDULE

SYMBOL	DESCRIPTION	TYPE	FINISH
CD-1	CEILING DIFFUSER	TITUS TDCA IN 24x24 PAN	WHITE
CD-2	CEILING DIFFUSER	TITUS TDCA IN HARD CEILING	WHITE
RG	RETURN GRILLE	TITUS 50F	
EG	EXHAUST GRILLE	TITUS 50F	
IAL	INTAKE AIR LOUVER	AIROLITE K609	PRIME COAT

1. CONTRACTOR SHALL VERIFY EXACT BUILDING CONSTRUCTION & PROVIDE THE CORRECT FRAMES FOR ALL AIR DIFFUSION PRODUCTS AS REQUIRED. THE FOLLOWING MANUFACTURER'S ARE ACCEPTABLE SUBSTITUTES PROVIDING THEY MEET THE REQUIREMENTS AS SCHEDULED: NAILOR, KRUEGER, E.H. PRICE, TITUS, RELIABLE AND J&J REGISTER.
2. GRILLES, REGISTERS & DIFFUSERS INSTALLED IN ALL CEILINGS SHALL BE SECURED AND/OR SUPPORTED IN ACCORDANCE WITH INTERNATIONAL BUILDING CODE STANDARDS FOR SEISMIC DESIGN.

UH UNIT HEATER SCHEDULE (GAS FIRED)

NO.	TYPE	A.G.A. MBH INPUT	A.G.A. MBH OUTPUT	CFM	HP	RPM	AMP	CHAR	GAS TYPE	SUPPLY SIZE	VENT	MANUFACTURER
1	PROPELLER SEPARATED COMBUSTION	82	65	1400	1/20	1050	2.6	120/1~	PRO	1/2	*	STERLING QVSF 100

* PROVIDE 4" SUPPLY & VENT TO CONCENTRIC EXHAUST/ COMBUSTION AIR- SEE DETAIL.
- MBH INPUT & OUTPUT ARE FOR 6500 FT. ELEVATION.

LICENSED PROFESSIONAL ENGINEER No. 291696 MICHAEL L. WISDOM STATE OF UTAH

JOB #05002
Engineering Incorporatec
2222 Broadway, Boise, Idaho 83706
(208)343-3663 FAX (208)343-9625

REV	DATE	BY	DESCRIPTION
R	3/07	MRW	RECORD DRAWING

Job No: 1690703

SCALE

WARNING 0 1/2 1 — IF THIS BAR DOES NOT MEASURE 1" THEN DRAWING IS NOT TO SCALE

DESIGNED KT
DRAWN WB
CHECKED MW

RECORD DRAWING
This record drawing has been prepared, entirely or in part on the basis of unverified information compiled and furnished by others to the preparer who is not responsible for any inaccuracies, errors or omissions which may have been incorporated into the document as a result

MWH

UTAH DIVISION OF WILDLIFE RESOURCES
WHITEROCKS STATE FISH HATCHERY

HATCHERY AND OPERATIONS BUILDING
HVAC FLOOR PLAN

SHEET M-7

12/18/07 - 9:19 am Q:\Whiterocks FH\Design\Record Drawings\Hvac\M7.dwg

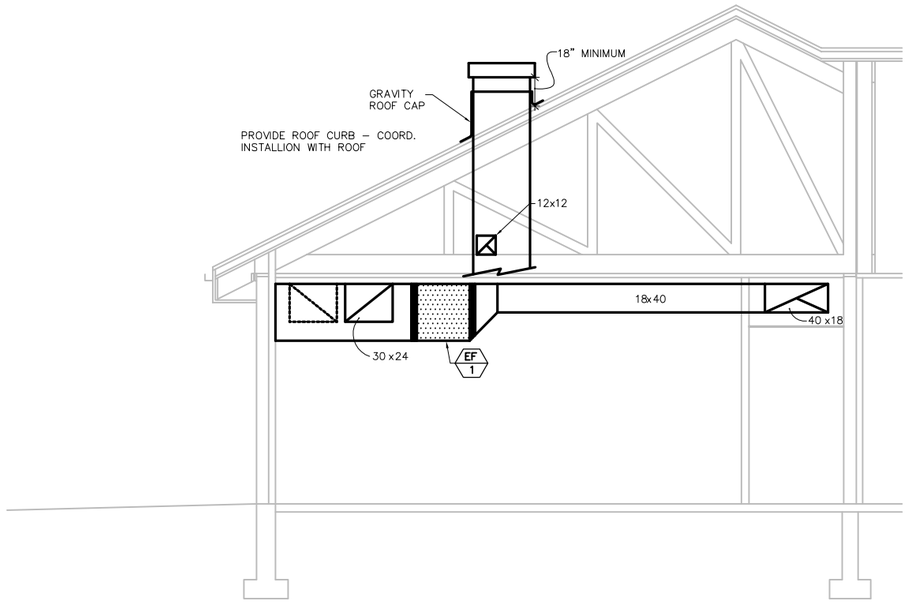

B / M-8 SECTION MECHANICAL ROOM
SCALE: | = 1'-0"

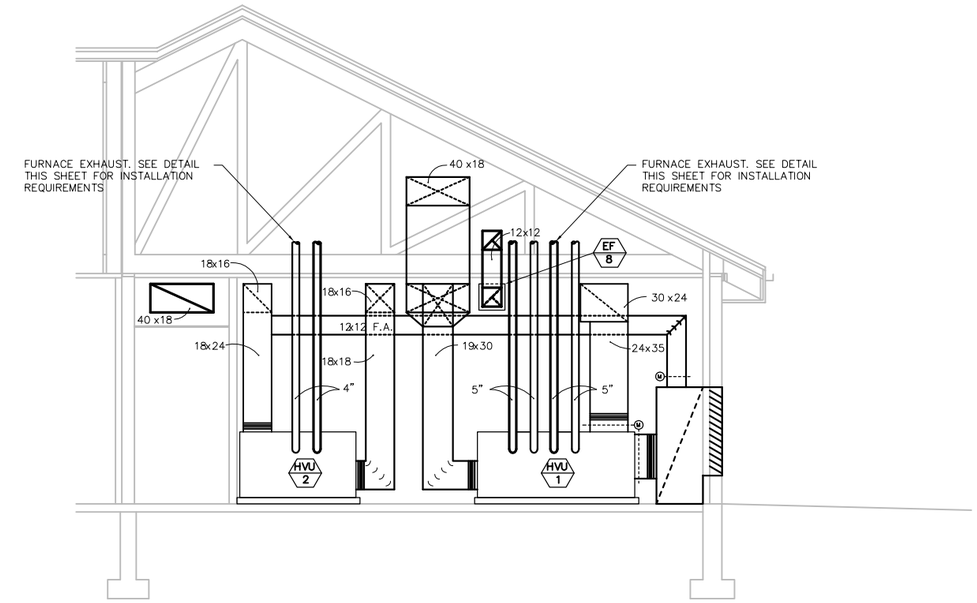

A / M-8 SECTION MECHANICAL ROOM
SCALE: | = 1'-0"

EF

EXHAUST FAN SCHEDULE

NO.	TYPE	CFM	SPE	WATTS / HP	CHAR	RPM	TIP SPEED	OV	MANUFACTURER	REMARKS
1	INLINE CENT.	4500	.5	1-1/2	480/3	525			COOK-DB-18	W/B.D. DAMPER
2	INLINE CENT.	250	.25	170	120/1	1075			COOK-GN-420	W/B.D. DAMPER
3	CENTRIFUGAL WALL FAN	500	.375	1/6	120/1	965			COOK 120W2B	W/B.D. DAMPER
4	CENTRIFUGAL WALL FAN	500	.375	1/6	120/1	965			COOK 120W2B	W/B.D. DAMPER
5	WALL PROPELLER	3500	.25	1/3	120/1	892			COOK 24XMW	1
6	WALL PROPELLER	3500	.25	1/3	120/1	892			COOK 24XMW	1
7	WALL PROPELLER	2000	.25	1/4	120/1	892			COOK 20XMW	1
8	INLINE CENT.	500	.375	301	120/1	1325			COOK-GN-720	W/B.D. DAMPER

1 INSTALL WITH WALL SLEEVE, SHUTTER, WIRE GUARD INSIDE & WEATHER HOOD OUTSIDE.

HVU

HEATING AND VENTILATING UNIT SCHEDULE

NO.	TYPE	CFM	HP	CHAR	RPM	F.A. CFM	HEATING MBH INPUT	HEATING MBH OUTPUT	HEATING EAT	HEATING LAT	SPE	GAS TYPE	UNIT WEIGHT	MANUFACTURER
1	FLOOR MTD.	5500	5	480/3	1300	900	396	317	30	97	1.25	PRO.	1200	REZNOR H5-50
2	FLOOR MTD.	1700	2	480/3	1200	600	119	95	50	114	1	PRO.	800	REZNOR M5-15

- UNIT #1 MINUMUM F.A. 900 CFM – PROVIDE FILTER MIXING BOX TO ALLOW 100%C F.A. – FILTERS TO BE 2" 30% FILTERS.
- MBH INPUT & OUTPUT RATINGS ARE FOR 6500 FT. ELEV.
- UNITS TO BE SEPARATED COMBUSTION TYPE.

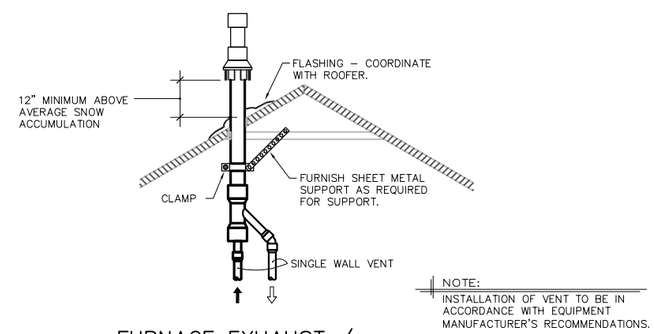

NOTE:
INSTALLATION OF VENT TO BE IN ACCORDANCE WITH EQUIPMENT MANUFACTURER'S RECOMMENDATIONS.

FURNACE EXHAUST / COMBUSTION AIR PIPING
SCALE: N.T.S.

LICENSED PROFESSIONAL ENGINEER No. 291696 MICHAEL L. WISDOM STATE OF UTAH

JOB #05002
Engineering Incorporatec
2222 Broadway, Boise, Idaho 83706
(208)343-3063 FAX (208)343-9625

REV	DATE	BY	DESCRIPTION
R	3/07	MRW	RECORD DRAWING

Job No: 1690703

SCALE

WARNING
0 1/2 1
IF THIS BAR DOES NOT MEASURE 1" THEN DRAWING IS NOT TO SCALE

DESIGNED KT
DRAWN WB
CHECKED MW

RECORD DRAWING
This record drawing has been prepared, entirely or in part on the basis of unverified information compiled and furnished by others to the preparer who is not responsible for any inaccuracies, errors or omissions which may have been incorporated into the document as a result

MWH

UTAH DIVISION OF WILDLIFE RESOURCES
WHITEROCKS STATE FISH HATCHERY

HATCHERY AND OPERATIONS BUILDING
HVAC SECTIONS AND DETAILS

SHEET
M-8

12/18/07 – 9:16 am G:\Whiterocks FH\Design\Record Drawings\Hvac\M8.dwg

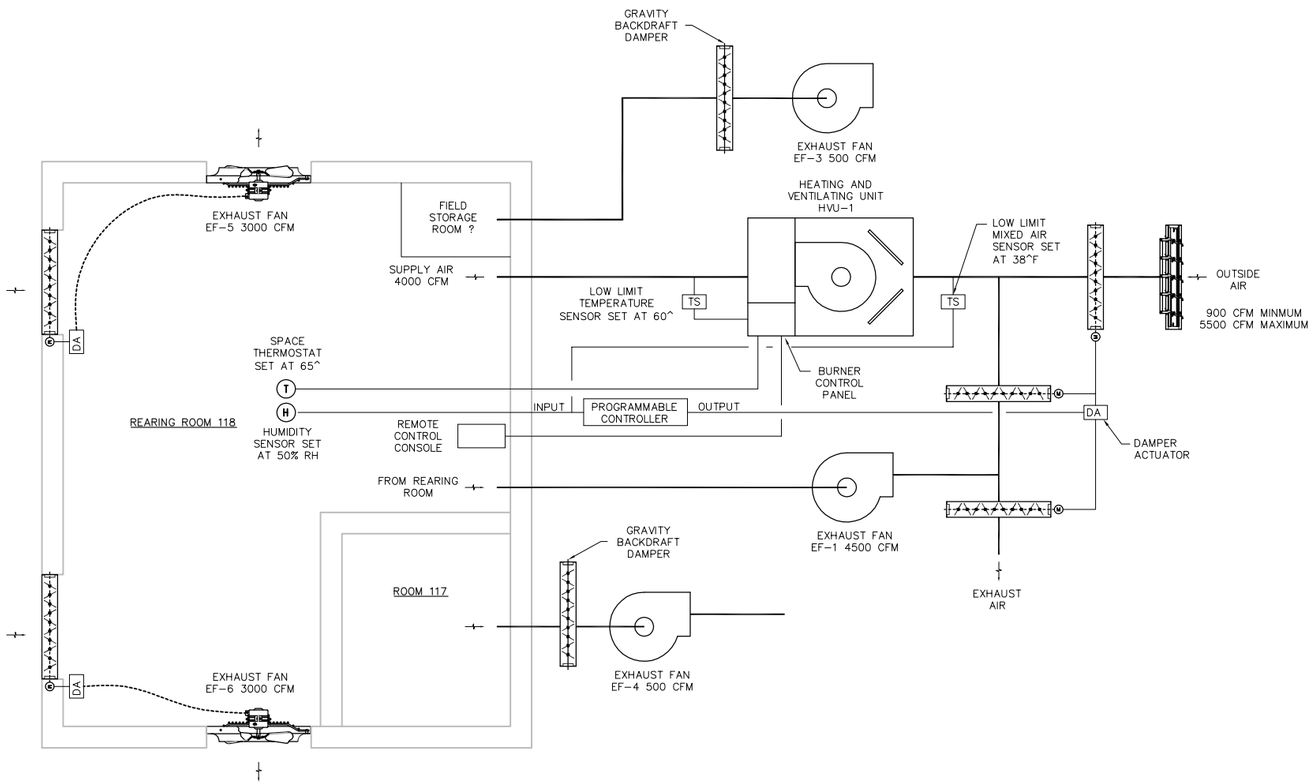

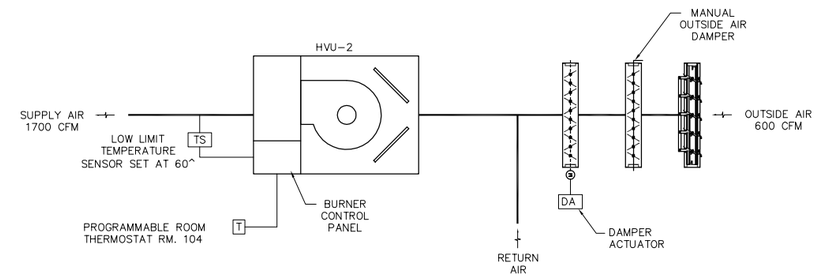

DESIGN CONDITIONS

REARING ROOM
INSIDE (WINTER): 65 DEGREES F. AND 50% RH OUTSIDE (WINTER): MINUS 7 DEGREES F. CFM DESIGN OUTSIDE CONDITIONS: 38 DEGREES F. 80% RH WATER EVAPORATION RATE: 30 POUNDS PER HOUR. VENTILATION RATE IS DRIVEN BY SPACE HUMIDITY.
OFFICE AREA
INSIDE (WINTER): 70 DEGREES F.
OUTSIDE (WINTER): MINUS 7 DEGREES F. VENTILATION RATES COMPLY WITH ASHRAE 62-1981

HVU-1 SYSTEM SCHEMATIC

SCALE: NONE

SEQUENCE OF OPERATION

A 2-STAGE WALL MOUNTED HUMIDITY SENSOR, ACTING THROUGH THE PROGRAMMABLE CONTROLLER, SHALL MODULATE THE OUTSIDE AIR AND RETURN AIR DAMPERS TO MAINTAIN SPACE RELATIVE HUMIDITY SETPOINT (50%). THE OUTSIDE AIR DAMPER SHALL BE CLOSED AND THE RETURN AIR DAMPER SHALL BE OPEN WHENEVER HVU-1 IS OFF. MINIMUM MIXED AIR TEMPERATURE TO BE LIMITED TO 30°F.

THE LOW LIMIT TEMPERATURE SENSOR SHALL CYCLE THE FURNACE TO MAINTAIN 65 DEGREES F. DISCHARGE AIR TEMPERATURE.

A WALL MOUNTED THERMOSTAT SHALL OVERRIDE THE HEATING AND VENTILATING UNIT FURNACES (2 STAGES + MODULATION) TO MAINTAIN SPACE TEMPERATURE SETPOINT (65 DEGREES F.).

PROVIDE ELECTRICAL INTERLOCK BETWEEN HVU-1, EF-1 AND EF-3 & EF-4 FAN STARTERS SO THAT ALL FANS RUN WHENEVER HVU-1 FAN IS RUNNING.

PROVIDE ELECTRICAL INTERLOCK BETWEEN EF-5, FE-6 AND CONTROL DAMPERS CONNECTED TO THE 32x60 LOUVERS SO THAT BOTH CONTROL DAMPERS OPEN WHEN EITHER OR BOTH FANS ARE RUNNING.

DESIGN CONDITIONS

A TWO-STAGE, ELECTRONIC, 7-DAY, PROGRAMMABLE THERMOSTAT SHALL CYCLE THE HEATING AND VENTILATING UNIT FURNACE TO MAINTAIN SPACE TEMPERATURE SETPOINT.

PROVIDE ELECTRICAL INTERLOCK BETWEEN HVU-2, AND EF-8 SO THAT IT RUNS WHENEVER HVU-2 FAN IS RUNNING.

THE LOW LIMIT TEMPERATURE SENSOR SHALL CYCLE THE FURNACE TO MAINTAIN 65 DEGREES F. DISCHARGE AIR TEMPERATURE.

HVU-2 SYSTEM SCHEMATIC

NONE

LICENSED PROFESSIONAL ENGINEER No. 291696 MICHAEL L. WISDOM STATE OF UTAH

JOB #05002
Engineering Incorporatec
2222 Broadway, Boise, Idaho 83706
(208)343-3663 FAX (208)343-9625

REV	DATE	BY	DESCRIPTION
R	3/07	MRW	RECORD DRAWING

SCALE

WARNING
0 1/2 1
IF THIS BAR DOES NOT MEASURE 1" THEN DRAWING IS NOT TO SCALE

DESIGNED KT
DRAWN WB
CHECKED MW

RECORD DRAWING
This record drawing has been prepared, entirely or in part on the basis of unverified information compiled and furnished by others to the preparer who is not responsible for any inaccuracies, errors or omissions which may have been incorporated into the document as a result

MWH

UTAH DIVISION OF WILDLIFE RESOURCES
WHITEROCKS STATE FISH HATCHERY

HATCHERY AND OPERATIONS BUILDING
MECHANICAL COVER SHEET

SHEET
M-9

Job No: 1690703

12/10/07 - 9:15 am Q:\Whiterocks FH\Design\Record Drawings\hvac\M9.dwg

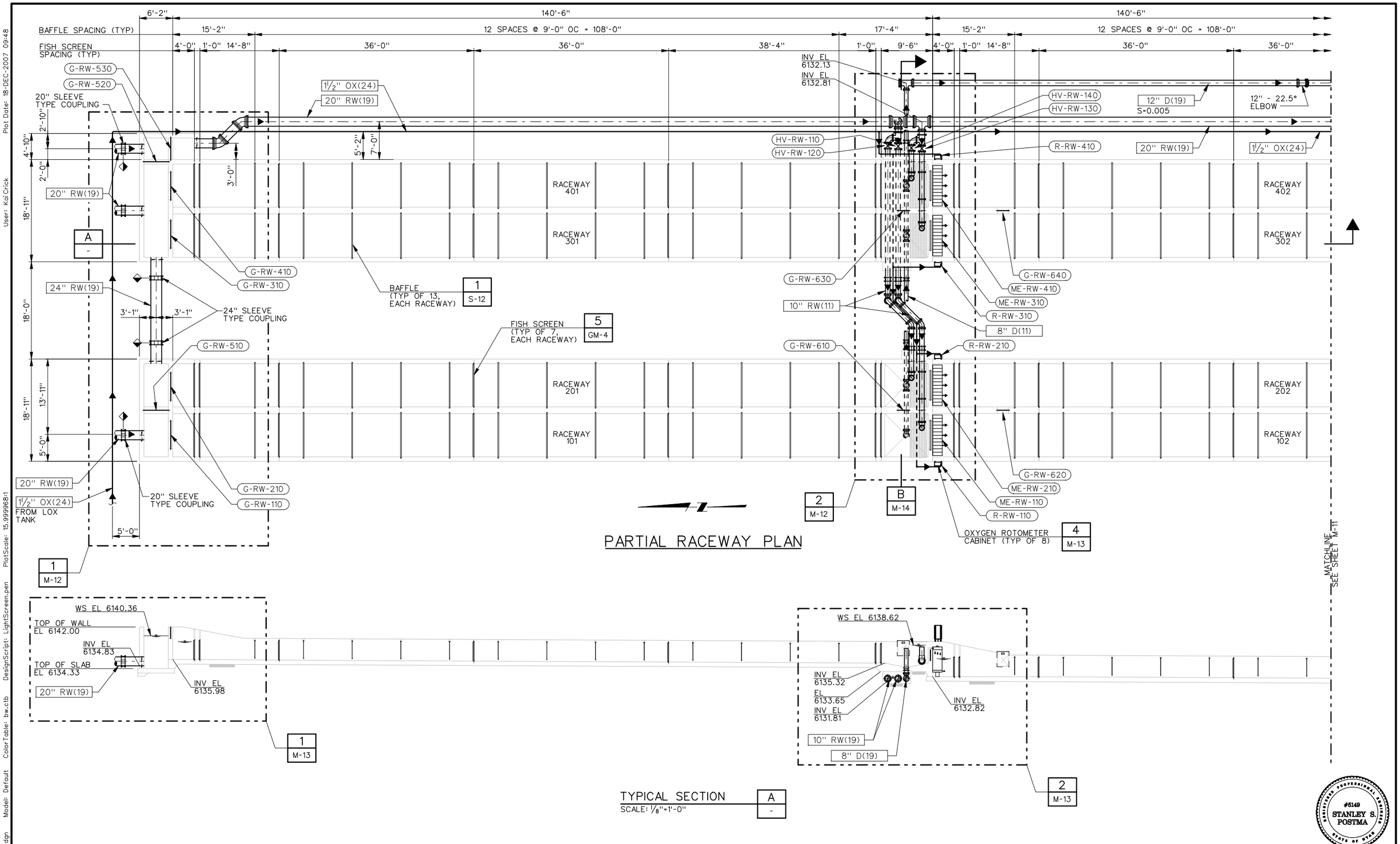

REV	DATE	BY	DESCRIPTION
R	3/07	MRW	RECORD DRAWING

SCALE ⅛"=1'-0"

WARNING: 0 ½ 1 — IF THIS BAR DOES NOT MEASURE 1" THEN DRAWING IS NOT TO SCALE

DESIGNED D. BARBEAU
DRAWN R. WALN
CHECKED S. POSTMA

RECORD DRAWING

This record drawing has been prepared, entirely or in part on the basis of unverified information compiled and furnished by others to the preparer who is not responsible for any inaccuracies, errors or omissions which may have been incorporated into the document as a result

MWH

UTAH DIVISION OF WILDLIFE RESOURCES
WHITEROCKS STATE FISH HATCHERY

PARTIAL RACEWAY PLAN AND TYPICAL SECTION - 1

SHEET M-10

1690703

File: wrfhm10-RD.dgn Model: Default ColorTable: bw.ctb DesignScript: LightScreen.pen PlotScale: 15.999968:1 User: KaiCrick Plot Date: 18-DEC-2007 09:48

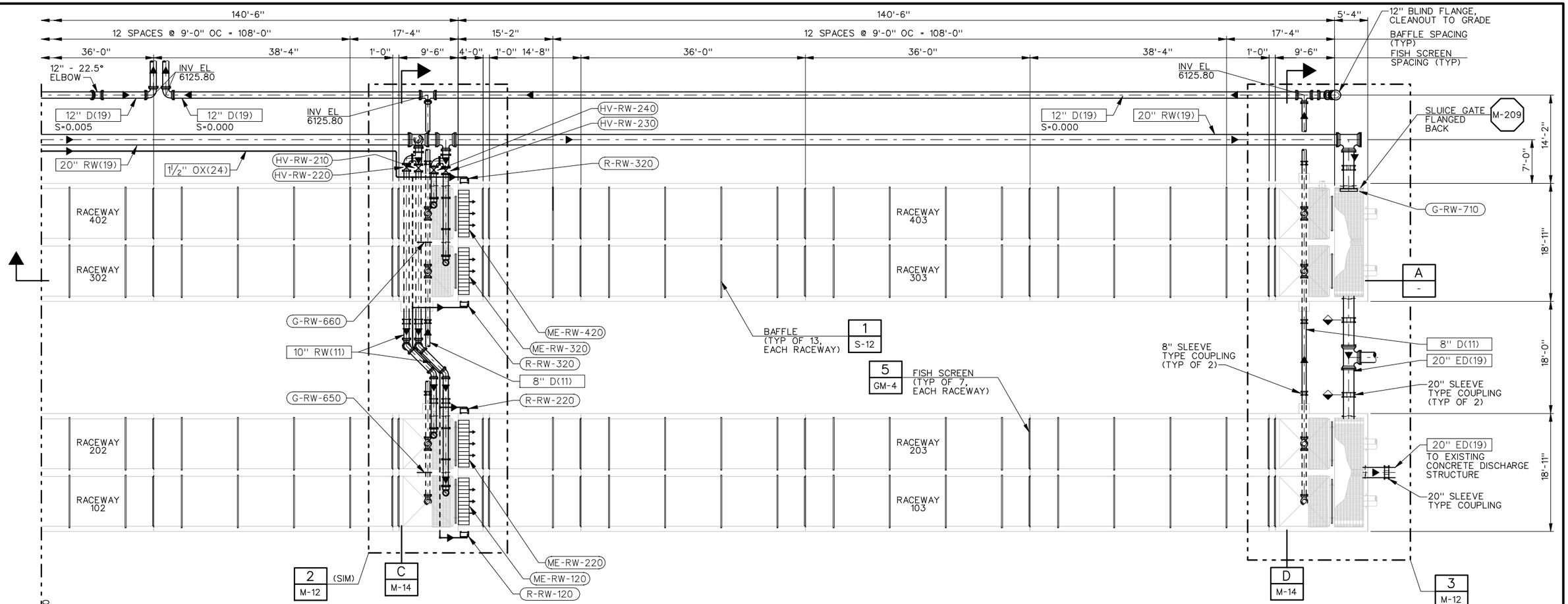

PARTIAL RACEWAY PLAN

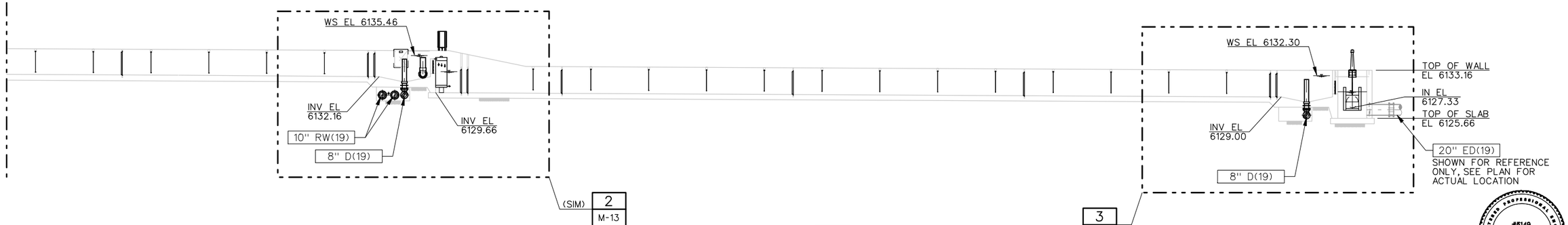

TYPICAL SECTION A
SCALE: 1/8"=1'-0"

REGISTERED PROFESSIONAL ENGINEER #5149 STANLEY S. POSTMA STATE OF UTAH

REV	DATE	BY	DESCRIPTION
R	3/07	MRW	RECORD DRAWING

SCALE 1/8"=1'-0"

WARNING 0 ½ 1 IF THIS BAR DOES NOT MEASURE 1" THEN DRAWING IS NOT TO SCALE

DESIGNED D. BARBEAU
DRAWN R. WALN
CHECKED S. POSTMA

RECORD DRAWING
This record drawing has been prepared, entirely or in part on the basis of unverified information compiled and furnished by others to the preparer who is not responsible for any inaccuracies, errors or omissions which may have been incorporated into the document as a result

MWH

UTAH DIVISION OF WILDLIFE RESOURCES
WHITEROCKS STATE FISH HATCHERY

PARTIAL RACEWAY PLAN AND TYPICAL SECTION - 2

SHEET M-11
1690703

File: wrfhm11-RD.dgn Model: Default ColorTable: bw.ctb DesignScript: LightScreen.pen PlotScale: 15.999968:1 User: KaiCrick Plot Date: 18-DEC-2007 09:49

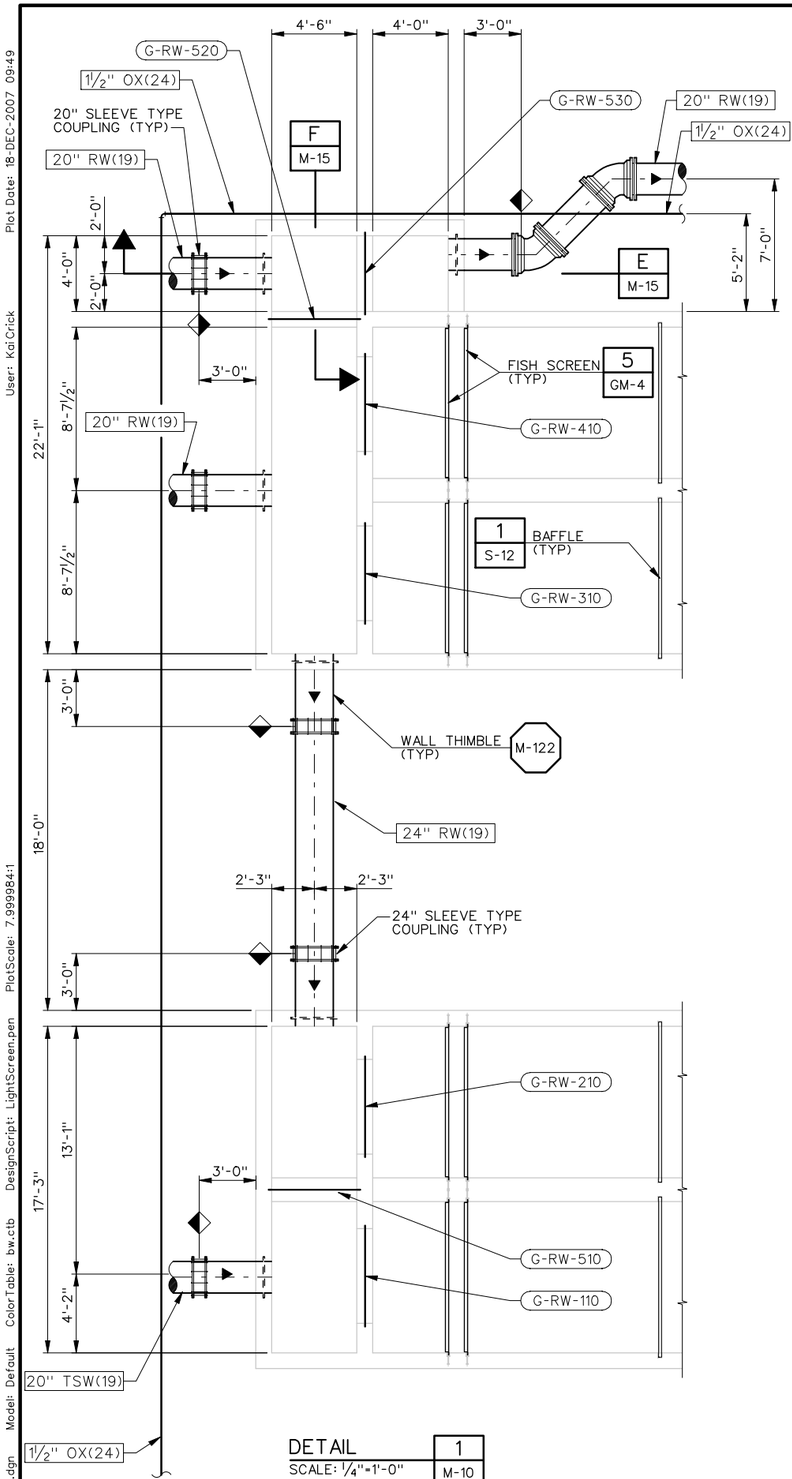

DETAIL 1 / M-10
SCALE: ¼"=1'-0"

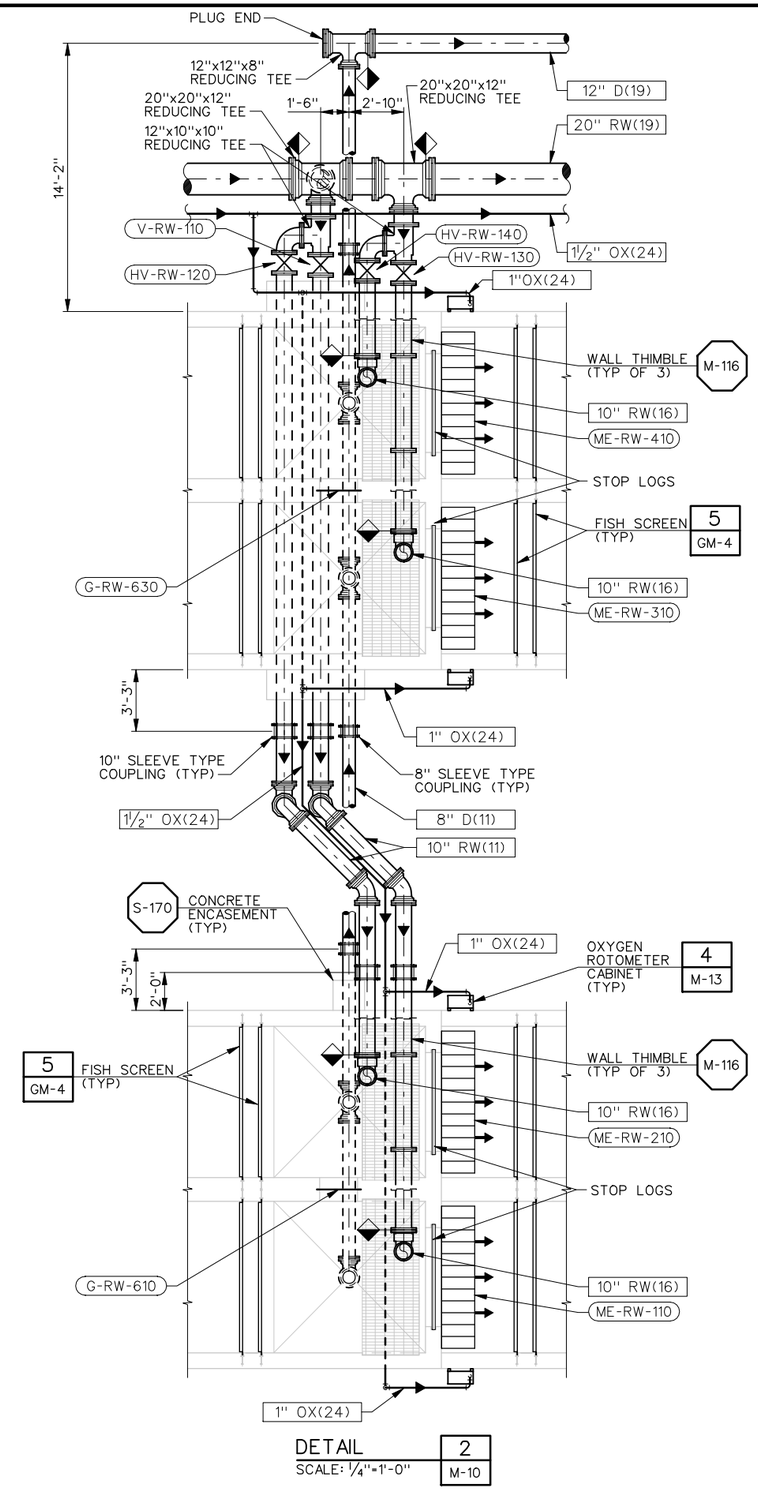

DETAIL 2 / M-10
SCALE: ¼"=1'-0"

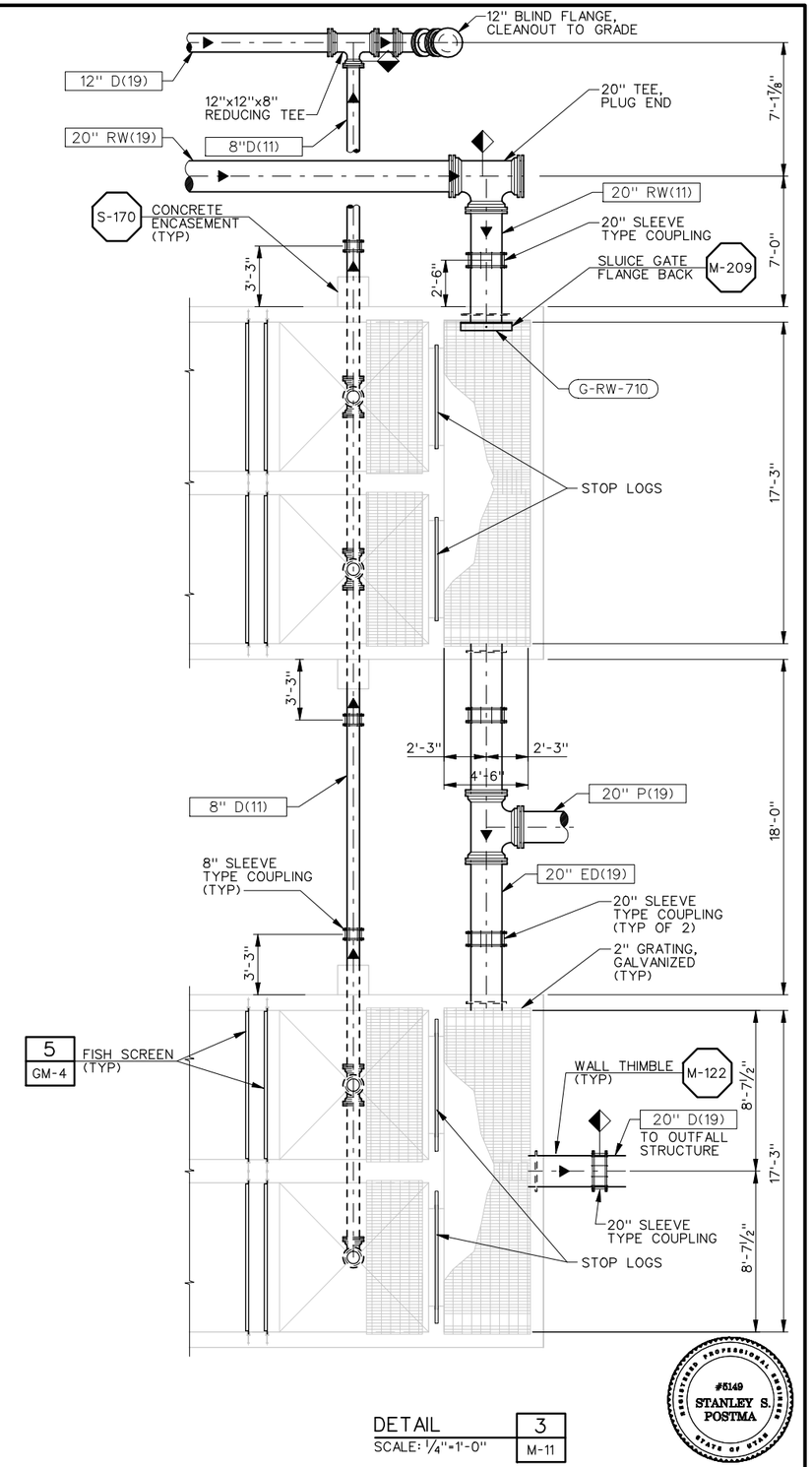

DETAIL 3 / M-11
SCALE: ¼"=1'-0"

REGISTERED PROFESSIONAL ENGINEER #5149 STANLEY S. POSTMA STATE OF UTAH

REV	DATE	BY	DESCRIPTION
R	3/07	MRW	RECORD DRAWING

SCALE: ¼"=1'-0"

WARNING: 0 ½ 1 — IF THIS BAR DOES NOT MEASURE 1" THEN DRAWING IS NOT TO SCALE

DESIGNED D. BARBEAU
DRAWN R. WALN
CHECKED S. POSTMA

RECORD DRAWING

This record drawing has been prepared, entirely or in part on the basis of unverified information compiled and furnished by others to the preparer who is not responsible for any inaccuracies, errors or omissions which may have been incorporated into the document as a result

MWH

UTAH DIVISION OF WILDLIFE RESOURCES
WHITEROCKS STATE FISH HATCHERY

RACEWAY DETAILS - 1

SHEET M-12
1690703

File: wrfhm12-RD.dgn Model: Default ColorTable: bw.ctb DesignScript: LightScreen.pen PlotScale: 7.999984:1 User: KaiCrick Plot Date: 18-DEC-2007 09:49

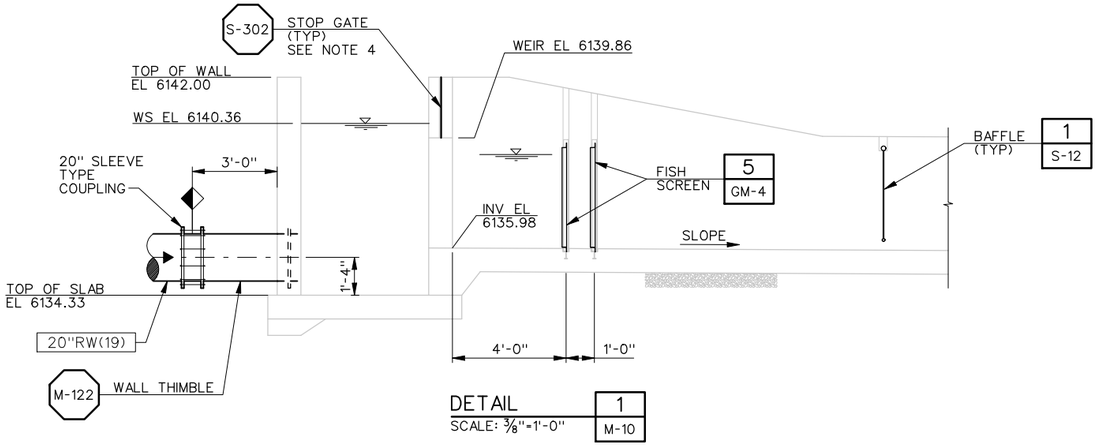

DETAIL 1 (M-10)
SCALE: 3/8"=1'-0"

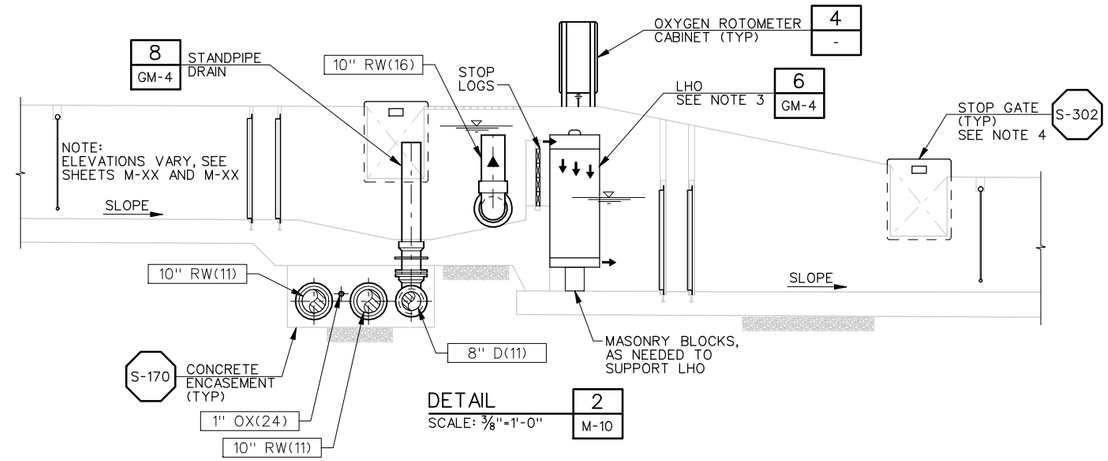

DETAIL 2 (M-10)
SCALE: 3/8"=1'-0"

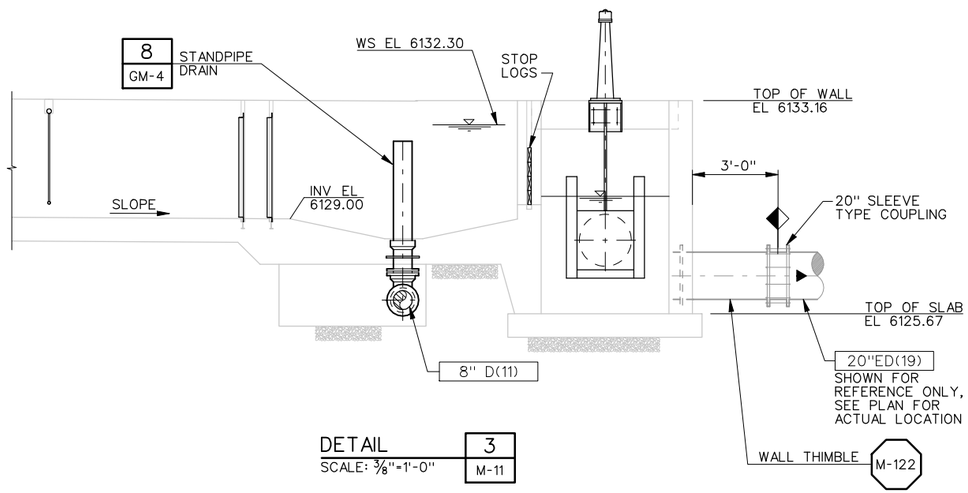

DETAIL 3 (M-11)
SCALE: 3/8"=1'-0"

RACEWAY NOTES:

1. REFER TO SHEETS C-10 AND C-11 FOR FINISHED GRADE INFORMATION.
2. YARD PIPING OUTSIDE RACEWAYS TO BE BURIED WITH 36" MINIMUM COVER TO TOP OF PIPE, UNLESS OTHERWISE SHOWN.
3. TYPICAL OF 8 LOW HEAD OXYGENATORS (LHO), SEE MECHANICAL EQUIPMENT SCHEDULE ON SHEET GM-1.
4. TYPICAL OF 13 STOP GATES, SEE DETAIL S-302, SHEET GS-6.

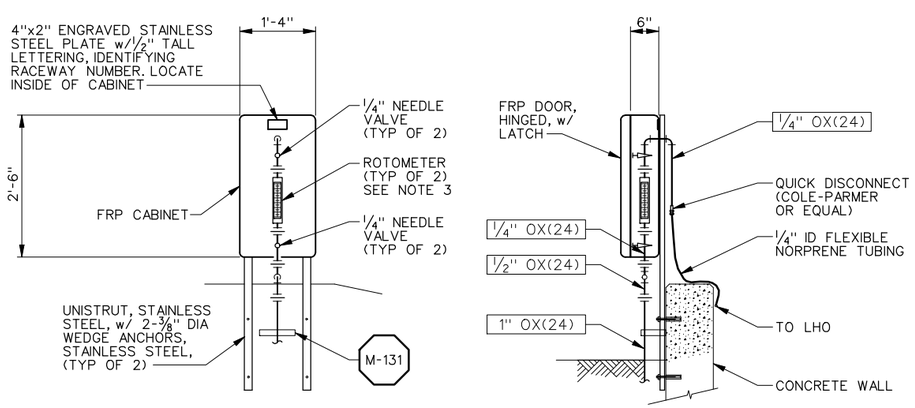

OXYGEN ROTOMETER CABINET DETAIL 4 (VAR)
SCALE: 3/4"=1'-0"

ROTOMETER NOTES:

1. MOUNT ROTOMETER CABINET LEVEL AS SHOWN. MOUNTING SHALL ALLOW CABINET TO BE REMOVABLE.
2. ROUTE 1/4" ID FLEXIBLE NORPRENE TUBING ALONG INSIDE FACE OF WALL OF RACEWAY, AS NECESSARY, TO CONNECT TO THE LHO UNITS.
3. FOR SINGLE ROTOMETER APLICATIONS ENCLOSURE SIZE MAY BE REDUCED. MOUNT PER MANUFACTURER'S RECOMMENDATIONS.
4. MOUNTING METHOD AS SHOWN FOR RACEWAYS, MAY VARY FOR OTHER AREAS.

REGISTERED PROFESSIONAL ENGINEER #5149 STANLEY S. POSTMA STATE OF UTAH

REV	DATE	BY	DESCRIPTION
R	3/07	MRW	RECORD DRAWING

SCALE: AS SHOWN

WARNING: 0 1/2 1 — IF THIS BAR DOES NOT MEASURE 1" THEN DRAWING IS NOT TO SCALE

DESIGNED D. BARBEAU
DRAWN R. WALN
CHECKED S. POSTMA

RECORD DRAWING

This record drawing has been prepared, entirely or in part on the basis of unverified information compiled and furnished by others to the preparer who is not responsible for any inaccuracies, errors or omissions which may have been incorporated into the document as a result

MWH

UTAH DIVISION OF WILDLIFE RESOURCES
WHITEROCKS STATE FISH HATCHERY

RACEWAY DETAILS - 2

SHEET M-13
1690703

File: wrfhm13-RD.dgn Model: Default ColorTable: bw.ctb DesignScript: LightScreen.pen PlotScale: 5.333323:1 User: KaiCrick Plot Date: 18-DEC-2007 09:49

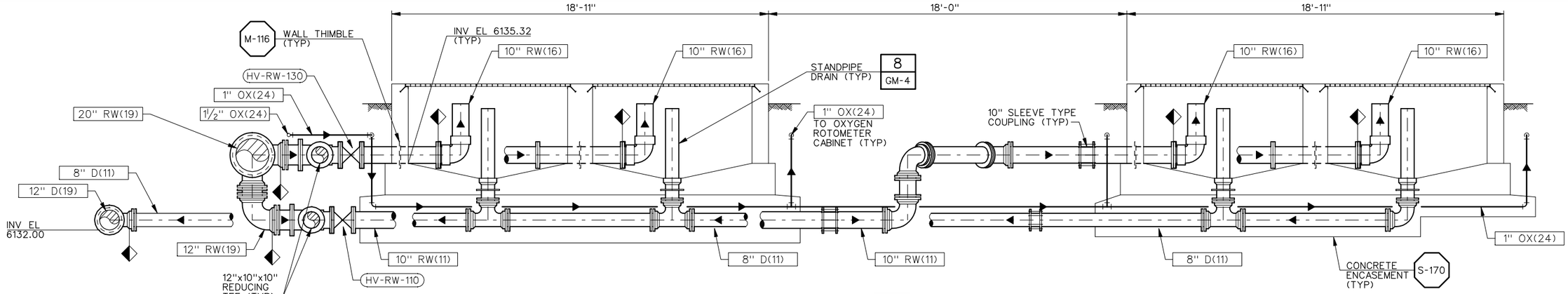

SECTION B
SCALE: 3/8"=1'-0"
M-10

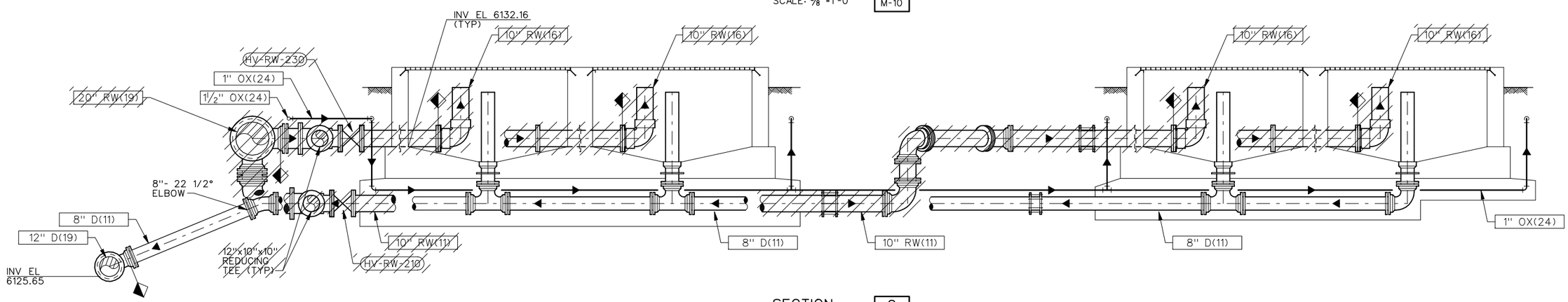

SECTION C
SCALE: 3/8"=1'-0"
M-11

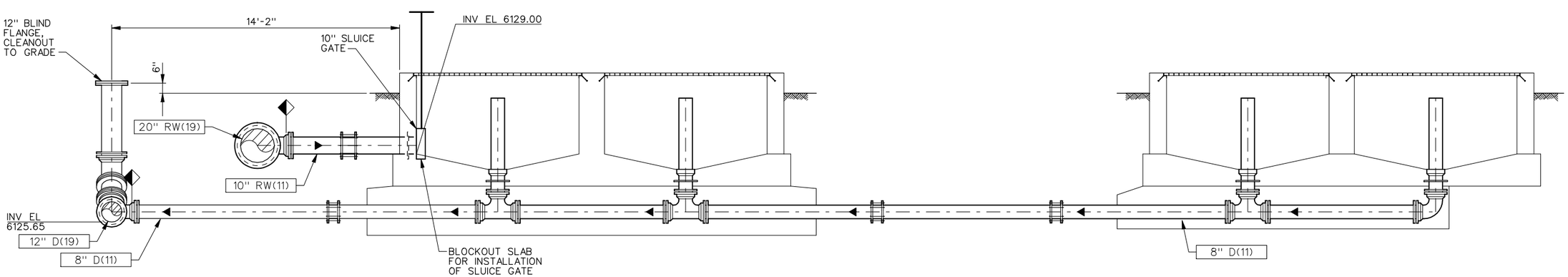

SECTION D
SCALE: 3/8"=1'-0"
M-11

REV	DATE	BY	DESCRIPTION
R	3/07	MRW	RECORD DRAWING

SCALE 3/8"=1'-0"

WARNING 0 ½ 1 IF THIS BAR DOES NOT MEASURE 1" THEN DRAWING IS NOT TO SCALE

DESIGNED D. BARBEAU
DRAWN R. WALN
CHECKED S. POSTMA

RECORD DRAWING

This record drawing has been prepared, entirely or in part on the basis of unverified information compiled and furnished by others to the preparer who is not responsible for any inaccuracies, errors or omissions which may have been incorporated into the document as a result

MWH

UTAH DIVISION OF WILDLIFE RESOURCES
WHITEROCKS STATE FISH HATCHERY

RACEWAY SECTIONS - 1

SHEET M-14

1690703

File: wrfhm14-RD.dgn Model: Default ColorTable: bw.ctb DesignScript: LightScreen.pen PlotScale: 5.3333323:1 User: KaiCrick Plot Date: 18-DEC-2007 09:49

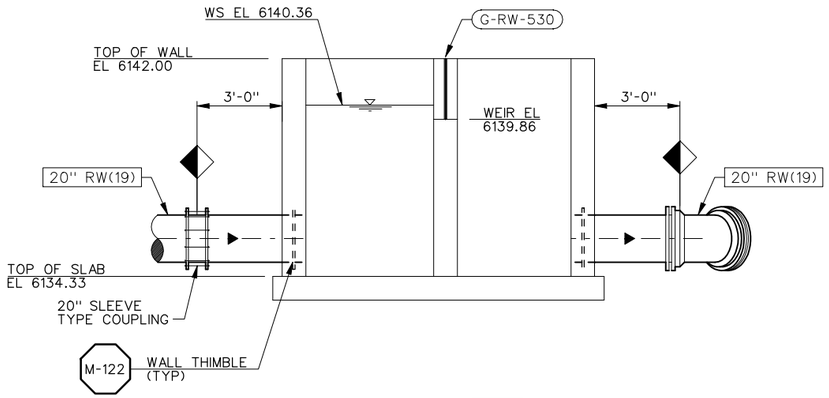

SECTION E
SCALE: 3/8"=1'-0"
M-12

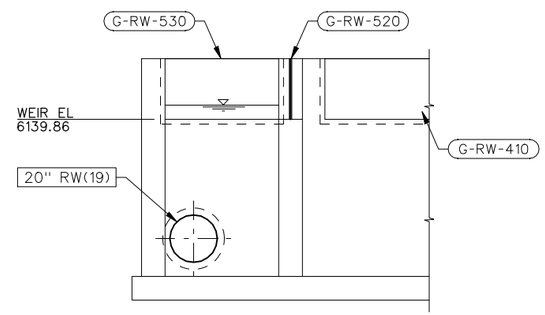

SECTION F
SCALE: 3/8"=1'-0"
M-12

REGISTERED PROFESSIONAL ENGINEER #5149 STANLEY S. POSTMA STATE OF UTAH

REV	DATE	BY	DESCRIPTION
R	3/07	MRW	RECORD DRAWING

SCALE: 3/8"=1'-0"

WARNING: 0 1/2 1 — IF THIS BAR DOES NOT MEASURE 1" THEN DRAWING IS NOT TO SCALE

DESIGNED D. BARBEAU
DRAWN R. WALN
CHECKED S. POSTMA

RECORD DRAWING

This record drawing has been prepared, entirely or in part on the basis of unverified information compiled and furnished by others to the preparer who is not responsible for any inaccuracies, errors or omissions which may have been incorporated into the document as a result

MWH

UTAH DIVISION OF WILDLIFE RESOURCES
WHITEROCKS STATE FISH HATCHERY

RACEWAY SECTIONS - 2

SHEET
M-15
1690703

File: wrfhm15-RD.dgn Model: Default ColorTable: bw.ctb DesignScript: LightScreen.pen PlotScale: 5.333323:1 User: KaiCrick Plot Date: 18-DEC-2007 09:49

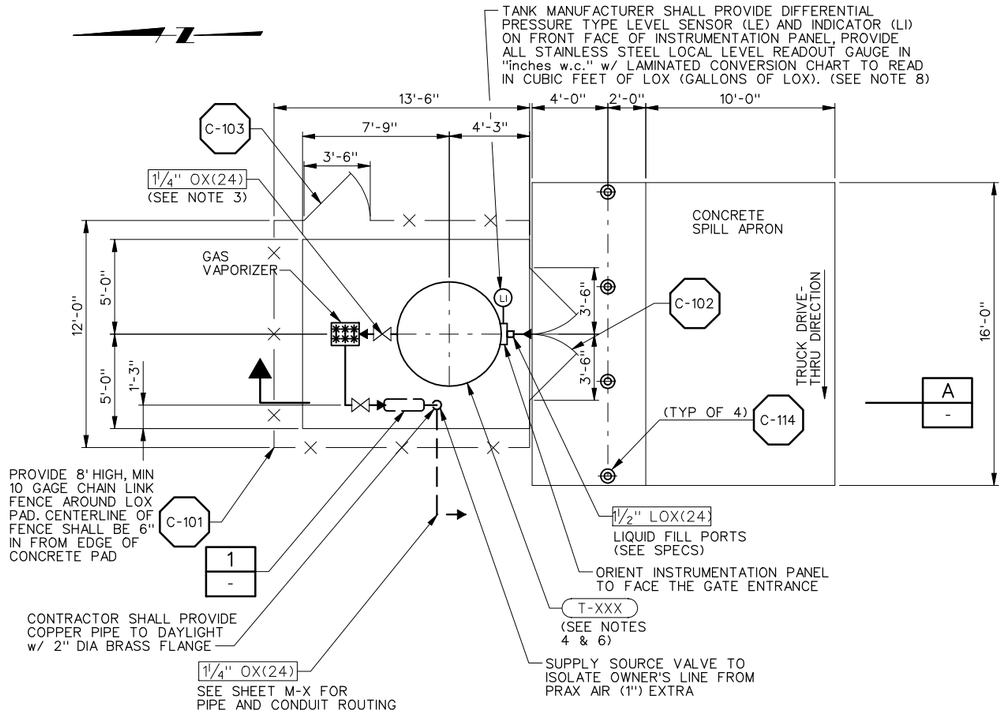

BULK LOX TANK - PLAN

SCALE: ¼"=1'-0"

GENERAL NOTES:

1. THIS UNIT MAY BE LEASED FROM LOX SUPPLIER. SUPPLIER SHALL BE RESPONSIBLE FOR MEETING ALL REQUIREMENTS SPECIFIED HEREIN AND ALL APPROPRIATE CODES.

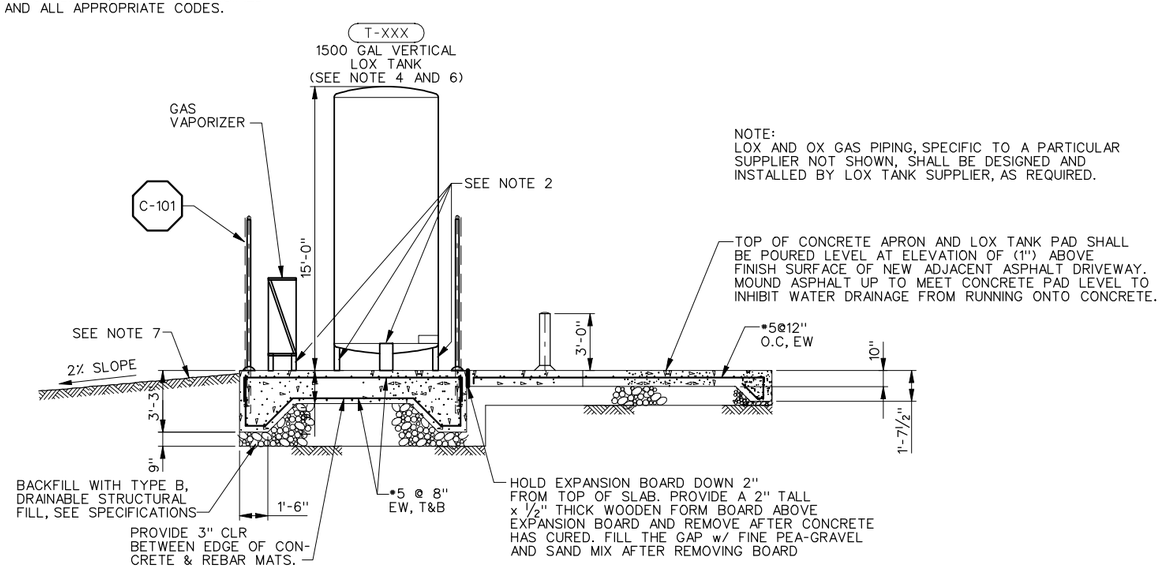

SECTION A

SCALE: ¼"=1'-0"

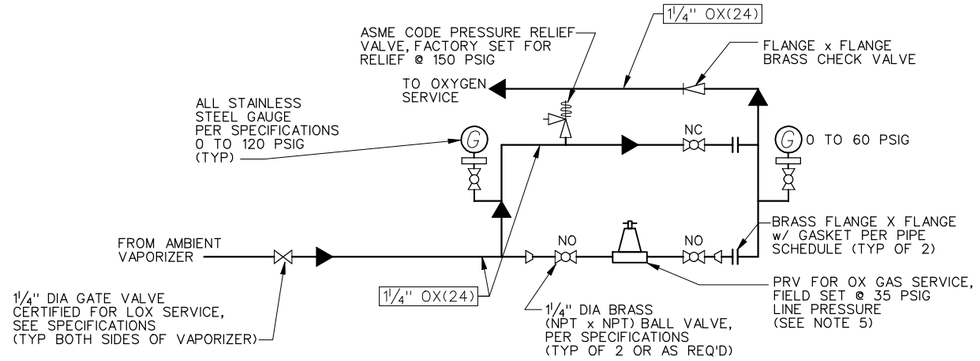

PRV/BYPASS HEADER ASSEMBLY

NOT TO SCALE

1 / -

NOTES TO CONTRACTOR & LOX TANK SUPPLIER:

1. CONTRACTOR SHALL BE RESPONSIBLE FOR CONSTRUCTION AND INSTALLATION OF COMPLETE LIQUID OXYGEN BULK STORAGE FACILITY AS DEPICTED ON THIS DRAWING AND PER SPECIFICATIONS.
2. ALL LOX TANK FEET AND VAPORIZER FEET SHALL BE ANCHORED TO THE CONCRETE SLAB FOR MINIMUM UBC SEISMIC ZONE 1 AND BOCA CODE CONDITIONS, AS LOCALLY APPLICABLE. CONTRACTOR SHALL PROVIDE ANCHORING SYSTEM DESIGN AND CALCULATIONS OF LOX TANK BY A LICENSED PROFESSIONAL ENGINEER. ALL ANCHOR BOLTS, NUTS, & WASHERS SHALL BE 304SST AND MEET, AT A MINIMUM, ASTM A-307. COAT EXPOSED FERROUS METAL SURFACES WITH TANK MANUFACTURER'S RECOMMENDED ALUMINUM PAINT OR APPROVED EQUAL.
3. SCHEMATIC PIPING: ANY VARIATIONS IN PIPING LAYOUT AND SUPPORTS SHALL BE SUBMITTED TO THE ENGINEER FOR APPROVAL. ALL COPPER PIPING SHOULD BE LOCATED APPROXIMATELY 1.5" TO 3" ABOVE THE CONCRETE UNLESS OTHERWISE SHOWN. ALL OXYGEN GAS PIPING IN LOX TANK & VAPORIZER AREA SHALL BE TYPE K HARD COPPER, "CLEANED FOR OXYGEN SERVICE", AND INSTALLED WITH 304SST UNISTRUT PIPE SUPPORTS, AS REQUIRED.
4. LOX TANK SUPPLIER SHALL PROVIDE LOX TANK WITH AMBIENT VAPORIZER AND WITH ALL INSTRUMENTATION SHOWN AND PER SPECIFICATIONS. ALL GAGES, METERS AND INSTRUMENTATION CONTROL PANEL SHALL BE SUITABLE FOR OUTDOOR USE AND MOUNTED BY LOX TANK SUPPLIER BETWEEN 4' AND 6' ABOVE FINISHED SLAB. INSTRUMENTATION CONTROL PANEL TO HAVE NEMA 4X RATING.
5. PRV SHALL BE OF BRASS BODY CONSTRUCTION WITH FLANGED ENDS, OXYGEN CLEANED, AND SUITABLE FOR OXYGEN GAS, BUBBLE-TIGHT, SERVICE. EACH PRV SHALL BE CAPABLE OF PASSING A MINIMUM OF 10 SCFM WITH A TANK PRESSURE OF 80 PSIG AND A LINE SET PRESSURE OF 35 PSIG.
6. LOX TANK SHALL, AT A MINIMUM, INCLUDE DOUBLE WALL CONSTRUCTION WITH PERLITE PACKING IN ANNULAR SPACE. UNDER MOST SEVERE OPERATING CONDITIONS, THE TANK BOIL-OFF RATE SHALL NOT EXCEED 0.5% OF TANK LIQUID CAPACITY PER DAY. SUPPLIER SHALL PROVIDE ECONOMIZER SYSTEM IN TANK WITH PRESSURE BUILDING SYSTEM TO MAINTAIN A MINIMUM OF 75 PSIG TANK PRESSURE. BOIL-OFF / VENT LINE TO ATMOSPHERE SHALL HAVE A GAS VOLUMETRIC TOTALIZER, CUBIC FEET PER MINUTE (CFM), INSTALLED BY LOX SUPPLIER FOR VERIFICATION OF ACTUAL TANK BOIL-OFF RATES. ALL LIQUID VALVES SHALL HAVE EXTENDED STEMS AND THE SUPPLIER SHALL HAVE FULL RESPONSIBILITY FOR SUPPLYING ALL SAFETY AND HAZARDOUS MATERIAL SIGNS ON THE FENCING, TANK, AND VAPORIZERS.
7. TANK FOUNDATION SHALL BE CONSTRUCTED SUCH THAT DRAINAGE AWAY FROM THE FOUNDATION IS ASSURED. CONCRETE SUBGRADE BACKFILL SHALL HAVE COMPACTION TO SPECIFICATION REQUIREMENTS. BEARING CAPACITY SHALL BE TESTED PER SPECIFICATIONS AND SHALL BE A MINIMUM OF 3,000 PSF.
8. FIELD ROUTE OXYGEN GAS COPPER LINE FROM LOX TANK TO POINTS OF USE, SEE SHEET C-13, WITH MINIMUM BURIAL DEPTH OF 36". COPPER LINE TO BE BEDDED AND BACKFILLED IN PIPE ZONE WITH APPROVED BACKFILL MATERIAL PER SPECIFICATION SECTION 02200. PROVIDE BACKFILL UP TO A LEVEL OF 6" ABOVE THE TOP OF THE PIPE AND PROPERLY COMPACT. CONTRACTOR TO THEN PROVIDE A NON-REINFORCED CONCRETE PROTECTION SLAB ALONG THE ENTIRE LENGTH OF THE TRENCH TO THE OZONE BUILDING (MINIMUM 18" WIDE BY MINIMUM OF 6" THICK). THIS CONCRETE IS NOT TO BE POURED UNTIL AFTER SUCCESSFUL PRESSURE TESTING AND CLEANING OF BURIED OXYGEN GAS LINE. ABOVE THE CONCRETE SLAB, CONTRACTOR TO PROVIDE 2" WIDE PLASTIC YELLOW WARNING TAPE LABELED " DANGER - OXYGEN GAS" FOR BURIAL IN THE TRENCH.
9. BULK LOX TANK AND VAPORIZER SHALL BE LEASED BY GOVERNMENT. BULK TANK MAY BE REPLACED BY 6 - 3500CF BOTTLES ON 3+3 AUTOSWITCHING MANIFOLD AT GOVERNMENT DIRECTION, AT TIME OF BID.
10. CONTRACTOR SHALL PROVIDE CONCRETE PAD, FENCING, ALL PRV'S AND PIPING AS SHOWN.
11. BULK TANK MAY BE ELIMINATED BY GOVERNMENT AND 3500 CF CRYOGENIC REPLACEABLE BOTTLES (6) WITH TRANSFER SWITCH SUBSTITUTED. SEE SPECIFICATION B IN DOCUMENTS.

REV	DATE	BY	DESCRIPTION
R	3/07	MRW	RECORD DRAWING

SCALE: AS SHOWN

WARNING: 0 ½ 1 — IF THIS BAR DOES NOT MEASURE 1" THEN DRAWING IS NOT TO SCALE

DESIGNED D. BARBEAU
DRAWN R. WALN
CHECKED S. POSTMA

RECORD DRAWING

This record drawing has been prepared, entirely or in part on the basis of unverified information compiled and furnished by others to the preparer who is not responsible for any inaccuracies, errors or omissions which may have been incorporated into the document as a result

MWH

UTAH DIVISION OF WILDLIFE RESOURCES

WHITEROCKS STATE FISH HATCHERY

LOX TANK PLAN, SECTION AND DETAIL

SHEET M-16

1690703

File: wrfhm16-RD.dgn Model: Default ColorTable: bw.ctb DesignScript: LightScreen.pen PlotScale: 7.999984:1 User: KaiCrick Plot Date: 18-DEC-2007 09:49

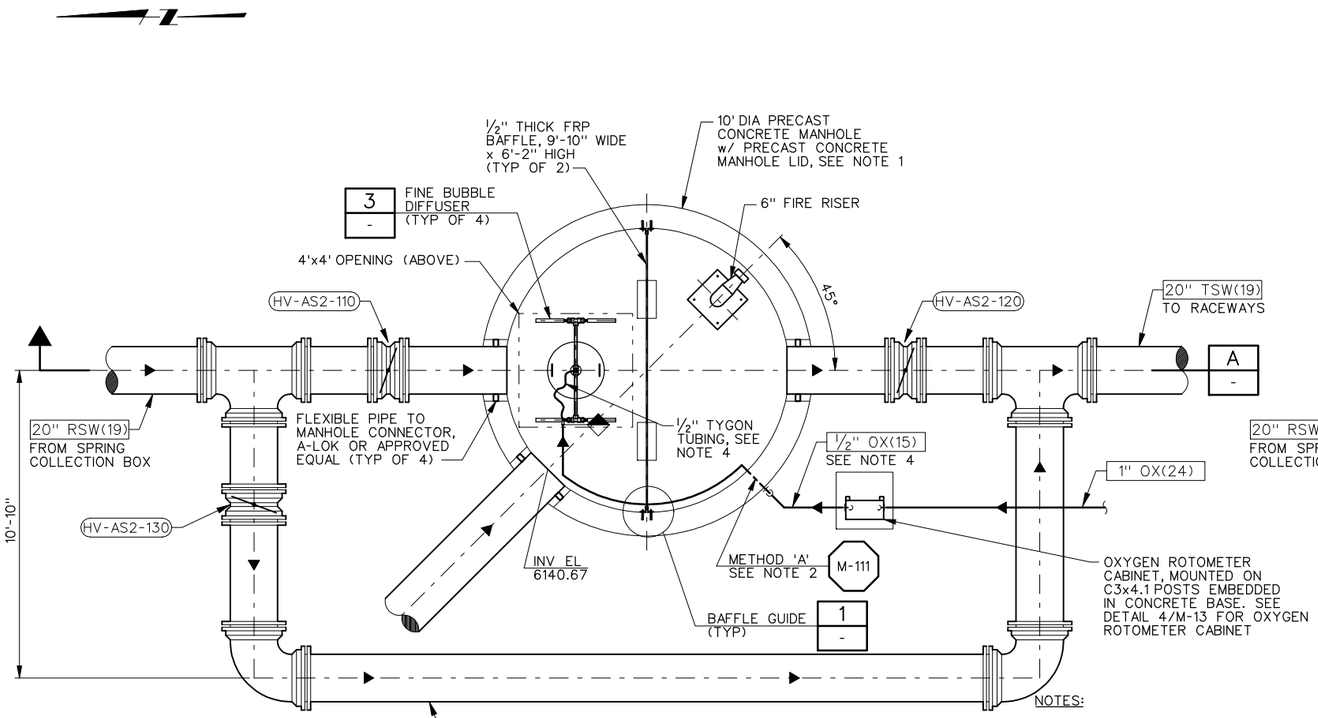

PLAN

SCALE: ⅜"=1'-0"

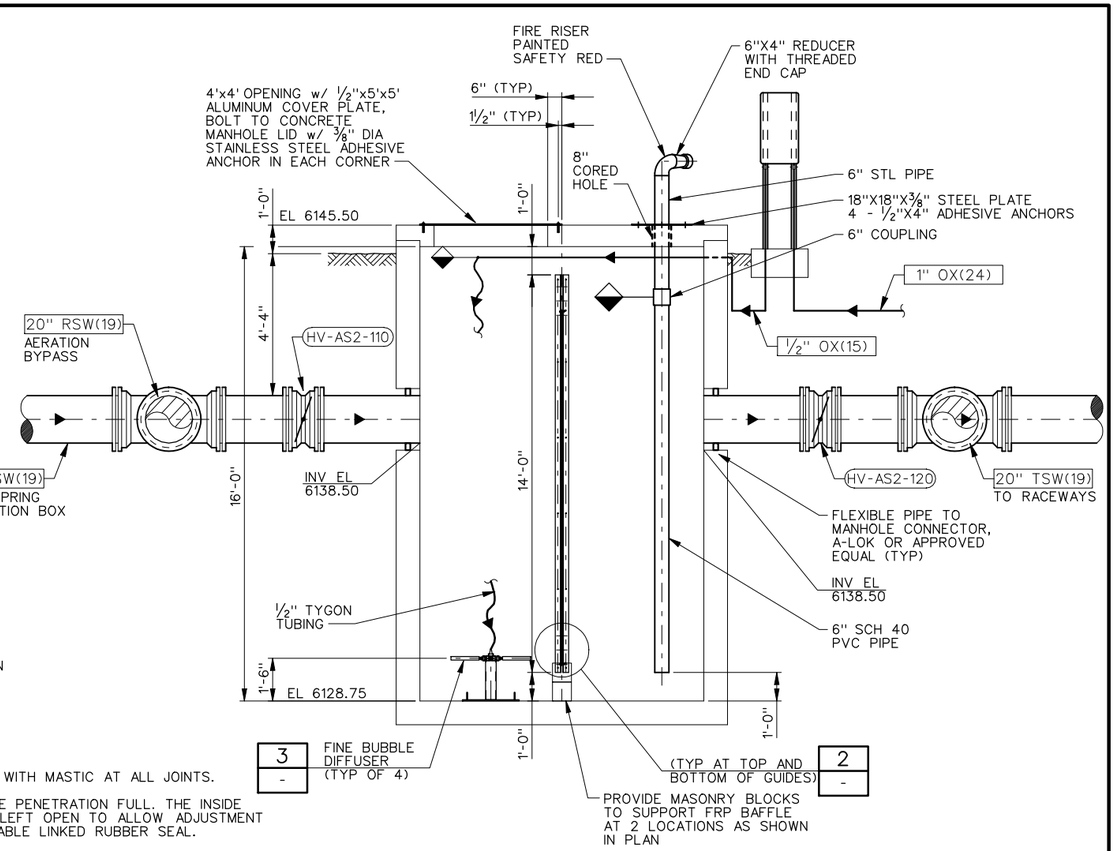

SECTION A

SCALE: ⅜"=1'-0"

NOTES:

1. THE MANHOLE SHALL BE SEALED WITH MASTIC AT ALL JOINTS.
2. GROUT THE OUTSIDE OF THE PIPE PENETRATION FULL. THE INSIDE OF THE PENETRATION SHALL BE LEFT OPEN TO ALLOW ADJUSTMENT AND TIGHTENING OF THE ADJUSTABLE LINKED RUBBER SEAL.
3. FRP BAFFLE SHALL REST ON TOP OF QUICK RELEASE PINS AT BOTTOM OF EACH SET OF GUIDE ANGLES. QUICK RELEASE PINS AT TOP SHALL HOLD THE BAFFLE IN PLACE. THE QUICK RELEASE PINS SHALL NOT PENETRATE THE FRP BAFFLE.
4. SUPPORT ½" OX(15) INSIDE MANHOLE AT 12" ON CENTER. PROVIDE A ½" FEMALE NPT x HOSE ADAPTER AND HOSE CLAMP, 316 STAINLESS STEEL, FOR CONNECTION TO TYGON TUBING.

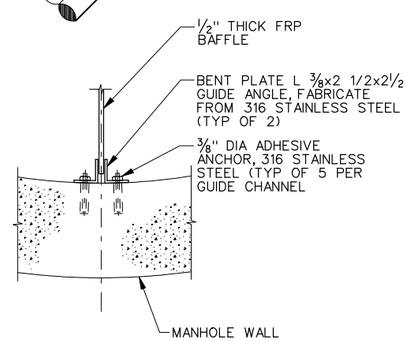

DETAIL 1

SCALE: 1½"=1'-0"

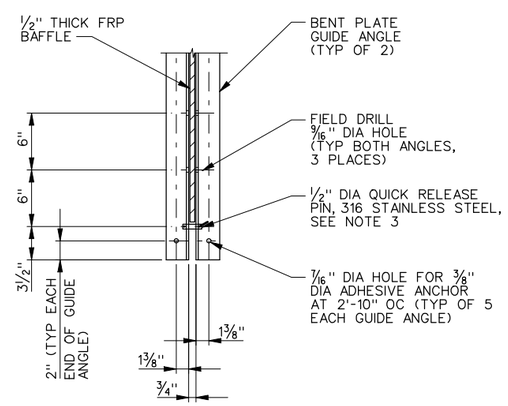

DETAIL 2

SCALE: 1½"=1'-0"

(SIMILAR AT TOP OF ANGLE GUIDES)

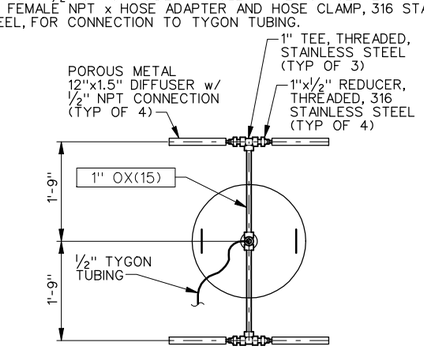

PLAN

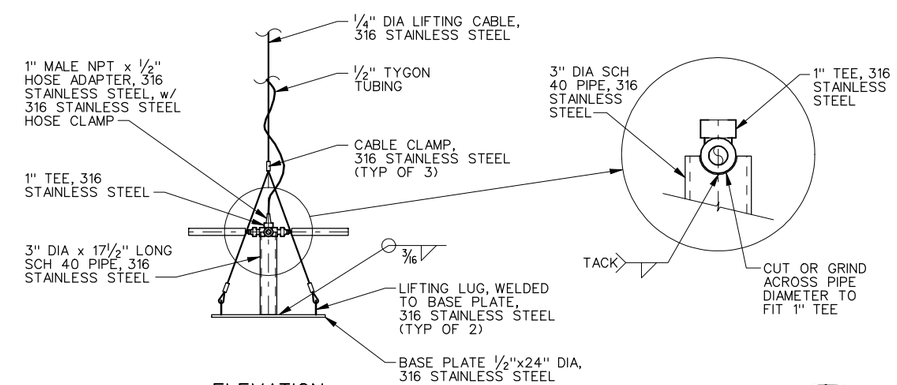

ELEVATION

DETAIL 3

SCALE: ¾"=1'-0"

REGISTERED PROFESSIONAL ENGINEER #5149 STANLEY S. POSTMA STATE OF UTAH

REV	DATE	BY	DESCRIPTION
R	3/07	MRW	RECORD DRAWING

SCALE: AS SHOWN

WARNING: 0 ½ 1 — IF THIS BAR DOES NOT MEASURE 1" THEN DRAWING IS NOT TO SCALE

DESIGNED E. CRYER
DRAWN R. WALN
CHECKED S. POSTMA

RECORD DRAWING

This record drawing has been prepared, entirely or in part on the basis of unverified information compiled and furnished by others to the preparer who is not responsible for any inaccuracies, errors or omissions which may have been incorporated into the document as a result

MWH

UTAH DIVISION OF WILDLIFE RESOURCES

WHITEROCKS STATE FISH HATCHERY

AERATION STRUCTURE NO. 2
PLANS, SECTION AND DETAILS

SHEET M-17

1690703

File: wrfhm17-RD.dgn Model: Default ColorTable: bw.ctb DesignScript: LightScreen.pen PlotScale: 5.3333323:1 User: KaiCrick Plot Date: 18-DEC-2007 09:49

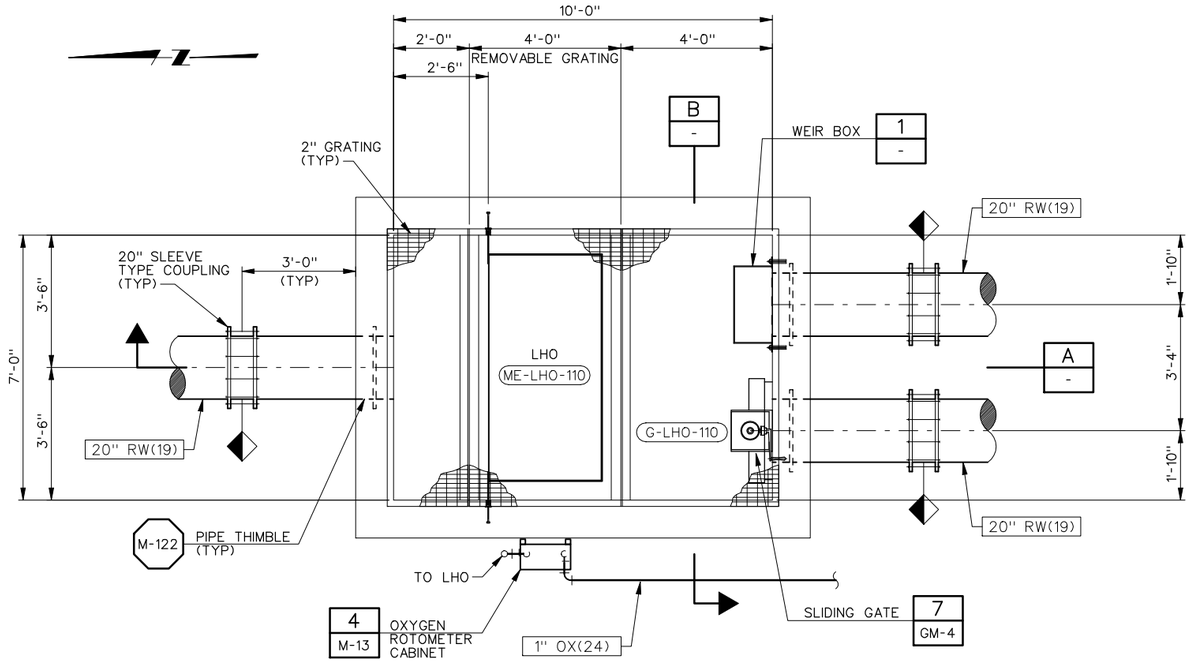

PLAN

SCALE: 1/2"=1'-0"

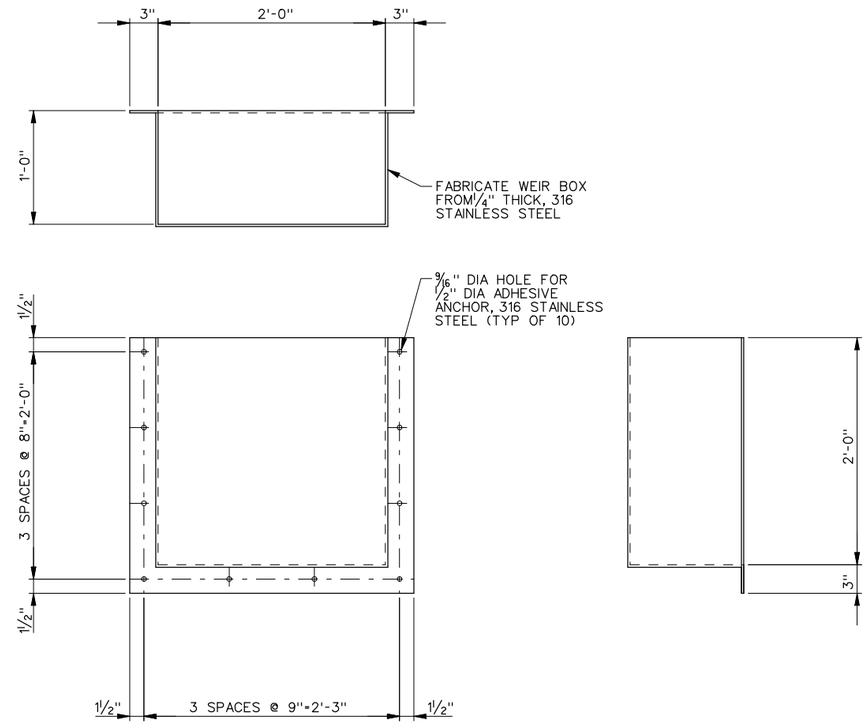

WEIR BOX 1

SCALE: -

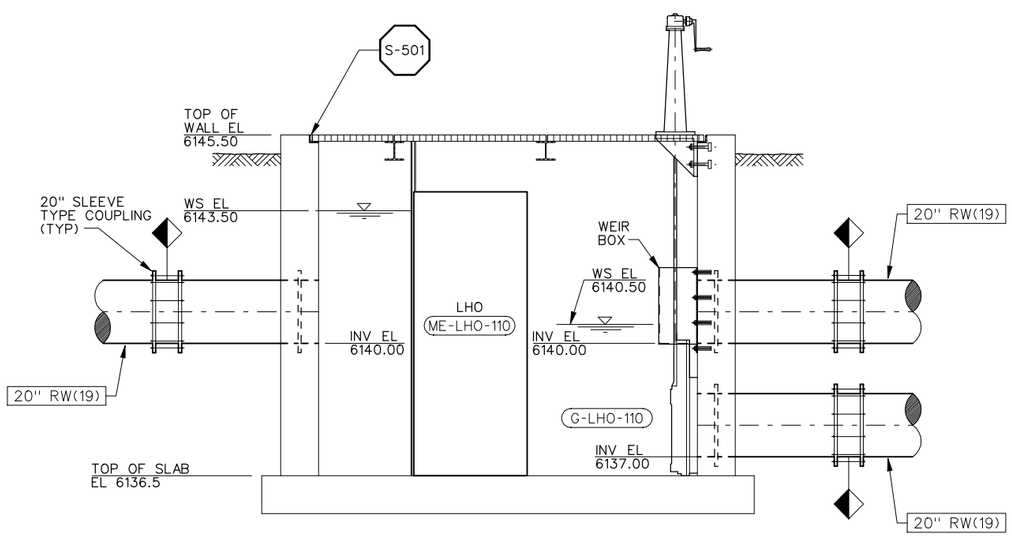

SECTION A

SCALE: 1/2"=1'-0"

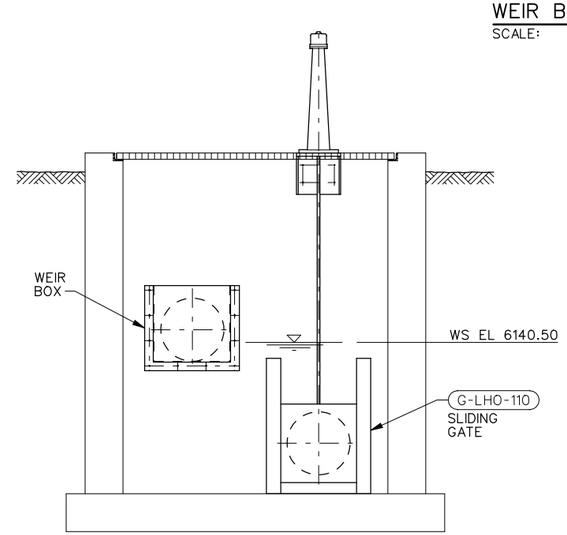

SECTION B

SCALE: 1/2"=1'-0"

REGISTERED PROFESSIONAL ENGINEER #5149 STANLEY S. POSTMA STATE OF UTAH

REV	DATE	BY	DESCRIPTION
R	3/07	MRW	RECORD DRAWING

SCALE: 1/2"=1'-0"

WARNING: 0 1/2 1 — IF THIS BAR DOES NOT MEASURE 1" THEN DRAWING IS NOT TO SCALE

DESIGNED D. BARBEAU
DRAWN R. WALN
CHECKED S. POSTMA

RECORD DRAWING

This record drawing has been prepared, entirely or in part on the basis of unverified information compiled and furnished by others to the preparer who is not responsible for any inaccuracies, errors or omissions which may have been incorporated into the document as a result

MWH

UTAH DIVISION OF WILDLIFE RESOURCES

WHITEROCKS STATE FISH HATCHERY

LOW HEAD OXYGENATOR (LHO) PLAN AND SECTIONS

SHEET M-18

1690703

File: wrfhm18-RD.dgn Model: Default ColorTable: bw.ctb DesignScript: LightScreen.pen PlotScale: 3.999992:1 User: KaiCrick Plot Date: 18-DEC-2007 09:49

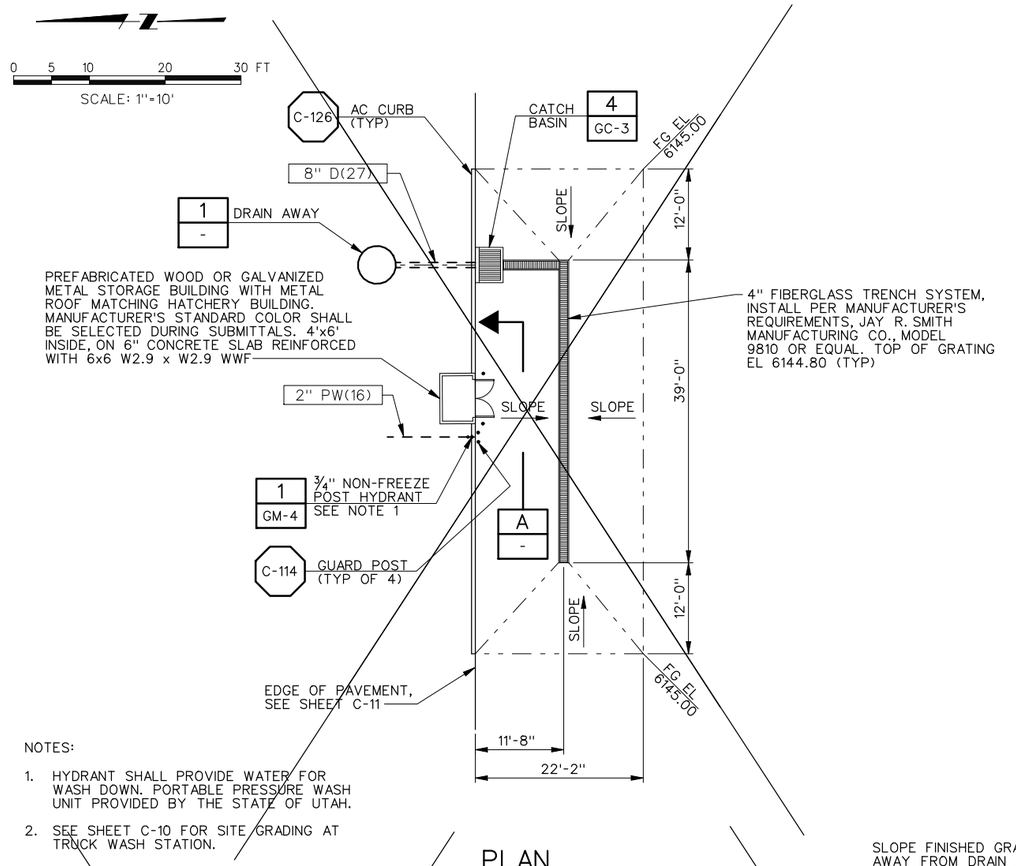

NOTES:

1. HYDRANT SHALL PROVIDE WATER FOR WASH DOWN. PORTABLE PRESSURE WASH UNIT PROVIDED BY THE STATE OF UTAH.
2. SEE SHEET C-10 FOR SITE GRADING AT TRUCK WASH STATION.

PLAN

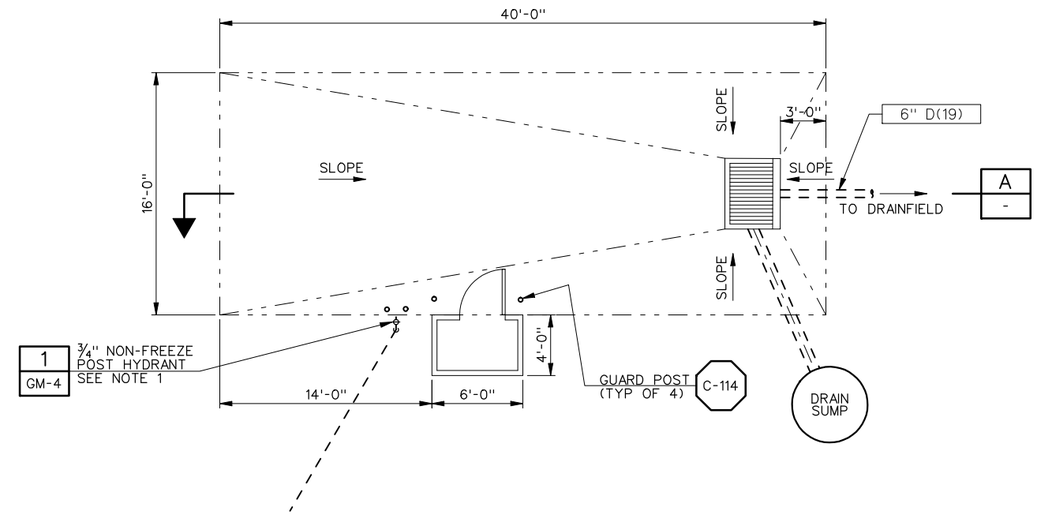

PLAN

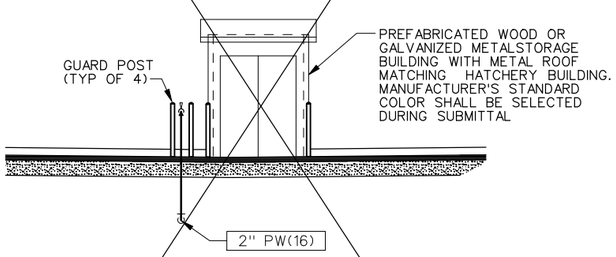

SECTION A
SCALE: 1"=5'

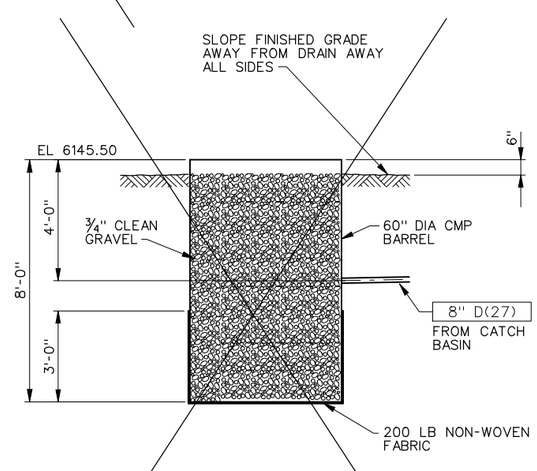

DRAIN AWAY 1
NOT TO SCALE

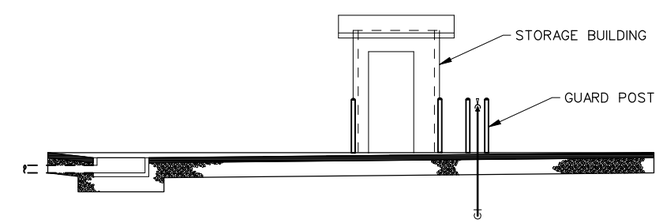

SECTION A
SCALE: 1"=5'

REGISTERED PROFESSIONAL ENGINEER #5149 STANLEY S. POSTMA STATE OF UTAH

REV	DATE	BY	DESCRIPTION
R	3/07	MRW	RECORD DRAWING

SCALE: AS SHOWN

WARNING: 0 ½ 1 — IF THIS BAR DOES NOT MEASURE 1" THEN DRAWING IS NOT TO SCALE

DESIGNED D. BARBEAU
DRAWN R. WALN
CHECKED S. POSTMA

RECORD DRAWING

This record drawing has been prepared, entirely or in part on the basis of unverified information compiled and furnished by others to the preparer who is not responsible for any inaccuracies, errors or omissions which may have been incorporated into the document as a result

MWH

UTAH DIVISION OF WILDLIFE RESOURCES
WHITEROCKS STATE FISH HATCHERY

TRUCK WASH STATION
PLAN, SECTION AND DETAIL

SHEET M-19
1690703

File: wrfhm19-RD.dgn Model: Default ColorTable: bw.ctb DesignScript: LightScreen.pen PlotScale: 19.99996:1 User: KaiCrick Plot Date: 18-DEC-2007 09:50

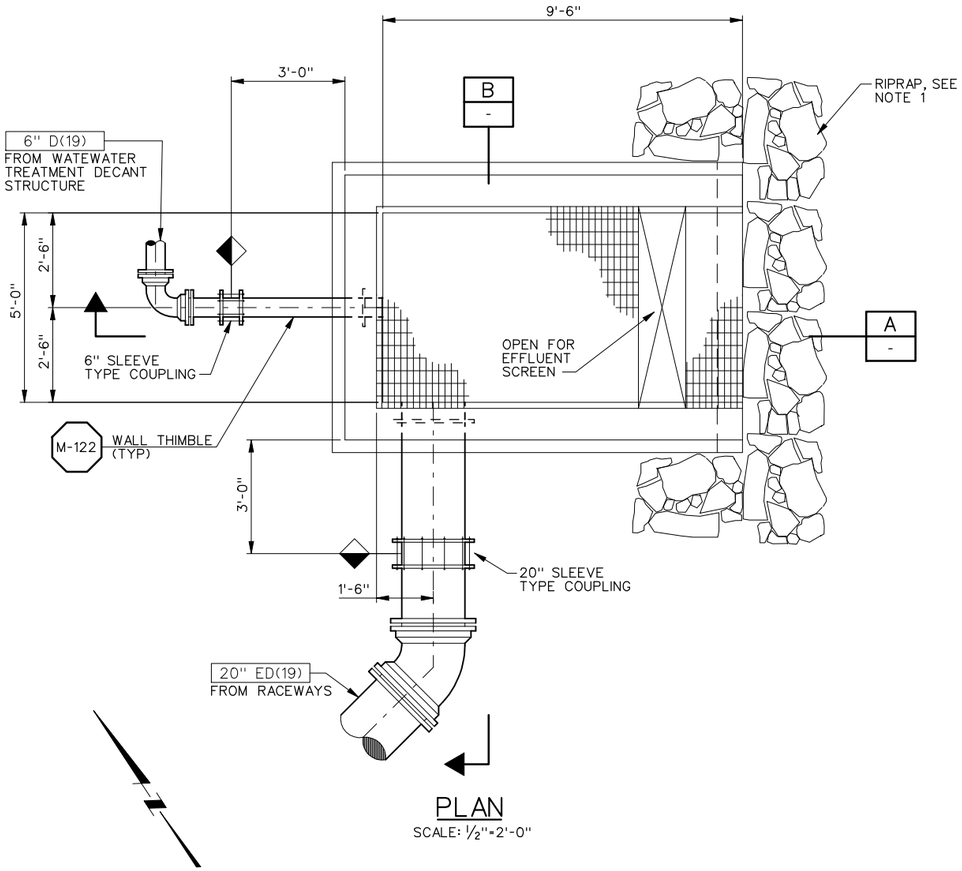

PLAN
SCALE: ½"=2'-0"

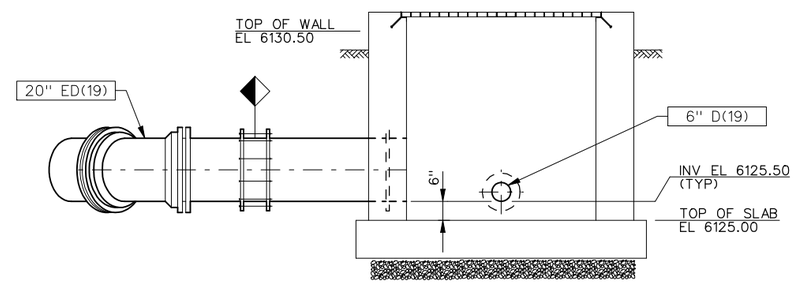

SECTION B
SCALE: ½"=1'-0"

NOTES:

1. EXTEND RIP-RAP DOWN TO EXISTING OUTFALL CHANNEL AND TIE INTO EXISTING ROCK, AT THE SAME ELEVATION.

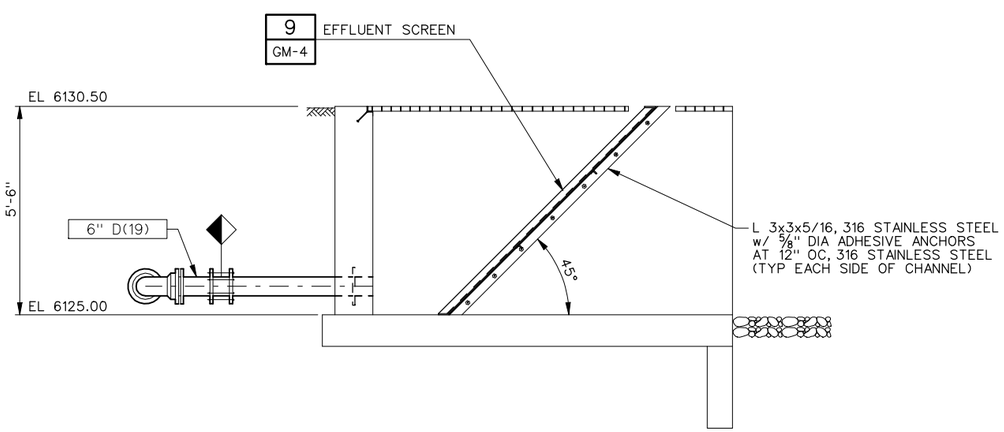

SECTION A
SCALE: ½"=1'-0"

REGISTERED PROFESSIONAL ENGINEER #5149 STANLEY S. POSTMA STATE OF UTAH

REV	DATE	BY	DESCRIPTION
R	3/07	MRW	RECORD DRAWING

SCALE: NONE

WARNING: 0 ½ 1 — IF THIS BAR DOES NOT MEASURE 1" THEN DRAWING IS NOT TO SCALE

DESIGNED D. BARBEAU
DRAWN R. WALN
CHECKED S. POSTMA

RECORD DRAWING
This record drawing has been prepared, entirely or in part on the basis of unverified information compiled and furnished by others to the preparer who is not responsible for any inaccuracies, errors or omissions which may have been incorporated into the document as a result

MWH

UTAH DIVISION OF WILDLIFE RESOURCES
WHITEROCKS STATE FISH HATCHERY

OUTFALL STRUCTURE
PLAN AND SECTIONS

SHEET M-20
1690703

File: wrfhm20-RD.dgn Model: Default ColorTable: bw.ctb DesignScript: LightScreen.pen PlotScale: 3.999992:1 User: KaiCrick Plot Date: 18-DEC-2007 09:50

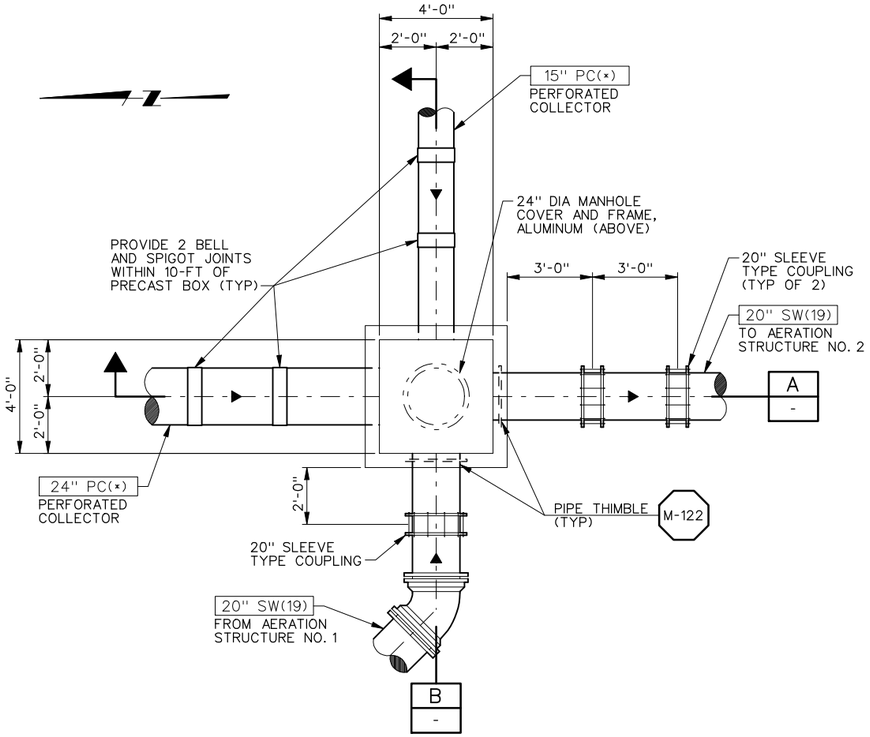

PLAN

SCALE: 3/8"=1'-0"

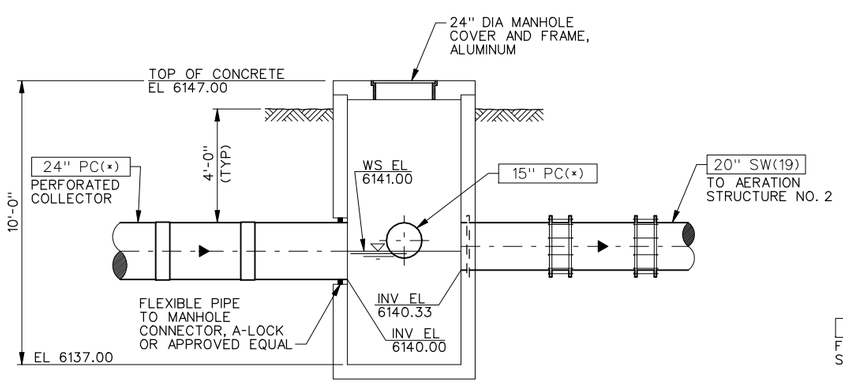

SECTION A

SCALE: 3/8"=1'-0"

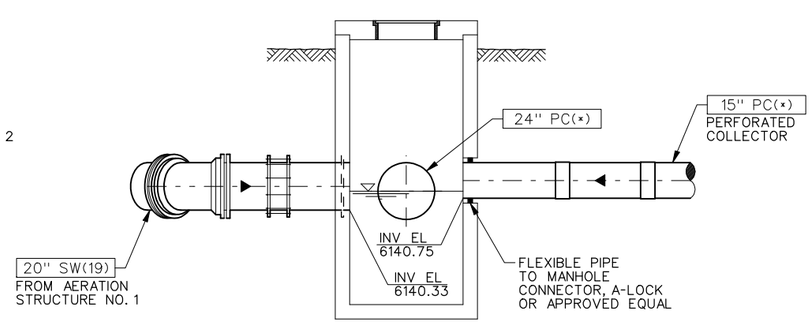

SECTION A

SCALE: 3/8"=1'-0"

NOTES:

1. PIPE TYPE INDICATED BY "(*)" SHALL BE ADS N-12 PERFORATED CORRUGATED HDPE PIPE, DOUBLE WALLED, SMOOTH INTERIOR, CORRUGATED EXTERIOR AS MANUFACTURED BY ADVANCED DRAINAGE SYSTEMS, INC OR APPROVED EQUAL. SEE SPECIFICATIONS

REGISTERED PROFESSIONAL ENGINEER #5149 STANLEY S. POSTMA STATE OF UTAH

REV	DATE	BY	DESCRIPTION
R	3/07	MRW	RECORD DRAWING

SCALE: 3/8"=1'-0"

WARNING: 0 1/2 1 — IF THIS BAR DOES NOT MEASURE 1" THEN DRAWING IS NOT TO SCALE

DESIGNED D. BARBEAU
DRAWN R. WALN
CHECKED S. POSTMA

RECORD DRAWING

This record drawing has been prepared, entirely or in part on the basis of unverified information compiled and furnished by others to the preparer who is not responsible for any inaccuracies, errors or omissions which may have been incorporated into the document as a result

MWH

UTAH DIVISION OF WILDLIFE RESOURCES
WHITEROCKS STATE FISH HATCHERY

SPRING COLLECTION BOX
PLAN AND SECTIONS

SHEET M-21

1690703

File: wrfhm21-RD.dgn Model: Default ColorTable: bw.ctb DesignScript: LightScreen.pen PlotScale: 5.333323:1 User: KaiCrick Plot Date: 18-DEC-2007 09:50

NOTES:

1. THE CONTRACTOR SHALL ROUTE LEVEL SWITCH CABLES AND PUMP POWER CABLES TO LOCAL CONTROL PANEL, LCP-D. WIRE FOR AUTO PUMP OPERATION AS REQUIRED IN SPECIFICATION SECTION 11148.
2. SEE DETAIL E-420 FOR LCP MOUNTING DETAIL.

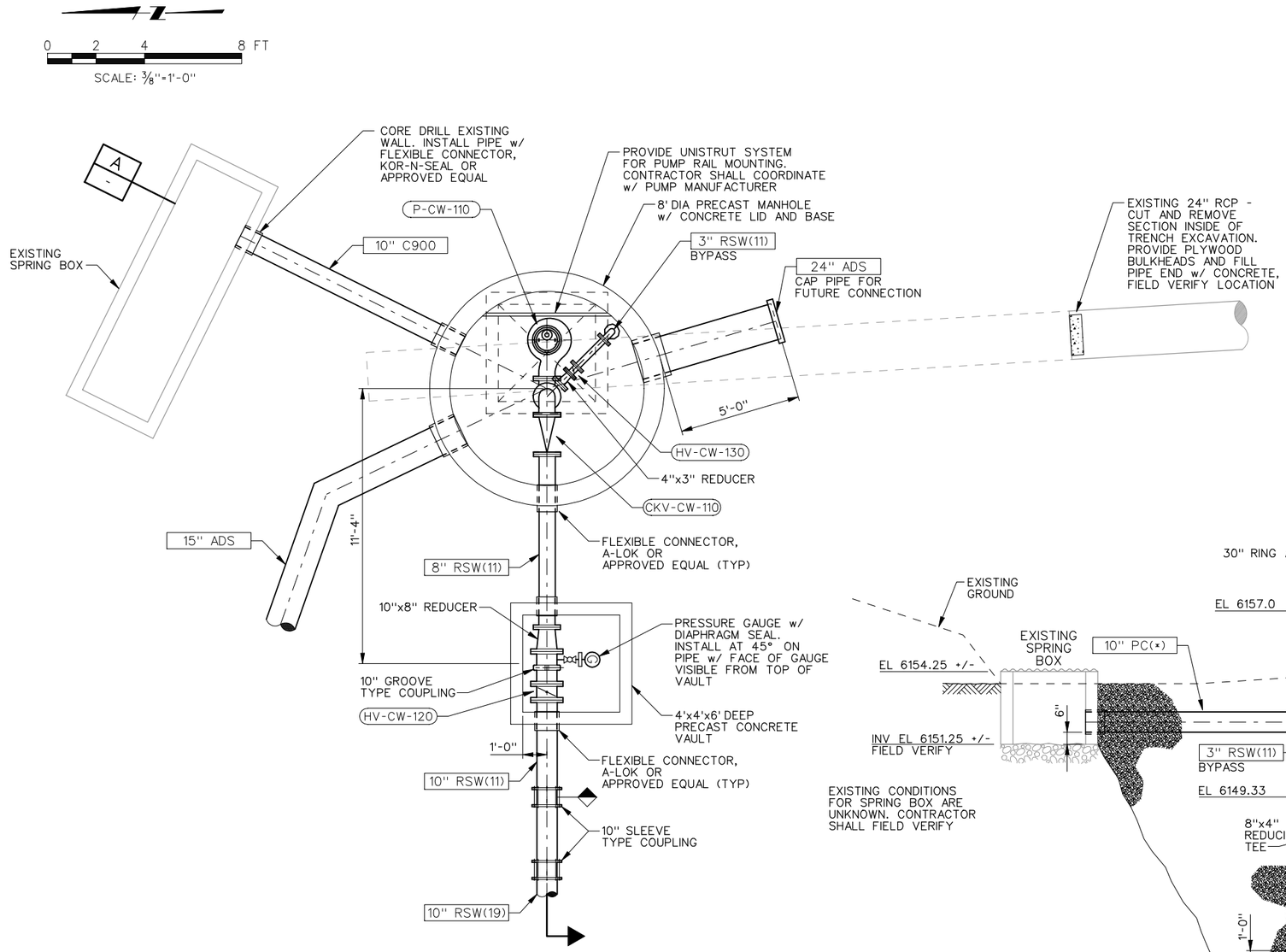

COLLECTOR WELL NO. 4 PLAN

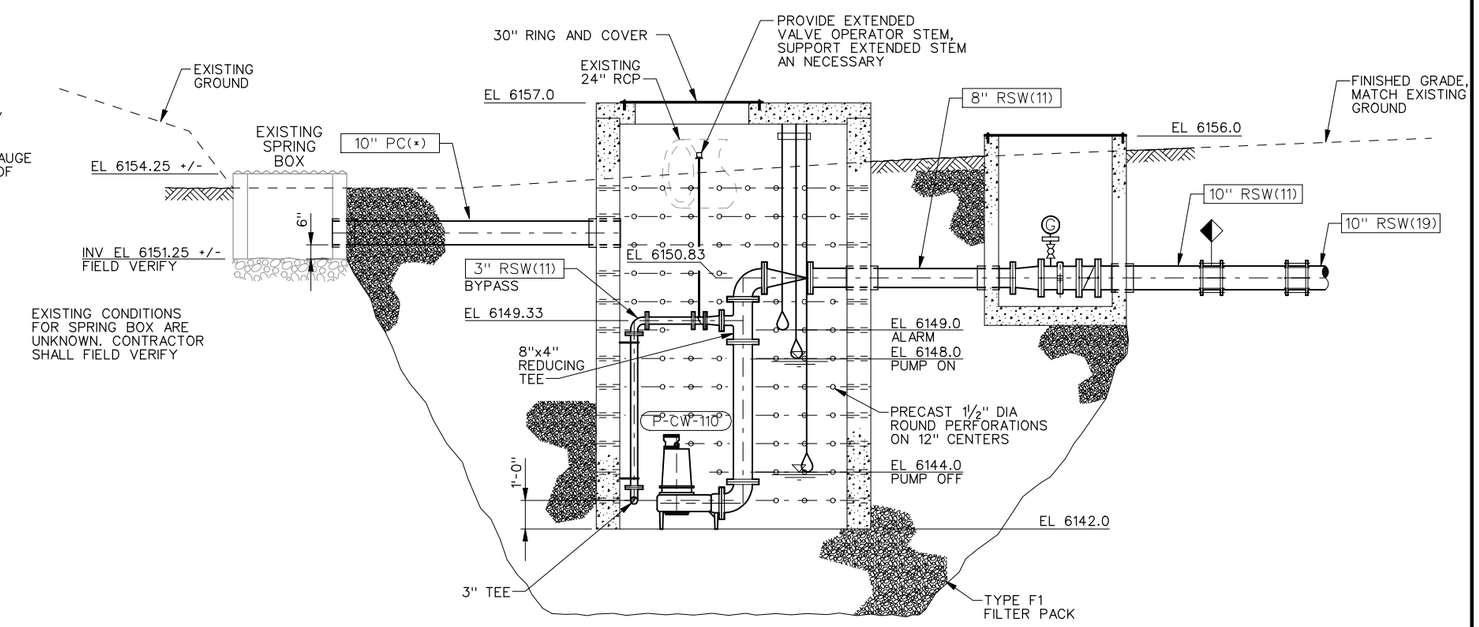

SECTION A
SCALE: 3/8"=1'-0"

REGISTERED PROFESSIONAL ENGINEER #5149 STANLEY S. POSTMA STATE OF UTAH

REV	DATE	BY	DESCRIPTION
R	3/07	MRW	RECORD DRAWING

SCALE 3/8"=1'-0"

WARNING: 0 1/2 1 — IF THIS BAR DOES NOT MEASURE 1" THEN DRAWING IS NOT TO SCALE

DESIGNED P. NAYLOR
DRAWN R. WALN
CHECKED

RECORD DRAWING

This record drawing has been prepared, entirely or in part on the basis of unverified information compiled and furnished by others to the preparer who is not responsible for any inaccuracies, errors or omissions which may have been incorporated into the document as a result

MWH

UTAH DIVISION OF WILDLIFE RESOURCES
WHITEROCKS STATE FISH HATCHERY

COLLECTOR WELL NO. 4
PLAN AND SECTION

SHEET M-22

1690703

File: wrfhm22-RD.dgn Model: Default ColorTable: bw.ctb DesignScript: LightScreen.pen PlotScale: 5.333323:1 User: KaiCrick Plot Date: 18-DEC-2007 09:50