CODE ANALYSIS

APPLICABLE CODES

	Year		Year
International Building Code	2006	National Electrical Code	2008
International Mechanical Code	2006	Uniform Code for Building Conservation	
International Fuel Gas Code	2006	ADA Accessibility Guide lines	ICC/ANSI 117.1 2003
International Plumbing Code	2006		
International Fire Code	2006		
International Energy Conservation Code	2006		

A. Occupancy and Group: B

Change in Use: Yes ____ No ✓ Mixed Occupancy: Yes ✓ No ____

Special Use and Occupancy (e.g. High Rise, Covered Mall): COVERED MALL BUILDING

B. Seismic Design Category: D Design Wind Speed: 90 mph

C. Type of Construction (circle one):

I A I B II A (II B) III A III B IV HT V A V B

D. Fire Resistance Rating Requirements for the Exterior Walls based on the fire separation distance (in hours):

North: 0 South: 0 East: 0 West: 0

E. Mixed Occupancies: ✓ Non separated Uses: 0

F: Sprinklers:

Required: ✓ Provided: ✓

Type of Sprinkler System (IBC 903.3.1) NFPA 13

G: Number of Stories: 2 Building Height: 30'

H: Actual Area per Floor (square feet): ADDITION 900 SF

I: Tabular Area: (table 503): N/A - UNLIMITED - COVERED MALL BUILDING

J: Area Modifications:

a) $A_a = \left\{ A_t + \left[A_t \times I_f \right] + \left[A_t \times I_s \right] \right\}$ $I_f = \left[F/P - 0.25 \right] W/30$

b) Sum of the Ratio Calculations for Mixed Occupancies:

$\frac{\text{Actual Area}}{\text{Allowable Area}} \leq 1$

c) Total Allowable Area for:

1) One Story: ____
2) Two Story: $A_a(2)$____
3) Three Story: $A_a(3)$____

d) Unlimited Area Building: Yes ✓ No ____ Code Section: 402

K. Fire Resistance Rating Requirements for Building Elements (hours).

Element	Hours	Assembly Listing	Element	Hours	Assembly Listing
Exterior Bearing Walls	0		Floors - Ceiling Floors	0	
Interior Bearing Walls	0		Roofs - Ceiling Roofs	0	
Exterior Non-Bearing Walls	0		Exterior Doors and Windows	0	
Structural Frame	0		Shaft Enclosures	1 Hr.	
Partitions - Permanent	N/A		Fire Walls	N/A	
Fire Barriers	N/A		Fire Partitions	N/A	
			Smoke Partitions	N/A	

L. Design Occupant Load: 900 S.F. @ 100 S.F. PER OCCUPANT = 9

Exit Width Required: .15" x 9 = 1.35 Exit Width Provided: 60"

M. Minimum Number of Required Plumbing Facilities:

a) Water Closets - Required (m) - (f) - Provided (m) - (f) -
b) Urinals - Required (m) ____ (f) ____ Provided (m) ____ (f) ____
c) Lavatories - Required (m) - (f) - Provided (m) - (f) -
d) Bath Tubs or Showers: -
e) Drinking Fountains: - Service Sinks: -

FOOTNOTES:

1) In case of conflict with the U.S. Department of Justice Federal Registers Parts I through V - ADA Guidelines and specific reference to the International Building Code Accessibility Chapters, the more restrictive requirement shall govern.

2) Additional Code Information shall be provided at the discretion of the Building Official for Complex Buildings. Including, but not limited to:
   a) High Rise Requirements.
   b) Atriums.
   c) Performance Based Criteria.
   d) Means or Egress Analysis.
   e) Fire Assembly Locator Sheet.
   f) Exterior and Interior Accessibility Route.
   g) Fire Stopping, Including Tested Design Number.

PROJECT TEAM

OWNER:
DFCM
Mike Ambre
Project Manager
4110 State Office Bldg.
Salt Lake City, Utah 84114
phone (801) 209-9104

USER:
UVU
James L. Michaelis
Associate Vice President
Facilities Planning
800 West University Parkway
Orem, Utah 84058-5999
phone (801)863-8130

ARCHITECT:
AXIS ARCHITECTS
Boyd Viehweg - Project Manager
352 S. Denver St.
Salt Lake City, UT 84111
phone (801)355-3003
fax (801)355-0113

STRUCTURAL:
Bsumek Mu
Peter Leichtliter
345 South 400 East
Salt Lake City, Utah 84111
phone (801)575-8223
fax (801)532-3778

MECHANICAL:
WHW Engineering
Win Packer
8619 South Sandy Parkway, Ste 101
Sandy, Utah 84070
phone (801) 466-4021
fax (801) 466-8536

ELECTRICAL:
BNA Consulting
Stephen Brown
635 S. State Street
Salt Lake City, Utah 84111
phone (801) 532-2196
fax (801) 532-2305

VICINITY MAP

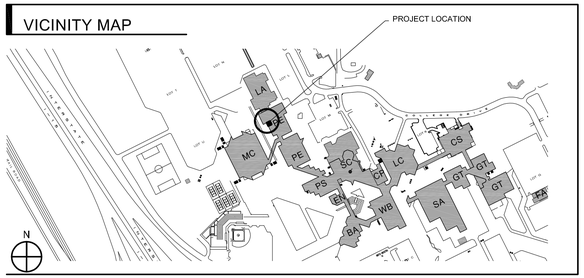

OVERALL SITE PLAN

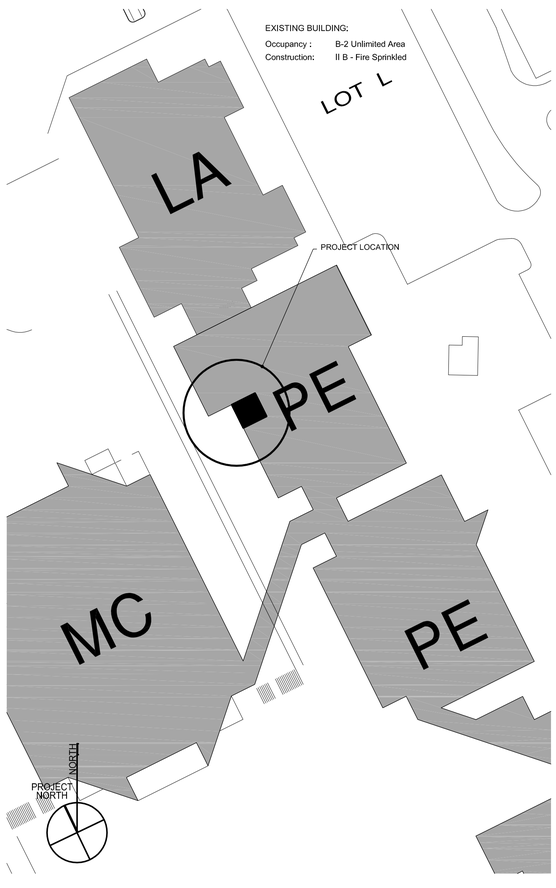

SYMBOL LEGEND

ROOM NAME 100 — ROOM NUMBER 1ST DIGIT INDICATES FLOOR
T.O. ELEV. = — ELEVATION MARKER
A1 A100 — DETAIL REFERENCE
A1 A100 — EXTERIOR ELEVATION
A1 A100 — BUILDING SECTION
A1 A100 — WALL SECTION
100 A1 — DOOR NUMBER, HARDWARE GROUP, FRAME NUMBER, DOOR TYPE (DOOR SYMBOL)
MATCH LINE — AREA 1, AREA 2 — LINE MATCH SYMBOL
A1 A100 — INT. ELEVATION SYMBOL
A — GLAZING TYPE
B1 F1 — NORTH WALL FINISH, BASE FINISH, FLOOR FINISH (FINISH SYMBOL)
ACT 8'-0" — CEILING TYPE AND HEIGHT
1 — WINDOW NUMBER
100'-0" — SPOT ELEVATION MARKER OR DECK BEARING
6 — WALL TYPE
FLOOR FINISH TRANSITION

GRAPHIC SYMBOLS

EARTH
CMU
BRICK
WOOD BLOCKING
WOOD FRAMING
STEEL
RIGID INSULATION
ASPHALT PAVING
CERAMIC TILE
GRAVEL
PLYWOOD
WOOD FINISH
ALUMINUM
BATT INSULATION
CONCRETE

DRAWING INDEX

GENERAL
GI101 GENERAL INFORMATION

ARCHITECTURAL
AE001 ARCHITECTURAL SITE PLAN
AE101 PLANS
AE201 BUILDING ELEVATIONS
AE301 BUILDING SECTIONS
AE401 WALL SECTIONS
AE601 DETAILS
AE602 DETAILS

STRUCTURAL
SE001 STRUCTURAL GENERAL NOTES
SE101 STRUCTURAL PLANS
SE301 STRUCTURAL DETAILS
SE501 STRUCTURAL TYPICAL DETAILS

MECHANICAL
MG001 GENERAL NOTES AND LEGEND
ME101 MECHANICAL PLANS
ME501 MECHANICAL DETAILS
ME601 MECHANICAL SCHEDULES

PLUMBING
PG001 PLUMBING NOTES AND LEGEND
PD101 PLUMBING DEMOLITION PLANS
PE101 PLUMBING PLANS
PE102 PLUMBING ROOF PLANS
PE501 PLUMBING DETAILS

ELECTRICAL
EG001 SYMBOLS, SCHEDULES, NOTES
EE101 LIGHTING & POWER PLANS
EX501 DIAGRAMS
EX601 ONE-LINE DIAGRAM & SCHEDULES

NOTE: THE SHEETS LISTED ABOVE REPRESENT A FULL SET OF CONSTRUCTION DOCUMENTS AND INCLUDE A DETAIL BOOK AND A PROJECT MANUAL AND SHALL NOT BE SEPARATED. ANY CONTRACTOR, SUBCONTRACTOR, VENDOR OR ANY OTHER PERSON PARTICIPATING IN OR BIDDING ON THIS PROJECT SHALL BE RESPONSIBLE FOR REVIEWING ALL THE CONSTRUCTION DOCUMENTS INCLUDING BUT NOT LIMITED TO DRAWINGS, DETAILS, PROJECT MANUAL, SPECIFICATIONS AND ANY AND ALL ADDENDA ISSUED.

UTAH VALLEY UNIVERSITY PHYSICAL EDUCATION INFILL II
Orem, Utah

DFCM PROJECT #09097790
CONSTRUCTION DOCUMENTS
July 10, 2009

ROOFING CODE COMPLIANCE

ALL ROOFING MATERIAL MANUFACTURERS ARE TO REQUIRED TO MEET OR EXCEED THE UL ASSEMBLY # AS OUTLINED IN THE UNDERWRITERS LABORATORIES, INC. ROOFING MATERIALS AND SYSTEMS DIRECTORY BOOK

Carlisle Syntec Incorporated
1285 Ritner Hwy PO Box 7000
Carlisle, PA 17013

UL R8103
EPDM, 60 Mil

Firestone Building Products Co.
1st FL 310 E 96th St.
Indianapolis, IN 46240

UL R9516
EPDM, 60 Mil

NOTE: ALL OTHER MANUFACTURERS SHALL BE SUBMITTED FOR APPROVAL PRIOR TO BID. UL ASSEMBLY CRITERIA MUST BE PROVIDED TO THE ARCHITECT PRIOR TO APPROVAL.

DEFERRED SUBMITTALS

FIRE SPRINKLER:
THE DEFERRED SUBMITTAL FOR FIRE SPRINKLERS IS ANTICIPATED TO BE SUBMITTED FOR REVIEW TO THE BUILDING OFFICIAL AND FIRE MARSHALL ON OR AROUND SEPT. 15, 2009.

FIRE ALARM:
THE DEFERRED SUBMITTAL FOR THE FIRE ALARM SYSTEM IS ANTICIPATED TO BE SUBMITTED FOR REVIEW TO THE BUILDING OFFICIAL AND FIRE MARSHALL ON OR AROUND SEPT. 15, 2009.

State of Utah
Department of Administrative Services
Division of Facilities Construction & Management
4110 State Office Building
Salt Lake City, Utah 84114
Phone: (801) 538 - 3018
Fax: (801) 538 - 3267

UTAH VALLEY UNIVERSITY
ENGINEERING, FACILITIES PLANNING & CONSTRUCTION DEPARTMENT

Axis Architects
352 SOUTH DENVER STREET (440 E.) SALT LAKE CITY UTAH 84111 P 355-3003 F 355-0113

Utah Valley University
Physical Education Infill II
OREM, UTAH

Axis Job #	0910
Owner #	09097790
Date	07-10-2009
Drawn	-
Checked	-

GENERAL INFORMATION

GI101

P:\0910-DFCM UVU PE Office Infill\CAD_GI101.dwg, 7/15/2009 4:23:19 PM, AXIS Architects AXIS Architects, AXIS Architects, 1:1,1511

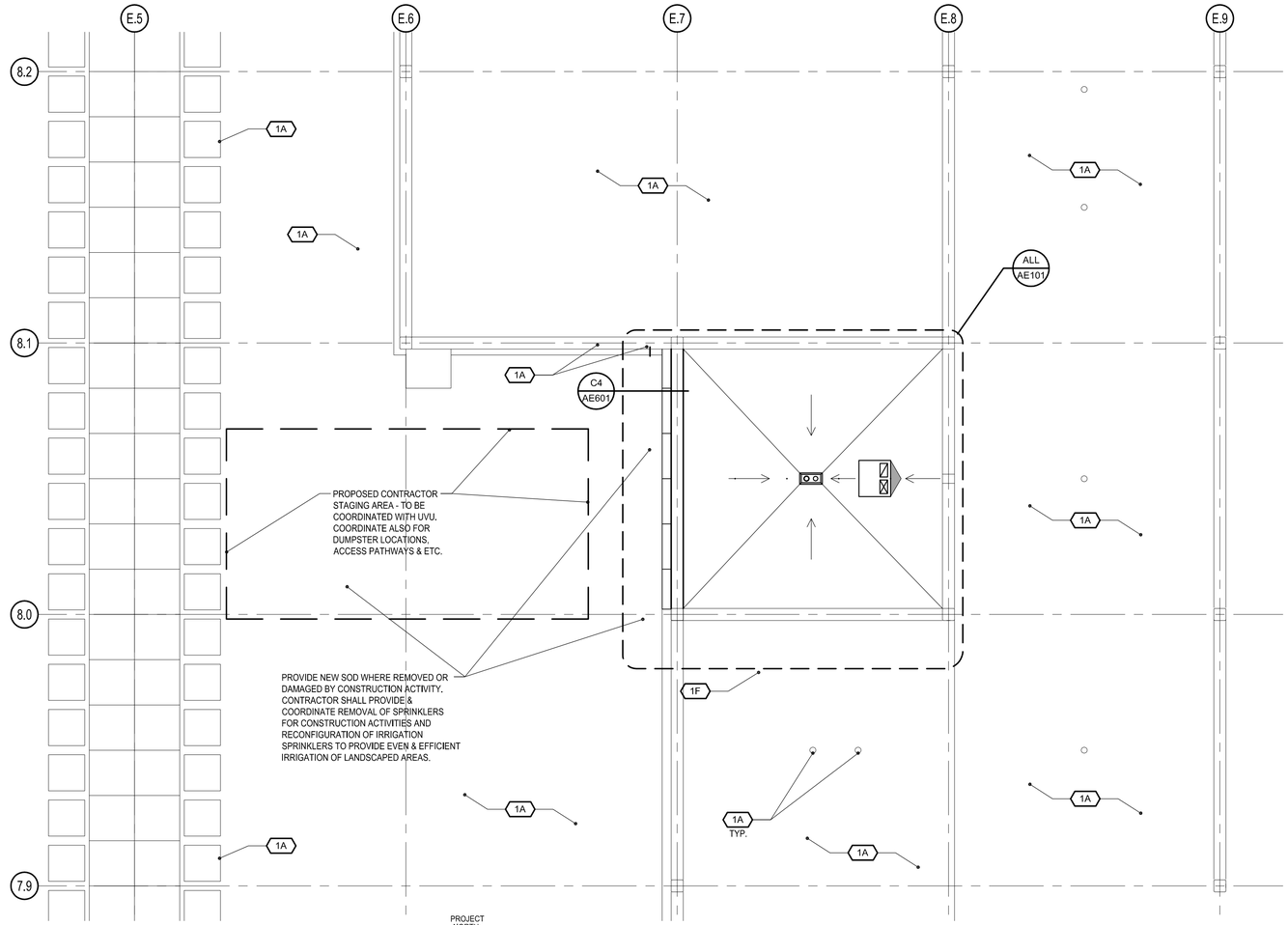

B1 SITE PLAN

SCALE: 1/8"=1'-0"

PROJECT NORTH

NOTES - GENERAL

1. CONTRACTOR TO PROTECT ALL EXISTING BUILDING COMPONENTS DURING CONSTRUCTION, INCLUDING FINISHES, DOORS, FRAMES ETC. CONTRACTOR IS RESPONSIBLE FOR ALL REPAIR OR REPLACEMENT COSTS FOR DAMAGE CAUSED BY DEMO AND/OR NEW CONSTRUCTION - SEE STRUCTURAL, MECHANICAL AND ELECTRICAL DRAWINGS FOR ADDITIONAL DEMOLITION INFORMATION.
2. CONTRACTOR TO FIELD VERIFY EXISTING CONDITIONS PRIOR TO BID
3. COMPACT ALL DISTURBED SOIL.
4. ALL ROOFING AND DRAINAGE SYSTEMS SHALL COMPLY WITH THE *INTERNATIONAL PLUMBING CODE*.
5. CONTRACTOR TO USE FLOOR PLAN DIMENSIONS TO DETERMINE ROOFING QUANTITIES.
6. PROVIDE HORIZONTAL LOUVER BLINDS ON ALL EXTERIOR WINDOWS.
7. REFER TO ADA REQUIREMENTS FOR MOUNTING HEIGHTS , ETC. FOR FIXTURES - COORD. W/ MECH. AND ELECTRICAL.
8. ALL EXPOSED MECHANICAL DUCTS, PIPES, ELECTRICAL CONDUIT AND FIRE SPRINKLER LINES TO BE PAINTED WITH CAMPUS COLOR CODED SYSTEM.
9. POWER WASH ALL EXISTING BRICK AND CONCRETE WHICH WILL BE EXPOSED AT THE INTERIOR OF THE NEW SPACE

SOILS AND EXCAVATION

1. AT NEW FOOTING OVER-EXCAVATE AS REQUIRED (SEE STRUCTURAL GENERAL NOTES). BEFORE PLACING ENGINEERED FILL, CONTACT THE ARCHITECT AND THE SOILS ENGINEER TO OBSERVE SOILS & DO TESTING AS REQUIRED. PROVIDE AN ALLOWANCE TO DIG TWO SHALLOW TEST PITS (5 FEET DEEP) AT THE DISCRESSION OF THE SOILS ENGINEER. PROVIDE AN ALLOWANCE OF $500.00 FOR TWO SHALLOW TEST PITS; RETURN TO OWNER IF NOT USED.

KEYNOTE LEGEND

1A

1 - DEMOLITION

- 1A EXISTING TO REMAIN - PROTECT DURING CONSTRUCTION
- 1B REMOVE CONC. SIDEWALK AS REQ'D FOR NEW CONSTRUCTION
- 1C REMOVE EXISTING FOUNDATION AS REQ'D. FOR NEW SLAB/WALLS.
- 1D EXISTING PLUMBING MAINS IN SOFFIT TO REMAIN - COORDINATE WITH NEW DUCT WORK
- 1E REMOVE DOOR AND FRAME
- 1F RECONFIGURE ROOF DRAIN/STORM DRAIN LINE - SEE PLUMBING, EXCAVATION REQUIRED.
- 1G POWER WASH ALL EXISTING BRICK AND CONCRETE WHICH WILL BE EXPOSED AT THE INTERIOR OF THE NEW SPACE
- 1H EXISTING LIGHT TO BE REMOVE AND SALVAGED TO OWNER.
- 1J REMOVE WINDOWS AND SALVAGE FOR RELOCATION
- 1K REMOVE CONCRETE MOW STRIP WHERE REQUIRED

2 - SITE WORK:

- 2A FINISH GRADE - SLOPE GRADE AWAY FROM BLDG. TYP.
- 2B 4" GRAVEL BASE
- 2C ENGINEERED FILL - SEE SOILS GENERAL NOTES ON AE001, & STRUCT.
- 2D CONCRETE MOW STRIP

3 - CONCRETE:

- 3A CONCRETE FOOTING
- 3B CONCRETE FOUNDATION WALL
- 3C CONCRETE SLAB - SEE A4 & C2 ON AE601 FOR CONNECTION TO EXISTING SLAB
- 3D CONCRETE BEAM

5 - METALS:

- 5A STEEL DECK - SEE STRUCTURAL
- 5B STEEL ANGLE - SEE STRUCTURAL
- 5C STEEL JOIST - SEE STRUCTURAL

7 - THERMAL AND MOISTURE PROTECTION:

- 7A SINGLE PLY REINFORCED EPDM ROOFING MEMBRANE
- 7B CONT. PRE-FINISHED METAL FLASHING
- 7C R-30 POLYISOCYANURATE INSULATION
- 7D R-19 BATT INSULATION
- 7E EXTRUDED POLYSTYRENE RIGID INSULATION
- 7F INFILL @ BEAM OPENING - SEE B3/AE601
- 7G TERMINATION BAR AND REGLET
- 7H PREFINISHED BREAK METAL
- 7J TAPERED RIGID INSULATION - 1/4" PER FOOT FINISHED SLOPE U.N.O.

8 - DOORS AND WINDOWS:

- 8A SCHEDULED DOOR AND FRAME
- 8B EXISTING WINDOW SYSTEM TO BE RELOCATED.

9 - FINISHES:

- 9A PAINTED GYPSUM BOARD
- 9C SCHEDULED METAL STUD WALL
- 9D LAY-IN CEILING - SEE CEILING DETAILS

10 - SPECIALTIES

- 10A FIRE EXTINGUISHER IN SEMI-RECESSED CABINET

15 - MECHANICAL:

- 15A MECH. DIFFUSER/RETURN
- 15B MECHANICAL DUCT WORK
- 15C ROOF DRAIN & OVERFLOW DRAIN
- 15D MECHANICAL UNIT - SEE B4/AE601 FOR ROOF CURB DETAIL

16 - ELECTRICAL:

- 16A LIGHT FIXTURE

UVU PFCM

Axis Architects
352 SOUTH DENVER STREET (440 E.) SALT LAKE CITY UTAH 84111 P 355-3003 F 355-0113

Utah Valley University Physical Education Infill II

OREM, UTAH

Axis Job #	0910
Owner #	09097790
Date	07-10-2009
Drawn	-
Checked	-

ARCHITECTURAL SITE PLAN

AE001

P:\09104-PFCM UVU PE Office Infill\3-CD\AE001.dwg 7/13/2009 5:10:32 PM, AXIS Architects AXIS Architects, AXIS Architects, 17.0/11

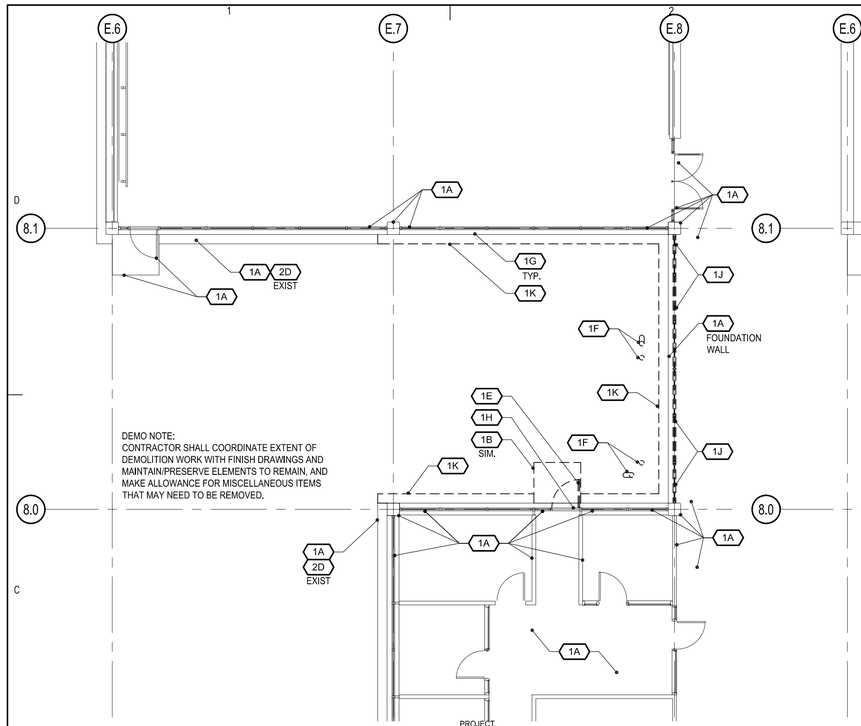

C1 DEMO FLOOR PLAN

SCALE: 1/8"=1'-0"

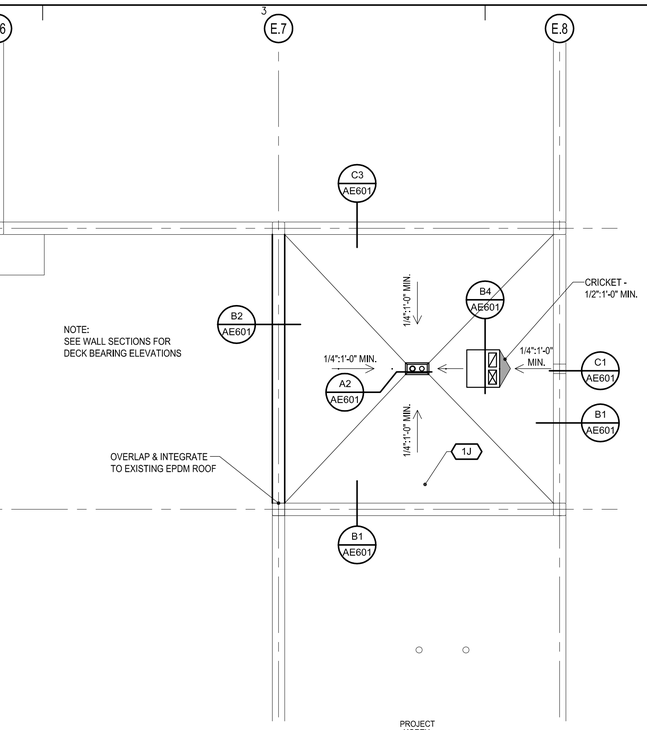

C3 ROOF PLAN

SCALE: 1/8"=1'-0"

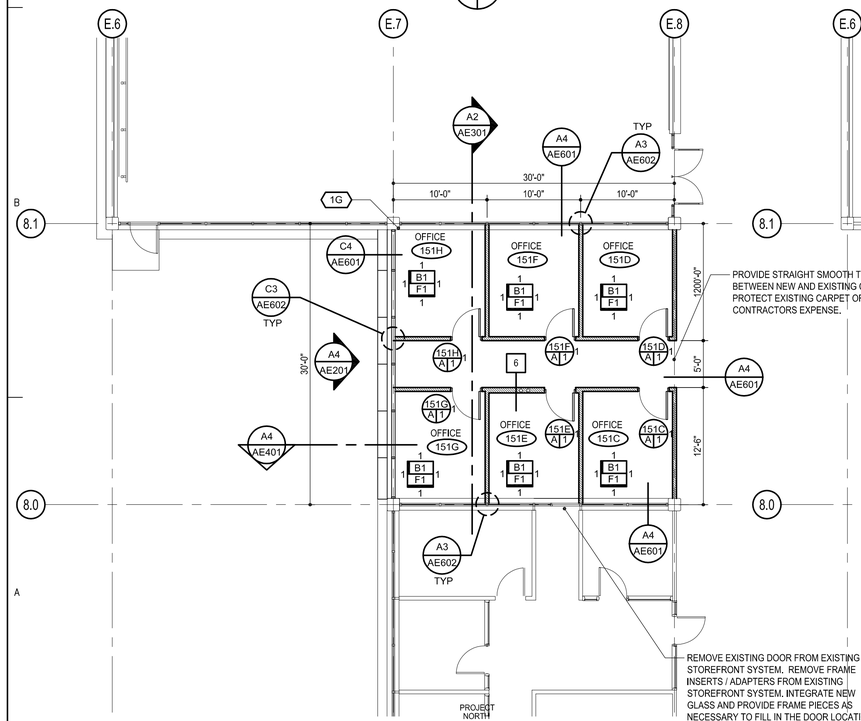

A1 FLOOR PLAN

SCALE: 1/8"=1'-0"

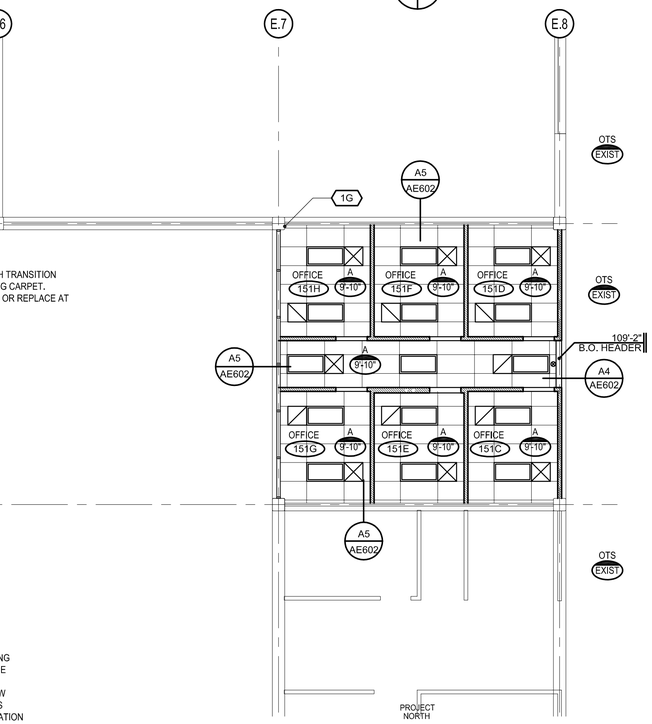

A3 REFLECTED CEILING

SCALE: 1/8"=1'-0"

NOTES - GENERAL

1. CONTRACTOR TO PROTECT ALL EXISTING BUILDING COMPONENTS DURING CONSTRUCTION, INCLUDING FINISHES, DOORS, FRAMES ETC. CONTRACTOR IS RESPONSIBLE FOR ALL REPAIR OR REPLACEMENT COSTS FOR DAMAGE CAUSED BY DEMO AND/OR NEW CONSTRUCTION - SEE STRUCTURAL, MECHANICAL AND ELECTRICAL DRAWINGS FOR ADDITIONAL DEMOLITION INFORMATION.
2. CONTRACTOR TO FIELD VERIFY EXISTING CONDITIONS PRIOR TO BID
3. COMPACT ALL DISTURBED SOIL.
4. ALL ROOFING AND DRAINAGE SYSTEMS SHALL COMPLY WITH THE *INTERNATIONAL PLUMBING CODE*.
5. CONTRACTOR TO USE FLOOR PLAN DIMENSIONS TO DETERMINE ROOFING QUANTITIES.
6. PROVIDE HORIZONTAL LOUVER BLINDS ON ALL EXTERIOR WINDOWS.
7. REFER TO ADA REQUIREMENTS FOR MOUNTING HEIGHTS , ETC. FOR FIXTURES - COORD. W/ MECH. AND ELECTRICAL.
8. ALL EXPOSED MECHANICAL DUCTS, PIPES, ELECTRICAL CONDUIT AND FIRE SPRINKLER LINES TO BE PAINTED WITH CAMPUS COLOR CODED SYSTEM.
9. POWER WASH ALL EXISTING BRICK AND CONCRETE WHICH WILL BE EXPOSED AT THE INTERIOR OF THE NEW SPACE

FINISH LEGEND

WALL: 1 PAINT

FLOOR: F1 CARPET TILE

BASE: B1 CARPET BASE

ADJACENT WALL FINISH
BASE
FLOOR FINISH
ADJACENT WALL FINISH

1. MATERIALS IN SIMILAR LOCATIONS ARE NOT NOTED AT EVERY OCCURRENCE.
2. APPLY CONCRETE MOISTURE SEALER AT ALL AREAS TO RECEIVE FLOORING MATERIAL

WALL TYPES

EXISTING WALL TO REMAIN

3 5/8" METAL STUD WALL FROM SLAB TO DECK - 5/8" GYP. BOARD EA. SIDE SLAB TO DECK, PAINTED WHERE VISIBLE. SOUND BATT INSULATION FULL HEIGHT. SEAL AROUND ALL PENETRATIONS. SEE DETAIL B2/AE602 FOR TOP OF WALL.

6

SAME AS ABOVE WITH 6" METAL STUDS

NOTE:
1. SEE WALL SECTIONS AND DETAILS FOR MORE INFORMATION
2. ADD SOUND BATT INSULATION IN OFFICE AND RESTROOM PERIMETER WALLS.
3. ALL PERIMETER FOUNDATION WALLS TO RECEIVE EXTRUDED POLYSTYRENE RIGID INSULATION

CEILING SYMBOL LEGEND

INDIRECT FLUORESCENT PENDANT

RECESSED DOWN LIGHT FIXTURE

EXIT LIGHT

RETURN AIR REGISTER

SUPPLY AIR REGISTER

CEILING SCHEDULE

OTS VAR. — MATERIAL, ELEVATION ABOVE F.F.

A — 2X4 SUSPENDED ACOUSTIC TILE CEILING ARMSTRONG CORTEGA OR APPROVED EQUAL

OTS VAR. — OPEN TO STRUCTURE

NOTE:
1. SEE DETAILS C1, C2, B4, AND A5 ON AE602 FOR CEILING CONSTRUCTION
2. SUPPORT ALL SUSPENDED LIGHT FIXTURES WITH UNISTRUT BRACED TO STRUCTURE, NOT TO DECK.

KEYNOTE LEGEND

1A

1 - DEMOLITION

1A EXISTING TO REMAIN - PROTECT DURING CONSTRUCTION
1B REMOVE CONC. SIDEWALK AS REQ'D FOR NEW CONSTRUCTION
1C REMOVE EXISTING FOUNDATION AS REQ'D. FOR NEW SLAB/WALLS.
1D EXISTING PLUMBING MAINS IN SOFFIT TO REMAIN - COORDINATE WITH NEW DUCT WORK
1E REMOVE DOOR AND FRAME
1F RECONFIGURE ROOF DRAIN/STORM DRAIN LINE - SEE PLUMBING, EXCAVATION REQUIRED.
1G POWER WASH ALL EXISTING BRICK AND CONCRETE WHICH WILL BE EXPOSED AT THE INTERIOR OF THE NEW SPACE
1H EXISTING LIGHT TO BE REMOVE AND SALVAGED TO OWNER.
1J REMOVE WINDOWS AND SALVAGE FOR RELOCATION
1K REMOVE CONCRETE MOW STRIP WHERE REQUIRED

2 - SITE WORK:

2A FINISH GRADE - SLOPE GRADE AWAY FROM BLDG. TYP.
2B 4" GRAVEL BASE
2C ENGINEERED FILL - SEE SOILS GENERAL NOTES ON AE001, & STRUCT.
2D CONCRETE MOW STRIP

3 - CONCRETE:

3A CONCRETE FOOTING
3B CONCRETE FOUNDATION WALL
3C CONCRETE SLAB - SEE A4 & C2 ON AE601 FOR CONNECTION TO EXISTING SLAB
3D CONCRETE BEAM

5 - METALS:

5A STEEL DECK - SEE STRUCTURAL
5B STEEL ANGLE - SEE STRUCTURAL
5C STEEL JOIST - SEE STRUCTURAL

7 - THERMAL AND MOISTURE PROTECTION:

7A SINGLE PLY REINFORCED EPDM ROOFING MEMBRANE
7B CONT. PRE-FINISHED METAL FLASHING
7C R-30 POLYISOCYANURATE INSULATION
7D R-19 BATT INSULATION
7E EXTRUDED POLYSTYRENE RIGID INSULATION
7F INFILL @ BEAM OPENING - SEE B3/AE601
7G TERMINATION BAR AND REGLET
7H PREFINISHED BREAK METAL
7J TAPERED RIGID INSULATION - 1/4" PER FOOT FINISHED SLOPE U.N.O.

8 - DOORS AND WINDOWS:

8A SCHEDULED DOOR AND FRAME
8B EXISTING WINDOW SYSTEM TO BE RELOCATED.

9 - FINISHES:

9A PAINTED GYPSUM BOARD
9C SCHEDULED METAL STUD WALL
9D LAY-IN CEILING - SEE CEILING DETAILS

10 - SPECIALTIES

10A FIRE EXTINGUISHER IN SEMI-RECESSED CABINET

15 - MECHANICAL:

15A MECH. DIFFUSER/RETURN
15B MECHANICAL DUCT WORK
15C ROOF DRAIN & OVERFLOW DRAIN
15D MECHANICAL UNIT - SEE B4/AE601 FOR ROOF CURB DETAIL

16 - ELECTRICAL:

16A LIGHT FIXTURE

Axis Architects
352 SOUTH DENVER STREET (440 E.) SALT LAKE CITY UTAH 84111 P 355-3003 F 355-0113

Utah Valley University Physical Education Infill II

OREM, UTAH

Axis Job #	0910
Owner #	09097790
Date	07-10-2009
Drawn	-
Checked	-

PLANS

AE101

P:\0910-UPCM UVU PE Office Infill\ACD\AE101.dwg, 7/15/2009 5:09:55 PM, AXIS Architects AXIS Architects.
AXIS Architects, 1.0.211

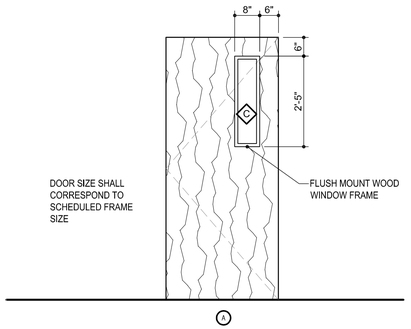

C1 FLUSH WOOD DOOR

SCALE: 1/2"=1'-0"

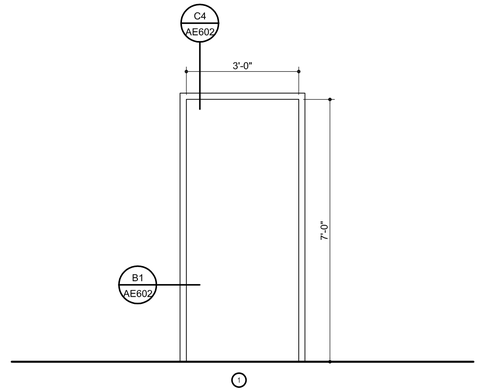

C2 HOLLOW METAL FRAME

SCALE: 1/2"=1'-0"

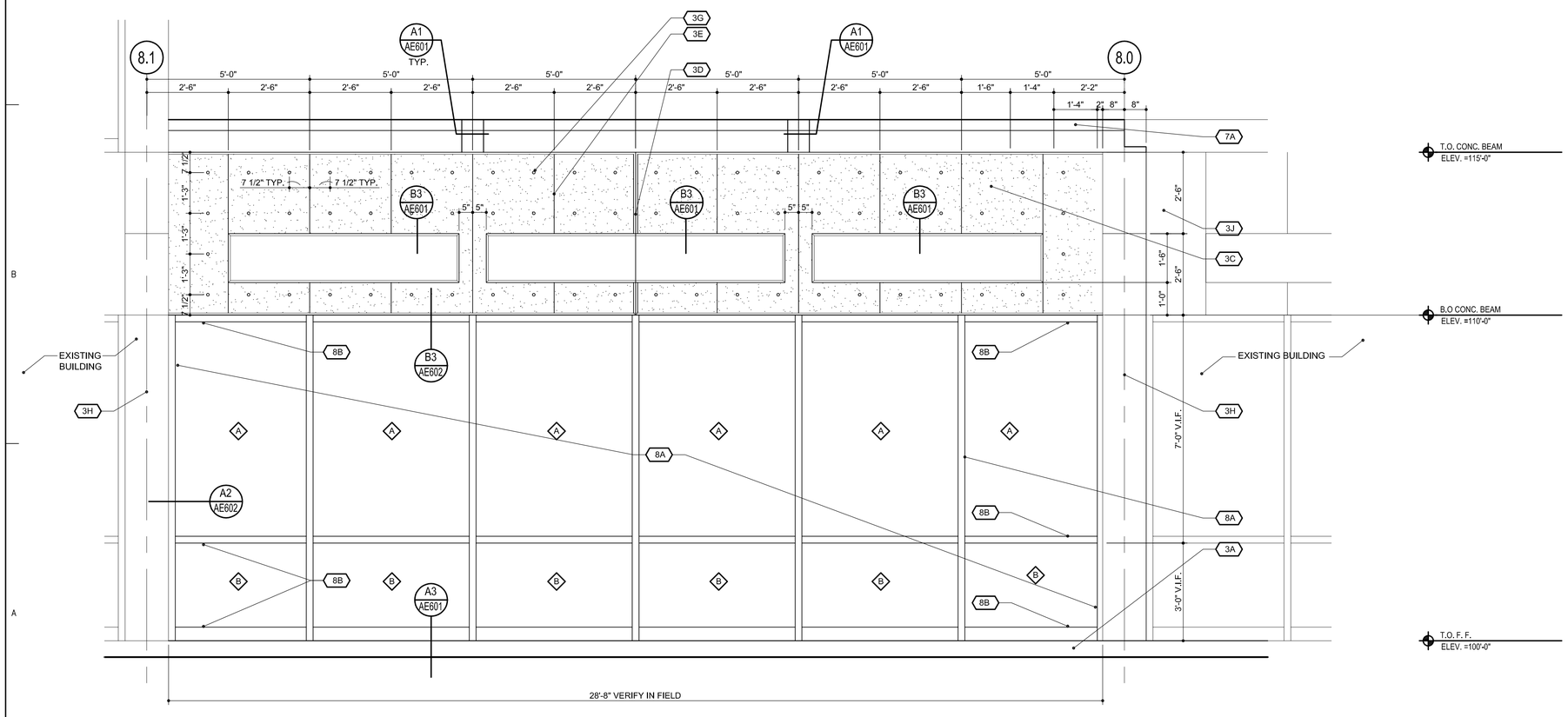

A4 ENLARGED PARTIAL WEST ELEVATION

SCALE: 1/2"=1'-0"

GLAZING SCHEDULE

- A — EXISTING 1" INSULATED GLASS - BRONZE TINT
- B — EXISTING 1" INSULATED TEMPERED GLASS - BRONZE TINT
- C — 1/4" CLEAR TEMPERED FLOAT GLASS

1. CONTRACTOR TO FIELD VERIFY ALL DIMENSIONS AND ANGLES PRIOR TO FABRICATION.
2. SOME DETAILS MAY BE REVERSED.
3. IF EXISTING GLASS DOES NOT FIT, PROVIDE NEW.

KEYNOTE LEGEND

1A ELEVATIONS

2 - SITE WORK:

- 2A SLOPE GRADE AWAY FROM BLDG. TYP.

3 - CONCRETE:

- 3A NEW CONCRETE FOUNDATION WALL - SEE STRUCT.
- 3B NEW CONCRETE COLUMN - SEE STRUCT.
- 3C NEW CONCRETE BEAM - SEE STRUCT.
- 3D CONTROL JOINT
- 3E FORM JOINT
- 3F NOT USED
- 3G CONCRETE FORM TIE
- 3H EXISTING CONC. COLUMN TO REMAIN
- 3J EXISTING CONC. BEAM TO REMAIN
- 3K NOT USED.
- 3L NOT USED.
- 3M NOT USED

7 - THERMAL AND MOISTURE PROTECTION:

- 7A PRE-FINISHED METAL FLASHING

8 - DOORS AND WINDOWS:

- 8A EXISTING WINDOW SYSTEM - RELOCATED
- 8B MULLIONS MAY HAVE TO BE CUT OR EXTENDED TO FIT NEW LOCATION

9 - FINISHES

- 9A NOT USED.

15 - MECHANICAL

- 15A LOUVER SEE MECHANICAL

Axis Architects
352 SOUTH DENVER STREET (440 E.) SALT LAKE CITY UTAH 84111 P 355-3003 F 355-0113

Utah Valley University Physical Education Infill II

OREM, UTAH

Axis Job #	0910
Owner #	09097790
Date	07-10-2009
Drawn	-
Checked	-

BUILDING ELEVATIONS

AE201

P:\0910-UEFC\M UVU PE Office Infill\3-CD\AE201.dwg, 7/13/2009 5:09:19 PM, AXIS Architects AXIS Architects.
AXIS Architects, 1:1,311

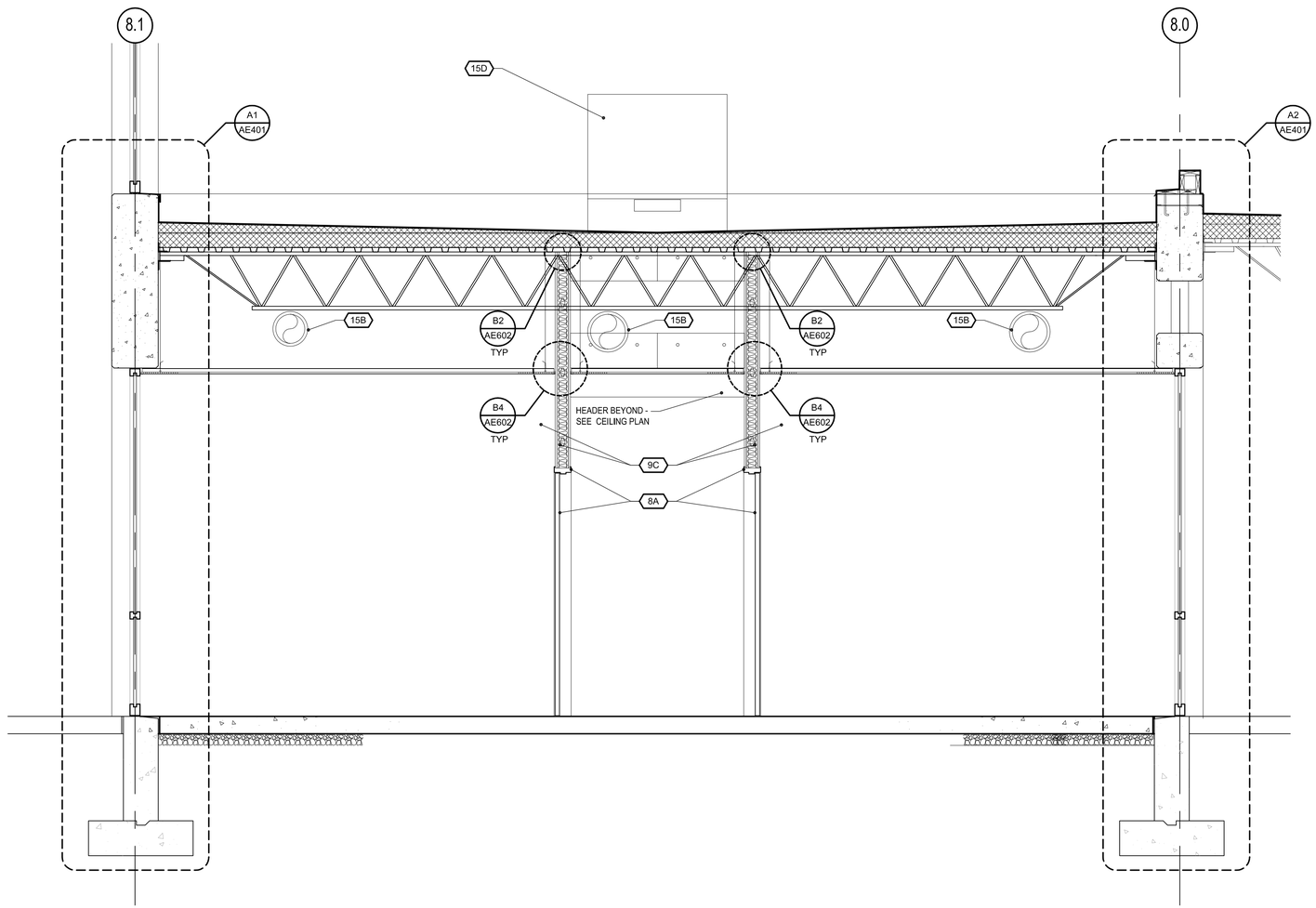

A2 SECTION

SCALE: 1/2"=1'-0"

KEYNOTE LEGEND

1A

1 - DEMOLITION

- 1A EXISTING TO REMAIN - PROTECT DURING CONSTRUCTION
- 1B REMOVE CONC. SIDEWALK AS REQ'D FOR NEW CONSTRUCTION
- 1C REMOVE EXISTING FOUNDATION AS REQ'D. FOR NEW SLAB/WALLS.
- 1D EXISTING PLUMBING MAINS IN SOFFIT TO REMAIN - COORDINATE WITH NEW DUCT WORK
- 1E REMOVE DOOR AND FRAME
- 1F RECONFIGURE ROOF DRAIN/STORM DRAIN LINE - SEE PLUMBING, EXCAVATION REQUIRED.
- 1G POWER WASH ALL EXISTING BRICK AND CONCRETE WHICH WILL BE EXPOSED AT THE INTERIOR OF THE NEW SPACE
- 1H EXISTING LIGHT TO BE REMOVE AND SALVAGED TO OWNER.
- 1J REMOVE WINDOWS AND SALVAGE FOR RELOCATION
- 1K REMOVE CONCRETE MOW STRIP WHERE REQUIRED

2 - SITE WORK:

- 2A FINISH GRADE - SLOPE GRADE AWAY FROM BLDG. TYP.
- 2B 4" GRAVEL BASE
- 2C ENGINEERED FILL - SEE SOILS GENERAL NOTES ON AE001, & STRUCT.
- 2D CONCRETE MOW STRIP

3 - CONCRETE:

- 3A CONCRETE FOOTING
- 3B CONCRETE FOUNDATION WALL
- 3C CONCRETE SLAB - SEE A4 & C2 ON AE601 FOR CONNECTION TO EXISTING SLAB
- 3D CONCRETE BEAM

5 - METALS:

- 5A STEEL DECK - SEE STRUCTURAL
- 5B STEEL ANGLE - SEE STRUCTURAL
- 5C STEEL JOIST - SEE STRUCTURAL

7 - THERMAL AND MOISTURE PROTECTION:

- 7A SINGLE PLY REINFORCED EPDM ROOFING MEMBRANE
- 7B CONT. PRE-FINISHED METAL FLASHING
- 7C R-30 POLYISOCYANURATE INSULATION
- 7D R-19 BATT INSULATION
- 7E EXTRUDED POLYSTYRENE RIGID INSULATION
- 7F INFILL @ BEAM OPENING - SEE B3/AE601
- 7G TERMINATION BAR AND REGLET
- 7H PREFINISHED BREAK METAL
- 7J TAPERED RIGID INSULATION - 1/4" PER FOOT FINISHED SLOPE U.N.O.

8 - DOORS AND WINDOWS:

- 8A SCHEDULED DOOR AND FRAME
- 8B EXISTING WINDOW SYSTEM TO BE RELOCATED.

9 - FINISHES:

- 9A PAINTED GYPSUM BOARD
- 9C SCHEDULED METAL STUD WALL
- 9D LAY-IN CEILING - SEE CEILING DETAILS

10 - SPECIALTIES

- 10A FIRE EXTINGUISHER IN SEMI-RECESSED CABINET

15 - MECHANICAL:

- 15A MECH. DIFFUSER/RETURN
- 15B MECHANICAL DUCT WORK
- 15C ROOF DRAIN & OVERFLOW DRAIN
- 15D MECHANICAL UNIT - SEE B4/AE601 FOR ROOF CURB DETAIL

16 - ELECTRICAL:

- 16A LIGHT FIXTURE

Axis Architects
352 SOUTH DENVER STREET (440 E.) SALT LAKE CITY UTAH 84111 P 355-3003 F 355-0113

Utah Valley University Physical Education Infill II

OREM, UTAH

Axis Job #	0910
Owner #	09097790
Date	07-10-2009
Drawn	-
Checked	-

BUILDING SECTIONS

AE301

P:\0910-SPCM UVU PE Office Infill\3-CD\AE301.dwg, 7/10/2009 5:08:13 PM, AXIS Architects AXIS Architects.
AXIS Architects, 1/1,0,1

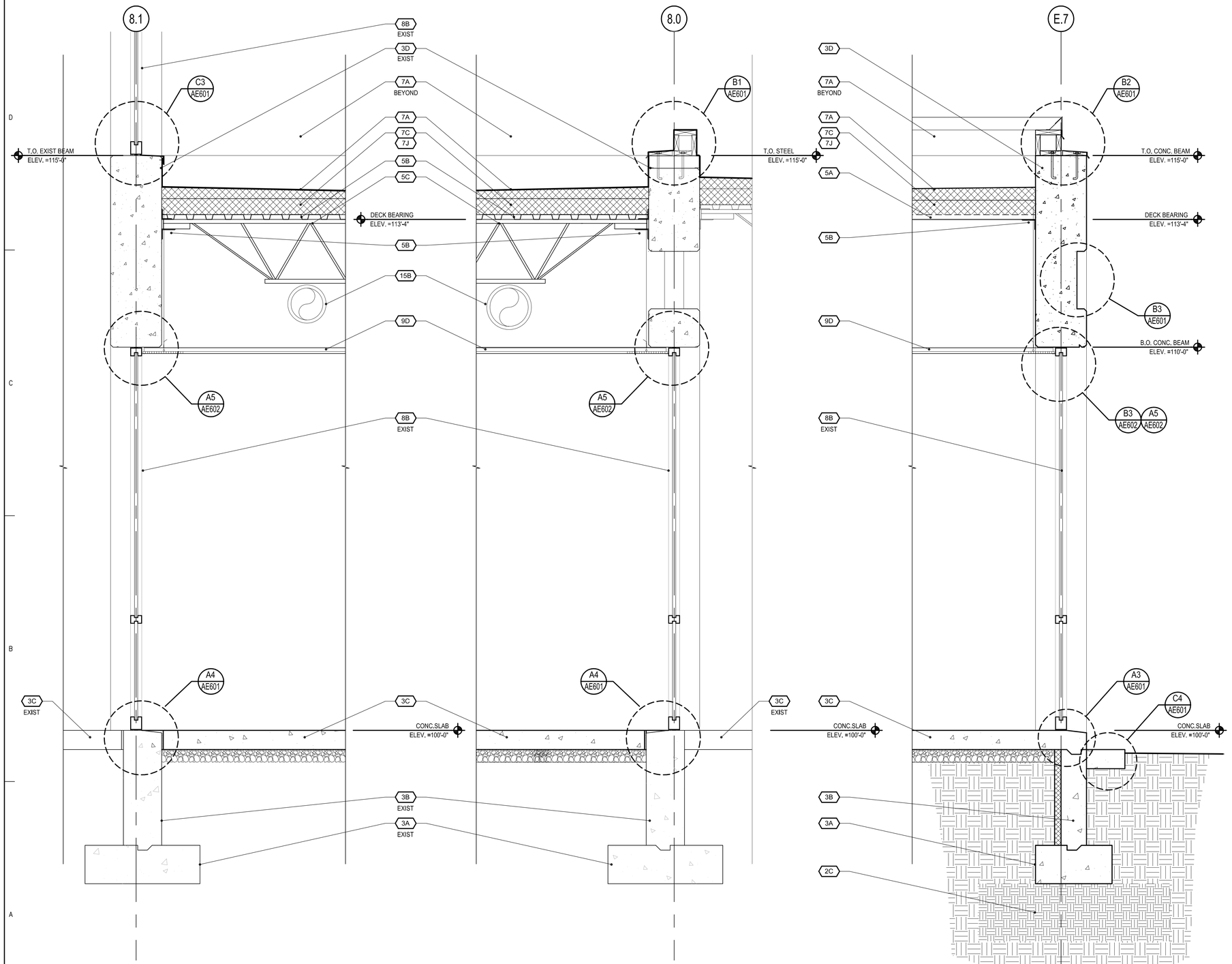

A2 WALL SECTION
SCALE: 3/4"=1'-0"

A2 WALL SECTION
SCALE: 3/4"=1'-0"

A4 WALL SECTION
SCALE: 3/4"=1'-0"

KEYNOTE LEGEND

1A

1 - DEMOLITION

- 1A EXISTING TO REMAIN - PROTECT DURING CONSTRUCTION
- 1B REMOVE CONC. SIDEWALK AS REQ'D FOR NEW CONSTRUCTION
- 1C REMOVE EXISTING FOUNDATION AS REQ'D. FOR NEW SLAB/WALLS.
- 1D EXISTING PLUMBING MAINS IN SOFFIT TO REMAIN - COORDINATE WITH NEW DUCT WORK
- 1E REMOVE DOOR AND FRAME
- 1F RECONFIGURE ROOF DRAIN/STORM DRAIN LINE - SEE PLUMBING, EXCAVATION REQUIRED.
- 1G POWER WASH ALL EXISTING BRICK AND CONCRETE WHICH WILL BE EXPOSED AT THE INTERIOR OF THE NEW SPACE
- 1H EXISTING LIGHT TO BE REMOVE AND SALVAGED TO OWNER.
- 1J REMOVE WINDOWS AND SALVAGE FOR RELOCATION
- 1K REMOVE CONCRETE MOW STRIP WHERE REQUIRED

2 - SITE WORK:

- 2A FINISH GRADE - SLOPE GRADE AWAY FROM BLDG. TYP.
- 2B 4" GRAVEL BASE
- 2C ENGINEERED FILL - SEE SOILS GENERAL NOTES ON AE001, & STRUCT.
- 2D CONCRETE MOW STRIP

3 - CONCRETE:

- 3A CONCRETE FOOTING
- 3B CONCRETE FOUNDATION WALL
- 3C CONCRETE SLAB - SEE A4 & C2 ON AE601 FOR CONNECTION TO EXISTING SLAB
- 3D CONCRETE BEAM

5 - METALS:

- 5A STEEL DECK - SEE STRUCTURAL
- 5B STEEL ANGLE - SEE STRUCTURAL
- 5C STEEL JOIST - SEE STRUCTURAL

7 - THERMAL AND MOISTURE PROTECTION:

- 7A SINGLE PLY REINFORCED EPDM ROOFING MEMBRANE
- 7B CONT. PRE-FINISHED METAL FLASHING
- 7C R-30 POLYISOCYANURATE INSULATION
- 7D R-19 BATT INSULATION
- 7E EXTRUDED POLYSTYRENE RIGID INSULATION
- 7F INFILL @ BEAM OPENING - SEE B3/AE601
- 7G TERMINATION BAR AND REGLET
- 7H PREFINISHED BREAK METAL
- 7J TAPERED RIGID INSULATION - 1/4" PER FOOT FINISHED SLOPE U.N.O.

8 - DOORS AND WINDOWS:

- 8A SCHEDULED DOOR AND FRAME
- 8B EXISTING WINDOW SYSTEM TO BE RELOCATED.

9 - FINISHES:

- 9A PAINTED GYPSUM BOARD
- 9C SCHEDULED METAL STUD WALL
- 9D LAY-IN CEILING - SEE CEILING DETAILS

10 - SPECIALTIES

- 10A FIRE EXTINGUISHER IN SEMI-RECESSED CABINET

15 - MECHANICAL:

- 15A MECH. DIFFUSER/RETURN
- 15B MECHANICAL DUCT WORK
- 15C ROOF DRAIN & OVERFLOW DRAIN
- 15D MECHANICAL UNIT - SEE B4/AE601 FOR ROOF CURB DETAIL

16 - ELECTRICAL:

- 16A LIGHT FIXTURE

Axis Architects
352 SOUTH DENVER STREET (440 E.) SALT LAKE CITY UTAH 84111 P 355-3003 F 355-0113

Utah Valley University Physical Education Infill II

OREM, UTAH

Axis Job #	0910
Owner #	09097790
Date	07-10-2009
Drawn	-
Checked	-

WALL SECTIONS

AE401

P:\0910-UFCA UVU PE Office Infill\3-CD\AE401.dwg, 7/13/2009 5:07:31 PM, AXIS Architects AXIS Architects.
AXIS Architects, 1/1311

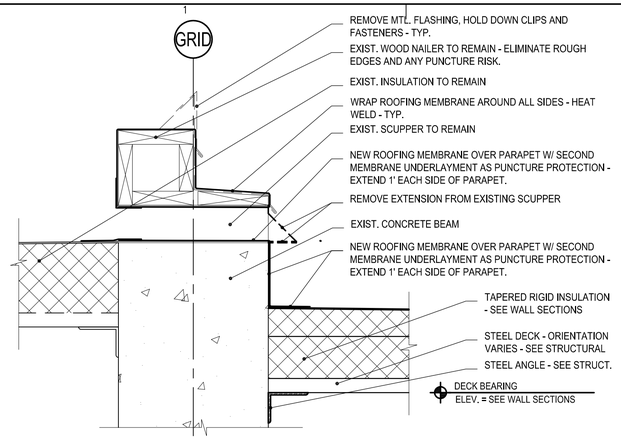

C1 ROOF DETAIL AT EXISTING SCUPPER

SCALE: 1 1/2"=1'-0"

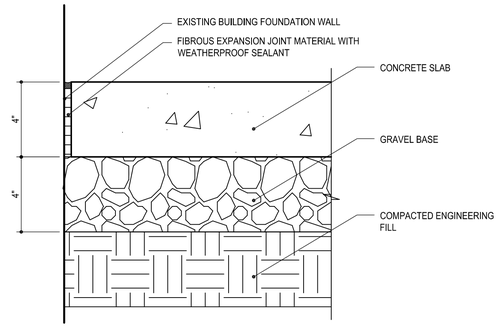

C2 EXPANSION JOINT AT BUILDING

SCALE: 3"=1'-0"

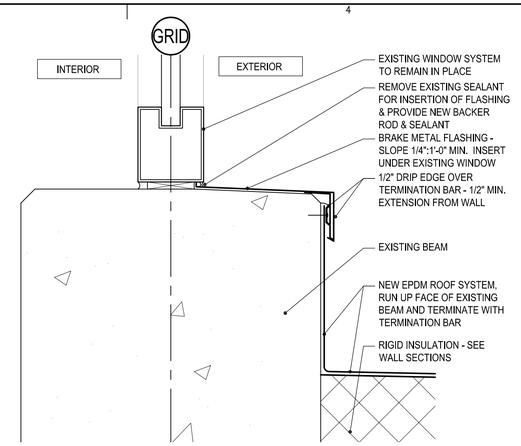

C3 ROOFING AT EXISTING WINDOW

SCALE: 3"=1'-0"

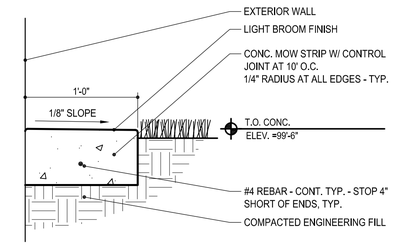

C4 MOW STRIP

SCALE: 1 1/2"=1'-0"

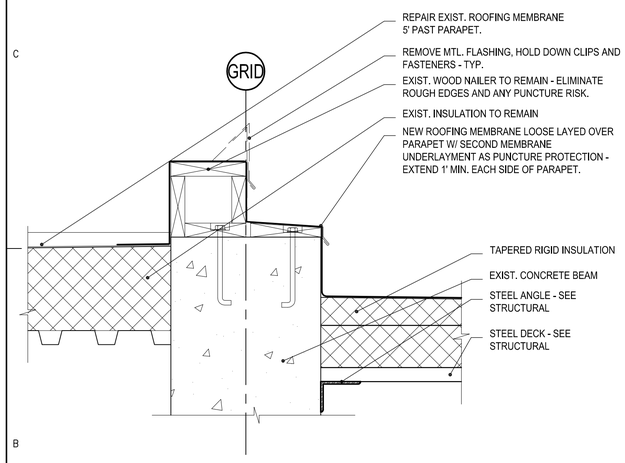

B1 EXISTING PARAPET @ NEW ROOF

SCALE: 1 1/2"=1'-0"

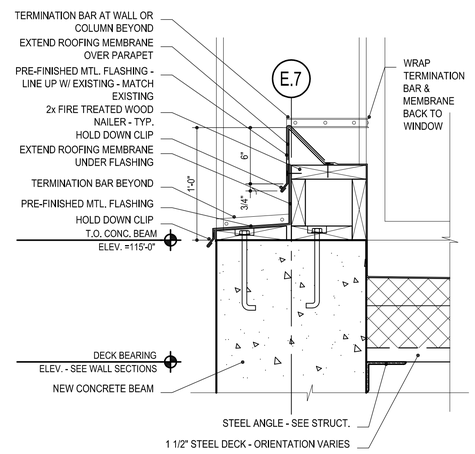

B2 PARAPET COPING

SCALE: 1 1/2"=1'-0"

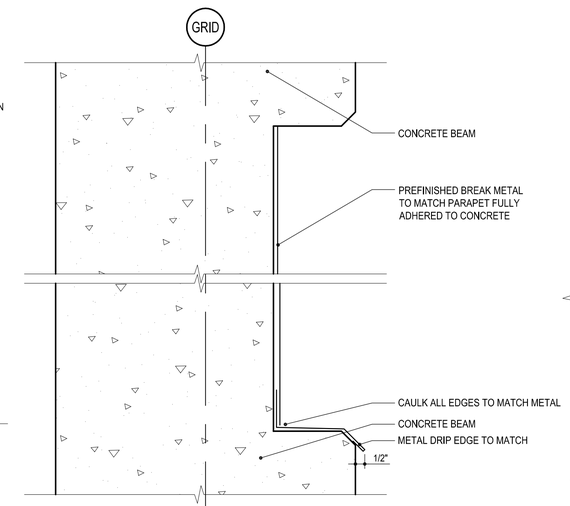

B3 BEAM INFILL

SCALE: 3"=1'-0"

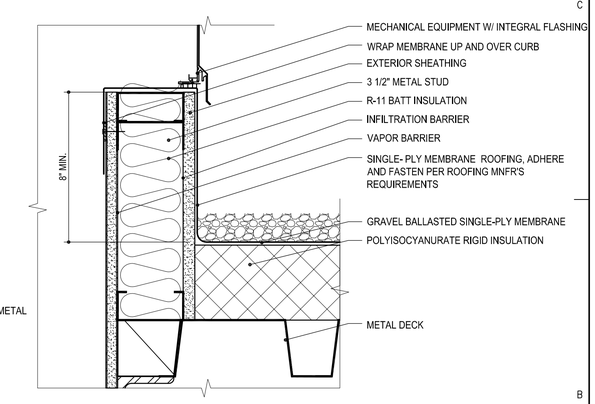

B4 ROOF CURB DETAIL

SCALE: 3"=1'-0"

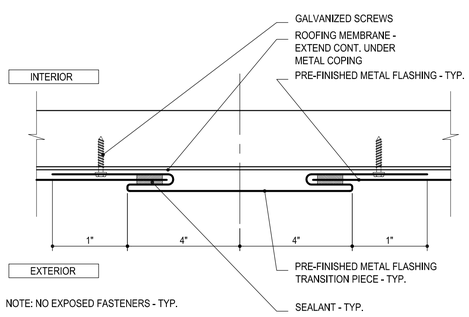

A1 ROOF FLASHING DETAIL

SCALE: 6"=1'-0"

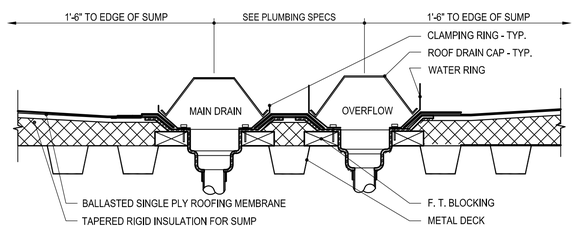

A2 ROOF DRAIN DETAIL

SCALE: 1 1/2"=1'-0"

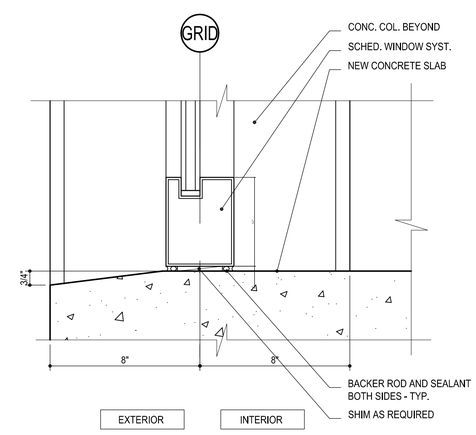

A3 GLAZING SILL

SCALE: 3"=1'-0"

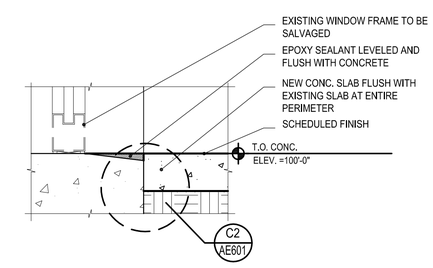

A4 NEW/OLD CONC. TRANSITION

SCALE: 1 1/2"=1'-0"

Axis Architects
352 SOUTH DENVER STREET (440 E.) SALT LAKE CITY UTAH 84111 P 355-3003 F 355-0113

Utah Valley University Physical Education Infill II

OREM, UTAH

Axis Job #	0910
Owner #	09097790
Date	07-10-2009
Drawn	-
Checked	-

DETAILS

AE601

P:\0910-UEPCM UVU PE Office Infill\3-CD\AE601.dwg, 7/13/2009 4:54:50 PM, AXIS Architects AXIS Architects, AXIS Architects, 1:1,511

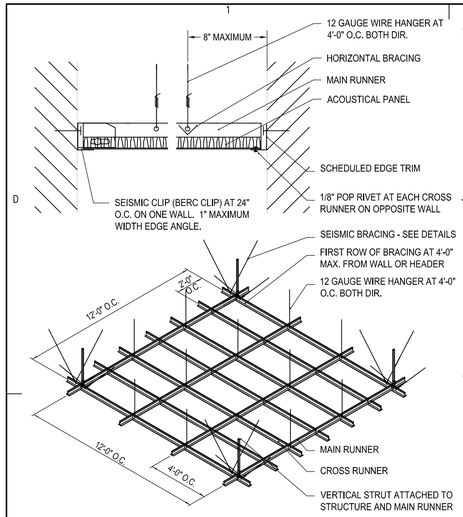

NOTE:
1. NO SPLAY WIRE SHOULD BEND AROUND EQUIPMENT, DUCTS OR OTHER WIRES.
2. ALL SPLAY WIRES TO BE IN LINE WITH ATTACHED RUNNER
3. ADD'L SPLAY WIRES REQUIRED WITHIN 3" OF EACH CORNER OF LIGHT FIXT.
4. NO SPLAY WIRE SHALL BE CLOSER THAN 6" FROM ANY UNBRACED DUCT/PIPE.
5. ATTACH SPLAY WIRES TO JOISTS AND RUNNERS W/ 4 TIGHT TURNS IN 2 INCHES

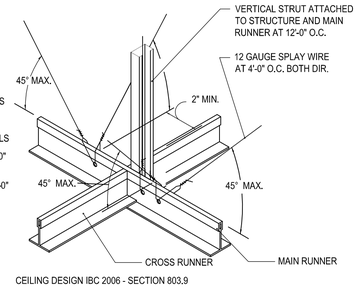

CEILING DESIGN IBC 2006 - SECTION 803.9

C1 SUSPENDED CEILING DETAIL
SCALE: 1/8"=1'-0"

C2 SEISMIC BRACING DETAIL
SCALE: 1/8"=1'-0"

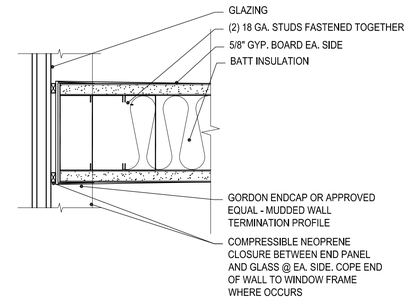

C3 WALL AT GLASS
SCALE: 3"=1'-0"

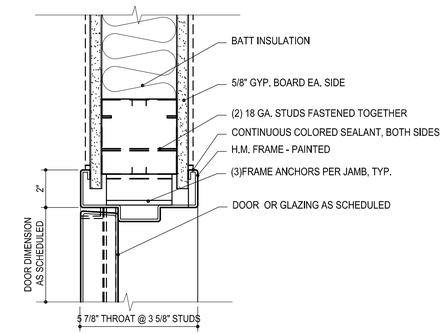

C4 HEADER DETAIL
SCALE: 3"=1'-0"

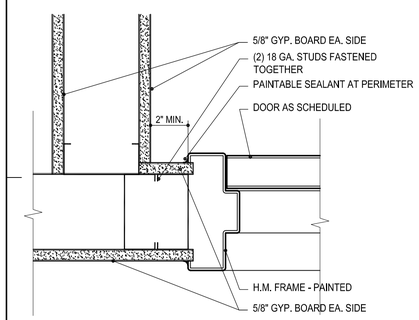

B1 JAMB DETAIL
SCALE: 3"=1'-0"

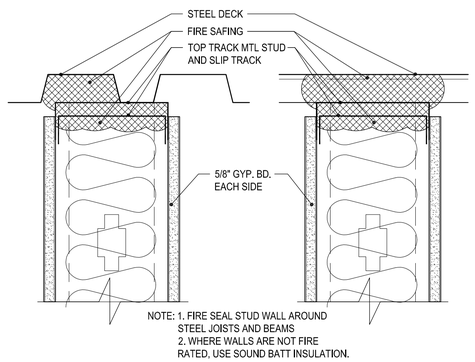

B2 TOP OF GYP. BD. WALL
SCALE: 3"=1'-0"

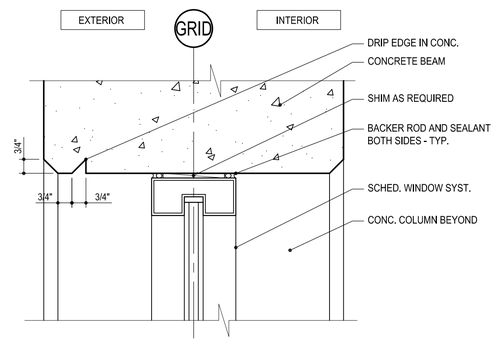

B3 WINDOW HEAD @ BEAM
SCALE: 3"=1'-0"

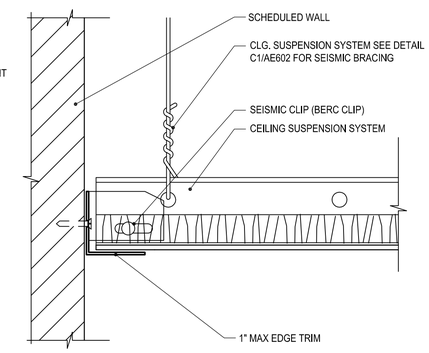

B4 SUSPENDED CEILING PANEL
SCALE: 3"=1'-0"

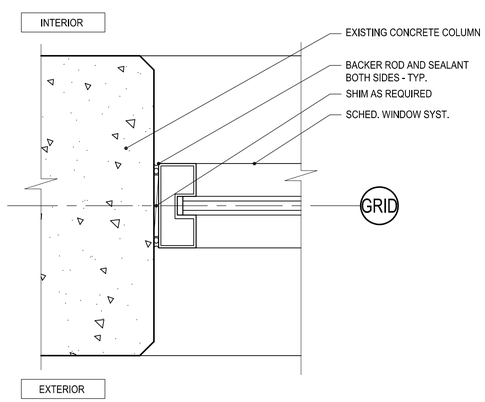

A2 WINDOW JAMB @ COLUMN
SCALE: 3"=1'-0"

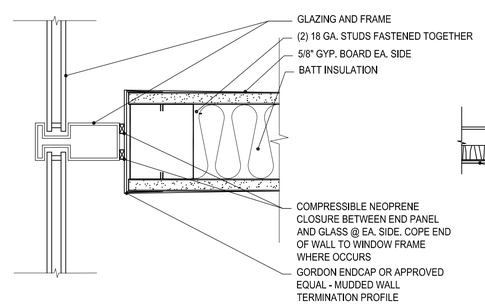

A3 WALL @ WINDOW MULLION
SCALE: 3"=1'-0"

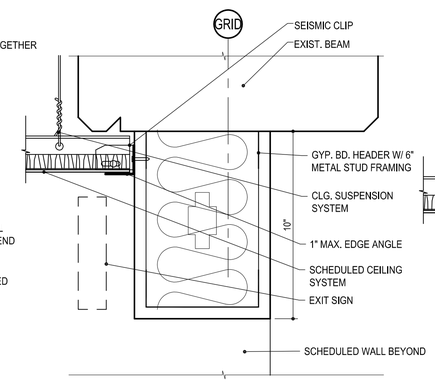

A4 HEADER AT HALLWAY
SCALE: 3"=1'-0"

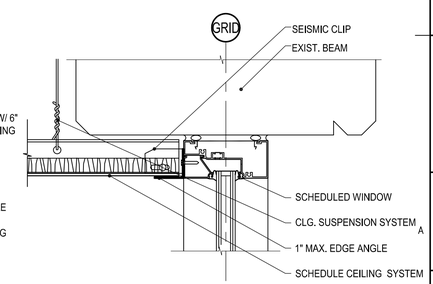

A5 ACC. TILE CEILING AT BEAM
SCALE: 3"=1'-0"

Axis Architects
352 SOUTH DENVER STREET (440 E.) SALT LAKE CITY UTAH 84111 P 355-3003 F 355-0113

Utah Valley University Physical Education Infill II
OREM, UTAH

Axis Job #	0910
Owner #	09097790
Date	07-10-2009
Drawn	-
Checked	-

DETAILS

AE602

P:\09104\CAD\CM UVU PE Office Infill\S-CD\AE602.dwg, 7/13/2009 5:11:00 PM, AXIS Architects AXIS Architects,
AXIS Architects, 1:1,1311

STRUCTURAL GENERAL NOTES

I. Basis of Design

B1. Governing Building Code: 2006 International Building Code (IBC)

B2. Gravity Loading
A. Roof.....20 psf dead load
Snow Loads Plus Snowdrift
Pg= 43 psf
Pf= 33 psf
Ce= 1.0
Is= 1.1
Ct= 1.0

B3. Earthquake
A. Seismic Design Category..D IE = 1.25
B. SDS = 0.801, SD1 = 0.441, Ss = 1.16, S1 = 0.487
C. Site Class = D
D. Lateral Force Resisting System = Concrete Shear Walls
E. Base shear = 0.17W R= 6
F. Analysis procedure = Equivalent Lateral-Force Procedure

B4. Wind velocity.....90 miles per hour (3 second gust speed) exposure B.
Net uplift force at roof equals 17 psf.
Importance Factor Iw.....1.1
Cladding and Components.....21 psf

B5. Foundation
A. Soil Bearing Pressure.....1500 psf ASSUMED.

B. Frost Depth.....30 inches.

II. Site Work

SW1. A minimum of 6" of topsoil shall be removed from the entire building site including all vegetation and debris.

SW2. Contractor shall over excavate 18" under all footings and 18" beyond edge of footing. An independent soils testing agency shall verify a 1500 psf soil bearing capacity of the soil subgrade prior to installing the replacement fill as specified in sheet SE001 notes SW3 through SW10.

SW3. All bearing earth to be undisturbed earth or compacted fill. The area on which the fill is placed must be frost free. The fill shall then be placed in layers not to exceed 8 inches in depth and compacted.

SW4. All fill and back fill shall be compacted to a minimum of 95% of maximum relative density for footings and 90% for all other structural fill based on AASHTO T180.

SW5. Any fill to be placed under the building and footings shall be a well graded granular material within the limits of the following gradation, unless otherwise specified by Soils Engineer:

Sieve Size	Percent Passing
4"	100
1"	60-90
#4	30-60
#40	10-30
#200	5-12

SW6. All water shall be removed from foundation excavation prior to placing of concrete. Do not pour concrete under water.

SW7. Any unusual soil conditions (water, clay, soft layers, etc.) encountered during excavation for footings shall be immediately brought to the attention of the architect and soils engineer.

SW8. All foundation excavations shall be protected from all detrimental changes in environmental conditions such as rain and freezing.

SW9. Contractor shall coordinate the architectural, structural, and civil drawings for top of footing elevations and footing steps and excavations.

SW10. Contractor shall verify all existing and future grades. Footings shall be poured to maintain the minimum frost protection or confinement indicated on details. Footing steps shall be provided as per typical details where required by site conditions.

III. Concrete and Reinforcing

C1. All work and materials shall comply with all areas of ACI318 and ACI 347 Publications and applicable ASTM Publications.

C2. Compressive strength of concrete at 28 days shall be as follows: (only 1-grade of concrete shall be poured on the job at one time). Use type II cement in contact with ground.

	Minimum Compressive Strength(psi) (At 28 Days)	Slump (+/- 1/2")	% Air Entrainment	Maximum Aggregate Size	Special Inspection Required
Footings	3000	4	3%	1 1/2"	NO
Foundation walls	4000	4	3%	3/4"	NO
Int.Slab on Grade	4000	3	3%	1 1/2"	NO
Ext.Slab on Grade	4500	3 5 1/2& to 7 1/2&1		1 1/2"	NO

water/cement ratio = .45 max.

C3. Hardrock aggregates shall conform to ASTM C-33. Their Maximum size shall be 3/4" except 1" shall be used for footings and slabs on grade.

C4. Admixtures
A. Concrete mix shall include flyash as per ASTM C618 class "F" except that maximum loss on ignition shall be limited to 1% to yield specified quantities. Flyash replacement of cement shall be limited to 20% by weight.

C5. The contractor shall submit mix design and 3, 7, and 28 days strength tests for review by the structural engineer before any concrete is poured at the job site.

C6. All concrete that is placed by pumping shall be medium range-plasticized with water reducing admixture which shall comply with specifications for chemical admixtures for concrete, ASTM designation C-494 non-chloride and shall be used in strict accordance with manufacturer's recommendations. Product specification publication shall be submitted to structural engineer for review.

C7. Unless otherwise noted all reinforcement bars shall be securely anchored to the forms and spaced from them as follows: Minimum Coverage
A. Cast against & exposed to earth.....3 inches
B. Concrete exposed to earth or weather:
#6 though #18 bars.....2 inches
#5 bar and smaller.....1 1/2 inches
C. Not exposed to weather or in contact with ground: slabs, walls, joists:.....3/4 inches

C8. Reinforcing Steel
A. All reinforcing steel shall be bent, detailed and chaired as per the "ACI Manual of Standard Practice for Detailing Reinforcing Concrete Structures."
B. All reinforcing steel to be welded shall comply with ASTM A706.
C. All reinforcing steel shall be of new stock deformed bars conforming to ASTM A-615 grade 60 unless otherwise noted. Placement of bars in accordance with ACI 315 and ACI 318. Use bar supports per ACI 315 chapter 7 for all rebar and welded wire fabric. As per ACI 318, Section 7.5.1: "All reinforcement shall be accurately placed and adequately supported before concrete is placed and shall be secured against displacement within tolerances permitted in 7.5.2." Wet stabbing reinforcing is not allowed.
D. Unless otherwise indicated, all anchors welded to steel plates or angles that are embedded in masonry or concrete shall be deformed bar anchors conforming to A36 Steel or ASTM A706.
E. Minimum standard rebar lap lengths: #3=14" #4=25" #5=31" #6=37" #7=54" #8=62" #9=70" #10=78" #11=85".
Epoxy coated bar laps, multiply above values by 1.2. For epoxy coated rebars or wires with cover less than 3db or clear spacing less than 6db, the laps shall multiply the above values by 1.5.
Lightweight concrete bar laps, multiply above values by 1.3. (ie. #6=37"x1.3=48").
If more than 12" concrete is below rebar (beam top reinforcing), multiply above values by 1.3. (ie. #5=31"x1.3=41").
See shear wall schedule for seismic lap lengths.
All vertical reinforcing bars (unless noted otherwise) shall be doweled to footing with 90 degree standard hook.
F. Reinforcing for concrete walls as follows:(unless otherwise noted on drawings)

Thickness	Horizontal Reinf	Vertical Reinf
6"	#4 at 16" o.c.	#4 at 18" o.c.
8"	#4 at 12" o.c.	#4 at 18" o.c.
10"	#4 at 15" o.c. each face	#4 at 18" o.c. each face
12"	#4 at 12" o.c. each face each face	#4 at 18" o.c. each face each face

G. All dowels shall have at least 38 bar diameter embedment.
H. Break out dowels may be used for convenience of contractor, however dowels shall be Grade 40 and spacing of dowels shall be decreased by 1/3.
I. Provide corner bars at all intersecting corners. Use same size bar and spacing as horizontal wall reinforcing.
J. Add 2-#5 bars around all openings (unless otherwise noted) and extend 24" beyond corner of openings. Add also 2-#5 x 4'-0 diagonally at corners. For reinforcing over opening see opening details on drawings.
K. When called for on the drawings or when directed by engineer (bars that are to be epoxy doweled are to be put in holes larger than the bar diameter (1/4" larger for rebar and 1/8" larger for threaded bars). The holes shall be ten bar diameters deep for 4000 psi concrete or above and 15 bar diameters for concrete below 4000 psi and masonry. Fill holes with "Simpson SET-XP" epoxy (or equal as approved by engineer).
All epoxy dowels and epoxy anchors are to be either threaded or deformed bars as per drawings. Apply epoxy as per manufacturer's recommendations. Mixing shall be done using a power mixer. For cold weather application gel shall be mixed at 70 degrees and kept at 40 degrees for 72 hours after application. Impact type drilling tools shall not be used for drilling holes or tightening anchors and shear bolt nuts into or through brick. SPECIAL INSPECTION IS REQUIRED.
L. The contractor shall include an "in-place" price in his bid for 1000 pounds of reinforcing bars to be used as directed by the structural engineer. This reinforcing steel need not be stockpiled at the job site. The contractor shall submit with his bid a unit price credit for the unused portion of bars.
M. Top rebar in slabs and beams including top 6" of ties and column bars exposed to weather are to be epoxy coated after fabrication as per ASTM A 775-81 "Standard Specifications for Epoxy-coated Rebar." Splice length of epoxy-coated top bars shall be 1.7 times the length in Note E. Splice length for all other epoxy coated bars shall 1.5 times Note E.
N. Beam Rebars shall be spliced as follows, unless noted otherwise:
a. Top bars at midspan.
b. Bottom bars at support.

C9. Concrete tests shall be made by testing laboratory approved by the architect, with copies of all reports being mailed to the architect and the contractor. In general, one test shall be made for each 50 cubic yards of concrete, or each days' pour if less than 50 yards, or as directed by Architect. Each test shall consist of 5 cylinders of which one shall be tested at 7 days, 2 tested at 28 days, and two retained in reserve for later tests, if required. Specimens shall be made and tested in accordance with ASTM C-172, C-31 and C-39 standards. Slump and Air entrainment test shall also be made with each set of cylinders taken. Contractor shall provide the cylinders. The testing laboratory shall transport all cylinders. The owner shall pay for all tests.

C10. Before concrete is poured, check with all trades to insure proper placement of all openings, sleeves, curbs, conduits, bolts, inserts, etc. relating to work.

C11. Drypack concrete shall be one part Portland cement and one part sand with sufficient water to allow a small amount of paste to come to the surface. Use for grouting joists and beam pockets unless otherwise noted.

C12. Formwork not supporting weight of concrete, such as sides of beams, walls, columns, and similar parts of the work, may be removed after cumulatively curing at not less than 50 degrees for 24 hours after placing concrete, provided concrete is sufficiently hard to not be damaged by form removal operations, and provided curing and protection operations are maintained. Formwork supporting weight of concrete, such as beam soffits, joints, slabs and other structural elements, may not be removed in less than 14 days or until concrete has attained 75% of its design minimum compressive strength at 28 days. Support formwork from facing materials with structural members spaced sufficiently close to prevent deflection. Fit forms placed in successive units for continuous surfaces to be accurately aligned free from irregularities and within allowable tolerances.
Provide 1/16" camber per every 2.5 feet in concrete formwork of exposed to view concrete unless otherwise indicated by Architect/Engineer.

C13. All exposed to view concrete shall be stoned smooth while green, or as directed by Architect. No grout plaster shall be permitted.
Exposed to view concrete shall have 3/4" deep "V" groove placed vertically at 8'-0" o.c. or as directed by Architect.

C14. Protect freshly placed concrete from premature drying and excessive cold or hot temperature as per ACI 318 and maintain without drying at a relatively constant temperature for a period of time necessary for hydration of cement and proper hardening.

C15. Cold weather curing and protection requirements for concrete shall conform to the requirements of ACI 306 when depositing concrete at freezing temperature or below, the concrete mix shall have a temperature of at less 50 degrees but not more than 80 degrees. The concrete shall be maintained at a temperature of not less than 50 degrees and in a moist condition for not less than 7 days after placing or as directed by the structural engineer. The use of chemicals or additives to prevent freezing will not be permitted. Contractor shall prevent frost from penetrating under footings or interior slabs on grade or postpone concrete pour. Refer also to specifications and to any directive by structural engineer for additional cold weather requirements.

C16. Architect/Engineer shall be notified 48 hours prior to pouring any concrete in order to observe reinforcing placement.

C17. All concrete shall be properly vibrated in place using internal vibrating rods.

C18. Unless otherwise noted all concrete slabs apply a liquid type membrane forming curing compound complying with ASTM C-309, type 1, class A Moisture loss shall be not more than 0.055 gr./sq. cm. applied at 200 sq.ft./gal. When temperature is 75 degrees or more during placement do not use membrane but moist cure slab for 7 days continuous minimum or see ACI Committee 305 Report "Hot Weather Concreting". Submit method of curing for approval.

V. Structural Steel

S1. All structural steel work shall comply with the latest edition of the AISC "Standard Specifications for the Design, Fabrication and Erection of Structural Steel for Buildings", and "Code of Standard Practice". ASTM A-992 Fy=50 ksi minimum specified for structural shapes; A36 steel for miscellaneous steel; ASTM A-500 grade B for structural tubes; ASTM A-53 for structural pipes; typical U.N.O. Cambering shall meet the standard mill practice shown on AISC "Manual of Steel Construction".

S2. Shop paint and remove all rust, oils, mill scale. Apply one coat zinc chromate 2 dry mills thick. Provide touch up field coat at all abraded and welded areas, two dry mills thick. All steel exposed to moisture conditions shall be galvanized. (Follow SSPC - Paint 20; ASTM A 780)

S3. Unless noted otherwise, all structural steel to steel bolted connections shall use 3/4" diameter high strength bolts conforming to ASTM A-325 (N) and shall have carbonized washers under the turning unit. All other bolts shall conform to ASTM A-307.
A. Unless otherwise noted, all A325 bolts shall be tightened to "snug tight" requirements of AISC Table 4.1. The "Special Inspector" shall verify snug tight condition on 10% of installed bolts.
B. As noted on the drawings, bolts tightened to "PT" level shall follow requirements of AISC Table 4.1 for combined load transfer condition. Contractor shall use twist off bolts as per 8.2.3.

S4. Unless noted otherwise on plans, all steel floor beams with spans greater than 25' and all steel roof beams with spann greater than 40' shall have L/480 positive camber.

S5. Welding
A. All welding to be made by certified welders using E-70 series electrodes. (For all welding of ASTM A-572 steel, E70X8 electrodes shall be used and welding shall be as per AWS D1.1 "Structural Welding Code".)
B. All welders to be currently certified for all type of welds on this project under latest AWS D1.1, Structural Welding Code. Welders to have passed the Qualification Requirements within preceding 6 month period.
C. Welds made against concrete are to be done under the supervision of an approved testing agency and that fillet welds should be made in 1/8" passes 2" long at 4" o.c.
D. All steel to steel connections not shown bolted which is continuous, shall be welded to develop full strength capacity of connecting members.
E. Minimum size of fillet weld (unless noted otherwise on drawings):

Material thickness of thicker part joined	Minimum size of of fillet weld
to 1/4" inclusive	1/8" all around
over 1/4" to 1/2"	3/16" all around
over 1/2" to 3/4"	1/4" all around
over 3/4" to 1 1/2"	5/16" all around

F. Unless otherwise noted, all structural steel to steel connections shall be made in such a manner to develop full shear capacity of connecting members as per AISC specifications.
G. Field paint all abraded and welded surfaces for joists and metal deck. Use SSPC - Paint 20 (Galvanic).
H. Unless otherwise indicated, all anchors welded to steel plates or angles that are embedded in masonry or concrete shall be deformed bar anchors conforming to A36 Steel or ASTM A706.
I. All deck bearing angles or plates shall have full penetration welds at splices and corners typical unless noted otherwise.
J. All full penetration welds shall be tested by x-ray or ultrasonic procedures by an independent testing agency approved by the architect. Where testing procedures are not physically possible, visual inspection before and during welding shall be done by an independent testing agency.
K. 10% of all shop and field welds shall be done under the direct supervision of an independent testing agency approved by the architect and tested by magnetic particle procedures.
L. Copies of all tests results are to be sent to structural engineer. Welds found to be defective shall be corrected at no extra cost to the owner.
M. All weld testing shall be paid for by the owner.

S6. Steel Deck
A. All metal deck shall meet requirements of Steel Deck Institute (SDI) for wide rib deck. See drawings for type of deck. Manufacture shall be a member of SDI.
B. Deck manufacturer shall have ICBO certification showing lateral shear capacities of deck equaling 1100 plf TYPICAL, with an F (Flexibility Factor) less than 10.
C. Provide 18 gage sheet metal reinforcing at all valleys, hips, ridges, deck changing directions, and openings through metal deck. For openings 15" and larger frame opening with angle 3 x 3 x 1/4" unless otherwise noted. End laps to occur at supports and shall have minimum lap of 2". The deck shall be attached to all supports and the side lap of adjacent units.
D. All deck splices shall occur over supporting members and shall have a minimum of 4" of flat bearing surface contact.
E. Deck Welding (unless otherwise noted):
a. Supports parallel to deck 3/4" diameter puddle welds at 12" o.c.
b. Supports perpendicular to deck 3/4" diameter at each valley.
c. Top seam welds 1 1/2" at 12" o.c. Deck shall be crimped prior to all side or top seam welding. For composite floor deck, side lap use 1/4" diameter button punch at 24" o.c..
d. Welder shall be certified as a light gage welder in accordance with AWS.
e. Use E60 electrodes.
a, b, and c are minimum deck welding, deck supplier is to indicate deck welds on shop drawings to develop stated shear capacities.
F. Unless noted otherwise on drawings all deck shall bear on and be welded to continuous angle 3 x 3 x 1/4 x cont. at all deck boundaries fastened to concrete or masonry wall with weld plates as per typical details or 3/4" diameter x 8" x 3" J-bolts at 16" o.c. Provide angle 3 1/2 x joist depth x 3/16 under all changes in deck direction.
G. All continuous deck bearing angles shall have full penetration welds at splices and corners.
H. Architect/Engineer shall be notified 48 hours prior to application of roofing material in order to observe deck attachment.
I. Roof deck and joists and girders shall be designed for 17 psf uplift force minimum, U.N.O.
J. Temporary shoring for composite floor deck, see manufacturer for recommendations.

S7. Steel Joists
A. All open web steel joists, VS joist substitutes, loose outrigger and bridging shall be fabricated according to the specifications of the "Steel Joist Institute" (S.J.I) and the manufacturers shall be members of S.J.I joists, outriggers and VS members shall be anchored at their supports by welding unless otherwise noted. VS joist substitutes are Vulcraft "VS" series or equal. All K series joists shall bear 4 inches minimum and LH series joists and open web and girders shall bear 6 inches minimum on steel bearing angles or plates. Joist and girder supplier shall submit shop drawings showing truss joist geometry and member sizes. Joist supplier shall submit design calculations for all joists with snow drift loading, point loads, or any non-standard loading conditions.
B. Joist bearing sloping 1/4" per foot or more provide beveled steel shims welded to joist and support.
C. All joist cross bridging shall be welded at each joist and at cross over points.
D. Where steel joist are exposed, use X bridging only. Coordinate bridging location with Architect. Do not run bridging through skylights, etc., unless otherwise indicated.
E. Live Load deflection shall be limited to L over 360 unless otherwise noted. Total load deflection for jois supports, folding doors, running tracks, and hallways shall be limited to L/240.
F. Structural calculations shall be provided with a Utah P.E. stamp.
G. Top chord of joist shall be designed for an additional 5k axial force TYP. U.N.O.
H. A certification of compliance must be submitted to building official upon completion of fabrication per IBC 2206.5.
I. The bridging which supports the masonry and concrete wall shall be designed for 280 plf.
J. Side clamp of bottom chord of joist for mechanical and electrical support is not allowed.
K. Bottom chord shall be designed for 10 psf (vertical and miscellaneous loads).
L. Joists supporting running or walking track, or folding door, the total loads deflection should be limited to L/480 TYP. U.N.O.
M. Steel joists shall be designed for an additional 1K vertical load and 1K horizontal load for each basketball standard as indicated TYP. U.N.O..

S8. Steel Studs
A. Structural steel studs shall be as specified in this note and shown on drawings with minimum effective properties.

Stud Size	Gage	Gross Area (in.2)	EFFECTIVE IXX (in.4)
6"x 1 5/8	18	.43	2.22
6"x 1 5/8	16	.54	2.76
4"x 1 5/8	16	.42	1.06
3 5/8 x 1 5/8	16	.41	.84

B. All studs shall be spaced at 16" o.c. unless noted otherwise and to be standard painted unless otherwise noted.
Fy for 16 ga. and heavier material..50 Ksi
Fy for 18 ga. and lighter material..33 Ksi
C. Unless otherwise noted all bridging to be 1 1/2" minimum x 1/8" minimum x continuous cold rolled channels positioned through stud punch-outs and weld attached on both sides to stud punch-out. Bridging shall be placed at 4'-6" o.c. to match punch-outs. Where punch-outs do not line up use weld attached bridge clip angles.
D. All track to be stud size by 1 1/2" flange by 16 gage standard painted unless noted otherwise. Attach track to concrete slab at 16" o.c. using .177" diameter x 1 1/2" powder driven fasteners. Tracks and bridging to have Fy = 33,000 psi.
E. All splices of structural studs to be full strength. Use 2'-0" minimum section lapped 1'-0" above and below splice fully welded. Alternate all splices 24" minimum. Spot paint all welds after cleaning.
F. Load bearing stud walls must be fabricated with the stud ends seated against the track web. Full web and flange bearing must be provided.
G. All structural studs shall be welded to top and bottom tracks with 1/8" x 1 1/2" fillet at each stud flange and 1/8" x 3" at stud web.
H. Where plywood sheathing is screwed to metal studs, provide a 2 1/2" x 16 gage x cont. strap blocking at all horizontal panel edges between panel and studs.

S9. Headed stud type shear connectors shall conform to ASTM A-108 grade 1015 or 1020 cold finished carbon steel with dimensions complying with AISC specifications and as shown on drawings.

VII. General Conditions

G1. If discrepancies exist between specifications, general notes and drawings, call the Engineer (801-575-8223)to resolve the conflict or use the more expensive option.

G2. All dimensions on structural drawings shall be checked and verified against architectural drawings. All dimensions relating to existing site, buildings, installations or construction shall be field verified, all discrepancies shall be submitted to the architect. Do not proceed with fabrication and erection of materials affected until discrepancies are resolved.

G3. All omissions or discrepancies in the working drawings and or specifications shall be brought to the attention of the Architect and/or Structural Engineer before proceeding with any work involved.

G4. Shoring
A. Until all permanent members, including walls, slabs, floors and roof are in place and all connections are completed, stability of structure and all portions thereof shall be contractor's responsibility. During construction contractor shall keep construction loads within the design load limits shown on drawings. After construction is completed building owner shall keep loads on roof and floor within design limits shown on drawings.
B. Do not backfill walls until floor at top of wall is in place or adequate temporary bracing is provided.
C. Contractor shall provide shoring design calculations and drawings stamped by a Utah Registered Professional Engineer.

G5. All Construction shall be in accordance with the IBC 2006 and supplements unless a higher standard is called for.

G6. Unless a more stringent requirement is specified, design all members with minimum Live Load deflection of L/360.

G7. Contractor shall be responsible for safety and protection in and around job site and or adjacent properties.

G8. Observation visits to the site by Bsumek Mu and Associates Field Representative shall neither be construed as inspection nor approval of construction.

G9. Contractor shall provide 5 sets of shop drawings for review by structural engineer for: all reinforcing bars, structural steel, and all prefab. structural items (including structural calculations) and shall also be approved by the governing authority prior to installation. See Section' 106.3.4.2.

G10. All openings through floors and walls shall be verified with architectural, mechanical and electrical drawings. Do not cut openings in concrete or masonry without approval of structural engineer and architect.

G11. Contractor/Window/Door - Supplier shall provide 1/2" minimum vertical movement capability in frame system.
Window/Door- Supplier shall design for wind load specified under "Basis for Design" and shall submit professional engineer stamped design calculations showing compliance with Wind Load Capacity and vertical movement capacity.

G12. Seismic bracing of electrical, mechanical equipment,ducts, piping, and ceiling system shall be designed by their respective supplier and stamped by a Utah Professional Engineer and submitted for design review and should be submitted to the governing authority for approval prior to installation.

G13. The appearance of all exposed structural elements shall be approved by architect or owner.
All blemishes, dents, or shipping damage in structural elements that are exposed to view shall be repaired before erection and shall be approved by the architect. All sweeps in beams joists, and girders greater than 1/2" shall be corrected. Repairs shall be made at no cost to the owner. For tolerances in wide flange shapes, follow AISC specifications.

G14. Mechanical ducts, piping, and electrical conduits which supports from the bottom chord of steel joist, should be limited to 50 lbs. for single clamp on one side within 6" of each panel point.

G15. Where the ducts and pipes are running parallel to the roof joist and the weight is more than 50 plf an additional joist shall be added.

VIII. Special Inspections and Structural Testing for Seismic Resistance

Special Inspections shall be done by Special Inspectors that are qualified and approved for each area of work stated below or as required by the Building Official. All special inspections shall be paid for by the OWNER. The special inspector shall observe the work assigned for conformance with the approved design drawings and specifications. The special inspector shall submit reports to the owner, the Building Official, the Contractor, Architect, and Bsumek Mu and Associates. The special inspectors shall conform to and fulfill all other responsibilities as outlined in SECTION 1704, 1707, 1709 of the IBC 2006. The special inspector shall submit written reports of observations stating time, date, location of work and observation of work being done.

A. See note C2 for concrete above 2500 psi not requiring special inspections. Some higher strength concrete is specified for durability only.
B. Special inspections are required for the following work:
1. Concrete and reinforcing placement. Except for the following conditions:
a. For foundations satisfying requirement of IBC 2006,Table 1805.4.2.
b. Non-Structural slab on grade.
c. Site work concrete where no special hazards exist.
2. Bolts installed in concrete where indicated on drawings.
3. Welding except for the following:
a. Welded connections made by an approved fabricator's shop need no special inspection. When Building Official allows, periodic inspections for floor and roof deck welds and composite welded stud.
b. Periodic inspection may be done as outlined on drawings. See IBC 2006, Table 1704.3.
4. High strength bolting inspection for bearing type connections need be done only after installation.
5. Section 1707. Special inspections for seismic resistance.
6. All rebars and threaded rods epoxy doweled into concrete and/or grouted CMU.
C. Structural testing for seismic resistance, see Section 1708 of the IBC 2006.
D. Structural observations shall be done according to Section 106.3.4.1. All the seismic resisting elements shall be inspected, including footings.

SPECIAL INSPECTION AND TESTING (IBC 1704)

Indicate required Special inspections for project by checking the appropriate boxes:

FABRICATORS (IBC1704.2)

☒ Approved Fabricator	Fabricators Name:
☐ Unapproved Fabricator	Fabricators Name:

In-plant inspections ☐ Steel Construction ☐ Welding ☐ Details

STEEL (IBC1704.3)

Item			Reference/Comments
High Strength Bolting(1704.3.3)	☐ Continuous	☒ Periodic	
WELDING (1704.3.1)			
Details (1704.3.2)			
Complete & partial penetration groove welds	☒ Continuous	☐ Periodic	
Multipass fillet welds	☒ Continuous	☐ Periodic	
Single-pass fillet welds > 5/16"	☐ Continuous	☐ Periodic	
Single-pass fillet welds ≤ 5/16"	☐ Continuous	☒ Periodic	
Floor & roof deck welds	☐ Continuous	☒ Periodic	

CONCRETE CONSTRUCTION (IBC1704.4)

Item			Reference/Comments
Materials (1704.4.1)	☐ Continuous	☒ Periodic	
Steel placement	☐ Continuous	☒ Periodic	
Bolts prior & during placement	☒ Continuous	☐ Periodic	
Use of required design mix	☐ Continuous	☒ Periodic	
Concrete sampling for strength test, slump, air content, and temperature of concrete	☒ Continuous	☐ Periodic	
Concrete & shotcrete placement	☒ Continuous	☐ Periodic	
Curing temperature and techniques	☐ Continuous	☒ Periodic	
Form work	☐ Continuous	☒ Periodic	

SOILS CONSTRUCTION (IBC1704.7)

Item			Reference/Comments
Site preparation	☐ Continuous	☒ Periodic	
Structural fill material	☒ Continuous	☐ Periodic	
Structural fill lift thickness	☒ Continuous	☐ Periodic	
Structural fill soil densities	☒ Continuous	☐ Periodic	
Backfill soils materials	☐ Continuous	☒ Periodic	
Backfill soil densities	☐ Continuous	☒ Periodic	

EPOXY (IBC1704.13)

Item			Reference/Comments
Material and instillation	☒ Continuous	☐ Periodic	

Axis Architects
352 SOUTH DENVER STREET (440 E.) SALT LAKE CITY UTAH 84111 P 355-3003 F 355-0113

Utah Valley University
Physical Education Infill II
OREM, UTAH

Axis Job #	0910
Owner #	09097790
Date	07-10-2009
Drawn	Tri
Checked	Peter

STRUCTURAL GENERAL NOTES

SE001

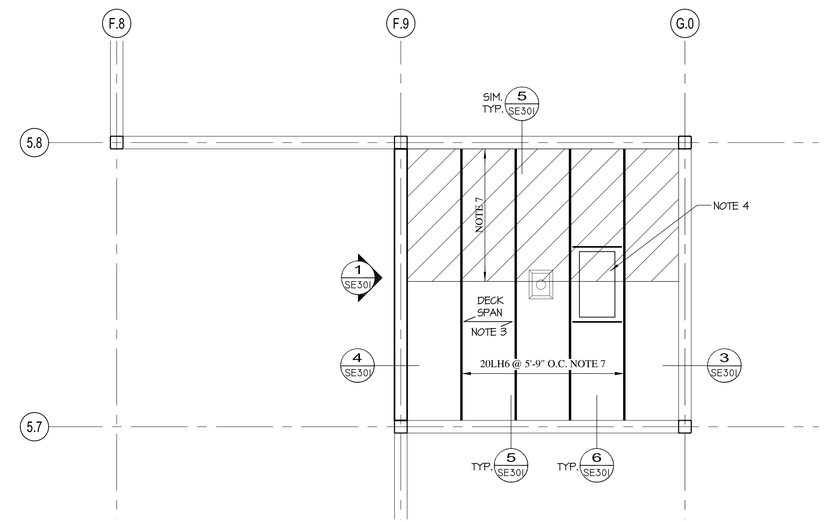

2 ROOF FRAMING PLAN

SCALE: 1/8"=1'-0"

PROJECT NORTH

PLAN NOTES:

1. 4" CONCRETE SLAB ON GRADE OVER 4" GRAVEL BASE.
2. NEW CONCRETE FOOTING AND FOUNDATION WALL. SEE DETAIL 2/SE301
3. 1 1/2"x18 GAGE ROOF DECK GALVANIZED G-60 (3-SPAN MIN.)
4. 500#± MECHANICAL UNIT. COORDINATE WEIGHT AND LOCATION ON JOISTS WITH MECHANICAL ENGINEER. SEE 5/SE501 FOR FRAMING DETAIL.
5. SEE TYPICAL DETAILS ON SHEET SE501.
6. EXISTING CONCRETE FOOTINGS.
7. DESIGN ROOF JOISTS FOR ADDITIONAL SNOW DRIFT LOAD:

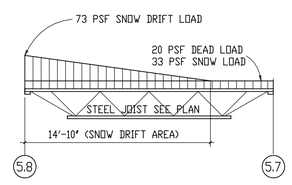

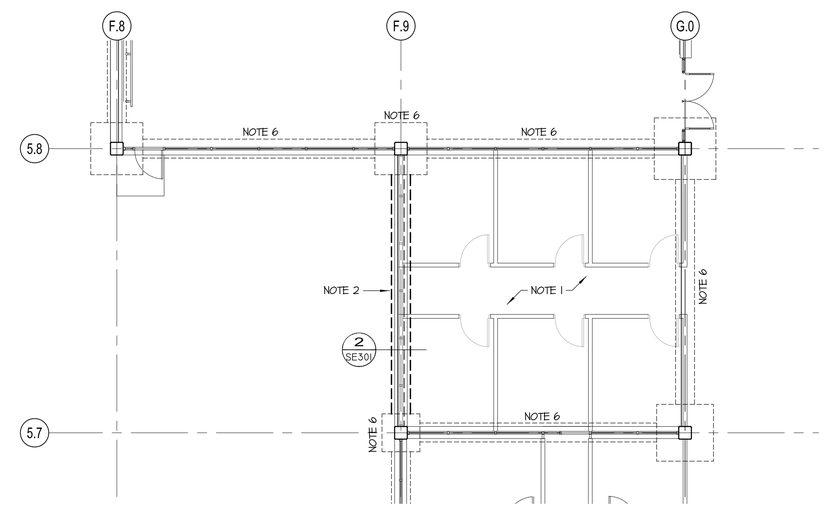

1 FOOTING & FOUNDATION PLAN

SCALE: 1/8"=1'-0"

PROJECT NORTH

Axis Architects
352 SOUTH DENVER STREET (440 E.) SALT LAKE CITY UTAH 84111 P 355-3003 F 355-0113

Utah Valley University Physical Education Infill II

OREM, UTAH

Axis Job #	0910
Owner #	09097790
Date	07-10-2009
Drawn	Tri
Checked	Peter

STRUCTURAL PLANS

SE101

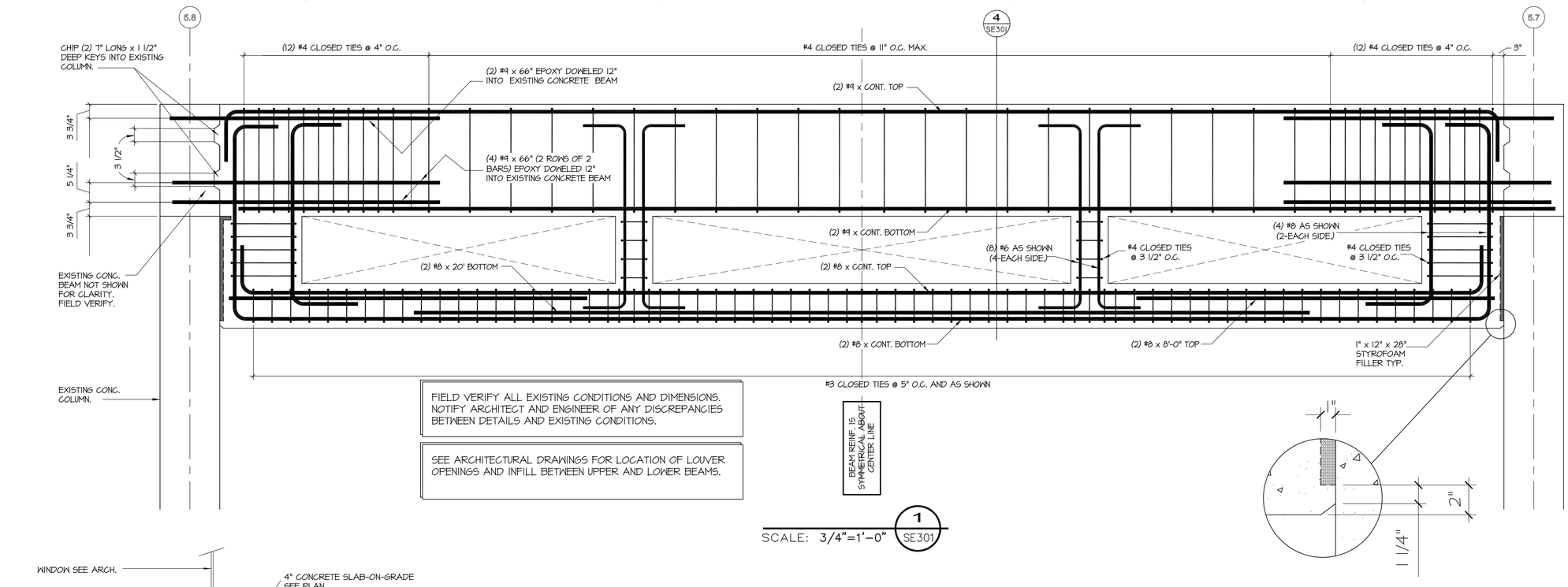

FIELD VERIFY ALL EXISTING CONDITIONS AND DIMENSIONS. NOTIFY ARCHITECT AND ENGINEER OF ANY DISCREPANCIES BETWEEN DETAILS AND EXISTING CONDITIONS.

SEE ARCHITECTURAL DRAWINGS FOR LOCATION OF LOUVER OPENINGS AND INFILL BETWEEN UPPER AND LOWER BEAMS.

SCALE: 3/4"=1'-0" (1 / SE301)

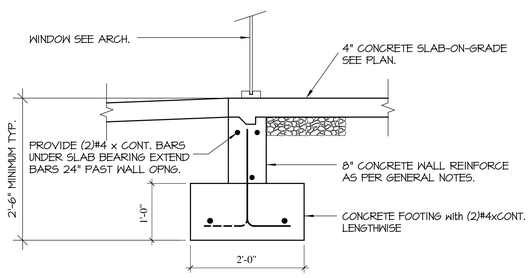

SCALE: N.T.S. (2 / SE301)

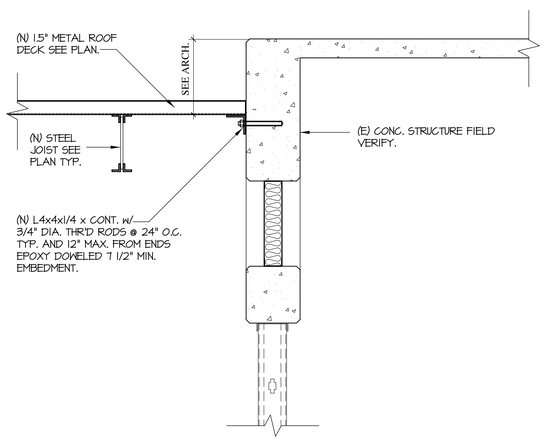

SCALE: 3/4" = 1'-0" (3 / SE301)

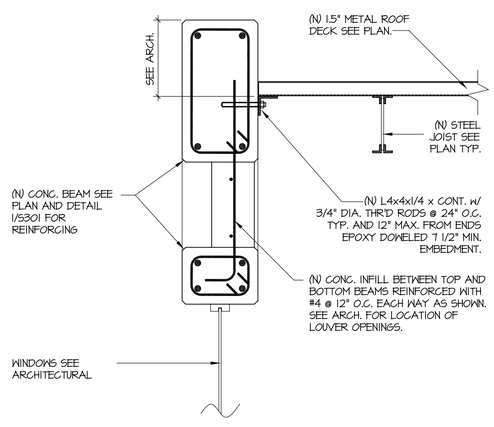

SCALE: 3/4" = 1'-0" (4 / SE301)

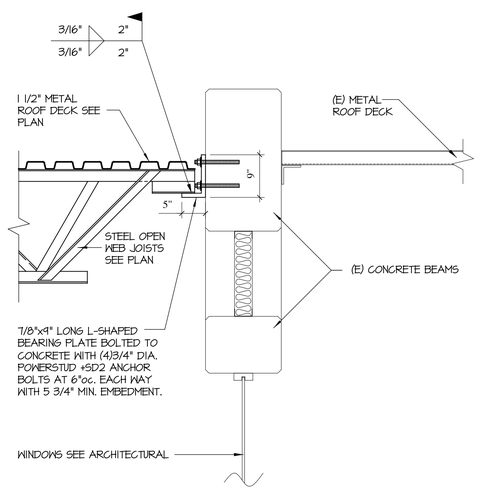

SCALE: 3/4" = 1'-0" (5 / SE301)

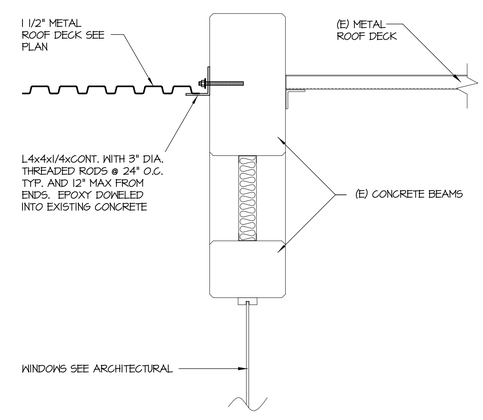

SCALE: 3/4" = 1'-0" (6 / SE301)

UVU
Axis Architects
352 SOUTH DENVER STREET (440 E.) SALT LAKE CITY UTAH 84111 P 355-3003 F 355-0113

Utah Valley University Physical Education Infill II

OREM, UTAH

Axis Job #	0910
Owner #	09097790
Date	07-10-2009
Drawn	Tri
Checked	Peter

STRUCTURAL DETAILS

SE301

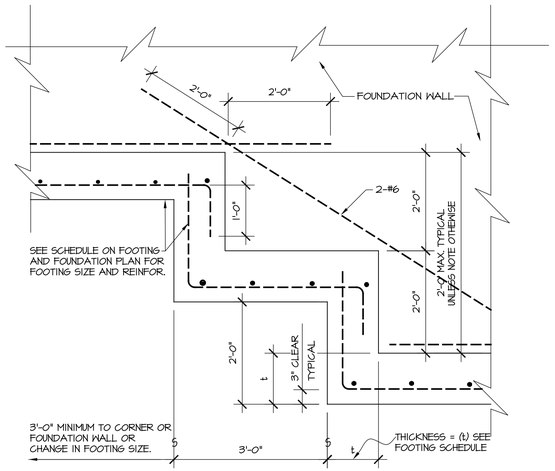

TYPICAL STEP FOOTING

SCALE: N.T.S. 1 SE501

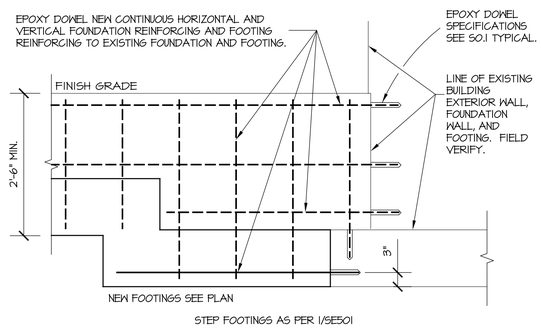

NOTE: THIS DETAIL IS TYPICAL AT ALL FOOTING AND FOUNDATION WALLS--NEW TO EXISTING

SCALE: N.T.S. 2 SE501

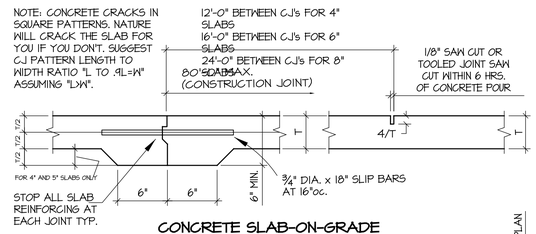

CONCRETE SLAB-ON-GRADE

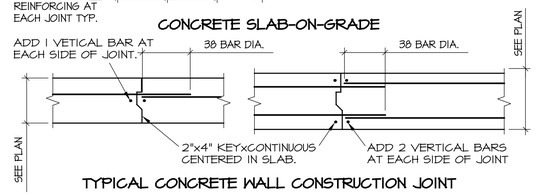

TYPICAL CONCRETE WALL CONSTRUCTION JOINT

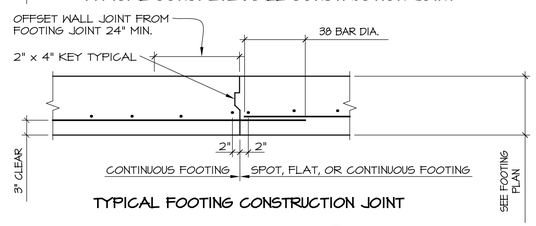

TYPICAL FOOTING CONSTRUCTION JOINT

SCALE: N.T.S. 3 SE501

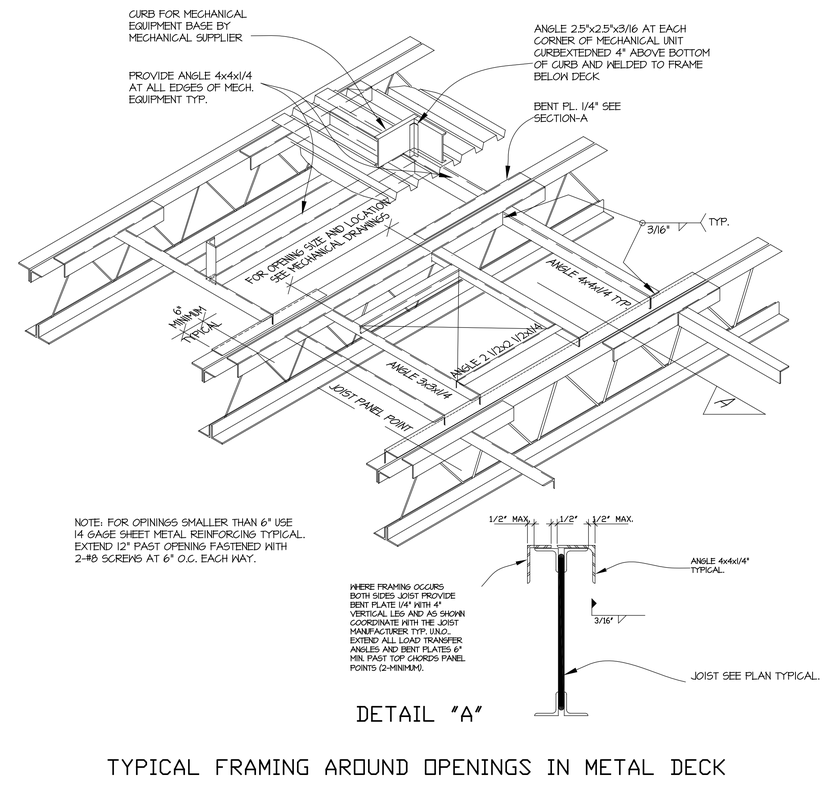

DETAIL "A"

TYPICAL FRAMING AROUND OPENINGS IN METAL DECK

SCALE: N.T.S. 5 SE501

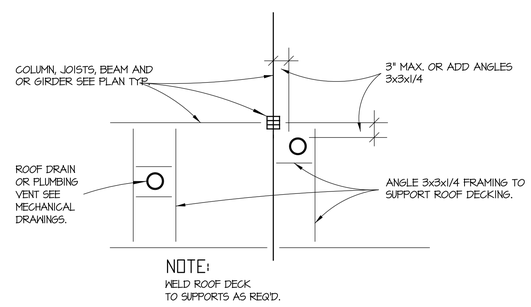

PLAN

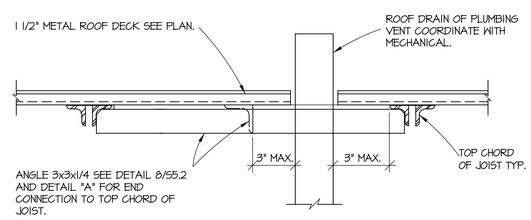

TYPICAL ROOF PENETRATION FOR ROOF DRAINS OR VENTING.

SCALE: N.T.S. 4 SE501

Axis Architects
352 SOUTH DENVER STREET (440 E.) SALT LAKE CITY UTAH 84111 P 355-3003 F 355-0113

Utah Valley University
Physical Education Infill II
OREM, UTAH

Axis Job #	0910
Owner #	09097790
Date	07-10-2009
Drawn	Tri
Checked	Peter

STRUCTURAL TYPICAL DETAILS

SE501

MECHANICAL LEGEND

SYMBOL	ABR.	DESCRIPTION
GENERAL TERMINOLOGY		
A2		DETAIL NUMBER DESIGNATION CORRESPONDING WITH GRID LOCATION
MA 1		MECHANICAL EQUIPMENT DESIGNATION EQUIPMENT ITEM DESIGNATION
D-1 CFM		REGISTER, GRILL OR DIFFUSER DESIGNATION WITH BALANCING CFM LISTED BELOW
R-1		GRILLE, OR LOUVER DESIGNATION WHERE BALANCING NOT REQUIRE
1		REVISION DESIGNATOR AND NUMBER
1		KEY NOTE DESIGNATOR AND NUMBER
	POC	POINT OF CONNECTION
	POR	POINT OF REMOVAL
GC		GENERAL CONTRACTOR
MC		MECHANICAL CONTRACTOR
ATC		CONTROL CONTRACTOR
EC		ELECTRICAL CONTRACTOR
FPC		FIRE PROTECTION CONTROL
NIC		NOT IN CONTRACT
NTS		NOT TO SCALE
C		COMMON
NC		NORMALLY CLOSED
NO		NORMALLY OPEN

SYMBOL	ABR.	DESCRIPTION
AIR SIDE		
		EXISTING AIR DUCT TO BE REMOVED
		EXISTING AIR DUCT TO REMAIN
		NEW AIR DUCT
		NEW SPIRAL DUCT
		NEW MEDIUM PRESSURE DUCT
		BURIED OR UNDER FLOOR DUCT
		FLEXIBLE AIR DUCT
		LINED DUCT
		VANED ELBOW
		RADIUS ELBOW
		FLEXIBLE AIR DUCT CONNECTION
VD		VOLUME DAMPER
		SUPPLY AIR DIFFUSER
		RETURN AIR, FRESH AIR, AND TRANSFER AIR
		CEILING MOUNTED EXHAUST FAN OR EXHAUST GRILLE
		RETURN OR OUTSIDE AIR DUCT UP
		SUPPLY DUCT UP
		EXHAUST AIR INTAKE UP
		RETURN OR OUTSIDE AIR DUCT DOWN
		SUPPLY DUCT DOWN
		EXHAUST DUCT DOWN
		ROUND DUCT UP
		ROUND DUCT DOWN
	AP	ACCESS PANEL
		EXISTING EQUIPMENT TO BE REMOVED
		EXISTING EQUIPMENT TO REMAIN
		NEW EQUIPMENT
T RTU-1	T-STAT	WALL MOUNTED THERMOSTAT MECHANICAL EQUIPMENT CONTROLLED
SA		SUPPLY AIR
RA		RETURN AIR
EA		EXHAUST AIR
OA		OUTSIDE AIR
MA		MIXED AIR
FA		FRESH AIR
RF		RELIEF AIR

SYMBOL	ABR.	DESCRIPTION
WET SIDE		
		PUMP
		REGULATOR
		UNION
		BUTTERFLY VALVE
		GATE VALVE
	CBV	CIRCUIT BALANCING VALVE
	BV	BALL VALVE
		PRESSURE GAUGE AND GAUGE COCK - WATER
		PRESSURE GAUGE AND GAUGE COCK - STEAM
		THERMOMETER AND THERMOWELL
		DIRECTION OF FLOW
		ELBOW UP
		ELBOW DOWN
		TEE UP
		TEE DOWN
		EXISTING PIPING TO BE REMOVED
		EXISTING PIPING TO REMAIN
		NEW PIPING
		PIPE CAP OR PLUG
		FLEXIBLE CONNECTION
	CW	CULINARY COLD WATER
	HW	CULINARY HOT WATER
		RECIRCULATED CULINARY HOT WATER
HWS		HEATING WATER SUPPLY
HWR		HEATING WATER RETURN
CHWS		CHILLED WATER SUPPLY
CHWR		CHILLED WATER RETURN

GENERAL NOTES:

G-1 MECHANICAL INFORMATION IS NOT LIMITED TO THE MECHANICAL DRAWINGS. CONTRACTOR SHALL BE RESPONSIBLE FOR INFORMATION ON ALL OTHER CONSTRUCTION DOCUMENTS INCLUDING DRAWINGS BY OTHER DISCIPLINES AND SPECIFICATIONS.

A - EACH DRAWING SHEET AND THE SPECIFICATIONS HAVE BEEN PREPARED TO SUPPLEMENT EACH OTHER AND THEY SHALL BE INTERPRETED AS AN INTEGRAL UNIT WITH ITEMS SHOWN AND NOTED ON ONE AND NOT THE OTHER BEING FURNISHED AND INSTALLED AS THOUGH SHOWN AND CALLED OUT IN ALL PLACES. ITEMS IN SPECIFICATIONS OR DRAWINGS LISTED WHICH ARE DIFFERING IN EFFICIENCY OR QUALITY SHALL BE HELD TO THE GREATEST OF: EFFICIENCY, QUALITY OR GOVERNING CODE.

B - THE CONTRACTOR WILL BE HELD RESPONSIBLE FOR THE INSTALLATION OF THE SYSTEMS ACCORDING TO THE TRUE INTENT AND MEANING OF THE CONTRACT DOCUMENTS.

C - THE CONTRACTOR SHALL INSTALL ALL EQUIPMENT WITH PROPER SERVICE ACCESS AND CLEARANCES ACCORDING TO MANUFACTURERS RECOMMENDATIONS. THE CONTRACTOR SHALL REVIEW SUPPLIERS BID PACKAGES FOR COMPLETENESS AND COMPLIANCE TO THE SPECIFICATIONS, SCHEDULES, AND DESIGN INTENT (ALL EQUIPMENT AND METHODS). THE CONTRACTOR SHALL REMOVE AND REINSTALL CORRECTLY AT HIS OWN EXPENSE ANY EQUIPMENT NOT IN COMPLIANCE.

D - THE CONTRACTOR SHALL CONSULT MANUFACTURERS INSTALLATION INSTRUCTIONS FOR SIZES, METHODS, ACCESSORIES, AND CLEARANCES IN SPACE AVAILABLE PRIOR TO BIDDING PROJECT.

E - ANYTHING NOT CLEAR OR IN CONFLICT WILL BE EXPLAINED BY MAKING APPLICATION TO THE ENGINEER IN WRITING.

G-2 ANY AND ALL ALTERATIONS TO THE SYSTEM SHOWN SHALL BE SUBMITTED TO THE ENGINEER PRIOR TO CHANGES FOR APPROVAL. CONTRACTOR SHALL NOT START ANY CHANGES UNTIL NOTIFIED IN WRITING. IF CHANGES ARE MADE PRIOR TO APPROVAL CONTRACTOR SHALL TAKE ALL RESPONSIBILITY FOR THE CHANGES MADE AND ALL COSTS RELATING TO FAILURE OR REPLACEMENT OF ALTERATIONS.

G-3 CONTRACTOR SHALL FIELD VERIFY ALL DIMENSIONS AND LOCATIONS.

G-4 THE WORKING DRAWINGS ARE DIAGRAMMATIC. THEY DO NOT SHOW EVERY OFFSET, BEND, OR ELBOW NECESSARY FOR THE COMPLETE INSTALLATION IN THE SPACE PROVIDED. ALL LOCATIONS FOR MECHANICAL EQUIPMENT SHALL BE FIELD VERIFIED AND COORDINATED WITH ALL DRAWINGS. THE CONTRACTOR SHALL PROVIDE OR COORDINATE WITH THE GENERAL CONTRACTOR PROVISIONS FOR BLOCKOUTS OR CORE DRILLS THROUGH STRUCTURE.

G-5 THE INSTRUCTION TO "PROVIDE" ALSO INCLUDES INSTALLATION.

G-6 MECHANICAL CONTRACTOR SHALL PROVIDE AND INSTALL SMOKE AND FIRE DAMPERS AS REQUIRED BY LOCAL CODES AND AUTHORITIES.

G-7 SHEET METAL DUCT SIZES SHOWN ON DRAWINGS ARE FREE AREA DIMENSIONS.

G-8 PROVIDE AND INSTALL BALANCING DAMPERS IN ALL SUPPLY AND EXHAUST AIR BRANCH DUCTS. BALANCE TO CFM SHOWN ON PLAN.

G-9 SEE ARCHITECTURAL REFLECTED CEILING PLAN FOR EXACT LOCATION OF DIFFUSERS AND GRILLES.

G-10 PROVIDE TURNING VANES IN ALL ELBOWS OF RECTANGULAR DUCT.

G-11 THE CONTRACTOR SHALL ASSUME ALL RESPONSIBILITY IN HANDLING AND DISPOSING OF REFRIGERANTS, OILS, ETC. ALL SUCH MATERIALS SHALL BE HANDLED, DISPOSED, AND USED IN ACCORDANCE WITH ALL LOCAL, STATE, AND FEDERAL LAWS.

G-12 THE MECHANICAL CONTRACTOR SHALL VERIFY MOTOR VOLTAGES WITH THE ELECTRICAL DRAWING BEFORE ORDERING MOTORIZED EQUIPMENT AND CONTROLS.

G-13 C.F.M. LISTED IS ACTUAL AIR.

G-14 SUPPLIERS SHALL REVIEW ALL DRAWINGS AND THE SPECIFICATIONS PRIOR TO SUBMITTING PRICES TO THE CONTRACTOR. ALL QUESTIONS AND DISCREPANCIES SHALL BE BROUGHT TO THE ENGINEERS ATTENTION PRIOR TO BIDDING.

G-15 CONTRACTOR SHALL THOROUGHLY REVIEW AND SIGN SUBMITTALS FOR COMPLETENESS AND COMPLIANCE TO THE SPECIFICATIONS PRIOR TO ENGINEERS REVIEW. SUPPLIERS SHALL HIGHLIGHT OR MARK ALL INFORMATION REQUIRED TO SHOW COMPLIANCE TO THE SPECIFICATIONS. ALL REQUESTED EXCEPTIONS TO THE SPECIFICATIONS, OR SCHEDULES SHALL BE CLEARLY NOTED AND EXPLAINED. SUBMITTAL REVIEW AND ACCEPTANCE IS FOR DESIGN CONCEPT ONLY, AND DOES NOT AT ANY TIME RELIEVE THE CONTRACTOR OF RESPONSIBILITY TO MEET SPECIFICATIONS, CAPACITIES, OR DESIGN INTENT.

G-16 ALL MECHANICAL SHALL BE INSTALLED AND CONFORM TO THE 2006 EDITION OF THE IMC WITH UTAH ANNOTATIONS AND LOCAL AUTHORITY REQUIREMENTS.

G-17 ALL PIPING, MATERIALS, ETC. SHALL BE NEW AND DOMESTIC MADE UNLESS SPECIFICALLY AUTHORIZED IN WRITING PRIOR TO BID.

WHW ENGINEERING INC.
PROFESSIONAL MECHANICAL ENGINEERING
918 South Pierpont Suite 101
PLEASANT GROVE, UTAH 84062
(801) 785-0177 FAX 785-0808
EMAIL: ecd@mail@whwengineering.com

Axis Architects

PROFESSIONAL ENGINEER 07/10/09 WINWARD M. PACKER No. 375080 STATE OF UTAH

Utah Valley University
Physical Education Infill II
OREM, UTAH

Axis Job #	0910
Owner #	09097790
Date	07-10-2009
Drawn	STAFF
Checked	WP

GENERAL NOTES AND LEGEND

MG001

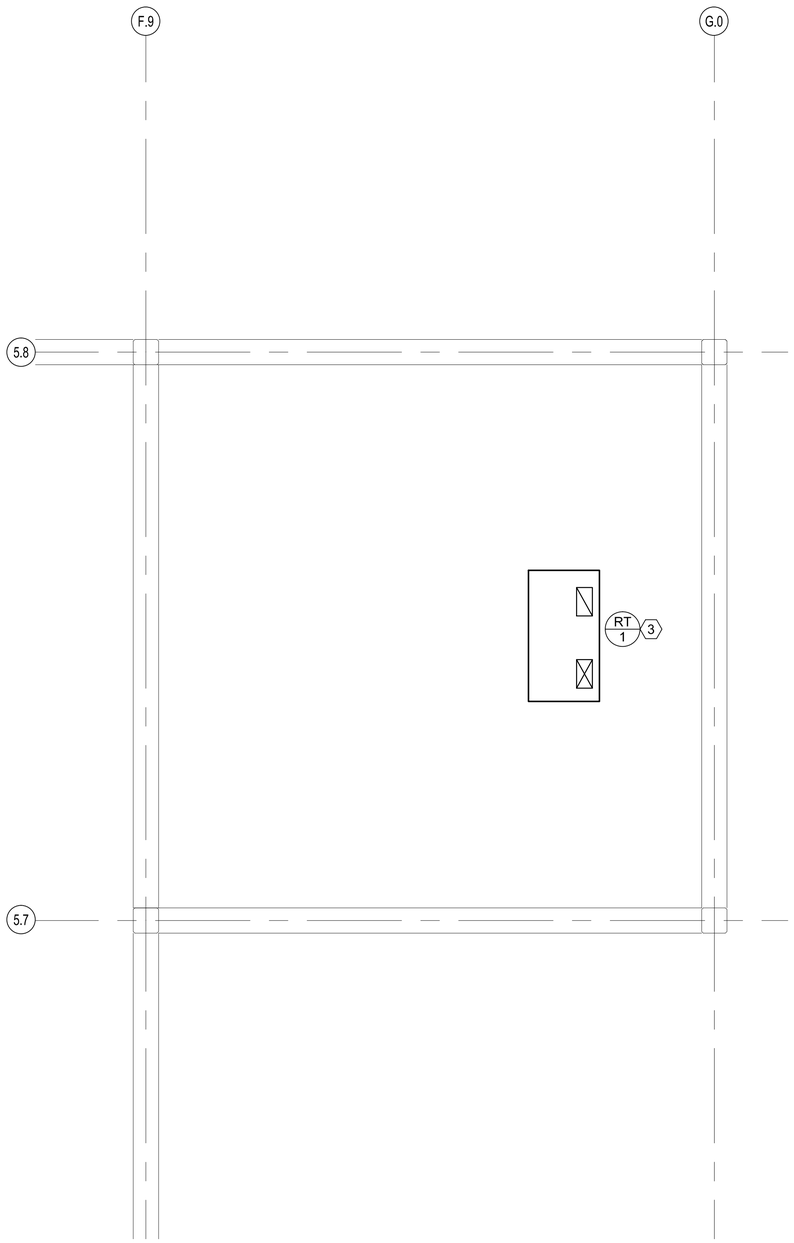

A1 MECHANICAL ROOF PLAN

SCALE: 1/4"=1'-0"

PROJECT NORTH

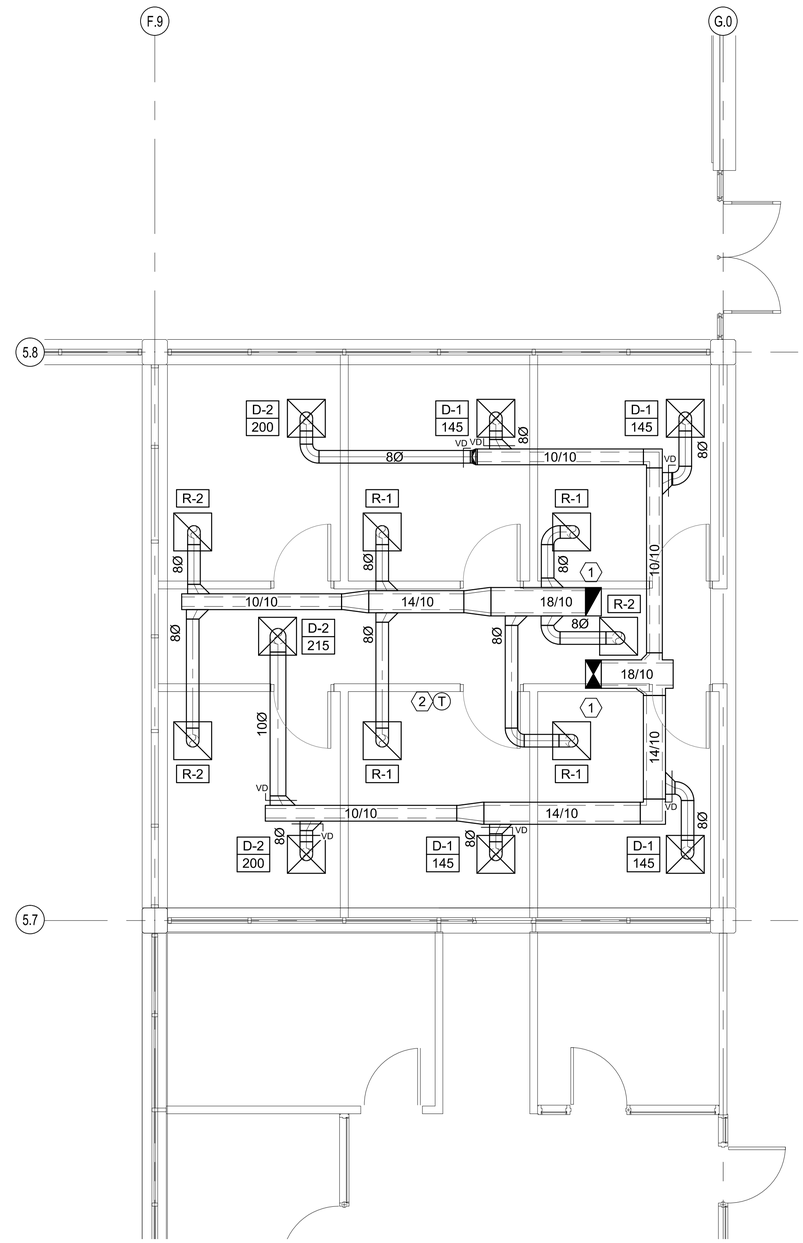

A3 MECHANICAL FLOOR PLAN

SCALE: 1/4"=1'-0"

PROJECT NORTH

SHEET NOTES:

1. SEE A3 THIS SHEET FOR ASSOCIATED ROOF TOP UNIT ABOVE.
2. PROVIDE WALL MOUNTED THERMOSTAT. COORDINATE EXACT LOCATION WITH OWNER, ARCHITECT, AND ALL OTHER DISCIPLINES.
3. PROVIDE ROOF TOP UNIT WITH ISOLATION CURB. SEE ME101 FOR CONTINUATION OF DUCT WORK BELOW. SEE PLUMBING SHEETS FOR GAS PIPING. COORDINATE EXACT SIZE AND LOCATION OF CURB WITH STRUCTURAL.

GENERAL NOTES:

1. ALL PIPING, DUCT WORK, CONDUIT, ETC. TO BE PAINTED &/OR LABELED IN ACCORDANCE WITH UVU STANDARDS. SEE SPECIFICATIONS.
2. COORDINATE ALL DUCT SIZES AND ROUTING WITH FIELD CONDITIONS AND ALL OTHER DISCIPLINES. FIELD VERIFY PRIOR TO FABRICATION.

KEYPLAN

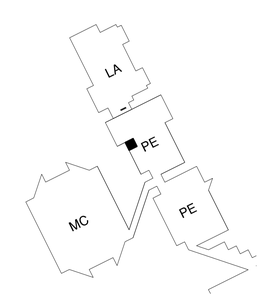

WHW ENGINEERING INC.
PROFESSIONAL MECHANICAL ENGINEERING
1819 South Pierce Suite 101
OREM, UTAH 84057
(801) 224-2771 FAX 224-2808
EMAIL: ecs@whwengineering.com

DEM

UVU

Axis Architects

PROFESSIONAL ENGINEER
07/10/09
WINWARD M. PACKER
No. 375080
STATE OF UTAH

Utah Valley University Physical Education Infill II

OREM, UTAH

Axis Job #	0910
Owner #	09097790
Date	07-10-2009
Drawn	STAFF
Checked	WP

MECHANICAL PLANS

ME101

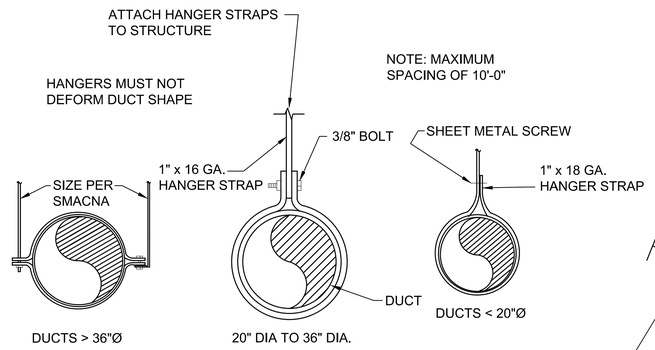

C1 ROUND DUCT SUPPORT DETAIL
SCALE: NONE

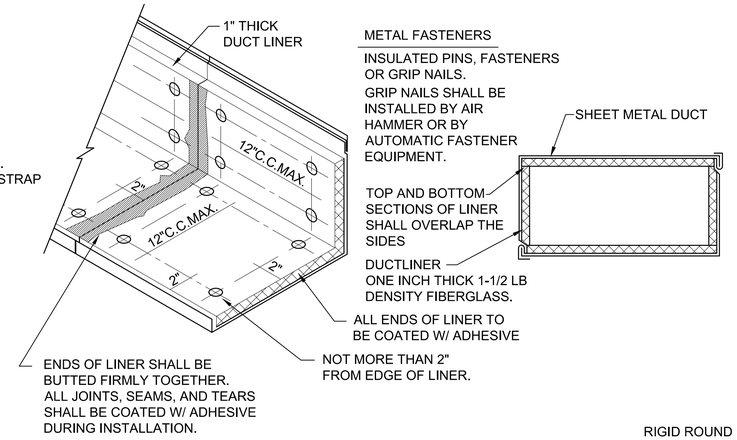

C2 DUCT LINER DETAIL
SCALE: NONE

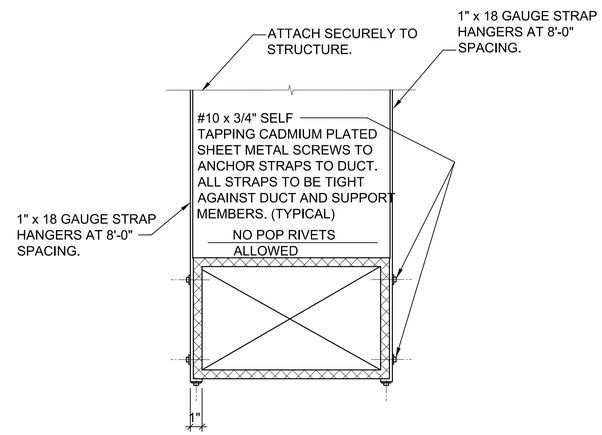

B1 DUCT STRAP HANGER DETAIL
SCALE: NONE

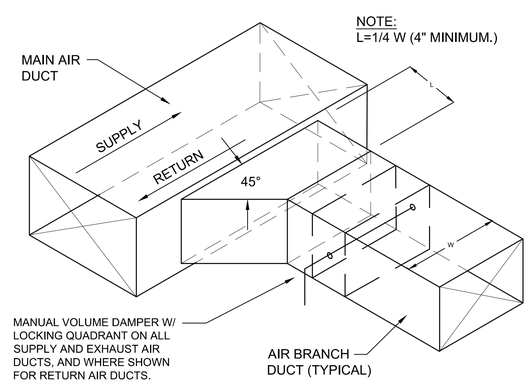

B2 BRANCH DUCT TAKE-OFF & DAMPER DETAIL
SCALE: NONE

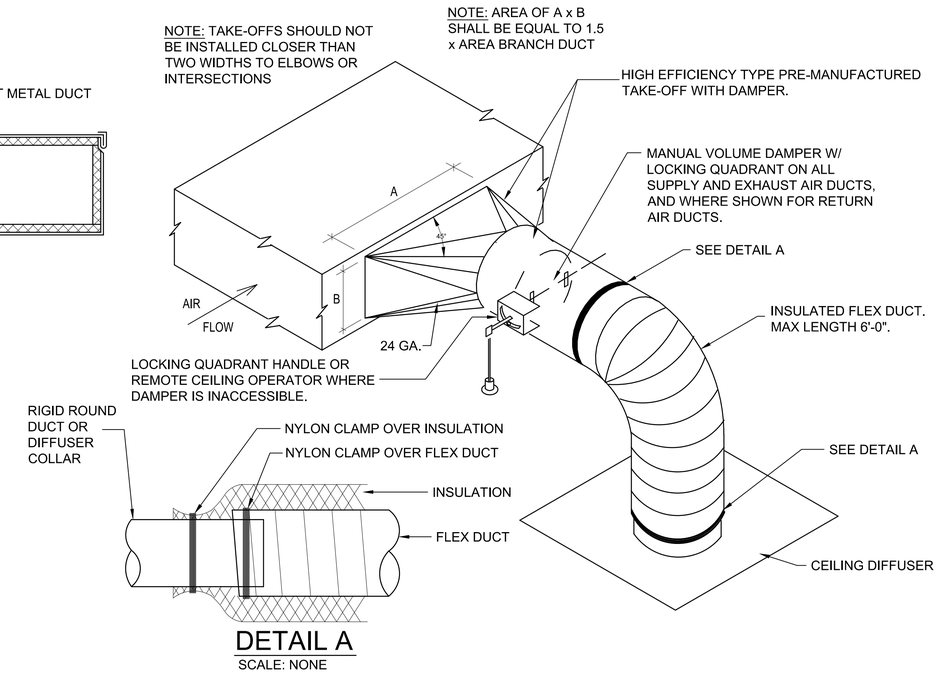

DETAIL A
SCALE: NONE

B4 SQUARE-TO-ROUND TAKE-OFF DETAIL
SCALE: NONE

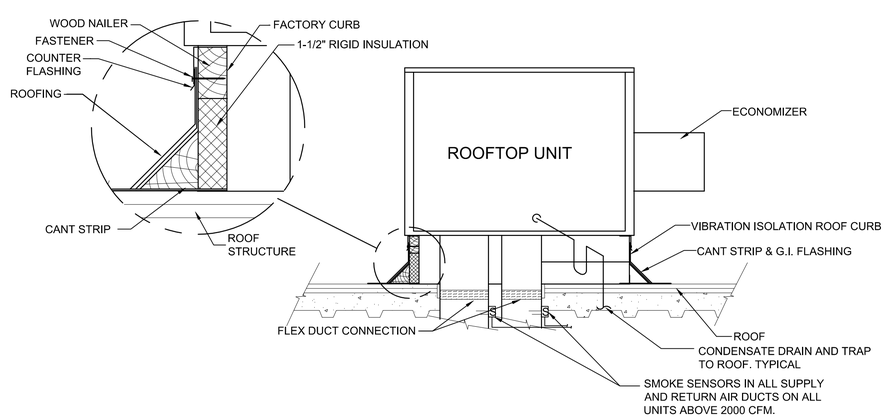

A1 ROOFTOP UNIT DETAIL
SCALE: NONE

GENERAL NOTES:

1. 16 GA GALVANIZED STEEL SEISMIC HOLD DOWN BRACKETS BY MICROMETL OR EQUAL.

2. COORDINATE EXACT DEPTH OF SEISMIC BRACKET WITH ROOFTOP MANUFACTURER.

3. PROVIDE A MINIMUM OF 2 BRACKETS PER SIDE.

4. COORDINATE WITH SPECIFICATIONS SECTION 15074 VIBRATION AND SEISMIC CONTROLS.

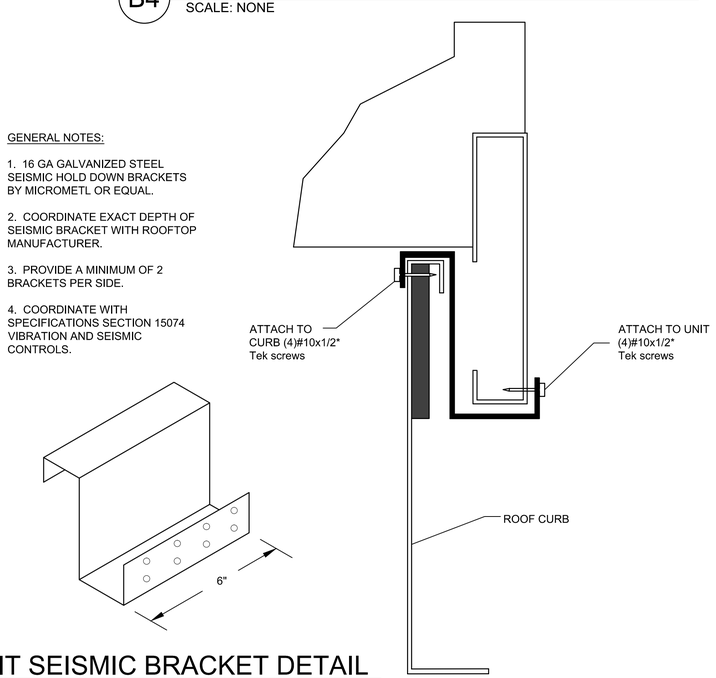

A3 ROOFTOP UNIT SEISMIC BRACKET DETAIL
SCALE: NONE

WHW ENGINEERING INC.
PROFESSIONAL MECHANICAL ENGINEERING
1818 South Pierce Suite 101
OREM, UTAH 84058
(801) 225-7777 FAX 225-8008
EMAIL: ecs@mail@whwengineering.com

Axis Architects

PROFESSIONAL ENGINEER
07/10/09
WINWARD M. PACKER
No. 375080
STATE OF UTAH

Utah Valley University Physical Education Infill II
OREM, UTAH

Axis Job #	0910
Owner #	09097790
Date	07-10-2009
Drawn	STAFF
Checked	WP

MECHANICAL DETAILS

ME501

ROOFTOP AIR CONDITIONER SCHEDULE (GAS HEAT)

SYMBOL	MANUFACTURER & MODEL NUMBER	SA CFM	OSA CFM	E.S.P. IN W.G.	HEATING	COOLING			ELECTRICAL								EER/ SEER	OPER. WT. (LBS)	SCHEDULE NOTES
					TOT. MIN. INPUT MBH	AMB. AIR (DB)	AMB. AIR (WB)	MIN. TOTAL MBH	V - Ø - Hz	COMPRESSOR #	COMPRESSOR TOTAL RLA	COMPRESSOR TOTAL LRA	EVAP BLOWER HP	POWER EXHAUST HP	MCA	MOCP			
RT 1	TRANE 4YCC3036A3075A	1200	240	.5	75	95	67	35	208/3/60	1	11.5	77	1/5	N/A	18.5	30	11.0/13.0	500	1,2,3,4,5,6

1. E.S. P. DOES NOT INCLUDE LOSSES THROUGH ACCESSORIES.
2. RATED MINIMUM INPUT AT SEA LEVEL.
3. PROVIDE ONE 15 AMP, 120 VOLT, DUPLEX GFCI SERVICE OUTLET. FACTORY INSTALLED, FIELD WIRED.
4. BELT DRIVE UNIT
5. PROVIDE WITH VIBRATION ISOLATION CURB.
6. PROVIDE WITH ECONOMIZER.

REGISTER, LOUVER & GRILLE SCHEDULE

SYMBOL	TYPE	SERVICE	MAX CFM	NOMINAL SIZE	THROAT SIZE	CEILING TYPE	SCHEDULE NOTES
R-1	CEILING	RETURN	180	8/8	8/8	LAY-IN	1,2,3,4
R-2	CEILING	RETURN	250	10/10	10/10	LAY-IN	1,2,3,4

REGISTER. LOUVER AND DIFFUSER SCHEDULE NOTES:

1. MAXIMUM NC = 25 @ MAXIMUM CFM NOTED.
2. SHALL BE PRICE 535 OR EQUAL BY OTHER APPROVED MANUFACTURERS.
3. SEE SPECIFICATIONS FOR APPROVED MANUFACTURERS.
4. FINISH SHALL BE STANDARD WHITE.

DIFFUSER SCHEDULE

SYMBOL	TYPE	MAX CFM	FACE SIZE	NECK SIZE	CEILING TYPE	BLOW	PATTERN	SCHEDULE NOTES
D-1 CFM	CEILING	150	6X6	6"Ø	LAY-IN	4--WAY		1,2,3,4,5
D-2 CFM	CEILING	300	9X9	8"Ø	LAY-IN	4--WAY		1,2,3,4,5

1. PROVIDE LAY-IN CEILING AND BORDER / MODULE AS REQUIRED. SEE ARCHITECTURAL CEILING PLANS.
2. MAXIMUM NC 25 AT CFM LISTED.
3. PROVIDE TRANSITION TO DIFFUSER NECK SIZE AS REQUIRED TO DUCT WORK SHOWN ON PLAN.
4. DIFFUSER SHALL BE PRICE MODEL SMD OR EQUAL BY APPROVED MANUFACTURER IN SPECIFICATIONS.
5. FINISH SHALL BE STANDARD WHITE.

WHW ENGINEERING INC.
PROFESSIONAL MECHANICAL ENGINEERING
1818 South Pierce Suite 101
SANDY, UTAH 84093
(801) 487-1777 FAX 487-8008
EMAIL: ecs@whwengineering.com

DLM

GVU Axis Architects

PROFESSIONAL ENGINEER
07/10/09
WINWARD M. PACKER
No. 375080
STATE OF UTAH

Utah Valley University
Physical Education Infill II
OREM, UTAH

Axis Job #	0910
Owner #	09097790
Date	07-10-2009
Drawn	STAFF
Checked	WP

MECHANICAL SCHEDULES

ME601

PLUMBING LEGEND

MEANING	SYMBOL OR ABBREVIATION	MEANING	SYMBOL OR ABBREVIATION
HOT WATER LINE		WALL CLEANOUT	WCO
COLD WATER LINE		CLEANOUT	CO
HOT WATER RECIRCULATING LINE		CLEANOUT TO GRADE	COTG
VENT LINE		FLOOR CLEANOUT	FCO
WASTE LINE		BALL VALVE	
GAS LINE		UNION	
VENT THRU ROOF	VTR	CONNECTION TO EXISTING PIPING	
UNDER FLOOR	UF	REGULATOR	R
SANITARY SEWER	SS	SOFT WATER	SW
PRIMARY ROOF DRAIN (PRD)	PD	SECONDARY ROOF DRAIN (SRD)	SD

PLUMBING GENERAL NOTES:

G-1 ALL PLUMBING SHALL BE INSTALLED AND CONFORM TO THE 2006 EDITION OF THE INTERNATIONAL PLUMBING CODE (IPC) WITH UTAH ANNOTATIONS AND LOCAL AUTHORITY REQUIREMENTS.

G-2 ALL PIPING MATERIALS SHALL MEET ALL REQUIREMENTS OF IPC AND LOCAL AUTHORITY. PLASTIC PIPING SHALL BE ALLOWED ONLY WHERE ALLOWED BY CODE. PLASTIC PIPING SHALL NOT BE ROUTED THROUGH RETURN AIR PLENUMS OR OTHER AREAS PROHIBITED BY THE IMC, IPC OR NFPA CODES OR BY LOCAL AUTHORITY

G-3 GAS PIPING INSTALLATION SHALL BE IN STRICT ACCORDANCE WITH GAS COMPANY REGULATIONS, NFPA CODE REQUIREMENTS, AND LOCAL AUTHORITY.

G-4 ALL MATERIALS SHALL BE NEW AND SHALL BE DOMESTIC MADE UNLESS SPECIFICALLY APPROVED OTHERWISE IN WRITING BY ARCHITECT OR OWNER.

G-5 PROVIDE VACUUM BREAKERS AND BACK FLOW PREVENTERS WHERE REQUIRED BY CODE OR WHERE THERE MAY BE ANY POSSIBLE CHANCE FOR CROSS CONTAMINATION. PREVENTERS SHALL BE INSTALLED IN ACCORDANCE WITH UTAH CODE.

G-6 ALL PLUMBING INFORMATION IS NOT LIMITED TO THE PLUMBING DRAWINGS. CONTRACTOR SHALL BE RESPONSIBLE FOR INFORMATION ON ALL OTHER CONSTRUCTION DOCUMENTS INCLUDING SPECIFICATIONS, ARCHITECTURAL DRAWING, STRUCTURAL DRAWINGS, MECHANICAL DRAWINGS, AND ELECTRICAL DRAWINGS.

G-7 THE WORKING DRAWINGS ARE DIAGRAMMATIC. BECAUSE OF THE SMALL SCALE OF THE DRAWING, THEY DO NOT SHOW EVERY OFFSET, BEND OR ELBOW NECESSARY FOR THE COMPLETE INSTALLATION IN THE SPACE PROVIDED. ALL PIPING SHALL BE CHECKED AND COORDINATED WITH THE SPECIFICATIONS, ARCHITECTURAL, STRUCTURAL, MECHANICAL, AND ELECTRICAL DRAWINGS.

G-8 COORDINATE ALL PIPING AND PLUMBING EQUIPMENT WITH ALL OTHER TRADES AND/OR CONTRACTORS PRIOR TO INSTALLATION.

G-9 ANY AND ALL ALTERATIONS TO THE SYSTEM SHOWN SHALL BE THE RESPONSIBILITY OF THIS CONTRACTOR AND ARCHITECT/ENGINEER SHALL BE NOTIFIED IN WRITING PRIOR TO CHANGES.

G-10 GAS LINE FITTINGS SHALL BE STANDARD WELD FITTINGS WITH TAPERED REDUCERS. DO NOT USE VALVES, UNIONS, OR AUTO CONTROLS IN GAS LINES ROUTED IN INACCESSIBLE CONCEALED SPACES.

G-11 ALL WATER SYSTEMS SHALL MEET THE REQUIREMENTS OF ANSI/NSF STANDARD 61 SECTION 9 (1998), CONCERNING METAL CONTAMINANTS IN THE WATER SYSTEM.

G-12 WATER PIPING SHALL NOT BE ROUTED IN OUTSIDE WALLS OR ON EXTERIOR SIDE OF BUILDING INSULATION ENVELOPE.

G-13 WATER HAMMER ARRESTORS SHALL BE INSTALLED IN ALL WATER LINES WITH QUICK OPEN OR QUICK CLOSE VALVES.

WATER HAMMER ARRESTOR SCHEDULE:

TYPE A	1-11 FIXTURE UNITS
TYPE B	12-32 FIXTURE UNITS
TYPE C	33-60 FIXTURE UNITS
TYPE D	61-113 FIXTURE UNITS

WHW ENGINEERING INC.
PROFESSIONAL MECHANICAL ENGINEERING
1615 South Pierpont Suite 101
OGDEN, UTAH 84404
(801) 627-1734 FAX 627-1808
EMAIL: ecdlfleming@whwengineering.com

UVU

Axis Architects

PROFESSIONAL ENGINEER
07/10/09
WINWARD M. PACKER
No. 375080
STATE OF UTAH

Utah Valley University
Physical Education Infill II
OREM, UTAH

Axis Job #	0910
Owner #	09097790
Date	07-10-2009
Drawn	STAFF
Checked	WP

PLUMBING GENERAL NOTES AND LEGEND

PG001

SHEET NOTES:

1. EXISTING CLEAN-OUT TO GRADE SHALL BE REMOVED AND CAPPED.
2. EXISTING GOOSENECK OVERFLOW SHALL BE REMOVED AND CAPPED.

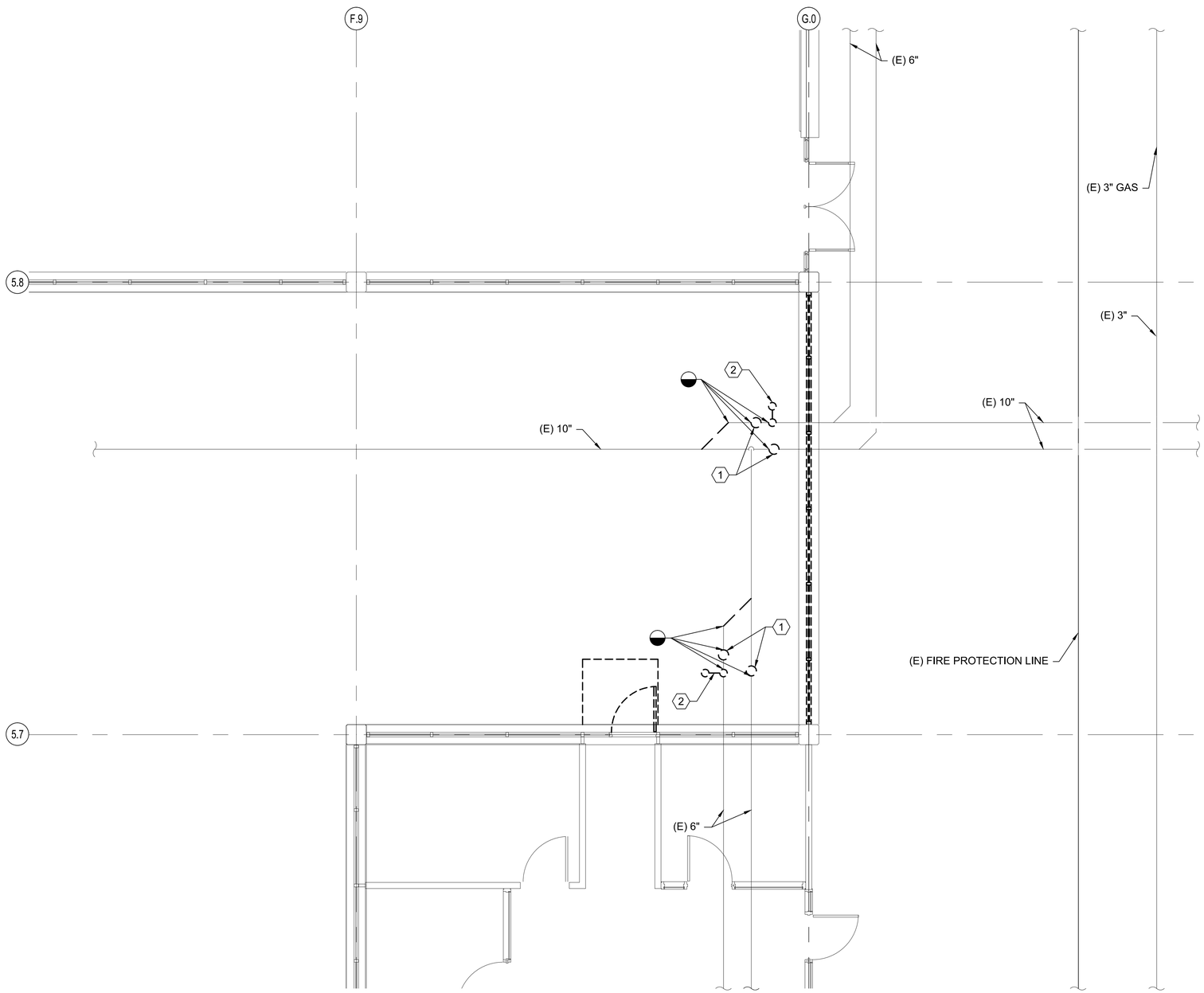

A2 PLUMBING FLOOR PLAN

SCALE: 1/4"=1'-0"

PROJECT NORTH

KEYPLAN

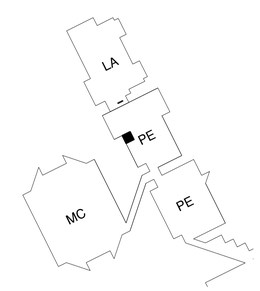

WHW ENGINEERING INC.
PROFESSIONAL ELECTRICAL ENGINEERING
815 S Sandy Parkway Suite 101
Sandy, UT 84070
(801) 562-2771 FAX 562-2808
EMAIL: eric@whwengineering.com

DEM

UVU

Axis Architects

PROFESSIONAL ENGINEER
07/10/09
WINWARD M. PACKER
No. 375080
STATE OF UTAH

Utah Valley University Physical Education Infill II

OREM, UTAH

Axis Job #	0910
Owner #	09097790
Date	07-10-2009
Drawn	STAFF
Checked	WP

PLUMBING DEMOLITION PLANS

PD101

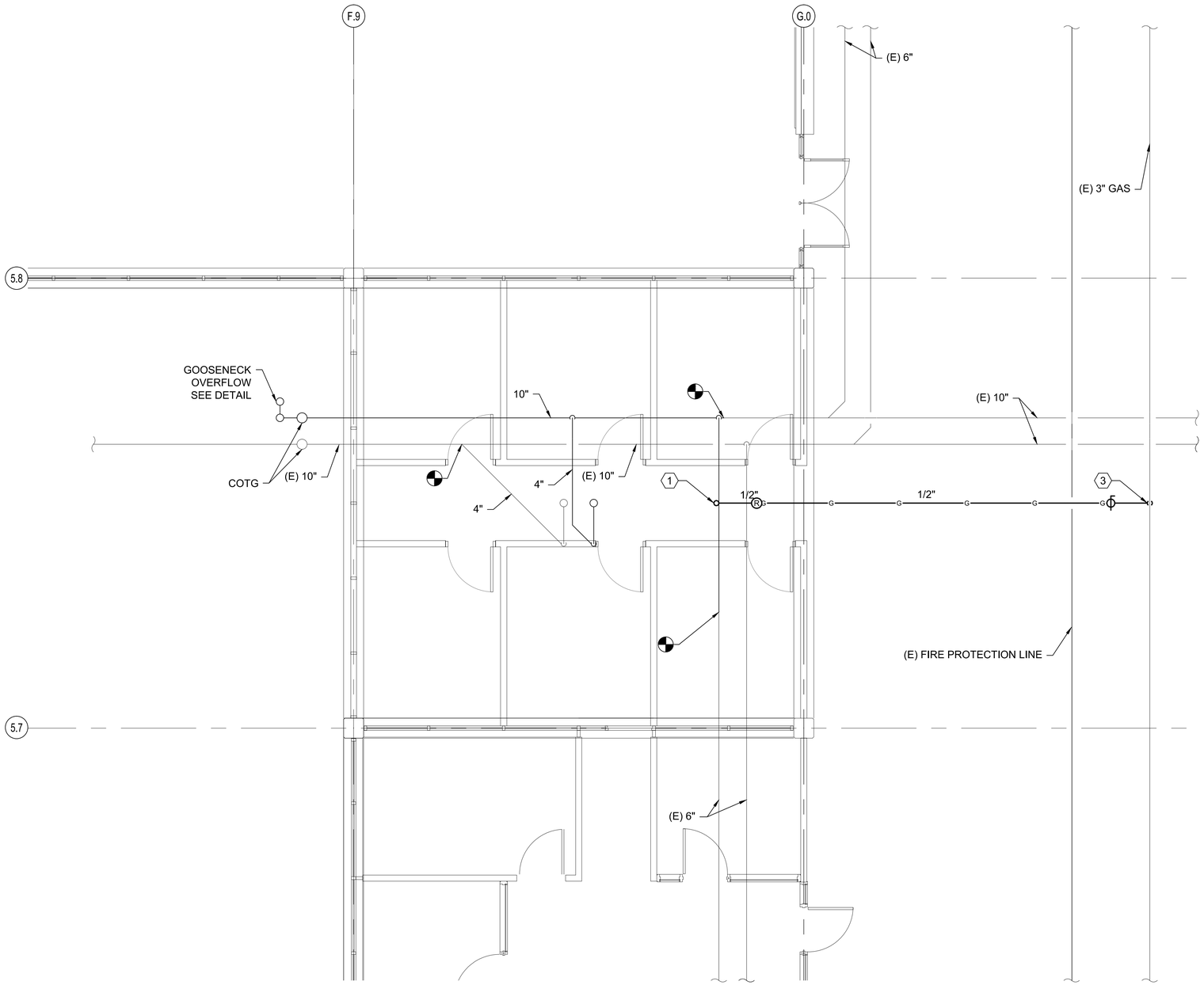

A2 PLUMBING FLOOR PLAN

SCALE: 1/4"=1'-0"

PROJECT NORTH

SHEET NOTES:

1. NEW 1/2" GAS LINE UP TO NEW ROOF TOP UNIT. SEE PE102 FOR CONTINUATION.
2. ROUTE GAS PIPING HIGH TIGHT TO STRUCTURE.
3. TIE INTO EXISTING GAS LINE. GAS LINE WILL NEED TO BE ISOLATED AND COMPLETED PURGED FOR TIE IN. SHUT DOWN OF GAS LINE WILL NEED TO BE DONE DURING LOW USAGE TIME, AND COMPLETED AS QUICKLY AS POSSIBLY. COORDINATE WITH UVU PROJECT MANAGER.

GENERAL NOTES:

1. FIRE SPRINKLERS SHALL BE PROVIDED BY DESIGN BUILD FIRE SPRINKLER CONTRACTOR, PER UTAH VALLEY UNIVERSITY FIRE MARSHALL REQUIREMENTS. DESIGN BUILD CONTRACTOR SHALL BE NICET CERTIFIED PER SPECIFICATION AND SHALL PROVIDE DEFERRED SUBMITTAL WITH ALL APPLICABLE CALCULATIONS DRAWINGS ETC.
2. ALL PIPING, DUCT WORK, CONDUIT, ETC. TO BE PAINTED &/OR LABELED IN ACCORDANCE WITH UVU STANDARDS. SEE SPECIFICATIONS.

KEYPLAN

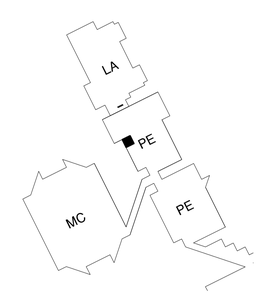

WHW ENGINEERING INC.
PROFESSIONAL MECHANICAL ENGINEERING
1615 South Pierpont Suite 101
OREM, UTAH 84057 (801) 225-8008
(801) 225-8009 FAX
EMAIL: wwhwengineering@wwhwengineering.com

DEWM

UVU

Axis Architects

PROFESSIONAL ENGINEER
07/10/09
WINWARD M. PACKER
No. 375080
STATE OF UTAH

Utah Valley University Physical Education Infill II

OREM, UTAH

Axis Job #	0910
Owner #	09097790
Date	07-10-2009
Drawn	STAFF
Checked	WP

PLUMBING PLANS

PE101

SHEET NOTES:

1. 1/2 GAS LINE DOWN. PROVIDE DRIP LEG AND FLEXIBLE CONNECTION PER DETAIL.
2. SEE PE101 FOR CONTINUATION.

GAS LOAD:
LOAD: 75 CFH
LENGTH: 10 FEET

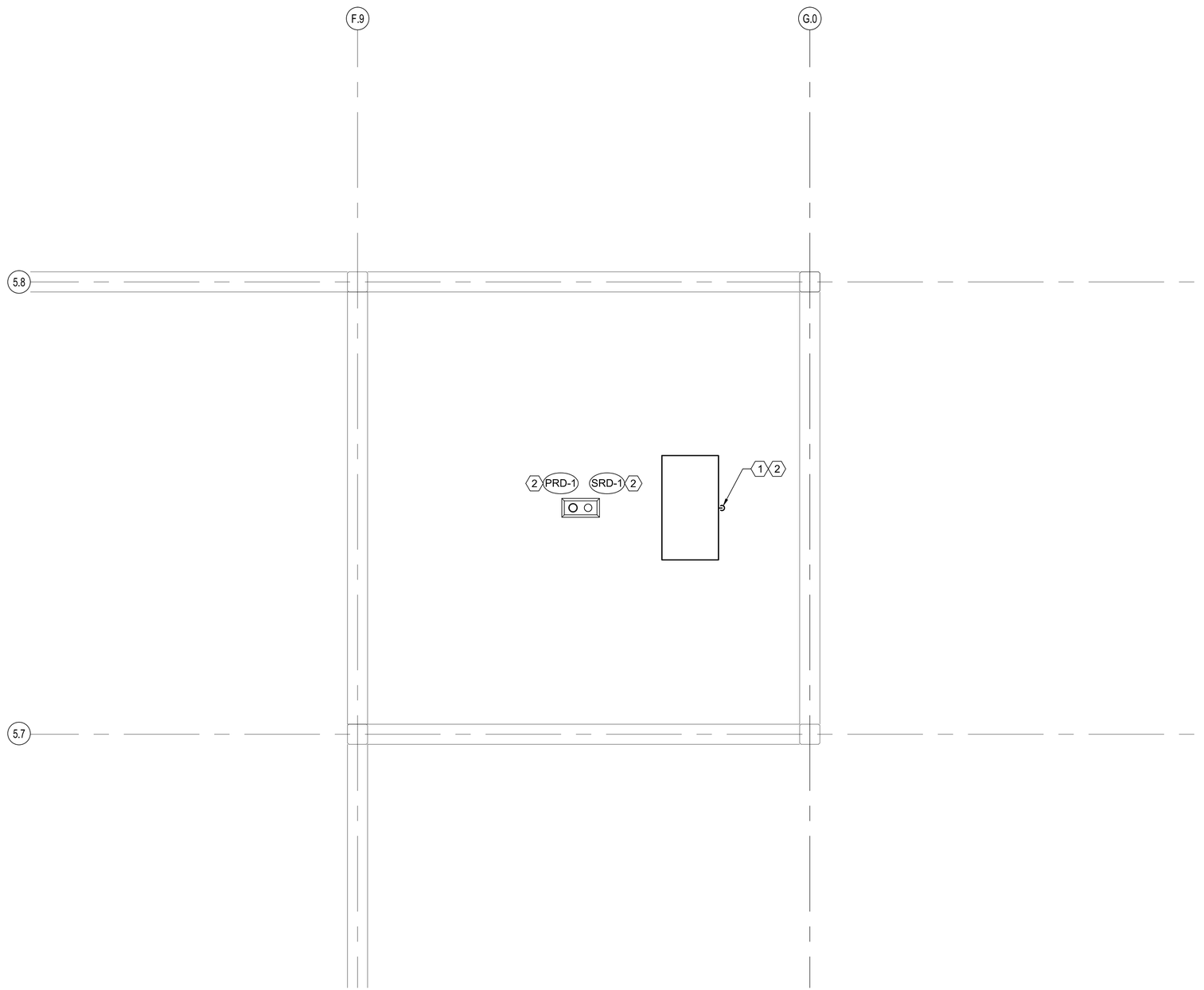

GENERAL NOTES:

1. ALL PIPING, DUCT WORK, CONDUIT, ETC. TO BE PAINTED &/OR LABELED IN ACCORDANCE WITH UVU STANDARDS. SEE SPECIFICATIONS.

KEYPLAN

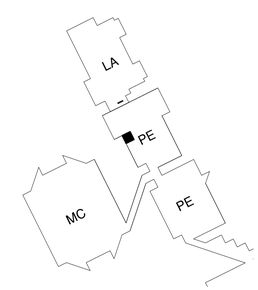

A2 PLUMBING FLOOR PLAN

SCALE: 1/4"=1'-0"

PROJECT NORTH

WHW ENGINEERING INC.
PROFESSIONAL ENGINEERS & CONSULTANTS
915 S South Pointe Suite 101
Orem, UT 84058 - (801) 225-8000
(801) 225-8008 FAX
EMAIL: eco@whwengineering.com

DPM

UVU

Axis Architects

PROFESSIONAL ENGINEER
07/10/09
WINWARD M. PACKER
No. 375080
STATE OF UTAH

Utah Valley University Physical Education Infill II

OREM, UTAH

Axis Job #	0910
Owner #	09097790
Date	07-10-2009
Drawn	STAFF
Checked	WP

PLUMBING ROOF PLANS

PE102

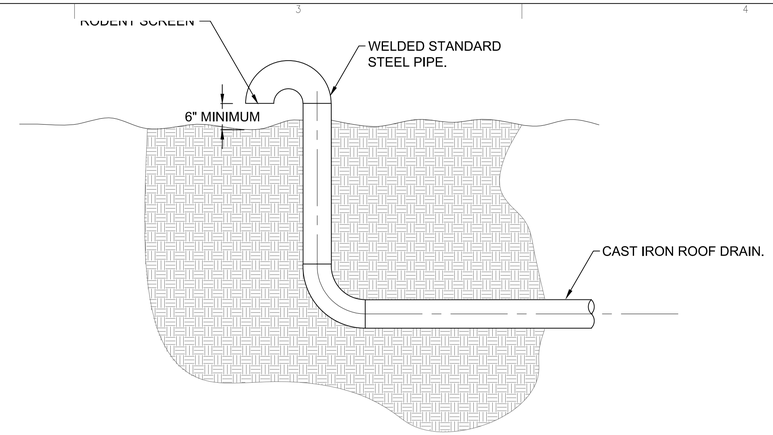

C2 GOOSENECK OVERFLOW DETAIL
SCALE: NONE

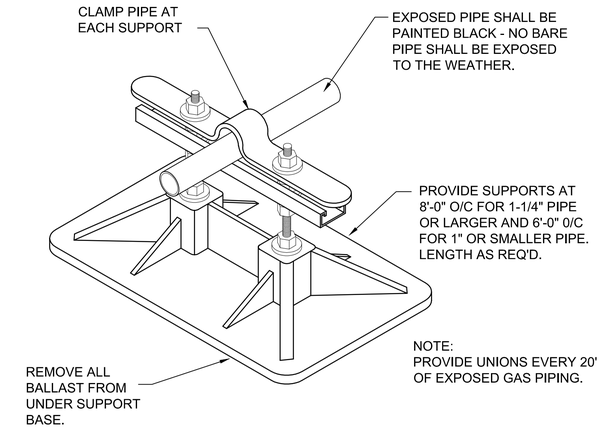

C4 GAS SUPPORT ON ROOF DETAIL
SCALE: NONE

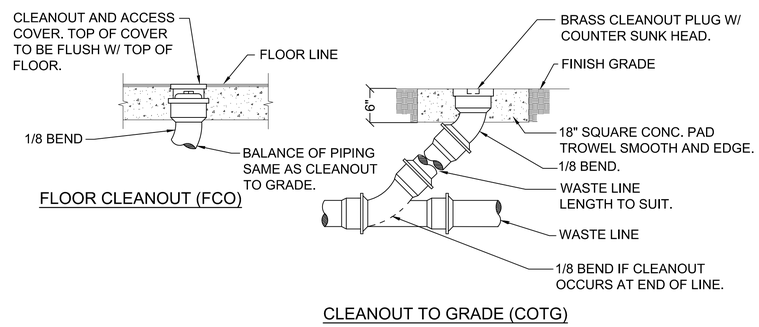

B2 CLEAN-OUT DETAILS
SCALE: NONE

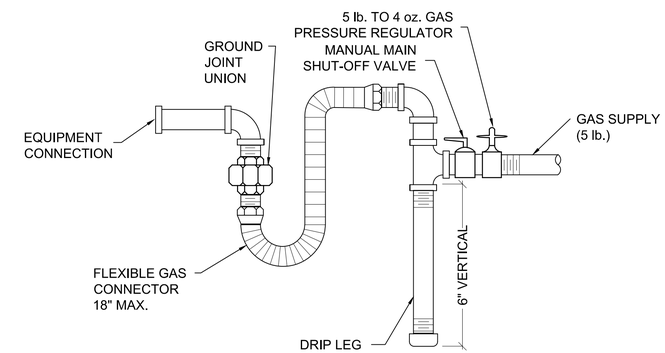

B4 GAS LINE CONNECTION DETAIL
SCALE: NONE

PLUMBING FIXTURE SCHEDULE

SYMBOL	FIXTURE	INDIVIDUAL LINE SIZES					REMARKS
		TRAP	WASTE	VENT	COLD WATER	HOT WATER	
PRD-1	PRIMARY ROOF DRAIN	-	4"	-	-	-	
SRD-1	SECONDARY ROOF DRAIN	-	4"	-	-	-	

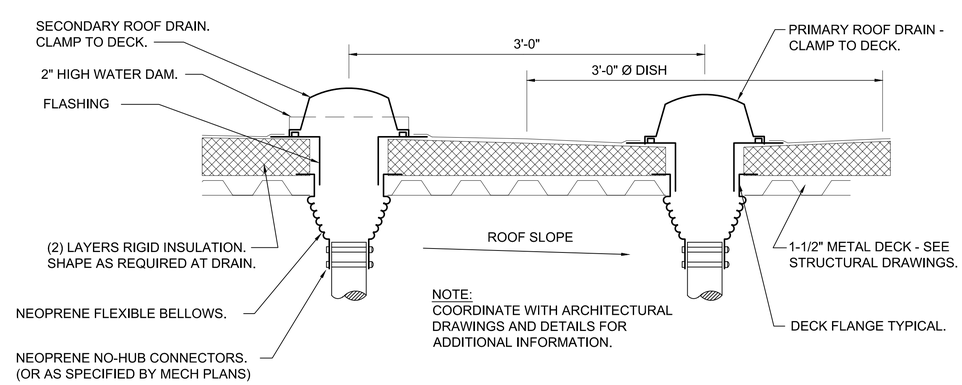

A4 ROOF DRAIN DETAIL
SCALE: NONE

WHW ENGINEERING INC.
PROFESSIONAL MECHANICAL ENGINEERING
1818 South Pinetree Suite 101
PROVO, UTAH 84606
(801) 374-0071 (801) 374-8025
EMAIL: ecolleen@whwengineering.com

UVU

Axis Architects

PROFESSIONAL ENGINEER
07/10/09
WINWARD M. PACKER
No. 375080
STATE OF UTAH

Utah Valley University Physical Education Infill II
OREM, UTAH

Axis Job #	0910
Owner #	09097790
Date	07-10-2009
Drawn	STAFF
Checked	WP

PLUMBING DETAILS AND SCHEDULES

PE501

GENERAL NOTES

1. CONSULT ARCHITECTURAL REFLECTED CEILING PLANS FOR EXACT LOCATION OF ALL LIGHTING FIXTURES.
2. VERIFY ALL EQUIPMENT DIMENSIONS AND LOCATIONS BEFORE BEGINNING ROUGH IN. CONSULT ALL APPLICABLE CONTRACT DRAWINGS AND SHOP DRAWINGS TO INSURE NEC CODE CLEARANCES REQUIRED AROUND ALL ELECTRICAL EQUIPMENT.
3. CONTRACTOR SHALL VERIFY ALL ELECTRICAL LOADS (VOLTAGE, PHASE, CONNECTION REQUIREMENTS, ETC.) OF EQUIPMENT FURNISHED UNDER DIVISION 15 WITH APPROVED MECHANICAL SHOP DRAWINGS BEFORE BEGINNING ROUGH IN.
4. SEE SECTION 16510 OF THE SPECIFICATION REQUIRED COORDINATION MEETINGS WITH MECHANICAL AND CEILING CONTRACTORS.
5. SEE APPLICABLE SHOP DRAWINGS FOR ROUGH IN LOCATION OF ALL EQUIPMENT, WIRING DEVICES, ETC. WHERE APPLICABLE MOUNT ALL WIRING DEVICES ABOVE BACK SPLASH EXCEPT THOSE SERVING UNDER COUNTER EQUIPMENT.
6. SEE SPECIFICATION FOR ENERGY SAVING LAMP AND BALLAST REQUIREMENTS.
7. FINISHES OF ALL LIGHT FIXTURES SHALL BE AS SELECTED BY ARCHITECT.
8. THE ELECTRICAL CONTRACTOR SHALL NOTIFY AND COOPERATE WITH THE MECHANICAL CONTRACTOR SUCH THAT NO PIPING, DUCTS, OR EQUIPMENT FOREIGN TO THE OPERATION OF THE ELECTRICAL EQUIPMENT SHALL BE PERMITTED TO BE INSTALLED IN, ENTER OR PASS THRU ELECTRICAL ROOMS OR SPACES, OR ABOVE OR BELOW ELECTRICAL EQUIPMENT IN OTHER AREAS.
9. ELECTRICAL BOXES SHALL NOT BE LOCATED IN MASONRY COLUMNS IN BRICK WALLS OR IN GROUTED CELLS ADJACENT TO OPENINGS. COORDINATE LOCATION OF BOXES WITH MASONRY CONTRACTOR.
10. ALL PENETRATIONS OF FIRE RATED FLOORS, WALLS, AND CEILINGS SHALL BE SEALED WITH APPROVED MATERIAL TO MAINTAIN FIRE RATING OF SURFACE PENETRATED.
11. CIRCUITS EXTENDING OVER 70' FOR 120 VOLT AND 165' FOR 277 VOLT 20 AMP CIRCUITS SHALL BE RUN WITH MINIMUM #10 CONDUCTORS. LARGER CONDUCTORS MAY BE REQUIRED FOR LONG RUNS OR CIRCUITS WITH HIGHER LOADS. CONTRACTOR TO MEET NEC VOLTAGE DROP REQUIREMENTS.

FIXTURE SCHEDULE

TYPE	DESCRIPTION	CATALOG NUMBER	VOLTS	LAMPS
A1	2'X4' LAY-IN FLUORESCENT TROFFER VOLUMETRIC LOW BRIGHTNESS ACRYLIC LENS LBF ELECTRONIC PROGRAM START BALLAST	DAYBRITE# 2-ST-2-32-D-120-1/2-EBL-PAF-LPT835HL OR EQUAL	277	(2) 3500K F32T8 3100 LUMENS
A1E	SAME AS ABOVE EXCEPT WITH HIGH LUMEN EMERGENCY BATTERY	DAYBRITE# 2-ST-2-32-D-120-1/2-EBL-PAF-LPT835HL- EL OR EQUAL	277	(2) 3500K F32T8 3100 LUMENS
X1	LED UNIVERSAL MOUNT EXIT LIGHT AND BATTERY BACK UP	LITHONIA# EDG1G OR EQUAL	277	LED COLOR TO MATCH EXISTING

ELECTRICAL SYMBOL SCHEDULE

1. SEE FIXTURE SCHEDULE FOR TYPE, MOUNTING AND WATTAGE.
2. HEIGHT MEASURED TO CENTER LINE OF THE BOX FROM THE FINISH FLOOR.
3. REFER TO DRAWINGS FOR DIRECTIONAL ARROWS.
4. SUBSCRIPT KEYS SWITCH TO FIXTURES CONTROLLED.
5. NEMA TYPE 'ND' NON–FUSED UNLESS NOTED 'F' (FUSED). USE 'HD' 480 V.
6. HEIGHT TO BE THE LOWER OF EITHER 80" A.F.F. OR 6" BELOW CEILING.
7. PROVIDE H.O.A. AND S.S. PUSHBUTTONS AS REQUIRED.
8. DOUBLE ARROWS DENOTE A DOUBLE FACE UNIT.
9. COORDINATE WITH MILLWORK SHOP DRAWINGS AND ELEVATIONS FOR HEIGHT.
10. SUBSCRIPT DENOTES NEMA CONFIGURATION.
11. HEIGHT MEASURED TO BOTTOM OF THE BOX FROM FINISH FLOOR.

* TYPICAL SYMBOL SCHEDULE. SOME SYMBOLS MAY NOT BE USED IN THIS SET OF DRAWINGS.

STANDARD MOUNTING HEIGHT UNLESS OTHERWISE NOTED ON PLANS

SYMBOL	DESCRIPTION	MOUNTING HEIGHT	NOTES
	ONE CIRCUIT, TWO WIRE HOME RUN TO PANEL		
	2 CIRCUIT, 3 WIRE, COMMON NEUTRAL HOME RUN		
	3 CIRCUIT, 4 WIRE, COMMON NEUTRAL HOME RUN		
	CONDUIT RUN CONCEALED IN WALL OR CEILING		
	CONDUIT RUN CONCEALED IN FLOOR OR GROUND		
	CONDUIT UP		
	CONDUIT DOWN		
	CONDUIT STUB LOCATION	CAP CONDUIT	
	CABLE TRAY	AS NOTED	
	CEILING LIGHT FIXTURE	CEILING	1.
	WALL LIGHT FIXTURE	AS NOTED	1.
	RECESSED DOWNLIGHT FIXTURE	CEILING	1.
	FLUORESCENT LIGHT FIXTURE	AS NOTED	1
	FLUORESCENT EGRESS LIGHT FIXTURE	AS NOTED	UNSWITCHED
	AREA LIGHT POLE AND FIXTURE	CONCRETE BASE	SEE DIAGRAM
	FLOOD OR TRACK FIXTURE	AS NOTED	
	CEILING MOUNTED EXIT LIGHT	CEILING	1.3.8.
	WALL MOUNTED EXIT LIGHT	AS NOTED	1.3.8.
$	SINGLE POLE SWITCH	+4'–0"	2.
$a	SINGLE POLE SWITCH	+4'–0"	4. 2.
$3	THREE–WAY SWITCH	+4'–0"	2.
$4	FOUR–WAY SWITCH	+4'–0"	2.
$K	KEY OPERATED SWITCH	+4'–0"	2.
$P	SWITCH WITH PILOT LIGHT	+4'–0"	2.
$D	VARIABLE INTENSITY SWITCH	+4'–0"	2.
$TM	TIMER SWITCH	+4'–0"	2.
	LOW VOLTAGE SWITCH	+4'–0"	2.
	OCCUPANCY SENSOR	CEILING	
	OCCUPANCY SENSOR	+4'–0"	2.
PP	POWER PACK	CEILING	SEE DIAGRAM, SPEC.
A	AUTOMATIC RELAY PACK	CEILING	SEE DIAGRAM. SPEC.
T	LOW VOLTAGE TRANSFORMER		
	DUPLEX RECEPTACLE UPPER OUTLET SWITCH CONTROLLED	+16" OR AS NOTED	9. 11.
	SIMPLEX RECEPTACLE	+16" OR AS NOTED	9. 11.
	DUPLEX RECEPTACLE	+16" OR AS NOTED	9. 11.
A	DUPLEX RECEPTACLE		9.
W	ELECTRIC WATER COOLER RECEPTACLE		SEE DIAGRAM
WP	WEATHERPROOF RECEPTACLE	+24" OR AS NOTED	2. 9.
IG	ISOLATED GROUND RECEPTACLE	+16" OR AS NOTED	9. 11.
	GROUND FAULT INTERRUPTER DUPLEX RECEPTACLE	+16" OR AS NOTED	9. 11.
	DUPLEX RECEPTACLE EMERGENCY POWER (RED)	+16" OR AS NOTED	9. 11.
	FOURPLEX RECEPTACLE	+16" OR AS NOTED	9. 11.
	FOURPLEX RECEPTACLE EMERGENCY POWER (RED)	+16" OR AS NOTED	9. 11.
	FLOOR OUTLET WITH 20A DEVICE	FLOOR	
	MULTIPLE SERVICE FLOOR BOX	FLOOR	
	SPECIAL PURPOSE OUTLET	+16" OR AS NOTED	10. WITH CAP. 11.
	CORD DROP		SEE DIAGRAM
	PLUGMOLD	+46" OR AS NOTED	
	TELEVISION OUTLET	+16" OR AS NOTED	11.
	DATA OUTLET	+16" OR AS NOTED	9. 11.
	TELEPHONE OUTLET	+16" OR AS NOTED	9. 11.
	TELEPHONE/DATA OUTLET	+16" OR AS NOTED	9. 11.
	TELEPHONE OUTLET	FLOOR	
	CALL SWITCH	+4'–0"	2.
C	CLOCK OUTLET	+7'–6"	8.
C	CLOCK/SPEAKER COMBINATION	+7'–6"	

STANDARD MOUNTING HEIGHT UNLESS OTHERWISE NOTED ON PLANS

SYMBOL	DESCRIPTION	MOUNTING HEIGHT	NOTES
J	JUNCTION BOX ('F' IN FLOOR)	AS NOTED	
	MOTOR OUTLET	TO SUIT EQUIP.	
P	PHOTO–ELECTRIC CONTROL	AS NOTED	TORK 2000A
TC	TIME CLOCK	+5'–0"	2.
	PUSHBUTTON	+4'–0"	2.
	NON–FUSED DISCONNECT SWITCH	+5'–0"	5.
F	FUSED DISCONNECT SWITCH	+5'–0"	5.
$T	MANUAL STARTER THERMAL OVERLOAD SWITCH WITH PILOT LIGHT	+4'–0"	2.
	MAGNETIC STARTER	+5'–0"	7.
	MAGNETIC STARTER / DISCONNECT COMBINATION	+5'–0"	
VFD	VARIABLE FREQUENCY DRIVE	+6'–6"	
	PANEL BOARD	TOP AT +6'–0"	
	MAIN DISTRIBUTION PANEL		
	TELEPHONE TERMINAL BOARD		
	BELL	+7'–6"	
	CHIME	+7'–6"	
F	FIRE ALARM MANUAL STATION	+4'–0"	2.
H	FIRE ALARM SIGNAL HORN/STROBE PROJECTORS	+6'–8"	6.
H	FIRE ALARM SIGNAL HORN/STROBE	+6'–8"	6.
E	FIRE ALARM SIGNAL SPEAKER/STROBE	+6'–8"	6.
S	SMOKE DETECTOR	CEILING	
D	DUCT SMOKE DETECTOR		MTD. IN DUCT
CO1	CARBON MONOXIDE DETECTOR	CEILING	
D	FIRE/SMOKE DAMPER		
	DOOR HOLDER	AS NOTED	
FS	FLOW SWITCH		
TS	TAMPER SWITCH		
WF	WATER FLOOD INDICATOR		
	O.S. & Y. VALVE		SEE DIAGRAM
R	FIRE ALARM RELAY		
CM	FIRE ALARM CONTROL MODULE		
MM	FIRE ALARM MONITOR MODULE		
S	FIRE ALARM STROBE	+6'–8"	6.
D	DURESS PUSHBUTTON	+4'–0"	
D 1	SECURITY SYSTEM DOOR SWITCH	DOOR JAMB	
D 2	SECURITY SYSTEM OVERHEAD DOOR SWITCH	CEILING	MOUNT AS PER. MAN
ML	MAGNETIC SHEAR LOCK		
A	SECURITY SYSTEM KEYED ACCESS SWITCH	+4'–0"	2.
I	INFRARED SENSOR	AS NOTED	
M	SECURITY MOTION DETECTOR		MOUNT AS PER. MAN
G	GLASS BREAK DETECTOR	CEILING	
ES	ELECTRIC DOOR STRIKE		
CR	ACCESS CONTROL CARD READER	+4'–0"	2.
	CLOSED CIRCUIT TELEVISION CAMERA	AS NOTED	
	DOOR POSITION INDICATING SWITCH		
#	SOUND SYSTEM SPEAKER	+8'–0" OR AS NOTED	
IC	INTERCOM SPEAKER	AS NOTED	
V	VOLUME CONTROL	+4'–0"	2.
M	MICROPHONE OUTLET	+16"	11.
M	MICROPHONE FLOOR OUTLET	FLOOR	
M	MICROPHONE CEILING OUTLET	CEILING	
	SOUND EQUIPMENT CABINET		CIRCUIT TO 120V
842	ARCHITECTURAL ROOM NUMBER		
A	LIGHT FIXTURE (LETTER DESIGNATES TYPE)		
EQ 34	EQUIPMENT NUMBER		
$	FAN, LIGHT CONTROLLER	+4'–0"	2.

INDEX OF ELECTRICAL DRAWINGS

EG001 SYMBOLS, SCHEDULES AND NOTES

EE101 LIGHTING & POWER PLANS

EX501 ELECTRICAL DIAGRAMS

EX601 ONE–LINE DIAGRAMS & PANELBOARD SCHEDULES

Axis Architects
352 SOUTH DENVER STREET (440 E.) SALT LAKE CITY UTAH 84111 P:355-3003 F:355-0113

Utah Valley University
Physical Education Infill II
OREM, UTAH

BNA CONSULTING
SALT LAKE ST.GEORGE
635 South State Street
Salt Lake City, Utah 84111
P:801.532.2196
F:801.532.2305
www.bnaconsulting.com

© 2009 BNA CONSULTING

Axis Job #	0910
BNA Job #	09094A
Date	07-10-2009
Drawn	SCB
Checked	GM

SYMBOLS, SCHEDULES AND NOTES

EG001

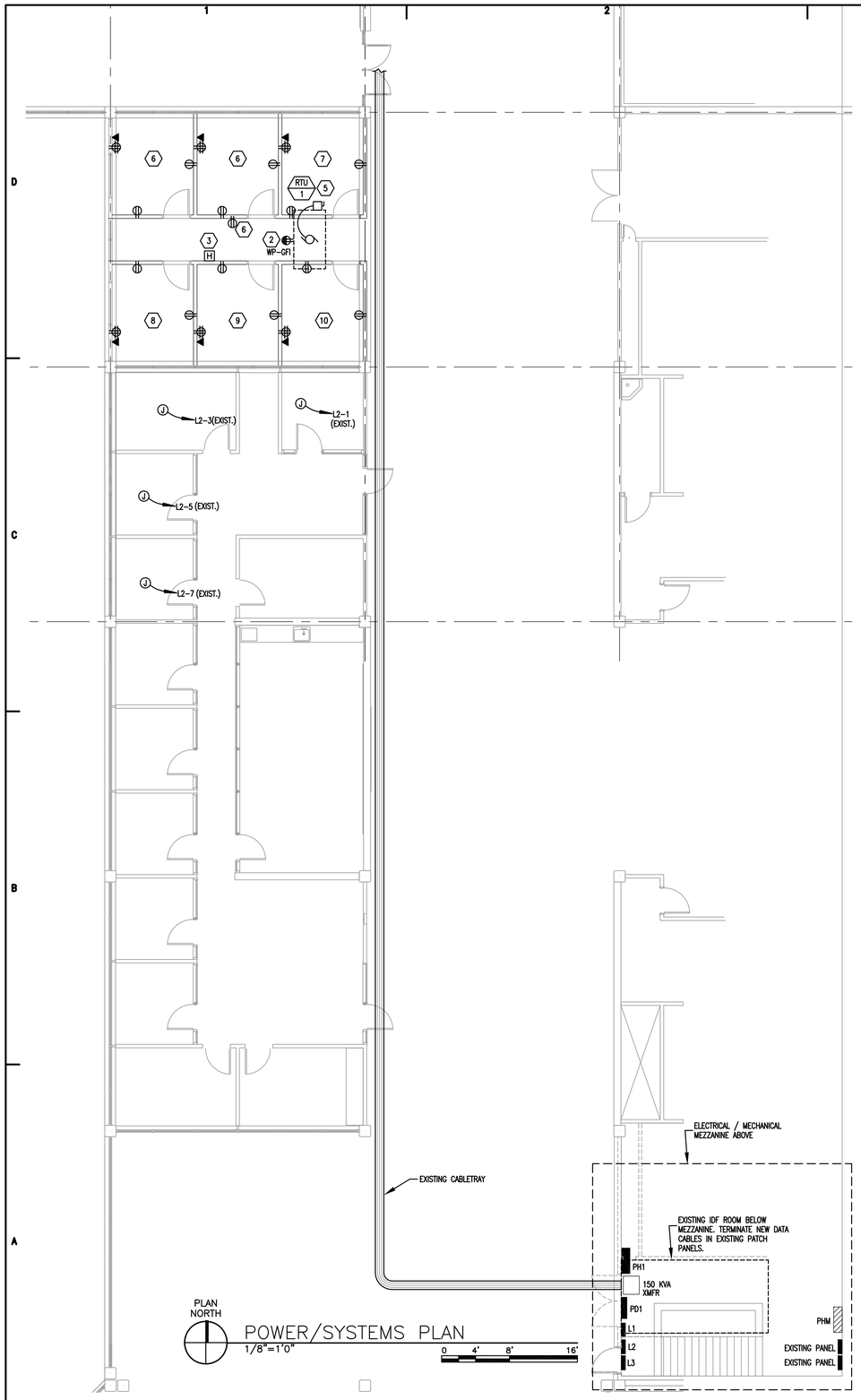

POWER/SYSTEMS PLAN
1/8"=1'0"
0 4' 8' 16'

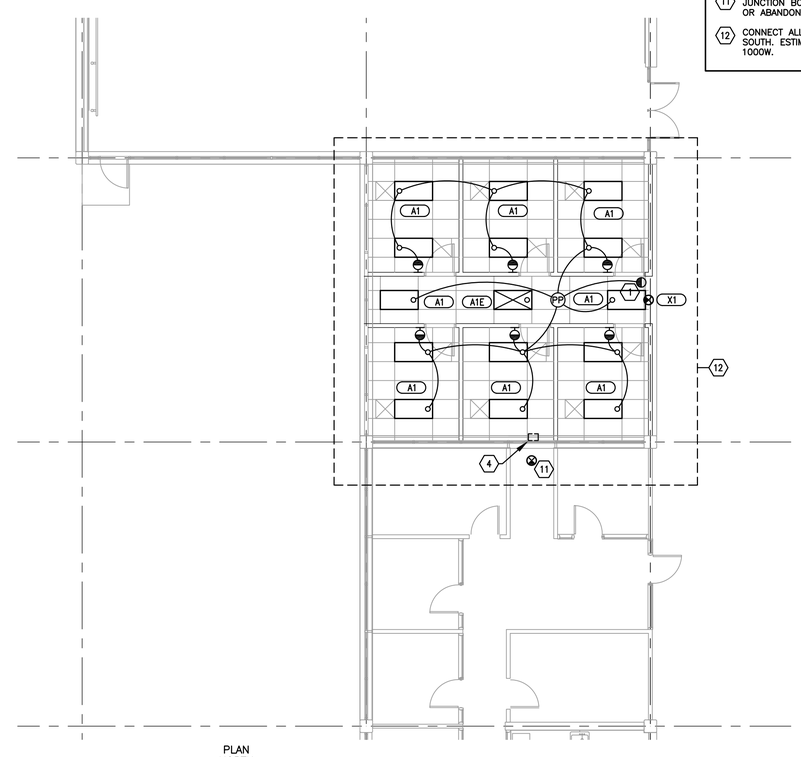

LIGHTING PLAN
1/8"=1'0"
0 4' 8' 16'

GENERAL NOTES

1. PROVIDE 1" CONDUIT FOR ALL DATA OUTLETS SHOWN ON THIS PLAN ROUTED TO EXISTING CABLE TRAY AND TERMINATE WITH AN INSULATED THROAT CONNECTOR AND PLASTIC BUSHING. PROVIDE (3) NEW CAT 6 PLENUM RATED CABLES FOR EACH LOCATION. TERMINATE CABLES AT EXISTING PATCH PANEL AND TEST CABLE. CABLE TYPE, CONNECTORS, FACEPLATES, JACKS AND LABELING SHALL BE PER UVU IT STANDARDS. PROVIDE NEW MATCHING PATCH PANEL IN EXISTING IDF ROOM IF NO CAPACITY REMAINS.
2. ROUTE ALL NEW BRANCH CONDUIT/CIRCUITS INTO EXISTING CORRIDOR AT CEILING LEVEL ALONG SAME PATH AS EXISTING CABLE TRAY INTO IDF ROOM. TURN UP BRANCH CONDUITS UP INTO MECHANICAL MEZZANINE AND TERMINATE IN CORRESPONDING PANEL.
3. PRIOR TO WORK IN EXISTING PANELS, COORDINATE POWER INTERRUPTION WITH OWNER. WORK MAY BE REQUIRED AFTER HOURS OR ON WEEKENDS.
4. CONTRACTOR SHALL VERIFY ALL EXISTING CIRCUIT NUMBERS SHOWN AND LOCATIONS OF HOMERUNS WITH THE ACTUAL EXISTING FIELD CONDITIONS PRIOR TO INSTALLATION.
5. PROVIDE HOMERUN CONDUCTORS SIZED TO ACCOMODATE VOLTAGE DROP AS RECOMMENDED BY THE NATIONAL ELECTRIC CODE.

SHEET KEYNOTES

1. CEILING MOUNTED PIR MOTION SENSOR WITH 180' FIELD OF VIEW.
2. LOCATE WP GFI ON ROOF WITHIN 25' OF NEW RTU. CONNECT TO NEW CIRCUIT FROM PANEL L2 AS DESCRIBED IN NOE 6 BELOW.
3. CONNECT NEW FIRE ALARM HORN STROBE TO NEAREST EXISTING FIRE ALARM NOTIFICATION APPLIANCE. DEVICE TO MATCH EXISTING SYSTEM MANUFACTURER. VERIFY CIRCUIT CAPACITY PRIOR TO ADDING DEVICE, PROVIDE ANY POWER BOOSTER REQUIRED. CONTRACTOR TO VERIFY EXISTING SYSTEM MANUFACTURER PRIOR TO BID.
4. REMOVE EXISTING WALL PACK. PROVIDE BLANK COVER ON EXISTING OUTLET BOX. REMOVE EXISTING CIRCUITS BACK TO NEAREST JUNCTION BOX UPSTREAM OF THE OUTLET BOX.
5. RTU-1 ON ROOF. CONNECT TO NEW 30A, 3P CIRCUIT BREAKER IN EXISTING PANEL PD1. SEE SHEET E2 FOR MORE INFO.
6. CONNECT NEW RECEPTACLES IN THIS ROOM TO NEW 20A, 1P CIRCUIT BREAKER IN EXISTING PANEL L2. SEE SHEET E2 FOR MORE INFO.
7. CONNECT NEW RECEPTACLES IN THIS ROOMTO EXISTING CIRCUIT L2-3. ESTIMATED CAPACITY ON EXISTING CIRCUIT = 840W, NEW LOAD ADDED = APPROX. 720W.
8. CONNECT NEW RECEPTACLES IN THIS ROOM TO EXISTING CIRCUIT L2-5. ESTIMATED CAPACITY ON EXISTING CIRCUIT = 1200W, NEW LOAD ADDED = APPROX. 720W.
9. CONNECT NEW RECEPTACLES IN THIS ROOM TO EXISTING CIRCUIT L2-1. ESTIMATED CAPACITY ON EXISTING CIRCUIT = 1020W, NEW LOAD ADDED = APPROX. 720W.
10. CONNECT NEW RECEPTACLES IN THIS ROOM TO EXISTING CIRCUIT L2-7. ESTIMATED CAPACITY ON EXISTING CIRCUIT = 1200W, NEW LOAD ADDED = APPROX. 720W.
11. REMOVE EXISTING EXIT SIGN, OUTLET BOX AND CONDUCTORS BACK TO NEAREST UPSREAM JUNCTION BOX. REPLACE CEILING TILE WITH MATCHING TILE IF EXIT SIGN IS CEILING MOUNTED OR ABANDON WALL MOUNTED BOX AND PATCH WALL IF WALL MOUNTED.
12. CONNECT ALL NEW LIGHTING TO EXISTING 277V CIRCUIT PH1-10 IN ADJACENT SPACE TO THE SOUTH. ESTIMATED CAPACITY ON EXISTING CIRCUIT = 1632W, NEW LOAD ADDED = APPROX. 1000W.

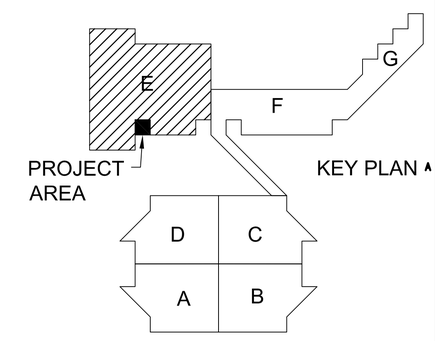

KEY PLAN

Axis Architects
352 SOUTH DENVER STREET (440 E.) SALT LAKE CITY UTAH 84111 P:355-3003 F:355-0113

Utah Valley University Physical Education Infill II

OREM, UTAH

BNA CONSULTING
SALT LAKE ST.GEORGE
635 South State Street
Salt Lake City, Utah 84111
P:801.532.2196
F:801.532.2305
www.bnaconsulting.com

© 2009 BNA CONSULTING

Axis Job #	0910
BNA Job #	09094A
Date	07-10-2009
Drawn	SCB
Checked	GM

LIGHTING & POWER PLANS

EE101

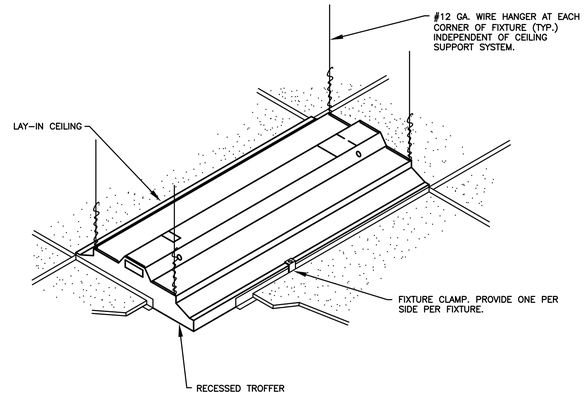

DIAGRAM A001 TYP. RECESSED FIXTURE MOUNTING
NTS

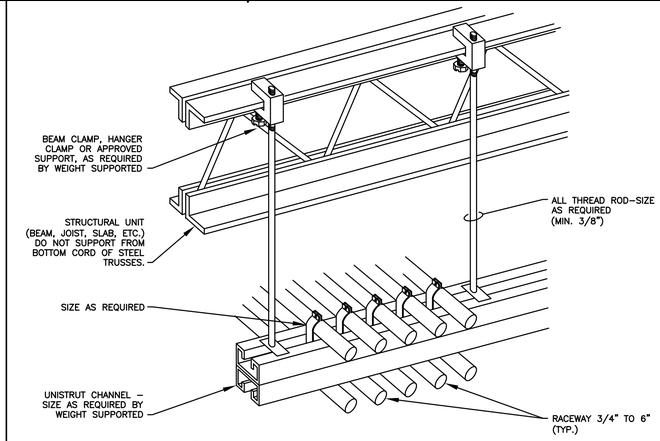

DIAGRAM H001 TYPICAL TRAPEZE CONDUIT RACK
NTS

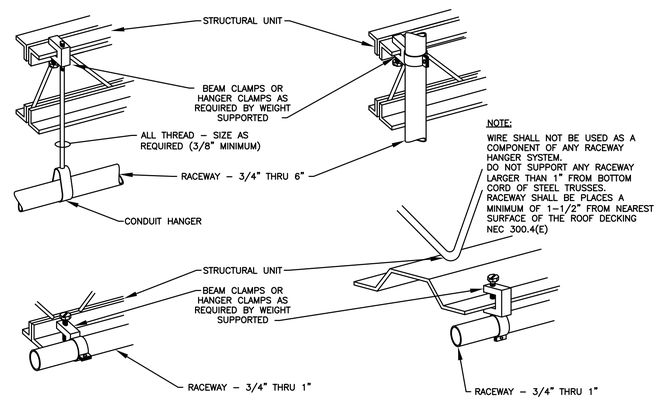

DIAGRAM H003 TYPICAL RACEWAY SUPPORT METHODS
NTS

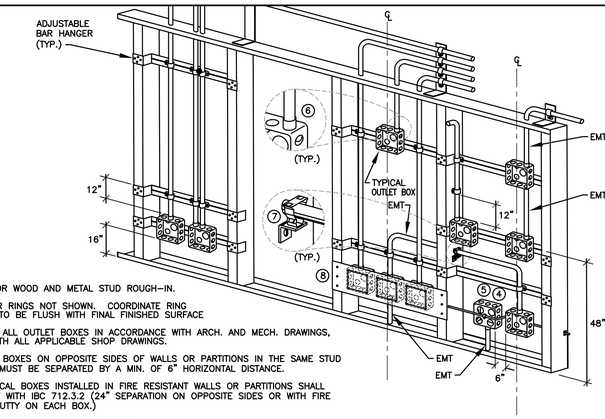

NOTES:

1. TYP. FOR WOOD AND METAL STUD ROUGH-IN.
2. PLASTER RINGS NOT SHOWN. COORDINATE RING DEPTH TO BE FLUSH WITH FINAL FINISHED SURFACE
3. LOCATE ALL OUTLET BOXES IN ACCORDANCE WITH ARCH. AND MECH. DRAWINGS, AND WITH ALL APPLICABLE SHOP DRAWINGS.
4. OUTLET BOXES ON OPPOSITE SIDES OF WALLS OR PARTITIONS IN THE SAME STUD SPACE MUST BE SEPARATED BY A MIN. OF 6" HORIZONTAL DISTANCE.
5. ELECTRICAL BOXES INSTALLED IN FIRE RESISTANT WALLS OR PARTITIONS SHALL COMPLY WITH IBC 712.3.2 (24" SEPARATION ON OPPOSITE SIDES OR WITH FIRE STOP PUTTY ON EACH BOX.)
6. INSULATED THROAT EMT CONNECTOR.
7. CADDY FASTENER, THROUGH STUD CABLE/CONDUIT SUPPORT 'FB12P'.
8. CADDY BOX MOUNTING BRACKET 'RBS16'.

DIAGRAM H004 TYPICAL ROUGH IN REQUIREMENTS
NTS

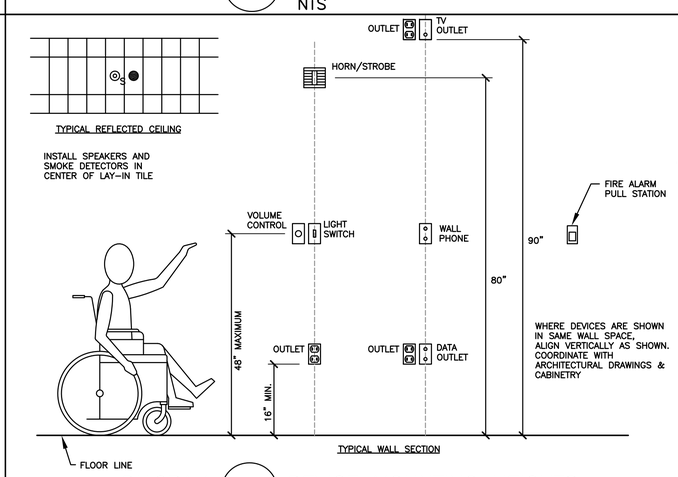

DIAGRAM R001 DEVICE MOUNTING HEIGHTS
NTS

Axis Architects
352 SOUTH DENVER STREET (440 E.) SALT LAKE CITY UTAH 84111 P 355-3003 F 355-0113

Utah Valley University Physical Education Infill II

OREM, UTAH

BNA CONSULTING
SALT LAKE ST.GEORGE
635 South State Street
Salt Lake City, Utah 84111
P:801.532.2196
F:801.532.2305
www.bnaconsulting.com

© 2009 BNA CONSULTING

Axis Job #	0910
BNA Job #	09094A
Date	07-10-2009
Drawn	SCB
Checked	GM

DIAGRAMS

EX501

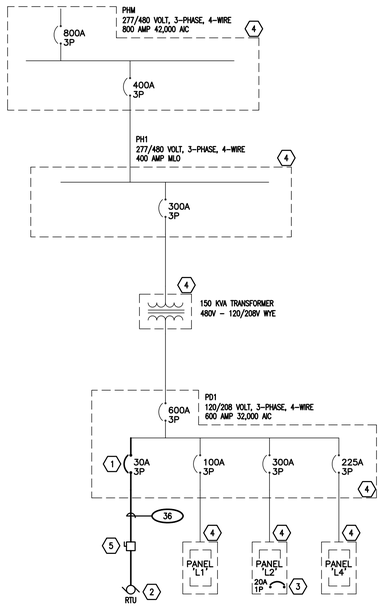

1 ONE-LINE DIAGRAM
NO SCALE

ESTIMATED CONNECTED LOADS

PANEL L2 ESTIMATED CONNECTED LOAD = 180A
PANEL L2 BREAKER CAPACITY = 240A
PANEL L2 NEW LOADS = 31A
TOTAL L2 CONNECTED LOAD = 211A

PANEL PD1 ESTIMATED CONNECTED LOAD = 414A
PANEL PD1 BREAKER CAPACITY = 480A
PANEL PD1 NEW LOADS = 12A
TOTAL PD1 CONNECTED LOAD = 426A

SHEET KEYNOTES

1. PROVIDE NEW COMPATIBLE BREAKER IN EXISTING SQUARE D PANEL. PANEL MODEL #HC4268T5.
2. NEW RTU LOCATED ON ROOF OF IN-FILL AREA. SEE SHEET E1 FOR LOCATION.
3. PROVIDE NEW COMPATIBLE BREAKER IN EXISTING SQUARE D NQOD PANEL.
4. EXISTING ELECTRICAL EQUIPMENT
5. 240V, 30A, 3P, N3R DISCONNECT WITH 30A HACR FUSES

COPPER CONDUCTOR & O.C. PROT. FOR TRANSFORMER PRIMARY

TRANS KVA	O.C. PROT.	TYPE COND.*	GND. COND.
30	50	38	8
45	70	34	4
75	125	31	2
112.5	175	32X	1/0
150	300	335	2/0
225	400	350	2/0
300	600	325-2	3/0
500	800	350-2	3/0
750	1500	335-5	3/0

COPPER CONDUCTOR & O.C. PROT. FOR TRANSFORMER SECONDARY △480/208/120Y

O.C. PROT.	TYPE COND.	COND. AMPS	SETS	CONDUCTOR QUAN.	CONDUCTOR SIZE	CONDUIT SIZE	EQ. GND COND.
100	142-1	104	1	4	2	1-1/4"	8
175	143X-1	180	1	4	3/0	2"	6
225	1425-1	232	1	4	250	2-1/2"	4
400	144X-2	416	2	4	4/0	2-1/2"	3
600	1440-2	608	2	4	400	3"	1
800	1435-3	840	3	4	350	3"	1/0
1200	1440-4	1216	4	4	400	3"	3/0
1600	1450-5	1720	5	4	500	4"	4/0
3000	1450-8	3096	9	4	500	4"	400

COPPER CONDUCTOR & O.C. PROT. FOR TRANSFORMER PRIMARY

TRANS KVA	O.C. PROT.	TYPE COND.*	GND. COND.
30	50	38	8
45	70	34	4
75	125	31	2
112.5	175	32X	1/0
150	300	335	2/0
225	400	350	2/0
300	600	325-2	3/0
500	800	350-2	3/0
750	1500	335-5	3/0

COPPER CONDUCTOR & O.C. PROT. FOR TRANSFORMER SECONDARY (200% NEUTRAL) △480/208/120Y

O.C. PROT.	TYPE COND.	COND. AMPS	SETS	CONDUCTOR QUAN.	CONDUCTOR SIZE	CONDUIT SIZE	EQ. GND COND.
100	152-1	104	1	5	2	1-1/2"	8
175	153X-1	180	1	5	3/0	2-1/2"	6
225	1525-1	232	1	5	250	3"	4
400	154X-2	416	2	5	4/0	2-1/2"	3
600	1540-2	608	2	5	400	3-1/2"	1
800	1535-3	840	3	5	350	3"	1/0
1200	1540-4	1216	4	5	400	3"	3/0
1600	1550-5	1720	5	5	500	4"	4/0
3000	1550-8	3096	9	5	500	4"	400

* SEE SCHEDULE FOR CONDUIT AND WIRE SIZE

COPPER CONDUCTOR & CONDUIT SCHEDULE

TYPE	AMP.	COND. SIZE	CONDUCTOR QUAN.	CONDUCTOR SIZE	INSUL-ATION	EQ. GND. COND.
20	30	3/4"	2	10	THHN THWN	10
30	30	3/4"	3	10	THHN THWN	10
40	30	3/4"	4	10	THHN THWN	10
28	40	3/4"	2	8	THHN THWN	10
38	40	3/4"	3	8	THHN THWN	10
48	40	3/4"	4	8	THHN THWN	10
26	55	3/4"	2	6	THHN THWN	8
36	55	3/4"	3	6	THHN THWN	8
46	55	1"	4	6	THHN THWN	8
24	70	3/4"	2	4	THHN THWN	8
34	70	1"	3	4	THHN THWN	8
44	70	1-1/4"	4	4	THHN THWN	8
23	85	1"	2	3	THHN THWN	8
33	85	1"	3	3	THHN THWN	8
43	85	1-1/4"	4	3	THHN THWN	8
32	95	1-1/4"	3	2	THHN THWN	6
42	95	1-1/4"	4	2	THHN THWN	6
31	110	1-1/4"	3	1	THHN THWN	6
41	110	1-1/2"	4	1	THHN THWN	6
51	110	2"	5	1	THHN THWN	6
31X	150	1-1/2"	3	1/0	THHN THWN	6
41X	150	1-1/2"	4	1/0	THHN THWN	6
51X	150	2"	5	1/0	THHN THWN	6
32X	175	1-1/2"	3	2/0	THHN THWN	6
42X	175	2"	4	2/0	THHN THWN	6
52X	175	2"	5 *	2/0	THHN THWN	6
33X	200	2"	3	3/0	THHN THWN	6
43X	200	2"	4	3/0	THHN THWN	6
53X	200	2-1/2"	5	3/0	THHN THWN	6
34X	230	2"	3	4/0	THHN THWN	4
44X	230	2-1/2"	4	4/0	THHN THWN	4
54X	230	2-1/2"	5	4/0	THHN THWN	4
325	255	2"	3	250	THHN THWN	4
425	255	2-1/2"	4	250	THHN THWN	4
525	255	2-1/2"	5	250	THHN THWN	4
335	310	2-1/2"	3	350	THHN THWN	3
435	310	3"	4	350	THHN THWN	3
535	310	3"	5	350	THHN THWN	3
340	335	3"	3	400	THHN THWN	3
440	335	3"	4	400	THHN THWN	3
540	335	3"	5	400	THHN THWN	3
350	380	3-1/2"	3	500	XHHW	3
450	380	3-1/2"	4	500	XHHW	3
550	380	3-1/2"	5	500	XHHW	3

COPPER CONDUCTOR & CONDUIT SCHEDULE FOR PARALLEL RUNS

TYPE	MAX. O.C. PROT.	COND. AMPS	SETS	CONDUCTOR QUAN.	CONDUCTOR SIZE	CONDUIT SIZE	EQ. GND. COND.
325-2	600	510	2	3	250	2-1/2"	1
425-2	600	510	2	4	250	2-1/2"	1
525-2	600	510	2	5	250	2-1/2"	1
435-2	700	620	2	4	350	3"	1/0
440-2	700	670	2	4	400	3"	1/0
350-2	800	760	2	3	500	3"	1/0
450-2	800	760	2	4	500	4"	1/0
550-2	800	760	2	5	500	4"	1/0
460-2	800	840	2	4	600	4"	1/0
435-3	900	930	3	3	350	3"	2/0
435-3	900	930	3	4	350	3"	2/0
535-3	900	930	3	5 *	350	3"	2/0
440-3	1000	1005	3	3	400	3"	2/0
440-3	1000	1005	3	4	400	3"	2/0
540-3	1000	1005	3	5	400	3"	2/0
435-4	1200	1240	4	4	350	3"	3/0
535-4	1200	1240	4	5	350	3"	3/0
460-3	1200	1260	3	4	600	4"	3/0
435-5	1500	1550	5	3	350	3"	4/0
440-5	1600	1675	5	4	400	3"	4/0
540-5	1600	1675	5	5	400	3"	4/0
460-4	1600	1680	4	4	600	4"	4/0
440-6	2000	2010	6	4	400	3"	250
460-6	2500	2520	6	4	600	4"	350
450-8	3000	3040	8	4	500	4"	400
450-11	4000	4180	11	4	500	4"	500

NOTES
IN PARALLEL RUNS SIZE GND. COND. IN ACCORDANCE WITH NEC PARA. 250-122.

GND. CONDUCTOR MAY BE DELETED ON SERVICE ENTRANCE CONDUCTORS

* 200% NEUTRAL

Axis Architects
352 SOUTH DENVER STREET (440 E.) SALT LAKE CITY UTAH 84111 P 355-3003 F 355-0113

Utah Valley University Physical Education Infill II
OREM, UTAH

BNA CONSULTING
SALT LAKE ST.GEORGE
635 South State Street
Salt Lake City, Utah 84111
P:801.532.2196
F:801.532.2305
www.bnaconsulting.com
© 2009 BNA CONSULTING

Axis Job #	0910
BNA Job #	09094A
Date	07-10-2009
Drawn	SCB
Checked	GM

ONE-LINE DIAGRAM AND SCHEDULES

EX601