PROJECT NO.	SHEET NO.
09098610	1

ISSUE DATE 5-18-2010

STATE OF UTAH
DIVISION OF FACILITIES CONSTRUCTION AND MANAGEMENT

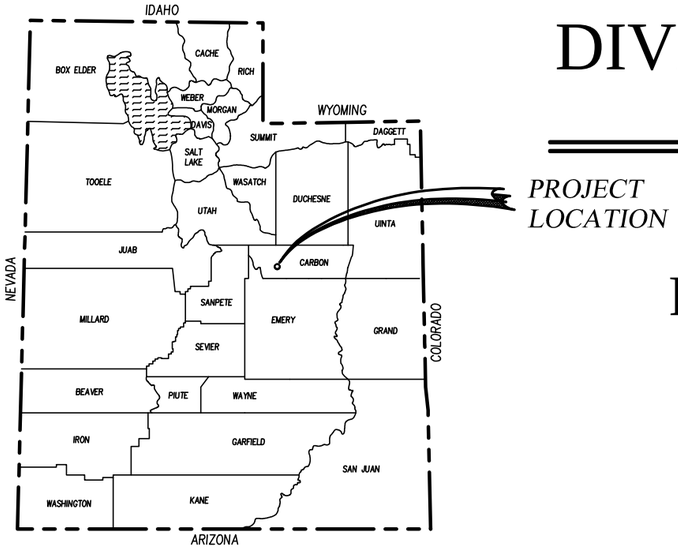

COLLEGE OF EASTERN UTAH

PRICE CAMPUS PAVING IMPROVEMENTS

DFCM PROJECT NO. 09098610

N

RECOMMENDED FOR APPROVAL:

PROJECT ENGINEER — DATE 5/18/10

LICENSED PROFESSIONAL ENGINEER No. 146602 CRAIG E. JOHANSEN STATE OF UTAH

APPROVALS:

STATE OF UTAH DFCM — DATE 5/18/10

johansen & tuttle ENGINEERING INC.
BOX 487, CASTLE DALE, UTAH 84513 (435) 381-2523
FAX (435) 381-2522 email jt@etv.net

INDEX TO SHEETS

SHEET	DESCRIPTION
1	TITLE SHEET
2	INDEX TO SHEETS, SUMMARY OF ITEMS
3	TYPICAL SECTIONS
4	DETAILS
5	PLAN VIEW
6	PAINTING PLAN

SUMMARY OF ITEMS

ITEM	DESCRIPTION	UNIT	QUANTITY
1	MOBILIZATION	LUMP	1
2	HMA AC-10 (1/2 INCH MAX.)	SQ. FT.	29300
3	EXCAVATION	SQ. FT.	33050
4	UNTREATED BASE COURSE 6 INCHES	SQ. FT.	29360
5	UNTREATED BASE COURSE 4 INCHES	SQ. FT.	3690
6	GRANULAR BORROW (6 INCH MINUS)	SQ. FT.	29300
7	CONCRETE REPAIR	LUMP	1
8	INLET BOX	EACH	4
9	15 INCH RCP , CLASS III	FEET	280
10	4 INCH PVC PIPE, CLASS 200	FEET	44
11	PAVEMENT MARKING PAINT	LUMP	1

GENERAL NOTES:

1. THESE DRAWINGS MEET THE CURRENT DFCM STANDARDS.
2. THIS PROJECT DOES NOT INVOLVE STRUCTURES.
3. THESE DRAWINGS ARE BASED ON THE 2006 IBC AND THE ICC/ANSI A117.1-2003

LICENSED PROFESSIONAL ENGINEER
No. 156602
CRAIG E. JOHANSEN
5/18/10
STATE OF UTAH

DESIGNED	HRT	01-10	CHECKED LMS 01-10
DRAWN	LMS	01-10	CHECKED HRT 01-10
SURVEYED	BHT	01-10	CHECKED LMS 01-10
R.O.W.			CHECKED

johansen & tuttle ENGINEERING INC.
BOX 487, CASTLE DALE, UTAH 84513 (435) 381-2523
FAX (435) 381-2522 EMAIL j-t@etv.net

STATE of UTAH DFCM
COLLEGE OF EASTERN UTAH
PRICE CAMPUS
PAVING IMPROVEMENTS
PROJECT No. 09098610

INDEX TO DRAWINGS
and SUMMARY of ITEMS

PROJECT NO.
09098610

SHEET NO.
2

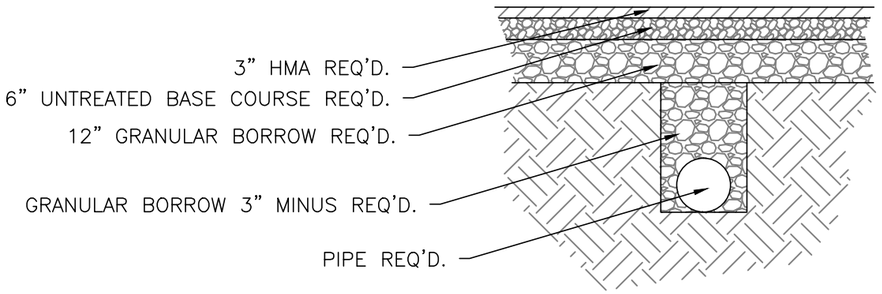

TRENCH DETAIL

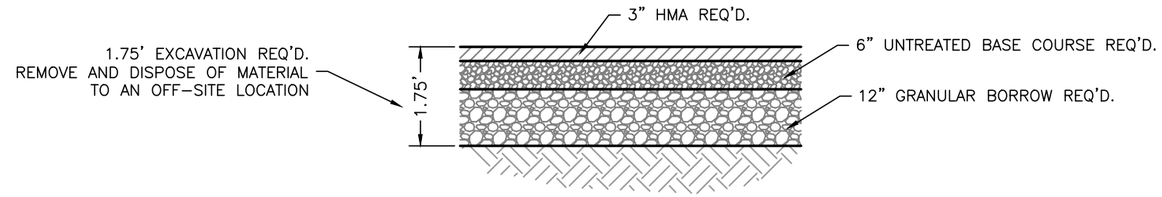

TYPICAL PAVEMENT SECTION

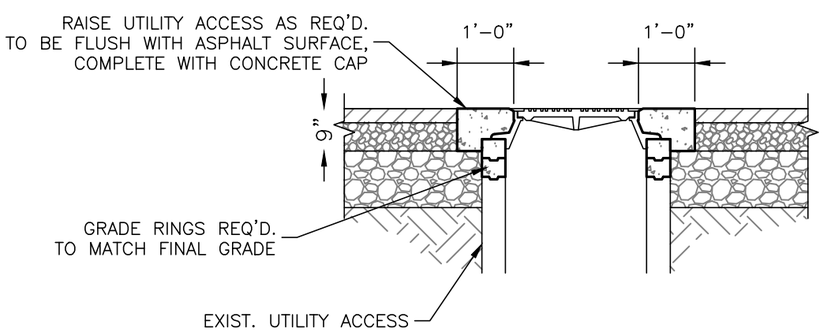

RECONSTRUCT MANHOLE DETAIL

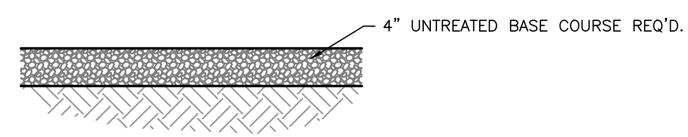

TYPICAL GRAVEL SECTION

LICENSED PROFESSIONAL ENGINEER
No. 161602
CRAIG E. JOHANSEN
5/18/10
STATE OF UTAH

DESIGNED	HRT	01-10	CHECKED LMS 01-10
DRAWN	LMS	01-10	CHECKED HRT 01-10
SURVEYED	BHT	01-10	CHECKED LMS 01-10
R.O.W.			CHECKED

phansen & tuttle ENGINEERING INC.
BOX 487, CASTLE DALE, UTAH 84513 (435) 381-2523
FAX (435) 381-2522 EMAIL jt@etv.net

STATE of UTAH DFCM
COLLEGE OF EASTERN UTAH
PRICE CAMPUS
PAVING IMPROVEMENTS
PROJECT No. 09098610

TYPICAL SECTIONS

PROJECT NO.
09098610

SHEET NO.
3

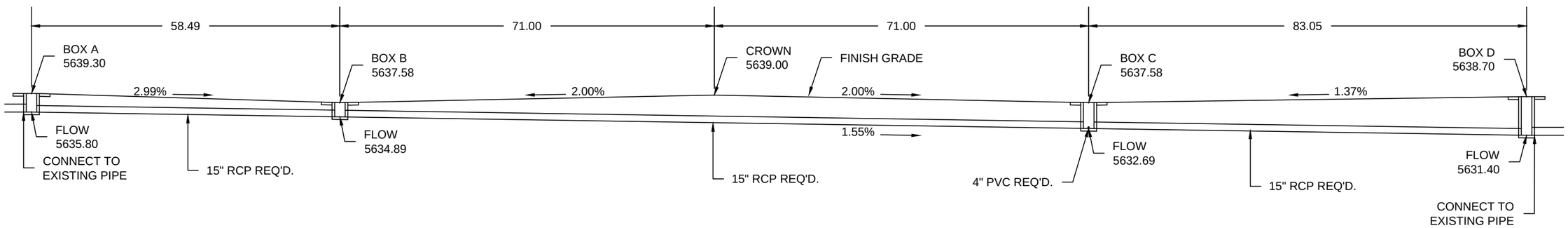

STORM DRAIN PROFILE

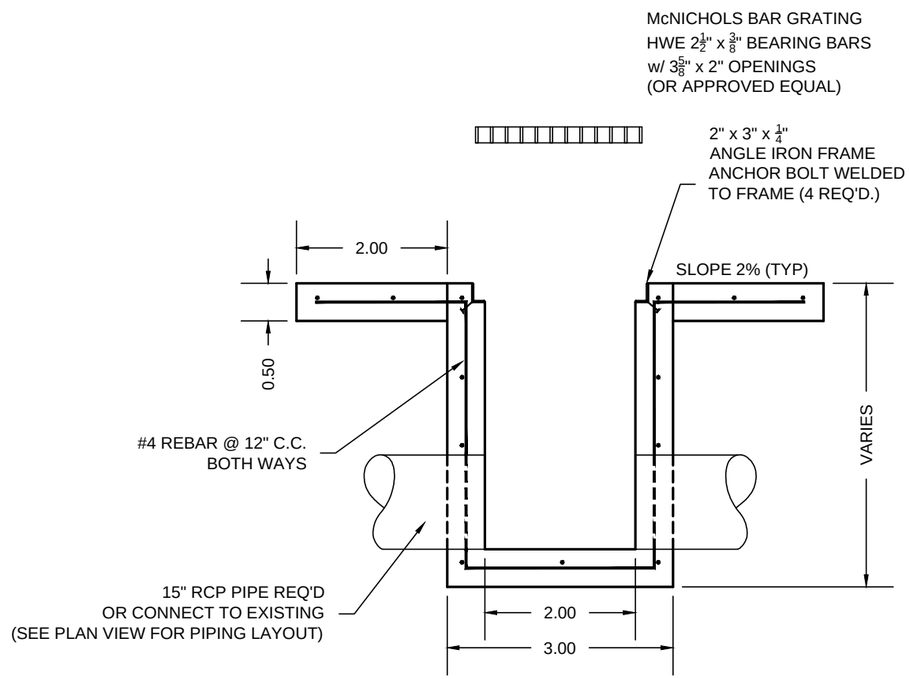

SECTION A–A

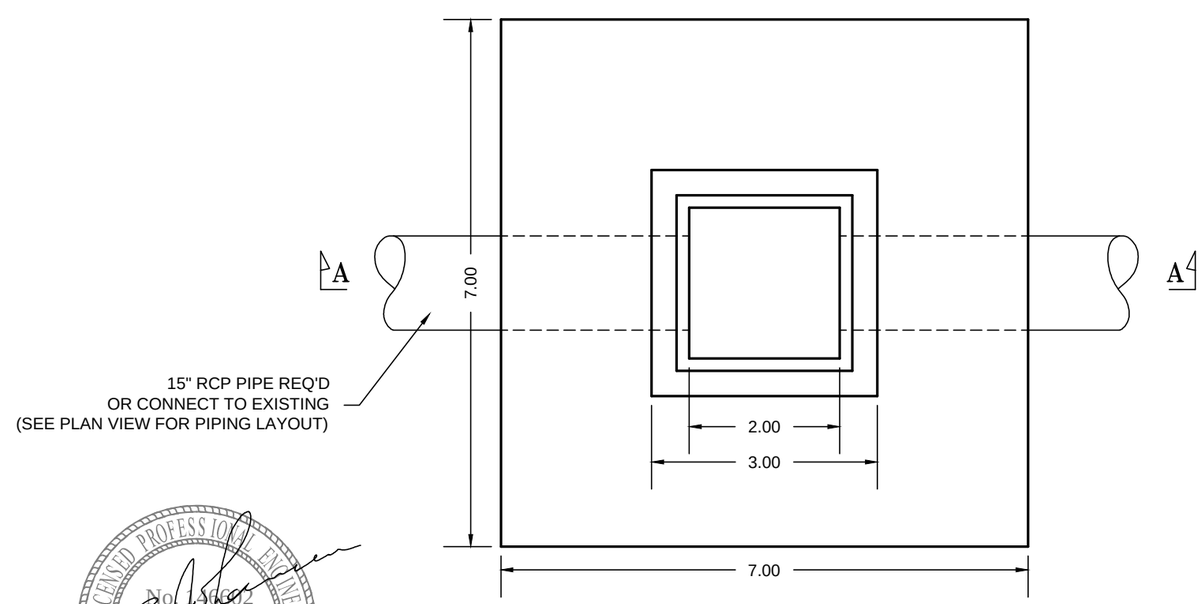

INLET BOX TYPICAL

LICENSED PROFESSIONAL ENGINEER
No. 156602
CRAIG E. JOHANSEN
5/18/10
STATE OF UTAH

DESIGNED	HRT	01-10	CHECKED LMS 01-10
DRAWN	LMS	01-10	CHECKED HRT 01-10
SURVEYED	BHT	01-10	CHECKED LMS 01-10
R.O.W.			CHECKED

johansen & tuttle ENGINEERING INC.
BOX 487, CASTLE DALE, UTAH 84513 (435) 381-2523
FAX (435) 381-2522 EMAIL j@etv.net

STATE of UTAH DFCM
COLLEGE OF EASTERN UTAH
PRICE CAMPUS
PAVING IMPROVEMENTS
PROJECT No. 09098610

DETAILS

PROJECT NO.
09098610
SHEET NO.
4

LEGEND:

EXCAVATION REQ'D.
HMA REQ'D.
UNTREATED BASE COURSE REQ'D.
GRANULAR BORROW REQ'D.

29,300 square feet

EXCAVATION REQ'D.
CONCRETE REPAIR REQ'D.
UNTREATED BASE COURSE REQ'D.

60 square feet

EXCAVATION REQ'D.
UNTREATED BASE COURSE REQ'D.

3,690 square feet

NOTE:

1. UPPERCASE INDICATES WORK REQUIRED
2. lower case indicates existing features.

DESIGNED	HRT	01-10	CHECKED	LMS 01-10
DRAWN	LMS	01-10	CHECKED	HRT 01-10
SURVEYED	BHT	01-10	CHECKED	LMS 01-10
R.O.W.			CHECKED	

johansen & tuttle ENGINEERING INC.
BOX 487, CASTLE DALE, UTAH 84513 (435) 381-2523
FAX (435) 381-2522 EMAIL jt@etv.net

STATE of UTAH DFCM
COLLEGE OF EASTERN UTAH
PRICE CAMPUS
PAVING IMPROVEMENTS
PROJECT No. 09098610

PLAN VIEW

PROJECT NO.
09098610

SHEET NO.
5

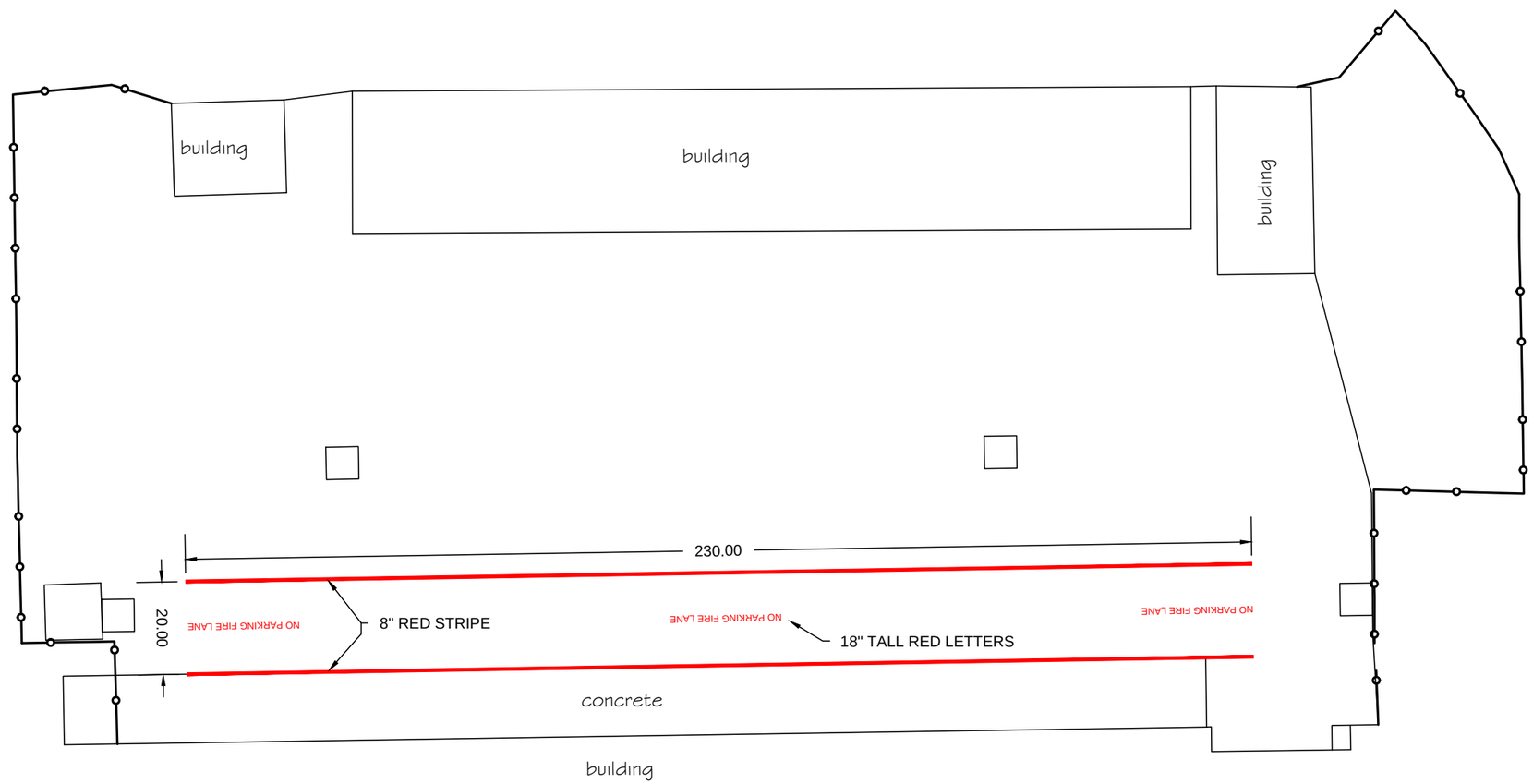

scale: 1" = 30'

LICENSED PROFESSIONAL ENGINEER
No. 390602
CRAIG E. JOHANSEN
5/18/10
STATE OF UTAH

DESIGNED	HRT	01-10	CHECKED LMS 01-10
DRAWN	LMS	01-10	CHECKED HRT 01-10
SURVEYED	BHT	01-10	CHECKED LMS 01-10
R.O.W.			CHECKED

johansen & tuttle ENGINEERING INC.
BOX 487, CASTLE DALE, UTAH 84513 (435) 381-2523
FAX (435) 381-2522 EMAIL jt@etv.net

STATE of UTAH DFCM
COLLEGE OF EASTERN UTAH
PRICE CAMPUS
PAVING IMPROVEMENTS
PROJECT No. 09098610

PAINTING PLAN

PROJECT NO. 09098610

SHEET NO. 6