CODE ANALYSIS

APPLICABLE CODES

	Year		Year
International Building Code	2006	National Electrical Code	2008
International Mechanical Code	2006	Uniform Code for Building Conservation	N/A
International Plumbing Code	2006	ADA Accessibility Guildelines	2003
International Fire Code	2006		
International Energy Conservation Code	2006		

A. Occupancy and Group: NA

Change in Use: Yes ____ No X Mixed Occupancy: Yes ____ No X

Special Use and Occupancy (e.g. High Rise, Covered Mall): N/A

B. Seismic Design Category: D Design Wind Speed: 90 mph

C. Type of Construction (circle one):

I/A I/B II/A II/B III/A III/B IV/HT V/A (V/B)

D. Fire Resistance Rating Requirements for the Exterior Walls based on the fire separation distance (in hours):

North: 0 South: 0 East: 0 West: 0

E. Mixed Occupancies: NA Nonseparated Uses: NA

F: Sprinklers:

Required: NA Provided: NA Type of Sprinkler System: NA

G: Number of Stories: NA Building Height: NA

H: Actual Area per Floor (square feet): EXISTING NA..

I: Tabular Area: EXISTING NA..

J: Area Modifications:

N/A

a) $A_a = A_t + \left[\frac{A_t I_f}{100}\right] + \left[\frac{A_t I_s}{100}\right]$ $I_f = 100\left[\frac{F}{P} - 0.25\right]\frac{W}{30}$

b) Sum of the Ratio Calculations for Mixed Occupancies:

N/A

$\frac{\text{Actual Area}}{\text{Allowable Area}} \leq 1$

N/A

c) Total Allowable Area for:

1) One Story: _____
2) Two Story: A_a (2)_____
3) Three Story: A_a (3)_____

d) Unlimited Area Building: Yes _____ No X Code Section: N/A

K. Fire Resistance Rating Requirements for Building Elements (hours).

Element	Hours	Assembly Listing	Element	Hours	Assembly Listing
Exterior Bearing Walls	0		Floors - Ceiling Floors	N/A	
Interior Bearing Walls	0		Roofs - Ceiling Roofs	N/A	
Exterior Non-Bearing Walls	0		Exterior Doors and Windows	0	
Structural Frame	0		Shaft Enclosures	NA	
Partitions - Permanent	0		Fire Walls	N/A	
Fire Barriers	N/A		Fire Partitions	N/A	
			Smoke Partitions	N/A	

L. Design Occupant Load: NA

Exit Width Required: NA Exit Width Provided: NA

M. Minimum Number of Required Plumbing Facilities: EXISTING CONDITION N.A.

a) Water Closets - Required (m) _____ (f) _____ Provided (m) _____ (f) _____
b) Lavatories - Required (m) _____ (f) _____ Provided (m) _____ (f) _____
c) Bath Tubs or Showers: _____ PROVIDED _____
d) Drinking Fountains: _____ Service Sinks: _____ PROVIDED _____
PROVIDED _____

FOOTNOTES:

1) In case of conflict with the U.S. Department of Justice Federal Registers Parts I through V - ADA Guidelines and specific reference to the International Building Code Accessibility Chapters, the more restrictive requirement shall govern.

2) Additional Code Information shall be provided at the discretion of the Building Official for Complex Buildings. Including, but not limited to:
   a) High Rise Requirements.
   b) Atriums.
   c) Performance Based Criteria.
   d) Means or Egress Analysis.
   e) Fire Assembly Locator Sheet.
   f) Exterior and Interior Accessibility Route.
   g) Fire Stopping, Including Tested Design Number.

RICHFIELD COURTS JUDGES PARKING

RICHFIELD UTAH

INDEX OF DRAWINGS

COVER COVER

GENERAL

SD1.01 SITE PLAN
SD1.02 DETAILS

S0.1 NOTES
S0.2 SPECIAL INSPECTIONS
S1.1 FRAMING PLAN
S5.1 DETAILS

E1.01 ELECTRICAL SITE PLAN

ARCHITECT:

CAMPBELL & ASSOCIATES
46 NORTH 200 EAST
ST. GEORGE UT 84770
435/628-5969
435/628-5975 fax
ATTN: KIM O. CAMPBELL

STRUCTURAL

CKR ENGINEERS
1283 N. STATE STREET
OREM, UT 84057
801/222-0922
801/222-0902 fax
ATTN: DAN GOODRICH

State of Utah
Department of Administrative Services

Division of Facilities Construction & Management
4110 State Office Building
Salt Lake City, Utah 84114
Phone: (801) 538 - 3018
Fax: (801) 538 - 3267

Internet: http://www.dfcm.state.ut.us

CREATED BY:

CAMPBELL & ASSOCIATES
ARCHITECTS
46 NORTH 200 EAST STREET, ST. GEORGE, UTAH 84770
PHONE (435)628-5969 FAX 628-5975 E-MAIL camco@infowest.com

STATE OF UTAH
KIM O. CAMPBELL
011202016
REGISTERED ARCHITECT

BUILDING NAME:

RICHFIELD COURTS JUDGES PARKING

PROJECT TITLE:

RICHFIELD COURTS JUDGES PARKING AT RICHFIELD UTAH

MARK	DATE	DESCRIPTION
1	9/24/09	PLAN REVIEW

ISSUE TYPE: CHECK SET

ISSUE DATE: ??/??/????

DFCM PROJECT NO: 09121150
CAD PROJECT NO:
CAD DWG FILE: 09009
DRAWN BY: GT / IM
CHK'D BY: K.C.

COPYRIGHT: STATE OF UTAH

SHEET TITLE

COVER

SHEET NUMBER

G0.00

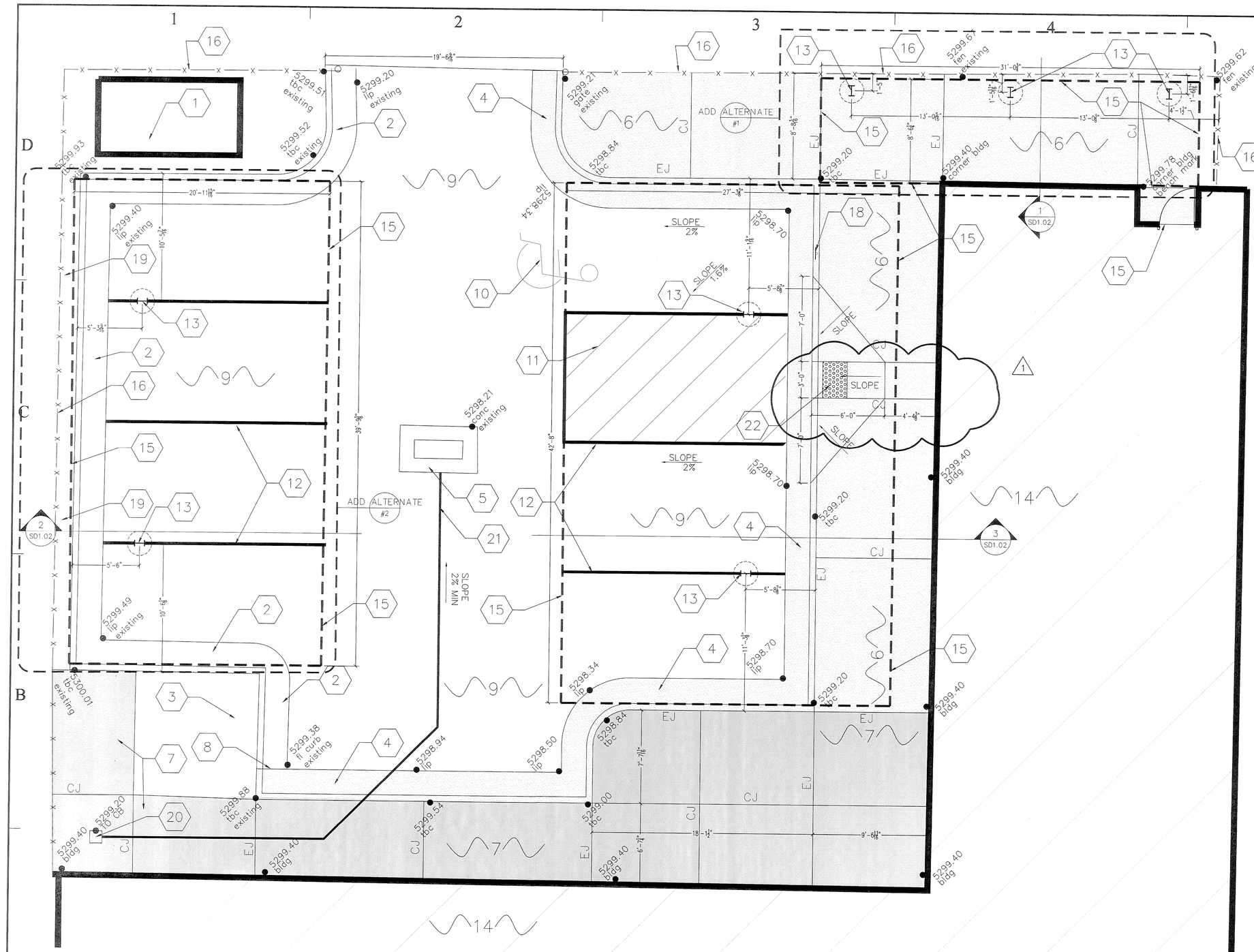

GENERAL NOTES

1. EXISTING SHED TO REMAIN UNCHANGED
2. EXISTING CURB & GUTTER TO REMAIN
3. EXISTING GENERATOR & PAD
4. REPLACE EXISTING CURB & GUTTER W/ SEE DETAIL 5/SD1.02 NEW CURB & GUTTER (SHOWN HATCHED)
5. EXISTING CATCH BASIN TO REMAIN UNCHANGED
6. REPLACE EXISTING CONCRETE WALK W/ NEW CONCRETE (SHOWN HATCHED) G.N. IS RESPONSIBLE FOR THE REMOVAL OF ALL DEMOLITION MATERIAL
7. NEW CONCRETE TO REPLACE EXISTING GRASS (SHOWN DASHED)
8. JOINT BETWEEN NEW & EXISTING CURB & GUTTER
9. NEW ASPHALT TO REPLACE EXISTING (ASPHALT MAKE UP)
10. ADA HANDICAPPED SYMBOL
11. 4" STRIPES @ 3'-0" O.C. FOR ADA UNLOADING ZONE
12. 4" PARKING STRIPES (TYP)
13. COLUMN & FOOTING TYP.
14. EXISTING BUILDING (SHOWN HATCHED)
15. EDGE OF NEW PARKING CANOPY
16. EXISTING FENCE TO REMAIN UNCHANGED
17. EXISTING GATE TO REMAIN UNCHANGED
18. NEW ADA SIGN SEE DETAIL 4/SD1.02
19. EXISTING CONCRETE TO REMAIN UNCHANGED
20. NEW CONCRETE 12"X12" CATCH BASIN
21. NEW 6" STORM DRAIN. 16" MIN COVER OVER PIPE
22. DETECTABLE WARNING (TRUNCATED DOMES)

LEGEND

NEW CONCRETE TO REPLACE EXISTING.

NEW CONCRETE TO REPLACE EXISTING GRASS

EJ EXPANSION JOINT

CJ CONTROL JOINT

SITE PLAN
1/4"=1'-0"

N

ADD ALTERNATE #1 NORTH PEDESTRIAN CANOPY
INCLUDES: CANOPY, COLUMNS, FOOTINGS AND ELECTRICAL

ADD ALTERNATE #2 WEST PARKING CANOPY
INCLUDES: CANOPY, COLUMNS, FOOTINGS AND ELECTRICAL

State of Utah
Department of Administrative Services
Division of Facilities Construction & Management
4110 State Office Building
Salt Lake City, Utah 84114
Phone: (801) 538 - 3018
Fax: (801) 538 - 3267
Internet: http://www.dfcm.state.ut.us

CREATED BY:

CAMPBELL & ASSOCIATES
ARCHITECTS
48 NORTH 500 EAST STREET, ST. GEORGE, UTAH 84770
PHONE (435)283-6555 FAX 283-6575 E-MAIL camarch@infowest.com

STATE OF UTAH
KIM O. CAMPBELL
0112002016
REGISTERED ARCHITECT

BUILDING NAME:
RICHFIELD COURTS JUDGES PARKING

PROJECT TITLE:
RICHFIELD COURTS JUDGES PARKING AT RICHFIELD UTAH

MARK	DATE	DESCRIPTION
1	9/24/09	PLAN REVIEW

ISSUE TYPE: CHECK SET

ISSUE DATE: ??/??/????

DFCM PROJECT NO: 09121150
CAD PROJECT NO:
CAD DWG FILE: 09009
DRAWN BY: GT / IM
CHK'D BY: K.C.
COPYRIGHT: STATE OF UTAH

SHEET TITLE

SHEET NUMBER

SD1.01

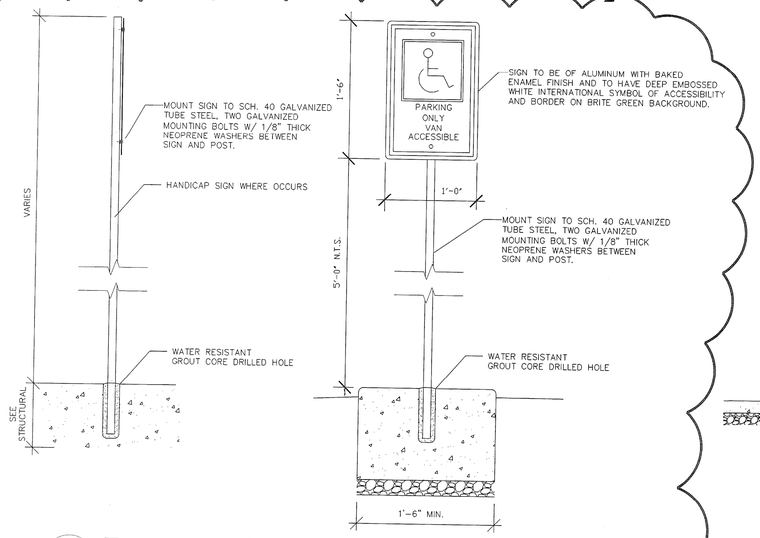

4 TYPICAL SIGN DETAIL
SCALE" 3"=1'-0"

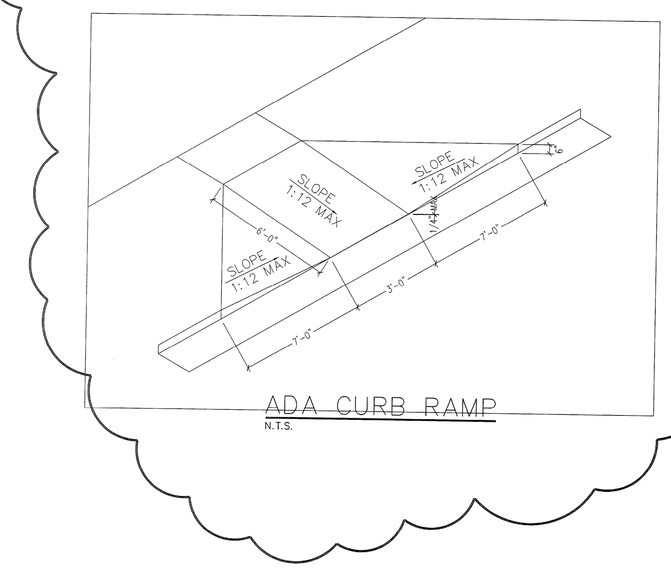

ADA CURB RAMP
N.T.S.

1

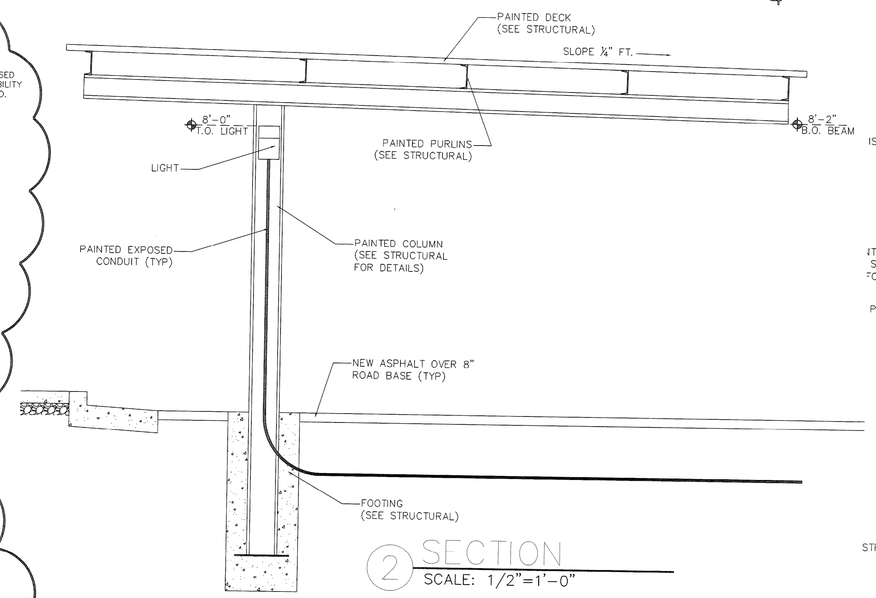

2 SECTION
SCALE: 1/2"=1'-0"

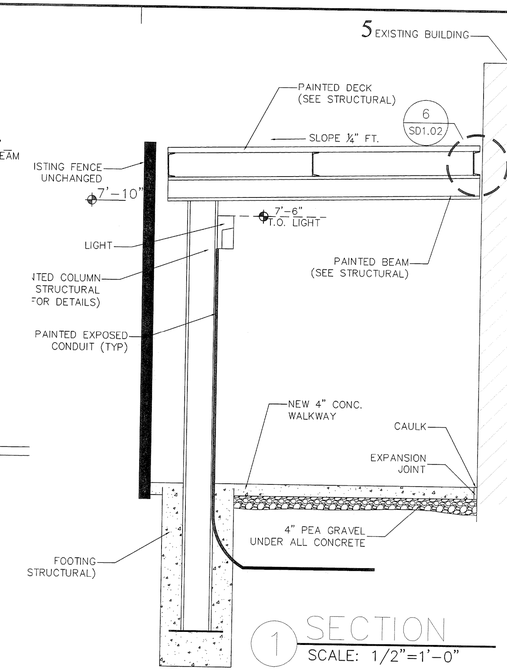

1 SECTION
SCALE: 1/2"=1'-0"

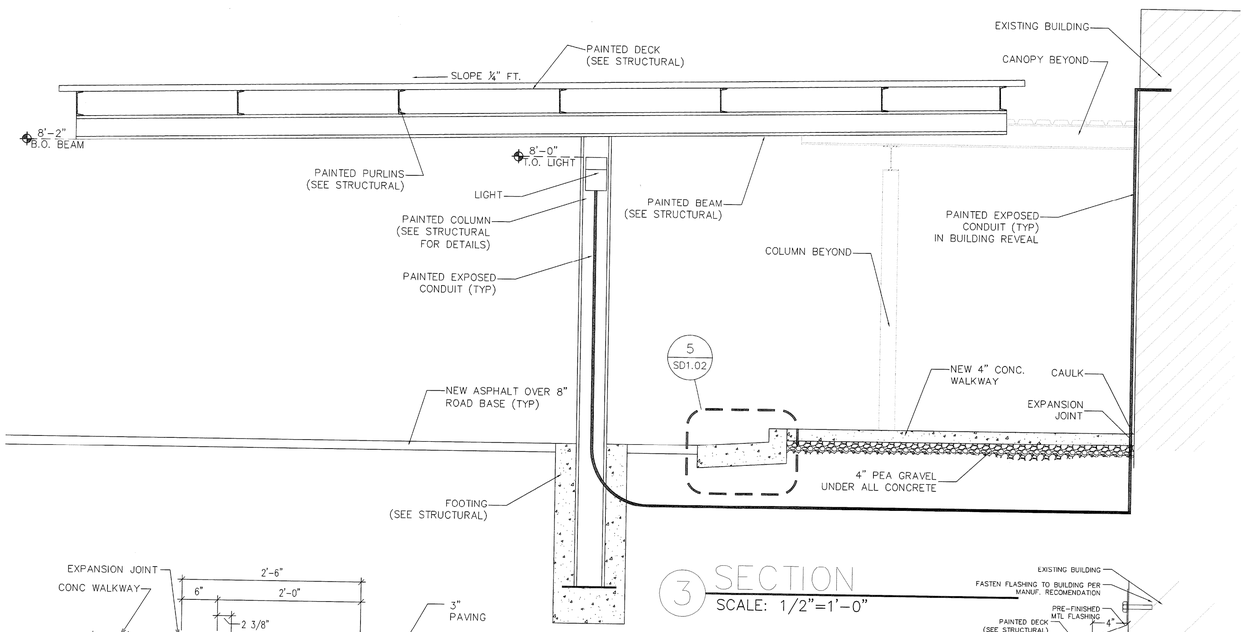

3 SECTION
SCALE: 1/2"=1'-0"

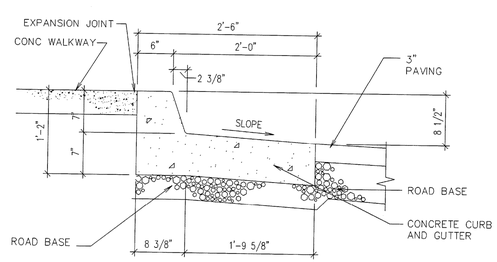

5 CURB DETAIL
SCALE: 1"-1'-0"

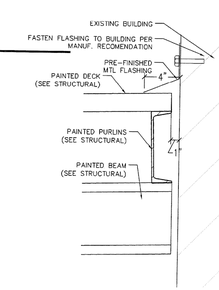

6 DETAIL
SCALE: 1 1/2"=1'-0"

State of Utah
Department of Administrative Services
Division of Facilities Construction & Management
4110 State Office Building
Salt Lake City, Utah 84114
Phone: (801) 538 - 3018
Fax: (801) 538 - 3267
Internet: http://www.dfcm.state.ut.us

CREATED BY:
CAMPBELL & ASSOCIATES
ARCHITECTS
46 NORTH 300 EAST STREET, ST. GEORGE, UTAH 84770
PHONE (435)673-6606 FAX 673-6676 E-MAIL campbell@infowest.com

STATE OF UTAH
KIM O. CAMPBELL
01120020016
REGISTERED ARCHITECT

BUILDING NAME:
RICHFIELD COURTS JUDGES PARKING

PROJECT TITLE:
RICHFIELD COURTS JUDGES PARKING AT RICHFIELD UTAH

MARK	DATE	DESCRIPTION
1	9/24/09	PLAN REVIEW

ISSUE TYPE: CHECK SET

ISSUE DATE: ??/??/????

DFCM PROJECT NO: 09121150
CAD PROJECT NO:
CAD DWG FILE: 09009
DRAWN BY: GT / IM
CHK'D BY: K.C.
COPYRIGHT: STATE OF UTAH

SHEET TITLE

SHEET NUMBER
SD1.02

GENERAL NOTES

Governing Building Code - 2006 International Building Code

Design loads:
- Occupancy Category II
- Roof Snow - Pg = 43 psf ground snow
  Pf = 30 psf flat roof snow load
  Ce = 1.0, Is = 1.0, Ct = 1.0
- Floor Live - Not Applicable
- Partition - Not Applicable
- Wind - 90 mph basic wind speed, exposure C
  Iw = 1.0
  GCpi = 0
- Seismic - Ie = 1.0
  Design Category D
  Cantilevered Columns
  Ss = 81.9%, S1 = 24.0%
  SDS = 0.6399, SD1 = 0.3072
  R = 1.25
  Cs = 0.5119
  Base Shear = 1.185 k per frame
  Equivalent Lateral Force Procedure
- Soil - Allowable Bearing Capacity - 1500 psf
  - Site Class D

CKR Engineers recommends that the owner provide a geotechnical study on the site completed by a competent Geotechnical Engineer. When completed, CKR Engineers shall be entitled to rely on the accuracy and completeness thereof. If the owner chooses not to have a geotechnical study completed, the owner assumes full responsibility and liability for any structural damage or other problems related to existing site conditions.

THE CONTRACTOR SHALL VERIFY ALL CONDITIONS AND DIMENSIONS PRIOR TO FABRICATION OR CONSTRUCTION IN ANY AREA! DO NOT SCALE DRAWINGS! The Architect/Engineer shall be notified of any discrepancies, omissions, or inconsistencies. In case of conflict, follow the most stringent requirements as directed by the Architect and Engineer. The contractor shall submit a written request to the Architect before proceeding with any changes, substitutions or modifications. Any work completed before receiving a written response shall be at the contractors risk.

Refer to the Special Inspection schedule for all required inspections. All requirements of Chapter 17 of the IBC shall be followed. A copy of all special inspections shall be forwarded to the Engineer for review.

These structural notes do not supersede the project specifications. Consult the project specifications for additional requirements in each section. If conflict between notes and specifications occurs, the most stringent requirement governs. Notes and details on drawings take precedence over general notes, typical details, and specifications.

All work shall conform to the minimum standards of the International Building Code, any other regulating agencies that have authority over any portion of the work, and the codes and standards listed in these notes and specifications. All specifications noted shall be the latest approved revision or edition. The General Contractor shall review and approve all shop drawings prior to submitting them to the Architect. A reviewed copy of all shop drawings shall be kept at the construction site for reference. The shop drawing review does not relieve the General Contractor of any responsibility for completion of the project according to the contract documents.

All details and notes on drawings are intended to be typical and shall apply to similar situations elsewhere unless noted or shown otherwise.

The contractor shall investigate the site during clearing, excavation or other earthwork operations for filled excavations, buried structures or unnatural soil conditions. If any of these conditions are found, the Architect and Geotechnical Engineer shall be notified immediately.

Structural drawings and specifications represent the finished structure, not the method of construction. The contractor shall be responsible for all measures necessary to protect the structure during construction. These measures include, but are not limited to: bracing, shoring, etc. Shoring and bracing shall remain in place until all permanent members are in place and connections complete. Observation visits to the site by the Engineer or his representative shall not include inspection of these items.

Construction materials shall be spread out if placed on framed floors or roof. Loads shall not exceed the design strength of the construction. Provide adequate shoring or bracing where structure has not attained design strength.

The contractor shall coordinate with all trades all items that are to be integrated into the structural system. Concrete reinforcing, anchor rods, embed plates, and any other items embedded in concrete, shall be securely tied in place prior to ordering concrete. Wet setting/stabbing of any items is not permitted.

See Architectural drawings for the following: (Unless noted)
- Size and location of door, window, floor, and roof openings.
- Size and location of all interior and exterior non-bearing partitions.
- Size and location of all curbs, drains, depressed areas, slopes, changes in level, grooves, chamfers, inserts, etc.
- Floor and roof finishes.
- Stair framing and details (except as shown).
- Dimensions not shown on structural drawings.

See Mechanical and Electrical drawings for the following: (unless shown or noted)
- Pipe runs, sleeves, trenches, hangars, wall and slab openings, etc.
- Electrical conduits, boxes, and outlets in walls and slabs.
- Concrete insert requirements for mechanical and electrical.
- Size and location of machine or equipment bases, anchor bolt requirements, etc.

Openings larger than 6 in. shall not be placed in slabs, decks, walls, etc., unless specifically detailed on the structural drawings. Notify the Structural Engineer when drawings by others show above conditions located in structural members.

The Engineer shall be notified forty-eight hours in advance prior to any of the following:
- Placing any concrete.
- Completing the fastening of any sheathed deck.

Observation visits by the Engineer or his representative shall neither be construed as inspection nor approval of construction.

FOUNDATIONS

Follow all recommendations of the soils report.

Footings shall be placed on undisturbed soil or structural fill per the requirements of the soils report. Excavations for footings are to be approved by the Geotechnical Engineer or Special Inspector prior to placement of concrete or reinforcing. The Geotechnical Engineer or Special Inspector shall submit letter of compliance to the Owner and the Structural Engineer.

The contractor shall provide for proper de-watering of any and all excavations if required.

The contractor shall provide for the design and installation of all cribbing, sheathing, and shoring required to safely and adequately retain any excavations.

All drilled shaft footings must be filled the same day they are excavated. All loose material must be removed from the bottom of the excavation prior to placing concrete

Grading shall allow for positive drainage (5 percent minimum) away from the building, other footings and foundations, drives, and sidewalks.

Excessive wetting or drying of the foundation excavation should be avoided during construction.

All fill supporting concrete slabs, footings, or etc. shall be moistened and compacted to at least 95 percent of the maximum dry density as determined by ASTM D-1557 (Modified Proctor). All other fill shall be compacted to a minimum relative compaction of ninety (90) percent of maximum dry density. An approved testing agency shall perform the compaction testing and submit the results to the Structural Engineer. Sufficient field density tests shall be performed to certify building pads as conforming to the specifications.

REINFORCING STEEL (FOR CONCRETE AND MASONRY)

All reinforcing steel shall be detailed and placed in conformance with the 'Building Code Requirements For Reinforced Concrete' (ACI 318 latest approved edition) and 'The Manual Of Standard Practice For Reinforced Concrete Construction' (latest approved edition) by the CRSI and the WCRSI, as modified by the project drawings and specifications.

All reinforcing bars shall be free of rust, scale, grease, form oil, or other material that might affect or impair bond.

All steel reinforcement shall conform to ASTM A615 Grade 60 with minimum yield strength of 60,000 psi

Welding of reinforcing shall be with low hydrogen electrodes in conformance with 'Recommended Practices For Welding Reinforcing Steel' American Welding Society, AWS-D1.4.

Reinforcing bars shall neither be welded nor bent by heating. Where inserts require welding to plates, angles or the like, deformed weldable bars shall be used.

All 90 degree hooks in reinforcing bars shall be bent with an inside diameter of 6 bar diameters for #3 to #8, 8 bar diameters for #9 to #11 bars and 10 bar diameters for bars larger than #11. Extend bars 12 bar diameters beyond bend. All 180 degree hooks in reinforcing bars shall be bent with an inside diameter of 6 bar diameters for #3 to #8, 8 bar diameters for #9 to #11 bars and 10 bar diameters for bars larger than #11. Extend bars a minimum of 4 bar diameters, or 2-1/2 in. beyond bend.

CONCRETE

All phases of work pertaining to the concrete construction shall conform to the 'Building Code Requirements For Reinforced Concrete' (ACI 318) and the 'Specifications For Structural Concrete For Buildings' (ACI 301) latest approved editions, with modifications as noted in the drawings or specifications.

Concrete mixes shall be designed by a qualified testing laboratory and approved by the Structural Engineer. All concrete in contact with the earth shall contain Type I Portland cement unless noted otherwise (UNO). In areas subject to sulfates, all concrete in contact with earth shall contain Type V cement with w/c ratio < 0.45 and minimum compressive of 4,500 psi.

Concrete shall have the following minimum compressive strengths within 28 days after placement (UNO):

Footings	4,000 psi
All Exterior Concrete	4,000 psi

All exterior concrete shall be air entrained by 6% +/- 1%.

Calcium chloride shall not be used.

Maximum concrete slump shall not exceed six inches.

Concrete samples for concrete being placed using a pump shall be taken at the point of discharge.

All concrete shall be thoroughly cured according to ACI recommendations. Follow ACI 306R "Cold Weather Concreting" and ACI 305R "Hot Weather Concreting" for all concrete and masonry work when required by current weather conditions.

Conduits and pipes embedded in concrete shall conform to the requirements in Section 1906.3 of the International Building Code.

No aluminum or product containing aluminum or any metal injurious to concrete shall be embedded in concrete.

Clear coverage of concrete over outer reinforcement bars shall be as follows (UNO).
- For concrete placed directly against earth, 3 in. cover
- For concrete surfaces exposed to weather, 1 1/2 in. cover.
- For concrete surfaces exposed to ground after removal of forms, 2 in. cover.
- For concrete surfaces not exposed to the ground or weather: slabs and walls, 3/4 in cover; joists or waffle beams, 1 in cover; beams, piers, and columns, 1 1/2 in. cover.

STRUCTURAL STEEL

All structural steel and structural steel work shall comply with the "AISC Specification for the Design, Fabrication and Erection of Structural Steel for Buildings" and with the "AISC Code of Standard Practice".

Hot rolled structural wide flange steel shall conform to A992 (50 ksi). Other hot rolled structural steel shall conform to ASTM A-36 (36 ksi) UNO. Pipe columns shall conform to ASTM A-53 grade B (36 ksi). All square or rectangular HSS steel tubes shall conform to ASTM A500 Grade B (46 ksi). All round steel HSS tubes shall conform to ASTM A500 Grade B (42 ksi).

All welds and welding shall be in accordance with the specifications of the American Welding Society. Use E70XX electrodes for all welding. All welders must be A.W.S. qualified for the specific type of welding required. Copies of current (within 1 year) welder certification shall be submitted to Architect/Structural Engineer.

Weld lengths noted on plans are the net effective length required. Minimum welds shall meet the requirements of the AISC specification Welds shall be continuous fillet as follows (UNO): 1/16 inch less than the thinnest connecting part for material over 1/4 inch in thickness and shall be the same size as the thinnest connecting part for material under 1/4" thick.

Ten Percent of all welds (both shop and field) are to be tested by magnetic particle and visual inspection according to AWS D1.1 and ASTM #709, or by other non-destructive test as specified by the Engineer. All complete penetration groove welds shall be tested 100 percent by ultrasonic testing or by radiography. Weld tests shall be made by independent testing agency at the owner's expense.

Provide full height web stiffener plates to each side of all beams above all bearing points. Stiffener plates shall be 3/8 inch thick (UNO) and welded with 3/16-inch filet welds continuous.

All steel-to-steel connection bolts shall conform to ASTM A325-N (UNO). Steel to concrete anchor rods shall conform to ASTM F1554 Grade 36 (UNO). Steel to wood bolts shall conform to ASTM A307 Grade A (UNO). Bolts shall be tightened according to the Turn-Of-The-Nut Method.

Provide and install hardened washers for all A325 or stronger bolted connections and standard washers for all other bolts. Where the outer member face exceeds 1 in 20 with respect to the normal plane of the bolt axis, provide beveled washers.

Boltholes in steel shall be 1/16 inch larger than nominal size of bolt used, except anchor rods, which may be 3/16 inch larger.

Provide galvanized steel angle lintels at all openings through the masonry walls where none is indicated. Provide 1 inch of bearing for each foot of opening width with a minimum of 6 inches of bearing. See schedule for lintel size.

Anchor studs, shear studs, and deformed anchors:
- Shall be Nelson Studs or equal.
- Headed studs (shear and anchor) shall be made of material conforming to ASTM A108.
- Deformed anchors shall be made of material conforming to ASTM 496.
- Studs and anchors shall be welded according to manufacturer's recommendations. Manual arc (stick) welding of headed studs and/or deformed anchors is not allowed.

STEEL DECKING

Steel decking shall be of type and gauge as noted on the steel deck schedule. Decking and all accessories shall be formed from steel having a minimum yield strength of 60 ksi and conforming to ASTM A 1008, or ASTM A 653. Decking under interior concrete shall be phosphatized/painted UNO. Roof decking shall be manufacturer's prime coat finish.

Deck units shall span over two or more spans. If a two span condition is not possible, provide heavier gage deck as required to provide the equivalent loading of a two span deck.

Steel roof deck shall not be used to support items such as lighting, conduit, etc. Any items to be supported by the canopy shall be attached to the purlins or frames.

Minimum bearing of decking on supports shall be 2 inches. Sheets shall be attached to all supporting steel members as indicated on drawings and in accordance with manufacturer's recommendations.

Power driven fasteners are an acceptable alternative to welds provided the shear and uplift capacity meets or exceeds the capacities of the welded diaphragm. Submit calculations to the Architect/Engineer for review. The submittal shall either include verification of the thickness of the base material, or use the diaphragm reduction factor required for thinner base materials. Submittals that do not account for thickness of the base material will be rejected.

COLD-FORMED STEEL

All light gage steel framing shall be galvanized channel type sections of the size, type, and gauge indicated on the plans. All steel framing studs shall have flange stiffener lips (U.N.O.). All steel purlins shall conform to ASTM A570 with a minimum yield of 55 ksi. All track, bridging, closures, etc. shall be formed from 33-ksi steel UNO.

Members shall be welded as noted on the drawings by arc welding which complies with current AWS practice. Where welding is not specifically noted, studs may be attached with manufacturer approved self-drilling, self-tapping screws.

EPOXY INSTRUCTIONS FOR ANCHORING REBAR AND BOLTS
(Referred to below as bar(s))

Use epoxy that meets ICC AC308 criteria, e.g. Hilti RE 500 SD.

Bars must be deformed or threaded for the full embedment depth in epoxy.

Over-drill bar diameter as recommended by manufacturer and to depth indicated in the drawings (15 bar diameter minimum depth). Maximum hole size to be no larger than 1/4 in. larger than bar diameter.

Remove all dirt, dust, water, and ice by vacuum from the holes. Brush and blow hole with oil-free compressed air twice.

Clean dirt, rust, and oil from the bars.

During the epoxy mixing and application process, follow the epoxy manufacturer's instructions exactly.

Inject the holes drilled for the bars halfway with epoxy and then insert the bars while twisting slightly. Insure that bar is seated at bottom of hole and that epoxy has flowed from the top of the hole.

Use an epoxy gel for all horizontal holes or vertical holes filled from the bottom.

All bars anchored in epoxy are to be special inspected during installation.

PROFESSIONAL STRUCTURAL ENGINEER
DONALD GUNNON
265738
9/15/09
STATE OF UTAH

State of Utah
Department of Administrative Services
Division of Facilities Construction & Management
4110 State Office Building
Salt Lake City, Utah 84114
Phone: (801) 538 - 3018
Fax: (801) 538 - 3267
Internet: http://www.dfcm.state.ut.us

CREATED BY:
CKR ENGINEERS
CONSULTING STRUCTURAL ENGINEERS
1295 NORTH STATE STREET
OREM, UTAH 84057
PHONE: (801) 222-0922
FAX: (801) 222-0902

BUILDING NAME:
RICHFIELD COURTS JUDGES PARKING

PROJECT TITLE:
RICHFIELD COURTS JUDGES PARKING AT RICHFIELD UTAH

MARK	DATE	DESCRIPTION

ISSUE TYPE:

ISSUE DATE:

DFCM PROJECT NO:
CAD PROJECT NO:
CAD DWG FILE:
DRAWN BY: JR
CHK'D BY: DG
COPYRIGHT: STATE OF UTAH

SHEET TITLE
NOTES

SHEET NUMBER
S0.1

SPECIAL INSPECTION SCHEDULE (2006 IBC CHAPTER 17)

REQUIRED VERIFICATION AND INSPECTION OF STEEL CONSTRUCTION (IBC TABLE 1704.3)

VERIFICATION AND INSPECTION	CONTINUOUS	PERIODIC	COMMENTS
1. MATERIAL VERIFICATION OF HIGH STRENGTH BOLTS, NUTS AND WASHERS:			
A. IDENTIFICATION MARKINGS TO CONFORM TO ASTM STANDARDS SPECIFIED IN THE APPROVED CONSTRUCTION DOCUMENTS		X	
B. MANUFACTURERS CERTIFICATE OF COMPLIANCE IS REQUIRED		X	
2. INSPECTION OF HIGH STRENGTH BOLTING:			
A. BEARING TYPE CONNECTIONS		X	VERIFY FASTENING OF STRUCTURAL STEEL TO LIGHT GAGE PURLINS
3. MATERIAL VERIFICATION OF STRUCTURAL STEEL:			
A. IDENTIFICATION MARKINGS TO CONFORM TO ASTM STANDARDS SPECIFIED IN THE APPROVED CONSTRUCTION DOCUMENTS.		X	
B. MANUFACTURER'S CERTIFIED MILL TEST REPORTS.		X	
4. MATERIAL VERIFICATION OF WELD FILLER MATERIALS:			
A. IDENTIFICATION MARKINGS TO CONFORM TO ASTM SPECIFICATION IN THE APPROVED CONSTRUCTION DOCUMENTS.		X	
B. MANUFACTURER'S CERTIFICATE OF COMPLIANCE REQUIRED.		X	CERT REQUIRED FOR FULL PEN WELD METAL
5. INSPECTION OF WELDING:			
A. STRUCTURAL STEEL:			
1) COMPLETE AND PARTIAL PENETRATION GROOVE WELDS.	X		
2) MULTIPASS FILLET WELDS.	X		
3) SINGLE-PASS FILLET WELDS > 5/16"	X		
4) SINGLE-PASS FILLET WELDS ≤ 5/16"		X	
B. REINFORCING STEEL:			
1) VERIFICATION OF WELDABILITY OF REINFORCING STEEL OTHER THAN ASTM A 706.		X	
6. INSPECTION OF STEEL FRAME JOINT DETAILS FOR COMPLIANCE WITH APPROVED CONSTRUCTION DOCUMENTS: A. DETAILS SUCH AS BRACING AND STIFFENING. B. MEMBER LOCATIONS. C. APPLICATION OF JOINT DETAILS AT EACH CONNECTION.		X	

REQUIRED VERIFICATION AND INSPECTION OF CONCRETE CONSTRUCTION (IBC TABLE 1704.4)

VERIFICATION AND INSPECTION	CONTINUOUS	PERIODIC	COMMENTS
1. INSPECTION OF REINFORCING STEEL, INCLUDING PRESTRESSING TENDONS, AND PLACEMENT.			
2. INSPECTION OF REINFORCING STEEL WELDING IN ACCORDANCE WITH TABLE 1704.3, ITEM 5B.			
3. INSPECTION BOLTS TO BE INSTALLED IN CONCRETE PRIOR TO AND DURING PLACEMENT OF CONCRETE WHERE ALLOWABLE LOADS HAVE BEEN INCREASED.			
4. VERIFYING USE OF REQUIRED DESIGN MIX.		X	
5. AT THE TIME FRESH CONCRETE IS SAMPLED TO FABRICATE SPECIMENS FOR STRENGTH TESTS, PERFORM SLUMP AND AIR CONTENT TESTS, AND DETERMINE THE TEMPERATURE OF THE CONCRETE.	X		
6. INSPECTION OF CONCRETE AND SHOTCRETE PLACEMENT FOR PROPER APPLICATION TECHNIQUES.	X		
7. INSPECTION FOR MAINTENANCE OF SPECIFIED CURING TEMPERATURE AND TECHNIQUES.		X	
8. INSPECT FORMWORK FOR SHAPE, LOCATION AND DIMENSIONS OF THE CONCRETE MEMBER BEING FORMED.		X	

REQUIRED VERIFICATION AND INSPECTION OF SOIL (IBC TABLE 1704.7)

VERIFICATION AND INSPECTION	CONTINUOUS	PERIODIC	COMMENTS
1. VERIFY MATERIALS BELOW FOOTINGS ARE ADEQUATE TO ACHIEVE THE DESIGN BEARING CAPACITY		X	
2. VERIFY EXCAVATIONS ARE EXTENDED TO PROPER DEPTH AND HAVE REACHED PROPER MATERIAL		X	VERIFY DIAMETER, DEPTH AND NO LOOSE MATERIAL AT BOTTOM

NOTES:
1. STEEL FABRICATOR MUST BE DFCM APPROVED OR IN-PLANT SPECIAL INSPECTIONS ARE REQUIRED.

2. SPECIAL INSPECTIONS REQUIRED FOR ALL FIELD WELDING.

PROFESSIONAL STRUCTURAL ENGINEER
CONRAD GUYMON
265738
9/15/09
STATE OF UTAH

State of Utah
Department of Administrative Services
Division of Facilities Construction & Management
4110 State Office Building
Salt Lake City, Utah 84114
Phone: (801) 538 - 3018
Fax: (801) 538 - 3267
Internet: http://www.dfcm.state.ut.us

CREATED BY:
CKR ENGINEERS
CONSULTING STRUCTURAL ENGINEERS
1295 NORTH STATE STREET
OREM, UTAH 84057
PHONE: (801) 222-0922
FAX: (801) 222-0902

BUILDING NAME:
RICHFIELD COURTS JUDGES PARKING

PROJECT TITLE:
RICHFIELD COURTS JUDGES PARKING AT RICHFIELD UTAH

MARK	DATE	DESCRIPTION

ISSUE TYPE:

ISSUE DATE:

DFCM PROJECT NO:
CAD PROJECT NO:
CAD DWG FILE:
DRAWN BY: JR
CHK'D BY: DG
COPYRIGHT: STATE OF UTAH

SHEET TITLE
SPECIAL INSPECTION SCHEDULE

SHEET NUMBER
S0.2

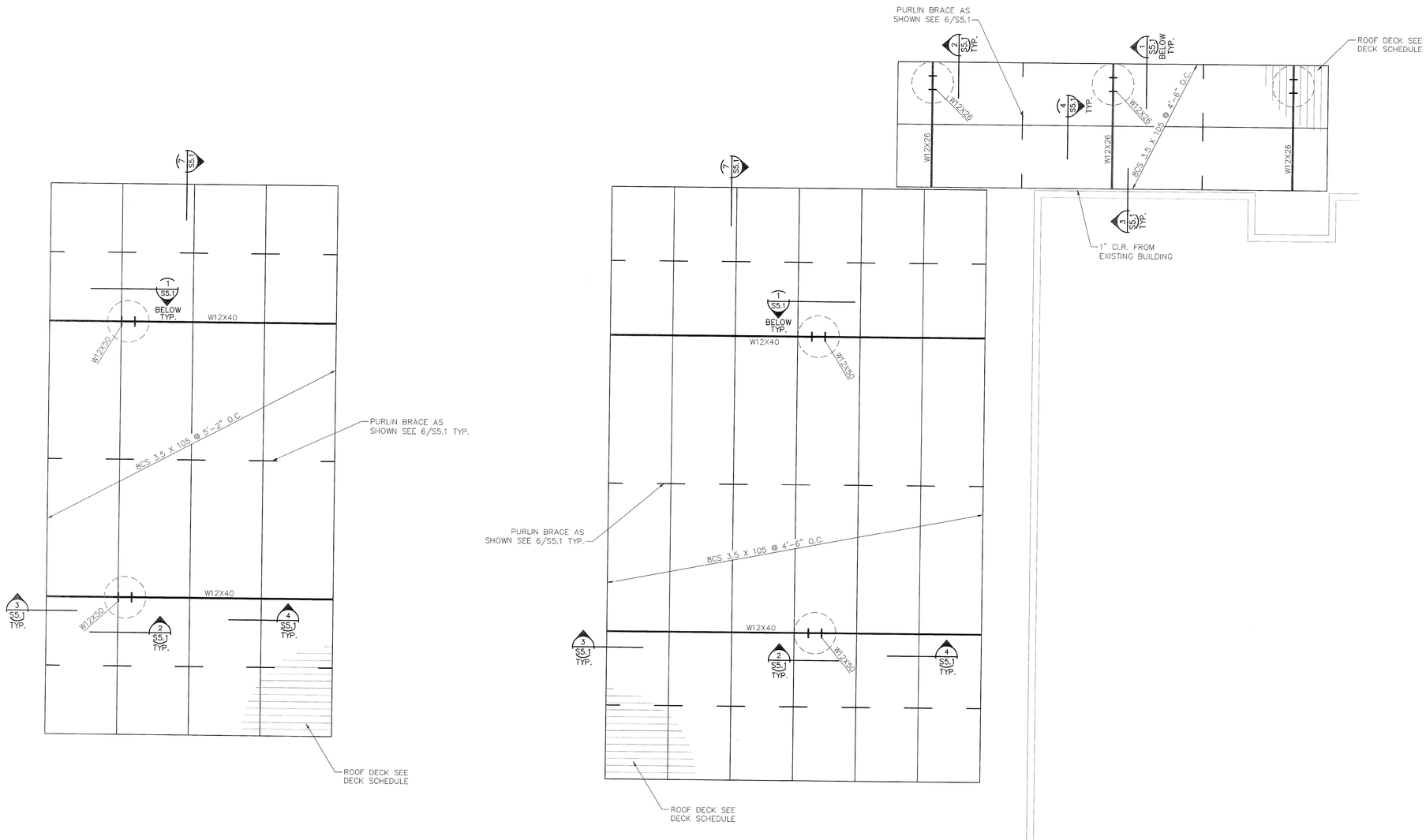

ROOF FRAMING PLAN (1) — 1/4"=1'-0"
NAME

DECK SCHEDULE

MARK	DECK TYPE	ICBO NO.	MIN. SPAN PER SHT.	FASTENERS REQUIRED AT SIDE LAP SEAMS	FASTENERS REQ'D AT SUPPORTS PERPENDICULAR TO DECK SPAN	FASTENERS REQ'D AT SUPPORTS PARALLEL TO DECK SPAN
ROOF	26 GAGE MBCI PBR PANEL	2078	3	#12 SCREW AT 20" O.C.	SEE 5/S5.1	#12 SCREW AT 20" O.C.

NOTE:
DECKING SHALL BE MANUFACTURERS PRIME COATS ON BOTTOM. FINISH COAT ON TOP. COLOR TO BE SELECTED BY THE ARCHITECT. BOTTOM OF DECK SHALL BE FIELD PAINTED WITHIN 30 DAYS OF INSTALLATION.

State of Utah
Department of Administrative Services
Division of Facilities Construction & Management
4110 State Office Building
Salt Lake City, Utah 84114
Phone: (801) 538 - 3018
Fax: (801) 538 - 3267
Internet: http://www.dfcm.state.ut.us

CREATED BY:

CKR ENGINEERS
CONSULTING STRUCTURAL ENGINEERS
1295 NORTH STATE STREET
OREM, UTAH 84057
PHONE: (801) 222-0922
FAX: (801) 222-0902

BUILDING NAME:
RICHFIELD COURTS JUDGES PARKING

PROJECT TITLE:
RICHFIELD COURTS JUDGES PARKING AT RICHFIELD UTAH

MARK	DATE	DESCRIPTION

ISSUE TYPE:

ISSUE DATE:

DFCM PROJECT NO:
CAD PROJECT NO:
CAD DWG FILE:
DRAWN BY: JR
CHK'D BY: DG
COPYRIGHT: STATE OF UTAH

SHEET TITLE
ROOF FRAMING PLAN

SHEET NUMBER
S1.1

PROFESSIONAL STRUCTURAL ENGINEER
CONRAD GUYMON
265738
9/15/09
STATE OF UTAH

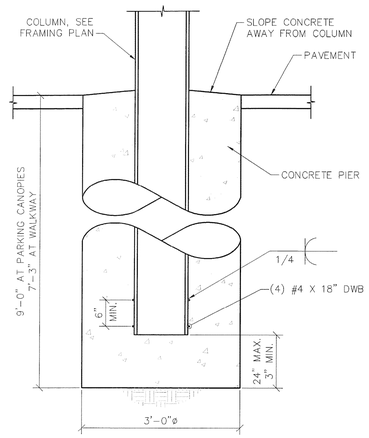

DETAIL 1 — 3/4"=1'-0"
DET3

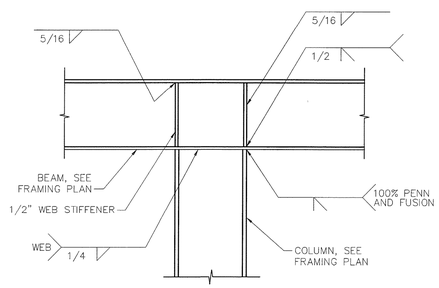

DETAIL 2 — 1"=1'-0"
DET2

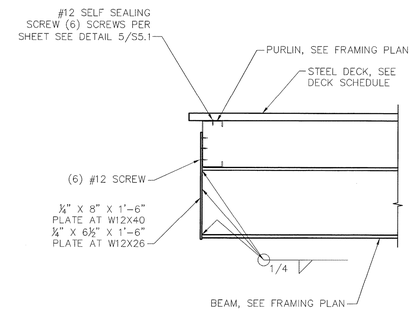

DETAIL 3 — 1"=1'-0"
DET5

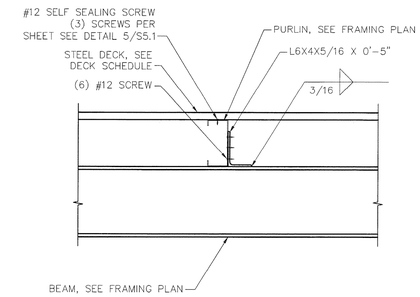

DETAIL 4 — 1"=1'-0"
DET1

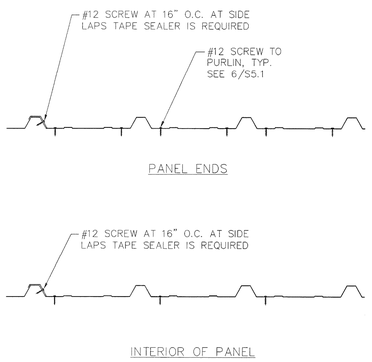

FASTENER LOCATION 5 — 1 1/2"=1'-0"
DET6

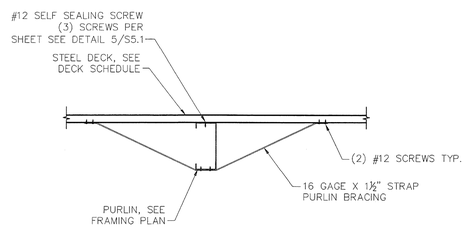

DETAIL 6 — 1"=1'-0"
DET4

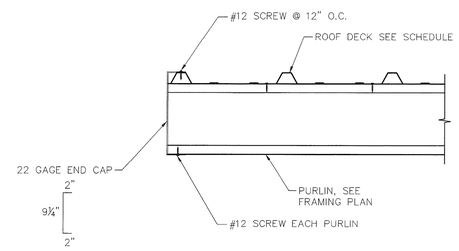

DETAIL 7 — 1 1/2"=1'-0"
DET7

State of Utah
Department of Administrative Services
Division of Facilities Construction & Management
4110 State Office Building
Salt Lake City, Utah 84114
Phone: (801) 538 - 3018
Fax: (801) 538 - 3267
Internet: http://www.dfcm.state.ut.us

CREATED BY:
CKR ENGINEERS
CONSULTING STRUCTURAL ENGINEERS
1295 NORTH STATE STREET
OREM, UTAH 84057
PHONE: (801) 222-0922
FAX: (801) 222-0902

BUILDING NAME:
RICHFIELD COURTS JUDGES PARKING

PROJECT TITLE:
RICHFIELD COURTS JUDGES PARKING AT RICHFIELD UTAH

MARK	DATE	DESCRIPTION

ISSUE TYPE:

ISSUE DATE:

DFCM PROJECT NO:
CAD PROJECT NO:
CAD DWG FILE:
DRAWN BY: JR
CHK'D BY: DG
COPYRIGHT: STATE OF UTAH

SHEET TITLE
DETAILS

SHEET NUMBER
S5.1

PROFESSIONAL STRUCTURAL ENGINEER
CONRAD GUYMON
265738
9/15/09
STATE OF UTAH

LUMINAIRE SCHEDULE

TYPE	DESCRIPTION	MANUFACTURER: CATALOG NUMBER	VOLTS	LAMPS QTY	LAMPS MODEL	MOUNTING	NOTES VA
L1	CAST ALUMINUM BACK HOUSING WITH POLYCARBONATE VANDAL RESISTANT FRONT. WET LOCATION RATED	HUBBELL:NRG350B	120	1	MH50	SURFACE	55 VA

NOTES:
(1)
(2)

ELECTRICAL SYMBOL SCHEDULE

SYMBOL	DEVICE/FIXTURE DESCRIPTION	MOUNTING	COMMENTS
	WALL LIGHT FIXTURE	7'-6"	(1) (2)
P	PHOTO-ELECTRIC CELL		
	PANEL BOARD	6'-6" TO TOP	
	CONDUIT RUN CONCEALED IN WALL OR CEILING		
	CONDUIT RUN CONCEALED IN FLOOR OR GROUND		
	LOW VOLTAGE CONDUIT RUN		
	ONE CIRCUIT, TWO WIRE HOME RUN TO PANEL		
	TWO CIRCUIT, THREE WIRE HOME RUN TO PANEL		
	THREE CIRCUIT, FOUR WIRE HOME RUN TO PANEL		
	CONDUIT STUB LOCATION		
	CONDUIT STUB DOWN		
	CONDUIT STUB UP		

ABBREVIATIONS/NOTES

AFF - ABOVE FINISHED FLOOR,AFG - ABOVE FINISHED GRADE, AIC - AMPS INTERUPTING CAPACITY
BC - BARE COPPER,BFG - BELOW FINISHED GRADE,BFC - BELOW FINISHED CEILING,
CND, DR E. - CONDUIT,CT - CURRENT TRANSDUCER,DFA - DROP FROM ABOVE,
EC - ELECTRICAL CONTRACTORGC - GENERAL CONTRACTOR,MC - MECHANICAL CONTRACTOR,
MCA - MINIMUM CIRCUIT AMPS,P.C. - PLUMBING CONTRACTOR,POC - POINT OF CONNECTION,
POS - POINT OF SALES,RMC - RIGID METAL CONDUIT,SCA - SHORT CIRCUIT AMPERES,
TC - TEMP. CONTROL CONTRACTOR,WP - WEATHER PROOF/NEMA 3R VA - VOLT/AMPS,
VIF - VERIFY IN FIELD, SBJ - SYSTEM BONDING JUMPER, CO - CONDUIT ONLY

(1) SEE LIGHTING FIXTURE SCHEDULE FOR TYPE AND SPECIFICS.
(2) SEE LIGHTING FIXTURE SCHEDULE FOR MOUNTING OF FIXTURE.

1

GENERAL NOTES

1. THE ELECTRICAL SYSTEMS DEFINED BY THESE PLANS AND SPECIFICATIONS ARE TO BE CONSTRUCTED AS COMPLETE AND OPERABLE SYSTEMS AND SHALL BE BID WITH THIS INTENT. THE CONTRACTOR SHALL VISIT THE SITE, READ ALL THE RELEVANT DOCUMENTS AND BECOME FAMILIAR WITH THE TYPE OF CONSTRUCTION AND WORK TO BE ACCOMPLISHED. SHOULD ANY ERROR, OMISSION OR CONFLICT EXIST IN EITHER THE PLANS OR SPECIFICATIONS, THE CONTRACTOR SHALL NOTIFY THE ENGINEER IN WRITING BEFORE SUBMITTING HIS BID PRICE SO A CHANGE CAN BE ISSUED IN A PRE-BID ADDENDUM. OTHERWISE, THE CONTRACTOR AND/OR EQUIPMENT SUPPLIER SHALL SUPPLY THE PROPER MATERIALS AND LABOR TO INSTALL COMPLETE AND OPERABLE SYSTEMS AT THEIR OWN EXPENSE. WHEN EACH ELECTRICAL SYSTEM IS COMPLETE, THE CONTRACTOR SHALL TEST AND CONFIRM IT'S PROPER OPERATION. ANY INCOMPLETE SYSTEM SHALL BE MADE COMPLETE AND OPERABLE.
2. THE ARCHITECTURAL AND MECHANICAL PLANS ARE CONSIDERED A PART OF THE ELECTRICAL DOCUMENTS SO FAR AS THEY APPLY. THE ELECTRICAL CONTRACTOR SHALL REFER TO AND COORDINATE WITH THEM. NO EXTRA COST SHALL BE ALLOWED FOR FAILURE TO COORDINATE THE CONTRACT DOCUMENTS WITH OTHER TRADES AND/OR IF EQUIPMENT DIMENSIONS ARE GREATER THAN SPECIFIED AND/OR DIMENSIONED ON THE PLANS.
3. NO ADDITIONS TO THE CONTRACT BID WILL BE ALLOWED FOR CHANGES MADE NECESSARY BY INTERFERENCE WITH OTHER WORK.
4. THIS PROJECT IS TO BE INSTALLED IN STRICT ACCORDANCE WITH LOCAL AND STATE CODES AND THE NEC. IF AT ANY TIME DURING CONSTRUCTION, OR AFTER, SOMETHING IS FOUND TO BE INSTALLED IN VIOLATION OF THE CODES LISTED ABOVE, IT SHALL BE CORRECTED AT THE CONTRACTORS EXPENSE.
5. THE EC SHALL INSTALL A SEPARATE EQUIPMENT GROUNDING CONDUCTOR IN EACH CONDUIT RUN. CONDUIT SHALL NOT BE USED AS AN EQUIPMENT GROUNDING CONDUCTOR. THE EC SHALL GROUND THE ELECTRICAL SYSTEM IN ACCORDANCE WITH LOCAL AND NATIONAL CODES.
6. ELECTRICAL CONTRACTOR SHALL CONFIRM MINIMUM CODE (NEC) WORKING CLEARANCE BEFORE INSTALLING ANY ELECTRICAL PANELS OR CABINETS AND SHALL MOVE THE PANELS AT HIS EXPENSE IF REJECTED BY AN INSPECTOR. IF CLEARANCE IS NOT POSSIBLE, THE DESIGNER SHALL BE NOTIFIED IMMEDIATELY IN WRITING.
7. THE CONTRACTOR SHALL ALLOW THE MOVEMENT, BEFORE ROUGH-IN, OF ANY ELECTRICAL PANEL, DEVICE, LIGHT FIXTURE, ETC. A DISTANCE OF 10 FEET WITHOUT REQUIRING ADDITIONAL COST TO THE PROJECT.
8. THE ELECTRICAL CONTRACTOR SHALL SECURE ALL CONDUIT TO THE STRUCTURE AS IT IS SET IN PLACE USING INDUSTRY STANDARD METHODS AND PRACTICES.
9. TO ASSURE ALL DEVICES ARE RIGIDLY SET, THE ELECTRICAL CONTRACTOR SHALL SECURE ALL DEVICE BOXES WITH BRACKETS, HANGERS, ETC. DESIGNED FOR THE APPLICATION. ANY DEVICE BOXES NOT SECURED WILL BE MADE SECURE AT THE CONTRACTORS EXPENSE.
10. BEFORE ANY ELECTRICAL CONDUIT, BOXES, ETC. ARE COVERED (FLOOR, CEILINGS, WALLS, ETC.), THEY SHALL BE APPROVED BY THE INSPECTING OFFICER (INSPECTOR). THE UNCOVERING AND REPLACEMENT OF ELECTRICAL WORK FOR THE INSPECTION PURPOSES WILL BE AT THE COST OF THE ELECTRICAL CONTRACTOR.
11. DURING CONSTRUCTION, THE ELECTRICAL CONTRACTOR SHALL REMOVE, REROUTE, AND/OR RELOCATE ANY EXISTING ELECTRICAL EQUIPMENT THAT CONFLICTS WITH THE REMODEL OR ADDITION. ALL SYSTEMS SHALL BE OPERABLE AT THE COMPLETION OF THE PROJECT. THE OWNER RESERVES FIRST RIGHT OF REFUSAL ON ALL ELECTRICAL EQUIPMENT WHICH IS NOT TO BE REUSED. EQUIPMENT WHICH IS NOT REUSED OR RECLAIMED BY THE OWNER BECOMES THE PROPERTY OF THE ELECTRICAL CONTRACTOR AND SHALL BE REMOVED FROM THE PREMISES.

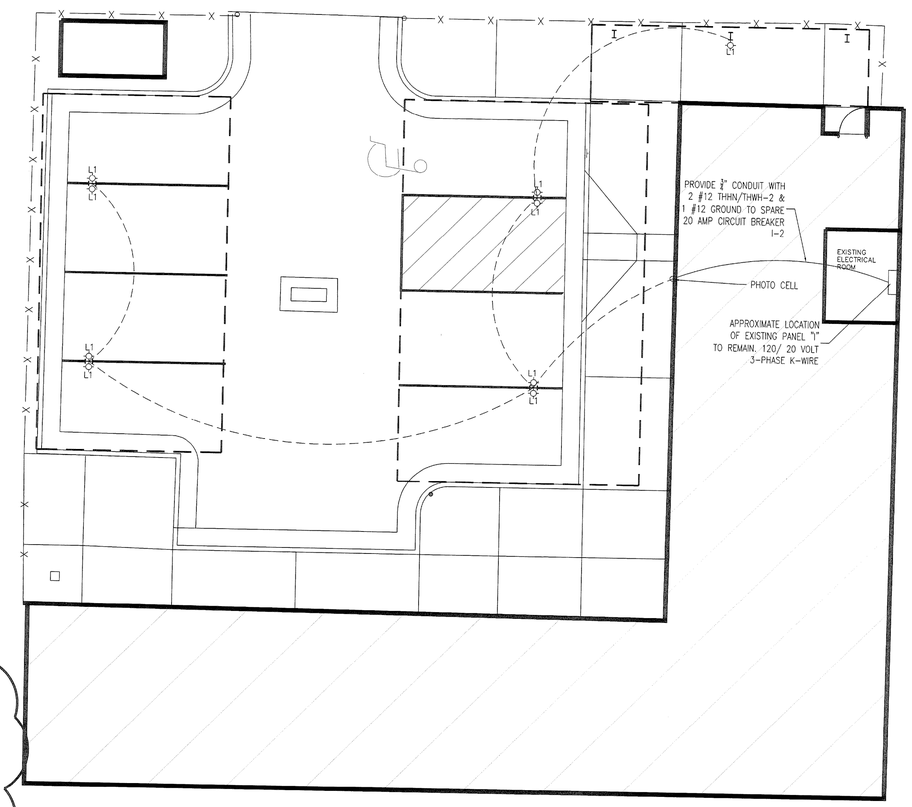

COM*check* Software Version 3.5.2

Exterior Lighting Compliance Certificate

2006 IECC

Report Date: 09/24/09
Data filename: H:\No Job Number\Richfield Courts Parking\Cad\Reports\Electrical\ComCheck.cck

Section 1: Project Information

Project Type: **Addition**
Project Title : Richfield Courts Judges Parking

Construction Site: Richfield, UT
Owner/Agent:
Designer/Contractor: Kim Campbell, Campbell & Associates, 46 North 200 East, St. George, UT 84770, 435-628-5969

Section 2: Exterior Lighting Area/Surface Power Calculation

A Exterior Area/Surface	B Quantity	C Allowed Watts / Unit	D Tradable Wattage	E Allowed Watts (C x D)	F Proposed Watts
Free standing canopy	2330 ft2	1.25	Yes	2912	495
			Total Tradable Watts* =	2912	495
			Total Allowed Watts =	2912	
			Total Allowed Supplemental Watts** =	146	

* Wattage tradeoffs are only allowed between tradable areas/surfaces.
** A supplemental allowance equal to 5% of total allowed wattage may be applied toward compliance of both non-tradable and tradable areas/surfaces.

Section 3: Exterior Lighting Fixture Schedule

A Fixture ID : Description / Lamp / Wattage Per Lamp / Ballast	B Lamps/ Fixture	C # of Fixtures	D Fixture Watt.	E (C X D)
Free standing canopy (2330 ft2): Tradable Wattage				
HID 1: Metal Halide 50W / Electronic	1	9	55	495
			Total Tradable Proposed Watts =	495

Section 4: Requirements Checklist

Lighting Wattage:

☐ 1. Within each non-tradable area/surface, total proposed watts must be less than or equal to total allowed watts. Across all tradable areas/surfaces, total proposed watts must be less than or equal to total allowed watts.
Compliance: Passes.

Controls, Switching, and Wiring:

☐ 2. All exemption claims are associated with fixtures that have a control device independent of the control of the nonexempt lighting.
☐ 3. All nonexempt lighting fixtures shall be controlled by a photosensor or astronomical time switch that is capable of automatically turning off the fixture when sufficient daylight is available or the lighting is not required.

Exterior Lighting Efficacy:

Project Title: Richfield Courts Judges Parking
Data filename: H:\No Job Number\Richfield Courts Parking\Cad\Reports\Electrical\ComCheck.cck
Report date: 09/24/09
Page 1 of 2

☐ 4. All exterior building grounds luminaires that operate at greater than 100W have minimum efficacy of 60 lumen/watt.
Exceptions:
Controlled by motion sensor or exempt from consideration under the provisions of Section 505.6.2.

Exterior Lighting PASSES: 9.2 W/ft2 (495 / 2330 ft2)

Section 5: Compliance Statement

Compliance Statement: The proposed exterior lighting design represented in this document is consistent with the building plans, specifications and other calculations submitted with this permit application. The proposed lighting system has been designed to meet the 2006 IECC requirements in COMcheck Version 3.5.2 and to comply with the mandatory requirements in the Requirements Checklist.

Name - Title: Kim Campbell
Signature: Kim Campbell
Date: 9-25-09

Project Title: Richfield Courts Judges Parking
Data filename: H:\No Job Number\Richfield Courts Parking\Cad\Reports\Electrical\ComCheck.cck
Report date: 09/24/09
Page 2 of 2

GENERAL NOTES:
1.ALL CANOPIES SHALL BE BONDED PER NEC 250.104

State of Utah
Department of Administrative Services
Division of Facilities Construction & Management
4110 State Office Building
Salt Lake City, Utah 84114
Phone: (801) 538 - 3018
Fax: (801) 538 - 3267
Internet: http://www.dfcm.state.ut.us

CREATED BY:
CAMPBELL & ASSOCIATES ARCHITECTS
46 NORTH 200 EAST ST.GEORGE, UT. 84770
PHONE (435)628-5969 FAX 628-5978 E-MAIL camarch@infowest.com

STATE OF UTAH KIM D. CAMPBELL 0112002016 REGISTERED ARCHITECT

BUILDING NAME:
RICHFIELD COURTS JUDGES PARKING

PROJECT TITLE:
RICHFIELD COURTS JUDGES PARKING AT RICHFIELD UTAH

MARK	DATE	DESCRIPTION
1	9/24/09	PLAN REVIEW

ISSUE TYPE: CHECK SET
ISSUE DATE: ??/??/????
DFCM PROJECT NO: 09121150
CAD PROJECT NO:
CAD DWG FILE: 09009
DRAWN BY: GT / IM
CHK'D BY: K.C.
COPYRIGHT: STATE OF UTAH
SHEET TITLE

SHEET NUMBER
E1.01