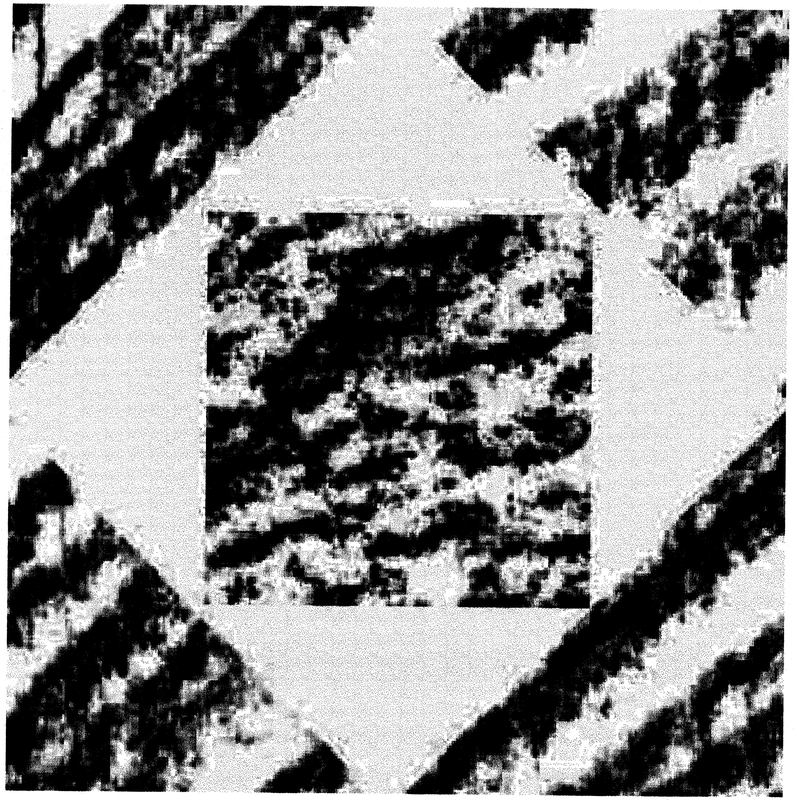

SKYLIGHT REPLACEMENT

SALT LAKE COMMUNITY COLLEGE

State of Utah–Department of Administrative Services

DIVISION OF FACILITIES CONSTRUCTION AND MANAGEMENT

4110 State Office Building/Salt Lake City, Utah 84114/538-3018

DIVISION OF FACILITIES CONSTRUCTION AND MANAGEMENT
REVIEWED FOR CODE COMPLIANCE
SIGNATURE: FC
DATE: 10-1-09

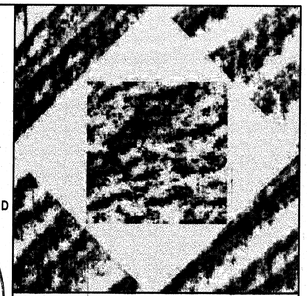

HFSArchitects
ARCHITECTURE
INTERIORS
PLANNING

1484 South State Street
Salt Lake City, Utah 84115
801-596-0691/F: 596-0693
www.hfsa.com

CONSULTANT

STATE OF UTAH
BARRY W. SMITH
123796
31 AUG 2009
LICENSED ARCHITECT

GRAPHIC SYMBOLS

- DTL.# / SHT# — BLDG. ELEV. SYMB.
- DTL.# / SHT# — BLDG. SECT. SYMB.
- DTL.# / SHT# — WALL SECT. SYMB.
- # — KEYED NOTE SYMB.
- T.O. ELEV — DATUM PT. SYMB.
- ELEV — SPOT ELEV. SYMB.
- RM NAME / RM# / F/B | W/W — RM. NAME/NUMB. RM. FINISH SYMB.
- ELEV — CEIL. FINISH/ELEV. SYMB.
- DTL.# / SHT# — DETAIL REF. SYMB.
- DTL.# / SHT# — INTR. ELEV. SYMB.
- DR# / HW# — DOOR/HDWR. SYMB.
- REF# — WINDOW SYMB.

CODE ANALYSIS

APPLICABLE CODES

	Year		Year
International Building Code	2006	National Electrical Code	2008
International Mechanical Code	2006	Uniform Code for Building Conservation	N.A.
International Plumbing Code	2006	ADA Accessibility Guidelines	1994
International Fire Code	2006		
International Energy Conservation Code	N.A.		

A. Occupancy and Group: B
Change in Use: Yes ____ No X Mixed Occupancy: Yes ____ No X
Special Use and Occupancy (e.g. High Rise, Covered Mall): N.A.

B. Seismic Design Category: N.A. Design Wind Speed: N.A. mph

C. Type of Construction (circle one):
I/A I/B (II/A) II/B III/A III/B IV/HT V/A V/B

D. Fire Resistance Rating Requirements for the Exterior Walls based on the fire separation distance (in hours):
North: N.A. South: N.A. East: N.A. West: N.A.

E. Mixed Occupancies: N.A. Nonseparated Uses: N.A.

F: Sprinklers:
Required: N.A. Provided: ____ Type of Sprinkler System: ____

G: Number of Stories: N.A. Building Height: N.A.

H: Actual Area per Floor (square feet): N.A.

I: Tabular Area: ____

J: Area Modifications:

a) $A_a = A_t + \left[\frac{A_1 I_f}{100}\right] + \left[\frac{A_1 I_s}{100}\right]$ $\quad I_f = 100\left[\frac{F}{P} - 0.25\right]\frac{W}{30}$

b) Sum of the Ratio Calculations for Mixed Occupancies:
$\frac{\text{Actual Area}}{\text{Allowable Area}} \leq 1$

c) Total Allowable Area for:
1) One Story: ____
2) Two Story: $A_a(2)$____
3) Three Story: $A_a(3)$____

d) Unlimited Area Building: Yes ____ No X Code Section: ____

K. Fire Resistance Rating Requirements for Building Elements (hours).

Element	Hours	Assembly Listing	Element	Hours	Assembly Listing
Exterior Bearing Walls	N.A.		Floors - Ceiling Floors	N.A.	
Interior Bearing Walls	N.A.		Roofs - Ceiling Roofs	N.A.	
Exterior Non-Bearing Walls	N.A.		Exterior Doors and Windows	N.A.	
Structural Frame	N.A.		Shaft Enclosures	N.A.	
Partitions - Permanent	N.A.		Fire Walls	N.A.	
Fire Barriers	N.A.		Fire Partitions	N.A.	
			Smoke Partitions		

L. Design Occupant Load: N.A.
Exit Width Required: N.A. Exit Width Provided: N.A.

M. Minimum Number of Required Plumbing Facilities:
a) Water Closets - Required (m) N.A. (f) N.A. Provided (m) N.A. (f) N.A.
b) Lavatories - Required (m) N.A. (f) N.A. Provided (m) N.A. (f) N.A.
c) Bath Tubs or Showers: N.A.
d) Drinking Fountains: N.A. Service Sinks: N.A.

FOOTNOTES:
1) In case of conflict with the U.S. Department of Justice Federal Registers Parts I - V - ADA Guidelines and specific reference to the International Building Code Accessibility Chapters, the more restrictive requirement shall govern.
2) Additional Code Information shall be provided at the discretion of the Building Official for Complex Buildings. Including, but not limited to:
a) High Rise Requirements.
b) Atriums.
c) Performance Based Criteria.
d) Means or Egress Analysis.
e) Fire Assembly Locator Sheet.
f) Exterior and Interior Accessibility Route.
g) Fire Stopping, Including Tested Design Number.

DRAWING INDEX

ARCHITECTURAL DRAWINGS

GI001	TITLE SHEET, GENERAL INFO, & SHEET INDEX
AD101	SKYLIGHT DEMOLITION PLAN
AD201	AS BUILT ELEVATIONS
AD301	AS BUILT SECTIONS
AD501	AS BUILT DETAILS
AE101	SKYLIGHT PLANS
AE501	SKYLIGHT DETAILS & ELEVATIONS

PROJECT DIRECTORY

ARCHITECT
HFS Architects
1484 South State Street
Salt Lake City, Utah 84115
801-596-0691/FAX-596-0693

VICINITY MAP

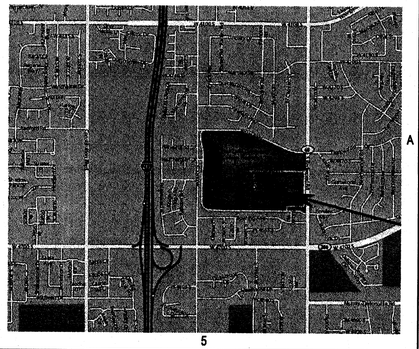

GENERAL ABBREVIATIONS

ACT.	ACCOUSTIC CEILING TILE
ALT.	ALTERNATE
ALUM.	ALUMINUM
A.B.	ANCHOR BOLT
&	AND
ARCH.	ARCHITECTURAL
@	AT OR AT THE
BM.	BEAM
BLK.	BLOCK
BLKG.	BLOCKING
BD.	BOARD
BOT.	BOTTOM
BLDG.	BUILDING
CPT.	CARPET
CLKG.	CAULKING
C.I.	CAST IRON
CLG.	CEILING
CEM.	CEMENT
CTR.	CENTER
CL	CENTER LINE
CER.	CERAMIC
C.T.	CERAMIC TILE
CLR.	CLEAR (ANCE)
CLO.	CLOSET
COL.	COLUMN
CONC.	CONCRETE
CMU	CONCRETE MASONRY UNIT
CMP	CORRUGATED METAL PIPE
CONN.	CONNECTION
CONSTR.	CONSTRUCTION
CONT.	CONTINUE/CONTINUOUS
CONTR.	CONTRACTOR
C.J.	CONTROL JOINT
CORR.	CORRIDOR
CNTR.	COUNTER
CTSK.	COUNTERSUNK
DET.	DETAIL
DEPT.	DEPARTMENT
DIA.	DIAMETER
DIM.	DIMENSION
DN.	DOWN
D.S.	DOWNSPOUT
DWG.	DRAWING
D.F.	DRINKING FOUNTAIN
E.	EAST
EA.	EACH
ELEC.	ELECTRIC (AL)
ELEV./EL.	
EXIST.	EXISTING
EQ.	EQUAL
EQUIP.	EQUIPMENT
EXIST.	EXISTING
EXP.	EXPANSION
EXT.	EXTERIOR
FIN.	FINISH
F.A.	FIRE ALARM
F.E.	FIRE EXTINGUISER
F.E.C.	F.E. CABINET
FLR./FL.	FLOOR
F.D.	FLOOR DRAIN
F.O.S.	FACE OF STUD
F.O.W.	FACE OF WALL
FTG.	FOOTING
FDN.	FOUNDATION
F.F.	FINISH FLOOR
GALV	GALVANIZED
G.I.	GALVANIZED IRON
GA.	GAUGE
GL.	GLASS
GR.	GRADE
GND.	GROUND
GYP. BD.	GYPSUM BOARD
GWB	GYPSUM WATERPROOF BOARD
H.D.P.E.	HIGH DENSITY POLYETHYLENE
HG#	HARDWARE GROUP #
HDWD.	HARDWOOD
HT.	HEIGHT
H.P.	HIGH POINT
HORIZ.	HORIZONTAL
H.B.	HOSE BIBB
H.M.	HOLLOW METAL
HR.	HOURS (FIRE RATING)
IN.	INCH
I.D.	INSIDE DIAMETER
INSUL.	INSULATION
INT.	INTERIOR
I.E.	INVERT ELEVATION
INV.	
JAN.	JANITOR
JT.	JOINT
J-BOX	JUNCTION BOX
KIT.	KITCHEN
LAM.	LAMINATE
LAV.	LAVATORY
LT.	LIGHT
L.P.	LOW POINT
MATL.	MATERIAL
MAS.	MASONRY
MAINT.	MAINTENANCE
MFR.	MANUFACTURER
M.H.	MANHOLE
M.O.	MASONRY OPENING
MAX.	MAXIMUM
MECH.	MECHANICAL
MEMB.	MEMBRANE
MEN	MEN'S TOILET
MTL/MET.	METAL
MIN.	MINIMUM
MIR.	MIRROR
MISC.	MISCELLANEOUS
MTD.	MOUNTED
MUL.	MULLION
NOM.	NOMINAL
N.	NORTH
N.I.C.	NOT IN CONTRACT
N.T.S.	NOT TO SCALE
NO.	NUMBER
OR #	ORDINATE NUMBER
OFF.	OFFICE
O.C.	ON CENTER
OPNG.	OPENING
OPP.	OPPOSITE
OPP. H.	OPPOSITE HAND
O.D.	OUTSIDE DIAMETER
O.R.D.	OVERFLOW ROOF DRAIN
PTD.-E	PAINTED EPOXY
PTD.	PAINTED
PR.	PAIR
PART.	PARTITION
PED.	PEDESTRIAN
PLAS.	PLASTER
P. LAM.	PLASTIC LAMINATE
PL	PLATE
PLYWD.	PLYWOOD
PT.	POINT
Q.T.	QUARRY TILE
RAD.	RADIUS
R.B.	RUBBER BASE
R.W.L.	RAIN WATER LEADER
R.F.F.	REFERENCE FINISH FLOOR
REFL.	REFLECTED
REINF.	REINFORCING
REQ.	REQUIRED
RET.	RETAINING
REV.	REVISED
R.	RISER
R.D.	ROOF DRAIN
RM.	ROOM
R.O.	ROUGH OPENING
SCHED.	SCHEDULE
SEAL.	SEALANT
SECT.	SECTION
S.SK.	SERVICE SINK
SHT.	SHEET
SIM.	SIMILAR
SL./SLP.	SLOPE
S.C.	SOLID CORE
SPEC.	SPECIFICATIONS
SQ.	SQUARE
STD.	STANDARD
STL.	STEEL
STOR.	STORAGE
STRUCT	STRUCTURAL/STRUCTURE
SYM.	SYMMETRICAL
T.B.R.	TO BE REMOVED
TEL.	TELEPHONE
TEMP.	TEMPORARY / TEMPERED
THK.	THICK (NESS)
T & G	TONGUE AND GROOVE
T/CONC	TOP OF CONCRETE
T/CURB	TOP OF CURB
T.O. FTG.	TOP OF FOOTING
T.O.P.	TOP OF PLATE
T/WALL	TOP OF WALL
T.	TREAD
TYP.	TYPICAL
UNF.	UNFINISHED
U.N.O.	UNLESS NOTED OTHERWISE
VAR.	VARY OR VARIES
VERT.	VERTICAL
V.T.R.	VENT THROUGH ROOF
VCT	VINYL COMPOSITION TILE
W/	WITH
W.A.S.	WELDED ANCHOR STUD
WD.	WOOD
WP.	WATERPROOF
WSCT.	WAINSCOT
W/O	WITHOUT
W.P.	WORKING POINT
W.R.	WATER RESISTANT
W.I.	WROUGHT IRON

MATERIALS LEGEND

EARTH, GRAVEL, SAND, CONCRETE, CONCRETE W/ ARCH. FINISH, CAST STONE, CMU, MARBLE, BRICK, GRANITE, LIMESTONE, STONE, WOOD (BLOCKING), PLYWOOD, WOOD FRAMING, WOOD FINISH, STEEL, ALUMINUM, RIGID INSULATION, BATT INSULATION, PLASTER, ACOUSTICAL TILE, COMPRESSIBLE FILLER, BACKER ROD AND FILLER, METAL LATH, GYPSUM BOARD, FENCE, TO REMOVE

SPECIAL INSPECTIONS

NO SPECIAL INSPECTIONS REQUIRED.

SLCC RRC
STUDENT CENTER
SKYLIGHT REPLACEMENT
SALT LAKE
COMMUNITY COLLEGE
REDWOOD CAMPUS

MARK	DATE	DESCRIPTION

DATE:	31 AUGUST 2009
AGENCY PROJECT NO:	09126660
HFSA PROJECT NO:	0911.01
CAD DWG FILE NO:	
DRAWN BY:	MRN
CHECKED BY:	BWS
DESIGNED BY:	RLS
DWG TYPE:	ARCHITECTURAL
ARCHITECTURAL PHASE:	CONSTRUCTION BID DOCUMENTS

SHEET TITLE

TITLE SHEET, GENERAL INFO & SHEET INDEX

GI001

SHEET 1 OF 7

D1 GLAZING VIEW 1
SCALE: N.T.S.

D2 GLAZING VIEW 2
SCALE: N.T.S.

D3 GLAZING VIEW 3
SCALE: N.T.S.

D4 GLAZING VIEW 4
SCALE: N.T.S.

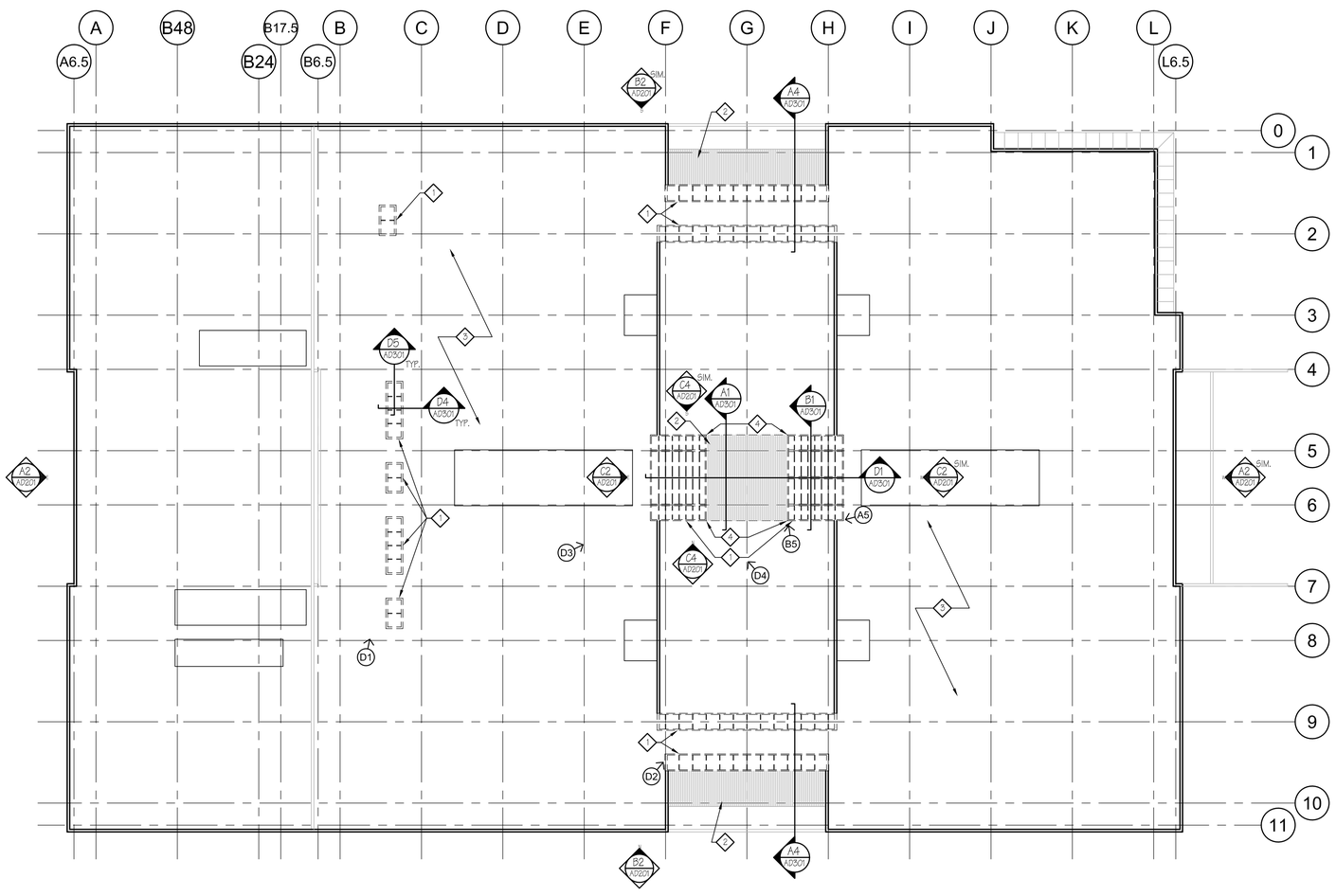

A2 EXISTING & SKYLIGHT DEMO PLAN
SCALE: 1"=20'-0"

GENERAL NOTES

1. ALL DIMENSIONS & EXISTING CONDITIONS IN AREAS OF WORK ARE TO BE FIELD VERIFIED PRIOR TO COMMENCING WORK - ANY DISCREPANCIES ARE TO BE REPORTED TO THE ARCHITECT OR ENGINEER OF RECORD PRIOR TO COMMENCING WORK.

2. PROTECT ALL AREAS & SURFACES ADJACENT TO DEMOLITION & CONSTRUCTION. PATCH & REPAIR ANY DAMAGE OR HOLES IN WALLS, CEILINGS & FLOORS RESULTING FROM THE DEMOLTION OF EXISTING ITEMS OR THE CONSTRUCTION OF NEW ITEMS.

3. NOTED AREAS INDICATED THE GENERAL EXTENT OF DEMOLITON. THE CONTRACTOR'S CHOICE OF MEANS & METHODS OF CONSTRUCTION MAY REQUIRE MORE OR LESS DEMOLITION. THE MEANS & METHODS OF DEMOLITION & CONSTRUCTION MUST BE ACCOUNTED FOR IN THE CONTRACTORS BID. ANY DEMOLITION & REPAIR TO ADJACENT SURFACES BEYOND THE AREAS INDICATED IN THE CONTRACT DOCUMENTS WILL NOT BE COMPENSATED FOR AFTER THE BID OPENING.

4. PRIOR TO THE START OF DEMOLTION, THE CONTRACTOR IS TO MEET WITH THE OWNER & ARCHITECT TO IDENTIFY ALL ITEMS TO BE DEMOLISHED & REMOVED FROM SITE, ITEMS TO BE REMOVED & RETURNED TO THE OWNER, OR ITEMS TO BE REMOVED & REINSTALLED.

5. 72-HOUR NOTICE IS REQUIRED FOR ANY UTILITY SHUT DOWN.

DEMO KEYED NOTES

1. EXISTING SLOPED GLAZING TO BE REMOVED - EXISTING ALUMINUM FRAMING TO REMAIN.
2. EXISTING CONCRETE ROOF TILES TO REMAIN. PROTECT FROM DAMAGE.
3. EXISTING SINGLE PLY ROOF. PROTECT FROM DAMAGE.
4. REMOVE EXISTING CLAY TILE CAP ALONG EDGE W/ SKYLIGHT SYSTEM & REINSTALL AFTER INSTALLMENT OF NEW SKYLIGHT SYSTEM.

B5 GLAZING VIEW 5
SCALE: N.T.S.

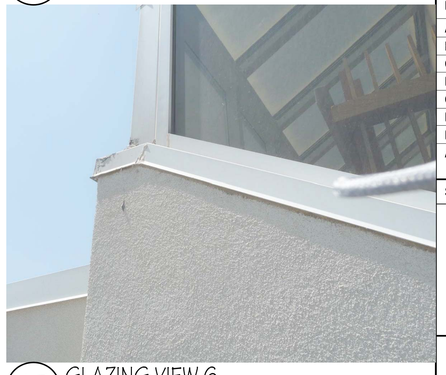

A5 GLAZING VIEW 6
SCALE: N.T.S.

HFSArchitects
ARCHITECTURE
INTERIORS
PLANNING
1484 South State Street
Salt Lake City, Utah 84115
801-596-0691/F: 596-0693
www.hfsa.com

CONSULTANT

SLCC RRC
STUDENT CENTER
SKYLIGHT REPLACEMENT
SALT LAKE
COMMUNITY COLLEGE
REDWOOD CAMPUS

MARK	DATE	DESCRIPTION

DATE:	31 AUGUST 2009
AGENCY PROJECT NO:	09126660
HFSA PROJECT NO:	0911.01
CAD DWG FILE NO:	
DRAWN BY:	MRN
CHECKED BY:	BWS
DESIGNED BY:	RLS
DWG TYPE:	ARCHITECTURAL
ARCHITECTURAL PHASE:	CONSTRUCTION BID DOCUMENTS

SHEET TITLE

SKYLIGHT DEMO PLAN

AD101

SHEET 2 OF 7

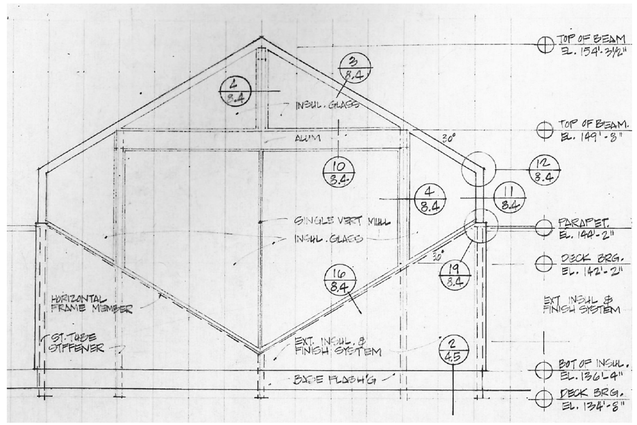

C2 EAST & WEST ROOF ELEVATION
SCALE: N.T.S.

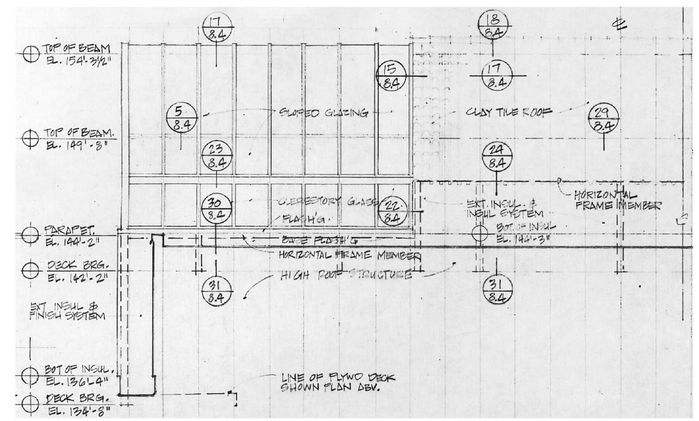

C4 NORTH & SOUTH ROOF ELEVATION
SCALE: N.T.S.

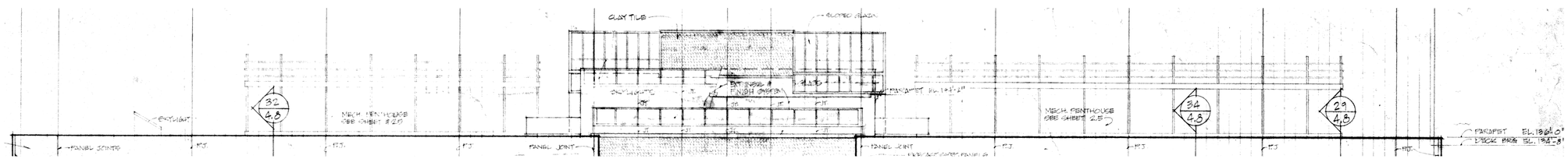

B2 SOUTH ROOF ELEVATION
SCALE: N.T.S.

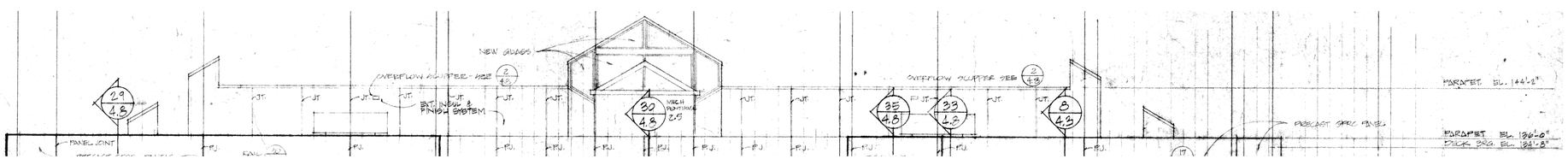

A2 EAST ROOF ELEVATION
SCALE: N.T.S.

HFSArchitects

ARCHITECTURE
INTERIORS
PLANNING

1484 South State Street
Salt Lake City, Utah 84115
801-596-0691/F: 596-0693
www.hfsa.com

CONSULTANT

SLCC RRC
STUDENT CENTER
SKYLIGHT REPLACEMENT

SALT LAKE
COMMUNITY COLLEGE
REDWOOD CAMPUS

MARK	DATE	DESCRIPTION

DATE:	31 AUGUST 2009
AGENCY PROJECT NO:	09126660
HFSA PROJECT NO:	0911.01
CAD DWG FILE NO:	
DRAWN BY:	
CHECKED BY:	BWS
DESIGNED BY:	RLS
DWG TYPE:	ARCHITECTURAL
ARCHITECTURAL PHASE:	CONSTRUCTION BID DOCUMENTS

SHEET TITLE

AS BUILT
ELEVATIONS

AD201

SHEET 3 OF 7

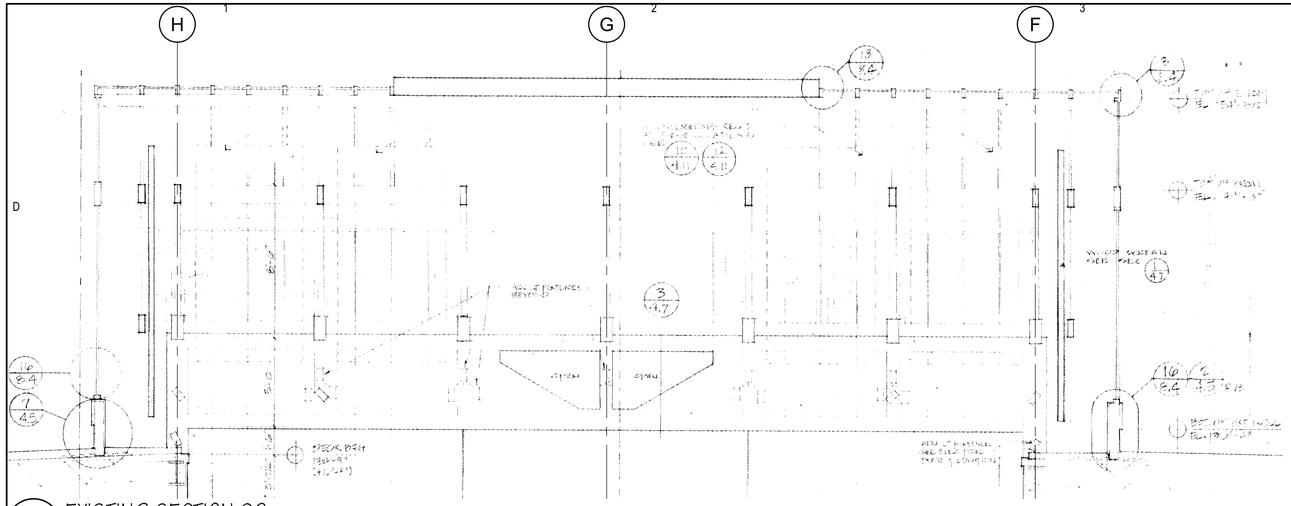

D1 EXISTING SECTION 06
SCALE: N.T.S.

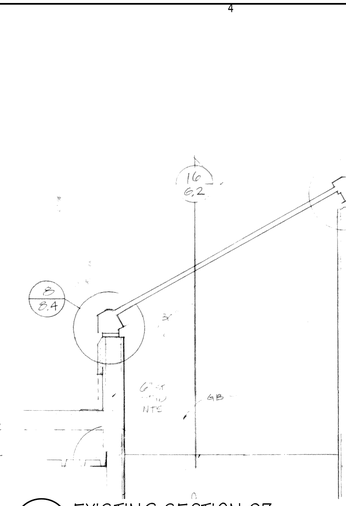

D4 EXISTING SECTION 03
SCALE: N.T.S.

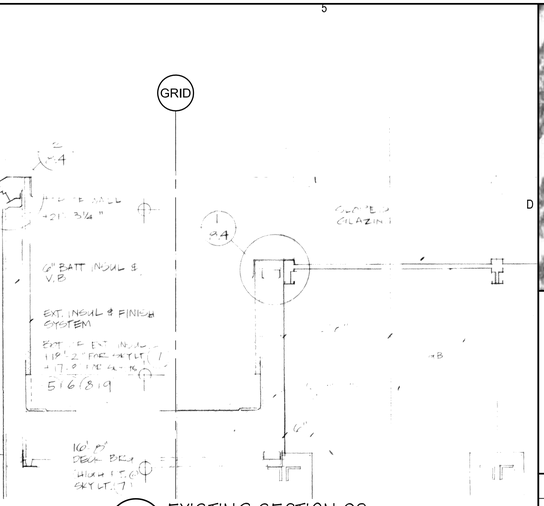

D5 EXISTING SECTION 02
SCALE: N.T.S.

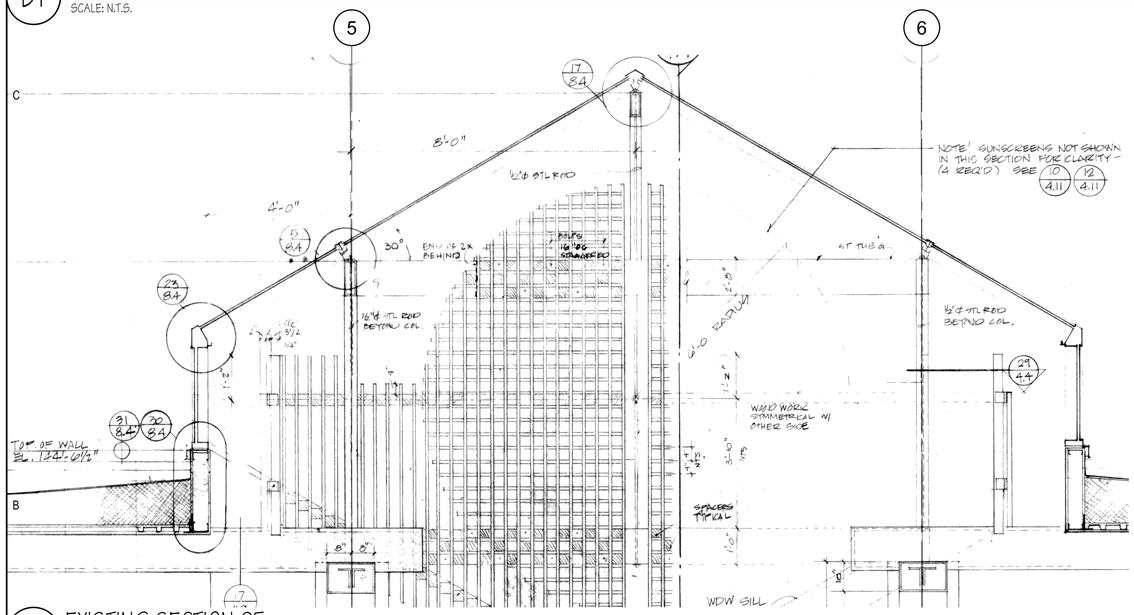

B1 EXISTING SECTION 05
SCALE: N.T.S.

NOTE: SEE ALL AS BUILT DETAILS REF. ON AD501

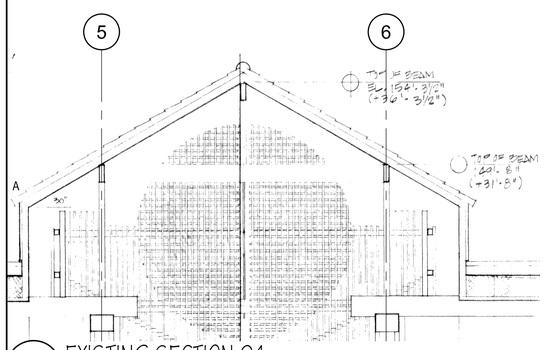

A1 EXISTING SECTION 04
SCALE: N.T.S.

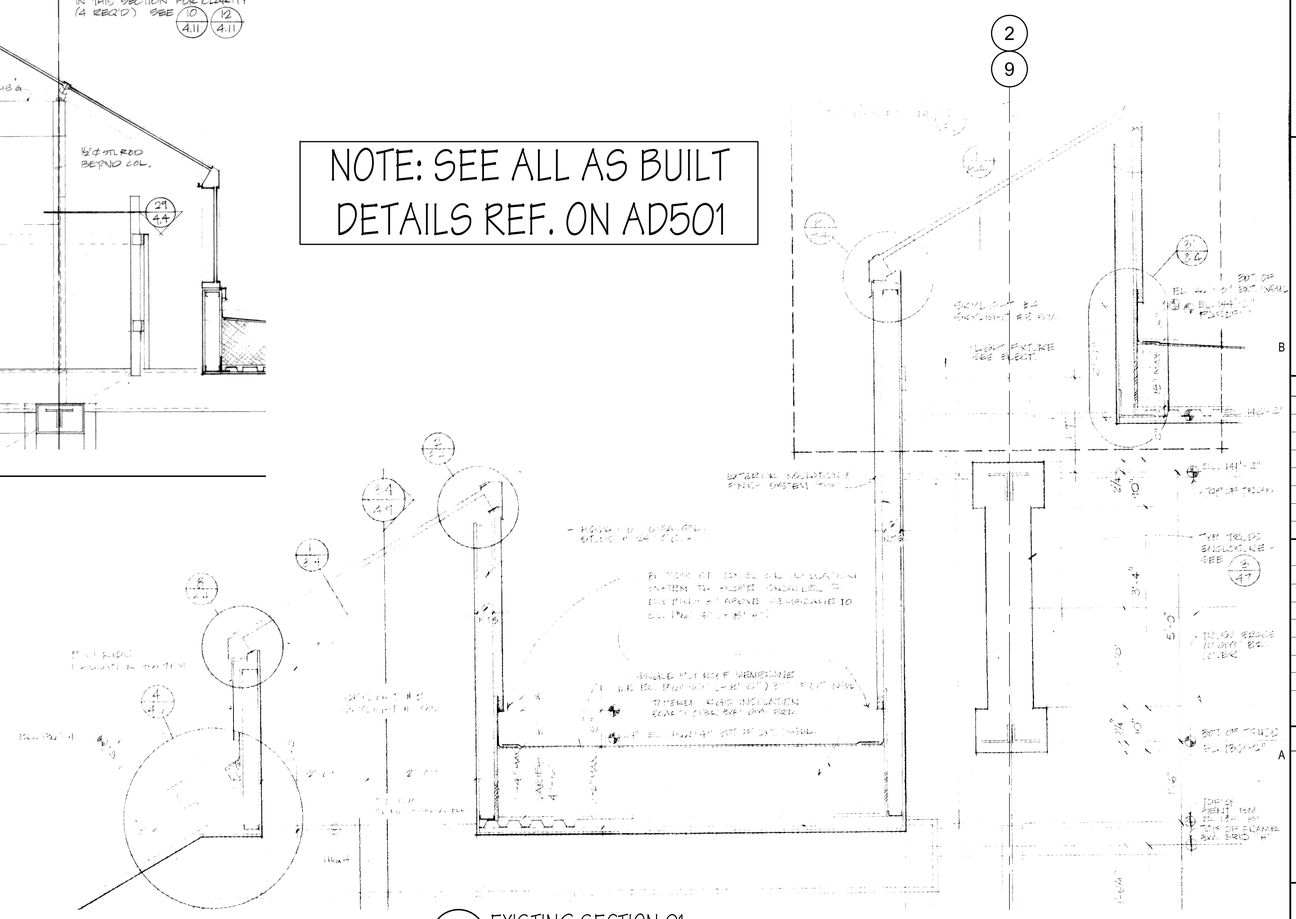

A4 EXISTING SECTION 01
SCALE: N.T.S.

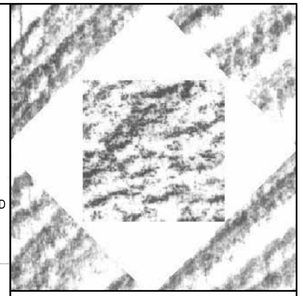

HFSArchitects
ARCHITECTURE
INTERIORS
PLANNING

1484 South State Street
Salt Lake City, Utah 84115
801-596-0691/F: 596-0693
www.hfsa.com

CONSULTANT

SLCC RRC
STUDENT CENTER
SKYLIGHT REPLACEMENT

SALT LAKE
COMMUNITY COLLEGE
REDWOOD CAMPUS

MARK	DATE	DESCRIPTION

DATE:	31 AUGUST 2009
AGENCY PROJECT NO:	09126660
HFSA PROJECT NO:	0911.01
CAD DWG FILE NO:	
DRAWN BY:	
CHECKED BY:	BWS
DESIGNED BY:	RLS
DWG TYPE:	ARCHITECTURAL
ARCHITECTURAL PHASE:	CONSTRUCTION BID DOCUMENTS

SHEET TITLE

AS BUILT
SECTIONS

AD301

SHEET 4 OF 7

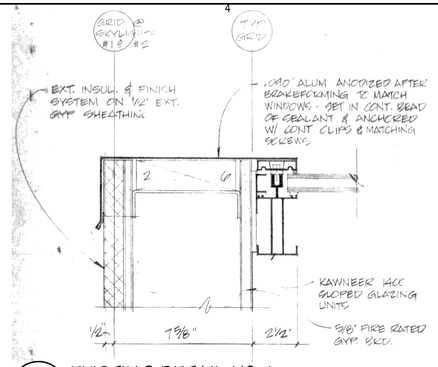

D4 EXISTING DETAIL 1/8.4

SCALE: N.T.S.

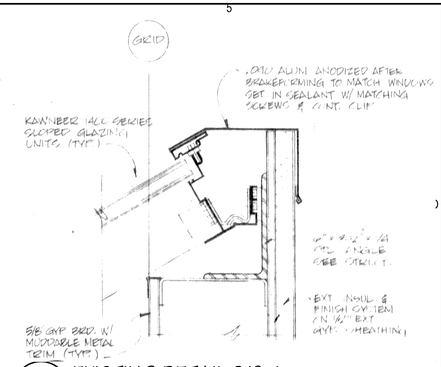

D5 EXISTING DETAIL 2/8.4

SCALE: N.T.S.

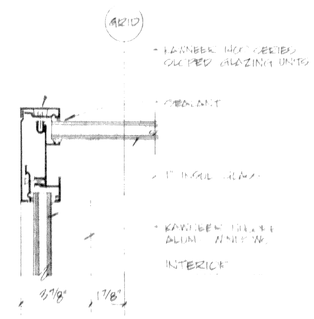

C4 EXISTING DETAIL 3/8.4

SCALE: N.T.S.

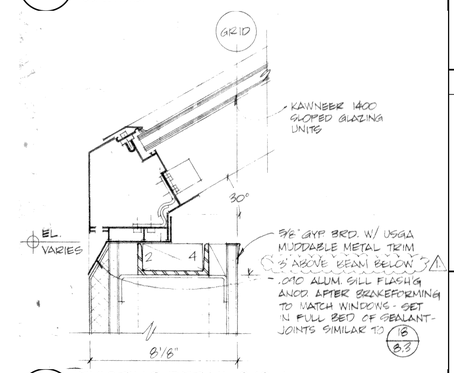

C5 EXISTING DETAIL 8/8.4

SCALE: N.T.S.

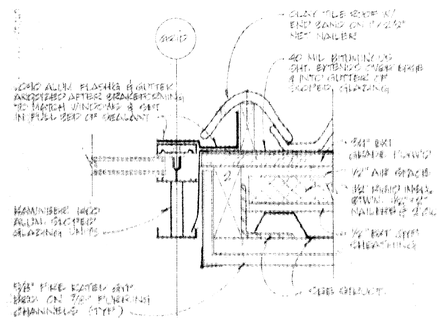

B4 EXISTING DETAIL 15/8.4

SCALE: N.T.S.

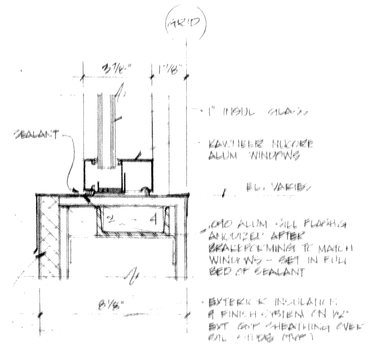

B5 EXISTING DETAIL 16/8.4

SCALE: N.T.S.

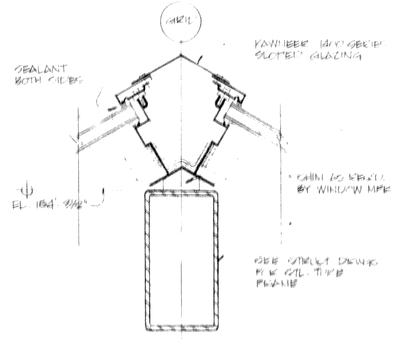

A4 EXISTING DETAIL 17/8.4

SCALE: N.T.S.

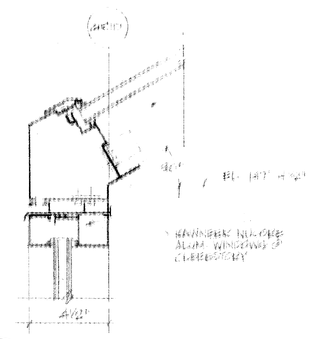

A5 EXISTING DETAIL 23/8.4

SCALE: N.T.S.

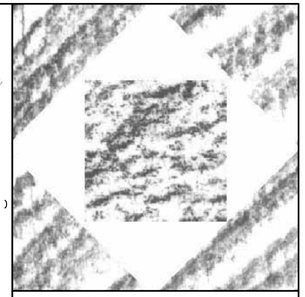

HFS*Architects*

ARCHITECTURE
INTERIORS
PLANNING

1484 South State Street
Salt Lake City, Utah 84115
801-596-0691/F: 596-0693
www.hfsa.com

CONSULTANT

SLCC RRC
STUDENT CENTER
SKYLIGHT REPLACEMENT

SALT LAKE
COMMUNITY COLLEGE
REDWOOD CAMPUS

MARK	DATE	DESCRIPTION

DATE:	31 AUGUST 2009
AGENCY PROJECT NO:	09126660
HFSA PROJECT NO:	0911.01
CAD DWG FILE NO:	
DRAWN BY:	
CHECKED BY:	BWS
DESIGNED BY:	RLS
DWG TYPE:	ARCHITECTURAL
ARCHITECTURAL PHASE:	CONSTRUCTION BID DOCUMENTS

SHEET TITLE

AS BUILT
DETAILS

AD501

SHEET 5 OF 7

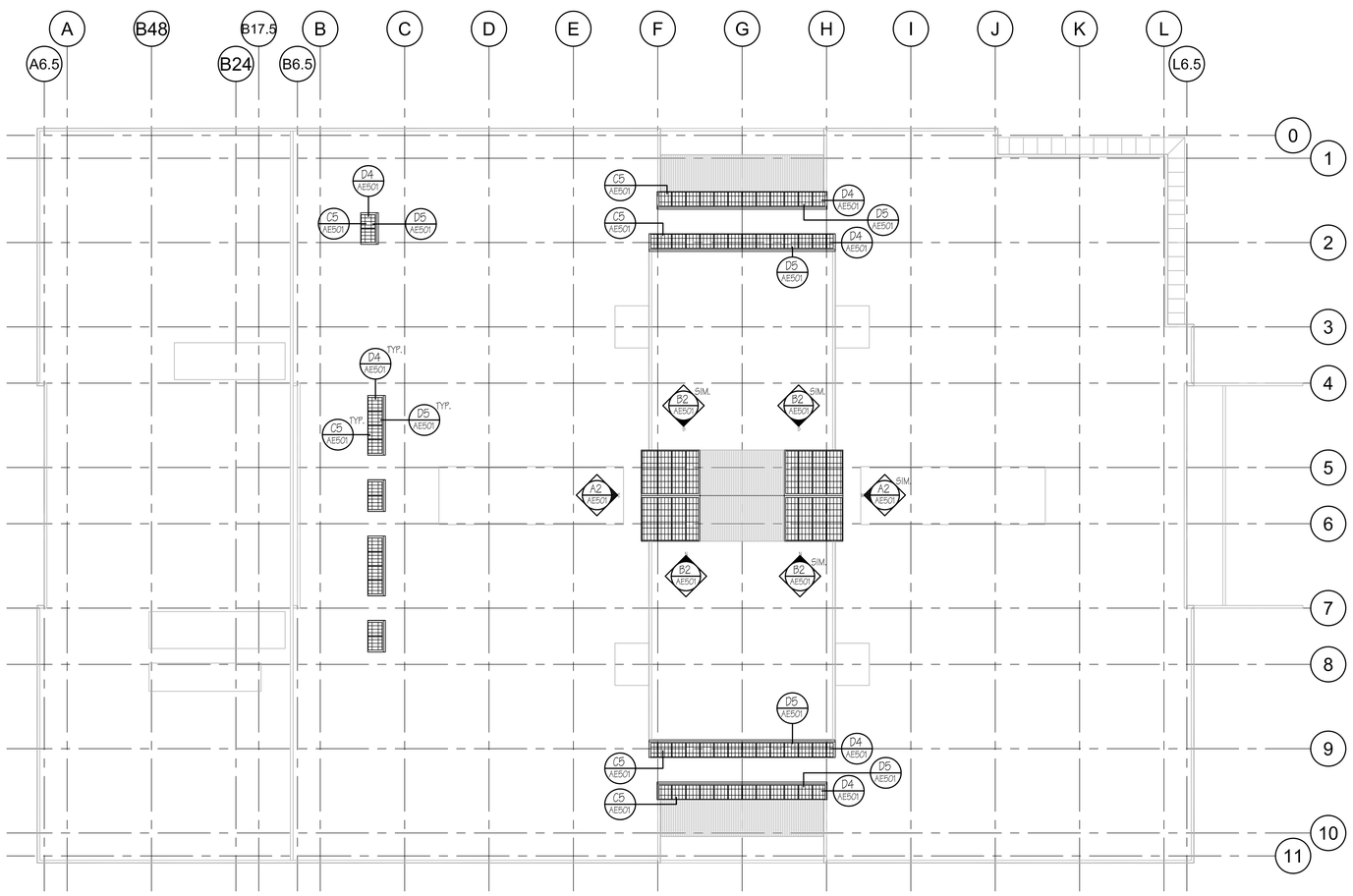

A2 NEW SKYLIGHT PLAN
SCALE: 1"=20'-0"

GENERAL NOTES

1. ALL DIMENSIONS & EXISTING CONDITIONS IN AREAS OF WORK ARE TO BE FIELD VERIFIED PRIOR TO COMMENCING WORK - ANY DISCREPANCIES ARE TO BE REPORTED TO THE ARCHITECT OR ENGINEER OF RECORD PRIOR TO COMMENCING WORK.

2. PROTECT ALL AREAS & SURFACES ADJACENT TO DEMOLITION & CONSTRUCTION. PATCH & REPAIR ANY DAMAGE OR HOLES IN WALLS, CEILINGS & FLOORS RESULTING FROM THE DEMOLTION OF EXISTING ITEMS OR THE CONSTRUCTION OF NEW ITEMS.

3. NOTED AREAS INDICATED THE GENERAL EXTENT OF DEMOLITON. THE CONTRACTOR'S CHOICE OF MEANS & METHODS OF CONSTRUCTION MAY REQUIRE MORE OR LESS DEMOLITION. THE MEANS & METHODS OF DEMOLITION & CONSTRUCTION MUST BE ACCOUNTED FOR IN THE CONTRACTORS BID. ANY DEMOLITION & REPAIR TO ADJACENT SURFACES BEYOND THE AREAS INDICATED IN THE CONTRACT DOCUMENTS WILL NOT BE COMPENSATED FOR AFTER THE BID OPENING.

4. PRIOR TO THE START OF DEMOLTION, THE CONTRACTOR IS TO MEET WITH THE OWNER & ARCHITECT TO IDENTIFY ALL ITEMS TO BE DEMOLISHED & REMOVED FROM SITE, ITEMS TO BE REMOVED & RETURNED TO THE OWNER, OR ITEMS TO BE REMOVED & REINSTALLED.

5. 72-HOUR NOTICE IS REQUIRED FOR ANY UTILITY SHUT DOWN.

HFSArchitects
ARCHITECTURE
INTERIORS
PLANNING

1484 South State Street
Salt Lake City, Utah 84115
801-596-0691/F: 596-0693
www.hfsa.com

CONSULTANT

SLCC RRC
STUDENT CENTER
SKYLIGHT REPLACEMENT

SALT LAKE
COMMUNITY COLLEGE
REDWOOD CAMPUS

MARK	DATE	DESCRIPTION

DATE:	31 AUGUST 2009
AGENCY PROJECT NO:	09126660
HFSA PROJECT NO:	0911.01
CAD DWG FILE NO:	
DRAWN BY:	MRN
CHECKED BY:	BWS
DESIGNED BY:	RLS
DWG TYPE:	ARCHITECTURAL
ARCHITECTURAL PHASE:	CONSTRUCTION BID DOCUMENTS

SHEET TITLE

SKYLIGHT
PLAN

AE101

SHEET 6 OF 7

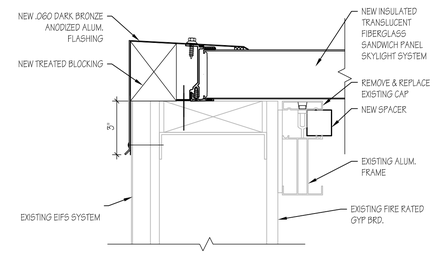

D4 RAKE JAMB @ SKYLIGHTS
SCALE: 3" = 1'-0"

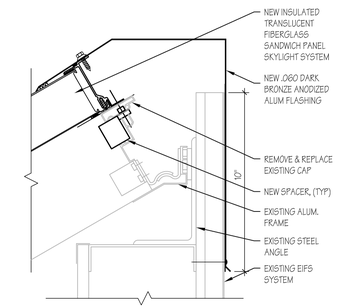

D5 HEAD @ SKYLIGHTS
SCALE: 3" = 1'-0"

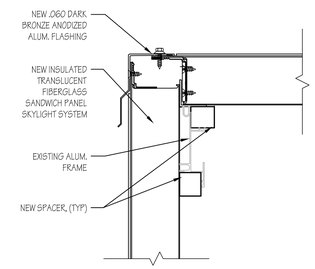

C4 SKYLIGHT ENDWALL HEAD
SCALE: 3" = 1'-0"

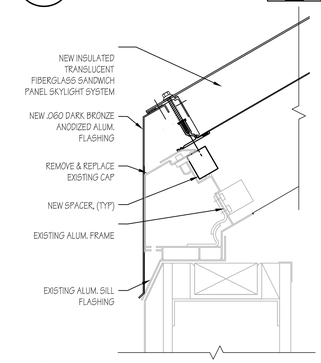

C5 SILL @ SKYLIGHTS
SCALE: 3" = 1'-0"

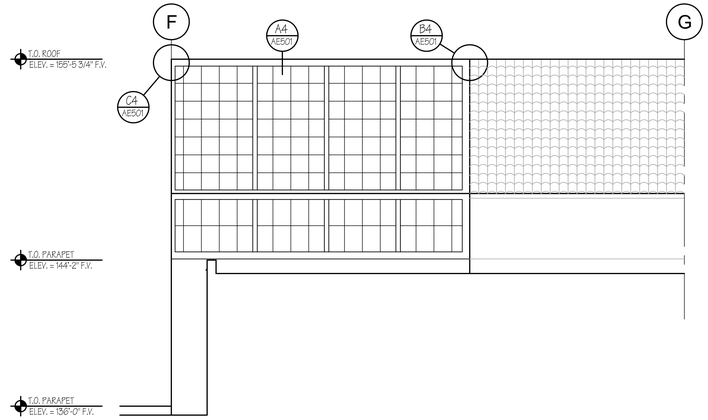

B2 CLERESTORY NORTH & SOUTH ELEVATION
SCALE: 1/4" = 1'-0"

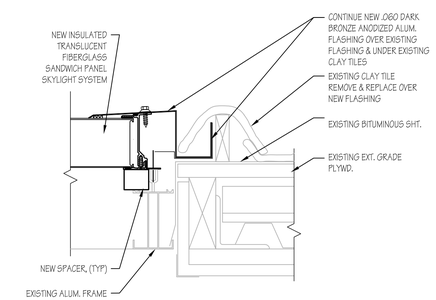

B4 SLOPED GLAZING TO ROOF
SCALE: 3" = 1'-0"

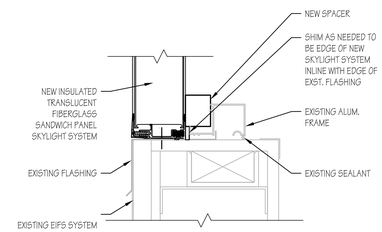

B5 SILL @ CLERESTORY END
SCALE: 3" = 1'-0"

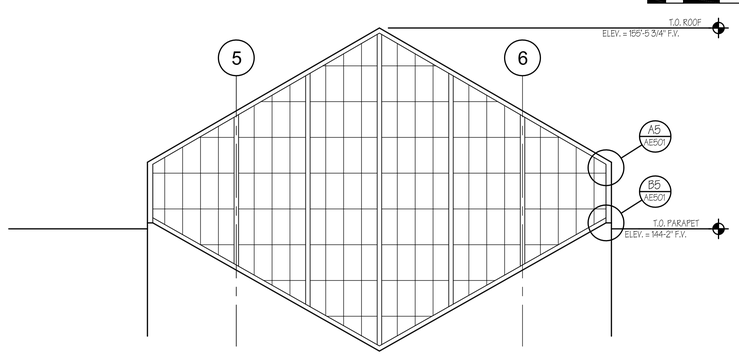

A2 CLERESTORY EAST & WEST ELEVATION
SCALE: 1/4" = 1'-0"

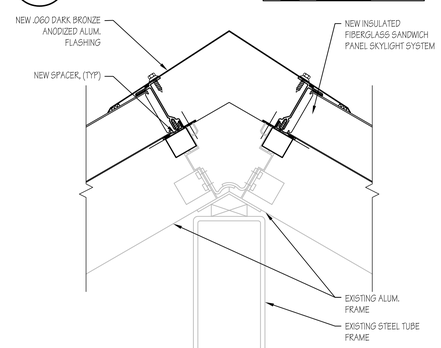

A4 SLOPED GLAZING RIDGE
SCALE: 3" = 1'-0"

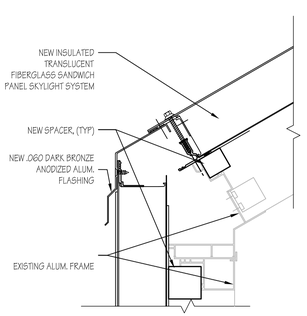

A5 CLERESTORY EAVE
SCALE: 3" = 1'-0"

HFSArchitects
ARCHITECTURE
INTERIORS
PLANNING

1484 South State Street
Salt Lake City, Utah 84115
801-596-0691/F: 596-0693
www.hfsa.com

CONSULTANT

SLCC RRC
STUDENT CENTER
SKYLIGHT REPLACEMENT

SALT LAKE
COMMUNITY COLLEGE
REDWOOD CAMPUS

MARK	DATE	DESCRIPTION

DATE:	31 AUGUST 2009
AGENCY PROJECT NO:	09126660
HFSA PROJECT NO:	0911.01
CAD DWG FILE NO:	
DRAWN BY:	MRN
CHECKED BY:	BWS
DESIGNED BY:	RLS
DWG TYPE:	ARCHITECTURAL
ARCHITECTURAL PHASE:	CONSTRUCTION BID DOCUMENTS

SHEET TITLE

GLAZING DETAILS

AE501

SHEET 7 OF 7