OTTER CREEK STATE PARK
FISH CLEANING STATION

DFCM PROJECT NUMBER 09136510

SHEET INDEX

GENERAL

G1.00 COVER SHEET AND SHEET INDEX

ARCHITECTURAL

A1.10 SITE PLAN

A2.10 FLOOR PLAN, ELEVATION AND SECTIONS

A2.20 SEPTIC TANK PLAN

PLUMBING

AP1.10 PLUMBING DRAWINGS

AP1.11 PLUMBING DRAWINGS

ELECTRICAL

E1.0 ELECTRICAL PLAN

E2.0 ELECTRICAL SPECIFICATIONS

GENERAL NOTES:

THE DRAWING INCLUDE IN THIS PROJECT COMPLY WITH ALL THE REQUIREMENTS OF DFCM STANDARDS. INCLUDING THE ENHANCED ACCESSIBILITY STANDARDS.

THESE PLANS ARE THE PROPERTY OF SARGENT DESIGN GROUP AND ARE NOT TO BE USED FOR ANY OTHER LOCATION HEREON.

COPYRIGHT, 2009 - ALL RIGHTS RESERVED.

NO CHANGES ARE TO BE MADE TO THESE DRAWINGS WITHOUT THE KNOWLEDGE OR CONSENT OF THE ARCHITECT/ENGINEER WHOSE SIGNATURE APPLIES HEREON.

DIMENSIONS AS INDICATED ARE THE DIMENSIONS TO BE USED FOR CONSTRUCTION. DO NOT SCALE THE PRINTS. GENERAL CONTRACTOR SHALL FIELD VERIFY ALL EXISTING CONDITIONS AND REPORT DISCREPANCIES TO THE ARCHITECT AND OWNER.

NO FRAMING OF ANY TYPE IS TO BE CONCEALED PRIOR TO INSPECTIONS BY GOVERNING AGENCIES.

REFERENCE TO ANY DETAILS OR DRAWINGS IS FOR CONVENIENCE ONLY AND DOES NOT LIMIT THE APPLICATION OF SUCH DETAIL OR DRAWING.

DIMENSIONS AND CONDITIONS AT THE JOB SITE SHALL BE VERIFIED BY ALL CONTRACTORS. IT IS THE RESPONSIBILITY OF THOSE CONTRACTORS TO EXAMINE THE THE EXISTING CONDITIONS PRIOR TO SUBMITTING BIDS TO THE OWNER SINCE PROPOSALS MUST TAKE INTO CONSIDERATION ALL SUCH CONDITIONS AS IT MAY AFFECT WORK. DISCREPANCIES IN THE DRAWINGS AND ACTUAL FIELD CONDITIONS SHALL BE REPORTED TO THE RESPONSIBLE PARTIES AND TO THE OWNER. CORRECTED DRAWINGS AND INSTRUCTIONS SHALL BE ISSUED BY THE ARCHITECT PRIOR TO THE INSTALLATION OF ANY WORK. ALL DIMENSIONS ARE TO BE ROUGH UNLESS OTHERWISE NOTES. DO NOT SCALE DRAWINGS.

ALL WORK, CONSTRUCTION AND MATERIALS SHALL COMPLY WITH ALL PROVISIONS OF THE BUILDING CODE AND WITH OTHER RULES, REGULATIONS AND ORDINANCES GOVERNING THE PLACE OF CONSTRUCTION.

IT IS THE RESPONSIBILITY OF ANYONE SUPPLYING LABOR OR MATERIAL OR BOTH TO BRING TO THE ATTENTION OF THE ARCHITECT AND THE OWNER ANY DISCREPANCIES OR CONFLICT BETWEEN THE REQUIREMENTS OF THE CODE AND THE DRAWINGS.

ABBREVIATIONS THROUGH OUT PLANS ARE THOSE IN COMMON USE. NOTIFY THE ARCHITECT OF ANY ABBREVIATIONS IN QUESTION.

FINAL CLEAN-UP AND DISPOSAL: GENERAL CONTRACTOR TO REMOVE ALL DEBRIS, RUBBISH AND WASTE MATERIAL FROM THE OWNER'S PROPERTY TO A LAWFUL DISPOSAL AREA AND PAY ALL HAULING AND DUMPING COSTS. CONFORM TO APPLICABLE LOCAL, COUNTY, STATE AND NATIONAL LOCAL LAWS, REGULATIONS, CODES AND ORDERS UPON COMPLETION OF WORK. ALL CONSTRUCTION AREAS (AT A MINIMUM) SHALL BE LEFT VACUUM-CLEAN AND FREE FROM DEBRIS. CLEAN ALL DUST, DIRT, STAINS, HAND MARKS, PAINT SPOTS, DROPPINGS AND REPAIR ALL BLEMISHES.

ANY/ALL WORK CONSTRUCTED, ORDERED OR INSTALLED IN CONFLICT WITH THE CONTRACT DOCUMENTS SHALL BE CORRECTED BY THE TRADE SUBCONTRACTORS AT THOSE CONTRACTOR'S EXPENSE AND AT NO ADDITIONAL EXPENSE, EITHER DIRECT OR INDIRECT TO THE OWNER, ARCHITECT OR ARCHITECT'S OTHER CONSULTANTS.

ALL CONSTRUCTION TO COMPLY WITH ALL THE APPLICABLE REQUIREMENTS AND STANDARDS OF DFCM, INCLUDING, BUT NOT LIMITED TO, ENHANCED ACCESSIBILITY. THE DFCM STANDARDS CAN BE FOUND AT THE FOLLOWING WEB SITE: www.dfcm.utah.gov.

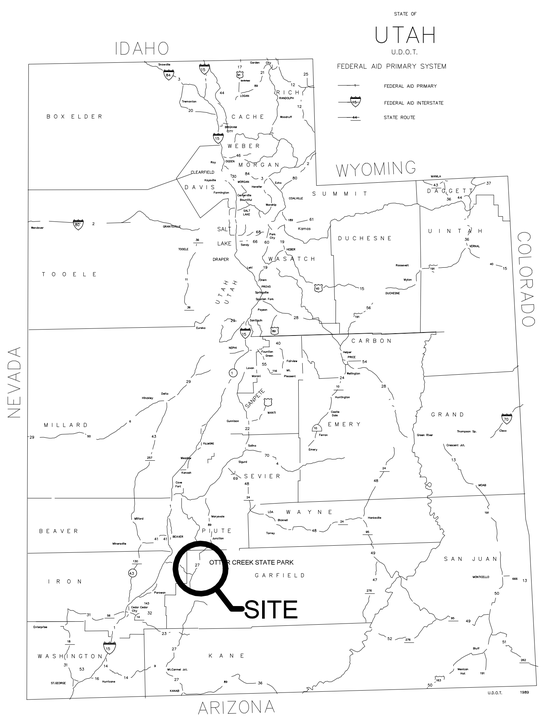

STATE MAP

SPECIAL INSPECTION AND TESTING (IBC 1704)

Indicate required Special inspections for project by checking the appropriate boxes:

FABRICATORS (IBC1704.2)

■ Approved Fabricator	Fabricators Name: Porter Corporation, 4240 N. 136th Ave, Holland, MI 49424

CONCRETE CONSTRUCTION (IBC1704.4)

Item			Reference/Comments
Steel placement		■ Periodic	
Concrete sampling for strength test, slump, air content, and temperature of concrete		■ Periodic	

SOILS CONSTRUCTION (IBC1704.7)

Item		Reference/Comments
Site preparation	■ Periodic	
Structural fill material	■ Periodic	
Structural fill soil densities	■ Periodic	
Backfill soils materials	■ Periodic	
Backfill soil densities	■ Periodic	

Special Inspectors Shall:

- Be approved by the Building Official prior to performing any duties;
- Provide proof of licensure as a special inspector by the State of Utah for each type of inspection;
- Inspection reports are to meet the requirements of IBC 1704.1.2 and DFCM standards;
- Inspection reports are to be submitted to the code consultant, architect, DFCM project manager, and the State of Utah Building Official within 48 hrs. of inspections;
- A final inspection report shall be submitted following completion of the project documenting the types of special inspections performed and a statement indicating that the structure is in compliance with the drawings, specifications and applicable codes. IBC 1704.1.2

CODE ANALYSIS

APPLICABLE CODES

	Year		Year
International Building Code	2006	National Electrical Code	2008
International Mechanical Code	2006	Uniform Code for Building Conservation	N.A.
International Plumbing Code	2006	ADA Accessibility Guidelines	2003
International Fire Code	2006		
International Energy Conservation Code	2006		

A. Occupancy and Group: B BUSINESS

Change in Use: Yes ____ No X Mixed Occupancy: Yes ____ No X

Special Use and Occupancy (e.g. High Rise, Covered Mall): N.A.

B. Seismic Design Category: D Design Wind Speed: 90 mph

C. Type of Construction (circle one):

I	I	II	II	III	III	IV	V	V
A	B	A	B	A	B	HT	A	B

D. Fire Resistance Rating Requirements for the Exterior Walls based on the fire separation distance (in hours):

North: 0 South: 0 East: 0 West: 0

E. Mixed Occupancies: NO Nonseparated Uses: NO

F: Sprinklers:

Required: NO Provided: NO Type of Sprinkler System: _____

G: Number of Stories: 1 Building Height: 12'-0"

H: Actual Area per Floor (square feet): 119 SF, MAIN FLOOR

I: Tabular Area: 9,000 SF

J: Area Modifications: NOT REQUIRED

a) $A_a = A_t + \left[\frac{A_t\, I_f}{100}\right] + \left[\frac{A_t\, I_s}{100}\right]$ $\qquad I_f = 100\left[\frac{F}{P} - 0.25\right]\frac{W}{30}$

b) Sum of the Ratio Calculations for Mixed Occupancies:

$\frac{\text{Actual Area}}{\text{Allowable Area}} \leq 1$

c) Total Allowable Area for:

1) One Story: 9,000 SF
2) Two Story: $A_a(2)$ N.A.
3) Three Story: $A_a(3)$ N.A.

d) Unlimited Area Building: Yes ____ No X Code Section: ____

K. Fire Resistance Rating Requirements for Building Elements (hours).

Element	Hours	Assembly Listing	Element	Hours	Assembly Listing
Exterior Bearing Walls	0	N.A.	Floors - Ceiling Floors	0	N.A.
Interior Bearing Walls	0	N.A.	Roofs - Ceiling Roofs	0	N.A.
Exterior Non-Bearing Walls	0	N.A.	Exterior Doors and Windows	0	N.A.
Structural Frame	0	N.A.	Shaft Enclosures	0	N.A.
Partitions - Permanent	0	N.A.	Fire Walls	0	N.A.
Fire Barriers	0	N.A.	Fire Partitions	0	N.A.
			Smoke Partitions	0	N.A.

L. Design Occupant Load: 2 *IBC TABLE 1004.1.1

Exit Width Required: 1.2" Exit Width Provided: 120"

M. Minimum Number of Required Plumbing Facilities:

Design Occupant Load: 2

RESTROOM PROVIDED AS PART OF PARK FACILITIES.

GENERAL NOTE:

CONSTRUCTION OF NEW STATE BUILDINGS AND REMODELING OF EXISTING BUILDINGS SHALL COMPLY WITH ALL THE REQUIREMENTS OF THE DFCM STANDARDS, INCLUDING ENHANCED ACCESSIBILITY. THE DFCM STANDARDS CAN BE FOUND AT THE FOLLOWING WEB SITE: www.dcm.utah.gov.

TYPICAL SYMBOLS

NAME XXX	ROOM NAME/NUMBER
DTL SHT	DETAIL CALLOUT
DTL SHT	SECTION CALLOUT
DTL SHT	INTERIOR ELEVATION CALLOUT
#	KEYNOTE
#	DOOR NUMBER
#	WINDOW TYPE

MINIMUM MAT'L. SPECS.

1. CONCRETE f'_c = 2,000 P.S.I.
2. MASONRY GRADE "N", f'_c = 1,350 P.S.I.
3. MORTAR TYPE 'S', 1,800 P.S.I.
4. GROUT f'_c = 2,000 P.S.I.
5. REINFORCING STEEL ASTM, A-615, f_y = 36 K.S.I.
6. STRUCTURAL STEEL ASTM, A-36, F_y = 36 K.S.I.
7. GLUE-LAM BEAMS F_b = 2,400 P.S.I.; E = 1.8 X 10 P.S.I.
8. PLYWOOD ROOF 1/2" STANDARD SHEETING WITH EXT. GLUE PANEL INDEX 32/16
9. PLYWOOD FLOOR 3/4" T&G STANDARD SHEETING, PANEL INDEX 48/24 (MAY USE BLOCKING, OR 1/4" UNDERLAYMENT, OR 25/32 WOOD STRIP FINISH FLOOR IN LIEU OF T&G)
10. BOLTS A-307, F_y = 33 K.S.I.
11. LUMBER:

* ALL LUMBER TO BEAR APPROVED GRADING STAMP

LUMBER USAGE	ALLOWABLE UNIT STRESS (POUNDS PER SQUARE INCH)
2X4 STUDS	Fc (PARALLEL) = 600 P.S.I.
2X6 STUDS	Fc (PARALLEL) = 675 P.S.I.
2X6 THRU 2X14 JOIST	Fb (REPETITIVE) = 1,450 P.S.I.
4X BEAMS	Fb (SINGLE) = 1,250 P.S.I.
6X BEAMS	Fb (SINGLE) = 1,350 P.S.I.
4X4 POSTS	Fc (PARALLEL) = 1000 P.S.I.
6X6 POSTS	Fc (PARALLEL) = 1000 P.S.I.
TIMBERS [VEGAS]	Fb (SINGLE) = 1,200 P.S.I.
DECKING	Fb (REPETITIVE) = 1,650 P.S.I.
GLUE-LAM BEAMS	Fb (SIMPLE) = 2400 P.S.I.
GLUE-LAM BEAMS	Fb (CANTILEVER) = 2400 P.S.I. or (CONTINUOUS)

LUMBER USAGE	MODULUS OF ELASTICITY (POUNDS PER SQUARE INCH)
2X4 STUDS	1.5 X 10⁶ P.S.I.
2X6 STUDS	1.5 X 10⁶ P.S.I.
2X6 THRU 2X14 JOISTS	1.7 X 10⁶ P.S.I.
4X BEAMS	1.7 X 10⁶ P.S.I.
6X BEAMS	1.6 X 10⁶ P.S.I.
4X4 POSTS	1.7 X 10⁶ P.S.I.
6X6 POSTS	1.6 X 10⁶ P.S.I.
TIMBERS [VEGAS]	1.6 X 10⁶ P.S.I.
DECKING	1.7 X 10⁶ P.S.I.
GLUE-LAM BEAMS	1.8 X 10⁶ P.S.I.
GLUE-LAM BEAMS	1.8 X 10⁶ P.S.I.

LUMBER USAGE	SPECIES & GRADE OR COMBINATION SYMBOL
2X4 STUDS	D.F.L. #3
2X6 STUDS	D.F.L. #3
2X6 THRU 2X14 JOISTS	D.F.L. #2
4X BEAMS	D.F.L. #2
6X BEAMS	D.F.L. #1
4X4 POSTS	D.F.L. #2
6X6 POSTS	D.F.L. #1
TIMBERS [VEGAS]	D.F.L. #1
DECKING	COMMERCIAL D.F.L.
GLUE-LAM BEAMS	DF/DF 24F-V4
GLUE-LAM BEAMS	DF/DF 24F-V8

*UNLESS NOTED OTHERWISE ON THE DRAWINGS.

PRELIMINARY REVIEW

THIS SET OF PLANS IS FOR PRELIMINARY REVIEW ONLY. A FULL SET OF PLANS, INCLUDING THE DESIGN OF THE METAL BUILDING, WILL BE SUBMITTED AFTER THE BID PROCESS IS COMPLETE AND A CONTRACTOR HAS BEEN CHOSEN.

DEFERRED SUBMITTALS

THERE ARE NO DEFERRED SUBMITTALS ASSOCIATED WITH THIS PROJECT.

SARGENT DESIGN GROUP
ARCHITECTURE | PLANNING
36 NORTH 300 WEST, SUITE B
CEDAR CITY, UTAH 84720
OFFICE: (435) 586-8510
FAX: (435) 586-4873
jcoltons@email.com

State of Utah-Department of Administrative Services
DIVISION OF FACILITIES CONSTRUCTION AND MANAGEMENT
4110 State Office Building/Salt Lake City, Utah 84114/538-3018

Project:
UTAH STATE PARKS
STATE OF UTAH
DEPARTMENT OF NATURAL RESOURCES
DIVISION OF STATE PARKS AND RECREATION
OTTER CREEK STATE PARK
FISH CLEANING STATION

Sheet Title:
COVER SHEET
SHEET INDEX AND NOTES

Revisions:
2 CODE REVIEW 10.13.09
3 CODE REVIEW 11.25.09

PROJECT NUMBER: 09553
DATE: 07.10.09
DRAWN BY: J.C.S.
CHECKED BY: J.C.S.
APPROVED BY: J.C.S.

G0.01

SHEET NUMBER:
Sheet of

SITE CHANGES

⊗ MARK

A. TRASH ENCLOSURE
1. MOVE TRASH ENCLOSURE AS INDICATED

B. PROPANE TANK
1. MOVE PROPANE TANK AS INDICATED
2. REMOVE EXISTING LINE
3. INSTALL NEW LINE TO MATCH EXISTING INSTALLATION

C. FISH CLEANING STATION
1. LOCATE AS INDICATED
2. PROVIDE ELECTRIC POWER LINE AS INDICATED ON DRAWINGS
3. PROVIDE WATER LINE AS INDICATED ON DRAWINGS
4. PROVIDE SEWER LINE AS INDICATED ON DRAWINGS
5. PROVIDE 1" FREEZE LESS HYDRANT NEAR FRONT WEST CORNER OF FISH STATION

D. SEPTIC TANK
1. LOCATE AS INDICATED
2. PROVIDE SEWER LINE FROM FISH CLEANING STATION
3. PROVIDE SEWER LINE TO LIFT STATION AS INDICATED ON DRAWINGS

E. LIFT STATION
1. REPLACE EXISTING LIFT STATION.
2. HYDROMATI. TG-PRO SYSTEM, STAINLESS STEEL, SINGLE PHASE, NO RAILS, 4 PUMPS (2 FOR EMERGENCY, PROVIDE TO PARK) NEW FLOATS, NEW FLEX-HOSE, (2) STAINLESS STEEL GATE VALVES WITH HANDLE WRENCH, NEW DUPLEX CONTROL BOX LOCATED IN WATER HOUSE, ALL NEW WIRING, USE EXISTING CONDUIT

RENOVATION

⊗ MARK

A. FENCING
1. EXTEND FENCING AT CURVE TO BENCH. MATCH EXISTING FENCE.

B. LAWN
1. PROVIDE NEW TOP SOIL TO A MINIMUM OF 6" ACROSS AREA WHERE FISH CLEANING STATION AND SEPTIC TANK HAVE BEEN REMOVED.
2. SEED AREA IDENTIFIED ON DRAWINGS.
3. GRASS SEED TO BE SELECTED BASED ON COMPATABILITY WITH LOCAL CLIMATE.

EQUIPMENT

1. ALL EQUIPMENT IDENTIFIED HERE TO BE CONSIDERED AS RECOMMENDATIONS WITH THE OPTION OF APPROVED EQUALS.

2. FISH CLEANING STATION - SINGLE PHASE, 220/240 MOTOR, SIMILAR TO FABWRIGHT FISH CLEANING STATION FG-9648, MODEL 5126

3. LIFT STATION - SINGLE PHASE, HYDROMATIC TG-PRO SYSTEM, AS IDENTIFIED ABOVE.

GENERAL NOTES:

AFTER INSTALLATION OF FISH CLEANING STATION AND SEPTIC TANK RETURN GRADE AROUND EACH TO PREVIOUS CONDITION.

ALL DEBRI TO BE TAKEN TO APPROVED LANDFILL.

NOTIFY ARCHITECT OF ANY DISCREPANCIES FOUND DURING INSTALLATION.

TRENCHES CUT IN ASPHALT TO BE COMPACTED AND TESTED BY INSPECTION FIRM.

ALL CONCRETE JOINTS TO BE SEALED WITH SEAL FLEX OR A GOOD QUALITY CREAK SEALER.

ALL CONCRETE TO BE SEALED WITH A TEN YEAR WARRANTEED SEALR, AFTER CURING PERIOD.

PROVIDE 2 GFI PROTECTED EXTERIOR OUTLET RECEPTACLES TO BE LOCATED ON THE PAVILION UP RIGHTS.

PROVIDE FLOOR DRAIN IN FISH CLEANING STATION AREA.

DURING CONSTRUCTION CONTRACTOR WILL BE RESPONSIBLE FOR KEEPING PARK TRAFFIC OPEN AND SAFE.

COORDINATE INSTALLATION OF CONDUIT AND PIPING TO BE LOCATED IN TRENCHES AND EXISTING TRENCHING.

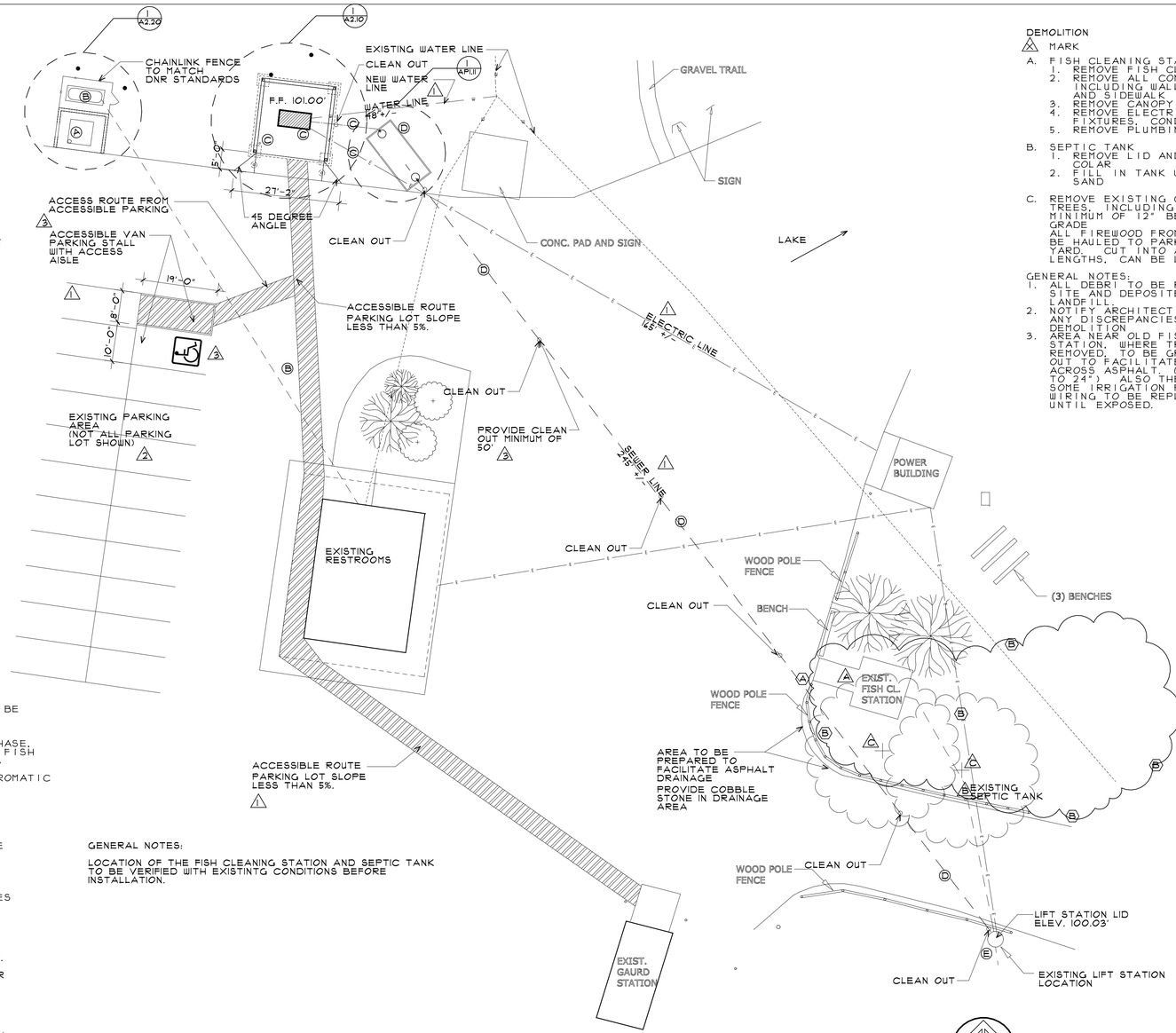

GENERAL NOTES:

LOCATION OF THE FISH CLEANING STATION AND SEPTIC TANK TO BE VERIFIED WITH EXISTINTG CONDITIONS BEFORE INSTALLATION.

SITE PLAN

SCALE: 1/16"=1'-0"

NORTH

DEMOLITION

⊗ MARK

A. FISH CLEANING STATION
1. REMOVE FISH CLEANING STAITON
2. REMOVE ALL CONCRETE INCLUDING WALLS, FOOTINGS AND SIDEWALK
3. REMOVE CANOPY
4. REMOVE ELECTRICAL WIRING, FIXTURES, CONDUIT, ETC.
5. REMOVE PLUMBING LINES

B. SEPTIC TANK
1. REMOVE LID AND CONCRETE COLAR
2. FILL IN TANK WITH CLEAN SAND

C. REMOVE EXISTING COTTONWOOD TREES, INCLUDING STUMP TO MINIMUM OF 12" BELOW FINISH GRADE
ALL FIREWOOD FROM TREES TO BE HAULED TO PARK MAINTENANCE YARD. CUT INTO APROPRIATE LENGTHS, CAN BE LONG LENGTHS.

GENERAL NOTES:
1. ALL DEBRI TO BE REMOVED FROM SITE AND DEPOSITED IN APPROVED LANDFILL.
2. NOTIFY ARCHITECT CONCERNING ANY DISCREPANCIES FOUND DURING DEMOLITION
3. AREA NEAR OLD FISH CLEANING STATION, WHERE TREES ARE BEING REMOVED, TO BE GRADED AND CUT OUT TO FACILITATE DRAINAGE ACROSS ASPHALT. (POSSIBLY 18" TO 24") ALSO THERE WILL BE SOME IRRIGATION PLUMBING AND WIRING TO BE REPLACED. UNKNOWN UNTIL EXPOSED.

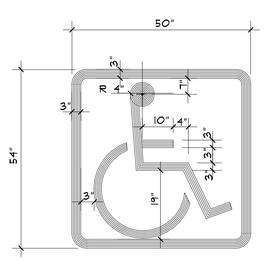

GENERAL NOTES:
FOLLOW ADA GUIDELINES

BLUE PAINT

3 ADA SYMBOL

NOT TO SCALE

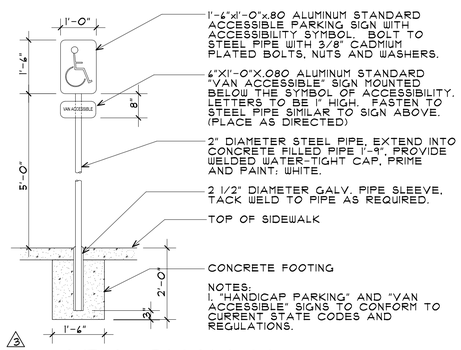

NOTES:
1. "HANDICAP PARKING" AND "VAN ACCESSIBLE" SIGNS TO CONFORM TO CURRENT STATE CODES AND REGULATIONS.

2 ADA SIGNAGE

NOT TO SCALE

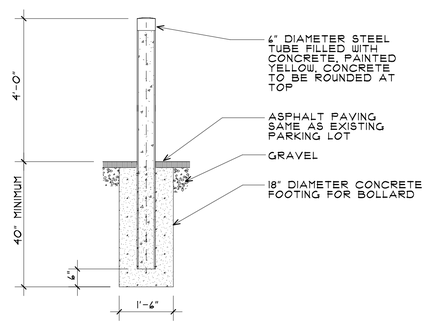

1 BOLLARD

NOT TO SCALE

SARGENT DESIGN GROUP
ARCHITECTURE | PLANNING
36 NORTH 300 WEST, SUITE B
CEDAR CITY, UTAH 84720
OFFICE: (435) 586-8510
FAX: (435) 586-4873
jcoltons@gmail.com

State of Utah-Department of Administrative Services
DIVISION OF FACILITIES CONSTRUCTION AND MANAGEMENT
4110 State Office Building/Salt Lake City, Utah 84114/538-3018

Project:
UTAH STATE PARKS
STATE OF UTAH
DEPARTMENT OF NATURAL RESOURCES
DIVISION OF STATE PARKS AND RECREATION
OTTER CREEK STATE PARK
FISH CLEANING STATION

Sheet Title:
SITE PLAN

Revisions:
2 CODE REVIEW 10.13.09
3 CODE REVIEW 11.25.09

PROJECT NUMBER:	09553
DATE:	07.10.09
DRAWN BY:	J.C.S.
CHECKED BY:	J.C.S.
APPROVED BY:	J.C.S.

A1.10

SHEET NUMBER:

Sheet of

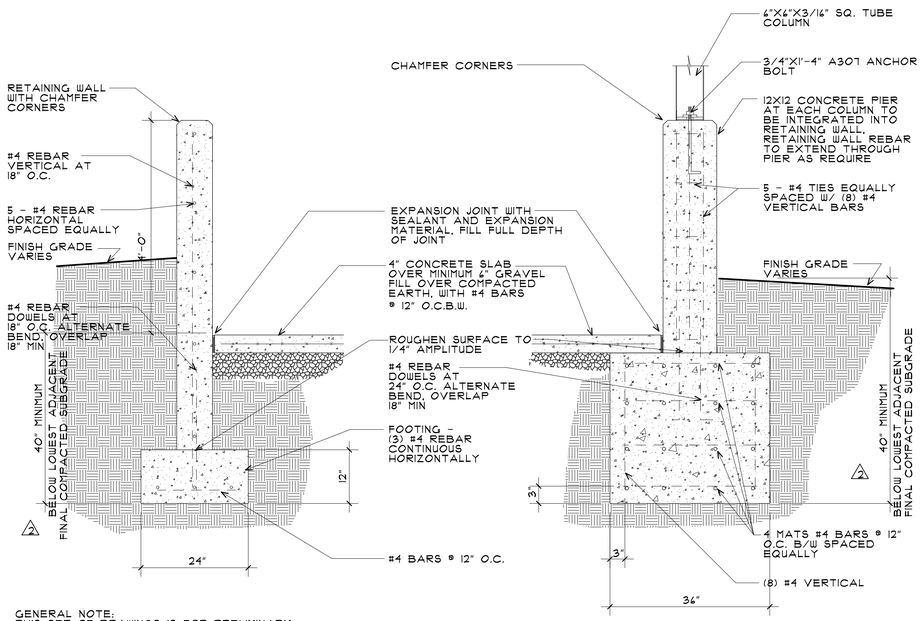

GENERAL NOTE:
THIS SET OF DRAWINGS IS FOR PRELIMINARY REVIEW ONLY AND THE FULL SET OF PLANS WITH REVISED FOOTING CALCULATIONS, AS REQUIRED, WILL BE SUBMITTED.

SECTIONS

SCALE: 3/4"=1'-0"

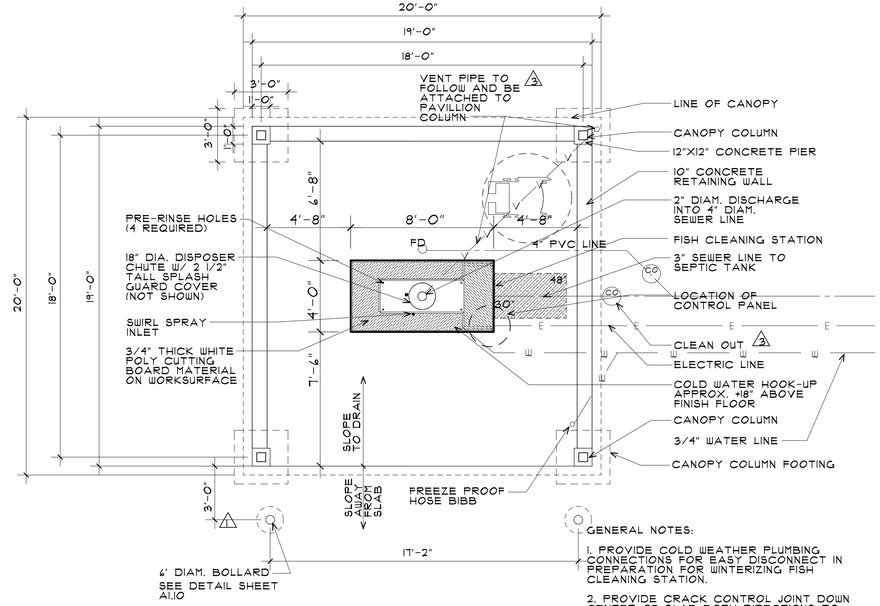

GENERAL NOTES:

1. PROVIDE COLD WEATHER PLUMBING CONNECTIONS FOR EASY DISCONNECT IN PREPARATION FOR WINTERIZING FISH CLEANING STATION.

2. PROVIDE CRACK CONTROL JOINT DOWN CENTER OF SLAB BOTH DIRECTIONS TO FURTHER LIMIT CRACKING.

3. BEARING CAPACITY FOR SOILS - 1,500 PSF.

FLOOR PLAN

SCALE: 1/4"=1'-0"

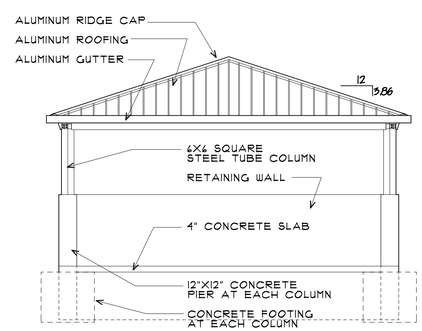

CONTRACTOR TO SUPPLY A BUILDING FABRICATED BY A CERTIFIED FABRICATOR FROM THE LIST OF APPROVED FABRICATORS PROVIDED BY THE STATE BUILDING OFFICIAL.

PLAN REVIEW OF THE BUILDING AND BUILDING STRUCTURAL CALCULATIONS MUST BE APPROVED BY THE STATE BUILDING OFFICIAL PRIOR TO COMMENCEMENT OF THE PROJECT.

ELEVATION

SCALE: 1/4"=1'-0"

GENERAL NOTES

(1) THIS OVERHEAD ROOF PROTECTION SYSTEM IS DESIGNED AS OPEN STRUCTURE.

(2) ROOF DECK MATERIAL SHALL BE ALUMINUM ALLOY 3004-H151 ALL OTHER MATERIAL SHALL BE CARBON STEEL A-36 (Fy = 36 KSI), UNLESS OTHERWISE NOTED.

(3) CONCRETE MIX FOR FOUNDATION SHALL BE MINIMUM 3000 PSI AT 28 DAYS.

(4) FOUNDATION SHALL REST ON REASONABLY SOUND GROUND THAT IS FREE OF ORGANIC MATERIAL AND CAPABLE OF SUPORTING 1000 PSF BEARING.

(5) FOOTING INDICATED ON PLANS.

(6) COMPLETE DETAILED INSTALLATION INSTRUCTIONS AND ASSEMBLY DRAWINGS ARE PROVIDED BY MANUFACTURER.

(7) SHELTERS ARE SHIPPED KNOCKED DOWN AND ARE PRE-DRILLED FOR EASY INSTALLATION. NO FIELD WELDING REQUIRED. THE STRUCTURAL STEEL FRAME IS FULLY FABRICATED TO ENTIRELY ELIMINATE THE NEED FOR DRILLING, CUTTING OR WELDING ON THE SITE. A PLUMB LINE, MEASURING TAPE AND ASSORTED WRENCHES ARE THE ONLY TOOLS REQUIRED FOR INSTALLATION.

FINISH: ALL STEEL COMPONENTS ARE CLEANED WITH A 3 - STAGE IRON PHOSPHATE WASH AND AN ACID RINSE/SEALER. COMPONENTS ARE SPRAYED WITH A HIGH QUALITY UV RESISTANT URETHANE/POLYESTER (TGIC) ANTI-GRAFFITI POWDER FINISH AND BAKED/CURED AT 400 DE. F. (GALVANIZING OPTIONAL).

ROOF PANELS: STRUCTURAL PANELS ARE A ROLL FORMED STUCCO EMBOSSED ALUMINUM WITH A SNAP LOCK AND PROVIDES A STRONG WATERTIGHT CONNECTION. THE PANEL IS 2-1/2" IN DEPTH AND PROVIDES A NET COVERAGE OF 24". THE ALUMINUM ALLOY IS UBC STANDARD CH28, ALLOY NO. 3004-H151. THE PANEL IS COATED WITH THE FINEST THERMOSETTING ACRYLIC FINISH.

COLUMNS & RAFTERS:
STRUCTURAL COLUMNS AND RAFTERS ARE HOLLOW STRUCTURAL TUBING. THE STEEL CONFORMS TO: ASTM A-500 WITH 46,000 PSI YIELD STRENGTH AND 58,000 PSI TENSILE STRENGTH.

PLATES:
STRUCTURAL STEEL PLATES ARE USED IN VARIOUS AREAS OF THE SHELTER AND ITS COMPONENTS. COLUMN BASE PLATES, BUTT PLATES, AND DIAGONAL BRACES ARE MANUFACTURED FROM STEEL PLATE. THE STEEL CONFORMS TO: ASTM A-36.

GUTTER TRIM:
ALUMINUM GUTTER FACIA AND TRIM FACIA ARE SUPPLIED WITH ALL SHELTERS. THE ALUMINUM ALLOY IS 6063-T5 OR 3003-H14.

FASTENERS:
STRUCTURAL STEEL BOLTS 1/2" OR 5/8" DIAMETER, BOLTS, NUTS AND WASHERS CONFORM TO ASTM A325. #12 X 1-1/4" HEX WASHER HEAD TEK 5 SCREWS WITH NEOPRENE WASHERS ARE USED FOR FASTENING ROOF PANELS TO STRUCTURAL STEEL. #8 X 1/2" OR 3/4" HEX WASHER HEAD TEK 2 SCREWS ARE USED FOR FASTENING GUTTER, FACIA TRIM AND ROOF PANELS. ALL SCREWS ARE EITHER CADMIUM OR ZINC PLATED.

WELDING:
ALL WELDING SHALL COMPLY WITH THE AWS A5.1 OR AWS A5.5, E70XX ELECTRODES, AND T24 PART 2 SEC. 2209A.

SHELTER DESIGN BASED ON 20'X20' SHELTER, MANUFACTURER BY PORTER CORPORATION PRODUCTS. APPROVED EQUALS ARE ACCEPTABLE.

SARGENT DESIGN GROUP
ARCHITECTURE | PLANNING
36 NORTH 300 WEST, SUITE B
CEDAR CITY, UTAH 84720
OFFICE: (435) 586-8510
FAX: (435) 586-4873
jcoltons@gmail.com

State of Utah-Department of Administrative Services
DIVISION OF FACILITIES CONSTRUCTION AND MANAGEMENT
4110 State Office Building/Salt Lake City, Utah 84114/538-3018

Project:
UTAH STATE PARKS
STATE OF UTAH
DEPARTMENT OF NATURAL RESOURCES
DIVISION OF STATE PARKS AND RECREATION
OTTER CREEK STATE PARK
FISH CLEANING STATION

Sheet Title:
FLOOR PLAN, ELEVATION AND SECTIONS

Revisions:
2 CODE REVIEW 10.13.09
3 CODE REVIEW 11.25.09

PROJECT NUMBER:	09553
DATE:	07.10.09
DRAWN BY:	J.C.S.
CHECKED BY:	J.C.S.
APPROVED BY:	J.C.S.

A2.10

SHEET NUMBER:
Sheet of

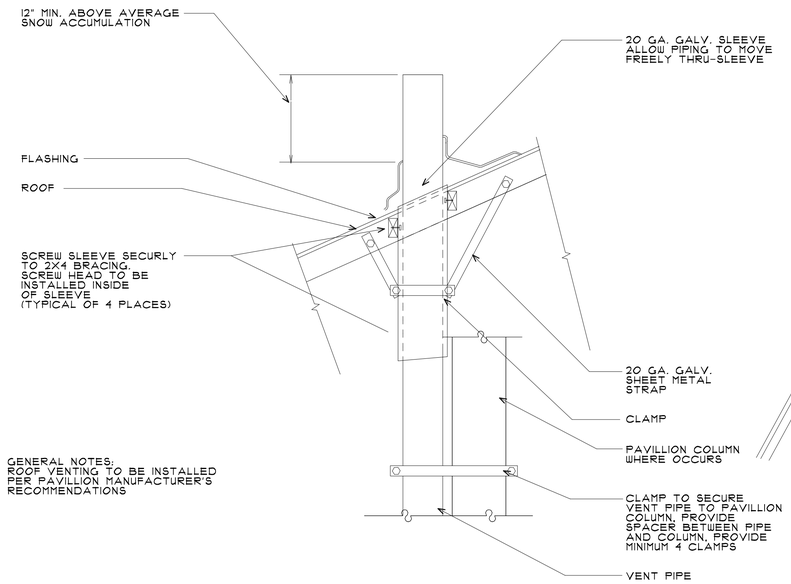

GENERAL NOTES:
ROOF VENTING TO BE INSTALLED PER PAVILLION MANUFACTURER'S RECOMMENDATIONS

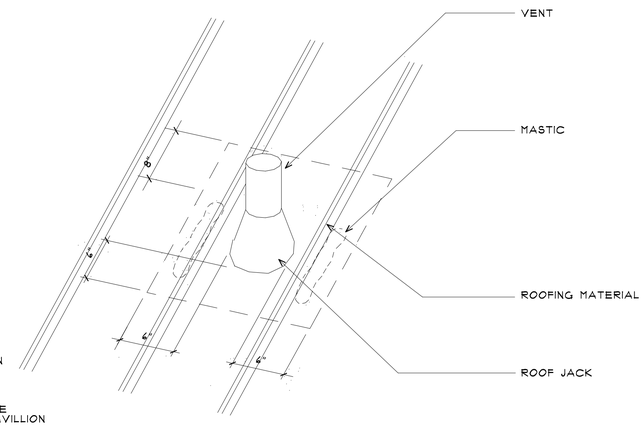

1 ROOF DETAILS
NOT TO SCALE

△3

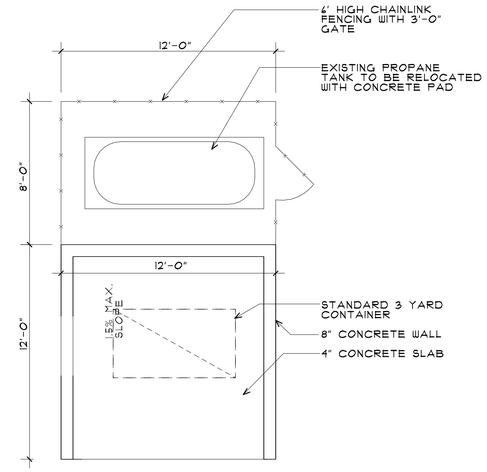

REINFORCING - VERTICAL #4 REBAR AT 24" O.C.
HORIZONTAL (5) #4 REBAR EQUALLY SPACED.

1 PLAN
NOT TO SCALE

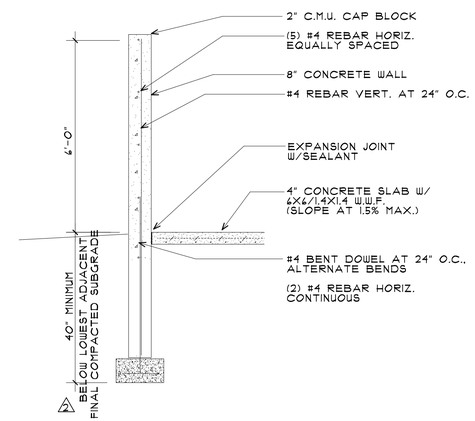

2 SECTION
NOT TO SCALE

SARGENT DESIGN GROUP
ARCHITECTURE | PLANNING
36 NORTH 300 WEST, SUITE B
CEDAR CITY, UTAH 84720
OFFICE: (435) 586-8510
FAX: (435) 586-4873
jcoltons@email.com

State of Utah–Department of Administrative Services
DIVISION OF FACILITIES CONSTRUCTION AND MANAGEMENT
4110 State Office Building/Salt Lake City, Utah 84114/538-3018

Project:
UTAH STATE PARKS
STATE OF UTAH
DEPARTMENT OF NATURAL RESOURCES
DIVISION OF STATE PARKS AND RECREATION
OTTER CREEK STATE PARK
FISH CLEANING STATION

Sheet Title:
TRASH ENCLOSURE AND DETAILS

Revisions:
△2 CODE REVIEW 10.13.09
△3 CODE REVIEW 11.25.09

PROJECT NUMBER:	09553
DATE:	07.10.09
DRAWN BY:	J.C.S.
CHECKED BY:	J.C.S.
APPROVED BY:	J.C.S.

A2.20
SHEET NUMBER:
Sheet of

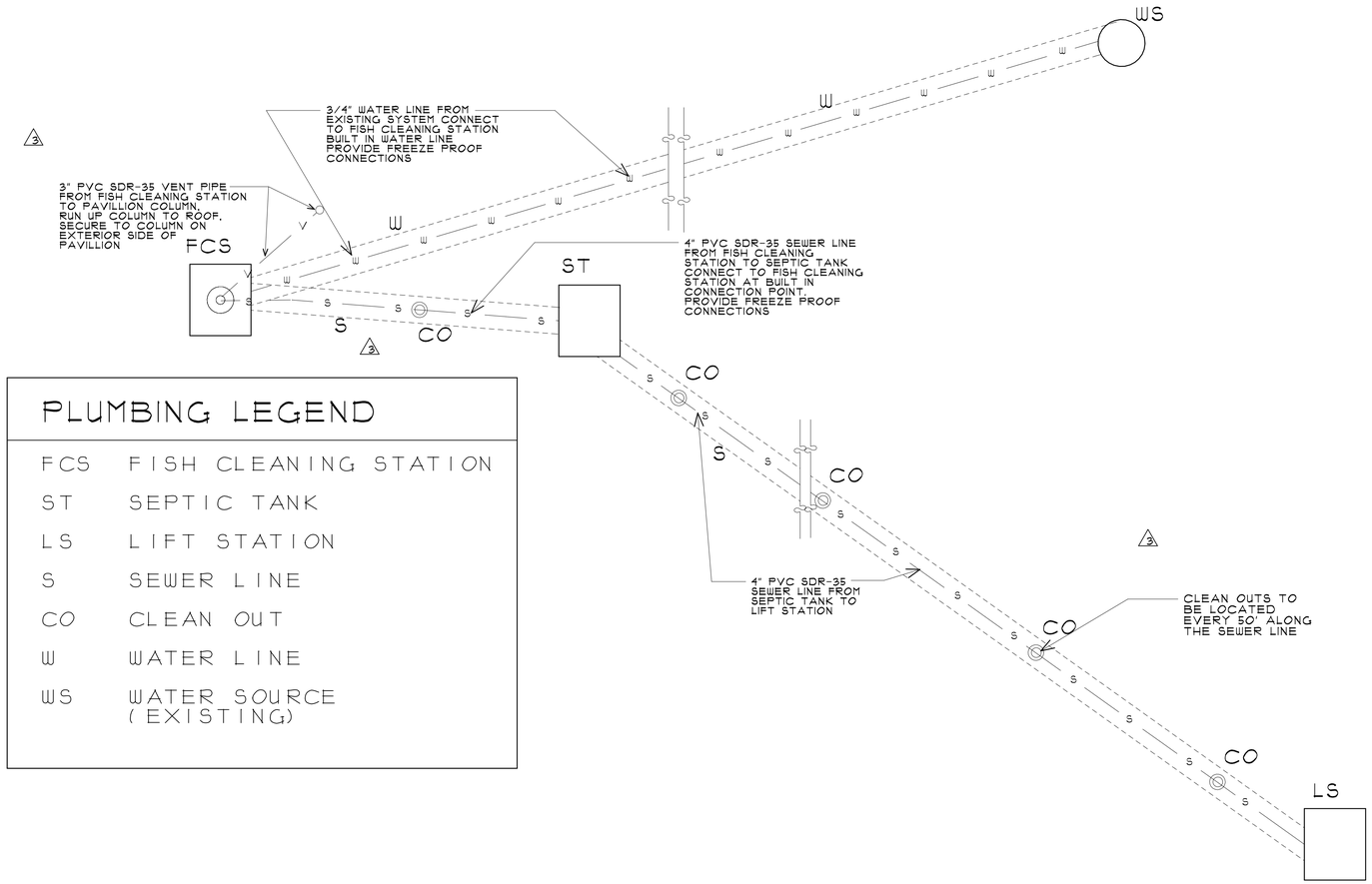

PLUMBING LEGEND

FCS	FISH CLEANING STATION
ST	SEPTIC TANK
LS	LIFT STATION
S	SEWER LINE
CO	CLEAN OUT
W	WATER LINE
WS	WATER SOURCE (EXISTING)

PLUMBING SCHEMATIC PLAN

NOT TO SCALE

SARGENT DESIGN GROUP
ARCHITECTURE | PLANNING
36 NORTH 300 WEST, SUITE B
CEDAR CITY, UTAH 84720
OFFICE: (435) 586-8510
FAX: (435) 586-4873
jcoltons@email.com

State of Utah–Department of Administrative Services
DIVISION OF FACILITIES CONSTRUCTION AND MANAGEMENT
4110 State Office Building/Salt Lake City, Utah 84114/538-3018

Project:
UTAH STATE PARKS
STATE OF UTAH
DEPARTMENT OF NATURAL RESOURCES
DIVISION OF STATE PARKS AND RECREATION
OTTER CREEK STATE PARK
FISH CLEANING STATION

Sheet Title:
PLUMBING DRAWINGS

Revisions:
2. CODE REVIEW 10.13.09
3. CODE REVIEW 11.25.09

PROJECT NUMBER:	09553
DATE:	07.10.09
DRAWN BY:	J.C.S.
CHECKED BY:	J.C.S.
APPROVED BY:	J.C.S.

SHEET NUMBER:
AP1.10
Sheet of

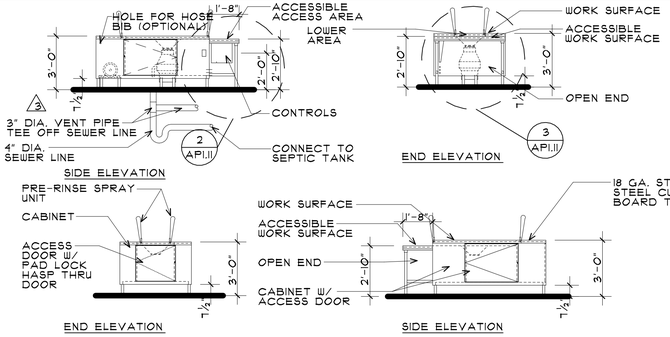

GENERAL NOTES
- 14 GA. ST/STL. CONSTRUCTION
- 16 GA. ST/STL. SIDE PANELS
- ALL INSIDE CORNERS ARE COVED 3/4" RADIUS
- ALL WELDED CONSTRUCTION
- FINISHED TO CURRENT N.S.F. STANDARDS
- ROTARY PHASE CONVERTER 230 VOLT, SINGLE PHASE INPUT
- 4" MINIMUM SEWER LINE
- COLD WATER HOSE BIBB

ELEVATIONS

SCALE: 1/4"=1'-0"

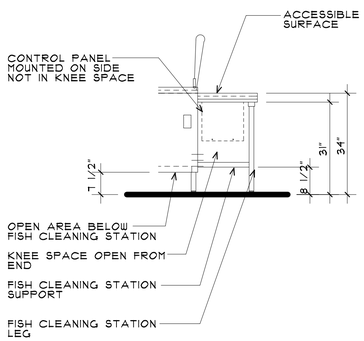

2 DETAIL 3
NOT TO SCALE

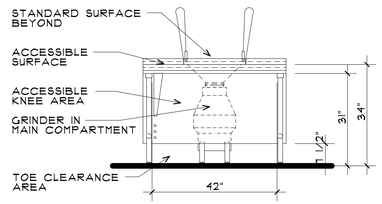

3 DETAIL 3
NOT TO SCALE

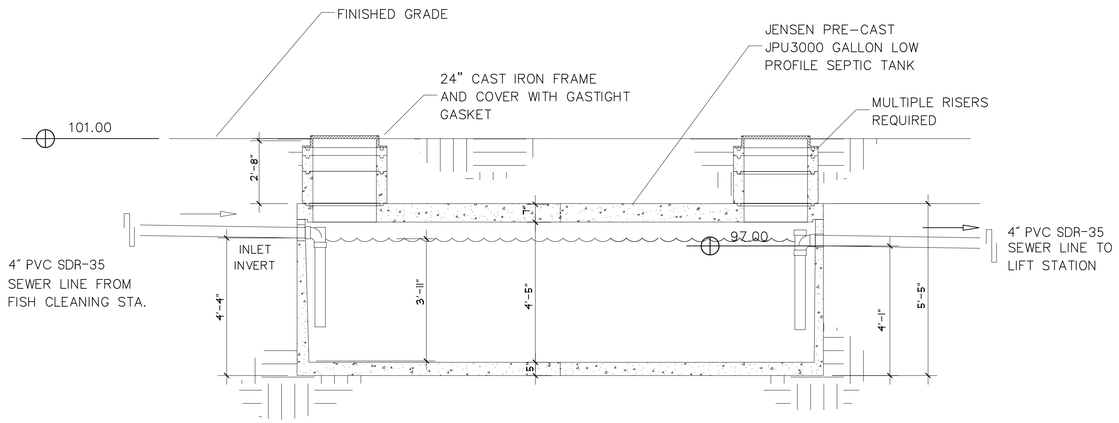

SIDE VIEW (CUT AWAY)

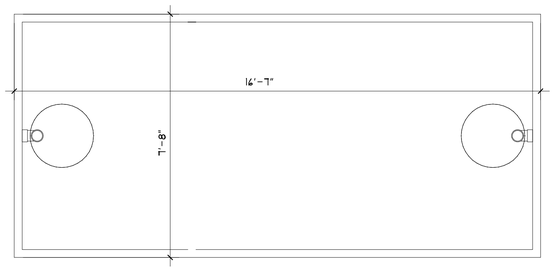

TOP VIEW

NOTES:

1) DESIGN LOAD: H-20 TRAFFIC
2) WATER TABLE ASSUMED TO BE BELOW BOTTOM OF STRUCTURE. IF GROUND WATER IS ENCOUNTERED CONTACT THE ARCHITECT IMMEDIATELY.
3) TANK MANUFACTURER SHALL ROTATE INLET AND OUTLET PIPING TO MATCH ENTRANCE ANGLES SOWN ON SITE PLAN
4) BEFORE PROCEEDING WITH ANY OTHER WORK, OR ORDERING ANY MATERIALS, THE CONTRACTOR SHALL EXPOSE THE INLET PIPING TO THE SEWER LIFT STATION AND DETERMINE PROPOSED GRADE TO SEPTIC TANK. CONTRACTOR TO FIELD FIT 4" SEWER LINE FROM SEPTIC TNK OUTLET TO EXISTING LIFT STATION INLET. ESTIMATED QUANTITY OF 4" PIPE IS 250 L.F.. MINIMUM GRADE IS 1%. IF SLOPE CAN NOT MEET 1% CONTACT THE ARCHITECT IMMEDIATELY.

1 SEPTIC TANK
NOT TO SCALE

PIPE BEDDING

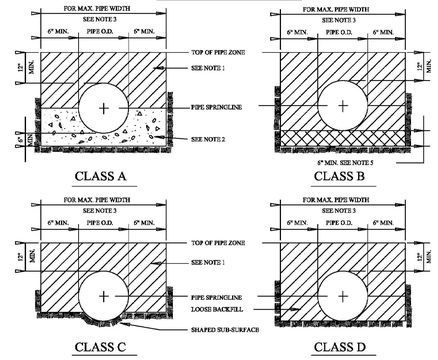

NOTES:

1. PLACE BACKFILL IN PIPE ZONE AT OPTIMUM MOISTURE IN HORIZONTAL 8" DEEP LOOSE LAYERS, COMPACT TO 90% ASTM D-698 DRY DENSITY WITH NOTHING LESS THAN 92%.
2. CONCRETE CRADLE WITH 28 DAY STRENGTH GREATER THAN 2000 PSI.
3. MAXIMUM WIDTH OF TRENCH MEASURED AT THE TOP OF THE PIPE, INCLUDING ANY NECESSARY SHEATHING AS FOLLOWS.

PIPE I.D.	MAX. TRENCH WIDTH
LESS THAN 33"	O.D. + 24"
GREATER THAN 33"	O.D. + 33"

4. O.D. MEANS OUTSIDE DIAMETER OF PIPE BARREL.
5. FOR FOUNDATION STABILIZATION, USE "SEWER ROCK" CONFORMING TO THE FOLLOWING GRADUATION.

SIEVE SIZE	IDEAL GRADUATION (% PASSING)	IDEAL GRADUATION (% PASSING)
2"	100	± 5
1"	65	± 5
1/2"	5	± 1

6. FREE FLOWING PEA GRAVEL VIBRATED INTO PLACE MAY BE SUBSTITUTED FOR COMPACTED BACKFILL IN PIPE ZONE ABOVE STABILIZATION MATERIALS. MAXIMUM UNVIBRATED LIFT SHALL BE 24".

PIPE BEDDING
NOT TO SCALE

GENERAL PLUMBING NOTES

1. PLUMBING CONTRACTOR SHALL COORDINATE HIS WORK WITH THE WORK OF OTHER TRADES.
2. INSTALLATION SHALL BE IN CONFORMANCE WITH THE IPC, 2006 EDITION; IBC, 2006 EDITION; IMC 2006 EDITION; IFGC, 2006 EDITION; AND THE NEC, 2005 EDITION; ALL AS ADOPTED AND AMENDED BY THE STATE OF UTAH AND THE LOCAL JURISDICTION.
3. THE PLUMBING CONTRACTOR SHALL BE RESPONSIBLE FOR THE CLEAN-UP AND REMOVAL OF WORK RELATED DEBRIS.
4. ARRANGE AND SCHEDULE INSPECTIONS IN A TIMELY MANNER WITH THE CONTRUCTION SCHEDULE.
5. ALL PENETRATIONS OF THE CONCRETE FLOOR SLAB REQUIRED FOR PLUMBING INSTALLATIONS SHALL BE THE RESPONSIBILITY OF THE PLUMBING CONTRACTOR.
6. REFER TO THE ARCHITECTURAL DIMENSIONED PLANS FOR THE EXACT LOCATION OF PLUMBING FIXTURES AND EQUIPMENT.

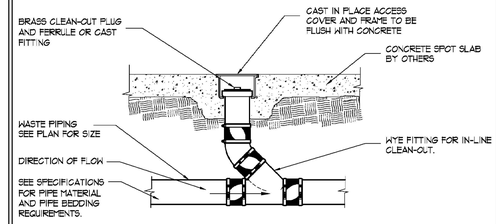

CLEAN OUT
NOT TO SCALE

TRENCH BACKFILL & ROAD SURFACE RESTORATION

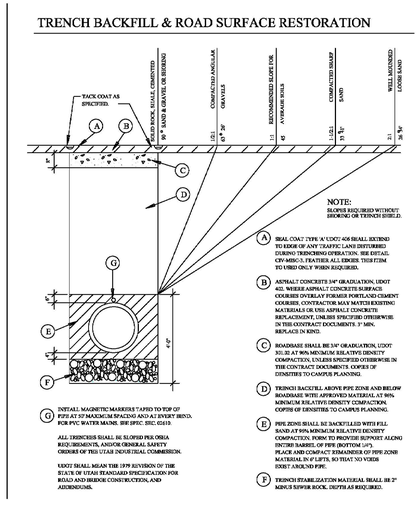

TRENCH
NOT TO SCALE

SARGENT DESIGN GROUP
ARCHITECTURE | PLANNING
36 NORTH 300 WEST, SUITE B
CEDAR CITY, UTAH 84720
OFFICE: (435) 586-8510
FAX: (435) 586-4873
jcoltons@gmail.com

State of Utah-Department of Administrative Services
DIVISION OF FACILITIES CONSTRUCTION AND MANAGEMENT
4110 State Office Building/Salt Lake City, Utah 84114/538-3018

Project:
UTAH STATE PARKS
STATE OF UTAH
NATURAL RESOURCES
DIVISION OF STATE PARKS AND RECREATION
OTTER CREEK STATE PARK
FISH CLEANING STATION

Sheet Title:
PLUMBING DRAWINGS

Revisions:
2 CODE REVIEW 10.13.09
3 CODE REVIEW 11.25.09

PROJECT NUMBER:	09553
DATE:	07.10.09
DRAWN BY:	J.C.S.
CHECKED BY:	J.C.S.
APPROVED BY:	J.C.S.

API.II
SHEET NUMBER:
Sheet of

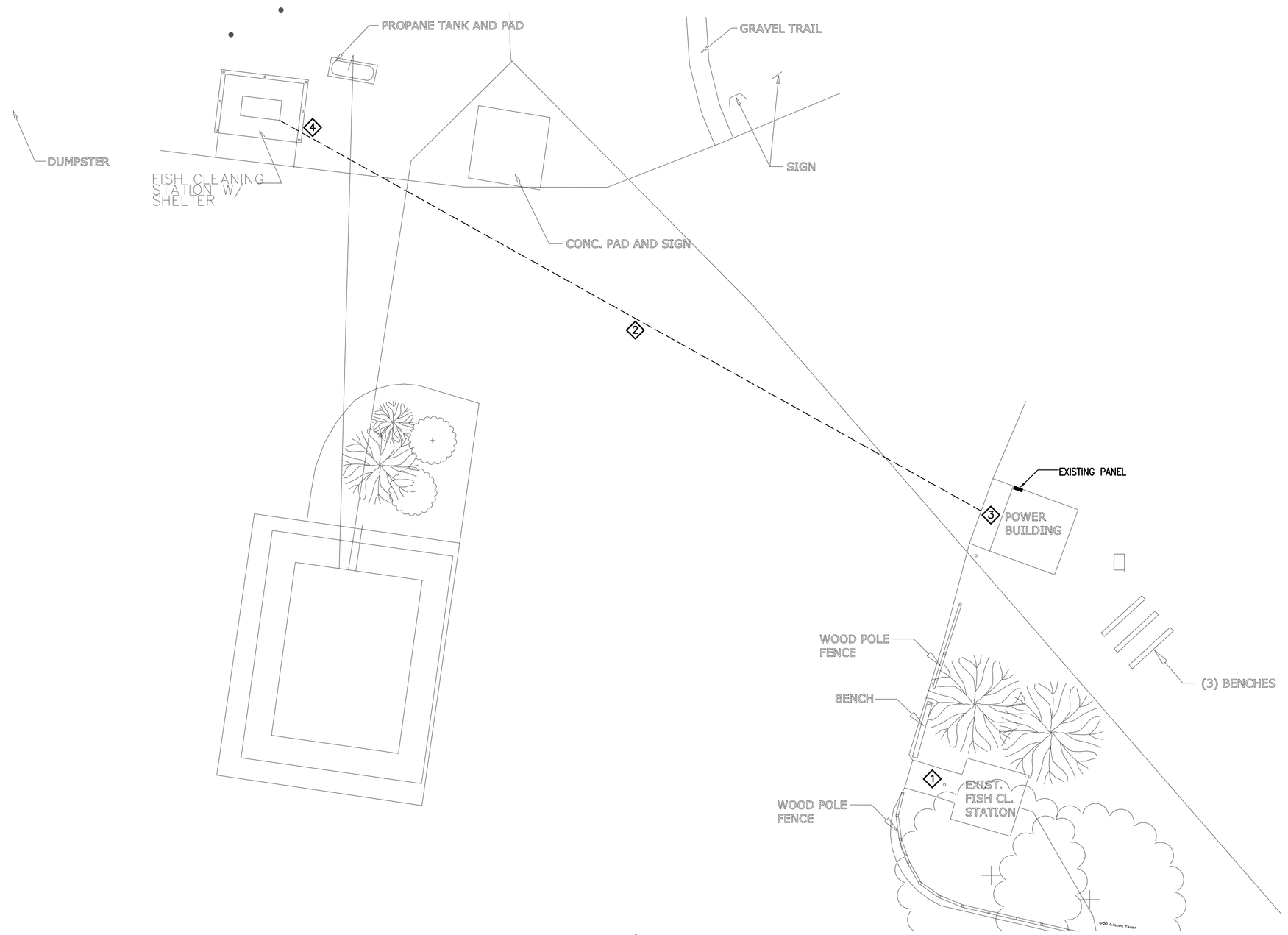

ELECTRICAL SITE PLAN

SCALE: 1/16" = 1'-0"

ELEC. KEYED NOTES

1. REMOVE COMPLETE EXISTING ELECTRICAL FROM EXISTING FISH CLEANING STATION TO POINT OF ORIGIN.
2. (1)2"CONDUIT WITH (3)#8 AWG, (2)#14 AWG AND (1)#10 AWG
3. CONNECT CIRCUITRY TO AVAILABLE BREAKER SPACE IN EXISTING POWER BUILDING PANEL.
4. CONTROL PANEL SHALL BE CONNECTED WITH (1)1" FLEXIBLE METAL CONDUIT AND (2)14 AWG.

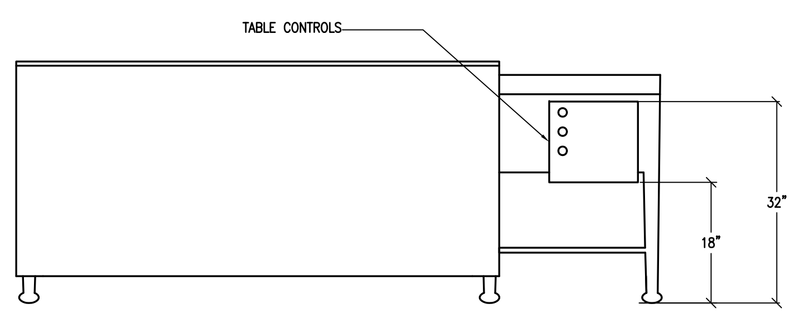

FISH TABLE ELEVATION

SCALE: NTS

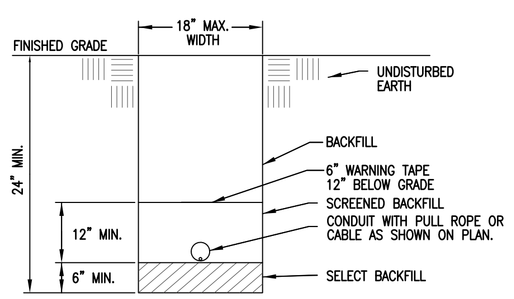

NOTE: VERIFY ALL DIMENSIONS WITH LOCAL POWER COMPANY STANDARDS AND SPECIFICATIONS

TRENCHING DETAIL

SCALE: NTS

NOTE:

1. WHEN AVAILABLE CONTRACTOR SHALL PROVIDE ALL GROUNDING MEANS INDICATED. CONTRACTOR SHALL REFER TO ELECTRICAL ONE-LINE DIAGRAM AND GROUNDING ELECTRODE CONDUCTOR SCHEDULE (THIS DETAIL) FOR GROUNDING ELECTRODE CONDUCTOR SIZE. CONTRACTOR SHALL REFER TO ELECTRICAL SPECIFICATIONS FOR SPECIFICS OF GROUNDING SYSTEM INSTALLATION AND MATERIALS.
2. GROUNDING ROD SHALL BE MIN. 9FT. AWAY FROM IRRICATION CONTROLLER.

KEYED NOTE:

1. T&B 3900 BU GROUND CLAMP WITH 3/4" CONDUIT HUB AND CABLE CLAMP
2. FULL SIZE GROUNDING ELECTRODE CONDUCTOR IN GRC.
3. EXOTHERMICALLY WELDED (TYPICAL)
4. DRIVEN GROUND RODS 5/8"x8' COPPER/STEEL ON BUILDING EXTERIOR
5. TABLE TAKEN FROM NEC 250.66. UNGROUNDED PHASE CONDUCTOR REFERS TO THE SIZE OF THE LARGEST UNGROUNDED SERVICE-ENTRANCE CONDUCTOR OR EQUIVALENT AREA FOR PARALLEL CONDUCTORS. SEE NEC 250.66.

GROUNDING ELECTRODE CONDUCTOR (5)

UNGROUNDED PHASE CONDUCTOR (COPPER)	GRND WIRE SIZE (CU)
#2 OR SMALLER	#8
1 OR 1/0	#6
2/0 OR 3/0	#4
>3/0 THRU 350 KCMIL	#2
>350 KCMIL THRU 600 KCMIL	1/0
>600 KCMIL THRU 1100 KCMIL	2/0
>1100 KCMIL	3/0

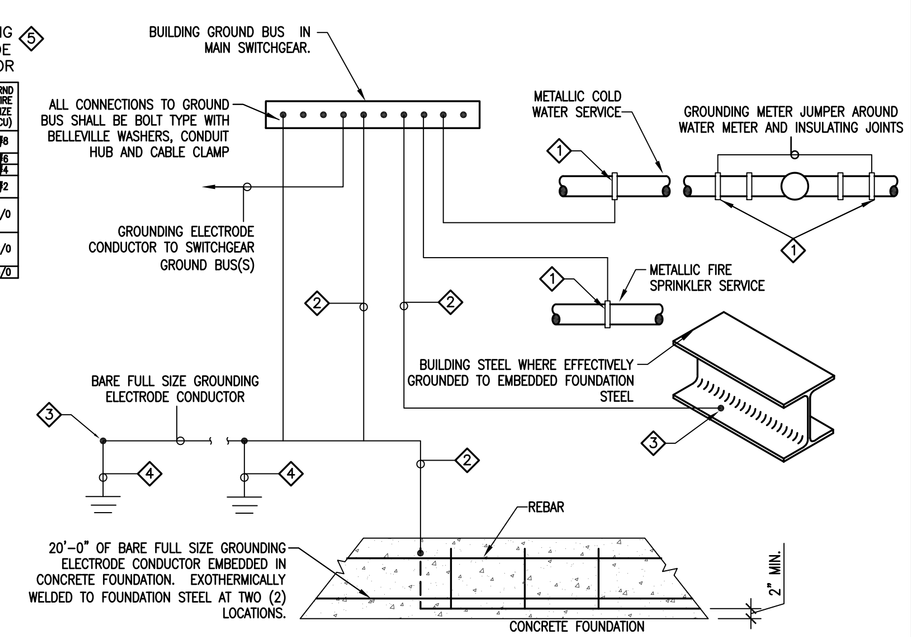

SERVICE GROUNDING DETAIL

SCALE: NONE

PANEL SCHEDULE "A"

VOLTAGE: 208 Y/ 120 VOLTS
MOUNTING: SURFACE
ENCLOSURE: NEMA 1
PHASE: 3
WIRE: 4
BUS RATING (AMPS): 225
MAIN LUGS ONLY
MINIMUM EQUIPMENT RATING: 22,000 AMPS (RMS-SYM)
REMARKS:

BREAKER No.	AMPS	POLE	CIRCUIT NAME	FEEDER C	WIRE	GRD	CKT. LOAD DEMAND FACTOR	WATTS	LOAD/PHASE (VA) ØA	ØB	ØC	CKT. LOAD WATTS	DEMAND FACTOR	FEEDER GRD	WIRE	C	CIRCUIT NAME	BREAKER POLE	AMPS	No.
1	100	2	EXISTING	1¼"	#3	#8	1.00	8,320	10,240			1,920	1.00	#12	#12	¾"	EXISTING	1	20	2
3	–	–	–	–	#3	–	1.00	8,320		13,312		4,992	1.00	#10	#6	1"	EXISTING	2	60	4
5	20	1	SPARE				1.00				4,992	4,992	1.00	–	#6	–	–	–	–	6
7	20	1	EXISTING	¾"	#12	#12	1.00	1,920	3,840			1,920	1.00	#12	#12	¾"	EXISTING	1	20	8
9	60	2	FISH CLEANING DISPOSER	1"	#6	#10	1.00	4,576		6,496		1,920	1.00	#12	#12	¾"	EXISTING	1	20	10
11	–	–	–	–	#6	–	1.00	4,576			4,576		1.00				SPACE			12
13			SPACE				1.00		0				1.00				SPACE			14
15			SPACE				1.00			0			1.00				SPACE			16
17			SPACE				1.00				0		1.00				SPACE			18
19			SPACE				1.00		1,920			1,920	1.00	#12	#12	¾"	EXISTING	1	20	20
21			SPACE				1.00			1,920		1,920	1.00	#12	#12	¾"	EXISTING	1	20	22
23	20	1	EXISTING	¾"	#12	#12	1.00	1,920			4,416	2,496	1.00	#10	#10	¾"	EXISTING	2	30	24
25	20	1	EXISTING	¾"	#12	#12	1.00	1,920	4,416			2,496	1.00	–	#10	–	–	–	–	26
27	30	2	EXISTING	¾"	#10	#10	1.00	2,496		7,488		4,992	1.00	#10	#6	1"	EXISTING	2	60	28
29	–	–	–	–	#10	–	1.00	2,496			7,488	4,992	1.00	–	#6	–	–	–	–	30

	ØA	ØB	ØC	TOTALS
CONNECTED LOAD (VA)	20,416	29,216	21,472	71,104
CONNECTED LOAD (A)				197
DEMAND FACTOR ADJUSTMENTS (VA)	0	0	0	0
TOTAL LOAD (VA)	20,416	29,216	21,472	71,104
TOTAL LOAD (A)				197
PHASE BALANCE	29%	41%	30%	

NOTES :

1. ALL INSULATION ON CONDUCTORS TO BE THHN UNLESS NOTED OTHERWISE. INSULATION ON ALL UNDERGROUND EXTERIOR CONDUCTORS SHALL BE THHW. INSULATION ON ALL UNDERGROUND EXTERIOR CONDUCTORS SHALL BE THHW.
2. LOAD DEMANDS CALCULATED AS PER SECTIONS 210 & 220 OF THE NATIONAL ELECTRICAL CODE.
3. PANEL COVER SHALL BE FIELD MARKED FOR FLASH PROTECTION WITH A PERMANENT LABEL AS REQUIRED BY THE NATIONAL ELECTRICAL CODE SECTION 110. LABEL SHALL READ AS FOLLOWS: "DANGER: POTENTIAL ARC FLASH HAZARD"
4. ABBREVIATIONS: CO-CONVENIENCE OUTLET, RR-RESTROOM, (N)ORTH, (S)OUTH, (E)AST (W)EST

SARGENT DESIGN GROUP
ARCHITECTURE | PLANNING
2390 WEST HIGHWAY 56
SUITE 4A
CEDAR CITY, UTAH 84720
OFFICE: (435) 586-8510
FAX: (435) 586-4873

REGISTERED PROFESSIONAL ENGINEER STEVEN R. GRIFFITHS STATE OF UTAH

State of Utah-Department of Administrative Services
DIVISION OF FACILITIES CONSTRUCTION AND MANAGEMENT
4110 State Office Building/Salt Lake City, Utah 84114/801-538-3018

Project: DNR OTTER CREEK FISH CLEANING

Sheet Title:

Revisions:

ROYAL ENGINEERING
ELECTRICAL
2335 SOUTH STATE SUITE 225
PHONE: 801.375.2228
MECHANICAL
PROVO, UTAH 84606
FAX: 801.375.2676

COPYRIGHT© JOB# J09139

THESE DOCUMENTS ARE INSTRUMENTS OF PROFESSIONAL SERVICE AND THE INFORMATION CONTAINED HEREIN IS INDIVISIBLE UNLESS IN CONJUNCTION WITH ROYAL ENGINEERING'S INTERPRETATIONS: DECISIONS, OBSERVATIONS AND ADMINISTRATIONS. USE OR REPRODUCTION OF THESE DOCUMENTS IN WHOLE OR IN PART WITHOUT ROYAL ENGINEERING'S CONSENT IS IN VIOLATION OF COMMON LAW, COPYRIGHT, AND OTHER STATE AND FEDERAL LAWS AND STATUTES. ACT 17 U.S. PAR. 101 (1991). EXCEPTIONS: EXEMPTS STATE AND LOCAL PUBLIC RECORD ACTS. REFER TO ACT 17 U.S.C. PAR. 301 (1991).

PROJECT NUMBER: J09139
DATE: 07.08.09
DRAWN BY: DAP
CHECKED BY: SRG
APPROVED BY: SRG

E1.0

SHEET NUMBER:
Sheet 1 of 1

ELECTRICAL SPECIFICATIONS

GENERAL PROVISION

A. REFERENCE
   1. THE GENERAL CONDITIONS AND OTHER CONTRACT DRAWINGS AS SET FORTH IN THE FOREGOING PAGES ARE HEREBY INCORPORATED INTO AND BECOME A PART OF THE SPECIFICATIONS FOR WORK UNDER THIS TITLE, INSOFAR AS THEY APPLY HERETO.
   2. ALL SPECIFICATIONS UNDER THIS DIVISION TITLE ARE DIRECTED TO AND ARE THE RESPONSIBILITY OF THE ELECTRICAL CONTRACTOR, UNLESS OTHER TRADES OR PERSONS ARE SPECIFICALLY MENTIONED, “ELECTRICAL CONTRACTOR” IS INFERRED AND INTENDED.
B. CONTRACT DRAWINGS
   1. THE DRAWINGS ACCOMPANYING THESE SPECIFICATIONS ARE COMPLEMENTARY EACH TO THE OTHER AND WHAT IS CALLED FOR BY ONE SHALL BE AS IF CALLED FOR BY BOTH.
   2. CONSULT ALL CONTRACT DRAWINGS WHICH MAY AFFECT THE LOCATION OF EQUIPMENT, CONDUIT AND WIRING AND MAKE MINOR ADJUSTMENTS IN LOCATION TO SECURE COORDINATION.
   3. WIRING LAYOUT IS SCHEMATIC AND EXACT LOCATIONS SHALL BE DETERMINED BY FIELD CONDITIONS.
   4. OTHER THAN MINOR ADJUSTMENTS SHALL BE SUBMITTED TO THE OWNER'S REPRESENTATIVE FOR APPROVAL BEFORE PROCEEDING WITH THE WORK.
C. JOB-SITE COPY OF DOCUMENTS
   1. MAINTAIN AT THE SITE, ONE COPY OF ALL DRAWINGS, SPECIFICATIONS, ADDENDA APPROVED SHOP DRAWINGS, CHANGE ORDERS AND OTHER MODIFICATIONS, IN GOOD ORDER AND MARKED TO RECORD ALL CHANGES MADE DURING CONSTRUCTION. THESE SHALL BE AVAILABLE TO THE OWNER'S REPRESENTATIVE. THE DRAWINGS MARKED TO RECORD ALL CHANGES MADE DURING CONSTRUCTION SHALL BE DELIVERED TO THE OWNER'S REPRESENTATIVE FOR THE OWNER UPON COMPLETION OF THE WORK. AN ADDITIONAL SET OF DRAWINGS WILL BE FURNISHED BY THE OWNER'S REPRESENTATIVE FOR THIS PURPOSE UPON REQUEST.
D. MANUFACTURER'S DRAWINGS
   1. THE CONTRACTOR SHALL SUBMIT TO THE ARCHITECT FOR REVIEW. (6) COPIES OF MANUFACTURER'S DRAWINGS AND WIRING DIAGRAMS. THE ENGINEER WILL REVIEW CONTRACTOR'S SHOP DRAWINGS AND RELATED SUBMITTALS (AS INDICATED BELOW) WITH RESPECT TO THE ABILITY OF THE DETAILED WORK, WHEN COMPLETE, TO BE A PROPERLY FUNCTIONING INTEGRAL ELEMENT OF THE OVERALL SYSTEM DESIGNED BY THE ENGINEER. BEFORE SUBMITTING A SHOP DRAWING OR ANY RELATED MATERIAL TO THE ENGINEER, CONTRACTOR SHALL: REVIEW EACH SUCH SUBMISSION FOR CONFORMANCE WITH THE MEANS, METHODS, TECHNIQUES, SEQUENCES, AND OPERATIONS OF CONSTRUCTION, AND SAFETY PRECAUTIONS AND PROGRAMS INCIDENTAL THERETO, ALL OF WHICH ARE THE SOLE RESPONSIBILITY OF CONTRACTOR: APPROVE EACH SUCH SUBMISSION BEFORE SUBMITTING IT; AND SO STAMP EACH SUCH SUBMISSION BEFORE SUBMITTING IT. THE ENGINEER SHALL ASSUME THAT NO SHOP DRAWING OR RELATED SUBMITTAL COMPRISES A VARIATION UNLESS CONTRACTOR ADVISES ENGINEER OTHERWISE VIA A WRITTEN INSTRUMENT WHICH IS ACKNOWLEDGED BY ENGINEER IN WRITING. THE ITEMS, TYPES OF SUBMITTALS AND RELATED MATERIAL (IF ANY) CALLED FOR ARE INDICATED BELOW:

ITEMS	TYPE SUBMITTALS REQUESTED
LIGHTING AND POWER PANELS	SHOP DRAWINGS
LIGHTING FIXTURES	CATALOG CUTS

E. GUARANTEES
   1. THE ELECTRICAL CONTRACTOR SHALL BE RESPONSIBLE FOR ALL DEFECTS, REPAIRS AND REPLACEMENTS IN MATERIALS AND WORKMANSHIP FOR A PERIOD OF ONE (1) YEAR AFTER DATE OF SUBSTANTIAL COMPLETION AS DETERMINED BY THE OWNER'S REPRESENTATIVE. PRODUCT GUARANTEES GREATER THAN ONE (1) YEAR SHALL BE PASSED ALONG TO THE OWNER FOR FULL BENEFIT OF THE MANUFACTURER'S WARRANTY.

DEMOLITION

A. DESCRIPTION OF WORK
   1. ALL RELOCATIONS, RECONNECTIONS AND REMOVALS ARE NOT NECESSARILY INDICATED ON DRAWINGS. ALL SUCH REQUIRED WORK SHALL BE INCLUDED WITHOUT ADDITIONAL COST TO OWNER. OTHER DEMOLITION WORK SHALL BE PERFORMED AS REQUIRED TO MAINTAIN SYSTEM OPERATION.
   2. THE INTENT OF THE DRAWINGS IS NOT TO SHOW EVERY DEVICE, OUTLET, FIXTURE, CONDUIT, ETC. AFFECTED BY DEMOLITION WORK.
   3. THE DRAWINGS DO NOT NECESSARILY REFLECT AS-BUILT CONDITIONS. THE CONTRACTOR SHALL VISIT THE JOBSITE PRIOR TO BIDDING TO DETERMINE THE OVERALL SCOPE OF DEMOLITION WORK.
   4. REFER TO SECTIONS OF OTHER DIVISIONS FOR APPLICABLE REQUIREMENTS AFFECTING DEMOLITION WORK.
B. GENERAL
   1. DEMOLITION WORK SHALL BE LAID OUT IN ADVANCE TO ELIMINATE UNNECESSARY CUTTING, DRILLING, CHANNELING, ETC. WHERE SUCH CUTTING, DRILLING, OR CHANNELING BECOMES NECESSARY, PERFORM WITH CARE, USE SKILLED MECHANICS OF THE TRADES INVOLVED. REPAIR DAMAGE TO BUILDING AND EQUIPMENT. CUTTING WORK OF OTHER CONTRACTORS SHALL BE DONE ONLY WITH THE CONSENT OF THAT CONTRACTOR. CUTTING OF STRUCTURAL MEMBERS SHALL NOT BE PERMITTED.
C. PATCHING AND REPAIR
   1. THE CONTRACTOR IS RESPONSIBLE FOR ALL DEMOLITION, PATCHING AND REPAIR OF ALL FINISHED INTERIOR SURFACES PERTAINING TO THE INSTALLATION OF THIS PARTICULAR PHASE OF WORK. ALL SURFACES SHALL BE FINISHED (PAINTED, ETC.) TO MATCH THE ADJACENT MATERIALS, FINISHES AND COLORS.
   2. HARD SURFACES: WHENEVER DEMOLITION OR EXCAVATION IS REQUIRED FOR THE INSTALLATION OF THE ELECTRICAL SYSTEM, IT SHALL BE THE RESPONSIBILITY OF THIS CONTRACTOR TO MAKE REPAIRS AND/OR REPLACEMENTS OF HARD FINISH SURFACES SUCH AS CONCRETE, ASPHALT, ETC.
   3. THE METHOD OF PATCHING AND REPAIR SHALL FOLLOW GOOD CONSTRUCTION PRACTICES AND ALL FINISHED SURFACES SHALL MATCH MATERIALS AND FINISH WHEREIN THE DEMOLITION OCCURRED.
D. EXISTING EQUIPMENT:
   1. THE NEW ELECTRICAL EQUIPMENT AND APPARATUS SHALL BE COORDINATED AND CONNECTED INTO THE EXISTING SYSTEM AS REQUIRED. AUXILIARY SYSTEMS SHALL COMPLY, UNLESS OTHERWISE SPECIFIED.
   2. THE EXISTING ELECTRICAL DEVICES, CONDUIT AND/OR EQUIPMENT THAT FOR ANY REASON OBSTRUCTS CONSTRUCTION SHALL BE RELOCATED. PROVIDE CONDUIT, WIRING, JUNCTION BOXES, ETC. AS REQUIRED TO EXTEND EXISTING CIRCUITS AND SYSTEMS TO RELOCATED DEVICES OR EQUIPMENT.
   3. THE NEW FIXTURES INDICATED FOR EXISTING OUTLETS SHALL BE INSTALLED IN ACCORDANCE WITH THE FIXTURE SPECIFICATIONS.
   4. WHEN INSTALLING EQUIPMENT IN THE EXISTING BUILDING, IT SHALL BE CONCEALED.
   5. EXISTING RACEWAYS SHALL BE USED WHERE POSSIBLE, EXCEPT AS NOTED. ALL CIRCUITS, CONDUIT AND WIRE THAT ARE NOT USED IN THE REMODELED AREA SHALL BE CAREFULLY REMOVED, AND TURNED OVER TO THE OWNER. THOSE FIXTURES INDICATED FOR RE-USE SHALL BE THOROUGHLY CLEANED, REPAIRED AS REQUIRED, RELAMPED AND INSTALLED AS INDICATED.
   6. OBTAIN PERMISSION FROM THE ARCHITECT AND OWNER'S REPRESENTATIVE BEFORE PENETRATING ANY CEILING, FLOOR, AND WALL SURFACES.

WORK INCLUDED

A. INSTALLATION, MATERIALS, AND WORKMANSHIP
   1. FURNISH AND INSTALL ALL NECESSARY ANCHORS, SUPPORTS, STRAPS, BOXES, FITTINGS AND OTHER SIMILAR APPURTENANCES NOT INDICATED ON THE DRAWINGS BUT WHICH ARE REQUIRED FOR A COMPLETE AND PROPERLY INSTALLED SYSTEM CONSISTENT WITH THE ARCHITECTURAL TREATMENT OF THE BUILDING.
   2. THE ELECTRICAL CONTRACTOR, INSOFAR AS THE WORK IS CONCERNED, SHALL AT ALL TIMES KEEP THE PREMISES IN A NEAT AND ORDERLY CONDITION. AND AT THE COMPLETION OF THE WORK, SHALL PROPERLY CLEAN UP AND CART AWAY DEBRIS AND EXCESS MATERIALS. ELECTRICAL CONTRACTOR SHALL BE RESPONSIBLE FOR THE COST OF DUMPSTER & REFUSED DISPOSAL AS REQUIRED FOR ELECTRICAL WORK.
   3. ALL MATERIALS SHALL BE NEW AND UNDETERIORATED AND OF A QUALITY NOT LESS THAN THE MINIMUM SPECIFIED.
B. COORDINATION OF PLANS AND SPECIFICATIONS
   1. CONTACT THE OWNER'S REPRESENTATIVE IMMEDIATELY IF THERE IS ANY QUESTIONS REGARDING THE MEANING OR INTENT OF EITHER PLANS OR SPECIFICATIONS, OR UPON NOTICING ANY DISCREPANCIES OR OMISSIONS IN EITHER PLANS OR SPECIFICATIONS.
C. CUTTING AND PATCHING
   1. ALL ELECTRICAL EQUIPMENT SHALL BE KEPT DRY AND CLEAN DURING THE CONSTRUCTION PERIOD. INTERIOR OF ALL ENCLOSURES SHALL BE CLEANED OF DIRT AND DEBRIS BEFORE INSTALLING TRIM OR COVERS.
   2. ALL FINISHED SURFACES OF EQUIPMENT FURNISHED UNDER THIS CONTRACT SHALL BE THOROUGHLY CLEANED OF DIRT AND ALL SCRATCHED OR DAMAGED SURFACES SHALL BE TOUCHED UP WITH MATCHING MATERIALS BEFORE FINAL ACCEPTANCE OF THE WORK.
   3. WHEN ALL WORK IS COMPLETED AND ALL WORK HAS BEEN SATISFACTORILY TESTED AND ACCEPTED BY THE OWNER'S REPRESENTATIVE, ALL CONDUIT AND OTHER EXPOSED SURFACES SHALL BE THOROUGHLY CLEANED.

CODES AND FEES

A. CODES:
   1. ALL WORK PERFORMED UNDER THIS SPECIFICATION SHALL BE DONE IN ACCORDANCE WITH THE LATEST EDITION OF THE NATIONAL ELECTRICAL CODE AS PREPARED AND PUBLISHED BY THE NATIONAL FIRE PROTECTION ASSOCIATION AND ANY APPLICABLE STATE OR LOCAL CODES.
B. FEES:
   1. OBTAIN AND PAY FOR ANY AND ALL PERMITS REQUIRED BY ALL LAWS AND REGULATIONS AND PUBLIC AUTHORITY HAVING SUCH JURISDICTION.

TESTS AND INSPECTIONS

A. OBTAIN ALL INSPECTIONS REQUIRED BY ALL LAWS, ORDINANCES, RULES, REGULATIONS OR PUBLIC AUTHORITY HAVING JURISDICTION AND OBTAIN CERTIFICATES OF SUCH INSPECTIONS AND SUBMIT SAME TO THE OWNER'S REPRESENTATIVE. PAY ALL FEES, CHARGES AND OTHER EXPENSES IN CONNECTION THEREIN. OBTAIN OCCUPANCY PERMIT AS REQUIRED BY OWNER. FINAL PAYMENT SHALL NOT BE MADE UNTIL OCCUPANCY PERMIT IS OBTAINED.
B. WORK SHALL BE UNACCEPTABLE WHEN FOUND TO BE DEFECTIVE OR CONTRARY TO THE PLANS SPECIFICATIONS, CODES SPECIFIED OR ACCEPTED STANDARDS OF GOOD WORKMANSHIP.
C. THE CONTRACTOR SHALL PROMPTLY CORRECT ALL WORK FOUND UNACCEPTABLE BY THE OWNER'S REPRESENTATIVE WHETHER OBSERVED BEFORE OR AFTER SUBSTANTIAL COMPLETION AND WHETHER OR NOT FABRICATED, INSTALLED OR COMPLETED. THE CONTRACTOR SHALL BEAR ALL COSTS OF CORRECTING SUCH UNACCEPTABLE WORK, INCLUDING COMPENSATION FOR THE OWNERS REPRESENTATIVE ADDITIONAL SERVICES MADE NECESSARY THEREBY.

CONDUIT

A. FURNISH AND INSTALL ALL CONDUITS, BOXES, FITTINGS, ETC., FOR A COMPLETE RACEWAY SYSTEM.
B. ALL WIRING SHALL BE RUN IN EMT CONDUIT OR MC CABLE WITH GROUND CONDUCTOR UNLESS OTHERWISE NOTED.
C. ALL CONDUIT SIZES STATED HEREIN OR MARKED ON THE DRAWINGS ARE MINIMUM SIZE AND SHALL BE NO LESS THAN ½" UNLESS OTHERWISE NOTED.
D. ALL CONDUIT SHALL BE SUBSTANTIALLY SUPPORTED BY PIPE STRAPS OR SUITABLE CLAMPS OR HANGERS ATTACHED TO THE ELEMENTS OF THE BUILDING STRUCTURE TO PROVIDE RIGID INSTALLATION; IN NO CASE SHALL CONDUIT BE ATTACHED OR SUPPORTED FROM ADJOINING PIPE OR INSTALLED IN SUCH A MANNER AS TO PREVENT THE READY REMOVAL OF OTHER PIPE FOR REPAIRS.

WIRE AND CABLE

A. ALL CONDUCTORS SHALL BE COPPER AND OF THE AWG SIZE AND TYPE SHOWN ON THE DRAWINGS. WHERE NO SIZE OR TYPE IS SHOWN. CONDUCTORS SHALL NOT BE LESS THAN #12 TYPE XHHW, THHN, OR THWN. CONDUCTORS #8 AWG AND LARGER SHALL BE STRANDED COPPER AND HAVE 600 VOLT INSULATION; BE UL LABELED AND OF AMERICAN MANUFACTURER.
B. ALL CONNECTIONS ARE TO BE MADE USING PRESSURE TYPE TERMINALS.
C. THE FOLLOWING COLOR CODE SHALL BE USED:

	120/240 VOLT	120/208 VOLT	277/480 VOLT
PHASE A	BLACK	BLACK	BROWN
PHASE B	RED	RED	ORANGE
PHASE C		BLUE	YELLOW
NEUTRAL	WHITE	WHITE	WHITE
GROUND	GREEN	GREEN	GREEN

D. CONDUCTORS NO. 10 AWG OR SMALLER SHALL HAVE INSULATION COLORED AS NOTED ABOVE.
E. CONDUCTORS NO. 8 AWG OR LARGER SHALL HAVE INSULATION COLORED AS NOTED ABOVE OR COLORED TAPE, MINIMUM SIZE ½", WRAPPED TWICE AROUND AT THE FOLLOWING POINTS:
   1. AT EACH TERMINAL
   2. AT EACH CONDUIT ENTRANCE
   3. AT INTERVALS NOT MORE THAN 12 INCHES APART IN ALL BOXES, PANEL TUBS, SWITCHBOARDS, ETC
F. ALL BRANCH CIRCUITS SHALL BE MARKED IN THE PANEL BOARD GUTTERS. MARKERS SHALL INDICATE CORRESPONDING BRANCH--CIRCUIT NUMBERS.
G. EACH BRANCH CIRCUIT REQUIRING A NEUTRAL SHALL BE FURNISHED WITH A SEPARATE INDIVIDUAL NEUTRAL CONDUCTOR.

BOXES AND PLATES

A. FURNISH AND INSTALL ALL OUTLET, JUNCTION, AND PULL BOXES AS INDICATED ON THE DRAWINGS AND AS NECESSARY TO INSTALL THE REQUIRED CONDUIT AND WIRING IN A NEAT AND WORKMANLIKE MANNER.
B. PULL BOXES AND JUNCTION BOXES SHALL BE GALVANIZED AND OF THE CORRECT SIZE AND GAUGE, SIZED IN ACCORDANCE WITH CODE REQUIREMENTS AND SHALL BE U.L. LABELED.
C. BOXES AT EXTERIOR AREAS TO BE WATERTIGHT AND DUST-TIGHT WITH GASKETED COVERS.
D. ALL BOXES FOR EXPOSED WORK IN FINISHED SPACES SHALL BE "FS" TYPE WITH THREADED HUBS WITH RIGID CONDUIT RISER (DEEP WIRE MOLD BOXES)
E. ALL BOXES SHALL BE RIGIDLY SUPPORTED INDEPENDENT OF THE CONDUIT SYSTEM. BOXES CAST INTO MASONRY OR CONCRETE ARE CONSIDERED TO BE RIGIDLY SUPPORTED.

WIRING DEVICES

A. WIRING DEVICES SHALL BE SIMILAR TO THOSE LISTED BELOW AND OF SPECIFIED AMPERAGE. OTHER SPECIAL PURPOSE DEVICES SHALL BE AS SPECIFIED ON THE DRAWINGS.
B. DUPLEX GROUNDING TYPE RECEPTACLE--20 AMP, 125 VOLT--
C. HUBBELL--5352
   ARROW HART--5352
   SINGLE POLE SWITCHES - 20 AMP, 120 VOLT
D. WEATHERPROOF RECEPTACLES - 20 AMP, 125 VOLT--NEMA 5--20R
E. HUBBELL--5352 WITH 5205 COVER INTERMATIC GUARDIAN
   I SERIES, NEMA 3R COVER
   ARROW HART--5352 WITH 4500 COVER
F. G.F.C.I. RECEPTACLE- 20 AMP, 125 VOLT--NEMA 5-20 R
   HUBBELL- GF 5262 WITH MATCHING NYLON COVER PLATE OR WO-26 W.P. COVER
G. GROUND ALL RECEPTACLES IN ACCORDANCE WITH ARTICLE 250-146 OF NEC AND AS INDICATED IN THE GROUNDING SECTION OF THIS SPECIFICATION.

IDENTIFICATION

A. EACH PIECE OF SERVICE EQUIPMENT AND INDIVIDUAL SWITCHES, ALL DISCONNECTS, STARTERS, ALL EXHAUST FAN MANUAL STARTING SWITCHES.
B. IDENTIFICATION SHALL BE IN THE FORM OF LAMINATED PLASTIC NAMEPLATES, BLACK RACE, WITH THE LETTERS ENGRAVED INTO THE WHITE BACKGROUND, MINIMUM ¼" HIGH. PLATES SHALL BE DRILLED ON EACH END FOR SHEET METAL SCREW ATTACHMENT. NO “DYMO” OR SIMILAR TYPE LABELS WILL BE ALLOWED.
C. PANEL BOARD DIRECTORY: A TYPED CIRCUIT DIRECTORY SHALL BE PROVIDED INDICATING LOCAL AREA SERVED AND LOCATION FOR EACH BRANCH CIRCUIT.

GROUNDING

A. ALL FEEDERS AND BRANCH CIRCUITS OVER 100 VOLTS SHALL INCLUDE A GROUNDING CONDUCTOR SIZED IN ACCORDANCE WITH NEC TABLE 250-122, EXCEPT NOT BE SMALLER THAN #12 FOR POWER AND LIGHTING CIRCUITS AND #14 FOR CONTROL CIRCUITS. ALL GROUND CONDUCTORS SHALL BE GREEN, OR AS SPECIFIED UNDER SECTION 16120, “WIRE AND CABLE”.
B. ALL GROUND CLAMPS SHALL BE PENN-UNION “GPL” TYPE OR SIMILAR BY O.Z. OR BURNDY.
C. CONDUIT FOR SOLITARY GROUND CONDUCTORS SHALL BE RIGID SCHEDULE 40 PVC NON- METALLIC ELECTRICAL CONDUIT WITH U.L. LABEL SOLITARY GROUND CONDUCTORS SHALL NOT BE PLACED THROUGH METALLIC SLEEVES OR CONDUITS AND SHALL NOT BE COMPLETELY ENCIRCLED BY METALLIC HANGERS OR SUPPORTS.
D. THE GROUND CONDUCTOR SHALL BE CONNECTED TO THE NEUTRAL IN ONLY TWO LOCATIONS -ON THE SUPPLY SIDE OF THE SERVICE DISCONNECT MEANS PER NEC--250--24 AND ON SEPARATELY DERIVED SYSTEMS PER NEC 250-30.
E. AT EACH RECEPTACLE BOX, THE GROUND CONDUCTOR SHALL ENTER AND CONNECT, WITH NORMAL WIRING CONNECTOR, TO: 1) THE GROUND PIGTAIL TO RECEPTACLE: 2) THE GROUND PIGTAIL TO THE BOX GROUND SCREW; AND 3) THE OUTGOING GROUND CONDUCTOR TO NEXT DEVICE, IF NOT AT END OF RUN. METAL TO METAL CONTACT BETWEEN THE DEVICE YOKE AND THE OUTLET BOX IS NOT ACCEPTABLE AS A BOND FOR EITHER SURFACE. MOUNTED BOXES OR FLUSH TYPE BOXES.
F. CONDUIT SYSTEM SHALL BE ELECTRICALLY CONTINUOUS. ALL LOCK NUTS SHALL CUT THROUGH ENAMELED OR PAINTED SURFACES ON ENCLOSURES. WHERE ENCLOSURES AND NON-CURRENT CARRYING METALS ARE ISOLATED FROM THE CONDUIT SYSTEM, USE BONDING JUMPERS WITH APPROVED CLAMPS. WHERE REDUCING WASHERS ARE USED AND WHERE CONCENTRIC OR ECCENTRIC KNOCKOUTS ARE NOT COMPLETELY REMOVED BONDING BUSHINGS SHALL BE REQUIRED.

INTERRUPTION OF SERVICE AND OWNER'S OPERATION

A. THE ELECTRICAL CONTRACTOR SHALL ORGANIZE HIS WORK SO THAT THESE ALTERATIONS AND ADDITIONS SHALL CAUSE A MINIMUM OF INTERFERENCE AND DISTURBANCE TO THE OWNER. ARRANGEMENTS SHALL BE MADE WITH THE OWNER AND ENGINEER BEFORE INTERRUPTING SERVICE IN ANY AREA. A WRITTEN DETAILED METHOD OF INTERRUPTION PROCEDURE INDICATING ELAPSED TIME REQUIRED AND TIME OF INTERRUPTION SHALL BE PREPARED BY THE ELECTRICAL CONTRACTOR AND SUBMITTED TO THE OWNER FOR APPROVAL.
B. ALL INTERRUPTIONS OF SERVICE SHALL BE MADE WHEN THE LOAD IS AT A MINIMUM AND SHALL BE SCHEDULED AT THE OWNER'S CONVENIENCE. (SERVICE INTERRUPTIONS WILL BE SCHEDULED FOR OTHER THAN NORMAL DAYTIME WORKING HOURS. THE ELECTRICAL CONTRACTOR SHALL INCLUDE NECESSARY COST FOR OVERTIME LABOR IN ALL BIDS.)
C. AT NO TIME SHALL THE ELECTRICAL CONTRACTOR OR HIS EMPLOYEES NORMALLY WORKING ON THE PROJECT LEAVE THE FACILITY DURING A TIME WHEN ANY NORMALLY LIVE CIRCUITS OR FEEDERS ARE DISCONNECTED, WITHOUT PERMISSION OF THE ENGINEER.
D. ALL MATERIALS, CONNECTIONS AND EQUIPMENT FOR TEMPORARY CONTROL OR POWER WIRING TO MAINTAIN CONTINUITY OF SERVICE DURING CONSTRUCTION SHALL BE PROVIDED BY THE ELECTRICAL CONTRACTOR.

ROYAL ENGINEERING
ELECTRICAL MECHANICAL
2335 SOUTH STATE SUITE 225 PROVO, UTAH 84606
PHONE: 801.375.2228 FAX: 801.375.2676

COPYRIGHT©

JOB# J09139

THESE DOCUMENTS ARE INSTRUMENTS OF PROFESSIONAL SERVICE AND THE INFORMATION CONTAINED HEREIN IS INCOMPLETE UNLESS IN CONJUNCTION WITH ROYAL ENGINEERING'S INTERPRETATIONS, DECISIONS, OBSERVATIONS AND ADMINISTRATIONS. USE OR REPRODUCTION OF THESE DOCUMENTS IN WHOLE OR IN PART WITHOUT ROYAL ENGINEERING'S CONSENT IS IN VIOLATION OF COMMON LAW. COPYRIGHTS, STATUTORY AND OTHER RESERVED RIGHTS. REFER TO ACT 17 U.S.C. PAR. 511 (1991). WHICH PREEMPTS STATE AND LOCAL PUBLIC RECORD ACTS. REFER TO ACT 17 U.S.C. PAR. 301 (1991).

SARGENT DESIGN GROUP
ARCHITECTURE | PLANNING
2390 WEST HIGHWAY 56
SUITE 4A
CEDAR CITY, UTAH 84720
OFFICE: (435) 586-8510
FAX: (435) 586-4873

REGISTERED PROFESSIONAL ENGINEER
187104
STEVEN R. GRIFFITHS
STATE OF UTAH

THE GREAT SEAL OF THE STATE OF UTAH 1896

State of Utah–Department of Administrative Services
DIVISION OF FACILITIES CONSTRUCTION AND MANAGEMENT
4110 State Office Building/Salt Lake City, Utah 84114/538-3018

Project:
DNR
OTTER
CREEK FISH
CLEANING

Sheet Title:

Revisions:

PROJECT NUMBER:	J09139
DATE:	07.08.09
DRAWN BY:	DAP
CHECKED BY:	SRG
APPROVED BY:	SRG

E2.0

SHEET NUMBER:
Sheet 1 of 1