STATE OF UTAH
DIVISION OF FACILITIES AND CONSTRUCTION MANAGEMENT

SAND HOLLOW STATE PARK
PWC PARKING LOT EXPANSION
PROJECT NO. 09184510
2009

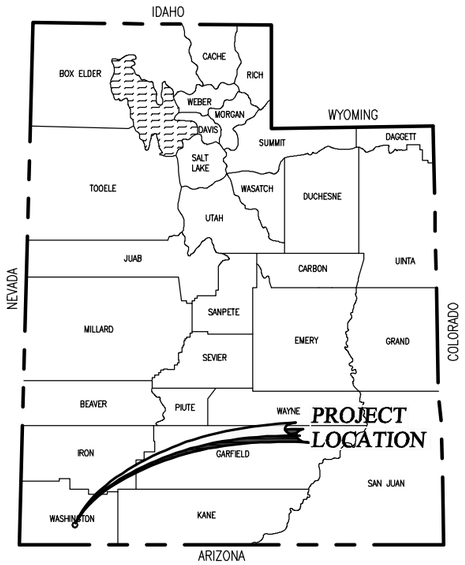

N

RECOMMENDED FOR APPROVAL:

LICENSED PROFESSIONAL ENGINEER No. 146602 CRAIG E. JOHANSEN STATE OF UTAH

PROJECT ENGINEER — DATE 10-16-09

APPROVALS:

STATE OF UTAH DFCM — DATE

UTAH STATE DIVISION OF PARKS AND RECREATION — DATE

johansen & tuttle ENGINEERING INC.
BOX 487, CASTLE DALE, UTAH 84513 (435) 381-2523
FAX (435) 381-2522 email jt@etv.net

WASHINGTON COUNTY , UTAH

INDEX TO SHEETS

SHEETS	DESCRIPTION
1	TITLE SHEET
2	SUMMARY SHEET
3	TYPICAL SECTIONS
4	PAINTING DETAILS
5	PLAN SHEET
6	PAINTING SHEET
7	

SUMMARY OF ITEMS

ITEM	SPEC. SECTION	DESCRIPTION	UNIT	QUANTITY USE
1	8	MOBILIZATION	LUMP	1
2	10	HOT MIX ASPHALT, (PG58-22) 1/2-INCH MAX	SQ. FT.	73,200
3	10	ASPHALT CONCRETE PAVEMENT SAWING	LIN. FT.	300
4	21	EXCAVATION	CU. Y.D.	2,500
5	23	UNTREATED BASE COURSE (1-INCH MAX.)	CU. Y.D.	1,400
6	23	GRANULAR BARROW (6-INCH MAX.)	CU. Y.D.	3,250
7	32	24" CONCRETE CURB AND GUTTER	LIN. FT.	1,100
8	93	TRAFFIC STRIPING PAINT	LUMP	1
9	94	STOP SIGN	EACH	1

DESIGNED	HRT	10-09	CHECKED CEJ 10-09
DRAWN	SCS	10-09	CHECKED HRT 10-09
SURVEYED	BHT	10-09	CHECKED LMS 10-09
R.O.W.	LMS	10-09	CHECKED CEJ 10-09

johansen & tuttle ENGINEERING INC.
BOX 497, CASTLE DALE, UTAH 84513 (435) 381-2523
FAX (435) 381-2522 EMAIL jt@etv.net

STATE of UTAH DFCM
SANDHOLLOW STATE PARK
PWC PARKING LOT EXPANSION
PROJECT No. 09184510

INDEX TO SHEETS
AND
SUMMARY OF ITEMS

PROJECT NO.
09184510

SHEET NO.
2

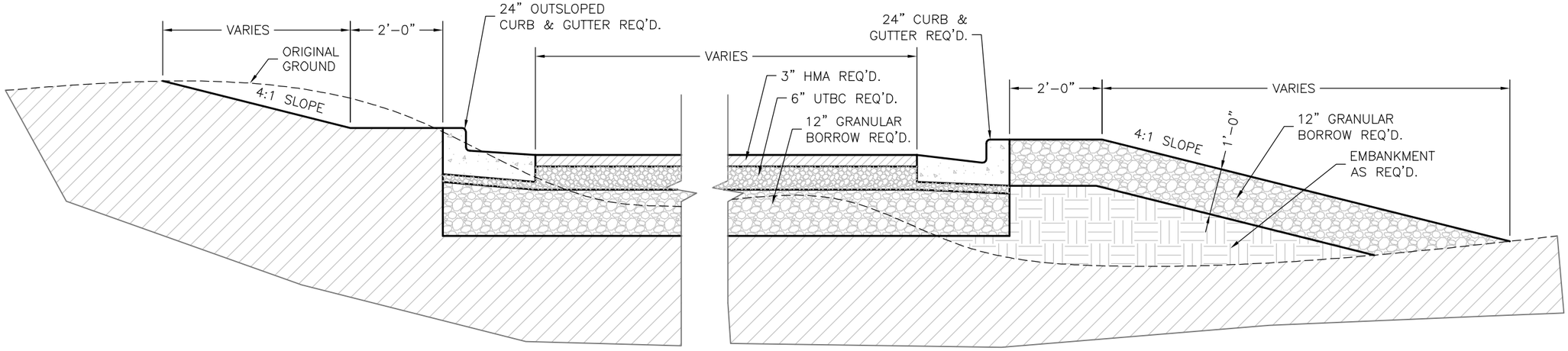

TYPICAL PARKING LOT SECTION

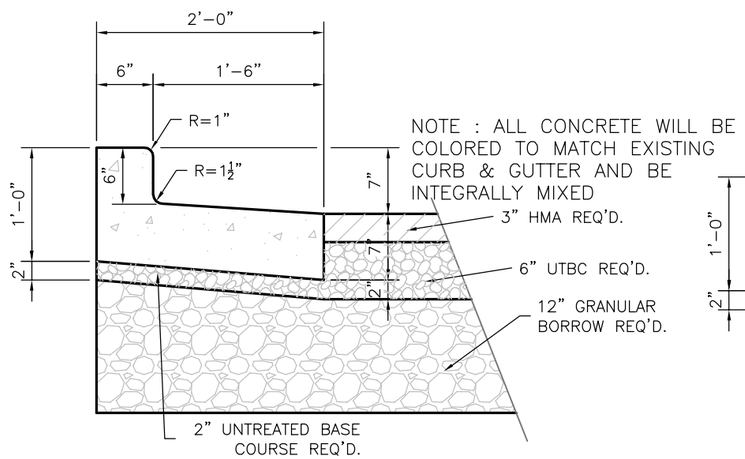

NOTE : ALL CONCRETE WILL BE COLORED TO MATCH EXISTING CURB & GUTTER AND BE INTEGRALLY MIXED

OUT SLOPE CURB DETAIL

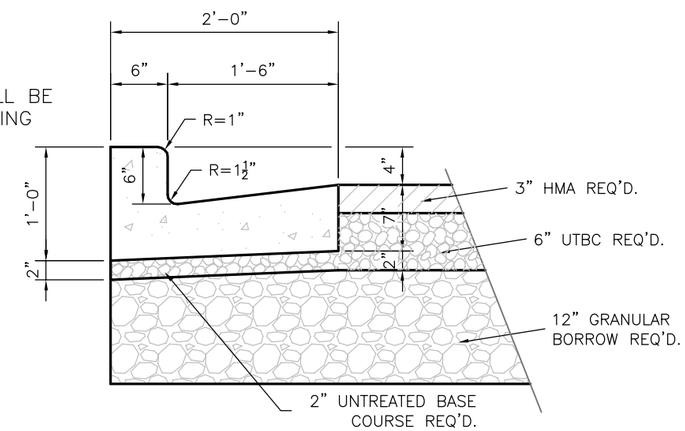

IN SLOPE CURB DETAIL

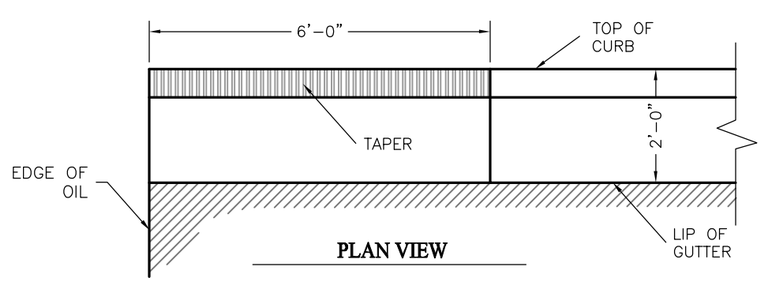

PLAN VIEW

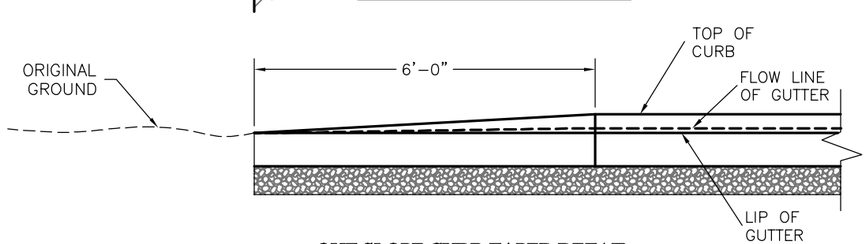

OUT SLOPE CURB TAPER DETAIL

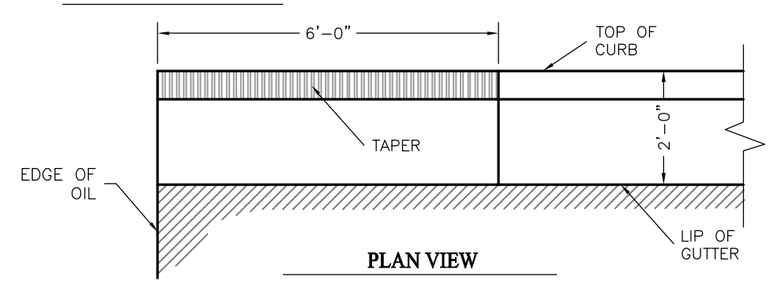

PLAN VIEW

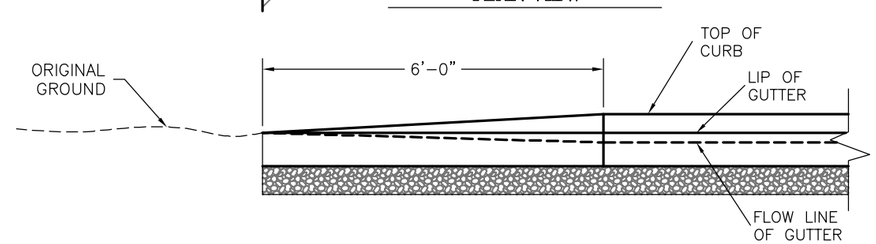

IN SLOPE CURB TAPER DETAIL

DESIGNED	HRT	10-09	
DRAWN	SCS	10-09	
SURVEYED	BHT	10-09	
R.O.W.	LMS	10-09	
CHECKED	CEJ	10-09	
CHECKED	HRT	10-09	
CHECKED	LMS	10-09	
CHECKED	CEJ	10-09	

johansen & tuttle ENGINEERING INC.
BOX 487, CASTLE DALE, UTAH 84513 (435) 381-2523
FAX (435) 381-2522 email: jt@emery.net

STATE of UTAH DFCM
SANDHOLLOW STATE PARK
PWC PARKING LOT EXPANSION
PROJECT No. 09184510

TYPICAL SECTIONS

PROJECT NO. 09184510

SHEET NO. 3

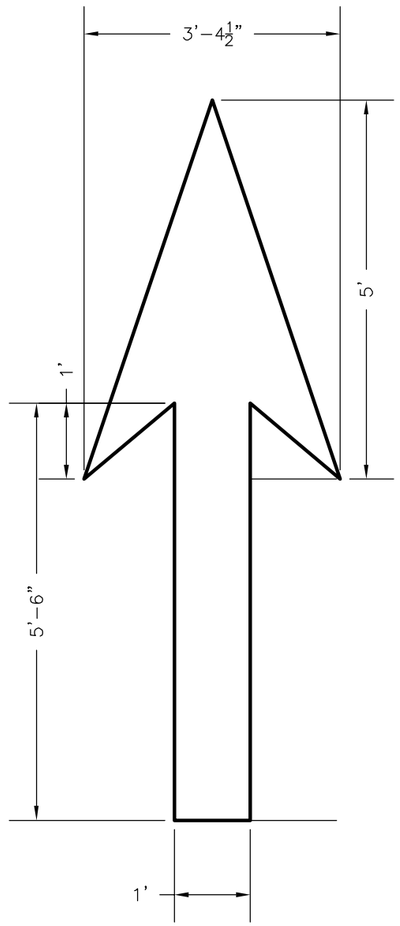

STANDARD PAVEMENT MARKING ARROWS

UTCD, STANDARD HIGHWAY SIGNS, PAVEMENT MARKINGS FIG. 10-8 & 10-10)

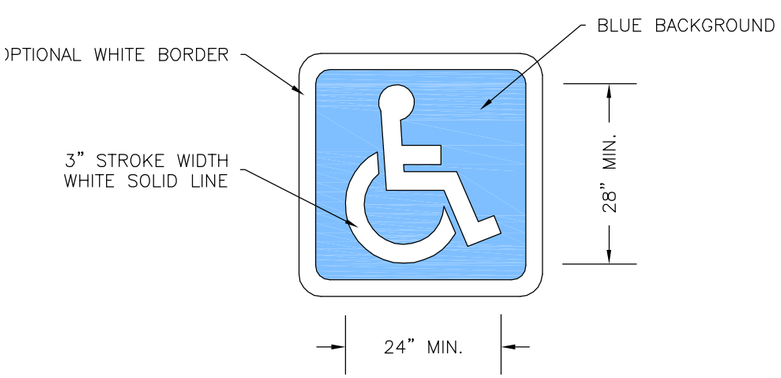

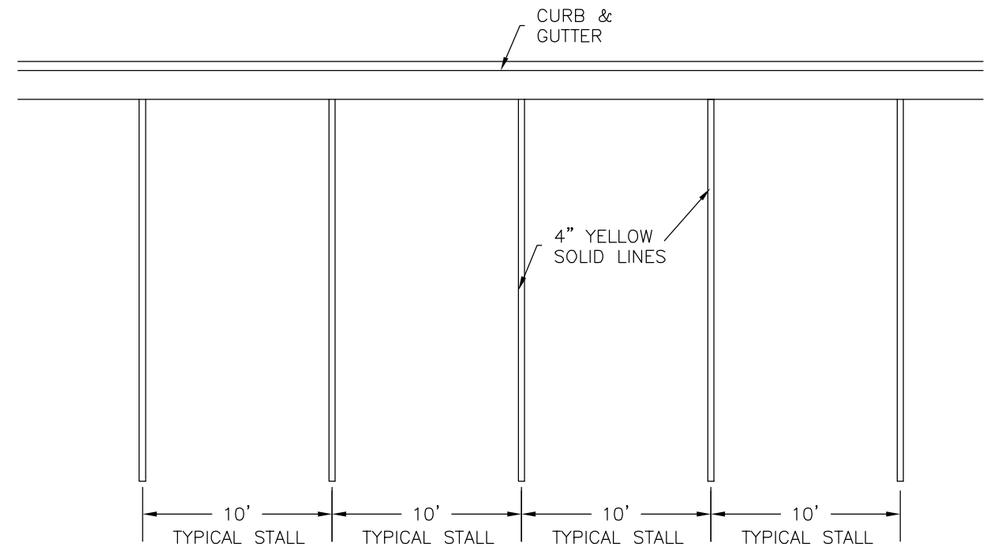

TYPICAL PARKING SPACE MARKING

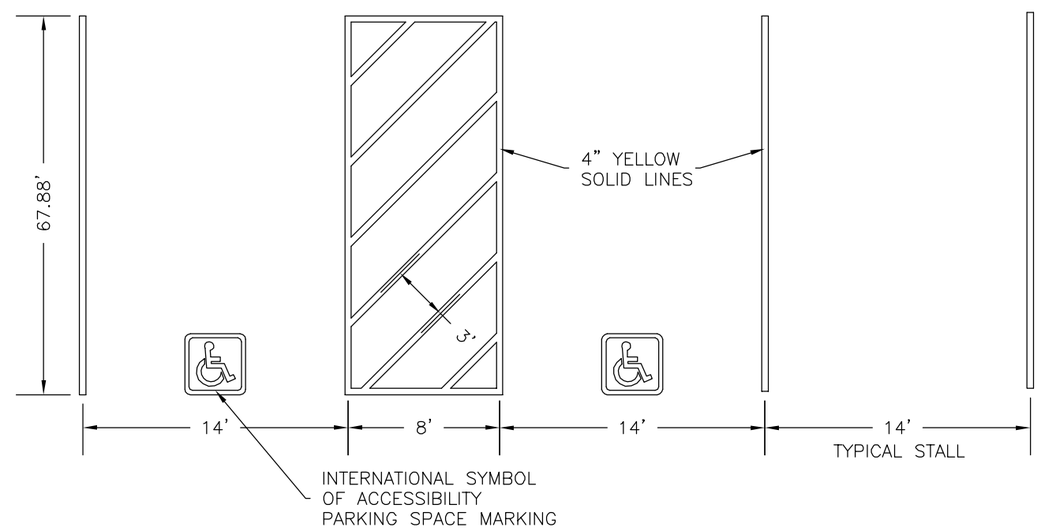

ACCESSIBLE WATER CRAFT

DESIGNED	HRT	10-09	CHECKED	CEJ	10-09
DRAWN	SCS	10-09	CHECKED	HRT	10-09
SURVEYED	BHT	10-09	CHECKED	LMS	10-09
R.O.W.			CHECKED		

johansen & tuttle ENGINEERING INC.
BOX 487, CASTLE DALE, UTAH 84513 (435) 381-2523
FAX (435) 381-2522 EMAIL jt@etv.net

STATE of UTAH DFCM
SANDHOLLOW STATE PARK
PWC PARKING LOT EXPANSION
PROJECT No. 09184510

PAINTING DETAILS

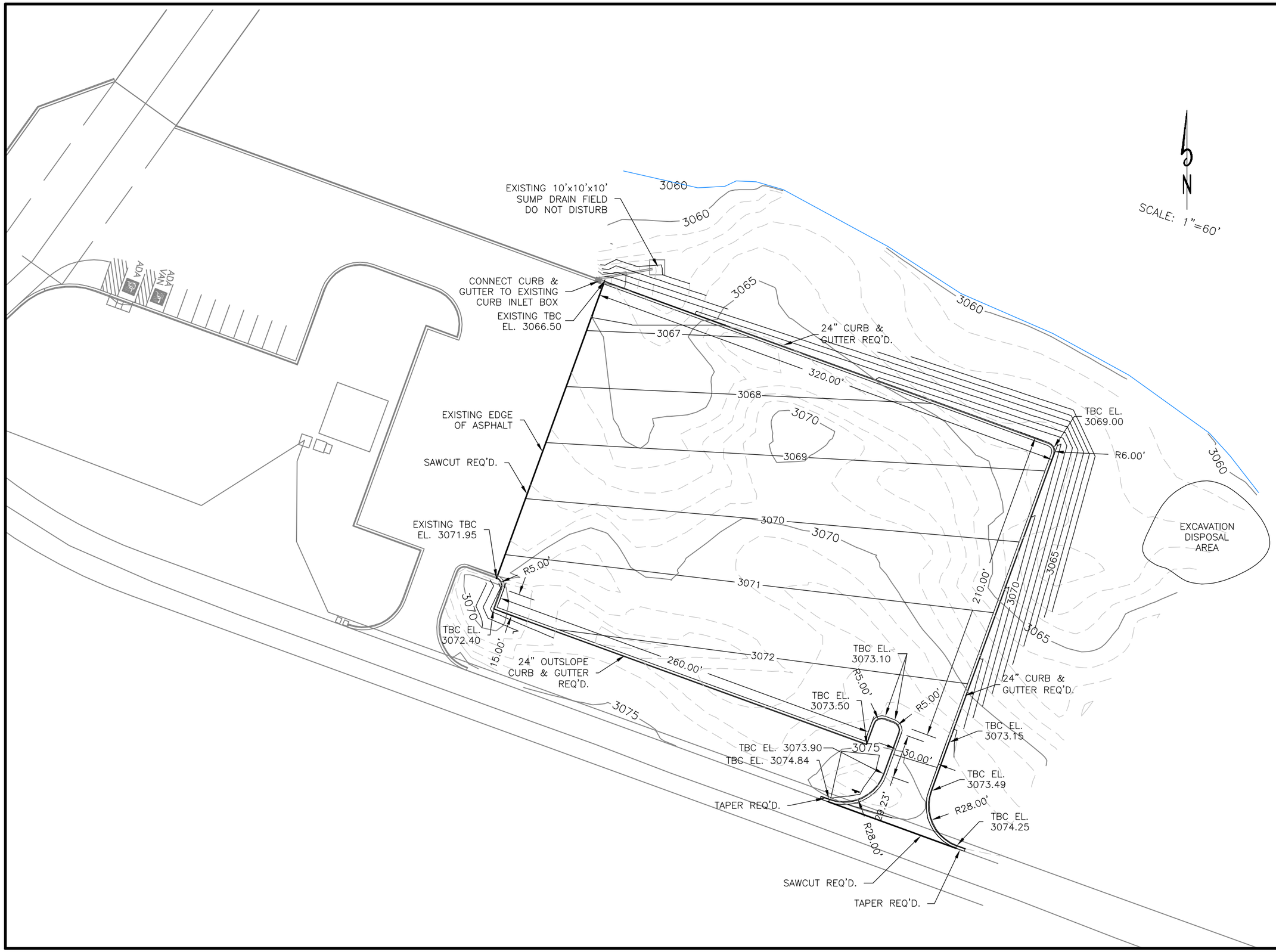

DESIGNED	HRT	10-09	CHECKED CEJ 10-09
DRAWN	SCS	10-09	CHECKED HRT 10-09
SURVEYED	BHT	10-09	CHECKED LMS 10-09
R.O.W.	LMS	10-09	CHECKED CEJ 10-09

johansen & tuttle ENGINEERING INC.
BOX 487, CASTLE DALE, UTAH 84513 (435) 381-2523
FAX (435) 381-2522 EMAIL jt@etv.net

STATE of UTAH DFCM
SANDHOLLOW STATE PARK
PWC PARKING LOT EXPANSION
PROJECT No. 09184510

SITE PLAN

PROJECT NO. 09184510

SHEET NO. 5

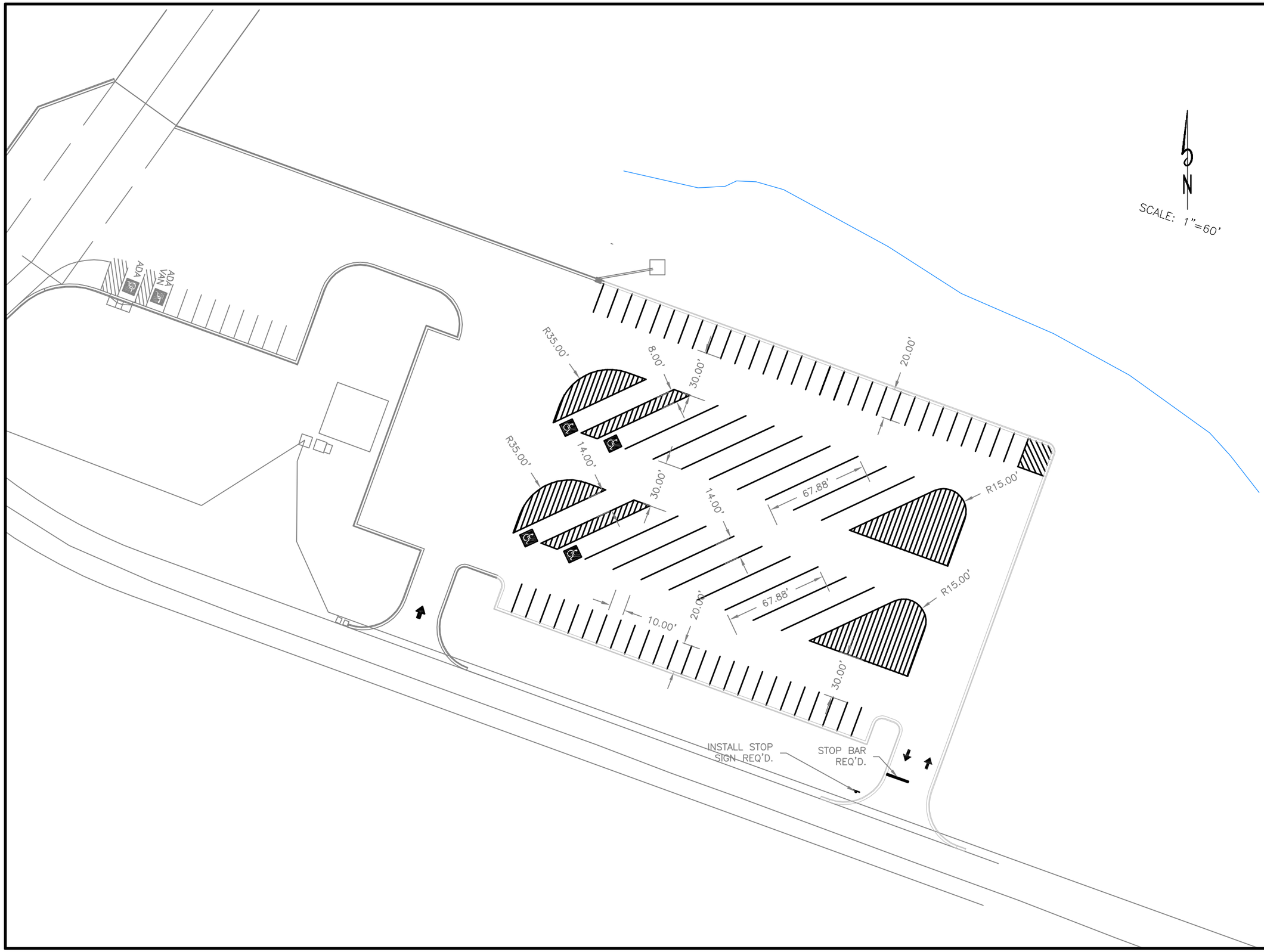

DESIGNED	HRT	10-09	CHECKED CEJ 10-09
DRAWN	SCS	10-09	CHECKED HRT 10-09
SURVEYED	BHT	10-09	CHECKED LMS 10-09
R.O.W.	LMS	10-09	CHECKED CEJ 10-09

johansen & tuttle ENGINEERING INC.
BOX 487, CASTLE DALE, UTAH 84513 (435) 381-2523
FAX (435) 381-2522 EMAIL jt@etv.net

STATE of UTAH DFCM
SANDHOLLOW STATE PARK
PWC PARKING LOT EXPANSION
PROJECT No. 09184510

STRIPING PLAN

PROJECT NO.
09184510

SHEET NO.
6