FIRE ALARM UPGRADE: UTAH STATE FAIR PARK

ADMINISTRATION BUILDING, BONNEVILLE BUILDING, SHOW RING & MULTIPURPOSE BARN

155 N 1000 W
SALT LAKE CITY, UTAH 84116

STATE OF UTAH
DEPARTMENT OF ADMINISTRATIVE SERVICES
DIVISION OF FACILITIES CONSTRUCTION AND MANAGEMENT
4110 State Office Building / SLC, Utah 84114 / (801) 538-3018

DFCM PROJECT NO. 09209370

PROTECTION CONSULTANTS, INC.
1199 SOUTH MAIN STREET, SUITE #101 - CENTERVILLE, UT 84012 - 801.295.6070

DRAWING SCHEDULE

SHEET	DRAWING TITLE
FA-1	SHOW RING, ADMINISTRATION AND BONNEVILLE BUILDING FIRE ALARM PLAN
FA-2	MULTIPURPOSE BARN FIRE ALARM PLAN
FA-3	DETAILS AND CALCULATIONS

CODE ANALYSIS (ADMINISTRATION BUILDING)

A. Applicable Codes:	Year
1. International Building Code	2006
2. International Fire Code	2006
3. ADA Accessibility Guidelines	1994
4. National Electrical Code (NFPA 70)	2008
5. International Mechanical Code	2006
6. Utah State Fire Marshall Rule R710-4	N/A
7. National Fire Alarm Code (NFPA 72)	2007

B. Building Parameters:	
1. Occupancy Group:	Business (B)
2. Building Area:	4,700 Sq.Ft.
3. Stories:	Two
4. Type of Construction:	Type IV-B
5. Fire Sprinklers:	No
6. Occupancy Seperations:	Single Occupancy

CODE ANALYSIS (BONNEVILLE BUILDING)

A. Applicable Codes:	Year
1. International Building Code	2006
2. International Fire Code	2006
3. ADA Accessibility Guidelines	1994
4. National Electrical Code (NFPA 70)	2008
5. International Mechanical Code	2006
6. Utah State Fire Marshall Rule R710-4	N/A
7. National Fire Alarm Code (NFPA 72)	2007

B. Building Parameters:	
1. Occupancy Group:	Assembly (A-3)
2. Building Area:	7,400 Sq.Ft.
3. Stories:	One
4. Type of Construction:	Type IV-B
5. Fire Sprinklers:	No
6. Occupancy Seperations:	Single Occupancy

CODE ANALYSIS (SHOW RING BUILDING)

A. Applicable Codes:	Year
1. International Building Code	2006
2. International Fire Code	2006
3. ADA Accessibility Guidelines	1994
4. National Electrical Code (NFPA 70)	2008
5. International Mechanical Code	2006
6. Utah State Fire Marshall Rule R710-4	N/A
7. National Fire Alarm Code (NFPA 72)	2007

B. Building Parameters:	
1. Occupancy Group:	Assembly (A-4)
2. Building Area:	8,100 Sq.Ft.
3. Stories:	Two
4. Type of Construction:	Type IV-B
5. Fire Sprinklers:	Yes
6. Occupancy Seperations:	Single Occupancy

CODE ANALYSIS (MULTIPURPOSE BARN BUILDING)

A. Applicable Codes:	Year
1. International Building Code	2006
2. International Fire Code	2006
3. ADA Accessibility Guidelines	1994
4. National Electrical Code (NFPA 70)	2008
5. International Mechanical Code	2006
6. Utah State Fire Marshall Rule R710-4	N/A
7. National Fire Alarm Code (NFPA 72)	2007

B. Building Parameters:	
1. Occupancy Group:	Storage (S-1)
2. Building Area:	26,000 Sq.Ft.
3. Stories:	One
4. Type of Construction:	Type IV-B
5. Fire Sprinklers:	Yes
6. Occupancy Seperations:	Single Occupancy

SCHEDULE OF DEFERRED SUBMITTALS

SUB #	DESCRIPTION
1	FIRE ALARM SYSTEM SHOP DRAWINGS
2	FIRE ALARM SYSTEM EQUIPMENT CUT SHEETS
3	FIRE ALARM SYSTEM BATTERY CALCULATIONS
4	FIRE ALARM SYSTEM VOLTAGE DROP CALCULATIONS

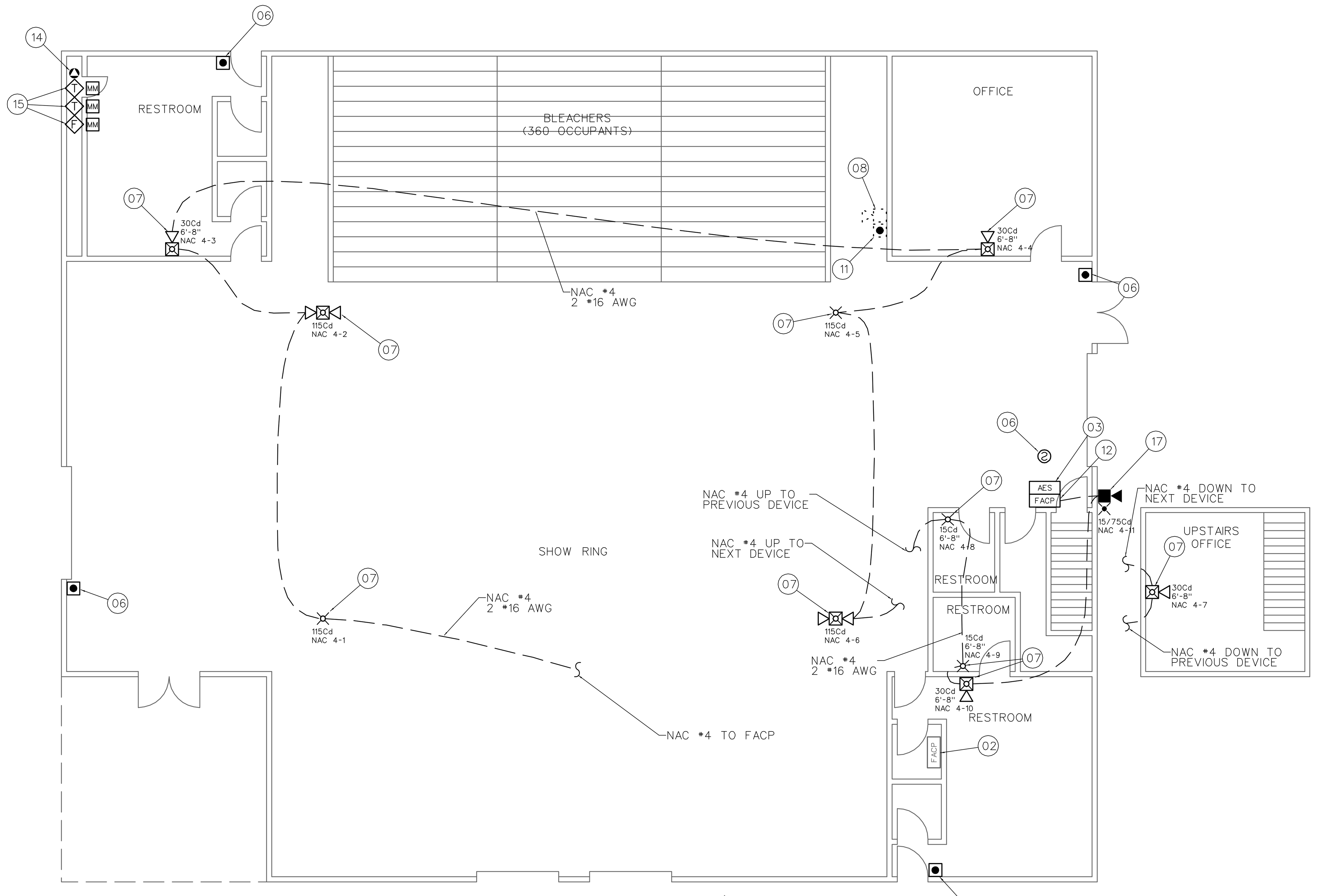

SHOW RING FIRE ALARM PLAN

1/8" = 1'-0"

0 8' 16' 32'

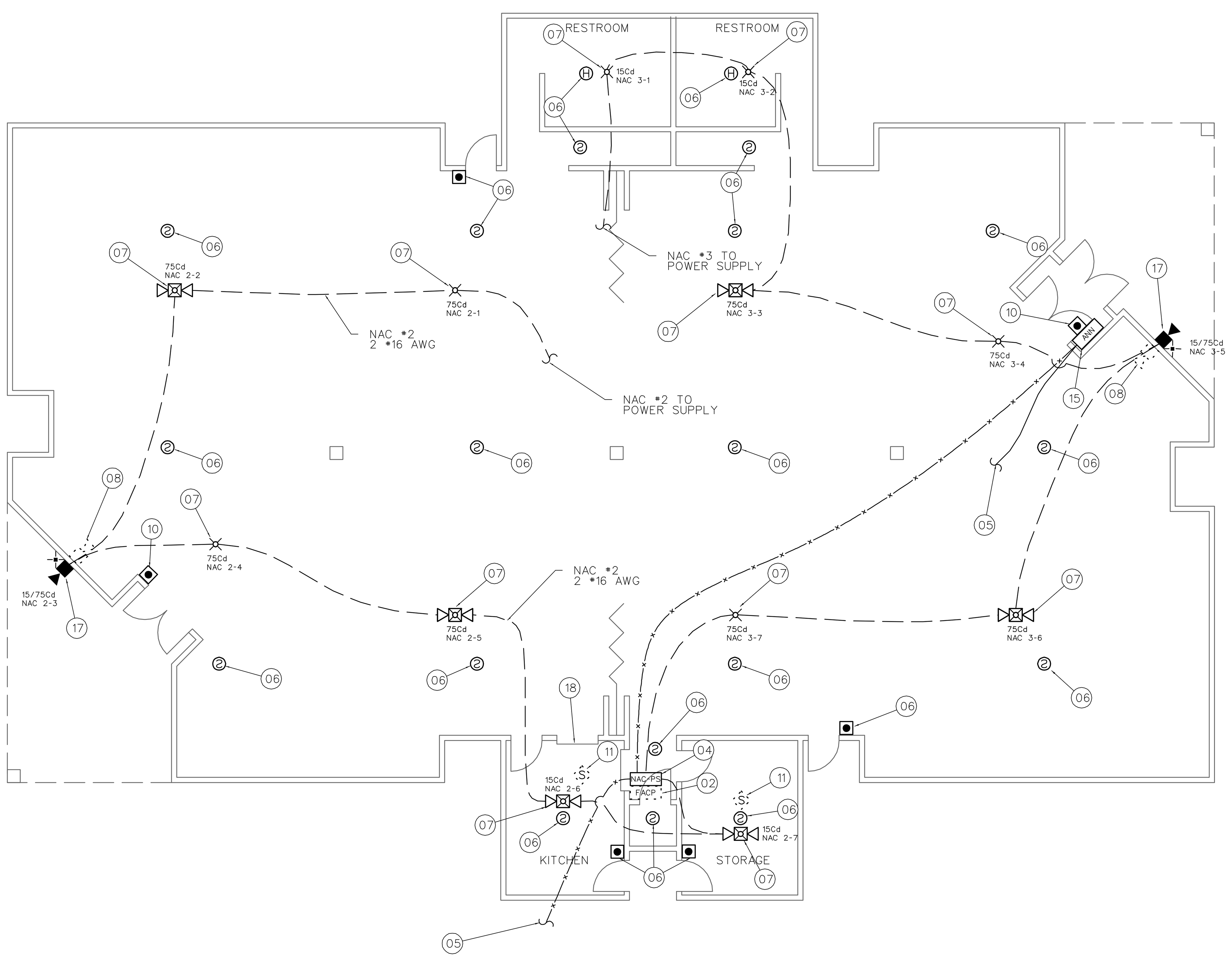

BONNEVILLE BUILDING FIRE ALARM PLAN

1/8" = 1'-0"

0 8' 16' 32'

1 VOLTAGE DROP CALCULATIONS ADMINISTRATION BUILDING - NAC #1

Physical Parameters		
Source Voltage		20.4 V
Wire Gauge	16 AWG	2580 cmil
Wire Resistivity		13 Ohm-cmil/ft

Ref.Start No.	Device/device Distance (feet)	Cumulative Distance (feet)	Light Intensity (Cd/dBA)	Device Current (Amps)	Circuit Current (Amps)	Device Voltage (Vdc)	% Voltage Drop	Ref. End No.
FACP	50	50	30	0.094	1.012	19.890	2.500	1
1	30	80	30	0.107	0.918	19.613	1.395	2
2	40	120	15	0.066	0.811	19.286	1.667	3
3	40	160	15	0.079	0.745	18.985	1.557	4
4	40	200	75	0.176	0.666	18.717	1.414	5
5	30	230	75	0.176	0.49	18.569	0.791	6
6	35	265	15/75	0.09	0.314	18.458	0.596	7
7	50	315	15	0.079	0.224	18.345	0.611	8
8	25	340	15	0.079	0.145	18.309	0.199	9
9	25	365	15	0.066	0.066	18.292	0.091	10

Total Circuit Length	Total Circuit Current	Total Circuit Voltage Drop %
365	**1.012**	**10.82**

2 VOLTAGE DROP CALCULATIONS BONNEVILLE BUILDING - NAC #2

Physical Parameters		
Source Voltage		20.4 V
Wire Gauge	16 AWG	2580 cmil
Wire Resistivity		13 Ohm-cmil/ft

Ref.Start No.	Device/device Distance (feet)	Cumulative Distance (feet)	Light Intensity (Cd/dBA)	Device Current (Amps)	Circuit Current (Amps)	Device Voltage (Vdc)	% Voltage Drop	Ref. End No.
FCPS	75	75	75	0.176	0.952	19.680	3.527	1
1	40	115	75	0.176	0.776	19.368	1.589	2
2	40	155	15/75	0.09	0.6	19.126	1.249	3
3	25	180	75	0.176	0.51	18.997	0.672	4
4	40	220	75	0.176	0.334	18.863	0.709	5
5	40	260	15	0.079	0.158	18.799	0.338	6
6	25	285	15	0.079	0.079	18.779	0.106	7

Total Circuit Length	Total Circuit Current	Total Circuit Voltage Drop %
285	**0.952**	**8.19**

3 VOLTAGE DROP CALCULATIONS BONNEVILLE BUILDING - NAC #3

Physical Parameters		
Source Voltage		20.4 V
Wire Gauge	16 AWG	2580 cmil
Wire Resistivity		13 Ohm-cmil/ft

Ref.Start No.	Device/device Distance (feet)	Cumulative Distance (feet)	Light Intensity (Cd/dBA)	Device Current (Amps)	Circuit Current (Amps)	Device Voltage (Vdc)	% Voltage Drop	Ref. End No.
FCPS	80	80	15	0.066	0.89	19.682	3.517	1
1	20	100	15	0.066	0.824	19.516	0.844	2
2	30	130	75	0.176	0.758	19.287	1.174	3
3	35	165	75	0.158	0.582	19.082	1.064	4
4	25	190	15/75	0.09	0.424	18.975	0.560	5
5	40	230	75	0.176	0.334	18.841	0.710	6
6	25	255	75	0.158	0.158	18.801	0.211	7

Total Circuit Length	Total Circuit Current	Total Circuit Voltage Drop %
255	**0.89**	**8.08**

4 VOLTAGE DROP CALCULATIONS SHOW RING - NAC #4

Physical Parameters		
Source Voltage		20.4 V
Wire Gauge	16 AWG	2580 cmil
Wire Resistivity		13 Ohm-cmil/ft

Ref.Start No.	Device/device Distance (feet)	Cumulative Distance (feet)	Light Intensity (Cd/dBA)	Device Current (Amps)	Circuit Current (Amps)	Device Voltage (Vdc)	% Voltage Drop	Ref. End No.
FACP	75	75	115	0.210	1.506	19.262	5.580	1
1	35	110	115	0.218	1.296	18.805	2.373	2
2	30	140	30	0.107	1.078	18.479	1.733	3
3	85	225	30	0.107	0.971	17.647	4.501	4
4	30	255	115	0.210	0.864	17.386	1.480	5
5	40	295	115	0.218	0.654	17.122	1.516	6
6	35	330	30	0.107	0.436	16.968	0.898	7
7	25	355	15	0.066	0.329	16.885	0.488	8
8	25	380	15	0.066	0.263	16.819	0.392	9
9	10	390	30	0.107	0.197	16.799	0.118	10
10	30	420	15/75	0.09	0.069	16.778	0.124	11

Total Circuit Length	Total Circuit Current	Total Circuit Voltage Drop %
420	**1.506**	**19.20**

5 FACP BATTERY CALCULATIONS ADMINISTRATION BUILDING

SILENT KNIGHT 5820XL FIRE PANEL CALCULATIONS			REQUIRED CURRENT (STANDBY)		REQUIRED CURRENT (ALARM)	
PART	DESCRIPTION	QTY	EACH (A)	TOTAL (A)	EACH (A)	TOTAL (A)
5820XL	CONTROL PANEL	1	0.2150	0.2150	0.3850	0.3850
5860	ANNUNCIATOR	1	0.0200	0.0200	0.0250	0.0250
SK-PULL-DA	PULL STATION	4	0.0006	0.0024	0.0006	0.0024
SK-PHOTO	SMOKE DETECTOR	20	0.0006	0.0120	0.0006	0.0120
SK-DUCT	DUCT SMOKE DETECTOR	0	0.0006	0.0000	0.0006	0.0000
SK-MINIMON	MONITOR MODULE	0	0.0006	0.0000	0.0006	0.0000
RIXSON 996	DOOR HOLD-OPEN DEVICE	0	0.0200	0.0000	0.0000	0.0000
SK-HEAT	HEAT DETECTOR	2	0.0006	0.0012	0.0006	0.0012
NAC #1	NOTIFICATION CIRCUIT	1	0.0000	0.0000	1.0120	1.0120
	TOTAL			0.2506		1.4376
SECONDARY STANDBY BATTERY CALCULATIONS: (STANDBY) X 24 HOUR + (ALARM) X 5 MINUTES + 10%=						6.7

6 REMOTE POWER SUPPLY BATTERY CALCULATIONS BONNEVILLE BUILDING

REMOTE POWER SUPPLY CALCULATIONS			REQUIRED CURRENT (STANDBY)		REQUIRED CURRENT (ALARM)	
PART	DESCRIPTION	QTY	EACH (A)	TOTAL (A)	EACH (A)	TOTAL (A)
5895XL	POWER SUPPLY	1	0.0400	0.0400	0.1600	0.1600
NAC #2	NAC CIRCUIT	1	0.0000	0.0000	0.9520	0.9520
NAC #3	NAC CIRCUIT	1	0.0000	0.0000	0.8900	0.8900
5815XL	SLC EXPANDER	1	0.1250	0.1250	0.1250	0.1250
SK-PHOTO	SMOKE DETECTOR	18	0.0006	0.0108	0.0006	0.0108
SK-PULL-DA	PULL STATION	6	0.0006	0.0036	0.0006	0.0036
SK-HEAT	HEAT DETECTOR	2	0.0006	0.0012	0.0006	0.0012
SK-MINIMON	INPUT MODULE	0	0.0006	0.0000	0.0006	0.0000
SK-DUCT	DUCT SMOKE DETECTOR	0	0.0006	0.0000	0.0006	0.0000
	TOTAL			0.1806		2.1426
SECONDARY STANDBY BATTERY CALCULATIONS: (STANDBY) X 24 HOUR + (ALARM) X 5 MINUTES + 10%=						4.964

7 FACP BATTERY CALCULATIONS SHOW RING

SILENT KNIGHT 5700 FIRE PANEL CALCULATIONS			REQUIRED CURRENT (STANDBY)		REQUIRED CURRENT (ALARM)	
PART	DESCRIPTION	QTY	EACH (A)	TOTAL (A)	EACH (A)	TOTAL (A)
5820XL	CONTROL PANEL	1	0.2000	0.2000	0.3250	0.3250
5860	ANNUNCIATOR	0	0.0200	0.0000	0.0250	0.0000
SK-PULL-DA	PULL STATION	4	0.0006	0.0024	0.0006	0.0024
SK-PHOTO	SMOKE DETECTOR	20	0.0006	0.0120	0.0006	0.0120
SK-DUCT	DUCT SMOKE DETECTOR	0	0.0006	0.0000	0.0006	0.0000
SK-MINIMON	MONITOR MODULE	0	0.0006	0.0000	0.0006	0.0000
RIXSON 996	DOOR HOLD-OPEN DEVICE	0	0.0200	0.0000	0.0000	0.0000
SK-HEAT	HEAT DETECTOR	2	0.0006	0.0012	0.0006	0.0012
NAC #1	NOTIFICATION CIRCUIT	1	0.0000	0.0000	1.5220	1.5220
	TOTAL			0.2156		1.8626
SECONDARY STANDBY BATTERY CALCULATIONS: (STANDBY) X 24 HOUR + (ALARM) X 5 MINUTES + 10%=						5.9

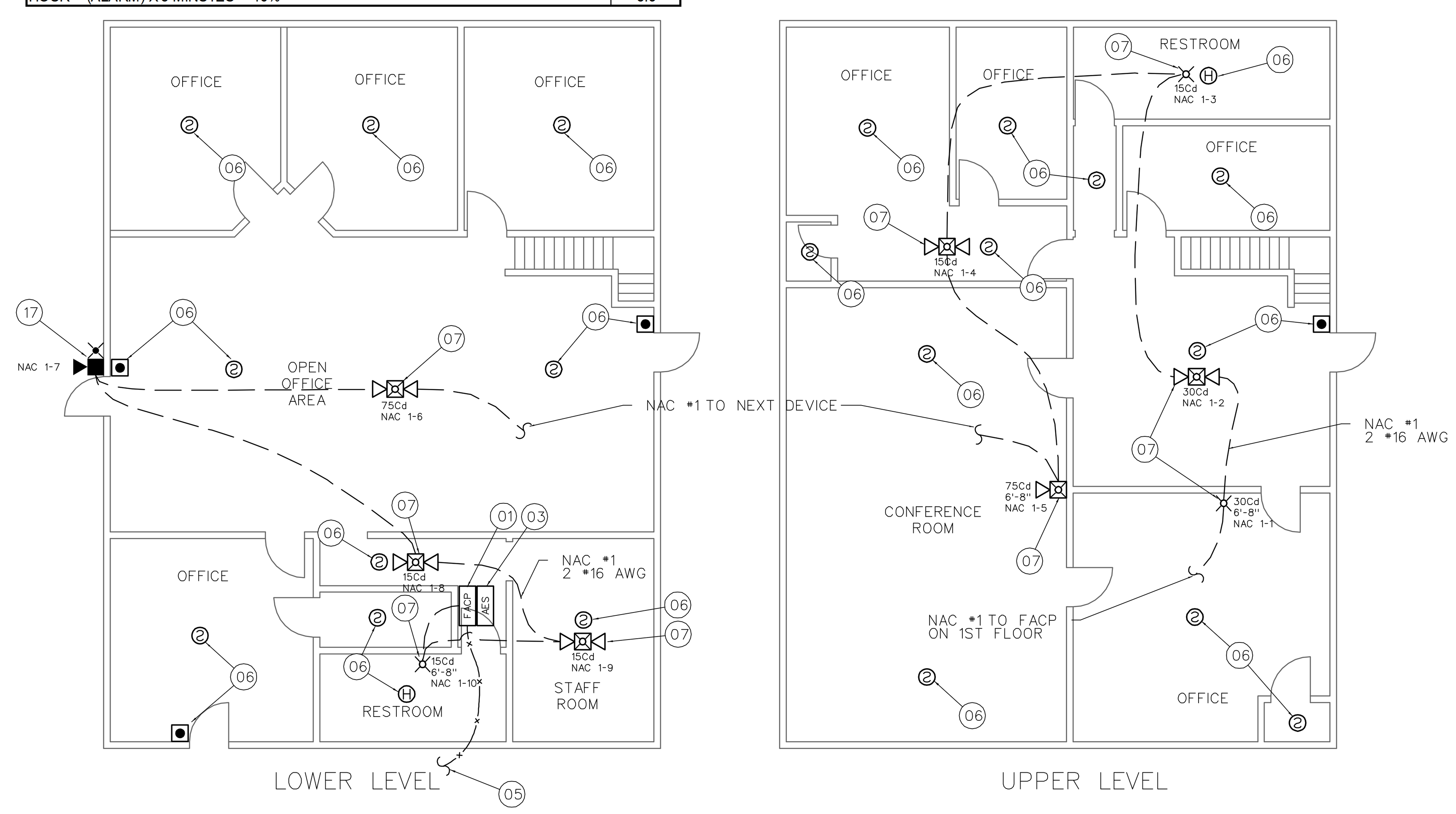

ADMINISTRATION BUILDING FIRE ALARM PLAN

1/8" = 1'-0"

0 8' 16' 32'

FIRE ALARM SYSTEM KEY NOTES

01 FURNISH AND INSTALL NEW ADDRESSABLE FACP (SILENT KNIGHT 5820XL OR EQUAL). FACP SHALL PROVIDE ALL REQUIRED PROTECTED PREMISES FIRE SAFETY FUNCTIONS (ACTIVATION OF LOCAL ALARMS). FACP SHALL RELAY FIRE ALARM, SUPERVISORY SIGNALS TO OFF-PREMISE MONITORING COMPANY SELECTED BY OWNER NEW RADIO TRANSMITTER. PROVIDE NEW 120 VAC POWER CIRCUIT FROM NEARBY POWER DISTRIBUTION PANEL.

02 REMOVE EXISTING FIRE ALARM CONTROL PANEL (FACP), MODULES AND ENCLOSURE.

03 FURNISH AND INSTALL NEW WIRELESS TRANSMITTER TO PROVIDE OFF-PREMISE MONITORING FOR NEW FIRE ALARM SYSTEM. AES MODEL AES-7744F. CONFIGURE TRANSMITTER TO RELAY FIRE ALARM AND SUPERVISORY SIGNALS TO OFF-PREMISE MONITORING COMPANY SELECTED BY OWNER.

04 FURNISH AND INSTALL NEW INTELLIGENT POWER SUPPLY (SILENT KNIGHT 5895XL OR EQUAL) TO PROVIDE 24 VDC POWER TO NEW NOTIFICATION APPLIANCE CIRCUITS. PROVIDE BACKUP BATTERIES SIZED TO MEET STANDBY DEMAND OF POWER SUPPLY FOR 24 HOURS WITH AN ADDITIONAL RESERVE FOR 5 MINUTES OF ALARM POWER. NUMBER AND CAPACITY OF POWER SUPPLIES AND LAYOUT OF NOTIFICATION APPLIANCE CIRCUITS SHALL LIMIT VOLTAGE DROP BETWEEN POWER SUPPLY AND MOST REMOTE DEVICE ON CIRCUIT TO LESS THAN 20%. PROVIDE MODULES AS REQUIRED TO SYNCHRONIZE STROBE FLASSHED OF ALL NOTIFICATION APPLIANCES WITHIN A SINGLE FIELD OF VIEW. PROVIDE NEW 120 VAC POWER FROM DEDICATED CIRCUIT.

05 EXISTING BURIED CONDUIT BETWEEN ADMINISTRATION BUILDING AND BONNEVILLE BUILDING BUILDING TO BE RE-USED. PULL NEW WIRE IN EXISTING CONDUIT TO ENABLE CONNECTION OF INTELLIGENT POWER SUPPLY IN BONNEVILLE BUILDING TO FACP IN ADMINISTRATION BUILDING VIA THE S-BUS CIRCUIT. CONTRACTOR SHALL FIELD VERIFY LOCATION OF CONDUIT STUB UP IN BOTH BUILDINGS. S-BUS CIRCUIT SHALL BE CLASS A BUT SUPPLY AND RETURN CONDUCTORS MAY BE RUN IN SAME UNDERGROUND CONDUIT. PROVIDE ISOLATOR MODULES ON S-BUS AT EACH POINT OF ENTRY/EXIT TO BUILDINGS.

06 FURNISH AND INSTALL NEW SMOKE OR HEAT DETECTOR OR MANUAL PULL STATION AS SHOWN ON PLAN. CONNECT NEW DEVICE TO NEW SIGNALLING LINE CIRCUIT AND PROGRAM ACTIVATION OF DEVICE AS A FIRE ALARM SIGNAL.

07 FURNISH AND INSTALL NEW NOTIFICATION APPLIANCE AS SHOWN ON PLAN. CONNECT NEW DEVICE TO CORRESPONDING NOTIFICATION APPLIANCE CIRCUIT.

08 EXISTING NOTIFICATION APPLIANCE TO BE REMOVED. REMOVE DEVICE, J-BOX, CONDUIT AND WIRING BACK TO FACP. PATCH, REPAIR AND/PR PAINT WALL SURFACE TO MATCH SURROUNDING AREA.

09 REPLACE EXISTING NOTIFICATION APPLIANCE WITH NEW NOTIFICATION APPLIANCE AS SHOWN ON PLAN. CONNECT NEW DEVICE TO CORRESPONDING NOTIFICATION APPLIANCE CIRCUIT. EXISTING CONDUIT AND J-BOXES MAY BE RE-USED IF IN GOOD CONDITION.

10 REPLACE EXISTING MANUAL PULL STATION WITH NEW MANUAL PULL STATION AS SHOWN ON PLAN. CONNECT NEW DEVICE TO NEW SIGNALLING LINE CIRCUIT AND PROGRAM ACTIVATION OF DEVICE AS A FIRE ALARM SIGNAL. EXISTING CONDUIT AND J-BOXES MAY BE RE-USED IF IN GOOD CONDITION.

11 REMOVE EXISTING INITIATING DEVICE, CONDUIT AND J-BOX. PATCH, REPAIR AND PAINT AS NECESSARY TO MATCH SURROUNDING AREA.

12 FURNISH AND INSTALL NEW ADDRESSABLE FACP (SILENT KNIGHT 5700 OR EQUAL). FACP SHALL PROVIDE ALL REQUIRED PROTECTED PREMISES FIRE SAFETY FUNCTIONS (ACTIVATION OF LOCAL ALARMS). FACP SHALL RELAY FIRE ALARM, SUPERVISORY AND TROUBLE SIGNALS TO OFF-PREMISE MONITORING COMPANY SELECTED BY OWNER USING NEW RADIO TRANSMITTER. PROVIDE NEW 120 VAC DEDICATED POWER CIRCUIT FROM NEARBY POWER DISTRIBUTION PANEL.

13 REPLACE EXISTING FIRE ALARM CONTROL PANEL (FACP) WITH NEW ADDRESSABLE FACP (SILENT KNIGHT 5820XL OR EQUAL). FACP SHALL PROVIDE ALL REQUIRED PROTECTED PREMISES FIRE SAFETY FUNCTIONS (ACTIVATION OF LOCAL ALARMS). FACP SHALL RELAY FIRE ALARM, SUPERVISORY AND TROUBLE SIGNALS TO OFF-PREMISE USING DIGITAL COMMUNICATOR AND EXISTING RADIO TRANSMITTER. EXISTING 120 VAC DEDICATED POWER MAY BE RE-USED.

14 EXISTING FIRE SPRINLKER RISER (WET OR DRY-PIPE) WITH WATER FLOW, VALVE SUPERVISORY AND OR AIR PRESSURE SUPERVISORY SWITCHES TO REMAIN. FURNISH AND INSTALL NEW ADDRESSABLE MODULES ON TO PROVIDE OFF-PREMISE MONITORING OF FIRE SPRINKLER SYSTEM. CONNECT NEW ADDRESSABLE MODULES TO NEW SIGNALLING LINE CIRCUIT.

15 FURNISH AND INSTALL NEW REMOTE ANNUNCIATOR FOR ADDRESSABLE FIRE ALARM SYSTEM AS SHOWN ON DRAWING. CONNECT TO NEW S-BUS.

16 EXISTING WIRELESS TRANSMITTER TO PROVIDE OFF-PREMISE MONITORING FOR NEW FIRE ALARM SYSTEM. CONNECT TO NEW FIRE ALARM SYSTEM AND TEST TO ENSURE PROPER OPERATION. REPAIR OR REPLACE AS NECESSARY.

17 FURNISH AND INSTALL NEW WEATHER-PROOF HORN/STROBE AS SHOWN ON PLAN. CONNECT NEW DEVICE TO CORRESPONDING NOTIFICATION APPLIANCE CIRCUIT.

18 EXISTING ROLL DOWN FIRE DOORS NO LONGER IN USE. DISCONNECT FROM EXISTING FACP.

FIRE ALARM EQUIPMENT LEGEND

DEVICE	DESCRIPTION	MOUNTING	REMARKS
FACP	NEW ADDRESSABLE FIRE ALARM CONTROL PANEL	SURFACE MOUNT ON WALL	SILENT KNIGHT SEE KEYNOTES FOR MODEL
FACP	EXISTING FIRE ALARM CONTROL PANEL TO BE REMOVED	EXISTING TO BE REMOVED	EXISTING TO BE REMOVED
ANN	NEW FIRE ALARM REMOTE ANNUNCIATOR PANEL	MOUNT ON NEW OR EXISTING J-BOX RECESSED INTO WALL.	SILENT KNIGHT 5860 OR EQUAL
NAC-PS	NEW INTELLIGENT POWER SUPPLY.	SURFACE MOUNT ON WALL	TO POWER NOTIFICATION APPLIANCE CIRCUITS. SILENT KNIGHT 5895XL OR EQUAL
AES	EXISTING OR NEW WIRELESS TRANSMITTER.	WALL MOUNT ABOVE FACP	WIRELESS TRANSMITTER TO SEND FIRE ALARM, TROUBLE AND SUPERVISORY SIGNAL AES MODEL AES-7744F
	NEW ADDRESSABLE PHOTOELECTRIC SMOKE DETECTOR	CEILING MOUNTED ON RECESSED J-BOX.	INSTALL NEW SMOKE DETECTORS AS SHOWN ON DRAWING AT A MAXIMUM SPACING OF 30' O.C. SILENT KNIGHT SK-PHOTO OR EQUAL
S	EXISTING SMOKE DETECTOR	EXISTING CEILING MOUNT	REMOVE EXISTING DEVICE, WIRING AND J-BOX.
H	NEW ADDRESSABLE HEAT DETECTOR (FIXED TEMP.)	CEILING MOUNTED ON RECESSED J-BOX.	INSTALL NEW HEAT DETECTORS IN ALL ROOMS WITHOUT SMOKE DETECTORS AT A MAXIMUM SPACING OF 50' O.C. SILENT KNIGHT SK-HEAT OR EQUAL
	NEW ADDRESSABLE MANUAL PULL STATION.	WALL MOUNT AT 48" AFF ON NEW OR EXISTING J-BOX.	SILENT KNIGHT SK-PULL-DA OR EQUAL
	EXISTING MANUAL PULL STATION TO BE REMOVED	EXISTING TO BE REMOVED	EXISTING TO BE REMOVED
MM	NEW ADDRESSABLE MONITOR MODULE	MOUNT ON J-BOX WITHIN 3' OF DEVICE OR CIRCUIT MONITORED	TO PROVIDE MONITORING OF CONVENTIONAL FIRE ALARM DEVICES. SILENT KNIGHT SK-MINIMON OR EQUAL
	NEW FIRE ALARM HORN/STROBE	CEILING MOUNTED ON RECESSED J-BOX.	CANDELA RATING OF STROBE SHALL BE AS INDICATED ON DRAWINGS. STROBES SHALL BE SYNCHRONIZED WITH ALL OTHER STROBES IN VIEW. DEVICE SHALL BE POWERED FROM FACP OR REMOTE NOTIFICATION APPLIANCE CIRCUIT POWER SUPPLY. COLOR SHALL BE RED SYSTEM SENSOR PC2W OR EQUAL
	NEW FIRE ALARM HORN/STROBE	WALL MOUNTED ON RECESSED J-BOX.	CANDELA RATING OF STROBE SHALL BE AS INDICATED ON DRAWINGS. STROBES SHALL BE SYNCHRONIZED WITH ALL OTHER STROBES IN VIEW. DEVICE SHALL BE POWERED FROM FACP OR REMOTE NOTIFICATION APPLIANCE CIRCUIT POWER SUPPLY. COLOR SHALL BE RED SYSTEM SENSOR PC2W OR EQUAL
	NEW FIRE ALARM STROBE	CEILING MOUNTED ON RECESSED J-BOX.	CANDELA RATING OF STROBE SHALL BE AS INDICATED ON DRAWINGS. STROBES SHALL BE SYNCHRONIZED WITH ALL OTHER STROBES IN VIEW. DEVICE SHALL BE POWERED FROM FACP OR REMOTE NOTIFICATION APPLIANCE CIRCUIT POWER SUPPLY. COLOR SHALL BE RED SYSTEM SENSOR SCW OR EQUAL
	NEW EXTERIOR FIRE ALARM HORN/STROBE	WALL MOUNTED ON NEW WEATHERPROOF J-BOX AT HEIGHT INDIACTED ON DWGS	CANDELA RATING OF STROBE TO BE A MINIMUM OF 15/75 Cd. DEVICE SHALL BE POWERED BY FACP OR REMOTE POWER SUPPLY. COLOR SHALL BE RED. DEVICE SHALL BE LISTED FOR EXTERIOR INSTALLATION
	EXISTING FIRE ALARM HORN/STROBE	EXISTING TO BE REMOVED.	REMOVE EXISTING DEVICE, WIRING J-BOX AND CONDUIT.
	EXISTING FIRE ALARM HORN/STROBE	EXISTING TO BE REMOVED.	REMOVE EXISTING DEVICE, WIRING J-BOX AND CONDUIT.
	EXISTING FIRE ALARM HORN	EXISTING TO BE REMOVED.	REMOVE EXISTING DEVICE, WIRING J-BOX AND CONDUIT.

PROTECTION CONSULTANTS, INC.
Fire Protection Engineers
-Since 1983-
182 South 600 East Suite 202
Salt Lake City, UT 84102
PHONE:(801)-596-1601 • FAX:(801)-596-2561
DOMAIN: pciut.com

JOB NO. 104485
DWG ISSUE: BID ISSUE
DRAWN BY: BBH
CHECKED BY: GTJ

REVISIONS:

DRAWING DATE: 03/01/10
REVISION DATE:

UTAH STATE FAIR PARK
155 NORTH 1000 WEST
OGDEN, UTAH

FIRE ALARM SYSTEM UPGRADE
DFCM PROJECT #09209370

SHOW RING, ADMINISTRATION AND BONNEVILLE BUILDING FIRE ALARM PLAN

FA-1

1 VOLTAGE DROP CALCULATIONS MULTIPURPOSE BARN - NAC #5

Physical Parameters		
Source Voltage		20.4 V
Wire Gauge	16 AWG	2580 cmil
Wire Resistivity		13 Ohm-cmil/ft

Ref.Start No.	Device/device Distance (feet)	Cumulative Distance (feet)	Light Intensity (Cd/dBA)	Device Current (Amps)	Circuit Current (Amps)	Device Voltage (Vdc)	% Voltage Drop	Ref. End No.
FCPS	80	80	115	0.210	1.284	19.365	5.074	1
1	60	140	115	0.218	1.074	18.715	3.353	2
2	60	200	115	0.210	0.856	18.198	2.766	3
3	60	260	115	0.218	0.646	17.807	2.146	4
4	60	320	115	0.210	0.428	17.548	1.453	5
5	60	380	115	0.218	0.218	17.417	0.751	6

Total Circuit Length	Total Circuit Current	Total Circuit Voltage Drop %
380	**1.284**	**15.54**

2 VOLTAGE DROP CALCULATIONS MULTIPURPOSE BARN - NAC #6

Physical Parameters		
Source Voltage		20.4 V
Wire Gauge	16 AWG	2580 cmil
Wire Resistivity		13 Ohm-cmil/ft

Ref.Start No.	Device/device Distance (feet)	Cumulative Distance (feet)	Light Intensity (Cd/dBA)	Device Current (Amps)	Circuit Current (Amps)	Device Voltage (Vdc)	% Voltage Drop	Ref. End No.
FCPS	130	130	115	0.210	1.284	18.718	8.246	1
1	60	190	115	0.218	1.074	18.068	3.469	2
2	60	250	115	0.210	0.856	17.551	2.865	3
3	60	310	115	0.218	0.646	17.160	2.226	4
4	60	370	115	0.210	0.428	16.901	1.508	5
5	60	430	115	0.218	0.218	16.770	0.780	6

Total Circuit Length	Total Circuit Current	Total Circuit Voltage Drop %
430	**1.284**	**19.09**

3 VOLTAGE DROP CALCULATIONS MULTIPURPOSE BARN - NAC #7

Physical Parameters		
Source Voltage		20.4 V
Wire Gauge	16 AWG	2580 cmil
Wire Resistivity		13 Ohm-cmil/ft

Ref.Start No.	Device/device Distance (feet)	Cumulative Distance (feet)	Light Intensity (Cd/dBA)	Device Current (Amps)	Circuit Current (Amps)	Device Voltage (Vdc)	% Voltage Drop	Ref. End No.
FCPS	70	70	15	0.066	0.38	20.132	1.314	1
1	20	90	15	0.079	0.314	20.069	0.314	2
2	40	130	15	0.066	0.235	19.974	0.472	3
3	20	150	15	0.079	0.169	19.940	0.171	4
4	50	200	15/75	0.09	0.09	19.895	0.227	5

Total Circuit Length	Total Circuit Current	Total Circuit Voltage Drop %
200	**0.38**	**2.50**

4 FACP BATTERY CALCULATIONS MULTIPURPOSE BARN

SILENT KNIGHT 5820XL FIRE PANEL CALCULATIONS			REQUIRED CURRENT (STANDBY)		REQUIRED CURRENT (ALARM)	
PART	DESCRIPTION	QTY	EACH (A)	TOTAL (A)	EACH (A)	TOTAL (A)
5820XL	CONTROL PANEL	1	0.2150	0.2150	0.3850	0.3850
5860	ANNUNCIATOR	1	0.0200	0.0200	0.0250	0.0250
SK-PULL-DA	PULL STATION	12	0.0006	0.0072	0.0006	0.0072
SK-PHOTO	SMOKE DETECTOR	1	0.0006	0.0006	0.0006	0.0006
SK-DUCT	DUCT SMOKE DETECTOR	0	0.0006	0.0000	0.0006	0.0000
SK-MINIMON	MONITOR MODULE	4	0.0006	0.0024	0.0006	0.0024
RIXSON 996	DOOR HOLD-OPEN DEVICE	0	0.0200	0.0000	0.0000	0.0000
SK-HEAT	HEAT DETECTOR	0	0.0006	0.0000	0.0006	0.0000
NAC #1	NOTIFICATION CIRCUIT	1	0.0000	0.0000	1.2840	1.2840
NAC #2	NOTIFICATION CIRCUIT	1	0.0000	0.0000	1.2840	1.2840
NAC #3	NOTIFICATION CIRCUIT	1	0.0000	0.0000	0.3800	0.3800
	TOTAL			0.2452		3.3682
SECONDARY STANDBY BATTERY CALCULATIONS: (STANDBY) X 24 HOUR + (ALARM) X 5 MINUTES + 10%=						6.8

MULTIPURPOSE BARN FIRE ALARM PLAN

1/8" = 1'-0"

0 8' 16' 32'

FIRE ALARM SYSTEM KEY NOTES

01 FURNISH AND INSTALL NEW ADDRESSABLE FACP (SILENT KNIGHT 5820XL OR EQUAL). FACP SHALL PROVIDE ALL REQUIRED PROTECTED PREMISES FIRE SAFETY FUNCTIONS (ACTIVATION OF LOCAL ALARMS). FACP SHALL RELAY FIRE ALARM, SUPERVISORY SIGNALS TO OFF-PREMISE MONITORING COMPANY SELECTED BY OWNER NEW RADIO TRANSMITTER. PROVIDE NEW 120 VAC POWER CIRCUIT FROM NEARBY POWER DISTRIBUTION PANEL.

02 REMOVE EXISTING FIRE ALARM CONTROL PANEL (FACP), MODULES AND ENCLOSURE.

03 FURNISH AND INSTALL NEW WIRELESS TRANSMITTER TO PROVIDE OFF-PREMISE MONITORING FOR NEW FIRE ALARM SYSTEM. AES MODEL AES-7744F. CONFIGURE TRANSMITTER TO RELAY FIRE ALARM AND SUPERVISORY SIGNALS TO OFF-PREMISE MONITORING COMPANY SELECTED BY OWNER.

04 FURNISH AND INSTALL NEW INTELLIGENT POWER SUPPLY (SILENT KNIGHT 5895XL OR EQUAL) TO PROVIDE 24 VDC POWER TO NEW NOTIFICATION APPLIANCE CIRCUITS. PROVIDE BACKUP BATTERIES SIZED TO MEET STANDBY DEMAND OF POWER SUPPLY FOR 24 HOURS WITH AN ADDITIONAL RESERVE FOR 5 MINUTES OF ALARM POWER. NUMBER AND CAPACITY OF POWER SUPPLIES AND LAYOUT OF NOTIFICATION APPLIANCE CIRCUITS SHALL LIMIT VOLTAGE DROP BETWEEN POWER SUPPLY AND MOST REMOTE DEVICE ON CIRCUIT TO LESS THAN 20%. PROVIDE MODULES AS REQUIRED TO SYNCHRONIZE STROBE FLASSHED OF ALL NOTIFICATION APPLIANCES WITHIN A SINGLE FIELD OF VIEW. PROVIDE NEW 120 VAC POWER FROM DEDICATED CIRCUIT.

05 EXISTING BURIED CONDUIT BETWEEN ADMINISTRATION BUILDING AND BONNEVILLE BUILDING BUILDING TO BE RE-USED. PULL NEW WIRE IN EXISTING CONDUIT TO ENABLE CONNECTION OF INTELLIGENT POWER SUPPLY IN BONNEVILLE BUILDING TO FACP IN ADMINISTRATION BUILDING VIA THE S-BUS CIRCUIT. CONTRACTOR SHALL FIELD VERIFY LOCATION OF CONDUIT STUB UP IN BOTH BUILDINGS. S-BUS CIRCUIT SHALL BE CLASS A BUT SUPPLY AND RETURN CONDUCTORS MAY BE RUN IN SAME UNDERGROUND CONDUIT. PROVIDE ISOLATOR MODULES ON S-BUS AT EACH POINT OF ENTRY/EXIT TO BUILDINGS.

06 FURNISH AND INSTALL NEW SMOKE OR HEAT DETECTOR OR MANUAL PULL STATION AS SHOWN ON PLAN. CONNECT NEW DEVICE TO NEW SIGNALLING LINE CIRCUIT AND PROGRAM ACTIVATION OF DEVICE AS A FIRE ALARM SIGNAL.

07 FURNISH AND INSTALL NEW NOTIFICATION APPLIANCE AS SHOWN ON PLAN. CONNECT NEW DEVICE TO CORRESPONDING NOTIFICATION APPLIANCE CIRCUIT.

08 EXISTING NOTIFICATION APPLIANCE TO BE REMOVED. REMOVE DEVICE, J-BOX, CONDUIT AND WIRING BACK TO FACP. PATCH, REPAIR AND/PR PAINT WALL SURFACE TO MATCH SURROUNDING AREA.

09 REPLACE EXISTING NOTIFICATION APPLIANCE WITH NEW NOTIFICATION APPLIANCE AS SHOWN ON PLAN. CONNECT NEW DEVICE TO CORRESPONDING NOTIFICATION APPLIANCE CIRCUIT. EXISTING CONDUIT AND J-BOXES MAY BE RE-USED IF IN GOOD CONDITION.

10 REPLACE EXISTING MANUAL PULL STATION WITH NEW MANUAL PULL STATION AS SHOWN ON PLAN. CONNECT NEW DEVICE TO NEW SIGNALLING LINE CIRCUIT AND PROGRAM ACTIVATION OF DEVICE AS A FIRE ALARM SIGNAL. EXISTING CONDUIT AND J-BOXES MAY BE RE-USED IF IN GOOD CONDITION.

11 REMOVE EXISTING INITIATING DEVICE, CONDUIT AND J-BOX. PATCH, REPAIR AND PAINT AS NECESSARY TO MATCH SURROUNDING AREA.

12 FURNISH AND INSTALL NEW ADDRESSABLE FACP (SILENT KNIGHT 5700 OR EQUAL). FACP SHALL PROVIDE ALL REQUIRED PROTECTED PREMISES FIRE SAFETY FUNCTIONS (ACTIVATION OF LOCAL ALARMS). FACP SHALL RELAY FIRE ALARM, SUPERVISORY AND TROUBLE SIGNALS TO OFF-PREMISE MONITORING COMPANY SELECTED BY OWNER USING NEW RADIO TRANSMITTER. PROVIDE NEW 120 VAC DEDICATED POWER CIRCUIT FROM NEARBY POWER DISTRIBUTION PANEL.

13 REPLACE EXISTING FIRE ALARM CONTROL PANEL (FACP) WITH NEW ADDRESSABLE FACP (SILENT KNIGHT 5820XL OR EQUAL). FACP SHALL PROVIDE ALL REQUIRED PROTECTED PREMISES FIRE SAFETY FUNCTIONS (ACTIVATION OF LOCAL ALARMS). FACP SHALL RELAY FIRE ALARM, SUPERVISORY AND TROUBLE SIGNALS TO OFF-PREMISE USING DIGITAL COMMUNICATOR AND EXISTING RADIO TRANSMITTER. EXISTING 120 VAC DEDICATED POWER MAY BE RE-USED.

14 EXISTING FIRE SPRINLKER RISER (WET OR DRY-PIPE) WITH WATER FLOW, VALVE SUPERVISORY AND OR AIR PRESSURE SUPERVISORY SWITCHES TO REMAIN. FURNISH AND INSTALL NEW ADDRESSABLE MODULES ON TO PROVIDE OFF-PREMISE MONITORING OF FIRE SPRINKLER SYSTEM. CONNECT NEW ADDRESSABLE MODULES TO NEW SIGNALLING LINE CIRCUIT.

15 FURNISH AND INSTALL NEW REMOTE ANNUNCIATOR FOR ADDRESSABLE FIRE ALARM SYSTEM AS SHOWN ON DRAWING. CONNECT TO NEW S-BUS.

16 EXISTING WIRELESS TRANSMITTER TO PROVIDE OFF-PREMISE MONITORING FOR NEW FIRE ALARM SYSTEM. CONNECT TO NEW FIRE ALARM SYSTEM AND TEST TO ENSURE PROPER OPERATION. REPAIR OR REPLACE AS NECESSARY.

17 FURNISH AND INSTALL NEW WEATHER-PROOF HORN/STROBE AS SHOWN ON PLAN. CONNECT NEW DEVICE TO CORRESPONDING NOTIFICATION APPLIANCE CIRCUIT.

18 EXISTING ROLL DOWN FIRE DOORS NO LONGER IN USE. DISCONNECT FROM EXISTING FACP.

FIRE ALARM EQUIPMENT LEGEND

DEVICE	DESCRIPTION	MOUNTING	REMARKS
FACP	NEW ADDRESSABLE FIRE ALARM CONTROL PANEL	SURFACE MOUNT ON WALL	SILENT KNIGHT SEE KEYNOTES FOR MODEL
FACP	EXISTING FIRE ALARM CONTROL PANEL TO BE REMOVED	EXISTING TO BE REMOVED	EXISTING TO BE REMOVED
ANN	NEW FIRE ALARM REMOTE ANNUNCIATOR PANEL	MOUNT ON NEW OR EXISTING J-BOX RECESSED INTO WALL.	SILENT KNIGHT 5860 OR EQUAL
NAC-PS	NEW INTELLIGENT POWER SUPPLY.	SURFACE MOUNT ON WALL	TO POWER NOTIFICATION APPLIANCE CIRCUITS. SILENT KNIGHT 5895XL OR EQUAL
AES	EXISTING OR NEW WIRELESS TRANSMITTER.	WALL MOUNT ABOVE FACP	WIRELESS TRANSMITTER TO SEND FIRE ALARM, TROUBLE AND SUPERVISORY SIGNAL AES MODEL AES-7744F
	NEW ADDRESSABLE PHOTOELECTRIC SMOKE DETECTOR	CEILING MOUNTED ON RECESSED J-BOX.	INSTALL NEW SMOKE DETECTORS AS SHOWN ON DRAWING AT A MAXIMUM SPACING OF 30' O.C. SILENT KNIGHT SK-PHOTO OR EQUAL
S	EXISTING SMOKE DETECTOR	EXISTING CEILING MOUNT	REMOVE EXISTING DEVICE, WIRING AND J-BOX.
H	NEW ADDRESSABLE HEAT DETECTOR (FIXED TEMP.)	CEILING MOUNTED ON RECESSED J-BOX.	INSTALL NEW HEAT DETECTORS IN ALL ROOMS WITHOUT SMOKE DETECTORS AT A MAXIMUM SPACING OF 50' O.C. SILENT KNIGHT SK-HEAT OR EQUAL
	NEW ADDRESSABLE MANUAL PULL STATION.	WALL MOUNT AT 48" AFF ON NEW OR EXISTING J-BOX.	SILENT KNIGHT SK-PULL-DA OR EQUAL
	EXISTING MANUAL PULL STATION TO BE REMOVED	EXISTING TO BE REMOVED	EXISTING TO BE REMOVED
MM	NEW ADDRESSABLE MONITOR MODULE	MOUNT ON J-BOX WITHIN 3' OF DEVICE OR CIRCUIT MONITORED	TO PROVIDE MONITORING OF CONVENTIONAL FIRE ALARM DEVICES. SILENT KNIGHT SK-MINIMON OR EQUAL
	NEW FIRE ALARM HORN/STROBE	CEILING MOUNTED ON RECESSED J-BOX.	CANDELA RATING OF STROBE SHALL BE AS INDICATED ON DRAWINGS. STROBES SHALL BE SYNCHRONIZED WITH ALL OTHER STROBES IN VIEW. DEVICE SHALL BE POWERED FROM FACP OR REMOTE NOTIFICATION APPLIANCE CIRCUIT POWER SUPPLY. COLOR SHALL BE RED SYSTEM SENSOR PC2W OR EQUAL
	NEW FIRE ALARM HORN/STROBE	WALL MOUNTED ON RECESSED J-BOX.	CANDELA RATING OF STROBE SHALL BE AS INDICATED ON DRAWINGS. STROBES SHALL BE SYNCHRONIZED WITH ALL OTHER STROBES IN VIEW. DEVICE SHALL BE POWERED FROM FACP OR REMOTE NOTIFICATION APPLIANCE CIRCUIT POWER SUPPLY. COLOR SHALL BE RED SYSTEM SENSOR PC2W OR EQUAL
	NEW FIRE ALARM STROBE	CEILING MOUNTED ON RECESSED J-BOX.	CANDELA RATING OF STROBE SHALL BE AS INDICATED ON DRAWINGS. STROBES SHALL BE SYNCHRONIZED WITH ALL OTHER STROBES IN VIEW. DEVICE SHALL BE POWERED FROM FACP OR REMOTE NOTIFICATION APPLIANCE CIRCUIT POWER SUPPLY. COLOR SHALL BE RED SYSTEM SENSOR SCW OR EQUAL
	NEW EXTERIOR FIRE ALARM HORN/STROBE	WALL MOUNTED ON NEW WEATHERPROOF J-BOX AT HEIGHT INDIACTED ON DWGS	CANDELA RATING OF STROBE TO BE A MINIMUM OF 15/75 Cd. DEVICE SHALL BE POWERED BY FACP OR REMOTE POWER SUPPLY. COLOR SHALL BE RED. DEVICE SHALL BE LISTED FOR EXTERIOR INSTALLATION
	EXISTING FIRE ALARM HORN/STROBE	EXISTING TO BE REMOVED.	REMOVE EXISTING DEVICE, WIRING J-BOX AND CONDUIT.
	EXISTING FIRE ALARM HORN/STROBE	EXISTING TO BE REMOVED.	REMOVE EXISTING DEVICE, WIRING J-BOX AND CONDUIT.
	EXISTING FIRE ALARM HORN	EXISTING TO BE REMOVED.	REMOVE EXISTING DEVICE, WIRING J-BOX AND CONDUIT.

PCI PROTECTION CONSULTANTS, INC.
Fire Protection Engineers
-Since 1983-
182 South 600 East Suite 202
Salt Lake City, UT 84102
PHONE:(801)-596-1601 • FAX:(801)-596-2561
DOMAIN: pciut.com

JOB NO. 104485
DWG ISSUE: BID ISSUE

DRAWN BY: BBH
CHECKED BY: GTJ

REVISIONS:

DRAWING DATE: 03/01/10

REVISION DATE:

UTAH STATE FAIR PARK
155 NORTH 1000 WEST
OGDEN, UTAH

FIRE ALARM SYSTEM UPGRADE
DFCM PROJECT #09209370

MULTIPURPOSE BARN
FIRE ALARM PLAN
FA-2

FIRE ALARM SYSTEM GENERAL NOTES

1. SCOPE OF WORK: WORK SHALL INCLUDE REMOVAL OF EXISTING CONVENTIONAL FIRE ALARM SYSTEMS INCLUDING ALL CONTROL EQUIPMENT, POWER SUPPLIES, CABINETS, INIT. CIRCUITS AND DEVICES, NOTIFICATION APPLIANCE CIRCUITS AND DEVICES. INSTALL NEW FIRE ALARM SYSTEMS INCLUDING CONTROL PANELS WITH NEW SIGNALING LINE CIRCUITS, INITIATING DEVICE CIRCUITS AND NOTIFICATION APPLIANCE CIRCUITS. NEW FIRE ALARM SYSTEM SHALL BE IN ACCORDANCE WITH NFPA 72, THESE DRAWINGS AND SPECIFICATIONS.

2. APPLICABLE CODES/STANDARDS:
   INTERNATIONAL BUILDING CODE - 2006 EDITION
   INTERNATIONAL FIRE CODE - 2006 EDITION
   UTAH STATE FIRE MARSHAL RULE R710-4
   NFPA 70 - 2005 EDITION
   NFPA 72 - 2007 EDITION

3. QUALITY ASSURANCE: ALL EQUIPMENT, MATERIAL AND DEVICES USED FOR THE FIRE ALARM SYSTEM INSTALLATION SHALL BE UL LISTED AND/OR FM APPROVED FOR USE IN FIRE PROTECTION SYSTEMS. ALL INITIATING DEVICES SHALL BE LISTED COMPATIBLE WITH THE FIRE ALARM CONTROL PANEL (FACP). MAJOR SYSTEM COMPONENTS (CONTROL PANELS, INITIATING DEVICES, ADDRESSABLE MODULES AND RELAYS, POWER SUPPLIES, ETC.) SHALL BE FROM A STATE OF UTAH DFCM APPROVED MANUFACTURER. APPROVED MANUFACTURERS INCLUDE FIRE-LITE AND SILENT KNIGHT.

4. SUBMITTALS: ENGINEERED DRAWINGS HAVE BEEN REVIEWED AND APPROVED BY USFM AND STATE BLDG OFFICIAL. CONTRACTOR SHALL INSTALL FIRE ALARM SYSTEM PER APPROVED PLANS AND SPECS. DEVIATIONS FROM PLANS SHALL BE APPROVED BY PROJECT ENGINEER AND CLEARLY MARKED ON AS-BUILT DRAWINGS. NO ADDITIONAL DRAWING SUBMITTAL (EXCEPT AS-BUILTS) WILL BE REQUIRED.

5. DEMOLITION: IT IS THE INSTALLER'S RESPONSIBILITY FOR THE DEMOLITION OF THE EXISTING FIRE ALARM SYSTEM. EXISTING DEVICES AND CONDUIT NOT BEING REPLACED AND REUSED THAT ARE VISIBLE, SUCH AS CABINETS NOTIFICATION APPLIANCES OR SMOKE DETECTORS SHALL BE REMOVED AND REMAINING WALL OR CEILING SURFACE REPAIRED OR REPLACED TO MATCH SURROUNDING AREAS. REMOVE ALL UNUSED WIRE IN ALL REMAINING J-BOXES AND/OR CONDUITS. ANY CEILING TILE DAMAGED BY THE INSTALLER MUST BE REPLACED WITH THE SAME OR EQUIVALENT TILE.

6. SYSTEM TYPE: FIRE ALARM SYSTEM SHALL MEET THE REQUIREMENTS FOR PROTECTED PREMISE FIRE ALARM SYSTEMS. SYSTEM SHALL PROVIDE OFF-PREMISE NOTIFICATION OF STATUS TO CENTRAL STATION DETERMINED BY OWNER.

7. OCCUPANT NOTIFICATION: NOTIFICATION CIRCUITS SHALL BE ZONED WITH ONE ZONE PER BUILDING. PROVIDE REMOTE NOTIFICATION POWER SUPPLIES IN EACH BUILDING TO POWER NOTIFICATION CIRCUITS. CONFIGURE NOTIFICATION CIRCUITS IN EACH BUILDING TO ACTIVATE ONLY UPON OPERATION OF AN INITIATING DEVICE IN THAT BUILDING.

8. WIRING/CONDUIT: ALL WIRING SHALL BE NEW (EXISTING WIRING MAY NOT BE RE-USED) AND SHALL BE FREE OF OPENS, SHORTS AND GROUNDS. ALL WIRING SHALL BE INSTALLED IN RIGID CONDUIT OR EMT. METAL CLAD OR ARMORED CABLE MAY BE USED WHERE INSTALLED AND SUPPORTED PER NFPA 70, DFCM REQUIREMENTS AND NEMA STANDARD RV1. MINIMUM CONDUIT SIZE SHALL BE 1/2". CONDUIT SHALL BE CONCEALED IN FINISHED AREAS AND MAY BE EXPOSED IN UNFINISHED AREAS. PAINT EXPOSED CONDUIT TO MATCH COLOR OF SURROUNDING BUILDING ELEMENTS. ALL PENETRATIONS THROUGH RATED PARTITIONS SHALL BE FIRE STOPPED WITH A SUITABLE CAULKING COMPOUND. ALL WIRING USED IN THE FIRE ALARM SYSTEM SHALL BE FPL (FIRE, POWER LIMITED) WITH MINIMUM 300V INSULATION OR EQUIVALENT AS PER NFPA 70 ARTICLE 760.

9. WIRING STYLES(PER NFPA 72): INITIATING DEVICE CIRCUITS SHALL MEET THE REQUIREMENTS FOR CLASS A STYLE D CIRCUITS. SIGNALING LINE & S-BUS CIRCUITS SHALL MEET THE REQUIREMENTS FOR CLASS A STYLE 6 OR 7 CIRCUITS. NOTIFICATION APPLIANCE CIRCUITS SHALL MEET THE REQUIREMENTS FOR CLASS A STYLE Z.

10. POWER: EXISTING DEDICATED BRANCH CIRCUITS MAY BE REUSED TO PROVIDE PRIMARY POWER TO NEW FACP AND REMOTE NOTIFICATION CIRCUIT POWER SUPPLIES. FURNISH A BATTERY BACKUP TO PROVIDE SECONDARY POWER SUPPLY TO FIRE ALARM PANEL AND NOTIFICATION CIRCUIT POWER SUPPLIES. BATTERY BACKUP SHALL BE OF SUFFICIENT CAPACITY TO PROVIDE 24 HOURS OF STANDBY POWER WITH AN ADDITIONAL RESERVE TO OPERATE SYSTEM FOR 5 MINUTES IN ALARM.

11. INITIATING DEVICES:
    DUCT SMOKE DETECTORS: INSTALL DUCT SMOKE DETECTORS IN SUPPLY DUCTS OF ALL AIR HANDLERS WITH A CAPACITY IN EXCESS OF 2,000 CFM.
    SMOKE DETECTORS: PROVIDE SMOKE DETECTORS WHERE SHOWN ON PLANS IN ALL CORRIDORS AND LOBBIES. MAXIMUM SPACING OF DETECTORS SHALL BE 30' BETWEEN DETECTORS OR 15' FROM FURTHEST WALL.
    MANUAL PULL STATIONS: INSTALL NEW PULL STATIONS AT SAME LOCATION AND HEIGHT AS EXISTING PULL STATIONS USING EXISTING JUNCTION BOXES. WHERE NEW MANUAL PULL STATIONS ARE INDICATED ON THE PLAN INSTALL WITH OPERATING ELEMENT AT 48" AFF.
    HEAT DETECTORS: PROVIDE HEAT DETECTORS WHERE SHOWN ON PLANS IN ALL AREAS NOT PROTECTED WITH SMOKE DETECTORS. MAXIMUM SPACING FOR HEAT DETECTORS SHALL BE 50' BETWEEN DETECTORS OR 25' FROM FURTHEST WALL.

12. NOTIFICATION APPLIANCES: PROVIDE AUDIBLE AND VISUAL NOTIFICATION APPLIANCES THROUGHOUT BUILDINGS. VOLUME OF HORNS SHALL BE SUFFICIENT TO PROVIDE A SOUND LEVEL OF 15 Db ABOVE AMBIENT IN ALL OCCUPIED AREAS. VISIBLE ALARMS SHALL BE PROVIDED THROUGHOUT ALL OCCUPIED AREAS OF THE BUILDING INCLUDING PRIVATE OFFICES AND AREAS WITH POSSIBLE OCCUPANCY BY HEARING IMPAIRED PERSONS. STROBES SHALL FLASH IN SYNCHRONIZATION.

13. FIRE SAFETY FUNCTIONS: CONTROL MODULE WITH RELAY CONTACTS SHALL BE INSTALLED AND PROGRAMMED TO PROVIDE DOOR RELEASE AND FAN SHUTDOWN. THE CONTROL RELAY MODULES SHALL BE INSTALLED WITHIN 36" OF DEVICE OR CIRCUIT CONTROLLED.

14. PHASING: PLAN SEQUENCE OF WORK TO MINIMIZE DOWN TIME OF FIRE ALARM SYSTEM. EXISTING FIRE ALARM SYSTEM SHALL REMAIN IN SERVICE UNTIL NEW SYSTEM IS INSTALLED AND OPERATIONAL. IT IS THE INSTALLER'S RESPONSIBILITY TO NOTIFY PROPER AUTHORITIES AND PROVIDE A FIRE WATCH DURING INTERRUPTIONS OF FIRE DETECTION AND ALARM SERVICE IN THE BUILDING.

15. TESTING: SCHEDULE AND PERFORM ALL ACCEPTANCE TESTS REQUIRED BY NFPA 72. TESTING SHALL BE WITNESSED BY STATE FIRE MARSHAL'S OFFICE, PROJECT ENGINEER, DFCM AND BUILDING MAINTENANCE PERSONNEL. SUBMIT A WRITTEN TESTING PLAN DETAILING EACH TEST TO BE PERFORMED TO EACH AGENCY AT LEAST ONE DAY PRIOR TO SCHEDULED TEST.

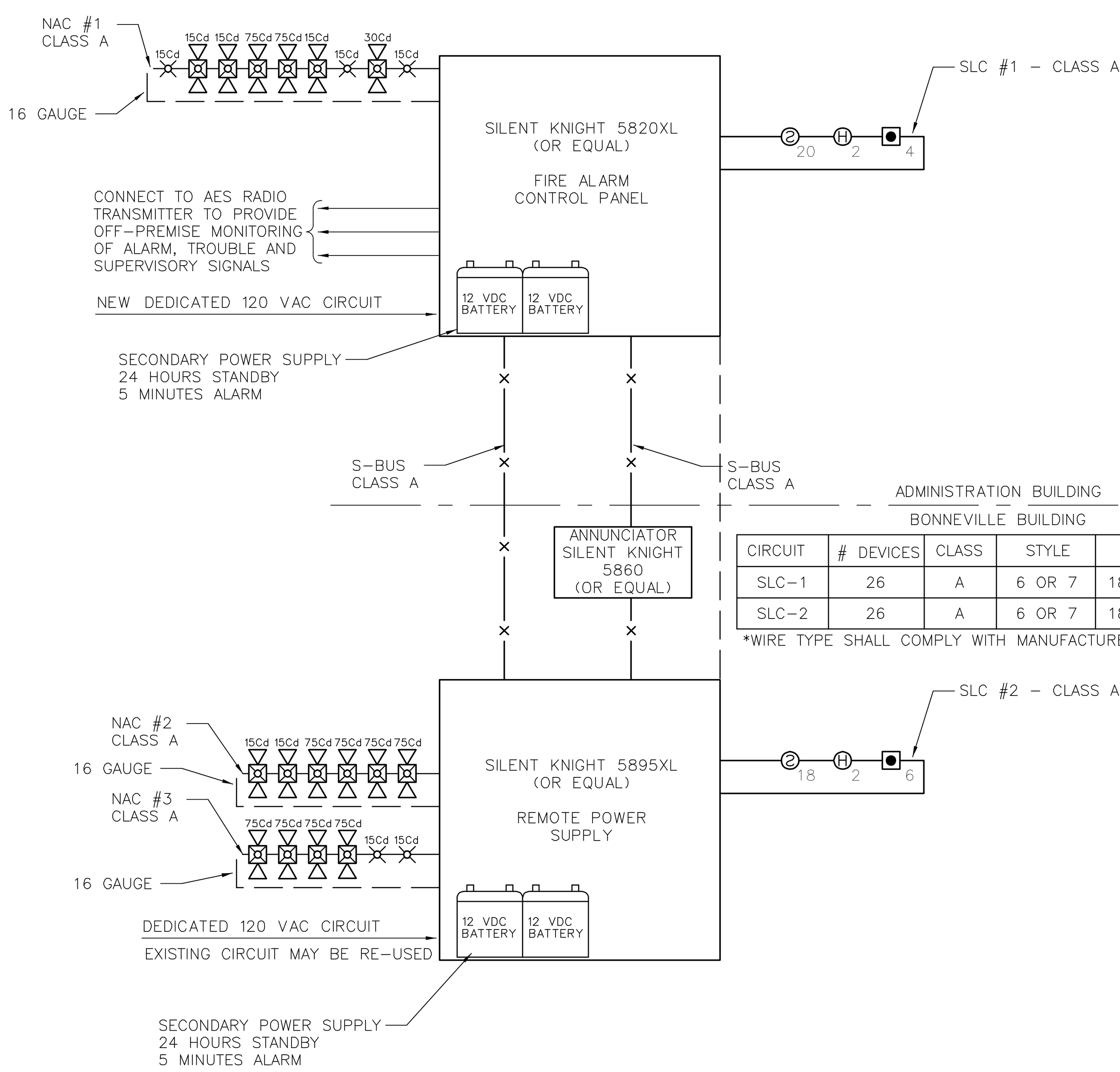

CIRCUIT	# DEVICES	CLASS	STYLE	WIRE TYPE *
SLC-1	26	A	6 OR 7	18 AWG THHN
SLC-2	26	A	6 OR 7	18 AWG THHN

*WIRE TYPE SHALL COMPLY WITH MANUFACTURER REQUIREMENTS

1 FIRE ALARM RISER SCHEMATIC ADMINISTRATION & BONNEVILLE BUILDING
NTS

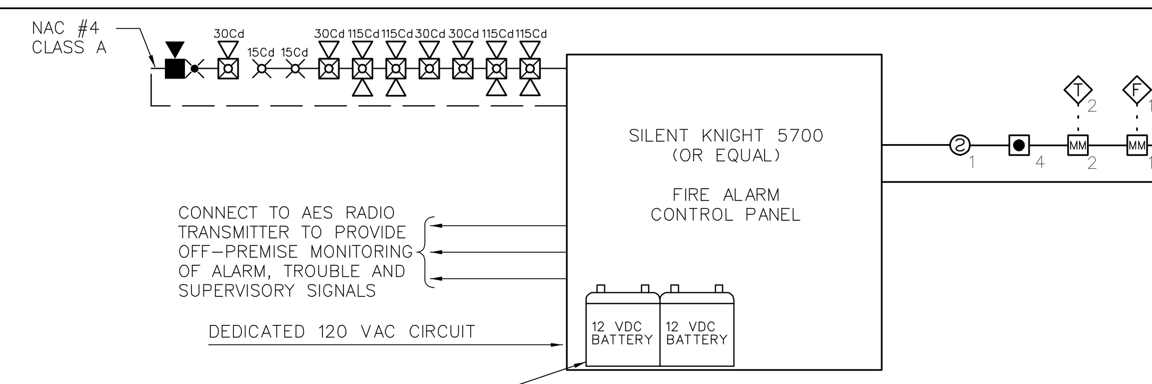

CIRCUIT	# DEVICES	CLASS	STYLE	WIRE TYPE *
SLC-1	8	A	6 OR 7	18 AWG THHN

*WIRE TYPE SHALL COMPLY WITH MANUFACTURER REQUIREMENTS

2 FIRE ALARM RISER SCHEMATIC SHOW RING
NTS

4 WIRE SCHEDULE

CIRCUIT	NUMBER OF CONDUCTORS	CIRCUIT CLASS	CIRCUIT STYLE	WIRE GAUGE (MIN)	GRAPHIC DESIGNATION
NOTIFICATION APPLIANCE CIRCUIT (NAC)	2	A	Z	16 AWG	— — — -
SIGNALING LINE CIRCUIT (SLC)	2	A	6 OR 7	18 AWG	————
INITIATING DEVICE CIRCUIT (IDC)	2	A	D	18 AWG	- - - - - - - - - -
SBUS CIRCUIT	4	A	6 OR 7	14 AWG	-x——x-

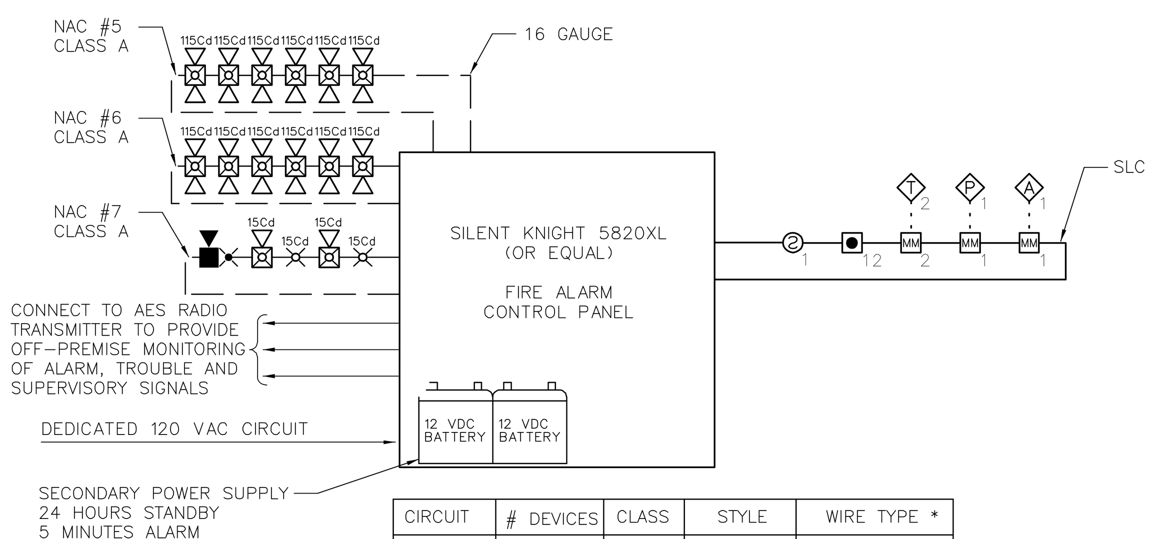

CIRCUIT	# DEVICES	CLASS	STYLE	WIRE TYPE *
SLC-1	17	A	6 OR 7	18 AWG THHN

*WIRE TYPE SHALL COMPLY WITH MANUFACTURER REQUIREMENTS

3 FIRE ALARM RISER SCHEMATIC MULTIPURPOSE BARN
NTS

OUTPUT ACTIONS

SYSTEM INPUTS	ACTIVATE LOCAL FIRE ALARM NOTIFICATION APPLIANCES (ADMINISTRATION)	ACTIVATE LOCAL FIRE ALARM NOTIFICATION APPLIANCES (BONNEVILLE)	TRANSMIT FIRE ALARM SIGNAL TO CENTRAL STATION	TRANSMIT SUPERVISORY SIGNAL TO CENTRAL STATION	TRANSMIT TROUBLE SIGNAL TO CENTRAL STATION	SHUT DOWN AIR HANDLERS		
ACTIVATION OF ANY SMOKE DETECTOR (ADMINISTRATION)	X		X			X		
ACTIVATION OF ANY HEAT DETECTOR (ADMINISTRATION)	X		X			X		
ACTIVATION OF ANY MANUAL PULL STATION (ADMINISTRATION)	X		X			X		
RECEIPT OF TROUBLE SIGNAL FROM REMOTE POWER SUPPLY					X			
LOSS OF AC POWER/LOW BATTERY VOLTAGE					X			
SYSTEM TROUBLE					X			
ACTIVATION OF ANY DUCT SMOKE DETECTOR				X		X		
ACTIVATION OF ANY SMOKE DETECTOR (BONNEVILLE)		X	X			X		
ACTIVATION OF ANY HEAT DETECTOR (BONNEVILLE)		X	X			X		
ACTIVATION OF ANY MANUAL PULL STATION (BONNEVILLE)		X	X			X		

5 SEQUENCE OF OPERATION ADMINISTRATION & BONNEVILLE BUILDINGS

OUTPUT ACTIONS

SYSTEM INPUTS	ACTIVATE LOCAL FIRE ALARM NOTIFICATION APPLIANCES (ALL CIRCUITS)	TRANSMIT FIRE ALARM SIGNAL TO CENTRAL STATION	TRANSMIT SUPERVISORY SIGNAL TO CENTRAL STATION	TRANSMIT TROUBLE SIGNAL TO CENTRAL STATION	SHUT DOWN AIR HANDLERS			
ACTIVATION OF ANY SMOKE DETECTOR	X	X			X			
ACTIVATION OF ANY HEAT DETECTOR	X	X			X			
ACTIVATION OF ANY MANUAL PULL STATION	X	X			X			
RECEIPT OF TROUBLE SIGNAL FROM REMOTE POWER SUPPLY				X				
LOSS OF AC POWER/LOW BATTERY VOLTAGE				X				
SYSTEM TROUBLE				X				
ACTIVATION OF ANY DUCT SMOKE DETECTOR			X		X			
WATER FLOW SWITCHES	X	X						
TAMPER SWITCHES			X					

6 SEQUENCE OF OPERATION SHOW RING

OUTPUT ACTIONS

SYSTEM INPUTS	ACTIVATE LOCAL FIRE ALARM NOTIFICATION APPLIANCES (ALL CIRCUITS)	TRANSMIT FIRE ALARM SIGNAL TO CENTRAL STATION	TRANSMIT SUPERVISORY SIGNAL TO CENTRAL STATION	TRANSMIT TROUBLE SIGNAL TO CENTRAL STATION	SHUT DOWN AIR HANDLERS			
ACTIVATION OF ANY SMOKE DETECTOR	X	X			X			
ACTIVATION OF ANY HEAT DETECTOR	X	X			X			
ACTIVATION OF ANY MANUAL PULL STATION	X	X			X			
RECEIPT OF TROUBLE SIGNAL FROM REMOTE POWER SUPPLY				X				
LOSS OF AC POWER/LOW BATTERY VOLTAGE				X				
SYSTEM TROUBLE				X				
ACTIVATION OF ANY DUCT SMOKE DETECTOR			X		X			
WATER FLOW SWITCHES	X	X						
TAMPER SWITCHES			X					
AIR PRESSURE								

7 SEQUENCE OF OPERATION MULTIPURPOSE BARN

FIRE ALARM SYSTEM KEY NOTES

(01) FURNISH AND INSTALL NEW ADDRESSABLE FACP (SILENT KNIGHT 5820XL OR EQUAL). FACP SHALL PROVIDE ALL REQUIRED PROTECTED PREMISES FIRE SAFETY FUNCTIONS (ACTIVATION OF LOCAL ALARMS). FACP SHALL RELAY FIRE ALARM, SUPERVISORY SIGNALS TO OFF-PREMISE MONITORING COMPANY SELECTED BY OWNER NEW RADIO TRANSMITTER. PROVIDE NEW 120 VAC POWER CIRCUIT FROM NEARBY POWER DISTRIBUTION PANEL.

(02) REMOVE EXISTING FIRE ALARM CONTROL PANEL (FACP), MODULES AND ENCLOSURE.

(03) FURNISH AND INSTALL NEW WIRELESS TRANSMITTER TO PROVIDE OFF-PREMISE MONITORING FOR NEW FIRE ALARM SYSTEM. AES MODEL AES-7744F. CONFIGURE TRANSMITTER TO RELAY FIRE ALARM AND SUPERVISORY SIGNALS TO OFF-PREMISE MONITORING COMPANY SELECTED BY OWNER.

(04) FURNISH AND INSTALL NEW INTELLIGENT POWER SUPPLY (SILENT KNIGHT 5895XL OR EQUAL) TO PROVIDE 24 VDC POWER TO NEW NOTIFICATION APPLIANCE CIRCUITS. PROVIDE BACKUP BATTERIES SIZED TO MEET STANDBY DEMAND OF POWER SUPPLY FOR 24 HOURS WITH AN ADDITIONAL RESERVE FOR 5 MINUTES OF ALARM POWER. NUMBER AND CAPACITY OF POWER SUPPLIES AND LAYOUT OF NOTIFICATION APPLIANCE CIRCUITS SHALL LIMIT VOLTAGE DROP BETWEEN POWER SUPPLY AND MOST REMOTE DEVICE ON CIRCUIT TO LESS THAN 20%. PROVIDE MODULES AS REQUIRED TO SYNCHRONIZE STROBE FLASSHED OF ALL NOTIFICATION APPLIANCES WITHIN A SINGLE FIELD OF VIEW. PROVIDE NEW 120 VAC POWER FROM DEDICATED CIRCUIT.

(05) EXISTING BURIED CONDUIT BETWEEN ADMINISTRATION BUILDING AND BONNEVILLE BUILDING BUILDING TO BE RE-USED. PULL NEW WIRE IN EXISTING CONDUIT TO ENABLE CONNECTION OF INTELLIGENT POWER SUPPLY IN BONNEVILLE BUILDING TO FACP IN ADMINISTRATION BUILDING VIA THE S-BUS CIRCUIT. CONTRACTOR SHALL FIELD VERIFY LOCATION OF CONDUIT STUB UP IN BOTH BUILDINGS. S-BUS CIRCUIT SHALL BE CLASS A BUT SUPPLY AND RETURN CONDUCTORS MAY BE RUN IN SAME UNDERGROUND CONDUIT. PROVIDE ISOLATOR MODULES ON S-BUS AT EACH POINT OF ENTRY/EXIT TO BUILDINGS.

(06) FURNISH AND INSTALL NEW SMOKE OR HEAT DETECTOR OR MANUAL PULL STATION AS SHOWN ON PLAN. CONNECT NEW DEVICE TO NEW SIGNALLING LINE CIRCUIT AND PROGRAM ACTIVATION OF DEVICE AS A FIRE ALARM SIGNAL.

(07) FURNISH AND INSTALL NEW NOTIFICATION APPLIANCE AS SHOWN ON PLAN. CONNECT NEW DEVICE TO CORRESPONDING NOTIFICATION APPLIANCE CIRCUIT.

(08) EXISTING NOTIFICATION APPLIANCE TO BE REMOVED. REMOVE DEVICE, J-BOX, CONDUIT AND WIRING BACK TO FACP. PATCH, REPAIR AND/PR PAINT WALL SURFACE TO MATCH SURROUNDING AREA.

(09) REPLACE EXISTING NOTIFICATION APPLIANCE WITH NEW NOTIFICATION APPLIANCE AS SHOWN ON PLAN. CONNECT NEW DEVICE TO CORRESPONDING NOTIFICATION APPLIANCE CIRCUIT. EXISTING CONDUIT AND J-BOXES MAY BE RE-USED IF IN GOOD CONDITION.

(10) REPLACE EXISTING MANUAL PULL STATION WITH NEW MANUAL PULL STATION AS SHOWN ON PLAN. CONNECT NEW DEVICE TO NEW SIGNALLING LINE CIRCUIT AND PROGRAM ACTIVATION OF DEVICE AS A FIRE ALARM SIGNAL. EXISTING CONDUIT AND J-BOXES MAY BE RE-USED IF IN GOOD CONDITION.

(11) REMOVE EXISTING INITIATING DEVICE, CONDUIT AND J-BOX. PATCH, REPAIR AND PAINT AS NECESSARY TO MATCH SURROUNDING AREA.

(12) FURNISH AND INSTALL NEW ADDRESSABLE FACP (SILENT KNIGHT 5700 OR EQUAL). FACP SHALL PROVIDE ALL REQUIRED PROTECTED PREMISES FIRE SAFETY FUNCTIONS (ACTIVATION OF LOCAL ALARMS). FACP SHALL RELAY FIRE ALARM, SUPERVISORY AND TROUBLE SIGNALS TO OFF-PREMISE MONITORING COMPANY SELECTED BY OWNER USING NEW RADIO TRANSMITTER. PROVIDE NEW 120 VAC DEDICATED POWER CIRCUIT FROM NEARBY POWER DISTRIBUTION PANEL.

(13) REPLACE EXISTING FIRE ALARM CONTROL PANEL (FACP) WITH NEW ADDRESSABLE FACP (SILENT KNIGHT 5820XL OR EQUAL). FACP SHALL PROVIDE ALL REQUIRED PROTECTED PREMISES FIRE SAFETY FUNCTIONS (ACTIVATION OF LOCAL ALARMS). FACP SHALL RELAY FIRE ALARM, SUPERVISORY AND TROUBLE SIGNALS TO OFF-PREMISE USING DIGITAL COMMUNICATOR AND EXISTING RADIO TRANSMITTER. EXISTING 120 VAC DEDICATED POWER MAY BE RE-USED.

(14) EXISTING FIRE SPRINLKER RISER (WET OR DRY-PIPE) WITH WATER FLOW, VALVE SUPERVISORY AND OR AIR PRESSURE SUPERVISORY SWITCHES TO REMAIN. FURNISH AND INSTALL NEW ADDRESSABLE MODULES ON TO PROVIDE OFF-PREMISE MONITORING OF FIRE SPRINKLER SYSTEM. CONNECT NEW ADDRESSABLE MODULES TO NEW SIGNALLING LINE CIRCUIT.

(15) FURNISH AND INSTALL NEW REMOTE ANNUNCIATOR FOR ADDRESSABLE FIRE ALARM SYSTEM AS SHOWN ON DRAWING. CONNECT TO NEW S-BUS.

(16) EXISTING WIRELESS TRANSMITTER TO PROVIDE OFF-PREMISE MONITORING FOR NEW FIRE ALARM SYSTEM. CONNECT TO NEW FIRE ALARM SYSTEM AND TEST TO ENSURE PROPER OPERATION. REPAIR OR REPLACE AS NECESSARY.

(17) FURNISH AND INSTALL NEW WEATHER-PROOF HORN/STROBE AS SHOWN ON PLAN. CONNECT NEW DEVICE TO CORRESPONDING NOTIFICATION APPLIANCE CIRCUIT.

(18) EXISTING ROLL DOWN FIRE DOORS NO LONGER IN USE. DISCONNECT FROM EXISTING FACP.

FIRE ALARM EQUIPMENT LEGEND

DEVICE	DESCRIPTION	MOUNTING	REMARKS
FACP	NEW ADDRESSABLE FIRE ALARM CONTROL PANEL	SURFACE MOUNT ON WALL	SILENT KNIGHT SEE KEYNOTES FOR MODEL
FACP	EXISTING FIRE ALARM CONTROL PANEL TO BE REMOVED	EXISTING TO BE REMOVED	EXISTING TO BE REMOVED
ANN	NEW FIRE ALARM REMOTE ANNUNCIATOR PANEL	MOUNT ON NEW OR EXISTING J-BOX RECESSED INTO WALL.	SILENT KNIGHT 5860 OR EQUAL
NAC-PS	NEW INTELLIGENT POWER SUPPLY.	SURFACE MOUNT ON WALL	TO POWER NOTIFICATION APPLIANCE CIRCUITS. SILENT KNIGHT 5895XL OR EQUAL
AES	EXISTING OR NEW WIRELESS TRANSMITTER.	WALL MOUNT ABOVE FACP	WIRELESS TRANSMITTER TO SEND FIRE ALARM, TROUBLE AND SUPERVISORY SIGNAL AES MODEL AES-7744F
②	NEW ADDRESSABLE PHOTOELECTRIC SMOKE DETECTOR	CEILING MOUNTED ON RECESSED J-BOX.	INSTALL NEW SMOKE DETECTORS AS SHOWN ON DRAWING AT A MAXIMUM SPACING OF 30' O.C. SILENT KNIGHT SK-PHOTO OR EQUAL
S	EXISTING SMOKE DETECTOR	EXISTING CEILING MOUNT	REMOVE EXISTING DEVICE, WIRING AND J-BOX.
Ⓗ	NEW ADDRESSABLE HEAT DETECTOR (FIXED TEMP.)	CEILING MOUNTED ON RECESSED J-BOX.	INSTALL NEW HEAT DETECTORS IN ALL ROOMS WITHOUT SMOKE DETECTORS AT A MAXIMUM SPACING OF 50' O.C. SILENT KNIGHT SK-HEAT OR EQUAL
■	NEW ADDRESSABLE MANUAL PULL STATION.	WALL MOUNT AT 48" AFF ON NEW OR EXISTING J-BOX.	SILENT KNIGHT SK-PULL-DA OR EQUAL
●	EXISTING MANUAL PULL STATION TO BE REMOVED	EXISTING TO BE REMOVED	EXISTING TO BE REMOVED
MM	NEW ADDRESSABLE MONITOR MODULE	MOUNT ON J-BOX WITHIN 3' OF DEVICE OR CIRCUIT MONITORED	TO PROVIDE MONITORING OF CONVENTIONAL FIRE ALARM DEVICES. SILENT KNIGHT SK-MINIMON OR EQUAL
	NEW FIRE ALARM HORN/STROBE	CEILING MOUNTED ON RECESSED J-BOX.	CANDELA RATING OF STROBE SHALL BE AS INDICATED ON DRAWINGS. STROBES SHALL BE SYNCHRONIZED WITH ALL OTHER STROBES IN VIEW. DEVICE SHALL BE POWERED FROM FACP OR REMOTE NOTIFICATION APPLIANCE CIRCUIT POWER SUPPLY. COLOR SHALL BE RED SYSTEM SENSOR PC2W OR EQUAL
	NEW FIRE ALARM HORN/STROBE	WALL MOUNTED ON RECESSED J-BOX.	CANDELA RATING OF STROBE SHALL BE AS INDICATED ON DRAWINGS. STROBES SHALL BE SYNCHRONIZED WITH ALL OTHER STROBES IN VIEW. DEVICE SHALL BE POWERED FROM FACP OR REMOTE NOTIFICATION APPLIANCE CIRCUIT POWER SUPPLY. COLOR SHALL BE RED SYSTEM SENSOR PC2W OR EQUAL
	NEW FIRE ALARM STROBE	CEILING MOUNTED ON RECESSED J-BOX.	CANDELA RATING OF STROBE SHALL BE AS INDICATED ON DRAWINGS. STROBES SHALL BE SYNCHRONIZED WITH ALL OTHER STROBES IN VIEW. DEVICE SHALL BE POWERED FROM FACP OR REMOTE NOTIFICATION APPLIANCE CIRCUIT POWER SUPPLY. COLOR SHALL BE RED SYSTEM SENSOR SCW OR EQUAL
	NEW EXTERIOR FIRE ALARM HORN/STROBE	WALL MOUNTED ON NEW WEATHERPROOF J-BOX AT HEIGHT INDIACTED ON DWGS	CANDELA RATING OF STROBE TO BE A MINIMUM OF 15/75 Cd. DEVICE SHALL BE POWERED BY FACP OR REMOTE POWER SUPPLY. COLOR SHALL BE RED. DEVICE SHALL BE LISTED FOR EXTERIOR INSTALLATION
	EXISTING FIRE ALARM HORN/STROBE	EXISTING TO BE REMOVED.	REMOVE EXISTING DEVICE, WIRING J-BOX AND CONDUIT.
	EXISTING FIRE ALARM HORN/STROBE	EXISTING TO BE REMOVED.	REMOVE EXISTING DEVICE, WIRING J-BOX AND CONDUIT.
	EXISTING FIRE ALARM HORN	EXISTING TO BE REMOVED.	REMOVE EXISTING DEVICE, WIRING J-BOX AND CONDUIT.

PCi PROTECTION CONSULTANTS, INC.
Fire Protection Engineers
-Since 1983-
182 South 600 East Suite 202
Salt Lake City, UT 84102
PHONE:(801)-596-1601 • FAX:(801)-596-2561
DOMAIN: pciut.com

JOB NO. 104485
DWG ISSUE: BID ISSUE
DRAWN BY: BBH
CHECKED BY: GTJ

REVISIONS:

DRAWING DATE: 03/01/10
REVISION DATE:

UTAH STATE FAIR PARK
155 NORTH 1000 WEST
OGDEN, UTAH

FIRE ALARM SYSTEM UPGRADE
DFCM PROJECT #09209370

DETAILS AND CALCULATIONS
FA-3