State of Utah

GARY R. HERBERT
Governor

GREGORY S. BELL
Lt. Governor

Department of Administrative Services
KIMBERLY K. HOOD
Executive Director

Division of Facilities Construction and Management
DAVID G. BUXTON
Director

ADDENDUM NO. 1

Date:	January 4, 2010
To:	Pre-Qualified General Contractors
From:	Wayne Smith – Project Manager
Reference:	Richfield Armory Upgrade Utah National Guard – Richfield, Utah DFCM Project No. 09219470
Subject:	**Addendum No. 1**

Pages	Addendum Cover Sheet	1	page
	Architect's Addendum	46	pages
	Total	47	pages

Note: This Addendum shall be included as part of the Contract Documents. Items in this Addendum apply to all drawings and specification sections whether referenced or not involving the portion of the work added, deleted, modified, or otherwise addressed in the Addendum. Acknowledge receipt of this Addendum in the space provided on the Bid Form. Failure to do so may subject the Bidder to Disqualification.

While we contend that SB220 should only be potentially applicable to a contract issued after the effective date of said bill, this is to clarify that for purposes of this contract, regardless of the execution or effective dates of this contract, the status of Utah Law and remedies available to the State of Utah and DFCM, as it relates to any matter referred to or affected by said SB220, shall be the Utah law in effect at the time of the issuance of this Addendum.

1.1 **SCHEDULE CHANGES:** No Project Schedule changes.

1.2 **GENERAL ITEMS:** See attached Architect's Addendum No. 1 dated January 4, 2010.

jsa architects

Principals
John C. Shirley, AIA
Corey R. Solum, AIA
Christopher D. Jensen, AIA

Assoc. Principals
Tyler K. Kirk, AIA
John M. Shirley, AIA

architects
planners
interior designers

JSA Architects, LLC
6465 South 3000 East
Suite 205
Salt Lake City, Utah
84121
Ph: 801.733-2500
Fax: 801.733.2501
www.jsa-llc.com

January 4, 2010

ADDENDUM #1

PROJECT: Utah National Guard
Richfield Armory Upgrade
Project No. - 09219470
620 W 200 S
Richfield, UT 84701

BID DATE: January 6, 2010

BID TIME: 3:00 p.m.

Please note and include the following items to the contract documents. The General Contractor shall be responsible to incorporate these changes into the Contract Documents and shall also be responsible to notify all sub-contractors of this addendum.

PROJECT MANUAL:

1. SECTION 012100 – ALLOWANCES:
1.1. As a reminder there is an allowance on this project, see section for amount, and should be part of the Base Bid. The successful bidder should include this amount as a separate line item on the schedule of values on the Certificate For Payment, AIA Document G703.
2. SECTION 033000 – CAST-IN-PLACE CONCRETE:
2.1. Paragraph 2.4. Vapor Retarders: Delete paragraph 'B'.
3. SECTION 072100 – THERMAL INSULATION:
3.1. Paragraph 2.4 Vapor Retarders: Delete paragraph 'B'
4. SECTION 075113 – BUILT-UP ASPHALT ROOFING:
4.1. The existing roofing material is still under an active warranty by the manufacturer specified. The new and remodel roofing work specified in the Construction Drawings must maintain this in-place warranty.
4.2. Paragraph 1.8.B- Inspection: The DFCM Roofing Program Manger is Matt Boyer (p: 801-541-0945). At the Pre-installation, during if needed, and at the time of completion of the roofing Matt will need to be contacted to be able to review and sign-off on the work for the DFCM.
4.3. Paragraph 1.10 Warranty: Current warranty information for both the manufacturer and contractor can be at the DFCM State website: www.dfcm.utah.gov/constManage/roofingNpaving.html.
5. SECTION 081416 – FLUSH WOOD DOORS:
5.1. Paragraph 2.1.A: Add VT Industires to the approved manufacturers listed.
6. SECTION 092400 – PORTLAND CEMENT STUCCO:
6.1. This section should be deleted from the Project Manual as this material is not part of the scope of work on this building.
7. SECTION 093000– TILING:
7.1. Paragraph 2.2.C-6.b: The color numbers listed should be changed as follows:
7.1.1. CT1 – Delete 'Matte' and change (87) to (A24) and Field to Accent.
7.1.2. CT2 – Change Chili Pepper (Q074) to Mushroom (A38).
7.1.3. CT3 - Change Smoky Quartz (47) to Mushroom Speckled (A41).
7.1.4. CT4 - Change Storm Gray (40) to Charcoal (A33).

7.1.5. CT1- CT4 should be broadcast randomly and each should cover approximately 25% of the floor area.

8. SECTION 102113– TOILET COMPARTMENTS:

8.1. Paragraph 2.1.A: Add Accurate Toilet Partitions and Columbia Partitions to the approved manufacturers listed.

9. SECTION 102226.13– ACCORDION FOLDING PARTITIONS:

9.1. Paragraph 2.1.A: Add Moderco Accordion Doors to the approved manufacturers listed.

10. SECTION 102800– TOILET ROOM ACCESSORIES:

10.1. Paragraph 2.1.A: Add Colombia Accessories to the approved manufacturers listed.

11. DIVISION 27 – COMMUNICATION SERVICES:

11.1. This Division 27 should be included in the Table of Contents with two sections under this heading with are already part of the Project Manual (271343- Communication Services(Raceways Only) and 271346- Television Signal Distribution Cabling & Equipment).

11.2. Section 271343- Communication Circuits: This is already included in the Project Manual and should be augmented with the following:

11.2.1. Attached as part of the addendum is the National Guard Telecommunication General Information and Conditions.

12. SECTION 283100– FIRE DETECTION AND ALARM:

12.1. Paragraph 2.1.A: The approved manufacturers listed should be changed so that manufacturers 1-4 are deleted and Fire Light is added and along with Silent Knight are the two approved manufacturers.

13. DIVISION 31 – EARTHWORK:

13.1. This Division 31 should be added to the Table of Contents and the Project Manual.

13.2. Included within this Division is the Soils Report by Gordon Spilker Huber Geotechnical Consultants, Inc dated 9.18.2009. This report is attached as part of this addendum.

CONSTRUCTION DOCUMENTS:

14. SHEET L-L1 LAYOUT/GRADING PLAN & SITE DETAILS: (See attached drawing)

14.1. Sheet reissued. See sheet for added information.

15. SHEET L-R1 IRRIGATION PLAN & DETAILS- ADD ALTERNATE #2: (See attached drawing)

15.1. Sheet reissued. See sheet for added information.

16. SHEET L-P1 LANDSCAPE PLAN & DETAILS- ADD ALTERNATE #2: (See attached drawing)

16.1. Sheet reissued. See sheet for added information.

17. SHEET S-501 FRAMING DETAILS: (See attached drawing)

17.1. Sheet reissued as a number of details were missing from the original drawing.

18. SHEET A-101 SITE PLAN: (See attached drawing)

18.1. Sheet reissued. See sheet for added information.

18.2. Keynotes 12-20 added.

18.3. Asphalt Paving extent clarified and paving notes added.

19. SHEET A-104 MAIN LEVEL FLOOR PLAN:

19.1. In Mechanical Room 118 there is a detail tag C3/A404 that should be deleted. The existing door opening should be in-filled with 8" masonry and furred out as per wall type A2 in detail E2/A501. See also the enlarged floor plan C3/A404.

20. SHEET A-106 ROOF PLAN: (See attached drawing)

20.1. See attached drawing which modified the trellis, the slope of the new raised roofing area over the lobby, and the roof hatch location.

21. SHEET A-303 BUILDING SECTIONS:

21.1. The detail C2/A03 titled New Lobby Roof to Existing Wall should be changed from C2 to C1.

22. SHEET A-304 WALL SECTIONS:

22.1. Section E1: the two bubble tags should be changed from A303 to A304.

22.2. Section E3: the two bubble tags should be changed from A303 to A304.
22.3. Section A4: the detail E5/A304 should be deleted. This cap flashing is existing and is to remain as is.
22.4. Section A6: the detail E5/A304 should be deleted. This cap flashing is existing and is to remain as is.
23. SHEET A-400 ARCHITECTURAL DETAILS
23.1. The Sheet Title should read as Architectural Details.
23.2. Room Finish Schedule: See attached schedule as Rooms 113-118 were missing.
23.3. Floor Finish Schedule: See attached schedule as the mark CT was missing information.
24. SHEET A-404 ENLARGED PLANS
24.1. The detail tag 1/A4.4 should be changed to read C3/A404.
25. SHEET A-501 ARCHITECTURAL DETAILS
25.1. Wall type B2: CMU needs to change from 6" to 8" to work with the new structural changes.
26. SHEET A-502 ARCHITECTURAL DETAILS
26.1. The details at the bottom of the sheet are missing the numbers and should read sequentially from left to right Al/A502 – A6/A502.
27. SHEET A-601 DOOR & WINDOW SCHEDULES:
27.1. Door Type D14: the elevation on this sheet does not show this door with windows but they should be included as per the specifications section 083613 paragraph 2.8.A and 2.8.G.
27.2. Door Frame Type F3: The sidelite glazing should be changed from 'D' to 'F'.
28. SHEET M-200 MECHANICAL DEMO PLAN: (See attached drawing)
28.1. Sheet reissued as it deletes the demolition requirement of the duct work in Storage Room #113.
29. SHEET M-201 MECHANICAL FLOOR PLAN: (See attached drawing)
29.1. Sheet reissued as it modifies the ductwork shown on the drawings.
29.2. The room name label of New Cot Storage #128 should be replaced with New Classroom #128 as per architectural.
29.3. The room name label of Vehicle Maint. #123 should be replaced with Loading #123.
30. MECHANICAL: Subject to the Contract Documents the following manufacturers are acceptable for bidding:

30.1. Air-Rite	Manual Volume Dampers, Roof Hoods
30.2. Thermaflex	Flexible Duct
30.3. Bradley	Thermostatic Mixing Valves
30.4. Fujitsu	Mini-Split AC Units
30.5. Hart and Cooley	Flexible Duct
30.6. Powers	Thermostatic Mixing Valves, Pressure Balancing Valves
30.7. Turbo-X	Radial Blade Ceiling Diffusers
30.8. Tempco Services	Testing, Adjusting and Balancing
30.9. Heat Transfer Products- Phoenix	Water Heaters

31. STRUCTURAL ITEMS:
31.1. 1. The table in A.12 on Sheet S-101 has been revised with updated Importance factors and Seismic Occupancy factor.
31.2. 2. Section C on Sheet S-101 has been revised to show Strong-Bolt anchors, Epoxy grouted anchors, and Titen-HD anchors at anchor bolts for interior walls.
31.3. Section G has been deleted from Sheet S-101
31.4. Section H renamed to be Section G on Sheet S-101.
31.5. Section I renamed to be Section H on Sheet S-101. Roof sheathing callout in same section revised to reference "19/32" APA RATED SHEATHING SPAN RATING 40/20". Floor sheathing callout has been deleted.
31.6. Section J renamed to be Section I on Sheet S-101.
31.7. Section K renamed to be Section J on Sheet S-101. Note 13 in the same sections has been added to require a Certificate of Compliance.
31.8. Section L renamed to be Section K on Sheet S-101.
31.9. Section M renamed to be Section l on Sheet S-101.
31.10. Section N renamed to be Section M on Sheet S-101.

31.11. Section O renamed to be Section N. CMU Special Inspection has been revised to be Level 2 Special Inspection. Titen HD Screw Anchors, and Strong-Bolt Expansion Anchors have been added to the Special Cases item in the same section.

31.12. The structural items requiring special inspection per the DFCM Special Inspection and Testing Form (from http://dfcm.utah.gov/downloads/bldg_official/Special_Inspection_Form.pdf) are the following:

31.12.1. Structural Steel to be Fabricated by an Approved Fabricator per DFCM Approved Fabricator List.

High Strength Bolting (1704.3) - Periodic
Single Pass Fillet Welds < or = 5/16" - Periodic
Reinforcing Steel Placement (in new footings) - Periodic
Use of Required Concrete Design Mix - Periodic
Concrete Sampling for Strength Test, Slum, Air Content, and Temperature of Concrete - Continuous
Masonry Construction - Site Prepared Mortar – Periodic
Masonry Construction - Construction of Mortar Joints – Periodic
Masonry Construction - Location of Reinforcement, Connectors, and Anchorages - Periodic

31.12.2. Masonry Construction – Size and Location of Structural Elements, Size and Location of Anchors – Periodic

31.12.3. Masonry Construction – Size, Grade and Type of Reinforcement – Periodic
Masonry Construction – Cold and Hot Weather Protection – Periodic

31.12.4. Masonry Construction – Clean Grout Space, Placement of Reinforcement, Grout Mix and Grout Placement – Periodic
Masonry Construction – Grout Placement – Continuous
Masonry Construction – Grout and Mortar Specimens and Prisms – Continuous
Masonry Construction – Construction and Submittal Compliance Verification – Periodic
Masonry Construction – Structural Steel – Periodic
Wood Construction – Prefabricated Elements and Assembly – Periodic

31.12.5. Structural Fill Soil Densities – Periodic

31.12.6. Post-Installed Mechanical Anchors (Strong-Bolt or Titen HD) - Periodic

31.12.7. Epoxy Grouted Anchor Bolts - Periodic
Seismic Supports for Duct Work and Sealing of Joints for Duct Work - Periodic

31.12.8. Seismic Supports for Electrical Raceways, Cable Trays and Lights - Periodic
Seismic Supports for Plumbing Lines including Gas, Water, and Steam and Condensation – Periodic

31.13. The depth of the footings below the new CMU shear walls at the drill hall have been increased to 3'-0" on Sheet S-201.

31.14. A new CMU shear wall (and footing) has been added at the drill hall on Sheet S-201 and Sheet S-301.

31.15. The vertical and drag loads at the new open web steel joists at the addition have been revised on Sheet S-301.

31.16. The weld length and plate size at the steel drag plate in detail 11 on Sheet S-501 have been revised.

31.17. The CMU shear wall reinforcing in Detail 1 on Sheet S-502 has been revised

31.18. The Titen HD anchors to the bottom of the concrete beam in detail 2 on Sheet S-502 shall be ¾" diameter at 6" o.c. with 5-1/2" embedment.

31.19. Some of the weld lengths and plate sizes at the steel drag plates in details 7, 8, 9, and 10 on Sheet S-502 have been revised.

31.20. Detail 6 on Sheet S-504 has been added for the new CMU shear wall at the drill hall.

32. ELECTRICAL ITEMS

33. Section 271343

34. Item #1 Paragraph 2.2 Delete the Manufacture Superior Essex and add"Comscope Systems Solutions"

35. <u>SHEET E101</u>

36. Item #1 Electrical Contractor shall provide new lighting fixtures on the Upper level as follows. Install 13 new Type F1 fixtures two in Aux Room, five in the Classroom, three in the corridor and three in FDC room. Also provide four Type F5 fixtures in the Storage Room. Install new switches in each room and corridor.
37.
38. Item #2 Electrical Contractor shall provide 3 new type F5 fixtures in the lower level Mechanical Equipment room and circuit to Circuit A1. Install new switch and the top of the stair.
39.
40. Item #3 Lighting fixtures in front Office are to be F1 not F6 Shown.
41.
42. <u>SHEET E201</u>
43.
44. Item #1 Electrical contractor shall provide Additional Voice/Data outlets as follows:
45. One in Office #103
46. One in Office #105
47. Two in Office #108
48. Two in Office #109
49. Three in existing Classroom #111
50. One in existing Classroom #112
51. One in the Kitchen #116
52. One in Vehicle Maintenance #123
53. Two in Weight room #127
54. Five in Classroom #128
55. Six in Classroom #129
56. Six in Classroom #130
57. One in Mechanical Room #118
58. Provide a ¾" conduit from each Voice/Data outlet with cables per specifications to the IT Room #120.
59. Item #2 Provide and install an additional TV outlets in Classrooms #129 & #130 and provide a duplex receptacle on the local circuit for power.
60. Item #3 Keyed note #5 should read Alternate #3 not #1 show
61. SHEET E401
62. Item #1 Provide a Manual Transfer switches on the existing electrical services. One for the Single phase service and one for the Three phase service. Generator Transfer switches are to be located on the exterior wall east side. The service conductors are to be intercepted and routed to the load side ot the transfer switch and new conductors run from the normal power side to the existing trans-closure. Provide two parallel runs of 500MCM for the 800amp switchboard and two parallel 350MCM for the 600amp switchboard. Coordinate the revisions with Rocky Mtn Power and provide conduits and metering revisions in accordance with their requirements. This work is to be included under Alternate #1
63. Item#2 The Service entrance feeders are to be two parallel runs of (4) #350 MCM CU. with #3 Gnd. in 3" Conduit, Feeders to Panels A and B to be #3/0 CU with #6 Gnd. In 2" Conduit, Feeders to Panels K and M to be #1 CU with # 6 Gnd. in 1-1/2" conduit

64. PRODUCT APPROVAL

65. LIST OF APPROVAL ITEMS

66. The following items, trade names, products and manufactures are approved for bidding. Approval does not relieve the bidder from satisfying the intent of the requirements of the drawings, specifications, and addenda in every respect. Failure to conform to the design quality and standards specified, established and required may result in later disapproval. If equipment must be disapproved after bidding, supplier shall supply specified equipment at no extra cost to the owner.

67. Items are listed generally and specific model number, etc. shall be as submitted. Items submitted but not approved either did not satisfy the requirements, or showed insufficient data, or arrived after the deadline established for the submittal process.

68. Fire Alarm System:

68.1. Notifer

69. Lighting Fixtures

69.1.	F1	Columbia	Lithonia	HE Williams
69.2.	F2	Columbia	ELP	HE Williams
69.3.	F3	Columbia	Nulite	HE Williams
69.4.	F4	Columbia	Nulite	HE Williams
69.5.	F5	Columbia	ELP	HE Williams
69.6.	F6	Columbia	Lithonia	HE Williams
69.7.	F7	Prescolite	Lithonia	HE Williams
69.8.	F8	Columbia	Lithonia	HE Williams
69.9.	F9	Columbia	Lithonia	LSI
69.10.	F10	Columbia	ELP	-
69.11.	F11	Columbia	Lithonia	HE Williams
69.12.	F12	Columbia	Lithonia	HE Williams
69.13.	F13	Prescolite	Lithonia	HE Williams
69.14.	F14	Duray	Lithonia	-
69.15.	F15	Duray	Lithonia	-
69.16.	F16	Prescolite	Lithonia	DMF
69.17.	F17	Hubbell	Lithonia	Trace Lite
69.18.	F18	Hubbell	Lithonia	Trace Lite
69.19.	F19	Hubbell	Lithonia	Trace Lite
69.20.	E1	Dual-Lite	Sidelite	-
69.21.	E2	Dual-Lite	Sidelite	-
69.22.	E3	Dual-Lite	Sidelite	
69.23.	G	Dual-Lite	Evenlite	Exitronics
69.24.	X1	Dual-Lite	Evenlite	Exitronics

70. Lighting Controls PCI

71. Occupancy Sensors: Novitas

End of Addendum #1

UTAH NATIONAL GUARD STATEMENT OF WORK
PERFORMING TELECOMMUNICATION PROJECTS
UT-G6-C (12/31/2009)

GENERAL INFORMATION AND CONDITIONS

Purpose and Intent:

The Utah Army National Guard (UTARNG) desires to have Telecommunication parts installed in accordance with Industry Standard TIA/568B. All projects must be coordinated and approved through the UTARNG State Telecommunications Manager (Mike Hansen, 801-432-4118) to ensure that industry standards are adhered to.

Key Dates:

Proposal Review: The Contractor should allow the Owner two weeks for review of proposals and award. A start date will be provided in the Notice of Award.

Site Visits:

Site visits for telecommunication projects will be arranged by contacting Mike Hansen by telephone at 801-432-4118(office), or by e-mail at john.m.hansen1@us.army.mil

Questions:

Questions regarding this Statement of Work should be presented in writing to:

Utah Army National Guard
UT-G6-C, ATTN: Mike Hansen
P.O. Box 1776
Draper, UT 84020
FAX (801) 523-4844

E-mail questions to john.m.hansen1@us.army.mil
A written answer to any such questions will be provided to all respondents to this request for proposals.

CONTRACT INFORMATION

Required Contractor Training

This is a list of all approved SYSTIMAX contractors and installers in the State of Utah

Americom Technology Contact: Mark Monsen
5123 South Commerce Drive
Murray, UT 84107
Tel: 801-892-0529
FAX: 801-892-0585

Cache Valley Electric Contact: Tim Hadden
2345 South John Henry Dr
Salt Lake City, UT 84119
Tel: 801-908-2680
FAX: 801-908-7041

Federal Communication Contact: Justin Thomas
1990 South Milestone Drive
Suite D
Salt Lake City, UT 84104-4853
Tel: 801-972-2262
FAX: 801-972-9095

Wasatch Electric Contact: Ryan Wallwork
1574 South West Temple
Salt Lake City, UT 84155
Tel: 801-487-4511
FAX: 801-487-5032

The Contractor shall be fully conversant and capable in the cabling of low voltage applications such as, but not limited to data, voice and imaging network systems. The Contractor shall at a minimum possess the following qualifications:

Personnel trained and certified in the design of the Systimax Cabling Solution.

Personnel trained and certified to install the Systimax Cabling Solution.

The Designer and Installer shall show proof of current certification of the Systimax Cabling Solution via an updated card given after attending the 5- day course or a re-certification class given every two years.

Provide references of the type of installation provided in this specification.

Personnel trained and certified in fiber optic cabling, splicing, termination and testing techniques. Personnel must have experience using a light meter and OTDR.

Personnel trained in the installation of pathways and support for housing horizontal and backbone cabling.

System Warranty

A twenty (20) year warranty available for the category _ structured cabling system shall be provided for an end-to-end channel model installation which covers applications assurance, cable, connecting hardware and the labor cost for the repair or replacement thereof. CommScope will receive a warranty registration form no later than 60 days after the installation. This will include all testing results.

Proposal Organization: The Contractor should break down his proposal deliverables and costs into parts and labor.

Cost Basis: The Contractor should show a unit price breakdown for the personnel, materials and tasks to be provided, as well as lump sum prices per project.

Selection Criteria: The UTNG will use the following criteria, equally weighted, to select the successful Contractor for this work.

Technical Abilities and Approach: The qualifications and experience of key personnel, as well as the proposed methodologies and resources will be considered.

Past Performance: The experiences of the Contractor most closely related to this project will be considered, particularly successful completion of projects using Industry Standard TIA/568B.

Responsiveness: The ability of the Contractor to dedicate sufficient resources to the project and to be readily available will be considered.

Cost: The overall costs proposed by the Contractor and the completeness of detail of these costs will be considered.

Award of Contract: Award of any Contract is contingent upon availability of state/federal funds to perform this work. The UTNG anticipates award of all work to a single Contractor, but reserves the right to split the award or make a partial award.

BACKGROUND

Agency Need Description: The UTNG requires that the following parts (brand specific) be used in conjunction with TIA/568B guidelines:

This is a list of all Telecommunication Standards for all Utah Army National Guard facilities, except for AGCW MDF.

MDF / IDF (Main or Intermittent Distribution Frame)
Standard Equipment:

1. CS-SYSTIMX 110UB1-366FT 366 PR BLOCK 110 CAT6 FIELD TERM KIT W/4PR CONN BLAOCKS 108651143 VISIPATCH
2. CS-SYSTIMX 110U2R VISIPATCH DISTRIBUTION RING SNAPS ONTO BACK PANEL 108523937 (FOR EVERY 1 OF PART ONE YOU NEED 6 OF THIS PART)
3. CS-SYSTIMX 110UTC VISIPATCH TROUGH COVER USED TO HIDE PATCH CORDS 108593203 GRAY
4. CS-SYSTIMX 110UHD-S8 VISIPATCH, HORIZONTAL DUCT SNAPS INTO BOTTOM OF VISIPATCH SYSTEM 108637737
5. CS-SYSTIMX MGS400BH-262 1-PORT MOD JACK 110 8W8P UTP T568A/B CAT6 GIGASPEED 700206725 ELEC. WHITE
6. CS-SYSTIMX M12L-262 2-PORT FLUSH MT UNLOADED SGL GANG M-SERIES 108168469 WHITE
7. CS-SYSTIMX CPC5512-03F003 CBL ASSY 110 24-4PR STRANDED CAT6 T568B 3FT VISIPATCH CPC5512-03F003 GRAY
8. CS-SYSTIMX CPC5512-03F003 CBL ASSY 110 24-4PR STRANDED CAT6 T568B 5FT VISIPATCH CPC5512-03F005 GRAY
9. CS-SYSTIMX CPC5512-03F003 CBL ASSY 110 24-4PR STRANDED CAT6 T568B 7FT VISIPATCH CPC5512-03F007 GRAY
10. CS-SYSTIMX CPC5312-03F007 CBL ASSY 110-MOD 24-4PR STR CAT6 T568B 7FT VISIPATCH CPC5312-03F007 GRAY
11. CS-SYSTIMX CPC5312-03F005 CBL ASSY 110-MOD 24-4PR STR CAT6 T568B 5FT VISIPATCH CPC5312-03F005 GRAY
12. CS-SYSTIMX CPC5312-03F003 CBL ASSY 110-MOD 24-4PR STR CAT6 T568B 3FT VISIPATCH CPC5312-03F003 GRAY
13. CS-SYSTIMX CPC5312-03F025 CBL ASSY 110 24-4PR STRANDED VISIP-RJ-45 CAT6 T568B 25FT GRAY CPC5312-03F025

14. CS-SYSTIMX 600G2-1U-MOD-SD MODULAR COMBINATION SHELF SLIDE ACCEPT 4 MODULES 760028324
15. CS-SYSTIMX MODG2-6SC-MM 6 MODULE ADAPTER BEIGE 72 MAX FIB MODG2-6SC-MM 760032177
16. CS-SYSTIMX P6201B-Z 125 SC CONNECTOR MM CER EZ&EPOXY OC 900UM ONLY, NON-TUNABLE 760007070
17. COMMSCOPE 75N4 (CAT 6 BLUE)
18. COMMSCOPE 75N4 (CAT 6 YELLOW)
19. MARCONI R66P25QC LIGHTING PROTECTION PANEL
20. MARCONI R66P50QC LIGHTING PROTECTION PANEL
21. MARCONI R66P100QC LIGHTING PROTECTION PANEL
22. GAS PROTECTION FUSES 104410147

MDF (Main Distribution Frame) for AGCW
Standard Equipment:

1. AVAYA 107894966 100 PAIR LIGHTING PROTECTION 110 TERMINATION STYLE
2. SECOR CCH03U 72 STRAND RACK MOUNT LIU.

The MDF at AGCW is in building 6170. To gain access to this area you will have to contact Mike Hansen at (801-432-4118). **All work to be bid on or done at AGCW** will contact Mike prior to starting.

Manholes

1. Copper Splice Cases 3M KB6 (is the series). You will need to talk to Mike or Toby to determine what ends need to be placed on the ends of the splice case.
2. Fiber Splice Case Coyote 80805514 (Splice tray will depend on amount of fiber)

There are several Manholes at AGCW. When pulling Backbone Cable you will leave a 20 ft maintenance loop in every manhole between the IDF and the MDF. All splices will be sealed water tight. If a case is open, it will be resealed to maintain a water tight seal. All splices in the fiber cable will be fusion spliced. Splices in the copper cable will be done in a splice case and made water tight. To find a path from the IDF to the MDF you will need to speak with Mike or Toby.

All telecommunication work to be done on any Utah Army National Guard Facility will be coordinated and approved though Mike Hansen (801-432-4118). Layout of the Systimax Solution will be coordinated through Mike Hansen. There will be one blue and one yellow CAT 6 wire pulled to each location. They will correlate with the same number on the VisiPatch System (ex. Jack 101 will have one blue and one yellow wire that will be in the same location on the VisiPatch System). Fiber will be terminated in an LIU can. Termination of fiber will be done on the SC style connector unless specified otherwise. This will depend on location. You will need to speak with Mike in order to know what facility has what termination.

PROJECT DELIVERABLES

The Contractor will provide progress reports throughout the term of the Contract to the UTARNG Telecommunications Manager.

All wire must be tested by the contractor with a cable analyzer for its appropriate rating in accordance with TIA/568B standards. The Contractor will turn-in written results of the cable analyzer testing to the UTNG Telecommunications Manager.

PROPOSAL PREPARATION INSTRUCTIONS

The proposal must include the following components: a technical proposal, a cost proposal, a delivery schedule, and a presentation of the Contractor's personnel qualifications and experience. Proposals that do not include the specified elements may be rejected. The Contractor is encouraged to submit copies of relevant projects performed (TIA/568B) within the last two years within his proposal.

Technical Proposal: The technical proposal should describe the tasks to be performed, the methods to be used and the proposed parts to be installed.

Cost Proposal:

The cost proposal should be provided as lump sums by project, and each project should be broken down by task. The cost proposal should include projected labor categories, hours and billing rates. The cost proposal should identify any proposed subcontractors and their labor categories, hours and billing rates.

Delivery Schedule:

The Contractor should provide a proposed schedule of activities, both on-site and in office, identifying work to be performed for each location.

Personnel, Qualifications and Experience:

The proposal should identify Contractor resources, offices, and personnel available to the project. The proposal should identify the actual personnel proposed for use on the project, including their relevant qualifications and experience with TIA/568B standards. Contractors must be certified installers of the parts and equipment proposed and install in accordance with manufacturer warranty. Experience should be listed in the following categories: Similar work performed in Utah, similar work performed in the Western United States, and similar work performed for DOD and specifically National Guard. Failure to use the proposed personnel may be grounds for termination of the project.

PROPOSAL SUBMISSION

The completed proposal should be mailed to:

Utah Army National Guard
UT-AAG-SMD, ATTN: Claire Gee
P.O. Box 1776
Draper, UT 84020

Electronic copies should be sent to cgee@utah.gov accompanied by a hard copy cover letter on letterhead.

Copyright (C) 2007 by PVE, Inc. Salt Lake City, Utah. All rights reserved. Unauthorized copying and/or use is illegal and subject to prosecution.

By: cepenilmo; Dec 16, 2009 - 11:18am, X:\Projects\2009\09101.02.03 - UTNG Richfield Armory Remodel\M2.1-09101.02.dwg

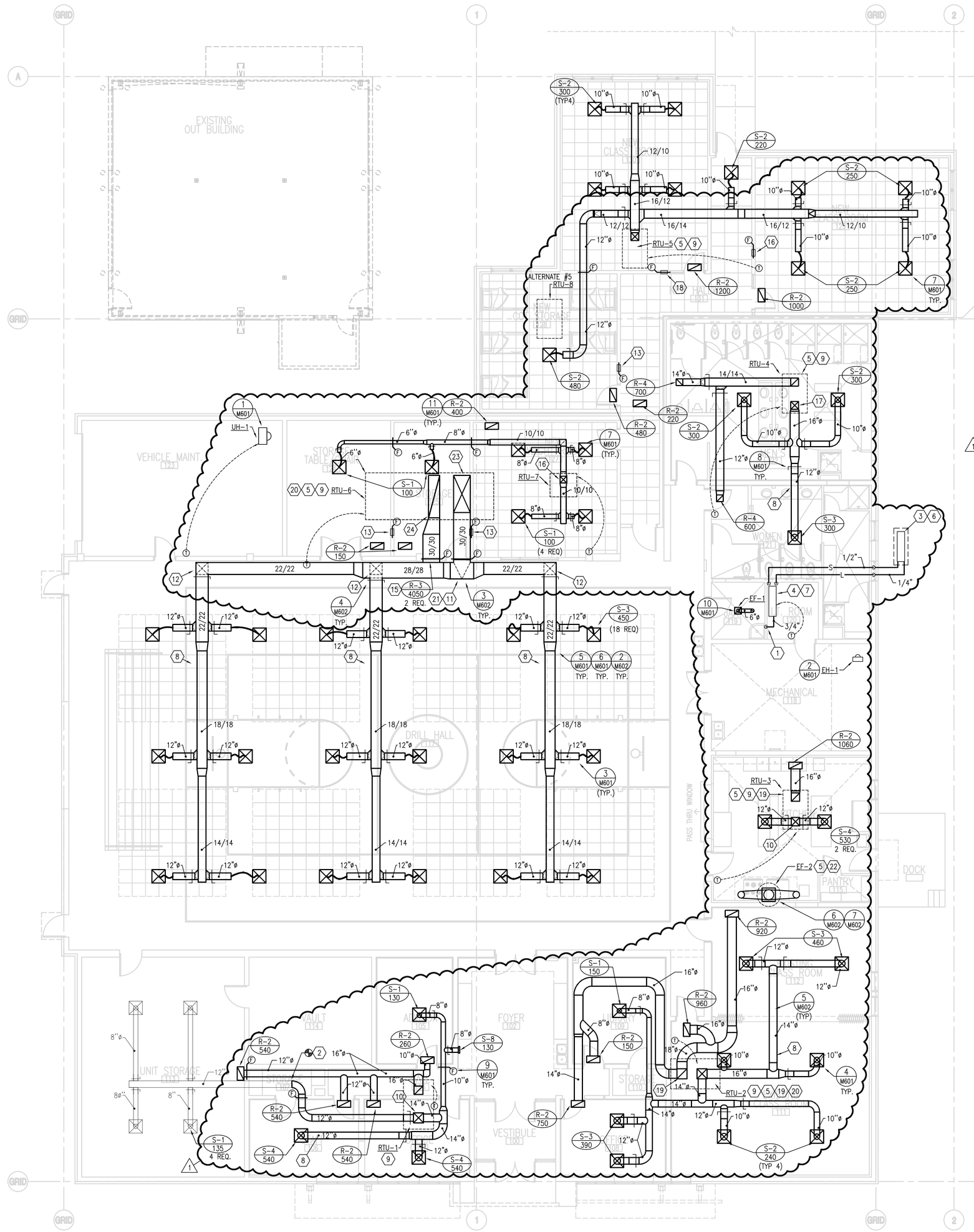

1 M-201 **MECHANICAL FLOOR PLAN**

SCALE:1/8" = 1' - 0"

GENERAL NOTES:

1. THE CONTRACTOR SHALL VERIFY ALL DUCTWORK THAT IS INTENDED TO BE INSTALLED IN THE TRUSSES WILL FIT IN THE TRUSSES PRIOR TO FABRICATION OF ANY DUCT.
2. MOUNT ALL THERMOSTATS AT 48" AFF.

KEYED NOTES:

1. AIR GAP CONDENSATE DRAIN LINE TO MOP SINK.
2. CONNECTIONS POINT TO EXISTING DUCT WORK.
3. PROVIDE REFRIGERANT LINE SIZES AS RECOMMENDED BY MANUFACTURER.
4. INSTALL PER MANUFACTURER'S REQUIREMENTS.
5. DO NOT INSTALL EQUIPMENT CLOSER THAN 10'-0" FROM EDGE OF ROOF.
6. CONDENSER UNIT FOR AC-1. INSTALL ON 4" CONCRETE EQUIPMENT PAD.
7. INSTALL ON HIGH WALL.
8. RUN DUCTWORK IN AND THROUGH ROOF TRUSSES. TYPICAL.
9. RTU LOCATED ON ROOF.
10. 16" X 16" SUPPLY DUCT UP TO RTU LOCATED ON ROOF.
11. RUN DUCT THROUGH WALL OF DRILL HALL.
12. RUN 22" X 22" DUCT ABOVE CEILING.
13. 12" X 12" OPENING THROUGH WALL ABOVE CEILING FOR RETURN AIR.
14. NOT USED
15. INSTALL 30" X 30" RETURN GRILLE IN SIDE WALL OF DRILL HALL, 12" AFF. INSTALL SECOND RETURN GRILL 42" AFF IN THE SAME DUCT.
16. 12" X 12" SUPPLY DUCT UP TO RTU LOCATED ON ROOF.
17. 14" X 14" SUPPLY DUCT UP TO RTU LOCATED ON ROOF.
18. 25"X18" OPENING THROUGH WALL ABOVE CEILING FOR RETURN
19. 18" X 18" DUCTWORK UP TO ROOF TOP UNIT LOCATED ON ROOF.
20. SEE DETAIL 9/M602. TYPICAL
21. SEE DETAIL 3/M602. TYPICAL
22. EF-2 LOCATED ON ROOF.
23. 66"X30" SUPPLY DUCT UP TO RTU-7 LOCATED ON THE ROOF.
24. 76"X20" RETURN DUCT UP TO RTU-7.

jsa architects
architects
planners
interior designers
6463 South 3000 East
Suite 205
Salt Lake City, UT 84121
Ph: 801. 733-2500
Fax: 801. 733-2501
www.jsa-llc.com

CREATED BY: JSA ARCHITECTS

THE DESIGNS SHOWN AND DESCRIBED HEREIN INCLUDING ALL TECHNICAL DRAWINGS, GRAPHIC REPRESENTATION & MODELS THEREOF, ARE PROPRIETARY & CAN NOT BE COPIED, DUPLICATED, OR COMMERCIALLY EXPLOITED IN WHOLE OR IN PART WITHOUT THE SOLE AND EXPRESS WRITTEN PERMISSION FROM THE STATE OF UTAH.

THESE DRAWINGS ARE AVAILABLE FOR LIMITED REVIEW AND EVALUATION BY CLIENTS, CONSULTANTS, CONTRACTORS, GOVERNMENT AGENCIES, VENDORS, AND OFFICE PERSONNEL ONLY IN ACCORDANCE WITH THIS NOTICE.

CONSULTANT:

PVE Inc.
Consulting Mechanical Electrical Engineers
1040 North 2200 West, Suite 100
Salt Lake City, UT 84116
Phone: (801) 359-3158
Fax: (801) 521-4114

BUILDING NAME:

RICHFIELD ARMORY

UTAH NATIONAL GUARD

PROJECT TITLE:

RICHFIELD ARMORY REMODEL

MARK	DATE	DESCRIPTION
1	12-16-09	ADDENDUM 1

ISSUE TYPE:

ISSUE DATE: 12/14/09

DFCM PROJECT NO: 09219470
CAD PROJECT NO: 09054
CAD DWG FILE:
DRAWN BY: PVE
CHK'D BY: PVE
COPYRIGHT: STATE OF UTAH

SHEET TITLE

MECHANICAL FLOOR PLAN

SHEET NUMBER

M-201

Copyright (C) 2007 by PVE, Inc. Salt Lake City, Utah. All rights reserved. Unauthorized copying and/or use is illegal and subject to prosecution.

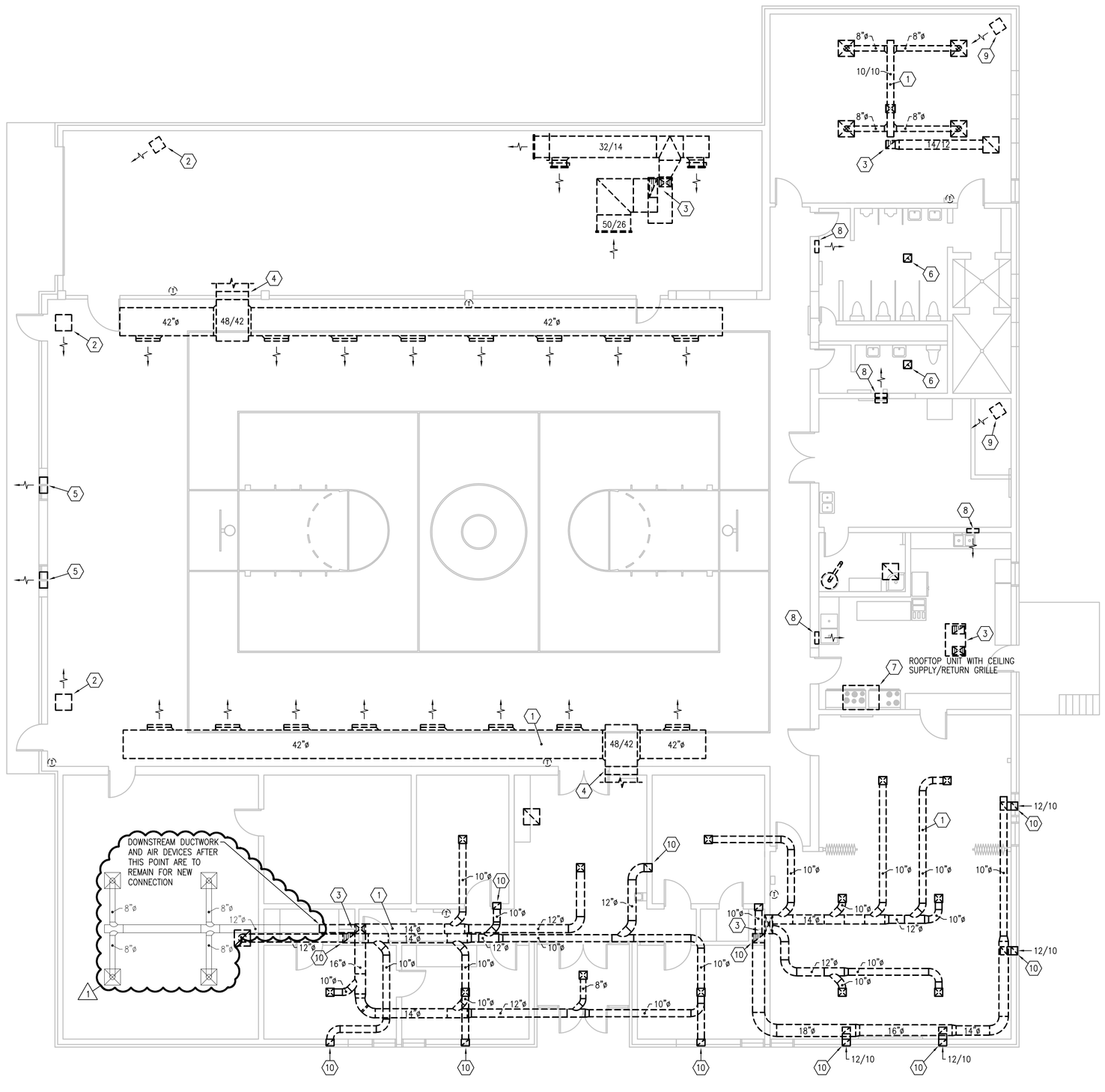

KEYED NOTES:

1. REMOVE DUCTWORK (TYPICAL)
2. REMOVE UNIT HEATER AND GAS PIPING.
3. SEAL OPENINGS THROUGH ROOF WEATHER / WATER TIGHT.
4. SEAL OPENINGS THROUGH WALL WEATHER / WATER TIGHT.
5. REMOVE LOUVER AND SEAL OPENING THROUGH WALL TO MATCH SURROUNDING WALL.
6. REMOVE EXHAUST FAN.
7. REMOVE KITCHEN HOOD AND MAKE-UP AIR DUCTWORK. SEAL OPENINGS THROUGH ROOF WEATHER / WATER TIGHT.
8. REMOVE ELECTRIC WALL HEATER.
9. REMOVE ELECTRIC UNIT HEATER.
10. CAP OFF UNDER GROUND DUCTWORK AT FLOOR LEVEL.

1 M-200 **MECHANICAL DEMO PLAN**

SCALE:1/8" = 1' – 0" 6' 0 4' 8' 12' 16'

jsa architects

architects
planners
interior designers

6465 South 3000 East
Suite 205
Salt Lake City, UT 84121
Ph: 801. 733-2500
Fax: 801. 733-2501
www.jsa-llc.com

CREATED BY: JSA ARCHITECTS

THE DESIGNS SHOWN AND DESCRIBED HEREIN INCLUDING ALL TECHNICAL DRAWINGS, GRAPHIC REPRESENTATION & MODELS THEREOF, ARE PROPRIETARY & CAN NOT BE COPIED, DUPLICATED, OR COMMERCIALLY EXPLOITED IN WHOLE OR IN PART WITHOUT THE SOLE AND EXPRESS WRITTEN PERMISSION FROM THE STATE OF UTAH.

THESE DRAWINGS ARE AVAILABLE FOR LIMITED REVIEW AND EVALUATION BY CLIENTS, CONSULTANTS, CONTRACTORS, GOVERNMENT AGENCIES, VENDORS, AND OFFICE PERSONNEL ONLY IN ACCORDANCE WITH THIS NOTICE.

CONSULTANT:

PVE Inc. Consulting Mechanical Electrical Engineers
1040 North 2200 West, Suite 100
Salt Lake City, UT 84116
Phone: (801) 359-3158
Fax: (801) 521-4114

BUILDING NAME:

RICHFIELD ARMORY

UTAH NATIONAL GUARD

PROJECT TITLE:

RICHFIELD ARMORY REMODEL

MARK	DATE	DESCRIPTION
1	12-16-09	ADDENDUM 1

ISSUE TYPE:

ISSUE DATE: 12/14/09

DFCM PROJECT NO: 09219470
CAD PROJECT NO: 09054
CAD DWG FILE:
DRAWN BY: PVE
CHK'D BY: PVE
COPYRIGHT: STATE OF UTAH

SHEET TITLE

MECHANICAL DEMO PLAN

SHEET NUMBER

M-200

By: cappellano; Dec 16, 2009 – 11:20am, X:\Projects\2009\09100.02.03 – UTNG Richfield Armory Remodel\M2.P-09100.02.dwg

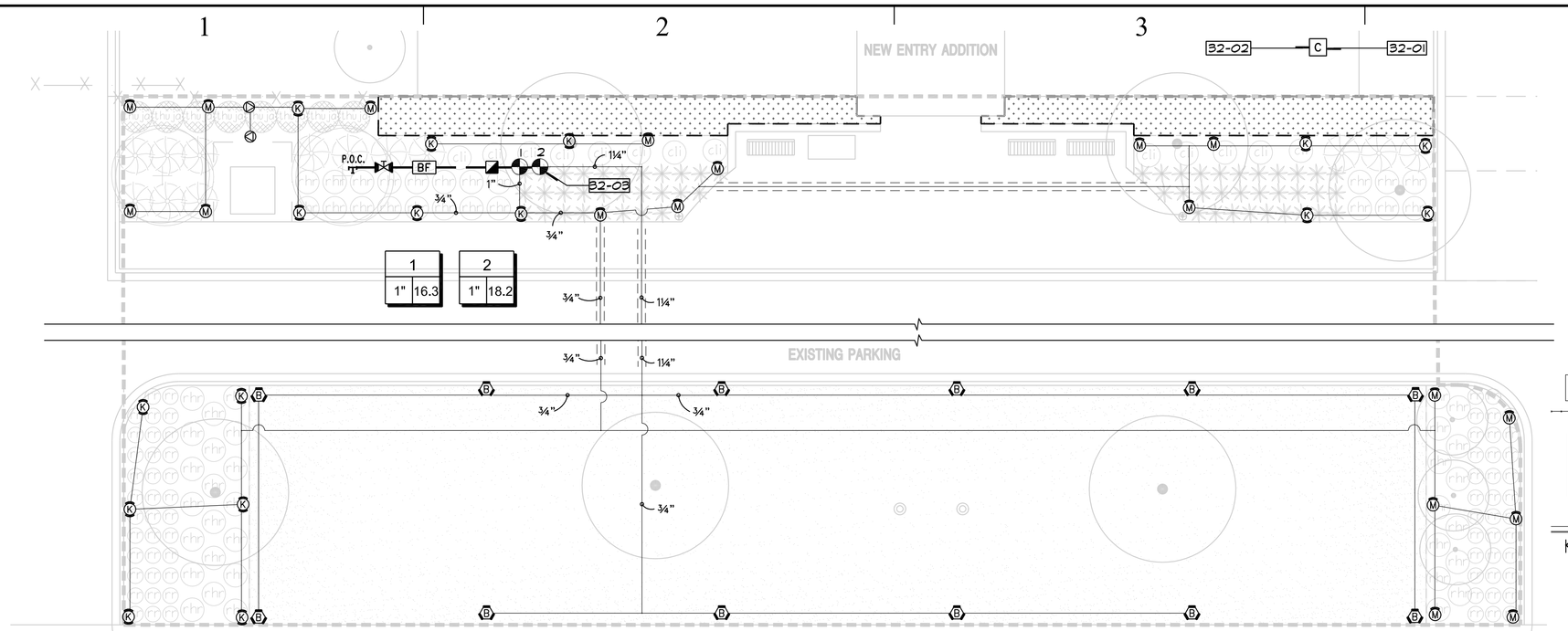

F IRRIGATION PLAN ADD ALTERNATE #2
SCALE: 1"=10'-0"

BLUE STAKES
Call: TOLL FREE
1-800
662-4111
TWO WORKING DAYS BEFORE YOU DIG

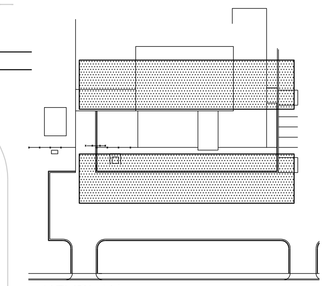

KEYPLAN

NORTH
PLAN

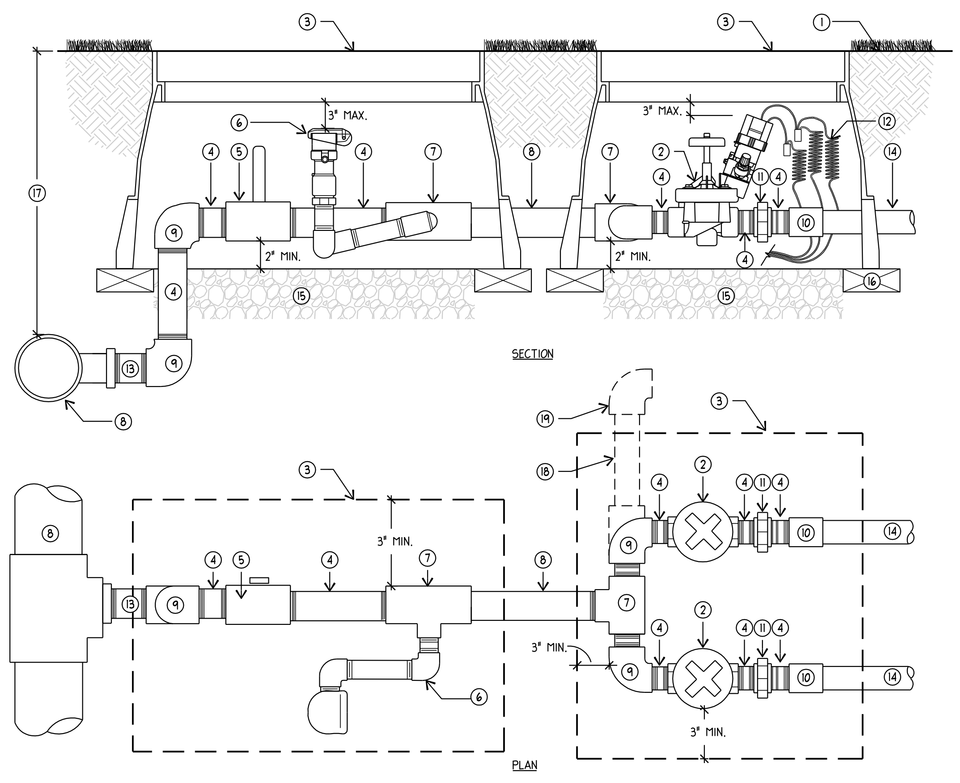

NOTES:
1. LOCATE ALL VALVE BOXES IN PLANTER BEDS UNLESS OTHERWISE INDICATED.
2. ALL FITTINGS AND NIPPLES IN MANIFOLD SHALL BE SCH. 80 THREADED PVC USING TEFLON TAPE.
3. VALVE MANIFOLD TO BE INSTALLED GOING AWAY FROM MAIN SUPPLY LINE. MINIMUM OF 1 FOOT BEFORE CHANGE IN DIRECTION.
4. CUT ALL VALVE BOXES AS REQUIRED SO BOXES DO NOT SIT ON PIPING.

1. SET FLUSH TO FINISH GRADE/TOP OF MULCH
2. ELECTRIC REMOTE-CONTROL VALVE (SEE IRRIGATION LEGEND)
3. CARSON BROOKS 14R-12 STANDARD OR JUMBO VALVE BOX WITH 1220 EXTENSIONS, IF NEEDED (LOCATION MUST BE APPROVED BY OWNER'S REPRESENTATIVE PRIOR TO INSTALLATION).
4. PVC SCH 80 NIPPLE (LENGTH AS REQUIRED)
5. ISOLATION BALL VALVE WITH HANDLE TURNED UPWARDS (SEE IRRIGATION LEGEND)
6. QUICK COUPLER VALVE (NOT AT EVERY VALVE MANIFOLD) (SEE IRRIGATION LEGEND AND DETAIL)
7. PVC SCH 80 TEE T X T X S (SAME SIZE AS MAINLINE PIPING)
8. MAINLINE PIPING (SIZE AS PER PLAN)
9. PVC SCH. 80 T X T ELBOW
10. PVC SCH. 80 T X S COUPLING
11. PVC SCH. 80 UNION
12. CONTROL WIRES- 30-INCH LINEAR LENGTH OF WIRE, COILED
13. PVC SCH 80 NIPPLE WITH BUSHING (LENGTH AS REQUIRED)
14. LATERAL PIPING (SIZE AS PER PLAN)
15. 6-INCH MINIMUM DEPTH OF 3/4-INCH WASHED AGGREGATE
16. BRICK FOUNDATION, TYP.
17. FOR TRENCH DEPTHS (SEE TRENCHING AND SLEEVING DETAIL)
18. PVC SCH 80 PIPE (LENGTH AS REQUIRED)
19. EXTEND FOR NUMBER OF VALVES REQUIRED

G ELECTRIC REMOTE-CONTROL VALVE ASSEMBLY ADD ALTERNATE #2
SCALE: NTS
SECTION/PLAN

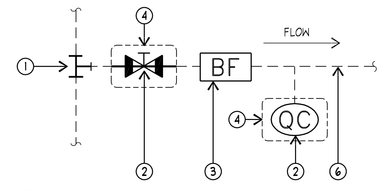

NOTE:
1. ALL CONNECTIONS TO MEET UTAH STATE CODE REQUIREMENTS
2. REFER TO GENERAL IRRIGATION NOTE #2 FOR IRRIGATION SYSTEM DESIGN PARAMETERS

1. POINT OF CONNECTION. TIE INTO CULINARY WATER LINE
2. STOP AND WASTE VALVE (SEE IRRIGATION SCHEDULE)
3. BACKFLOW PREVENTOR (SEE IRRIGATION SCHEDULE)
4. HEAVY-DUTY VALVE BOX WITH LOCKING LID (LOCATION MUST BE APPROVED BY OWNER'S REP. PRIOR TO INSTALL).
5. QUICK COUPLER
6. MAINLINE PIPING

A POINT OF CONNECTION ADD ALTERNATE #2
SCALE: NTS
PLAN

NOTE:
1. ALL BACKFLOW PREVENTERS ARE TO MEET UTAH STATE CODES.
2. ALL BURIED BOLTS SHALL BE STAINLESS STEEL.
3. INSTALL PER MANUFACTURERS RECOMMENDATIONS.

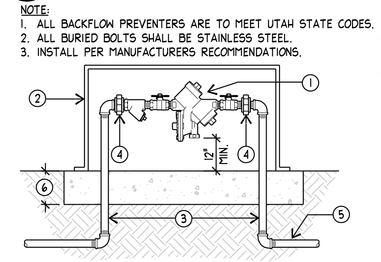

1. BACKFLOW PREVENTER (SEE IRRIGATION LEGEND)
2. PROTECTIVE ENCLOSURE (SEE IRRIGATION LEGEND)
3. MAINLINE PIPING (SIZE AS PER PLAN)
4. UNIONS AS NEEDED
5. PVC PIPING ALLOWED BEYOND THIS POINT OF THE SYSTEM- (USE SPOOL OR GALVANIZED PIPING BEFORE THIS POINT)
6. CONCRETE SLAB WITH COMPACTED AGGREGATE BASE PER ENCLOSURE MANUFACTURER RECOMMENDATION

B BACKFLOW ASSEMBLY ADD ALTERNATE #2
SCALE: NTS
SECTION

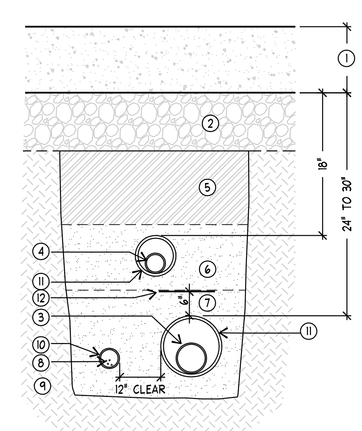

1. HARDSCAPE PAVING
2. COMPACTED AGGREGATE SUB-BASE
3. MAINLINE PIPING
4. LATERAL PIPING
5. CLEAN BACKFILL FREE OF ROCKS 1" DIA. AND LARGER.- SEE SPECS.
6. BEDDING SAND- IN CASES WHERE LATERAL PIPING IS INSTALLED IN MAINLINE TRENCH, USE SAND TO BACKFILL TRENCH
7. BEDDING SAND- USE SAND TO A DEPTH OF 2" BELOW AND TO THE EITHER SIDE OF SLEEVING
8. ELECTRICAL WIRES - BUNDLE AND TAPE WITH DUCT TAPE EVERY 15FT. O.C.
9. COMPACTED SUBGRADE
10. ELECTRICAL CONDUIT- SEE SPECS.
11. SLEEVING:
-SLEEVES SHALL BE 2" LARGER THAN THE PIPE OR WIRES WITHIN -1" TO 2 1/2" =PVC SCH 80
-4" AND LARGER = PVC CLASS 200
12. USE DETECTABLE WARNING TAPE W/ MAINLINE - PLACE 6" ABOVE - SEE SPECS.

NOTE:
1. SETTLE ALL TRENCHES WITH WATER PRIOR TO INSTALLATION OF TOPSOIL.
2. WHEN MULTIPLE PIPES OCCUR IN ONE TRENCH, ADD REQUIRED SLEEVE SIZES TOGETHER FOR 1 SLEEVE SIZE.
3. EXTEND ALL SLEEVING 12" MIN. BEYOND EDGE OF PAVING.

C SLEEVING ADD ALTERNATE #2
SCALE: NTS
SECTION

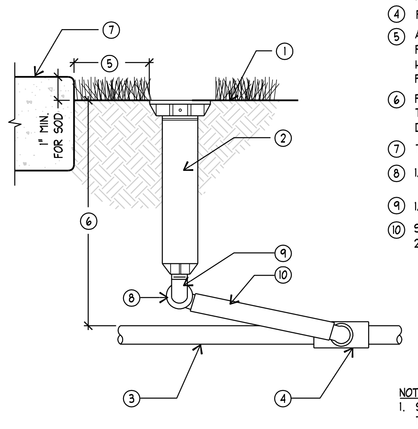

1. SET HEAD FLUSH WITH FINISH GRADE/TOP OF MULCH
2. POP-UP SPRAY HEAD (SEE IRRIGATION SCHEDULE)
3. LATERAL PIPING (SIZE AS PER PLAN)
4. PVC SCH 40 TEE OR ELL
5. ALL SPRAY HEADS TO BE PLACED 1" CLEAR OF ALL HARDSCAPE SURFACES AND 2'-0" FROM BUILDINGS
6. FOR TRENCH DEPTHS (SEE TRENCHING AND SLEEVING DETAIL)
7. TOP OF HARDSCAPE
8. 1/2" BARB 90°
9. 1/2" MARLEX 90° ELL
10. SWING ASSEMBLY: FLEX TUBE 24" MAX. LENGTH

NOTE:
1. SWING PIPE SHALL SLOPE TOWARDS LATERAL PIPE FOR COMPLETE DRAINAGE.

H POP-UP SPRAY HEAD ADD ALTERNATE #2
SCALE: NTS
SECTION

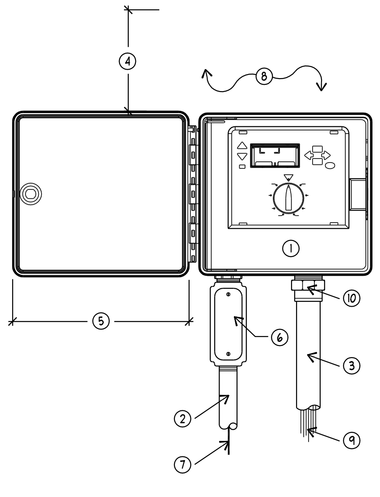

1. WALL MOUNTED IRRIGATION CONTROLLER (SEE IRRIGATION LEGEND)
2. 1-INCH PVC SCH. 80 CONDUIT AND FITTINGS TO POWER SUPPLY
3. 1-1/4", 1-1/2" OR 2" PVC SCH 80 CONDUIT AND FITTINGS FOR VALVE WIRES
4. MAINTAIN HINGE PIN CLEARANCE FOR DOOR REMOVAL
5. MAINTAIN CLEARANCE FOR DOOR
6. JUNCTION BOX
7. 120V POWER SUPPLY BY OTHERS
8. MOUNT TO BUILDING WALL BEYOND OR APPROVED STRUCTURE (LOCATION MUST BE APPROVED BY OWNER'S REPRESENTATIVE PRIOR TO INSTALLATION)
9. REMOTE CONTROL VALVE WIRES
10. LOCK NUT

NOTE:
1. INSTALL PER MANUFACTURE'S SPECIFICATIONS.
2. ALL CONDUIT ABOVE GROUND SHALL GALV. SCH. 40 PIPE.
3. PROVIDE UL APPROVED 5/8" X 8' GROUND ROD. GROUND WIRE SHALL BE #8 WIRE CONNECTING WITHIN THE TOP 4" OF GROUND ROD WITH UL APPROVED GROUND CLAMPS (NO SCREW CLAMPS)

E IRRIGATION CONTROLLER-WALL MOUNTED ADD ALTERNATE #2
SCALE: NTS
ELEVATION

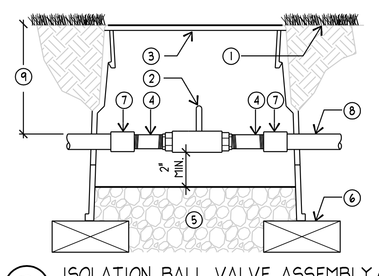

1. SET FLUSH TO FINISH GRADE / TOP OF MULCH
2. ISOLATION BALL VALVE W/ HANDLE TURNED UPWARD (SEE IRRIGATION SCHEDULE)
3. VALVE BOX (LOCATION MUST BE APPROVED BY OWNER'S REP. PRIOR TO INSTALL).
4. PVC SCH 80 NIPPLE
5. 6-INCH MINIMUM DEPTH OF 3/4-INCH WASHED AGGREGATE
6. BRICK FOUNDATION
7. PVC SCH 80 SLIP X THREAD COUPLING (SAME SIZE AS MAINLINE PIPING)
8. MAINLINE PIPING
9. FOR TRENCH DEPTHS (SEE TRENCHING AND SLEEVING DETAIL)

D ISOLATION BALL VALVE ASSEMBLY ADD ALTERNATE #2
SCALE: NTS
SECTION

LEGEND

- PROPERTY BOUNDARY LINE
- LIMIT OF WORK
- ROCK MULCH (SEE SHT. L-LI, DTL. A & F)
- LANDSCAPE EDGE
- FLAGPOLE
- SALVAGED MISSILE BOLLARD, RELOCATED
- BENCH (SEE SHT. L-LI, DTL. A & B)

IRRIGATION SCHEDULE ADD ALTERNATE #2

SYMBOL	MANUFACTURER/MODEL/DESCRIPTION	ARC	PSI	GPM	RADIUS
B	Hunter MP3000 w/ MPR40-04-CV Turf Spray 4" pop-up with factory installed check valve, MP Rotator nozzle. B=Blue adj arc 90-210, Y=Yellow adj arc 210-270, A=Gray 360 arc, on MPR40 4" pop-up body.	Adj	40		30'
M	Hunter MP1000 w/ MPR40-06-CV Shrub Spray 6" pop-up with check valve, MP Rotator nozzle. M=Maroon adj arc 90 to 210, L=Light Blue 210 to 270 arc, O=Olive 360 arc, on MPR40 6" pop-up body.	Adj	40		13'
K	Hunter MP2000 w/ MPR40-06-CV Shrub Spray 6" pop-up with factory installed check valve, MP Rotator nozzle. K=Black adj arc 90-210, G=Green adj arc 210-270, R=Red 360 arc, on MPR40 6" pop-up body.	Adj	40		19'
LS	Hunter MP Strip w/ MPR40-06-CV Shrub Spray 6" pop-up with factory installed check valve, MP Rotator nozzle. LST=Ivory left strip, SST=Brown side strip, RST=Copper right strip, on MPR40 6" pop-up body.	LCS	40	0.22	5'x15'
RS	Hunter MP Strip w/ MPR40-06-CV Shrub Spray 6" pop-up with factory installed check valve, MP Rotator nozzle. LST=Ivory left strip, SST=Brown side strip, RST=Copper right strip, on MPR40 6" pop-up body.	RCS	40	0.22	5'x15'
SS	Hunter MP Strip w/ MPR40-06-CV Shrub Spray 6" pop-up with factory installed check valve, MP Rotator nozzle. LST=Ivory left strip, SST=Brown side strip, RST=Copper right strip, on MPR40 6" pop-up body.	SST	40	0.44	5'x30'

SYMBOL	MANUFACTURER/MODEL/DESCRIPTION
	Hunter PSV-100S-5 Electric Remote Control Valve, 1" plastic globe valve, slip x slip.
	Hunter HQ-3RC Quick coupler valve, yellow rubber cover, red brass and stainless steel, with 3/4"NPT inlet, 1-piece body.
	Mueller Mark II Orseal Stop and Waste Valve - H-10284. Sized equal to pipe size.
C	Hunter PC-900 Modular Controller, 9 stations, outdoor model.
BF	Wilkins 975XL 1" Reduced Pressure Backflow device. Place inside Strong Box Model SBBC-30CR enclosure
P.O.C.	Point of Connection 1" CONNECT TO EXISTING CULINARY WATER LINE
	Irrigation Lateral Line: PVC Schedule 40
	1" Irrigation Mainline: PVC Schedule 40
	Pipe Sleeve: PVC Class 200 SDR 21 Typical pipe sleeve for irrigation pipe. Pipe sleeve size shall allow for irrigation piping and thei related couplings to easily slide through sleeving material. Extend sleeves 18 inches beyond edges of paving or construction.

Valve Callout
- # — Valve Number
- #" #— Valve GPM / Valve Size

REFERENCE NOTES ADD ALTERNATE #2

SYMBOL	DESCRIPTION
B2-01	WALL-MOUNTED CONTROLLER - VERIFY LOCATION WITH OWNER'S REPRESENTATIVE
B2-02	PROVIDE 120V POWER TO THIS LOCATION FOR CONTROLLER. COORDINATE WITH ELECTRICAL CONTRACTOR
B2-03	ALIGN VALVE BOXES WITHIN SHRUB BEDS

IRRIGATION NOTES ADD ALTERNATE #2

1. IT IS THE INTENT OF THESE IRRIGATION PLANS TO PROVIDE THE CONTRACTOR WITH CONSTRUCTION INFORMATION THAT WILL ENABLE HIM TO PROVIDE AND INSTALL A COMPLETE AND OPERATIONAL IRRIGATION SYSTEM. THE CONTRACTOR SHALL PROVIDE ALL LABOR, PARTS AND MATERIALS REQUIRED.
2. THE SYSTEM IS DESIGNED FOR AN OPERATING PRESSURE BETWEEN 40-65 PSI AND A MAX. DEMAND OF 20 GPM. THE CONTRACTOR SHALL VERIFY THE LOCATION OF THE EXISTING CULINARY WATER LINE TO BE CONNECTED TO AND VERIFY THE AVAILABLE WATER PRESSURE ON SITE PRIOR TO CONSTRUCTION - REPORT ANY DISCREPANCIES TO THE OWNER'S REPRESENTATIVE. IN THE EVENT THE PRESSURE DIFFERENCES ARE NOT REPORTED PRIOR TO THE START OF CONSTRUCTION, THE CONTRACTOR SHALL ASSUME FULL RESPONSIBILITY FOR ANY REVISIONS NECESSARY. CONTRACTOR TO MAINTAIN OPERATING PRESSURE FOR EACH ZONE TO THE LAST HEAD.
3. IT IS THE RESPONSIBILITY OF THE CONTRACTOR TO FAMILIARIZE HIMSELF WITH ALL GRADE DIFFERENCES, LOCATION OF WALLS, STRUCTURES, WALKS, AND UTILITIES. THE IRRIGATION CONTRACTOR SHALL REPAIR OR REPLACE ALL ITEMS DAMAGED BY HIS WORK, HE SHALL COORDINATE HIS WORK WITH OTHER CONTRACTORS FOR THE LOCATION AND INSTALLATION OF PIPE SLEEVES AND LATERALS THROUGH WALLS AND UNDER PAVING.
4. DO NOT WILLFULLY INSTALL THE IRRIGATION SYSTEM AS SHOWN ON THE PLANS WHEN IT IS OBVIOUS IN THE FIELD THAT UNKNOWN OBSTRUCTIONS OR GRADING DIFFERENCES MAY NOT HAVE BEEN CONSIDERED IN THE ENGINEERING. SUCH OBSTRUCTIONS OR DIFFERENCES SHOULD BE BROUGHT TO THE ATTENTION OF THE LANDSCAPE ARCHITECT. IN THE EVENT THAT THIS NOTIFICATION IS NOT PERFORMED, THE CONTRACTOR SHALL ASSUME FULL RESPONSIBILITY FOR ANY REVISIONS NECESSARY.
5. THIS DESIGN IS DIAGRAMMATIC, ALL IRRIGATION EQUIPMENT, PIPING, VALVES, ETC., SHOWN WITHIN PAVED AREAS ARE FOR DESIGN CLARIFICATION ONLY AND SHALL BE INSTALLED IN PLANTING AREAS WHEREVER POSSIBLE.
6. IRRIGATION SYSTEM IS TO BE INSTALLED AS SHOWN AND IN ACCORDANCE WITH ALL APPLICABLE CODES AND REGULATIONS.
7. THE CONTRACTOR SHALL FLUSH AND ADJUST ALL SPRINKLER HEADS AND VALVES FOR OPTIMUM COVERAGE. INSTALL ALL SPRINKLER HEADS WITH NOZZLES OF THE APPROPRIATE DEGREE AND RADIUS FOR THE AREA TO BE COVERED. ADJUST ALL NOZZLES TO MINIMIZE SPRAYING ONTO WALKS, BUILDINGS, ETC.
8. ALL IRRIGATION EQUIPMENT NOT OTHERWISE DETAILED OR SPECIFIED SHALL BE INSTALLED AS PER MANUFACTURES SPECS.
9. ALL PIPE INSTALLED IN PAVING SHALL BE SLEEVED (SEE LEGEND AND DETAILS).

SCALE & NORTH ARROW

jsa architects
architects
planners
interior designers
6465 South 3000 East
Suite 205
Salt Lake City, UT 84121
Ph: 801. 733-2500
Fax: 801. 733-2501
www.jsa-llc.com

CREATED BY: JSA ARCHITECTS

THE DESIGNS SHOWN AND DESCRIBED HEREIN INCLUDING ALL TECHNICAL DRAWINGS, GRAPHIC REPRESENTATION & MODELS THEREOF, ARE PROPRIETARY & CAN NOT BE COPIED, DUPLICATED, OR COMMERCIALLY EXPLOITED IN WHOLE OR IN PART WITHOUT THE SOLE AND EXPRESS WRITTEN PERMISSION FROM THE STATE OF UTAH.

THESE DRAWINGS ARE AVAILABLE FOR LIMITED REVIEW AND EVALUATION BY CLIENTS, CONSULTANTS, CONTRACTORS, GOVERNMENT AGENCIES, VENDORS, AND OFFICE PERSONNEL ONLY IN ACCORDANCE WITH THIS NOTICE.

CONSULTANT:

Arc Sitio Design, Inc
Landscape Architecture & Architectural Site Design
1058 East 2100 South
Salt Lake City, Utah 84106
office 801 . 487 . 4923
fax 801 . 466 . 3046
www.arcsitiodesign.com

BUILDING NAME:

RICHFIELD ARMORY

UTAH NATIONAL GUARD

PROJECT TITLE:

RICHFIELD ARMORY REMODEL

MARK	DATE	DESCRIPTION
1	12-30-09	SCALE PLAN UPDATE

ISSUE TYPE: CONST. DOCUMENT SET

ISSUE DATE: 12/14/09

DFCM PROJECT NO: 09219470
CAD PROJECT NO: 09054
CAD DWG FILE:
DRAWN BY: SG/KS
CHK'D BY: SG
COPYRIGHT: STATE OF UTAH

SHEET TITLE

IRRIGATION PLAN & DETAILS - ADD ALTERNATE #2

SHEET NUMBER

L-R1

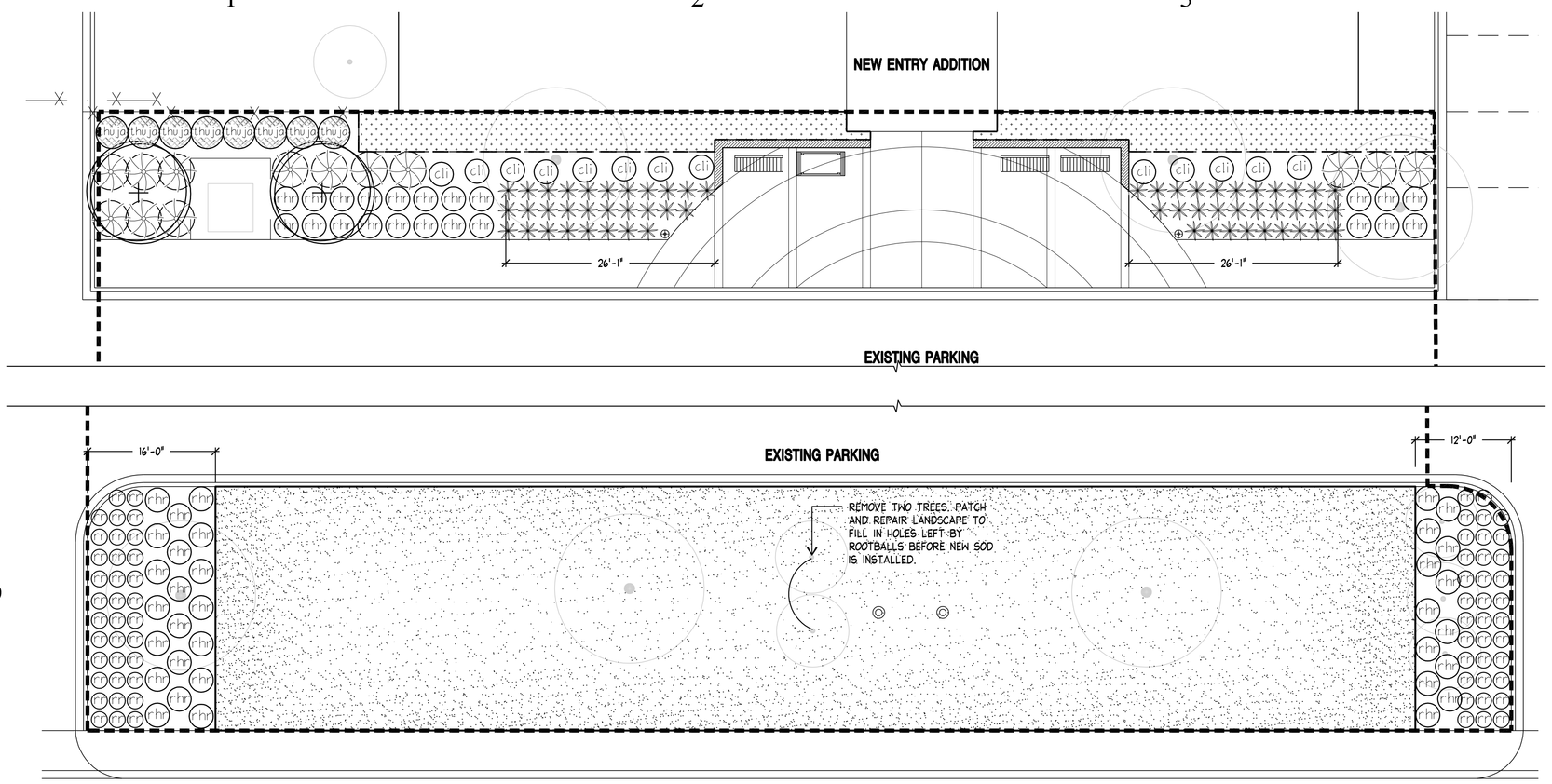

A LANDSCAPE PLAN ADD ALTERNATE #2
SCALE: 1"=10'-0"

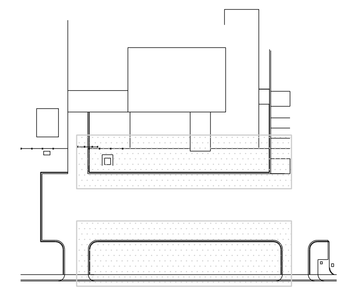

KEYPLAN

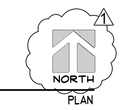

PLAN

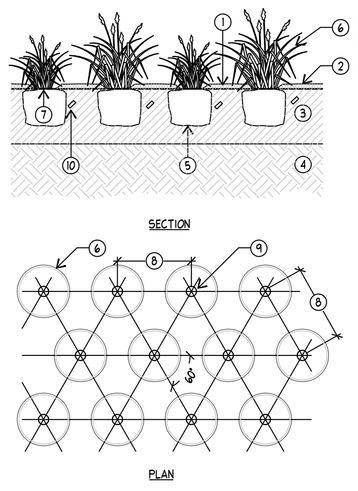

1. MULCH BACK FROM PLANT
2. SHREDDED BARK MULCH - SEE SPECS.
3. AMENDED TOPSOIL- SEE TOPSOIL SPECS.
4. UNDISTURBED SUBGRADE
5. IF PLANTS ARE POT-BOUND AT PLANTING TIME, LOOSEN THE ROOTS AROUND THE BOTTOM AND SIDES OF THE ROOT BALL
6. PLANT
7. BE SURE THE CROWN OF THE PLANT (THE POINT WHERE ROOTS AND TOP JOIN) IS EVEN WITH THE SOIL SURFACE
8. PLANT SPACING VARIES - REFER TO PLANT SCHEDULE OR PLAN
9. CENTER OF PLANT
10. FERTILIZER TABLET - SEE SPECS.

NOTES:
1. PRUNE DEAD, DISEASED, DAMAGED, OR RUBBING BRANCHES AT PLANTING TIME.
2. REMOVE ALL LABELS, WIRES, ETC. FROM PLANT.
3. WATER PLANTS THOROUGHLY FOLLOWING PLANTING TO SETTLE THE SOIL AROUND THE ROOTS.

F PERENNIAL / GROUNDCOVER ADD ALTERNATE #2
SCALE: NTS SECTION/PLAN

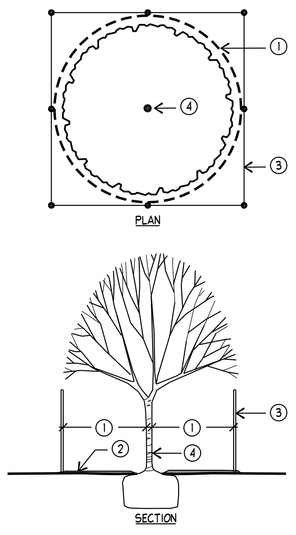

1. PROTECTIVE ROOT ZONE (PRZ)- TO CALCULATE CRITICAL ROOT RADIUS, MEASURE THE TREE'S DIAMETER (DBH) 4.5 FEET ABOVE THE GROUND. MEASURE IN INCHES. FOR EACH INCH, ALLOW FOR 1 TO 1.5 FEET OF CRITICAL ROOT RADIUS. IF A TREE'S DBH IS TEN INCHES, ITS CRITICAL ROOT RADIUS IS 10 TO 15 FEET.
2. MULCH 1" TO 2" BACK FROM TRUNK WITHIN THE PRZ
3. TREE PROTECTION BARRIER- USE 4'-0" HIGH ORANGE SNOW FENCE WITH POSTS MIN. 5'-0" O.C. REVIEW DESIGN WITH OWNER'S REPRESENTATIVE PRIOR TO INSTALLATION.
4. TREE TRUNK

NOTES:
1. IF THERE IS TRENCHING WITHIN THE PRZ, TRENCHES SHALL ONLY BE DUG ON ONE SIDE OF THE TREE AND SHALL BE DONE ONLY DONE WITH APPROVAL FROM THE OWNER'S REPRESENTATIVE. HAND EXCAVATION ONLY.
2. DO NOT STOCKPILE ANY MATERIALS OR LOCATE ANY HEAVY MACHINERY WITHIN THE PRZ. THERE SHALL BE NO TRAFFIC ALLOWED WITHIN THE PRZ.
3. ONLY MOVE BARRIER WITH THE PERMISSION OF THE OWNER'S REPRESENTATIVE.

D TREE PROTECTION ADD ALTERNATE #2
SCALE: NTS SECTION/PLAN

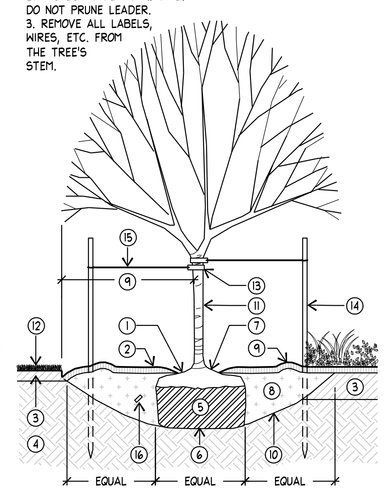

NOTES:
1. PLANT TREE PLUMB.
2. PRUNE DEAD, DISEASED, DAMAGED, OR RUBBING BRANCHES AT PLANTING TIME. DO NOT PRUNE LEADER.
3. REMOVE ALL LABELS, WIRES, ETC. FROM THE TREE'S STEM.

1. MULCH 1" TO 2" BACK FROM TRUNK
2. SHREDDED BARK MULCH - SEE SPECS.
3. AMENDED TOPSOIL - SEE TOPSOIL SPECS.
4. UNDISTURBED SUBGRADE
5. IF THE TREE IS BALLED AND BURLAPPED (OR CONTAINED IN A WIRE BASKET), CUT AND REMOVE THE ROPE, STRING, WIRE, AND/OR WIRE BASKET FROM AROUND THE TRUNK AND TOP 1/3 OF THE ROOT BALL
6. SET ROOTBALL ON UNDISTURBED SUBGRADE
7. TRUNK FLAIR- SET 1" TO 2" ABOVE FINISH GRADE
8. MAKE THE HOLE WIDE, AS MUCH AS THREE TIMES THE DIAMETER OF THE ROOT BALL, BUT ONLY AS DEEP AS THE ROOT BALL. BACKFILL WITH 1/2 TOPSOIL BORROW FROM PIT AND 1/2 AMENDED TOPSOIL - SEE TOPSOIL SPECS.
9. REMOVE SOD AT DRIPLINE OF TREE TO FORM TREE WELL OR A MIN. WIDTH OF 3'-0" DIA.
10. ROUGHEN SIDES PRIOR TO BACKFILLING. SETTLE W/ WATER IN 12" LIFTS
11. IF PLANTED IN LATE FALL, WRAP TRUNK, STARTING AT THE BOTTOM TO THE FIRST SET OF BRANCHES. REMOVE THE WRAP SPRING, AFTER THE LAST FROST. ONLY WRAP IF SUN HITS ITS TRUNK IN WINTER.
12. DO NOT PLANT LAWN IN TREE PIT
13. 3" OR WIDER NYLON WEBBING W/ METAL GROMMETS
14. 6'-0" X 2" DIA. ROUND WOOD STAKES, TWO PER TREE (THE STAKES SHALL BE PLUMB AND SET AT THE SAME HEIGHT)
15. DOUBLE STRAND PLIABLE NO. 10-GAGE GALVANIZED STEEL WIRE OR VINYL-COATED STEEL WIRE, DO NOT PULL TAUT
16. FERTILIZER TABLET - SEE SPECS.
17. EDGE OF WALK OR CURB

B DECIDUOUS TREE WITH STAKING ADD ALTERNATE #2
SCALE: NTS SECTION

NOTES:
1. PRUNE DEAD, DISEASED, DAMAGED, OR RUBBING BRANCHES AT PLANTING TIME. DO NOT PRUNE LEADER.
3. REMOVE ALL LABELS, WIRES, ETC. FROM SHRUB.

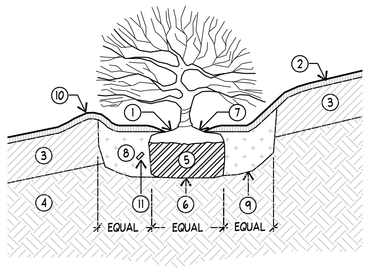

1. MULCH 1" TO 2" BACK FROM TRUNK
2. SHREDDED BARK MULCH - SEE SPECS.
3. AMENDED TOPSOIL- SEE TOPSOIL SPECS.
4. UNDISTURBED SUBGRADE
5. IF THE SHRUB IS BALLED AND BURLAPPED (OR CONTAINED IN A WIRE BASKET), CUT AND REMOVE THE ROPE, STRING, WIRE, AND/OR WIRE BASKET FROM AROUND THE TRUNK AND TOP 1/3 OF THE ROOT BALL
6. SET ROOTBALL ON UNDISTURBED SUBGRADE
7. TRUNK FLAIR- SET 1" TO 2" ABOVE FINISH GRADE
8. MAKE THE HOLE WIDE, AS MUCH AS THREE TIMES THE DIAMETER OF THE ROOT BALL, BUT ONLY AS DEEP AS THE ROOT BALL. BACKFILL WITH 1/2 TOPSOIL BORROW FROM PIT AND 1/2 AMENDED TOPSOIL - SEE TOPSOIL SPECS.
9. ROUGHEN SIDES PRIOR TO BACKFILLING. SETTLE W/ WATER IN 12" LIFTS
10. FORM WELL AT EACH PLANT USING TOPSOIL
11. FERTILIZER TABLET - SEE SPECS.

G SHRUB ADD ALTERNATE #2
SCALE: NTS SECTION

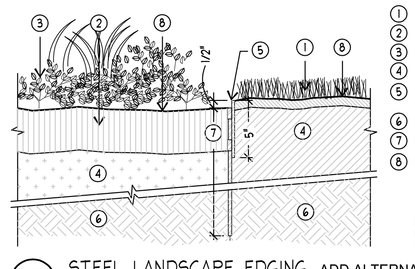

1. TURF
2. MULCH, AS SPECIFIED
3. SHRUB BED
4. TOPSOIL LAYER
5. STEEL LANDSCAPE EDGING SYSTEM- SEE SPECS.
6. SUBGRADE
7. 14" SPIKE
8. FINISH GRADE

NOTES:
1. INSTALL PER MANUFACTURER'S SPECIFICATIONS.

E STEEL LANDSCAPE EDGING ADD ALTERNATE #2
SCALE: NTS SECTION

BLUE STAKES
CALL BEFORE YOU DIG
Call: TOLL FREE
1-800
662-4111
TWO WORKING DAYS BEFORE YOU DIG

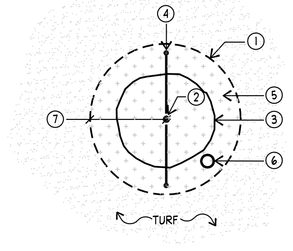

1. TURF EDGE (E / L-P1)
2. TREE TRUNK
3. ROOTBALL
4. STAKING SYSTEM- LOCATE STAKES WITHIN THE TURF EDGE
5. MULCH AS SPECIFIED
6. ACCENT LIGHTING- IF USED, LOCATE ACCENT LIGHTS WITHIN THE TURF EDGE
7. REMOVE SOD AT DRIPLINE OF TREE- MIN. WIDTH OF 3'-0" DIA.

C TREE IN TURF ADD ALTERNATE #2
SCALE: NTS PLAN

LEGEND

- PROPERTY BOUNDARY LINE
- LIMIT OF WORK
- ROCK MULCH (SEE SHT. L-L1, DTL. A & F)
- LANDSCAPE EDGE
- FLAGPOLE
- SALVAGED MISSILE BOLLARD, RELOCATED
- BENCH (SEE SHT. L-L1, DTL. A & B)
- EXISTING TREE - PROTECT IN PLACE, UNLESS NOTED OTHERWISE.

PLANTING LEGEND ADD ALTERNATE #2

DECIDUOUS TREES	BOTANICAL	COMMON	CONT	CAL	QTY
+	Pyrus calleryana 'Chanticleer'	Chanticleer Pear	B & B	3"	2

SHRUBS	BOTANICAL	COMMON	CONT	QTY
Cli	Cytisus x 'Lilac Time'	Lilac Time Broom	5 gal	13
Fra	Rhus aromatica 'Gro-Low'	Gro-Low Fragrant Sumac	5 gal	55
Thu	Thuja occidentalis 'Emerald'	Emerald Arborvitae	5'-6'	8

ANNUALS/PERENNIALS	BOTANICAL	COMMON	CONT	QTY
Hy	Hemerocallis hybrid 'Rosy Returns'	Rosy Returns Daylily	1 gal	70

GRASSES	BOTANICAL	COMMON	CONT	QTY
	Calamagrostis acutifolia 'Karl Foerster'	Foerster's Reed Grass	1 gal	59
	Miscanthus sinensis 'Gracillimus'	Maiden Grass	1 gal	13

GROUND COVERS	BOTANICAL	COMMON	CONT	QTY
	Turf-Grass	Turf-Grass	sod	4,574 sf

KEYNOTES

PLANTING NOTES ADD ALTERNATE #2

1. CONTRACTOR SHALL BE RESPONSIBLE FOR MAKING HIMSELF FAMILIAR WITH ALL UNDERGROUND UTILITIES, PIPES AND STRUCTURES. CONTRACTOR SHALL TAKE SOLE RESPONSIBILITY FOR ANY COSTS INCURRED DUE TO DAMAGE OF SAID UTILITIES.
2. THE CONTRACTOR SHALL SUPPLY ALL PLANT MATERIAL IN QUANTITIES SUFFICIENT TO COMPLETE THE PLANTING SHOWN ON THE DRAWINGS. QUANTITIES ARE ESTIMATES, IT IS THE RESPONSIBILITY OF THE CONTRACTOR TO VERIFY THE NUMBERS.
3. ANY PROPOSED SUBSTITUTIONS OF PLANT SPECIES SHALL BE MADE WITH PLANTS OF EQUIVALENT OVERALL FORM, HEIGHT, BRANCHING HABIT, FLOWER, LEAF, COLOR, FRUIT AND CULTURE ONLY AS APPROVED BY THE LANDSCAPE ARCHITECT.
4. INSTALL A 3" LAYER OF APPROVED BARK MULCH TO COVER ALL EXPOSED AREAS IN ALL PLANTED AREAS, SEE SPECIFICATIONS.
5. ALL PLANT MATERIAL SHALL BE APPROVED BY THE OWNER'S REPRESENTATIVE UPON DELIVERY TO THE SITE, AND PRIOR TO INSTALLATION.
6. FINAL LOCATIONS OF ALL PLANT MATERIALS SHALL BE SUBJECT TO APPROVAL OF THE OWNER'S REPRESENTATIVE.
7. THE CONTRACTOR TO SUPPLY A MINIMUM OF 6" OF AMENDED TOPSOIL TO ALL NEW PLANTINGS. PRUNE TREES IN ACCORDANCE WITH SPECIFICATIONS. AMEND THE SOIL WITH ORGANIC MATERIAL AS PER SPECIFIC RECOMMENDATIONS OF THE SOILS REPORT. SCARIFY THE SOIL TO A MIN. DEPTH OF 6 INCHES.
8. ALL PLANT MATERIALS SHALL MATCH SPECIFICATIONS PER SPECIES AND COMPLY WITH ANSIZ60.1 "STANDARDS FOR NURSERY STOCK."
9. TREES SHALL NOT BE PLANTED LESS THAN 5'-0" FROM CURBS OR HARD SURFACE AREAS UNLESS A ROOT BARRIER IS INSTALLED PER SPECIFICATIONS.
10. ALL MANUFACTURED SLOPE AREAS AND DRAINAGE SWALES SHALL BE COVERED WITHIN 30 DAYS OF COMPLETION OF GRADING WITH STRAW MULCH, JUTE NETTING, OR OTHER APPROVED GEOTEXTILE MATERIAL CAPABLE OF CONTROLLING SURFACE SOIL EROSION.
11. CONTRACTOR RESPONSIBLE TO NOTIFY OWNER'S REPRESENTATIVE WHEN APPROXIMATELY 25% PLANT MATERIAL HAS BEEN INSTALLED. OWNER'S REPRESENTATIVE AND LANDSCAPE ARCHITECT TO WALK SITE TO INSPECT THE HEALTH, CONDITION, AND COMPLIANCE OF INITIAL INSTALLATION OF PLANT MATERIAL. ADJUSTMENTS TO PLANTINGS MAY BE REQUIRED FOR REMAINDER OF WORK TO ADDRESS QUALITY ISSUES DISCOVERED DURING 25% SITE PLANT INSPECTION.

SCALE & NORTH ARROW

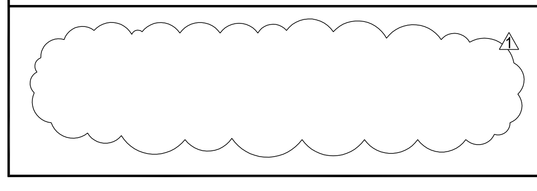

jsa architects
architects
planners
interior designers
6465 South 3000 East
Suite 205
Salt Lake City, UT 84121
Ph: 801. 733-2500
Fax: 801. 733-2501
www.jsa-llc.com

CREATED BY: JSA ARCHITECTS

THE DESIGNS SHOWN AND DESCRIBED HEREIN INCLUDING ALL TECHNICAL DRAWINGS, GRAPHIC REPRESENTATION & MODELS THEREOF, ARE PROPRIETARY & CAN NOT BE COPIED, DUPLICATED, OR COMMERCIALLY EXPLOITED IN WHOLE OR IN PART WITHOUT THE SOLE AND EXPRESS WRITTEN PERMISSION FROM THE STATE OF UTAH.

THESE DRAWINGS ARE AVAILABLE FOR LIMITED REVIEW AND EVALUATION BY CLIENTS, CONSULTANTS, CONTRACTORS, GOVERNMENT AGENCIES, VENDORS, AND OFFICE PERSONNEL ONLY IN ACCORDANCE WITH THIS NOTICE.

CONSULTANT:

Arc Sitio Design, Inc
Landscape Architecture & Architectural Site Design
1058 East 2100 South
Salt Lake City, Utah 84106
office 801 . 487 . 4923
fax 801 . 466 . 3046
www.arcsitiodesign.com

BUILDING NAME:

RICHFIELD ARMORY

UTAH NATIONAL GUARD

PROJECT TITLE:

RICHFIELD ARMORY REMODEL

MARK	DATE	DESCRIPTION
1	12-30-09	SCALE PLAN UPDATE

ISSUE TYPE: CONST. DOCUMENT SET

ISSUE DATE: 12/14/09

DFCM PROJECT NO: 09219470
CAD PROJECT NO: 09054
CAD DWG FILE:
DRAWN BY: SG/KS
CHK'D BY: SG

COPYRIGHT: STATE OF UTAH

SHEET TITLE

LANDSCAPE PLAN & DETAILS - ADD ALTERNATE #2

SHEET NUMBER

L-P1

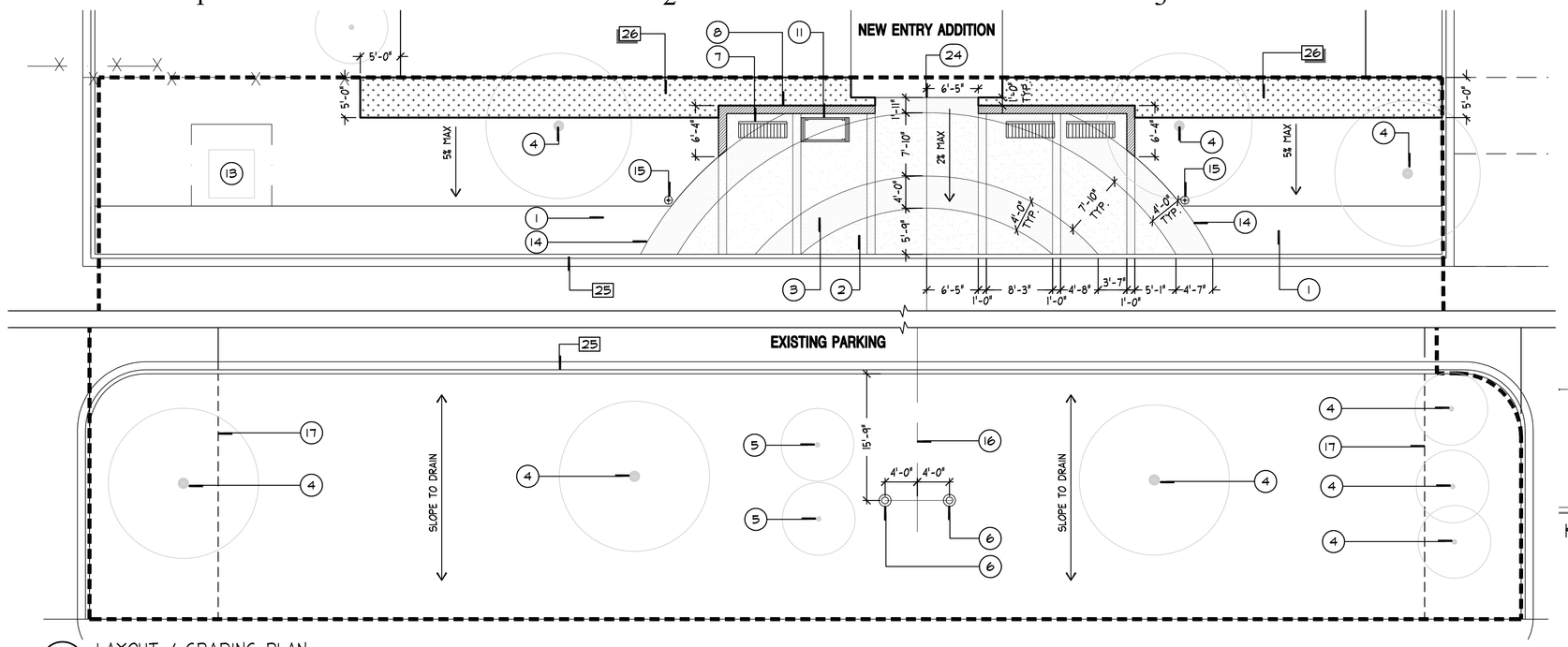

A LAYOUT / GRADING PLAN
SCALE: 1"=10'-0"

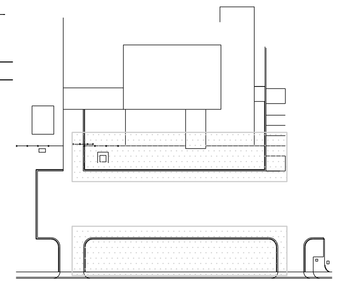

KEYPLAN

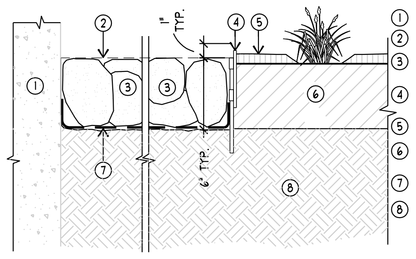

1. BUILDING FOUNDATION
2. FINISH GRADE
3. ROCK MULCH - SEE SPECS.
4. LANDSCAPE EDGING SYSTEM WITH 14" SPIKE
5. TOP OF MULCH, IF APPLICABLE
6. AMENDED TOPSOIL, IF APPLICABLE
7. WEED BARRIER FABRIC
8. COMPACTED SUBGRADE

NOTE: CONTRACTOR TO REMOVE AND DISPOSE SOIL NESSCARY FOR ROCK MULCH BED DEPTH.

F ROCK MULCH BASE BID
SCALE: NTS — SECTION

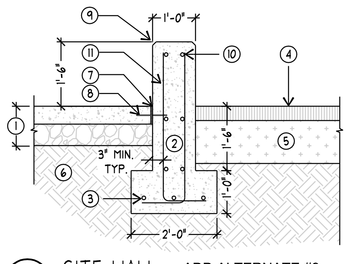

1. CONCRETE PAVING, WHERE OCCURS
2. POURED IN PLACE CONCRETE
3. (3) #4 BARS X CONT.
4. LANDSCAPING - SEE PLANS
5. TOPSOIL
6. COMPACTED SUBGRADE
7. EXPANSION JOINT
8. 8" (L) #4 DOWEL IN 5/8" SIMPSON ET EPOXY OR APPROVED EQUAL - HOLE @ 18" O.C.
9. 1" CHAMFER, TYP.
10. #4 BARS @ 18" O.C. EACH FACE HORIZONTAL
11. #4 BARS @ 16" O.C. EACH FACE - VERTICAL

G SITE WALL ADD ALTERNATE #2
SCALE: 1/2" = 1'-0" — SECTION

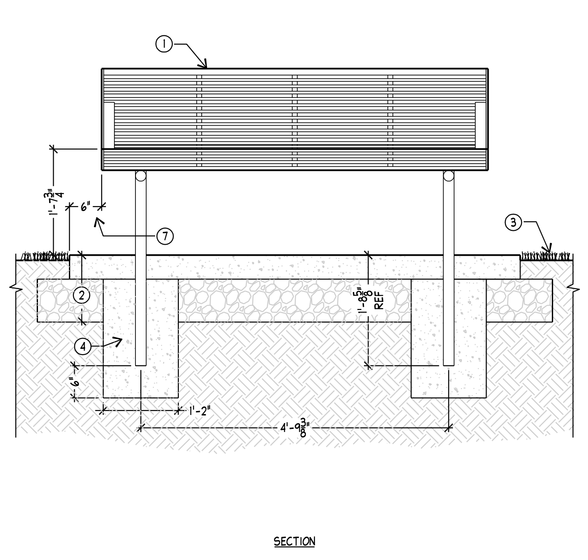

SECTION

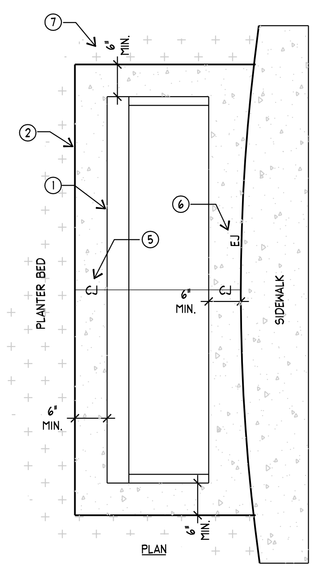

PLAN

1. BENCH, SEE SPECS.
2. CONCRETE PAVING (NIC.)
3. FINISH GRADE 1" BELOW PAVING
4. CONCRETE FOOTING PER MANUFACTURER'S SPECS., TYP.
5. CONTROL JOINT, TYP.
6. EXPANSION JOINT, TYP.
7. 6" MIN. DISTANCE- REFER TO THE PLANS FOR THE EXACT CONCRETE PAVING LAYOUT

NOTE:
1. INSTALLATION TO BE COMPLETED IN ACCORDANCE WITH MANUFACTURER'S SPECIFICATIONS.

B BENCH BASE BID - ONE BENCH
SCALE: NTS — SECTION/PLAN

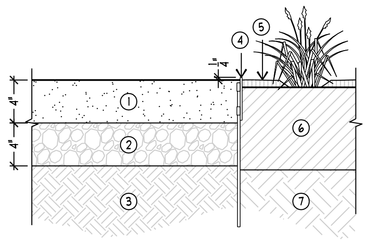

1. COMPACTED STONE DUST, SEE SPECS.
2. COMPACTED AGGREGATE SUBBASE
3. 95% COMPACTED SUBGRADE PER GEOTECHNICAL RECOMENDATIONS
4. LANDSCAPE EDGING SYSTEM WITH 14" SPIKE
5. TOP OF MULCH
6. AMENDED TOPSOIL
7. UNDISTURBED SUBGRADE

D STONE DUST PAVING
SCALE: NTS — SECTION

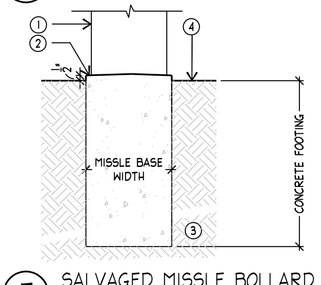

1. SALVAGED MISSLE BOLLARD
2. CONCRETE FOOTING SLOPED AROUND BASE
3. UNDISTURBED SUBGRADE
4. TOP OF FINISH GRADE

NOTES:
1. CONTRACTOR TO SUBMIT SHOP DRAWINGS FOR APPROVAL BY OWNER'S REPRESENTITIVE

E SALVAGED MISSLE BOLLARD FOOTING ADD ALTERNATE #2
SCALE: 1-1/2" = 1'-0" — SECTION

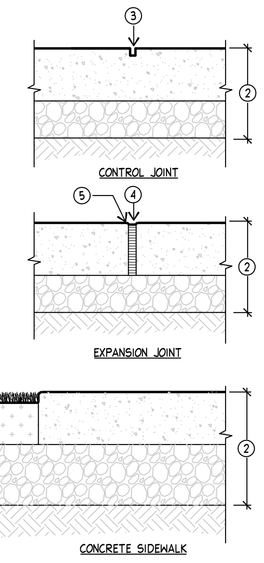

1. FINISH GRADE- 1" BELOW PAVING
2. 4" THICK PC CONCRETE PAVEMENT (WITH WW MESH) OVER 4" COMPACTED AGGREGATE BASE OVER COMPACTED SUBGRADE
3. 1/4" WIDE SCORE. (1" DEEP) PLACE AT 5'-0" O.C. OR AS SHOWN (SEE SPECS.)
4. EXPANSION JOINT, EXPANSION JOINT FILLER & CONT. SEALANT AND PLACE AT 25' O.C. OR AS SHOWN
5. 1/4" RADIUS

C CONCRETE PAVING AND JOINTS ADD ALTERNATE #2
SCALE: NTS — SECTION

BLUE STAKES
CALL BEFORE YOU DIG
Call: TOLL FREE
1-800
662-4111
TWO WORKING DAYS BEFORE YOU DIG

LEGEND - DETAIL A

- PROPERTY BOUNDARY LINE
- LIMIT OF WORK
- ROCK MULCH (SEE SHT. L-L1, DTL. A & F)
- LANDSCAPE EDGE
- FLAGPOLE
- SALVAGED MISSILE BOLLARD, RELOCATED
- BENCH (SEE SHT. L-L1, DTL. A & B)
- CONCRETE PAVING TYPE A
- CONCRETE PAVING TYPE B
- SITE WALL

KEYNOTES - DETAIL A

SYMBOL	DESCRIPTION	QTY	REMARKS
1	EXISTING CONCRETE PAVEMENT		
2	CONCRETE PAVING TYPE A - SEE SHT. L-L1, DTL. C	617 sf	ADD ALTERNATE #2
3	CONCRETE PAVING TYPE B - SEE SHT. L-L1, DTL. C	439 sf	ADD ALTERNATE #2
4	EXISTING TREE TO REMAIN - FIELD VERIFY LOCATION. PROTECT IN PLACE ACCORDING TO DETAILS AND SPECS		
5	REMOVE EXISTING TREE - PATCH AND REPAIR LANDSCAPE AS NECESSARY		
6	FLAGPOLE - SEE ARCHITECTURAL DRAWINGS. PROVIDE ELECTRICAL POWER TO FLAGPOLES. COORDINATE WITH ELECTRICAL PLANS.		BASE BID
7	BENCH - SEE SHT. L-L1, DTL. B & B2		BASE BID - ONE BENCH
8	SITE WALL - SEE SHT. L-L1, DTL. G		ADD ALTERNATE #2
11	SALVAGE AND PROTECT EXISTING MONUMENT. RELOCATE IN THIS LOCATION AND PROVIDE NECESSARY PEDISTAL BASE AND FOOTING.		
13	EXISTING DUMPSTER. PROTECT IN PLACE.		
14	SAW-CUT EXISTING CONCRETE AND REMOVE CONCRETE PAVEMENT AS NECESSARY FOR PROPOSED CONSTRUCTION. PATCH AND REPAIR EXISTING CONCRETE AS NECESSARY.		
15	SALVAGE AND PROTECT EXISTING MISSILE BOLLARDS. RELOCATE IN THIS LOCATION.		
16	FLAGPOLE TO BE LOCATED AND SURVEYED AS PER ORIGINAL LOCATION PRIOR TO CONSTRUCTION. FLAG POLE TO BE NEW-SEE ARCHITECTURAL DRAWINGS FOR DETAIL.		
17	LANDSCAPE EDGING - SEE SHT. L-P1, DTL. E		ADD ALTERNATE #2
24	CENTER JOINT ON DOOR. SCORE PATTERN IS MIRRORED ON BOTH SIDES OF THIS JOINT.		
25	EXISTING CONCRETE CURB		
26	ROCK MULCH - SEE SHT. L-L1, DTL. F		BASE BID

*QUANTITIES FOR REFERENCE ONLY, CONTRACTOR TO VERIFY.

GRADING NOTES

1. FINISHED GRADES, CONTOURS, AND ELEVATIONS INDICATED ON THE GRADING AND DRAINAGE PLAN DESCRIBE FINAL SURFACE ELEVATIONS FOR COMPLETED CONSTRUCTION. THE CONTRACTOR SHALL REVIEW THE DETAILS AND SPECIFICATIONS TO ASCERTAIN SPECIFIC WORK LIMITS AND REQUIREMENTS.
2. CONTRACTOR SHALL BLEND NEW EARTHWORK SMOOTHLY INTO EXISTING. ALL RIDGES AND VALLEYS SHALL HAVE A SMOOTH TRANSITION FROM THE VALLEYS TO THE RIDGES.
3. THE LOCATION OF UNDERGROUND UTILITIES SHOWN ON THIS PLAN ARE DIAGRAMMATIC ONLY, AND ALL UTILITIES MAY NOT BE SHOWN. THE CONTRACTOR SHALL CONTACT THE PROPER LOCAL AUTHORITIES OR RESPECTIVE UTILITY COMPANY TO CONFIRM THE LOCATION OF ALL EXISTING UTILITIES BEFORE COMMENCING WORK. ANY DAMAGE DUE TO FAILURE OF THE CONTRACTOR TO CONTACT THE PROPER AUTHORITIES SHALL BE BORNE BY THE CONTRACTOR.
4. CONTRACTOR SHALL REPAIR ANY DAMAGE TO EXISTING UTILITY LINES OR STRUCTURES INCURRED DURING CONSTRUCTION OPERATIONS AT NO COST TO THE OWNER.
5. ANY AREA OUTSIDE THE LIMIT OF DISTURBANCE/PROPERTY LINE THAT IS DISTURBED SHALL BE RESTORED TO ITS ORIGINAL CONDITION AT NO COST TO THE OWNER.
6. CONSULT ALL OF THE DRAWINGS AND SPECIFICATIONS FOR COORDINATION REQUIREMENTS BEFORE COMMENCING CONSTRUCTION.
7. CONTRACTOR SHALL SUPPLY AND MAINTAIN FOR THE DURATION OF CONSTRUCTION ALL NECESSARY DEVICES FOR EROSION, SEDIMENT AND DUST CONTROL.
8. CONTRACTOR SHALL VERIFY ALL EXISTING GRADES IN THE FIELD AND REPORT ANY DISCREPANCIES TO THE LANDSCAPE ARCHITECT.
9. ALL WALKS, ADA RAMPS, STAIRS AND ALL HARDSURFACING ARE TO MEET CODE REQUIREMENTS.

SCALE & NORTH ARROW

jsa architects
architects
planners
interior designers
6465 South 3000 East
Suite 205
Salt Lake City, UT 84121
Ph: 801. 733-2500
Fax: 801. 733-2501
www.jsa-llc.com

CREATED BY: JSA ARCHITECTS

THE DESIGNS SHOWN AND DESCRIBED HEREIN INCLUDING ALL TECHNICAL DRAWINGS, GRAPHIC REPRESENTATION & MODELS THEREOF, ARE PROPRIETARY & CAN NOT BE COPIED, DUPLICATED, OR COMMERCIALLY EXPLOITED IN WHOLE OR IN PART WITHOUT THE SOLE AND EXPRESS WRITTEN PERMISSION FROM THE STATE OF UTAH.

THESE DRAWINGS ARE AVAILABLE FOR LIMITED REVIEW AND EVALUATION BY CLIENTS, CONSULTANTS, CONTRACTORS, GOVERNMENT AGENCIES, VENDORS, AND OFFICE PERSONNEL ONLY IN ACCORDANCE WITH THIS NOTICE.

CONSULTANT:

Arc Sitio Design, Inc
Landscape Architecture & Architectural Site Design
1058 East 2100 South
Salt Lake City, Utah 84106
office 801 . 487 . 4923
fax 801 . 466 . 3046
www.arcsitiodesign.com

BUILDING NAME:

RICHFIELD ARMORY

UTAH NATIONAL GUARD

PROJECT TITLE:

RICHFIELD ARMORY REMODEL

MARK	DATE	DESCRIPTION
1	12-30-09	SCALE PLAN UPDATE

ISSUE TYPE: CONST. DOCUMENT SET

ISSUE DATE: 12/14/09

DFCM PROJECT NO: 09219470
CAD PROJECT NO: 09054
CAD DWG FILE:
DRAWN BY: SG/KS
CHK'D BY: SG
COPYRIGHT: STATE OF UTAH

SHEET TITLE

LAYOUT / GRADING PLAN & SITE DETAILS

SHEET NUMBER

L-L1

Gordon Spilker Huber
Geotechnical Consultants, Inc.

REPORT
GEOTECHNICAL STUDY
PROPOSED OUTBUILDING UPGRADE AND CLASSROOM ADDITION
UTAH NATIONAL GUARD RICHFIELD ARMORY
NORTH SIDE OF 200 SOUTH 650 WEST
RICHFIELD, UTAH 84701

Submitted To:

State of Utah - DFCM
P.O. Box 14114
Salt Lake City, Utah 84114

Submitted By:

Gordon Spilker Huber Geotechnical Consultants, Inc.
4426 South Century Drive, Suite 100
Salt Lake City, Utah 84123

September 18, 2009

Job No. 0128-047-09

GSH
Gordon Spilker Huber
Geotechnical Consultants, Inc.

September 18, 2009
Job No. 0128-047-09

State of Utah - DFCM
P.O. Box 14114
Salt Lake City, Utah 84114

Attention: Mr. Wayne Smith

Gentlemen:

Re: Report
Geotechnical Study
Proposed Outbuilding Upgrade and Classroom Addition
Utah Nation Guard Richfield Armory
North Side of 200 South 650 West
Richfield, Utah 84701

1. INTRODUCTION

1.1 GENERAL

This report presents the results of our geotechnical study performed at the site of the proposed outbuilding upgrade and classroom addition at the Utah National Guard Richfield Armory, which is located at 200 South 650 West in Richfield, Utah. The general location of the site with respect to major topographic features and existing facilities, as of 2001, is presented on Figure 1, Vicinity Map. A more detailed layout of the site showing the existing armory, outbuildings, roadways, and proposed locations for the classroom addition is presented on Figure 2, Site Plan. The locations of the borings drilled in conjunction with this study are also presented on Figure 2.

1.2 OBJECTIVES AND SCOPE

The objectives and scope of our study were planned in discussions between Mr. Wayne Smith of State of Utah - DFCM, Mr. Mark Stonehocker of JSA Architects, and Mr. Bill Gordon of Gordon Spilker Huber Geotechnical Consultants, Inc. (GSH).

In general, the objectives of this study were to:

1. Accurately define and evaluate the subsurface soil and groundwater conditions at the site.

Gordon Spilker Huber Geotechnical Consultants, Inc.
4426 South Century Drive, Suite 100
Salt Lake City, Utah 84123
Tel: (801) 685-9190 Fax: (801) 685-2990
www.gshgeotech.com

2. Provide appropriate foundation and earthwork recommendations and geoseismic information to be utilized in the design and construction of the proposed outbuilding upgrade and classroom addition.

In accomplishing these objectives, our scope has included the following:

1. A field program consisting of the drilling, logging, and sampling of four borings.

2. A laboratory testing program.

3. An office program consisting of the correlation of available data, engineering analyses, and the preparation of this summary report.

1.3 AUTHORIZATION

Authorization was provided verbally on August 27, 2009 by Mr. Wayne Smith (Professional Services Agreement No. 09-0820, dated August 26, 2009).

1.4 PROFESSIONAL STATEMENTS

Supporting data upon which our recommendations are based are presented in subsequent sections of this report. Recommendations presented herein are governed by the physical properties of the soils encountered in the exploration borings, projected groundwater conditions, and the layout and design data discussed in Section 2., Proposed Construction, of this report. If subsurface conditions other than those described in this report are encountered and/or if design and layout changes are implemented, GSH must be informed so that our recommendations can be reviewed and amended, if necessary.

Our professional services have been performed, our findings developed, and our recommendations prepared in accordance with generally accepted engineering principles and practices in this area at this time.

2. PROPOSED CONSTRUCTION

Proposed construction is to consist of: 1) enclosing and adding a mezzanine level to existing slab-on-grade, steel column and steel roof canopy outbuilding with an eve height of approximately 20 feet; and 2) a 25-foot wide classroom addition at either the northeast corner or west perimeter of the existing armory building. The classroom addition is to be constructed single story of block or wood construction over slab-on-grade with floor elevation equal to the existing building. New loads for the outbuilding and classroom addition will be supported on separate exterior wall foundations and possible few interior footings. See Figure 2 for the proposed layout.

Structural loads associated with the proposed structure will be transmitted down through bearing walls and columns to supporting foundations. Maximum column and wall loads are anticipated to be on the order of 20 to 40 kips and 2 to 4 kips per lineal foot, respectively. Floor slab loads are projected to range from 150 to 200 pounds per square foot.

Site development will require a minor amount of earthwork in the form of site grading. We estimate that maximum cuts and fills to achieve design grades will be on the order of one foot.

Concrete paved aprons/sidewalks will be constructed at the east and west ends of the enclosed outbuilding.

3. SITE INVESTIGATIONS

3.1 FIELD PROGRAM

In order to define and evaluate the subsurface soil and groundwater conditions at the site, 4 borings were explored to depths ranging from 20.5 to 29.5 feet below existing grade. The borings were drilled using a truck-mounted drill rig equipped with hollow-stem augers. Locations of the borings are presented on Figure 2.

The field portion of our study was under the direct control and continual supervision of an experienced member of our geotechnical staff. During the course of the drilling operations, a continuous log of the subsurface conditions encountered was maintained. In addition, relatively undisturbed and small disturbed samples of the typical soils encountered were obtained for subsequent laboratory testing and examination. The soils were classified in the field based upon visual and textural examination. These classifications have been supplemented by subsequent inspection and testing in our laboratory. Detailed graphical representation of the subsurface conditions encountered is presented on Figures 3A through 3D, Log of Borings. Soils were classified in accordance with the nomenclature described on Figure 4, Unified Soil Classification System.

A 3.25-inch outside diameter, 2.42-inch inside diameter drive sampler (Dames & Moore) was utilized in the majority of the subsurface sampling at the site. Additionally, a 2.0-inch outside diameter, 1.38-inch inside diameter drive sampler (SPT) was utilized at select locations. The blow-counts recorded on the boring logs were those required to drive the sampler 12 inches with a 140-pound hammer dropping 30 inches.

Following completion of drilling operations, one and one-quarter-inch diameter slotted PVC pipe was installed in Borings B-1 and B-2 in order to provide a means of monitoring the future groundwater fluctuations.

3.2 LABORATORY TESTING

3.2.1 General

In order to provide data necessary for our engineering analyses, a laboratory testing program was completed. The program included moisture, density, collapse/consolidation, and chemical tests. The following paragraphs describe the tests and summarize the test data.

3.2.2 Moisture and Density Tests

To aid in classifying the soils and to help correlate other test data, moisture and density tests were performed on selected samples. The results of these tests are presented on the boring logs, Figures 3A through 3D.

3.2.3 Collapse/Consolidation Tests

Three collapse/consolidation tests were performed on representative samples of the silty/sandy clay and clayey sand soils encountered within the borings in order to assess their moisture sensitivity and load deformation characteristics. The collapse/consolidation tests were performed as follows:

1. Load sample at in-situ moisture content to specific axial pressure.
2. Measure and record axial deflection.
3. Saturate sample.
4. Measure and record resulting collapse.

The test results are tabulated below:

Boring No.	Depth (feet)	Soil Type	Natural Dry Density (pcf)	Natural Moisture Content (percent)	Axial Load When Saturated (psf)	Collapse (-) or Swell (+)
B-1	2.5	CL	112	16.0	100	0.0
B-2	4.5	CL	103	13.2	100	0.0
B-2	13.5	SC	117	15.7	1,600	-0.3

The results indicate that the finer-grained soils are moderately over-consolidated and will exhibit moderate compressibility characteristics when loaded below the over-consolidation pressure. Detailed results of the test are maintained within our files and can be transmitted to you, upon your request.

3.2.4 Chemical Tests

To determine if the site soils will react detrimentally with concrete, chemical tests were performed on a representative sample of the clayey sand soils encountered in Boring B-3 at a depth of 3.5 feet below existing grade. The results of the chemical tests are tabulated below:

Boring No.	Depth (feet)	pH	Total Water Soluble Sulfate (mg/kg-dry)
B-3	3.5	8.59	96

4. SITE CONDITIONS

4.1 SURFACE

The site is located at the existing Utah National Guard Richfield Armory at 200 South and 650 West in Richfield, Utah. The site consists of the existing Armory building, an adjacent canopy outbuilding, and a gravel lot and multiple shed outbuildings to the west and north. The overall Armory site slopes moderately downward from west to east with overall relief across the Armory on the order of 8 to 10 feet. The Armory site is slightly higher than 200 South. Localized relief at the locations of the classroom addition and outbuilding upgrade is minor.

The general site is bordered to the north by Richfield High School; the west by a Snow College-sponsored applied technical school; the east by single-family residential homes; and the south by 200 South, followed by The Church of Jesus Christ of Latter-Day Saints church house building.

4.2 SUBSURFACE SOIL AND GROUNDWATER

Boring B-1 was located along the west of the existing Armory building within a landscaped area. A three-inch surface layer of topsoil (rootmat) was encountered at Boring B-1. Borings B-2 through B-4 were located within existing gravel fill covered areas with the gravel surface varying from six inches to one foot thick.

Below the topsoil in Boring B-1 and surficial gravel fill in Boring B-4, silty clay with some fine sand was encountered to depths of 10.0 and 4.5 feet, respectively. In Borings B-2 and B-3, the surficial gravel fill is underlain with a silty/clayey sand to depths of two and five feet, respectively. At 2 feet in Boring B-2 and at 5 feet in Boring B-3, a layer of sandy/silty clay was encountered to depths of 8 and 11 feet, respectively. Below the upper clay layers in Borings B-1 through B-4, clayey and silty fine to medium sand layers were encountered to the full depths penetrated, 20.5 to 29.5 feet.

The upper clay layers encountered are medium stiff, moist, reddish brown, moderately over-consolidated, and will exhibit moderate compressibility characteristics when loaded below the over-consolidation pressure. The sand layers encountered are loose to medium dense, moist, reddish brown, and will exhibit high strength and low compressibility characteristics.

Groundwater was not encountered within the depths penetrated, 20.5 to 29.5 feet, during drilling operations.

5. DISCUSSIONS AND RECOMMENDATIONS

5.1 SUMMARY OF FINDINGS

The results of our study show that the proposed outbuilding enclosure and classroom addition may be supported upon conventional spread and continuous wall foundations established upon suitable natural soils and/or structural fill extending to suitable natural soils.

In the following sections, detailed discussions pertaining to earthwork, foundations, lateral resistance and pressure, floor slabs, exterior flatwork, and the geoseismic setting of the site are provided.

5.2 EARTHWORK

5.2.1 Site Preparation

Prior to initiation of major construction activities, all surface vegetation and deleterious materials must be removed extending out two feet from the outbuilding enclosure, classroom addition, and exterior flatwork. It is estimated that up to approximately three inches of stripping would be necessary if the classroom addition is located to the west of the existing Armory building in order to remove the majority of vegetation and topsoil (rootmat).

The surficial layer of gravel fill ranging from one-half to one foot thick may be considered as structural site grading fill if adequately proofrolled. Prior to the placement of structural site grading fill, floor slabs, footings, or exterior flatwork, the exposed subgrade should be proofrolled by running moderate-weight rubber tire-mounted construction equipment uniformly over the surface at least three times. If excessively soft or otherwise unsuitable soils are encountered beneath footings, they must be completely removed. Should soft or otherwise unsuitable soils below footings extend deeper than two feet, GSH must be notified to provide recommendations. In floor slab and outside flatwork areas, unsuitable natural soils should be removed to a maximum depth of two feet and replaced with compacted granular structural fill.

Surface vegetation and other deleterious materials should generally be removed from the site. Topsoil, although unsuitable for utilization as structural fill, may be stockpiled for subsequent landscaping purposes.

5.2.2 Excavations

Static groundwater was not encountered within the full depths penetrated, 20.5 to 29.5 feet. Temporary construction excavations in cohesive soil, not exceeding four feet in depth (above the groundwater table), may be constructed with near-vertical sideslopes. Temporary excavations up to eight feet deep in fine-grained cohesive soils above the water table, may be constructed with sideslopes no steeper than one-half horizontal to one vertical. Excavations deeper than eight feet are not anticipated at the site.

For granular (cohesionless) soils, construction excavations above the water table, not exceeding four feet, should be no steeper than one-half horizontal to one vertical. For excavations up to eight feet in granular soils and above the water table, the slopes should be no steeper than one horizontal to one vertical. Excavations encountering very loose, clean or saturated cohesionless soils will be very difficult and will require very flat sideslopes and/or shoring and bracing.

All excavations must be inspected periodically by qualified personnel. If any signs of instability or excessive sloughing are noted, immediate remedial action must be initiated.

5.2.3 Structural Fill

Structural fill is defined as all fill which will ultimately be subjected to structural loadings, such as imposed by footings, floor slabs, pavements, etc. Structural fill will be required as backfill over foundations and utilities, as site grading fill, and potentially as replacement fill below footings. All structural fill must be free of sod, rubbish, topsoil, frozen soil, and other deleterious materials. Structural site grading fill is defined as fill placed over relatively large open areas to raise the overall grade. For structural site grading fill, the maximum particle size should generally not exceed four inches; although, occasional larger particles, not exceeding eight inches in diameter, may be incorporated if placed randomly in a manner such that "honeycombing" does not occur and the desired degree of compaction can be achieved. The maximum particle size within structural fill placed within confined areas should generally be restricted to two inches.

The on-site soils may be utilized as structural site grading fill provided they meet the requirements for such. However, it should be noted that unless moisture is maintained near optimum, utilization of the natural fine-grained clay soils as structural site grading fill <u>will be very difficult, if not impossible to compact</u>, during wet and cold periods of the year. Only granular soils are recommended as structural fill in confined areas, such as around foundations and within utility trenches.

Imported granular structural fill should consist of a fairly well-graded mixture of sand and gravel. The plasticity index of imported fine-grained soils must not exceed 18 percent.

Non-structural site grading fill is defined as all fill material not designated as structural fill and may consist of any cohesive or granular soils not containing excessive amounts of degradable material.

5.2.4 Fill Placement and Compaction

All structural fill should be placed in lifts not exceeding eight inches in loose thickness. Fills beneath the area extending out at least 2 feet from the perimeter of the proposed additions must be compacted to at least 95 percent of the maximum dry density as determined by the AASHTO[1] T-180 (ASTM[2] D-1557) compaction criteria. Structural fills extending outside 2 feet from the structure which are greater than 5 feet thick must be compacted to 92 percent of the above criteria. Structural fills (including utility trenches) greater than eight feet thick are not anticipated at the site. Structural fills less than 5 feet thick, which are not beneath an area extending out at least 2 feet from the perimeter of the proposed additions, should be compacted to at least 90 percent of the above-defined criteria.

Non-structural fill may be placed in lifts not exceeding 12 inches in loose thickness and compacted by passing construction, spreading, or hauling equipment over the surface at least twice.

5.2.5 Utility Trenches

All utility trench backfill material below structurally loaded facilities (flatwork, floor slabs, paved areas, etc.) should be placed to the same material and density requirements established for structural fill.

If the surface of the backfill becomes disturbed during the course of construction, the backfill should be proofrolled and/or properly compacted prior to the construction of any exterior flatwork over a backfilled trench. Proofrolling may be performed by passing moderately loaded rubber tire-mounted construction equipment uniformly over the surface at least twice. If excessively loose or soft areas are encountered during proofrolling, they should be removed to a maximum depth of two feet below design finish grade and replaced with structural fill.

Most utility companies and City-County governments are now requiring that Type A-1a or A-1b (AASHTO Designation – basically granular soils with limited fines) soils be used as backfill over utilities.

These organizations are also requiring that in public roadways, the backfill over major utilities be compacted over the full depth of fill to at least 96 percent of the maximum dry density as

---

1 American Association of State Highway and Transportation Officials
2 American Society for Testing and Materials

determined by the AASHTO T-180 (ASTM D-1557) method of compaction. We recommend that as the major utilities continue onto the site that these compaction specifications are followed.

Fine-grained cohesive soils, such as the natural on-site silty/sandy clays, are not recommended for use as trench backfill.

5.3 SPREAD AND CONTINUOUS WALL FOUNDATIONS

5.3.1 Design Data

The proposed addition and outbuilding enclosure may be supported upon conventional spread and continuous wall foundations established upon suitable undisturbed natural soils and/or structural fill extending to suitable natural soils. For design, the following parameters are provided with respect to the projected loading discussed in Section 2, Proposed Construction of this report:

Minimum Recommended Depth of Embedment for Frost Protection	- 30 inches
Minimum Recommended Depth of Embedment for Non-frost Conditions	- 15 inches
Recommended Minimum Width for Continuous Wall Footings	- 18 inches
Minimum Recommended Width for Isolated Spread Footings	- 24 inches
Recommended Net Bearing Pressure for Real Load Conditions	- 2,500 pounds per square foot
Bearing Pressure Increase for Seismic Loading	- 50 percent

The term “net bearing pressure” refers to the pressure imposed by the portion of the structure located above lowest adjacent final grade. Therefore, the weight of the footing and backfill to lowest adjacent final grade need not be considered. Real loads are defined as the total of all dead plus frequently applied live loads. Total load includes all dead and live loads, including seismic and wind.

5.3.2 Installation

Under no circumstances should the footings be established upon soft, loose or disturbed soils, non-engineered fills, sod, rubbish, frozen soils, debris, or within ponded water. If the natural soils upon which the footings are to be established become loose or disturbed, they must be removed and replaced with granular structural fill. If granular structural fill upon which the footings are to be established become disturbed, they should be recompacted to the requirements for structural fill.

The width of replacement fill below footings should be equal to the width of the footing plus one additional foot for each foot of fill thickness placed. For example, if the width of the footing is two feet and the thickness of the structural fill beneath the footing is one foot, the width of the structural fill at the base of the footing excavation would be a total of three feet. We recommend that footing excavations be completed with a smooth-lip bucket to reduce disturbance of the bearing subgrade soils.

5.3.3 Settlements

Maximum settlements of foundations designed and installed in accordance with recommendations presented herein and supporting maximum anticipated loads, as discussed in Section 2., Proposed Construction, are anticipated to be on the order of one-quarter to one half-of an inch.

Approximately 60 percent of the quoted settlement should occur during construction.

5.4 LATERAL RESISTANCE

Lateral loads imposed upon foundations due to wind or seismic forces may be resisted by the development of passive earth pressures and friction between the base of the footings and the supporting soils. In determining frictional resistance, a coefficient of 0.40 should be utilized. Passive resistance provided by properly placed and compacted granular structural fill above the water table may be considered equivalent to a fluid with a density of 300 pounds per cubic foot. Below the water table, this granular soil should be considered equivalent to a fluid with a density of 150 pounds per cubic foot.

A combination of passive earth resistance and friction may be utilized provided that the friction component of the total is divided by 1.5.

5.5 LATERAL PRESSURES

The proposed outbuilding upgrade and classroom addition will be slab-on-grade. However, for the purpose of possible shallow subgrade facilities, such as utility boxes etc., the following lateral pressure discussion is presented.

The lateral pressure parameters, as presented within this section, are for backfills which will consist of drained granular soil placed and compacted in accordance with the recommendations presented herein. The lateral pressures imposed upon subgrade facilities will, therefore, be basically dependent upon the relative rigidity and movement of the backfilled structure. For active walls, such as retaining walls which can move outward (away from the backfill), granular backfill may be considered equivalent to a fluid with a density of 35 pounds per cubic foot in computing lateral pressures. For more rigid walls, generally not exceeding eight feet in height, granular backfill may be considered equivalent to a fluid with a density of 45 pounds per cubic foot. The above values assume that the surface of the soils slope behind the wall is horizontal and that the granular fill within three feet of the wall will be compacted with hand-operated compacting equipment.

For seismic loading and below-grade walls up to four feet tall, a uniform pressure of 20 and 40 pounds per square foot should be added for active and more rigid walls, respectively.

5.6 FLOOR SLABS

Floor slabs may be established upon properly prepared, existing granular fills, suitable undisturbed natural soils and/or upon structural fill extending to suitable natural soils. Topsoil and non-engineered fill are not considered suitable. To provide a capillary break, it is recommended that floor slabs be directly underlain by at least four inches of “free-draining” fill, such as “pea” gravel or three-quarters- to one-inch-minus clean gap-graded gravel. Settlements of lightly to moderately loaded floor slabs are anticipated to be minor.

5.7 CEMENT TYPES

Laboratory tests indicate that the site soils contain negligible amounts of water soluble sulfates. Therefore, all concrete which will be in contact with the site soils may be prepared using Type I or IA cement.

5.8 GEOSEISMIC SETTING

5.8.1 General

Utah municipalities adopted the International Building Code (IBC) 2006 on January 1, 2007. The IBC 2006 code determines the seismic hazard for a site based upon 2002 mapping of bedrock accelerations prepared by the United States Geologic Survey (USGS) and the soil site class. The USGS values are presented on maps incorporated into the IBC code and are also available based on latitude and longitude coordinates (grid points).

The structure must be designed in accordance with the procedure presented in Section 1613, Earthquake Loads, of the IBC 2006 edition.

5.8.2 Faulting

Based on our review of available literature, no active faults pass through or immediately adjacent to the site.

5.8.3 Soil Class

For dynamic structural analysis, the Site Class D - Stiff Soil Profile as defined in Table 1613.5.2, Site Class Definitions, of the IBC 2006 can be utilized.

5.8.4 Ground Motions

The IBC 2006 code is based on 2002 USGS mapping, which provides values of short and long period accelerations for the Site Class B-C boundary for the Maximum Considered Earthquake (MCE). This Site Class B-C boundary represents a hypothetical bedrock surface and must be corrected for local soil conditions. The following table summarizes the peak ground and short and long period accelerations for a MCE event and incorporates a soil amplification factor for a Site Class D soil profile in the second column. Based on the site latitude and longitude (38.7659 degrees north and 112.0961 degrees west, respectively), the values for this site are tabulated below:

Spectral Acceleration Value, T Seconds	Site Class B-C Boundary [mapped values] (% g)	Site Class D [adjusted for site class effects] (% g)
Peak Ground Acceleration	32.8	38.5
0.2 Seconds, (Short Period Acceleration)	$S_S = 82.1$	$S_{MS} = 96.2$
1.0 Seconds (Long Period Acceleration)	$S_1 = 24.1$	$S_{M1} = 46.2$

The IBC 2006 code design accelerations (S_{DS} and S_{D1}) are based on multiplying the above accelerations (adjusted for site class effects) for the MCE event by two-thirds (⅔).

5.8.5 Liquefaction

Liquefaction is defined as the condition when saturated, loose, finer-grained sand-type soils lose their support capabilities because of excessive pore water pressure which develops during a seismic event. Clayey soils, even if saturated, will not liquefy during a major seismic event. Groundwater/saturated soils were not encountered to the full depths penetrated 20.5 to 29.5 feet. Therefore, liquefaction potential within the depths penetrated is projected to be low.

We appreciate the opportunity of providing this service for you. If you have any questions or require additional information, please do not hesitate to contact us.

Respectfully submitted,

GSH Geotechnical Consultants, Inc.

Bryan N. Roberts, State of Utah No. 276476
Professional Engineer

Reviewed by:

William J. Gordon, State of Utah No.146417
Professional Engineer

BNR/WJG:jlh

Encl. Figure 1, Vicinity Map
Figure 2, Site Plan
Figures 3A through 3D, Log of Borings
Figure 4, Unified Soil Classification System

Addressee (3)
c: Mr. Mark Stonehocker, AIA
JSA Architects, LLC
6465 South 3000 East, Suite 205
Salt Lake City, Utah 84121

STATE OF UTAH - DFCM
JOB NO. 0128-047-09

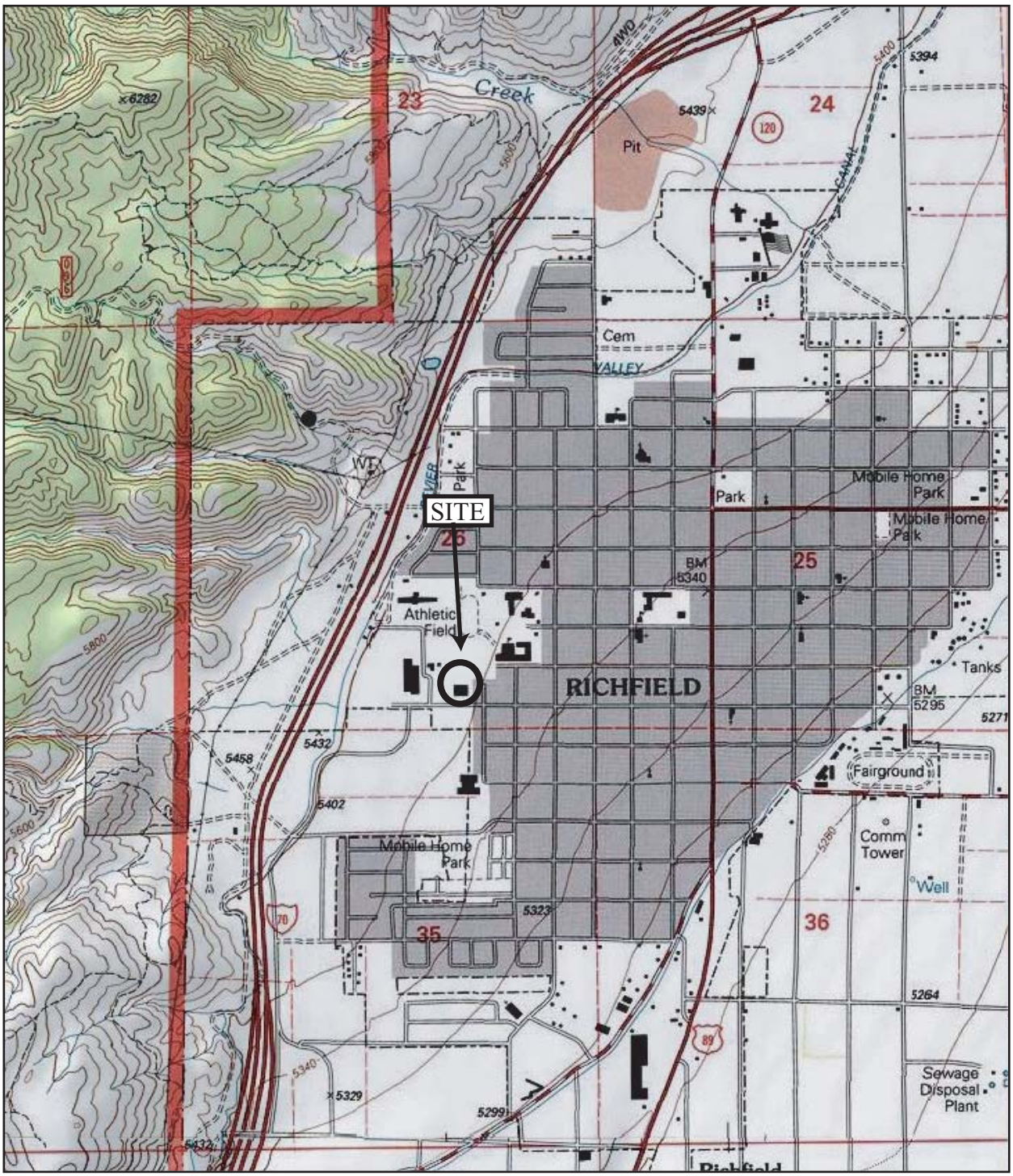

SCALE IN FEET
1000 0 1000 2000

FIGURE 1
VICINITY MAP

REFERENCE:
USGS 7.5 MINUTE TOPOGRAPHIC QUADRANGLE MAP
TITLED "RICHFIELD, UTAH" AND "ANNABELLA, UTAH"
BOTH DATED 2001

GSH
Gordon Spilker Huber
Geotechnical Consultants, Inc.

STATE OF UTAH - DFCM
JOB NO. 0128-047-09

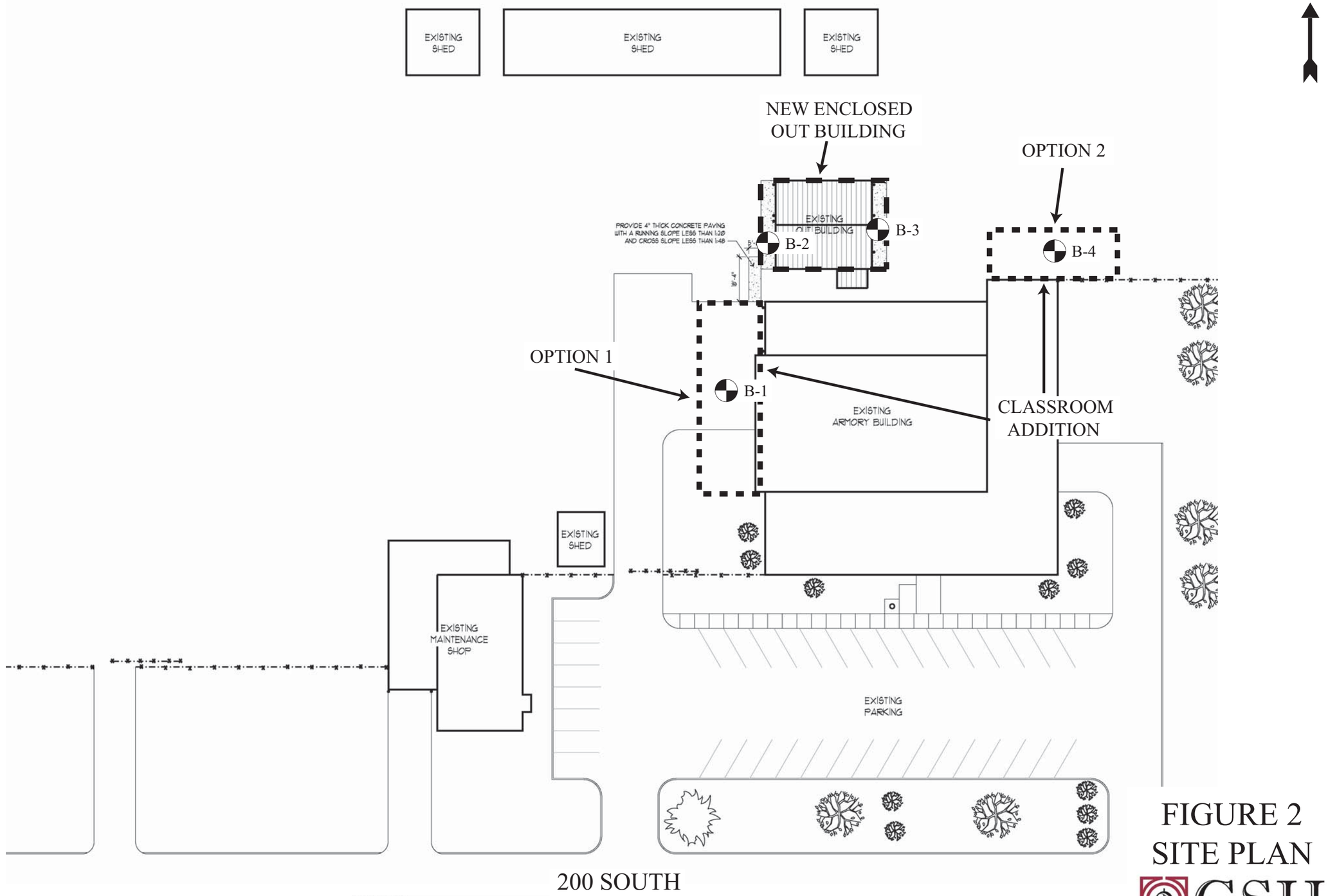

FIGURE 2
SITE PLAN

GSH
Gordon Spilker Huber
Geotechnical Consultants, Inc.

REFERENCE:
ADAPTED FROM DRAWING ENTITLED
"RICHFIELD ARMORY, UTAH NATIONAL GUARD, OUT BUILDING REMODEL
SHEET NUMBER 1-100, SHEET 09 OF 24"
BY JSA ARCHITECTS, DATED AUGUST 17, 2009

SITE PLAN
SCALE: 1" = 20'-0"

Gordon Spilker Huber Geotechnical Consultants, Inc.
Salt Lake City, Utah 84123

Project Name: Prop Outbuilding Upgrade/Classroom Addition
Project No.: 0128-047-09
Location: N Side of 200 S & 650 W, Richfield, Utah
Client: State of Utah - DFCM
Drilling Method: 3-3/4" ID Hollow-Stem Auger
Date Drilled: 09-03-09
GSH Field Rep.: RJG
Elevation: - -
Water Level: No groundwater encountered (09-03-09)
Remarks:

Graphical Log	Water Level	DESCRIPTION	DEPTH FT.	BLOWS/FT	SAMPLE SYMBOL	MOISTURE (%)	% PASSING 200	DRY DENSITY (PCF)	Liquid Limit (%)	Plastic Limit (%)	REMARKS
		Ground Surface	0								
		SILTY CLAY with some fine sand and occasional silty fine sand seems; major roots (topsoil) to 3"; reddish-brown (CL)									loose to 3" moist stiff
				12		16.0		112			
		grades silty clay with some fine sand and numerous silty fine sand seems; occasional layers up to 1/16" thick; reddish-brown	5	13							
		CLAYEY FINE TO MEDIUM SAND brown to reddish-brown (SC)	10	15		11.4		122			moist loose
		grades with fine sand; reddish-brown	15	10							
				5							
		SILTY FINE TO COARSE SAND AND GRAVEL with occasional layers up to 2" thick of silty fine to coarse sand with some fine and coarse gravel; reddish-brown (SM-GM)	20	60							moist medium dense
		SILTY FINE SAND with trace gravel and occasional layers up to 4" thick of clayey fine sand; brown (SM)									moist medium dense
			25								

The discussion in the text under the section titled, SUBSURFACE CONDITIONS, is necessary for a proper understanding of the nature of the subsurface material.

FIGURE 3A

Gordon Spilker Huber Geotechnical Consultants, Inc.
Salt Lake City, Utah 84123

Project Name: Prop Outbuilding Upgrade/Classroom Addition
Project No.: 0128-047-09
Location: N Side of 200 S & 650 W, Richfield, Utah
Client: State of Utah - DFCM
Drilling Method: 3-3/4" ID Hollow-Stem Auger
Date Drilled: 09-03-09
GSH Field Rep.: RJG
Elevation: - -
Water Level: No groundwater encountered (09-03-09)
Remarks:

Graphical Log	Water Level	DESCRIPTION	DEPTH FT.	BLOWS/FT	SAMPLE SYMBOL	MOISTURE (%)	% PASSING 200	DRY DENSITY (PCF)	Liquid Limit (%)	Plastic Limit (%)	REMARKS
				12							
		Stopped drilling at 25.0'.									
		Stopped sampling at 26.5'.									
		Installed 1-1/4" diameter slotted PVC pipe to 26.5'.									
		No groundwater encountered at time of drilling.	30								
			35								
			40								
			45								
			50								

The discussion in the text under the section titled, SUBSURFACE CONDITIONS, is necessary for a proper understanding of the nature of the subsurface material.

FIGURE 3A
(con't)

Gordon Spilker Huber Geotechnical Consultants, Inc.
Salt Lake City, Utah 84123

Project Name: Prop Outbuilding Upgrade/Classroom Addition
Project No.: 0128-047-09
Location: N Side of 200 S & 650 W, Richfield, Utah
Client: State of Utah - DFCM
Drilling Method: 3-3/4" ID Hollow-Stem Auger
Date Drilled: 09-03-09
GSH Field Rep.: RJG
Elevation: - -
Water Level: No groundwater encountered (09-03-09)
Remarks:

Graphical Log	Water Level	DESCRIPTION	DEPTH FT.	BLOWS/FT	SAMPLE SYMBOL	MOISTURE (%)	% PASSING 200	DRY DENSITY (PCF)	Liquid Limit (%)	Plastic Limit (%)	REMARKS
		Ground Surface									
		FINE AND COARSE GRAVEL, FILL with cobbles; brown (GM-FILL)	0								loose to 3" moist
		SILTY FINE SAND reddish-brown (SM)		11		12.8		104			loose
		FINE SANDY CLAY with some silt and occasional layers up to 1/4" thick of silty fine sand; reddish-brown (CL)									moist medium stiff
			5	10		13.2		103			
		FINE SANDY CLAY/CLAYEY FINE SAND with occasional layers up to 2" thick of silty clay with some fine sand; reddish-brown (SC/CL)		11							moist loose
			10								
		CLAYEY FINE SAND with some silt; reddish-brown (SC)									moist loose
				11		15.5		102			
			15								
		SILTY FINE SAND with some fine and coarse gravel; reddish-brown (SM)		12							moist loose
			20								
				36							dense
			25								

The discussion in the text under the section titled, SUBSURFACE CONDITIONS, is necessary for a proper understanding of the nature of the subsurface material.

FIGURE 3B

Gordon Spilker Huber Geotechnical Consultants, Inc.
Salt Lake City, Utah 84123

Project Name: Prop Outbuilding Upgrade/Classroom Addition
Project No.: 0128-047-09
Location: N Side of 200 S & 650 W, Richfield, Utah
Client: State of Utah - DFCM
Drilling Method: 3-3/4" ID Hollow-Stem Auger
Date Drilled: 09-03-09
GSH Field Rep.: RJG
Elevation: - -
Water Level: No groundwater encountered (09-03-09)
Remarks:

Graphical Log	Water Level	DESCRIPTION	DEPTH FT.	BLOWS/FT	SAMPLE SYMBOL	MOISTURE (%)	% PASSING 200	DRY DENSITY (PCF)	Liquid Limit (%)	Plastic Limit (%)	REMARKS
		grades with occasional layers up to 3" thick of clayey fine sand; reddish-brown									
				10							medium dense
			30								
		Stopped drilling at 28.0'.									
		Stopped sampling at 29.5'.									
		Installed 1-1/4" diameter slotted PVC pipe to 29.5'.									
		No groundwater encountered at time of drilling.									
			35								
			40								
			45								
			50								

The discussion in the text under the section titled, SUBSURFACE CONDITIONS, is necessary for a proper understanding of the nature of the subsurface material.

FIGURE 3B
(con't)

Gordon Spilker Huber Geotechnical Consultants, Inc.
Salt Lake City, Utah 84123

Project Name: Prop Outbuilding Upgrade/Classroom Addition
Project No.: 0128-047-09
Location: N Side of 200 S & 650 W, Richfield, Utah
Client: State of Utah - DFCM
Drilling Method: 3-3/4" ID Hollow-Stem Auger
Date Drilled: 09-03-09
GSH Field Rep.: RJG
Elevation: - -
Water Level: No groundwater encountered (09-03-09)
Remarks:

Graphical Log	Water Level	DESCRIPTION	DEPTH FT.	BLOWS/FT	SAMPLE SYMBOL	MOISTURE (%)	% PASSING 200	DRY DENSITY (PCF)	Liquid Limit (%)	Plastic Limit (%)	REMARKS
		Ground Surface	0								
		SILTY FINE TO COARSE SAND AND FINE AND COARSE GRAVEL, FILL brown (SM/GM-FILL)									loose to 3" dry to slightly moist
		CLAYEY FINE SAND with occasional layers up to 2" thick of silty clay and some fine sand; reddish-brown (SC)									moist loose
				9		12.8		104			
		FINE SANDY CLAY with some silt and occasional layers up to 3" thick of silty fine sand; reddish-brown (CL)	5								moist stiff
				14							
		grades silty clay with trace to some fine sand	10	15		16.4		101			
		SILTY FINE SAND with occasional layers up to 1/2" thick of silty clay and some fine sand; reddish-brown (SM)									moist loose
			15	15							
			20	13							
		Stopped drilling at 19.0'. Stopped sampling at 20.5'. No groundwater encountered at time of drilling.	25								

The discussion in the text under the section titled, SUBSURFACE CONDITIONS, is necessary for a proper understanding of the nature of the subsurface material.

FIGURE 3C

Gordon Spilker Huber Geotechnical Consultants, Inc.
Salt Lake City, Utah 84123

Project Name: Prop Outbuilding Upgrade/Classroom Addition
Project No.: 0128-047-09
Location: N Side of 200 S & 650 W, Richfield, Utah
Client: State of Utah - DFCM
Drilling Method: 3-3/4" ID Hollow-Stem Auger
Date Drilled: 09-03-09
GSH Field Rep.: RJG
Elevation: - -
Water Level: No groundwater encountered (09-03-09)
Remarks:

Graphical Log	Water Level	DESCRIPTION	DEPTH FT.	BLOWS/FT	SAMPLE SYMBOL	MOISTURE (%)	% PASSING 200	DRY DENSITY (PCF)	Liquid Limit (%)	Plastic Limit (%)	REMARKS
		Ground Surface									
		SILTY FINE TO COARSE SAND AND FINE AND COARSE GRAVEL, FILL light brown (SM/GM-FILL)	0								loose to 3" dry to slightly moist
		SILTY CLAY with some fine sand; reddish-brown (CL)		15							moist stiff
		FINE SANDY CLAY/CLAYEY FINE SAND with occasional layers up to 1" thick of clayey fine sand	5	15		13.8		95			moist stiff
		CLAYEY FINE SAND with occasional layers up to 1/4" thick of silty clay and some fine sand; reddish-brown (SC)	10	14							moist loose
		SILTY FINE SAND reddish-brown (SM)	15	14		11.3		99			moist loose
		grades with trace clays	20	14							
			25								

The discussion in the text under the section titled, SUBSURFACE CONDITIONS, is necessary for a proper understanding of the nature of the subsurface material.

FIGURE 3D

Gordon Spilker Huber Geotechnical Consultants, Inc.
Salt Lake City, Utah 84123

Project Name: Prop Outbuilding Upgrade/Classroom Addition
Project No.: 0128-047-09
Location: N Side of 200 S & 650 W, Richfield, Utah
Client: State of Utah - DFCM
Drilling Method: 3-3/4" ID Hollow-Stem Auger
Date Drilled: 09-03-09
GSH Field Rep.: RJG
Elevation: - -
Water Level: No groundwater encountered (09-03-09)
Remarks:

Graphical Log	Water Level	DESCRIPTION	DEPTH FT.	BLOWS/FT	SAMPLE SYMBOL	MOISTURE (%)	% PASSING 200	DRY DENSITY (PCF)	Liquid Limit (%)	Plastic Limit (%)	REMARKS
				19							
		Stopped drilling at 25.0'.									
		Stopped sampling at 26.5'.									
		No groundwater encountered at time of drilling.									
			30								
			35								
			40								
			45								
			50								

The discussion in the text under the section titled, SUBSURFACE CONDITIONS, is necessary for a proper understanding of the nature of the subsurface material.

FIGURE 3D
(con't)

UNIFIED SOIL CLASSIFICATION SYSTEM

FIELD IDENTIFICATION PROCEDURES				GRAPH SYMBOL	LETTER SYMBOL [1]	TYPICAL DESCRIPTIONS
COARSE GRAINED SOILS More than half of material is larger than No. 200 sieve size. [2] (The No. 200 sieve size is about the smallest particle visible to the naked eye)	GRAVELS More than half of coarse fraction is larger than No. 4 sieve size. (For visual classifications, the 1/4" size may be used as equivalent to the No. 4 sieve size.)	CLEAN GRAVELS (Little or no fines)	Wide range in grain size and substantial amounts of all intermediate particle sizes.		GW	Well graded gravels, gravel-sand mixtures, little or no fines.
			Predominantly one size or a range of sizes with some intermediate sizes missing.		GP	Poorly graded gravels, gravel-sand mixtures, little or no fines.
		GRAVELS WITH FINES (Appreciable amount of fines)	Non-plastic fines (for identification procedures see ML below).		GM	Silty gravels, poorly graded gravel-sand-silt mixtures.
			Plastic fines (for identification procedures see CL below).		GC	Clayey gravels, poorly graded gravel-sand-clay mixtures.
	SANDS More than half of coarse fraction is smaller than No. 4 sieve size. (For visual classifications, the 1/4" size may be used as equivalent to the No. 4 sieve size.)	CLEAN SANDS (Little or no fines)	Wide range in grain sizes and substantial amounts of all intermediate particle sizes.		SW	Well graded sands, gravelly sands, little or no fines.
			Predominantly one size or a range of sizes with some intermediate sizes missing.		SP	Poorly graded sands, gravelly sands, little or no fines.
		SANDS WITH FINES (Appreciable amount of fines)	Non-plastic fines (for identification procedures see ML below).		SM	Silty sands, poorly graded sand-silt mixtures.
			Plastic fines (for identification procedures see CL below).		SC	Clayey sands, poorly graded sand-clay mixtures.

FINE GRAINED SOILS More than half of material is smaller than No. 200 sieve size. (The No. 200 sieve size is about the smallest particle visible to the naked eye)	IDENTIFICATION PROCEDURES ON FRACTION SMALLER THAN No. 40 SIEVE SIZE	DRY STRENGTH (CRUSHING CHARACTERISTICS)	DILATANCY (REACTION TO SHAKING)	TOUGHNESS (CONSISTENCY NEAR PLASTIC LIMIT)	GRAPH SYMBOL	LETTER SYMBOL [1]	TYPICAL DESCRIPTIONS
	SILTS AND CLAYS Liquid limit less than 50	None to slight	Quick to slow	None		ML	Inorganic silts and very fine sands, rock flour, silty or clayey fine sand with slight plasticity.
		Medium to high	None to very slow	Medium		CL	Inorganic clays of low to medium plasticity, gravelly clays, sandy clays, silty clays, lean clays.
		Slight to medium	Slow	Slight		OL	Organic silts and organic silt-clays of low plasticity.
	SILTS AND CLAYS Liquid limit greater than 50	Slight to medium	Slow to none	Slight to medium		MH	Inorganic silts, micaceous or diatomaceous fine sandy or silty soils, elastic silts.
		High to very high	None	High		CH	Inorganic clays of high plasticity, fat clays.
		Medium to high	None to very slow	Slight to medium		OH	Organic clays of medium to high plasticity.
HIGHLY ORGANIC SOILS		Readily identified by color, odor, spongy feel and frequently by fibrous texture.				Pt	Peat and other highly organic soils.

[1] Boundary classifications: –Soils possessing characteristics of two groups are designated by combinations of group symbols. For example GW–GC, well graded gravel–sand mixture with clay binder.
[2] All sieve sizes on this chart are U.S. standard.

GENERAL NOTES

1. In general, Unified Soil Classification Designations presented on the logs were evaluated by visual methods only. There rore, actual designations (based on laboratory testing) may differ.

2. Lines seperating strata on the logs represent approximate boundaries only Actual transitions may be gradual.

3. Logs represent general soil conditions observed at teh point of exploration onthe date indicated.

4. No warranty is provided as to the continuity of soil conditions between individual sample locations.

FINE - GRAINED SOIL

CONSISTENCY	SPT (blows/ft)	TORVANE UNDRAINED SHEAR STRENGTH (tsf)	POCKET PENETROMETER UNCONFINED COMPRESSIVE STRENGTH (tsf)	FIELD TEST
Very Soft	<2	<0.125	<0.25	Easily penetrated several inches by Thumb. Squeezes through fingers.
Soft	2 - 4	0.125 - 0.25	0.25 - 0.5	Easily penetrated 1 " by Thumb . Molded by light finger pressure.
Medium Stiff	4 - 8	0.25 - 0.5	0.5 - 1.0	Penetrated over 1/2 " by Thumb with moerate effort. Molded by strong finger pressure.
Stiff	8 - 15	0.5 - 1.0	1.0 - 2.0	Indented about 1/2 " by Thumb but penetrated only with great effort
Very Stiff	15 - 30	1.0 - 2.0	2.0 - 4.0	Readily Indented by Thumbnail
Hard	>30	>2.0	>4.0	Indented with difficulty by Thumbnail

LOG KEY SYMBOLS

- Bulk / Bag Sample
- Rock Core
- Standard Penetration Split Spoon Sampler
- No Recovery
- Thin Wall
- D&M Sampler
- Water Level (level after completion)
- Water Level (level where first encountered)

COARSE -GRAINDE SOIL

APPERENT DENSITY	SPT (blows/ft)	RELATIVE DENSITY (%)	FIELD TEST
Very Loose	<4	0 - 15	Easily penetrated with 1/2 " reinforcing rod pushed by hand
Loose	4 - 10	15 - 35	Difficult to penetrated with 1/2 " reinforcing rod pushed by hand
Medium Dense	10 - 30	35 - 65	Easily penetrated a foot with 1/2 " reinforcing rod driven with 5-lb hammer
Dense	30 - 50	65 - 85	Difficult to penetrated a foot with 1/2 " reinforcing rod driven with 5-lb hammer
Very Dense	>50	85 - 100	Penetrated only a few inches with 1/2 " reinforcing rod driven with 5-lb hammer

STRATIFICATION

DESCRIPTION	THICKNESS
SEAM	1/16 - 1/2 "
LAYER	1/2 - 12 "

DESCRIPTION	THICKNESS
Occasional	One or less per foot of thickness
Frequent	More than on per foot of thichness

CEMENTATION

DESCRIPTION	DESCRIPTION
Weakely	Crumbles or breaks with handling of slight finger pressure
Moderately	Crumbles or breaks with considerable finger pressure
Strongly	Will not crumbles or breaks with finger pressure

MODIFIERS

DESCRIPTION	%
Trace	<5
Some	5 - 12
With	>12

MOISTURE CONTENT

DESCRIPTION	FIELD TEST
Dry	Absence of moisture, dusty, dry to the touch
Moist	Damp but no visible water
Wet	Visible water, usually soil below Water Table

FIGURE 4

GSH
Gordon Spilker Huber Geotechnical Consultants, Inc.

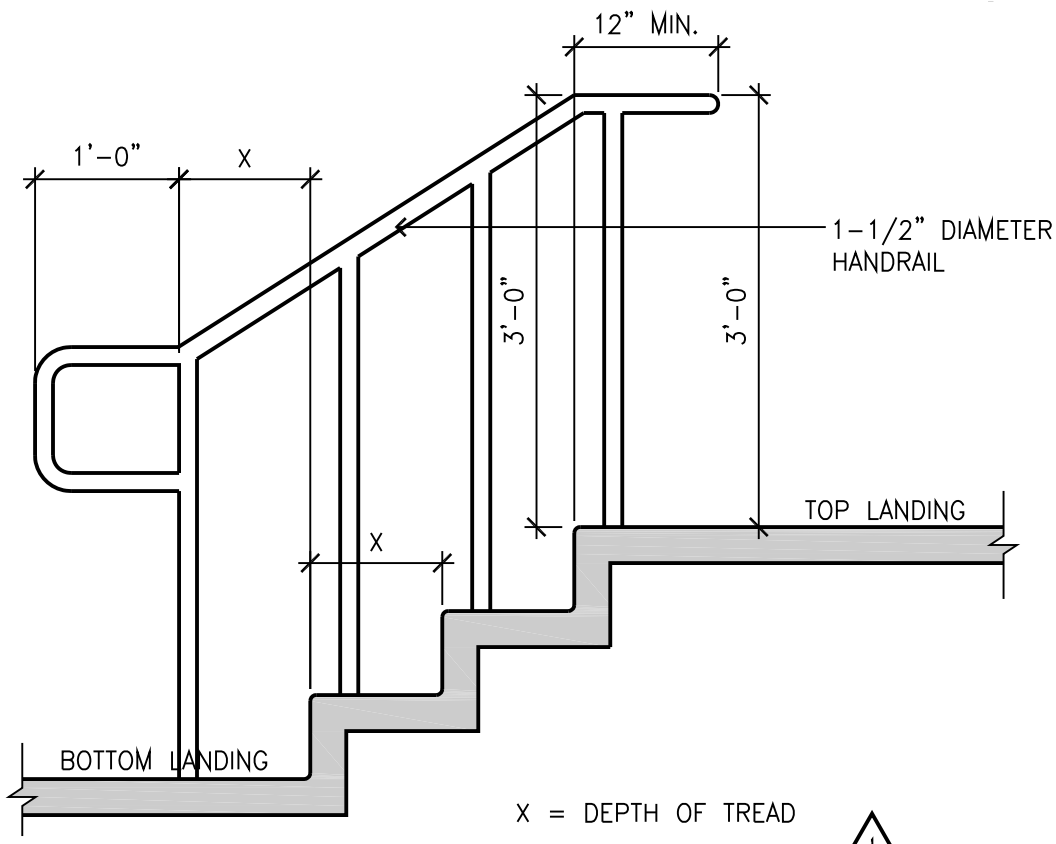

X = DEPTH OF TREAD

ICC/ANSI A117.1-2003 SECTION 505.10

1

HANDRAIL EXTENSIONS

SCALE: 3/4" = 1'-0"

DA-AC-46

D6
G008

ROOM FINISH SCHEDULE

ROOM		CEILING		WALLS				FLOOR & BASE FINISH		COUNTER TOP	REMARKS
RM #	ROOM NAME	HEIGHT A.F.F.	TYPE	NORTH	EAST	SOUTH	WEST	BASE	FLOOR		
102	VESIBULE	13'-5 1/2"	CP	N/A	WP-1, WP-3	N/A	WP-, WP-3	PB	PT,EM	NA	WP - SEE INT. ELEVATION A401
101	NOT USED	-	-	-	-	-	-	-	--	-	-
102	FOYER	13'-5 1/2"	CP	WP-1, WP-3	WP-1, WP-3	WP-1, WP-3	WP-1, WP-3	PB	PT	NA	WP - SEE INT. ELEVATION A401
103	OFFICE	8'-0"	CP	WP-1	WP-1	WP-1	WP-3	RB	CA	NA	-
104	HALL	8'-0"	CP	WP-1	WP-1	WP-1	WP-1	PB	CA	NA	-
105	OFFICE	8'-0"	CP	WP-1	WP-1	WP-1	WP-3	RB	CA	NA	-
106	OFFICE	8'-0"	AC	WP-1	WP-1	WP-1	WP-3	RB	CA	NA	-
107	STORAGE	8'-0"	CP	WP-1	WP-1	WP-1	WP-1	RB	CA	NA	-
108	OFFICE	8'-0"	CP	WP-1	WP-1	WP-1	WP-3	RB	CA	NA	-
109	OFFICE	8'-0"	CP	WP-1	WP-3	WP-1	WP-1	RB	CA	NA	-
110	STORAGE	8'-0"	CP	WP-1	WP-1	WP-1	WP-1	RB	CA	NA	-
111	EXISTING CLASS ROOM	8'-0"	CP	WP-1	WP-3	WP-1	WP-1	RB	CA	NA	-
112	EXISTING CLASS ROOM	8'-0"	CP	WP-1	WP-3	WP-1	WP-1	RB	CA	NA	-
113	UNIT STORAGE	8'-0"	NA	NA	NA	NA	NA	NA	NA	NA	-
114	VAULT	NA	NA	NA	NA	NA	NA	NA	NA	NA	-
115	PANTRY	8'-0"	CP	WP-1	WP-1	WP-1	WP-1	QB	QT	NA	-
116	KITCHEN	8'-0"	CP	FRP	FRP	FRP	FRP	QB	QT	NA	-
117	DRILL HALL	20'-0"+/-	AC	WP-1	WP-1	WP-1	WP-1	RB	WF	NA	SEE CEILING PLAN FOR GRID LAYOUT & MTL.
118	MECHANICAL	8'-0"	NA	NA	NA	NA	NA	NA	NA	NA	-
119	JANITOR	8'-0"	CP	WP-1	WP-1, WT-1	WP-1, WT-1	WP-1	RB	SC	NA	-
120	I.T. ROOM	8'-0"	CP	WP-1	WP-1	WP-1	WP-1	RB	SC	NA	-
121	WOMEN'S RESTROOM	8'-0"	CP	WP-1, WT	WP-1, WT	WP-1, WT	WP-1, WT	CB	CT	NA	WT-SEE INT. ELEVATIONS A404 FOR PATTERN
122	MEN'S RESTROOM	8'-0"	CP	WP-1, WT	WP-1, WT	WP-1, WT	WP-1, WT	CB	CT	NA	WT-SEE INT. ELEVATIONS A403 FOR PATTERN
123	VEHICLE MAINTENANCE	11'-0"	NA	WP-1	WP-1	WP-1	WP-1	RB	SC	NA	-
124	STORAGE TABLE/ CHAIR	11'-0"	NA?	WP-1	WP-1	WP-1	WP-1	RB	SC	NA	-
125	NOT USED	-	-	-	-	-	-	-	-	-	-
126	SECURE STORAGE	11'-0"	NA	WP-1	WP-1	WP-1	WP-1	RB	CA	NA	-
127	NEW WEIGHT ROOM	10'-0"	AC	WP-1	WP-1	WP-1	WP-3	RB	RF	NA	-
128	NEW CLASSROOM	10'-0"	AC	WP-1	WP-1	WP-1	WP-3	RB	CA	NA	-
129	NEW CLASS ROOM	10'-0"	AC	WP-3	WP-1	WP-1	WP-1	RB	CA	NA	-
130	NEW CLASS ROOM	10'-0"	AC	WP-1	WP-1	WP-1	WP-3	RB	CA	NA	-
131	NEW HALLWAY	9'-0"	AC	WP-1	WP-1	WP-1	WP-1	RB	CA	NA	-

FLOOR FINISH SCHEDULE

MARK	MATERIAL	MANUFACTURER	MFG. #	PATTERN/STYLE	COLOR	THICKNESS	DETAIL?	SAMPLE REQUIRED	REMARKS
CA	CARPET TILE	SHAW	STYLE #59465	BEAM OF LIGHT	CAFE HIGHLIGHTS #63309	-	-	YES	-
EM	ENTRY MAT	INTERFACE	STYLE #1290102500	FLOR	OLIVE 7191	-	-	YES	-
SC	SEALED CONCRETE	-	-	-	-	-	-	YES	-
RF	RUBBER FLOOR	MONDO	-	RAMFLEX	BROWN #G715	-	-	YES	-
EP	EPOXY	-	-	-	-	-	-	YES	-
CT	CERAMIC TILE	AMERICAN OLEAN	-	-	ALMOND A24	SIZE: 1 X 1	-	YES	NOTE: 25% OF EACH COLOR
	CERAMIC TILE	AMERICAN OLEAN	-	-	MUSHROOM SPECKLED A41	SIZE: 1 X 1	-	YES	GROUT: MAPEI, 47 CHARCOAL
	CERAMIC TILE	AMERICAN OLEAN	-	-	CHARCOAL A33	SIZE: 1 X 1	-	YES	-
	CERAMIC TILE	AMERICAN OLEAN	-	-	MUSHROOM A38	SIZE: 1 X 1	-	YES	-
PT	PORCELAIN TILE	CASA DOLCE CASA	-	NUETRA	CEMENTO & SILVER	SIZE: TBD	-	YES	GROUT: CASA DOLCE CASA, 05 CEMENTO
QT	QUARRY TILE	DALTILE	-	-	BRONZE 0Q62	SIZE: 6 X 6	-	YES	-
WF	WOOD SPORTS FLOOR	-	-	-	-	-	-	YES	-

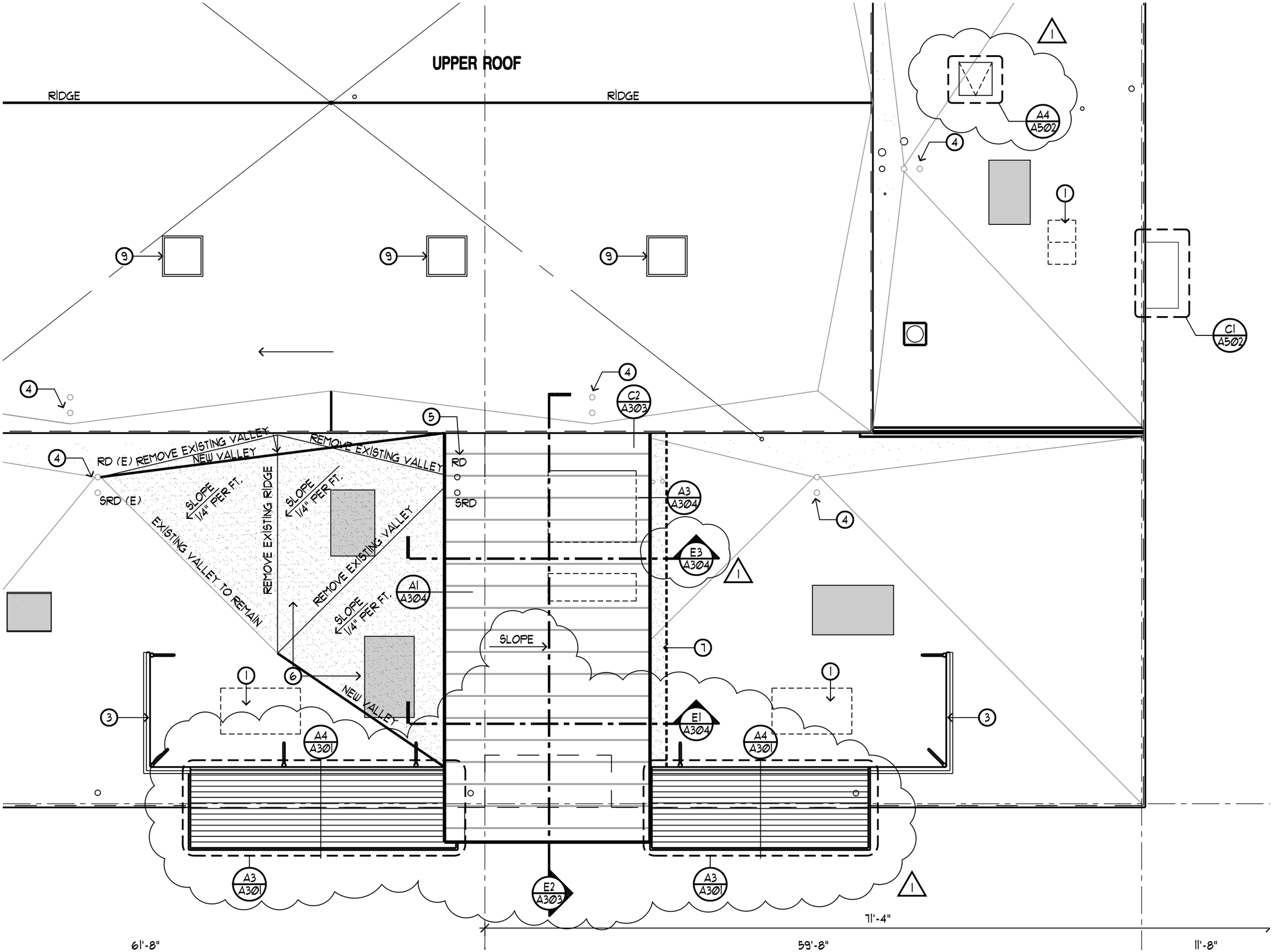
UPPER ROOF
RIDGE
RIDGE
RD (E) REMOVE EXISTING VALLEY
NEW VALLEY
REMOVE EXISTING VALLEY
SRD (E)
SLOPE 1/4" PER FT.
REMOVE EXISTING RIDGE
SLOPE 1/4" PER FT.
EXISTING VALLEY TO REMAIN
REMOVE EXISTING VALLEY
SLOPE 1/4" PER FT.
NEW VALLEY
RD
SRD
SLOPE
A4 A502
C1 A502
C2 A303
A3 A304
E3 A304
A1 A304
E1 A304
A4 A301
A3 A301
E2 A303
61'-8"
59'-8"
71'-4"
11'-8"

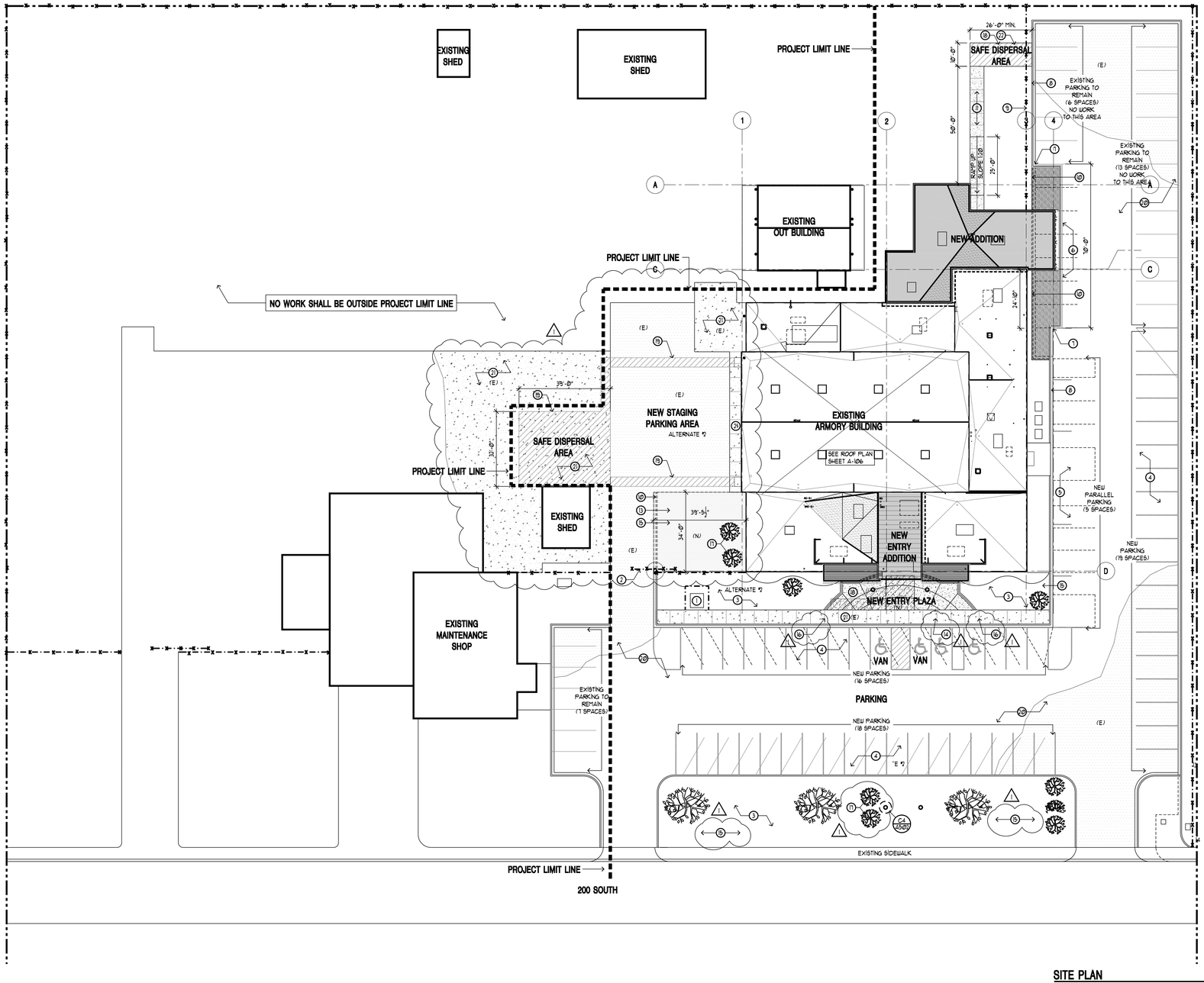

SITE PLAN

SCALE: 1" = 20'-0"

SITE PLAN LEGEND

HATCH PATTERN	SECTION	DESCRIPTION
		NEW ADDITION
		EXISTING BUILDING
		NEW 3" ASPHALT PAVING OVER 5" COMPACTED SUB BASE. SEE PAVEMENT NOTES BELOW.
		EXISTING ASPHALT PAVING TO REMAIN
		NEW 5" CONCRETE SLAB OVER 6" COMPACTED SUB BASE
		EXISTING CONCRETE SLAB/SIDEWALK TO REMAIN
		EXISTING CONCRETE SLAB/SIDEWALK TO BE REMOVED AND REPLACED. SEE LANDSCAPE PLAN FOR SCOPE OF WORK.

SITE PLAN KEY NOTES

DESCRIPTION

1. EXISTING GARBAGE DUMPSTER, SLAB AND ENCLOSURE.
2. EXISTING FENCE AND GATE.
3. NEW LANDSCAPE - SEE LANDSCAPING DRAWINGS.
4. RE-STRIPE PARKING STALLS, TO BE PERPENDICULAR STALLS - STALLS TO BE 9'-0" WIDE X 18'-0" DEEP.
5. RELOCATE EXISTING STALLS TO OPPOSITE SIDE OF PARKING LOT.
6. NEW CONCRETE CURB AND GUTTER - MATCH PROFILE OF EXISTING - SET ON 12" COMPACTED ROAD BASE.
7. SAW CUT EXISTING CURB/GUTTER ASPHALT PARKING FOR NEW ADDITION.
8. EXISTING CONCRETE CURB AND GUTTER.
9. EXISTING FENCE TO REMAIN. DISCONNECT FROM EXISTING FENCE POST DURING CONSTRUCTION AND RE-INSTALL AFTER CONSTRUCTION, STOP AT BUILDING.
10. CURB AND GUTTER TO BE REMOVED.
11. 5'-0" WIDE, 4" CONCRETE SLAB OVER 6" COMPACTED SUB BASE. SLOPE AT MAX OF 1:20 SLOPE FROM BUILDING TO SAFE DISPERSAL AREA.
12. REMOVE EXISTING ASPHALT AND REPLACE WITH GRAVEL TO MATCH EXISTING GRAVEL ADJACENT TO WORK.
13. NEW 3" ASPHALT OVER 5" COMPACTED SUB BASE. SLOPE NOT TO EXCEED 1:20 AND CROSS SLOPE NOT MORE THAN 1:48
14. EXISTING CONCRETE TO BE REMOVED AT SHADED AREA. SEE LANDSCAPE PLANS FOR NEW CONCRETE PATTEN AND LOCATION.
15. REMOVE TURF
16. SAW CUT EXISTING CONCRETE AT THIS LOCATION.
17. REMOVE TREES
18. NEW 4" CONCRETE SLAB OVER 6" COMPACTED SUB BASE. SLOPE NOT TO EXCEED 1:20 AND CROSS SLOPE NOT MORE THAN 1:48
19. PROVIDE NEW STRIPING ON ASPHALT AND CONCRETE FROM EXIT DOORS TO SAFE DISPERSAL AREA. STRIPING SHOULD SHOW DIRECT PATH FROM EXIT TO LOCATION OF SAFE DISPERSAL AREA.
20. EXISTING ASPHALT TO REMAIN
21. EXISTING CONCRETE SLAB/SIDEWALK TO REMAIN
22. PROVIDE NEW STRIPING ON CONC. AT LOCATION OF SAFE DISPERSAL AREA.

SITE PLAN GENERAL NOTES

1. CONTRACTOR IS RESPONSIBLE TO COORDINATE PENETRATIONS THROUGH SLAB WITH PLUMBING, ELECTRICAL & MECHANICAL.
2. CONTRACTOR IS RESPONSIBLE TO COORDINATE EMBEDS IN SLAB W/ STRUCTURAL DRAWINGS.
3. CONTRACTOR IS RESPONSIBLE TO COORDINATE ANY AND ALL PENETRATIONS PRIOR TO WATERPROOFING.
4. PROVIDE UNI-STRUT CAST IN PLACE IN P.T. SLAB FOR PIPE AND CONDUIT HANGERS AND FOR SHELVING HANGERS. SEE 21/A14 & MECH. & PLUMB. DRWNGS.
5. SEE SHEET A8.1 FOR REQUIREMENTS OF WALL TYPES AND NOTES.
6. CONTRACTORS MAY EXERCISE OPTIONS FOR PLACEMENT OF CONTROL JOINTS TO SIMPLIFY P.T. SLAB AND POUR ADDITIONAL TOPPING SLABS. THIS OPTION IF EXERCISED, MUST BE COORDINATED WITH THE STRUCTURAL ENGINEER.
7. SEE STRUCTURAL FOR COLUMN LOCATIONS AND TYPE

PARKING SUMMARY

PARKING TO REMAIN	19 SPACES
NEW PARKING	60 + 4 HANDICAP SPACES
TOTAL PARKING	83 SPACES

(16 NEW PARKING SPACES)

PAVEMENT NOTES

PAVEMENT NOTES:

1. ASPHALT PAVEMENT: USE ASPHALT CONCRETE SPECIFIED IN APWA SECTION 02745.

A. INSTALL LIFTS NO GREATER THAN 3" AND NOT LESS THAN 2" AS MEASURED AFTER COMPACTION.

B. COMPACT WITHIN THE RANGE OF 96 TO 98 PERCENT RELATIVE TO THE ASTM D 5591 (MARSHALL METHOD) OR 93 TO 97 PERCENT RELATIVE TO ASTM D 2041 (RICE METHOD).

2. UNTREATED BASE COURSE: PROVIDE MATERIAL SPECIFIC IN APWA SECTION 02060. DO NOT USE GRAVEL OR SEWER ROCK.
0-2322. COMPACT PER APWA SECTION 02324 TO A MODIFIED PROCTOR DENSITY OF 95 PERCENT OR GREATER. MAXIMUM LIFT THICKNESS IS 8" BEFORE COMPACTION.

TYPICAL ASPHALT SECTION CUT

3"
5"
SEE PAVEMENT NOTE #1 ABOVE
SEE PAVEMENT NOTE #2 ABOVE

jsa architects

architects
planners
interior designers

6465 South 3000 East
Suite 205
Salt Lake City, UT 84121
Ph: 801. 733-2500
Fax: 801. 733-2501
www.jsa-llc.com

CREATED BY: JSA ARCHITECTS

THE DESIGNS SHOWN AND DESCRIBED HEREIN INCLUDING ALL TECHNICAL DRAWINGS, GRAPHIC REPRESENTATION & MODELS THEREOF, ARE PROPRIETARY & CAN NOT BE COPIED, DUPLICATED, OR COMMERCIALLY EXPLOITED IN WHOLE OR IN PART WITHOUT THE SOLE AND EXPRESS WRITTEN PERMISSION FROM THE STATE OF UTAH.

THESE DRAWINGS ARE AVAILABLE FOR LIMITED REVIEW AND EVALUATION BY CLIENTS, CONSULTANTS, CONTRACTORS, GOVERNMENT AGENCIES, VENDORS, AND OFFICE PERSONNEL ONLY IN ACCORDANCE WITH THIS NOTICE.

CONSULTANT:

BUILDING NAME:

RICHFIELD ARMORY

UTAH NATIONAL GUARD

PROJECT TITLE:

RICHFIELD ARMORY REMODEL

MARK	DATE	DESCRIPTION
1	01-04-10	ADDENDUM #1

ISSUE TYPE: CONST. DOCUMENT SET

ISSUE DATE: 12/14/09

DFCM PROJECT NO: 09219470
CAD PROJECT NO: 09054
CAD DWG FILE:
DRAWN BY: MHF
CHK'D BY: CDJ
COPYRIGHT: STATE OF UTAH

SHEET TITLE

SITE PLAN

SHEET NUMBER

A-101

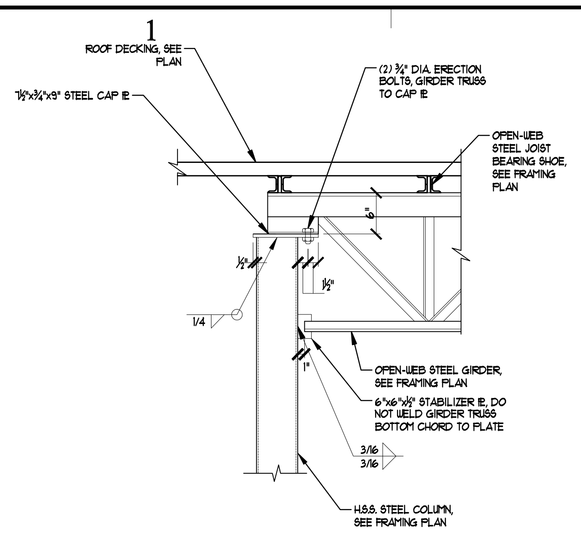

STEEL GIRDER JOIST ON STEEL COL. DETAIL (10)
N.T.S. ST112

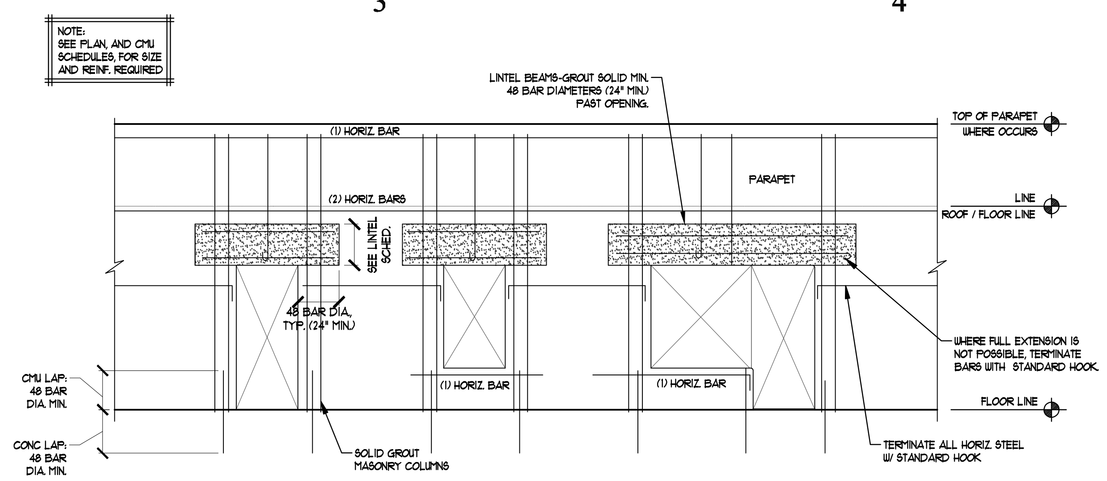

NOTE: REINFORCING TIES NOT SHOWN FOR CLARITY.

MASONRY WALL DETAIL (3)
N.T.S. CM003

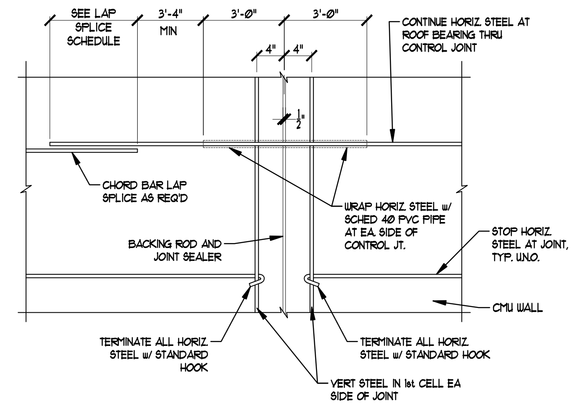

ELEVATION

TYPICAL CHORD SPLICES

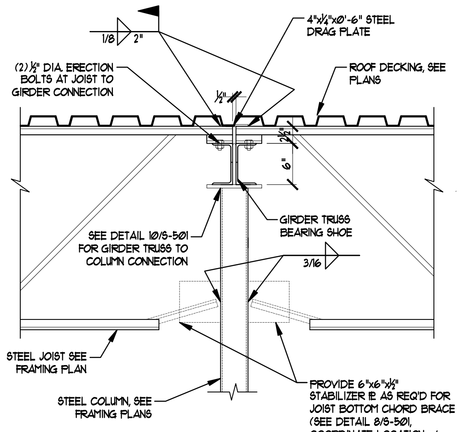

STL JOIST ON STL GIRDER AT COL. DETAIL (11)
N.T.S. ST112

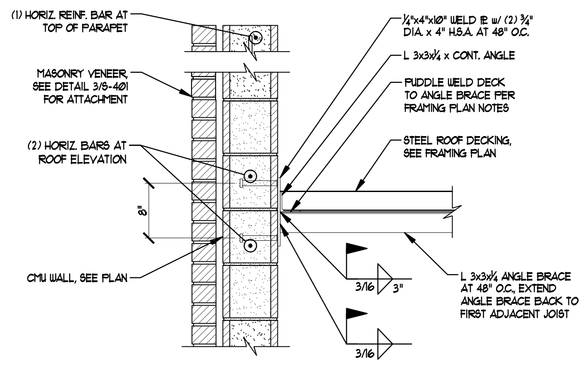

CMU WALL DETAIL (7)
N.T.S. CM105

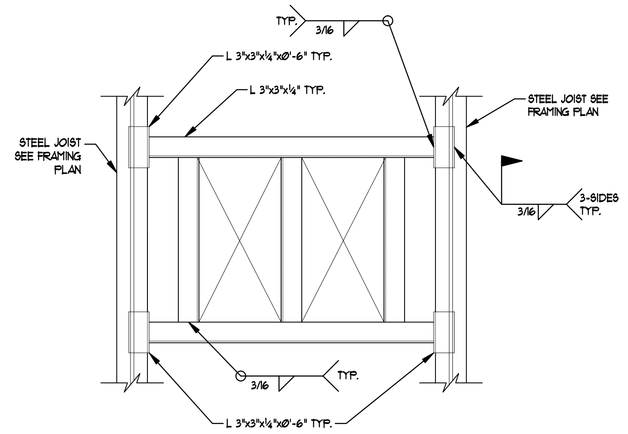

NOTE: SEE DECK MANUFACTURER'S STANDARDS FOR SUPPORT AROUND SMALL OPENINGS WHERE APPLICABLE, OTHERWISE PROVIDE SUPPORT AS SHOWN. ALL OPENING SUPPORTS SHALL BE APPROVED THROUGH SHOP DRAWING SUBMITTAL PRIOR TO FABRICATION

TYP. ROOF DRAIN SUPPORT DETAIL (4)
N.T.S. ST038

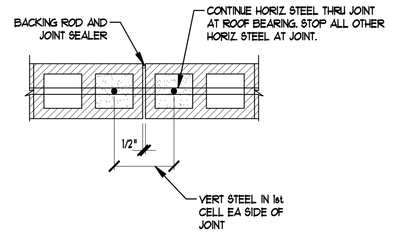

PLAN

TYPICAL CONTROL JT DETAIL

CONTROL JOINT DETAIL (1)
N.T.S. CM004

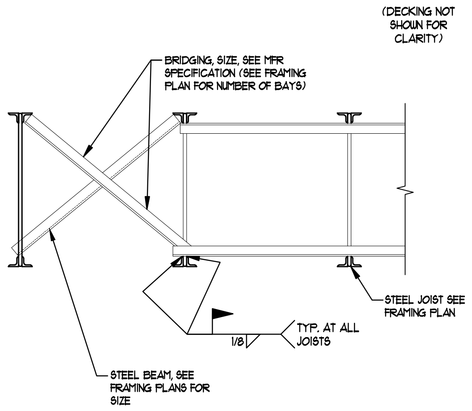

TYP. HORIZ. BRIDGING ENDING AT TRUSS (12)
N.T.S. ST034

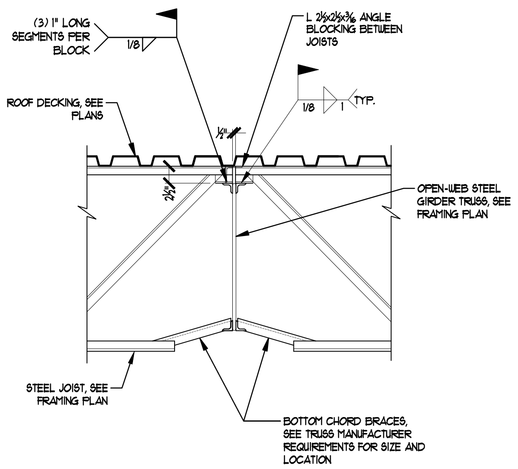

STEEL JOIST ON STEEL GIRDER DETAIL (8)
N.T.S. ST114

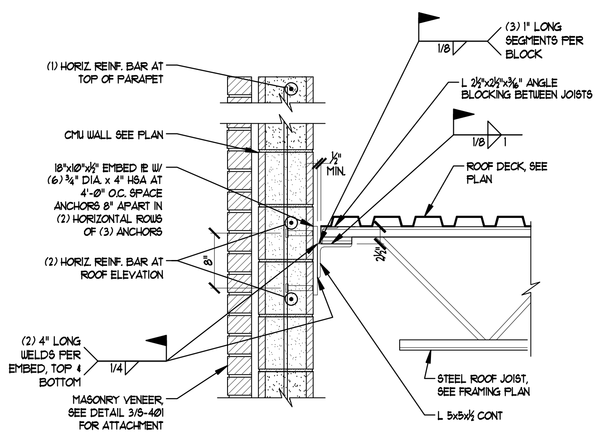

FRAMING DETAIL (5)
N.T.S. ST710

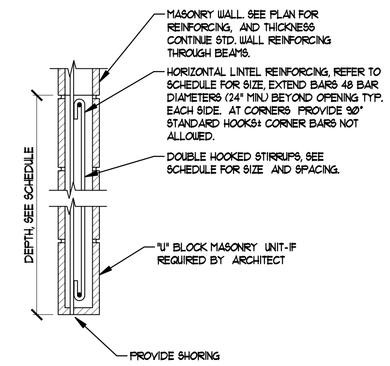

1. DO NOT LAP BOTTOM STEEL AT CENTER SPAN, NOR TOP STEEL NEAR INTERIOR OR EXTERIOR SUPPORTS. ALL LAPS OF TYP. WALL BOND BEAMS SHALL BE MADE IN THE SECTION OF THE WALL, AND NOT IN THE LINTEL.
2. ALL LINTELS, AND 24" OF ADJACENT WALLS, SHALL BE GROUTED SOLID.
3. SEE ARCHITECTURAL SECTIONS FOR COMBINED BLOCK SIZES IN LINTEL BEAMS.
4. ALL LINTELS NOT SPECIFICALLY CALLED OUT ON FRAMING PLAN SHALL BE COORDINATED WITH ENGINEER
5. PENETRATIONS THROUGH LINTELS FOR MECHANICAL, ELECTRICAL SYSTEMS, ETC. IS NOT PERMITTED WITHOUT APPROVAL OF THE ENGINEER.

MASONRY LINTEL DETAIL (2)
N.T.S. CM001

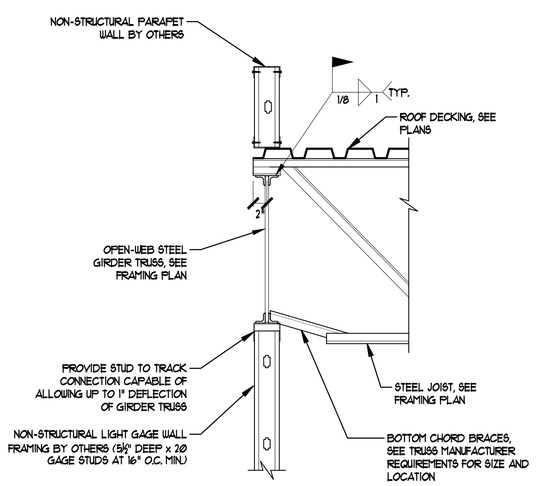

STEEL JOIST ON STEEL GIRDER DETAIL (13)
N.T.S. ST114

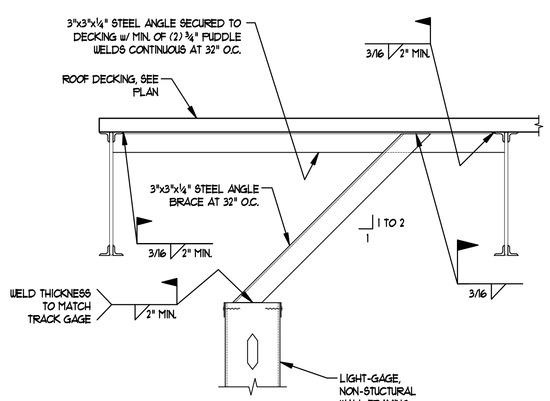

INTERIOR WALL BRACE CONN. (9)
N.T.S. ST117

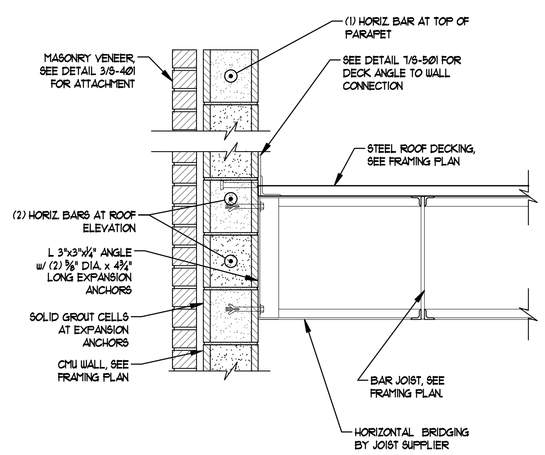

CONSTRUCTION DETAIL (6)
N.T.S. CM116

jsa architects
architects
planners
interior designers
6465 South 3000 East
Suite 205
Salt Lake City, UT 84121
Ph: 801. 733-2500
Fax: 801. 733-2501
www.jsa-llc.com

CREATED BY: JSA ARCHITECTS

THE DESIGNS SHOWN AND DESCRIBED HEREIN INCLUDING ALL TECHNICAL DRAWINGS, GRAPHIC REPRESENTATION & MODELS THEREOF, ARE PROPRIETARY & CAN NOT BE COPIED, DUPLICATED, OR COMMERCIALLY EXPLOITED IN WHOLE OR IN PART WITHOUT THE SOLE AND EXPRESS WRITTEN PERMISSION FROM THE STATE OF UTAH.

THESE DRAWINGS ARE AVAILABLE FOR LIMITED REVIEW AND EVALUATION BY CLIENTS, CONSULTANTS, CONTRACTORS, GOVERNMENT AGENCIES, VENDORS, AND OFFICE PERSONNEL ONLY IN ACCORDANCE WITH THIS NOTICE.

CONSULTANT:

LR. NELSON ENGINEERS
51 WEST 9000 SOUTH
SANDY, UTAH 84070
(801) 565-8580

JOB # U915-084-091

BUILDING NAME:

RICHFIELD ARMORY
UTAH NATIONAL GUARD

PROJECT TITLE:

RICHFIELD ARMORY REMODEL

MARK	DATE	DESCRIPTION

ISSUE TYPE: CONST. DOCUMENT SET

ISSUE DATE: 12/14/09

DFCM PROJECT NO: 09219470
CAD PROJECT NO: 09054
CAD DWG FILE:
DRAWN BY: GJJ
CHK'D BY:
COPYRIGHT: STATE OF UTAH

SHEET TITLE

FRAMING DETAILS

SHEET NUMBER

S-501

SHEET 16 OF 61