State of Utah

GARY R. HERBERT
Governor

GREGORY S. BELL
Lt. Governor

Department of Administrative Services
KIMBERLY K. HOOD
Executive Director

Division of Facilities Construction and Management
DAVID G. BUXTON
Director

ADDENDUM NO. 2

Date:	January 6, 2010		
To:	Contractors		
From:	Wayne Smith – Project Manager		
Reference:	Richfield Armory Upgrade Utah National Guard – Richfield, Utah DFCM Project No. 09219470		
Subject:	**Addendum No. 2**		
Pages	Addendum Cover Sheet	1	page
	Revised Project Schedule	1	page
	Architect's Addendum	16	pages
	Total	18	pages

Note: This Addendum shall be included as part of the Contract Documents. Items in this Addendum apply to all drawings and specification sections whether referenced or not involving the portion of the work added, deleted, modified, or otherwise addressed in the Addendum. Acknowledge receipt of this Addendum in the space provided on the Bid Form. Failure to do so may subject the Bidder to Disqualification.

While we contend that SB220 should only be potentially applicable to a contract issued after the effective date of said bill, this is to clarify that for purposes of this contract, regardless of the execution or effective dates of this contract, the status of Utah Law and remedies available to the State of Utah and DFCM, as it relates to any matter referred to or affected by said SB220, shall be the Utah law in effect at the time of the issuance of this Addendum.

2.1 **SCHEDULE CHANGES:** Wednesday, January 6, 2010 3:00 PM bid opening has been cancelled and rescheduled for Monday, January 11, 2009 at 3:30 PM. See attached Revised Project Schedule

2.2 **GENERAL ITEMS:** See attached Architect's Addendum No. 2 dated January 6, 2010.

Stage II
PROJECT SCHEDULE – REVISED PER ADDENDUM NO. 2 DATED JANUARY 6, 2010

PROJECT NAME: **RICHFIELD ARMORY UPGRADE**
UTAH NATIONAL GUARD – RICHFIELD, UTAH
DFCM PROJECT #: **09219470**

Event	Day	Date	Time	Place
Stage II Bidding Documents Available	Wednesday	December 16, 2009	2:00 PM	DFCM 4110 State Office Building SLC, UT and the DFCM web site*
Mandatory Pre-bid Site Meeting	Thursday	December 17, 2009	1:00 PM	Richfield National Guard Armory 650 West 100 South Richfield, UT
Deadline for Submitting Questions	Tuesday	December 29, 2009	5:00 PM	Wayne Smith – DFCM E-mail wfsmith@utah.gov Fax 801-538-3267
Addendum Deadline (exception for bid delays)	**Wednesday**	**January 6, 2010**	**12:00 NOON**	**DFCM web site***
Prime Contractors Turn in Bid and Bid Bond	**Monday**	**January 11, 2010**	**3:30 PM**	**DFCM** **4110 State Office Building** **SLC, UT**
Subcontractors List Due	**Tuesday**	**January 12, 2010**	**3:30 PM**	**DFCM** **4110 State Office Building** **SLC, UT** **Fax 801-538-3677**
Substantial Completion Date	Tuesday	August 31, 2010		

* **NOTE: DFCM's web site address is http://dfcm.utah.gov**

jsa architects

Principals
John C. Shirley, AIA
Corey R. Solum, AIA
Christopher D. Jensen, AIA

Assoc. Principals
Tyler K. Kirk, AIA
John M. Shirley, AIA

architects
planners
interior designers

JSA Architects, LLC
6465 South 3000 East
Suite 205
Salt Lake City, Utah
84121
Ph: 801.733-2500
Fax: 801.733.2501
www.jsa-llc.com

January 6, 2010

ADDENDUM #2

PROJECT: Utah National Guard
Richfield Armory Upgrade
Project No. - 09219470
620 W 200 S
Richfield, UT 84701

BID DATE: January 11, 2010

BID TIME: See body of DFCM attached Addendum for new time.

Please note and include the following items to the contract documents. The General Contractor shall be responsible to incorporate these changes into the Contract Documents and shall also be responsible to notify all sub-contractors of this addendum.

PROJECT MANUAL:

1. SECTION 012300 – ALTERNATES:
1.1. Alternate #4: Skylights in Drill Hall- The Base Bid and Alternate description are reversed it should read as follows:
1.1.1. Base Bid: Roof to remain as existing without the installation of new skylights.
1.1.2. Alternate: Install skylights in Drill Hall as per sheets A-1`05 and A-106.
2. SECTION 230900 – AUTOMATIC TEMPERATURE CONTROL SYSTEM:
2.1. This section should be added to Division 23 and is attached as part of this addendum.

CONSTRUCTION DOCUMENTS:

3. SHEET G-008 ACCESSIBILITY DETAILS:
3.1. Details D6: See attached details for revisions to the handrail
4. SHEET S-101 GENERAL NOTES:
4.1. Sheet reissued to go along with comments from Addendum #1.
5. SHEET S-201 FOUNDATION PLAN:
5.1. Sheet reissued to go along with comments from Addendum #1.
6. SHEET S-301 ROOF FRAMING PLAN:
6.1. Sheet reissued to go along with comments from Addendum #1.
7. SHEET S-501 FRAMING DETAILS:
7.1. Detail 11: Replace with the one attached.
8. SHEET S-502 FRAMING DETAILS:
8.1. Sheet reissued to go along with comments from Addendum #1 as a number of details were modified.
9. SHEET S-504 FRAMING DETAILS:
9.1. Detail 6: This new detail is attached and should be added to this sheet.

End of Addendum #2

UTAH NATIONAL GUARD

DIVISION 23 MECHANICAL

AUTOMATIC TEMPERATURE CONTROL SYSTEM SECTION 230900

GENERAL CONDITIONS:
All pertinent sections of this specification may be part of the work described in this section. This contractor will require coordination of other trades. This contractor will have a project manager, with not less than ten years experience, on site when ATC work commences to coordinate daily work activities.

MANUFACTURER'S QUALIFICATIONS:
Firms regularly engaged in the manufacture of electric control equipment of types and sizes required, whose products have been in satisfactory use in similar service for not less than 10 years in the State of Utah. The manufacturer shall be represented locally by an authorized distributor or reseller that has been properly trained and certified by the manufacturer to represent their products. The manufacturer shall have had local representation or their products in the State of Utah for a consistent period of not less than 10 years.

As an extension to the existing Utah National Guard facilities and the UNG centralized DDC control system, the Automatic Temperature Control (ATC) system shall be TAC (Schneider Electric) installed and commissioned by Utah Yamas Controls.

Contact Scott Porter 435-668-8167.

CONTRACTOR QUALIFICATIONS:
Qualified Bidders: The Automatic Temperature Control (ATC) system shall be installed and certified by Utah Yamas Controls Inc. of Utah. The installation of the DDC system must be approved and certified by a factory representative of the controls manufacturer.

Past Projects: The BAS contractor shall have completed a minimum of 20 projects within the last five years which are at least equal in dollar value and scope to this project. The past projects shall have utilized the same control system manufacturer that is being proposed for this project. A list of similar projects, dollar amount, scope, contact names and numbers shall be provided by the BAS contractor if requested by the owner.

Longevity: The BAS contractor shall have a minimum of 10 years experience (as an authorized factory support center for the controls manufacturer) installing and servicing consistent computerized building automation control systems. Employee experience may not be substituted for company experience.

The BAS contractor shall have complete engineering, service and installation departments. The contractor shall have an established 24 hour emergency service organization. The required extended service submission by the BAS contractor will include service response times and advanced replacement policies for bid consideration.

Personnel, Coverage and Response Capabilities: The BAS contractor shall have service and support employees within 30 miles of the project location. The service and support employees shall be full time employees of the BAS contractor and available. The BAS contractor's main office, training center, warehouse and repair center shall be in the State of Utah. The contractor shall have a complete warehouse and repair facility with components to support this installation. Documentation and review of such capabilities and facilities may be required for review if requested by the owner's representative.

SCOPE OF WORK:
The scope of work shall include all labor, material, and equipment necessary to integrate the existing

UTNG TAC I/Net control system at the Richfield Armory. The scope also includes the extension of the control system to the existing TAC network located at the UNG Draper Headquarters to include the Direct Digital Control (DDC) system additions at the Armory. Scope includes software, hardware, programming, valves, damper actuators, sensors, and all like items, setup, start-up and owner instruction as well as all pertinent required items to insure a fully functioning DDC automation system. The ATC contractor is to update the UNG Draper Headquarters TAC head end interface with graphic pages for the Armory and verify connectivity, alarm masking, trending and remote scheduling and programming of the system.

The existing controllers, sensors, damper actuators and like items shall be removed, as identified on the mechanical demolition drawings, by the controls contractor and returned to the owner. New TAC DDC controllers, sensors, damper actuators and like items shall be installed, commissioned and programmed.

WORK TO BE PERFORMED BY OTHERS

The Contractor shall carefully review all notes, coordination schedules, and drawings for work required under this section of the specification.

The electrical contractor shall furnish and install all single phase and multiple phase electrical power wiring to magnetic starters, disconnect switches, and motor. The electrical contractor shall also provide 120v power to each ATC panel as shown on the plans. The RTU and Furnace units shall have factory supplied step down 24VAC transformers for unit control circuitry. The ATC contractor shall be responsible for step down transformers and 24 VAC wiring for other ATC equipment such as outside air damper actuators, carbon dioxide sensors and TAC (Schneider Electric) DDC control devices.

The sheet metal contractor shall install all dampers supplied by the ATC contractor. Each damper shall be installed so that it will operate freely and without binding. Each damper shall be checked and those not properly installed shall be replaced or reinstalled without cost to the ATC contractor.

The test and balance contractor shall perform a complete air systems and water balance and provide the owner with a certified compliance report. Balancing data sheets shall indicate the required and actual CFM of all supply, return and exhaust outlets or inlets, and be totaled and summarized by systems. Hydronic balancing data sheets shall list required temperature or pressure differentials used for balancing coils, radiations, condensers, etc. Sheets shall show in comparison final as balanced versus design values. The ATC contractor shall allow up to 4 hours to assist the test and balance contractor with the commissioning of this project.

Mechanical Contractor to install all control valves and temperature sensor wells. The ATC contractor to provide ATC valves and temperature sensors wells.

Duct smoke detectors, fire dampers, fire/smoke dampers are supplied and installed by others.

ELECTRICAL WIRING:

A licensed electrical contractor shall install all ATC conduit and wiring. The ATC Contractor shall be responsible for the complete ATC installation. All wiring shall be installed in accordance to the National Electrical Code and local codes. The ATC contractor shall hold a valid electrical license for the State of Utah.

All ATC wiring shall be installed in ¾" conduit (minimum) and in accordance with the National Electrical Code (NEC) in any exposed or inaccessible locations. The installation of plenum rated cable may be used without conduit in accessible concealed areas as long as it meets NEC.

MAINTAIN SYSTEM OPERATION

This project will take place in an occupied and operating building. Work located in occupied areas must be done as not to disrupt the work of the occupants. Local shut downs for the installation of the new control systems are expected but shall be coordinated with other trades and per the construction schedule.

SUBMITTALS and OPERATION MANUALS:
Prior to any installation, the Contractor shall submit, with 15 days after award of contract, a complete submittal package. This submittal shall contain six (6) copies of complete literature on all control equipment including control diagrams as per the sequence of operation.

The Operation and maintenance manuals shall contain six (6) copies of complete literature on all control equipment including updated control diagrams as per the sequence of operation and programming detail on CD. The Operation and maintenance manuals shall also contain detailed troubleshooting guides and maintenance guidelines.

SEASONAL ADJUSTMENTS:
Seasonal adjustments to the control system will need to be included in this bid. Depending on the finish date this contractor will schedule 8 hours, with maintenance personal to check the system in the mode of either winter or summer conditions.

PROJECT MANAGEMENT:
Provide a designated project manager who will be responsible for the following:
Construct and maintain project schedule
On-site coordination with all applicable trades and subcontractors
Attend project meetings
Make necessary field decisions

WARRANTY:
Provide all services, materials and equipment necessary for a one-year period after beneficial use has been established.

TRAINING:
Training will consist of a factory authorized training course totaling not less than 4 hours. Training will be at the Armory and performed by an instructor that is accredited and certified by the manufacturer. A total of up to 4 employees from the UNG shall be permitted attend the training course.

PRODUCTS AND EQUIPMENT:

MANUFACTURERS:
As an extension of the UNG centralized DDC control system, provide a TAC (Schneider Electric) Direct Digital Controls (DDC) as described herein. This DDC system shall be compatible with and tied into the existing UNG Ethernet network as an extension of the NetPlus router network.
Contact Scott Porter 435-668-8167.

VALVES:
Valves to be manufactured by TAC, Belimo or Honeywell and shall utilize electronic 4-20mA, 0-10VDC, or PWM positioning and electric actuation. ATC valve bodies 2” and smaller shall be screw type; larger valves shall be flanged. Screwed valves shall be rated at 150 psi or greater and shall have cast iron or brass bodies. Flanged valves shall be rated at 250 psi or greater and have cast iron or steel bodies. All automatic valves shall be for DDC control application. All valves shall be disc/plug and seat or ball construction. Valves to be sized for a 3-lb. pressure drop.

DAMPERS AND ACTUATORS:
The ATC contractor shall furnish motorized control dampers identified on the mechanical drawings as ‘by ATC contractor’. All dampers shall be factory-built, low leakage units such as Ruskin CD-50 or approved equal. Blades shall be 6” maximum width; material to be extruded aluminum, and blade linkage to be external and accessible. Frames shall be 5” x 1” and made of extruded aluminum hat channel, 0.125” minimum thickness with corner braces to assure that they are square. Dampers shall be low leakage type

with compressible end seals and neoprene of extruded vinyl blade and jamb seals. Leakage shall be not exceed 6.2 cfm/sq. ft. at 4" W.G. Dampers shall require less than 7#-in/sq. ft. torque at the operating shaft.

BUILDING MANAGEMENT SYSTEM (BMS):

The building management system shall permit full operator communication and control, including obtaining information about performance of this system; changing times and parameters; adding or deleting points; changing relationships between sensors and controlled equipment; creating or modifying control strategies; and diagnosing system malfunctions. English language prompting format shall be used. The operator will be presented with options at the CRT in English. Features of the system will be compatibility to run on Windows NT. System to have TCP/IP protocol communication; support for net plus routers; open database support; integrated graphic editor; asynchronous auto-dial/auto answer, and one way dialing. This Contractor shall provide all software required for efficient operation of all the automatic system functions required by this specification. Software shall be modular in design for flexibility in expansion or revision of the system. It is the intent of this specification to require provisions of a system, which can be fully utilized by individuals with no, or limited, previous exposure to PC's and programming techniques and languages. If the system to be provided requires the use of any modified BASIC, "C", PASCAL, or DRUM Language program, or writing "line" programming statements to modify operation or strategy in the system, the vendor shall provide unlimited, no charge, software modification and support for a period of five (5) years after the completion of the project in addition to the warranty period specified elsewhere. Systems, which are factory programmed, are unacceptable. Direct Digital Control (DDC) Modules: Each DCU shall provide "Block" or "Modular" programming software so that the operator can easily develop custom control strategies and sequences of operation, without learning a programming language.

Control loops and sequences shall be defined using "modules" that are analogous to traditional pneumatic or electric control devices. Modules may be linked together to form more complex control strategies. The use of mathematical equations, "BASIC", or proprietary programming languages for defining a DDC control loop is unacceptable.

LOCAL AREA NETWORKS (LAN):

Controller LAN: The FMS shall provide communication between the DCU's over a Local Area Network (LAN).

The Controller LAN shall be a "bus type" network over which information is transmitted in a "token passing" fashion between all the nodes on the network.

The Controller LAN shall have the capacity to contain not less than 64 nodes as a minimum. Each work station, DCU, or "gateway" device shall represent a node to the network.

The Controller LAN shall connect the nodes in a fully distributed environment, each DCU operating autonomously while communicating with all other nodes on the network. Controller LANs requiring a communication controller (for any reason) will not be acceptable. LAN lengths in excess of 24,000 ft. shall be supported.

A break in the communication path of the Controller LAN shall be announced as an alarm and shall automatically initiate a Controller LAN reconfiguration such that the resulting sections of the Controller LAN continue to function as separate LANs. No loss of control shall result from such a break in the Controller LAN.

Commercial LAN: Workstations on the Controller LAN may also reside on a higher tier "commercial" LAN. This "commercial" LAN shall be based on Ethernet, and comply with IEEE 802.3 standards. Where a "commercial" LAN is implemented, it shall be possible to connect multiple Controller LANs together, with global data sharing across this commercial LAN.

Data speed shall not be less than 10 Megabaud.

An operator at a workstation on the "commercial" LAN may connect to any other workstation on the "commercial" LAN as if the operator were sitting at the other workstation.

Alarms and special event notices shall be routed to different workstations on the "commercial" LAN based on time of day, and day of the week.

Operator password assignment shall be available on both a system-wide basis and a workstation by workstation basis.

DIRECT DIGITAL CONTROL SYSTEM-OVERVIEW:

The direct digital control system shall consist of local microprocessor-based digital control panels (DCP) network together for information sharing and operating convenience and a central operator interface station.

It is the intent of these specifications to create a combined direct digital control system. All system type control functions, such as those used for fan systems, boilers, chillers, central plant and pumps, building pressure, etc., shall be accomplished by using software algorithms in the respective DCP.

Each major mechanical component (fan system, chiller, boiler, etc.) shall have its own dedicated DCP so that failure of any will not result in catastrophic system failure. DCP's utilizing a master-slave relationship shall have a master unit provided for each major mechanical system.

All safety devices such as fire alarm shutdown, smoke detectors, low limit thermostats, etc., shall be hard wired to accomplish their critical functions completely independent of the DCP and shall have additional outputs as required to sever as inputs to the DCP for secondary control and reporting functions.

CONTROLLER (DCU):

The controller shall be a microprocessor and shall form the basic control unit of the system. It shall operate as a stand-alone unit providing all the necessary algorithms and software logic to perform the local HVAC control sequences and energy saving functions. Failure of any one DCU shall have no effect on the other DCU's in the system. Programming shall be block type and accomplished by the operator's terminal, or the remote operator terminal. The DCU shall have the ability for direct digital control; automatic time scheduling; demand limiting; calculated points universal inputs with configurable outputs; an RS-485 Lan port; an RS-232 port; an TTL port for hand held console; trend sampling, and on line editing capability. The controller shall operate independent of any central computer, shall have built in diagnostic routines.

Inter-computer communications shall support true global token passing control strategies as well as allow data status and values connected to one DCU to be used within application programs of another DCU.

The system shall provide a network communication facility to support global calculation and control strategies to be continuously implemented in the distributed system. The system shall provide for events detected in any area of the total network to initiate commands to any other device within the network. The system shall also provide for connected or calculated data to be continuously shared between any or all controllers within the total network. Through the DCU's may share none critical sensor information, at no point within the facility shall quick reacting and constantly changing point information be communicated via the network bus. These types of point shall be hardwired to the DCU in which the algorithm exists.

SOFTWARE:

This contractor shall provide the most current versions of all programming, controlling, monitoring software & graphic/system displays required by the DDC system. These shall include but not be limited to DDC operating system and data files. **All software, programs and intellectual rights to the database shall become the property of the owner.** Copies of all software releases available within one year of the substantial completion shall be provided and installed to the owner at no cost.

ROUTER and SECURITY OF CONTROL SYSTEM:

Connect new TAC (Schneider Electric) DDC controls to the existing TAC DDC Ethernet router at this site to provide constant on-line monitoring by the facility personnel. This device shall serve as the network interface between the ATC control/controllers at the remote site and the existing Wide Area Network (WAN). This router to tie directly to the control system. The router shall support the following protocol, Telnet via TCP, SNMP via UDP, and ATC contractor's proprietary protocol via UDP. The router shall require a Static IP address, Subnet Mask and Gateway provided by the network administrator. The maximum allowable transmission/response packet sizes shall not exceed 186 bytes, and acknowledge/response packet sizes shall not exceed 64 bytes. UDP packets shall be proprietary to the control system with critical packets using a private key encryption for security.

AIR DUCT SMOKE DETECTORS:
Smoke detectors shall be furnished and wired by the electrical division contractor. All smoke detectors shall be interlocked with the building fire alarm system by the electrical contractor.

TEMPERATURE SENSORS:
Provide thermistor or thin film silicon sensors for all temperature applications, except differential chilled water for BTU calculation, where precision matched Platinum RTDs shall be used. Solid state sensors shall be linear, drift free, and require only a one-time calibration. A look-up table in the connected controller shall linearize thermistors or similar non-linear temperature devices. Resolution shall be better than .5 degrees F for Micro Controller applications, and better than .2 degrees F for DCP applications.

Space sensors shall have an integral port for connection of a portable “intelligent” sensor to communicate with its DCP. This port and portable “intelligent” sensor may be used for initiating the "test mode" locally to verify all DCP control sequences, and perform test and balancing functions. To eliminate the downtime associated with rechargeable batteries, the portable “intelligent” sensor shall receive its power from the sensor port.

SEQUENCE OF CONTROL:
All settings specified below are initial settings only and must be field adjusted to satisfy actual jobsite conditions.

RTU-1 thru RTU-8:
The RTU units include cooling state(s), gas heat stage(s), factory controlled hot gas bypass, power exhaust or ERV, factory installed outdoor air, return air, and relief air dampers. The unit shall be factory wired for control point terminations and have a terminal strip for fan enable, heating and cooling stages. The hot gas bypass shall be factory supplied, wired and controlled by the unit. The ATC contractor will supply and install a TAC DDC AHU controller with the required I/O count and connect to the existing UTNG TAC I/Net DDC control system.

The supply fan shall be started from a local DDC controller through an "OFF-AUTO" switch, located on the face of factory supplied starter. In "OFF" position, fan shall be stopped, and in "AUTO" position, fan shall be on during OCCUPIED mode and cycled to maintain minimum space temperature when in the UNOCCUPIED mode. The ATC contractor will supply and install a DDC controller, fan status current switch, supply air temperature sensor, low limit freezstat, mixed air temperature sensor, building static pressure sensor, space sensor with push button override and return air carbon dioxide sensor.

Fan system operation in AUTO mode shall be subject to low discharge air limits, building fire alarm, building optimal start-stop programs, and other conditions or logic pre-programmed into the DDC controllers. If the fan system is shut-down, or fails to start due to abnormal conditions, a ‘Safeties Alarm’ shall be sent to the DDC system. When the fan is stopped under any condition, the outside air dampers and relief air dampers shall close, and the supply/powered exhaust fans shall stop. The fan system shall perform an optimal start program that shall include building warm-up and building purge features. In the warm-up mode, all outside air and relief air dampers shall remain closed and the air handler shall discharge 80 degree F air into the building. In the purge mode, the cooling stages shall remain off and the outside air and relief air dampers shall open to 100% to allow the air handler to discharge the coolest possible temperature into the building.

OCCUPIED mode: Each RTU area will have a dedicated occupancy time schedule with user adjustable dates, times and permit holiday and special day scheduling. A space temperature sensor and an outdoor air temperature sensor, acting through DDC controllers, shall enable the fan, heating and DX cooling stages. The DDC controller shall modulate the outdoor air and return air dampers to maintain the drill hall space temperature set point. A discharge air temperature sensor will be supplied and installed to monitor the RTU leaving air temperature.

A CO2 level transmitter located in the space served, acting through a DDC controller, shall reset the outside air damper minimum position. The outside air dampers shall maintain a minimum position sufficient to meet the minimum scheduled CFM fresh air requirements. If the air-quality sensor detects CO2 levels in the return air stream in excess of 800 ppm, the minimum CFM set point shall be adjusted up to the maximum scheduled fresh air requirements. A mixed air temperature sensor, acting through a DDC controller, shall provide 45 degree F mixed air temperature low limit control of the air handling system. A –0.25 to 0.25" w.c. static pressure transmitter with an outside probe and an interior probe located in an interior hallway in area served by the fan, acting through the DDC system shall modulate the relief dampers or VFD powered exhaust to maintain 0.03" w.c. building static pressure.

EVENT mode: A push button located with the DDC space temperature sensor shall override the air handler to the EVENT mode sequence when activated for a time period of three hours (adjustable). If the event mode override pushbutton is again activated while the air handler is in the EVENT mode, the event timer shall reset and provide an additional three hours (adjustable) of the EVENT mode sequence. When in EVENT mode the air handler shall control as in the OCCUPIED mode.

UNOCCUPIED mode: The space temperature acting through a DDC controller shall cycle the supply fan to maintain desired minimum set back space temperature. The outdoor air and relief air dampers shall remain closed and the unit gas heat shall operate under the warm-up mode sequence. When the RTU is commanded OFF by the DDC system the heating and cooling stages shall be off, the outside air damper shall remain closed.

FIRE ALARM FAN SHUT-DOWN:
All heating, ventilating and air conditioning system supply fans shall automatically shut off and all natural ventilation dampers shall close when the building fire alarm system is energized. All fans to automatically start up again when fire alarm system is reset. Fire alarm system fan relays shall be "normally energized" and shall be supplied, installed and wired by the electrical contractor for each fan system.

UNIT HEATERS UH-1:
The ATC contractor shall supply and install space temperature sensor for each UH. The DDC system will enable each unit individually based on time schedule and temperature drop below set point. The DDC system shall be configured for night set back operation and enable the units to maintain set back set points. The space temperatures, unit enable point and set points (occupied and set back) for each unit shall be available on the graphic pages and adjustable from the graphical user interface.

EXHAUST FAN EF-1 & EF-2:
EF-1 is controlled by a light switch provided and wired by the Electrical Contractor. EF-2 is to be wired to the hood and interlocks with the hood supplied electrical controls. The ATC contractor shall supply and install a current switch to monitor the run time of EF-2. This status input shall be wired to the DDC controller.

AREA SECURITY TEMPERATURE ALARMS:
Temperature sensors located in an area served by each fan system shall continuously monitor the space temperature and alarm the building DDC control system anytime the space temperature drops below or rises above preset set points. Upon receiving an alarm the UNG DDC control system shall indicate which area(s) of the building are in alarm through a graphic floor plan display of the building(s). Current space temperatures shall also be displayed at the graphic pages for the facility.

ELECTRIC WALL HEATER EWH-1:
The EWH will be supplied with built in thermostat. The ATC contractor shall supply and install an analog amp sensor to the 115VAC feed to the unit. The analog amp value shall be wired and configured in the DDC system for trending and monitoring.

MINI SPLIT SYSTEM AC-1:

The ATC contractor shall install and wire the factory supplied split system space thermostat.

ABBREVIATIONS	
AB	ANCHOR BOLT
ABV	ABOVE
ADJ	ADJACENT
AFF	ABOVE FINISH FLOOR
AGGR	AGGREGATE
ALT	ALTERNATE
ALUM	ALUMINUM
APPROX	APPROXIMATELY
ARCH'L	ARCHITECTURAL
BLW	BELOW
BD	BOARD
BLDG	BUILDING
BLK'G	BLOCKING
BM	BEAM
B.N.	BOUNDARY NAILING
B.O.	BOTTOM OF
BOTT	BOTTOM
BRG	BEARING
B/WN	BETWEEN
CAM	CAMBER
CANT'L	CANTILEVERED
CTR	CENTERED
℄	CENTERLINE
CLR	CLEAR
CMU	CONC MAS UNIT
COL	COLUMN
CONC	CONCRETE
CONN	CONNECTION
CONST	CONSTRUCTION
CONT	CONTINUOUS
d	PENNY
D/DIA	DIAMETER
DBL	DOUBLE
DEPT	DEPARTMENT
DFL	DOUGLAS FIR LARCH
DIAG	DIAGONAL
DTL	DETAIL
DIA	DIAMETER
DIM	DIMENSION
DN	DOWN
DWG	DRAWING
DWL	DOWEL
EA	EACH
EJ	EXPANSION JOINT
ELEV	ELEVATION
ELEC	ELECTRIC
E.N.	EDGE NAILING
ENCL	ENCLOSED
EQ	EQUAL
EQUIP	EQUIPMENT
EXIST	EXISTING
EXP	EXPANSION
EXT	EXTERIOR
EXTD	EXTENDED
FD	FLOOR DRAIN
FND/FDN	FOUNDATION
FF	FINISH FLOOR
FG	FINISH GRADE
FIN	FINISH
FLR	FLOOR
FRMG	FRAMING
FT	FOOT OR FEET
FTG	FOOTING
FURR	FURRING
GA	GAUGE
GLB	GLU-LAM BEAM
GRND	GROUND
G.T.	GIRDER TRUSS
GYP	GYPSUM WALLBOARD
HD	HOLDOWN
HDR	HEADER
HGR	HANGER
HGT	HEIGHT
HORIZ	HORIZONTAL
H.T.	HIP TRUSS
INSUL	INSULATION
INT	INTERIOR
JT	JOINT
LAM	LAMINATE
LAT	LATERAL
LBS	POUNDS
LSL	LAM. STRAND LUMBER
LT	LIGHT
LVL	LAM. VENEER LUMBER
MAS	MASONRY
MAX	MAXIMUM
MECH	MECHANICAL
MFR	MANUFACTURER
MFR'D	MANUFACTURED
MIN	MINIMUM
MISC	MISCELLANEOUS
NO.	NUMBER
NTS	NOT TO SCALE
O/	OVER
O.C.	ON CENTER
O.H.	OPPOSITE HAND
OPN'G	OPENING
P.F.A.	POST FROM ABOVE
PSL	PARALLEL STRAND LUMBER
PL	PLATE
PLYWD	PLYWOOD
PNL	PANEL
PSI	LBS PER SQ INCH
PT	POST-TENSIONED
#	POUND
PREFAB	PREFABRICATED
r/RAD	RADIUS
REF	REFERENCE
REINF	REINFORCING
REQ'D	REQUIRED
SCHED	SCHEDULE
S.F.	SQUARE FEET
SECT	SECTION
SHTHG	SHEATHING
SIM	SIMILAR
SPEC	SPECIFICATIONS
SQ	SQUARE
STD	STANDARD
STL	STEEL
STRUCT	STRUCTURAL
SYM	SYMMETRICAL
SW	SHEAR WALL
SPN	SOLE PLATE NAILING
T&G	TONGUE AND GROOVE
T&B	TOP AND BOTTOM
THK	THICK
T.O.	TOP OF
TRIMM	TRIMMER
TR	TRUSS
TS	TUBE STEEL
TS LSL	TIMBERSTRAND BEAM
TYP	TYPICAL
U.N.O.	UNLESS NOTED OTHERWISE
VERT	VERTICAL
W/	WITH
W/O	WITHOUT
WT	WEIGHT

STRUCTURAL GENERAL NOTES

A. GENERAL

1. THE CONTRACTOR SHALL VERIFY ALL DIMENSIONS PRIOR TO STARTING CONSTRUCTION. THE ARCHITECT SHALL BE NOTIFIED OF ANY DISCREPANCIES.
2. DIMENSIONS SHALL TAKE PRECEDENCE OVER SCALE SHOWN ON DRAWINGS.
3. NOTES AND DETAILS ON DRAWINGS SHALL TAKE PRECEDENCE OVER GENERAL NOTES AND TYPICAL DETAILS.
4. ALL WORK SHALL CONFORM TO THE MINIMUM STANDARDS OF THE FOLLOWING:
THE 2006 EDITION OF THE INTERNATIONAL BUILDING CODE, AND ANY OTHER REGULATING AGENCIES WHICH HAVE AUTHORITY OVER ANY PORTION OF THE WORK, AND THOSE CODES AND STANDARDS LISTED IN THESE NOTES AND SPECIFICATIONS.
5. SEE ARCHITECTURAL DRAWINGS FOR THE FOLLOWING:
   - SIZE AND LOCATION OF ALL DOOR AND WINDOW OPENINGS, EXCEPT AS NOTED.
   - SIZE AND LOCATION OF ALL INTERIOR AND EXTERIOR NON-BEARING PARTITIONS.
   - SIZE AND LOCATION OF FLOOR AND ROOF OPENINGS EXCEPT AS SHOWN.
   - FLOOR AND ROOF FINISHES.
   - STAIR FRAMING AND DETAILS (EXCEPT AS SHOWN).
   - DIMENSIONS NOT SHOWN ON STRUCTURAL DRAWINGS.
6. SEE MECHANICAL, PLUMBING AND ELECTRICAL DRAWINGS FOR THE FOLLOWING:
   - PIPE RUNS, SLEEVES, HANGER, TRENCHES WALL AND SLAB OPENINGS, ETC., EXCEPT AS SHOWN OR NOTED.
   - ELECTRICAL CONDUIT RUNS, BOXES, OUTLETS IN WALLS AND SLABS. △1
   - CONCRETE INSERTS FOR ELECTRICAL, MECHANICAL OR PLUMBING FIXTURES.
   - SIZE AND LOCATION OF MACHINE OR EQUIPMENT BASES, ANCHOR BOLTS FOR MOUNTS.
7. THE CONTRACT STRUCTURAL DRAWINGS AND SPECIFICATIONS REPRESENT THE FINISHED STRUCTURE. THEY DO NOT INDICATE THE METHOD OF CONSTRUCTION. THE CONTRACTOR SHALL PROVIDE ALL MEASURES NECESSARY TO PROTECT THE STRUCTURE DURING CONSTRUCTION. SUCH MEASURES SHALL INCLUDE, BUT NOT BE LIMITED TO, BRACING, SHORING FOR LOADS DUE TO CONSTRUCTION EQUIPMENT, ETC. OBSERVATION VISITS TO THE SITE BY THE STRUCTURAL ENGINEER SHALL NOT INCLUDE INSPECTION OF THE ABOVE ITEMS.
8. OPENINGS, POCKETS, ETC. LARGER THAN 6 INCHES SHALL NO BE PLACED IN SLABS, DECKS, BEAMS, JOISTS, COLUMNS, WALLS, ETC., UNLESS SPECIFICALLY DETAILED ON THE STRUCTURAL DRAWINGS. NOTIFY THE STRUCTURAL ENGINEER WHEN DRAWINGS BY OTHERS SHOW OPENINGS, POCKETS, ETC., NOT SHOWN ON THE STRUCTURAL DRAWINGS, BUT WHICH ARE LOCATED ON STRUCTURAL MEMBERS.
9. ASTM SPECIFICATIONS NOTED SHALL BE THE LATEST REVISION.
10. CONTRACTOR SHALL INVESTIGATE SITE DURING CLEARING AND EARTHWORK OPERATIONS FOR FILLED EXCAVATIONS OR BURIED STRUCTURES SUCH AS CESSPOOLS, CISTERNS, FOUNDATIONS, ETC. IF ANY SUCH STRUCTURES ARE FOUND, THE STRUCTURAL ENGINEER SHALL BE NOTIFIED IMMEDIATELY.
11. CONSTRUCTION MATERIALS SHALL BE SPREAD OUT IF PLACED ON FLOORS OR ROOF. LOAD SHALL NOT EXCEED THE DESIGN LIVE LOAD PER SQUARE FOOT. PROVIDE ADEQUATE SHORING AND/OR BRACING WHERE STRUCTURE HAS NOT ATTAINED DESIGN STRENGTH.
12.

LIVE LOADS	
FLOOR LIVE LOAD	50 PSF / 100 PSF
ROOF LIVE LOAD	20 PSF
LIVE LOAD REDUCTION (WHERE APPLICABLE)	YES

SNOW LOAD		
GROUND SNOW LOAD, Pg	43 PSF	
ROOF SNOW LOAD	30 PSF	
FLAT ROOF SNOW LOAD, Pf	30 PSF	
SNOW EXPOSURE FACTOR, Ce	1.0	
SNOW IMPORTANCE FACTOR, I	1.2	△1
THERMAL FACTOR, Ct	1.0	

WIND		
BASIC WIND SPEED	90 MPH	
WIND IMPORTANCE FACTOR, I_w	1.15	△1
WIND EXPOSURE CATEGORY	C	
INTERNAL PRESSURE COEFFICIENT	±0.18	
COMPONENT & CLADDING		
ROOF	+10.0 PSF MIN. OR −20.4 PSF	
ROOF (ENDZONE)	+10.0 PSF MIN. OR −51.5 PSF	
ROOF (OVERHANG)	+10.0 PSF MIN. OR −51.5 PSF	
WALL	+20.4 PSF OR −27.3 PSF	

SEISMIC - NEW ADDITION & NEW ELEMENTS		
SEISMIC IMPORTANCE FACTOR	1.5	△1
SEISMIC OCCUPANCY CATEGORY	IV	
MAPPED SPECTRAL RESPONSE ACCELERATIONS	S_s =0.821 AND S_1 =0.241	
SITE CLASS	D	
SPECTRAL RESPONSE COEFFICIENT	S_{DS}=0.641 AND S_{D1}=0.308	
SEISMIC DESIGN CATEGORY	D	
BASIC SEISMIC FORCE RESISTING SYSTEMS	SPECIAL REINFOCED CMU SHEAR WALLS	
DESIGN BASE SHEAR	C_s x DEAD WEIGHT(W)	
SPECTRAL RESPONSE COEFFICIENT, C_s	0.128	△1
RESPONSE MODIFICATION FACTORS	R = 5	
ANALYSIS PROCEDURE	EQUIVALENT LATERAL FORCE	△1

SEISMIC - FOR EVALUATION OF EXISTING BUILDING ELEMENTS	
SEISMIC IMPORTANCE FACTOR	1.0
SEISMIC OCCUPANCY CATEGORY	II
MAPPED SPECTRAL RESPONSE ACCELERATIONS	S_s =0.821 AND S_1 =0.241
SITE CLASS	D
SPECTRAL RESPONSE COEFFICIENT	S_{DS}=0.641 AND S_{D1}=0.308
SEISMIC DESIGN CATEGORY	D
BASIC SEISMIC FORCE RESISTING SYSTEMS	SPECIAL REINFOCED CMU SHEAR WALLS
DESIGN BASE SHEAR	C_s x DEAD WEIGHT(W)
SPECTRAL RESPONSE COEFFICIENT, C_s	0.321
RESPONSE MODIFICATION FACTORS	R = 2
ANALYSIS PROCEDURE	EQUIVALENT LATERAL FORCE

SPECIAL LOADS	
FLOOD LOAD	N/A (OUTSIDE FLOOD HAZARD AREA)
OTHER SPECIAL LOADS	N/A

B. FOUNDATION

1. FOOTINGS ARE DESIGNED BASED ON AN ALLOWABLE SOIL PRESSURE OF 2500 PSF AS PER THE PROJECT GEOTECHNCAL REPORT, (THE SOIL REPORT):

   CONSULTANT: GSH GEOTECHNICAL CONSULTANTS, INC.
   REPORT #: 0128-047-09
   DATE: SEPT. 18, 2009

   SOILS PREPARATION AND FOUNDATION CONSTRUCTION SHALL CONFORM TO THE REQUIREMENTS OF THE SOILS REPORT.
2. SEE ARCHITECTURAL AND STRUCTURAL DRAWINGS FOR EXACT LOCATION OF BULKHEADS AND OPENINGS ETC.
3. CONTRACTOR SHALL PROVIDE FOR PROPER DE-WATERING OF EXCAVATIONS FROM SURFACE WATER, GROUND WATER, SEEPAGE, ETC.
4. FOOTINGS SHALL BE PLACED ACCORDING TO DEPTHS SHOWN ON THE DRAWINGS. ALL ABANDONED FOOTINGS, UTILITIES, ETC. THAT INTERFERE WITH NEW CONSTRUCTION SHALL BE REMOVED.
5. THE SOIL UNDER PERIMETER BEAMS AND SLAB SHALL BE NEAR OPTIMUM MOISTURE PRIOR TO CONCRETE PLACEMENT AND SHALL BE VERIFIED BY SOILS ENGINEER.
6. CONCRETE PLACEMENT SHALL BE IN ONE CONTINUOUS OPERATION UNLESS OTHERWISE SPECIFIED AND SLAB SURFACE SHALL BE CURED WITH HUNTS COMPOUND OR EQUAL
7. FOOTING BACKFILL AND UTILITY TRENCH BACKFILL WITHIN BUILDING AREA SHALL BE PER THE REQUIREMENTS OF THE PROJECT SOILS REPORT. FLOODING WILL NOT BE PERMITTED.

C. ANCHOR BOLT NOTES

1. THICKEN SLAB AS REQUIRED FOR CONCRETE COVERAGE AT ANCHOR BOLTS PER ACI 318. WHERE OCCURS. THE CONCRETE CONTRACTOR SHALL VERIFY LOCATION OF ALL BOLTS, TIE-DOWNS, POST-ANCHORS, ETC. WITH ARCHITECTURAL PLANS PRIOR TO COMMENCING WORK AND BE RESPONSIBLE FOR SAME.
2. U.N.O. BOLT SILL PLATES OF INTERIOR WALLS TO THE SLAB w/ MIN. ½" DIA. STRONG-BOLT (ICC-ES ESR-1771) ANCHOR BOLT WITH PLATE WASHERS. BOLTS SHALL BE SPACED NOT MORE THAN 32" O.C. THERE SHALL BE A MIN. OF (2) BOLTS PER PIECE. ONE BOLT SHALL BE LOCATED NOT MORE THAN 12" AND NOT LESS THAN 4" FROM EACH END. EMBED BOLTS AT LEAST 2¾" INTO CONCRETE SLAB.
3. ALL ½" DIA. ANCHOR BOLTS MAY BE REPLACED WITH ½" DIA. THREADED ROD EPOXY DOWELED TO FOUNDATION WITH SIMPSON SET-XP EPOXY (ICC-ES ESR-2508) IN ⅝" DIA. HOLE. PROVIDE A MIN. 2¾" EMBEDMENT.
4. AT ALL INTERIOR WALLS, ½" DIA. ANCHOR BOLTS MAY BE REPLACED WITH ½" DIA. SIMPSON TITEN HD. (ICC-ES ESR-2713) PROVIDE A MIN. OF 3¼" EMBED.
5. EXPANSION ANCHORS NOTED IN PLANS OR DETAILS SHALL BE SIMPSON STRONG-BOLT (ICC-ES ESR-1771).

D. CONCRETE

1. ALL PHASES OF WORK PERTAINING TO THE CONCRETE CONSTRUCTION SHALL CONFORM TO THE "BUILDING CODE REQUIREMENTS FOR REINFORCED CONCRETE" (ACI 318 LATEST APPROVED EDITION) WITH MODIFICATIONS AS NOTED IN THE DRAWINGS AND SPECIFICATIONS.
2. REINFORCED CONCRETE DESIGN IS BY THE "ULTIMATE STRENGTH DESIGN METHOD:, ACI 318 – (LATEST EDITION).
3. SCHEDULE OF STRUCTURAL CONCRETE 28-DAY STRENGTHS AND TYPES:

LOCATION IN STRUCTURE	STRENGTH PSI	TYPE
SLABS ON GRADE	4000	HARD ROCK
FOOTINGS	3000	HARD ROCK
FOUNDATION WALLS	3000	HARD ROCK

   DESIGN BASED ON 2500 PSI, 28-DAY STRENGTH, THEREFORE, SPECIAL INSPECTION IS NOT REQUIRED.
4. CONCRETE MIX DESIGN SHALL BE SUBMITTED TO THE ENGINEER FOR APPROVAL WITH THE FOLLOWING REQUIREMENTS:
   A. COMPRESSIVE STRENGTH AT AGE 28 DAYS AS SPECIFIED ABOVE.
   B. LARGE AGGREGATE-HARDROCK, ¾" MAXIMUM SIZE CONFORMING TO ASTM C-33
   C. CEMENT-ASTM C-150, TYPE II PORTLAND CEMENT,
   D. MAXIMUM SLUMP 5-INCHES.
   E. NO ADMIXTURES, EXCEPT FOR ENTRAINED AIR, AND AS APPROVED BY THE ENGINEER.
   F. MAXIMUM WATER/CEMENT RATIO = 0.50
5. CONCRETE MIXING OPERATIONS, ETC., SHALL CONFORM TO ASTM C-94.
6. PLACEMENT OF CONCRETE SHALL CONFORM TO ACI STANDARD 614 AND PROJECT SPECIFICATIONS.
7. CLEAR COVERAGE OF CONCRETE OVER OUTER REINFORCING BARS SHALL BE AS FOLLOWS:
   CONCRETE POURED DIRECTLY AGAINST EARTH – 3 INCHES CLEAR
   STRUCTURAL SLABS – ¾ INCHES CLEAR (TOP AND BOTTOM) FORMED
   CONCRETE WITH EARTH BACK FILL – 2 INCHES CLEAR
8. ALL REINFORCING BARS, ANCHOR BOLTS AND OTHER CONCRETE INSERTS SHALL BE WELL SECURED IN POSITION PRIOR TO PLACING CONCRETE.
9. PROVIDE SLEEVES FOR PLUMBING AND ELECTRICAL OPENINGS IN CONCRETE BEFORE PLACING. DO NOT CUT ANY REINFORCING WHICH MAY CONFLICT. CORING IN CONCRETE IS NO PERMITTED EXCEPT AS SHOWN. NOTIFY THE STRUCTURAL ENGINEER IN ADVANCE OF CONDITIONS NOT SHOWN ON THE DRAWINGS.
10. CONDUIT OR PIPE SIZE (O.D.) SHALL NOT EXCEED 30% OF SLAB THICKNESS AND SHALL BE PLACED BETWEEN THE TOP AND BOTTOM REINFORCING, UNLESS SPECIFICALLY DETAILED OTHERWISE. CONCENTRATIONS OF CONDUITS OR PIPES SHALL BE AVOIDED EXCEPT WHERE DETAILED OPENING ARE PROVIDED.
11. MODULUS OF ELASTICITY OF CONCRETE, WHEN TESTED IN ACCORDANCE WITH ASTM C-460, SHALL BE AT LEAST THE VALUE GIVEN BY THE EQUATIONS IN SECTION 8.5.1 OF ACI 318 FOR THE SPECIFIED 28-DAY STRENGTH.
12. SHRINKAGE OF CONCRETE, WHEN TESTED IN ACCORDANCE WITH ASTM C-157, SHALL NOT EXCEED 0,00040 INCHES/INCH.

E. REINFORCING STEEL

1. REINFORCING BARS SHALL CONFORM TO THE REQUIREMENTS OF ASTM A-615 GRADE 60.
2. ALL REINFORCING BAR BENDS SHALL BE MADE COLD.
3. MINIMUM LAP OF WELDED WIRE FABRIC SHALL BE 6 INCHES OR ONE FULL MESH AND ONE HALF, WHICH EVER IS GREATER.
4. ALL BARS SHALL BE MARKED SO THEIR IDENTIFICATION CAN BE MADE WHEN THE FINAL IN-PLACE INSPECTION IS MADE.
5. REBAR SPLICES ARE TO BE: CLASS "B".
6. REINFORCING SPLICES SHALL BE MADE ONLY WHERE INDICATED ON THE DRAWINGS.
7. DOWELS BETWEEN FOOTINGS AND WALLS OR COLUMNS SHALL BE THE SAME GRADE, SIZE AND SPACING OR NUMBER AS THE VERTICAL REINFORCING, RESPECTIVELY.

F. WOOD

1. FRAMING LUMBER:
   A. DOUGLAS FIR LARCH NO. 2 GRADE FOR 2x AND 4x FRAMING EXCEPT FOR 2x4, 2x6 STUDS USE DOUGLAS FIR STUD GRADE, U.N.O.
   B. 6x FRAMING DFL NO. 1 GRADE
2. BOLT HOLES SHALL BE ¹⁄₁₆" MAXIMUM LARGER THAN THE BOLT SIZE RE-TIGHTEN ALL NUTS PRIOR TO CLOSING IN.
3. STANDARD CUT WASHERS SHALL BE USED UNDER BOLT HEADS AND NUTS AGAINST WOOD, U.N.O. PLATE WASHERS ARE REQUIRED AT SHEAR WALLS, SEE SCHEDULE.
4. ALL SILLS OR PLATES RESTING ON CONCRETE OR MASONRY SHALL BE PRESSURE TREATED DOUGLAS FIR. (1) BOLT SHALL BE LOCATED NOT MORE THAN 12 INCHES FROM EACH END OF A PLATE, OR FROM A NOTCH GREATER THAN ½ THE WITH OF THE PLATE.
5. DO NOT NOTCH JOISTS, RAFTERS OR BEAMS, EXCEPT WHERE SHOWN IN DETAILS. OBTAIN ENGINEER'S APPROVAL FOR ANY HOLES OR NOTCHES NOT DETAILED. HOLES THROUGH SILLS, PLATES, STUDS, AND DOUBLE PLATES IN INTERIOR BEARING, AND SHEAR WALLS SHALL NOT EXCEED ⅓ THE PLATE WIDTH. USE BORED HOLES LOCATED IN THE CENTER OF THE STUD OR PLATE.
6. WHERE POST OCCURS ON 2nd FLOOR, ADD THE SAME POST UNDER IT ON 1st FLOOR AND ALSO ADD THE SAME POST BETWEEN FLOOR SHEATHING AND 1st FLOOR WALL TOP PLATE.
7. CONNECTION HARDWARE SHALL BE SIMPSON STRONG-TIE OR EQUAL. MUST BE I.C.B.O. APPROVED.
8. FASTENING SCHEDULE PER 2006 EDITION OF THE INTERNATIONAL BUILDING CODE, TABLE 2304.9.1, U.N.O.
9. AT 2x4 TOP PLATES, HOLES LESS THAN 1⅜" DO NOT REQUIRE MODIFICATION. HOLES THAT EXCEED 1⅜" WILL REQUIRE A SIMPSON HSS STUD SHOE. AT 2x6 TOP PLATES, HOLES LESS THAN 2⅛" DO NOT REQUIRE MODIFICATION. HOLES THAT EXCEED 2⅛" WILL REQUIRE A SIMPSON HSS STUD SHOE. AT NON-SHEAR WALLS, WHERE HOLES MADE IN THE TOP PLATE THAT EXCEED THE SIZE OF THE HSS SHOE, STRAP ACROSS EACH PLATE WITH A CS16 STRAP w/ (12) 10d x1½" NAILS EACH END. LOT SPECIFIC LETTERS ARE REQUIRED FOR NON-SHEAR WALLS WHERE THE HOLE OR NOTCH IN THE PLATE EXCEEDS 4" IN LENGTH. LOT SPECIFIC LETTERS ARE REQUIRED FOR SHEAR WALLS WHERE THE HOLE IN THE TOP PLATE EXCEEDS 2¾" LENGTH OR WHERE THE HSS STUD SHOE CANNOT BE INSTALLED.
10. 16d SINKERS NOTED IN THESE DRAWINGS MAY BE REPLACED WITH 0.131 x 3¼ GUN NAILS PER THE FOLLOWING TABLES:

# OF 16d SINKERS	1	2	3	4	5	6	7	8	9	10	11	12
# OF 0.131 x 3¼ GUN NAILS	2	3	4	5	6	7	8	9	11	12	13	14

SPACE OF 16d SINKERS	2" O.C.	4" O.C.	6" O.C.	8" O.C.	10" O.C.	12" O.C.
SPACE OF 0.131 x 3¼ GUN NAILS	1½" O.C.	3½" O.C.	5" O.C.	7" O.C.	8½" O.C.	10½" O.C.

G. MANUFACTURED BEAMS △1

1. GLUED LAMINATED BEAMS (GLB)
   A. GLU-LAM BEAMS SHALL BE 24F-V4, (CONT. AND CANT'L GLU-LAM BEAMS SHALL BE 24F-V8) AND HAVE THE FOLLOWING MINIMUM PROPERTIES: Fb = 2400 psi, Fc (Perpendicular) = 650 psi, E=1,800,000 psi.
   B. ALL BEAMS SHALL BE FABRICATED USING EXTERIOR GLUE. FABRICATION AND HANDLING PER LATEST AITC AN WCCA STANDARDS. BEAMS TO BEAR GRADE STAMP AND AITC STAMP AND CERTIFICATE.
   C. MOISTURE CONTENT SHALL BE LIMITED TO A MAXIMUM OF 12%
   D. ALL GLU-LAM BEAMS SHALL HAVE STANDARD CAMBER, U.N.O. ON PLANS.
2. LAMINATED STRAND LUMBER (1.3E OR 1.5E LSL)
   A. LSL BEAMS SHALL BE TIMBER STRAND LSL BY TRUS-JOIST OR ICBO APPROVED EQUAL AND HAVE THE FOLLOWING MINIMUM PROPERTIES:
      1) FOR E = 1,300,000 psi, Fb = 1700 psi, Fv = 400 psi, Fc (Perpendicular) = 680 psi, Fc (Parallel) = 1400 psi
      2) FOR E = 1,500,000 psi, Fb = 2250 psi, Fv = 400 psi, Fc (Perpendicular) = 750 psi, Fc (Parallel) = 1950 psi
3. LAMINATED VENEER LUMBER (LVL)
   A. LVL BEAMS SHALL BE MICROLAM LVL BY TRUS-JOIST OR ICBO APPROVED EQUAL AND HAVE THE FOLLOWING MINIMUM PROPERTIES:
      1) E = 1,900,000 psi, Fb = 2600 psi, Fv = 285 psi, Fc (Perpendicular) = 750 psi, Fc (Parallel) = 2510 psi
   B. MULTIPLE-PLY LVL BEAMS SHALL BE NAILED TOGETHER AS FOLLOWS:
      1) PROVIDE (2) ROWS OF 16d SINKERS AT 12" O.C. FOR BEAMS ≤ 11⅞" DEEP.
      2) PROVIDE (3) ROWS OF 16d SINKERS AT 12" O.C. FOR BEAMS > 11⅞" DEEP.
4. PARALLEL STRAND LUMBER (PSL)
   A. PSL BEAMS SHALL BE PARALLAM PSL BY TRUS-JOIST OR ICBO APPROVED EQUAL AND HAVE THE FOLLOWING MINIMUM PROPERTIES:
      1) E = 2,000,000 psi, Fb = 2900 psi, Fv = 290 psi, Fc (Perpendicular) = 750 psi, Fc (Parallel) = 2900 psi

H. STRUCTURAL SHEATHING △1

1. ALL PLYWOOD SHALL BE C-D INTERIOR SHEATHING WITH EXTERIOR GLUE AND SHALL BEAR THE STAMP OF AN APPROVED TESTING AGENCY. LAY PLYWOOD WITH FACE GRAIN PERPENDICULAR TO SUPPORTS. USE A MIN. OF 4-PLY PLYWOOD. STAGGER JOINTS, AND NAILS. ORIENTED STRAND BOARD (O.S.B.) WITH EQUIVALENT PROPERTIES MAY REPLACE PLYWOOD.
2. △1 ROOF SHEATHING
   ¹⁹⁄₃₂" APA RATED SHEATHING SPAN RATING 40/20 EXPOSURE I, UNBLOCKED w/ 10d COMMON NAILS AT 6" O.C. ALL BOUNDARIES AND SUPPORTED PANEL EDGES 12" O.C. FIELD UNLESS NOTED OTHERWISE
3. ROOF SHEATHING AT BLOCKED DIAPHRAGM
   ¹⁹⁄₃₂" APA RATED SHEATHING SPAN RATING 40/20 EXPOSURE I, BLOCKED w/ 10d COMMON NAILS AT 6" O.C. ALL BOUNDARIES AND SUPPORTED PANEL EDGES 12" O.C. FIELD UNLESS NOTED OTHERWISE

I. SHOP DRAWINGS △1

1. SHOP DRAWINGS SHALL BE SUBMITTED FOR ALL STRUCTURAL ITEMS IN ADDITION TO ITEMS REQUIRED BY ARCHITECTURAL SPECIFICATIONS.
2. THE CONTRACTOR SHALL REVIEW ALL SHOP DRAWINGS PRIOR TO SUBMITTAL. ITEMS NOT IN ACCORDANCE WITH CONTRACT DRAWINGS SHALL BE FLAGGED FOR REVIEW.
3. VERIFY ALL DIMENSIONS WITH ARCHITECT
4. ANY CHANGES, SUBSTITUTIONS, OR DEVIATIONS FROM ORIGINAL CONTRACT DRAWINGS SHALL BE RED-LINED OR FLAGGED BY SUBMITTING PARTIES, SHALL BE CONSIDERED APPROVED AFTER ENGINEERS REVIEW, U.N.O.
5. THE ENGINEER HAS THE RIGHT TO APPROVE OR DISAPPROVE ANY CHANGES TO THE ORIGINAL DRAWINGS AT ANYTIME BEFORE OR AFTER SHOP DRAWING REVIEW.
6. THE SHOP DRAWINGS DO NOT REPLACE THE ORIGINAL CONTRACT DRAWINGS. ITEMS OMITTED OR SHOWN INCORRECTLY AND ARE NOT FLAGGED BY THE STRUCTURAL ENGINEER OR ARCHITECT ARE NOT TO BE CONSIDERED CHANGES TO THE ORIGINAL CONTRACT DRAWING.
7. THE ADEQUACY OF ENGINEERING DESIGNS AND LAYOUT PERFORMED BY THE OTHERS RESTS WITH THE DESIGNING OR SUBMITTING AUTHORITY.
8. REVIEWING IS INTENDED ONLY AS AN AID TO THE CONTRACTOR IN OBTAINING CORRECT SHOP DRAWINGS. RESPONSIBILITY FOR CORRECTNESS SHALL REST WITH THE CONTRACTOR.

J. LIGHT GAGE STEEL FRAMING △1

1. ALL STEEL STUDS SHALL BE THE TYPE SIZE AND GAGE SHOWN ON THE PLANS.
2. 16 AND 14 GAGE STUDS AND JOISTS SHALL BE FORMED FROM MILL CERTIFIED "PRIME STEEL" CONFORMING TO ASTM A570 GRADE 50 STEEL. 18 AND 20 GAGE STUDS AND ALL TRACK, BRIDGING, END ENCLOSURES, AND ACCESSORIES SHALL BE FORMED FROM STEEL THAT CONFORMS TO THE REQUIREMENTS OF ASTM 611, GRADE C WITH A MINIMUM YIELD STRENGTH OF 33,000 P.S.I.
3. ALL STUDS, TRACK, AND ACCESSORIES SHALL BE GALVANIZED, OR PRIMED WITH RUST-INHIBITIVE PAINT MEETING THE PERFORMANCE REQUIREMENTS OF TT-P-636C.
4. THE PHYSICAL AND STRUCTURAL PROPERTIES LISTED BY AISI SHALL BE CONSIDERED THE MINIMUM FOR ALL FRAMING MEMBERS.
5. ALL FRAMING COMPONENTS SHALL BE CUT SQUARELY FOR ATTACHMENT TO PERPENDICULAR MEMBERS, OR AS REQUIRED FOR AN ANGULAR FIT AGAINST ABUTTING MEMBERS. MEMBERS SHALL BE HELD POSITIVELY IN PLACE UNTIL PROPERLY FASTENED.
6. AXIALLY LOADED STUDS SHALL BE INSTALLED IN A MANNER WHICH WILL ASSURE THAT ENDS OF THE STUDS ARE POSITIONED AGAINST THE INSIDE TRACK WEB, PRIOR TO STUD AND TRACK ATTACHMENT.
7. TRACKS SHALL BE SECURELY ANCHORED TO THE SUPPORTING STRUCTURE AS SHOWN ON THE PLANS.
8. COMPLETE UNIFORM AND LEVEL BEARING SUPPORT SHALL BE PROVIDED FOR THE BOTTOM TRACK.
9. AT TRACK BUTT JOINTS, ABUTTING PIECES OF TRACK SHALL BE SECURELY ANCHORED TO A COMMON STRUCTURAL ELEMENT, OR THEY SHALL BE BUTT WELDED OR SPLICED TOGETHER.
10. STUDS SHALL BE PLUMBED, ALIGNED, AND SECURELY ATTACHED TO THE FLANGES OR WEBS OF BOTH UPPER AND LOWER TRACKS.

K. STRUCTURAL STEEL △1

1. HOT-ROLLED STRUCTURAL STEEL SHAPES SHALL BE PER ASTM A992, GRADE 50 MIN. (fy = 50 ksi).
2. STRUCTURAL STEEL PLATES SHALL BE PER ASTM A36 MIN. (fy = 36 ksi).
3. H.S.S. – HOLLOW STRUCTURAL SECTIONS SHALL BE PER ASTM A500 GRADE B MIN. (Fy = 46 ksi).
4. NUTS AND BOLTS IN STRUCTURAL STEEL CONNECTIONS SHALL BE PER ASTM A325N, WITH HARDENED WASHERS, AND SHALL BE ¾" DIA. MIN. UNLESS NOTED OTHERWISE.
5. ANCHOR BOLTS SHALL BE PER ASTM F1554-36, U.N.O.
6. WELDS SHALL BE BY E70XX, LOW HYDROGEN ELECTRODES. WELDING SHALL BE PERFORMED BY A CERTIFIED WELDER IN A SHOP APPROVED BY THE BUILDING OFFICIAL. ALL WELDS AT MOMENT FRAME CONNECTIONS, AND BRACE CONNECTIONS SHALL BE MADE WITH A FILLER METAL CAPABLE OF PROVIDING A MINIMUM CHARPY V-NOTCH (CVN) TOUGHNESS OF 20 FT-LB AT -20°F AND 40 FT-LB AT 70°.
7. ALL STEEL SHALL BE PROPERLY PRIMED AND PAINTED SEE ARCHITECTURAL FOR COLOR.
8. ALL STEEL BEAMS SHALL HAVE WEB STIFFENERS ON BOTH SIDES AT ALL BEARING LOCATIONS, AND AT CONCENTRATED LOADS WEB STIFFENER SHALL BE SAME THICKNESS AS WEB OF BEAM TYPICAL UNLESS NOTED OTHERWISE.
9. ALL STEEL JOIST REQUIREMENTS AND DETAILS SHALL BE IN ACCORDANCE WITH THE STEEL JOIST INSTITUTE AND MANUFACTURER'S SPECIFICATIONS AND RECOMMENDATIONS.
10. ALL JOISTS WITH TOTAL LOAD/LIVE LOAD DESIGNATION ARE TO BE DESIGNED BY SUPPLIER WITH ALL LOADS SHOWN ON DRAWINGS.
11. JOIST BRIDGING, BRACING, ETC. SHALL BE PER MANUFACTURER'S SPECIFICATIONS AND RECOMMENDATIONS.
12. ANY CONNECTIONS NOT DETAILED ON PLANS SHALL BE PROVIDED BY STEEL DETAILER AND SUBMITTED TO ENGINEER FOR APPROVAL.
13. △1 A CERTIFICATE OF COMPLIANCE SHALL BE SUBMITTED TO THE BUILDING OFFICIAL UPON COMPLETION OF FABRICATION – IN ACCORDANCE WITH IBC SECTION 2206.5

L. STEEL DECKING △1

1. ALL STEEL DECK REQUIREMENTS AND DETAILS SHALL BE IN ACCORDANCE WITH THE STEEL DECK INSTITUTE AND MANUFACTURER'S SPECIFICATIONS AND RECOMMENDATIONS.
2. STEEL DECK SHALL BE VERCO 1½" 'B' DECK, 22 GAGE (OR APPROVED EQUAL) TYPICAL UNLESS NOTED OTHERWISE ON FRAMING PLANS
3. DECK WELDS SHALL BE BY E60XX, LOW HYDROGEN ELECTRODES. WELDING SHALL BE PERFORMED BY A CERTIFIED WELDER.

M. CONCRETE MASONRY UNITS (CMU) △1

1. ALL PHASES OF WORK PERTAINING TO THE MASONRY CONSTRUCTION SHALL CONFORM TO THE "BUILDING CODE REQUIREMENTS FOR MASONRY STRUCTURES" (ACI 530 – LATEST APPROVED EDITION) WITH MODIFICATIONS AS NOTED IN THE DRAWINGS AND SPECIFICATIONS
2. REINFORCED CONCRETE MASONRY UNIT (CMU) DESIGN IS BY THE "ALLOWABLE STRESS DESIGN" METHOD. (ACI 530 – LATEST EDITION)
3. CONCRETE MASONRY UNIT (CMU) DESIGNED FOR f'm = 1500 PSI MIN. AND SHALL MEET APPROVAL OF OWNER, ARCHITECT AND PROJECT SPECIFICATIONS. CONCRETE MASONRY UNIT (CMU) AT NEW SHEAR WALL IN ASSEMBLY HALL (AT WEST END OF NORTH WALL) DESIGNED FOR f'm = 2,500 PSI. MIN. AND SHALL MEET APPROVAL OF OWNER, ARCHITECT AND PROJECT SPECIFICATIONS..
4. EXCEPT AS NOTED BELOW, MASONRY UNITS SHALL BE GRADE N-II UNITS, 1900 PSI, CONFORMING TO ASTM DESIGNATION C-90. (LATEST EDITION) MASONRY UNITS AT NEW SHEAR WALL IN ASSEMBLY HALL (AT WEST END OF NORTH WALL) SHALL BE GRADE N-11 UNITS, 3,750 PSI, CONFORMING TO ASTM DESIGNATION C90. (LATEST EDITION)
5. PORTLAND CEMENT SHALL CONFORM TO ASTM DESIGNATION C-150, SAME TYPE AS SPECIFIED FOR CONCRETE.
6. MORTAR MIX SHALL CONFORM TO ASTM DESIGNATION C-270, AND TO THE REQUIREMENTS OF I.B.C. TABLE 2103.8 (1), TYPE S, & PROJECT SPECIFICATIONS. MORTAR SHALL ATTAIN A COMPRESSIVE STRENGTH OF 1800 PSI AT 28 DAYS.
7. GROUT SHALL CONFORM TO REQUIREMENTS OF I.B.C. TABLE 2103.12 FOR COARSE GROUT. USE SUFFICIENT WATER FOR GROUT TO FLOW INTO ALL JOINTS OF THE MASONRY WITHOUT SECRETION. GROUT SHALL ATTAIN A COMPRESSIVE STRENGTH OF 2000 PSI AT 28 DAYS. (3,500 PSI AT NEW SHEAR WALL AT ASSEMBLY HALL)
8. REINFORCE MASONRY IN BOTH DIRECTIONS AS SPECIFIED ON THE PLANS.
9. GROUT FULL ALL BLOCK CELLS WITH REINFORCING, ALIGN CELLS TO PRESERVE UNOBSTRUCTED VERTICAL CELLS OF 2½" x 3" MINIMUM.
10. PROVIDE A MINIMUM OF ½" GROUT BETWEEN MAIN REINFORCING & MASONRY UNITS.
11. MAXIMUM GROUT POUR HEIGHT IS 5 FEET. GROUT SHALL BE PLACED USING LOW LIFT CONSTRUCTION PROCEDURES.
12. CONTRACTOR SHALL BE RESPONSIBLE FOR ACTUAL LAYOUT AND PLACEMENT OF REINFORCING STEEL. COORDINATE WITH MASONRY MANUFACTURER/SUPPLIER AS REQUIRED.
13. DOWEL REINFORCING IN COLUMNS AND WALLS INTO THE FOOTING OR STRUCTURE BELOW WITH REBAR OF THE SAME SIZE AND SPACING AS REQUIRED ABOVE. DOWELS IN FOOTINGS SHALL BE SET TO ALIGN WITH CMU CORES CONTAINING REINFORCING STEEL.
14. ALL REQUIRED EMBEDDED ANCHOR BOLTS, EMBED PLATES, BEARING PLATES, ETC. SHALL BE INSTALLED IN FULLY GROUTED BLOCK CELLS.
15. REFER TO ARCHITECTURAL DRAWINGS FOR SURFACE & HEIGHT OF UNITS, LAYING PATTERN & JOINT TYPE.

SHEET INDEX

SHT #	SHEET NAME
S-101	STRUCTURAL GENERAL NOTES
S-201	FOUNDATION PLAN
S-301	ROOF FRAMING PLAN
S-401	FOUNDATION DETAILS
S-501	FRAMING DETAILS
S-502	FRAMING DETAILS
S-503	FRAMING DETAILS
S-504	FRAMING DETAILS

N. STATEMENT OF SPECIAL INSPECTIONS △1

1. PROVIDE SPECIAL INSPECTION IN ACCORDANCE WITH THE REQUIREMENTS OF THE 2006 EDITION OF THE INTERNATIONAL BUILDING CODE, SECTION 1704.
2. THE CONTRACTOR RESPONSIBLE FOR THE CONSTRUCTION OF A MAIN WIND-OR SEISMIC-FORCE-RESISTING SYSTEM, DESIGNATED SEISMIC-FORCESYSTEM, OR WIND-OR SEISMIC-RESISITING COMPONENT, SHALL SUBMIT A WRITTEN STATEMENT OF RESPONSIBILITY TO THE BUILDING OFFICIAL AND THE OWNER PRIOR TO COMMENCEMENT OF WORK ON THE SYSTEM OR COMPONENT IN ACCORDANCE WITH SECTION 1706.
3. WHERE SPECIAL INSPECTION IS REQUIRED, IT SHALL BE PERFORMED BY A REGISTERED DEPUTY INSPECTOR EMPLOYED BY THE OWNER AND APPROVED BY THE GOVERNING JURISDICTION. COPIES OF THE INSPECTION REPORTS SHALL BE SUBMITTED TO THE BUILDING DEPARTMENT AND ARCHITECT/ENGINEER FOR REVIEW.
4. THE TYPE AND FREQUENCE OF SPECIAL INSPECTION, STRUCTURAL TESTING AND SUBSEQUENT REPORTING CONFORMING TO THE REQUIREMENTS OF IBC SECTION 1704, 1707, 1708 SHALL BE SUBMITTED BY THE INSPECTION AND TESTING AGENCIES TO THE ARCHITECT / STRUCTURAL ENGINEER FOR APPROVAL.
5. STRUCTURAL OBSERVATIONS AND SUBSEQUENT REPORTING OF GENERAL CONFORMANCE TO THE STRUCTURAL DRAWINGS SHALL BE PERFORMED PERIODICALLY BY THE ENGINEER IN RESPONSIBLE CHARGE AT HIS/HER DISCRETION OR WHEN SPECIFICALLY REQUIRED BY THE BUILDING OFFICIAL.
6. THE TESTING LABORATORY SHALL BE RETAINED BY THE OWNER AND BE SATISFACTORY TO THE GOVERNING CODE AUTHORITY TO PERFORM REQUIRED TESTS AN INSPECTIONS OF THIS CONTRACT AN APPLICABLE CODE.
7. SUBMIT LABORATORY TEST REPORTS CERTIFYING MATERIALS ARE UNIDENTIFIABLE TESTED STOCK TO THE OWNER, TESTING LABORATORY, ARCHITECT / STRUCTURAL ENGINEER AND UPON REQUEST TO THE GOVERNING CODE AUTHORITY ON A MONTHLY BASIS. IF LABORATORY TEST REPORTS CANNOT BE MADE AVAILABLE, TESTING LABORATORY WILL PERFORM TESTS AS DIRECTED BY ARCHITECT / STRUCTURAL ENGINEER. CONTRACTOR SHALL PAY TESTING LABORATORY FOR COSTS RELATED TO TESTS AND INSPECTIONS OF UNIDENTIFIABLE MATERIALS OR MATERIALS FURNISHED WITHOUT LABORATORY TEST REPORTS, MATERIALS FOUND DEFICIENT AFTER INITIAL TESTS AND INSPECTIONS, OR MATERIALS REPLACING DEFICIENT MATERIALS.
8. THE FOLLOWING ELEMENTS OF GENERAL CONSTRUCTION REQUIRE SPECIAL INSPECTION:

A. STEEL CONSTRUCTION

PERFORM THE FOLLOWING TESTS AND OR INSPECTIONS OF THE STEEL CONSTRUCTION IN ACCORDANCE WITH TABLE 1704.3:

1. MATERIAL VERIFICATION OF HIGH-STENGTH BOLTS, NUTS AND WASHERS – PERIODIC
2. INSPECTION OF HIGH STRENGTH BOLTING – PERIODIC.
3. SHOP WELDING UNLESS PERFORMED ON PREMISES OF AN APPROVED FABRICATOR AS DEFINED IN IBC SECTION 1704.2 – PERIODIC.
4. FIELD WELDING, INCLUDING SHEAR STUDS AND LIGHT GAUGE STEEL CONTINUOUS.
   EXCEPTION: SINGLE PASS FILLET WELDS ≤ 5/16", FLOOR DECK WELDS, AND ROOF DECK WELDS, ONLY REQUIRE PERIODIC SPECIAL INSPECTION.
5. STRUCTURAL STEEL CONNECTIONS IN ACCORDANCE WITH IBC SECTION 1704.3 – PERIODICALLY DURING ERECTION.

B. CMU (CONCRETE MASONRY UNITS) CONSTRUCTION

△1 PROVIDE LEVEL 2 SPECIAL INSPECTION OF THE FOLLOWING ITEMS IN ACCORDANCE WITH SECTION 1704.5 AND TABLE 1704.5.3.

1. PROPORTIONS OF SITE PREPARED MORTAR, CONSTRUCTION OF MORTAR JOINTS, AND PLACEMENT OF MASONRY UNITS, AND REINFORCEMENT AND CONNECTORS, AND ANCHORAGES. – PERIODIC
2. △1 SIZE AND LOCATION OF STRUCTURAL ELEMENTS, SPECIFIED SIZE, GRADE AND TYPE OF REINFORCEMENT, PROTECTION OF MASONRY DURING COLD WEATHER (TEMPERATURES BELOW 40°F) OR HOT WEATHER (TEMPERATURES ABOVE 90°F), AND COMPLIANCE WITH REQUIRED INSPECTION PROVISIONS OF THE CONSTRUCTION DOCUMENTS AND THE APPROVED SUBMITTALS. – PERIODIC
3. △1 GROUT SPACE PRIOR TO GROUTING, PLACEMENT OF GROUT, TYPE, SIZE AND LOCATION OF ANCHORS, INCLUDING ANCHORAGE OF MASONRY TO STRUCTURAL MEMBERS, FRAMES OR OTHER CONSTRUCTION, WELDING OF REINFORCING BARS, AND PREPARATION OF ANY REQUIRED GROUT SPECIMENS, MORTAR SPECIMENS AND/OR PRISMS. – CONTINUOUS
4. CLEANLINESS OF GROUT SPACE, PLACEMENT OF REINFORCEMENT AND CONNECTORS, PROPORTIONS OF SITE-PREPARED GROUT, AND CONSTRUCTION OF MORTAR JOINTS. – PERIODIC

△1 C. CONCRETE CONSTRUCTION:

1. STEEL PLACEMENT IN ACCORDANCE WITH IBC SECTION 1704.4 – PERIODIC
2. USE OF REQUIRED DESIGN MIX IN ACCORDANCE WITH IBC SECTION 1704.4 – PERIODIC
3. CONCRETE SAMPLING FOR STRENGTH TEST, SLUMP, AIR CONTENT, AND TEMPERATURE OF CONCRETE IN ACCORCANCE WITH IBC SECTION 1704.4 – CONTINUOUS

D. SPECIAL CASES:

1. EPOXY AND GROUT SET BOLTS AND REINFORCING BARS – IN ACCORDANCE WITH IBC SECTION 1704.13 – PERIODICALLY PRIOR TO INSTALLATION.
2. EXCAVATION AND BACK-FILLING. IN ACCORDANCE WITH IBC SECTION 1704.7 – PERIODICALLY DURING GRADING, FILL PLACEMENT AND COMPACTION.
3. △1 TITEN HD SCREW ANCHORS – IN ACCORDANCE WITH IBC SECTION 1704.13 – PERIODIC
4. STONG-BOLT EXPANSION ANCHORS – IN ACCORDANCE WITH IBC SECTION 1704.13 – PERIODIC

jsa architects
architects
planners
interior designers
6465 South 3000 East
Suite 205
Salt Lake City, UT 84121
Ph: 801. 733-2500
Fax: 801. 733-2501
www.jsa-llc.com

CREATED BY: JSA ARCHITECTS

THE DESIGNS SHOWN AND DESCRIBED HEREIN INCLUDING ALL TECHNICAL DRAWINGS, GRAPHIC REPRESENTATION & MODELS THEREOF, ARE PROPRIETARY & CAN NOT BE COPIED, DUPLICATED, OR COMMERCIALLY EXPLOITED IN WHOLE OR IN PART WITHOUT THE SOLE AND EXPRESS WRITTEN PERMISSION FROM THE STATE OF UTAH.

THESE DRAWINGS ARE AVAILABLE FOR LIMITED REVIEW AND EVALUATION BY CLIENTS, CONSULTANTS, CONTRACTORS, GOVERNMENT AGENCIES, VENDORS, AND OFFICE PERSONNEL ONLY IN ACCORDANCE WITH THIS NOTICE.

CONSULTANT:
L.R. NELSON ENGINEERS
51 WEST 9000 SOUTH
SANDY, UTAH 84070
(801) 565-8580

JOB # U915-084-091

BUILDING NAME:
RICHFIELD ARMORY UTAH NATIONAL GUARD

PROJECT TITLE:
RICHFIELD ARMORY REMODEL

MARK	DATE	DESCRIPTION
△1	1-4-10	ADDENDUM 1

ISSUE TYPE: CONST. DOCUMENT SET
ISSUE DATE: 12/14/09
DFCM PROJECT NO: 09219470
CAD PROJECT NO: 09054
CAD DWG FILE:
DRAWN BY: GJJ
CHK'D BY:

COPYRIGHT: STATE OF UTAH

SHEET TITLE
GENERAL NOTES

SHEET NUMBER
S-101

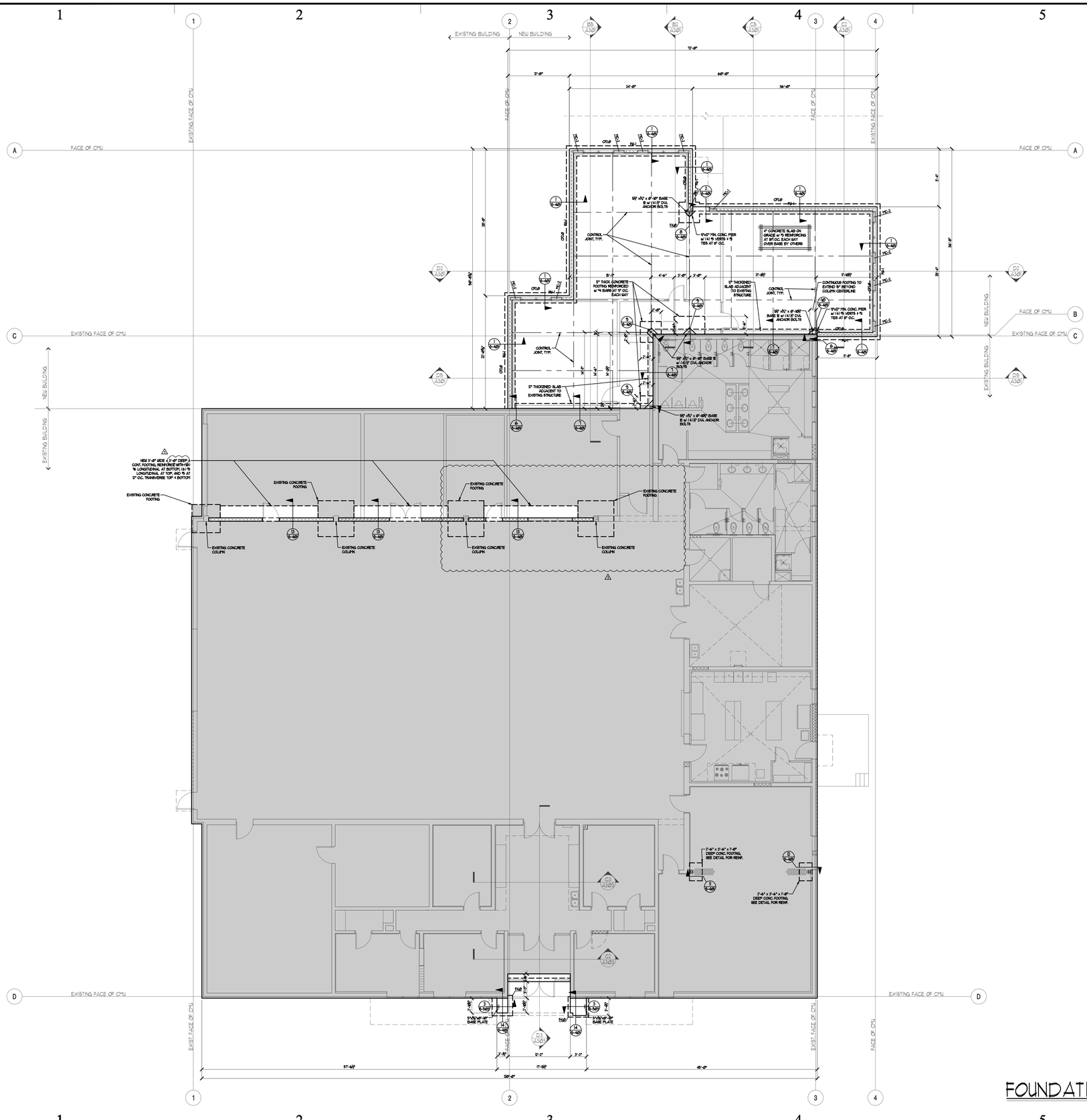

FOUNDATION PLAN

SCALE: 1/8" = 1'-0"

FOOTING SCHEDULE

CONTINUOUS FOOTINGS											
MARK	WIDTH	LENGTH	DEPTH	REINFORCING CROSSWISE			REINFORCING LENGTHWISE				REMARKS
				NO	SIZE	LENGTH	SPACING	NO	SIZE	LENGTH	SPACING	
CF2.0	2'-0"	CONT	12"					3	#4	CONT	EQ	

SPOT FOOTINGS												
MARK	WIDTH	LENGTH	DEPTH	REINFORCING CROSSWISE				REINFORCING LENGTHWISE				REMARKS
				NO	SIZE	LENGTH	SPACING	NO	SIZE	LENGTH	SPACING	
F3.0	3'-0"	3'-0"	12"	4	#4	2'-6"	EQ	4	#4	2'-6"	EQ.	
F4.0	4'-0"	4'-0"	12"	6	#4	3'-6"	EQ	6	#4	3'-6"	EQ.	

FOUNDATION WALL SCHEDULE

MARK	THICKNESS	VERTICAL REINFORCING		HORIZONTAL REINFORCING		REMARKS
		SIZE	SPACING	SIZE	SPACING	
FW-1	10"	#5	12" O.C.	#5	18" O.C.	

FOUNDATION NOTES:

1. CONTRACTOR SHALL VERIFY ALL DIMENSIONS WITH ARCH'L PLANS PRIOR TO CONSTRUCTION. ANY DISCREPANCIES BETWEEN ARCHITECT AND THIS PLAN IS TO BE COORDINATED BY THE BUILDER PRIOR TO CONSTRUCTION. IF THIS COORDINATION IS NOT DONE, IT IS THE SOLE RESPONSIBILITY OF THE CONTRACTOR.
2. SEE DETAIL 4/S-401 FOR TYPICAL SLAB-ON-GRADE CONTROL JOINTS.
3. SEE DETAIL 5/S-401 FOR TYPICAL CORNER BAR REINFORCING.

jsa architects

architects
planners
interior designers

6465 South 3000 East
Suite 205
Salt Lake City, UT 84121
Ph: 801. 733.2500
Fax: 801. 733.2501
www.jsa-llc.com

CREATED BY: JSA ARCHITECTS

THE DESIGNS SHOWN AND DESCRIBED HEREIN INCLUDING ALL TECHNICAL DRAWINGS, GRAPHIC REPRESENTATION & MODELS THEREOF, ARE PROPRIETARY & CAN NOT BE COPIED, DUPLICATED, OR COMMERCIALLY EXPLOITED IN WHOLE OR IN PART WITHOUT THE SOLE AND EXPRESS WRITTEN PERMISSION FROM THE STATE OF UTAH.

THESE DRAWINGS ARE AVAILABLE FOR LIMITED REVIEW AND EVALUATION BY CLIENTS, CONSULTANTS, CONTRACTORS, GOVERNMENT AGENCIES, VENDORS, AND OFFICE PERSONNEL ONLY IN ACCORDANCE WITH THIS NOTICE.

CONSULTANT:

LR. NELSON ENGINEERS
51 WEST 9000 SOUTH
SANDY, UTAH 84070
(801) 565-8580

JOB # U915-084-091

BUILDING NAME:

RICHFIELD ARMORY UTAH NATIONAL GUARD

PROJECT TITLE:

RICHFIELD ARMORY REMODEL

MARK	DATE	DESCRIPTION
1	1-4-10	ADDENDUM 1

ISSUE TYPE: CONST. DOCUMENT SET

ISSUE DATE: 12/14/09

DFCM PROJECT NO: 09219470
CAD PROJECT NO: 09054
CAD DWG FILE:
DRAWN BY: GJJ
CHK'D BY:
COPYRIGHT: STATE OF UTAH

SHEET TITLE

FOUNDATION PLAN

SHEET NUMBER

S-201

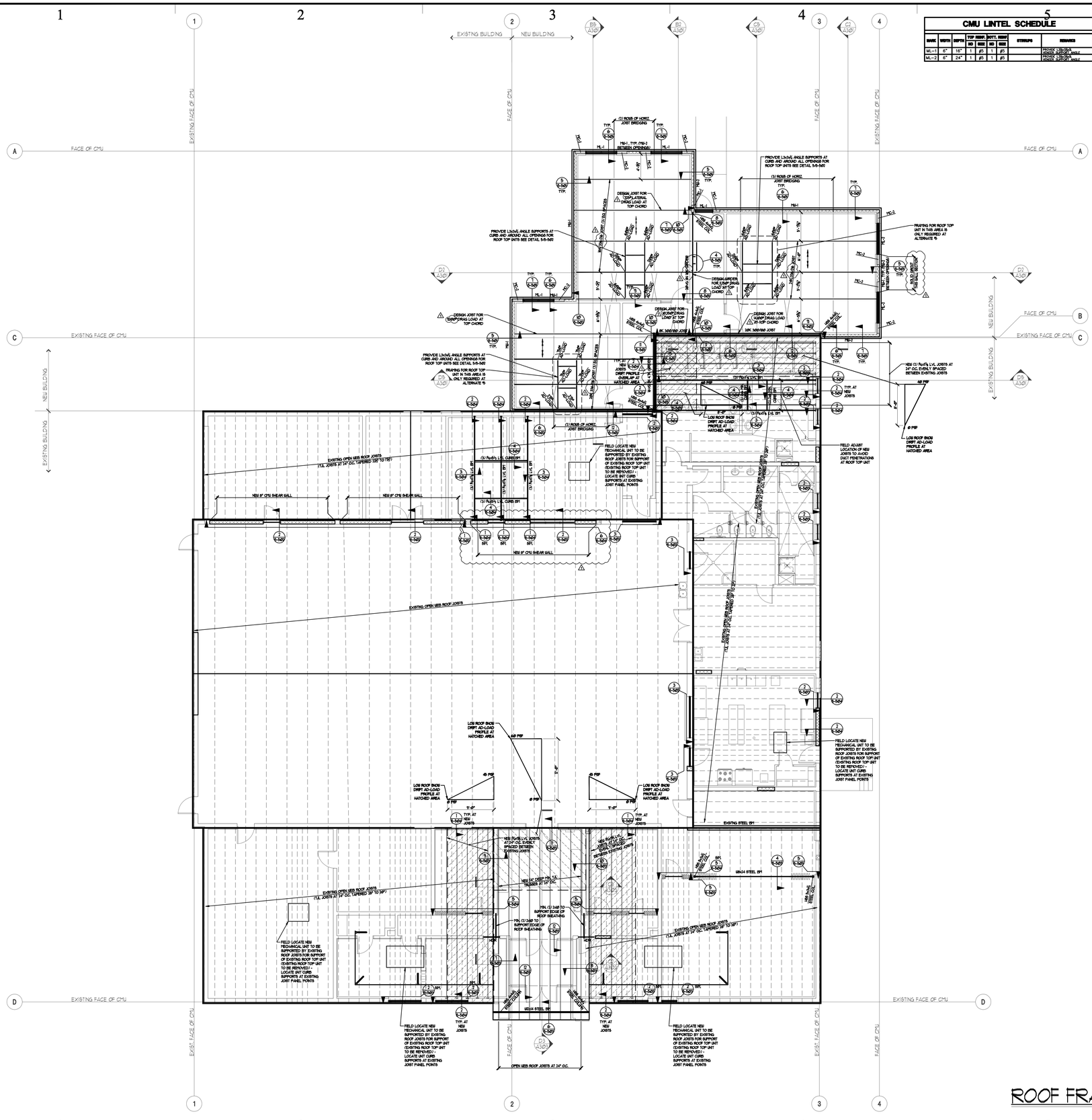

CMU LINTEL SCHEDULE

MARK	WIDTH	DEPTH	TOP REINF. NO	TOP REINF. SIZE	BOTT. REINF. NO	BOTT. REINF. SIZE	STIRRUPS	REMARKS
ML-1	6"	16"	1	#5	1	#5		PROVIDE 1.5x1.5x3/16 VENEER SUPPORT ANGLE
ML-2	6"	24"	1	#5	1	#5		PROVIDE 1.5x1.5x3/16 VENEER SUPPORT ANGLE

CMU WALL SCHEDULE

MARK	THICKNESS	VERTICAL REINFORCING		HORIZONTAL REINFORCING	
		REBAR SIZE	SPACING	REBAR SIZE	SPACING
MW-1	6"	#5	32" O.C.	#4	48" O.C.
MW-2	6"	#5	32" O.C.	#4	24" O.C.

NOTE:
1. ALL REINFORCING BAR LAP SPLICE LENGHTS SHALL BE 48 BAR DIAMETERS, MINIMUM (I.E. 30" MINIMUM LAP SPLICES AT #5 BARS).
2. SEE DETAIL 1/S-501 FOR CMU CONTROL JOINTS. VERIFY LOCATIONS WITH ARCH.
3. SEE DETAIL 3/S-501 FOR CMU TYP. REINFORCING AROUND OPENINGS IN CMU WALLS.

CMU COLUMN SCHEDULE

MARK	WIDTH	DEPTH	VERT. BARS	TIES	REMARKS
MC-1	6"	16"	(2) #5	#3 AT 8" O.C.	
MC-2	6"	24"	(3) #5	(2) #3 AT 8" O.C.	

NOTE:
1. SEE DETAIL 5/S-401 FOR ALL MASONRY COLUMNS NOT SPECIFICALLY CALLED OUT ON FRAMING PLANS.
2. SPACE TIES AT 16" O.C. IN COLUMN ABOVE MASONRY LINTEL.
3. COLUMNS SHALL CONTINUE INTO CONCRETE FOUNDATION BELOW. SEE FOUNDATION PLAN AND DETAILS.
4. RUN TYP HORIZONTAL WALL STEEL CONT. THROUGH ALL COLUMNS.

INDICATES DIRECTION OF 9PAN FOR VERCO 9/4" 22 GAGE 'B' DECK. ATTACH w/ 5/8" LONG SIDE LAPS - SPACING=12" O.C. 3/4" DIA PUDDLE WELD AT EACH FLUTE PERPENDICULAR TO SUPPORTS AND AT 12" O.C. PARALLEL TO SUPPORTS

ROOF FRAMING PLAN

SCALE: 1/8" = 1'-0"

jsa architects

architects
planners
interior designers

6465 South 3000 East
Suite 205
Salt Lake City, UT 84121
Ph: 801.733.2500
Fax: 801.733.2501
www.jsa-llc.com

CREATED BY: JSA ARCHITECTS

THE DESIGNS SHOWN AND DESCRIBED HEREIN INCLUDING ALL TECHNICAL DRAWINGS, GRAPHIC REPRESENTATION & MODELS THEREOF, ARE PROPRIETARY & CAN NOT BE COPIED, DUPLICATED, OR COMMERCIALLY EXPLOITED IN WHOLE OR IN PART WITHOUT THE SOLE AND EXPRESS WRITTEN PERMISSION FROM THE STATE OF UTAH.

THESE DRAWINGS ARE AVAILABLE FOR LIMITED REVIEW AND EVALUATION BY CLIENTS, CONSULTANTS, CONTRACTORS, GOVERNMENT AGENCIES, VENDORS, AND OFFICE PERSONNEL ONLY IN ACCORDANCE WITH THIS NOTICE.

CONSULTANT:

LR. NELSON ENGINEERS
51 WEST 9000 SOUTH
SANDY, UTAH 84070
(801) 565-8580

JOB # U915-084-091

BUILDING NAME:

RICHFIELD ARMORY UTAH NATIONAL GUARD

PROJECT TITLE:

RICHFIELD ARMORY REMODEL

MARK	DATE	DESCRIPTION
1	1-4-10	ADDENDUM 1

ISSUE TYPE: CONST. DOCUMENT SET

ISSUE DATE: 12/14/09

DFCM PROJECT NO: 09219470
CAD PROJECT NO: 09054
CAD DWG FILE:
DRAWN BY: GJJ
CHK'D BY:
COPYRIGHT: STATE OF UTAH

SHEET TITLE

ROOF FRAMING PLAN

SHEET NUMBER

S-301

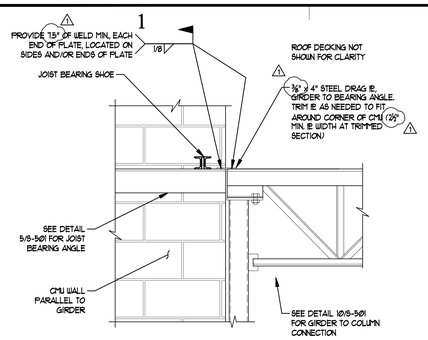

LATERAL DRAG DETAIL (7)
N.T.S.

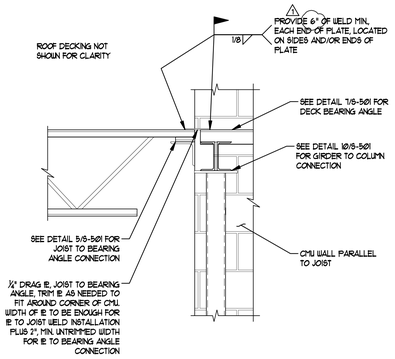

LATERAL DRAG DETAIL (8)
N.T.S.

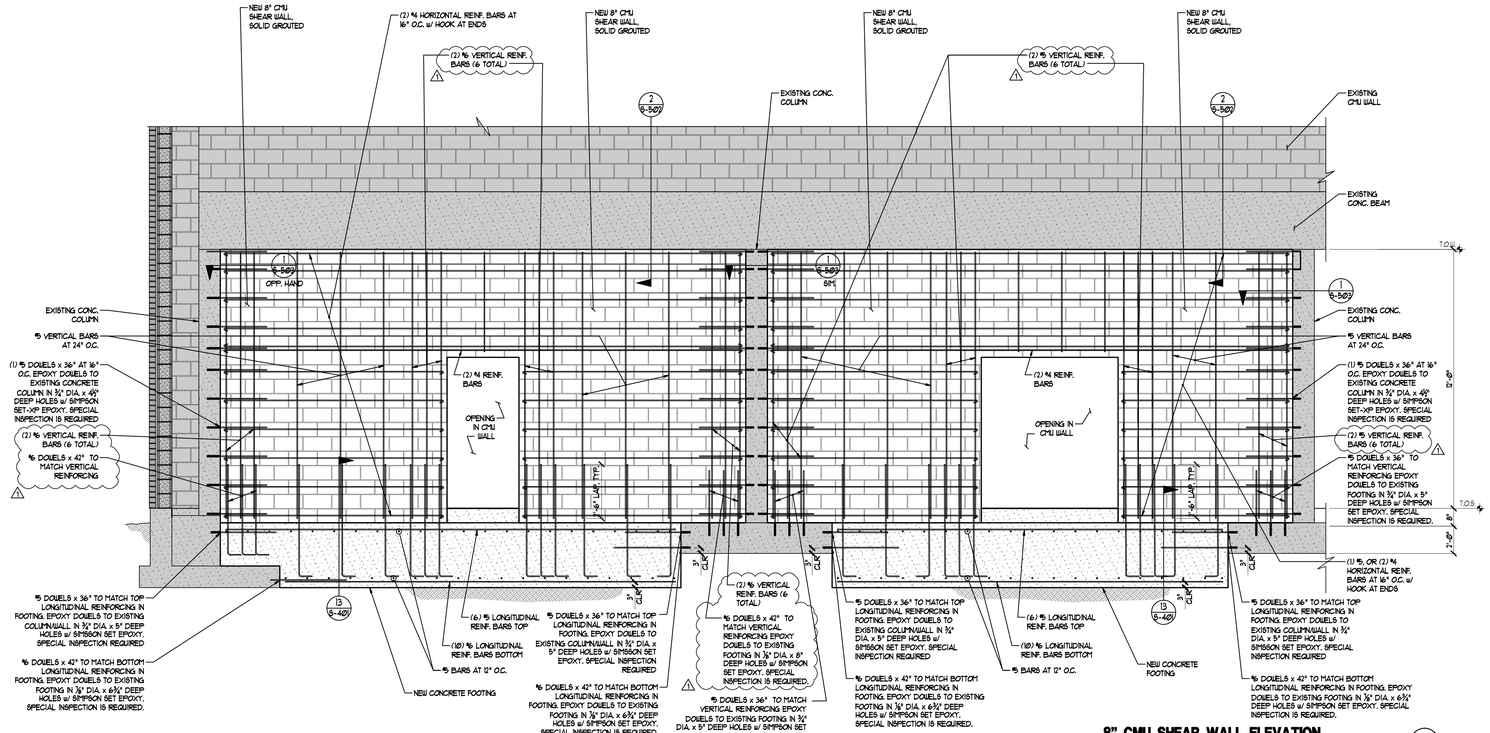

8" CMU SHEAR WALL ELEVATION (1)
N.T.S.

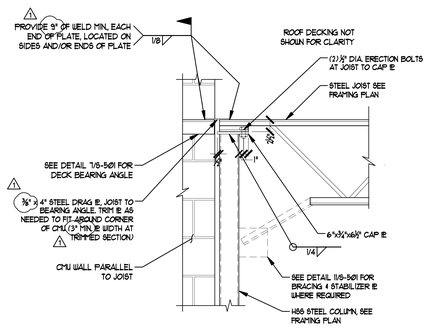

LATERAL DRAG DETAIL (9)
N.T.S.

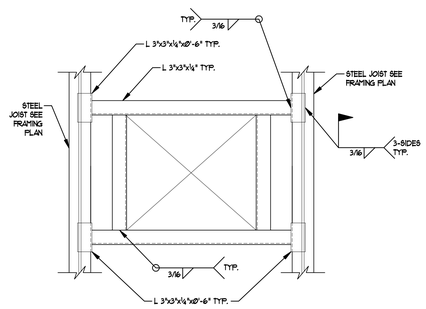

NOTE: SEE DECK MANUFACTURER'S STANDARDS FOR SUPPORT AROUND SMALL OPENINGS WHERE APPLICABLE, OTHERWISE PROVIDE SUPPORT AS SHOWN. ALL OPENING SUPPORTS SHALL BE APPROVED THROUGH SHOP DRAWING SUBMITTAL PRIOR TO FABRICATION

TYP. ROOF OPENING DETAIL (5)
N.T.S. S7037

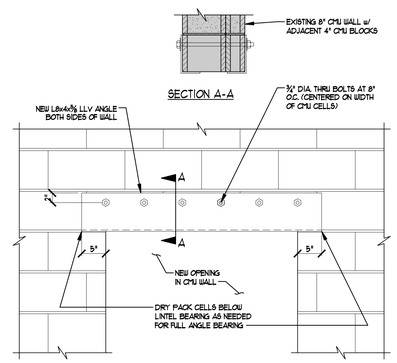

CMU OPENING RETROFIT LINTEL (3)
N.T.S. CM005

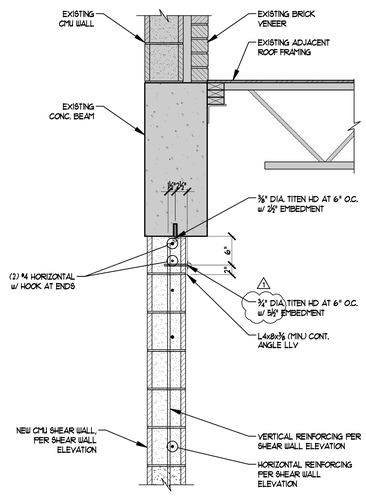

CMU SHEAR WALL TO EXISTING CONC. BM (2)
N.T.S.

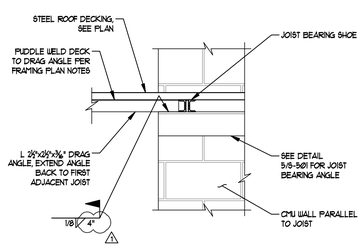

LATERAL DRAG DETAIL (10)
N.T.S.

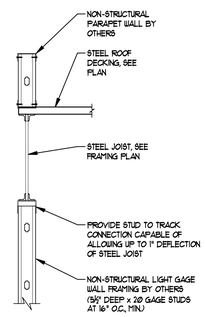

STEEL JOIST EDGE DETAIL (6)
N.T.S.

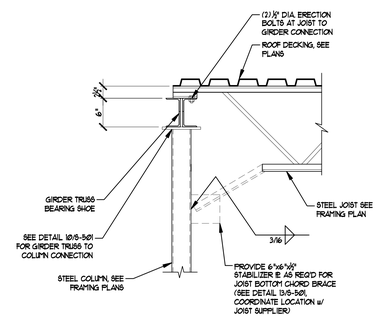

STL JOIST ON STL GIRDER AT COL. DETAIL (4)
N.T.S. ST112

jsa architects

architects
planners
interior designers

6465 South 3000 East
Suite 205
Salt Lake City, UT 84121
Ph: 801. 733.2900
Fax: 801. 733.2901
www.jsa-llc.com

CREATED BY: JSA ARCHITECTS

THE DESIGNS SHOWN AND DESCRIBED HEREIN INCLUDING ALL TECHNICAL DRAWINGS, GRAPHIC REPRESENTATION & MODELS THEREOF, ARE PROPRIETARY & CAN NOT BE COPIED, DUPLICATED, OR COMMERCIALLY EXPLOITED IN WHOLE OR IN PART WITHOUT THE SOLE AND EXPRESS WRITTEN PERMISSION FROM THE STATE OF UTAH.

THESE DRAWINGS ARE AVAILABLE FOR LIMITED REVIEW AND EVALUATION BY CLIENTS, CONSULTANTS, CONTRACTORS, GOVERNMENT AGENCIES, VENDORS, AND OFFICE PERSONNEL ONLY IN ACCORDANCE WITH THIS NOTICE.

CONSULTANT:

LR. NELSON ENGINEERS
51 WEST 9000 SOUTH
SANDY, UTAH 84070
(801) 565-8580

JOB # U915-084-091

BUILDING NAME:

RICHFIELD ARMORY UTAH NATIONAL GUARD

PROJECT TITLE:

RICHFIELD ARMORY REMODEL

MARK	DATE	DESCRIPTION
1	1-4-10	ADDENDUM 1

ISSUE TYPE: CONST. DOCUMENT SET

ISSUE DATE: 12/14/09

DFCM PROJECT NO: 09219470
CAD PROJECT NO: 09054
CAD DWG FILE:
DRAWN BY: GJJ
CHK'D BY:
COPYRIGHT: STATE OF UTAH

SHEET TITLE

FRAMING DETAILS

SHEET NUMBER

S-502

L. R. NELSON CONSULTING ENGINEERS

JOB NO. U915-084-091

DATE 1 1-4-10

PROJECT RICHFIELD ARMORY **SHEET** ____ **OF** ____

SUBJECT DETAIL 11/S501 **DESIGNED** BDY **CHECKED** BDY

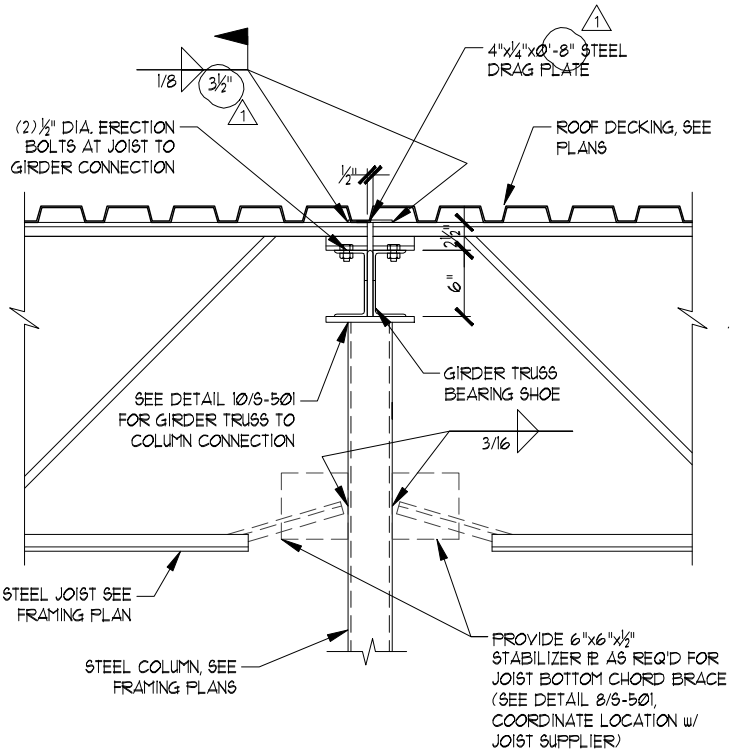

STL JOIST ON STL GIRDER AT COL. DETAIL

N.T.S. ST112

11

NEVADA • 6765 West Russell Rd, Suite 200 • Las Vegas, NV 89118 • (702) 798-7978 • FAX (702) 451-2296
UTAH • 51 West 9000 South, Unit 2 • Sandy, UT 84070 • (801) 565-8580 • FAX (801) 565-9340

L. R. NELSON CONSULTING ENGINEERS

JOB NO. U915-084-091

DATE 1 1-4-10

PROJECT RICHFIELD ARMORY **SHEET** ____ **OF** ____

SUBJECT DETAIL 6/S504 **DESIGNED** BDY **CHECKED** BDY

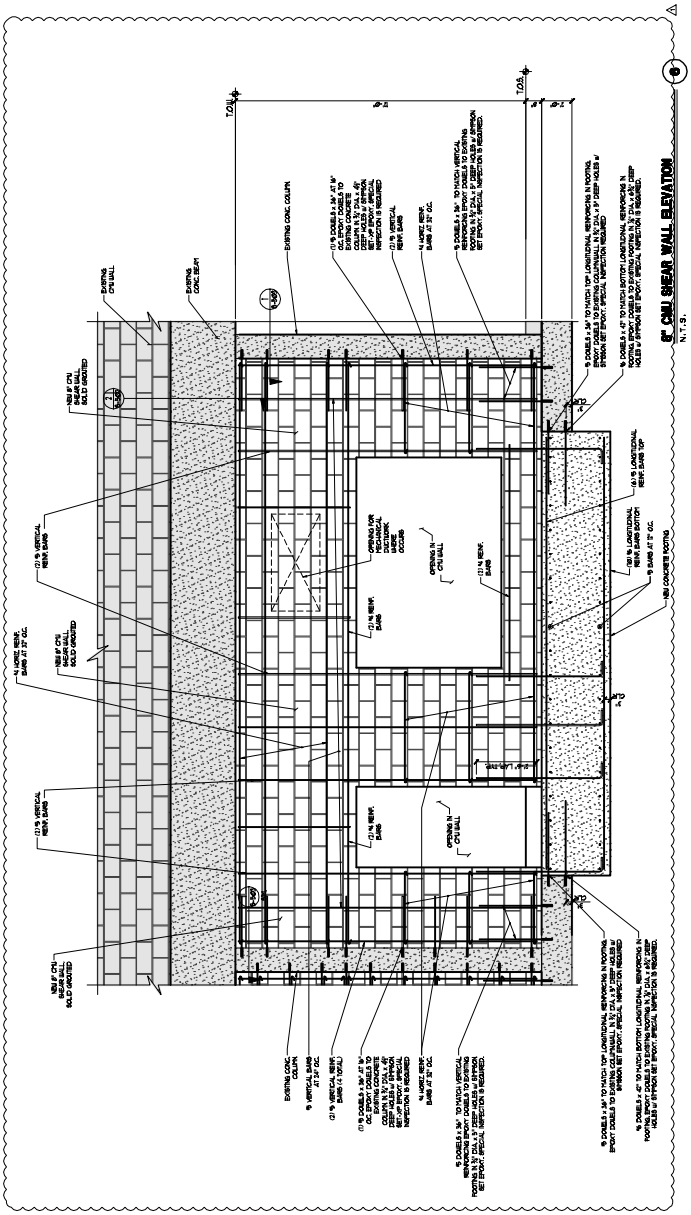

NEVADA • 6765 West Russell Rd, Suite 200 • Las Vegas, NV 89118 • (702) 798-7978 • FAX (702) 451-2296
UTAH • 51 West 9000 South, Unit 2 • Sandy, UT 84070 • (801) 565-8580 • FAX (801) 565-9340

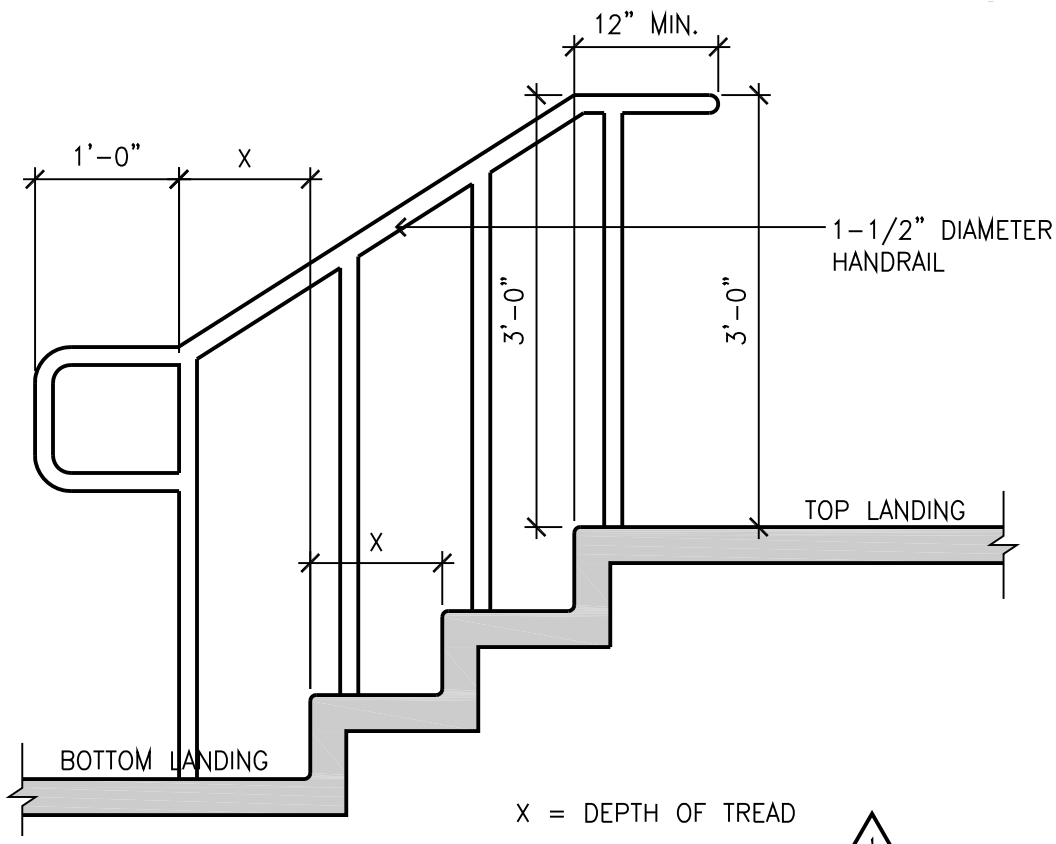

X = DEPTH OF TREAD

ICC/ANSI A117.1-2003 SECTION 505.10

1

HANDRAIL EXTENSIONS

SCALE: 3/4" = 1'-0"

DA-AC-46

D6
G008