State of Utah

GARY R. HERBERT
Governor

GREGORY S. BELL
Lt. Governor

Department of Administrative Services
KIMBERLY K. HOOD
Executive Director

Division of Facilities Construction and Management
DAVID G. BUXTON
Director

ADDENDUM NO. 2

Date: May 27, 2010

To: Contractors

From: Darrell Hunting - Project Manager

Reference: Training Housing – Division of Services for the Blind and Visually Impaired
Utah State Office of Rehabilitation – Salt Lake City, Utah
DFCM Project No. 09240200

Subject: **Addendum No. 2**

Pages

Addendum Cover Sheet	1	page
Revised Project Schedule	1	page
Architect's Addendum No. 1	74	pages
Geotechnical Engineering Report	30	pages
Total	106	pages

Note: This Addendum shall be included as part of the Contract Documents. Items in this Addendum apply to all drawings and specification sections whether referenced or not involving the portion of the work added, deleted, modified, or otherwise addressed in the Addendum. Acknowledge receipt of this Addendum in the space provided on the Bid Form. Failure to do so may subject the Bidder to Disqualification.

While we contend that SB220 should only be potentially applicable to a contract issued after the effective date of said bill, this is to clarify that for purposes of this contract, regardless of the execution or effective dates of this contract, the status of Utah Law and remedies available to the State of Utah and DFCM, as it relates to any matter referred to or affected by said SB220, shall be the Utah law in effect at the time of the issuance of this Addendum.

2.1 **SCHEDULE CHANGES:** See Revised Project Schedule – Bid date and sublist submittal postponed. Changes highlighted.

2.2 **GENERAL ITEMS:** See attached Architect's Addendum No. 1 dated May 27, 2010 and Geotechnical Engineering Report dated April 21, 2010.

STATE OF UTAH - DEPARTMENT OF ADMINISTRATIVE SERVICES

Division of Facilities Construction and Management | **DFCM**

MULTI-STEP PROJECT SCHEDULE – REVISED PER ADDENDUM NO. 2 DATED MAY 27, 2010

PROJECT NAME: **TRAINING HOUSING**
DIVISION OF SERVICES FOR THE BLIND AND VISUALLY IMPAIRED
UTAH STATE OFFICE OF REHABILITATION – SALT LAKE CITY, UTAH

DFCM PROJECT NO. : **09240200**

Event	Day	Date	Time	Place
Document Available, including preliminary plans	Thursday	April 22, 2010	2:00 PM	DFCM 4110 State Office Building SLC, UT and DFCM web site*
Mandatory Pre-Submittal Meeting	Thursday	April 29, 2010	11:00 AM	DFCM 4112 State Office Building SLC, UT
Last Day to Submit Questions on Shortlisting (In Writing)	Tuesday	May 4, 2010	4:00 PM	Darrell Hunting - DFCM E-mail dhunting@utah.gov Fax 801-538-3267
Addendum on Shortlisting including plans and specifications	Thursday	May 6, 2010	4:00 PM	DFCM web site*
List of References, Statement of Qualifications, Project Management Plan, and Termination/Debarment Certification Due	Tuesday	May 11, 2010	12:00 NOON	DFCM 4110 State Office Building SLC, UT
Short-List Announced	Tuesday	May 18, 2010	4:00 PM	DFCM web site*
Notice: Only Short-Listed Firms Will Be Allowed To Bid On This Project				
Last Day to Submit Questions (In Writing)	Monday	May 24, 2010	10:00 AM	Darrell Hunting - DFCM E-mail dhunting@utah.gov Fax 801-538-3267
Final Addendum (exception for bid delays)	Thursday	May 27, 2010	4:00 PM	DFCM web site*
Prime Contractors Turn in Bid and Bid Bond/Bid Opening in DFCM Conference Room	**Wednesday**	**June 2, 2010**	**3:00 PM**	**DFCM** **4110 State Office Building** **SLC, UT**
Subcontractors List Due	**Thursday**	**June 3, 2010**	**3:00 PM**	**DFCM** **4110 State Office Building** **SLC, UT** **Fax 801-538-3677**
Project Completion Date	Friday	November 19, 2010		

* DFCM's web site address is **http://dfcm.utah.gov**

STAGE TWO
ADDENDUM NO. 2

TO THE PLANS AND SPECIFICATIONS FOR

Utah State Office of Rehabilitation
Services for the Blind and Visually Impaired
Training Housing
1991 & 1995 W 400 North
Salt Lake City, Utah 84116

Prepared by:

W P A ARCHITECTURE

475 NORTH FREEDOM BLVD.

PROVO, UTAH 84601

27 May 2010

This addendum issued **27 May 2010** is for all persons preparing bids and as such shall be made a part of the contract documents. This addendum consists of this cover sheet, plus **10** letter size pages and **58** D size (24 x 36) pages. In case of any conflict between drawings, specifications and the Addendum, this Addendum shall govern. All changes, corrections, deletions, and/or addition to the initial bidding documents shall be included in the Bidder's proposal. Receipt of the Addendum shall be acknowledged on each Bid proposal.

Training Housing for the Blind

Stage Two
Addendum No. 2 - Architectural

01. DRAWINGS:

Item 01-01: Sheet GI-101:

1. "CS-101 Civil Site Plan" added to the Drawing Index.
2. Sheet numbering for LI-101, LI-501 & LI-502 changed to LS-101, LE-501 & LE-502.

Item 01-02: Sheet GI-601:

1. Special Inspection Table added.
2. Revised Deferred Submittal Notes to include requirements for submittal and added Fire Sprinkler System, Fire Alarm and Spray Applied Insulation System.
3. Revised detail callout in "Occupancy Separations" to 2-6/AE-601.
4. Revised Item H in Code Analysis to 5,300 s.f.

Item 01-03: Sheets CG-101, CS-101, CP-101 & CU-101:

1. Add "per city standards" to the "Remove exist. drive approach & const. new drive approach" note.

Item 01-04: Sheets CG-101 & CU-101:

1. Remove concrete vault and replace with underground tank as described. Updated piping sizes, deleted 3 x 3 box, provided cleanouts at least every 50 feet and at 45 degree turns and at vertical rises as applicable.
2. Sheet CG-101 only – Deleted Storm Drain Keyed Notes 3 & 4. Revised Notes 2, 5, 6, 7 and 32 – 36.

Item 01-05: Sheet LI-101:

1. Sheet number changed to LS-101.
2. Plan revised with note reference for rainwater harvesting system.

Item 01-06: Sheet LI-102:

1. Sheet Number changed to LE-503.
2. Detail 8 added.

Item 01-07: Sheet LI-103:

1. Sheet Number changed to LE-502.

Item 01-08: Sheet LP-501:

1. Detail E revised to Aluminum edging.
2. Details F & G added.
3. Reference Note 5 added.
4. Quantities in Reference Notes revised.

Item 01-09 Sheet SE-101:

1. General Structural Notes: revision to note 11.
2. General Concrete Notes: revision to notes 11 and 12.
3. General Concrete Notes: revision the "SLABS" section.
4. General Wood Truss Notes: revision to the design loads for roof trusses.

Item 01-10 Sheet SB-101:

1. Update laundry and mechanical rooms not to have a recess slab.
2. Added note #9 to the footing and foundation notes.
3. Added note regarding concrete pilaster and steel column to be at west building.

Item 01-11: Sheet SB-501:

1. Revisions to details 1, 4, 5, 6, 7, 8, and 10.
2. Construction detail 11 – not used.

Item 01-12: Sheet SF-101:

1. Update to the design load of the roof truss shown to be 4250 lbs.

Item 01-13: Sheet SF-401:

1. Added trellis foundation plan.
2. Added note "all exposed lumber shall be western cedar no. 1 or better".

Item 01-14: Sheet SF-501:

1. Added note "all built-up column members are to be nailed together w/ 16d nails at 6" o.c. staggered cont. for length of post."

Item 01-15: Sheet SL-101:

1. Added hold downs "CC" to the locations shown on the shear wall plan.

Item 01-16: Sheet AS-101:

1. Change Sheet Note #26 to the following: "3/16" thick x 5-1/2" high x 16' long aluminum landscape edging w/ 5 stakes per section (mill finish)."
2. Added Sheet Note #41: "1/2" expansion joint where shown and @ 30'-0" max. typ." And added locations on the site plan.
3. Added Sheet Note #42: "Bollard Lighting – See electrical dwgs." and added bollard lighting on the site plan.
4. Provided dimension for sidewalk at the south end of project.

Item 01-17: Sheet AS-501:

1. Detail 3 – Changed depth of base to 6 inches.
2. Detail 9 – Revised detail references and added sloping floor surface to the plan.
3. Detail 10 – Added 6" steel pipe bollards and changed the height of the enclosure to match the enclosure section.
4. Detail 11 – Added 6" steel pipe bollards and changed the height of the enclosure to match the enclosure section.
5. Added detail 13 for steel pipe bollards.

6. Changed numbers for details 13 & 14 to 14 & 15.

Item 01-18: Sheet AE-101:

1. Added Room-ID references (item not clouded).
2. Added wall type reference to wall between Laundry (120) and Bedroom (121) and to wall between Laundry (156) and Bedroom (149).

Item 01-19: Sheet AE-102:

1. Added window designations, including tempered and obscure locations.
2. Revised Sheet Note 6: "Arched ceiling transition header – see building sections & reflected ceiling plan" and added sheet note reference to plan.
3. Added Sheet Note 12: "2-A-10B:C Fire Extinguisher & Semi-recessed fire extinguisher w/ lock – see detail 22/AE-503" and located cabinets on the plan.
4. Added Sheet Note 13: "Column Base – see sheet AE-502" and placed sheet note reference on the plan.
5. Deleted 2nd water heater in Mech (125) and Mech (157) to match mechanical drawings.
6. Added building section references between grid lines E & G, above grid line 1 and between grid lines D & E.8, and between grid lines 3 & 4.

Item 01-20: Sheet AE-103:

1. Deleted sloping requirement at Sheet Note 2.
2. Added Sheet Note 4: "Roof ventilator – see details 11 & 12/AE-501 and mechanical drawings" and placed ventilators on roof drainage plan.
3. Eliminated gutters and downspouts along high roof eave line (between grids 2.7 & 3).
4. Added building section reference between grid lines E & G, above grid line 1 and between grid lines D & E.8 and grid lines 3 &4.

Item 01-21: Sheet AE-104:

1. Added building section reference between grid lines E & G, above grid line 1 and between grid lines D & E.8 and grid lines 3 &4.
2. Revised details 1 & 2 and added detail 3.
3. Added "paint to match finish ceiling" to sheet notes 1 & 2.
4. Updated detail references at arches.

Item 01-22: Sheet AE-201:

1. Added sheet notes 19A & 19B to provide building addresses, and placed building address onto elevations.
2. Added dimension of brick to elevation 2.

Item 01-23: Sheet AE-202:

1. Added sheet notes 19A & 19B to provide building addresses, and placed building address onto elevations.
2. Revised detail reference at windows B & G on elevation 1 for header detail in brick and jamb detail for window B.

Item 01-24: Sheet AE-301:

1. Revised Sheet Note 28 to reference detail 8/AE-501.

Item 01-25: Sheet AE-302:

1. Revised Sheet Note 30 to reference detail 6/AE-501.
2. Revised Sheet Note 32 to reference detail 7/AE-503.
3. Revised detail reference at header for window "B" located between grid lines 4 & 5.

Item 01-26: Sheet AE-303:

1. Added "w/ capped ends" to Sheet Notes 31 & 32.
2. Replaced Sheet Note 33 with the following: "Steel column cap (typical)."
3. Added Sheet Note 34: "8 x 8 steel column – see structural dwgs."
4. Typical Wall Section 2 – Revised note for roofing system.
5. Typical Wall Section 2 – Added detail reference for detail 4/AE-501.
6. Typical Wall Section 2 – Heel height called out with blocking size.
7. Trellis Plan 3, Trellis Section 5 & Trellis Elevation 6 – Added detail reference 8/AE-503 and Sheet Note 34.
8. Trellis Elevation 6 – Revised dimensions at masonry pilaster.

Item 01-27: Sheet AE-401:

1. Revised sheet reference for wall construction type note.
2. Added mounting heights to Sheet Notes 2, 3, 11, & 15.
3. Deleted "N.I.C." from CPT & CPTB in Finish Legend.
4. Added wall construction type designations to Enlarged Kitchen 127/Dining 128.
5. Revised kitchen island cabinets with an overall dimension of 9'-6".

Item 01-28: Sheet AE-402:

1. See items 1 – 3 from Sheet AE-401.
2. Added wall construction type designations to Enlarged Dressing 150, Toilet Rm 153 & Bath 154 and to Enlarged Dressing 123 & Bath 124.
3. Added Sheet Note 23 to Bath (154).
4. Revised Sheet Notes in Bath (124).
5. Added shelves to cabinet in Elevation C of Dressing 123 Interior Elevations.
6. Added detail reference to Elevation B of Dressing 150 Interior Elevations.
7. Revised Sheet Note on Elevation D of Dressing 150 Interior Elevations.

Item 01-29: Sheet AE-403:

1. See items 1 – 3 from Sheet AE-401.
2. Added wall construction type designations to Enlarged Laundry (120), Enlarged Dressing 115, Toilet Rm 116, and Bath 117 and Enlarged Powder 103.

Item 01-30: Sheet AE-501:

1. Detail 7 – Heel height called out with blocking size.
2. Detail 8 – Height of pre-cast cap and top of foundation height called out; Deleted filter fabric around free draining granular material.

3. Detail 9 – Height of pre-cast cap and top of foundation height called out; Deleted filter fabric around free draining granular material; Delete requirement of plastered foundation; Add dimension from finish grade to top of foundation.
4. Add detail 10, 11 & 12.

Item 01-31: Sheet AE-502:

1. Bottom of cap and top of foundation elevations called out.

Item 01-32: Sheet AE-503:

1. Detail 2 updated to show brick sill.
2. Detail 21 updated to show thickset mortar bed.
3. Detail reference to 24/AE-503 added to details 1-2 & 5-9,
4. Details 22, 23 & 24 added.

Item 01-33: Sheet AE-601:

1. Add the following note to wall construction types 1-1, 1-2, 2-1, 2-2 & 2-4: "Replace gypsum board with cementitious back unit where ceramic tile installation occurs."
2. Add "ceramic tile (where occurs)" to wall construction types 2-1, 2-2 & 2-4.

Item 01-34: Sheet AE-602:

1. Revise style of Door Type E.
2. Glazing Schedule deleted & replaced with Glazing Notes.
3. 128 Common Area - Change E/N wall finish designation to "PTWD1-A."
4. 129 Common Area – Change W/S wall finish designation to "PTWD1-A."
5. 153 Fire Riser – Change ceiling finish to "PTDC1" and add the following note in the remarks section "match wall color."
6. Detail 2 – revise size of trim to "3/4"cont. maple window trim (stain) and add "1/2" reveal – see det. 24/AE-503."

Item 01-35: Sheet PL-101:

1. Updated the labels on two tub/showers (T-2 and SH-1).

Item 01-36: Sheet PL-201:

1. Updated the labels on two tub/showers (T-2 and SH-1) in the water and sewer schematics.
2. Updated the fixture schedule showing the sink and lavatory as under mount, showing WC-2 as ADA compliant, and added T-2.

Item 01-37: Sheet MH-101:

1. Moved diffusers in restrooms to not be above arched openings.

Item 01-38: Sheet ES-101

1. Provide 20A breaker in Panel "B1" West Unit only and ¾" conduit w/ #12 conductors to dumpster enclosure wall (approx. 62 feet) and from dumpster wall to cistern (approx. 20 feet) for cistern pump power. Coordinate with Landscape Contractor.

Item 01-39: Sheet EP-101

1. Provide Smoke Detector in Common Area 128 and 129 in both buildings (total of 4).
2. Provide duplex GFCI receptacle (Kitchens 127 and 159 at +44" at countertop area above dishwasher bordering Mechanical rooms. (total of 4)
3. Clarification item: All outlets in all Bedrooms to be circuited to AFCI breaker as shown on Panel Schedules "A"& "B" Sheet EU-501.

Item 01-40: Sheet EL-101

1. Omit all Exit Sign Fixtures from project.

Item 01-41: Sheet EU - 502

1. The following light fixtures have been changed: F1, F2, F2A, F3, F4, F5, F8, & F12. Contractor's allowance for Fixtures F1, F2, F2A, F3, & F8 (Hubberdton Forge) to be **$29,142.00** (does not include freight charges) For Fixtures F4, & F5 (Access Lighting) to be **$2012.00** (does not include freight charges) For Fixture F12 (Brownlee) to be **$123.00:**

F1	Hubbardton Forge #124412-05 G47
F2	Hubbardton Forge #206305-05 G188
F2A	Hubbardton Forge #206303-05 G188
F3	Hubbardton Forge #124422-05 G47
F4	Access Lighting #QC52669 ORB/AMB/BZ/US…
F5	Access Lighting #QC28812 ORB/COB/BZ/US…
F8	Hubbardton Forge #306001-15 H72
F12	Brownlee #2045-11-WH-13Q-BAC

02. SPECIFICATIONS:

Item 02-01: Section 01 10 00 Summary

Change Section 1.2D as follows:

"D. Owner's Representative:

Darrell Hunting
Division of Facilities Construction and Management
4110 State Office Building
Salt Lake City, Utah 84114
Tel: 801-244-7647"

Item 02-02: Section 01 21 00 Allowances

Add the following to Section 1.1, A, B:

"2. Lump-Sum Allowance"

Revise section title for Section 1.5 to the following:

"1.5 Lump-Sum and Unit-Cost Allowances"

Add the following Allowance to Section 3.3:

"B. Allowance No. 2: Lump-Sum Allowance: Include the following estimated amounts as an allowance for impact and connection fees – Questar Gas: $5,077.18; Rocky Mountain Power: $10,000 deposit; Salt Lake City: $14,764.31 (Sewer Connection Fee: $818.00; Sewer Impact Fee: $3,834.00; Storm Drain Fee: $1,027.75; Water Meter: $8,591.56; 4" Fire Line: $355.00; City Street Cut: $138.00). Include an additional 5 percent contingency for these impact fees.

1. Submit and arrange for all necessary Impact and Connection Fees required by Salt Lake City, Questar Gas and Rocky Mountain Power."

Item 02-03: Section 03 30 00 Cast-In-Place Concrete

Add the following sentence to 2.5 A: "Permeance as tested after mandatory conditioning (ASTM E 1745 paragraphs 7.1.1-5): less than 0.01 perms (gr/ft^2/hr/in-Hg)."

Delete section 2.5 B.

Item 02-04: Section 09 29 00 Gypsum Board

Delete Sub-Section 2.4 "Tile Backing Panels"

Item 02-05: Section 09 30 00 Tiling

Revise 3.4 A as follows:

"1. Tile Installation F111: Cement mortar bed (thickset) with cleavage membrane; TCA F111"

Revise 3.4 B as follows:

"1. Tile Installation W244: Thin-set mortar on cementitious backer unit or fiber cement underlayment Thin-Set; TCA W244
   a. Thin-Set Mortar: Latex-portland cement mortar.
   b. Grout: Polymer-modified sanded grout."

Add 3.4 C as follows:

"1. Tile Installation F125A: Thin-set mortar on crack isolation membrane; TCA F125A.
   a. Thin-Set Mortar: Latex-portland cement mortar.
   b. Grout: Polymer-modified sanded grout."

Item 02-06: Add the following sections:

10 44 13 Fire Extinguisher Cabinets

10 44 16 Fire Extinguishers

03. APPROVED MANUFACTURERS:

The following manufacturers, vendors, etc., are noted in compliance with section 01 33 00

Item 03-01: Section 07 21 00 Thermal Insulation:

Add the following manufacturer to the list under Foam-Plastic Board Insulation: "Insulfoam, a Carlisle Company"

Item 03-02: Section 08 54 13 Fiberglass Windows and Doors:
Add the following manufacturer: "Serious Materials"

Item 03-03: Section 12 36 61 Simulated Stone:
Add the following manufacturer: "E. I. du Pont de Nemours and Company"

Furnished items shall comply with criteria and character of the basic specification, fully adapted to the actual project conditions. Costs of accommodating this item which may vary from that indicated shall be the responsibility of the Contractor.

04. GENERAL NOTES:

Item 04-01: Bidding Question #01 – "What is the edging between the grass and the rock mulch?" **Answer: Sheet note 27 on Sheet AS-101 describes the edging material between the grass and the rock mulch, as well as between the rocks.**

Item 04-02: Bidding Question #02 – "Is there edging between the two different types of rock mulch on the east side of the west bldg?" **Answer: Yes. See sheet note 26 on AS-101 and Item 01-xx in this addendum.**

Item 04-03: Bidding Question #03 – "Does the garden soil continue through the blue fescue in the south east bed on the west bldg and the southwest bed on the east bldg?" **Answer: Yes.**

Item 04-04: Bidding Question #04 – "Can you clarify the extent of the site available for lay down? I assume the area south of the east building designated for a future storage building would be available." **Answer: The area of the site available for lay down includes only those areas within the area currently enclosed by the fence on the north, east & west sides, and 5 feet beyond the edge of the proposed sidewalk along the south side.**

Item 04-05: Bidding Question #05 – "Please clarify item F: Sprinkler on sheet GI-601; as it states that sprinklers are not required but furnished as type NFPA-BD. Will this building be bid with a sprinkler system?" **Answer: The code analysis lists that per the IRC, automatic fire sprinklers are not required, but that the Owner is asking that they be provided, and that that they are to meet the requirements of NFPA-13D.**

Item 04-06: Bidding Question #06 – "In addition to Item #24 Permits Multi-Step Bidding Process; Please clarify if plans have been submitted to Salt Lake City Building Permit Department for plan review and if the contractor is responsible for fees associated with plan check fees, permit fees, utility connection fees, and impact fees." **Answer: Plans will not be submitted to the Salt Lake City Building Department for review. The State Building Official has reviewed the project; corrections have been made as a result of the comments received and are included in this addendum. The Contractor's responsibility for utility connection and impact fees are covered in Item #02-02 of this Addendum.**

Item 04-07: Bidding Question #07 – "Has a soils report been done by anyone? Do we need to have one done?" **Answer: A soils report has been completed by Professional Service Industries, Inc. dated April 21, 2010 and has been posted to the DFCM website along with this addendum for reference only.**

Item 04-08: Bidding Question #08 – "On the finish schedule of the plans it calls out 6" high base (NIC) but on the specifications it calls out what to use and does not mention not in contract. QUESTION: Could you please verify if this is to be included in our bid? **Answer: Yes, these items need to be included in your bid. Correction made to the drawings and included in this Addendum.**

Item 04-09: Bidding Question #09 – "On sheet CU-101 it shows the gas line going across the road. QUESTION: Do we need to include all the costs to get the gas service from the main to the buildings? **Answer: Yes, include the cost to go from the gas service main to the buildings.**

Item 04-10: Bidding Question #10 – "On sheet AS-101 there is a sidewalk that goes from the East building on the South East side and heads South to the other existing buildings to the South and does not include a full plan that shows the dimension. QUESTION: Can you provide the length of this walk? I did a golf step and came up with approx. 214' L.F." **Answer: See dimension on revised Sheet AS-101 and included in this Addendum.**

Item 04-11: Bidding Question #11 – "On sheet SE-001 there is a note #26 under the Slab section that list all slabs and deck slabs to include fiber mesh. QUESTION: Is fiber mesh to be included along with the rebar and or wire mesh that is called for? **Answer: Note #26 under the slab section of sheet SE-001 refers to suspended slabs not slab on grade requirements. Note #25 is our note for slab on grade concrete, please follow that note.**

Item 04-12: Bidding Question #12 – "QUESTION: Do all the exterior building foundations recess for the building wall like shown on detail 2/AE-303. This is not shown on details 1/AE-303 and 1/AE-302? All the structural details on SB-501 do not show any recess at all." **Answer: Yes, provide the exterior building foundation recess for the building throughout. See revised details 1/SB-501 & 8/SB-501.**

Item 04-13: Bidding Question #13 – "QUESTION: Do all the exterior walls need to have wall flashing behind the brick and return over the foundation's? Details 4 & 9 on AE-501 call for metal flashing. Detail 2/AE303 doesn't show flashing?" **Answer: Yes, provide all exterior walls with the flashing detail. Detail 2/AE-303 has been revised to provide a reference to detail 4/AE-501.**

Item 04-14: Bidding Question #14 – "QUESTION: Should we include a cost to plaster the exposed foundation walls? There was a note about plastering the exposed foundation of the planters." **Answer: No. This note has been deleted from the planter detail 9/AE-501.**

Item 04-15: Bidding Question #15 – "On 3-1/AE-601 it calls for a Vapor Retarder under the slab. I can't find anything on a Vapor retarder or barrier anywhere on the plans or

specifications. QUESTION: Do we need to include a cost for this work? **Answer: Yes – see Section 03 30 00 for requirements on Vapor Retarders.**

Item 04-16: Bidding Question #16: - "The site plan shows a 4" fire line running to each building and into a riser room so it appears we need to include a cost for the buildings to be sprinkled, but I didn't see any specifications or anything on the plans. QUESTION: Do the two buildings need to have a fire sprinkler system installed in them?" **Answer: Yes. The code analysis on Sheet GA-601 list that requirement and a deferred submittal for the fire sprinkler system and fire alarm was added in this addendum.**

Item 04-17: Bidding Question #17: - "The Tile specifications include a spec for walls to be a thick set with backer board, but wall types 1, 2, 7 & 8 show tile over gypsum board. QUESTIONS: Are the walls thick set with backer board or are they drywall? **Answer: Section 09 30 00 has been revised to have ceramic tile installed over a cementitious backer unit and is included in this Addendum. A note has been added to wall type 1-1 & 1-2 to require the gypsum board to be removed where ceramic tile is to be installed. Wall Construction Types (Sheet AE-601) have been revised with the following note added: "Replace gypsum board with cementitious back unit where ceramic tile installation occurs."**

Item 04-18: Bidding Question #18: "Backer board is called out in both 092900 and in 093000. QUESTION: Does the drywall or tile subcontractor furnish the backer board if needed?" **Answer: Who you have install the backer board is a means and method for the Contractor to determine. However, the backer board has been removed from Section 09 29 00 to require cementitious backer units only as found in Section 09 30 00.**

Item 04-19: Bidding Question #19: "SB-101 shows the floor recessed for the laundry and mechanical rooms but the finish schedule calls for RSF and EPT which should be installed on a concrete slab with no recess instead of a mud bed or a floated floor. QUESTION: Should the floors be recessed in these areas?" **Answer: No, you are correct. The structural drawings have been revised to reflect this change.**

Item 04-20: Bidding Question #20: "The spec. lists a water proof membrane and anti fracture membrane but does not show where they are to be used. QUESTION: Please verify if a membrane is to be used?" **Answer: A waterproof membrane will not be required. The Interior Tile Installation Schedule in Section 09 30 00 has been revised in this Addendum to include a cleavage membrane in the thickset installation method and a crack isolation membrane in the thin-set installation method.**

Item 04-21: Bidding Question #21: "The floor detail AE-503 note 18 & 21 are thin set details but the slab is shown as recessed for a mud bed. QUESTIONS: Please verify if the floor tile is on slab or a floated mud bed system?" **Answer: It is to be thick set. Detail 21/AE-503 has been revised to show the thickset mortar bed.**

UTAH STATE OFFICE OF REHABILITATION

services for the blind & visually impaired

TRAINING HOUSING

salt lake city, utah

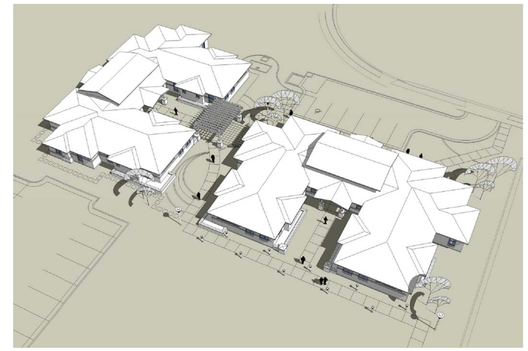

ARCHITECT

WPA architecture

475 NORTH FREEDOM BOULEVARD
PROVO, UTAH 84601
TEL: 801-374-0800 • FAX: 801-374-0805

CIVIL ENGINEER

EXCEL ENGINEERING, INC.

12 WEST 100 NORTH, SUITE 201
AMERICAN FORK, UTAH 84003
TEL: 801-756-4504
FAX: 801-756-4511

LANDSCAPE ARCHITECT

NORTHLAND DESIGN GROUP

466 NORTH 900 WEST, SUITE 200
AMERICAN FORK, UTAH 84003
TEL: 801-763-0179
FAX: 801-763-0180

STRUCTURAL ENGINEER

DYNAMIC STRUCTURES

1887 NORTH 1120 WEST
PROVO, UTAH 84604
TEL: 801-356-1140
FAX: 801-356-0001

MECHANICAL ENGINEER

ROYAL ENGINEERING

2335 SOUTH STATE, SUITE #225
PROVO, UTAH 84606
TEL: 801-375-2228
FAX: 801-375-2676

ELECTRICAL ENGINEER

ROYAL ENGINEERING

2335 SOUTH STATE, SUITE #225
PROVO, UTAH 84606
TEL: 801-375-2228
FAX: 801-375-2676

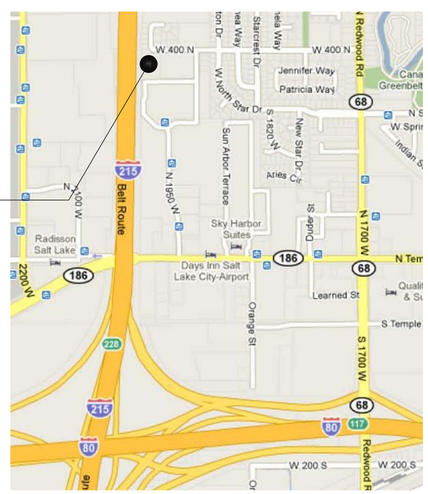

LOCATION MAP

NOT TO SCALE

DRAWING INDEX

GENERAL

GI-101 COVER SHEET, PROJECT INFORMATION
GI-601 CODE ANALYSIS

CIVIL

C-001 CIVIL NOTES
CS-101 CIVIL SITE PLAN
CU-101 UTILITY PLAN
CG-101 GRADING PLAN
CP-101 PAVING PLAN
CSWPP-101 STORMWATER POLLUTION PREVENTION PLAN
CU-501 DETAILS

LANDSCAPING

LS-101 IRRIGATION PLAN
LE-501 IRRIGATION DETAILS
LE-502 IRRIGATION DETAILS
LP-101 LANDSCAPE PLAN
LE-501 PLANTING DETAILS

STRUCTURAL

SE-001 GENERAL STRUCTURAL NOTES
SE-002 STATEMENT OF SPECIAL INSPECTION
SB-101 FOOTING & FOUNDATION PLAN
SB-501 CONSTRUCTION DETAILS
SF-101 ROOF FRAMING PLAN
SF-401 TRELLIS FRAMING & WOOD TRUSS ELEV.
SF-501 CONSTRUCTION DETAILS
SF-502 CONSTRUCTION DETAILS
SF-503 CONSTRUCTION DETAILS
SL-101 SHEAR WALL PLAN

ARCHITECTURAL

AS-101 SITE PLAN
AS-501 SITE DETAILS
AE-101 FLOOR PLAN - DIMENSION
AE-102 FLOOR PLAN - REFERENCE
AE-103 ROOF DRAINAGE PLAN
AE-104 REFLECTED CEILING PLAN
AE-201 EXTERIOR ELEVATIONS
AE-202 EXTERIOR ELEVATIONS
AE-301 BUILDING SECTIONS
AE-302 BUILDING SECTIONS
AE-303 BUILDING SECTIONS
AE-401 ENLARGED PLANS & INTERIOR ELEVATIONS
AE-402 ENLARGED PLANS & INTERIOR ELEVATIONS
AE-403 ENLARGED PLANS & INTERIOR ELEVATIONS
AE-501 EXTERIOR DETAILS
AE-502 EXTERIOR DETAILS
AE-503 DOOR & WINDOW DETAILS
AE-601 CONSTRUCTION TYPES
AE-602 DOOR, WINDOW & FINISH SCHEDULES

PLUMBING

PS-101 PLUMBING SITE PLAN
PL-101 PLUMBING PLAN
PL-201 PLUMBING SCHEDULE & SCHEMATICS
PL-301 PLUMBING DETAILS

MECHANICAL

MH-101 MECHANICAL PLAN
MH-201 MECHANICAL SCHEDULES & DETAILS
MH-202 MECHANICAL DETAILS
MH-203 MECHANICAL DETAILS

ELECTRICAL

ES-101 SITE POWER PLAN
EP-101 POWER PLAN
EP-102 ROOF ICE MELT PLAN
EL-101 LIGHTING PLAN
EU-501 SCHEDULES & DETAILS
EU-502 SCHEDULES & DETAILS
EU-503 SCHEDULES & DETAILS

GENERAL NOTES

A. ALL EXIT ACCESS DOORS AND EXITS SHALL BE OPENABLE FROM THE INSIDE WITHOUT THE USE OF A KEY OR ANY SPECIAL KNOWLEDGE OR EFFORT. USE OF MANUAL FLUSH BOLTS, EDGE BOLTS, TOP OR BOTTOM BOLTS, ETC. IS PROHIBITED.

B. GLAZING IN DOORS OR IN FIXED OR OPERABLE PANELS ADJACENT TO A DOOR WHERE THE NEAREST EXPOSED EDGE IS WITHIN A 24 INCH ARC OF THE DOOR AND WHERE THE BOTTOM EXPOSED EDGE IS LESS THAN 60 INCHES ABOVE THE WALKING SURFACE MUST BE TEMPERED.

C. TANK TYPE WATER CLOSETS SHALL HAVE A MAXIMUM WATER USE OF 1.6 GALLONS PER FLUSH. SHOWERS SHALL HAVE A MAXIMUM FLOW OF 2.5 GALLONS PER MINUTE.

D. BURNING OF CONSTRUCTION WASTE MATERIALS IS PROHIBITED AT ALL TIMES.

E. PROVIDE ONE 2-A FIRE EXTINGUISHER FOR EVERY 3,000 SQ. FT. OF FLOOR AREA WITH A MAXIMUM TRAVEL DISTANCE OF 75 FEET TO AN EXTINGUISHER.

F. STORAGE OF EQUIPMENT, SOILS, CONSTRUCTION MATERIALS ON PUBLIC RIGHT-OF-WAY (STREETS/SIDEWALKS) OR EASEMENT IS EXPRESSLY PROHIBITED.

G. OCCUPANCY OF THIS BUILDING IS PROHIBITED UNTIL A FINAL INSPECTION OF THE PREMISES HAS BEEN MADE AND APPROVAL GIVEN BY THE AUTHORITY HAVING JURISDICTION AND ALL OTHER AGENCIES INVOLVED.

State of Utah
Department of Administrative Services
Division of Facilities Construction & Management
4110 State Office Building
Salt Lake City, Utah 84114
Phone: (801) 538 - 3018
Fax: (801) 538 - 3267
http://dfcm.utah.gov

WPA architecture
475 North Freedom Blvd.
Provo, Utah, 84601
Tel: (801) 374-0800 Fax: (801) 374-0805
www.wpa-architecture.com

BUILDING NAME:

PROPERTY #15278
USOR - DSBVI
TRAINING HOUSING
Salt Lake City, Utah

PROJECT TITLE:

USOR - Division of Services for the Blind and Visually Impaired TRAINING HOUSING

LICENSED ARCHITECT
BRUCE T. FALLON
5403169-0301
date
STATE OF UTAH

MARK	DATE	DESCRIPTION

ISSUE TYPE: Construction Document Phase

ISSUE DATE: 27 May 2010

DFCM PROJECT NO: 09240200
CAD PROJECT NO:
CAD DWG FILE: GI-101 Cover Sheet.dwg
DRAWN BY: BTF
CHK'D BY: BTF
COPYRIGHT: STATE OF UTAH

SHEET TITLE

Cover Sheet

SHEET NUMBER

GI-101

SPECIAL INSPECTION AND TESTING UNDER THE PROVISIONS OF IBC 1704 AND FOR MISCELLANEOUS AREAS

STEEL (IBC 1704.3)

ITEM			DETAILED INSTRUCTION and FREQUENCIES
COMPLETE and PARTIAL PENETRATION GROOVE WELDS.	■ CONTINUOUS	☐ PERIODIC	ONLY AS NEEDED
SINGLE PASS FILLET WELDS = 5/16"	☐ CONTINUOUS	■ PERIODIC	TRELLIS FIELD WELDS

CONCRETE (IBC 1704.4)

ITEM			DETAILED INSTRUCTION and FREQUENCIES
STEEL PLACEMENT	☐ CONTINUOUS	■ PERIODIC	FOUNDATION WALLS & SLAB ON GRADE
USE OF REQUIRED DESIGN MIX	☐ CONTINUOUS	■ PERIODIC	ON MIXES OVER 3,000 PSI
CONCRETE SAMPLING FOR STRENGTH TEST, SLUMP, AIR CONTENT, AND TEMPERATURE OF CONCRETE	■ CONTINUOUS	☐ PERIODIC	ON MIXES OVER 3,000 PSI
CONCRETE & SHOTCRETE PLACEMENT	■ CONTINUOUS	☐ PERIODIC	FOUNDATION WALLS & SLAB ON GRADE
CURING TEMPERATURES & TECHNIQUES	☐ CONTINUOUS	■ PERIODIC	SLAB ON GRADE
PRE-CAST CONCRETE	☐ CONTINUOUS	■ PERIODIC	ON-SITE PLACEMENT
FORM WORK	☐ CONTINUOUS	■ PERIODIC	FOUNDATION WALLS ONLY

MASONRY (IBC 1704.5)

ITEM			DETAILED INSTRUCTION and FREQUENCIES
NONE	☐ CONTINUOUS	☐ PERIODIC	

WOOD CONSTRUCTION (IBC 1704.6)

ITEM			DETAILED INSTRUCTION and FREQUENCIES
NONE	☐ CONTINUOUS	☐ PERIODIC	

WOOD CONSTRUCTION (IBC 1704.6)

ITEM			DETAILED INSTRUCTION and FREQUENCIES
NONE	☐ CONTINUOUS	☐ PERIODIC	

SOILS CONSTRUCTION (IBC 1704.7)

ITEM			DETAILED INSTRUCTION and FREQUENCIES
SITE PREPARATION	☐ CONTINUOUS	■ PERIODIC	AS PER GEOTECHNICAL ENGINEER
STRUCTURAL FILL MATERIAL	☐ CONTINUOUS	■ PERIODIC	AS PER GEOTECHNICAL ENGINEER
STRUCTURAL FILL LIFT THICKNESS	■ CONTINUOUS	☐ PERIODIC	AS PER GEOTECHNICAL ENGINEER
STRUCTURAL FILL SOIL DENSITIES	■ CONTINUOUS	☐ PERIODIC	AS PER GEOTECHNICAL ENGINEER
BACKFILL SOILS MATERIALS	■ CONTINUOUS	☐ PERIODIC	AS PER GEOTECHNICAL ENGINEER
BACKFILL SOILS DENSITIES	☐ CONTINUOUS	■ PERIODIC	AS PER GEOTECHNICAL ENGINEER

PILE FOUNDATIONS (IBC 1704.8)

ITEM			DETAILED INSTRUCTION and FREQUENCIES
NONE	☐ CONTINUOUS	☐ PERIODIC	

PIER FOUNDATIONS (IBC 1704.9)

ITEM			DETAILED INSTRUCTION and FREQUENCIES
NONE	☐ CONTINUOUS	☐ PERIODIC	

SPRAYED FIRE-RESISTANT MATERIALS (IBC 1704.10)

ITEM			DETAILED INSTRUCTION and FREQUENCIES
NONE	☐ CONTINUOUS	☐ PERIODIC	

MASTIC AND INTUMESCENT FIRE-RESISTANT COATINGS (IBC 1704.11)

ITEM			DETAILED INSTRUCTION and FREQUENCIES
NONE	☐ CONTINUOUS	☐ PERIODIC	

EXTERIOR INSULATION AND FINISH SYSTEMS (EIFS) (IBC 1704.12)

ITEM			DETAILED INSTRUCTION and FREQUENCIES
NONE	☐ CONTINUOUS	☐ PERIODIC	

ALTERNATIVE CONSTRUCTION METHODS OR MATERIALS (IBC 1704.13)

ITEM			DETAILED INSTRUCTION and FREQUENCIES
NONE	☐ CONTINUOUS	☐ PERIODIC	

EPOXY (IBC 1704.13)

ITEM			DETAILED INSTRUCTION and FREQUENCIES
NONE	☐ CONTINUOUS	☐ PERIODIC	

SMOKE CONTROL (IBC 1704.14)

ITEM			DETAILED INSTRUCTION and FREQUENCIES
NONE	☐ CONTINUOUS	☐ PERIODIC	

SPECIAL INSPECTION FOR SEISMIC RESISTANCE (IBC 1707)

ITEM			DETAILED INSTRUCTION and FREQUENCIES
NONE PER EXCEPTION 1	☐ CONTINUOUS	☐ PERIODIC	

MISCELLANEOUS AREAS

ITEM			DETAILED INSTRUCTION and FREQUENCIES
NONE	☐ CONTINUOUS	☐ PERIODIC	

SPECIAL INSPECTORS SHALL:

1. BE APPROVED BY THE BUILDING OFFICIAL PRIOR TO PERFORMING ANY DUTIES.
2. PROVIDE PROOF OF LICENSURE AS A SPECIAL INSPECTOR BY THE STATE OF UTAH FOR EACH TYPE OF INSPECTION.
3. INSPECTION REPORTS ARE TO MEET THE REQUIREMENTS OF IBC 1704.12 AND DFCM STANDARDS.
4. INSPECTION REPORTS ARE TO BE SUBMITTED TO THE CODE CONSULTANT, ARCHITECT, DFCM PROJECT MANAGER AND THE STATE OF UTAH BUILDING OFFICIAL WITHIN 48 HOURS OF INSPECTIONS.
5. A FINAL INSPECTION REPORT SHALL BE SUBMITTED FOLLOWING COMPLETION OF THE PROJECT DOCUMENTING THE TYPES OF SPECIAL INSPECTIONS PERFORMED AND A STATEMENT INDICATING THAT THE STRUCTURE IS IN COMPLIANCE WITH THE DRAWINGS, SPECIFICATIONS AND APPLICABLE CODES (IBC 1704.12).

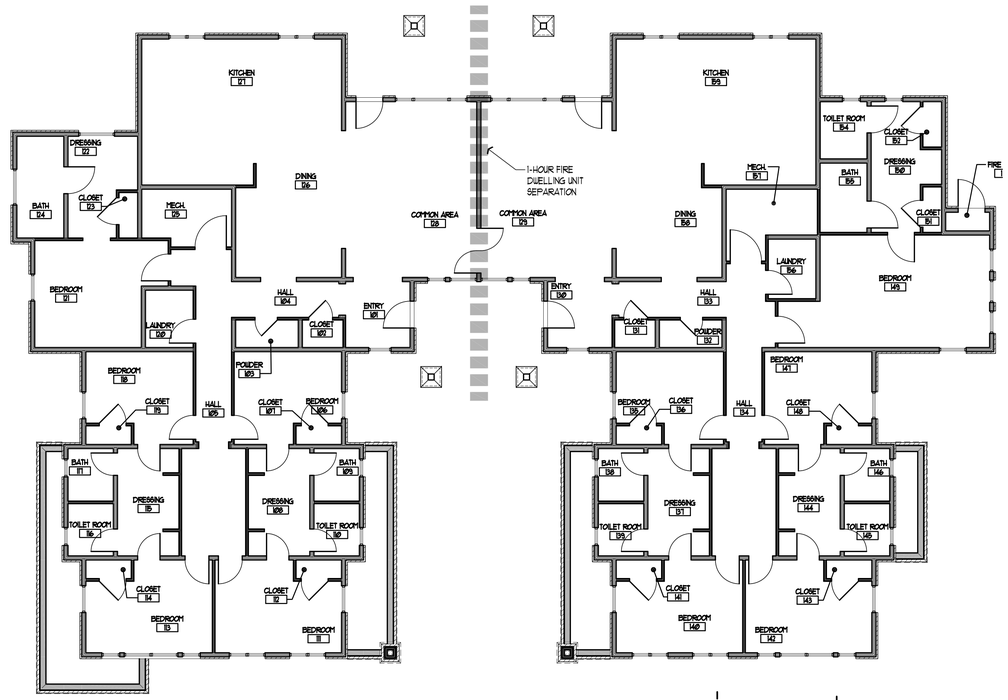

CODE ANALYSIS PLAN

1/8" = 1'-0"

EAST BUILDING — WEST BUILDING

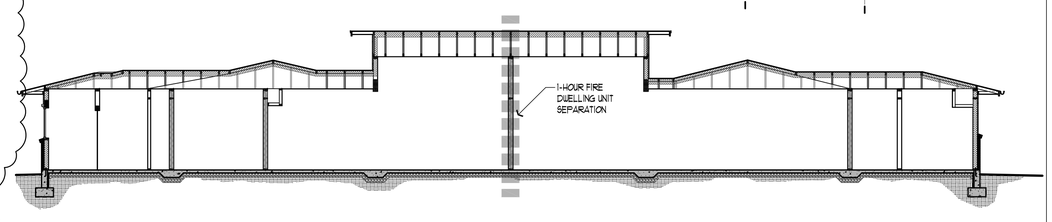

CODE ANALYSIS SECTION

1/8" = 1'-0"

CODE ANALYSIS

APPLICABLE CODES

	Year		Year
International Building Code		National Electrical Code	
International Mechanical Code		Uniform Code for Building Conservation	
International Plumbing Code		ADA Accessibility Guidelines	
International Fire Code		Intn'l Residential Code	2006
International Energy Conservation Code			

A. Occupancy and Group: TWO-FAMILY DWELLING PER 2006 IRC

Change in Use: Yes ___ No X Mixed Occupancy: Yes ___ No X
Special Use and Occupancy (e.g. High Rise, Covered Mall): N/A

B. Seismic Design Category: D Design Wind Speed: 90 mph EXPOSURE B

C. Type of Construction (circle one): NOT FIRE-RESISTANCE RATED PER TABLE R302.1

I/A I/B II/A II/B III/A III/B IV/HT V/A V/B

D. Fire Resistance Rating Requirements for the Exterior Walls based on the fire separation distance (in hours):
North: 0 South: 0 East: 0 West: 0

E. Mixed Occupancies: N/A Nonseparated Uses: N/A

F: Sprinklers:
Required: NO Provided: YES Type of Sprinkler System: NFPA-13D

G: Number of Stories: ONE Building Height: 15'-5"

H: Actual Area per Floor (square feet): 5,300 S.F. 1

I: Tabular Area: N/A

J: Area Modifications: N/A

K. Fire Resistance Rating Requirements for Building Elements (hours).

Element	Hours	Assembly Listing	Element	Hours	Assembly Listing
Exterior Bearing Walls	0	N/A	Floors - Ceiling Floors	0	N/A
Interior Bearing Walls	0	N/A	Roofs - Ceiling Roofs	0	N/A
Exterior Non-Bearing Walls	0	N/A	Exterior Doors and Windows	0	N/A
Structural Frame	0	N/A	Shaft Enclosures	0	N/A
Partitions - Permanent	0	N/A	Fire Walls	0	N/A
Fire Barriers	0	N/A	Fire Partitions	0	N/A
Occupancy Separation	1	WP 3514	Smoke Partitions	0	N/A

L. Design Occupant Load: N/A
Exit Width Required: 36" Exit Width Provided: 72"

M. Minimum Number of Required Plumbing Facilities: PER IRC R306
a) Water Closets - Required (m) 1 (f) 1 Provided (m) 4 (f) 4
b) Lavatories - Required (m) 1 (f) 1 Provided (m) 6 (f) 6
c) Bath Tubs or Showers: 1
d) Drinking Fountains: N/A Service Sinks: N/A

FOOTNOTES:

1. In accordance with IRC Section R322, no accessibility standards are required for this project. Any accessibility features included, such as grab bars or clear floor spaces are for convenience only and do not constitute compliance with any accessibility standards.

DEFERRED SUBMITTALS NOTES

DEFERRED SUBMITTALS

GENERAL: CONTRACTOR TO SUBMIT DEFERRED SUBMITTALS TO ARCHITECT FOR REVIEW PRIOR TO SUBMITTAL TO THE AUTHORITY HAVING JURISDICTION (AHJ). ARCHITECT TO PROVIDE A LETTER TO THE AHJ STATING THAT THE SHOP DRAWINGS ARE IN GENERAL CONFORMANCE WITH THE CONTRACT DOCUMENTS. CONTRACTOR TO VERIFY SUBMITTAL DATES. WORK RELATED TO THE DEFERRED SUBMITTALS SHALL NOT COMMENCE UNTIL APPROVED BY THE BUILDING OFFICIAL AND/OR FIRE MARSHAL.

1. CONTRACTOR SHALL SUBMIT SHOP DRAWINGS TO ARCHITECT AND FIRE MARSHAL FOR THE FIRE SPRINKLER SYSTEM & FIRE ALARM FOR APPROVAL BEFORE FABRICATION AND INSTALLATION BEGINS. CONTRACTOR SHALL ALSO CONDUCT A SYSTEM FLOW TEST FROM THE NEAREST FIRE HYDRANT.
2. SUBMIT FIRE PENETRATION DETAILS TO AUTHORITY HAVING JURISDICTION FOR APPROVAL PRIOR TO ANY INSTALLATION. SUBMITTAL DATE TO BE APPROXIMATELY 21 JUNE 2010.
3. SUBMIT SHOP DRAWINGS AND STRUCTURAL CALCULATIONS TO THE ARCHITECT AND AUTHORITY HAVING JURISDICTION FOR THE ROOF TRUSS MEMBERS PRIOR TO FABRICATION AND INSTALLATION. SUBMITTAL DATE TO BE APPROXIMATELY 21 JUNE 2010.
4. SUBMIT AN APPROVED EVALUATION REPORT FOR THE STUCCO SYSTEM SELECTED. SUBMITTAL DATE TO BE APPROXIMATELY 6 JULY 2010.
5. SUBMIT AN APPROVED EVALUATION REPORT FOR THE SPRAY APPLIED INSULATION SYSTEM SELECTED. SUBMITTAL DATE TO BE APPROXIMATELY 21 JUNE 2010.

1

CODE ANALYSIS NOTES

OCCUPANCY SEPARATIONS (SECTION R317)

PER SECTION R317.1, PROVIDE A WALL AND/OR FLOOR ASSEMBLY HAVING NOT LESS THAN A 1-HOUR FIRE-RESISTANCE RATING WHEN TESTED IN ACCORDANCE WITH ASTM E119. EXTEND FIRE-RESISTANCE RATED FLOOR-CEILING AND WALL ASSEMBLIES TO & BE TIGHT AGAINST THE EXTERIOR WALL AND TO THE UNDERSIDE OF THE ROOF SHEATHING. SEE WALL CONSTRUCTION TYPE DETAIL 2-6/AE-601. 1

CODE COORDINATION NOTES

1. SEE LISTING FOR FIRE RATING OF WALL CONSTRUCTION TYPES ON SHEET AE601. NOTE: ONLY WALLS SHOWN ON THE CODE ANALYSIS PLANS ARE REQUIRED TO BE FIRE RATED. SOME WALLS MAY BE NOTED TO A WALL CONSTRUCTION TYPE WHICH HAS A FIRE RATING, BUT THE RATING IS NOT REQUIRED UNLESS SHOWN ON THE CODE ANALYSIS PLANS.
2. PENETRATIONS THROUGH FIRE RATED ASSEMBLIES SHALL BE FIRE STOPPED IN ACCORDANCE WITH WRITTEN INSTRUCTIONS FROM THE MANUFACTURER OF THE FIRE STOPPING MATERIAL.
3. ALL WALLS WITH OPENINGS HAVE A 5 FT. OR GREATER FIRE-SEPARATION DISTANCE - NO PROTECTION OF OPENINGS REQUIRED.

State of Utah
Department of Administrative Services
Division of Facilities Construction & Management
4110 State Office Building
Salt Lake City, Utah 84114
Phone: (801) 538 - 3018
Fax: (801) 538 - 3267
http://dfcm.utah.gov

WPA architecture
475 North Freedom Blvd.
Provo, Utah, 84601
Tel: (801) 374-0800 Fax: (801) 374-0805
www.wpa-architecture.com

BUILDING NAME:
PROPERTY #15278
USOR - DSBVI
TRAINING HOUSING
Salt Lake City, Utah

PROJECT TITLE:
USOR - Division of Services for the Blind and Visually Impaired TRAINING HOUSING

LICENSED ARCHITECT BRUCE T. FALLON 5403169-0301 STATE OF UTAH

MARK	DATE	DESCRIPTION
1	05.27.10	Addendum 1

ISSUE TYPE: Construction Document Phase
ISSUE DATE: 27 May 2010
DFCM PROJECT NO: 09240200
CAD PROJECT NO:
CAD DWG FILE: GI-601.dwg
DRAWN BY: BTF
CHK'D BY: btf
COPYRIGHT: STATE OF UTAH

SHEET TITLE
Code Analysis

SHEET NUMBER
GI-601

Salt Lake City Public Utilities General Notes

1. COMPLIANCE:
ALL CONSTRUCTION AND MATERIALS SHALL BE IN ACCORDANCE WITH THESE CONTRACT DOCUMENTS AND THE MOST RECENT EDITIONS OF THE FOLLOWING: THE INTERNATIONAL PLUMBING CODE, UTAH DRINKING WATER REGULATIONS, APWA 2007 MANUAL OF STANDARD PLANS AND SPECIFICATIONS, WITH ADDENDUM AND SLC PUBLIC UTILITIES MODIFICATIONS TO APWA STANDARD PLANS AND APPROVED MATERIALS AND SLC PUBLIC UTILITIES APWA SPECIFICATIONS MODIFICATIONS. THE CONTRACTOR IS REQUIRED TO ADHERE TO ALL OF THE ABOVE-MENTIONED DOCUMENTS UNLESS OTHERWISE NOTED AND APPROVED IN WRITING BY THE SALT LAKE CITY DIRECTOR OF PUBLIC UTILITIES.

2. COORDINATION:
THE CONTRACTOR IS RESPONSIBLE TO NOTIFY ALL APPROPRIATE GOVERNMENT AND PRIVATE ENTITIES ASSOCIATED WITH THE PROJECT. THE FOLLOWING MUST BE CONTACTED 48-HOURS PRIOR TO CONSTRUCTION AS APPLICABLE TO THE PROJECT:

PUBLIC UTILITIES:
INSPECTIONS, PERMITS, CONTRACTS & AGREEMENTS – 483-6727
ENGINEERING – 483-6781
DEVELOPMENT REVIEW – 483-6733
BACKFLOW PREVENTION – 799-4045

SLC DEPARTMENTS:
PERMITS AND LICENSING (BLDG SERVICES) – 535-7645
ENGINEERING – SUBDIVISIONS – 535-6204
ENGINEERING – PUBLIC WAY PERMITS AND ISSUES – 535-6396
TRANSPORTATION – 535-6630
PLANNING AND ZONING – 535-7757
FIRE DEPARTMENT – 799-4162

– ALL WATER USERS INVOLVED IN WATER MAIN SHUTDOWNS
– APPLICABLE SEWER, WATER AND DRAINAGE DISTRICTS
– UTAH DEPARTMENT OF TRANSPORTATION, REGION #2 – 975-4800
– UTAH STATE ENGINEER – 538-7240
– BLUESTAKES LOCATING SERVICES – 532-5000
– COUNTY HEALTH DEPARTMENT – 313-6600
– COUNTY FIRE DEPARTMENT – 743-7231
– UNION PACIFIC RAILROAD CO., SUPERINTENDENTS OFFICE – 595-3405
– THE UTAH TRANSIT AUTHORITY FOR RE-ROUTING SERVICE – 262-5626
– SALT LAKE COUNTY HIGHWAY DEPARTMENT – 468-3705 OR 468-2156
– ALL OTHER POTENTIALLY IMPACTED GOVERNING AGENCIES OR ENTITIES

3. SCHEDULE
PRIOR TO CONSTRUCTION THE CONTRACTOR WILL PROVIDE, AND WILL UPDATE AS CHANGES OCCUR, A CONSTRUCTION SCHEDULE IN ACCORDANCE WITH THE SPECIFICATIONS AND SALT LAKE CITY ENGINEERING REGULATIONS AS APPLICABLE FOR WORKING WITHIN THE PUBLIC WAY.

4. PERMITS, FEES, AND AGREEMENTS
CONTRACTOR MUST OBTAIN ALL THE NECESSARY PERMITS AND AGREEMENTS AND PAY ALL APPLICABLE FEES PRIOR TO ANY CONSTRUCTION ACTIVITIES. CONTACT SALT LAKE CITY ENGINEERING (535-6396) FOR PERMITS AND INSPECTIONS REQUIRED FOR ANY WORK CONDUCTED WITHIN SALT LAKE CITY'S PUBLIC RIGHT-OF-WAY. APPLICABLE UTILITY PERMITS MAY INCLUDE MAINLINE EXTENSION AGREEMENTS AND SERVICE CONNECTION PERMITS. ALL UTILITY WORK MUST BE BONDED. ALL CONTRACTORS MUST BE LICENSED TO WORK ON CITY UTILITY MAINS.

CONSTRUCTION SITES MUST BE IN COMPLIANCE WITH THE UTAH POLLUTION DISCHARGE ELIMINATION SYSTEM (UPDES) STORM WATER PERMIT FOR CONSTRUCTION ACTIVITIES (538-6923). A COPY OF THE PERMIT'S STORM WATER POLLUTION PREVENTION PLAN MUST BE SUBMITTED TO PUBLIC UTILITIES FOR REVIEW AND APPROVAL. ADDITIONAL WATER QUALITY AND EROSION CONTROL MEASURES MAY BE REQUIRED. THE CONTRACTOR MUST ALSO COMPLY WITH SALT LAKE CITY'S CLEAN WHEEL ORDINANCE.

5. ASPHALT AND SOIL TESTING
THE CONTRACTOR IS TO PROVIDE MARSHALL AND PROCTOR TEST DATA 24-HOURS PRIOR TO USE. CONTRACTOR IS TO PROVIDE COMPACTION AND DENSITY TESTING AS REQUIRED BY SALT LAKE CITY ENGINEERING, UDOT, OR OTHER GOVERNING ENTITY. TRENCH BACKFILL MATERIAL AND COMPACTION TESTS ARE TO BE TAKEN PER APWA STANDARD SPECIFICATIONS, SECTION 330520 – BACKFILLING TRENCHES, OR AS REQUIRED BY THE SLC PROJECT ENGINEER IF NATIVE MATERIALS ARE USED. NO NATIVE MATERIALS ARE ALLOWED WITHIN THE PIPE ZONE. THE MAXIMUM LIFTS FOR BACKFILLING EXCAVATIONS IS 8-INCHES. ALL MATERIALS AND COMPACTION TESTING IS TO BE PERFORMED BY A LAB RECOGNIZED AND ACCEPTED BY SALT LAKE CITY ENGINEERING.

6. TRAFFIC CONTROL AND HAUL ROUTES
TRAFFIC CONTROL MUST CONFORM TO THE MOST CURRENT EDITION OF SALT LAKE CITY TRAFFIC CONTROL MANUAL – PART 6 OF "MANUAL ON UNIFORM TRAFFIC CONTROL DEVICES" FOR SALT LAKE COUNTY AND STATE ROADS. SLC TRANSPORTATION MUST APPROVE ALL PROJECT HAUL ROUTES (535-7129). THE CONTRACTOR MUST ALSO CONFORM TO UDOT, SALT LAKE COUNTY OR OTHER APPLICABLE GOVERNING ENTITIES REQUIREMENTS FOR TRAFFIC CONTROL.

7. SURVEY CONTROL
CONTRACTOR MUST PROVIDE A REGISTERED LAND SURVEYOR OR PERSONS UNDER SUPERVISION OF A REGISTERED LAND SURVEYOR TO SET STAKES FOR ALIGNMENT AND GRADE OF EACH MAIN AND/OR FACILITY AS APPROVED. THE STAKES SHALL BE MARKED WITH THE HORIZONTAL LOCATION (STATION) AND VERTICAL LOCATION (GRADE) WITH CUTS AND/OR FILLS TO THE GRADE OF THE MAIN AND/OR FACILITY AS APPROVED. IN ADDITION, THE CONTRACTOR AND/OR SURVEYOR SHALL PROVIDE TO SALT LAKE CITY PUBLIC UTILITIES CUT SHEETS FILLED OUT COMPLETELY AND CLEARLY SHOWING THE PERTINENT GRADES, ELEVATIONS AND CUT/FILLS ASSOCIATED WITH THE FIELD STAKING OF THE MAIN AND/OR FACILITY. THE CUT SHEET FORM IS AVAILABLE AT THE CONTRACTS AND AGREEMENTS OFFICE AT PUBLIC UTILITIES. ALL MAINS AND LATERALS NOT MEETING MINIMUM GRADE REQUIREMENTS AS SPECIFIED BY ORDINANCE OR AS REQUIRED TO MEET THE MINIMUM REQUIRED FLOWS OR AS APPROVED MUST BE REMOVED AND RECONSTRUCTED TO MEET DESIGN GRADE. THE CONTRACTOR SHALL PROTECT ALL STAKES AND MARKERS UNTIL PUBLIC UTILITY SURVEYORS COMPLETE FINAL MEASUREMENTS. THE CONTRACTOR WILL BE RESPONSIBLE FOR FURNISHING, MAINTAINING, OR RESTORING ALL MONUMENTS AND REFERENCE MARKS WITHIN THE PROJECT SITE. CONTACT THE CITY SURVEYOR FOR MONUMENT LOCATIONS AND CONSTRUCTION REQUIREMENTS. ALL ELEVATIONS SHALL BE REFERENCED TO SALT LAKE CITY DATUM UNLESS NOTED OTHERWISE ON THE PLANS.

8. ASPHALT GUARANTEE
THE CONTRACTOR SHALL REMOVE, DISPOSE OF, FURNISH AND PLACE PERMANENT ASPHALT PER SALT LAKE CITY ENGINEERING STANDARDS AS APPLICABLE TO THE PROJECT. THE CONTRACTOR SHALL GUARANTEE THE ASPHALT RESTORATION FOR A PERIOD OF THREE YEARS AS REQUIRED BY SALT LAKE CITY ENGINEERING.

9. TEMPORARY ASPHALT
IF THE CONTRACTOR CHOOSES TO WORK WITHIN THE PUBLIC WAY WHEN HOT MIX ASPHALT IS NOT AVAILABLE, THE CONTRACTOR MUST OBTAIN APPROVAL FROM THE APPROPRIATE GOVERNING ENTITY PRIOR TO INSTALLING TEMPORARY ASPHALT SURFACING MATERIAL. WITHIN SALT LAKE CITY, WHEN PERMANENT ASPHALT BECOMES AVAILABLE, THE CONTRACTOR SHALL REMOVE THE TEMPORARY ASPHALT, FURNISH AND INSTALL THE PERMANENT ASPHALT. THE CONTRACTOR SHALL GUARANTEE THE ASPHALT RESTORATION FOR A PERIOD AS REQUIRED BY THE GOVERNING ENTITY FROM THE DATE OF COMPLETION.

10. SAFETY
THE CONTRACTOR IS RESPONSIBLE FOR ALL ASPECTS OF SAFETY OF THE PROJECT AND SHALL MEET ALL OSHA, STATE, COUNTY AND OTHER GOVERNING ENTITY REQUIREMENTS.

THE CONTRACTOR IS SOLELY RESPONSIBLE FOR CONFORMING TO LOCAL AND FEDERAL CODES GOVERNING SHORING AND BRACING OF EXCAVATIONS AND TRENCHES, AND FOR THE PROTECTION OF WORKERS.

11. DUST CONTROL
THE CONTRACTOR IS RESPONSIBLE FOR DUST CONTROL ACCORDING TO THE GOVERNING ENTITY STANDARDS. USE OF HYDRANT WATER OR PUMPING FROM CITY-OWNED CANALS OR STORM DRAINAGE FACILITIES IS NOT ALLOWED FOR DUST CONTROL ACTIVITIES WITHOUT WRITTEN APPROVAL OF THE PUBLIC UTILITIES DIRECTOR.

12. DEWATERING
ALL ON-SITE DEWATERING ACTIVITIES MUST BE APPROVED IN WRITING BY PUBLIC UTILITIES. PROPOSED OUTFALL LOCATIONS AND ESTIMATED FLOW VOLUME CALCULATIONS MUST BE SUBMITTED TO PUBLIC UTILITIES FOR REVIEW AND APPROVAL. ADEQUATE MEASURES MUST BE TAKEN TO REMOVE ALL SEDIMENT PRIOR TO DISCHARGE. PUBLIC UTILITIES MAY REQUIRE ADDITIONAL MEASURES FOR SEDIMENT CONTROL AND REMOVAL.

13. PROJECT LIMITS
THE CONTRACTOR IS REQUIRED TO KEEP ALL CONSTRUCTION ACTIVITIES WITHIN THE APPROVED PROJECT LIMITS. THIS INCLUDES, BUT IS NOT LIMITED TO, VEHICLE AND EQUIPMENT STAGING, MATERIAL STORAGE AND LIMITS OF TRENCH EXCAVATION. IT IS THE CONTRACTORS RESPONSIBILITY TO OBTAIN PERMISSION AND/OR EASEMENTS FROM THE APPROPRIATE GOVERNING ENTITY AND/OR INDIVIDUAL PROPERTY OWNER(S) FOR WORK OR STAGING OUTSIDE OF THE PROJECT LIMITS.

14. WATER, FIRE, SANITARY SEWER AND STORM DRAINAGE UTILITIES
A. INSPECTIONS –
IT IS THE CONTRACTOR'S RESPONSIBILITY TO SCHEDULE ANY WATER, SEWER, BACKFLOW AND DRAINAGE INSPECTION 48-HOURS IN ADVANCE TO WHEN NEEDED. CONTACT 483-6727 TO SCHEDULE INSPECTIONS.

B. DAMAGE TO EXISTING UTILITIES –
THE CONTRACTOR IS RESPONSIBLE FOR REPAIRING ANY DAMAGE, CAUSED BY ANY CONDITION INCLUDING SETTLEMENT, TO EXISTING UTILITIES FROM WORK PERFORMED AT OR NEAR EXISTING UTILITIES. THE CONTRACTOR SHALL TAKE ALL MEASURES NECESSARY TO PROTECT ALL EXISTING PUBLIC AND PRIVATE ROADWAY AND UTILITY FACILITIES. DAMAGE TO EXISTING FACILITIES CAUSED BY THE CONTRACTOR, MUST BE REPAIRED BY THE CONTRACTOR AT HIS/HER EXPENSE, TO THE SATISFACTION OF THE OWNER OF SAID FACILITIES.

C. UTILITY LOCATIONS –
CONTRACTOR WILL BE RESPONSIBLE FOR LOCATING AND AVOIDING ALL UTILITIES AND SERVICE LATERALS, AND FOR REPAIRING ALL DAMAGE THAT OCCURS TO THE UTILITIES DUE TO THE CONTRACTOR'S ACTIVITIES. CONTRACTOR IS TO VERIFY LOCATION, DEPTH, SIZE, MATERIAL AND OUTSIDE DIAMETERS OF UTILITIES IN THE FIELD BY POTHOLING A MINIMUM OF 300-FEET AHEAD OF SCHEDULED CONSTRUCTION IN ORDER TO IDENTIFY POTENTIAL CONFLICTS AND PROBLEMS WITH FUTURE CONSTRUCTION ACTIVITIES. EXISTING UTILITY INFORMATION OBTAINED FROM SLC PUBLIC UTILITIES' MAPS MUST BE ASSUMED AS APPROXIMATE AND REQUIRING FIELD VERIFICATION. CONTACT BLUE STAKES OR APPROPRIATE OWNER FOR COMMUNICATION LINE LOCATIONS.

D. UTILITY RELOCATIONS –
FOR UTILITY CONFLICTS REQUIRING MAINLINE RELOCATIONS, THE CONTRACTOR MUST NOTIFY THE APPLICABLE UTILITY COMPANY OR USER A MINIMUM OF 2-WEEKS IN ADVANCE. A ONE-WEEK MINIMUM NOTIFICATION IS REQUIRED FOR CONFLICTS REQUIRING THE RELOCATION OF SERVICE LATERALS. ALL RELOCATIONS ARE SUBJECT TO APPROVAL FROM THE APPLICABLE UTILITY COMPANY AND/OR USER.

E. FIELD CHANGES –
NO ROADWAY, UTILITY ALIGNMENT OR GRADE CHANGES ARE ALLOWED FROM THE APPROVED CONSTRUCTION PLANS/DOCUMENTS WITHOUT WRITTEN APPROVAL FROM THE SLC PUBLIC UTILITIES DIRECTOR. CHANGES TO HYDRANT LOCATIONS AND/OR FIRE LINES MUST BE REVIEWED AND APPROVED BY THE SALT LAKE CITY OR SALT LAKE COUNTY FIRE DEPARTMENT (AS APPLICABLE TO THE PROJECT) AND PUBLIC UTILITIES.

F. PUBLIC NOTICE TO PROJECTS IN THE PUBLIC WAY–
FOR APPROVED PROJECTS THE CONTRACTOR IS RESPONSIBLE TO PROVIDE AND DISTRIBUTE WRITTEN NOTICE TO ALL RESIDENTS LOCATED WITHIN THE PROJECT AREA AT LEAST 72-HOURS PRIOR TO CONSTRUCTION. WORK TO BE CONDUCTED WITHIN COMMERCIAL OR INDUSTRIAL AREAS MAY REQUIRE A LONGER NOTIFICATION PERIOD AND ADDITIONAL CONTRACTOR COORDINATION WITH PROPERTY OWNERS. THE WRITTEN NOTICE IS TO BE APPROVED BY THE SLC PUBLIC UTILITIES PROJECT ENGINEER.

G. PUBLIC NOTICE FOR WATER MAIN SHUT DOWNS –
THROUGH THE SLC PUBLIC UTILITIES INSPECTOR AND WITH THE PUBLIC UTILITIES PROJECT ENGINEER APPROVAL, SLC PUBLIC UTILITIES MUST BE CONTACTED AND APPROVE ALL WATER MAIN SHUTDOWNS. ONCE APPROVED THE CONTRACTOR MUST NOTIFY ALL EFFECTED USERS BY WRITTEN NOTICE A MINIMUM OF 48-HOURS (RESIDENTIAL) AND 72-HOURS (COMMERCIAL/INDUSTRIAL) PRIOR TO THE WATER MAIN SHUT DOWN. PUBLIC UTILITIES MAY REQUIRE LONGER NOTICE PERIODS.

H. WATER AND SEWER SEPARATION –
IN ACCORDANCE WITH UTAH'S DEPARTMENT OF HEALTH REGULATIONS, A MINIMUM TEN-FOOT HORIZONTAL AND 1.5-FOOT VERTICAL (WITH WATER ON TOP) SEPARATION IS REQUIRED. IF THESE CONDITIONS CANNOT BE MET, STATE AND SLC PUBLIC UTILITIES APPROVAL IS REQUIRED. ADDITIONAL CONSTRUCTION MEASURES WILL BE REQUIRED FOR THESE CONDITIONS.

I. SALVAGE –
ALL METERS MUST BE RETURNED TO PUBLIC UTILITIES, AND AT PUBLIC UTILITIES REQUEST ALL SALVAGED PIPE AND/OR FITTINGS MUST BE RETURNED TO SLC PUBLIC UTILITIES (483-6727) LOCATED AT 1530 SOUTH WEST TEMPLE.

J. SEWER MAIN AND LATERAL CONSTRUCTION REQUIREMENTS –
SLC PUBLIC UTILITIES MUST APPROVE ALL SEWER CONNECTIONS. ALL SEWER LATERALS 6-INCHES AND SMALLER MUST WYE INTO THE MAINS PER SLC PUBLIC UTILITIES REQUIREMENTS. ALL 8-INCH AND LARGER SEWER CONNECTIONS MUST BE PETITIONED FOR AT PUBLIC UTILITIES (483-6762) AND CONNECTED AT A MANHOLE. INSIDE DROPS IN MANHOLES ARE NOT ALLOWED. A MINIMUM 4-FOOT BURY DEPTH IS REQUIRED ON ALL SEWER MAINS AND LATERALS. CONTRACTOR SHALL INSTALL INVERT COVERS IN ALL SEWER MANHOLES WITHIN THE PROJECT AREA.

CONTRACTOR TO PROVIDE AIR PRESSURE TESTING OF SEWER MAINS IN ACCORDANCE WITH PIPE MANUFACTURERS RECOMMENDATIONS AND SALT LAKE CITY PUBLIC UTILITIES REQUIREMENTS. ALL PVC SEWER MAIN AND LATERAL TESTING SHALL BE IN ACCORDANCE WITH UNI-BELL UN-B-6-98 RECOMMENDED PRACTICE FOR LOW PRESSURE AIR TESTING OF INSTALLED SEWER PIPE. CONTRACTOR SHALL PROVIDE SEWER LATERAL WATER TESTING AS REQUIRED BY THE SALT LAKE CITY PUBLIC UTILITIES PROJECT ENGINEER OR INSPECTOR. A MINIMUM OF 9-FEET OF HEAD PRESSURE IS REQUIRED AS MEASURED VERTICALLY FROM THE HIGH POINT OF THE PIPELINE AND AT OTHER LOCATIONS ALONG THE PIPELINE AS DETERMINED BY THE SLC PUBLIC UTILITIES PROJECT ENGINEER OR INSPECTOR. TESTING TIME WILL BE NO LESS THAN AS SPECIFIED FOR THE AIR TEST DURATION IN TABLE 1 ON PAGE 12 OF UNI-B-6-98. ALL PIPES SUBJECT TO WATER TESTING SHALL BE FULLY VISIBLE TO THE INSPECTOR DURING TESTING. TESTING MUST BE PERFORMED IN THE PRESENCE OF A SLC PUBLIC UTILITIES REPRESENTATIVE. ALL VISIBLE LEAKAGE MUST BE REPAIRED TO THE SATISFACTION OF THE SLC PUBLIC UTILITIES ENGINEER OR INSPECTOR.

K. WATER AND FIRE MAIN AND SERVICE CONSTRUCTION REQUIREMENTS –
SLC PUBLIC UTILITIES MUST APPROVE ALL FIRE AND WATER SERVICE CONNECTIONS. A MINIMUM 3-FOOT SEPARATION IS REQUIRED BETWEEN ALL WATER AND FIRE SERVICE TAPS INTO THE MAIN. ALL CONNECTIONS MUST BE MADE MEETING SLC PUBLIC UTILITIES REQUIREMENTS. A 5-FOOT MINIMUM BURY DEPTH (FINAL GRADE TO TOP OF PIPE) IS REQUIRED ON ALL WATER/FIRE LINES UNLESS OTHERWISE APPROVED BY PUBLIC UTILITIES. WATER LINE THRUST BLOCK AND RESTRAINTS ARE AS PER SLC APPROVED DETAIL DRAWINGS AND SPECIFICATIONS. ALL EXPOSED NUTS AND BOLTS WILL BE COATED WITH CHEVRON FM1 GREASE PLUS MINIMUM 8 MIL THICKNESS PLASTIC. PROVIDE STAINLESS STEEL NUTS, BOLTS AND WASHERS FOR HIGH GROUNDWATER/ SATURATED CONDITIONS AT FLANGE FITTINGS, ETC.

ALL WATERLINES INSTALLATIONS AND TESTING TO BE IN ACCORDANCE WITH AWWA SECTIONS C600, C601, C651, C206, C200, C900, C303 AWWA MANUAL M11 AND ALL OTHER APPLICABLE AWWA, UPWS, ASTM AND ANSI SPECIFICATIONS RELEVANT TO THE INSTALLATION AND COMPLETION OF THE PROJECT. AMENDMENT TO SECTION C600 SECTION 4.1.1; DOCUMENT TO READ MINIMUM TEST PRESSURE SHALL NOT BE LESS THAN 200 P.S.I. GAUGED TO A HIGH POINT OF THE PIPELINE BEING TESTED. ALL MATERIALS USED FOR WATERWORKS PROJECTS TO BE RATED FOR 150 P.S.I. MINIMUM OPERATING PRESSURE.

CONTRACTOR IS TO INSTALL WATER SERVICE LINES, METER YOKES AND/OR ASSEMBLIES AND METER BOXES WITH LIDS LOCATED AS APPROVED ON THE PLANS PER APPLICABLE PUBLIC UTILITIES DETAIL DRAWINGS. METER BOXES ARE TO BE PLACED IN THE PARK STRIPS PERPENDICULAR TO THE WATERMAIN SERVICE TAP CONNECTION. ALL WATER METERS, CATCH BASINS, CLEANOUT BOXES, MANHOLES, DOUBLE CHECK VALVE DETECTOR ASSEMBLIES, REDUCED PRESSURE DETECTOR ASSEMBLIES AND BACKFLOW PREVENTION DEVICES MUST BE LOCATED OUTSIDE OF ALL APPROACHES, DRIVEWAYS, PEDESTRIAN WALKWAYS AND OTHER TRAVELED WAYS UNLESS OTHERWISE APPROVED ON PLANS.

BACKFLOW PREVENTORS ARE REQUIRED ON ALL IRRIGATION AND FIRE SPRINKLING TAPS PER PUBLIC UTILITIES AND SLC FIRE DEPARTMENT REQUIREMENTS. CONTRACTORS SHALL INSTALL BACKFLOW PREVENTION DEVICES ON FIRE SPRINKLER CONNECTIONS. DOUBLE CHECK VALVE ASSEMBLIES SHALL BE INSTALLED ON CLASS 1, 2 AND 3 SYSTEMS. REDUCED PRESSURE PRINCIPLE VALVES SHALL BE INSTALLED ON CLASS 4 SYSTEMS. ALL FIRE SPRINKLING BACKFLOW ASSEMBLIES SHALL CONFORM TO ASSE STANDARD 1048, 1013, 1047 AND 1015. THE CONTRACTOR SHALL BE RESPONSIBLE TO PERFORM BACKFLOW PREVENTION TESTS PER SALT LAKE CITY STANDARDS AND SUBMIT RESULTS TO PUBLIC UTILITIES. ALL TESTS MUST BE PERFORMED AND SUBMITTED TO PUBLIC UTILITIES WITHIN 10 DAYS OF INSTALLATION OR WATER TURN-ON. BACKFLOW TEST FORMS ARE AVAILABLE AT PUBLIC UTILITIES' CONTRACTS AND AGREEMENTS OFFICE.

L GENERAL WATER SEWER AND STORM DRAIN REQUIREMENTS –
ALL WATER, FIRE AND SEWER SERVICES STUBBED TO A PROPERTY MUST BE USED OR WATER AND FIRE SERVICES MUST BE KILLED AT THE MAIN AND SEWER LATERALS CAPPED AT PROPERTY LINE PER PUBLIC UTILITIES REQUIREMENTS. ALLOWABLE SERVICES TO BE KEPT WILL BE AS DETERMINED BY THE PUBLIC UTILITIES PROJECT ENGINEER. ALL WATER AND FIRE SERVICE KILLS AND SEWER LATERAL CAPS ARE TO BE KILLED AND CAPPED AS DETERMINED AND VISUALLY VERIFIED BY THE ON-SITE PUBLIC UTILITIES INSPECTOR.

ALL MANHOLES, HYDRANTS, VALVES, CLEAN-OUT BOXES, CATCH BASINS, METERS, ETC. MUST BE RAISED OR LOWERED TO FINAL GRADE PER PUBLIC UTILITIES STANDARDS AND INSPECTOR REQUIREMENTS. CONCRETE COLLARS MUST BE CONSTRUCTED ON ALL MANHOLES, CLEANOUT BOXES, CATCH BASINS AND VALVES PER PUBLIC UTILITIES STANDARDS. ALL MANHOLE, CATCH BASIN, OR CLEANOUT BOX CONNECTIONS MUST BE MADE WITH THE PIPE CUT FLUSH WITH THE INSIDE OF THE BOX AND GROUTED OR SEALED AS REQUIRED BY THE PUBLIC UTILITIES INSPECTOR. ALL MANHOLE, CLEANOUT BOX OR CATCH BASIN DISCONNECTIONS MUST BE REPAIRED AND GROUTED AS REQUIRED BY THE ON-SITE PUBLIC UTILITIES INSPECTOR.

CONTRACTOR SHALL NOT ALLOW ANY GROUNDWATER OR DEBRIS TO ENTER THE NEW OR EXISTING PIPE DURING CONSTRUCTION. UTILITY TRENCHING, BACKFILL, AND PIPE ZONE AS PER SLC PUBLIC UTILITIES, "UTILITY INSTALLATION DETAIL."

APPROVAL SIGNATURES

JUSTIN STOKER, P.E. – DEVELOPMENT ENGINEER _____

FIRE DEPARTMENT _____

State of Utah
Department of Administrative Services
Division of Facilities Construction & Management
4110 State Office Building
Salt Lake City, Utah 84114
Phone: (801) 538 - 3018
Fax: (801) 538 - 3267
http://dfcm.utah.gov

EXCEL ENGINEERING
David W. Peterson, P.E., License #270393
12 West 100 North, Suite 201, American Fork, UT 84003
P: (801) 756-4504; F: (801) 756-4511

BUILDING NAME:
PROPERTY# 15278
USOR - DSVBI
TRAINING HOUSING
Salt Lake City, Utah

PROJECT TITLE:
USOR - Division of Services for the Blind and Visually Impaired TRAINING HOUSING

MARK	DATE	DESCRIPTION
1	5.27.10	Addendum 1

ISSUE TYPE: Construction Document Phase
ISSUE DATE: 04.30.2010
DFCM PROJECT NO: 09240200
CAD PROJECT NO:
CAD DWG FILE: THFB CIVIL PLAN 052410.DWG
DRAWN BY: GJY
CHK'D BY: DWP
COPYRIGHT: STATE OF UTAH

SHEET TITLE
CIVIL NOTES

SHEET NUMBER
C-001

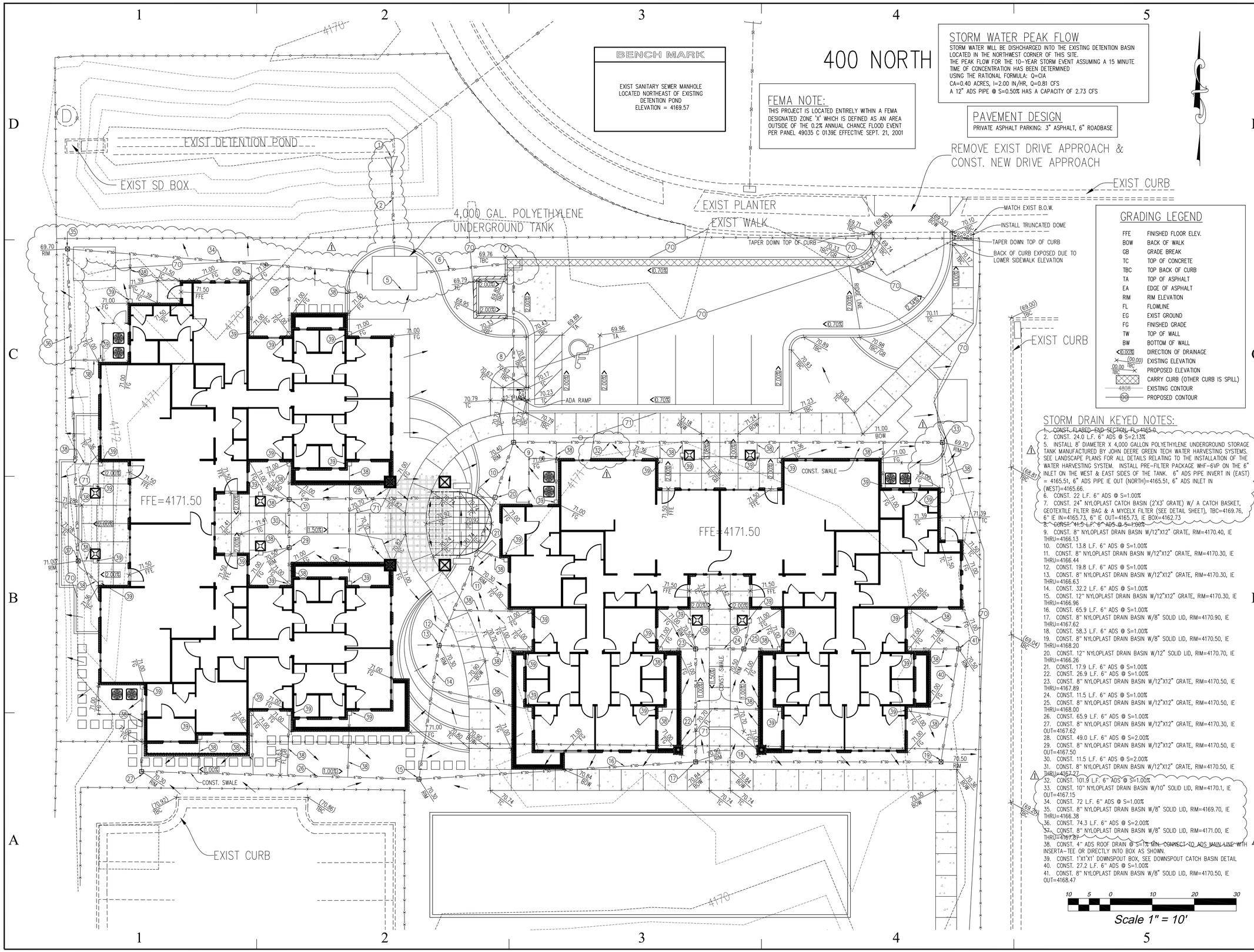

BENCH MARK

EXIST SANITARY SEWER MANHOLE LOCATED NORTHEAST OF EXISTING DETENTION POND
ELEVATION = 4169.57

FEMA NOTE:

THIS PROJECT IS LOCATED ENTIRELY WITHIN A FEMA DESIGNATED ZONE "X" WHICH IS DEFINED AS AN AREA OUTSIDE OF THE 0.2% ANNUAL CHANCE FLOOD EVENT PER PANEL 49035 C 0139E EFFECTIVE SEPT. 21, 2001

STORM WATER PEAK FLOW

STORM WATER WILL BE DISHCHARGED INTO THE EXISTING DETENTION BASIN LOCATED IN THE NORTHWEST CORNER OF THIS SITE.
THE PEAK FLOW FOR THE 10-YEAR STORM EVENT ASSUMING A 15 MINUTE TIME OF CONCENTRATION HAS BEEN DETERMINED
USING THE RATIONAL FORMULA: Q=CIA
CA=0.40 ACRES, I=2.00 IN/HR, Q=0.81 CFS
A 12" ADS PIPE @ S=0.50% HAS A CAPACITY OF 2.73 CFS

PAVEMENT DESIGN

PRIVATE ASPHALT PARKING: 3" ASPHALT, 6" ROADBASE

GRADING LEGEND

FFE	FINISHED FLOOR ELEV.
BOW	BACK OF WALK
GB	GRADE BREAK
TC	TOP OF CONCRETE
TBC	TOP BACK OF CURB
TA	TOP OF ASPHALT
EA	EDGE OF ASPHALT
RIM	RIM ELEVATION
FL	FLOWLINE
EG	EXIST GROUND
FG	FINISHED GRADE
TW	TOP OF WALL
BW	BOTTOM OF WALL
0.00%	DIRECTION OF DRAINAGE
(00.00)	EXISTING ELEVATION
00.00 TBC	PROPOSED ELEVATION
	CARRY CURB (OTHER CURB IS SPILL)
4808	EXISTING CONTOUR
90	PROPOSED CONTOUR

STORM DRAIN KEYED NOTES:

1. CONST. FLARED END SECTION, FL=4165.0
2. CONST. 24.0 L.F. 6" ADS @ S=2.13%
5. INSTALL 8' DIAMETER X 4,000 GALLON POLYETHYLENE UNDERGROUND STORAGE TANK MANUFACTURED BY JOHN DEERE GREEN TECH WATER HARVESTING SYSTEMS. SEE LANDSCAPE PLANS FOR ALL DETAILS RELATING TO THE INSTALLATION OF THE WATER HARVESTING SYSTEM. INSTALL PRE-FILTER PACKAGE WHF-6VP ON THE 6" INLET ON THE WEST & EAST SIDES OF THE TANK. 6" ADS PIPE INVERT IN (EAST) = 4165.51, 6" ADS PIPE IE OUT (NORTH)=4165.51, 6" ADS INLET IN (WEST)=4165.66.
6. CONST. 22 L.F. 6" ADS @ S=1.00%
7. CONST. 24" NYLOPLAST CATCH BASIN (2'X3' GRATE) W/ A CATCH BASKET, GEOTEXTILE FILTER BAG & A MYCELX FILTER (SEE DETAIL SHEET), TBC=4169.76, 6" IE IN=4165.73, 6" IE OUT=4165.73, IE BOX=4162.73
8. CONST. 41.5 L.F. 6" ADS @ S=1.00%
9. CONST. 8" NYLOPLAST DRAIN BASIN W/12"X12" GRATE, RIM=4170.40, IE THRU=4166.13
10. CONST. 13.8 L.F. 6" ADS @ S=1.00%
11. CONST. 8" NYLOPLAST DRAIN BASIN W/12"X12" GRATE, RIM=4170.30, IE THRU=4166.44
12. CONST. 19.8 L.F. 6" ADS @ S=1.00%
13. CONST. 8" NYLOPLAST DRAIN BASIN W/12"X12" GRATE, RIM=4170.30, IE THRU=4166.63
14. CONST. 32.2 L.F. 6" ADS @ S=1.00%
15. CONST. 12" NYLOPLAST DRAIN BASIN W/12"X12" GRATE, RIM=4170.30, IE THRU=4166.96
16. CONST. 65.9 L.F. 6" ADS @ S=1.00%
17. CONST. 8" NYLOPLAST DRAIN BASIN W/8" SOLID LID, RIM=4170.90, IE THRU=4167.62
18. CONST. 58.3 L.F. 6" ADS @ S=1.00%
19. CONST. 8" NYLOPLAST DRAIN BASIN W/8" SOLID LID, RIM=4170.50, IE THRU=4168.20
20. CONST. 12" NYLOPLAST DRAIN BASIN W/12" SOLID LID, RIM=4170.70, IE THRU=4166.26
21. CONST. 17.9 L.F. 6" ADS @ S=1.00%
22. CONST. 26.9 L.F. 6" ADS @ S=1.00%
23. CONST. 8" NYLOPLAST DRAIN BASIN W/12"X12" GRATE, RIM=4170.50, IE THRU=4167.89
24. CONST. 11.5 L.F. 6" ADS @ S=1.00%
25. CONST. 8" NYLOPLAST DRAIN BASIN W/12"X12" GRATE, RIM=4170.50, IE THRU=4168.00
26. CONST. 65.9 L.F. 6" ADS @ S=1.00%
27. CONST. 8" NYLOPLAST DRAIN BASIN W/12"X12" GRATE, RIM=4170.30, IE OUT=4167.62
28. CONST. 49.0 L.F. 6" ADS @ S=2.00%
29. CONST. 8" NYLOPLAST DRAIN BASIN W/12"X12" GRATE, RIM=4170.50, IE OUT=4167.50
30. CONST. 11.5 L.F. 6" ADS @ S=2.00%
31. CONST. 8" NYLOPLAST DRAIN BASIN W/12"X12" GRATE, RIM=4170.50, IE THRU=4167.27
32. CONST. 101.9 L.F. 6" ADS @ S=1.00%
33. CONST. 10" NYLOPLAST DRAIN BASIN W/10" SOLID LID, RIM=4170.1, IE OUT=4167.15
34. CONST. 72 L.F. 6" ADS @ S=1.00%
35. CONST. 8" NYLOPLAST DRAIN BASIN W/8" SOLID LID, RIM=4169.70, IE THRU=4166.38
36. CONST. 74.3 L.F. 6" ADS @ S=2.00%
37. CONST. 8" NYLOPLAST DRAIN BASIN W/8" SOLID LID, RIM=4171.00, IE THRU=4167.37
38. CONST. 4" ADS ROOF DRAIN @ S=1% MIN. CONNECT TO ADS MAIN LINE WITH INSERTA-TEE OR DIRECTLY INTO BOX AS SHOWN.
39. CONST. 1'X1'X1' DOWNSPOUT BOX, SEE DOWNSPOUT CATCH BASIN DETAIL
40. CONST. 27.2 L.F. 6" ADS @ S=1.00%
41. CONST. 8" NYLOPLAST DRAIN BASIN W/8" SOLID LID, RIM=4170.50, IE OUT=4168.47

10 5 0 10 20 30
Scale 1" = 10'

State of Utah
Department of Administrative Services
Division of Facilities Construction & Management
4110 State Office Building
Salt Lake City, Utah 84114
Phone: (801) 538 - 3018
Fax: (801) 538 - 3267
http://dfcm.utah.gov

EXCEL ENGINEERING
David W. Peterson, P.E., License #270393
12 West 100 North, Suite 201, American Fork, UT 84003
P: (801) 756-4504; F: (801) 756-4511

BUILDING NAME:

PROPERTY# 15278
USOR - DSVBI
TRAINING HOUSING
Salt Lake City, Utah

PROJECT TITLE:

USOR - Division of Services for the Blind and Visually Impaired TRAINING HOUSING

MARK	DATE	DESCRIPTION
1	5.27.10	Addendum 1

ISSUE TYPE: Construction Document Phase

ISSUE DATE: 04.30.2010

DFCM PROJECT NO: 09240200
CAD PROJECT NO:
CAD DWG FILE: THFB CIVIL PLAN 052410.DWG
DRAWN BY: GJY
CHK'D BY: DWP
COPYRIGHT: STATE OF UTAH

SHEET TITLE

GRADING PLAN

SHEET NUMBER

CG-101

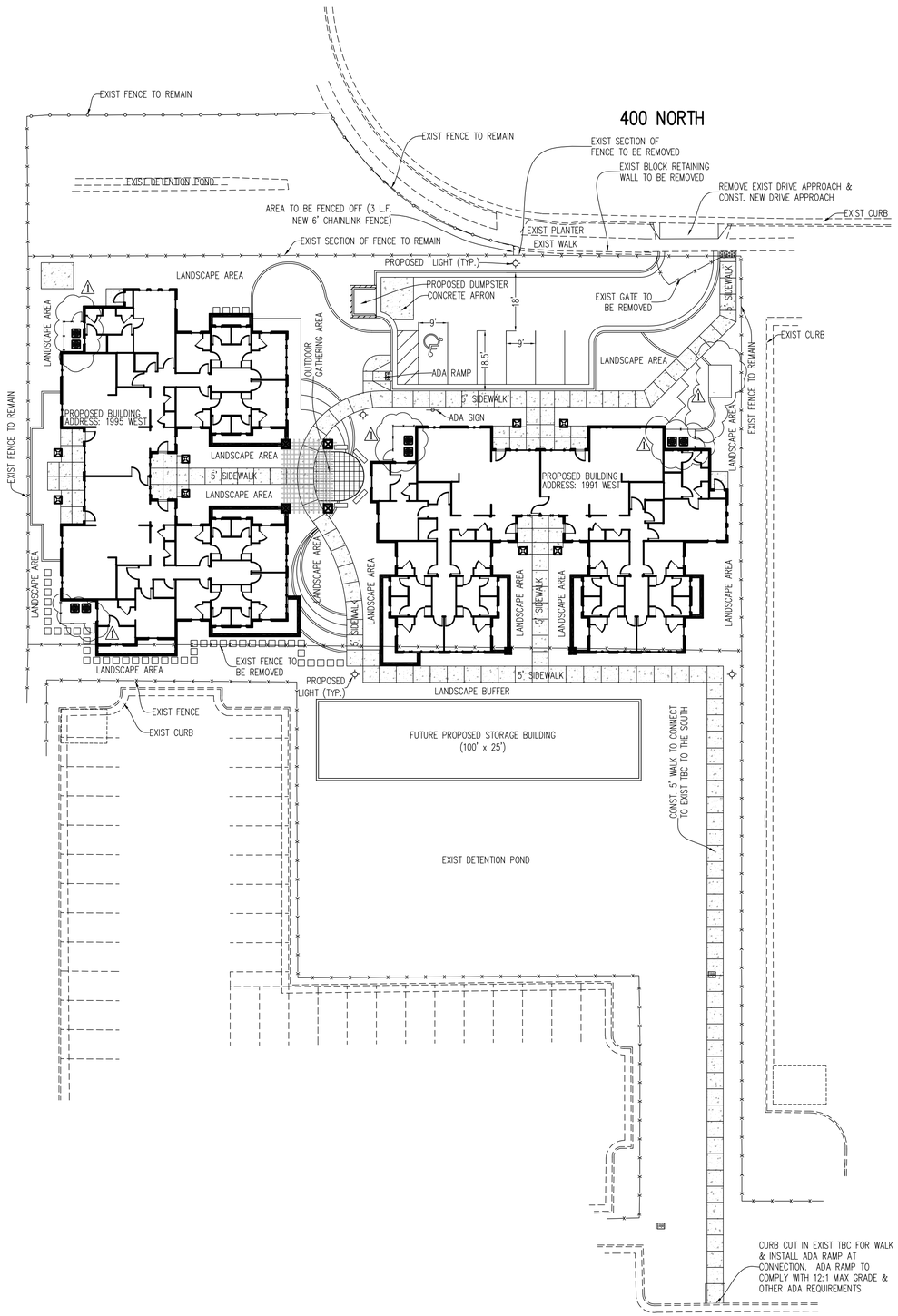

SLC FIRE DEPARTMENT NOTES

1. FIRE FOLLOW OF 1500 GPM @ 20 PSI SHALL BE PROVIDED FOR THIS PROJECT.
2. PROVIDE A MINIMUM 2A: 10BC RATED FIRE EXTINGUISHER IN ALL UNITS. THESE FIRE EXTINGUISHERS PROVIDED SHALL BE WITHIN 75' TRAVEL DISTANCE OF ALL PARTS OF THE UNITS.
3. THE K STYLE FIRE EXTINGUISHERS SHALL BE PROVIDED WITHIN 30' TRAVEL DISTANCE OF THE COOKING SURFACE WITH EACH RESTAURANT.
4. PROVIDE AN ADDRESS FOR THE BUILDING, AND TO INDICATE THE UNIT DESIGNATION UNDER THE ADDRESS LARGE ENOUGH TO BE DISTINGUISHABLE FROM THE ROAD THAT SERVES THE STRUCTURE. THE MINIMUM SIZE OF THESE NUMERALS SHALL NOT BE LESS THAN 6" HIGH AND 3/4" WIDTH. PROVIDE A TEMP. ADDRESS SIGN DURING CONSTRUCTION.
5. PROVIDE A SUPRA BOX, WHICH SHALL BE PERMANENTLY INSTALLED ON THE STRUCTURE.
6. FLOOR CARPET, IF INSTALLED ON THE STRUCTURE SHALL BE TESTED BY THE LATEST ASTM E-648 TEST, AND BE A MINIMUM CLASS '1' (CRITICAL RADIANT FLUX OF 0.45 WATTS PER SQUARE CENTIMETER)
7. WALL CARPET, IF INSTALLED, SHALL BE TESTED BY CLASS 'A' (0-23 FLAME SPREAD) WITH A SMOKE DEVELOPMENT INDEX OF 0-450.
8. PENETRATION BY CONDUITS, DUCTS, AND PIPES WITH A FIRE STOP MATERIAL THAT IS TESTED BY THE LATEST ASTM E-814 TEST.
9. INSULATION I TO BE COVERED WITH VAPOR BARRIER RATED FOR EXPOSED APPLICATION, INCLUDING SMOKE AND FLAME RATINGS.

TABULATIONS

TOTAL DISTURBED AREA:	29,665 SF
IMPERVIOUS AREA:	17,498 SF
LANDSCAPE AREA:	12,167 SF

GENERAL NOTES

1. THIS SITE IS TO CONFORM TO RECOMMENDATIONS PROVIDED IN GEOTECHNICAL REPORT COMPLETED BY PSI DATED APRIL 21, 2010.
2. THE PAVEMENT SECTION IS AS FOLLOWS:
   PRIVATE ASPHALT PARKING: 3" ASPHALT, 6" ROADBASE

20 10 0 20 40 60

Scale 1" = 20'

BENCH MARK

EXIST SANITARY SEWER MANHOLE LOCATED NORTHEAST OF EXISTING DETENTION POND
ELEVATION = 4169.57

State of Utah
Department of Administrative Services
Division of Facilities Construction & Management
4110 State Office Building
Salt Lake City, Utah 84114
Phone: (801) 538 - 3018
Fax: (801) 538 - 3267
http://dfcm.utah.gov

EXCEL ENGINEERING
David W. Peterson, P.E., License #270393
12 West 100 North, Suite 201, American Fork, UT 84003
P: (801) 756-4504; F: (801) 756-4511

BUILDING NAME:

PROPERTY# 15278
USOR - DSVBI
TRAINING HOUSING
Salt Lake City, Utah

PROJECT TITLE:

USOR - Division of Services for the Blind and Visually Impaired TRAINING HOUSING

MARK	DATE	DESCRIPTION
1	5.27.10	Addendum 1

ISSUE TYPE: Construction Document Phase

ISSUE DATE: 04.30.2010

DFCM PROJECT NO: 09240200
CAD PROJECT NO:
CAD DWG FILE: THFB CIVIL PLAN 052410.DWG
DRAWN BY: GJY
CHK'D BY: DWP
COPYRIGHT: STATE OF UTAH

SHEET TITLE

SITE PLAN

SHEET NUMBER

CS-101

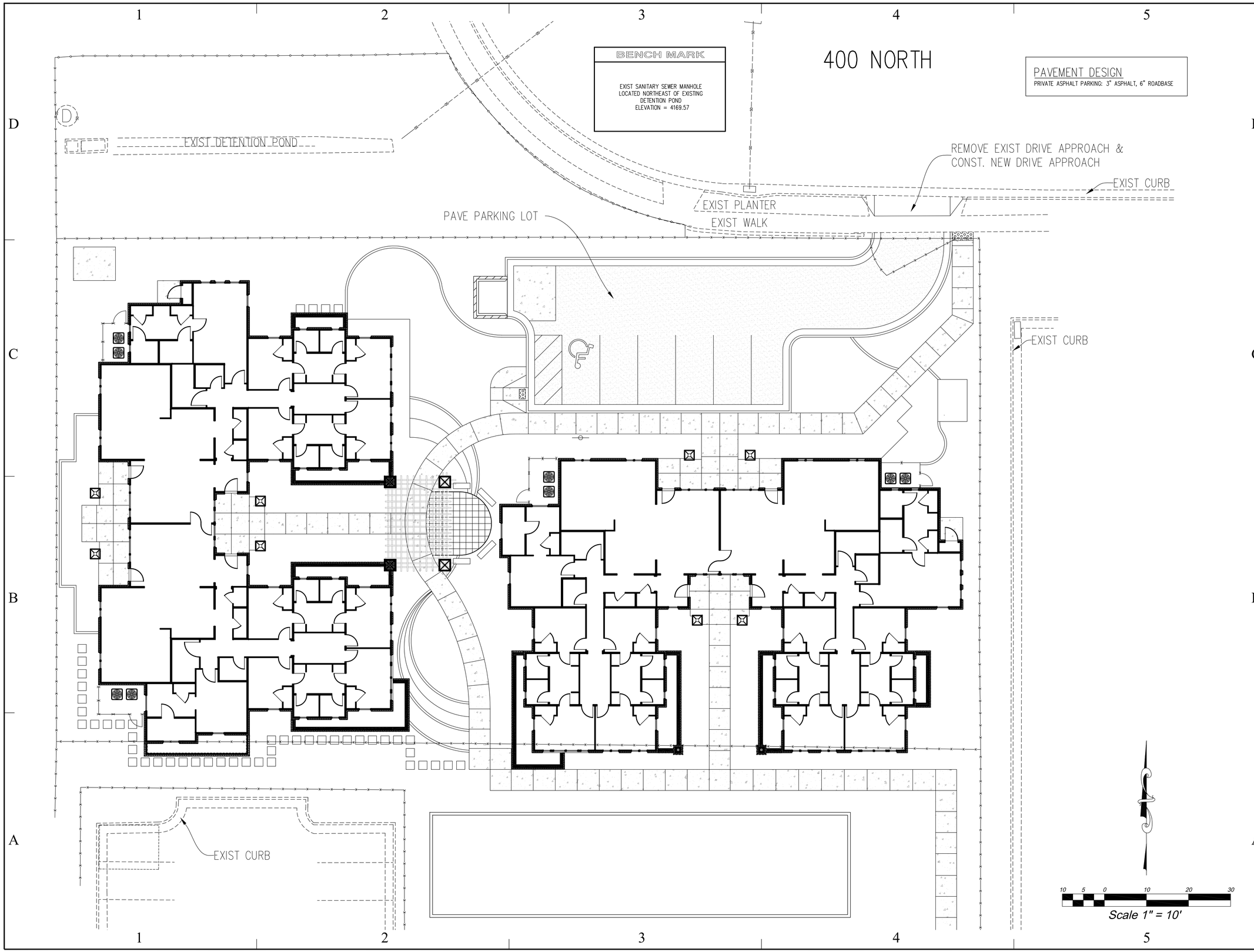

State of Utah
Department of Administrative Services

Division of Facilities
Construction & Management
4110 State Office Building
Salt Lake City, Utah 84114
Phone: (801) 538 - 3018
Fax: (801) 538 - 3267

http://dfcm.utah.gov

EXCEL ENGINEERING
David W. Peterson, P.E., License #270393
12 West 100 North, Suite 201, American Fork, UT 84003
P: (801) 756-4504; F: (801) 756-4511

BUILDING NAME:

PROPERTY# 15278
USOR - DSVBI
TRAINING HOUSING
Salt Lake City, Utah

PROJECT TITLE:

USOR - Division of Services for the Blind and Visually Impaired TRAINING HOUSING

MARK	DATE	DESCRIPTION
1	5.27.10	Addendum 1

ISSUE TYPE: Construction Document Phase

ISSUE DATE: 04.30.2010

DFCM PROJECT NO: 09240200
CAD PROJECT NO:
CAD DWG FILE: THFB CIVIL PLAN 052410.DWG
DRAWN BY: GJY
CHK'D BY: DWP
COPYRIGHT: STATE OF UTAH

SHEET TITLE

PAVING PLAN

SHEET NUMBER

CP-101

BMP: Inlet Protection - Gravel

IPG

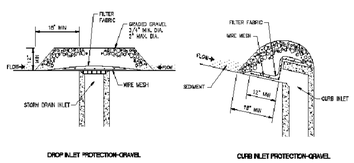

Description:
Placement of gravel filter over inlet to storm drain to filter storm water runoff.

Application:
Construct at inlets in paved or unpaved areas where upgradient area is to be disturbed by construction activities.

Installation/Application Criteria:
- Place wire mesh (with ½ inch openings) over the inlet grate extending one foot past the grate in all directions.
- Place filter fabric over the mesh. Filter fabric should be selected based on soil type.
- Place graded gravel, to a minimum depth of 12-inches, over the filter fabric and extending 18-inches past the grate in all directions.

Limitations:
- Recommended for maximum drainage area of one acre.
- Excess flows may bypass the inlet requiring down gradient controls.
- Ponding will occur at inlet.

Maintenance:
- Inspect inlet protection after every large storm event and at a minimum of once monthly.
- Remove sediment accumulated when it reaches 4-inches in depth.
- Replace filter fabric and clean or replace gravel if clogging is apparent.

Objectives
- ☐ Housekeeping Practices
- ☐ Contain Waste
- ☐ Minimize Disturbed Areas
- ☐ Stabilize Disturbed Areas
- ☐ Protect Slopes/Channels
- ☒ Control Site Perimeter
- ☒ Control Internal Erosion

Adapted from Salt Lake County BMP Fact Sheet

Targeted Pollutants
- ■ Sediment
- ☐ Nutrients
- ☐ Toxic Materials
- ☐ Oil & Grease
- ■ Floatable Materials
- ☐ Other Waste

- ■ High Impact
- ☒ Medium Impact
- ☐ Low or Unknown Impact

Implementation Requirements
- ☒ Capital Costs
- ☐ O&M Costs
- ☒ Maintenance
- ☐ Training

■ High ☒ Medium ☐ Low

BMP: Silt Fence

SF

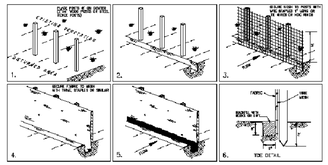

Description:
A temporary sediment barrier consisting of entrenched filter fabric stretched across and secured to supporting posts.

Application:
- Perimeter control; place barrier at downgradient limits of disturbance
- Sediment barrier; place barrier at toe of slope or soil stockpile
- Protection of existing waterways; place barrier near top of stream bank
- Inlet protection; place fence surrounding catchbasins

Installation/Application Criteria:
- Place posts 6 feet apart on center along contour (or use preassembled unit) and drive 2 feet minimum into ground. Excavate an anchor trench immediately upgradient of posts.
- Secure wire mesh (14 gage min. With 6 inch openings) to upslope side of posts. Attach with heavy duty 1 inch long wire staples, tie wires or hog rings.
- Cut fabric to required width, unroll along length of barrier and drape over barrier. Secure fabric to mesh with twine, staples, or similar, with trailing edge extending into anchor trench.
- Backfill trench over filter fabric to anchor.

Limitations:
- Recommended maximum drainage area of 0.5 acre per 100 feet of fence
- Recommended maximum upgradient slope length of 150 feet
- Recommended maximum uphill grade of 2:1 (50%)
- Recommended maximum flow rate of 0.5 cfs
- Ponding should not be allowed behind fence

Maintenance:
- Inspect immediately after any rainfall and at least daily during prolonged rainfall.
- Look for runoff bypassing ends of barriers or undercutting barriers.
- Repair or replace damaged areas of the barrier and remove accumulated sediment.
- Reanchor fence as necessary to prevent shortcutting.
- Remove accumulated sediment when it reaches ½ the height of the fence.

Objectives
- ☐ Housekeeping Practices
- ☐ Contain Waste
- ☐ Minimize Disturbed Areas
- ☐ Stabilize Disturbed Areas
- ☒ Protect Slopes/Channels
- ☒ Control Site Perimeter
- ☒ Control Internal Erosion

Adapted from Salt Lake County BMP Fact Sheet

Targeted Pollutants
- ■ Sediment
- ☐ Nutrients
- ☐ Toxic Materials
- ☐ Oil & Grease
- ☐ Floatable Materials
- ☐ Other Waste

- ■ High Impact
- ☒ Medium Impact
- ☐ Low or Unknown Impact

Implementation Requirements
- ☒ Capital Costs
- ☒ O&M Costs
- ☒ Maintenance
- ☐ Training

■ High ☒ Medium ☐ Low

BMP: Stabilized Construction Entrance and Wash Area

SCEWA

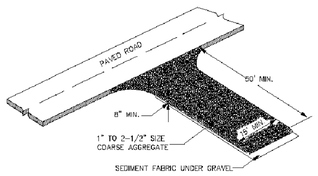

Description:
A stabilized pad of crushed stone located where construction traffic enters or leaves the site from or to paved surface. The area can be used to spray off vehicles before they leave the site.

Applications:
At any point of ingress or egress at a construction site where adjacent traveled way is paved. Generally applies to sites over 2 acres unless special conditions exist.

Installation/Application Criteria:
- Clear and grub area and grade to provide maximum slope of 2%.
- Compact subgrade and place filter fabric if desired (recommended for entrances to remain for more than 3 months).
- Place coarse aggregate, 1 to 2-1/2 inches in size, to a minimum depth of 8 inches.
- Provide water to the area that can be used to spray off vehicles as needed to prevent the tracking of mud off of the construction site. This may not be needed during dry periods of work, but is needed when construction is proceeding under wet conditions.
- Provide berming as needed to prevent sediment laden wash water from entering storm water facilities or other water bodies, or leaving the site.

Limitations:
- Requires periodic top dressing with additional stones.
- Should be used in conjunction with street sweeping on adjacent public right-of-way.
- Must be situated such that waste water does not run off site.

Maintenance:
- Inspect daily for loss of gravel or sediment buildup.
- Inspect adjacent roadway for sediment deposit and clean by shoveling and sweeping.
- Repair entrance and replace gravel as required to maintain control in good working condition.
- Expand stabilized area as required to accommodate traffic and prevent erosion at driveways.

Objectives
- ☒ Housekeeping Practices
- ☐ Contain Waste
- ☐ Minimize Disturbed Areas
- ☐ Stabilize Disturbed Areas
- ☐ Protect Slopes/Channels
- ☒ Control Site Perimeter
- ☐ Control Internal Erosion

Adapted from Salt Lake County BMP Fact Sheet

Targeted Pollutants
- ■ Sediment
- ☐ Nutrients
- ☐ Toxic Materials
- ☐ Oil & Grease
- ☐ Floatable Materials
- ☐ Other Waste

- ■ High Impact
- ☒ Medium Impact
- ☐ Low or Unknown Impact

Implementation Requirements
- ☒ Capital Costs
- ☒ O&M Costs
- ☒ Maintenance
- ☐ Training

■ High ☒ Medium ☐ Low

STORM WATER POLLUTION PREVENTION PLAN NOTES:

1. CONTRACTOR IS TO READ AND UNDERSTAND ALL BMP PRACTICES PRIOR TO ANY CONSTRUCTION ON THIS SITE. CONTRACTOR IS TO FOLLOW ALL BMP PRACTICES CONTAINED IN THESE PLANS.
2. INSTALL A SILT FENCE AS SHOWN ON THE PLAN PER BMP SF.
3. INSTALL INLET PROTECTION OVER EXISTING AND NEW INLETS PER BMP IPG.
4. CONST. A 15'X50'X2' DEEP COBBLE VEHICLE TRACKING CONTROL AREA AT ENTRANCE PER BMP SCEWA.
5. THE SITE IS TO BE WATERED AT LEAST TWICE A WEEK TO CONTROL DUST OR MORE FREQUENT AS DETERMINED BY THE CONTRACTOR.
6. CONTRACTOR IS TO REMOVE INLET PROTECTION FROM BOXES AND CLEAN-OUT BOXES BEFORE LEAVING THE SITE.

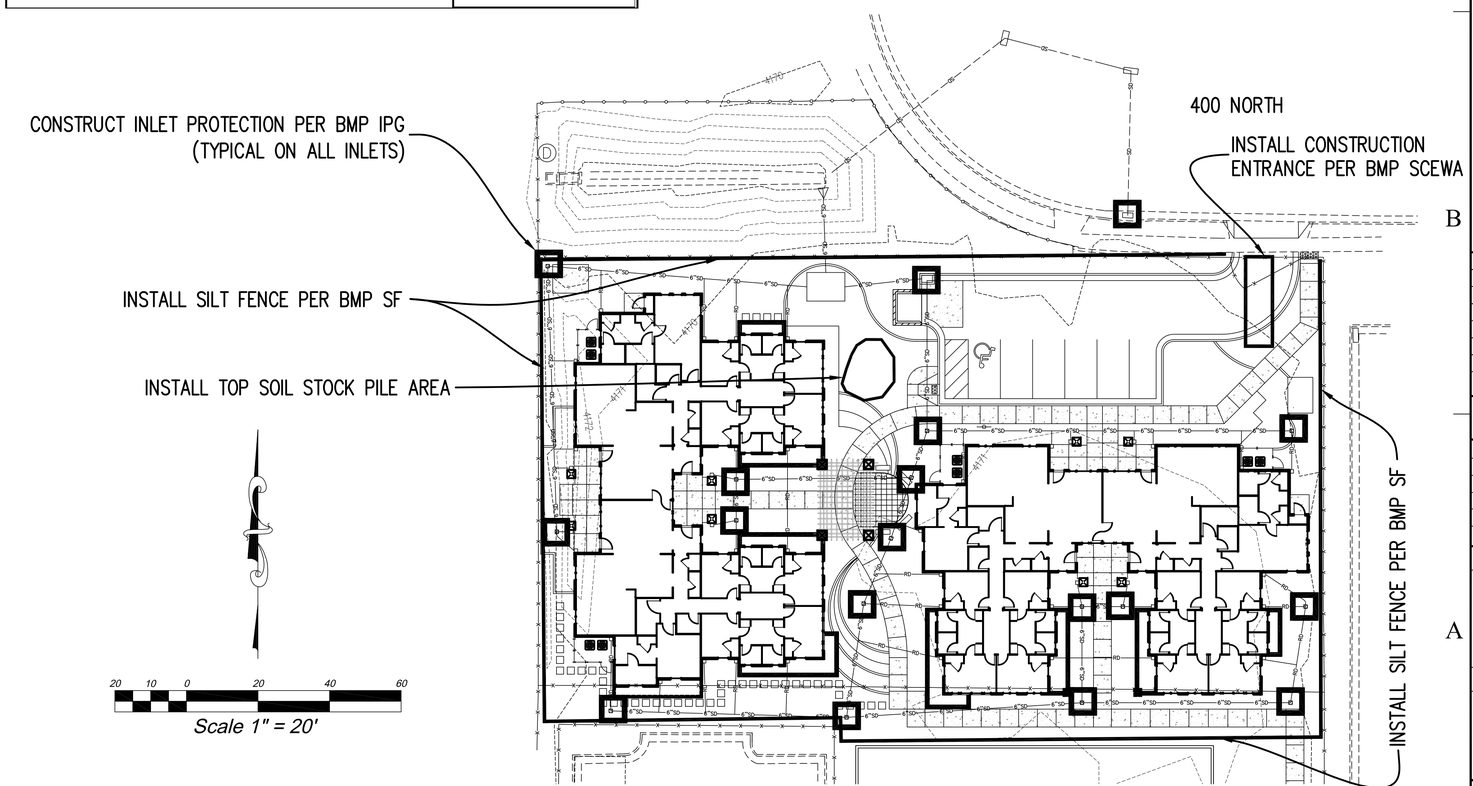

State of Utah
Department of Administrative Services
Division of Facilities Construction & Management
4110 State Office Building
Salt Lake City, Utah 84114
Phone: (801) 538 - 3018
Fax: (801) 538 - 3267
http://dfcm.utah.gov

EXCEL ENGINEERING
David W. Peterson, P.E., License #270393
12 West 100 North, Suite 201, American Fork, UT 84003
P: (801) 756-4504; F: (801) 756-4511

BUILDING NAME:

PROPERTY# 15278
USOR - DSVBI
TRAINING HOUSING
Salt Lake City, Utah

PROJECT TITLE:

USOR - Division of Services for the Blind and Visually Impaired TRAINING HOUSING

MARK	DATE	DESCRIPTION
1	5.27.10	Addendum 1

ISSUE TYPE: Construction Document Phase

ISSUE DATE: 04.30.2010

DFCM PROJECT NO: 09240200
CAD PROJECT NO:
CAD DWG FILE: THFB CIVIL PLAN 052410.DWG
DRAWN BY: GJY
CHK'D BY: DWP
COPYRIGHT: STATE OF UTAH

SHEET TITLE

STORM WATER POLLUTION PREVENTION PLAN

SHEET NUMBER

CSWPP-101

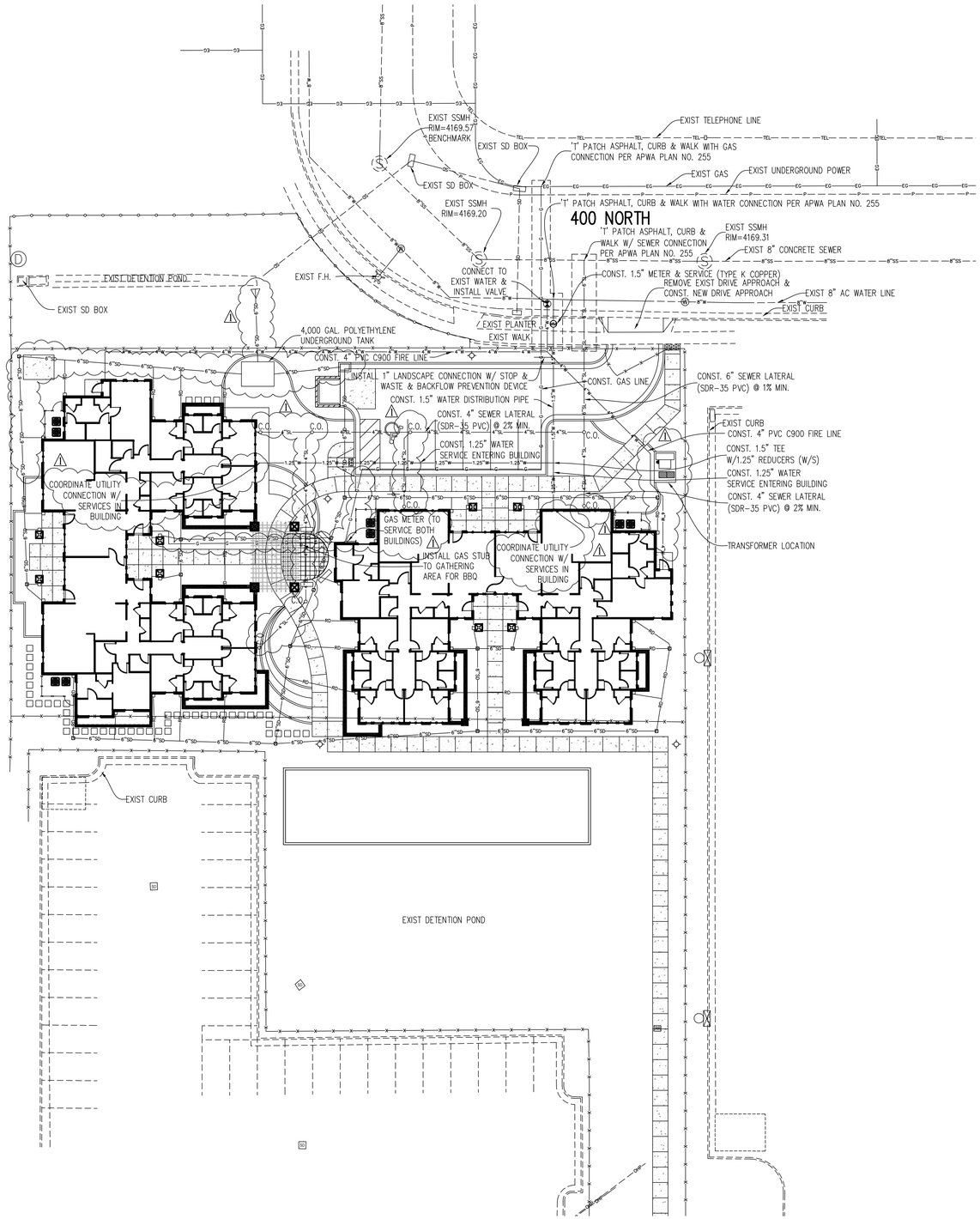

PAVEMENT DESIGN

PRIVATE ASPHALT PARKING: 3" ASPHALT, 6" ROADBASE

UTILITY LEGEND

- EXIST FIRE HYDRANT
- NEW CONCRETE SURFACE
- 8"W — CULINARY WATER
- 8"SS — SEWER PIPE PVC SDR-35
- 15"SD — STORM DRAIN PIPE
- EDGE OF ASPHALT
- X — EXIST FENCE
- OHP — EXIST OVERHEAD POWER LINE
- P — EXIST BURIED POWER LINE
- TV — EXIST TELEVISION LINE
- TEL — EXST TELEPHONE LINE
- EG — EXIST GAS LINE

BENCH MARK

EXIST SANITARY SEWER MANHOLE LOCATED NORTHEAST OF EXISTING DETENTION POND
ELEVATION = 4169.57

20 10 0 20 40 60

Scale 1" = 20'

State of Utah
Department of Administrative Services

Division of Facilities Construction & Management
4110 State Office Building
Salt Lake City, Utah 84114
Phone: (801) 538 - 3018
Fax: (801) 538 - 3267

http://dfcm.utah.gov

EXCEL ENGINEERING
David W. Peterson, P.E., License #270393
12 West 100 North, Suite 201, American Fork, UT 84003
P: (801) 756-4504; F: (801) 756-4511

BUILDING NAME:

PROPERTY# 15278
USOR - DSVBI
TRAINING HOUSING
Salt Lake City, Utah

PROJECT TITLE:

USOR - Division of Services for the Blind and Visually Impaired TRAINING HOUSING

MARK	DATE	DESCRIPTION
1	5.27.10	Addendum 1

ISSUE TYPE: Construction Document Phase

ISSUE DATE: 04.30.2010

DFCM PROJECT NO: 09240200
CAD PROJECT NO:
CAD DWG FILE: THFB CIVIL PLAN 052410.DWG
DRAWN BY: GJY
CHK'D BY: DWP
COPYRIGHT: STATE OF UTAH

SHEET TITLE

UTILITY PLAN

SHEET NUMBER

CU-101

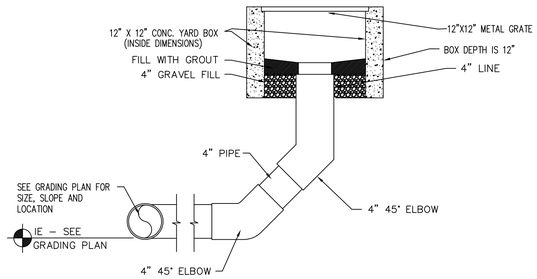

DOWNSPOUT CATCH BASIN DETAIL

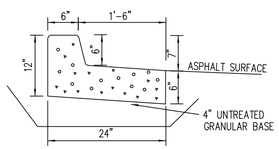

4" UNTREATED GRANULAR BASE UNDER CURB
EXTENDING 6" LATERALLY IN FRONT AND BACK
COMPACT TO 95% DENSITY ASTM D 1557-78

SPILL CURB

NOT TO SCALE

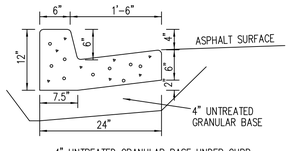

4" UNTREATED GRANULAR BASE UNDER CURB
EXTENDING 6" LATERALLY IN FRONT AND BACK
COMPACT TO 95% DENSITY ASTM D 1557-78

CARRY CURB

NOT TO SCALE

Treating Storm Water At The Source

Phase II of EPA's National Pollution Discharge Elimination system requires all but the smallest municipal and industrial storm sewer systems to treat storm water discharge to the "maximum extent practicable." The regulations are not clear on the allowable concentration of specific pollutants, but it is generally agreed that significant removal of suspended solids, hydrocarbons, sediment, metals and nutrients is required.

The EPA lists a variety of best management practices (BMPs) for treating storm water, and local jurisdictions are free to choose the ones they believe will provide the most effective and economical compliance. One important factor is the ease with which the BMP can be adapted to the existing storm sewer system.

Catch Basin Inserts

Storm water treatment is especially important in locations with higher pollutant concentrations, such as roadways, parking lots, and maintenance and loading areas. Catch basin inserts are increasingly being selected for these applications because of their adaptability to existing drainage systems, fast installation, high flow volume, relatively low cost, and pollutant removal performance.

Storm-PURE™

Nyloplast has developed a catch basin insert that provides all of the above benefits, and is particularly efficient at removing pollutants. The Storm-PURE catch basin insert is a two-stage unit that will fit into 24" nominal diameter catch basins (additional sizes to be developed as demand dictates).

The upper section consists of a perforated metal catch basket covered by a geotextile filter bag. This assembly captures sediment and debris while allowing filtered water to pass freely through the center cone.

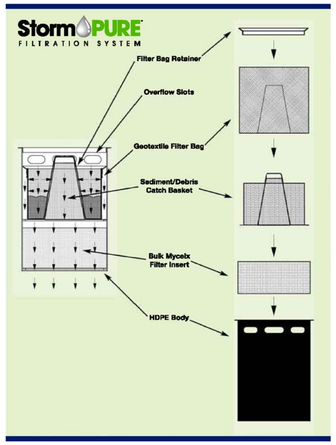

The lower stage contains a patented Mycelx® PermaKleen® filter insert that attracts and holds tiny particles of hydrocarbons and oil-bound pollutants. The specially treated absorbent material instantly bonds contaminant particles, resulting in a 99.0% removal rate of total petroleum hydrocarbons.

Both stages are housed in a corrosion-resistant high density polyethylene body with overflow slots at the top to act as a bypass in unusually high flow conditions.

The complete assembly will pass 230 gpm without bypassing the flow.

The Storm-PURE™ catch basin insert fits readily into standard 24" Nyloplast catch basins (including curb inlets and road and highway basins), providing a highly engineered solution for treating storm water. A kit is available for retrofitting standard concrete basins.

Unmatched Pollutant Removal

The Storm-PURE™ water treatment insert stands apart from competitive units in its ability to remove suspended solids, hydrocarbons and other pollutants. In a laboratory test, polluted storm water was processed through the unit, and samples of the influent and effluent were analyzed by Analytical Environmental Services, Inc. to determine removal efficiency. The results are shown in the table below.

The testing procedure and lab results were third party certified by Lloyds Register North America, Inc., certificate #NAQ 0605840-01 (complete report available on Nyloplast Technics CD, Version 4).

Features & Benefits of the MYCELX® PermaKleen Filter

- MYCELX will not water log.
- MYCELX will not support microbial or insect growth.
- The unused capacity will remain fresh.
- Flow rate over 200 gpm in Storm-PURE Insert.

MYCELX captures and permanently bonds hydrocarbon pollutants (with no desorption). It also removes pesticides, metals and other construction chemicals attached to the hydrocarbon molecules.

Pollutant Removal Performance

Analyzed Components	Unit	Reporting Limit	Influent	Effluent	Removal
Total Suspended Solids (TSS)	mg/L	5	36	11	69.44%
Total Petroleum Hydrocarbons (TPH)	mg/L	5	96.9	BRL	99.90%
*Chemical Oxygen Demand (COD)	mg/L	10	156	BRL	94.23%
*Nitrogen	mg/L	0.2	1.48	BRL	98.33%
*Total Phosphorus	mg/L	0.25	19.7	12.8	35.03%
*Iron	ug/L	100	1490	362	75.70%
*Copper	ug/L	5	86.2	11.5	86.66%
*Lead	ug/L	1	1110	106	90.46%
*Zinc	ug/L	10	6060	296	95.28%

*Removal related to the components bonding with hydrocarbon molecules.

BRL - Below Reporting Limit

Storm-PURE Specifications

Max. Flow Rate of Filter (at 0 ft. of head weir flow)	230 gpm	(0.52 cfs)
Max. Flow Rate of Bypass (at 0.5 ft. of head orifice flow)	1189 gpm	(2.65 cfs)
Max. Flow Rate of Filter & Bypass (at 0.5 ft. of head orifice flow)	1419 gpm	(3.16 cfs)
Primary Filter (Upper Section) Sediment/Debris Storage Capacity	1.42 cu ft	(170 lbs)
Sediment/Debris Particle Size Captured by Primary Filter	>0.033 in	(838 micron)
Sediment/Debris Particle Size Captured by Secondary (Mycelx) Filter	>0.012 in	(300 micron)
Secondary Filter Hydrocarbon Removal Storage Capacity	15 lb	(2.04 gal)
Secondary Filter Media Volume	1.60 cu ft	-

Dimensions*

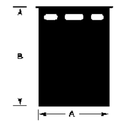

Nom. Diameter	A	B
18"	15.35"	16.00"
21"	21.35"	18.00"
24"	21.35"	30.00"

*Additional sizes to be developed as demand by demand.

Recommended Maintenance Schedule and Procedure

(Personnel should wear protective gear on hands and proper eye protection.)

Monthly, or following 6" of accumulated rainfall:

1. Remove grate.
2. Lift out the catch basket (upper chamber) by hand or mechanical lifting device.
3. Remove the gasket material and lift out the geotextile filter bag from the basket.
4. Dispose of sediment and debris. If sediment has dried or caked, it may be necessary to wash the bag.
5. Inspect the filter bag. If too much sediment has dried and cannot be washed out, or if any tears or holes are discovered, the bag should be replaced.
6. Re-position the bag in the catch basket and re-install the basket into the top of the Storm-PURE unit.
7. Replace the grate.

Every 6 months, or after oil/fuel or other hazmat spill event:

1. Clean and inspect the filter bag as outlined at left.
2. The Mycelx hydrocarbon absorption bag is located in the lower chamber of the Storm-PURE assembly.
3. Obtain a replacement Mycelx filter by calling 800-821-6710.
4. Prior to removing filter, consult with local waste management authorities to determine proper disposal procedure.
5. Remove Mycelx filter bag and dispose of in accordance with local requirements.
6. Install a fresh Mycelx filter into the lower chamber, making sure it is lying flat and is equally displaced.
7. Re-assemble the unit and replace the grate.

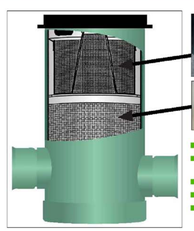

- Sediment/debris catch basket
- Geotextile filter bag (primary filter)
- Storm-PURE™ body
- MYCELX™ filter

- Low cost BMP solution for hydrocarbon and debris removal
- Superior flow and bypass design ensures capture and eliminates back-up
- Quick and easy installation and maintenance requirements
- 99% hydrocarbon removal efficiency under test conditions
- Lloyds Register third party certified testing procedure and removal rates

Nyloplast®

3130 Verona Avenue • Buford, Georgia 30518 • (866) 888-8479 / (770) 932-2443 - Fax: (770) 932-2490

www.nyloplast-us.com

Nyloplast® and Storm PURE™ Systems are registered trademarks of Nyloplast. Mycelx® is a registered trademark of Mycelx Inc. ©2007 Nyloplast

NP147/0107

State of Utah
Department of Administrative Services

Division of Facilities
Construction & Management
4110 State Office Building
Salt Lake City, Utah 84114
Phone: (801) 538 - 3018
Fax: (801) 538 - 3267

http://dfcm.utah.gov

EXCEL ENGINEERING
David W. Peterson, P.E., License #270393
12 West 100 North, Suite 201, American Fork, UT 84003
P: (801) 756-4504; F: (801) 756-4511

BUILDING NAME:

PROPERTY# 15278
USOR - DSVBI
TRAINING HOUSING
Salt Lake City, Utah

PROJECT TITLE:

USOR - Division of Services for the Blind and Visually Impaired TRAINING HOUSING

MARK	DATE	DESCRIPTION
1	5.27.10	Addendum 1

ISSUE TYPE: Construction Document Phase

ISSUE DATE: 04.30.2010

DFCM PROJECT NO: 09240200
CAD PROJECT NO:
CAD DWG FILE: THFB CIVIL PLAN 052410.DWG
DRAWN BY: GJY
CHK'D BY: DWP
COPYRIGHT: STATE OF UTAH

SHEET TITLE

DETAIL SHEET

SHEET NUMBER

CU-501

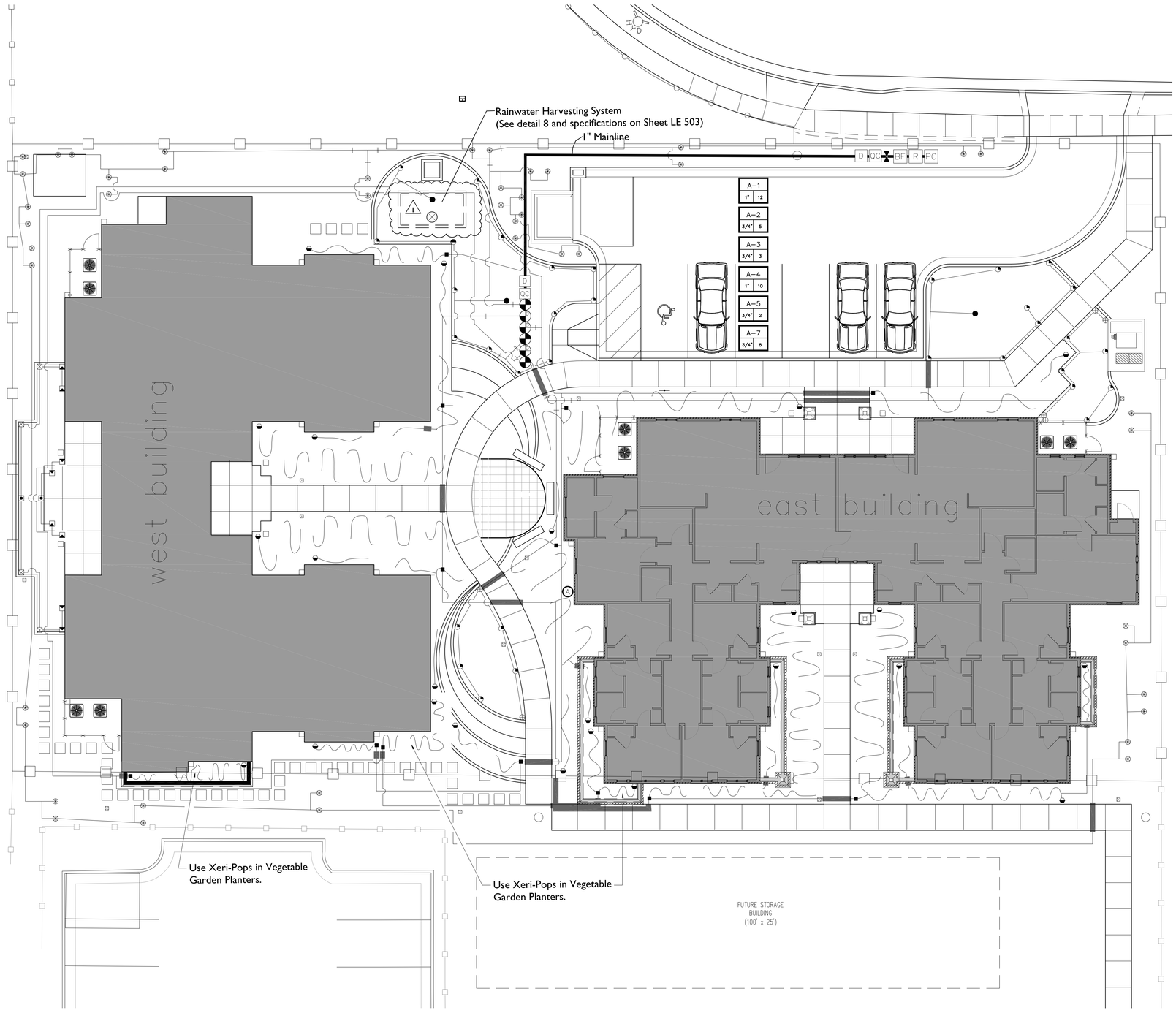

IRRIGATION PLAN

1" = 10'-0"

RIES PRESSURE REDUCING VALVE

QUICK COUPLING VALVE

1" MANUAL DRAIN VALVE

–D SERIES REMOTE CONTROL VALVE. SIZE
RESSURE REGULATING MODULE TO ACHIEVE

N CONTROL ZONE KIT (XCZ–075–PRF) FOR

TE VALVE (T–113). SIZE PER LINE.

MODULAR SERIES OUTDOOR CONTROLLER.

ON:

ONTROLLER & VALVE NUMBER

)

QTY.	EMITTER	MANUFACTURER
5	XB–20–PC	RAINBIRD
3	XB–20–PC	RAINBIRD
1	XB–20–PC	RAINBIRD
1	XB–10–PC	RAINBIRD
ON	XERI–POP	RAINBIRD
ON	XERI–POP	RAINBIRD

ULE 40 MAINLINE PIPE AND FITTINGS. SIZE AS NOTED.

DULE 40 PIPE LATERALS AND FITTINGS.
ER SCHEDULE BELOW:

BS DISTRIBUTION TUBING WITH MANUAL
VE.

IDCF75MPT PVC TO POLY PIPE ADAPTER

O PVC SLEEVING. ALL IRRIGATION CONTROL WIRES TO BE IN
SLEEVE. SIZE AS REQUIRED. 2" MINIMUM. ALL PIPING AND WIRING
ADS, WALKS, ETC. SHALL BE INSTALLED IN A SLEEVE.

NOTES

N IS DIAGRAMMATIC ONLY. ALL IRRIGATION COMPONENTS ARE TO BE
APE AREAS. ITEMS SHOWN ON WALKWAYS AND BUILDINGS IS FOR
Y. THE IRRIGATION CONTRACTOR SHALL BE RESPONSIBLE FOR THE
ORDANCE WITH THE DRAWINGS. LAYOUT MAY BE MODIFIED IF
HE SITE. DO NOT INCREASE OR DECREASE THE NUMBER OF HEADS
UNLESS IT IS ACCEPTABLE TO THE LANDSCAPE ARCHITECT. THE
STED FOR COMPLETE COVERAGE AND ALL NECESSARY ADJUSTMENTS
OPER COVERAGE PRIOR TO ACCEPTANCE BY THE OWNER.

FY ALL EXISTING UTILITIES BEFORE CONSTRUCTION BEGINS.
TECT AND PRESERVE ALL EXISTING UTILITIES LOCATED ON SITE. ANY
UTILITIES SHALL BE REPAIRED AND/OR REPLACED TO UTILITY
AND SPECIFICATIONS AT CONTRACTOR'S EXPENSE.

ON–SITE PRE–CONSTRUCTION MEETING WITH OWNER'S
LANDSCAPE ARCHITECT PRIOR TO ANY CONSTRUCTION.

ROVIDE AN AS–BUILT DRAWING OF THE IRRIGATION SYSTEM SHOWING
DIMENSIONED LOCATIONS OF ALL VALVES, WIRE SPLICES NOT IN A
N VALVES. SHOW DIMENSIONS TO PERMANENT SITE ELEMENT, SUCH
RES.

SLOPE TO DRAIN. ADD ANY ADDITIONAL DRAINS, AS THE SITE
BE INSTALLED AS NECESSARY FOR COMPLETE DRAINAGE OF THE

SIBLE FOR POWER CONNECTION.

SIBLE FOR ALL PIPING, WIRING AND EQUIPMENT NECESSARY TO
OF CONNECTION TO BACKFLOW PREVENTER.

ONSIBLE TO OBTAIN ANY NECESSARY PERMITS AND TO BE IN
LOCAL STANDARDS, CODES AND REGULATIONS.

State of Utah
Department of Administrative Services

Division of Facilities
Construction & Management
4110 State Office Building
Salt Lake City, Utah 84114
Phone: (801) 538 - 3018
Fax: (801) 538 - 3267

http://dfcm.utah.gov

northland
DESIGN GROUP
landscape architecture | landscape design | land planning

466 NORTH 900 WEST SUITE 200
AMERICAN FORK, UTAH 84003
PHONE: 801-763-0179

BUILDING NAME:

PROPERTY# 15278
USOR - DSVBI
TRAINING HOUSING
Salt Lake City, Utah

PROJECT TITLE:

USOR - Division of Services for the Blind and Visually Impaired TRAINING HOUSING

STATE OF UTAH
DON LESLIE
NO. 371132-5301
Licensed Landscape Architect

MARK	DATE	DESCRIPTION
1	5-27-10	Addendum No. 1
-	---------	----------

ISSUE TYPE: Design Development

ISSUE DATE: 03.30.2010

DFCM PROJECT NO: 09240200
CAD PROJECT NO:
CAD DWG FILE: Irrigation Plan.dwg
DRAWN BY: DL
CHK'D BY: JF
COPYRIGHT: STATE OF UTAH

SHEET TITLE

Irrigation Plan

SHEET NUMBER

LS-101

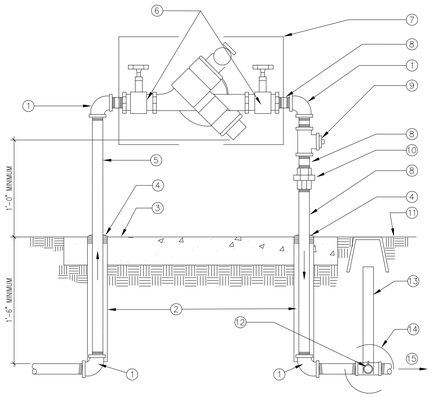

1. ELBOW (LINE SIZE)
2. PVC SLEEVE
3. 4" CONCRETE SLAB (SLOPE TO DRAIN)
4. SEALANT
5. FROM WATER SOURCE
6. BRONZE GATE VALVES
7. BACKFLOW PREVENTER ASSEMBLY
8. NIPPLE, TYPICAL (LINE SIZE)
9. TEE WITH 1" PLUG FOR SPRINKLER BLOWOUT WITH AIR COMPRESSOR
10. UNION
11. FINISH GRADE
12. MANUAL DRAIN REQUIRED ONLY IF LINE SLOPES TOWARD BACKFLOW PREVENTER
13. 2" CLASS 200 PVC SLEEVE
14. MANUAL DRAIN VALVE
15. LINE TO SYSTEMS FLOW

1 REDUCED PRESSURE BACKFLOW ASSEMBLY
N.T.S.

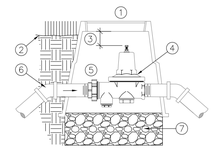

1. 10" ROUND GREEN PLASTIC VALVE BOX, W/ BOLT LOCK, CARSON-BROOKS OR EQUAL
2. FINISH GRADE
3. 12" MAX.
4. BRONZE PRESSURE REDUCING VALVE
5. UNION
6. MAINLINE. ANGLE TO SPECIFIED DEPTH WITH 45-DEGREE ELBOWS, SIZE PER DRAWING.
7. GRAVEL, 2 CU. FT. MIN.

2 REDUCED PRESSURE VALVE
N.T.S.

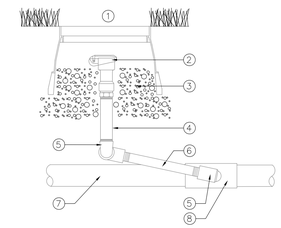

1. 10" ROUND GREEN PLASTIC VALVE BOX, W/ BOLT LOCK, CARSON-BROOKS OR EQUAL
2. QUICK COUPLING VALVE – SEE EQUIPMENT LEGEND
3. 6" MIN. PEA GRAVEL LAYER UNDER ENTIRE BOX AND IN BOX TO STABILIZE QUICK COUPLER
4. GALV. NIPPLE (LENGTH AS REQUIRED)
5. GALV. ELBOW
6. 12" GALV. NIPPLE
7. MAINILNE (LINE SIZE PER PLAN)
8. MAINLINE FITTING

3 QUICK COUPLING VALVE
N.T.S.

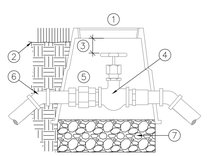

1. 10" ROUND GREEN PLASTIC VALVE BOX, W/ BOLT LOCK, CARSON-BROOKS OR EQUAL
2. FINISH GRADE
3. 12" MAX.
4. BRONZE GATE VALVE
5. UNION
6. MAINLINE. ANGLE TO SPECIFIED DEPTH WITH 45-DEGREE ELBOWS, SIZE PER DRAWING.
7. GRAVEL, 2 CU. FT. MIN.

4 GATE VALVE
N.T.S.

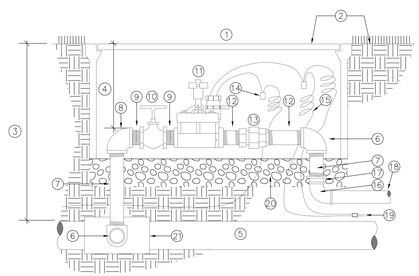

1. STANDARD OR JUMBO VALVE BOX.
2. INSTALL AT GRADE
3. 30" MAX. DEPTH
4. 6"-12"
5. MAIN WATER SUPPLY LINE
6. PVC SCH. 80 ELBOW
7. PVC SCH. 80 NIPPLE; LENGTH AS REQUIRED (TYP.)
8. PVC SCH. 80 ELL SAME SIZE AS VALVE
9. SCH. 80 NIPPLE ON EITHER SIDE OF GATE VALVE
10. MILWAUKEE BRAND OR APPROVED AMERICAN MADE BRASS GATE VALVE W/ NON RISING STEM (LINE SIZE)
11. ELECTRIC CONTROL VALVE – SEE EQUIPMENT SCHEDULE
12. SCH. 80 NIPPLE ON EITHER SIDE OF UNION
13. PVC SCH. 80 UNION
14. WATER TIGHT CONNECTORS (3M DBY ONLY)
15. PROVIDE 18" EXPANSION LOOP AT EACH WIRE CONNECTOR IN BOX.
16. SCH. 80 ELBOW WITH SCHED. 80 NIPPLE INTO S X T BUSHING TO LATERAL
17. SCH. 80 ELBOW /NIPPLES
18. LATERAL LINE
19. CONTROL WIRES
20. 6" MIN. DEPTH CLEAN PEA GRAVEL
21. PVC SCH. 80 TEE SXSXS WITH SCH. 80 SXT BUSHING OR DOUBLE STRAP SADDLE.

5 REMOTE CONTROL VALVE
N.T.S.

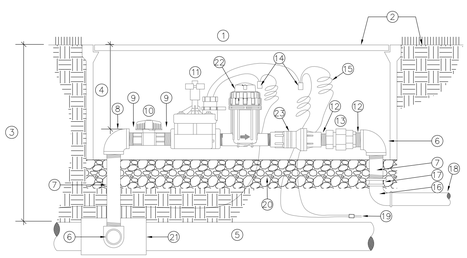

1. STANDARD OR JUMBO VALVE BOX.
2. INSTALL AT GRADE
3. 30" MAX. DEPTH
4. 6"-12"
5. MAIN WATER SUPPLY LINE
6. PVC SCH. 80 ELBOW
7. PVC SCH. 80 NIPPLE; LENGTH AS REQUIRED (TYP.)
8. PVC SCH. 80 ELL SAME SIZE AS VALVE
9. SCH. 80 NIPPLE ON EITHER SIDE OF BALL VALVE
10. PVC BALL VALVE (LINE SIZE)
11. ELECTRIC CONTROL VALVE – SEE EQUIPMENT SCHEDULE
12. SCH. 80 NIPPLE ON EITHER SIDE OF UNION
13. PVC SCH. 80 UNION
14. WATER TIGHT CONNECTORS (3M DBY ONLY)
15. PROVIDE 18" EXPANSION LOOP AT EACH WIRE CONNECTOR IN BOX.
16. SCH. 80 ELBOW WITH SCHED. 80 NIPPLE INTO S X T BUSHING TO LATERAL
17. SCH. 80 ELBOW /NIPPLES
18. LATERAL LINE
19. CONTROL WIRES
20. 6" MIN. DEPTH CLEAN PEA GRAVEL
21. PVC SCH. 80 TEE SXSXS WITH SCH. 80 SXT BUSHING OR DOUBLE STRAP SADDLE.
22. DRIP VALVE FILTER – SEE EQUIPMENT SCHEDULE
23. INLINE PRESSURE REGULATOR – SEE EQUIPMENT SCHEDULE

6 DRIP REMOTE CONTROL VALVE ASSEMBLY
N.T.S.

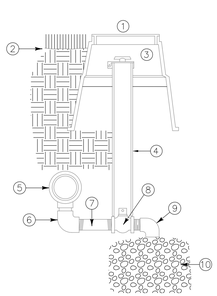

1. 10" ROUND VALVE BOX CARSON-BROOKS 910 OR EQUAL
2. FINISH GRADE
3. LOCKING VALVE CAP PERMANENTLY TO SLEEVE. TOP OF MARKER 4"-6" BELOW GRADE
4. 2" PVC SCH. 40 SLEEVE NOTCHED OVER VALVE
5. PVC SCH. 80 TEE & MAIN LINE
6. 3/4" PVC SCH. 80 ELBOW
7. 3/4" PVC SCH. 80 NIPPLE (LENGTH AS REQUIRED)
8. FORD 3/4" B11-333 BALL VALVE
9. 3/4" MARLEX STREET ELBOW
10. GRAVEL SUMP – 18" x 18" x 12" MIN. SIZE

NOTE:
1) ALL PVC NIPPLES TO BE SCH. 80
2) PROVIDE VALVE KEY TO OWNER

7 MANUAL DRAIN
N.T.S.

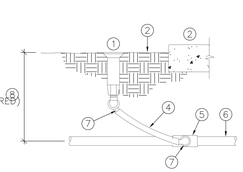

1. POP-UP SPRAY HEAD – SEE LEGEND
2. FINISH GRADE
3. NOTE: ALL SPRAY HEADS TO BE PLACED 2" CLEAR OF ALL HARDSCAPE SURFACES
4. SWING PIPE WITH SPIRAL BARB FITTINGS
5. PVC SCH. 40 SxSxT TEE (OR ELL)
6. PVC LATERAL LINE, SIZE AS NOTED ON PLAN
7. SPIRAL BARB FITTINGS
8. DEPTH – SEE NOTES & TRENCH DETAIL

8 SPRAY HEAD
N.T.S.

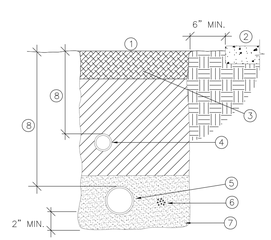

1. IF LAWN IS EXISTING, REPLACE SOD AS PER OWNER'S SPECIFICATIONS
2. ADJACENT HARD SURFACE
3. TOPSOIL FREE FROM ROCKS GREATER THAN 1" DIAMETER
4. NON-PRESSURE LATERAL LINE
5. PRESSURE MAIN LINE
6. DIRECT BURIAL, LOW VOLTAGE CONTROL WIRES; TAPE AND BUNDLE AT 10' O.C. PLACE 6" EITHER SIDE OF PIPE OR 6" BELOW.
7. MORTAR SAND BEDDING 2" BELOW AND ABOVE PIPE. NO ROCKS LARGER THAN 1" DIAMETER TO GO BACK INTO TRENCH AS PER WRITTEN SPECIFICATIONS.
8. PIPE DEPTHS:
   MAIN LINE: 18 – 30" COVER
   LATERAL LINE: 8 – 14" COVER

NOTE: SEE SLEEVING DETAIL FOR TRENCHING IN PAVED AREAS.

9 TRENCH DETAIL
N.T.S.

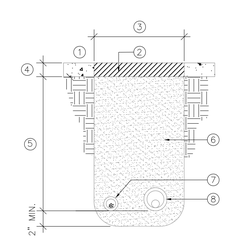

1. EXISTING CONCRETE / ASPHALT
2. SAWCUT & PATCH CONCRETE/ ASPHALT AS REQUIRED
3. WIDTH AS REQUIRED
4. DEPTH FOR CONCRETE DEPTH FOR ASPHALT
5. DETPH AS REQUIRED TO MATCH MAINLINE (18"-30") OR LATERAL (8"-14") PIPING OR CONTROL WIRES (18"-30")
6. COMPACTED BACKFILL FREE FROM ROCKS GREATER THAN 1 1/2" IN DIAMETER.
7. CONTROL WIRES 6" TO EITHER SIDE OR 6" UNDER MAINLINE.
8. PVC MAIN LINE/LATERAL

NOTES:
- SLEEVES 4" AND SMALLER USE PVC SCH. 40 PIPE.
- SLEEVES >4" USE PVC SEWER PIPE
- ALL SLEEVES SHALL BE 2" LARGER THAN PIPE TO BE SLEEVED.

10 SLEEVING DETAIL
N.T.S.

IRRIGATION DETAILS

State of Utah
Department of Administrative Services
Division of Facilities Construction & Management
4110 State Office Building
Salt Lake City, Utah 84114
Phone: (801) 538 - 3018
Fax: (801) 538 - 3267
http://dfcm.utah.gov

northland DESIGN GROUP
landscape architecture | landscape design | land planning
466 NORTH 900 WEST SUITE 200
AMERICAN FORK, UTAH 84003
PHONE: 801-763-0179

BUILDING NAME:
PROPERTY# 15278
USOR - DSVBI
TRAINING HOUSING
Salt Lake City, Utah

PROJECT TITLE:
USOR - Division of Services for the Blind and Visually Impaired TRAINING HOUSING

STATE OF UTAH
DON LESLIE
NO. 371132-6301
Licensed Landscape Architect

MARK	DATE	DESCRIPTION
1	5-27-10	Addendum No. 1
-	---------	----------

ISSUE TYPE: Design Development

ISSUE DATE: 03.30.2010

DFCM PROJECT NO: 09240200
CAD PROJECT NO:
CAD DWG FILE: Irrigation Details.dwg
DRAWN BY: DL
CHK'D BY: JF
COPYRIGHT: STATE OF UTAH

SHEET TITLE
Irrigation Details

SHEET NUMBER
LE-502

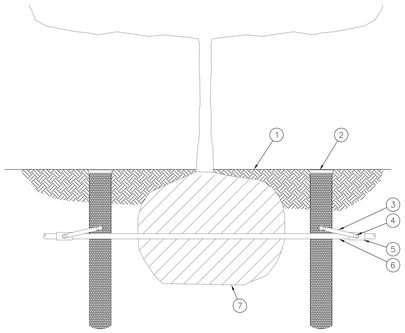

1. FINISH GRADE/TOP OF MULCH
2. ROOT WATERING SYSTEM
3. SWING ASSEMBLY
4. 1/2-INCH MALE NPT INLET
5. PVC SCH 40 TEE OR ELL
6. LATERAL PIPE
7. TREE ROOT BALL

1 ROOT WATER SYSTEM (RWS)
N.T.S.

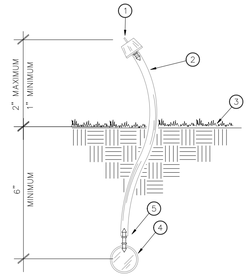

1. DRIP EMITTER – SEE EMITTER SCHEDULE
2. 1/4" VINYL DISTRIBUTION TUBING (MAX. 6' LENGTH)
3. FINISH GRADE
4. 3/4" POLY TUBING
5. BARBED CONNECTOR

2 DRIP EMITTER
N.T.S.

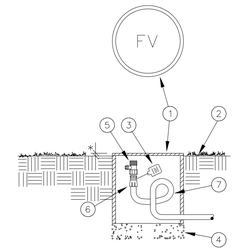

LEGEND

1. BROOKS #1100 10"x10" ROUND VALVE BOX WITH GREEN COVER. HEAT BRAND "FV" ON COVER IN 2" UPPER CASE CHARACTERS.
2. FINISH GRADE.
3. I.D. TAG. (SEE NOTES).
4. 3/4" CRUSHED ROCK. 6" DEPTH.
5. AG PRODUCTS 3/4"-B BALL VALVE.
6. PVC SCH. 40 MALE ADAPTER
7. 3/4" POLY TUBING

* 1" IN LAWN AREAS.
2" IN SHRUB AREAS.

NOTE: INSTALL FLUSH VALVES AT END OF EACH DRIP LATERAL RUN.

3 MANUAL FLUSH VALVE
N.T.S.

LEGEND

1. FROM ELECTRIC CONTROL DRIP VALVE ASSEMBLY
2. 3/4" POLY TUBING (LENGTH NOT TO EXCEED 250' AND/OR 8 GPM)
3. DRIP VALVE ASSEMBLY, SEE DETAIL
4. TYPICAL SHRUB
5. DRIP EMITTER ASSEMBLY (SEE DETAIL THIS SHEET)
6. MANUAL FLUSH VALVE, SEE DETAIL
7. 1/4" VINYL DISTRIBUTION TUBING (MAX. LENGTH IS 6')

NOTE: WHEN POSSIBLE, PLACE EMITTER UPHILL FROM SHRUB.

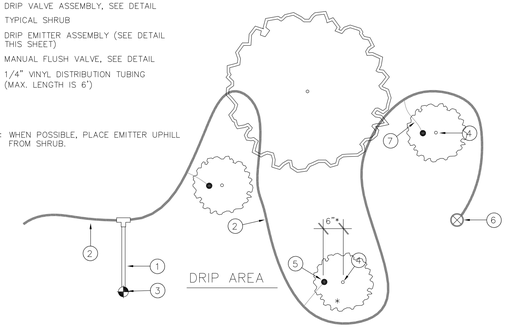

4 TYPICAL DRIP EMITTER LAYOUT
N.T.S.

LEGEND

1. ELECTRIC DRIP CONTROL VALVE ASSEMBLY (SEE EQUIPMENT SCHEDULE)
2. 3/4" POLY TUBING LATERAL (LENGTH NOT TO EXCEED 250' AND/OR 8 GPM)
3. MANUAL FLUSH VALVE, SEE DETAIL
4. LINE CONTINUES
5. TYPICAL SHRUB
6. TYPICAL TREE
7. FROM IRRIGATION SOURCE
8. BOULDER – SEE PLANTING PLAN

NOTE
REFER TO TYPICAL EMITTER LAYOUT DETAIL FOR EMITTER LOCATIONS FOR INDIVIDUAL SHRUBS AND TREES.

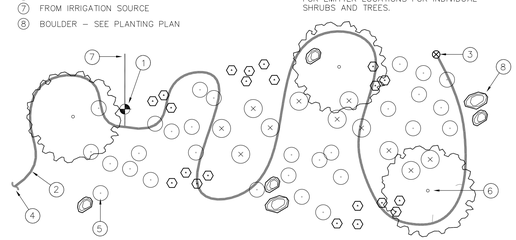

5 TYPICAL DRIP EMITTER LATERAL SYSTEM
N.T.S.

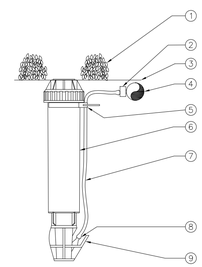

1. PLANT MATERIAL
2. INSERT FITTING: 1/4" SELF-PIERCING BARB CONNECTOR
3. FINISH GRADE
4. 1/2" POLYETHYLENE TUBING
5. SNAP COLLAR
6. RAINBIRD XERI-POP (SEE EQUIPMENT SCHEDULE)
7. 1/4" DISTRIBUTION TUBING (SEE EQUIPMENT SCHEDULE)
8. 1/4" BARBED INLET
9. PROTECTIVE FLANGE

6 XERI-POP MICRO SPRAY HEAD
N.T.S.

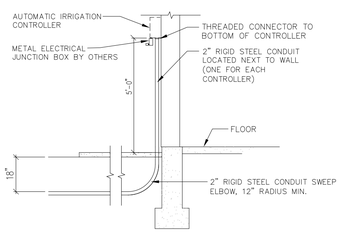

7 IRRIGATION CONTROLLER
N.T.S.

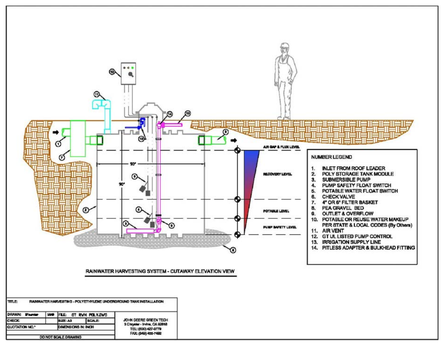

8 RAINWATER HARVESTING SYSTEM
N.T.S.

COMPANY: **JOHN DEERE GREEN TECH**

CONTACT: Fritz Law
District Sales Manager

NUMBERS: 303-598-5428
Fax: 866-571-9525

SPECIFICATIONS FOR POLYETHYLENE UNDERGROUND WATER TANKS

QUALITY ASSURANCE
Polyethylene underground water storage tank package as supplied by John Deere Green Tech

GENERAL GOVERNING STANDARDS
1. ASTM 1998-93, Polyethylene Storage Tanks, those specific sections considered germane and prudent as applied to **underground water storage tanks** only.
- Section 4 : Type 2 high density virgin linear polyethylene resin
- Section 5 : Material standards for food contact grade polyethylene resin
- Section 7 : Fittings for polyethylene water tanks
- Section 8 : Performance requirements based on impact testing
- Section 9 : Dimensions and tolerances
- Section 10 : Workmanship

DESIGN STANDARDS / MODULAR POLYETHYLENE TANK SYSTEMS
1. *External Hydrostatic loading*: The empty tank system with manway risers, when anchored into a sand backfilled excavation at a 3 foot bury depth and flooded with water to spring line, must maintain its structural shape and 100% water tightness.
2. *Traffic Loading*: Tank systems, when properly installed and incorporating an approved concrete surface slab, must withstand automotive and H20 truck traffic loads.
3. *Dry Bury Installation*: Tank systems must have sufficient wall strength and structural integrity to be installed and **completely backfilled** to a 3 foot bury depth without the addition of water **during** the backfill process. Furthermore, tank systems must maintain their structural shape and full storage capacity when left **empty** for extended periods.

TANK FITTINGS
All fittings shall be of polyolefin or PVC construction and incorporate only 300 series stainless steel hardware. Compatible and warranted tank-to-pipe **flexible couplers** must be made available along with the tank system at the time of purchase. Fittings, gaskets, and hardware must be available specifically for domestic water use.

POTABLE WATER APPLICATIONS
The virgin polyethylene resin used for construction of potable water storage tanks must be NSF listed and comply with FDA Title 21 when in contact with drinking water.

ACCESSORIES
The accessory package provided with any storage tank system must contain only fully approved accessories and appurtenances which meet all performance standards and warranty coverage guidelines of tank manufacturer.

CAPACITY AND SIZE REQUIREMENTS
1. The nominal volume of the tank system shall be 2500 gallons.
2. The nominal tank diameter shall be 8 feet by a nominal length of 12 feet.

LIMITED WARRANTY
A standard 2 year structural and corrosion warranty shall become effective upon tank delivery. An optional extended warranty program must be available at time of purchase.

IRRIGATION DETAILS

State of Utah
Department of Administrative Services
Division of Facilities Construction & Management
4110 State Office Building
Salt Lake City, Utah 84114
Phone: (801) 538 - 3018
Fax: (801) 538 - 3267
http://dfcm.utah.gov

northland DESIGN GROUP
landscape architecture | landscape design | land planning
466 NORTH 900 WEST SUITE 200
AMERICAN FORK, UTAH 84003
PHONE: 801-763-0179

BUILDING NAME:
PROPERTY# 15278
USOR - DSVBI
TRAINING HOUSING
Salt Lake City, Utah

PROJECT TITLE:
USOR - Division of Services for the Blind and Visually Impaired TRAINING HOUSING

STATE OF UTAH
DON LESLIE
NO. 371132-5301
Licensed Landscape Architect

MARK	DATE	DESCRIPTION
1	5-27-10	Addendum No. 1
-	---------	----------

ISSUE TYPE: Design Development

ISSUE DATE: 03.30.2010

DFCM PROJECT NO: 09240200
CAD PROJECT NO:
CAD DWG FILE: Irrigation Details.dwg
DRAWN BY: DL
CHK'D BY: JF
COPYRIGHT: STATE OF UTAH

SHEET TITLE
Irrigation Details

SHEET NUMBER
LE-503

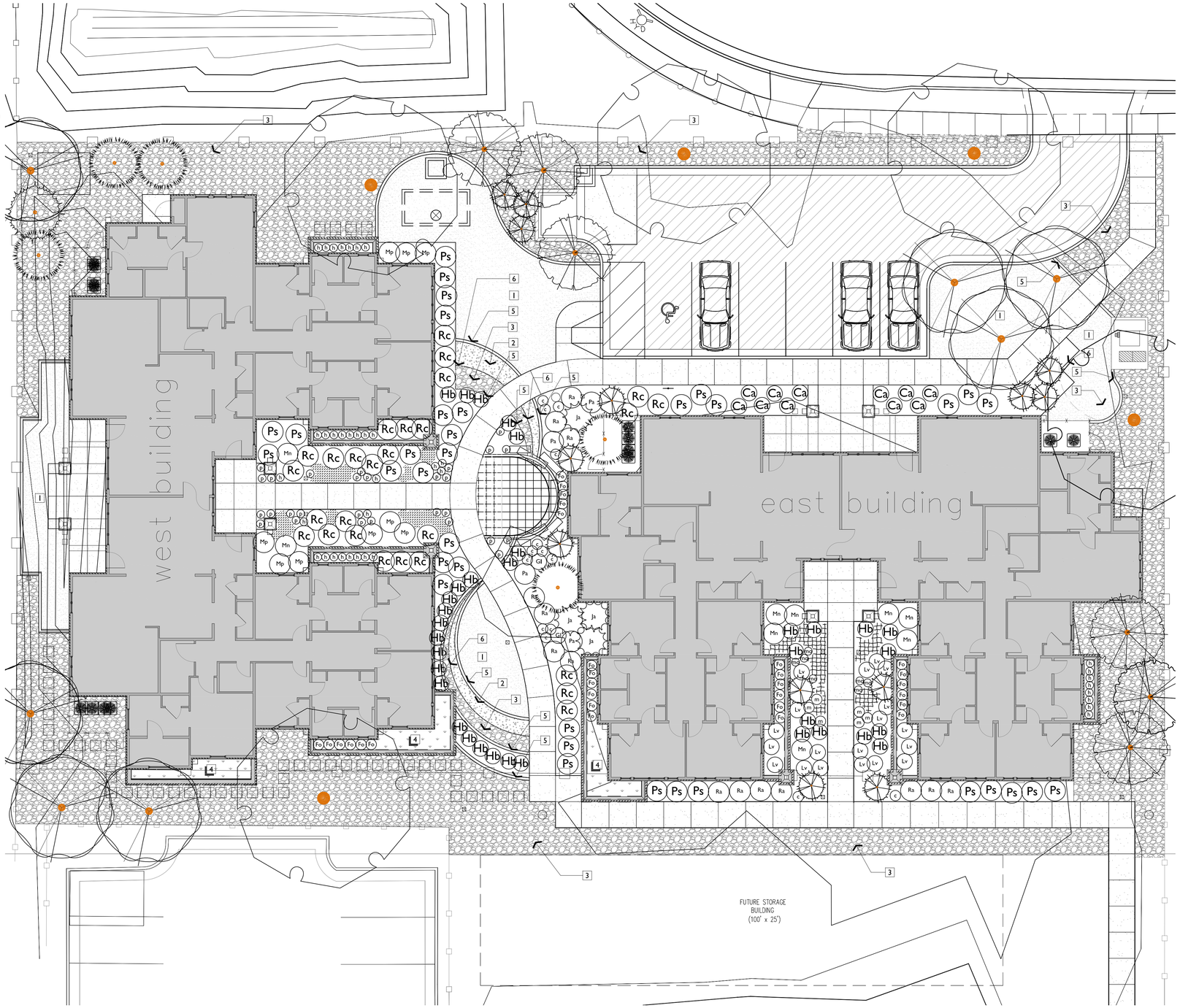

Landscape Plan

1" = 10'-0"

PLANT SCHEDULE

DECIDUOUS TREES	BOTANICAL NAME / COMMON NAME	CONT	CAL	SIZE	QTY
	Amelanchier x grandiflora 'Autumn Brilliance' / 'Autumn Brilliance' Serviceberry	B & B	2"Cal		6
	Prunus virginiana 'Canada Red' / Canada Red Chokecherry	B & B	2"Cal		7
	Zelkova serrata 'Autumn Glow' / Autumn Glow Japanese Zelkova	B & B	2"Cal		5

EVERGREEN TREES	BOTANICAL NAME / COMMON NAME	CONT	CAL	SIZE	QTY
	Juniperus virginiana 'Skyrocket' / Skyrocket Juniper	Container		6'	13
	Picea pungens glauca 'Baby Blue Eyes' TM / Baby Blue Eyes Blue Spruce	B & B		6'	5
	Pinus leucodermis 'Heidreichii' / Bosnian Pine	B & B		8'	1

SHRUBS	BOTANICAL NAME / COMMON NAME	CONT	QTY
Ja	Juniperus horizontalis plumosa 'Andorra' / Andorra Juniper	5 gal	4
Lv	Lavandula angustifolia 'Hidcote' / Hidcote Lavender	1 gal	19
Ma	Miscanthus sinensis 'Strictus' / Porcupine Grass	5 gal	9
Mn	Mahonia aquifolium / Littleleaf Mockorange	5 gal	9
Ps	Physocarpus opulifolius 'Summer Wine' / Summer Wine Ninebark	5 gal	35
Ra	Rhus aromatica 'Gro-Low' / Gro-Low Fragrant Sumac	5 gal	14
Rc	Ribes alpinum / Alpine Currant	5 gal	27

ANNUALS/PERENNIALS	BOTANICAL NAME / COMMON NAME	CONT	QTY
c	Coreopsis verticillata 'Moonbeam' / Threadleaf Coreopsis	1 gal	14
Gl	Gaura lindheimeri / Wandflower	1 gal	2
h	Heuchera sanguinea 'Palace Purple' / Coral Bells	1 gal	38
m	Mirabilis multiflora / Colorado Four O' Clock	1 gal	6
mo	Monardella odoratissima / Mountain Monarda	1 gal	7
p	Penstemon cyananthus / Wasatch penstemon	1 gal	28
Ps	Perovskia scrophulifolia / Russian Sage	1 gal	4

GRASSES	BOTANICAL NAME / COMMON NAME	CONT	QTY
Ca	Calamagrostis x acutiflora 'Karl Foerster' / Feather Reed Grass	1 gal	11
Fo	Festuca ovina glauca 'Elijah Blue' / Blue Fescue	1 gal	29
Hb	Helictotrichon sempervirens / Blue Oat Grass	1 gal	34

GROUND COVERS	BOTANICAL NAME / COMMON NAME	CONT	QTY
	Lamium maculatum 'Pink Pewter' / Pink Pewter Dead Nettle	flat @ 12" oc	97
	Phlox longifolia / Longleaf Phlox	flat @ 12" oc	97

REFERENCE NOTES SCHEDULE

SYMBOL	DESCRIPTION	QTY
1	LAWN AREA-BIO TURF DWARF FESCUE SOD MIX-801-563-9090	1,948 sf
2	Crushed sandstone mulch 3/4"-1" stone-Color to compliment building materials-submit material sample to landscape architect.	128 sf
3	2-3" Rock mulch-To compliment building materials-submit material to landscape architect for approval.	5,946 sf
4	Garden Boxes - Provide 12 inch depth of garden soil	218 sf
5	Concrete Curbing (See detail L1.2)	

- LANDSCAPE CONTRACTOR SHALL BE WILLING TO WORK WITH LANDSCAPE ARCHITECT IF CHANGES TO THE PLANT PALETTE ARE NECESSARY TO ACHIEVE DESIRED CHARACTER. CHANGES WILL BE IN SPECIES ONLY NOT IN SIZE.
- LANDSCAPE CONTRACTOR SHALL BE RESPONSIBLE FOR KEEPING RECORDS OF QUANTITIES OF PLANT MATERIAL USED. QUANTITY LISTS SHALL BE DISTRIBUTED TO LANDSCAPE ARCHITECT AND OWNER.
- CONTRACTOR SHALL VERIFY ALL QUANTITIES ON THIS PLAN. LANDSCAPE ARCHITECT SHALL NOT BE RESPONSIBLE FOR DISCREPANCIES BETWEEN PLAN AND PLANT TABLE. WHERE DISCREPANCIES EXIST THE PLAN SHALL DICTATE.
- ALL PLANTERS ADJACENT TO SIDEWALKS ARE TO HAVE A FINISHED TOPSOIL GRADE OF 4" BELOW

State of Utah
Department of Administrative Services

Division of Facilities Construction & Management
4110 State Office Building
Salt Lake City, Utah 84114
Phone: (801) 538 - 3018
Fax: (801) 538 - 3267

http://dfcm.utah.gov

northland DESIGN GROUP
landscape architecture | landscape design | land planning
466 NORTH 900 WEST SUITE 200
AMERICAN FORK, UTAH 84003
PHONE: 801-763-0179

BUILDING NAME:

PROPERTY# 15278
USOR - DSVBI
TRAINING HOUSING
Salt Lake City, Utah

PROJECT TITLE:

USOR - Division of Services for the Blind and Visually Impaired TRAINING HOUSING

LICENSED LANDSCAPE ARCHITECT
314615
Jeremy S. Fillmore
STATE OF UTAH

MARK	DATE	DESCRIPTION
-	---------	----------

ISSUE TYPE: Constructions Documents Phase

ISSUE DATE: 03.30.2010

DFCM PROJECT NO: 09240200
CAD PROJECT NO:
CAD DWG FILE: Planting Plan.dwg
DRAWN BY: ---
CHK'D BY: ---
COPYRIGHT: STATE OF UTAH

SHEET TITLE

Landscape Plan

SHEET NUMBER

LP-101

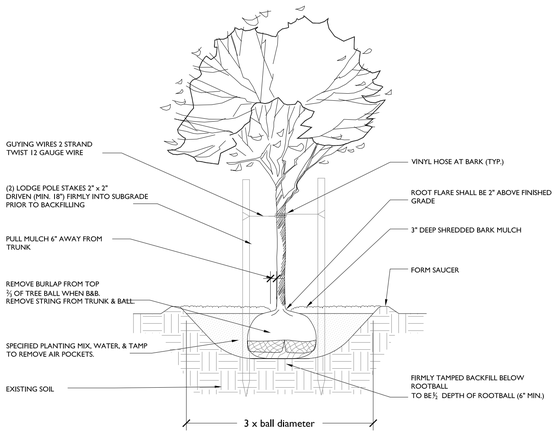

A DECIDUOUS TREE DETAIL

SCALE: NTS

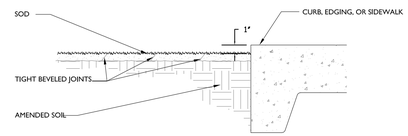

D SOD INSTALLATION

SCALE: NTS

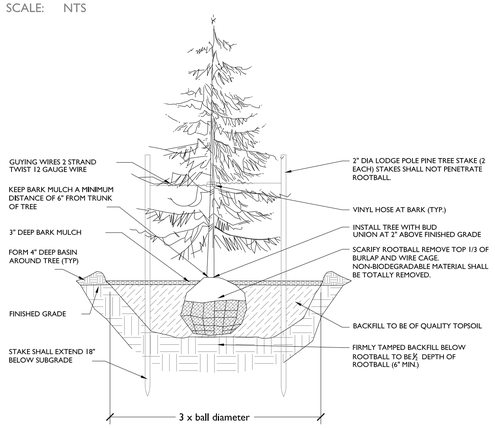

B EVERGREEN TREE DETAIL

SCALE: NTS

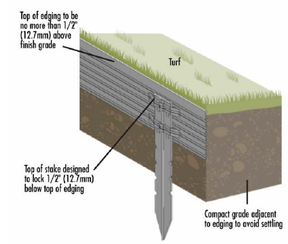

E SUR-LOC ALUMINUM EDGING 3/16" x 5.5"

SCALE: NTS

PLANT SCHEDULE

DECIDUOUS TREES	BOTANICAL NAME / COMMON NAME	CONT	CAL	SIZE	QTY
	Amelanchier x grandiflora `Autumn Brilliance` / `Autumn Brilliance` Serviceberry	B & B	2"Cal		6
	Prunus virginiana `Canada Red` / Canada Red Chokecherry	B & B	2"Cal		7
	Zelkova serrata `Autumn Glow` / Autumn Glow Japanese Zelkova	B & B	2"Cal		5

EVERGREEN TREES	BOTANICAL NAME / COMMON NAME	CONT	CAL	SIZE	QTY
	Juniperus virginiana `Skyrocket` / Skyrocket Juniper	Container		6`	13
	Picea pungens glauca `Baby Blue Eyes` TM / Baby Blue Eyes Blue Spruce	B & B		6`	5
	Pinus leucodermis `Heidreichii` / Bosnian Pine	B & B		8`	1

SHRUBS	BOTANICAL NAME / COMMON NAME	CONT	QTY
Ja	Juniperus horizontalis plumosa `Andorra` / Andorra Juniper	5 gal	4
Lv	Lavandula angustifolia `Hidcote` / Hidcote Lavender	1 gal	19
Mp	Miscanthus sinensis `Strictus` / Porcupine Grass	5 gal	9
Mn	Philadelphus microphyllus / Littleleaf Mockorange	5 gal	9
Ps	Physocarpus opulifolius `Summer Wine` / Summer Wine Ninebark	5 gal	35
Ra	Rhus aromatica `Gro-Low` / Gro-Low Fragrant Sumac	5 gal	14
Rc	Ribes alpinum / Alpine Currant	5 gal	27

ANNUALS/PERENNIALS	BOTANICAL NAME / COMMON NAME	CONT	QTY
c	Coreopsis verticillata `Moonbeam` / Threadleaf Coreopsis	1 gal	14
Gl	Gaura lindheimeri / Wandflower	1 gal	2
h	Heuchera sanguinea `Palace Purple` / Coral Bells	1 gal	38
m	Mirabilis multiflora / Colorado Four O`Clock	1 gal	6
mo	Monardella odoratissima / Mountain Monarda	1 gal	7
p	Penstemon cyananthus / Wasatch penstemon	1 gal	28
Ps	Perovskia atriplicifolia / Russian Sage	1 gal	4

GRASSES	BOTANICAL NAME / COMMON NAME	CONT	QTY
Ca	Calamagrostis x acutiflora `Karl Foerster` / Feather Reed Grass	1 gal	11
Fo	Festuca ovina glauca `Elijah Blue` / Blue Fescue	1 gal	29
Hb	Helictotrichon sempervirens / Blue Oat Grass	1 gal	34

GROUND COVERS	BOTANICAL NAME / COMMON NAME	CONT	QTY
	Lamium maculatum `Pink Pewter` / Pink Pewter Dead Nettle	flat @ 12" oc	97
	Phlox longifolia / Longleaf Phlox	flat @ 12" oc	97

REFERENCE NOTES SCHEDULE

SYMBOL	DESCRIPTION	QTY
1	LAWN AREA-BIO TURF DWARF FESCUE SOD MIX-801-562-9090	1,948 sf
2	Crushed sandstone mulch 3/4" -1" stone-Color to compliment building materials-submit material sample to landscape architect.	128 sf
3	2-3" Rock mulch-To compliment building materials-submit material to landscape architect for approval.	5,946 sf
4	Garden Boxes - Provide 12 inch depth of garden soil	218 sf
5	Concrete Curbing (See detail L1.2)	

- LANDSCAPE CONTRACTOR SHALL BE WILLING TO WORK WITH LANDSCAPE ARCHITECT IF CHANGES TO THE PLANT PALETTE ARE NECESSARY TO ACHIEVE DESIRED CHARACTER. CHANGES WILL BE IN SPECIES ONLY NOT IN SIZE.
- LANDSCAPE CONTRACTOR SHALL BE RESPONSIBLE FOR KEEPING RECORDS OF QUANTITIES OF PLANT MATERIAL USED. QUANTITY LISTS SHALL BE DISTRIBUTED TO LANDSCAPE ARCHITECT AND OWNER.
- CONTRACTOR SHALL VERIFY ALL QUANTITIES ON THIS PLAN. LANDSCAPE ARCHITECT SHALL NOT BE RESPONSIBLE FOR DISCREPANCIES BETWEEN PLAN AND PLANT TABLE. WHERE DISCREPANCIES EXIST THE PLAN SHALL DICTATE.
- ALL PLANTERS ADJACENT TO SIDEWALKS ARE TO HAVE A FINISHED TOPSOIL GRADE OF 4" BELOW TOP OF CONCRETE WALK/CURB TO ALLOW FOR 3" DEPTH OF MULCH.
- SEE ATTACHED PLANTING AND IRRIGATION SPECIFICATIONS FOR ADDITIONAL INFORMATION.

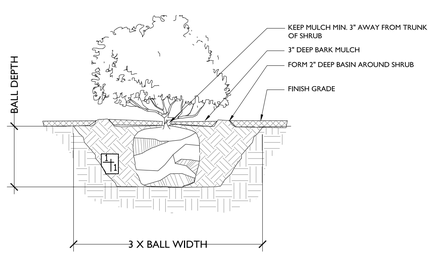

C SHRUB PLANTING

SCALE: NTS

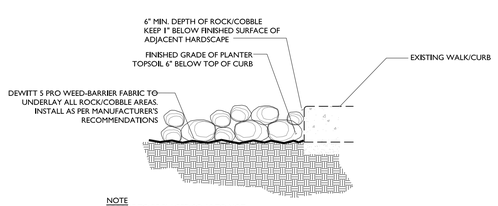

NOTE
COBBLE TO BE PLACED SO AS TO NOT DAMAGE CURB. PLACE BY HAND FINAL COBBLE CLOSEST TO CURB.

F COBBLE/ROCK PLACEMENT

SCALE: NTS

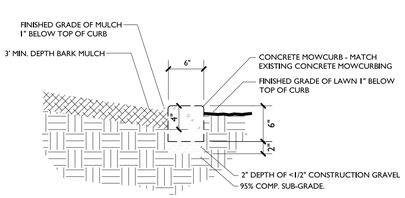

NOTE:
PLACE MULCH AFTER MOWCURB HAS COMPLETELY CURED.

G CONCRETE CURBING

SCALE: NTS

LANDSCAPE DETAILS

State of Utah
Department of Administrative Services
Division of Facilities Construction & Management
4110 State Office Building
Salt Lake City, Utah 84114
Phone: (801) 538 - 3018
Fax: (801) 538 - 3267
http://dfcm.utah.gov

northland DESIGN GROUP
landscape architecture | landscape design | land planning
466 NORTH 900 WEST SUITE 200
AMERICAN FORK, UTAH 84003
PHONE: 801-763-0179

BUILDING NAME:

PROPERTY# 15278
USOR - DSVBI
TRAINING HOUSING
Salt Lake City, Utah

PROJECT TITLE:

USOR - Division of Services for the Blind and Visually Impaired TRAINING HOUSING

LICENSED LANDSCAPE ARCHITECT # 314615 Jeremy S. Fillmore STATE OF UTAH

MARK	DATE	DESCRIPTION
-	---------	----------

ISSUE TYPE: Constructions Documents Phase

ISSUE DATE: 03.30.2010

DFCM PROJECT NO: 09240200
CAD PROJECT NO:
CAD DWG FILE: Planting Plan.dwg
DRAWN BY: ---
CHK'D BY: ---
COPYRIGHT: STATE OF UTAH

SHEET TITLE

Landscape Details

SHEET NUMBER

LP-501

GENERAL STRUCTURAL NOTES

1. IN ALL CASES, "CONTRACTOR" SHALL REFER TO THE CONTRACTOR OR SUB-CONTRACTOR RESPONSIBLE FOR THE TRADE SPECIFICALLY REFERRED TO IN THE NOTES (i.e. STEEL, CONCRETE, MASONRY). THE "CONTRACTOR:" SHALL MEET ALL NOTE REQUIREMENTS AND SHALL INCLUDE THE COSTS ASSOCIATED WITH THESE REQUIREMENTS IN HIS/HER BID. THE GENERAL CONTRACTOR, OR CONSTRUCTION MANAGER, IS ULTIMATELY RESPONSIBLE FOR COMPLIANCE WITH ALL NOTE REQUIREMENTS.
2. THE CONTRACTOR SHALL PERFORM HIS/HER TRADE AND DUTIES IN A MANNER CONFORMING TO THE PROCEDURES AND REQUIREMENTS AS STATED IN THE 2006 INTERNATIONAL BUILDING CODE (IBC), AND/OR LATEST CODE ADOPTED BY THE LOCAL BUILDING OFFICIAL, AND ALL LOCAL ORDINANCES.
3. THE GENERAL CONTRACTOR, OR PROJECT MANAGER, SHALL COORDINATE THE WORK PERFORMED BY ALL TRADES.
4. THE CONTRACTOR SHALL NOTIFY THE ENGINEER AND/OR ARCHITECT OF ANY DISCREPANCIES, OMISSIONS OR CONFLICTS BETWEEN THE VARIOUS ELEMENTS OF THE WORKING DRAWINGS AND/OR THE SPECIFICATIONS BEFORE PROCEEDING WITH ANY WORK INVOLVED. IN ALL CASES, UNLESS OTHERWISE DIRECTED, THE MOST STRINGENT REQUIREMENTS SHALL GOVERN AND BE PERFORMED.
5. THE CONTRACTOR SHALL VERIFY ALL CONDITIONS, DIMENSIONS, SLOPES AND ELEVATIONS, ETC.. AT THE JOB SITE AND SHALL COORDINATE THESE WITH THE ARCHITECT AND WITH ALL TRADES. CONSTRUCTION DRAWINGS SHALL NOT BE SCALED FOR DIMENSIONS.
6. VISITS TO THE JOB SITE BY REPRESENTATIVES OF THE ENGINEER DO NOT CONSTITUTE APPROVAL OF THE WORK PERFORMED BY THE CONTRACTOR OR HIS SUBCONTRACTORS; THEY ARE MERELY FOR THE PURPOSE OF OBSERVATION.
7. SHOP DRAWINGS FOR ANY FABRICATED COMPONENTS OR COMPONENTS DESIGNED-BY-MANUFACTURER SHALL BE APPROVED BY THE ENGINEER AND ARCHITECT PRIOR TO FABRICATION AND ERECTION. SHOP DRAWINGS SHALL BE STAMPED BY A PROFESSIONAL ENGINEER REGISTERED IN THE SAME STATE AS THE PROJECT.
8. THE CONTRACTOR SHALL VERIFY SIZES, LOCATIONS, LOADS, AND EQUIPMENT ANCHORAGE IN THE FIELD WITH THE EQUIPMENT MANUFACTURER (OR SUPPLIER) PRIOR TO FABRICATION OR INSTALLATION OF SUPPORTING STRUCTURES.
9. TEMPORARY SHORING (BRACING) SHALL BE PROVIDED WHERE NECESSARY. SHORING SHALL SUPPORT ALL LOADS TO WHICH THE STRUCTURE MAY BE SUBJECTED (i.e. WIND). SHORING SHALL REMAIN IN PLACE AS LONG AS MAY BE REQUIRED FOR SAFETY OR UNTIL ALL THE STRUCTURAL ELEMENTS ARE COMPLETED. ALL SHORING IS THE RESPONSIBILITY OF THE CONTRACTOR
10. DURING AND AFTER CONSTRUCTION, THE CONTRACTOR AND OWNER SHALL KEEP LOADS ON THE STRUCTURE WITHIN THE LIMITS OF THE DESIGN LOADS FOR THE OCCUPANCY. SEE STRUCTURAL PLANS AND CALCULATIONS FOR STRUCTURAL DESIGN LOADINGS AND CRITERIA.
11. ANY SPECIAL INSPECTION REQUIRED BY THE CONSTRUCTION DOCUMENTS, OR BY THE BUILDING OFFICIAL, OR BY THE IBC, IS THE RESPONSIBILITY OF THE OWNER. (1)
12. CONTRACTOR SHALL BE RESPONSIBLE FOR SAFETY AND PROTECTION WITHIN AND ADJACENT TO THE JOB SITE.
13. SEE STRUCTURAL PLANS FOR ADDITIONAL STRUCTURAL NOTES AND REQUIREMENTS.
14. PRIOR APPROVAL, IN WRITING, FROM THE ENGINEER IS REQUIRED FOR ANY DEVIATION FROM THE STRUCTURAL PLANS AND/OR CONSTRUCTION DOCUMENTS. OPTIONAL MEMBER SIZES AND VARIATIONS IN THE FRAMING REQUIRE PRIOR APPROVAL OF THE ENGINEER, ARCHITECT AND OWNER. FAILURE TO FOLLOW PLANS AND CONSTRUCTION DOCUMENTS CONSTITUTES CHANGE IN PROJECT SCOPE.
15. THE ENGINEER RESERVES THE RIGHT TO REQUEST REPLACEMENT OF ANY PORTION OF THE STRUCTURE DEVIATING FROM THE PLANS WHERE WRITTEN PRIOR APPROVAL HAS NOT BEEN OBTAINED AND WHERE INSPECTION BY THE ENGINEER PRIOR TO CONSTRUCTION OF THE CHANGED PORTION HAS NOT HAPPENED.
16. ALL SITE WORK, GRADING, COMPACTION AND BACKFILL, ETC. SHALL BE DONE IN COMPLIANCE WITH A GEOTECHNICAL REPORT SPECIFIC TO THE SITE. IT IS THE GENERAL CONTRACTORS RESPONSIBILITY TO OBTAIN A GEOTECHNICAL REPORT, IF ONE HAS NOT ALREADY BEEN OBTAINED, AND SUBMIT A COPY TO THE ENGINEER FOR VERIFICATION.

DESIGN CRITERIA:

1. GOVERNING BUILDING CODE: 2006 INTERNATIONAL BUILDING CODE (IBC)
2. FLOOR LIVE LOADING: (SLAB ON GRADE)
   - a. RESIDENTIAL .... 40 PSF
   - b. EXIT FACILITIES AND COORIDORS .... 100 PSF
   - c. MAIN FLOOR LOBBY .... 100 PSF
   - d. PARTITIONS 15PSF
3. ROOF LIVE LOADING:
   - a. ROOF LIVE LOAD .... 30 PSF
   - b. ROOF SNOW LOAD .... 30 PSF
     1. GROUND SNOW LOAD, P_G .... 43 PSF
     2. SNOW EXPOSURE FACTOR, C_E 1.0
     3. IMPORTANCE FACTOR, I_S 1.0
     3. THERMAL FACTOR, C_T 1.0
4. ROOF DEAD LOADS:
   - a. SLOPING ROOF.......... 15 PSF
5. EARTHQUAKE:
   - a. OCCUPANCY CATAGORY II
   - b. SEISMIC DESIGN CATAGORY .... D
   - c. SPECTRAL RESPONSE ACCELERATIONS:
     S_S = 1.7g S_{DS} = 1.14g
     S_1 = 0.688g S_{D1} = 0.69g
   - d. SOIL SITE CLASS: .... D
     F_A = 1.0 F_V = 1.5
   - e. IMPORTANCE FACTOR, I_E.......... 1.0
   - f. DESIGN BASE SHEAR 19.5k
   - g. SEISMIC RESPONCE COEFFICIENT, C_S 0.175
   - h. ANALYSIS PROCEDURE .... EQUIV. LATERAL FORCE
   - i. BASIC SEISMIC FORCE RESISTING SYSTEM.......... WOOD SHEAR WALLS
   - j. RESPONCE MODIFICATION FACTOR, R.......... 6.5
6. WIND:
   - a. BASIC WIND SPEED (3 SECOND GUST) .... 90 MPH
   - b. IMPORTANCE FACTOR, I_W 1.0
   - c. EXPOSURE .... B
   - d. INTERNAL PRESSURE COEFFICIANT, GC_{PI}.......... 0.18
   - e. COMPONENTS AND CLADDING PRESSURE .... 17.8 PSF
7. FOUNDATION:
   - a. SOILS REPORT BY .... PSI
     DATED .... APRIL 21, 2010
   - b. SOIL BEARING PRESSURE .... 1,500 PSF
   - c. LATERAL SOIL PRESSURE FLUID EQUIVALENT DENSITY
     1. ACTIVE .... 45 PCF (RETAINING WALLS)
     2. AT REST .... 60 PCF (FOUNDATION WALLS)
     3. PASSIVE .... 250 PCF
     4. INCREASE FOR SEISMIC.......... N/A
   - d. COEFFICIENT OF FRICTION 0.40

GENERAL CONCRETE NOTES:

1. SEE GENERAL STRUCTURAL NOTES FOR ADDITIONAL REQUIREMENTS.
2. ALL WORK SHALL BE IN STRICT ACCORDANCE WITH THE 2006 IBC, ACI 318-05, AND LOCAL ORDINANCES.
3. CONTRACTOR SHALL VERIFY ALL CONDITIONS AND DIMENSIONS PRIOR TO PLACING CONCRETE.
4. CONTRACTOR SHALL COORDINATE WITH MECHANICAL, ELECTRICAL, AND ARCHITECTURAL PRIOR TO PLACING CONCRETE. PROVIDE SLEEVES, BLOCK OUTS, ETC... AS REQUIRED.
5. CONTRACTOR SHALL BE RESPONSIBLE FOR PROPER PLACEMENT OF ALL ANCHOR BOLTS, SEISMIC ANCHORS OR STRAPS, ETC.. INSTALL PER MANUFACTURER'S SPECIFICATIONS.
6. THE CONTRACTOR IS RESPONSIBLE FOR PROVIDING ALL FORM WORK, POUR STOPS, ETC. REQUIRED TO CONSTRUCT ALL CONCRETE WORK. SUCH FORM WORK IS NOT NECESSARILY SHOWN ON THE STRUCTURAL PLANS OR DETAILS. THE CONTRACTOR SHALL SPECIFY ALL FORM WORK AND SHALL INCLUDE THE COST FOR SUCH IN HIS/HER ORIGINAL BID.
7. CONTRACTOR SHALL PROVIDE ALL SHORING AS REQUIRED.
8. FOOTINGS, FOUNDATION AND SLABS ON GRADE SHALL BE CONSTRUCTED ON PROPERLY COMPACTED NATURAL SOIL, OR ON STRUCTURAL FILL.
9. A GEOTECH REPORT SHALL BE PROVIDED TO THE ENGINEER TO VERIFY ACTUAL SITE CONDITIONS.
10. SEE FOUNDATION PLAN FOR ADDITIONAL NOTES AND REQUIREMENTS.
11. ALL EPOXY ANCHORS SHALL BE SIMPSON SET-XP (ICC-ES REPORT ESR 2508) (1)
12. ALL MECHANICAL ANCHORS SHALL BE SIMPSON STRONG BOLTS (ICC-ES REPORT ESR 1771)

CONCRETE AND REINFORCEMENT

13. ALL CONCRETE SHALL HAVE A MINIMUM COMPRESSIVE STRENGTH OF 3,000 PSI IN 28 DAYS. FLAT SLABS, FOUNDATION WALLS, AND CONCRETE RETAINING WALLS OVER 4'-0" HIGH, SHALL HAVE A MINIMUM COMPRESSIVE STRENGTH OF 4,000 PSI. A COMPRESSIVE STRENGTH OF 2500 PSI HAS BEEN USED FOR CONCRETE DESIGN.
14. SEE PROJECT SPECIFICATIONS FOR CONCRETE DESIGN REQUIREMENTS.
15. ALL REINFORCING STEEL SHALL BE DEFORMED BARS CONFORMING TO THE STANDARD SPECIFICATIONS ASTM A615 GRADE 60. REINFORCING STEEL SHALL BE PROPERLY TIED INTO PLACE PRIOR TO PLACING CONCRETE. FIELD BENT DOWELS MAY BE GRADE 40.
16. ALL REINFORCING STEEL SHALL BE DETAILED AND PLACED IN ACCORDANCE WITH THE ACI DETAILING MANUAL AND ACI STANDARDS (LATEST EDITION).
17. ALL SPLICES IN CONTINUOUS CONCRETE REINFORCING BARS SHALL LAP A MINIMUM OF 40 BAR DIAMETERS. ALL SPLICES SHALL BE MADE IN A COMPRESSION ZONE UNLESS NOTED. ALL CONTINUOUS REINFORCING SHALL TERMINATE WITH A 90 DEG. BEND OR WITH SEPARATE CORNER BARS.

FOUNDATION WALLS

18. SEE FOUNDATION WALL SCHEDULE, OR FOUNDATION PLAN, FOR SPECIFICATION OF FOUNDATION WALL REINFORCEMENT. SEE RETAINING WALL SCHEDULE, OR FOUNDATION PLAN, FOR SPECIFICATION OF RETAINING WALL REINFORCEMENT.
19. BRACE WALLS AS REQUIRED UNTIL FLOOR SLABS AND/OR FLOOR FRAMING ARE IN PLACE, AND UNTIL WALLS HAVE PROPERLY CURED.
20. FOUNDATION WALLS HAVE BEEN DESIGNED USING AN EQUIVALENT FLUID PRESSURE. A GEOTECHNICAL REPORT SHALL BE PROVIDED TO THE ENGINEER TO VERIFY PRESSURES USED FOR DESIGN. SEE STRUCTURAL PLANS AND CALCULATIONS FOR ACTUAL FLUID PRESSURE USED.
21. BACKFILL ADJACENT TO FOUNDATION WALLS OR IN LANDSCAPED AREAS SHALL BE PLACED IN LOOSE LIFTS A MAXIMUM OF EIGHT INCHES (8"). FILL SHALL HAVE A MOISTURE CONTENT WITHIN 2 % OF OPTIMUM AND SHALL BE COMPACTED TO AT LEAST 90 % MAXIMUM DENSITY (ASTM D 1557). HEAVY EQUIPMENT SHALL NOT BE USED TO BACKFILL WITHOUT PRIOR CONSENT OF THE ENGINEER.
22. CONTRACTOR SHALL PROVIDE DRAINAGE BEHIND ALL FOUNDATION AND RETAINING WALLS. CONTRACTOR SHALL RETAIN CONSULTANTS AS NECESSARY TO ACCOMPLISH THIS WORK.
23. CONSTRUCTION JOINTS (COLD JOINTS) IN WALLS SHALL BE WATERPROOFED TO PREVENT LEAKS.
24. WHERE WALLS OR FOOTINGS SUPPORT MASONRY, PROVIDE MATCHING DOWELS OF SAME SIZE AND SPACING AS VERTICAL WALL STEEL.
25. WHERE WALLS SUPPORT WOOD FRAMING, PROVIDE 5/8" DIAMETER ANCHOR BOLTS 10" LONG AT 32" O.C UNLESS NOTED OTHERWISE ON THE FOUNDATION PLAN. ANCHOR BOLTS SHALL BE EMBEDDED A MINIMUM OF 7". ALL ANCHOR BOLTS SHALL HAVE 3 x 3 x 1/4" PLATE WASHERS.
26. THE CONTRACTOR SHALL COORDINATE STEPS IN WALLS WITH THE ARCHITECT, AND SHALL VERIFY WITH THE ENGINEER.

SLABS (1)

27. REINFORCE ALL SLABS ON GRADE W/ #4 @ 18" O.C. EACH WAY, OR WITH 4 x 4 – W2.9xW2.9 WIRE MESH. ALL REINFORCING SHALL BE CHAIRED IN CENTER OF SLAB. SLABS ON GRADE SHALL BE DOWELED TO FOUNDATION WALLS PER STRUCTURAL PLANS AND DETAILS.
28. RECESS FOUNDATION AND POUR SLABS THROUGH, TYPICAL AT ALL EXTERIOR DOORS AND STORE FRONT TYPE WINDOWS. SEE FOUNDATION DETAILS.
29. DEPRESS SLABS AS REQUIRED IN AREAS OF CERAMIC TILE, SPECIAL ENTRY MATS, HARDWOOD FLOORS, ETC. COORDINATE LOCATION AND DEPTH WITH THE ARCHITECT.
30. PROVIDE ISOLATION JOINTS AROUND COLUMNS/SPREAD FOOTINGS, AND CONTROL JOINTS AS REQUIRED, PARTICULARLY WHERE SLABS TRANSITION IN SIZE.
31. THE CONTRACTOR SHALL TAKE CARE THAT HEAVY EQUIPMENT, AND AREAS USED FOR STAGING, DOES NOT CRACK AND DAMAGE SLABS ON GRADE. DAMAGED SLABS SHALL BE REPAIRED OR REPLACED AT NO ADDITIONAL EXPENSE TO THE OWNER.
32. REFER TO THE CIVIL PLANS FOR SPECIFICATION OF ALL EXTERIOR FLAT WORK.

FOOTINGS

33. SEE FOOTING SCHEDULE FOR FOOTING SIZES AND REINFORCING REQUIREMENTS.
34. FOOTINGS HAVE BEEN DESIGNED USING AN ALLOWABLE BEARING PRESSURE. A GEOTECHNICAL REPORT SHALL BE PROVIDED TO THE ENGINEER TO VERIFY PRESSURES USED FOR DESIGN. SEE STRUCTURAL PLANS AND CALCULATIONS FOR ACTUAL BEARING PRESSURE USED.
35. ALL EXTERIOR FOOTINGS SHALL BEAR BELOW FROST DEPTH. CONTRACTOR TO VERIFY.
36. THE CONTRACTOR SHALL COORDINATE STEPS IN FOOTINGS WITH THE ARCHITECT, AND SHALL VERIFY WITH THE ENGINEER.

STRUCTURAL FILL

37. STRUCTURAL FILL SHALL BE SPECIFIED AND APPROVED BY THE SOILS ENGINEER OF RECORD, BY WAY OF A GEOTECHNICAL REPORT, AS BEING APPROPRIATE FOR THE APPLICATION. STRUCTURAL FILL SHALL BE PROVIDED IN THE BUILDING PAD AND PAVEMENT AREAS AS NECESSARY.
38. STRUCTURAL FILL SHOULD BE PLACED IN LOOSE LIFTS A MAXIMUM OF EIGHT INCHES (8"). FILL SHALL HAVE A MOISTURE CONTENT WITHIN 2 % OF OPTIMUM AND SHALL BE COMPACTED TO AT LEAST 95 % MAXIMUM DENSITY (ASTM D 1557).
39. FOOTINGS SHALL BE SUPPORTED ON UNDISTURBED NATIVE SOILS OR 24" MINIMUM OF PROPERLY PLACED AND COMPACTED STRUCTURAL FILL. ALL STRUCTURAL FILL SHALL EXTEND 12" MIN. BEYOND EDGES OF FOOTINGS. SEE SITE PLAN FOR ADDITIONAL FILL REQUIRED TO RAISE THE BUILDING PAD TO REQUIRED ELEVATIONS.
40. SLABS ON GRADE SHALL BE SUPPORTED ON UNDISTURBED NATIVE SOILS OR 12" MINIMUM OF PROPERLY PLACED AND COMPACTED STRUCTURAL FILL. SLABS ON GRADE SHALL BE ALSO CONSTRUCTED OVER 6" FREE DRAINING BASE PLACED OVER THE STRUCTURAL FILL.

GENERAL STEEL NOTES

1. SEE GENERAL STRUCTURAL NOTES FOR ADDITIONAL REQUIREMENTS.
2. ALL WORK TO BE IN STRICT ACCORDANCE WITH THE 2006 IBC, AISC, AND LOCAL ORDINANCES.
3. ALL DIMENSIONS AND CONDITIONS SHALL BE VERIFIED BY THE CONTRACTOR PRIOR TO FABRICATION AND ERECTION.
4. SEE SPECIFICATIONS FOR ADDITIONAL INFORMATION AND REQUIREMENTS.
5. SEE ARCHITECTURAL SHEETS FOR DECK BEARING ELEVATIONS. STRUCTURAL STEEL DETAILER SHALL DETERMINE ALL BEARING PLATE ELEVATIONS FROM ARCHITECTURAL DECK ELEVATIONS
6. SEE ARCHITECTURAL SHEETS FOR ADDITIONAL DIMENSIONS.
7. SEE ARCHITECTURAL FOR ACCESS HATCHES, DRAFT STOPS, ETC.
8. SUBMIT SHOP DRAWINGS OF ALL STRUCTURAL STEEL, STEEL JOISTS, STEEL DECKING & MISCELLANEOUS STEEL TO ENGINEER FOR APPROVAL PRIOR TO FABRICATION.
9. SEE FRAMING PLANS FOR ADDITIONAL NOTES AND REQUIREMENTS.

STRUCTURAL STEEL

10. ALL STRUCTURAL STEEL TO BE GRADE 50 A992. ALL STRUCTURAL PLATES TO BE A36.
11. ALL TUBULAR COLUMNS TO BE MANUF'D TO Fy =46 KSI UNDER ASTM A500, GRADE B.
12. ALL PIPE COLUMNS TO BE MANUF'D TO Fy = 36 KSI UNDER ASTM A501 OR A53, TYPE S E OR S.
13. ALL BOLTS FOR STEEL TO STEEL CONNECTIONS TO BE 3/4" DIA. MIN. A325-N HIGH STRENGTH BOLTS, UNLESS NOTED OTHERWISE. BOLTS EMBEDDED IN CONCRETE OR MASONRY SHALL BE A307 UNLESS NOTED OTHERWISE.
14. ALL JOIST WELDS TO BE E7024. ALL DECK WELDS TO BE E6022. ALL OTHER SPECIFIED WELDS TO BE E7018. ALL WELDS SHALL BE BY A CERTIFIED WELDER.
15. ALL WELDS AND BOLTING TO MEET APPROVAL OF SPECIAL INSPECTOR AS REQUIRED BY BUILDING OFFICIAL.
16. ALL STEEL SHALL BE PROPERLY PRIMED EXCEPT AREAS THAT REQUIRE FIELD WELDING (i.e. TOP OF BEAMS).
17. ALL STEEL BEAMS USED AS GIRDERS SHALL HAVE WEB STIFFENERS EACH SIDE OF WEB AT BEARING ENDS AND AT CONCENTRATED LOADS. STIFFENER TO BE SAME THICKNESS AS WEB OF BEAM - TYPICAL. STEEL BEAMS USED AS JOISTS DO NOT REQUIRE WEB STIFFENERS.
18. ANY BEARING PLATES NOT DETAILED SHALL BE; SAME THICKNESS AS FLANGE OF MEMBER, WIDTH SHALL BE WIDTH OF MEMBER PLUS 4" AND DEPTH SHALL BE 6" MIN. BEARING PLATES TO HAVE (2) 3/4" DIA. NELSON STUDS MIN.
19. ALL STEEL BEAMS SUPPORTING CONCRETE DECK SHALL HAVE A SINGLE ROW OF 3/4" DIAMETER X 3" NELSON STUDS AT 24" O.C. MINIMUM UNLESS NOTED OTHERWISE ON PLANS.
20. STEEL DETAILER SHALL PROVIDE STANDARD STAIR DETAILING INCORPORATING C12 x 20.7 STRINGERS OR APPROVED EQUAL. SUBMIT SHOP DRAWINGS FOR APPROVAL PRIOR TO FABRICATION.
21. SEE ARCHITECTURAL, MECHANICAL AND ELECTRICAL FOR ADDITIONAL STEEL MEMBERS (BRACKETS, ANGLES, ETC...) REQUIRED.
22. STEEL MEMBERS SHALL NOT BE CUT, DRILLED OR TORCHED FOR PIPES, ETC. UNLESS SPECIFICALLY DETAILED.
23. ANY MODIFICATION OF STRUCTURAL MEMBERS NOT SPECIFICALLY DETAILED ON THE STRUCTURAL PLANS IS NOT PERMITTED WITHOUT PRIOR APPROVAL.
24. ANY CONNECTIONS NOT DETAILED ON STRUCTURAL PLANS SHALL BE PROVIDED BY THE STEEL DETAILER. SHOP DRAWINGS FOR ALL FABRICATED STEEL CONNECTIONS SHALL BE SUBMITTED FOR REVIEW AND APPROVAL PRIOR TO FABRICATION AND INSTALLATION.

VENEER

BRICK VENEER

1. PROVIDE CONTINUOUS SINGLE WIRE JOINT REINFORCEMENT OF WIRE SIZE W1. 7 AT A MAXIMUM SPACING OF 16" O.C. VERTICALLY. MECHANICALLY ATTACH ANCHORS TO THE JOINT REINFORCEMENT WITH CLIPS OR HOOKS
2. PERMITTED ANCHOR TYPES SHALL BE CORRUGATED SHEET METAL ANCHORS, WIRE ANCHORS OR ADJUSTABLE ANCHORS. ANCHORS SHALL COMPLY WITH ACI 530-05 6. 2. 2. 5
3. FOR WOOD BACKING, ATTACH EACH ANCHOR TO WOOD STUDS OR FRAMING WITH A CORROSION RESISTANT 8d COMMON NAIL. FOR CORRUGATED SHEET METAL ANCHORS, LOCATE THE NAIL OR FASTENER WITHIN ½" OF THE 90 deg. BEND IN THE ANCHOR.
4. FOR STEEL BACKING, ATTACH VENEER WITH ADJUSTABLE ANCHORS ONLY. ATTACH EACH ANCHOR TO STEEL FRAMING WITH CORROSION RESISTANT SCREWS THAT HAVE A MINIMUM NOMINAL SHANK DIAMETER OF 0. 190 in. COLD FORMED STEEL FRAMING SHALL BE CORROSION RESISTANT AND SHALL BE 18ga MIN. THICKNESS.
5. ATTACH VENEER TO MASONRY BACKING WITH WIRE ANCHORS OR ADJUSTABLE ANCHORS.. ATTACH VENEER TO CONCRETE BACKING WITH ADJUSTABLE ANCHORS ONLY.
6. PROVIDE A 1" MINIMUM AIR SPACE BETWEEN THE BACK OF VENEER AND THE FACE OF SHEATHED FRAMED BACKING OR FACE OF MASONRY OR CONCRETE.
7. ALL VENEER LINTELS SHALL BE PROVIDED FOLLOWING THE SCHEDULE BELOW:
   - UP TO 5'-0" IN LENGTH SHALL BE L 3 ½" x 3 ½" x ¼"
   - 5'-0" IN LENGTH AND GREATER SHALL BE L 3 ½" x 5" x ¼" LAGGED WITH ½" DIA. BOLTS INTO THE SUPPORTING WOOD MEMBER AT 32" O.C.

DEFERRED SUBMITTALS

1. THE CONTRACTOR SHALL SUBMIT THE FOLLOWING DOCUMENTS TO THE ARCHITECT AND ENGINEER OF RECORD FOR REVIEW AND APPROVAL. THE DOCUMENTS MAY BE SUBMITTED AFTER THE BUILDING PERMIT IS ISSUED (IF ALLOWED BY BUILDING DEPARTMENT), BUT MUST BE SUBMITTED AND RECEIVED BACK AS APPROVED PRIOR TO COMMENCING FABRICATION OR CONSTRUCTION OF THE COMPONENTS.
   - a. PRE-FABRICATED WOOD TRUSSES

GENERAL WOOD FRAMING NOTES

1. SEE GENERAL STRUCTURAL NOTES FOR ADDITIONAL REQUIREMENTS.
2. ALL WORK TO BE IN STRICT ACCORDANCE WITH THE 2006 IBC, NDS, AND LOCAL ORDINANCES.

DIMENSIONAL LUMBER

3. DIMENSIONAL LUMBER USED AS STRUCTURAL FRAMING (i.e. JOISTS, RAFTERS, HEADERS) SHALL BE DOUGLAS FIR-LARCH NO. 2 OR EQUAL.
4. DIMENSIONAL LUMBER USED FOR STUD WALLS SHALL BE STUD GRADE UNLESS NOTED OTHERWISE. STUDS SHALL BE SPACED AT 16" O.C. MINIMUM, WITH A DOUBLE TOP PLATE. SPLICES IN THE DOUBLE TOP PLATE SHALL ALTERNATE TOP AND BOTTOM. IN NO CASE SHALL 2 X 4" BEARING WALLS SUPPORT MORE THAN TWO FLOORS OF FRAMING IN ADDITION TO ROOF AND CEILING.
5. ROUGH CUT TIMBER USED AS STRUCTURAL FRAMING SHALL BE AS SPECIFIED IN THE CONSTRUCTION DOCUMENTS.

ENGINEERED LUMBER

6. GLU-LAMINATED BEAMS FOR SIMPLE SPANS SHALL BE 24F-V4 DF/DF. GLU-LAMINATED BEAMS FOR CONTINUOUS SPANS AND CANTILEVERS SHALL BE 24F-V8 DF/DF. DO NOT INSTALL GLU-LAMINATED BEAMS UPSIDE DOWN.
7. LAMINATED VENEER LUMBER AND THE LIKE SHALL BE INSTALLED PER MANUFACTURER'S RECOMMENDATIONS AND SPECIFICATIONS.
8. I-JOISTS SHALL BE TJI OR EQUIVALENT, AND SHALL BE INSTALLED PER MANUFACTURER'S RECOMMENDATIONS AND SPECIFICATIONS.
9. ENGINEERED LUMBER, WITH THE EXCEPTION OF EXTERIOR GRADE GLU-LAMINATED LUMBER, SHALL NOT BE USED IN EXTERIOR APPLICATIONS.
10. USE REDWOOD OR PRESSURE TREATED LUMBER FOR ALL WOOD IN CONTACT WITH CONCRETE OR MASONRY IN CONTACT WITH EARTH (i.e. MUD SILL). IN SOME SITUATIONS, 26 GAUGE GALVANIZED SHEET METAL MAY BE PROVIDED AS AN APPROVED MOISTURE BARRIER. SEE ENGINEER FOR APPROVAL OF THIS OPTION.

BLOCKING, BRIDGING, MISCELLANEOUS.

11. DIMENSIONAL JOISTS AND RAFTERS SHALL HAVE FULL-HEIGHT SOLID BLOCKING AT THEIR BEARING POINTS. EACH RAFTER AND/OR ROOF TRUSS SHALL BE ANCHORED WITH SIMPSON H1 ANCHORS AT EACH END.
12. I-JOISTS AND RAFTERS SHALL HAVE FULL-HEIGHT SOLID BLOCKING AT THEIR BEARING POINTS. CONNECT EACH BLOCK TO TOP OF EXTERIOR WALLS WITH SIMPSON A34 CLIPS.
13. WOOD MEMBERS SHALL NOT BE CUT FOR PIPES, ETC. UNLESS SPECIFICALLY DETAILED
14. BIRDS MOUTHS AND/OR NOTCHING OF STRUCTURAL MEMBERS NOT SPECIFICALLY DETAILED ON THE STRUCTURAL PLANS IS NOT PERMITTED WITHOUT PRIOR APPROVAL.

COLUMNS AND STUDS

15. ALL COLUMNS SHALL EXTEND DOWN THROUGH THE STRUCTURE TO THE FOUNDATION. COLUMNS SHALL BE BRACED AT EACH FLOOR LEVEL. COLUMNS SHALL BE AS WIDE AND DEEP AS THE MEMBER THEY SUPPORT IN ORDER TO PROVIDE FULL BEARING.
16. STAND ALONE POSTS SHALL BE DOUGLAS FIR-LARCH NO. 1 OR EQUAL.
17. ALL EXTERIOR WALLS SHALL BE 2 x 6 AT 16" O.C.

FLOOR, ROOF AND WALL SHEATHING

18. ALL ROOF SHEATHING SHALL BE 7/16" APA EXP. 1 RATED SHEATHING OR EQUAL WITH 8d COMMON NAILS AT 6" O.C. PERIMETER, 6" O.C. PANEL EDGES AND AT 12" O.C. IN THE FIELD. PROVIDE 2 X SHAPED BLOCKING AT RIDGES UNLESS A CONTINUOUS MEMBER EXISTS. PANEL EDGES ARE UNBLOCKED UNLESS NOTED OTHERWISE ON THE STRUCTURAL PLANS.
19. ALL EXTERIOR WALLS SHALL BE SHEATHED WITH 7/16" APA EXP. 1 RATED SHEATHING OR EQUAL WITH 8d COMMON NAILS AT 6" O.C. EDGES AND AT 12" O.C. IN THE FIELD – FLAT BLOCKED AT ALL PANEL EDGES, UNLESS NOTED OTHERWISE IN SHEAR WALL SCHEDULE.

STRUCTURAL CONNECTIONS

20. THE CONTRACTOR IS ULTIMATELY RESPONSIBLE TO PROVIDE ADEQUATE STRUCTURAL CONNECTIONS. CONNECTIONS MUST CARRY THE BEARING CAPACITY OF THE MEMBER AND ANY UPLIFT OR SEISMIC FORCES GENERATED IN THE MEMBER. SPECIAL CONSIDERATION SHALL BE GIVEN TO PREVENT CRUSHING OF THE MEMBER AT BEARING, SPLITTING AND/OR CRACKING OF THE WOOD, AND THE LIKE.
21. THE CONTRACTOR SHALL STRICTLY ADHERE TO THE CONNECTION DETAILS SPECIFIED ON THE PLANS OR INCLUDED WITH THE CONSTRUCTION DOCUMENTS. PRIOR APPROVAL IS REQUIRED FOR ANY DEVIATION FROM THE CONSTRUCTION DOCUMENTS.
22. SUBSTITUTION OF CONNECTIONS OTHER THAN THOSE SPECIFIED ON THE PLANS REQUIRES PRIOR APPROVAL. THE ENGINEER IS NOT RESPONSIBLE FOR CONNECTIONS NOT APPROVED PRIOR TO CONSTRUCTION OR INSTALLATION.
23. IF CONNECTION DETAILS, APPROVED BY THE ENGINEER, HAVE NOT BEEN PROVIDED IN THE CONSTRUCTION DOCUMENTS, IT IS THE CONTRACTOR'S RESPONSIBILITY TO SPECIFY AND PROVIDE ALL STRUCTURAL CONNECTIONS. IF OTHER THAN STANDARD CONNECTIONS ARE REQUIRED, SEE ENGINEER FOR ADDITIONAL ASSISTANCE.
24. USE SIMPSON CONNECTIONS OR EQUIVALENT. INSTALL PER MANUFACTURER'S SPECIFICATIONS.
25. SHOP DRAWINGS FOR ALL FABRICATED STEEL CONNECTIONS SHALL BE SUBMITTED FOR REVIEW AND APPROVAL PRIOR TO FABRICATION AND INSTALLATION. SEE GENERAL STEEL NOTES.
26. SEE GENERAL CONCRETE NOTES FOR SPECIFICATION OF ANCHOR BOLTS, ETC. IN NO CASE SHALL THE MUD SILL BE NOTCHED FOR THE INSTALLATION OF PLATE WASHERS, OR FOR ANY OTHER REASON.
27. ALL STRUCTURAL MEMBERS SHALL HAVE 1 3/4" MINIMUM BEARING.
28. FOR ADDITIONAL NAILING PATTERN, SEE SCHEDULES IN THE INTERNATIONAL BUILDING CODE (IBC).

FABRICATED FRAMING

29. FABRICATED (PRE-ENGINEERED) TRUSSES MAY BE USED FOR ROOF AND/OR FLOOR FRAMING. INSTALL PER MANUFACTURER'S RECOMMENDATIONS AND SPECIFICATIONS. TRUSS MANUFACTURER SHALL DESIGN TRUSSES FOR ALL LOADS PER INTERNATIONAL BUILDING CODE, INCLUDING UNBALANCED SNOW LOADS, SNOW DRIFTING, SNOW BUILD UP IN VALLEYS AND ON EAVES, ETC. TRUSS MANUFACTURER SHALL RECOMMEND AND PROVIDE ALL REQUIRED TRUSS BRACING, BLOCKING, TRUSS TO TRUSS AND TRUSS TO BEAM CONNECTIONS, ETC. SEE GENERAL TRUSS NOTES.
30. SHOP DRAWINGS FOR ALL FABRICATED FRAMING SHALL BE SUBMITTED FOR REVIEW AND APPROVAL PRIOR TO FABRICATION AND INSTALLATION.

GENERAL WOOD TRUSS NOTES:

1. SEE GENERAL STRUCTURAL NOTES FOR ADDITIONAL REQUIREMENTS.
2. THE TRUSSES SHALL ALSO BE DESIGNED PER THE 2006 INTERNATIONAL BUILDING CODE, AND LOCAL ORDINANCES. THE TRUSS MANUFACTURER SHALL BE RESPONSIBLE FOR THE DESIGN AND FABRICATION OF THE PRE-ENGINEERED TRUSSES, PER THE DESIGN CRITERIA ABOVE. DESIGN MUST TAKE INTO ACCOUNT UNBALANCED SNOW LOADS, SNOW DRIFTING, INCREASED SNOW LOADS ON EAVES AND IN VALLEYS, IMPACT LOADS FROM FALLING SNOW AND ICE, ETC.
3. THE PROJECT ENGINEER, OR ENGINEER OF RECORD, IS NOT RESPONSIBLE FOR THE DESIGN OF THE PRE-ENGINEERED TRUSSES, NOR FOR THE INSTALLATION, ETC. OF THE TRUSSES. SHOP DRAWINGS FOR ALL WOOD TRUSSES SHALL BE SUBMITTED TO THE ENGINEER AND ARCHITECT FOR REVIEW AND APPROVAL PRIOR TO FABRICATION AND INSTALLATION.
4. ALL TRUSS TO TRUSS AND TRUSS TO STRUCTURAL BEAM CONNECTORS SHALL BE SPECIFIED BY THE TRUSS MANUFACTURER.
5. THE TRUSSES SHALL BE DESIGNED TO CARRY ANY ADDITIONAL LOADS DUE TO MECHANICAL UNITS, OVERHEAD DOORS, ROOF OVERBUILDS, ETC. SEE STRUCTURAL PLANS FOR ADDITIONAL REQUIREMENTS.
6. ALL MEMBERS SHALL BE DESIGNED FOR COMBINED STRESSES, BASED ON THE WORST LOADING CONDITION.
7. BOTTOM CHORDS OF TRUSSES, ACTING AS CEILING MEMBERS, MUST BE ABLE TO SUPPORT A 10 PSF LIVE LOAD PER IBC REQUIREMENTS.
8. EACH CHORD SECTION SHALL BE INVOLVED IN TWO PANEL POINTS BEFORE BEING SPLICED.
9. PROVIDE 1/8" CAMBER FOR EACH 6 FEET OF TRUSS UNLESS OTHERWISE INDICATED.

TRUSS BRACING AND BLOCKING

10. THE TRUSS MANUFACTURER SHALL SPECIFY PROPER BRACING OF COMPRESSION CHORD MEMBERS 6'-0" LONG (OR LONGER), AS WELL AS BRACING REQUIRED FOR TRUSS ERECTION, AND ANY OTHER BRACING.
11. THE TRUSS MANUFACTURER SHALL SPECIFY ALL REQUIRED TRUSS BLOCKING. TRUSS BLOCKING SHALL BE DESIGNED FOR LATERAL LOADINGS.

FABRICATION AND INSTALLATION

12. FABRICATION OF TRUSSES SHALL BE AS APPROVED BY ICBO. THIS SPECIFICATION SHALL GOVERN WHEN IT EXCEEDS ICBO REQUIREMENTS.
13. ALL DIMENSIONS SHALL BE FIELD VERIFIED PRIOR TO FABRICATION.
14. FABRICATE TRUSSES FROM SHOP DRAWINGS REVIEWED AND APPROVED BY THE ENGINEER AND ARCHITECT.
15. FABRICATE TRUSSES IN JIGS WITH MEMBERS ACCURATELY CUT TO PROVIDE GOOD BEARING AT JOINTS. JOINTS SHALL BE ACCEPTABLE IF THE AVERAGE OPENING BETWEEN ENDS OF MEMBERS IMMEDIATELY AFTER FABRICATION IS LESS THAN 1/16", EXCEPT THAT TRUSS COMPRESSION CHORD JOINTS AT SPLICES AND RIDGES SHALL HAVE FULL CONTACT BETWEEN MEMBERS.
16. TRUSS FABRICATORS USING METAL PLATES SHALL HAVE PLANT INSPECTED FOUR TIMES PER YEAR BY AN INDEPENDENT TESTING LABORATORY IN ACCORDANCE WITH TPI REGULATIONS AND COPIES OF INSPECTIONS MADE AVAILABLE TO OWNER UPON REQUEST.
17. THE CONTRACTOR SHALL BE RESPONSIBLE FOR THE INSTALLATION OF THE TRUSSES PER THE TRUSS MANUFACTURER'S RECOMMENDATIONS AND SPECIFICATIONS. NO WEB OR CHORD MEMBERS SHALL BE MODIFIED IN THE FIELD.

METAL GUSSET PLATES

18. GUSSET PLATES SHALL BE SPECIFIED FOR GREATER OF EITHER THE MEMBER FORCES SHOWN ON DRAWINGS OR THE MEMBER FORCES DERIVED FROM STRUCTURAL ANALYSIS. PLUS OR MINUS 6%.
19. NO PANEL POINT SHALL HAVE MORE THAN ONE PLATE PER TRUSS SIDE.
20. PLATES SHALL HAVE MINIMUM BITE OF 2 1/2" ON MEMBERS. MEASURE BITE ALONG CENTER LINE OF WEBS AND PERPENDICULAR TO CHORD AXES. ORIENT PLATE AXIS PARALLEL WITH TRUSS CHORD AXIS EXCEPT WHERE CHORDS CHANGE PITCH AT JOINT.
21. PRESS PLATES INTO MEMBERS TO OBTAIN FULL PENETRATION WITHOUT CRUSHING OUT SURFACE OF WOOD. PLATE EMBEDMENT IS ACCEPTABLE IF OPENING BETWEEN PLATE AND WOOD SURFACE IS LESS THAN 1/32".
22. LUMBER DEFECTS AND PLATE MISPLACEMENT, IN COMBINATION, SHALL NOT REDUCE PLATE AREA OR NUMBER OF AFFECTIVE TEETH, PRONGS, OR NAILS BY MORE THAN 10%.
23. DO NOT APPLY METAL GUSSET PLATES AFTER SHOP FABRICATION.

DESIGN LOADS FOR ROOF TRUSSES: (1)

TOP CHORD LIVE LOAD	= 30 PSF
TOP CHORD DEAD LOAD	= 10 PSF
BOT CHORD LIVE LOAD	= 10 PSF
BOT CHORD DEAD LOAD	= 5 PSF
TOTAL DESIGN LOAD	= 45 PSF

DEFLECTION CRITERIA FOR ROOF TRUSSES:

TOTAL LOAD DEFLECTION = L/ 240

State of Utah
Department of Administrative Services

Division of Facilities Construction & Management
4110 State Office Building
Salt Lake City, Utah 84114
Phone: (801) 538 - 3018
Fax: (801) 538 - 3267
http://dfcm.utah.gov

DYNAMIC STRUCTURES
1887 NORTH 1120 WEST PROVO, UTAH 84604
PH: (801) 356-1140 FAX: (801) 356-0001

BUILDING NAME:
PROPERTY# 15278

PROJECT TITLE:
USOR - Division of Services for the Blind and Visually Impaired TRAINING HOUSING Salt Lake City, Utah

MARK	DATE	DESCRIPTION
1	5/27/2010	ADDENMDUM #1

ISSUE TYPE: CONST. DOCUMENT PHASE

ISSUE DATE: 30 APRIL 2010

DFCM PROJECT NO: 09240200
CAD PROJECT NO:
CAD DWG FILE:
DRAWN BY: G.R.J.
CHK'D BY: G.R.J.
COPYRIGHT: STATE OF UTAH

SHEET TITLE
GENERAL STRUCTURAL NOTES

SHEET NUMBER
SE-001

STATEMENT OF SPECIAL INSPECTIONS

1. THE PROJECT OWNER SHALL EMPLOY ONE OR MORE SPECIAL INSPECTORS TO PROVIDE INSPECTIONS DURING CONSTRUCTION ON THE TYPES OF WORK LISTED BELOW. THE SPECIAL INSPECTOR SHALL BE A QUALIFIED PERSON WHO SHALL DEMONSTRATE COMPETENCE, TO THE SATISFACTION OF THE BUILDING OFFICIAL, FOR INSPECTION OF THE PARTICULAR TYPE OF CONSTRUCTION OR OPERATION REQUIRING SPECIAL INSPECTION. THESE INSPECTIONS ARE IN ADDITION TO THE INSPECTIONS REQUIRED BY THE BUILDING DEPARTMENT OF THE LOCAL JURISDICTION.

2. SPECIAL INSPECTORS SHALL KEEP RECORDS OF INSPECTIONS. THE SPECIAL INSPECTOR SHALL FURNISH INSPECTION REPORTS TO THE BUILDING OFFICIAL AND TO THE REGISTERED DESIGN PROFESSIONAL IN RESPONSIBLE CHARGE. REPORTS SHALL INDICATE THAT WORK INSPECTED WAS DONE IN CONFORMANCE WITH APPROVED CONSTRUCTION DOCUMENTS. DISCREPANCIES SHALL BE BROUGHT TO THE IMMEDIATE ATTENTION OF THE CONTRACTOR FOR CORRECTION. IF THE DISCREPANCIES ARE NOT CORRECTED, THE DISCREPANCIES SHALE BE BROUGHT TO THE ATTENTION OF THE BUILDING OFFICIAL AND TO THE REGISTERED DESIGN PROFESSIONAL IN RESPONSIBLE CHARGE PRIOR TO THE COMPLETION OF THAT A PHASE OF THE WORK. A FINAL REPORT DOCUMENTING REQUIRED SPECIAL INSPECTIONS AND CORRECTION OF ANY DISCREPANCIES NOTED IN THE INSPECTIONS SHALL BE SUBMITTED AT A POINT IN TIME AGREED UPON BY THE PERMIT APPLICANT AND THE BUILDING OFFICIAL PRIOR TO THE START OF WORK.

3. SPECIAL INSPECTIONS FOR EACH TASK SHALL BE CARRIED OUT IN COMPLIANCE WITH REQUIREMENTS PER THE CURRENT IBC AND OTHER MATERIAL STANDARDS.

FABRICATION SHOP REQUIREMENTS

4. WHERE FABRICATION OF STRUCTURAL LOAD BEARING MEMBERS AND ASSEMBLIES IS BEING PERFORMED ON THE PREMISES OF A FABRICATORS SHOP, SPECIAL INSPECTIONS REQUIRED BELOW SHALL BE PROVIDED IN THE SHOP DURING THE FABRICATION PROCESS. THIS REQUIREMENT MAY BE EXCEPTED IF THE WORK IS DONE ON THE PREMISES OF A FABRICATOR REGISTERED AND APPROVED TO PERFORM SUCH WORK WITHOUT SPECIAL INSPECTION. A CERTIFICATE SHALL BE REQUIRED TO VERIFY SUCH APPROVAL. AT COMPLETION OF THE FABRICATION, THE APPROVED FABRICATOR SHALL SUBMIT A CERTIFICATE OF COMPLIANCE TO THE BUILDING OFFICIAL STATING THAT THE WORK WAS PERFORMED IN ACCORDANCE WITH THE APPROVED CONSTRUCTION DRAWINGS.

STEEL

1. SPECIAL INSPECTIONS FOR STEEL ELEMENTS OF BUILDINGS AND STRUCTURES SHALL BE IN ACCORDANCE WITH THE TABLE BELOW:

STEEL INSPECTIONS

TASK No.	TASK	INSPECTION FREQUENCY CONT.	PERIODIC
1	MATERIAL VERIFICATION OF HIGH-STRENGTH BOLTS, NUTS AND WASHERS:		
1a	IDENTIFICATION MARKINGS TO CONFORM TO ASTM STANDARDS SPECIFIED IN THE APPROVED CONSTRUCTION DOCUMENTS		X
1b	MANUFACTURERS CERTIFICATE OF COMPLIANCE REQUIRED		X
2	INSPECTION OF HIGH STRENGTH BOLTING:		
2a	BEARING TYPE CONNECTIONS		X
2b	SLIP CRITICAL CONNECTIONS	X	X
3	INSPECTION OF WELDING:		
3a	COMPLETE AND PARTIAL PENETRATION GROOVE WELDS	X	
3b	MULTI-PASS FILLET WELDS	X	
3c	SINGLE-PASS FILLET WELDS > 5/16"	X	
3d	SINGLE-PASS FILLET WELDS ≤ 5/16"		X
3e	FLOOR AND ROOF DECK WELDS		X
4	INSPECTION OF GRAVITY CONNECTIONS FOR GENERAL COMPLIANCE w/ CONST. DOCUMENTS		X

TASKS no's. REQ'D FOR THIS SPECIFIC PROJECT ALONG WITH SEISMIC RESISTANCE & SEISMIC TESTING REQUIREMENTS

1a, 1b, 3a, 3d, 4

CONCRETE

1. SPECIAL INSPECTIONS AND VERIFICATIONS FOR CONCRETE CONSTRUCTION SHALL BE AS REQUIRED IN ACCORDANCE WITH THE TABLE BELOW:

2. THE CONTRACTOR SHALL SUPPLY SUFFICIENT DATA OR DOCUMENTATION PROVIDING EVIDENCE OF CONFORMANCE TO QUALITY STANDARDS FOR MATERIALS IN CHAPTER 3 OF ACI 318 OR PROVIDE TESTING FOR COMPLIANCE

CONCRETE INSPECTIONS

TASK No.	TASK	INSPECTION FREQUENCY CONT.	PERIODIC
1	INSPECTION OF REINFORCING STEEL, INCLUDING PRE-STRESSING TENDONS, AND PLACEMENT		X
2	VERIFYING USE OF REQUIRED DESIGN MIX		X
3	FRESH CONCRETE SAMPLED FOR STRENGTH, SLUMP, AIR CONTENT AND TEMPERATURE	X	
4	INSPECTION OF PLACEMENT FOR PROPER APPLICATION TECHNIQUES	X	
5	INSPECTION FOR MAINTENANCE OF SPECIFIED CURING TEMPERATURE AND TECHNIQUES		X
6	APPLICATION OF PRE-STRESSING FORCES	X	
7	ERECTION OF PRE-CAST CONCRETE MEMBERS		X
8	VERIFICATION OF IN-SITU STRENGTH PRIOR TO STRESSING TENDONS OR REMOVING SHORES		X
9	INSPECT FORM WORK FOR SHAPE, LOCATION AND DIMENSIONS		X
10	POST INSTALLED MECHANCIAL ANCHORS	X	
11	POST INSTALLED EPOXY ANCHORS	X	

TASKS no's. REQ'D FOR THIS SPECIFIC PROJECT ALONG WITH SEISMIC RESISTANCE & SEISMIC TESTING REQUIREMENTS

1, 2, 3, 4, 5, 6, 7, 8, 9,10,11

MASONRY

1. MASONRY CONSTRUCTION SHALL BE INSPECTED AND EVALUATED IN ACCORDANCE WITH THE TABLE BELOW:

MASONRY INSPECTIONS LEVEL 1

TASK No.	TASK	INSPECTION FREQUENCY CONT.	PERIODIC
1	AS MASONRY CONSTRUCTION BEGINS THE FOLLOWING SHALL BE VERIFIED TO ENSURE COMPLIANCE:		
1a	PROPORTIONS OF SITE PREPARED MORTAR		X
1b	CONSTRUCTION OF MORTAR JOINTS		X
1c	LOCATION OF REINFORCEMENT, CONNECTORS, AND ANCHORAGES		X
2	THE INSPECTION PROGRAM SHALL VERIFY:		
2a	SIZE AND LOCATION OF STRUCTURAL ELEMENTS		X
2b	TYPE, SIZE, AND LOCATION OF ANCHORS		X
2c	SPECIFIED SIZE GRADE AND TYPE OF REINFORCEMENT		X
2d	WELDING OF REINFORCEMENT BARS	X	
2e	PROTECTION OF MASONRY DURING COLD (BELOW 40deg. F) OR HOT (ABOVE 90deg. F) WEATHER		X
3	PRIOR TO GROUTING THE FOLLOWING SHALL BE VERIFIED TO ENSURE COMPLIANCE:		
3a	GROUT SPACE IS CLEAN	X	
3b	PLACEMENT OF REINFORCING AND CONNECTORS	X	
3c	PROPORTIONS OF SITE PREPARED GROUT	X	
3d	CONSTRUCTION OF MORTAR JOINTS	X	
4	GROUT PLACEMENT SHALL BE VERIFIED TO ENSURE COMPLIANCE WITH CODE AND CONSTRUCTION DOCUMENTS	X	
5	PREPARATION OF ANY REQUIRED GROUT, MORTAR OR PRISM SPECIMENS	X	
6	COMPLIANCE WITH REQUIRED INSPECTION PROVISIONS OF THE CONSTRUCTION DOCUMENTS AND THE APPROVED SUBMITTALS SHALL BE VERIFIED		X

TASKS no's. REQ'D FOR THIS SPECIFIC PROJECT ALONG WITH SEISMIC RESISTANCE & SEISMIC TESTING REQUIREMENTS

NONE

WOOD

1. SPECIAL INSPECTIONS OF PRE-FABRICATED WOOD STRUCTURAL ELEMENTS SHALL BE AS PER GENERAL INSPECTION NOTE #4

2. SPECIAL INSPECTIONS OF SITE-BUILT ASSEMBLIES SHALL BE IN ACCORDANCE WITH THE TABLE BELOW:

WOOD INSPECTIONS

TASK No.	TASK	INSPECTION FREQUENCY CONT.	PERIODIC
1	HIGH-LOAD DIAPHRAGMS AS PER IBC 1704. 6. 1		X

TASKS no's. REQ'D FOR THIS SPECIFIC PROJECT ALONG WITH SEISMIC RESISTANCE & SEISMIC TESTING REQUIREMENTS

NONE

SOILS

1. SPECIAL INSPECTIONS FOR EXISTING SITE SOIL CONDITIONS, FILL PLACEMENT AND LOAD-BEARING REQUIREMENTS SHALL BE IN ACCORDANCE WITH THE TABLE BELOW:

2. THE APPROVED SOILS REPORT AND THE CONSTRUCTION DOCUMENTS SHALL BE USED TO DETERMINE COMPLIANCE

SOILS INSPECTIONS

TASK No.	TASK	INSPECTION FREQUENCY CONT.	PERIODIC
1	VERIFY MATERIALS BELOW FOOTINGS ARE ADEQUATE TO ACHIEVE THE DESIGN BEARING CAPACITY		X
2	VERIFY EXCAVATIONS ARE EXTENDED TO PROPER DEPTH AND HAVE REACHED PROPER MATERIAL		X
3	PERFORM CLASSIFICATION AND TESTING OF CONTROLLED FILL MATERIAL		X
4	VERIFY USE OF PROPER MATERIALS, DENSITIES AND LIFT THICKNESSES DURING PLACEMENT AND COMPACTION OF CONTROLLED FILL	X	
5	PRIOR TO PLACEMENT OF CONTROLLED FILL, OBSERVE SUB GRADE AND VERIFY THAT SITE HAS BEEN PROPERLY PREPARED		X

TASKS no's. REQ'D FOR THIS SPECIFIC PROJECT:

1, 2, 3, 4, 5

SEISMIC RESISTANCE

1. SPECIAL INSPECTIONS SHALL BE PROVIDED FOR COMPONENTS THAT ARE PART OF THE SEISMIC FORCE RESISTING SYSTEM IN ACCORDANCE WITH THE TABLE BELOW:

SEISMIC RESISTANCE

TASK No.	TASK	INSPECTION FREQUENCY CONT.	PERIODIC
1	ALL STRUCTURAL STEEL WELDING EXCEPT SINGLE PASS FILLET WELDS LESS THAN 5/16" AND FLOOR AND ROOF DECK WELDING	X	
2	FIELD GLUING OF WOOD ELEMENTS	X	
3	NAILING, BOLTING, ANCHORING AND OTHER FASTENING OF WOOD SHEAR WALLS, WOOD DIAPHRAGMS, DRAG STRUTS, BRACES, SHEAR PANELS AND HOLD DOWNS WHERE THE SHEAR WALL FASTENER SPACING IS 4" O.C. OR LESS		X
4	WELDING, SCREW ATTACHMENT, BOLTING, ANCHORING OF COLD FORMED FRAMED SHEAR WALLS, STRUTS, BRACES AND HOLD DOWNS		X
5	PLACEMENT OF REINFORCING, IN PIER FOUNDATIONS		X
6	PLACEMENT OF CONCRETE IN PIER FOUNDATIONS	X	

TASKS no's. REQ'D FOR THIS SPECIFIC PROJECT:

NONE

SEISMIC TESTING

1. TESTING AND VERIFICATION SHALL BE PROVIDED FOR QUALITY ASSURANCE OF ALL MATERIALS LISTED BELOW THAT ARE PART OF THE SEISMIC FORCE RESISTING SYSTEM

1a. MASONRY AS PER IBC TABLE 1708.1.2

1b. REINFORCING AND PRE STRESSING STEEL AS PER IBC 1708.3 AND ACI 318

1c. STRUCTURAL STEEL AS PER AISC 341 AND AWS D1.1

State of Utah
Department of Administrative Services
Division of Facilities Construction & Management
4110 State Office Building
Salt Lake City, Utah 84114
Phone: (801) 538 - 3018
Fax: (801) 538 - 3267
http://dfcm.utah.gov

DYNAMIC STRUCTURES
1887 NORTH 1120 WEST PROVO, UTAH 84604
PH: (801) 356-1140 FAX: (801) 356-0001

BUILDING NAME:

PROPERTY# 15278

PROJECT TITLE:

USOR - Division of Services for the Blind and Visually Impaired TRAINING HOUSING
Salt Lake City, Utah

MARK	DATE	DESCRIPTION
1	5/27/2010	ADDENMDUM #1

ISSUE TYPE: CONST. DOCUMENT PHASE

ISSUE DATE: 30 APRIL 2010

DFCM PROJECT NO: 09240200
CAD PROJECT NO:
CAD DWG FILE:
DRAWN BY: G.R.J.
CHK'D BY: G.R.J.
COPYRIGHT: STATE OF UTAH

SHEET TITLE

STATEMENT OF SPECIAL INSPECTION

SHEET NUMBER

SE-002

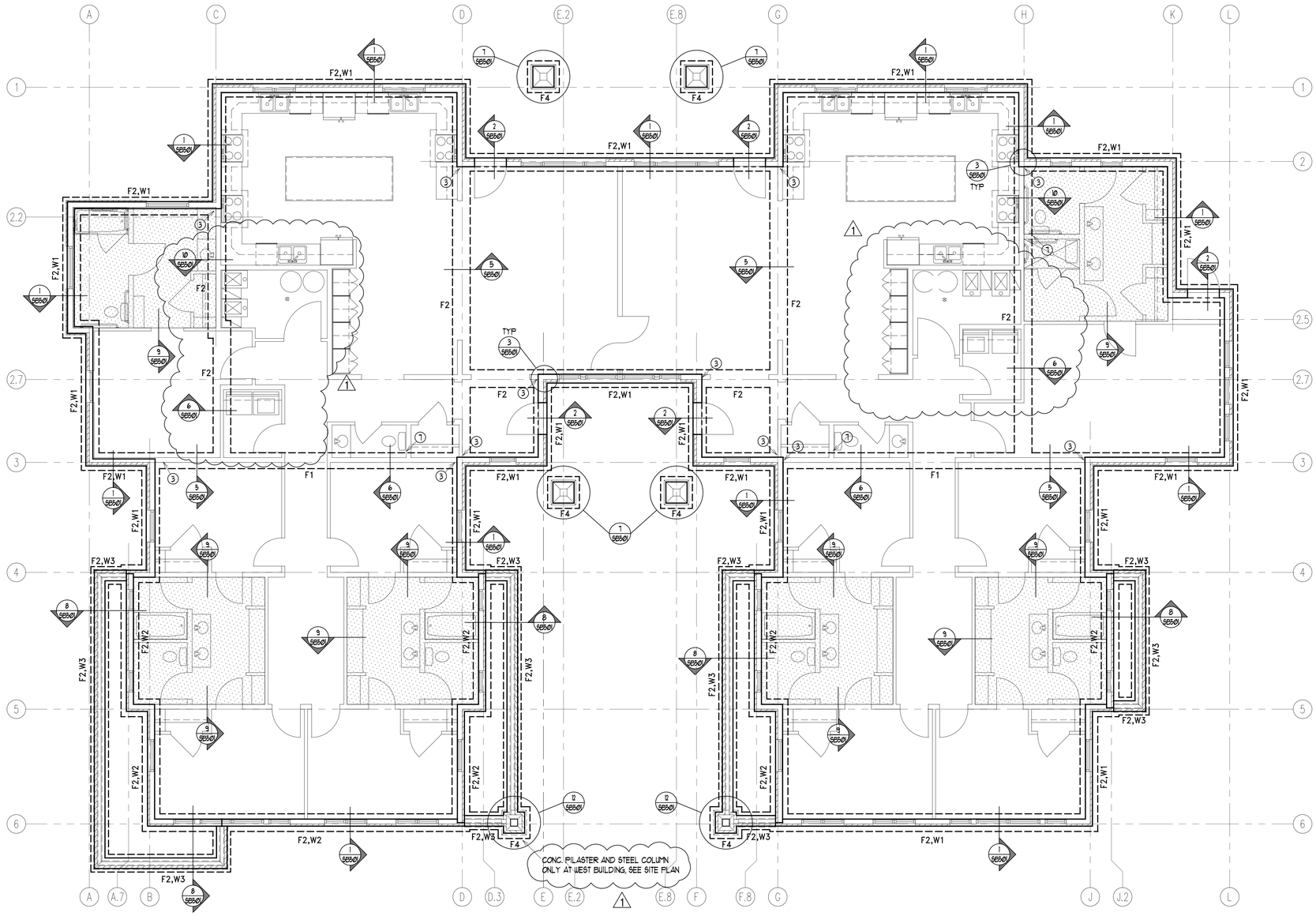

FOUNDATION SCHEDULE

MARK	THICKNESS	HEIGHT	VERTICAL REINFORCING		HORIZONTAL REINFORCING	
			REBAR SIZE	SPACING	REBAR SIZE	SPACING
W1	10"	4'-0" MAX	#5	18" O.C.	#5	18" O.C.
W2	8"	4'-0" MAX	#4	18" O.C.	#4	18" O.C.
W3	12"	4'-0" MAX	#5	16" O.C.	#5	12" O.C.

PLACE (2) #4 HORIZONTAL BARS @ THE TOP & BOTTOM OF WALL CONTINUOUS, TYPICAL.
RECESS TOP OF WALL @ OPENINGS & FOUR SLAB THROUGH, SEE DETAILS
MINIMUM COMPRESSIVE STRENGTH f'c = SEE CONCRETE NOTES
REINFORCING STEEL = SEE CONCRETE NOTES

FOOTING SCHEDULE

MARK	WIDTH	LENGTH	DEPTH	REINFORCING CROSS-WISE				REINFORCING LENGTH-WISE			
				No.	SIZE	LENGTH	SPACING	No.	SIZE	LENGTH	SPACING
F1	18"	CONT	10"	-	-	-	-	(2)	#4	CONT	EQUAL
F2	20"	CONT	10"	-	-	-	-	(2)	#4	CONT	EQUAL
F3	3'-0"	3'-0"	10"	(4)	#4	2'-6"	EQUAL	(4)	#4	2'-6"	EQUAL
F4	PIER + 12"		12"	-	#4	PIER + 6"	10" O.C.	-	#4	PIER + 6"	10" O.C.

MINIMUM COMPRESSIVE CONCRETE STRENGTH f'c = 3000 PSI
ALL REINFORCING STEEL SHALL BE GRADE 60 AND BE PROPERLY TIED INTO PLACE PRIOR TO POUR
ALL CONCRETE WORK MUST MEET THE REQUIREMENTS OF THE 2006 IBC, ACI 318 AND LOCAL ORDINANCES

FOOTING AND FOUNDATION NOTES

1. FOR GENERAL CONCRETE NOTES SEE SHEET SE-001
2. PROVIDE CONTROL JOINTS IN SLAB, PER DETAIL 4/ SB-501 UNLESS NOTED OTHERWISE)
3. EPOXY ALL HORIZONTAL REINFORCING IN FOOTING INTO CONCRETE STEMWALL PER DETAIL 3/ SB-501
4. ALL FOOTINGS MUST BE PLACED ON PROPERLY PREPARED SOIL PER GENERAL NOTES ON SE-001
5. SEE SHEAR WALL PLANS FOR REQUIRED ANCHOR BOLTS AND HOLDOWNS TO BE PLACED IN CONCRETE
6. RECESSED SLAB PER ARCHITECTURAL
7. PLUMBING CAN NOT RUN PARALLEL UNDER FOOTINGS
   ALL PLUMBING PENETRATIONS INTO FOOTINGS MUST RUN PERPENDICULAR UNTIL THEY CLEAR FOOTING BY A MIN. OF 12"
8. TOP OF FOUNDATION WALL ELEVATION AS PER ARCH. PLANS
9. ALL FASTENERS USED IN CONJUCTION w/ PRESERVATIVE TREATED WOOD SHALL COMPLY w/ SECTION IBC 2304.9.5

State of Utah
Department of Administrative Services
Division of Facilities Construction & Management
4110 State Office Building
Salt Lake City, Utah 84114
Phone: (801) 538 - 3018
Fax: (801) 538 - 3267
http://dfcm.utah.gov

DYNAMIC STRUCTURES
1887 NORTH 1120 WEST PROVO, UTAH 84604
PH: (801) 356-1140 FAX: (801) 356-0001

BUILDING NAME:
PROPERTY# 15278

PROJECT TITLE:
USOR - Division of Services for the Blind and Visually Impaired TRAINING HOUSING Salt Lake City, Utah

MARK	DATE	DESCRIPTION
1	5/27/2010	ADDENMDUM #1

ISSUE TYPE: CONST. DOCUMENT PHASE
ISSUE DATE: 30 APRIL 2010
DFCM PROJECT NO: 09240200
CAD PROJECT NO:
CAD DWG FILE:
DRAWN BY: G.R.J.
CHK'D BY: G.R.J.
COPYRIGHT: STATE OF UTAH

SHEET TITLE
FOOTING AND FOUNDATION PLAN
SCALE: 3/16" = 1'-0"

SHEET NUMBER
SB-101

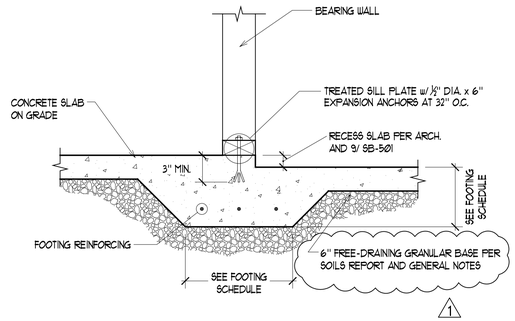

10 SB501 CONSTRUCTION DETAIL
NO SCALE

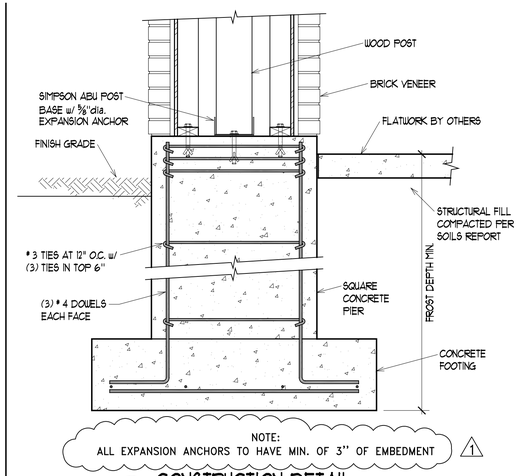

7 SB501 CONSTRUCTION DETAIL
NO SCALE

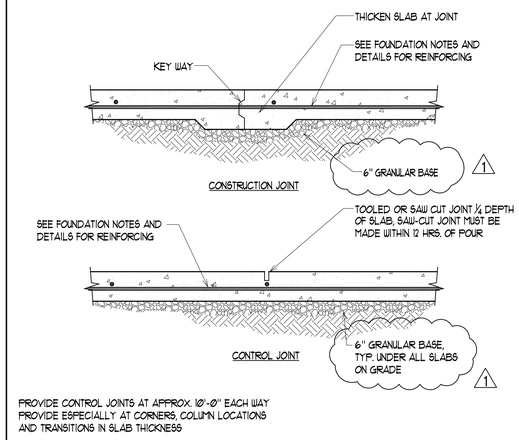

4 SB501 CONSTRUCTION DETAIL
NO SCALE

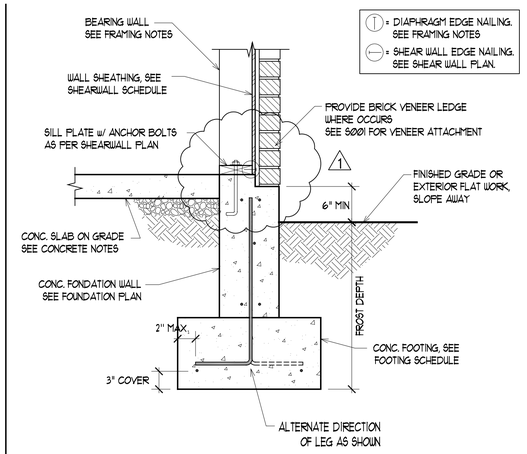

1 SB501 CONSTRUCTION DETAIL
NO SCALE

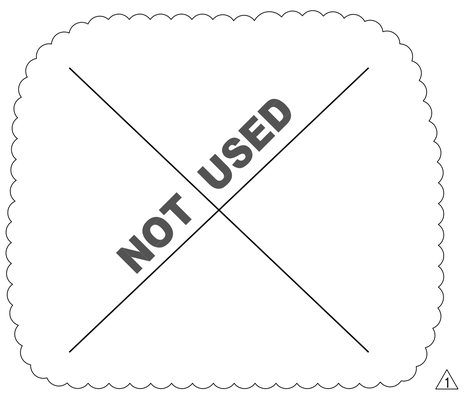

11 SB501 CONSTRUCTION DETAIL
NO SCALE

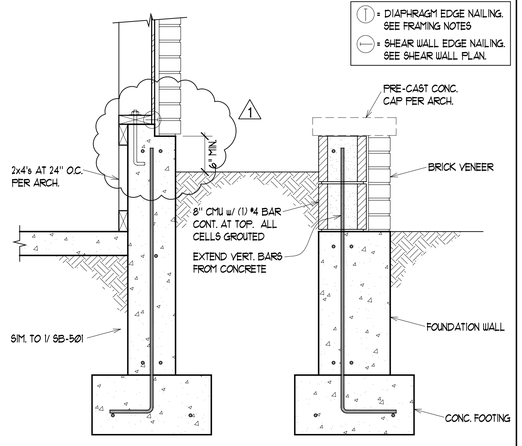

8 SB501 CONSTRUCTION DETAIL
NO SCALE

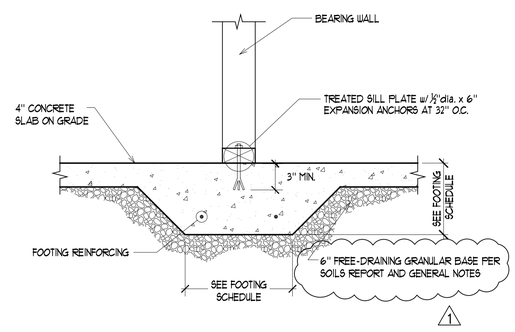

5 SB501 CONSTRUCTION DETAIL
NO SCALE

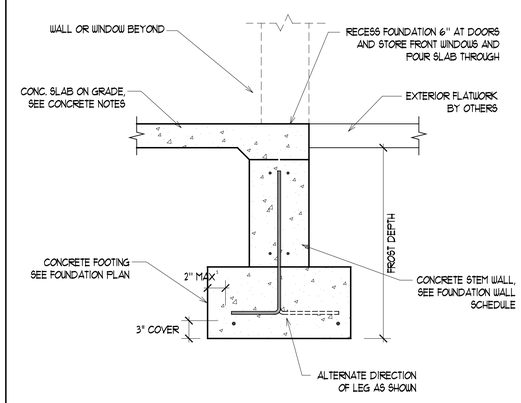

2 SB501 CONSTRUCTION DETAIL
NO SCALE

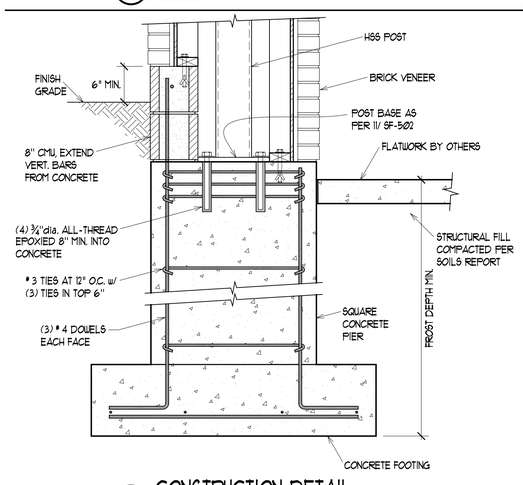

12 SB501 CONSTRUCTION DETAIL
NO SCALE

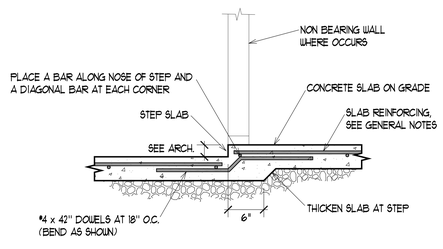

9 SB501 CONSTRUCTION DETAIL
NO SCALE

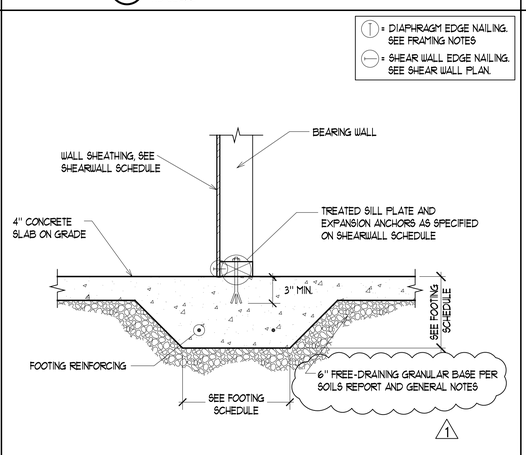

6 SB501 CONSTRUCTION DETAIL
NO SCALE

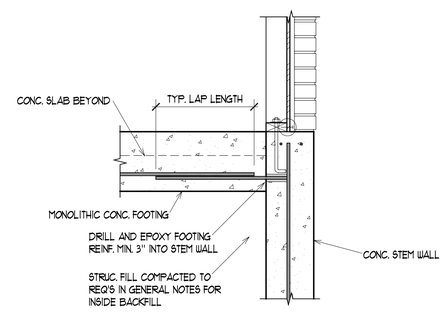

3 SB501 CONSTRUCTION DETAIL
NO SCALE

State of Utah
Department of Administrative Services
Division of Facilities Construction & Management
4110 State Office Building
Salt Lake City, Utah 84114
Phone: (801) 538 - 3018
Fax: (801) 538 - 3267
http://dfcm.utah.gov

DYNAMIC STRUCTURES
1887 NORTH 1120 WEST PROVO, UTAH 84604
PH: (801) 356-1140 FAX: (801) 356-0001

BUILDING NAME:
PROPERTY# 15278

PROJECT TITLE:
USOR - Division of Services for the Blind and Visually Impaired TRAINING HOUSING
Salt Lake City, Utah

MARK	DATE	DESCRIPTION
1	5/27/2010	ADDENMDUM #1

ISSUE TYPE: CONST. DOCUMENT PHASE
ISSUE DATE: 30 APRIL 2010
DFCM PROJECT NO: 09240200
CAD PROJECT NO:
CAD DWG FILE:
DRAWN BY: G.R.J.
CHK'D BY: G.R.J.
COPYRIGHT: STATE OF UTAH

SHEET TITLE
CONSTRUCTION DETAILS
SCALE: AS SHOWN

SHEET NUMBER
SB-501

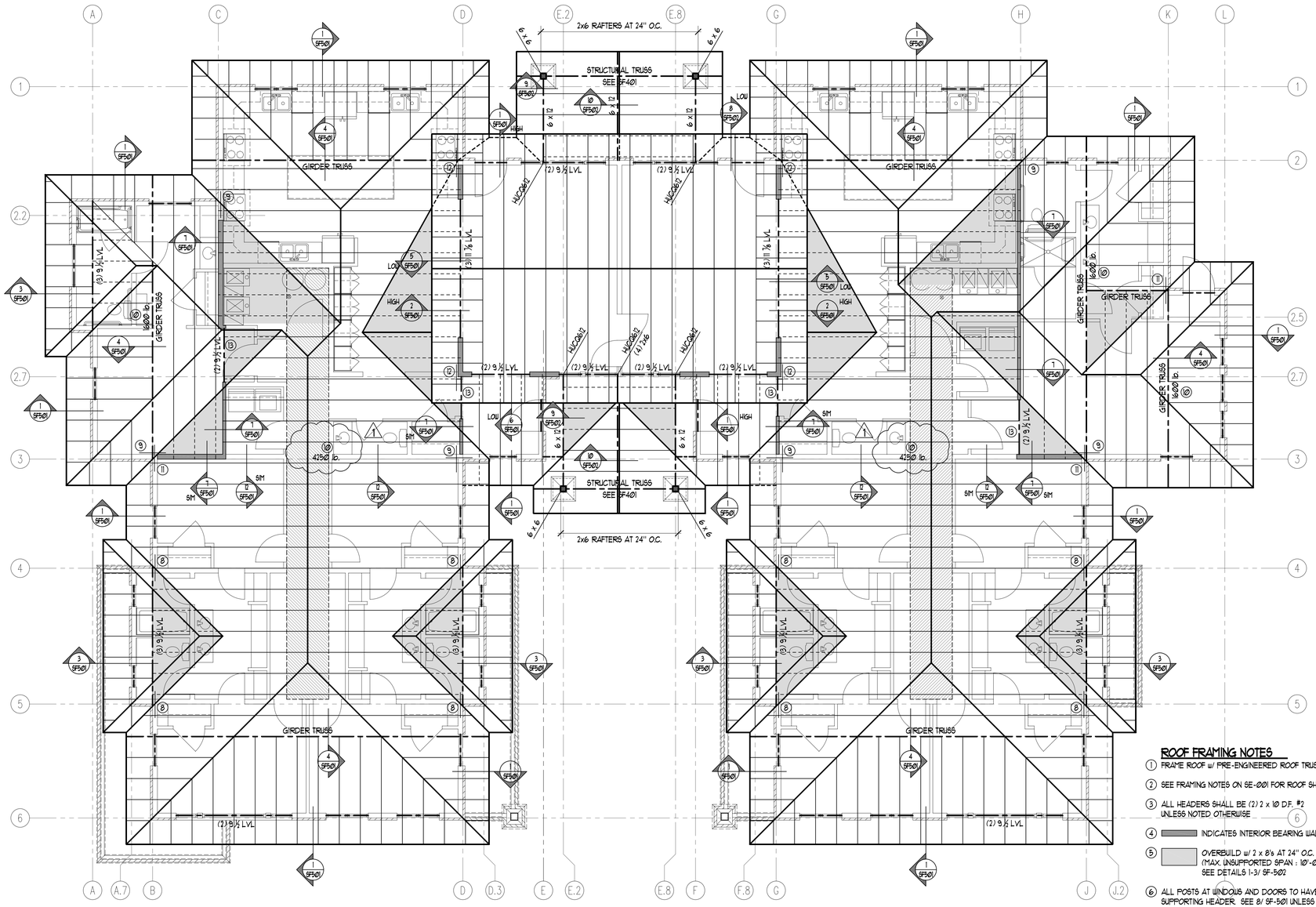

ROOF FRAMING NOTES

1. FRAME ROOF w/ PRE-ENGINEERED ROOF TRUSSES AT 24" O.C.
2. SEE FRAMING NOTES ON SE-001 FOR ROOF SHEATHING REQUIREMENTS
3. ALL HEADERS SHALL BE (2) 2 x 10 D.F. #2 UNLESS NOTED OTHERWISE
4. INDICATES INTERIOR BEARING WALL
5. OVERBUILD w/ 2 x 8's AT 24" O.C. (MAX. UNSUPPORTED SPAN : 10'-0") SEE DETAILS 1-3/ SF-502
6. ALL POSTS AT WINDOWS AND DOORS TO HAVE 1 KS, 1 TR. SUPPORTING HEADER. SEE 8/ SF-501 UNLESS NOTED OTHERWISE
7. ALL POSTS TO BE (2) 2 x 6, (3) 2 x 4 STUD POST OR WIDTH OF BEAM AS A MIN. UNLESS NOTED OTHERWISE. STUDS ARE TO BE NAILED TOGETHER w/ 16d NAILS AT 6" O.C. STAGGERED, SEE 8/ SF-501
8. ATTACH MST 37 STRAP TO TOP PLATE AND BEAM, SEE 9/ SF-501
9. STRAP DOUBLE TOP PLATE TO DOUBLE TOP PLATE w/ MST 37
10. TRUSS TO BE DESIGNED FOR LATERAL LOAD SHOWN ON FRAMING PLAN
11. CONNECT GIRDER TRUSS TO DOUBLE TOP PLATE PER 10/ SF-501
12. CONNECT TALL WALL TO SHORT WALL w/ CS16 STRAP PER 11/ SF-501
13. BEAM TO BE FLUSH w/ BOTTOM OF TRUSSES. TRUSS MANUF'R TO SPEC HANGERS TO SUPPORT TRUSS OFF OF BEAM
14. ATTIC TRUSS AREA. NEEDS MIN. HEIGHT OF 2'-6"

State of Utah
Department of Administrative Services
Division of Facilities Construction & Management
4110 State Office Building
Salt Lake City, Utah 84114
Phone: (801) 538 - 3018
Fax: (801) 538 - 3267
http://dfcm.utah.gov

DYNAMIC STRUCTURES
1887 NORTH 1120 WEST PROVO, UTAH 84604
PH: (801) 356-1140 FAX: (801) 356-0001

BUILDING NAME:

PROPERTY# 15278

PROJECT TITLE:

USOR - Division of Services for the Blind and Visually Impaired TRAINING HOUSING Salt Lake City, Utah

MARK	DATE	DESCRIPTION
1	5/27/2010	ADDENMDUM #1

ISSUE TYPE: CONST. DOCUMENT PHASE

ISSUE DATE: 30 APRIL 2010

DFCM PROJECT NO: 09240200
CAD PROJECT NO:
CAD DWG FILE:
DRAWN BY: G.R.J.
CHK'D BY: G.R.J.
COPYRIGHT: STATE OF UTAH

SHEET TITLE

ROOF FRAMING PLAN

SCALE: 3/16" = 1'-0"

SHEET NUMBER

SF-101

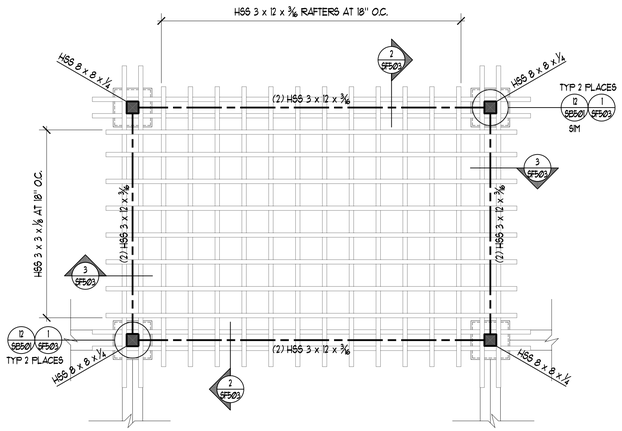

TRELLIS FRAMING PLAN

SCALE : 1/4" = 1'-0"

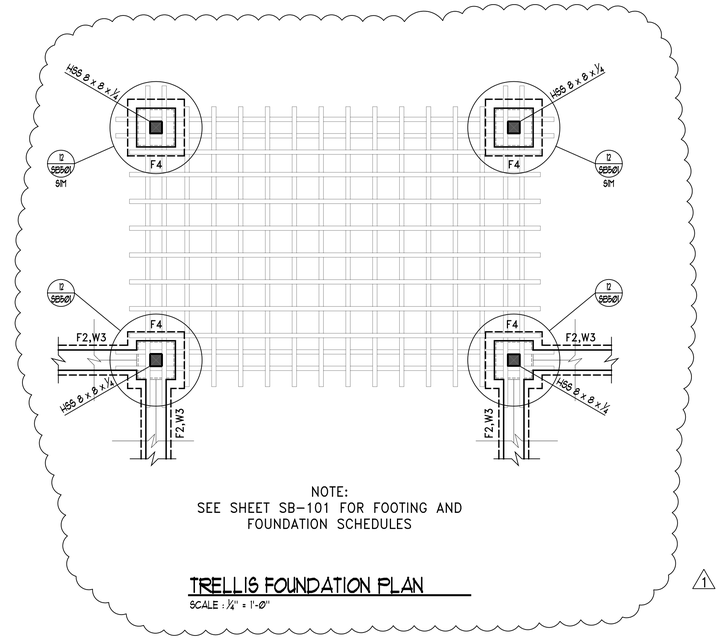

TRELLIS FOUNDATION PLAN

SCALE : 1/4" = 1'-0"

1

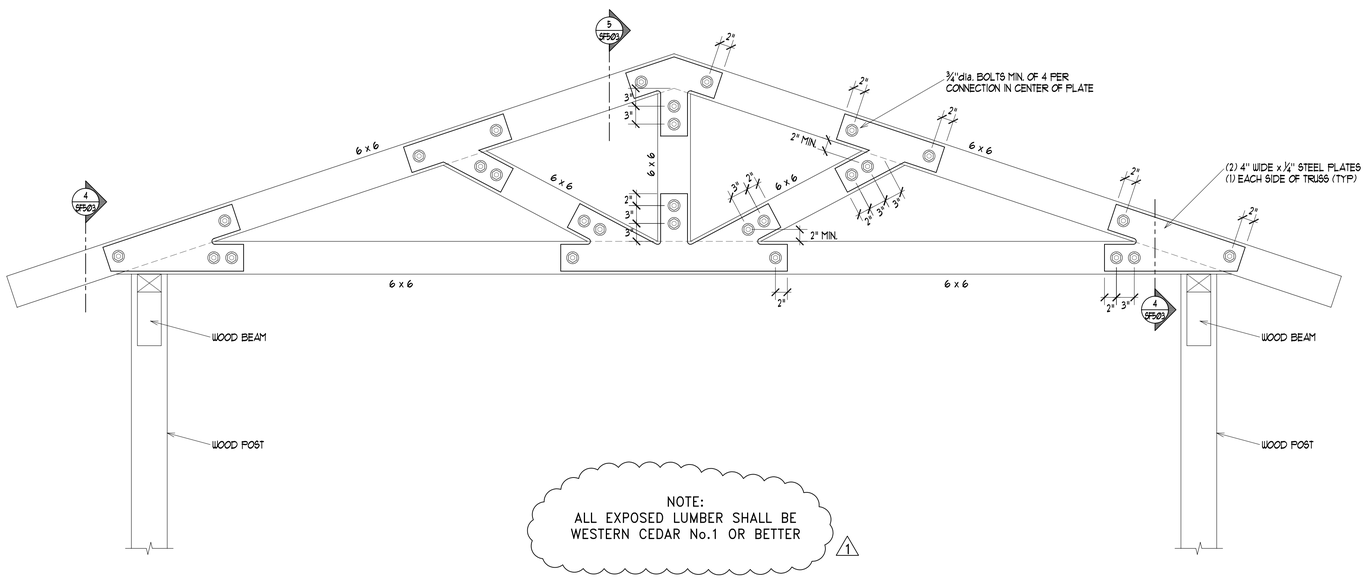

WOOD TRUSS ELEVATION

NO SCALE

State of Utah
Department of Administrative Services

Division of Facilities
Construction & Management
4110 State Office Building
Salt Lake City, Utah 84114
Phone: (801) 538 - 3018
Fax: (801) 538 - 3267

http://dfcm.utah.gov

DYNAMIC STRUCTURES
1887 NORTH 1120 WEST PROVO, UTAH 84604
PH: (801) 356-1140 FAX: (801) 356-0001

BUILDING NAME:

PROPERTY# 15278

PROJECT TITLE:

USOR - Division of Services for the Blind and Visually Impaired TRAINING HOUSING Salt Lake City, Utah

MARK	DATE	DESCRIPTION
1	5/27/2010	ADDENMDUM #1

ISSUE TYPE: CONST. DOCUMENT PHASE

ISSUE DATE: 30 APRIL 2010

DFCM PROJECT NO: 09240200
CAD PROJECT NO:
CAD DWG FILE:
DRAWN BY: G.R.J.
CHK'D BY: G.R.J.
COPYRIGHT: STATE OF UTAH

SHEET TITLE

TRELLIS FRAMING & WOOD TRUSS ELEV.

SCALE: AS SHOWN

SHEET NUMBER

SF-401

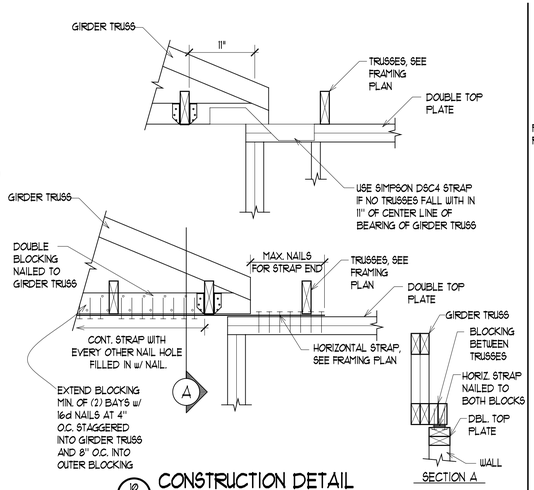

10 SF501 CONSTRUCTION DETAIL
NO SCALE

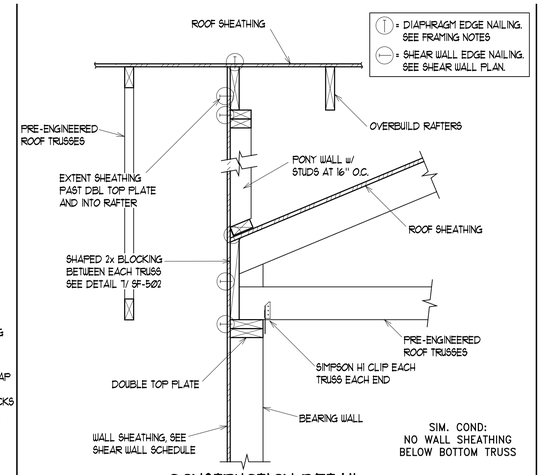

7 SF501 CONSTRUCTION DETAIL
NO SCALE

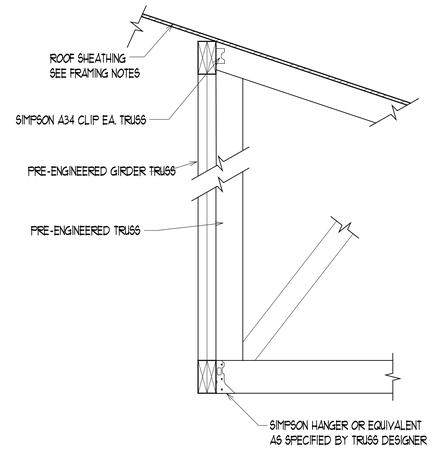

4 SF501 CONSTRUCTION DETAIL
NO SCALE

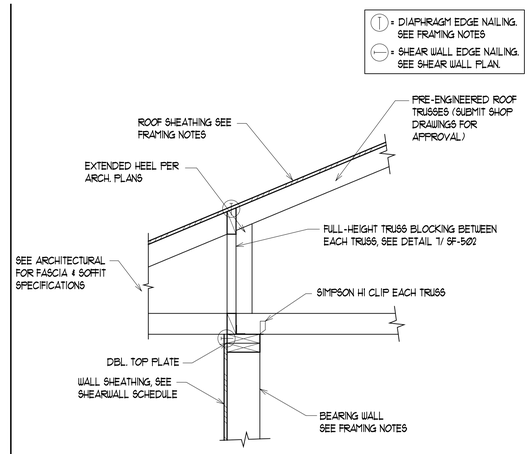

1 SF501 CONSTRUCTION DETAIL
NO SCALE

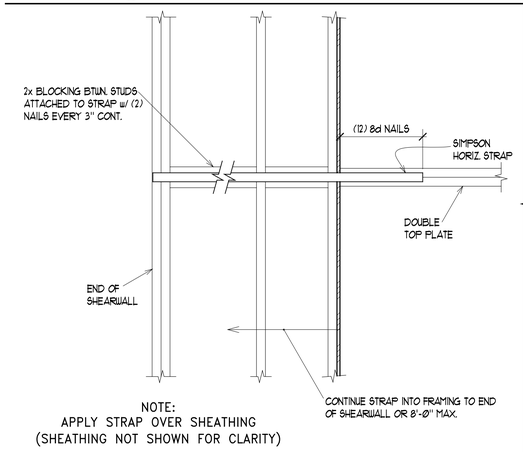

11 SF501 CONSTRUCTION DETAIL
NO SCALE

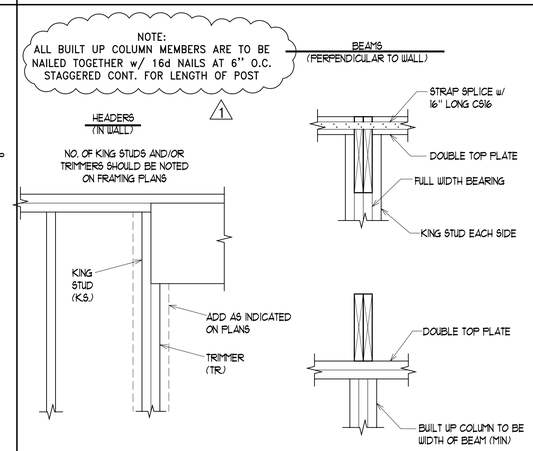

8 SF501 CONSTRUCTION DETAIL
NO SCALE

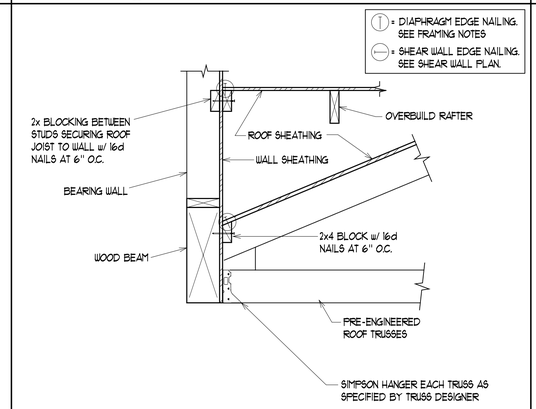

5 SF501 CONSTRUCTION DETAIL
NO SCALE

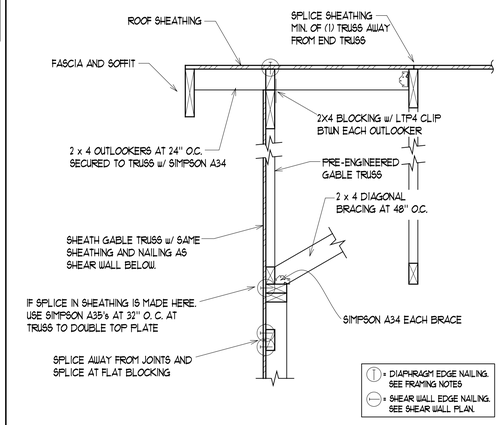

2 SF501 CONSTRUCTION DETAIL
NO SCALE

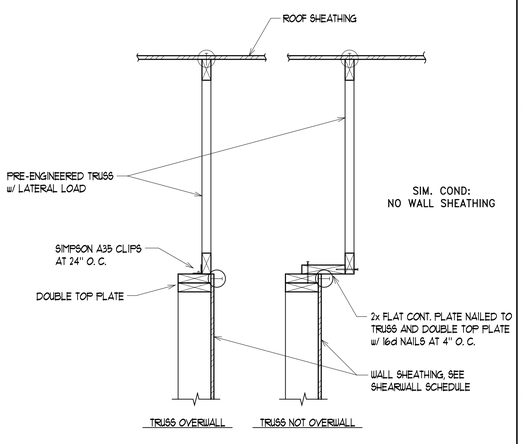

12 SF501 CONSTRUCTION DETAIL
NO SCALE

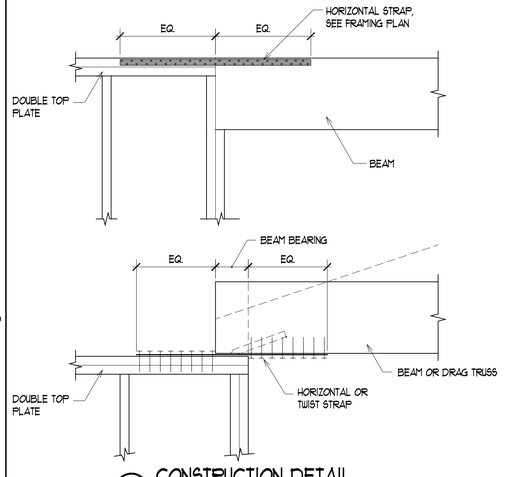

9 SF501 CONSTRUCTION DETAIL
NO SCALE

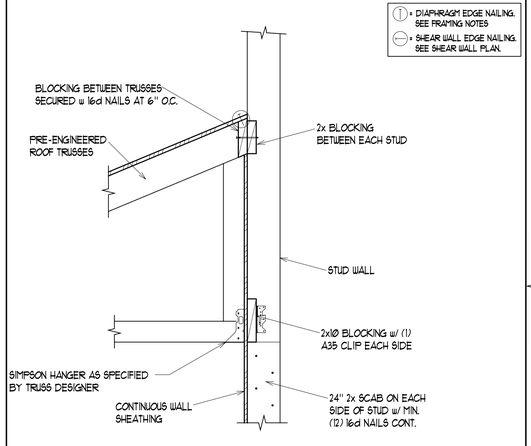

6 SF501 CONSTRUCTION DETAIL
NO SCALE

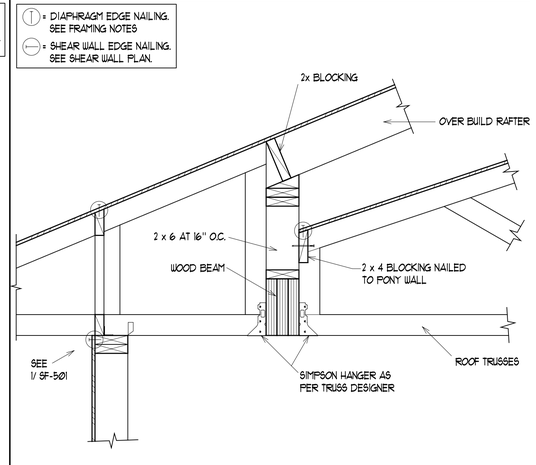

3 SF501 CONSTRUCTION DETAIL
NO SCALE

State of Utah
Department of Administrative Services
Division of Facilities Construction & Management
4110 State Office Building
Salt Lake City, Utah 84114
Phone: (801) 538 - 3018
Fax: (801) 538 - 3267
http://dfcm.utah.gov

DYNAMIC STRUCTURES
1887 NORTH 1120 WEST PROVO, UTAH 84604
PH: (801) 356-1140 FAX: (801) 356-0001

BUILDING NAME:

PROPERTY# 15278

PROJECT TITLE:

USOR - Division of Services for the Blind and Visually Impaired TRAINING HOUSING
Salt Lake City, Utah

MARK	DATE	DESCRIPTION
1	5/27/2010	ADDENMDUM #1

ISSUE TYPE: CONST. DOCUMENT PHASE

ISSUE DATE: 30 APRIL 2010

DFCM PROJECT NO: 09240200
CAD PROJECT NO:
CAD DWG FILE:
DRAWN BY: G.R.J.
CHK'D BY: G.R.J.
COPYRIGHT: STATE OF UTAH

SHEET TITLE

CONSTRUCTION DETAILS

SCALE: AS SHOWN

SHEET NUMBER

SF-501

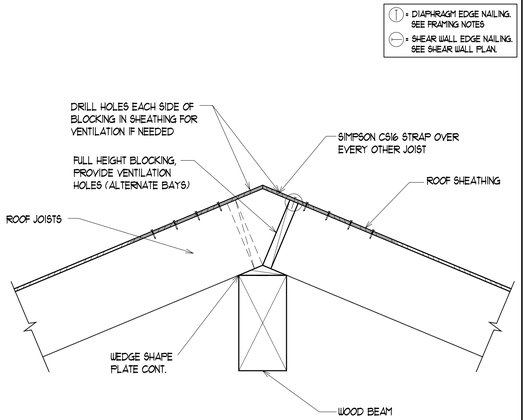

10 SF-501 CONSTRUCTION DETAIL
NO SCALE

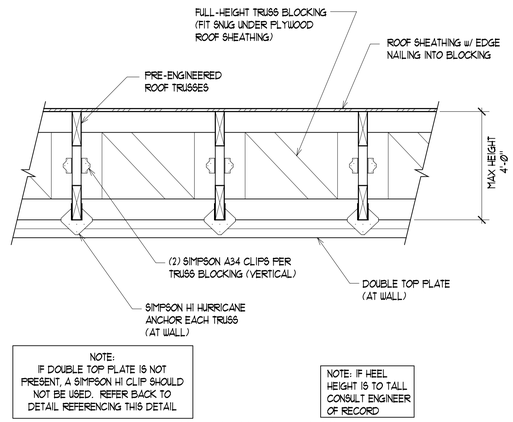

NOTE:
IF DOUBLE TOP PLATE IS NOT PRESENT, A SIMPSON H1 CLIP SHOULD NOT BE USED. REFER BACK TO DETAIL REFERENCING THIS DETAIL

NOTE: IF HEEL HEIGHT IS TO TALL CONSULT ENGINEER OF RECORD

7 SF-501 CONSTRUCTION DETAIL
NO SCALE

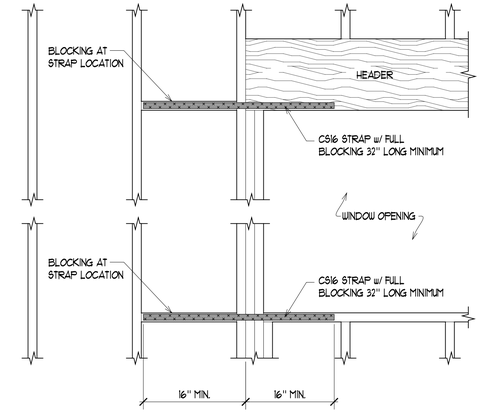

4 SF-501 CONSTRUCTION DETAIL
NO SCALE

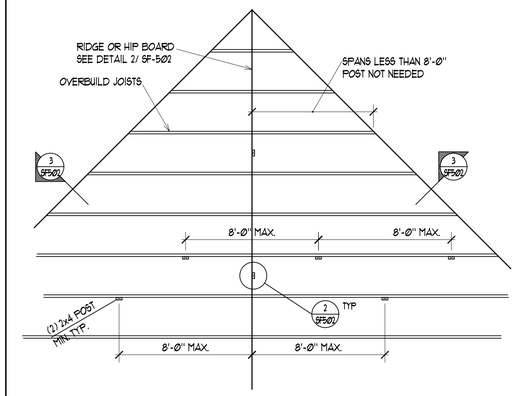

1 SF-501 CONSTRUCTION DETAIL
NO SCALE

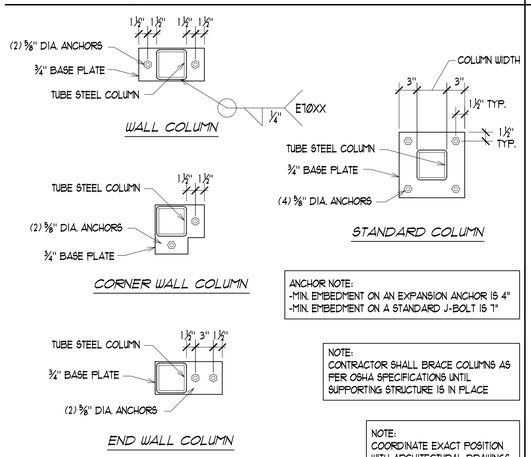

ANCHOR NOTE:
-MIN. EMBEDMENT ON AN EXPANSION ANCHOR IS 4"
-MIN. EMBEDMENT ON A STANDARD J-BOLT IS 7"

NOTE:
CONTRACTOR SHALL BRACE COLUMNS AS PER OSHA SPECIFICATIONS UNTIL SUPPORTING STRUCTURE IS IN PLACE

NOTE:
COORDINATE EXACT POSITION WITH ARCHITECTURAL DRAWINGS

11 SF-501 CONSTRUCTION DETAIL
NO SCALE

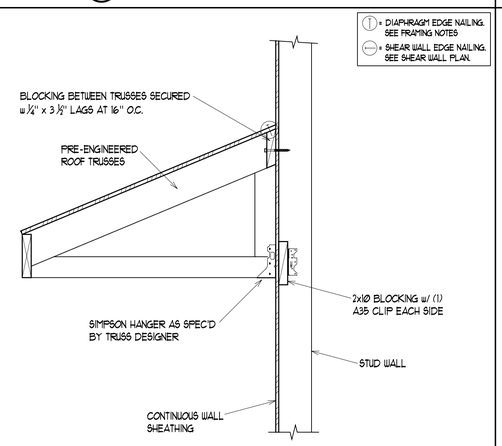

8 SF-501 CONSTRUCTION DETAIL
NO SCALE

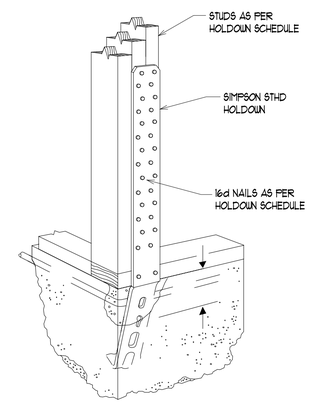

5 SF-501 CONSTRUCTION DETAIL
NO SCALE

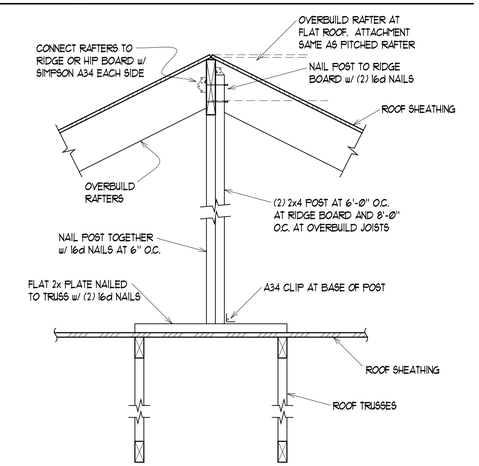

2 SF-501 CONSTRUCTION DETAIL
NO SCALE

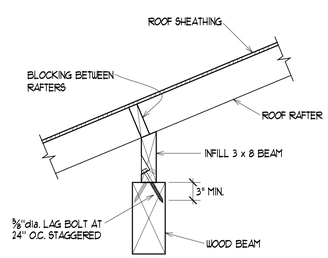

9 SF-501 CONSTRUCTION DETAIL
NO SCALE

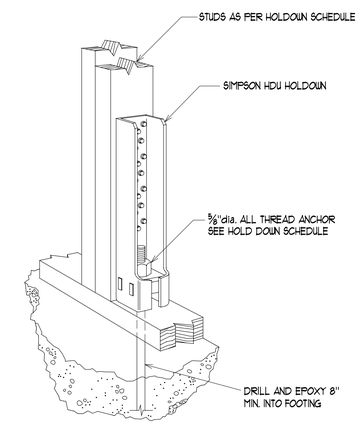

6 SF-501 CONSTRUCTION DETAIL
NO SCALE

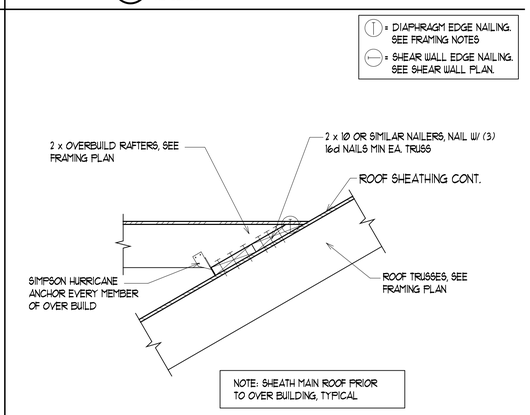

NOTE: SHEATH MAIN ROOF PRIOR TO OVER BUILDING, TYPICAL

3 SF-501 CONSTRUCTION DETAIL
NO SCALE

State of Utah
Department of Administrative Services
Division of Facilities Construction & Management
4110 State Office Building
Salt Lake City, Utah 84114
Phone: (801) 538 - 3018
Fax: (801) 538 - 3267
http://dfcm.utah.gov

DYNAMIC STRUCTURES
1887 NORTH 1120 WEST PROVO, UTAH 84604
PH: (801) 356-1140 FAX: (801) 356-0001

BUILDING NAME:
PROPERTY# 15278

PROJECT TITLE:
USOR - Division of Services for the Blind and Visually Impaired TRAINING HOUSING
Salt Lake City, Utah

MARK	DATE	DESCRIPTION
1	5/27/2010	ADDENMDUM #1

ISSUE TYPE: CONST. DOCUMENT PHASE
ISSUE DATE: 30 APRIL 2010
DFCM PROJECT NO: 09240200
CAD PROJECT NO:
CAD DWG FILE:
DRAWN BY: G.R.J.
CHK'D BY: G.R.J.
COPYRIGHT: STATE OF UTAH

SHEET TITLE
CONSTRUCTION DETAILS
SCALE: AS SHOWN

SHEET NUMBER
SF-502

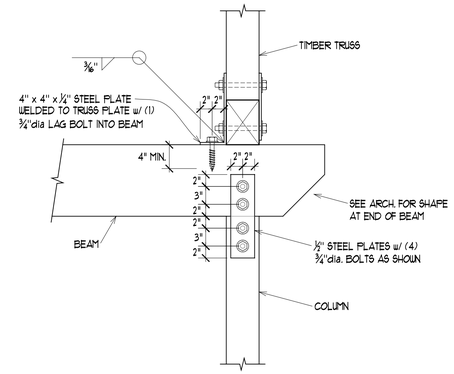

4 SF503 CONSTRUCTION DETAIL
NO SCALE

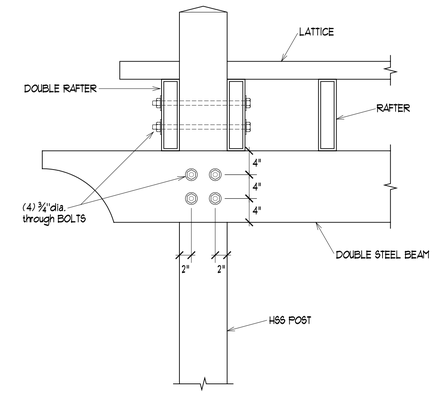

1 SF503 CONSTRUCTION DETAIL
NO SCALE

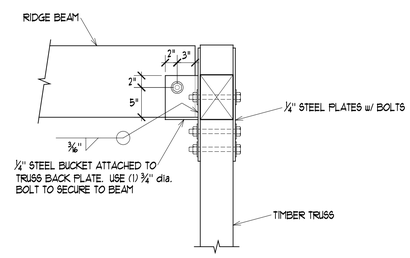

5 SF503 CONSTRUCTION DETAIL
NO SCALE

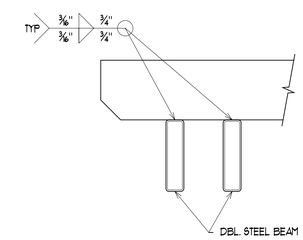

NOTE:
IF WELDING IS DONE AFTER BEAM IS INSTALLED, SHORE UP BEAM BEFORE WELDING LATTICE

2 SF503 CONSTRUCTION DETAIL
NO SCALE

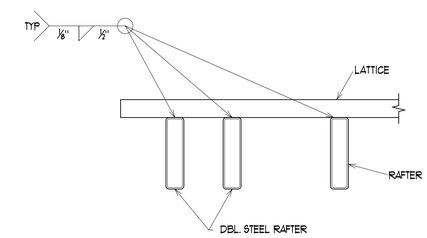

NOTE:
IF WELDING IS DONE AFTER RAFTERS ARE INSTALLED, SHORE UP RAFTERS BEFORE WELDING RAFTERS

3 SF503 CONSTRUCTION DETAIL
NO SCALE

State of Utah
Department of Administrative Services
Division of Facilities Construction & Management
4110 State Office Building
Salt Lake City, Utah 84114
Phone: (801) 538 - 3018
Fax: (801) 538 - 3267
http://dfcm.utah.gov

DYNAMIC STRUCTURES
1887 NORTH 1120 WEST PROVO, UTAH 84604
PH: (801) 356-1140 FAX: (801) 356-0001

BUILDING NAME:
PROPERTY# 15278

PROJECT TITLE:
USOR - Division of Services for the Blind and Visually Impaired TRAINING HOUSING
Salt Lake City, Utah

MARK	DATE	DESCRIPTION
1	5/27/2010	ADDENMDUM #1

ISSUE TYPE: CONST. DOCUMENT PHASE
ISSUE DATE: 30 APRIL 2010
DFCM PROJECT NO: 09240200
CAD PROJECT NO:
CAD DWG FILE:
DRAWN BY: G.R.J.
CHK'D BY: G.R.J.
COPYRIGHT: STATE OF UTAH

SHEET TITLE
CONSTRUCTION DETAILS
SCALE: AS SHOWN

SHEET NUMBER
SF-503

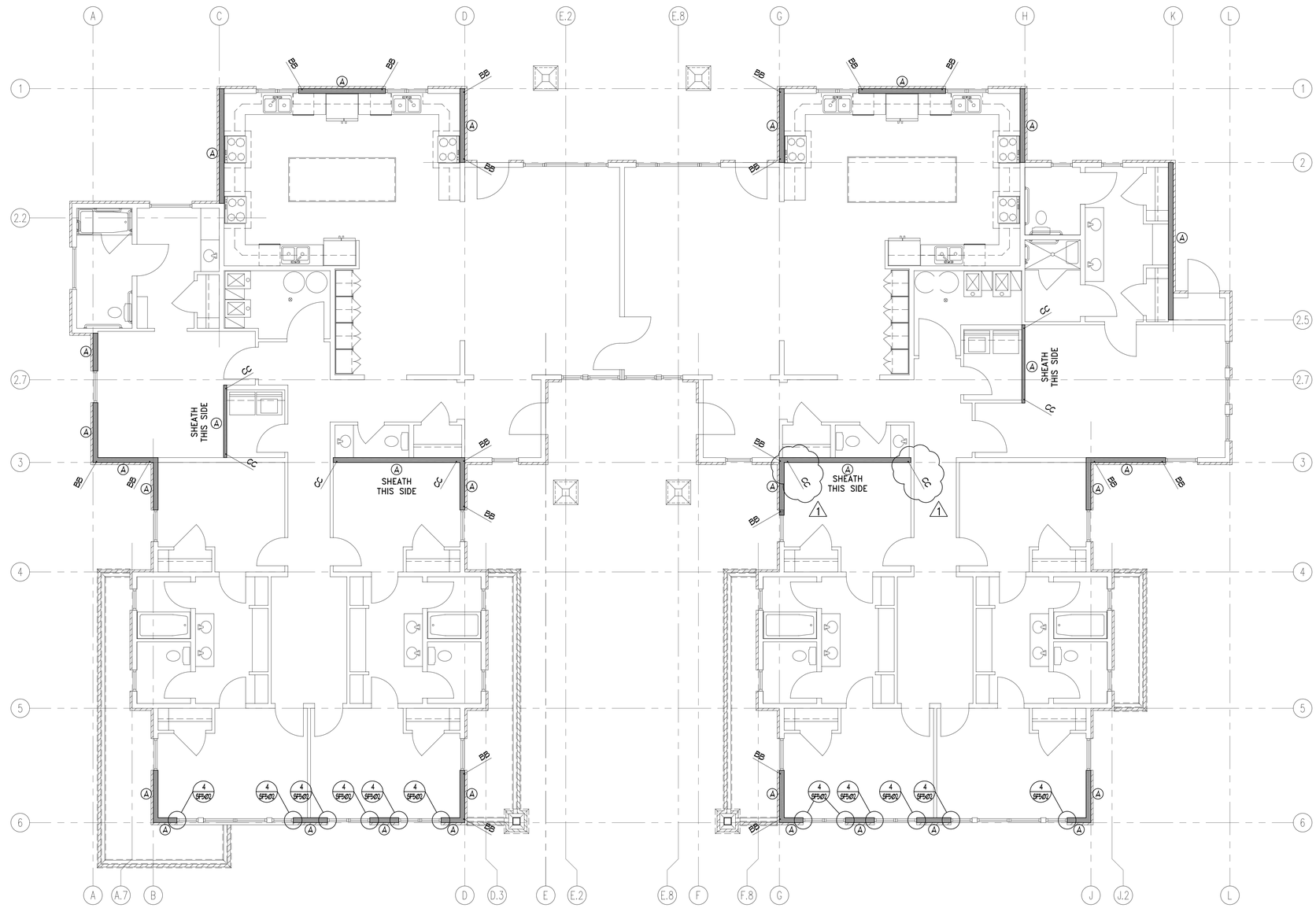

SHEAR WALL SCHEDULE

MARK	PANEL GRADE	PANEL THICKNESS	PANEL EDGE NAILING	PANEL FIELD NAILING	STUDS AT ADJOINING PANEL EDGES	ANCHOR BOLTS AT FOUNDATION LEVEL	SILL PLATE AT FOUNDATION
A	APA EXP. 1	7/16"	8d AT 6" O.C.	8d AT 12" O.C.	2 x 6	1/2" DIA. x 10" AT 32" O.C.	2 x 6 TREATED
B	APA EXP. 1	7/16"	8d AT 4" O.C.	8d AT 12" O.C.	2 x 6	1/2" DIA. x 10" AT 32" O.C.	2 x 6 TREATED
C	APA EXP. 1	7/16"	8d AT 3" O.C.	8d AT 12" O.C.	3 x 6	5/8" DIA. x 10" AT 16" O.C.	2 x 6 TREATED
D	APA EXP. 1	7/16"	8d AT 2" O.C.	8d AT 12" O.C.	3 x 6	5/8" DIA. x 12" AT 16" O.C.	3 x 6 TREATED

1. SEE GENERAL NOTES FOR ADDITIONAL INFORMATION
2. PLYWOOD, ORIENTED STRAND BOARD AND COMPOSITE BOARD (BUT NOT STRUCTURAL PARTICLE BOARD) ARE ACCEPTED AS EQUALS
3. ALL PANEL EDGES AT SHEAR WALLS SHALL BE BACKED WITH 2" NOMINAL FRAMING, EXCEPT WHERE INDICATED TO BE 3" NOMINAL ON SCHEDULE. 3x MATERIAL MAY BE REPLACED WITH 4x MATERIAL. MULTIPLE LAYERS OF 2x FRAMING SHALL NOT BE USED WHERE 3x FRAMING IS INDICATED.
4. ALL ANCHOR BOLTS TO HAVE A 3" x 3" x 1/4" PLATE WASHER (SEE SEE SCHEDULE ABOVE FOR SPACING)
5. ALL STUDS IN SHEAR WALLS SHALL BE DOUGLAS FIR-LARCH
6. SHEAR WALL PANELS INDICATED ON SCHEDULE ARE TO BE SHEATHED FOR FULL HEIGHT OF THE WALL.
7. SEE SPECIAL INSPECTION PAGE FOR ADDIONAL REQUIREMENTS (NOT APPLICABLE TO RESIDENTIAL PROJECTS)

HOLD DOWN SCHEDULE

MARK	HOLDOWN	ATTACHMENT TO STUDS	FOUNDATION ANCHORS	MINIMUM STUDS	REMARKS
AA	SIMPSON MST48	(34) 16d SINKERS	N. A.	(2) 2 x 6	
BB	SIMPSON STHD10	(28) 16d SINKERS	CAST IN PLACE	(2) 2 x 6	SEE DETAIL 5/ SF-502
CC	SIMPSON HDU5-SDS2. 5	(14) SDS 1/4" x 2 1/2" SCREWS	5/8"dia. ALL-THREAD	(2) 2 x 6	SEE DETAIL 6/ SF-502

1. ALL ANCHORS ARE SIMPSON STRONG-TIE. (OR EQUAL)
2. INSTALLATION OF ALL HOLDOWN ANCHORS AND STRAPS SHALL BE PER MANUFACTURES RECOMMENDATIONS AND SPECIFICATIONS
3. PROVIDE EDGE NAILING ALONG STUDS CONNECTED TO HOLDOWN ANCHORS AND STRAPS
4. SEE SPECIAL INSPECTION PAGE FOR ADDITIONAL REQUIREMENTS (NOT APPLICABLE TO RESIDENTIAL PROJECTS)

State of Utah
Department of Administrative Services
Division of Facilities Construction & Management
4110 State Office Building
Salt Lake City, Utah 84114
Phone: (801) 538 - 3018
Fax: (801) 538 - 3267
http://dfcm.utah.gov

DYNAMIC STRUCTURES
1887 NORTH 1120 WEST PROVO, UTAH 84604
PH: (801) 356-1140 FAX: (801) 356-0001

BUILDING NAME:
PROPERTY# 15278

PROJECT TITLE:
USOR - Division of Services for the Blind and Visually Impaired TRAINING HOUSING
Salt Lake City, Utah

MARK	DATE	DESCRIPTION
1	5/27/2010	ADDENMDUM #1

ISSUE TYPE: CONST. DOCUMENT PHASE
ISSUE DATE: 30 APRIL 2010
DFCM PROJECT NO: 09240200
CAD PROJECT NO:
CAD DWG FILE:
DRAWN BY: G.R.J.
CHK'D BY: G.R.J.
COPYRIGHT: STATE OF UTAH

SHEET TITLE
SHEAR WALL PLAN
SCALE: 3/16" = 1'-0"

SHEET NUMBER
SL-101

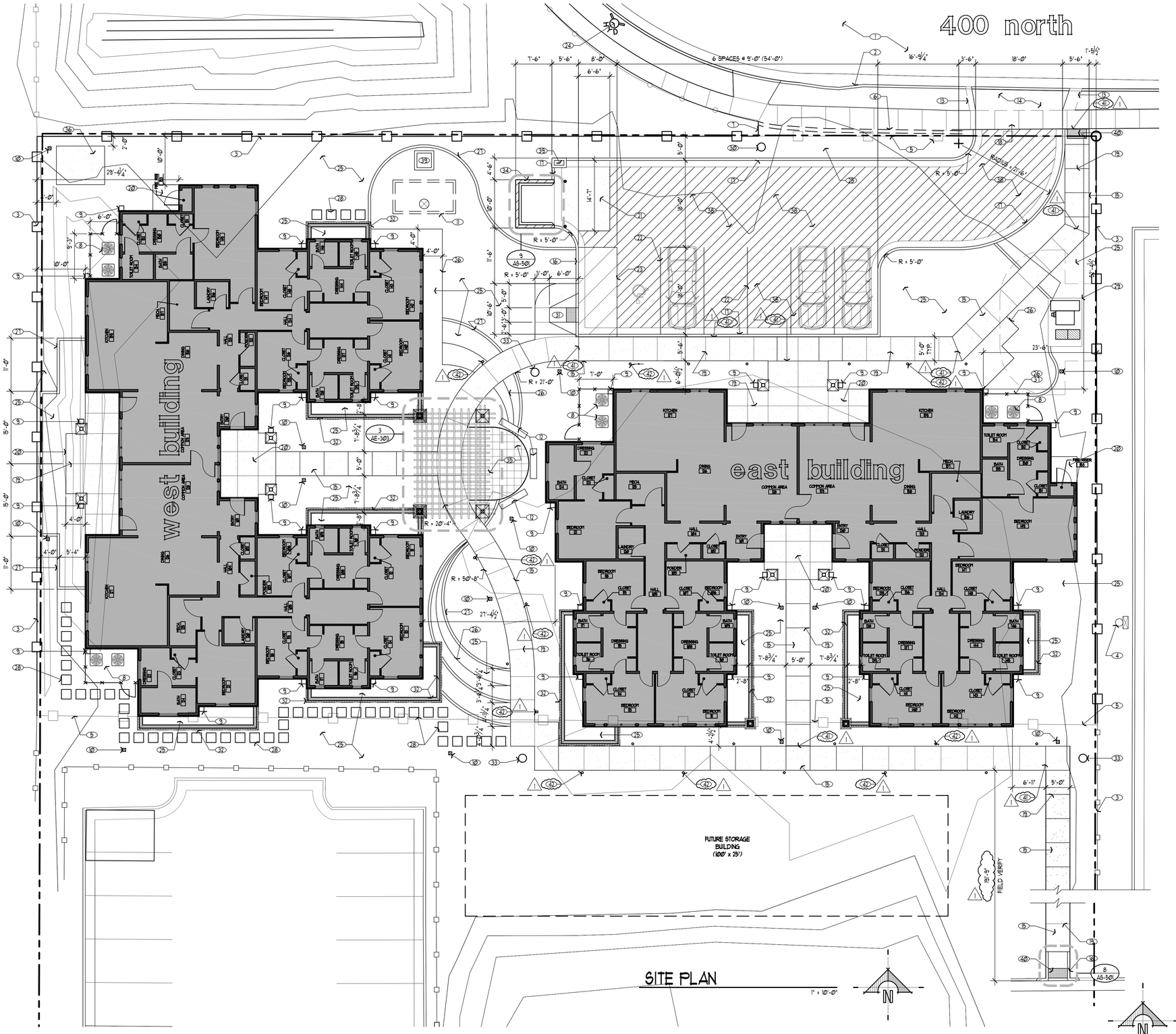

SITE PLAN

1" = 10'-0"

SHEET NOTES

1. EXISTING ASPHALT STREET.
2. EXISTING CURB & GUTTER, TYPICAL.
3. EXISTING CHAIN LINK FENCE TO REMAIN.
4. EXISTING LIGHT POLE TO REMAIN.
5. EXISTING CHAIN LINK FENCE TO REMOVED.
6. BLOCK RETAINING WALL TO BE REMOVED AND GROUND TO BE LEVELED OFF PER CIVIL AND LANDSCAPE DWGS.
7. PROVIDE AND INSTALL FENCING TO MATCH EXISTING.
8. MECHANICAL CONDENSING UNITS- SEE MECHANICAL DWGS.
9. DOWNSPOUT CATCH BASIN- SEE CIVIL DWGS.
10. NYOPLAST DRAIN BASIN- SEE CIVIL DWGS.
11. 6'-0" x 12'-0" UNDERGROUND CISTERN W/ MANHOLE ACCESS- SEE CIVIL DWGS.
12. OUTDOOR BENCHES - (BASIS OF DESIGN: ARCATA BACKLESS BENCH, EMBEDDED W/ POLYSITE SLATS)
13. REMOVE EXISTING DRIVE APPROACH AND CURB CUT.
14. CAST-IN-PLACE CONCRETE DRIVEWAY PER CITY STANDARDS. PATCH & REPAIR ASPHALT/SIDEWALK REMOVED FOR INSTALLATION OF DRIVEWAY TO MATCH EXISTING.
15. CAST-IN-PLACE CONCRETE SIDEWALK, SEE DETAIL 1/A5-501.
16. 6" CAST-IN-PLACE CONCRETE CURB, SEE DETAIL 2/A5-501.
17. 6" CAST-IN-PLACE CONCRETE CURB & GUTTER, SEE DETAIL 3/A5-501.
18. CAST-IN-PLACE CONCRETE SIDEWALK W/ INTEGRAL CURB & GUTTER, SEE DETAIL 4/A5-501.
19. CONCRETE CONTROL JOINT @ 6'-0" MAXIMUM SPACING AND AS SHOWN. CONTROL JOINT TO EXTEND A MINIMUM OF 1/4 OF THE DEPTH OF THE CONCRETE PAVEMENT.
20. CAST-IN-PLACE CONCRETE PATIO.
21. CONCRETE PAVING - PROVIDE 5" THICK OVER 6" GRANULAR FILL.
22. 3" WIDE PARKING LOT STRIPING, TYPICAL.
23. VAN ACCESSIBLE PARKING SPACE. STRIPE ACCESS AISLE W/ 3" WIDE PAINTED STRIPES @ 36" o.c. PROVIDE SIGNAGE PER DETAIL 5/A5-501.
24. FIRE HYDRANT - SEE CIVIL DWGS.
25. LANDSCAPE AREA - SEE LANDSCAPE DWGS.
26. 3/16" THICK x 5-1/2" HIGH x 16' LONG ALUMINUM LANDSCAPE EDGING W/ 5 STAKES PER SECTION (MILL FINISH)
27. 6" CONC. LANDSCAPE BORDER - SEE DETAIL 6/A5-501.
28. 24" x 24" LANDSCAPE PRE-CAST CONCRETE STEPPING STONES.
29. TRANSFORMER - SEE ELECTRICAL DWGS.
30. PARKING LIGHT FIXTURE - SEE ELECTRICAL DWGS.
31. CAST-IN-PLACE CONCRETE CURB RAMP - SEE DETAIL 12/A5-501.
32. PLANTER WALL- SEE DETAIL 9/AE-501.
33. LIGHT POLE- SEE ELECTRICAL DWGS.
34. TRASH DUMPSTER ENCLOSURE- SEE DETAIL 9/A5-501.
35. CAST-IN-PLACE CONCRETE PATIO - STAMPED & COLORED WITH 18" SQ. PATTERN
36. 10'-0" x 8'-0" CONCRETE PAD FOR A SHED TO BE PROVIDED AND INSTALLED BY THE CONTRACTOR.
37. 3'-0" HIGH CEDAR CONDENSING UNIT ENCLOSURE - SEE DETAIL 7/A5-501. PROVIDE 36" WIDE GATE WHERE SHOWN. MAINTAIN ALL REQUIRED CLEARANCES AROUND CONDENSING UNITS - CONFIRM WITH MANUFACTURER'S INSTRUCTIONS AFTER SELECTION OF UNIT.
38. ASPHALT PAVING - SEE CIVIL DRAWINGS
39. PRE-CAST CONCRETE BOX / BASIN - SEE CIVIL DRAWINGS
40. 4'-0" x 2'-0" COMPOSITE DETECTABLE WARNING PANEL
41. ½" EXPANSION JOINT WHERE SHOWN AND @ 30'-0" MAX, TYP.
42. BOLLARD LIGHTING - SEE ELECTRICAL DWGS.

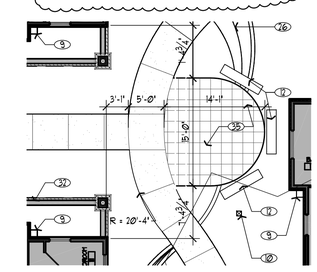

SHARED COURTYARD PLAN

1" = 10'-0"

State of Utah
Department of Administrative Services

Division of Facilities Construction & Management
4110 State Office Building
Salt Lake City, Utah 84114
Phone: (801) 538 - 3018
Fax: (801) 538 - 3267

http://dfcm.utah.gov

WPA architecture
475 North Freedom Blvd.
Provo, Utah, 84601

Tel: (801) 374-0800 Fax: (801) 374-0805
www.wpa-architecture.com

BUILDING NAME:

PROPERTY #15278
USOR - DSBVI
TRAINING HOUSING
Salt Lake City, Utah

PROJECT TITLE:

USOR - Division of Services for the Blind and Visually Impaired TRAINING HOUSING

LICENSED ARCHITECT
BRIDGET T. FALLON
5403169-0301
date
STATE of UTAH

MARK	DATE	DESCRIPTION
1	05.27.10	Addendum 1

ISSUE TYPE: Construction Document Phase

ISSUE DATE: 27 May 2010

DFCM PROJECT NO: 09240200
CAD PROJECT NO:
CAD DWG FILE: AS-101.dwg
DRAWN BY: ---
CHK'D BY: ---
COPYRIGHT: STATE OF UTAH

SHEET TITLE

Site Plan

SHEET NUMBER

AS-101

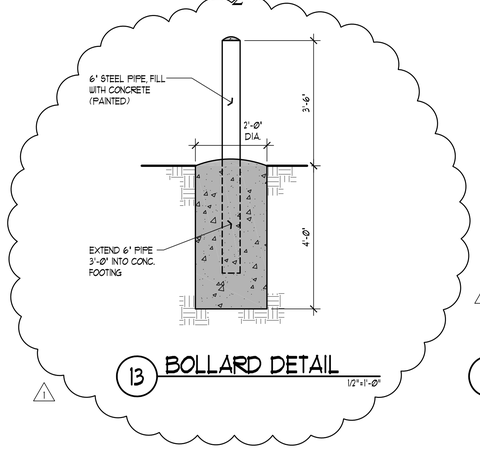

13 BOLLARD DETAIL
1/2"=1'-0"

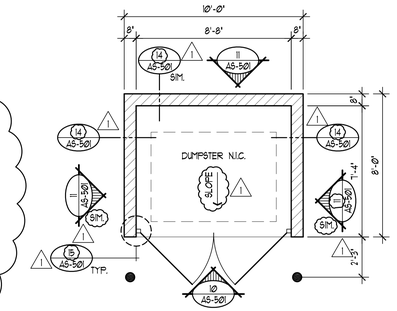

9 DUMPSTER ENCLOSURE PLAN
1/4" = 1'-0"

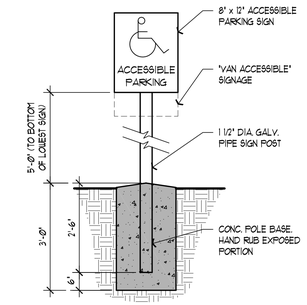

5 ACCESSIBLE PARKING SIGNAGE
1/2" = 1'-0"

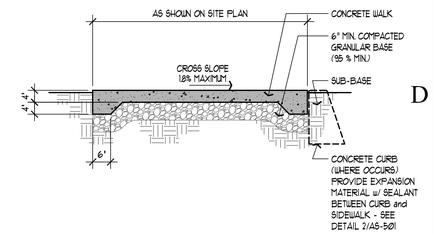

1 SIDEWALK DETAIL
1/2" = 1'-0"

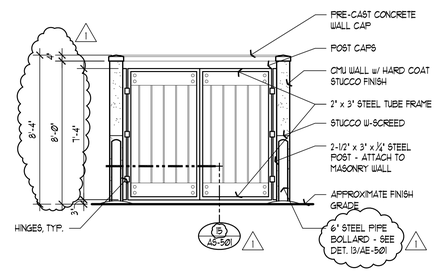

10 DUMPSTER ENCLOSURE ELEV.
1/4" = 1'-0"

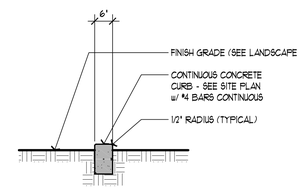

6 EDGE DETAIL
1/2" = 1'-0"

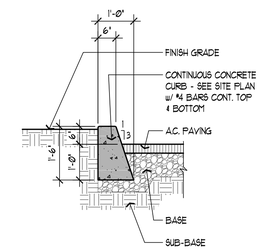

2 CURB DETAIL
1/2" = 1'-0"

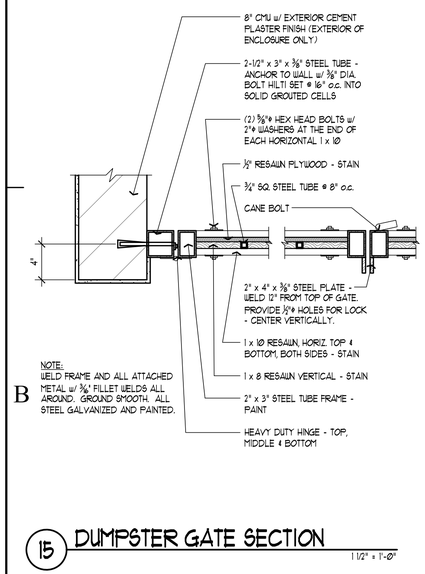

15 DUMPSTER GATE SECTION
1 1/2" = 1'-0"

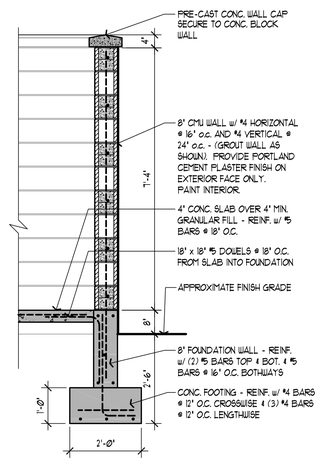

14 DUMPSTER ENCLOSURE SECTION
1/2" = 1'-0"

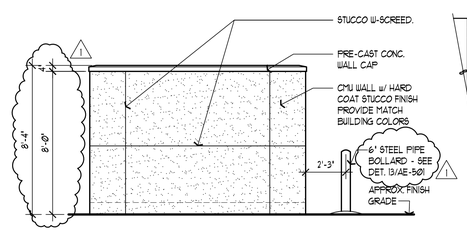

11 DUMPSTER ENCLOSURE ELEV.
1/4" = 1'-0"

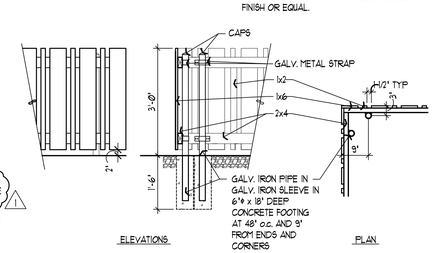

7 CONDENSER FENCE DETAIL
1/2" = 1'-0"

NOTES:
1. PROVIDE RED CEDAR FENCE.
2. SEAL & STAIN ALL WOOD SURFACES.
3. USE READY SEAL OS-012: NATURAL CEDAR FINISH OR EQUAL.

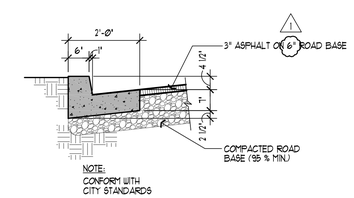

3 CURB & GUTTER DETAIL
1/2" = 1'-0"

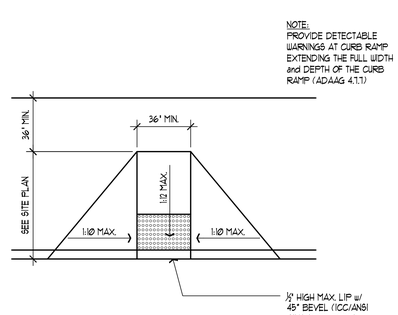

12 TYPICAL CURB RAMP
1/4" = 1'-0"

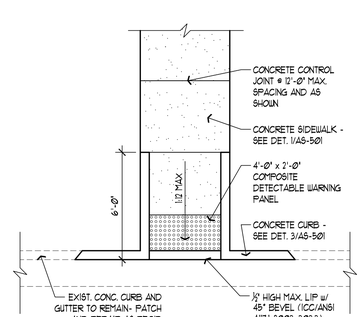

8 CURB RAMP DETAIL
1/4" = 1'-0"

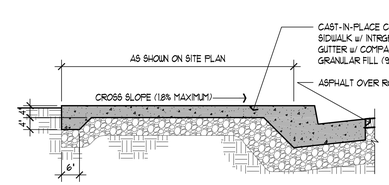

4 INTEGRAL CURB & SIDEWALK DETAIL
1/2" = 1'-0"

State of Utah
Department of Administrative Services
Division of Facilities Construction & Management
4110 State Office Building
Salt Lake City, Utah 84114
Phone: (801) 538 - 3018
Fax: (801) 538 - 3267
http://dfcm.utah.gov

WPA architecture
475 North Freedom Blvd.
Provo, Utah, 84601
Tel: (801) 374-0800 Fax: (801) 374-0805
www.wpa-architecture.com

BUILDING NAME:

PROPERTY #15278
USOR - DSBVI
TRAINING HOUSING
Salt Lake City, Utah

PROJECT TITLE:

USOR - Division of Services for the Blind and Visually Impaired TRAINING HOUSING

LICENSED ARCHITECT
BRUCE T. FALLON
5403169-0301
date
STATE OF UTAH

MARK	DATE	DESCRIPTION
1	05.27.10	Addendum 1

ISSUE TYPE: Construction Document Phase

ISSUE DATE: 27 May 2010

DFCM PROJECT NO: 09240200
CAD PROJECT NO:
CAD DWG FILE: AS-501.dwg
DRAWN BY: ---
CHK'D BY: ---
COPYRIGHT: STATE OF UTAH

SHEET TITLE

Site Details

SHEET NUMBER

AS-501

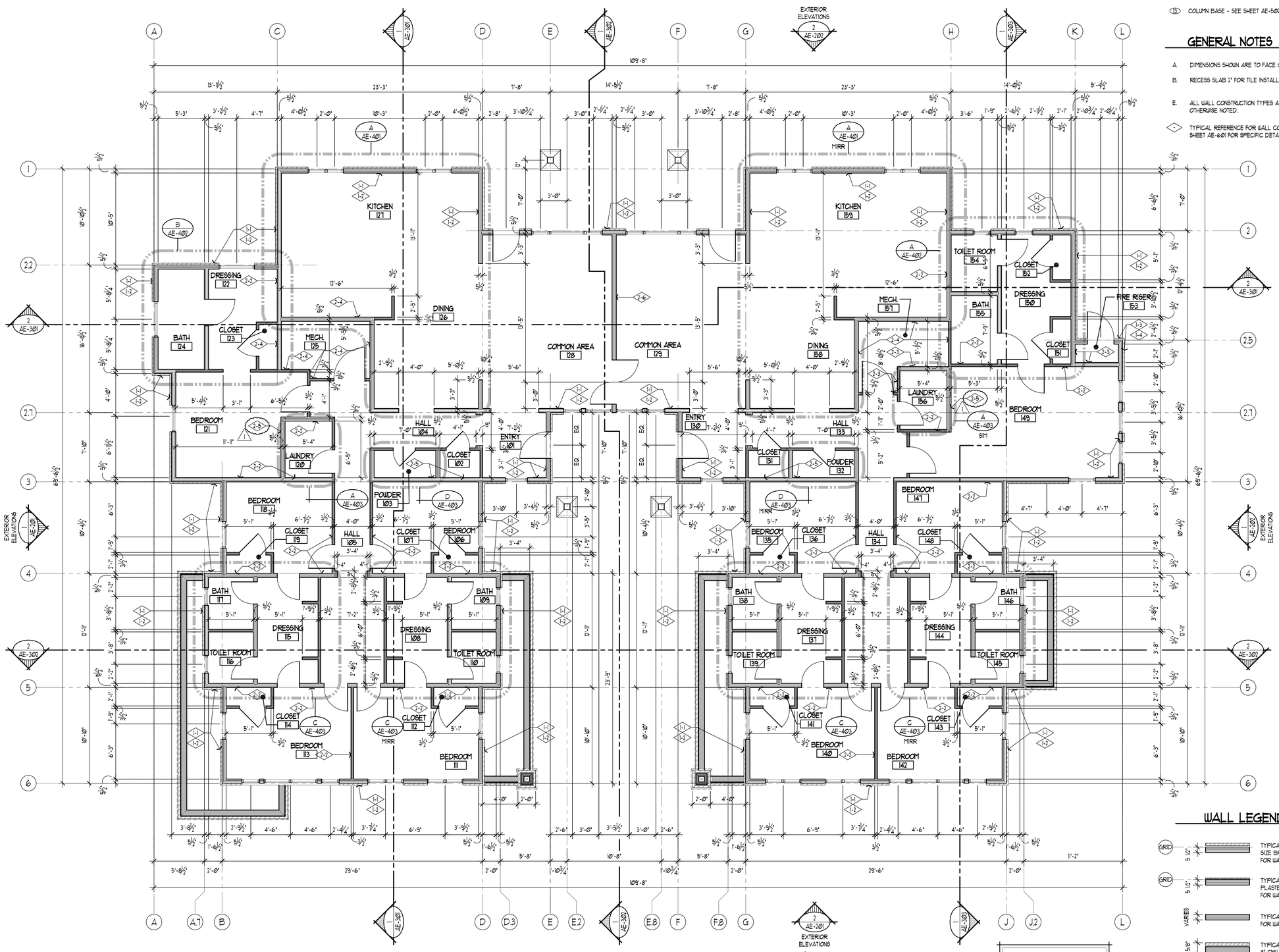

GENERAL NOTES

A. DIMENSIONS SHOWN ARE TO FACE OF FRAMING.

B. RECESS SLAB 2" FOR TILE INSTALLATION WHERE OCCURS.

E. ALL WALL CONSTRUCTION TYPES ARE "2-1, UNLESS OTHERWISE NOTED.

TYPICAL REFERENCE FOR WALL CONSTRUCTION TYPES - SEE SHEET AE-601 FOR SPECIFIC DETAIL.

COLUMN BASE - SEE SHEET AE-502.

WALL LEGEND

GRID 5 1/2"	TYPICAL EXTERIOR WALL - NORMAN SIZE BRICK VENEER - SEE SECTIONS FOR WALL LOCATION
GRID 5 1/2"	TYPICAL EXTERIOR WALL - 2 COAT PLASTER SYSTEM - SEE SECTIONS FOR WALL LOCATION
VARIES	TYPICAL WALL - SEE FLOOR PLAN FOR WALL THICKNESS
11 5/8"	TYPICAL PLANTER BOX WALL - 8" CMU W/ NORMAN SIZE BRICK VENEER

DIMENSION FLOOR PLAN

5300 sq. ft.

3/16" = 1'-0"

EAST BUILDING

WEST BUILDING

WARNING

THE SCALE OF THIS DRAWING IS 3/16" = 1'-0" AND NOT 1/4" = 1'-0"

State of Utah
Department of Administrative Services

Division of Facilities Construction & Management
4110 State Office Building
Salt Lake City, Utah 84114
Phone: (801) 538 - 3018
Fax: (801) 538 - 3267

http://dfcm.utah.gov

WPA architecture
475 North Freedom Blvd.
Provo, Utah, 84601
Tel: (801) 374-0800 Fax: (801) 374-0805
www.wpa-architecture.com

BUILDING NAME:

PROPERTY #15278
USOR - DSBVI
TRAINING HOUSING
Salt Lake City, Utah

PROJECT TITLE:

USOR - Division of Services for the Blind and Visually Impaired TRAINING HOUSING

LICENSED ARCHITECT
BRIGET T. FALLON
5403169-0301
STATE of UTAH

MARK	DATE	DESCRIPTION
1	05.27.10	Addendum 1

ISSUE TYPE: Construction Document Phase

ISSUE DATE: 27 May 2010

DFCM PROJECT NO: 09240200
CAD PROJECT NO:
CAD DWG FILE: AE-101.dwg
DRAWN BY: ---
CHK'D BY: ---
COPYRIGHT: STATE OF UTAH

SHEET TITLE

Dimension Floor Plan

SHEET NUMBER

AE-101

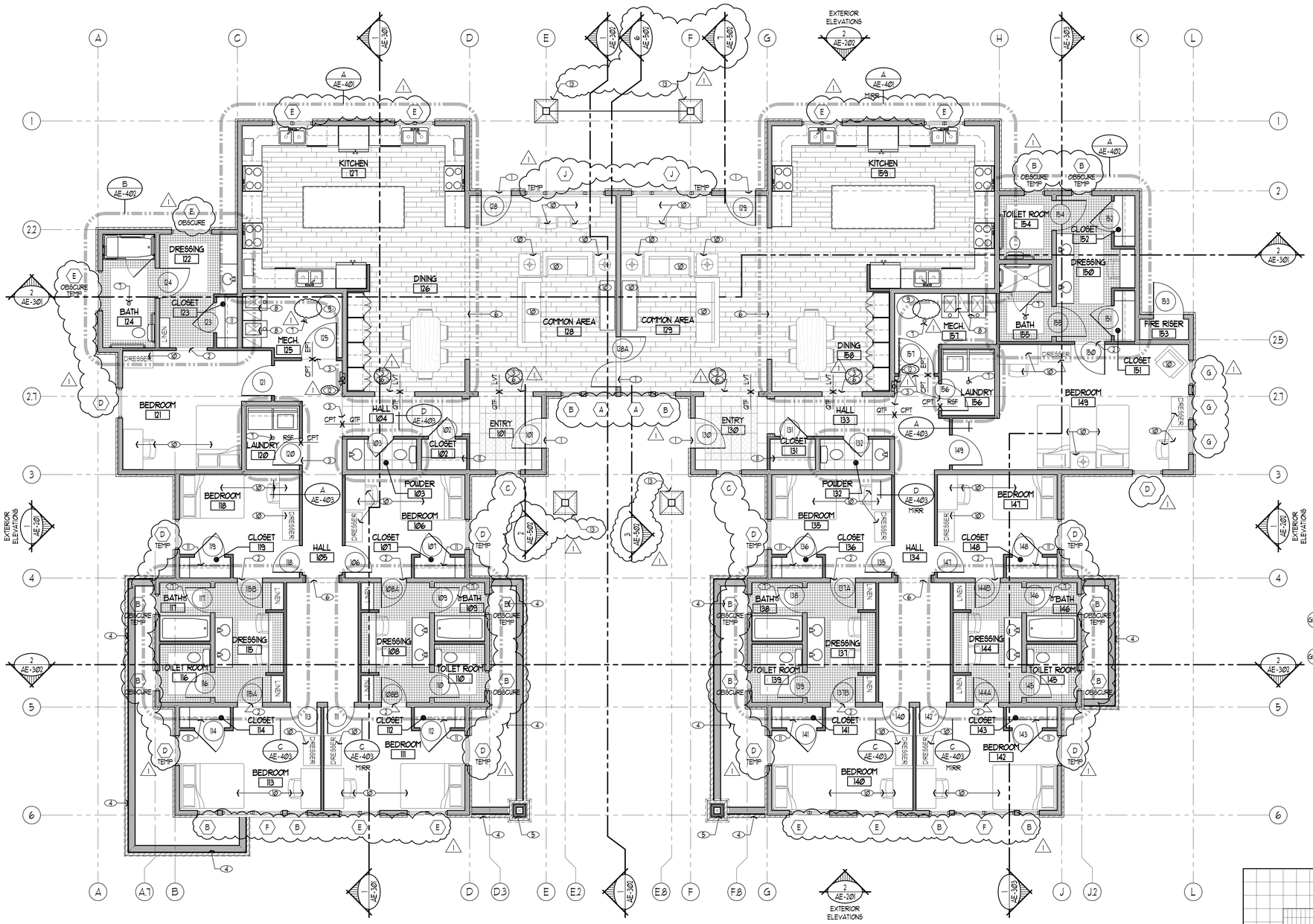

REFERENCE FLOOR PLAN

3/16" = 1'-0"

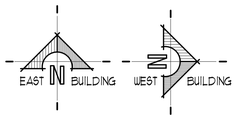

SHEET NOTES

1. TYPICAL REFERENCE FOR WINDOW TYPES - SEE SHEET AE-602 FOR SPECIFIC DETAIL.
2. TYPICAL REFERENCE FOR DOOR TYPES - SEE SHEET AE-602 FOR SPECIFIC DETAIL.
3. METAL THRESHOLD - SEE DETAIL 17/AE-503.
4. MARBLE THRESHOLD - SEE DETAIL 18/AE-503.
5. LINE OF FLOOR FINISH TRANSITION.
6. PLANTER BOX - SEE EXTERIOR ELEVATIONS.
7. MASONRY PILASTER - SEE 8/AE-501.
8. ARCHED CEILING TRANSITION HEADER - SEE BUILDING SECTIONS & REFLECTED CEILING PLAN.
9. FLOOR DRAIN - SEE PLUMBING DRAWINGS.
10. FURNACE - SEE MECHANICAL DRAWINGS.
11. WATER HEATER - SEE MECHANICAL DRAWINGS.
12. FURNITURE AS PROVIDED BY OWNER.
13. ROD AND SHELF - SEE INTERIOR ELEVATIONS.
14. 2-A-10B-C FIRE EXTINGUISHER & SEMI-RECESSED FIRE EXTINGUISHER CABINET w/ LOCK - SEE DETAIL 22/AE-503.
15. COLUMN BASE - SEE SHEET AE-502.

GENERAL NOTES

A. DIMENSIONS SHOWN ARE TO FACE OF FRAMING.

B. RECESS SLAB 2" FOR TILE INSTALLATION WHERE OCCURS.

C. PROVIDE SOLID BLOCKING OR BACKING FOR WALL MOUNTED ACCESSORIES.

D. FURNITURE SHOWN FOR CLEARANCES ONLY. FURNITURE TO BE PROVIDED BY OWNER. ACTUAL LAYOUT TO BE DECIDED BY OWNER.

WALL LEGEND

- GRID 5 1/2" — TYPICAL EXTERIOR WALL - NORMAN SIZE BRICK VENEER - SEE SECTIONS FOR WALL LOCATION
- GRID 5 1/2" — TYPICAL EXTERIOR WALL - 2 COAT PLASTER SYSTEM - SEE SECTIONS FOR WALL LOCATION
- VARIES — TYPICAL WALL - SEE FLOOR PLAN FOR WALL THICKNESS
- 5 5/8" — TYPICAL PLANTER BOX WALL - 8" CMU W/ NORMAN SIZE BRICK VENEER

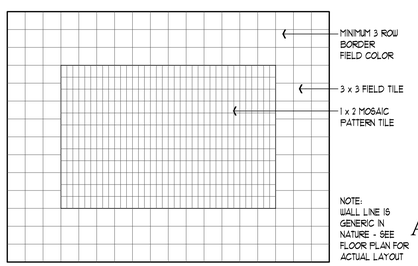

1 FLOOR TILE PATTERN

1" = 1'-0"

State of Utah
Department of Administrative Services

Division of Facilities Construction & Management
4110 State Office Building
Salt Lake City, Utah 84114
Phone: (801) 538 - 3018
Fax: (801) 538 - 3267

http://dfcm.utah.gov

WPA architecture
475 North Freedom Blvd.
Provo, Utah, 84601
Tel: (801) 374-0800 Fax: (801) 374-0805
www.wpa-architecture.com

BUILDING NAME:

PROPERTY #15278
USOR - DSBVI
TRAINING HOUSING
Salt Lake City, Utah

PROJECT TITLE:

USOR - Division of Services for the Blind and Visually Impaired TRAINING HOUSING

LICENSED ARCHITECT
BRUCE T. FALLON
5403169-0301
date
STATE OF UTAH

MARK	DATE	DESCRIPTION
1	05.27.10	Addendum 1

ISSUE TYPE: Construction Document Phase

ISSUE DATE: 27 May 2010

DFCM PROJECT NO: 09240200
CAD PROJECT NO:
CAD DWG FILE: AE-102.dwg
DRAWN BY: ---
CHK'D BY: ---
COPYRIGHT: STATE OF UTAH

SHEET TITLE

Reference Floor Plan

SHEET NUMBER

AE-102

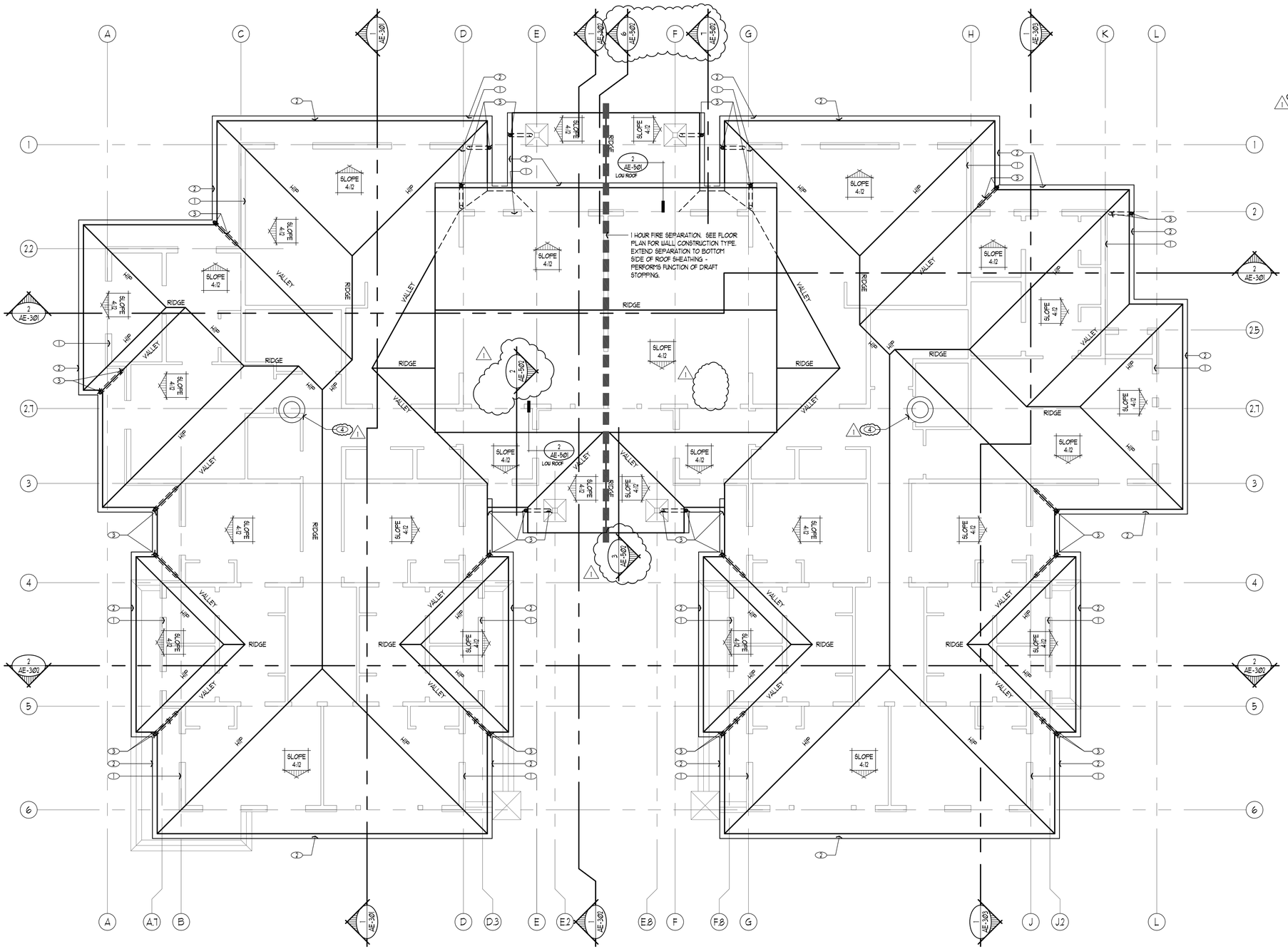

ROOF PLAN

3/16" = 1'-0"

EAST BUILDING WEST BUILDING

SHEET NOTES:

1. LINE OF BUILDING BELOW
2. PRE-FINISHED METAL RAIN GUTTER.
3. PRE-FINISHED METAL DOWNSPOUT. CONNECT TO STORM DRAINAGE - SEE CIVIL DRAWINGS.
4. ROOF VENTILATOR - SEE DETAILS 11 & 12/AE-501 & MECHANICAL DRAWINGS.

GENERAL NOTES:

A. PROVIDE ASPHALT SHINGLES OVER 30# ROOFING FELT. EXTEND ICE AND WATER SHIELD 36" PAST FINISH FACE OF INTERIOR WALL ON BOTH EAVES AND RAKES.

B. PROVIDE VALLEY FLASHING PER DETAIL 3/AE-501.

C. NO VENTILATION IS REQUIRED PER IRC R806.4. PROVIDE AIR-IMPERMEABLE INSULATION IN DIRECT CONTACT TO THE UNDERSIDE/INTERIOR OF THE STRUCTURAL ROOF DECK PER R806.4-1. PROVIDE CALCULATIONS TO VERIFY SUFFICIENT INSULATION IS INSTALLED TO MAINTAIN THE MONTHLY AVERAGE TEMPERATURE OF THE CONDENSING SURFACE ABOVE 45°F (7°C) PER R806.4-4.

D. PLACE ITEMS PENETRATING THROUGH THE ROOF IN LESS VISIBLE AREAS. DO NOT PLACE ITEMS PENETRATING THROUGH THE ROOF IN CONFLICT WITH ROOF FLASHING OR VALLEYS.

E. ALL ROOFING SYSTEMS AND COMPONENTS SHALL MEET OR EXCEED ALL ASTM, NRCA, SMACNA, UL AND FM REQUIREMENTS.

State of Utah
Department of Administrative Services

Division of Facilities Construction & Management
4110 State Office Building
Salt Lake City, Utah 84114
Phone: (801) 538 - 3018
Fax: (801) 538 - 3267

http://dfcm.utah.gov

WPA architecture
475 North Freedom Blvd.
Provo, Utah, 84601

Tel: (801) 374-0800 Fax: (801) 374-0805
www.wpa-architecture.com

BUILDING NAME:

PROPERTY #15278
USOR - DSBVI
TRAINING HOUSING
Salt Lake City, Utah

PROJECT TITLE:

USOR - Division of Services for the Blind and Visually Impaired TRAINING HOUSING

LICENSED ARCHITECT
BRUCE T. FALLON
5403169-0301
date
STATE of UTAH

MARK	DATE	DESCRIPTION
1	05.27.10	Addendum 1

ISSUE TYPE: Construction Document Phase

ISSUE DATE: 27 May 2010

DFCM PROJECT NO: 09240200
CAD PROJECT NO:
CAD DWG FILE: AE-103.dwg
DRAWN BY: ---
CHK'D BY: ---
COPYRIGHT: STATE OF UTAH

SHEET TITLE

Roof Drainage Plan

SHEET NUMBER

AE-103

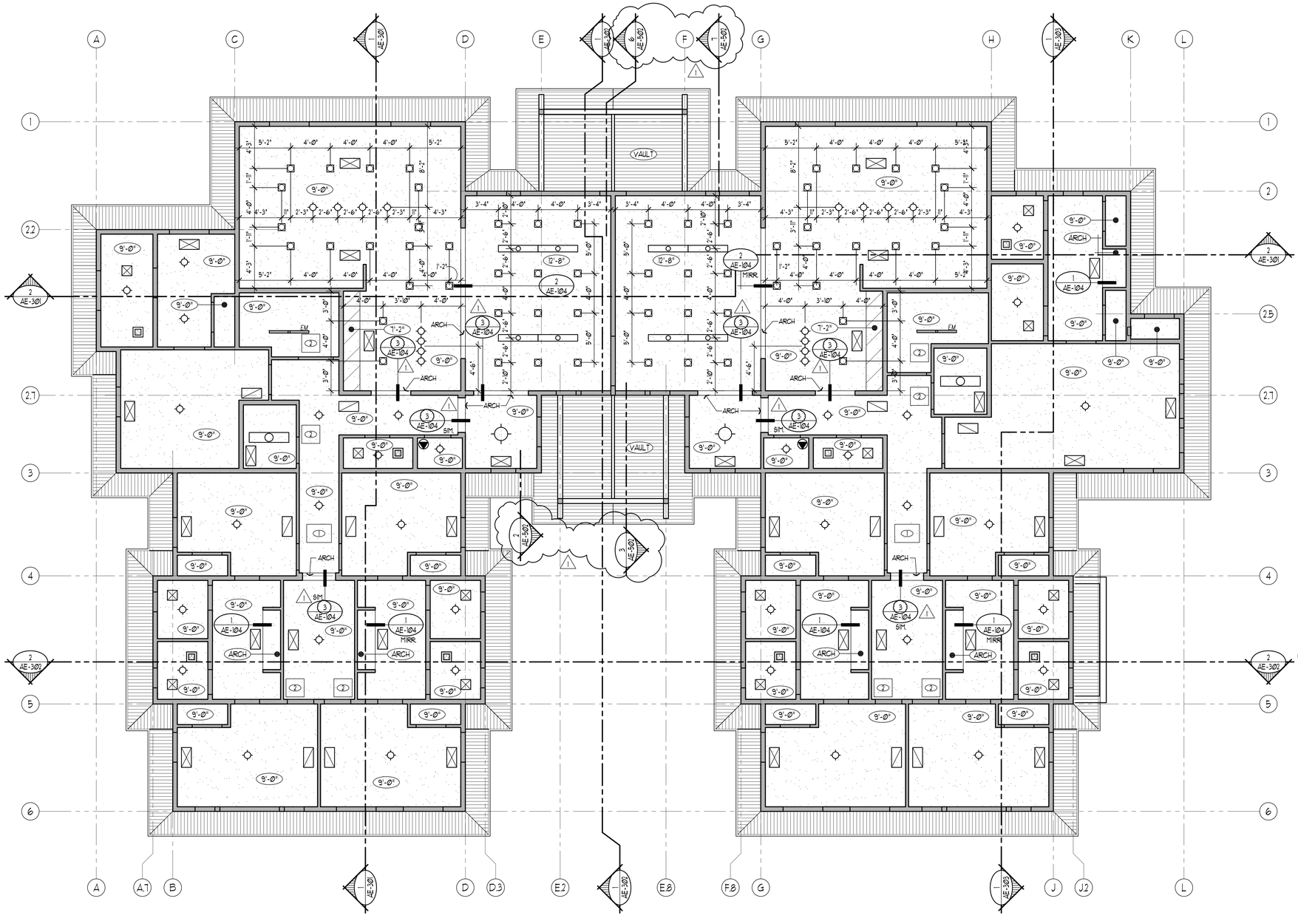

REFLECTED CEILING PLAN

3/16" = 1'-0"

EAST BUILDING — WEST BUILDING

CEILING LEGEND

	MECHANICAL SUPPLY AND RETURN AIR GRILLES, EXHAUST FANS (SEE MECHANICAL PLANS)
	MISC. LIGHTING FIXTURES, SMOKE DETECTORS, ETC. (SEE ELECTRICAL PLANS)
0'-0"	FINISHED CEILING HEIGHT (FROM FINISHED FLOOR LINE OF RESPECTIVE ROOM)
	GYPSUM BOARD CEILING (PAINTED)
	DROPPED CEILING GYPSUM BOARD CEILING (PAINTED)
	PREFINISHED METAL SOFFIT

NOTES:
1. CEILING HEIGHTS SHOWN ARE MINIMUM EXPECTED HEIGHTS OF FINISHED SURFACE OF CEILING
2. PROVIDE CONTINUOUS SOLID FLOORING IN THE ATTIC FROM ATTIC ACCESS POINTS TO DAMPER LOCATIONS IN THE ATTIC.

SHEET NOTES

1. 20" x 30" ATTIC ACCESS - PROVIDE A 24 INCH WIDE PASSAGEWAY IN THE ATTIC WITH A CONTINUOUS 3/4" SHEATHING FLOOR EXTENDING FROM THE ATTIC ACCESS TO THE DAMPERS SHOWN ON THE MECHANICAL DRAWINGS. PROVIDE A LEVEL SERVICE SPACE AT LEAST 30 INCHES BY 30 INCHES ALONG ALL SIDES OF THE APPLIANCE WHERE ACCESS IS REQUIRED. PAINT TO MATCH FINISH CEILING
2. 24" x 24" METAL ACCESS PANEL - PLACE BELOW DAMPERS FOR SERVICE ACCESS. PAINT TO MATCH FINISH CEILING. SEE MECH. DWGS.

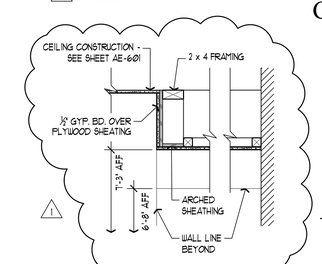

1 ARCH DETAIL
1"=1'-0"

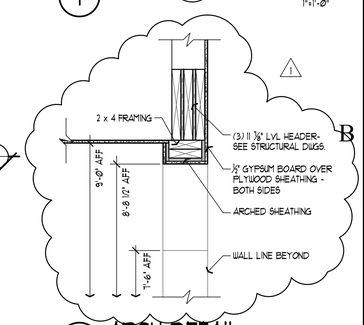

2 ARCH DETAIL
1"=1'-0"

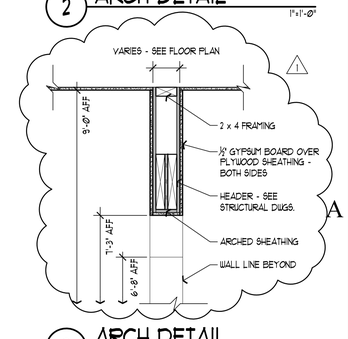

3 ARCH DETAIL
1"=1'-0"

State of Utah
Department of Administrative Services
Division of Facilities Construction & Management
4110 State Office Building
Salt Lake City, Utah 84114
Phone: (801) 538 - 3018
Fax: (801) 538 - 3267
http://dfcm.utah.gov

WPA architecture
475 North Freedom Blvd.
Provo, Utah, 84601
Tel: (801) 374-0800 Fax: (801) 374-0805
www.wpa-architecture.com

BUILDING NAME:

PROPERTY #15278
USOR - DSBVI
TRAINING HOUSING
Salt Lake City, Utah

PROJECT TITLE:

USOR - Division of Services for the Blind and Visually Impaired TRAINING HOUSING

LICENSED ARCHITECT BRUCE T. FALLON 5403169-0301 STATE of UTAH

MARK	DATE	DESCRIPTION
1	05.27.10	Addendum 1

ISSUE TYPE: Construction Document Phase

ISSUE DATE: 27 May 2010

DFCM PROJECT NO: 09240200
CAD PROJECT NO:
CAD DWG FILE: AE-104.dwg
DRAWN BY: ---
CHK'D BY: ---
COPYRIGHT: STATE OF UTAH

SHEET TITLE

Reflected Ceiling Plan

SHEET NUMBER

AE-104

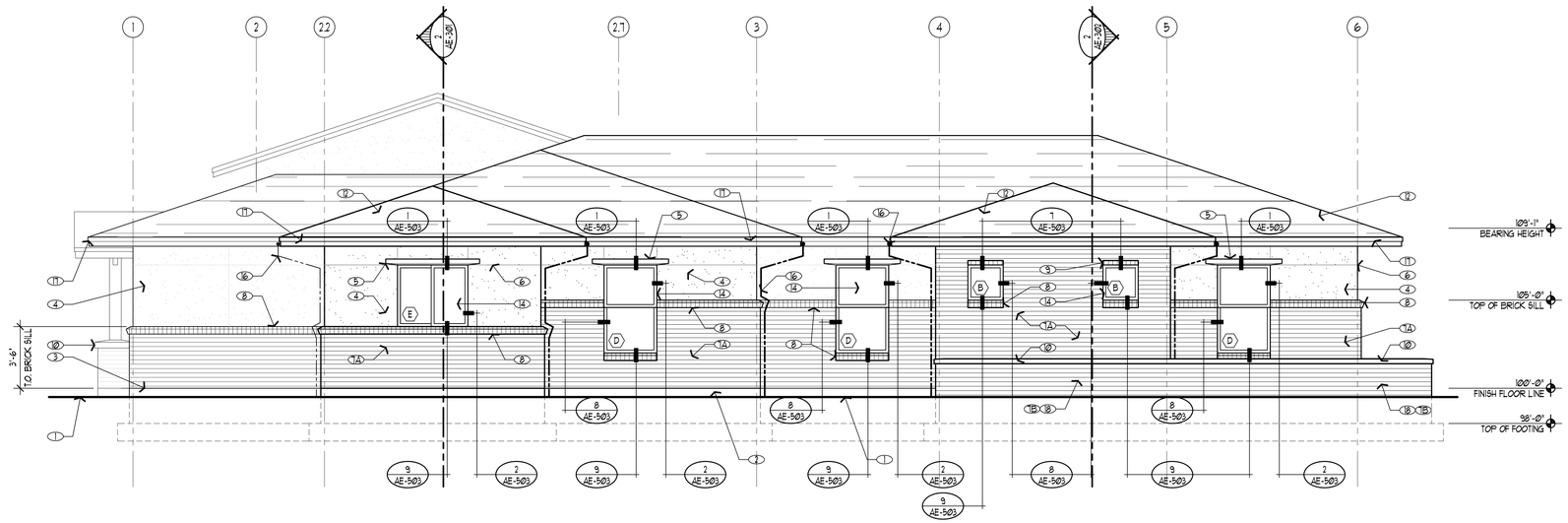

1 EXTERIOR ELEVATION

EAST BLDG = WEST ELEVATION
WEST BLDG = SOUTH ELEVATION

1/4"=1'-0"

SHEET NOTES

1. TYPICAL REFERENCE FOR WINDOW TYPES- SEE SHEET AE-602.
1. APPROXIMATE FINISH GRADE.
2. EXPOSED CONCRETE FOUNDATION WALL.
3. FINISH FLOOR ELEVATION.
4. TWO COAT PLASTER SYSTEM.
5. WINDOW TRIM. TWO COAT PLASTER OVER RIGID INSULATION- SEE DETAIL 19/AE-503.
6. STUCCO W/-SCREED, TYP.- SEE DETAIL 6/AE-501.
1A. NORMAN BRICK VENEER - LAY IN STACK BOND WITH RAKED MORTAR JOINT.
1B. NORMAN BRICK VENEER - LAY IN FLEMISH BOND ALTERNATING STRETCHERS AND HEADERS IN EACH COURSE. PROJECT HEADER BRICK OUT 1/2 INCH FROM FACE OF STRETCHER. PROVIDE RAKED MORTAR JOINT.
8. BRICK SILL - SEE DETAIL 1/AE-501.
9. BRICK HEADER - SEE DETAIL 7/AE-503.
10. PRE-CAST CONCRETE CAP - SEE DETAIL 5/AE/501.
11. 6 x 6 CEDAR COLUMN (STAINED) - SEE STRUCTURAL DWGS.
12. ARCHITECTURAL GRADE ASPHALT SHINGLE ROOF SYSTEM.
13. CEDAR TRUSS (STAINED) - SEE STRUCTURAL DWGS.
14. WINDOW PER WINDOW SCHEDULE- SEE SHEET AE-602.
15. DOOR PER DOOR SCHEDULE- SEE SHEET AE-602.
16. PRE-FINISHED METAL RAIN GUTTER AND DOWNSPOUT.
17. PRE-FINISHED METAL FASCIA AND SOFFIT.
18. PLANTER BOX- SEE DETAIL 9/AE-501.
18A. PIN MOUNTED BUILDING ADDRESS w/ 8" HIGH LETTERS (EAST BLDG)
18B. PIN MOUNTED BUILDING ADDRESS w/ 8" HIGH LETTERS (WEST BLDG)

GENERAL NOTES

A. SET TOP OF WINDOWS AT 7'-0" AFF (TYP.).

B. SEE SITE PLAN FOR BUILDING LOCATION.

EXTERIOR FINISH SCHEDULE

TWO COAT PLASTER SYSTEM:	DRYVIT, STEPH'S WOOD, #463A (SANDPEBBLE FINE)
TWO COAT PLASTER WINDOW HEADER:	DRYVIT, COLONIAL TAN, #117 (SANDPEBBLE FINE)
NORMAN SIZE BRICK VENEER & SILL:	INTERPACE BRICK, AZTEC
CAST-IN-PLACE CONCRETE CAP:	NATURAL GRAY
EXPOSED CONCRETE FOUNDATION:	UNFINISHED
ASPHALT SHINGLE ROOF SYSTEM:	CERTAINTEED, LANDMARK SOLARIS, BURNT SIENNA
WOOD COLUMNS & TRUSS:	READY SEAL, NATURAL CEDAR (OS-012)
TRUSS METAL BRACKETS:	COLOR TO BE SELECTED FROM PAINT MANUF.
METAL SOFFIT & FASCIA:	REYNOLDS, BRONZE
METAL LOUVERS:	MATCH METAL SOFFIT & FASCIA
PRE-FINISHED METAL GUTTERS & DOWNSPOUTS:	MATCH METAL SOFFIT & FASCIA
EXTERIOR FIBERGLASS DOORS:	STAINABLE, MATCH THERMA-TRU CEDAR
EXTERIOR DOOR FRAMES:	COLOR TO BE SELECTED FROM PAINT MANUF.
WINDOWS:	MILGARD, TAN

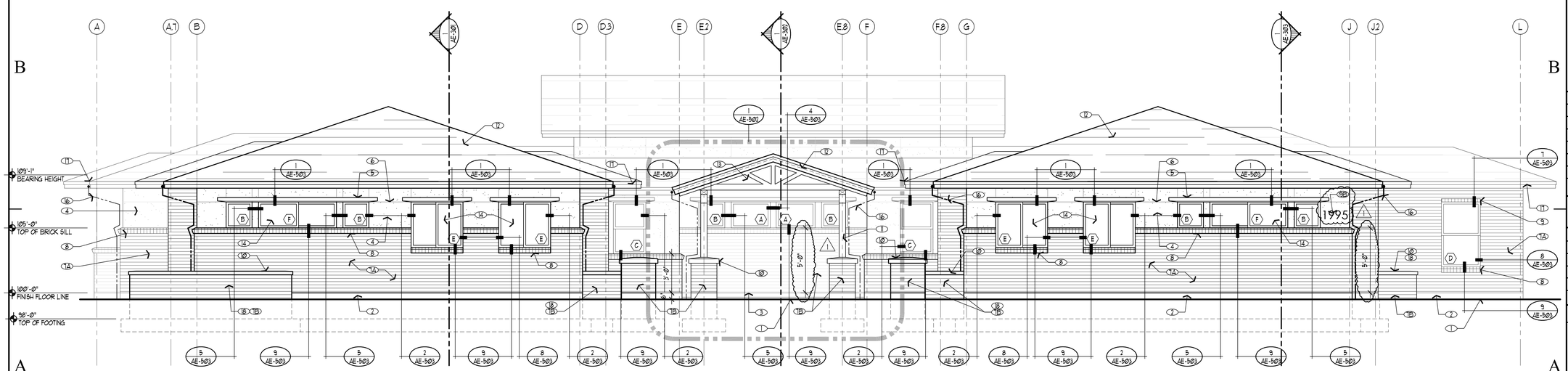

2 EXTERIOR ELEVATION

EAST BLDG = SOUTH ELEVATION
WEST BLDG = EAST ELEVATION

1/4"=1'-0"

State of Utah
Department of Administrative Services

Division of Facilities Construction & Management
4110 State Office Building
Salt Lake City, Utah 84114
Phone: (801) 538 - 3018
Fax: (801) 538 - 3267

http://dfcm.utah.gov

WPA architecture
475 North Freedom Blvd.
Provo, Utah, 84601

Tel: (801) 374-0800 Fax: (801) 374-0805
www.wpa-architecture.com

BUILDING NAME:

PROPERTY #15278
USOR - DSBVI
TRAINING HOUSING
Salt Lake City, Utah

PROJECT TITLE:

USOR - Division of Services for the Blind and Visually Impaired TRAINING HOUSING

LICENSED ARCHITECT
BRUCE T. FALLON
5403169-0301
date
STATE OF UTAH

MARK	DATE	DESCRIPTION
1	05.27.10	Addendum 1

ISSUE TYPE: Construction Document Phase

ISSUE DATE: 27 May 2010

DFCM PROJECT NO: 09240200
CAD PROJECT NO:
CAD DWG FILE: AE-201.dwg
DRAWN BY: ---
CHK'D BY: ---
COPYRIGHT: STATE OF UTAH

SHEET TITLE

Exterior Elevations

SHEET NUMBER

AE-201

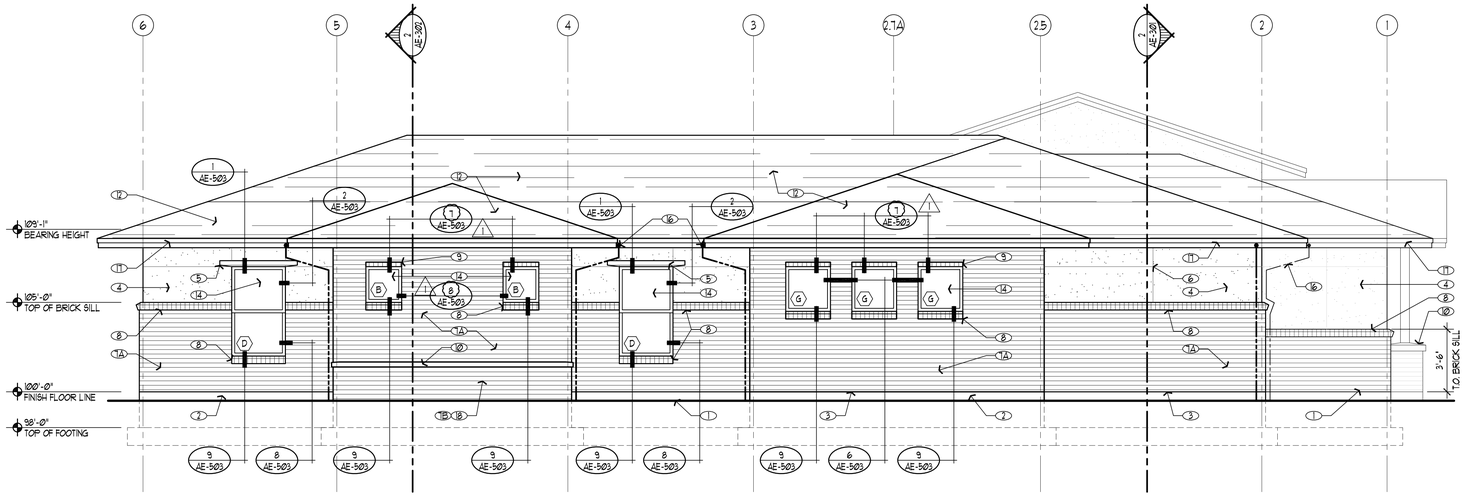

1 EXTERIOR ELEVATION

EAST BLDG = EAST ELEVATION
WEST BLDG = NORTH ELEVATION

1/4"=1'-0"

SHEET NOTES

- TYPICAL REFERENCE FOR WINDOW TYPES- SEE SHEET AE-602.
- 1 APPROXIMATE FINISH GRADE.
- 2 EXPOSED CONCRETE FOUNDATION WALL.
- 3 FINISH FLOOR ELEVATION.
- 4 TWO COAT PLASTER SYSTEM.
- 5 WINDOW TRIM. TWO COAT PLASTER OVER RIGID INSULATION- SEE DETAIL 19/AE-503.
- 6 STUCCO W-SCREED, TYP.- SEE DETAIL 6/AE-501.
- 7A NORMAN BRICK VENEER - LAY IN STACK BOND WITH RAKED MORTAR JOINT.
- 7B NORMAN BRICK VENEER - LAY IN FLEMISH BOND ALTERNATING STRETCHERS AND HEADERS IN EACH COURSE. PROJECT HEADER BRICK OUT 1/2 INCH FROM FACE OF STRETCHER. PROVIDE RAKED MORTAR JOINT.
- 8 BRICK SILL - SEE DETAIL 1/AE-501.
- 9 BRICK HEADER - SEE DETAIL 7/AE-503.
- 10 PRE-CAST CONCRETE CAP - SEE DETAIL 5/AE/501.
- 11 6 x 6 CEDAR COLUMN (STAINED) - SEE STRUCTURAL DWGS.
- 12 ARCHITECTURAL GRADE ASPHALT SHINGLE ROOF SYSTEM.
- 13 CEDAR TRUSS (STAINED) - SEE STRUCTURAL DWGS.
- 14 WINDOW PER WINDOW SCHEDULE- SEE SHEET AE-602.
- 15 DOOR PER DOOR SCHEDULE- SEE SHEET AE-602.
- 16 PRE-FINISHED METAL RAIN GUTTER AND DOWNSPOUT.
- 17 PRE-FINISHED METAL FASCIA AND SOFFIT.
- 18 PLANTER BOX- SEE DETAIL 9/AE-501.
- 19A PIN MOUNTED BUILDING ADDRESS w/ 8" HIGH LETTERS (EAST BLDG)
- 19B PIN MOUNTED BUILDING ADDRESS w/ 8" HIGH LETTERS (WEST BLDG)

GENERAL NOTES

A. SET TOP OF WINDOWS AT 7'-0" AFF (TYP).

B. SEE SITE PLAN FOR BUILDING LOCATION.

EXTERIOR FINISH SCHEDULE

TWO COAT PLASTER SYSTEM:	DRYVIT, STEPH'S WOOD, #463A (SANDPEBBLE FINE)
TWO COAT PLASTER WINDOW HEADER:	DRYVIT, COLONIAL TAN, #117 (SANDPEBBLE FINE)
NORMAN SIZE BRICK VENEER & SILL:	INTERPACE BRICK, AZTEC
CAST-IN-PLACE CONCRETE CAP:	NATURAL GRAY
EXPOSED CONCRETE FOUNDATION:	UNFINISHED
ASPHALT SHINGLE ROOF SYSTEM:	CERTAINTEED, LANDMARK SOLARIS, BURNT SIENNA
WOOD COLUMNS & TRUSS:	READY SEAL, NATURAL CEDAR (OS-002)
TRUSS METAL BRACKETS:	COLOR TO BE SELECTED FROM PAINT MANUF.
METAL SOFFIT & FASCIA:	REYNOLDS, BRONZE
METAL LOUVERS:	MATCH METAL SOFFIT & FASCIA
PRE-FINISHED METAL GUTTERS & DOWNSPOUTS:	MATCH METAL SOFFIT & FASCIA
EXTERIOR FIBERGLASS DOORS:	STAINABLE, MATCH THERMA-TRU CEDAR
EXTERIOR DOOR FRAMES:	COLOR TO BE SELECTED FROM PAINT MANUF.
WINDOWS:	MILGARD, TAN

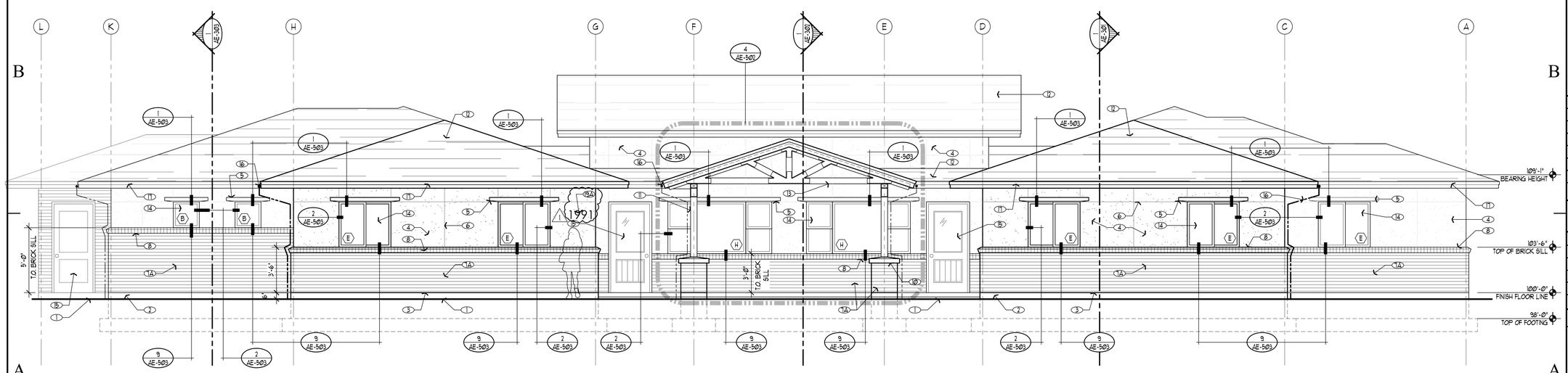

2 EXTERIOR ELEVATION

EAST BLDG = NORTH ELEVATION
WEST BLDG = WEST ELEVATION

1/4"=1'-0"

State of Utah
Department of Administrative Services

Division of Facilities Construction & Management
4110 State Office Building
Salt Lake City, Utah 84114
Phone: (801) 538 - 3018
Fax: (801) 538 - 3267

http://dfcm.utah.gov

WPA architecture
475 North Freedom Blvd.
Provo, Utah, 84601

Tel: (801) 374-0800 Fax: (801) 374-0805
www.wpa-architecture.com

BUILDING NAME:

PROPERTY #15278
USOR - DSBVI
TRAINING HOUSING
Salt Lake City, Utah

PROJECT TITLE:

USOR - Division of Services for the Blind and Visually Impaired TRAINING HOUSING

LICENSED ARCHITECT
BRUCE T. FALLON
5403169-0301
STATE OF UTAH
date

MARK	DATE	DESCRIPTION
1	05.27.10	Addendum 1

ISSUE TYPE: Construction Document Phase

ISSUE DATE: 27 May 2010

DFCM PROJECT NO: 09240200
CAD PROJECT NO:
CAD DWG FILE: AE-202.dwg
DRAWN BY: ---
CHK'D BY: ---
COPYRIGHT: STATE OF UTAH

SHEET TITLE

Exterior Elevations

SHEET NUMBER

AE-202

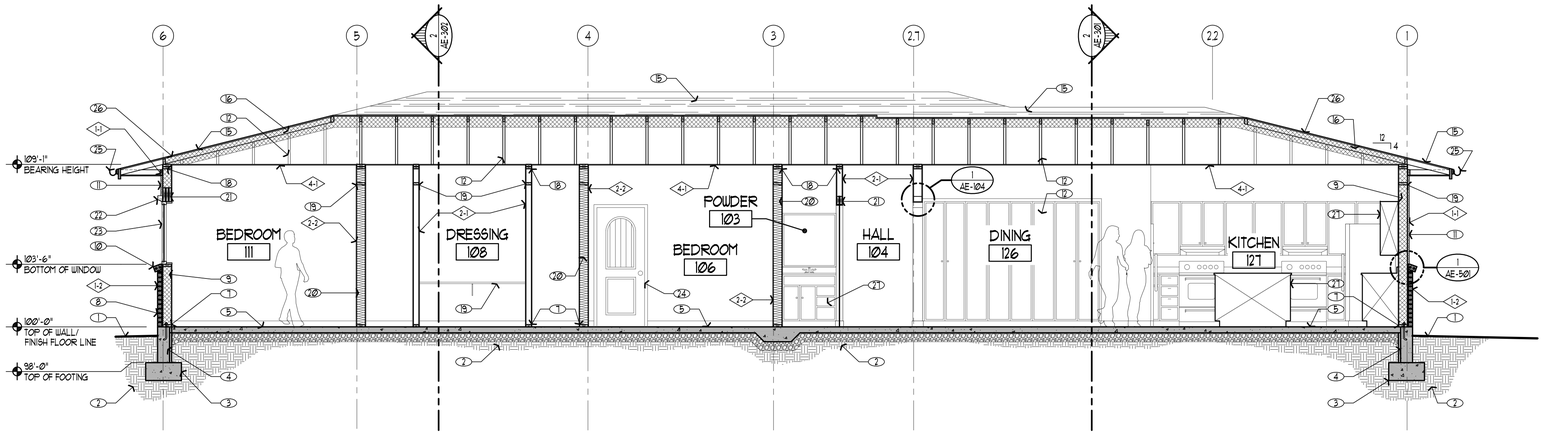

1 BUILDING SECTION
1/4"=1'-0"

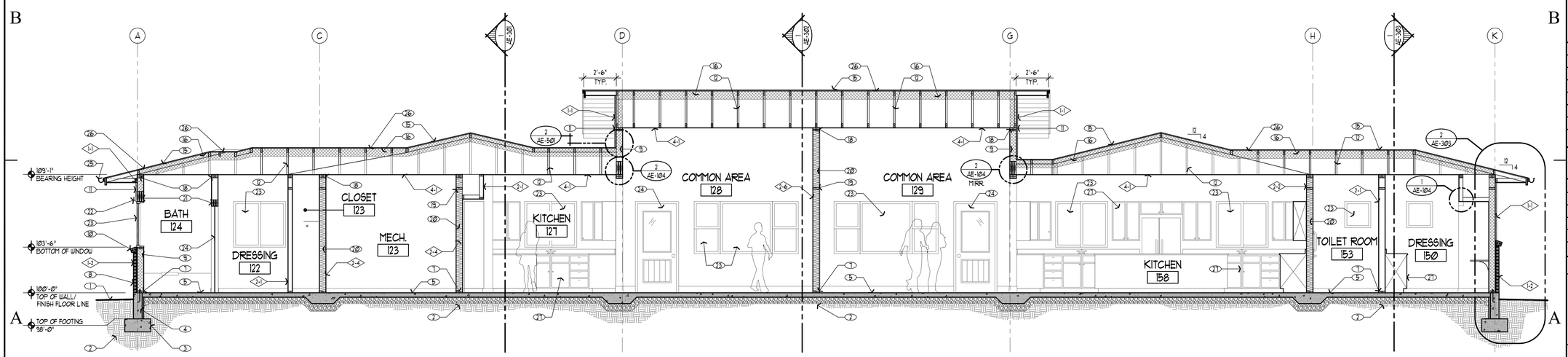

2 BUILDING SECTION
1/4"=1'-0"

SHEET NOTES

1. TYPICAL REFERENCE FOR CONSTRUCTION TYPES - SEE SHEET AE-601 FOR SPECIFIC DETAIL.
2. GRADE. SLOPE AWAY FROM STRUCTURE. PROVIDE MIN. 6" BELOW TOP OF FOUNDATION AND MIN. 30" ABOVE BOTTOM OF FOOTING.
3. UNDISTURBED EARTH. CONTACT ARCHITECT OR SOILS ENGINEER IF ANY UNUSUAL CIRCUMSTANCES ARE ENCOUNTERED.
4. CONCRETE FOOTING - SEE STRUCTURAL DRAWINGS.
5. CONCRETE FOUNDATION - SEE STRUCTURAL DRAWINGS.
6. CONCRETE SLAB OVER GRAVEL BASE - SEE STRUCTURAL DRAWINGS.
7. CONCRETE SIDEWALK/PATIO OVER GRAVEL BASE - SEE DET. 1/A5-501.
8. BOTTOM PLATE. USE REDWOOD OR PRESSURE TREATED WOOD AT CONNECTION BETWEEN WOOD WALL AND CONCRETE FLOOR.
9. NORMAN SIZE BRICK VENEER.
10. SPRAY-APPLIED FOAM WALL INSUALTION.
11. BRICK SILL - SEE DETAIL 1/AE-501.
12. TWO COAT PLASTER SYSTEM.
13. PRE-MANUFACTURED ROOF TRUSS OR 2x RAFTER FRAMING - SEE STRUCTURAL DRAWINGS.
14. 6 x 6 CEDAR COLUMN - STAINED.
15. PRE-CAST CONCRETE CAP - SLOPE @ 1/4" PER FOOT - SEE DET. 8/AE/501.
16. PROVIDE ASPHALT SHINGLES OVER 30# ROOFING FELT. EXTEND ICE AND WATER SHIELD 36" PAST FINISH FACE OF INTERIOR WALLS ON BOTH EAVES & RAKES.
17. SPRAY-APPLIED FOAM ROOF INSULATION.
18. EXPOSED CEDAR TRUSS - STAINED.
19. DOUBLE TOP PLATES.
20. SOLID BLOCKING @ 8'-0" O.C MAX.
21. FULL SOUND ATTENUATION BATTS.
22. WOOD HEADER - SEE STRUCTURAL DRAWINGS.
23. WINDOW TRIM. TWO COAT PLASTER OVER RIGID INSULATION - SEE DETAIL 19/AE-503.
24. WINDOW PER WINDOW SCHEDULE. PROVIDE FLASHING AROUND (4) SIDES OF WINDOW. USE 6" WIDE ICE AND WATER SHIELD. CAULK AROUND ALL SIDES OF WINDOW.
25. DOOR PER DOOR SCHEDULE. CAULK AROUND PERIMETER OF DOOR FRAME TO EXTERIOR FINISH MATERIAL.
26. PRE-FINISHED METAL RAIN GUTTER (WHERE OCCURS - SEE SHEET AE-103).
27. ½" PLYWOOD OR ⅞" OSB ROOF SHEATHING.
28. MILLWORK - SEE SHEETS AE-401 & AE-402.
29. MASONRY PILASTER - (SEE 8/AE-501) 1
30. PLANTER BOX.

State of Utah
Department of Administrative Services
Division of Facilities Construction & Management
4110 State Office Building
Salt Lake City, Utah 84114
Phone: (801) 538 - 3018
Fax: (801) 538 - 3267
http://dfcm.utah.gov

WPA architecture
475 North Freedom Blvd.
Provo, Utah, 84601
Tel: (801) 374-0800 Fax: (801) 374-0805
www.wpa-architecture.com

BUILDING NAME:

PROPERTY #15278
USOR - DSBVI
TRAINING HOUSING
Salt Lake City, Utah

PROJECT TITLE:

USOR - Division of Services for the Blind and Visually Impaired TRAINING HOUSING

LICENSED ARCHITECT
BRUCE T. FALLON
5403169-0301
STATE of UTAH

MARK	DATE	DESCRIPTION
1	05.27.10	Addendum 1

ISSUE TYPE: Construction Document Phase

ISSUE DATE: 27 May 2010

DFCM PROJECT NO: 09240200
CAD PROJECT NO:
CAD DWG FILE: AE-301.dwg
DRAWN BY: ---
CHK'D BY: ---
COPYRIGHT: STATE OF UTAH

SHEET TITLE

Building Sections

SHEET NUMBER

AE-301

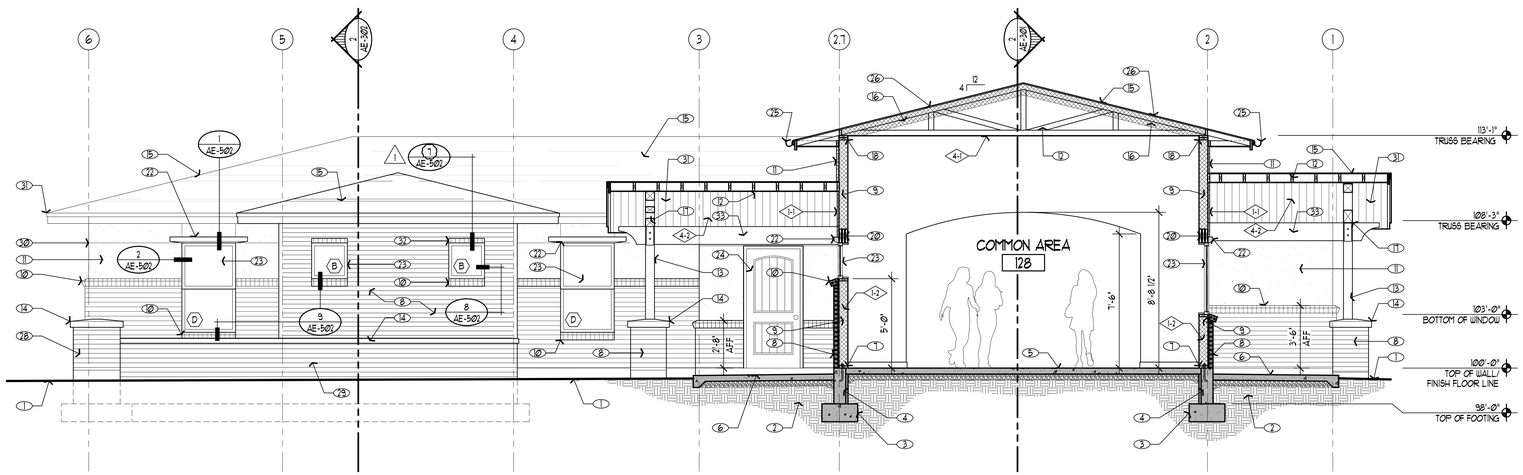

1 BUILDING SECTION
1/4"=1'-0"

SHEET NOTES

1. TYPICAL REFERENCE FOR CONSTRUCTION TYPES - SEE SHEET AE-601 FOR SPECIFIC DETAIL.
2. TYPICAL REFERENCE FOR WINDOW TYPES- SEE SHEET AE-602.
1. GRADE. SLOPE AWAY FROM STRUCTURE. PROVIDE MIN. 6" BELOW TOP OF FOUNDATION AND MIN. 30" ABOVE BOTTOM OF FOOTING.
2. UNDISTURBED EARTH. CONTACT ARCHITECT OR SOILS ENGINEER IF ANY UNUSUAL CIRCUMSTANCES ARE ENCOUNTERED.
3. CONCRETE FOOTING - SEE STRUCTURAL DRAWINGS.
4. CONCRETE FOUNDATION - SEE STRUCTURAL DRAWINGS.
5. CONCRETE SLAB OVER GRAVEL BASE - SEE STRUCTURAL DRAWINGS.
6. CONCRETE SIDEWALK/PATIO OVER GRAVEL BASE - SEE DET. 1/A5-501.
7. BOTTOM PLATE. USE REDWOOD OR PRESSURE TREATED WOOD AT CONNECTION BETWEEN WOOD WALL AND CONCRETE FLOOR.
8. NORMAN SIZE BRICK VENEER.
9. SPRAY-APPLIED FOAM WALL INSUALTION.
10. BRICK SILL - SEE DETAIL 1/AE-501.
11. TWO COAT PLASTER SYSTEM.
12. PRE-MANUFACTURED ROOF TRUSS OR 2x RAFTER FRAMING - SEE STRUCTURAL DRAWINGS.
13. 6 x 6 CEDAR COLUMN - STAINED.
14. PRE-CAST CONCRETE CAP - SLOPE @ 1/4" PER FOOT - SEE DET. 8/AE-501.
15. PROVIDE ASPHALT SHINGLES OVER 30# ROOFING FELT. EXTEND ICE AND WATER SHIELD 36" PAST FINISH FACE OF INTERIOR WALLS ON BOTH EAVES & RAKES.
16. SPRAY-APPLIED FOAM ROOF INSULATION.
17. EXPOSED CEDAR TRUSS - STAINED.
18. DOUBLE TOP PLATES.
19. SOLID BLOCKING @ 8'-0" O.C MAX.
20. FULL SOUND ATTENUATION BATTS.
21. WOOD HEADER - SEE STRUCTURAL DRAWINGS.
22. WINDOW TRIM. TWO COAT PLASTER OVER RIGID INSULATION - SEE DETAIL 19/AE-503.
23. WINDOW PER WINDOW SCHEDULE. PROVIDE FLASHING AROUND (4) SIDES OF WINDOW. USE 6" WIDE ICE AND WATER SHIELD. CAULK AROUND ALL SIDES OF WINDOW.
24. DOOR PER DOOR SCHEDULE. CAULK AROUND PERIMETER OF DOOR FRAME TO EXTERIOR FINISH MATERIAL.
25. PRE-FINISHED METAL RAIN GUTTER (WHERE OCCURS - SEE SHEET AE-103).
26. ½" PLYWOOD OR 7/16" OSB ROOF SHEATHING.
27. MILLWORK - SEE SHEETS AE-401 & AE-402.
28. MASONRY PILASTER - SEE 8/AE-501.
29. PLANTER BOX.
30. STUCCO W-SCREED, TYP.- SEE DETAIL 6/AE-501. 1
31. PRE-FINISHED METAL FASCIA AND SOFFIT.
32. BRICK HEADER - SEE DETAIL 1/AE-503. 1
33. 6 x 12 CEDAR BEAM (STAIN) - SEE STRUCTURAL DWGS.

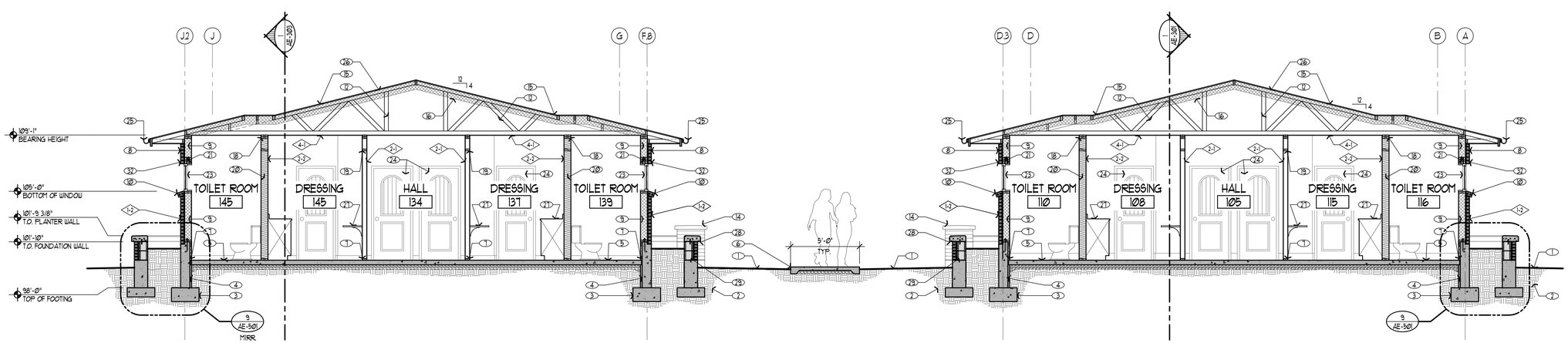

2 BUILDING SECTION
1/4"=1'-0"

State of Utah
Department of Administrative Services

Division of Facilities
Construction & Management
4110 State Office Building
Salt Lake City, Utah 84114
Phone: (801) 538 - 3018
Fax: (801) 538 - 3267

http://dfcm.utah.gov

WPA architecture
475 North Freedom Blvd.
Provo, Utah, 84601
Tel: (801) 374-0800 Fax: (801) 374-0805
www.wpa-architecture.com

BUILDING NAME:

PROPERTY #15278
USOR - DSBVI
TRAINING HOUSING
Salt Lake City, Utah

PROJECT TITLE:

USOR - Division of Services for the Blind and Visually Impaired TRAINING HOUSING

LICENSED ARCHITECT
BRUCE T. FALLON
5403169-0301
date
STATE of UTAH

MARK	DATE	DESCRIPTION
1	05.27.10	Addendum 1

ISSUE TYPE: Construction Document Phase

ISSUE DATE: 27 May 2010

DFCM PROJECT NO: 09240200
CAD PROJECT NO:
CAD DWG FILE: AE-302.dwg
DRAWN BY: ---
CHK'D BY: ---
COPYRIGHT: STATE OF UTAH

SHEET TITLE

Building Sections

SHEET NUMBER

AE-302

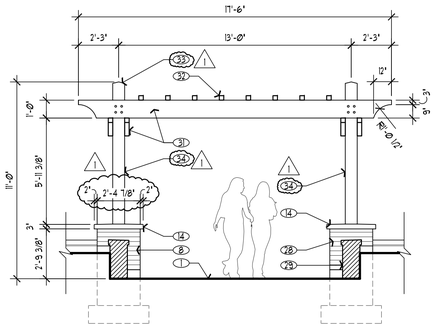

6 TRELLIS ELEVATION
1/4"=1'-0"

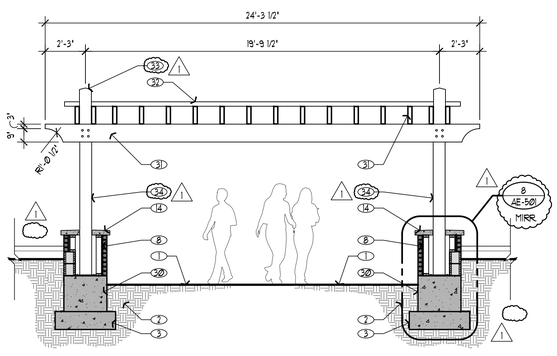

5 TRELLIS SECTION
1/4"=1'-0"

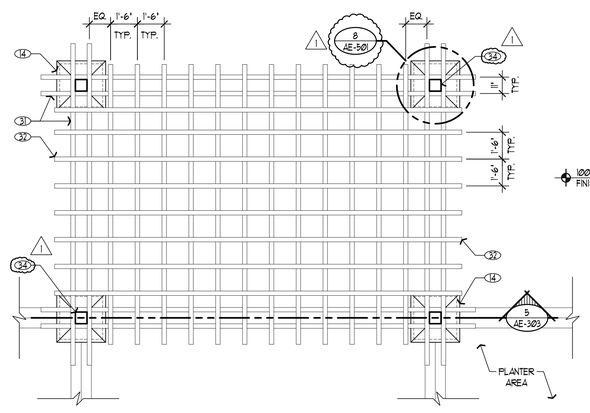

3 TRELLIS PLAN
1/4"=1'-0"

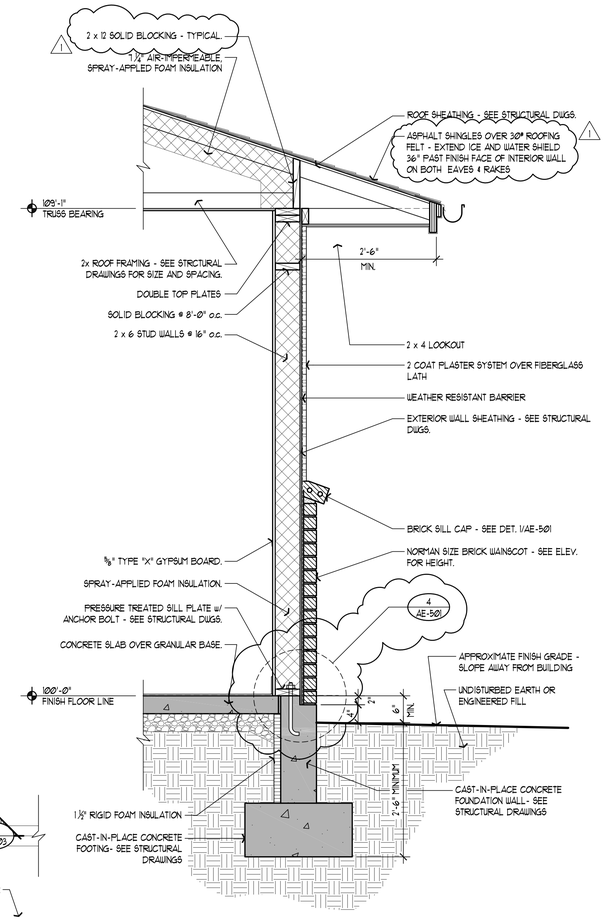

2 TYPICAL WALL SECTION
3/4"=1'-0"

SHEET NOTES

1. TYPICAL REFERENCE FOR CONSTRUCTION TYPES - SEE SHEET AE-601 FOR SPECIFIC DETAIL.
2. GRADE. SLOPE AWAY FROM STRUCTURE. PROVIDE MIN. 6" BELOW TOP OF FOUNDATION AND MIN. 30" ABOVE BOTTOM OF FOOTING.
3. UNDISTURBED EARTH. CONTACT ARCHITECT OR SOILS ENGINEER IF ANY UNUSUAL CIRCUMSTANCES ARE ENCOUNTERED.
4. CONCRETE FOOTING - SEE STRUCTURAL DRAWINGS.
5. CONCRETE FOUNDATION - SEE STRUCTURAL DRAWINGS.
6. CONCRETE SLAB OVER GRAVEL BASE - SEE STRUCTURAL DRAWINGS.
7. CONCRETE SIDEWALK/PATIO OVER GRAVEL BASE - SEE DET. 1/AS-501.
8. BOTTOM PLATE. USE REDWOOD OR PRESSURE TREATED WOOD AT CONNECTION BETWEEN WOOD WALL AND CONCRETE FLOOR.
9. NORMAN SIZE BRICK VENEER.
10. SPRAY-APPLIED FOAM WALL INSULATION.
11. BRICK SILL - SEE DETAIL 1/AE-501.
12. TWO COAT PLASTER SYSTEM.
13. PRE-MANUFACTURED ROOF TRUSS OR 2x RAFTER FRAMING - SEE STRUCTURAL DRAWINGS.
14. 6 x 6 CEDAR COLUMN - STAINED.
15. PRE-CAST CONCRETE CAP - SLOPE @ 1/4" PER FOOT - SEE DET. 8/AE-501.
16. PROVIDE ASPHALT SHINGLES OVER 30# ROOFING FELT. EXTEND ICE AND WATER SHIELD 36" PAST FINISH FACE OF INTERIOR WALLS ON BOTH EAVES & RAKES.
17. SPRAY-APPLIED FOAM ROOF INSULATION.
18. EXPOSED CEDAR TRUSS - STAINED.
19. DOUBLE TOP PLATES.
20. SOLID BLOCKING @ 8'-0" O.C MAX.
21. FULL SOUND ATTENUATION BATTS.
22. WOOD HEADER - SEE STRUCTURAL DRAWINGS.
23. WINDOW TRIM. TWO COAT PLASTER OVER RIGID INSULATION - SEE DETAIL 19/AE-503.
24. WINDOW PER WINDOW SCHEDULE. PROVIDE FLASHING AROUND (4) SIDES OF WINDOW. USE 6" WIDE ICE AND WATER SHIELD. CAULK AROUND ALL SIDES OF WINDOW.
25. DOOR PER DOOR SCHEDULE. CAULK AROUND PERIMETER OF DOOR FRAME TO EXTERIOR FINISH MATERIAL.
26. PRE-FINISHED METAL RAIN GUTTER (WHERE OCCURS - SEE SHEET AE-103).
27. 1/2" PLYWOOD OR 7/16" OSB ROOF SHEATHING.
28. MILLWORK - SEE SHEETS AE-401 & AE-402.
29. MASONRY PILASTER - SEE 8/AE-501.
30. PLANTER BOX.
31. 8" CONCRETE MASONRY UNIT.
32. 3" x 12" STEEL TUBE @ 18" O.C. W/ CAPPED ENDS - SEE STRUCT. DWGS.
33. 3" x 3" STEEL TUBE @ 18" O.C. W/ CAPPED ENDS - SEE STRUCT. DWGS.
34. STEEL COLUMN CAP (TYPICAL).
35. 8 x 8 STEEL COLUMN - SEE STRUCTURAL DWGS.

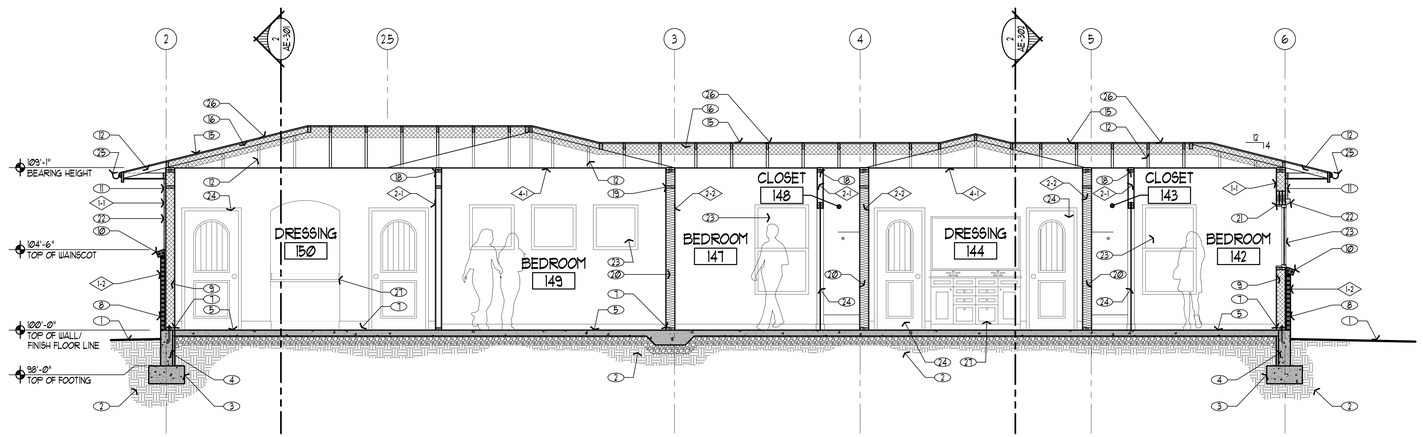

1 BUILDING SECTION
1/4"=1'-0"

State of Utah
Department of Administrative Services
Division of Facilities Construction & Management
4110 State Office Building
Salt Lake City, Utah 84114
Phone: (801) 538 - 3018
Fax: (801) 538 - 3267
http://dfcm.utah.gov

WPA architecture
475 North Freedom Blvd.
Provo, Utah, 84601
Tel: (801) 374-0800 Fax: (801) 374-0805
www.wpa-architecture.com

BUILDING NAME:

PROPERTY #15278
USOR - DSBVI
TRAINING HOUSING
Salt Lake City, Utah

PROJECT TITLE:

USOR - Division of Services for the Blind and Visually Impaired TRAINING HOUSING

LICENSED ARCHITECT
BRUCE T. FALLON
5403169-0301
STATE OF UTAH
date

MARK	DATE	DESCRIPTION
1	05.27.10	Addendum 1

ISSUE TYPE: Construction Document Phase

ISSUE DATE: 27 May 2010

DFCM PROJECT NO: 09240200
CAD PROJECT NO:
CAD DWG FILE: AE-303.dwg
DRAWN BY: ---
CHK'D BY: ---
COPYRIGHT: STATE OF UTAH

SHEET TITLE

Building Sections

SHEET NUMBER

AE-303

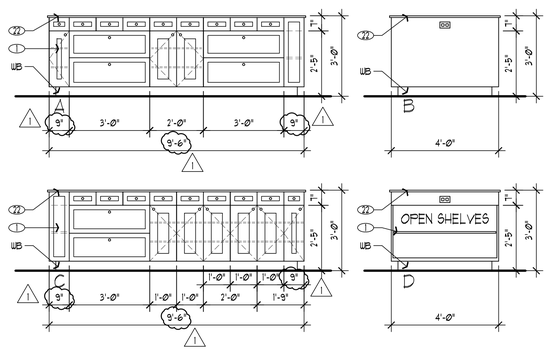

C KITCHEN 127 INT. ELEV. (ISLAND)

3/8"=1'-0"

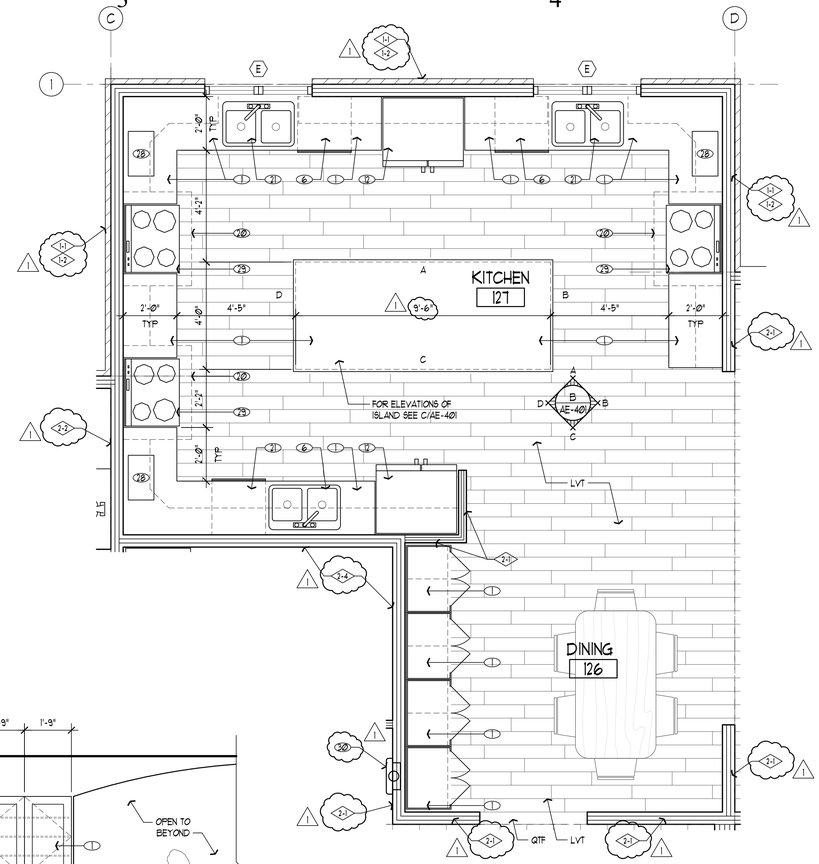

A ENLARGED KITCHEN 127/DINING 126

KITCHEN B8/DINING B8 - MIRROR

3/8"=1'-0"

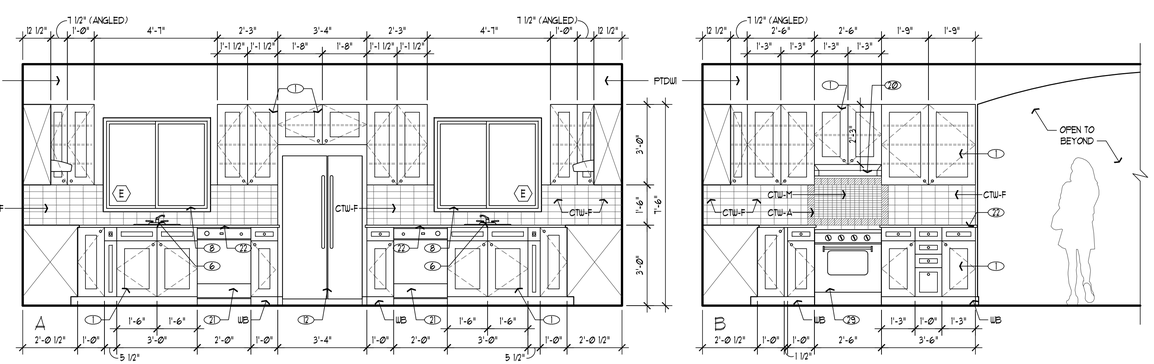

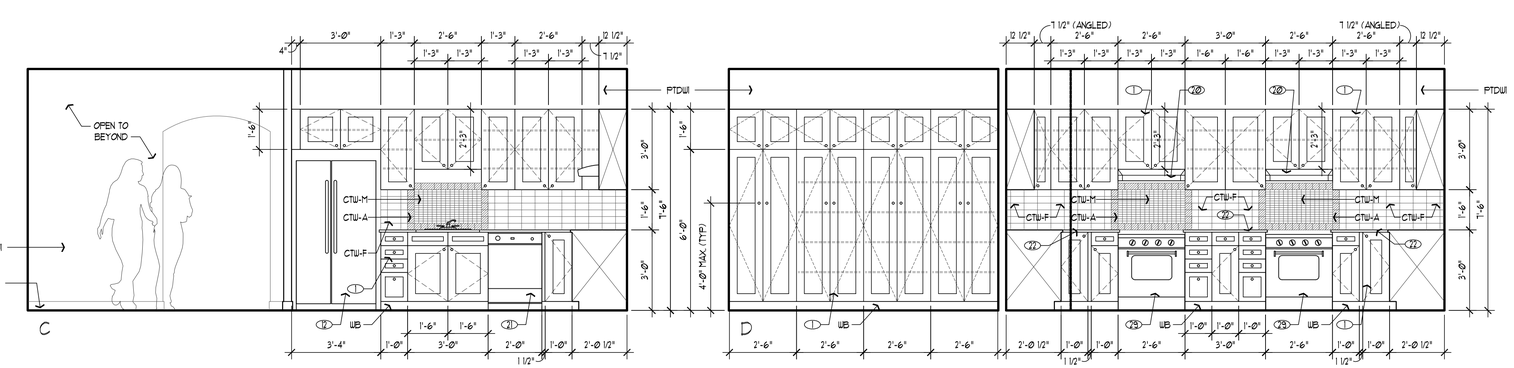

B KITCHEN 127 INTERIOR ELEVATIONS

3/8"=1'-0"

SHEET NOTES

1. TYPICAL REFERENCE FOR CONSTRUCTION TYPES - SEE SHEET AE-601 FOR SPECIFIC DETAIL.
2. TYPICAL REFERENCE FOR WINDOW TYPES. SEE SHEET AE-602 FOR SPECIFIC DETAIL.
3. TYPICAL REFERENCE FOR DOOR TYPES. SEE SHEET AE-602 FOR SPECIFIC DETAIL.
1. MILLWORK.
2. WIRE SHELVING MOUNTED @ 5'-6" AFF.
3. CLOTHES ROD MOUNTED @ 5'-1" AFF.
4. WASHING MACHINE.
5. CLOTHES DRYER.
6. SINK - SEE PLUMBING DRAWINGS.
7. DOOR PER DOOR SCHEDULE.
8. WINDOW PER WINDOW SCHEDULE.
9. MARBLE THRESHOLD, SEE 18/AE-503.
10. MANUFACTURED STONE COUNTER TOPS AND 4" BACKSPLASH, TYP. PROVIDE COUNTER TOPS IN LARGEST SECTIONS POSSIBLE (48" MINIMUM).
11. FIXED SHOWER HEAD MOUNTED @ 6'-6" AFF. SEE PLUMBING DRAWINGS.
12. REFRIGERATOR.
13. GRAB BARS, PROVIDE SOLID BACKING FOR ADDITIONAL SUPPORT.
14. BATHTUB - SEE PLUMBING DRAWINGS.
15. ROBE HOOK MOUNTED @ 5'-6" AFF. UNLESS OTHERWISE NOTED.
16. RECESSED SOAP DISH MOUNTED @ 2'-1" AFF.
17. ADJUSTABLE HEIGHT HANDHELD SHOWER HEAD - SEE PLUMBING DRAWINGS.
18. TOILET - SEE PLUMBING DRAWINGS.
19. TOILET PAPER HOLDER.
20. HOOD - SEE MECHANICAL DWGS.
21. DISHWASHER.
22. MANUFACTURED STONE COUNTER TOPS, TYP. PROVIDE COUNTER TOPS IN LARGEST SECTIONS POSSIBLE (48" MINIMUM).
23. FLOOR DRAIN - SEE PLUMBING DRAWINGS.
24. SHOWER SEAT.
25. SHOWER CONTROLS - LOCATE WITHIN AREA SHOWN PER ICC/ANSI & ADA REQUIREMENTS.
26. MIRROR WITH METAL FRAME.
27. FRAMELESS GLASS SHOWER DOOR AND PANEL.
28. COUNTERTOP MICROWAVE.
29. RANGE & OVEN.
30. SEMI-RECESSED FIRE EXTINGUISHER CABINET - SEE DETAIL 22/AE-503.

FINISH LEGEND

FLOORS

EPT	EPOXY PAINTED FLOOR OVER CONCRETE
CPT	CARPET TILE
CTF	UNGLAZED MOSAIC TILE (SEE DET. 1/AE-602)
LVT	LUXURY VINYL TILE (6" x 36" PLANK)
QTF	UNGLAZED QUARRY TILE (12" x 24")
RSF	RESILIENT SHEET FLOORING

BASE

CPTB	6" HIGH CARPET BASE
QTB	QUARRY TILE BASE (3 x 12)
CTB	CERAMIC TILE BASE (3 x 3)
RB	6" HIGH TOPSET RESILIENT BASE
VB	6" COVED RESILIENT SHEET INTEGRAL BASE
WB	6" HARDWOOD BASE (STAIN) - SEE DET. 1/AE-602
NONE	NO BASE REQUIRED - WALL FINISH TO EXTEND TO FLOOR

WALLS

PTDW1	GYPSUM BOARD TEXTURED & PAINTED (PRIME PLUS 2 COATS)
PTDW2	GYPSUM BOARD TEXTURED & EPOXY PAINTED (PRIME PLUS 2 COATS)
CTW-F	CERAMIC TILE - FIELD (3 x 6)
CTW-A	CERAMIC TILE - ACCENT (3 x 3)
CTW-M	CERAMIC TILE - MOSAIC (1 x 2)
PW	PLYWOOD - EPOXY PAINTED
SS	SOLID SURFACE TUB/SHOWER SURROUNDS

MILLWORK

MS	MANUFACTURED STONE COUNTER & BACKSPLASH
WD	WOOD

GENERAL NOTES:

A. DIMENSIONS SHOWN ON ENLARGED PLANS ARE TO FACE OF FRAMING.

B. PROVIDE PERMANENT SEAT IN ROLL-IN TYPE SHOWER STALL THAT COMPLIES WITH ANSI A117.1, SECTION 608.3.2.

C. PROVIDE REMOVABLE SHOWER SEAT FOR ACCESSIBLE BATHTUB IN BATH #124.

D. EXTEND FINISHED FLOORING UNDERNEATH CABINETS & COUNTERTOP SURFACES TO FACE OF WALL OR TO FACE OF CABINET TOE KICK.

State of Utah
Department of Administrative Services

Division of Facilities Construction & Management
4110 State Office Building
Salt Lake City, Utah 84114
Phone: (801) 538 - 3018
Fax: (801) 538 - 3267

http://dfcm.utah.gov

WPA architecture
475 North Freedom Blvd.
Provo, Utah, 84601

Tel: (801) 374-0800 Fax: (801) 374-0805
www.wpa-architecture.com

BUILDING NAME:

PROPERTY #15278
USOR - DSBVI
TRAINING HOUSING
Salt Lake City, Utah

PROJECT TITLE:

USOR - Division of Services for the Blind and Visually Impaired TRAINING HOUSING

LICENSED ARCHITECT
BRUCE T. FALLON
5403169-0301
STATE of UTAH

MARK	DATE	DESCRIPTION
1	05.27.10	Addendum 1

ISSUE TYPE: Construction Document Phase

ISSUE DATE: 27 May 2010

DFCM PROJECT NO: 09240200
CAD PROJECT NO:
CAD DWG FILE: AE-401.dwg
DRAWN BY: ---
CHK'D BY: ---

COPYRIGHT: STATE OF UTAH

SHEET TITLE

Enlarged Floor Plans & Interior Elevations

SHEET NUMBER

AE-401

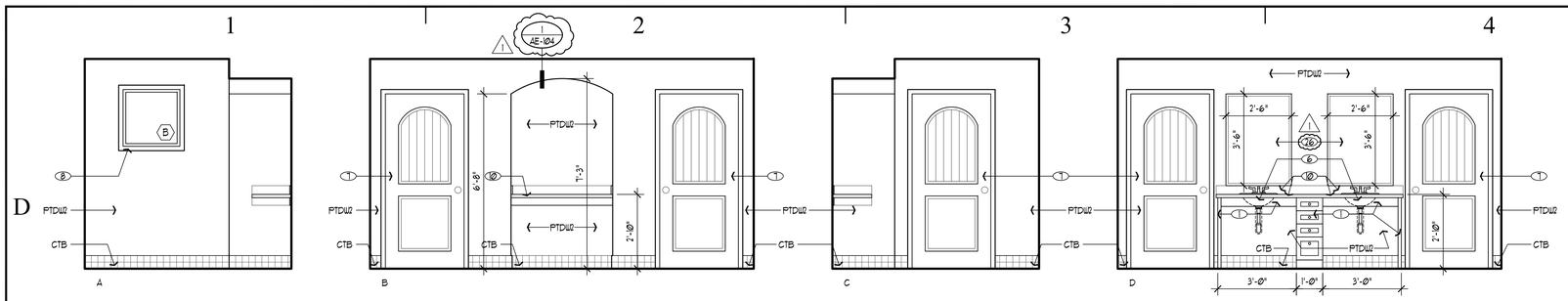

C DRESSING 150 INTERIOR ELEVATIONS

3/8"=1'-0"

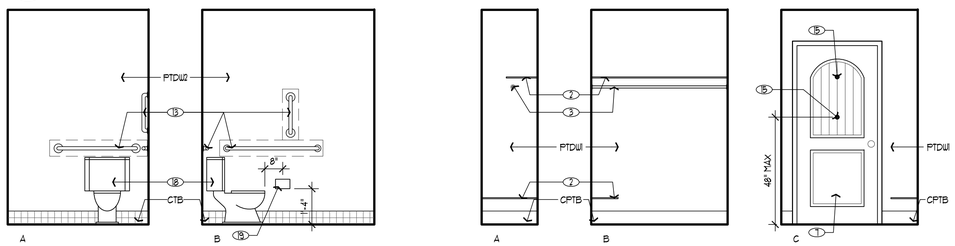

D TOILET ROOM 153

3/8"=1'-0"

NOTE: FRAMELESS GLASS SHOWER DOOR AND PANEL NOT SHOWN FOR CLARITY

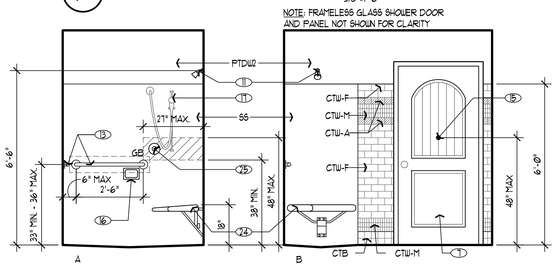

E TYP. CLOSET INT. ELEV.

3/8"=1'-0"

NOTE: FRAMELESS GLASS SHOWER DOOR AND PANEL NOT SHOWN FOR CLARITY

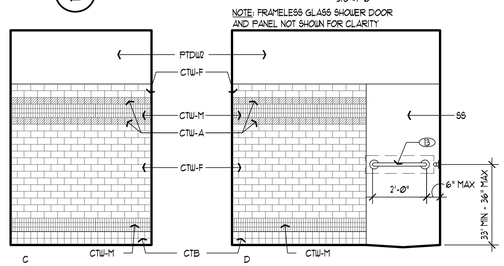

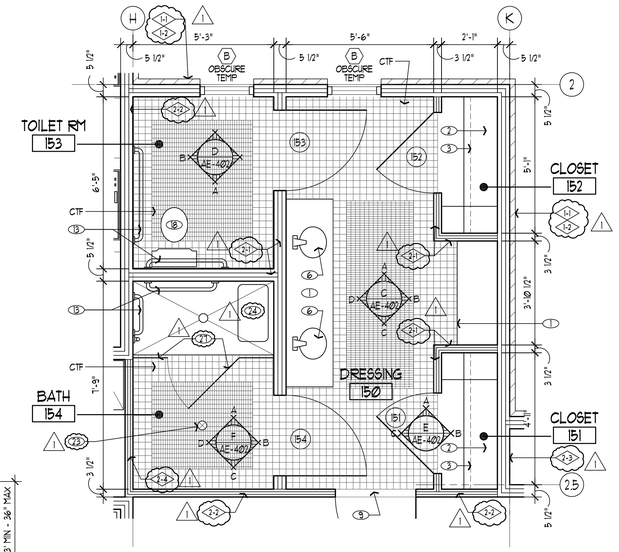

A ENLARGED DRESSING 150, TOILET RM 153, AND BATH 154

3/8"=1'-0"

F BATH 154

3/8"=1'-0"

NOTE: FRAMELESS GLASS SHOWER DOOR AND PANEL NOT SHOWN FOR CLARITY

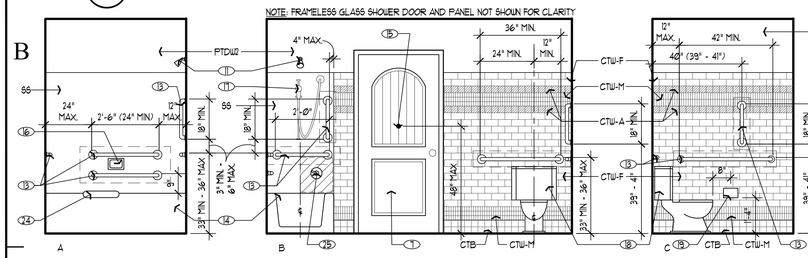

NOTE: FRAMELESS GLASS SHOWER DOOR AND PANEL NOT SHOWN FOR CLARITY

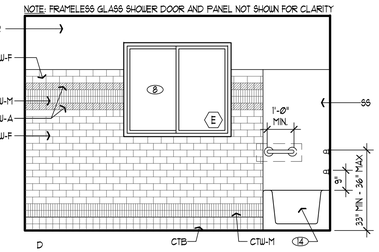

G BATH 124 INTERIOR ELEVATIONS

3/8"=1'-0"

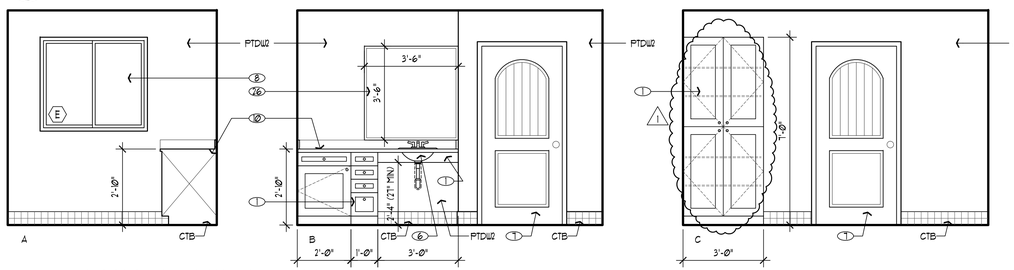

H DRESSING 123 INTERIOR ELEVATIONS

3/8"=1'-0"

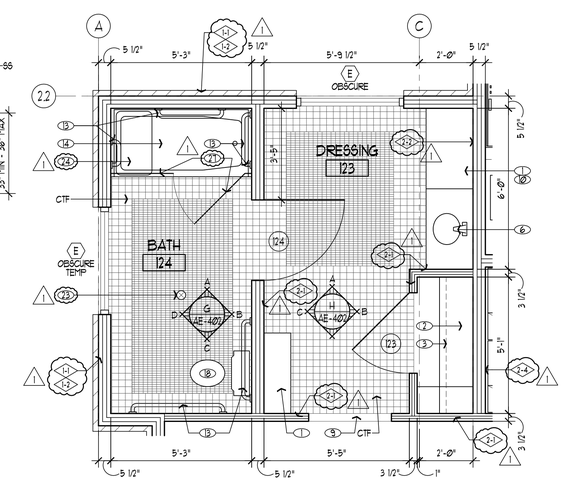

B ENLARGED DRESSING 123 AND BATH 124

3/8"=1'-0"

SHEET NOTES

1. TYPICAL REFERENCE FOR CONSTRUCTION TYPES - SEE SHEET AE-601 FOR SPECIFIC DETAIL.
2. TYPICAL REFERENCE FOR WINDOW TYPES. SEE SHEET AE-601 FOR SPECIFIC DETAIL.
3. TYPICAL REFERENCE FOR DOOR TYPES. SEE SHEET AE-601 FOR SPECIFIC DETAIL.
1. MILLWORK.
2. WIRE SHELVING MOUNTED @ 5'-6" AFF.
3. CLOTHES ROD MOUNTED @ 5'-1" AFF.
4. WASHING MACHINE.
5. CLOTHES DRYER.
6. SINK- SEE PLUMBING DRAWINGS.
7. DOOR PER DOOR SCHEDULE.
8. WINDOW PER WINDOW SCHEDULE.
9. MARBLE THRESHOLD, SEE 18/AE-503.
10. MANUFACTURED STONE COUNTER TOPS AND 4" BACKSPLASH, TYP. PROVIDE COUNTER TOPS IN LARGEST SECTIONS POSSIBLE (48" MINIMUM).
11. FIXED SHOWER HEAD MOUNTED @ 6'-6" AFF. SEE PLUMBING DRAWINGS.
12. REFRIGERATOR.
13. GRAB BARS, PROVIDE SOLID BACKING FOR ADDITIONAL SUPPORT.
14. BATHTUB- SEE PLUMBING DRAWINGS.
15. ROBE HOOK MOUNTED @ 5'-6" AFF. UNLESS OTHERWISE NOTED.
16. RECESSED SOAP DISH MOUNTED @ 2'-7" AFF.
17. ADJUSTABLE HEIGHT HANDHELD SHOWER HEAD - SEE PLUMBING DRAWINGS.
18. TOILET - SEE PLUMBING DRAWINGS.
19. TOILET PAPER HOLDER.
20. HOOD - SEE MECHANICAL DWGS.
21. DISHWASHER.
22. MANUFACTURED STONE COUNTER TOPS, TYP. PROVIDE COUNTER TOPS IN LARGEST SECTIONS POSSIBLE (48" MINIMUM).
23. FLOOR DRAIN - SEE PLUMBING DRAWINGS.
24. SHOWER SEAT.
25. SHOWER CONTROLS - LOCATE WITHIN AREA SHOWN PER ICC/ANSI & ADA REQUIREMENTS.
26. MIRROR WITH METAL FRAME.
27. FRAMELESS GLASS SHOWER DOOR AND PANEL.
28. COUNTERTOP MICROWAVE.
29. RANGE & OVEN.
30. SEMI-RECESSED FIRE EXTINGUISHER CABINET - SEE DETAIL 22/AE-503.

FINISH LEGEND

FLOORS

EPT	EPOXY PAINTED FLOOR OVER CONCRETE
CPT	CARPET TILE
CTF	UNGLAZED MOSAIC TILE (SEE DET. 1/AE-402)
LVT	LUXURY VINYL TILE (6" x 36" PLANK)
QTF	UNGLAZED QUARRY TILE (12" x 24")
RSF	RESILIENT SHEET FLOORING

BASE

CPTB	6" HIGH CARPET BASE
QTB	QUARRY TILE BASE (3 x 12)
CTB	CERAMIC TILE BASE (3 x 3)
RB	6" HIGH TOPSET RESILIENT BASE
VB	6" COVED RESILIENT SHEET INTEGRAL BASE
WB	6" HARDWOOD BASE (STAIN) - SEE DET. 1/AE-602
NONE	NO BASE REQUIRED - WALL FINISH TO EXTEND TO FLOOR

WALLS

PTDW	GYPSUM BOARD TEXTURED & PAINTED (PRIME PLUS 2 COATS)
PTDW2	GYPSUM BOARD TEXTURED & EPOXY PAINTED (PRIME PLUS 2 COATS)
CTW-F	CERAMIC TILE - FIELD (3 x 6)
CTW-A	CERAMIC TILE - ACCENT (3 x 3)
CTW-M	CERAMIC TILE - MOSAIC (1 x 2)
PW	PLYWOOD - EPOXY PAINTED
SG	SOLID SURFACE TUB/SHOWER SURROUNDS

MILLWORK

MS	MANUFACTURED STONE COUNTER & BACKSPLASH
WD	WOOD

GENERAL NOTES:

A. DIMENSIONS SHOWN ON ENLARGED PLANS ARE TO FACE OF FRAMING.

B. PROVIDE PERMANENT SEAT IN ROLL-IN TYPE SHOWER STALL THAT COMPLIES WITH ANSI A117.1, SECTION 608.3.2.

C. PROVIDE REMOVABLE SHOWER SEAT FOR ACCESSIBLE BATHTUB IN BATH #24.

D. EXTEND FINISHED FLOORING UNDERNEATH CABINETS & COUNTERTOP SURFACES TO FACE OF WALL OR TO FACE OF CABINET TOE KICK.

State of Utah
Department of Administrative Services

Division of Facilities Construction & Management
4110 State Office Building
Salt Lake City, Utah 84114
Phone: (801) 538 - 3018
Fax: (801) 538 - 3267

http://dfcm.utah.gov

WPA architecture
475 North Freedom Blvd.
Provo, Utah, 84601
Tel: (801) 374-0800 Fax: (801) 374-0805
www.wpa-architecture.com

BUILDING NAME:

PROPERTY #15278
USOR - DSBVI
TRAINING HOUSING
Salt Lake City, Utah

PROJECT TITLE:

USOR - Division of Services for the Blind and Visually Impaired
TRAINING HOUSING

LICENSED ARCHITECT
BRUCE T. FALLON
5403169-0301
STATE OF UTAH

MARK	DATE	DESCRIPTION
1	05.27.10	Addendum 1

ISSUE TYPE: Construction Document Phase

ISSUE DATE: 27 May 2010

DFCM PROJECT NO: 09240200
CAD PROJECT NO:
CAD DWG FILE: AE-402dwg
DRAWN BY: ---
CHK'D BY: ---

COPYRIGHT: STATE OF UTAH

SHEET TITLE

Enlarged Floor Plans & Interior Elevations

SHEET NUMBER

AE-402

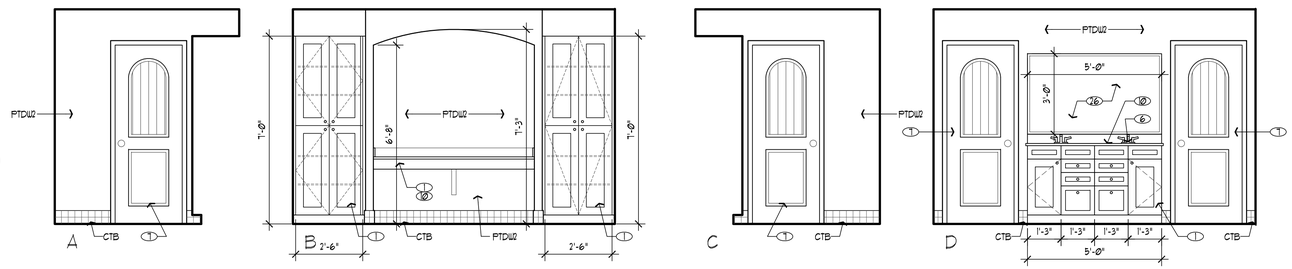

E DRESSING 115 INTERIOR ELEVATIONS

3/8"=1'-0"

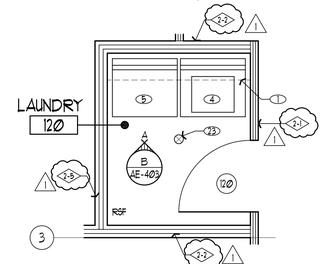

A ENLARGED LAUNDRY 120

LAUNDRY 155 - SIMILAR

3/8"=1'-0"

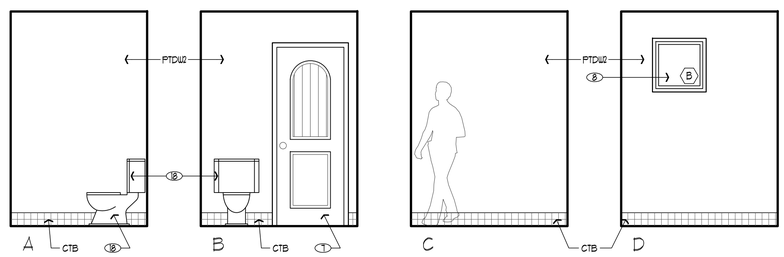

F BATH 117 INTERIOR ELEVATIONS

3/8"=1'-0"

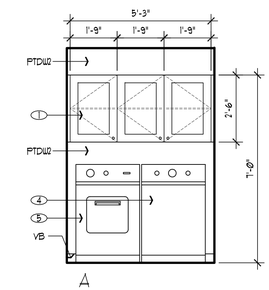

B LAUNDRY 120 INT. ELEVATION

3/8"=1'-0"

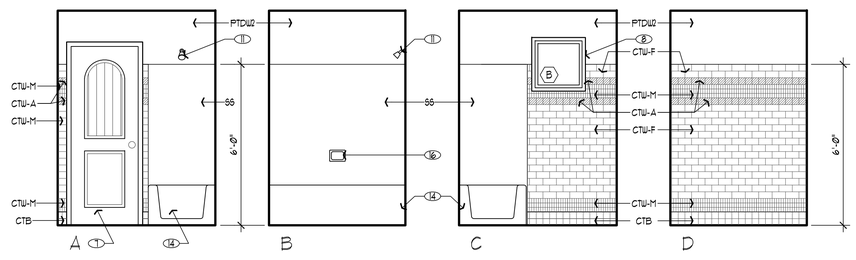

G BATH 117 INTERIOR ELEVATIONS

3/8"=1'-0"

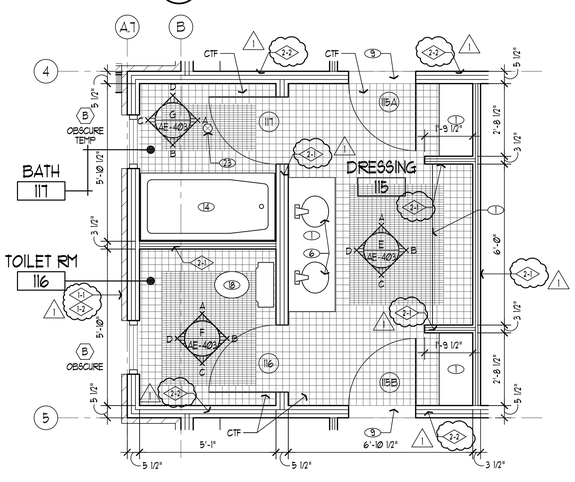

C ENLARGED DRESSING 115, TOILET RM 116, AND BATH 117

DRESSING 108, BATH 109, AND TOILET RM 110 - MIRROR

3/8"=1'-0"

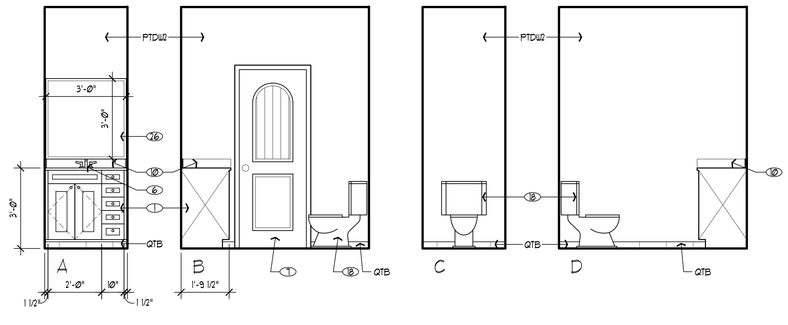

H POWDER 103 INTERIOR ELEVATIONS

3/8"=1'-0"

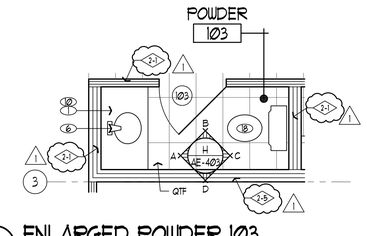

D ENLARGED POWDER 103

POWDER 132 - MIRROR

3/8"=1'-0"

SHEET NOTES

- TYPICAL REFERENCE FOR CONSTRUCTION TYPES - SEE SHEET AE-601 FOR SPECIFIC DETAIL.
- TYPICAL REFERENCE FOR WINDOW TYPES. SEE SHEET AE-602 FOR SPECIFIC DETAIL.
- TYPICAL REFERENCE FOR DOOR TYPES. SEE SHEET AE-602 FOR SPECIFIC DETAIL.

1. MILLWORK.
2. WIRE SHELVING MOUNTED @ 5'-6" AFF.
3. CLOTHES ROD MOUNTED @ 5'-1" AFF.
4. WASHING MACHINE.
5. CLOTHES DRYER.
6. SINK - SEE PLUMBING DRAWINGS.
7. DOOR PER DOOR SCHEDULE.
8. WINDOW PER WINDOW SCHEDULE.
9. MARBLE THRESHOLD, SEE 18/AE-503.
10. MANUFACTURED STONE COUNTER TOPS AND 4" BACKSPLASH, TYP. PROVIDE COUNTER TOPS IN LARGEST SECTIONS POSSIBLE (48" MINIMUM).
11. FIXED SHOWER HEAD MOUNTED @ 6'-6" AFF. - SEE PLUMBING DRAWINGS.
12. REFRIGERATOR.
13. GRAB BARS, PROVIDE SOLID BACKING FOR ADDITIONAL SUPPORT.
14. BATHTUB - SEE PLUMBING DRAWINGS.
15. ROBE HOOK MOUNTED @ 5'-6" AFF. UNLESS OTHERWISE NOTED.
16. RECESSED SOAP DISH MOUNTED @ 2'-1" AFF.
17. ADJUSTABLE HEIGHT HANDHELD SHOWER HEAD - SEE PLUMBING DRAWINGS.
18. TOILET - SEE PLUMBING DRAWINGS.
19. TOILET PAPER HOLDER.
20. HOOD - SEE MECHANICAL DWGS.
21. DISHWASHER.
22. MANUFACTURED STONE COUNTER TOPS, TYP. PROVIDE COUNTER TOPS IN LARGEST SECTIONS POSSIBLE (48" MINIMUM).
23. FLOOR DRAIN - SEE PLUMBING DRAWINGS.
24. SHOWER SEAT.
25. SHOWER CONTROLS - LOCATE WITHIN AREA SHOWN PER ICC/ANSI A ADA REQUIREMENTS.
26. MIRROR WITH METAL FRAME.
27. FRAMELESS GLASS SHOWER DOOR AND PANEL.
28. COUNTERTOP MICROWAVE.
29. RANGE & OVEN.
30. SEMI-RECESSED FIRE EXTINGUISHER CABINET - SEE DETAIL 22/AE-503.

FINISH LEGEND

FLOORS

EPT	EPOXY PAINTED FLOOR OVER CONCRETE
CPT	CARPET TILE
CTF	UNGLAZED MOSAIC TILE (SEE DET. 1/AE-102)
LVT	LUXURY VINYL TILE (6" x 36" PLANK)
QTF	UNGLAZED QUARRY TILE (12" x 24")
RSF	RESILIENT SHEET FLOORING

BASE

CPTB	6" HIGH CARPET BASE
QTB	QUARRY TILE BASE (3 x 12)
CTB	CERAMIC TILE BASE (3 x 3)
RB	6" HIGH TOPSET RESILIENT BASE
VB	6" COVED RESILIENT SHEET INTEGRAL BASE
WB	6" HARDWOOD BASE (STAIN) - SEE DET. 1/AE-602
NONE	NO BASE REQUIRED - WALL FINISH TO EXTEND TO FLOOR

WALLS

PTDW1	GYPSUM BOARD TEXTURED & PAINTED (PRIME PLUS 2 COATS)
PTDW2	GYPSUM BOARD TEXTURED & EPOXY PAINTED (PRIME PLUS 2 COATS)
CTW-F	CERAMIC TILE - FIELD (3 x 6)
CTW-A	CERAMIC TILE - ACCENT (3 x 3)
CTW-M	CERAMIC TILE - MOSAIC (1 x 2)
PW	PLYWOOD - EPOXY PAINTED
SS	SOLID SURFACE TUB/SHOWER SURROUNDS

MILLWORK

MS	MANUFACTURED STONE COUNTER & BACKSPLASH
WD	WOOD

GENERAL NOTES:

A. DIMENSIONS SHOWN ON ENLARGED PLANS ARE TO FACE OF FRAMING.

B. PROVIDE PERMANENT SEAT IN ROLL-IN TYPE SHOWER STALL THAT COMPLIES WITH ANSI A117.1, SECTION 608.3.2.

C. PROVIDE REMOVABLE SHOWER SEAT FOR ACCESSIBLE BATHTUB IN BATH #124.

D. EXTEND FINISHED FLOORING UNDERNEATH CABINETS & COUNTERTOP SURFACES TO FACE OF WALL OR TO FACE OF CABINET TOE KICK.

State of Utah
Department of Administrative Services

Division of Facilities Construction & Management
4110 State Office Building
Salt Lake City, Utah 84114
Phone: (801) 538 - 3018
Fax: (801) 538 - 3267

http://dfcm.utah.gov

WPA architecture
475 North Freedom Blvd.
Provo, Utah, 84601

Tel: (801) 374-0800 Fax: (801) 374-0805
www.wpa-architecture.com

BUILDING NAME:

PROPERTY #15278
USOR - DSBVI
TRAINING HOUSING
Salt Lake City, Utah

PROJECT TITLE:

USOR - Division of Services for the Blind and Visually Impaired TRAINING HOUSING

LICENSED ARCHITECT
BRADLEY T. FULLER
5403169-0301
STATE OF UTAH
date

MARK	DATE	DESCRIPTION
1	05.27.10	Addendum 1

ISSUE TYPE: Construction Document Phase

ISSUE DATE: 27 May 2010

DFCM PROJECT NO: 09240200
CAD PROJECT NO:
CAD DWG FILE: AE-403.dwg
DRAWN BY: ---
CHK'D BY: ---
COPYRIGHT: STATE OF UTAH

SHEET TITLE

Enlarged Floor Plans & Interior Elevations

SHEET NUMBER

AE-403

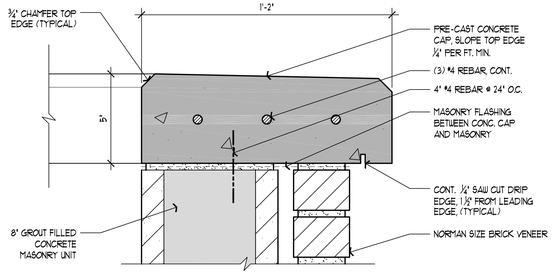

5 PRE-CAST CONC. CAP DETAIL
3" = 1'-0"

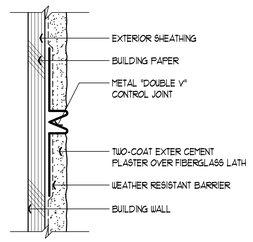

6 CONTROL JOINT DETAIL
HALF SCALE

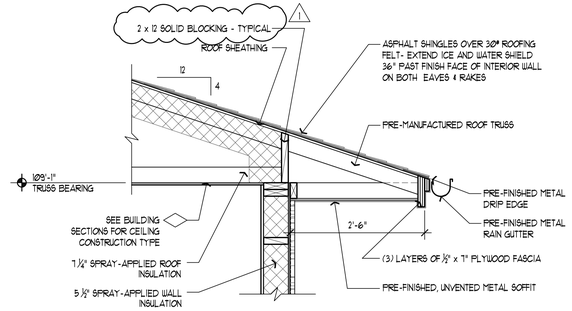

7 EAVE DETAIL
3/4" = 1'-0"

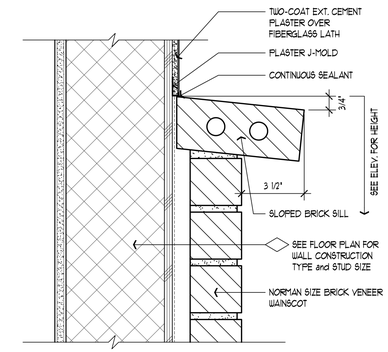

1 BRICK SILL DETAIL
3" = 1'-0"

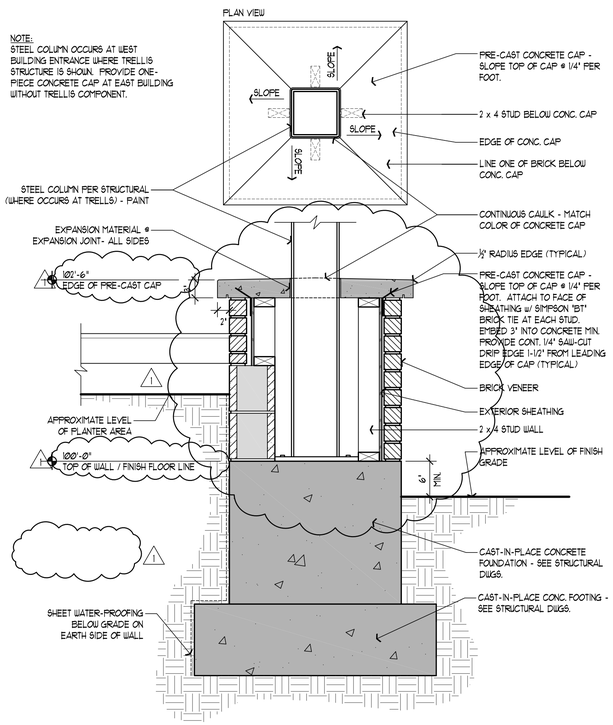

8 BASE DETAIL
1" = 1'-0"

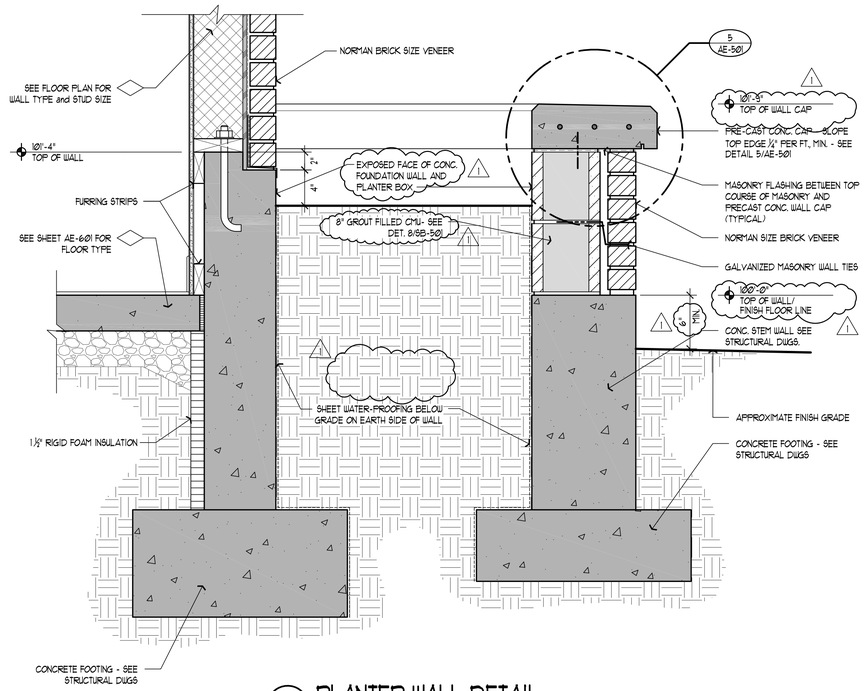

9 PLANTER WALL DETAIL
1½" = 1'-0"

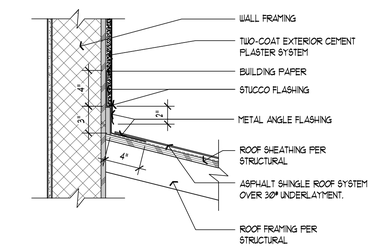

2 ROOF DETAIL
1½" = 1'-0"

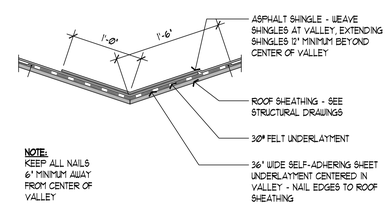

3 ROOF VALLEY DETAIL
1" = 1'-0"

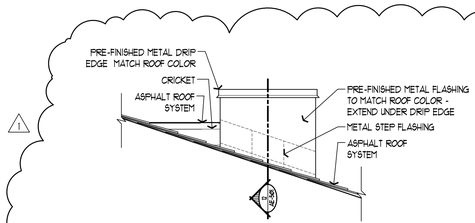

10 EXHAUST PENETRATION ELEV.
1" = 1'-0"

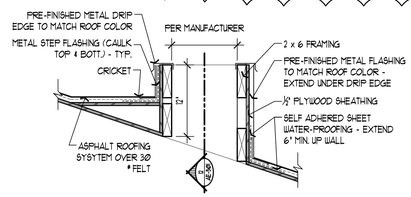

11 EXHAUST PENETRATION DETAIL
1" = 1'-0"

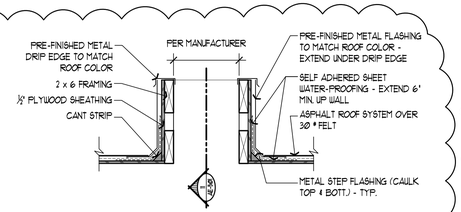

12 EXHAUST PENETRATION DET.
1" = 1'-0"

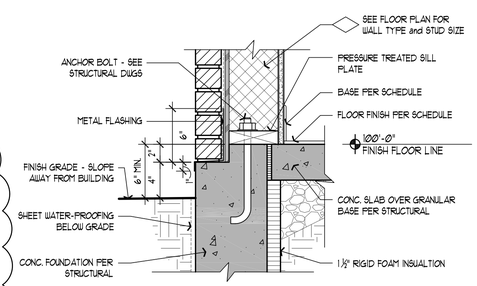

4 FLASHING DETAIL
1½" = 1'-0"

State of Utah
Department of Administrative Services
Division of Facilities Construction & Management
4110 State Office Building
Salt Lake City, Utah 84114
Phone: (801) 538 - 3018
Fax: (801) 538 - 3267
http://dfcm.utah.gov

WPA architecture
475 North Freedom Blvd.
Provo, Utah, 84601
Tel: (801) 374-0800 Fax: (801) 374-0805
www.wpa-architecture.com

BUILDING NAME:
PROPERTY #15278
USOR - DSBVI
TRAINING HOUSING
Salt Lake City, Utah

PROJECT TITLE:
USOR - Division of Services for the Blind and Visually Impaired TRAINING HOUSING

LICENSED ARCHITECT
BRUCE T. FALLON
5403169-0301
STATE of UTAH

MARK	DATE	DESCRIPTION
1	05.27.10	Addendum 1

ISSUE TYPE: Construction Document Phase
ISSUE DATE: 27 May 2010
DFCM PROJECT NO: 09240200
CAD PROJECT NO:
CAD DWG FILE: AE-501.dwg
DRAWN BY: ---
CHK'D BY: ---
COPYRIGHT: STATE OF UTAH

SHEET TITLE
Exterior Details

SHEET NUMBER
AE-501

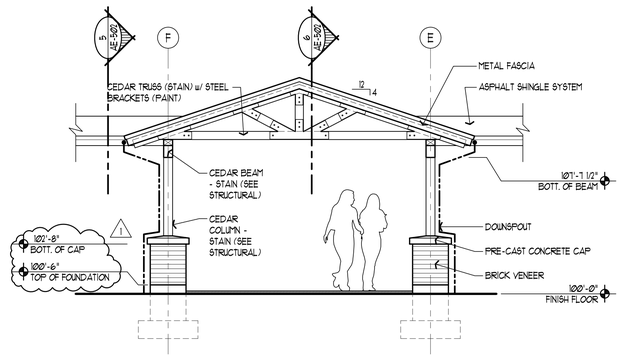

4 BACK PATIO ELEVATION
1/4"=1'-0"

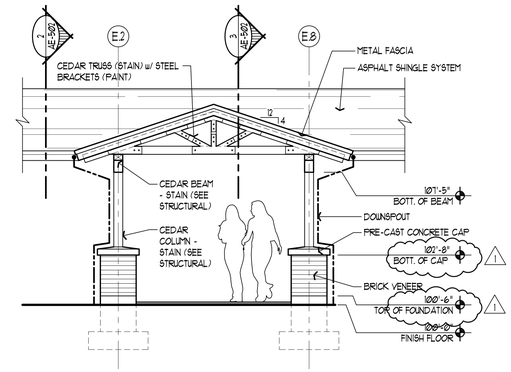

1 ENTRY ELEVATION
1/4"=1'-0"

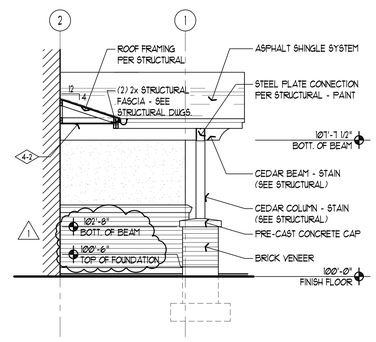

5 BACK PATIO SECTION
1/4"=1'-0"

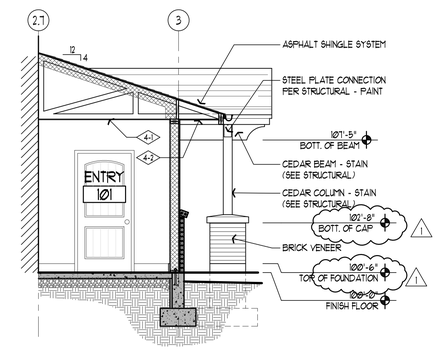

2 ENTRY SECTION
1/4"=1'-0"

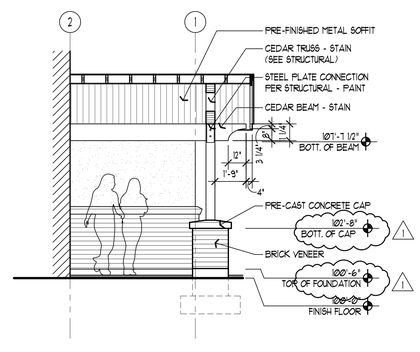

6 BACK PATIO SECTION
1/4"=1'-0"

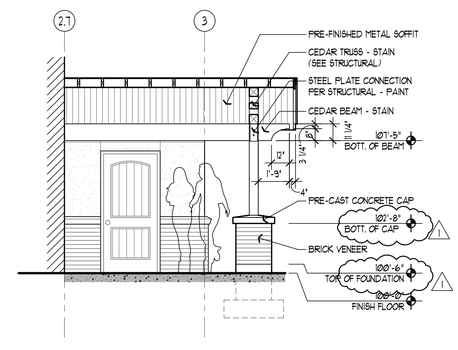

3 ENTRY SECTION
1/4"=1'-0"

State of Utah
Department of Administrative Services
Division of Facilities Construction & Management
4110 State Office Building
Salt Lake City, Utah 84114
Phone: (801) 538 - 3018
Fax: (801) 538 - 3267
http://dfcm.utah.gov

WPA architecture
475 North Freedom Blvd.
Provo, Utah, 84601
Tel: (801) 374-0800 Fax: (801) 374-0805
www.wpa-architecture.com

BUILDING NAME:

PROPERTY #15278
USOR - DSBVI
TRAINING HOUSING
Salt Lake City, Utah

PROJECT TITLE:

USOR - Division of Services for the Blind and Visually Impaired TRAINING HOUSING

LICENSED ARCHITECT
BRUCE T. FALLON
5403169-0301
date
STATE of UTAH

MARK	DATE	DESCRIPTION
1	05.27.10	Addendum 1

ISSUE TYPE: Construction Document Phase

ISSUE DATE: 27 May 2010

DFCM PROJECT NO: 09240200
CAD PROJECT NO:
CAD DWG FILE: AE-502.dwg
DRAWN BY: ---
CHK'D BY: ---
COPYRIGHT: STATE OF UTAH

SHEET TITLE

Exterior Details

SHEET NUMBER

AE-502

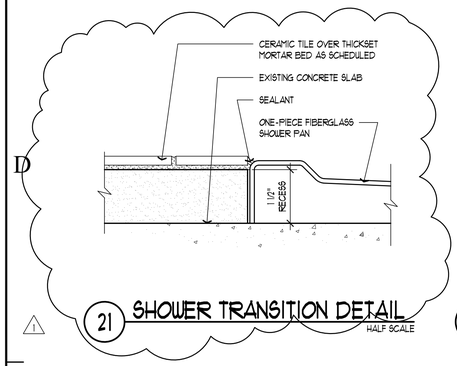

21 SHOWER TRANSITION DETAIL
HALF SCALE

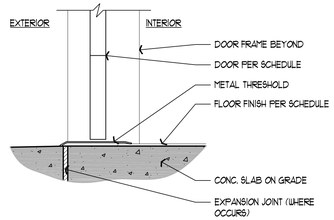

17 DOOR- THRESHOLD DETAIL
1 1/2" = 1'-0"

NOTE:

1. FLASHING SHALL COMPLY WITH ALL THE REQUIREMENTS OF IBC SECTION 1405.3 INCLUDING THE STATE OF UTAH AMENDMENT TO THIS SECTION.

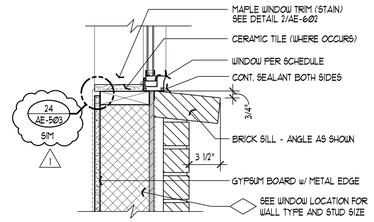

9 WINDOW- SILL DETAIL
1 1/2" = 1'-0"

NOTE:

1. FLASHING SHALL COMPLY WITH ALL THE REQUIREMENTS OF IBC SECTION 1405.3 INCLUDING THE STATE OF UTAH AMENDMENT TO THIS SECTION.

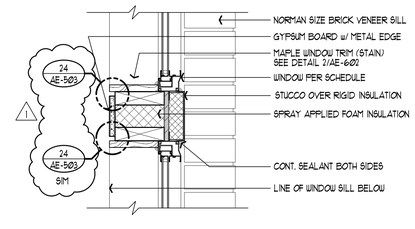

5 WINDOW- JAMB DETAIL
1 1/2" = 1'-0"

NOTE:

1. FLASHING SHALL COMPLY WITH ALL THE REQUIREMENTS OF IBC SECTION 1405.3 INCLUDING THE STATE OF UTAH AMENDMENT TO THIS SECTION.

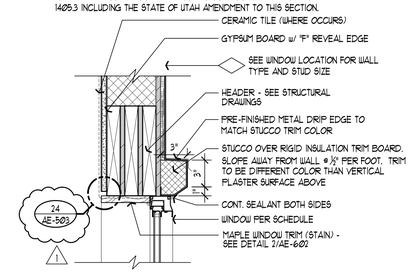

1 WINDOW - HEAD DETAIL
1 1/2" = 1'-0"

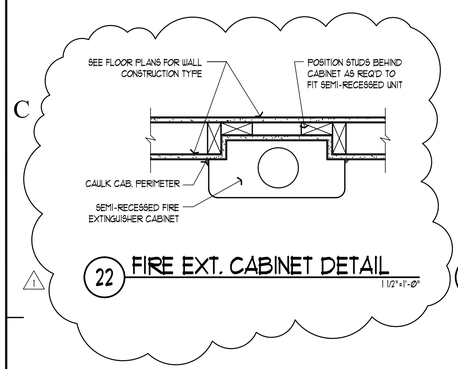

22 FIRE EXT. CABINET DETAIL
1 1/2"=1'-0"

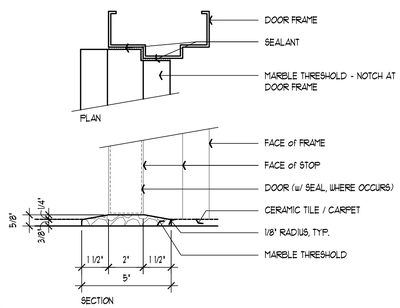

18 MARBLE THRESHOLD
3" = 1'-0"

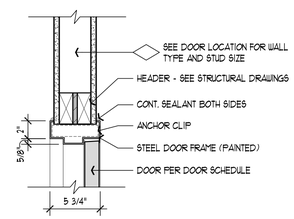

10 DOOR- HEAD DETAIL
JAMB SIMILAR
1 1/2" = 1'-0"

NOTE:

1. FLASHING SHALL COMPLY WITH ALL THE REQUIREMENTS OF IBC SECTION 1405.3 INCLUDING THE STATE OF UTAH AMENDMENT TO THIS SECTION.

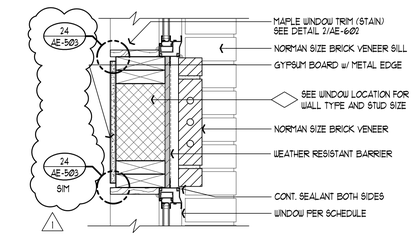

6 WINDOW - JAMB DETAIL
1 1/2" = 1'-0"

NOTE:

1. FLASHING SHALL COMPLY WITH ALL THE REQUIREMENTS OF IBC SECTION 1405.3 INCLUDING THE STATE OF UTAH AMENDMENT TO THIS SECTION.

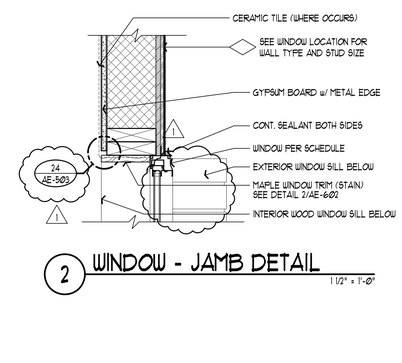

2 WINDOW - JAMB DETAIL
1 1/2" = 1'-0"

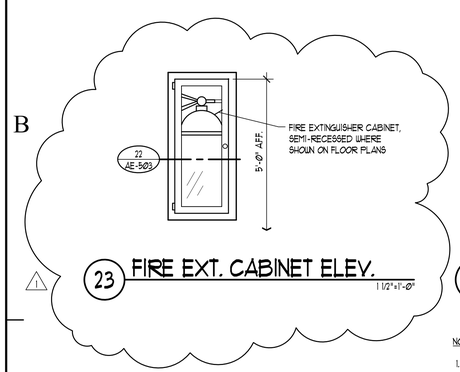

23 FIRE EXT. CABINET ELEV.
1 1/2"=1'-0"

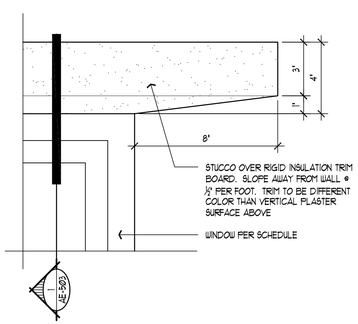

19 WINDOW HEADER DETAIL
3" = 1'-0"

NOTE:

1. FLASHING SHALL COMPLY WITH ALL THE REQUIREMENTS OF IBC SECTION 1405.3 INCLUDING THE STATE OF UTAH AMENDMENT TO THIS SECTION.

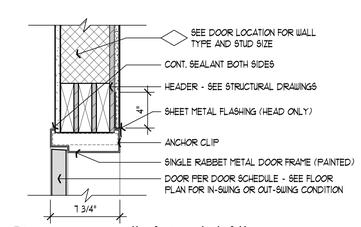

11 DOOR- HEAD DETAIL
JAMB SIMILAR
1 1/2" = 1'-0"

NOTE:

1. FLASHING SHALL COMPLY WITH ALL THE REQUIREMENTS OF IBC SECTION 1405.3 INCLUDING THE STATE OF UTAH AMENDMENT TO THIS SECTION.

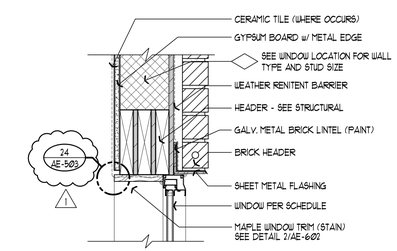

7 WINDOW- HEAD DETAIL
1 1/2" = 1'-0"

= NOT USED =

3 WINDOW- SILL DETAIL
3" = 1'-0"

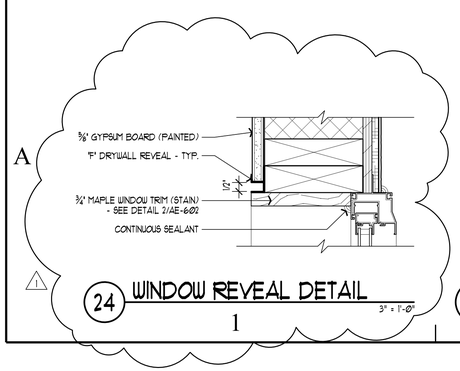

24 WINDOW REVEAL DETAIL
3" = 1'-0"

NOTE:

1. FLASHING SHALL COMPLY WITH ALL THE REQUIREMENTS OF IBC SECTION 1405.3 INCLUDING THE STATE OF UTAH AMENDMENT TO THIS SECTION.

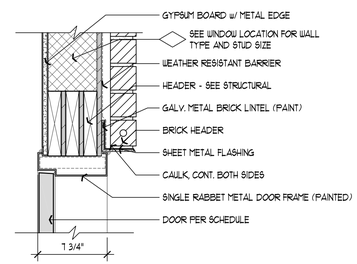

20 DOOR - HEAD DETAIL
1 1/2" = 1'-0"

NOTE:

1. FLASHING SHALL COMPLY WITH ALL THE REQUIREMENTS OF IBC SECTION 1405.3 INCLUDING THE STATE OF UTAH AMENDMENT TO THIS SECTION.

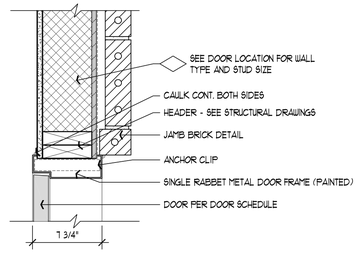

12 DOOR- JAMB DETAIL
1 1/2" = 1'-0"

NOTE:

1. FLASHING SHALL COMPLY WITH ALL THE REQUIREMENTS OF IBC SECTION 1405.3 INCLUDING THE STATE OF UTAH AMENDMENT TO THIS SECTION.

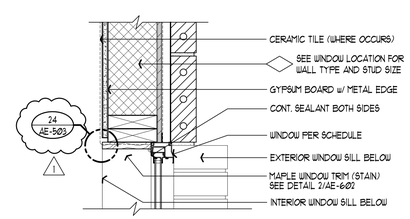

8 WINDOW- JAMB DETAIL
1 1/2" = 1'-0"

NOTE:

1. FLASHING SHALL COMPLY WITH ALL THE REQUIREMENTS OF IBC SECTION 1405.3 INCLUDING THE STATE OF UTAH AMENDMENT TO THIS SECTION.

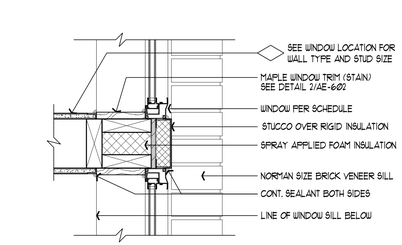

4 WINDOW- JAMB DETAIL
1 1/2" = 1'-0"

State of Utah
Department of Administrative Services

Division of Facilities Construction & Management
4110 State Office Building
Salt Lake City, Utah 84114
Phone: (801) 538 - 3018
Fax: (801) 538 - 3267

http://dfcm.utah.gov

WPA architecture
475 North Freedom Blvd.
Provo, Utah, 84601

Tel: (801) 374-0800 Fax: (801) 374-0805
www.wpa-architecture.com

BUILDING NAME:

PROPERTY #15278
USOR - DSBVI
TRAINING HOUSING
Salt Lake City, Utah

PROJECT TITLE:

USOR - Division of Services for the Blind and Visually Impaired TRAINING HOUSING

LICENSED ARCHITECT
BRUCE T. FALLON
5403169-0301
STATE of UTAH

MARK	DATE	DESCRIPTION
1	05.27.10	Addendum 1

ISSUE TYPE: Construction Document Phase

ISSUE DATE: 27 May 2010

DFCM PROJECT NO: 09240200
CAD PROJECT NO:
CAD DWG FILE: AE-503.dwg
DRAWN BY: ---
CHK'D BY: ---
COPYRIGHT: STATE OF UTAH

SHEET TITLE

Door & Window Details

SHEET NUMBER

AE-503

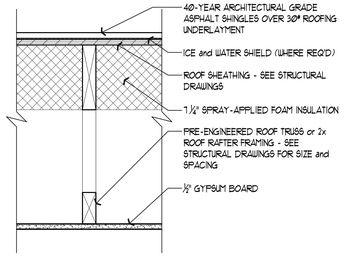

4-1 ROOF / CEILING ASSEMBLY # 4-1
1 1/2"=1'-0"

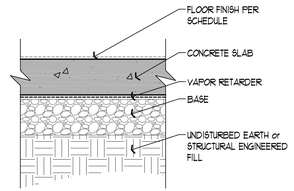

3-1 FLOOR / CEILING ASSEMBLY # 3-1
1 1/2"=1'-0"

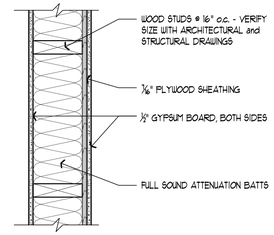

2-5 WALL CONSTRUCTION TYPE # 2-5
1 1/2"=1'-0"

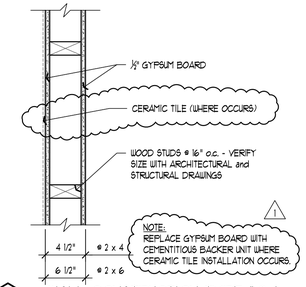

2-1 WALL CONSTRUCTION TYPE # 2-1
1 1/2"=1'-0"

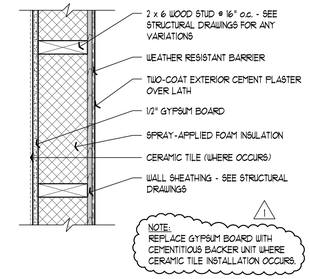

1-1 WALL CONSTRUCTION TYPE # 1-1
1 1/2"=1'-0"

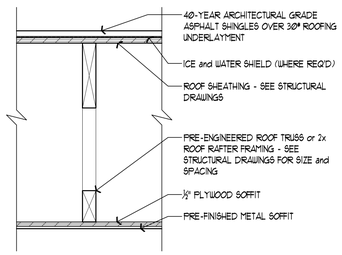

4-2 ROOF / CEILING ASSEMBLY # 4-2
1 1/2"=1'-0"

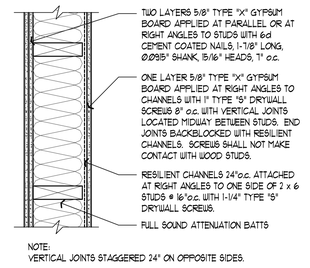

NOTE:
VERTICAL JOINTS STAGGERED 24" ON OPPOSITE SIDES.

2-6 WALL CONSTRUCTION TYPE # 2-6
MEETS REQUIREMENTS FOR 1-HOUR GYPSUM ASSOC. FILE #UP-3243
STC RATING: 53 PER NRCC TL93-116, 3-98
1 1/2"=1'-0"

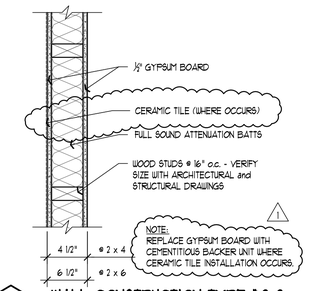

2-2 WALL CONSTRUCTION TYPE # 2-2
1 1/2"=1'-0"

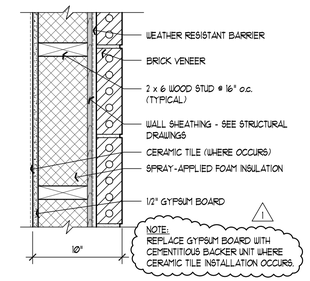

1-2 WALL CONSTRUCTION TYPE # 1-2
1 1/2"=1'-0"

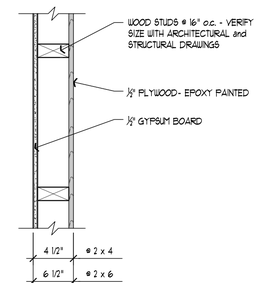

2-3 WALL CONSTRUCTION TYPE # 2-3
1 1/2"=1'-0"

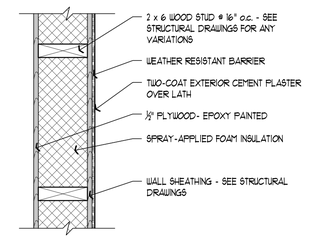

1-3 WALL CONSTRUCTION TYPE # 1-3
1 1/2"=1'-0"

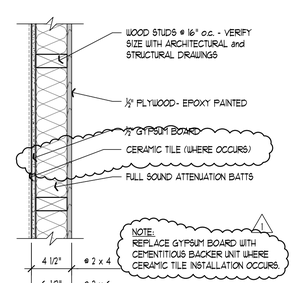

2-4 WALL CONSTRUCTION TYPE # 2-3
1 1/2"=1'-0"

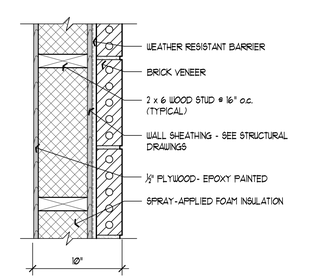

1-4 WALL CONSTRUCTION TYPE # 1-4
1 1/2"=1'-0"

State of Utah
Department of Administrative Services
Division of Facilities Construction & Management
4110 State Office Building
Salt Lake City, Utah 84114
Phone: (801) 538 - 3018
Fax: (801) 538 - 3267
http://dfcm.utah.gov

WPA architecture
475 North Freedom Blvd.
Provo, Utah, 84601
Tel: (801) 374-0800 Fax: (801) 374-0805
www.wpa-architecture.com

BUILDING NAME:

PROPERTY #15278
USOR - DSBVI
TRAINING HOUSING
Salt Lake City, Utah

PROJECT TITLE:

USOR - Division of Services for the Blind and Visually Impaired TRAINING HOUSING

LICENSED ARCHITECT
BRUCE T. FALLON
5403169-0301
STATE of UTAH

MARK	DATE	DESCRIPTION
1	05.27.10	Addendum #1

ISSUE TYPE: Construction Document Phase

ISSUE DATE: 27 May 2010

DFCM PROJECT NO: 09240200
CAD PROJECT NO:
CAD DWG FILE: AE-601dwg
DRAWN BY: ---
CHK'D BY: ---
COPYRIGHT: STATE OF UTAH

SHEET TITLE

Construction Types

SHEET NUMBER

AE-601

DOOR SCHEDULE

DR. NUMBER	ROOM NAME	DOOR TYPE	DOOR SIZE WIDTH	HEIGHT	THICK	DETAILS HEAD	JAMB	HDWE GROUP	FIRE RATING	REMARKS	DR. NUMBER
101	ENTRY	A	3'-0"	6'-8"	1 3/4"	11/AE-503	11 & 12/AE-503	02	-	METAL THRESHOLD, SEE DETAIL 17/AE-503	101
102	CLOSET	C	2'-8"	6'-8"	1 3/4"	10/AE-503	10/AE-503	10	-		102
103	POWDER	C	2'-6"	6'-8"	1 3/4"	10/AE-503	10/AE-503	06	-		103
106	BEDROOM	C	2'-8"	6'-8"	1 3/4"	10/AE-503	10/AE-503	07	-		106
107	CLOSET	C	3'-0"	6'-8"	1 3/4"	10/AE-503	10/AE-503	10	-		107
108A	DRESSING	C	2'-6"	6'-8"	1 3/4"	10/AE-503	10/AE-503	05	-	MARBLE THRESHOLD, SEE DETAIL 18/AE-503	108A
108B	DRESSING	C	2'-6"	6'-8"	1 3/4"	10/AE-503	10/AE-503	05	-	MARBLE THRESHOLD, SEE DETAIL 18/AE-503	108B
109	BATH	C	2'-6"	6'-8"	1 3/4"	10/AE-503	10/AE-503	06	-		109
110	TOILET ROOM	C	2'-6"	6'-8"	1 3/4"	10/AE-503	10/AE-503	06	-		110
111	BEDROOM	C	2'-8"	6'-8"	1 3/4"	10/AE-503	10/AE-503	07	-		111
112	CLOSET	C	3'-0"	6'-8"	1 3/4"	10/AE-503	10/AE-503	10	-		112
113	BEDROOM	C	2'-8"	6'-8"	1 3/4"	10/AE-503	10/AE-503	07	-		113
114	CLOSET	C	3'-0"	6'-8"	1 3/4"	10/AE-503	10/AE-503	10	-		114
115A	DRESSING	C	2'-6"	6'-8"	1 3/4"	10/AE-503	10/AE-503	05	-	MARBLE THRESHOLD, SEE DETAIL 18/AE-503	115A
115B	DRESSING	C	2'-6"	6'-8"	1 3/4"	10/AE-503	10/AE-503	05	-	MARBLE THRESHOLD, SEE DETAIL 18/AE-503	115B
116	TOILET ROOM	C	2'-6"	6'-8"	1 3/4"	10/AE-503	10/AE-503	06	-		116
117	BATH	C	2'-6"	6'-8"	1 3/4"	10/AE-503	10/AE-503	06	-		117
118	BEDROOM	C	2'-8"	6'-8"	1 3/4"	10/AE-503	10/AE-503	07	-		118
119	CLOSET	C	3'-0"	6'-8"	1 3/4"	10/AE-503	10/AE-503	10	-		119
120	LAUNDRY	C	2'-8"	6'-8"	1 3/4"	10/AE-503	10/AE-503	09	-		120
121	BEDROOM	C	3'-0"	6'-8"	1 3/4"	10/AE-503	10/AE-503	07	-		121
123	CLOSET	C	3'-0"	6'-8"	1 3/4"	10/AE-503	10/AE-503	10	-		123
124	BATH	C	3'-0"	6'-8"	1 3/4"	10/AE-503	10/AE-503	06	-		124
125	MECHANICAL	C	3'-6"	6'-8"	1 3/4"	10/AE-503	10/AE-503	11	-		125
128	COMMON AREA	B	3'-0"	6'-8"	1 3/4"	11/AE-503	11 & 12/AE-503	03	-	METAL THRESHOLD, SEE DETAIL 17/AE-503	128
128A	COMMON AREA	D	3'-0" (PR)	6'-8"	1 3/4"	10/AE-503	10/AE-503	04	45 MIN.	METAL THRESHOLD, SEE DETAIL 17/AE-503	128A
129	COMMON AREA	B	3'-0"	6'-8"	1 3/4"	11/AE-503	11 & 12/AE-503	03	-	METAL THRESHOLD, SEE DETAIL 17/AE-503	129
130	ENTRY	A	3'-0"	6'-8"	1 3/4"	11/AE-503	11 & 12/AE-503	02	-	METAL THRESHOLD, SEE DETAIL 17/AE-503	130
131	CLOSET	C	2'-8"	6'-8"	1 3/4"	10/AE-503	10/AE-503	10	-		131
132	POWDER	C	2'-6"	6'-8"	1 3/4"	10/AE-503	10/AE-503	06	-		132
135	BEDROOM	C	2'-8"	6'-8"	1 3/4"	10/AE-503	10/AE-503	07	-		135
136	CLOSET	C	3'-0"	6'-8"	1 3/4"	10/AE-503	10/AE-503	10	-		136
137A	DRESSING	C	2'-6"	6'-8"	1 3/4"	10/AE-503	10/AE-503	05	-	MARBLE THRESHOLD, SEE DETAIL 18/AE-503	137A
137B	DRESSING	C	2'-6"	6'-8"	1 3/4"	10/AE-503	10/AE-503	05	-	MARBLE THRESHOLD, SEE DETAIL 18/AE-503	137B
138	BATH	C	2'-6"	6'-8"	1 3/4"	10/AE-503	10/AE-503	06	-		138
139	TOILET ROOM	C	2'-6"	6'-8"	1 3/4"	10/AE-503	10/AE-503	06	-		139
140	BEDROOM	C	2'-8"	6'-8"	1 3/4"	10/AE-503	10/AE-503	07	-		140
141	CLOSET	C	3'-0"	6'-8"	1 3/4"	10/AE-503	10/AE-503	10	-		141
142	BEDROOM	C	2'-8"	6'-8"	1 3/4"	10/AE-503	10/AE-503	07	-		142
143	CLOSET	C	3'-0"	6'-8"	1 3/4"	10/AE-503	10/AE-503	10	-		143
144A	DRESSING	C	2'-6"	6'-8"	1 3/4"	10/AE-503	10/AE-503	05	-	MARBLE THRESHOLD, SEE DETAIL 18/AE-503	144A
144B	DRESSING	C	2'-6"	6'-8"	1 3/4"	10/AE-503	10/AE-503	05	-	MARBLE THRESHOLD, SEE DETAIL 18/AE-503	144B
145	TOILET ROOM	C	2'-6"	6'-8"	1 3/4"	10/AE-503	10/AE-503	06	-		145
146	BATH	C	2'-6"	6'-8"	1 3/4"	10/AE-503	10/AE-503	06	-		146
147	BEDROOM	C	2'-8"	6'-8"	1 3/4"	10/AE-503	10/AE-503	07	-		147
148	CLOSET	C	3'-0"	6'-8"	1 3/4"	10/AE-503	10/AE-503	10	-		148
149	BEDROOM	C	3'-0"	6'-8"	1 3/4"	10/AE-503	10/AE-503	07	-		149
150	DRESSING	C	3'-0"	6'-8"	1 3/4"	10/AE-503	10/AE-503	06	-	MARBLE THRESHOLD, SEE DETAIL 18/AE-503	150
151	CLOSET	C	3'-0"	6'-8"	1 3/4"	10/AE-503	10/AE-503	08	-		151
152	CLOSET	C	3'-0"	6'-8"	1 3/4"	10/AE-503	10/AE-503	08	-		152
153	FIRE RISER	E	3'-0"	6'-8"	1 3/4"	20/AE-503	12/AE-503	01	-	METAL THRESHOLD, SEE DETAIL 17/AE-503	153
154	TOILET ROOM	C	3'-0"	6'-8"	1 3/4"	10/AE-503	10/AE-503	06	-		154
155	BATH	C	3'-0"	6'-8"	1 3/4"	10/AE-503	10/AE-503	06	-		155
156	LAUNDRY	C	2'-8"	6'-8"	1 3/4"	10/AE-503	10/AE-503	09	-		156
157	MECHANICAL	C	3'-6"	6'-8"	1 3/4"	10/AE-503	10/AE-503	11	-		157

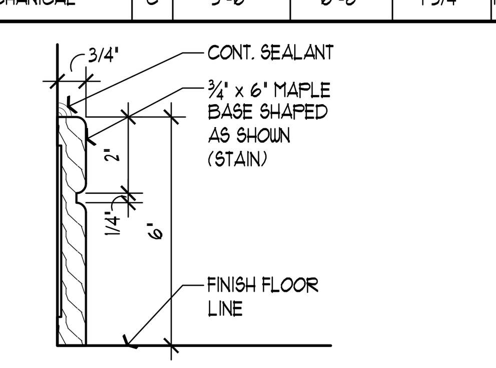

1 BASE DETAIL 3"=1'-0"

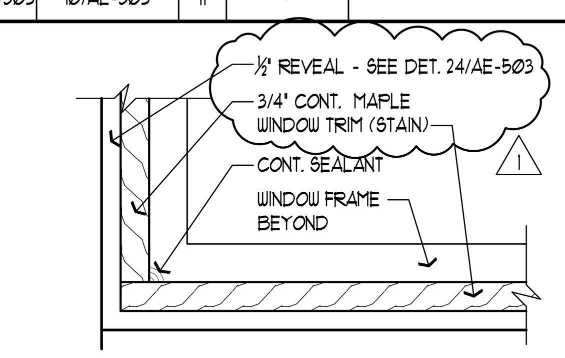

2 WINDOW TRIM DETAIL
HEAD SIMILAR 3"=1'-0"

FINISH SCHEDULE

ROOM NUMBER	ROOM NAME	FLOOR FINISH	BASE FINISH	WALL FINISH (EAST / WEST) N / W	E / N	S / E	W / S	CEILING FINISH FINISH	HEIGHT	REMARKS
101	ENTRY	QTF	WB	PTWD1	PTWD1	PTWD1	PTWD1	PTDC1	9'-0"	---
102	CLOSET	QTF	WB	PTWD1	PTWD1	PTWD1	PTWD1	PTDC1	9'-0"	---
103	POWDER	QTF	QTB	PTWD1	PTWD1	PTWD1	PTWD1	PTDC1	9'-0"	---
104	HALL	QTF	WB	PTWD1	PTWD1	PTWD1	--	PTDC1	9'-0"	---
105	HALL	CPT	WB	PTWD1	PTWD1	PTWD1	PTWD1	PTDC1	9'-0"	---
106	BEDROOM	CPT	CPTB	PTWD1	PTWD1	PTWD1	PTWD1	PTDC1	9'-0"	---
107	CLOSET	CPT	CPTB	PTWD1	PTWD1	PTWD1	PTWD1	PTDC1	9'-0"	---
108	DRESSING	CTF	CTB	PTWD2	PTWD2	PTWD2	PTWD2	PTDC1	9'-0"	---
109	BATH	CTF	CTB	CTW/PTWD2	CTW/PTWD2	CTW/PTWD2	CTW/PTWD2	PTDC1	9'-0"	---
110	TOILET ROOM	CTF	CTB	PTWD2	PTWD2	PTWD2	PTWD2	PTDC1	9'-0"	---
111	BEDROOM	CPT	CPTB	PTWD1	PTWD1	PTWD1	PTWD1	PTDC1	9'-0"	---
112	CLOSET	CPT	CPTB	PTWD1	PTWD1	PTWD1	PTWD1	PTDC1	9'-0"	---
113	BEDROOM	CPT	CPTB	PTWD1	PTWD1	PTWD1	PTWD1	PTDC1	9'-0"	---
114	CLOSET	CPT	CPTB	PTWD1	PTWD1	PTWD1	PTWD1	PTDC1	9'-0"	---
115	DRESSING	CTF	CTB	PTWD2	PTWD2	PTWD2	PTWD2	PTDC1	9'-0"	---
116	TOILET ROOM	CTF	CTB	PTWD2	PTWD2	PTWD2	PTWD2	PTDC1	9'-0"	---
117	BATH	CTF	CTB	CTW/PTWD2	CTW/PTWD2	CTW/PTWD2	CTW/PTWD2	PTDC1	9'-0"	---
118	BEDROOM	CPT	CPTB	PTWD1	PTWD1	PTWD1	PTWD1	PTDC1	9'-0"	---
119	CLOSET	CPT	CPTB	PTWD1	PTWD1	PTWD1	PTWD1	PTDC1	9'-0"	---
120	LAUNDRY	RSF	VB	PTWD2	PTWD2	PTWD2	PTWD2	PTDC1	9'-0"	---
121	BEDROOM	CPT	CPTB	PTWD1	PTWD1	PTWD1	PTWD1	PTDC1	9'-0"	---
122	DRESSING	CTF	CTB	PTWD2	PTWD2	PTWD2	PTWD2	PTDC1	9'-0"	---
123	CLOSET	CPT	CPTB	PTWD1	PTWD1	PTWD1	PTWD1	PTDC1	9'-0"	---
124	BATH	CTF	CTB	CTW/PTWD2	CTW/PTWD2	CTW/PTWD2	CTW/PTWD2	PTDC1	9'-0"	---
125	MECHANICAL	EPT	NONE	PW	PW	PW	PW	PTDC1	9'-0"	---
126	KITCHEN	LVT	WB	PTWD2	PTWD2	PTWD2	PTWD2	PTDC1	9'-0"	---
127	DINING	LVT	WB	--	PTWD2	PTWD2	PTWD2	PTDC1	9'-0"	---
128	COMMON AREA	LVT	WB	PTWD1	PTWD1-A	PTWD1	PTWD1	PTDC1	9'-0"	---
129	COMMON AREA	LVT	WB	PTWD1	PTWD1	PTWD1	PTWD1-A	PTDC1	9'-0"	---
130	ENTRY	QTF	WB	PTWD1	PTWD1	PTWD1	PTWD1	PTDC1	9'-0"	---
131	CLOSET	QTF	WB	PTWD1	PTWD1	PTWD1	PTWD1	PTDC1	9'-0"	---
132	POWDER	QTF	QTB	PTWD1	PTWD1	PTWD1	PTWD1	PTDC1	9'-0"	---
133	HALL	QTF	WB	PTWD1	--	PTWD1	PTWD1	PTDC1	9'-0"	---
134	HALL	CPT	WB	PTWD1	PTWD1	PTWD1	PTWD1	PTDC1	9'-0"	---
135	BEDROOM	CPT	CTPB	PTWD1	PTWD1	PTWD1	PTWD1	PTDC1	9'-0"	---
136	CLOSET	CPT	CPTB	PTWD1	PTWD1	PTWD1	PTWD1	PTDC1	9'-0"	---
137	DRESSING	CTF	CTB	PTWD2	PTWD2	PTWD2	PTWD2	PTDC1	9'-0"	---
138	BATH	CTF	CTB	CTW/PTWD2	CTW/PTWD2	CTW/PTWD2	CTW/PTWD2	PTDC1	9'-0"	---
139	TOILET ROOM	CTF	CTB	PTWD2	PTWD2	PTWD2	PTWD2	PTDC1	9'-0"	---
140	BEDROOM	CPT	CTB	PTWD1	PTWD1	PTWD1	PTWD1	PTDC1	9'-0"	---
141	CLOSET	CPT	CTB	PTWD1	PTWD1	PTWD1	PTWD1	PTDC1	9'-0"	---
142	BEDROOM	CPT	CPTB	PTWD1	PTWD1	PTWD1	PTWD1	PTDC1	9'-0"	---
143	CLOSET	CPT	CPTB	PTWD1	PTWD1	PTWD1	PTWD1	PTDC1	9'-0"	---
144	DRESSING	CTF	CTB	PTWD2	PTWD2	PTWD2	PTWD2	PTDC1	9'-0"	---
145	TOILET ROOM	CTF	CTB	PTWD2	PTWD2	PTWD2	PTWD2	PTDC1	9'-0"	---
146	BATH	CTF	CTB	CTW/PTWD2	CTW/PTWD2	CTW/PTWD2	CTW/PTWD2	PTDC1	9'-0"	---
147	BEDROOM	CPT	CPTB	PTWD1	PTWD1	PTWD1	PTWD1	PTDC1	9'-0"	---
148	CLOSET	CPT	CPTB	PTWD1	PTWD1	PTWD1	PTWD1	PTDC1	9'-0"	---
149	BEDROOM	CPT	CPTB	PTWD1	PTWD1	PTWD1	PTWD1	PTDC1	9'-0"	---
150	DRESSING	CTF	CTB	PTWD2	PTWD2	PTWD2	PTWD2	PTDC1	9'-0"	---
151	CLOSET	CPT	CPTB	PTWD1	PTWD1	PTWD1	PTWD1	PTDC1	9'-0"	---
152	CLOSET	CPT	CPTB	PTWD1	PTWD1	PTWD1	PTWD1	PTDC1	9'-0"	---
153	FIRE RISER	EPT	NONE	PW	PW	PW	PW	PTDC1	9'-0"	MATCH WALL COLOR
154	TOILET ROOM	CTF	CTB	PTWD2	PTWD2	PTWD2	PTWD2	PTDC1	9'-0"	---
155	BATH	CTF	CTB	CTW/PTWD2	CTW/PTWD2	CTW/PTWD2	CTW/PTWD2	PTDC1	9'-0"	---
156	LAUNDRY	RSF	RB	PTWD2	PTWD2	PTWD2	PTWD2	PTDC1	9'-0"	---
157	MECHANICAL	EPT	NONE	PW	PW	PW	PW	PTDC1	9'-0"	---
158	DINING	LVT	WB	PTWD2	PTWD2	PTWD2	PTWD2	PTDC1	9'-0"	---
159	KITCHEN	LVT	WB	PTWD2	PTWD2	PTWD2	PTWD2	PTDC1	9'-0"	---

FINISH NOTES

1. EXTEND FINISHED FLOORING UNDERNEATH CABINETS & COUNTERTOP SURFACES TO FACE OF WALL OR TO FACE OF CABINET TOE KICK.
2. FINISHES CALLED OUT ARE THE BASIS OF DESIGN AND EQUAL PRODUCTS CAN BE USED IN LIEU OF PRODUCTS LISTED.

FINISH LEGEND

FLOORS

- EPT — EPOXY PAINTED FLOOR OVER CONCRETE
  COLOR: ICI, VEIL, #00NN 53/000
- CPT — CARPET TILE
  COLOR: AS SELECTED FROM MANUFACTURER'S FULL RANGE
- CTF — UNGLAZED MOSAIC TILE (SEE DETAIL 1/AE-102)
  3x3 FIELD - DALTILE, KEYSTONES, ELEMENTAL TAN SPECKLE, D175
  1x2 MOSAIC - DALTILE, KEYSTONES, 25 PERCENT OF EACH OF THE FOLLOWING: CRISP LINEN (D139), CITYLINE KOHL (D171), CINNAMON RANGE (D007) and GOLD COAST (D191).
- LVT — LUXURY VINYL TILE (6" x 36" PLANK)
  COLOR: CENTIVA, EVENT PLANK, ANTIQUE WALNUT, WP-GW-38-E
- QTF — UNGLAZED QUARRY TILE (12" x 24")
  FIELD COLOR: DALTILE, VIBE, TECHNO BEIGE, V150
  ACCENT COLOR: DALTILE, VIBE, TECHNO BRONZE, V153
- RSF — RESILIENT SHEET FLOORING
  COLOR: AS SELECTED FROM MANUFACTURER'S FULL RANGE

BASE

- CPTB — 6" HIGH CARPET BASE (N.I.C.)
  COLOR: MATCH CPT
- QTB — QUARRY TILE BASE (3 x 12)
  COLOR: MATCH QTF FIELD COLOR
- CTB — CERAMIC TILE BASE (3 x 3)
  COLOR: MATCH CTF 3x3 FIELD TILE
- RB — 6" HIGH TOPSET RESILIENT BASE
  COLOR: AS SELECTED FROM MANUFACTURER'S FULL RANGE
- VB — 6" COVED RESILIENT SHEET INTEGRAL BASE
  COLOR: MATCH RSF
- WB — 6" HARDWOOD BASE (STAIN) - SEE DET. 1/AE-602
  COLOR: MATCH MILLWORK FINISH & COLOR
- NONE — NO BASE REQUIRED - WALL FINISH TO EXTEND TO FLOOR

WALLS

- PTDW1 — GYPSUM BOARD TEXTURED & PAINTED
  (PRIME PLUS 2 COATS)
  TYPICAL COLOR: ICI PAINTS, HIGHLAND PLAINS, #10YY 41/175
  PTDW1-A: ICI PAINTS, SPANISH CHESTNUT, #80YR 13/325
- PTDW2 — GYPSUM BOARD TEXTURED & EPOXY PAINTED
  (PRIME PLUS 2 COATS)
  COLOR: ICI PAINTS, HIGHLAND PLAINS, #10YY 41/175
- CTW — CERAMIC TILE (SEE INTERIOR ELEVATIONS)
  CTW-F: 3 x 6, DALTILE, ALMOND, 0135
  CTW-A: 3 x 3, DALTILE, KEYSTONES, ELEMENTAL TAN SPECKLE (D175)
  CTW-M: 1 x 2 MOSAIC - SEE CTF 1 x 2 MOSAIC ABOVE
- PW — PLYWOOD - EPOXY PAINTED
  COLOR: ICI PAINTS, HIGHLAND PLAINS, #10YY 41/175

CEILING

- PTDC1 — GYPSUM BOARD TEXTURED & PAINTED
  (PRIME PLUS 2 COATS)
  COLOR: ICI PAINTS, CRISP LINEN, #61YY 89/040
- UF — PERATAPED, MUDDED, AND SANDED

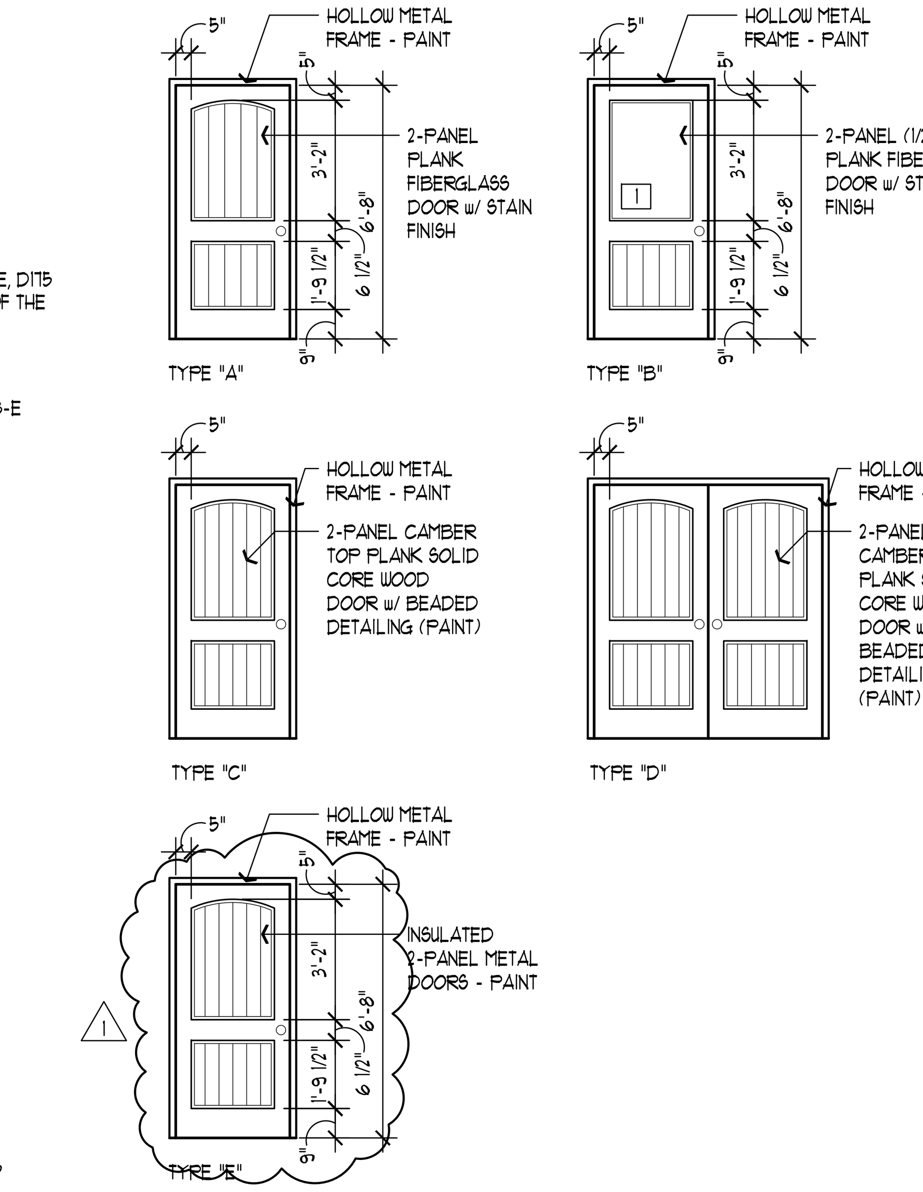

DOOR TYPES

1/4"=1'-0"

GLAZING NOTES

A. SEE FLOOR PLAN FOR SPECIFIC LOCATION WHERE REQUIRED FOR WINDOWS. PROVIDE AT ALL DOORS WHERE SHOWN ON SCHEDULE.

B. GLAZING TO HAVE A MIN. U-VALUE OF 0.31 AND A SHADING COEFFICIENT OF 0.44. PROVIDE FENESTRATION TESTED BY AN APPROVED INDEPENDENT LABORATORY, LISTED BY AN APPROVED ENTITY AND BEARING A LABEL IDENTIFYING MANUFACTURER, PERFORMANCE CHARACTERISTICS AND APPROVED INSPECTION AGENCY TO INDICATE COMPLIANCE WITH THE REQUIREMENTS WITH ASTM E1886 and ASTM E 1996 OR WITH AAMA 506 PER IRC SECTION R613.7.1. PROVIDE COMPLIANCE DOCUMENTATION WITH PRODUCT DATA SUBMITTALS.

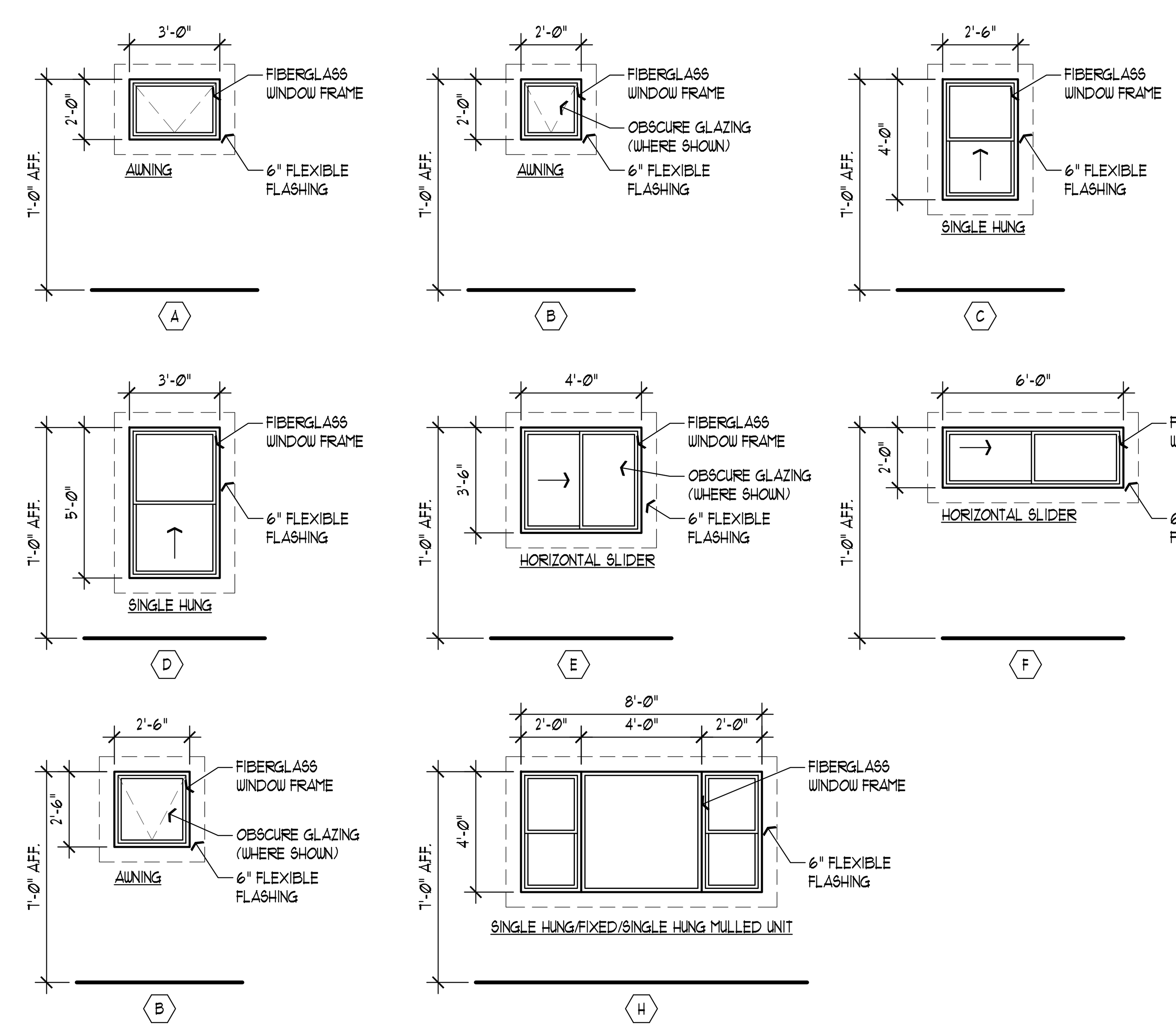

WINDOW TYPES

1/4"=1'-0"

State of Utah
Department of Administrative Services
Division of Facilities Construction & Management
4110 State Office Building
Salt Lake City, Utah 84114
Phone: (801) 538 - 3018
Fax: (801) 538 - 3267
http://dfcm.utah.gov

WPA architecture
475 North Freedom Blvd.
Provo, Utah, 84601
Tel: (801) 374-0800 Fax: (801) 374-0805
www.wpa-architecture.com

BUILDING NAME:

PROPERTY #15278
USOR - DSBVI
TRAINING HOUSING
Salt Lake City, Utah

PROJECT TITLE:

USOR - Division of Services for the Blind and Visually Impaired TRAINING HOUSING

LICENSED ARCHITECT
BRUCE T. FALLON
5403169-0301
date
STATE of UTAH

MARK	DATE	DESCRIPTION
1	05.26.10	Addendum #1

ISSUE TYPE: Construction Document Phase

ISSUE DATE: 27 May 2010

DFCM PROJECT NO: 09240200
CAD PROJECT NO:
CAD DWG FILE: AE-602.dwg
DRAWN BY: BTF
CHK'D BY: BTF

COPYRIGHT: STATE OF UTAH

SHEET TITLE

Door, Window & Finish Schedules

SHEET NUMBER

AE-602

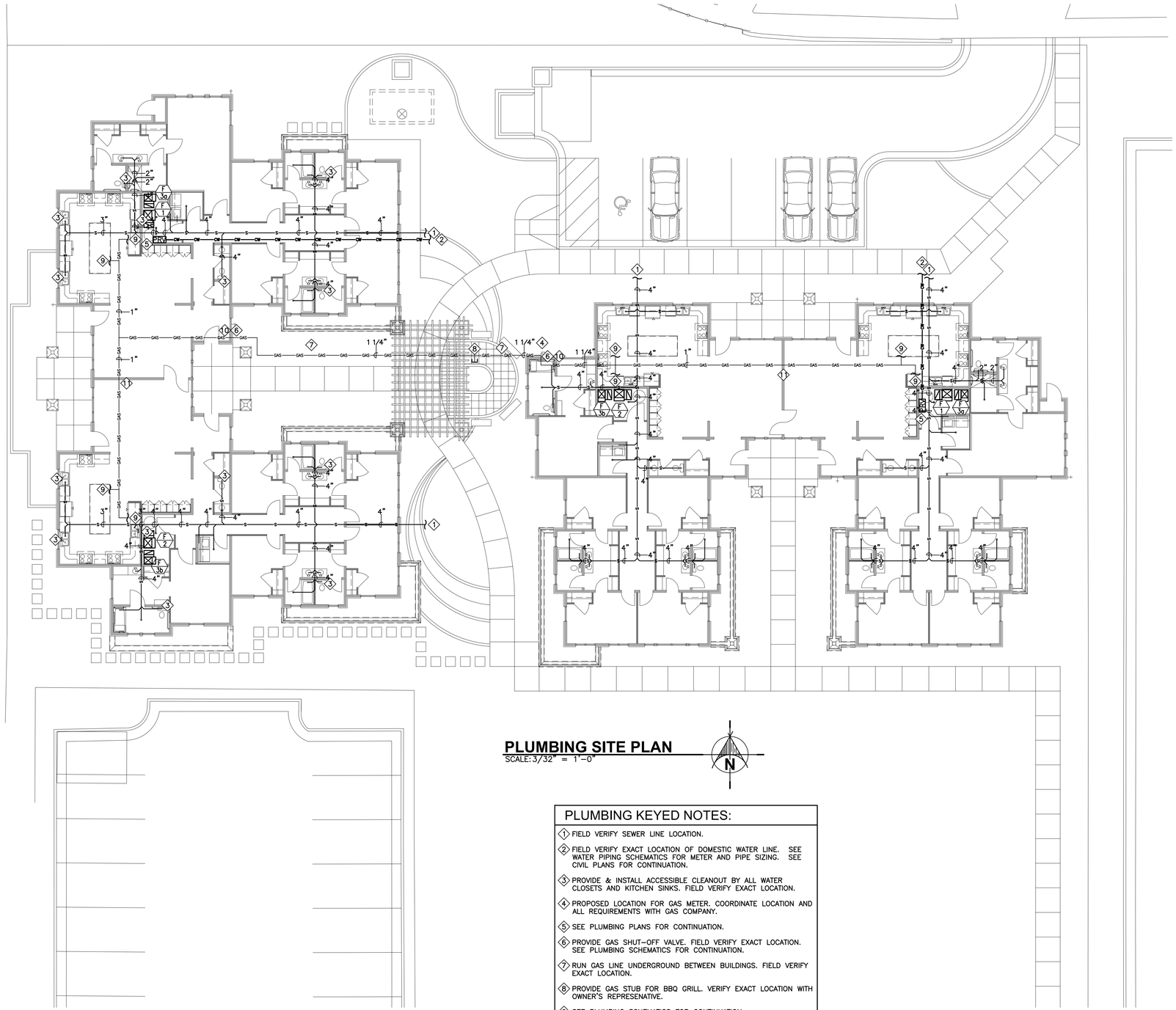

PLUMBING SITE PLAN

SCALE: 3/32" = 1'-0"

PLUMBING KEYED NOTES:

1. FIELD VERIFY SEWER LINE LOCATION.
2. FIELD VERIFY EXACT LOCATION OF DOMESTIC WATER LINE. SEE WATER PIPING SCHEMATICS FOR METER AND PIPE SIZING. SEE CIVIL PLANS FOR CONTINUATION.
3. PROVIDE & INSTALL ACCESSIBLE CLEANOUT BY ALL WATER CLOSETS AND KITCHEN SINKS. FIELD VERIFY EXACT LOCATION.
4. PROPOSED LOCATION FOR GAS METER. COORDINATE LOCATION AND ALL REQUIREMENTS WITH GAS COMPANY.
5. SEE PLUMBING PLANS FOR CONTINUATION.
6. PROVIDE GAS SHUT-OFF VALVE. FIELD VERIFY EXACT LOCATION. SEE PLUMBING SCHEMATICS FOR CONTINUATION.
7. RUN GAS LINE UNDERGROUND BETWEEN BUILDINGS. FIELD VERIFY EXACT LOCATION.
8. PROVIDE GAS STUB FOR BBQ GRILL. VERIFY EXACT LOCATION WITH OWNER'S REPRESENATIVE.
9. SEE PLUMBING SCHEMATICS FOR CONTINUATION.
10. GAS LINE SHALL NOT RUN UNDERGROUND UNDER THE INSIDE OF THE BUILDING.
11. PROVIDE FIRE STOP AT PENETRATION OF ALL FIRE BARRIERS. SEE DETAILS FOR MORE INFORMATION.

State of Utah
Department of Administrative Services

Division of Facilities Construction & Management
4110 State Office Building
Salt Lake City, Utah 84114
Phone: (801) 538 - 3018
Fax: (801) 538 - 3267

http://dfcm.utah.gov

ROYAL ENGINEERING
ELECTRICAL: 2335 SOUTH STATE SUITE 225 PHONE: 801.375.2226
MECHANICAL: PROVO, UTAH 84606 FAX: 801.375.2676

COPYRIGHT© JOB# J10037 DATE PLOTTED: 05/24/2010

THESE DOCUMENTS ARE INSTRUMENTS OF PROFESSIONAL SERVICE AND THE INFORMATION CONTAINED HEREIN IS INCOMPLETE UNLESS IN CONJUNCTION WITH ROYAL ENGINEERING'S SEALED OPINIONS, DESIGNS, OBSERVATIONS AND/OR INTERPRETATIONS. USE OR REPRODUCTION OF THIS DOCUMENT IN WHOLE OR IN PART WITHOUT ROYAL ENGINEERING'S CONSENT IS IN VIOLATION OF COPYRIGHT LAW. ROYAL ENGINEERING'S OPINIONS, DESIGNS, OBSERVATIONS AND/OR INTERPRETATIONS MAY NOT BE RELIED UPON BY ANY OTHER PARTY WITHOUT ROYAL ENGINEERING'S EXPRESS WRITTEN CONSENT. REFER TO ACT 17 M.B.C. FAX: 801-119911.

BUILDING NAME:

PROPERTY# 15278
USOR - DSVBI
TRAINING HOUSING
Salt Lake City, Utah

PROJECT TITLE:

USOR - Division of Services for the Blind and Visually Impaired TRAINING HOUSING

REGISTERED PROFESSIONAL ENGINEER 4858829 MARK L. MAKIN STATE OF UTAH

MARK	DATE	DESCRIPTION

ISSUE TYPE: Construction Document Phase

ISSUE DATE: 04.30.2010

DFCM PROJECT NO: 09240200
CAD PROJECT NO:
CAD DWG FILE: J10037 Mech All.dwg
DRAWN BY: SJN
CHK'D BY: MLM
COPYRIGHT: STATE OF UTAH

SHEET TITLE

Plumbing Site Plan

SHEET NUMBER

PS-101

PLUMBING SYMBOLS

NOTES:
1. ALL AYMBOLS MAY NOT BE USED.
2. DOTTED SYMBOLS INDICATE EXISTING EQUIPMENT, ETC

SYMBOL	EXPLANATION
ø	ROUND MEASUREMENT.
P-1	PLUMBING FIXTURE SYMBOL
A / L	MECHANICAL EQUIPMENT SYMBOL
#	KEYED NOTE REFERENCE
#	KITCHEN EQUIPMENT SYMBOL
— S —	SEWER PIPING
—HW—	HOT WATER PIPING
—CW—	COLD WATER PIPING
—GAS—	GAS PIPING

LEED PLUMBING REQUIREMENTS

WE CREDIT 3–INDOOR WATER USE
SEE PLUMBING FIXTURE SCHEDULE FOR MORE EFFICIENT PLUMBING FIXTURE SPECIFICATIONS.

EA CREDIT 7–DOMESTIC HOT WATER
1) ALL DOMESTIC HOT WATER PIPING SHALL HAVE R–4 INSULATION. INSULATION SHALL BE PROPERLY INSTALLED ON ALL PIPING ELBOWS TO ADEQUATELY INSULATE THE 90–DEGREE BEND.
2) SEE PLUMBING FIXTURE SCHEDULE FOR MORE EFFICIENT WATER HEATER SPECIFICATIONS.

EQ CREDIT 2–COMBUSTION VENTING
WATER HEATER SHALL HAVE CLOSED COMBUSTION OR POWER–VENTED EXHAUST.

EQ CREDIT 9–RADON PROTECTION
SHALL BE DESIGNED AND BUILT WITH THE RADON–RESISTANT CONSTRUCTION TECHNIQUES AS PRESCRIBED BY THE 2006 IRC SUCH AS:
1) OPENINGS AROUND BATHTUBS, SHOWERS, WATER CLOSETS, PIPES, WIRES OR OTHER OBJECTS THAT PENETRATE CONCRETE SLABS OR OTHER FLOOR ASSEMBLIES SHALL BE FILLED WITH POLYURETHANE CAULK OR EQUIVALENT SEALANT APPLIED IN ACCORDANCE WITH THE MANUFACTURER'S RECOMMENDATIONS.
2) CONDENSATE DRAINS SHALL BE TRAPPED OR ROUTED THROUGH NONPERFORATED PIPE TO DAYLIGHT.

PLUMBING KEYED NOTES:

1. SEE PLUMBING SCHEMATICS FOR CONTINUATION.
2. PROPOSED LOCATION FOR PRV AND MAIN SHUT–OFF. SEE PLUMBING SITE PLAN FOR WATER ENTRANCE TO BUILDING.
3. PROVIDE FIRE STOP AT PENETRATION OF ALL FIRE BARRIERS. SEE DETAILS FOR MORE INFORMATION.
4. PROVIDE AND INSTALL 1/2" HOT WATER RETURN LINE TO WATER HEATER FOR HOT WATER CIRCULATION.
5. PROVIDE SHUT–OFF FOR COLD WATER LINE SERVING THIS HALF OF THE BUILDING. SHUT–OFF VALVE SHALL BE ACCESSIBLE FROM THE MECHANICAL ROOM.

GENERAL PLUMBING NOTES:

1. SEE WASTE AND VENT PIPING SCHEMATIC FOR WASTE AND VENT PIPING SIZES IN THIS AREA.
2. SEE WATER PIPING SCHEMATIC FOR WATER PIPE SIZING IN THIS AREA.
3. SEE GAS PIPING SCHEMATIC FOR NATURAL GAS PIPE SIZING IN THIS AREA.
4. COORDINATE ALL WORK WITH OTHER TRADES AS REQUIRED.
5. CONCEAL ALL PIPING.
6. PROVIDE AND INSTALL ALL REQUIRED VALVES IN PIPING SYSTEM.
7. INSULATE ANY WATER PIPING PLACED IN UNCONDITIONED SPACES PER APPLICABLE CODES.
8. MAKE PROVISIONS FOR TRAP PRIMING WHERE REQUIRED.
9. PLUMBING CONTRACTOR SHALL VISIT THE PROJECT SITE DURING THE BIDDING PROCESS TO DETERMINE THE TOTAL SCOPE OF THE PROJECT.
10. PLUMBING CONTRACTOR SHALL DETERMINE ACTUAL PIPE ROUTING IN FIELD PER AVAILABLE SPACE AND BUILDING CONSTRUCTION.
11. PROVIDE AND INSTALL ALL REQUIRED CLEANOUTS. CLEANOUTS FOR HORIZONTAL DRAINS SHALL BE INSTALLED NO MORE THAN 100' APART. CLEANOUTS SHALL BE INSTALLED AT EACH CHANGE OF DIRECTION GREATER THAN 45°. A CLEANOUT SHALL BE PROVIDED AT THE BASE OF EACH WASTE OR SOIL STACK. CLEANOUTS SHALL BE ACCESSIBLE AND THE SAME SIZE AS THE WASTE LINES ON WHICH THEY ARE INSTALLED.
12. ALL PLUMBING VENTS MUST BE A MINIMUM 10–FEET FROM ALL FRESH AIR INTAKES.
13. WATER PIPING MATERIAL SHALL MEET THE STANDARDS SET FORTH IN IPC TABLES 605.3, 605.4 & 605.5.
14. SANITARY WASTE AND VENT PIPING MATERIAL SHALL MEET THE STANDARDS SET FORTH IN IPC TABLES 702.1, 702.2 AND 702.3 & 702.4.
15. NATURAL GAS PIPING MATERIAL SHALL MEET THE STANDARDS SET FORTH IN IFGC SECTION 403.
16. PROVIDE AND INSTALL WATER HAMMER ARRESTORS WHERE QUICK–CLOSING VALVES ARE UTILIZED.
17. TRENCHES THAT ARE EXCAVATED BELOW THE INSTALLATION LEVEL OF PIPE (SUCH THAT THE TRENCH BOTTOM DOES NOT FORM THE BED FOR THE PIPE) SHALL BE BACKFILLED TO THE INSTALLATION LEVEL OF THE BOTTOM OF THE PIPE WITH SAND OR FINE GRAVEL PACED IN LAYERS OF 6 INCHES MAXIMUM DEPTH. THE BACKFILL SHALL BE COMPACTED AFTER EACH PLACEMENT. IPC 306.2.1
18. ALL IRON, STEEL, AND MANUFACTURED GOODS USED ON THIS PROJECT MUST BE COMPLIANT WITH THE BUY AMERICAN PROVISIONS IN THE AMERICAN RECOVERY AND REINVESTMENT ACT (ARRA). (IRON, STEEL, AND MANUFACTURED GOODS MUST BE PRODUCED IN THE UNITED STATES. A MANUFACTURED GOOD IS A GOOD BROUGHT TO THE CONSTRUCTION SITE FOR INCORPORATION INTO THE BUILDING OR WORK THAT HAS BEEN A) PROCESSED INTO A SPECIFIC FORM OR B) COMBINED WITH OTHER RAW MATERIAL TO CREATE A QUALITATIVELY DIFFERENT MATERIAL.) SEE BUY AMERICAN PROVISIONS OF ARRA FOR DETAILS AND EXCEPTIONS.

PLUMBING PERFORMANCE NOTES:

P1. PROVIDE AND INSTALL NEW 1" WATER METER WITH 1 1/2" MAIN WATER SUPPLY LINE. PROVIDE AND INSTALL MAIN SHUT–OFF, PRV, ETC. (FIELD LOCATE)

P2. PROVIDE AND INSTALL 4" SEWER LINE. FIELD LOCATE. MAKE CONNECTION TO COMPLETE BUILDING SEWER SYSTEM. VERIFY ALL INVERT ELEVATIONS AND ALL OTHER REQ'S.

P3. FIELD LOCATE NEW 2 POUND GAS METER. FIELD VERIFY LOCATION AND ALL REQUIREMENTS WITH GAS COMPANY.

P4. WHERE REQUIRED PLUMBING CONTRACTOR SHALL PROVIDE AND INSTALL 2 POUND TO 4 OUNCE PRESSURE REGULATORS WITH LEAK–LIMITING DEVICE AND TEST TEE FITTING. IFGC 410.

P5. PLUMBING CONTRACTOR SHALL PROVIDE AND INSTALL WATER TEMPERING DEVICE (SHALL CONFORM TO ASSE 1070) FOR ALL HAND WASH AREAS IN PROJECT. HOT WATER TEMPERATURE SHALL HAVE A MAXIMUM TEMPERATURE OF 110° F. 2006 IPC 607.1

P6. COORDINATE WATER HEATER EXHAUST (BY MECHANICAL CONTRACTOR) WITH MECHANICAL CONTRACTOR.

P7. PLUMBING CONTRACTOR TO PROVIDE AND INSTALL BACKFLOW PREVENTOR AT ALL HOSE BIB LOCATIONS.

P8. PLUMBING CONTRACTOR TO PROVIDE 1/4 TURN VALVES ON ALL PLUMBING FIXTURES.

SEISMIC SUPPORT NOTES:

BRACING FOR SUSPENDED PIPING, ETC

1. PER ASCE STANDARD 7–05 13.6.8 SEISMIC SUPPORTS ARE NOT REQUIRED FOR THE FOLLOWING CONDITION:
   A. PIPING IS SUPPORTED BY ROD HANGERS 12" OR LESS IN LENGTH FROM THE TOP OF THE PIPE TO THE SUPPORTING STRUCTURE.
   B. HIGH–DEFORMABILITY PIPING IS USED.
2. IF INSTANCES OCCUR WHERE PIPING IS SUSPENDED BY HANGERS GREATER THAN 12" IN LENGTH. SYSTEM CONNECTORS AND COMPONENTS SHALL BE COMPATIBLE AND DESIGNED FOR THE APPLICATION THAT THEY ARE USED FOR. SHALL HAVE A MINIMUM OF TWO TRANSVERSE BRACES PER STRAIGHT PIPING RUN. THE MAXIMUM DISTANCE BETWEEN TRANSVERSE BRACES WILL BE DETERMINED BY PIPE SIZE AND PIPING COMPOSITION. SHALL HAVE A MINIMUM OF ONE LONGITUDINAL BRACE PER STRAIGHT DUCT RUN. IF LENGTH OF PIPING EXCEEDS LONGITUDINAL BRACE SPACING, ADDITIONAL LONGITUDINAL BRACES WILL BE REQUIRED.

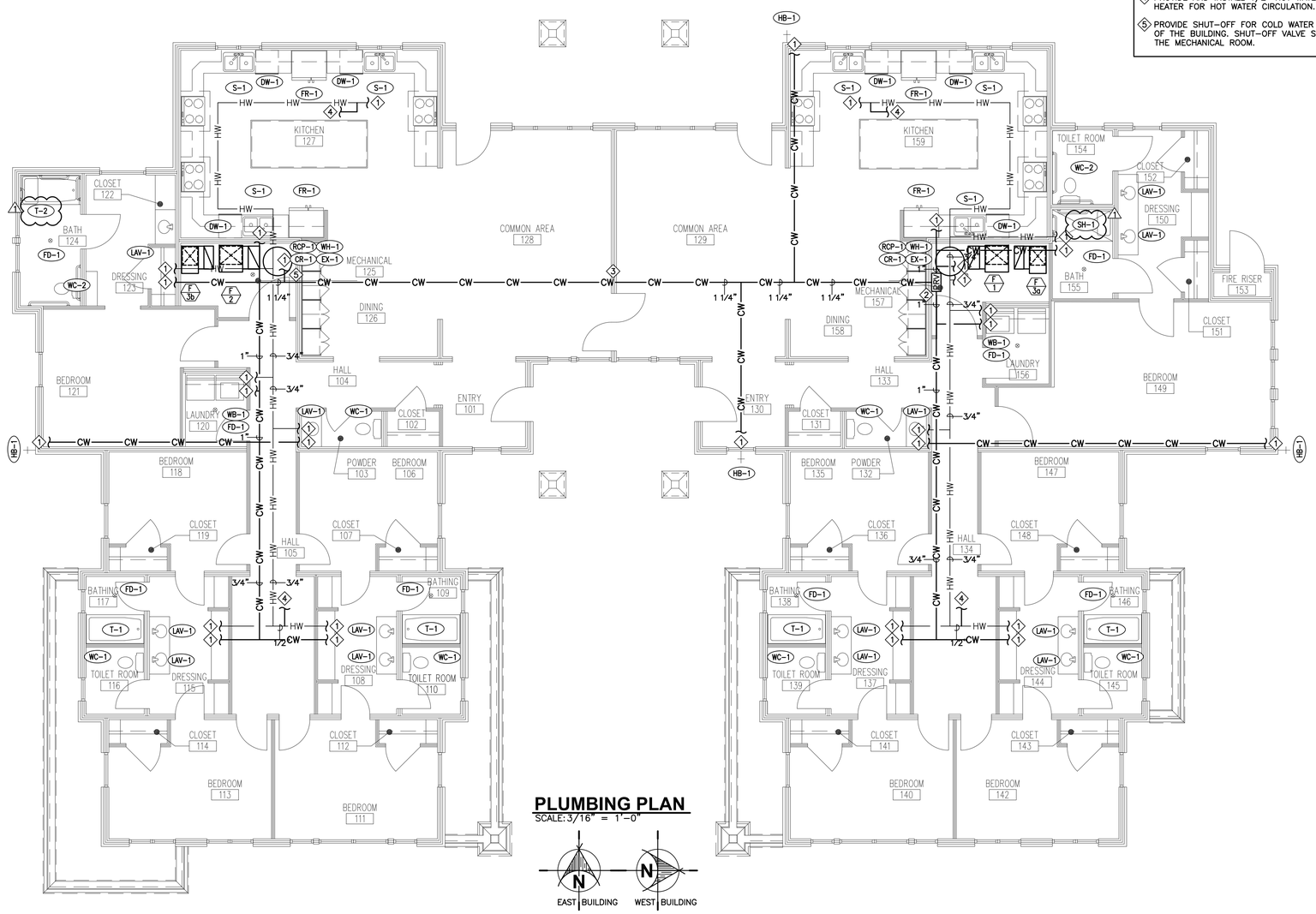

PLUMBING PLAN
SCALE: 3/16" = 1'–0"

State of Utah
Department of Administrative Services
Division of Facilities Construction & Management
4110 State Office Building
Salt Lake City, Utah 84114
Phone: (801) 538 - 3018
Fax: (801) 538 - 3267
http://dfcm.utah.gov

ROYAL ENGINEERING
ELECTRICAL: 2335 SOUTH STATE SUITE 225, PHONE: 801375.2226
MECHANICAL: PROVO, UTAH 84606, FAX: 801375.2676

COPYRIGHT© JOB# J10037 DATE PLOTTED: 05/24/2010
THESE DOCUMENTS ARE INSTRUMENTS OF PROFESSIONAL SERVICE AND THE INFORMATION CONTAINED HEREIN IS INCOMPLETE UNLESS IN CONJUNCTION WITH ALL ADDITIONAL SERVICES AND INFORMATION. REPRODUCTION, DISTRIBUTION OR ANY OTHER EXTENSIVE USE OR REPRESENTATION OF THESE DOCUMENTS IN WHOLE OR IN PART WITHOUT WRITTEN AUTHORIZATION OF ROYAL ENGINEERING IS PROHIBITED. ROYAL ENGINEERING SHALL BE DEEMED THE AUTHOR AND OWNER OF THESE DOCUMENTS PURSUANT TO 17 U.S.C. SEC. 101 ET SEQ. AND 17 U.S.C. SEC. 201(A) (1990). WHICH PREEMPTS STATE AND LOCAL PUBLIC RECORD ACTS. REFER TO ACT 17 U.S.C. PAR. 301 (1990).

BUILDING NAME:

PROPERTY# 15278
USOR - DSVBI
TRAINING HOUSING
Salt Lake City, Utah

PROJECT TITLE:

USOR - Division of Services for the Blind and Visually Impaired TRAINING HOUSING

REGISTERED PROFESSIONAL ENGINEER 4858829 MARK L MAKIN STATE OF UTAH

MARK	DATE	DESCRIPTION
1	05.27.10	Addendum 1

ISSUE TYPE: Construction Document Phase

ISSUE DATE: 04.30.2010

DFCM PROJECT NO: 09240200
CAD PROJECT NO:
CAD DWG FILE: J10037 Mech All.dwg
DRAWN BY: SJN
CHK'D BY: MLM
COPYRIGHT: STATE OF UTAH

SHEET TITLE

Plumbing Plan

SHEET NUMBER

PL-101

SHEET 45 OF 58

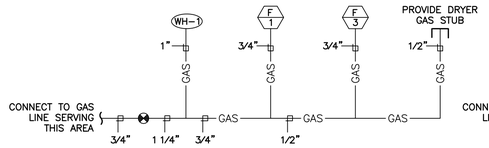

TYPICAL MECHANICAL ROOM AREA (MECHANICAL 125)

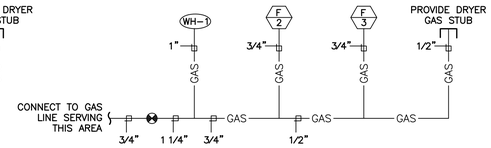

TYPICAL MECHANICAL ROOM AREA (MECHANICAL 157)

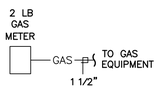

GAS METER

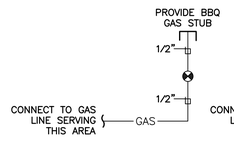

BBQ STUB

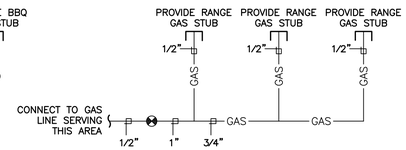

TYPICAL KITCHEN

NOTE: THIS GAS METER SHALL SERVE BOTH BUILDINGS. PROVIDE GAS SHUT-OFF VALVE AT GAS ENTRANCE AT BOTH BUILDINGS

GAS PIPING SCHEMATICS

SCALE: NONE

GAS PIPING CALCULATIONS

QUESTAR: NFPA

DESIGN CONDITIONS

CITY: SALT LAKE CITY, UTAH
LONGEST PIPE: 160 FEET MAXIMUM (VERIFY)
GAS PRESSURE: 2 LB

EQUIPMENT

WH-1	281 CFH	250,000	BTU PER HOUR
WH-1	281 CFH	250,000	BTU PER HOUR
WH-1	281 CFH	250,000	BTU PER HOUR
WH-1	281 CFH	250,000	BTU PER HOUR
F-1	90 CFH	80,000	BTU PER HOUR
F-1	90 CFH	80,000	BTU PER HOUR
F-2	90 CFH	80,000	BTU PER HOUR
F-2	90 CFH	80,000	BTU PER HOUR
F-3	45 CFH	40,000	BTU PER HOUR
F-3	45 CFH	40,000	BTU PER HOUR
F-3	45 CFH	40,000	BTU PER HOUR
F-3	45 CFH	40,000	BTU PER HOUR
BBQ STUB	61 CFH	54,000	BTU PER HOUR
RANGE STUB	62 CFH	55,000	BTU PER HOUR
RANGE STUB	62 CFH	55,000	BTU PER HOUR
RANGE STUB	62 CFH	55,000	BTU PER HOUR
RANGE STUB	62 CFH	55,000	BTU PER HOUR
RANGE STUB	62 CFH	55,000	BTU PER HOUR
RANGE STUB	62 CFH	55,000	BTU PER HOUR
RANGE STUB	62 CFH	55,000	BTU PER HOUR
RANGE STUB	62 CFH	55,000	BTU PER HOUR
RANGE STUB	62 CFH	55,000	BTU PER HOUR
RANGE STUB	62 CFH	55,000	BTU PER HOUR
RANGE STUB	62 CFH	55,000	BTU PER HOUR
RANGE STUB	62 CFH	55,000	BTU PER HOUR
DRYER STUB	25 CFH	22,000	BTU PER HOUR
DRYER STUB	25 CFH	22,000	BTU PER HOUR
DRYER STUB	25 CFH	22,000	BTU PER HOUR
DRYER STUB	25 CFH	22,000	BTU PER HOUR
TOTAL	2,569 CFH	2,282,000	BTU PER HOUR

WATER PIPING CALCULATIONS

DESIGN CONDITIONS

CITY: SALT LAKE CITY, UTAH
WATER PRESSURE 60 psi MIN. (VERIFY)
DEVELOPED PIPE LENGTH 260 FEET MAXIMUM (VERIFY)
ANTICIPATED FIXTURE UNITS 71 FU MAXIMUM

PLUMBING FIXTURE SCHEDULE

MARK	FIXTURE	PIPE SIZE TRAP	WASTE	VENT	C.W.	H.W.	REMARKS
WH-1	WATER HEATER	—	—	—	1"	1"	100 GALLON NATURAL GAS WATER HEATER WITH DRAIN PAN, DRAIN & POWER-VENTING. 320 GALLON PER HOUR RECOVERY @ 90° RISE. 250,000 BTU INPUT. DESIGN STANDARD: A. O. SMITH CYCLONE Xi BTH 250.
EX-1	EXPANSION TANK	—	—	—	1"	—	DESIGN STANDARD: WATTS DET 12.
RCP-1	RECIRCULATION PUMP	—	—	—	1/2"	—	RECIRCULATION PUMP WITH THERMOSTAT CONTROL AND 24 HOUR TIMER. 120 V. 1/6 HP MOTOR.
FD-1	FLOOR DRAIN	2"	2"	1 1/2"	—	—	MAKE PROVISIONS FOR TRAP PRIMING. EACH REST ROOM FLOOR DRAIN SHALL HAVE A TRAP PRIMER.
CR-1	CONDENSATE RECEPTOR	2"	2"	1 1/2"	—	—	FOR CONDENSATE FROM HIGH EFFICIENCY EQUIPMENT.
HB-1	HOSE BIB, EXTERIOR	—	—	—	1/2"	—	ANTI-SIPHON FREEZELESS HOSE HYDRANT.
DW-1	DISH WASHER	—	—	—	—	3/8"	CONNECT DRAIN TO SINK S-1 DRAIN PIPE.
S-1	UNDERMOUNT SINK	1 1/2"	1 1/2"	1 1/2"	1/2"	1/2"	SINK WITH FAUCET & BLADE HANDLES. MAKE PROVISIONS FOR DW CONNECTION.
LAV-1	LAVATORY	1 1/4"	1 1/4"	1 1/4"	1/2"	1/2"	COMMERCIAL LAVATORY SINK WITH FAUCET & AVERAGE FLOW RATE ≤ 1.5 GPM OR MUST MEET U.S. EPA WATERSENSE SPECIFICATION AND BEING CERTIFIED AND LABELED ACCORDINGLY. UNDERMOUNTED. FAUCET DESIGN STANDARD: KOHLER CORALAIS K-15240-4 WITH LOW-FLOW AERATOR.
WC-1	WATER CLOSET (FLOOR MOUNT)	INT.	4"	2"	1/2"	—	~~WITH TANK & AVERAGE FLOW RATE ≤ 1.3 GPF OR~~ DUAL-FLUSH MEETING THE REQUIREMENTS OF ASME A112.19.14 OR MEET U.S. EPA WATERSENSE SPECIFICATION AND BEING CERTIFIED AND LABELED ACCORDINGLY. DESIGN STANDARD: KOHLER WELLWORTH ~~K-3577.~~
WC-2	WATER CLOSET (FLOOR MOUNT)	INT.	4"	2"	1/2"	—	ADA COMPLIANT WITH TANK & AVERAGE FLOW RATE ≤ 1.3 GPF OR DUAL-FLUSH MEETING THE REQUIREMENTS OF ASME A112.19.14 OR MEET U.S. EPA WATERSENSE SPECIFICATION AND BEING CERTIFIED AND LABELED ACCORDINGLY. DESIGN STANDARD: KOHLER WELLWORTH K-3577.
T-1	TUB	2"	2"	1 1/2"	1/2"	1/2"	~~WITH FAUCET AND ANTI-SCALD SHOWER VALVE/HEAD~~ AS DIRECTED BY OWNER & AVERAGE FLOW RATE ≤ 1.75 GPM. SHOWERHEAD DESIGN STANDARD: KOHLER ~~FORTÉ K-10240.~~
T-2	TUB	2"	2"	1 1/2"	1/2"	1/2"	ADA COMPLIANT WITH FAUCET AND ANTI-SCALD SHOWER VALVE/HEAD AS DIRECTED BY OWNER & AVERAGE FLOW RATE ≤ 1.75 GPM. SHOWERHEAD DESIGN STANDARD: KOHLER FORTÉ K-10240.
SH-1	SHOWER	2"	2"	1 1/2"	1/2"	1/2"	~~WITH ANTI-SCALD SHOWER VALVE AND SHOWER HEAD &~~ AVERAGE FLOW RATE ≤ 1.75 GPM. SHOWER SHALL BE BE SURROUNDED BY A SOLID SURFACE AND NOT TILE. SHOWERHEAD DESIGN STANDARD: KOHLER FORTÉ K-10240.
WB-1	WASHER BOX	2"	2"	1 1/2"	1/2"	1/2"	WASHER BOX MOUNTED IN WALL. PROVIDE AND INSTALL HAMMER ARRESTOR AT EACH WASHER BOX.
FR-1	FRIDGE CONNECTION	—	—	—	1/2"	—	CONNECTION FOR WATER DISPENSER.

NOTES:
1. VERIFY ALL MANUFACTURERS, FINISHES, AND OPTIONS WITH OWNER BEFORE ORDERING ANY PLUMBING FIXTURES.
2. MINIMUM UNDERGROUND PIPING SIZE SHALL BE 2 INCHES.

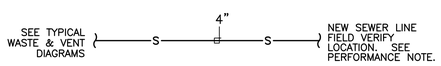

MAIN SEWER LINE

SCALE: NONE

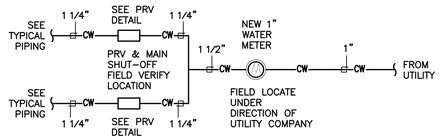

WATER SERVICE ENTRANCE

SCALE: NONE

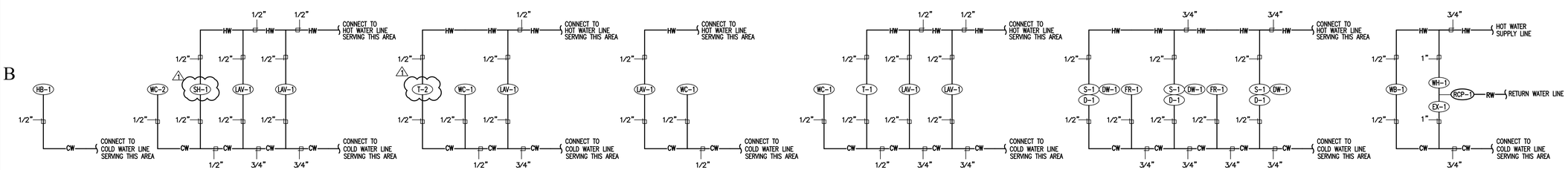

WATER PIPING SCHEMATICS

SCALE: NONE

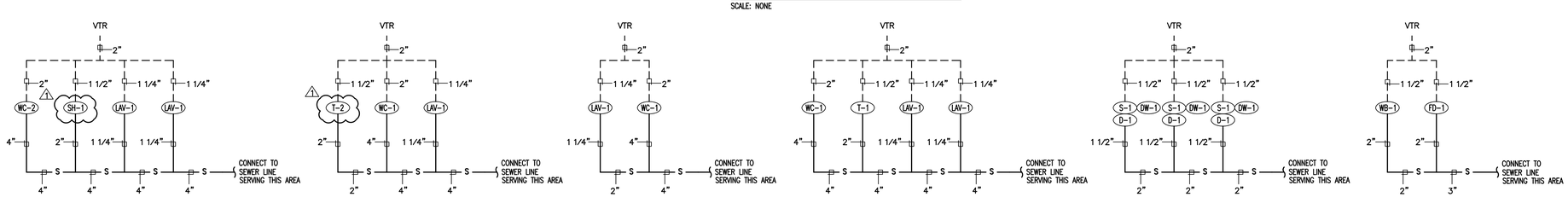

WASTE AND VENT PIPING SCHEMATICS

SCALE: NONE

State of Utah
Department of Administrative Services
Division of Facilities Construction & Management
4110 State Office Building
Salt Lake City, Utah 84114
Phone: (801) 538 - 3018
Fax: (801) 538 - 3267
http://dfcm.utah.gov

ROYAL ENGINEERING
ELECTRICAL: 2335 SOUTH STATE SUITE 225 PHONE: 801.375.2226
MECHANICAL: PROVO, UTAH 84606 FAX: 801.375.2676

COPYRIGHT© JOB# J10037 DATE PLOTTED: 05/24/2010
THESE DOCUMENTS ARE INSTRUMENTS OF PROFESSIONAL SERVICE AND THE INFORMATION CONTAINED HEREON IS INCOMPLETE UNLESS IN CONJUNCTION WITH OTHER ENGINEERING USE OR REPRESENTATIONS. DISTRIBUTION OR REPRODUCTION OF ANY ENGINEERING USE OR REPRESENTATIONS DOCUMENT IN WHOLE OR IN PART WITHOUT WRITTEN PERMISSION IS PROHIBITED. OWNERSHIP OF DOCUMENTS IS AS PER AIA DOCUMENT B141 - 1997, ARTICLE 7. ALL DOCUMENTS ARE THE PROPERTY OF ROYAL ENGINEERING. ALL RIGHTS RESERVED. COPYRIGHT 1997. WHICH PREEMPTS STATE AND LOCAL PUBLIC RECORD ACTS. REFER TO ACT 17 U.S.C. PAR. 301-1997).

BUILDING NAME:

PROPERTY# 15278
USOR - DSVBI
TRAINING HOUSING
Salt Lake City, Utah

PROJECT TITLE:

USOR - Division of Services for the Blind and Visually Impaired
TRAINING HOUSING

REGISTERED PROFESSIONAL ENGINEER 4858829 MARK L. MAKIN STATE OF UTAH

MARK	DATE	DESCRIPTION
1	05.27.10	Addendum 1

ISSUE TYPE: Construction Document Phase

ISSUE DATE: 04.30.2010

DFCM PROJECT NO: 09240200
CAD PROJECT NO:
CAD DWG FILE: J10037 Mech All.dwg
DRAWN BY: SJN
CHK'D BY: MLM
COPYRIGHT: STATE OF UTAH

SHEET TITLE

Plumbing Schedule & Schematics

SHEET NUMBER

PL-201

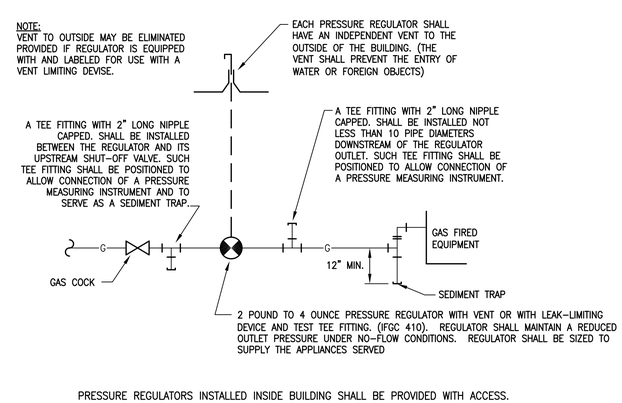

TYPICAL 2LB GAS CONNECTION DETAIL

SCALE: NONE

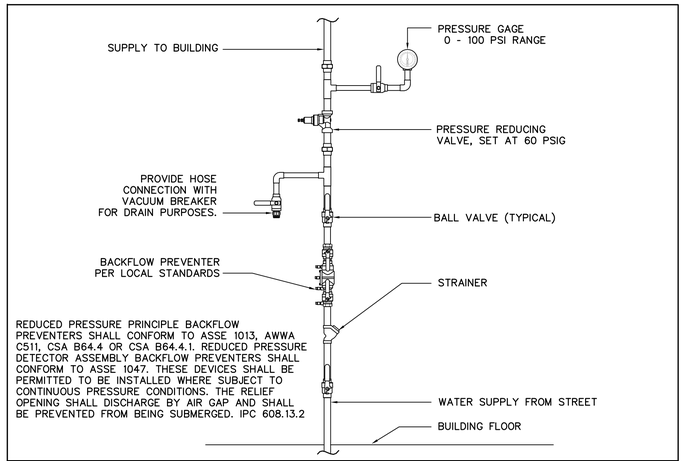

VERTICAL WATER PRESSURE REDUCING DETAIL

SCALE: NONE

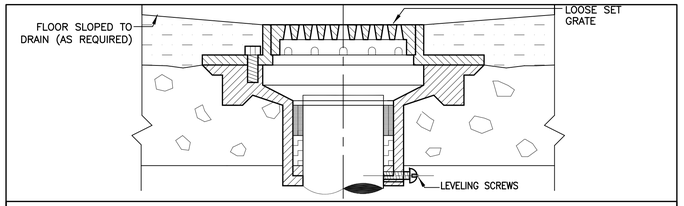

TYPICAL FLOOR DRAIN

SCALE: NONE

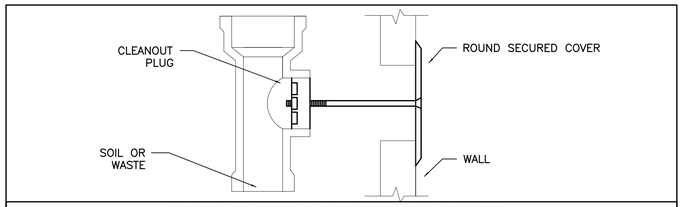

TYPICAL WALL CLEANOUT DETAIL

SCALE: NONE

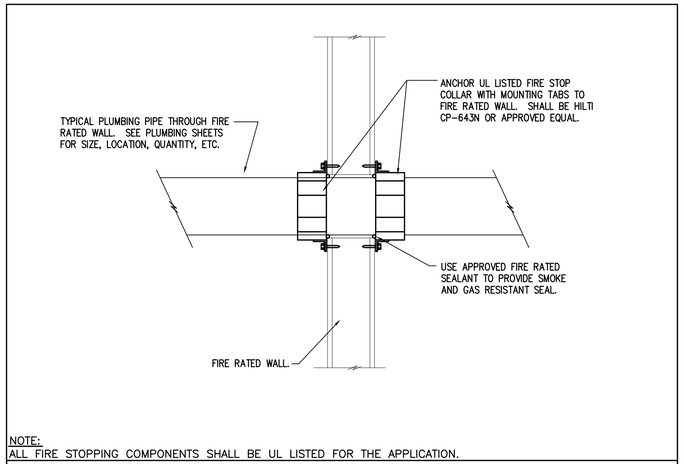

NOTE:
ALL FIRE STOPPING COMPONENTS SHALL BE UL LISTED FOR THE APPLICATION.

FIRE STOP THRU FIRE RATED WALL

SCALE: NONE

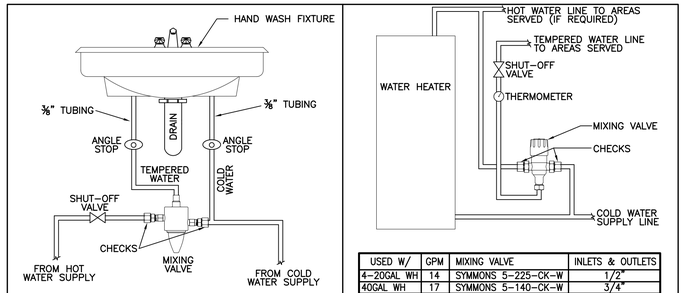

MIXING VALVE DESIGN STANDARD: SYMMONS 5-210-CK-W

SINGLE HAND WASH LOCATION

USED W/	GPM	MIXING VALVE	INLETS & OUTLETS
4-20GAL WH	14	SYMMONS 5-225-CK-W	1/2"
40GAL WH	17	SYMMONS 5-140-CK-W	3/4"

NOTES:
IF REQUIRED GPM EXCEEDS CAPABILITIES OF MIXING VALVES LISTED, PROVIDE MIXING VALVE WITH CAPABILITY NEEDED.

SERVING MULTIPLE FIXTURES

NOTES:
1. PROVIDE WITH SEPARATE CHECKS AND WALL MOUNTING BRACKET.
2. SHALL CONFORM TO ASSE 1070 AND LIMIT THE TEMPERED WATER TEMPERATURE TO A MAXIMUM OF 110 deg F. IPC 2006, 607.1.
3. SET MIXING VALVE TEMPERATURE WHEN INSTALLATION IS COMPLETE.
4. FOLLOW ALL MANUFACTURER INSTALLATION AND OTHER INSTRUCTIONS.
5. APPROVED MANUFACTURERS: SYMMONS, POWERS, LEONARD, BRADLEY, WATTS, LAWLER.
6. INSTALL HANDY-SHIELD, AS MANUFACTURED BY PLUMBEREX SPECIALTY PRODUCTS, SAFETY COVERS ON ALL SUPPLY PIPING AND WASTE PIPING BENEATH HANDICAPPED LAVATORIES. SHIELDS SHALL MEET THE REQUIREMENTS OF UNIFORM FEDERAL ACCESSIBILITY STANDARDS 4.19.4 GSA AND ANSI DOCUMENT A117-1-1980.

WATER TEMPERING DETAILS

SCALE: NONE

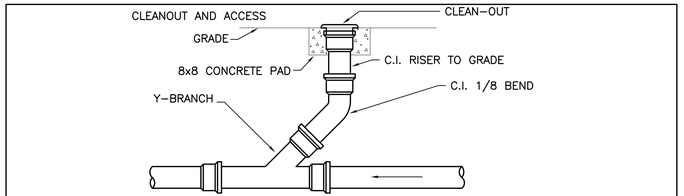

TYPICAL SURFACE CLEANOUT DETAIL

SCALE: NONE

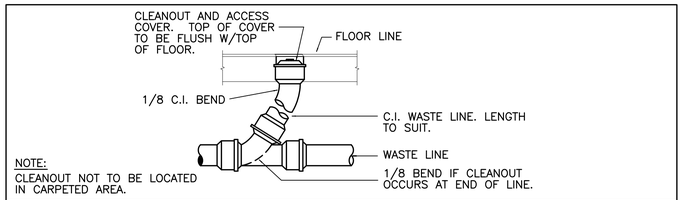

NOTE:
CLEANOUT NOT TO BE LOCATED IN CARPETED AREA.

TYPICAL FLOOR CLEANOUT DETAIL

SCALE: NONE

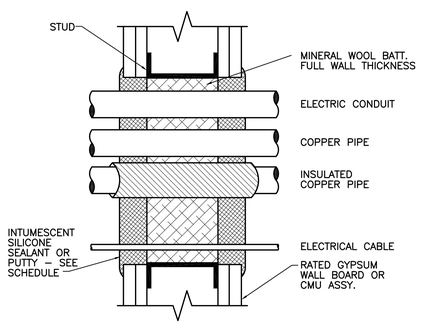

WALL RATING	DEPTH OF SEALANT	SEALANT CROWN
1 HR	1"	1/4"
2 HR	1-1/4"	3/8"
3 HR	1-1/2"	1/2"

TYPICAL PIPE & CONDUIT FIRE STOP DETAIL

SCALE: NONE

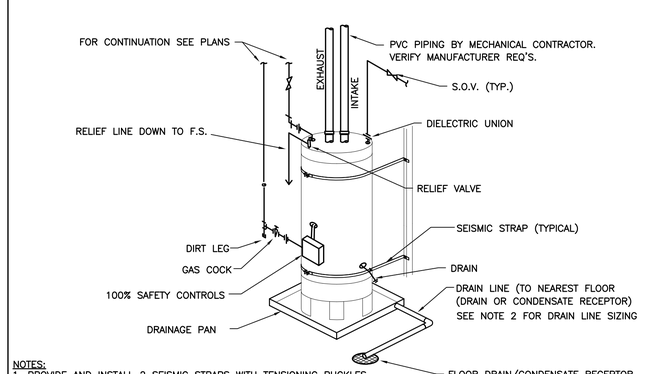

NOTES:
1. PROVIDE AND INSTALL 2 SEISMIC STRAPS WITH TENSIONING BUCKLES ANCHORED TO STRUCTURE. INSTALL PER MANUFACTURERS REQUIREMENTS
2. PROVIDE AND INSTALL PAN W/DRAIN WHERE REQUIRED, OR WHERE LEAK DAMAGE MAY OCCUR. DRAIN LINE SHALL BE 1 1/2" FOR PROJECTS LOCATED IN UTAH, 3/4" FOR OTHER PROJECT LOCATIONS.
3. 120 VOLT ELECTRICAL CONNECTION BY ELECTRICAL CONTRACTOR.

TYPICAL DIRECT VENT GAS WATER HEATER DETAIL

SCALE: NONE

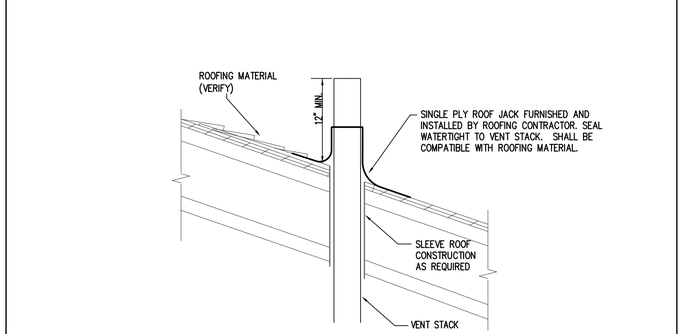

TYPICAL VENT THROUGH ROOF DETAIL

SCALE: NONE

State of Utah
Department of Administrative Services
Division of Facilities Construction & Management
4110 State Office Building
Salt Lake City, Utah 84114
Phone: (801) 538 - 3018
Fax: (801) 538 - 3267
http://dfcm.utah.gov

ROYAL ENGINEERING
ELECTRICAL: 2335 SOUTH STATE SUITE 225 PHONE: 801375.2226
MECHANICAL: PROVO, UTAH 84606 FAX: 801375.2676

COPYRIGHT© JOB# J10037 DATE PLOTTED: 05/24/2010
THESE DOCUMENTS ARE INSTRUMENTS OF PROFESSIONAL SERVICE AND THE INFORMATION CONTAINED HEREON IS INCOMPLETE UNLESS IN CONJUNCTION WITH ALL OTHER DOCUMENTS. REPRODUCTION, DISTRIBUTION OR USE FOR ANY PURPOSE OTHER THAN THOSE AUTHORIZED BY ROYAL ENGINEERING IS FORBIDDEN. DOCUMENTS IS WHOLE OR IN PART WITHOUT WRITTEN CONSENT IS IN VIOLATION OF COPYRIGHT LAW. ROYAL ENGINEERING ASSUMES NO RESPONSIBILITY FOR ANY ALTERATION OF DOCUMENTS. 17 U.S.C. 101 ET SEQ. PAR. 501-1199?1, WHICH PREEMPTS STATE AND LOCAL PUBLIC RECORD ACTS. REFER TO ACT 17 U.S.C. PAR. 501-1199?1.

BUILDING NAME:

PROPERTY# 15278
USOR - DSVBI
TRAINING HOUSING
Salt Lake City, Utah

PROJECT TITLE:

USOR - Division of Services for the Blind and Visually Impaired TRAINING HOUSING

REGISTERED PROFESSIONAL ENGINEER 4858829 MARK L. MAKIN STATE OF UTAH

MARK	DATE	DESCRIPTION

ISSUE TYPE: Construction Document Phase

ISSUE DATE: 04.30.2010

DFCM PROJECT NO: 09240200
CAD PROJECT NO:
CAD DWG FILE: J10037 Mech All.dwg
DRAWN BY: SJN
CHK'D BY: MLM
COPYRIGHT: STATE OF UTAH

SHEET TITLE

Plumbing Details

SHEET NUMBER

PL-301

SHEET 47 OF 58

MECHANICAL SYMBOLS

NOTES:
1. ALL AYMBOLS MAY NOT BE USED.
2. DOTTED SYMBOLS INDICATE EXISTING EQUIPMENT, ETC

SYMBOL	EXPLANATION
ø	ROUND MEASUREMENT.
	RETURN AIR
	SUPPLY AIR
	EXHAUST AIR
	EXHAUST FAN
A #	MECHANICAL EQUIPMENT SYMBOL
#	KEYED NOTE REFERENCE
#"ø / #	DUCT SIZE FROM MAIN DUCT TO DIFFUSER. DIFFUSER OR GRILLE BALANCED TO CFM.
—SA—	SUPPLY AIR DUCTWORK
—RA—	RETURN AIR DUCTWORK
—EA—	EXHAUST AIR DUCTWORK

LEED MECHANICAL REQUIREMENTS

EA CREDIT 5—DUCT TIGHTNESS
1) LIMIT DUCT AIR LEAKAGE TO OUTSIDE THE CONDITIONED ENVELOPE. THE TESTED DUCT LEAKAGE SHALL BE ≤ 1.0 CFM AT 25 PASCALS PER 100 SQUARE FEET OF CONDITIONED FLOOR AREA, VERIFIED BY THE ENERGY RATER.
2) DUCTS SHALL NOT BE INSTALLED IN EXTERIOR WALLS UNLESS EXTRA INSULATION IS ADDED TO MAINTAIN THE OVERALL UA FOR AN EXTERIOR WALL WITHOUT DUCTS. DUCTS MAY BE RUN INSIDE INTERIOR WALL CAVITIES BUT MUST BE FULLY DUCTED.
3) USE AT LEAST R—6 INSULATION AROUND DUCTS IN UNCONDITIONED SPACES.

EA CREDIT 6—SPACE HEATING AND COOLING
SEE MORE EFFICIENT HVAC EQUIPMENT AND THERMOSTAT ON MECHANICAL PLANS.

EA CREDIT 11—REFRIGERANT MANAGEMENT
1) PROVIDE PROOF OF PROPER REFRIGERANT CHARGE OF THE AIR—CONDITIONING SYSTEM.
2) SEE AIR COOLED CONDENSING UNIT SCHEDULE FOR REFRIGERANT SPECIFICATIONS.

EQ CREDIT 2—COMBUSTION VENTING
1) NO UNVENTED COMBUSTION APPLIANCES (E.G., DECORATIVE LOGS) ARE ALLOWED.
2) PROVIDE AND INSTALL A CARBON MONOXIDE MONITOR ON EACH SIDE OF THE DUPLEX.
3) SPACE AND WATER HEATING EQUIPMENT THAT INVOLVES COMBUSTION MUST MEET BE DESIGNED AND INSTALLED WITH CLOSED COMBUSTION (I.E. SEALED SUPPLY AIR AND EXHAUST AIR OR WITH POWER—VENTED EXHAUST.
4) NO FIREPLACES OR WOODSTOVES SHALL BE INSTALLED.

EQ CREDIT 4—OUTDOOR AIR VENTILATION
1) SEE OUTSIDE AIR BALANCING SCHEDULE FOR AMOUNTS OF OUTSIDE AIR PER FURNACE.
2) A THIRD PARTY SHALL TEST THE FLOW RATE OF AIR BROUGHT INTO THE HOME AND VERIFY THAT THE REQUIREMENTS OF ASHRAE 62.2—2007 ARE MET.

LEED MECH REQUIREMENTS CONT'D

EQ CREDIT 5—LOCAL EXHAUST
1) SEE MECHANICAL PLANS AND EXHAUST FAN SCHEDULE FOR EXHAUST SYSTEM INFORMATION.
2) AIR FROM EXHAUST FANS SHALL BE EXHAUSTED TO THE OUTDOORS (SHALL NOT BE EXHAUSTED TO ATTICS OR INTERSTITIAL SPACES).
3) A THIRD PARTY SHALL TEST EACH EXHAUST AIR FLOW RATE FOR COMPLIANCE WITH THE REQUIREMENTS IN SECTION 5 OF ASHRAE STANDARD 62.2—2007.

EQ CREDIT 6—DISTRIBUTION SYSTEMS
1) INSTALL DUCTS ACCORDING TO MECHANICAL PLANS.
2) ENSURE THAT EVERY ROOM (EXCEPT BATHS, KITCHENS, CLOSETS, PANTRIES, AND LAUNDRY ROOMS) HAS ADEQUATE RETURN AIR FLOW THROUGH THE USE OF MULTIPLE RETURNS, TRANSFER GRILLES OR JUMP DUCTS. MEET ONE OF THE FOLLOWING: 1) SIZE THE OPENING TO 1 SQUARE INCH PER CFM OF SUPPLY (THIS AREA MAY INCLUDING FREE AREA UNDERCUT BELOW DOOR), 2) DEMONSTRATE THAT THE PRESSURE DIFFERENTIAL BETWEEN CLOSED ROOMS AND ADJACENT SPACES WITH RETURN IS NO GREATER THAN 2.5 PA (0.01" W.C.).
3) HAVE THE TOTAL SUPPLY AIR FLOW RATES IN EACH ROOM TESTED USING A FLOW HOOD WITH DOORS CLOSED, OR ONE OF THE OTHER ACCEPTABLE METHODS CITED BY THE ACCA QUALITY INSTALLATION SPECIFICATIONS. SUPPLY AIR FLOW RATES MUST BE WITHIN +/— 15% (OR +/— 10 CFM) OF CALCULATED VALUES FROM ACCA MANUAL J.

EQ CREDIT 7—AIR FILTERING
INSTALL AIR FILTERS ≥MERV 13 AND ENSURE THAT AIR HANDLERS CAN MAINTAIN ADEQUATE PRESSURE AND AIR FLOW. AIR FILTER HOUSINGS MUST BE AIRTIGHT TO PREVENT BYPASS OR LEAKAGE.

EQ CREDIT 9—RADON PROTECTION
SHALL BE DESIGNED AND BUILT WITH THE RADON—RESISTANT CONSTRUCTION TECHNIQUES AS PRESCRIBED BY THE 2006 IRC: JOINTS IN AIR DUCTS AND PLENUMS IN UNCONDITIONED SPACES SHALL MEET THE REQUIREMENTS OF SECTION M1601 OF THE 2006 IRC. THERMAL ENVELOPE AIR INFILTRATION REQUIREMENTS SHALL COMPLY WITH THE ENERGY CONSERVATION PROVISIONS IN CHAPTER 11 OF THE 2006 IRC. FIRESTOPPING SHALL MEET THE REQUIREMENTS CONTAINED IN SECTION R602.8 OF THE 2006 IRC.

MECHANICAL KEYED NOTES:

1. FIELD VERIFY THERMOSTAT LOCATION WITH OWNER.
2. PROVIDE AND INSTALL 6" EXHAUST DUCT TO OWNER APPROVED EXHAUST VENT. EXHAUST DUCT SHALL BE VENTED TO OUTDOORS. VERIFY LOCATION IN FIELD. ACTUAL DUCT SIZE DETERMINED BY EXHAUST FAN OUTLET.
3. PROVIDE AND INSTALL ZONE CONTROL PANEL. VERIFY EXACT LOCATION WITH OWNER.
4. PROVIDE AND INSTALL ZONE REMOTE TEMPERATURE SENSORS. TEMPERATURE SENSORS SHALL ALLOW 6°F TO 8°F ADJUSTMENT. FIELD VERIFY LOCATIONS WITH OWNER.
5. SEE FURNACE ECONOMIZER DETAIL FOR INFORMATION ABOUT FURNACE ECONOMIZER AND EXHAUST FAN. MECHANICAL CONTRACTOR TO PROVIDE & INSTALL ALL CONTROLS INCLUDING SEPARATE ELECTRICAL REQUIREMENTS FOR ZONING SYSTEM. COORDINATE ALL 120V POWER SPECIFIC TO ZONING SYSTEM WITH ELECTRICAL CONTRACTOR.
6. PROVIDE ACCESS TO MOTORIZED DAMPERS. POWER SUPPLIES TO DAMPERS SHALL BE ACCESSIBLE AND SHALL BE LOCATED BY FURNACE.
7. PROVIDE AND INSTALL 8" EXHAUST DUCT FROM HOOD TO OWNER APPROVED EXHAUST VENT. EXHAUST DUCT SHALL BE VENTED TO OUTDOORS. VERIFY LOCATION IN FIELD. ACTUAL DUCT SIZE DETERMINED BY EXHAUST FAN OUTLET.
8. DAMPERS SHALL BE INSTALLED ABOVE THE CORRIDOR.
9. PROVIDE AND INSTALL BYPASS DAMPER SIZED ADEQUATELY TO ALLOW PASSAGE OF 1600 CFM. MECHANICAL CONTRACTOR TO PROVIDE AND INSTALL ALL CONTROLS AND PARTS INCLUDING ACTUATOR.
10. PROVIDE AND INSTALL BYPASS DAMPER SIZED ADEQUATELY TO ALLOW PASSAGE OF 1999 CFM. MECHANICAL CONTRACTOR TO PROVIDE AND INSTALL ALL CONTROLS AND PARTS INCLUDING ACTUATOR.
11. SEE GENERAL MECHANICAL NOTE 12 FOR CLOTHES DRYER EXHAUST DUCT REGULATIONS. FIELD VERIFY EXACT DUCT ROUTING.

GENERAL MECHANICAL NOTES:

1. COORDINATE ALL R.A. & S.A. DUCTWORK AND DIFFUSERS IN FIELD WITH LIGHTING AND OTHER SYSTEMS.
2. MAXIMUM NC=25 @ CFM NOTED.
3. ACTUAL DUCTWORK SIZING, CONFIGURATION, AND LOCATION DETERMINED IN FIELD PER AVAILABLE SPACE.
4. ALL FRESH AIR INTAKES SHALL BE 10 FEET MIN. FROM ALL EXHAUST & PLUMBING VENTS.
5. ALL R.A. & S.A. DUCTWORK IN UNCONDITIONED ATTIC SPACES SHALL BE INSULATED PER APPLICABLE CODES.
6. ALL EQUIPMENT SHALL HAVE A FLEXIBLE CONNECTION FOR THE R.A. & S.A. DUCTWORK.
7. HAVE ALL SYSTEMS BALANCED TO CFM NOTED AT EACH DIFFUSER AND GRILLE.
8. COORDINATE ALL WORK WITH OTHER TRADES AS REQUIRED.
9. MECHANICAL CONTRACTOR SHALL VISIT THE PROJECT SITE DURING THE BIDDING PROCESS TO DETERMINE THE TOTAL SCOPE OF THE PROJECT.
10. ALL GAS FIRED EQUIPMENT WILL BE TESTED BY CERTIFIED GAS INSTALLERS AND HAVE GREEN STICKERS STATING COMPLIANCE WITH ALL REQUIRED LOCAL AND 2006 IFGC REQUIREMENTS.
11. HEATING LOADS IN ACCORDANCE WITH ACCA MANUAL J AND D OR OTHER APPROVED CALCULATIONS.
12. THE MAXIMUM LENGTH OF A CLOTHES DRYER EXHAUST DUCT SHALL NOT EXCEED 25 FEET FROM THE DRYER LOCATION TO THE OUTLET TERMINAL. THE MAXIMUM LENGTH OF THE DUCT SHALL BE REDUCED 2½ FEET FOR EACH 45° BEND AND 5 FEET FOR EACH 90° BEND. THE MAXIMUM LENGTH OF THE EXHAUST DUCT DOES NOT INCLUDE THE TRANSITION DUCT. IMC 504.6.1
13. ALL IRON, STEEL, AND MANUFACTURED GOODS USED ON THIS PROJECT MUST BE COMPLIANT WITH THE BUY AMERICAN PROVISIONS IN THE AMERICAN RECOVERY AND REINVESTMENT ACT (ARRA). (IRON, STEEL, AND MANUFACTURED GOODS MUST BE PRODUCED IN THE UNITED STATES. A MANUFACTURED GOOD IS A GOOD BROUGHT TO THE CONSTRUCTION SITE FOR INCORPORATION INTO THE BUILDING OR WORK THAT HAS BEEN A) PROCESSED INTO A SPECIFIC FORM OR B) COMBINED WITH OTHER RAW MATERIAL TO CREATE A QUALITATIVELY DIFFERENT MATERIAL.) SEE BUY AMERICAN PROVISIONS OF ARRA FOR DETAILS AND EXCEPTIONS.

MECHANICAL PERFORMANCE NOTES:

M1. MECHANICAL CONTRACTOR TO PROVIDE AND INSTALL AN ENERGY STAR LABELED 7—DAY PROGRAMMABLE THERMOSTAT FOR EACH FURNACE. VERIFY THERMOSTAT LOCATION WITH OWNER IN FIELD.

M2. COORDINATE EXACT LOCATION OF ALL MECHANICAL UNITS WITH GENERAL CONTRACTOR. VERIFY IN FIELD.

M3. PROVIDE AND INSTALL OUTSIDE AIR AS SPECIFIED ON THE PLANS. SEE TYPICAL FURNACE ECONOMIZER DETAIL FOR FURNACES F—1 AND F—2. SEE TYPICAL OUTSIDE AIR DETAIL FOR FURNACES F—3a AND F—3b.

M4. PROVIDE AND INSTALL ALL NECESSARY COMPONENTS FOR FURNACE/CONDENSING UNIT SYSTEMS. (IE REFRIGERANT LINES, COMBUSTION AIR PIPING, EXHAUST PIPING, CONCENTRIC TERMINATION KIT). ALL PER MANUFACTURERS RECOMMENDATIONS

M5. PROVIDE AND INSTALL MAKE UP AIR OPENINGS TO THE OUTSIDE. THE REQUIRED MAKEUP AIR OPENING IS 144 SQUARE INCHES PER DRYER/TUMBLER. SEE EQUIP. MFG FOR REQUIREMENTS.

M6. SIZING FOR WATER HEATER AND FURNACE COMBUSTION AIR AND VENT PIPING DETERMINED USING MANUFACTURERS SPECIFICATIONS, ACTUAL LENGTH AND CONFIGURATION INFORMATION FROM FIELD.

M7. PROVIDE AND INSTALL FIRE DAMPERS IN MECHANICAL DUCT WITH REQUIRED ACCESS DOORS AT ALL FIRE RATED ASSEMBLY PENETRATIONS. FIRE BARRIER IS AT GYP. BOARD. (COORDINATE WITH ARCHITECTURAL PLANS). FIRE RATED AREAS ARE INCLUDING BUT NOT LIMITED TO: CORRIDORS AND ALL GUEST UNITS. SEE DETAILS FOR MORE INFORMATION.

M8. ALL MECHANICAL ROOF PENETRATIONS TO BE PAINTED BLACK.

SEISMIC SUPPORT NOTES:

BRACING FOR SUSPENDED DUCTWORK, ETC

1. PER ASCE STANDARD 7—05 13.6.7 SEISMIC SUPPORTS ARE NOT REQUIRED FOR EITHER OF THE FOLLOWING CONDITIONS:
   A. HVAC DUCTS ARE SUSPENDED WITH HANGERS 12" OR LESS IN LENGTH.
   B. HVAC DUCTS HAVE A CROSS—SECTIONAL AREA OF LESS THAN 6 SQUARE FEET.
2. IF INSTANCES OCCUR WHERE HVAC DUCT IS SUSPENDED WITH HANGERS GREATER THAN 12" IN LENGTH AND HVAC DUCT HAS A CROSS—SECTIONAL AREA GREATER THAN 6 SQUARE FEET SYSTEM CONNECTORS AND COMPONENTS SHALL BE COMPATIBLE AND DESIGNED FOR THE APPLICATION THAT THEY ARE USED FOR. SHALL HAVE A MINIMUM OF TWO TRANSVERSE BRACES PER STRAIGHT DUCT RUN WITH A MAXIMUM DISTANCE OF 30' BETWEEN TRANSVERSE BRACES. SHALL HAVE A MINIMUM OF ONE LONGITUDINAL BRACE PER STRAIGHT DUCT RUN WITH A MAXIMUM DISTANCE OF 40' BETWEEN LONGITUDINAL BRACES. BRACING SHALL ONLY OCCUR AT OR NEAR AREAS WHERE SUFFICIENT DUCT STIFFNESS IS PRESENT (AT OR NEAR JOINT CONNECTIONS).

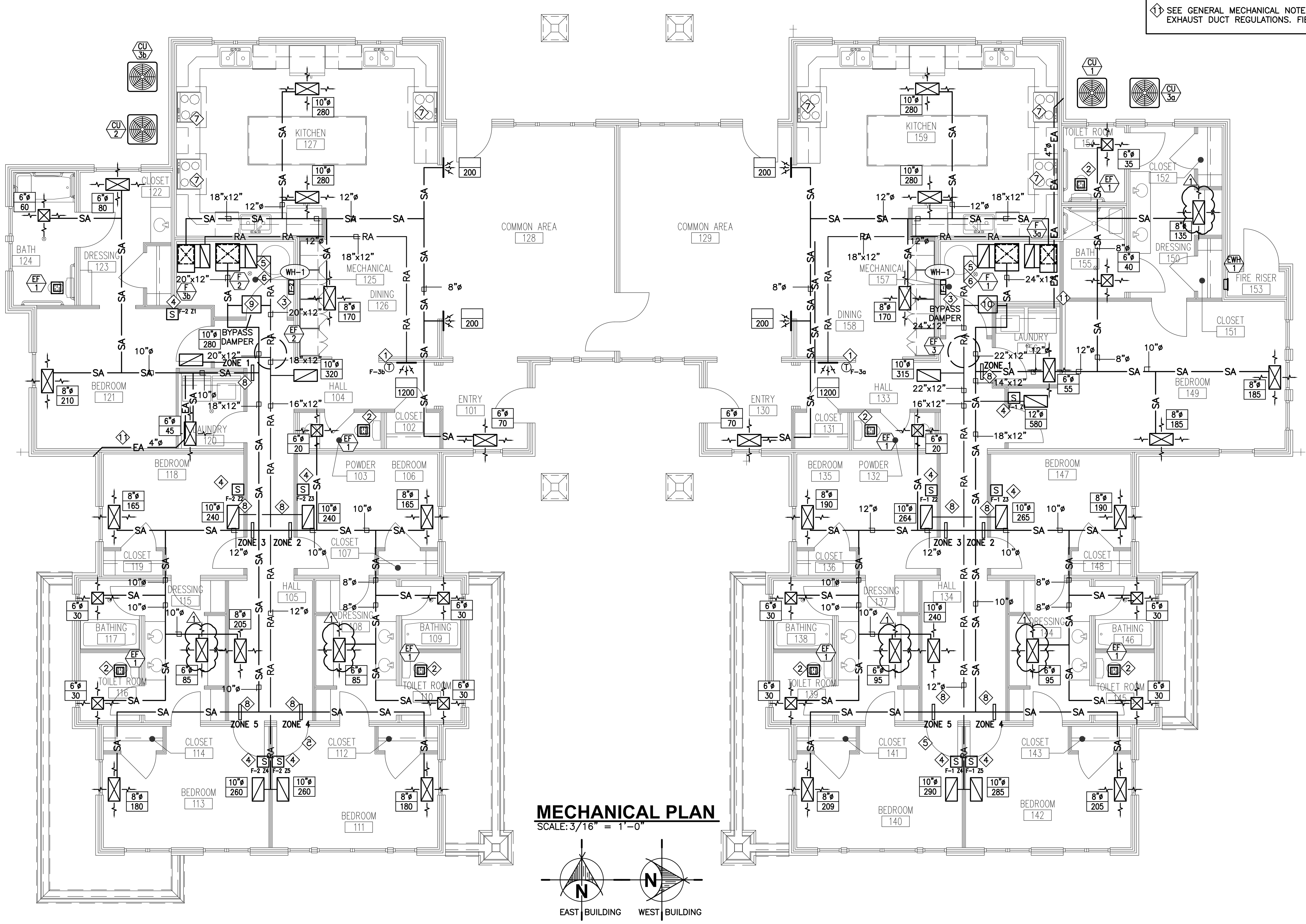

MECHANICAL PLAN
SCALE: 3/16" = 1'—0"

State of Utah
Department of Administrative Services
Division of Facilities Construction & Management
4110 State Office Building
Salt Lake City, Utah 84114
Phone: (801) 538 - 3018
Fax: (801) 538 - 3267
http://dfcm.utah.gov

ROYAL ENGINEERING
ELECTRICAL / MECHANICAL
2335 SOUTH STATE SUITE 225, PROVO, UTAH 84606
PHONE: 801.375.2228 FAX: 801.375.2676

COPYRIGHT© JOB# J10037 DATE PLOTTED: 05/24/2010
THESE DOCUMENTS ARE INSTRUMENTS OF PROFESSIONAL SERVICE AND THE INFORMATION CONTAINED HEREIN IS INCOMPLETE UNLESS IN CONJUNCTION WITH ROYAL ENGINEERING'S INTERPRETATIONS, DECISIONS, OBSERVATIONS AND ADMINISTRATIONS. USE OR REPRODUCTION OF THESE DOCUMENTS IN WHOLE OR IN PART WITHOUT ROYAL ENGINEERING'S CONSENT IS IN VIOLATION OF COMMON LAW, COPYRIGHTS, STATUTORY AND OTHER RESERVED RIGHTS. REFER TO ACT 17 U.S.C. PAR. 511 (1991), WHICH PREEMPTS STATE AND LOCAL PUBLIC RECORD ACTS. REFER TO ACT 17 U.S.C. PAR. 301 (1991).

BUILDING NAME:

PROPERTY# 15278
USOR - DSVBI
TRAINING HOUSING
Salt Lake City, Utah

PROJECT TITLE:

USOR - Division of Services for the Blind and Visually Impaired TRAINING HOUSING

REGISTERED PROFESSIONAL ENGINEER 4858829 MARK L. MAKIN STATE OF UTAH

MARK	DATE	DESCRIPTION
1	05.27.10	Addendum 1

ISSUE TYPE: Construction Document Phase

ISSUE DATE: 04.30.2010

DFCM PROJECT NO: 09240200
CAD PROJECT NO:
CAD DWG FILE: J10037 Mech All.dwg
DRAWN BY: SJN
CHK'D BY: MLM
COPYRIGHT: STATE OF UTAH

SHEET TITLE

Mechanical Plan

SHEET NUMBER

MH-101

SHEET 48 OF 58

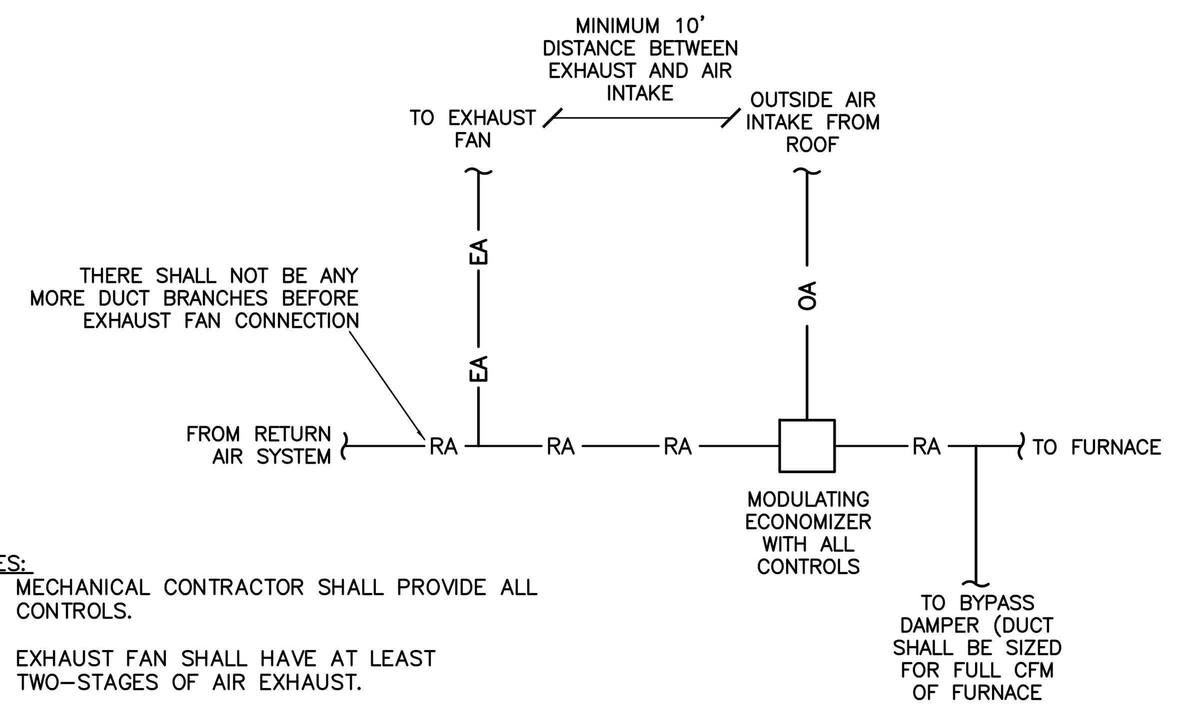

NOTES:
1. MECHANICAL CONTRACTOR SHALL PROVIDE ALL CONTROLS.
2. EXHAUST FAN SHALL HAVE AT LEAST TWO-STAGES OF AIR EXHAUST.
3. EXHAUST FAN SHALL PROVIDE BUILDING PRESSURE RELIEF (PROVIDE PRESSURE SENSOR)
4. MODULATING ECONOMIZER SHALL PROVIDE FROM 0 CFM TO THE FULL FURNACE CFM.

FURNACE ECONOMIZER DETAIL

SCALE: NONE

ZONING SCHEDULE

RTU	ZONE LABEL	MAX PRIMARY AIRFLOW (CFM)	MIN PRIMARY AIRFLOW (CFM)	UNIT & INLET SIZE	OUTLET	PART NUMBER	REMARKS
F-1	ZONE 1	635	0	8 INCH	12X10	35EV1000R081822	1, 2
	ZONE 2	605	0	8 INCH	12X10	35EV1000R081822	1, 2
	ZONE 3	345	0	6 INCH	12X8	35EV1000R061822	1, 2
	ZONE 4	209	0	5 INCH	12X8	35EV1000R051822	1, 2
	ZONE 5	205	0	5 INCH	12X8	35EV1000R051822	1, 2
F-2	ZONE 1	395	0	6 INCH	12X8	35EV1000R061822	1, 2
	ZONE 2	330	0	6 INCH	12X8	35EV1000R061822	1, 2
	ZONE 3	515	0	7 INCH	12X10	35EV1000R071822	1, 2
	ZONE 4	180	0	5 INCH	12X8	35EV1000R051822	1, 2
	ZONE 5	180	0	5 INCH	12X8	35EV1000R051822	1, 2

1. DESIGN STANDARD: CARRIER VVT-CCN 35E SINGLE DUCT TERMINAL
2. MECHANICAL CONTRACTOR SHALL PROVIDE ALL CONTROLS (INCLUDING, BUT NOT LIMITED TO: ACTUATORS, ZONE ROOM TEMPERATURE SENSORS, SEPARATE ELECTRICAL COMPONENTS FOR DAMPERS AND ACTUATORS, ETC.) FOR ZONING SYSTEM.

OUTSIDE AIR BALANCING SCHEDULE

PER ASHRAE 62.2-2007

MARK	BALANCE TO CFM	MINIMUM DUCT SIZE	REMARKS
F 3a	75	8"X8"	SEE OUTSIDE AIR DUCT DETAIL
F 3b	75	8"X8"	SEE OUTSIDE AIR DUCT DETAIL

EXHAUST FAN SCHEDULE

MARK	NOMINAL CFM	SOUND RATING (SONES)	RATED LOAD	VOLTAGE	MOUNTING	REMARKS	
EF 1	80	0.3	23.3W	120V	CEILING	BROAN QTXE080.	1, 2, 3, 4
EF 2	1600	6.3	1/3 HP	120V	ROOF	CARNES VEDK-15M3 DIRECT DRIVE	1, 3, 6
EF 3	1999	8.8	1/3 HP	120V	ROOF	CARNES VEDK-15M3 DIRECT DRIVE	1, 3, 6
EH 1	220	5.0	1.8 AMPS	120V	WALL	BROAN QS1.	1, 5

1. APPROVED MANUFACTURERS: BROAN, FANTECH, ACME, CARNES, PENN, COOK, BREIDERT, COOLAIR, CAPTIVE AIRE. (SUBJECT TO PROJECT DOCUMENT CONFORMANCE)
2. CONTROL WITH LIGHTS BY ELECTRICAL CONTRACTOR. ALSO INCLUDE A TIMER THAT WILL OPERATE THE FAN FOR A TIMED INTERVAL AFTER THE OCCUPANT LEAVES THE ROOM.
3. EXHAUST FAN SHALL HAVE INTEGRAL BACKDRAFT DAMPER.
4. BATHROOM EXHAUST FANS SHALL BE ENERGY STAR LABELED.
5. CONTROL BY ELECTRICAL CONTRACTOR WITH SEPARATE CONTROL SWITCH.
6. EXHAUST FAN SHALL BE HAVE AT LEAST TWO-STAGES OF AIR EXHAUST. EXHAUST FAN TO PROVIDE BUILDING PRESSURE RELIEF. MECHANICAL CONTRACTOR TO PROVIDE ALL CONTROLS.

NOTE: VERIFY ALL EQUIPMENT MANUFACTURERS, EFFICIENCIES, AND OPTIONS WITH OWNER BEFORE ORDERING.

GAS FIRED FURNACE SCHEDULE

MARK	MIN.REQ'D INPUT BTU/HR (AT SEA LEVEL)	MINIMUM COOLING S.C.F.M.	MOTOR		REMARKS
			MIN. AMPS	VOLTAGE	
F 1	80,000	1999	14.6	120V	1, 2, 3, 5, 6, 7 DESIGN STANDARD: CARRIER 58UVB080
F 2	80,000	1600	14.6	120V	1, 2, 3, 5, 6, 7 DESIGN STANDARD: CARRIER 58UVB080
F 3	40,000	1200	9.5	120V	1, 2, 3, 5, 6, 7 DESIGN STANDARD: CARRIER 58UVB040
CC X	——	——	——	——	4

1. SAME MANUFACTURER AS CONDENSING UNIT. APPROVED MANUFACTURERS: CARRIER, LENNOX, TRANE, YORK. (SUBJECT TO PROJECT DOCUMENT CONFORMANCE)
2. WITH AFUE GREATER THAN OR EQUAL TO 94 WITH LOW ELECTRIC ENERGY USE. 2-STAGES OF HEATING.
3. SHALL HAVE CLOSED COMBUSTION (I.E., SEALED COMBUSTION AND EXHAUST DUCTING) OR POWER-VENTED EXHAUST.
4. MATCH WITH CONDENSING UNIT. SHALL BE COMPATIBLE WITH FURNACE POSITION. (ORIENTATION)
5. PROVIDE AND INSTALL FILTER SECTION.
6. APPROVED MANUFACTURERS: CARRIER, LENNOX, TRANE, YORK. (SUBJECT TO PROJECT DOCUMENT CONFORMANCE)
7. FURNACE SHALL BE DESIGNED FOR MULTI-POSITION INSTALLATION.

AIR COOLED CONDENSING UNIT SCHEDULE (1-PHASE)

MARK	MIN. NOMINAL SIZE (TONS)	RATED MCA	MOCP	VOLTAGE	REMARKS	
CU 1	5	30.06	50	208/230V 1-PHASE	DESIGN STANDARD: CARRIER 24ACB760	1, 2
CU 2	4	27.80	40	208/230V 1-PHASE	DESIGN STANDARD: CARRIER 24ACB748	1, 2
CU 3	3	22.08	35	208/230V 1-PHASE	DESIGN STANDARD: CARRIER 24ACB736	1, 2

1. APPROVED MANUFACTURERS: CARRIER, LENNOX, TRANE, YORK. (SUBJECT TO PROJECT DOCUMENT CONFORMANCE)
2. SAME MANUFACTURER AS FURNACE & CC. 15 SEER MINIMUM, R410A. CAPABLE OF TWO-STAGE COOLING.

NOTE: VERIFY ALL EQUIPMENT MANUFACTURERS, EFFICIENCIES, AND OPTIONS WITH OWNER BEFORE ORDERING.

ELECTRIC WALL HEATER SCHEDULE

MARK	DESCRIPTION	ELECTRICAL		BTUH	MOUNTING	REMARKS
		FLA	VOLTAGE			
EWH 1	WALL HEATER	12.5	120V/1PHS	5160	WALL	1, 2

1. APPROVED MANUFACTURERS: BROAN, QMARK, BERKO, RAYWALL, REZNOR. (SUBJECT TO PROJECT DOCUMENT CONFORMANCE)
2. BROAN MODEL 174. WITH INTEGRAL THERMOSTAT, PERMANENTLY LUBRICATED MOTOR AND 20 GAUGE STEEL LOUVERS WITH WHITE ENAMEL FINISH.

NOTE: VERIFY ALL EQUIPMENT MANUFACTURERS, EFFICIENCIES, AND OPTIONS WITH OWNER BEFORE ORDERING.

State of Utah
Department of Administrative Services
Division of Facilities Construction & Management
4110 State Office Building
Salt Lake City, Utah 84114
Phone: (801) 538 - 3018
Fax: (801) 538 - 3267
http://dfcm.utah.gov

ROYAL ENGINEERING
ELECTRICAL MECHANICAL
2335 SOUTH STATE SUITE 225 PROVO, UTAH 84606
PHONE: 801375.2228 FAX: 801375.2676
COPYRIGHT© JOB# J10037 DATE PLOTTED: 05/24/2010
THESE DOCUMENTS ARE INSTRUMENTS OF PROFESSIONAL SERVICE AND THE INFORMATION CONTAINED HEREIN IS INCOMPLETE UNLESS IN CONJUNCTION WITH ROYAL ENGINEERING'S INTERPRETATIONS, DECISIONS, OBSERVATIONS AND ADMINISTRATIONS. USE OR REPRODUCTION OF THESE DOCUMENTS IN WHOLE OR IN PART WITHOUT ROYAL ENGINEERING'S CONSENT IS IN VIOLATION OF COMMON LAW, COPYRIGHTS, STATUTORY AND OTHER RESERVED RIGHTS. REFER TO ACT 17 U.S.C. PAR. 511 (1991), WHICH PREEMPTS STATE AND LOCAL PUBLIC RECORD ACTS. REFER TO ACT 17 U.S.C. PAR. 301 (1991).

BUILDING NAME:
PROPERTY# 15278
USOR - DSVBI
TRAINING HOUSING
Salt Lake City, Utah

PROJECT TITLE:
USOR - Division of Services for the Blind and Visually Impaired TRAINING HOUSING

REGISTERED PROFESSIONAL ENGINEER 4858829 MARK L. MAKIN STATE OF UTAH

MARK	DATE	DESCRIPTION

ISSUE TYPE: Construction Document Phase
ISSUE DATE: 04.30.2010
DFCM PROJECT NO: 09240200
CAD PROJECT NO:
CAD DWG FILE: J10037 Mech All.dwg
DRAWN BY: SJN
CHK'D BY: MLM
COPYRIGHT: STATE OF UTAH

SHEET TITLE
Mechanical Schedules & Details

SHEET NUMBER
MH-201

1 2 3 4 5

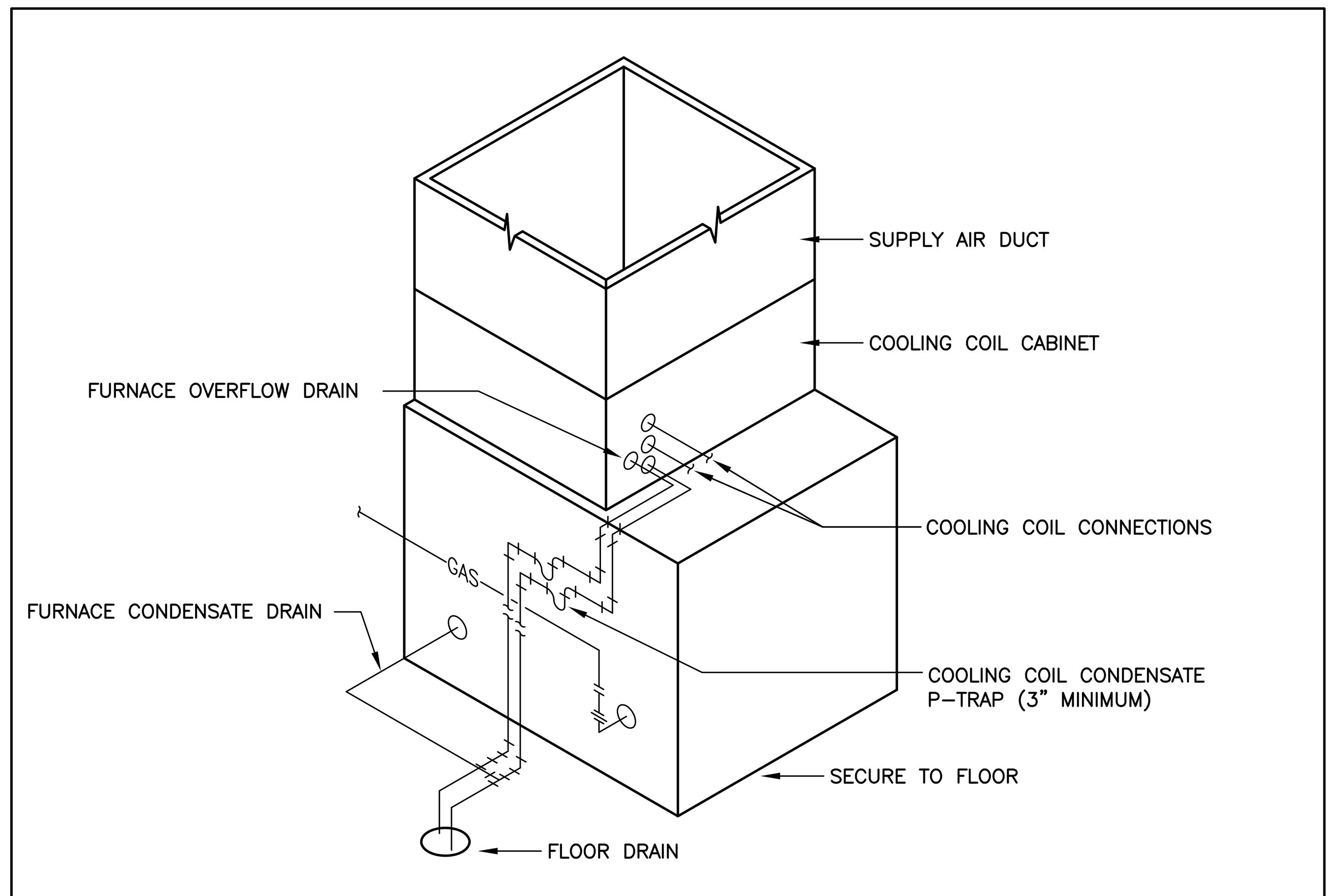

CONDENSATE DRAIN TRAP DETAIL

SCALE: NONE

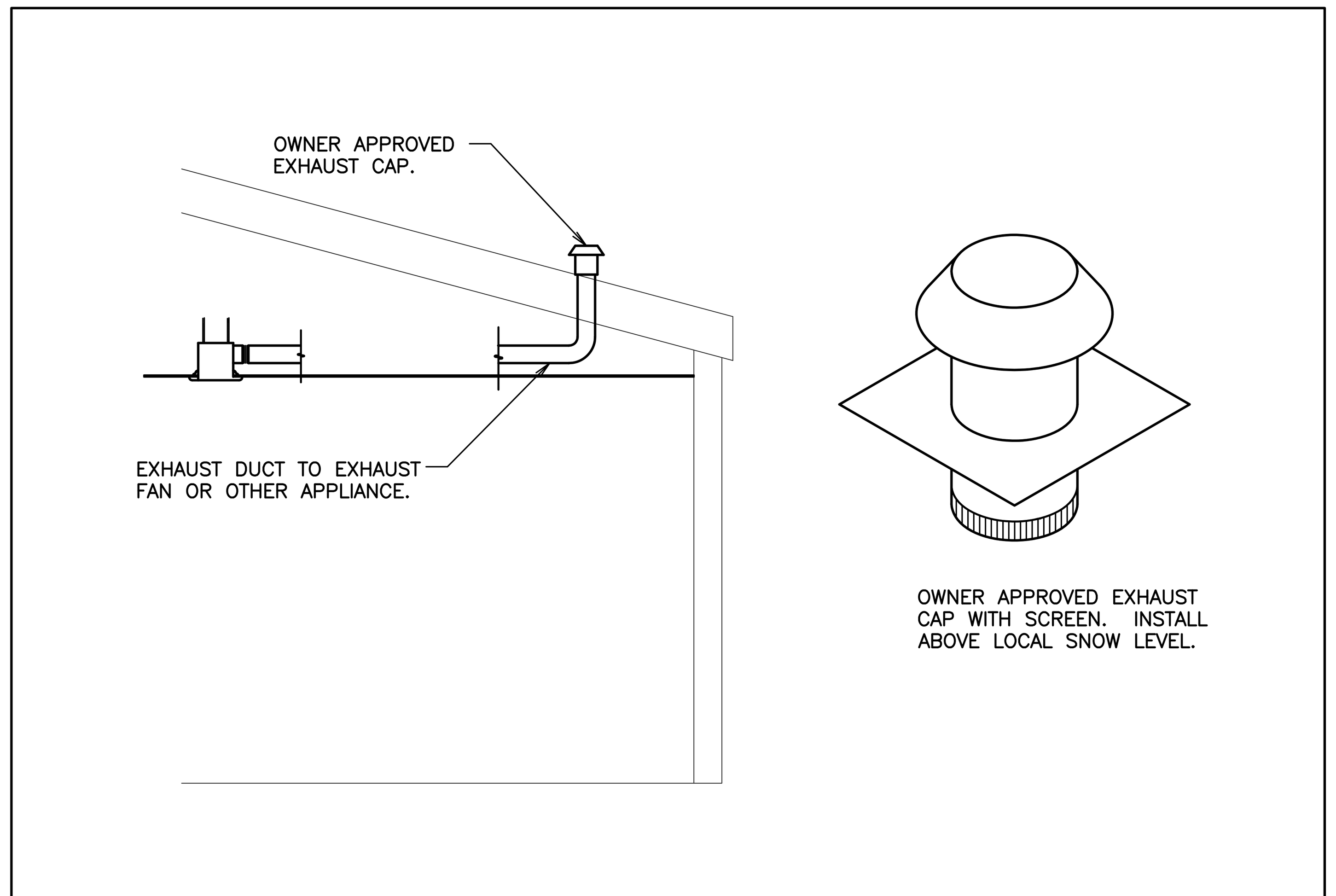

TYPICAL ROOF CAP DETAIL

SCALE: NONE

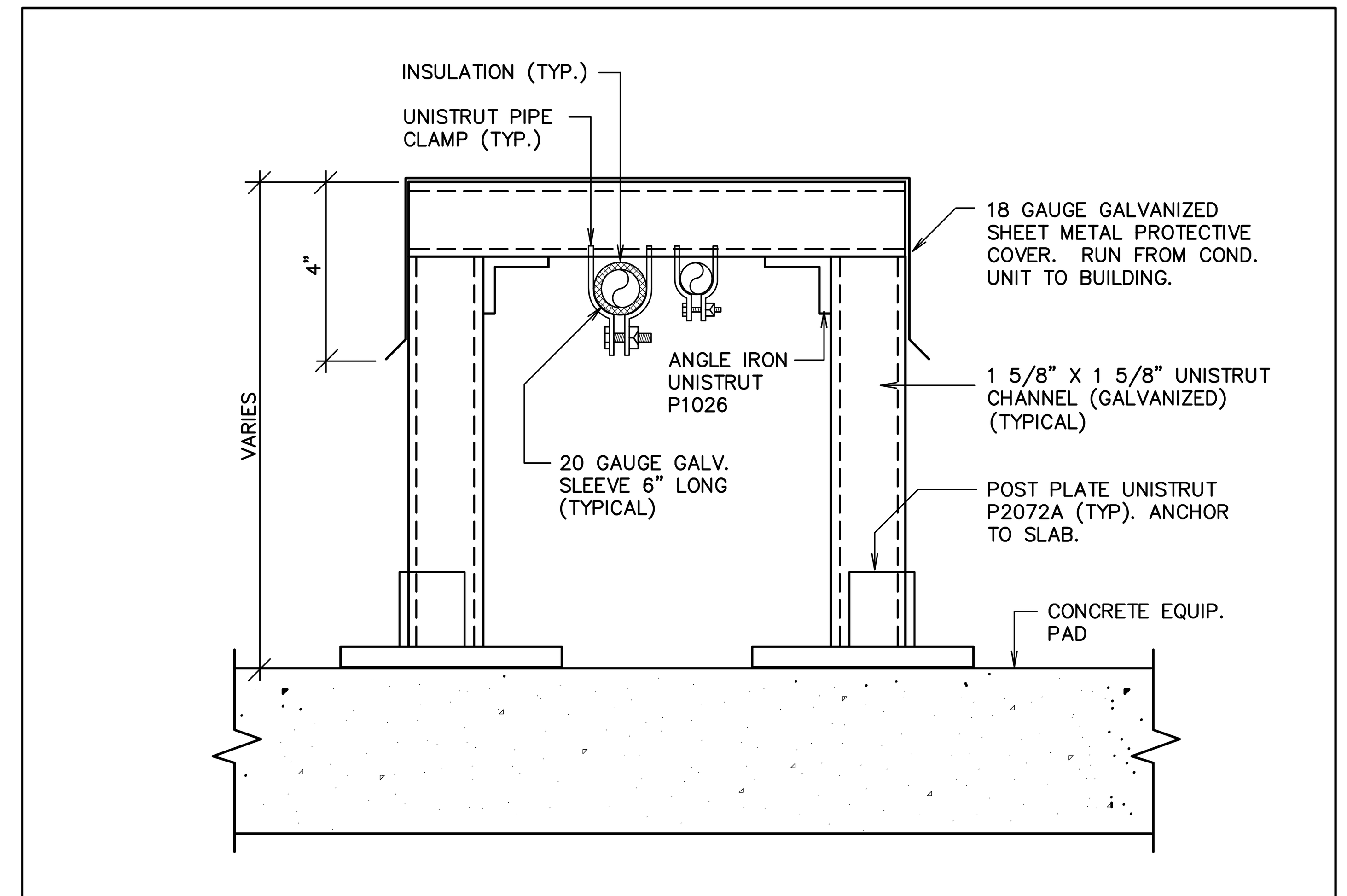

EXTERIOR REFRIGERANT PIPE SUPPORT DETAIL

SCALE: NONE

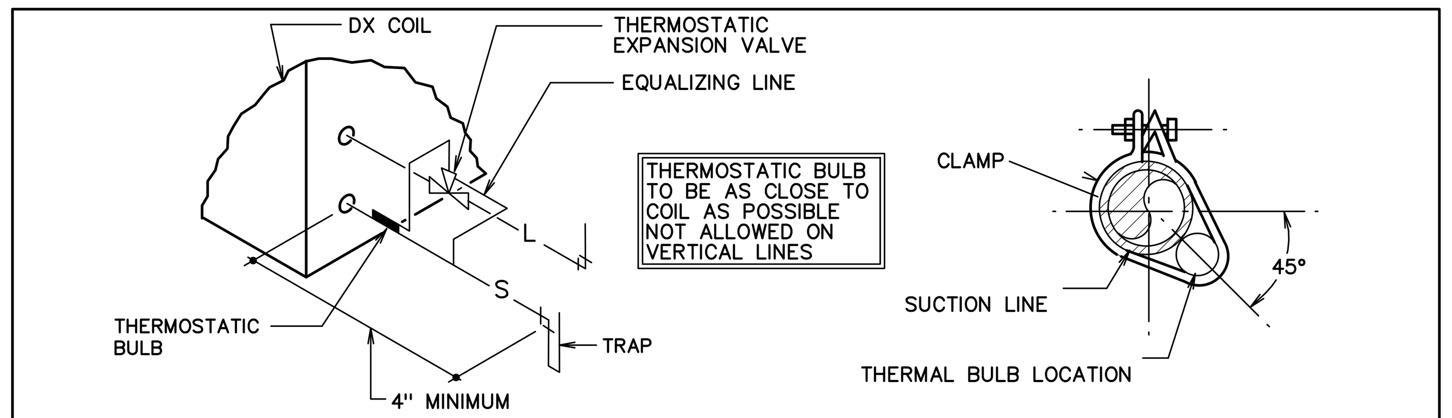

TYPICAL REFRIGERANT COIL CONNECTION DETAIL

SCALE: NONE

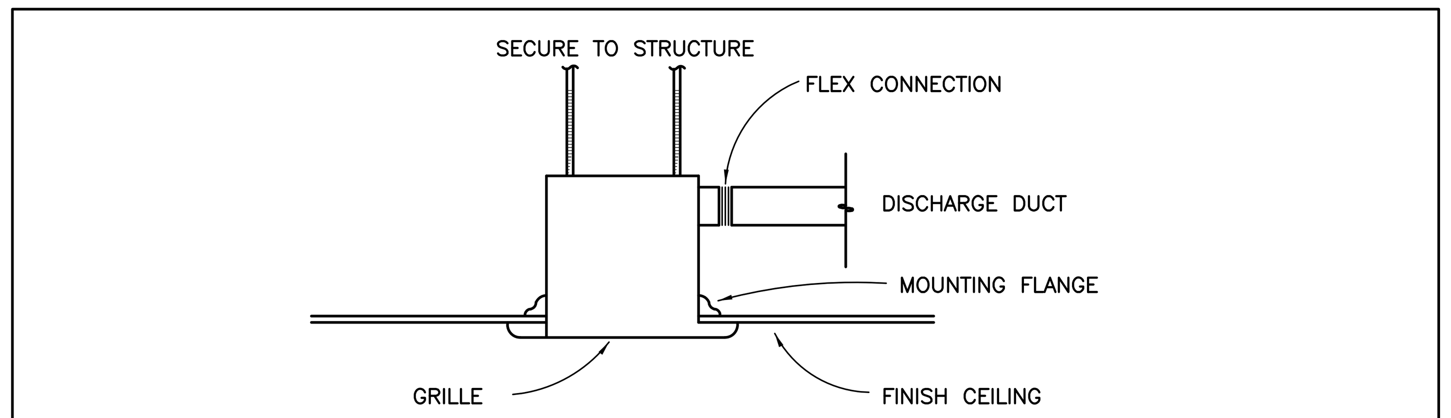

TYPICAL CEILING MOUNTED EXHAUST FAN

SCALE: NONE

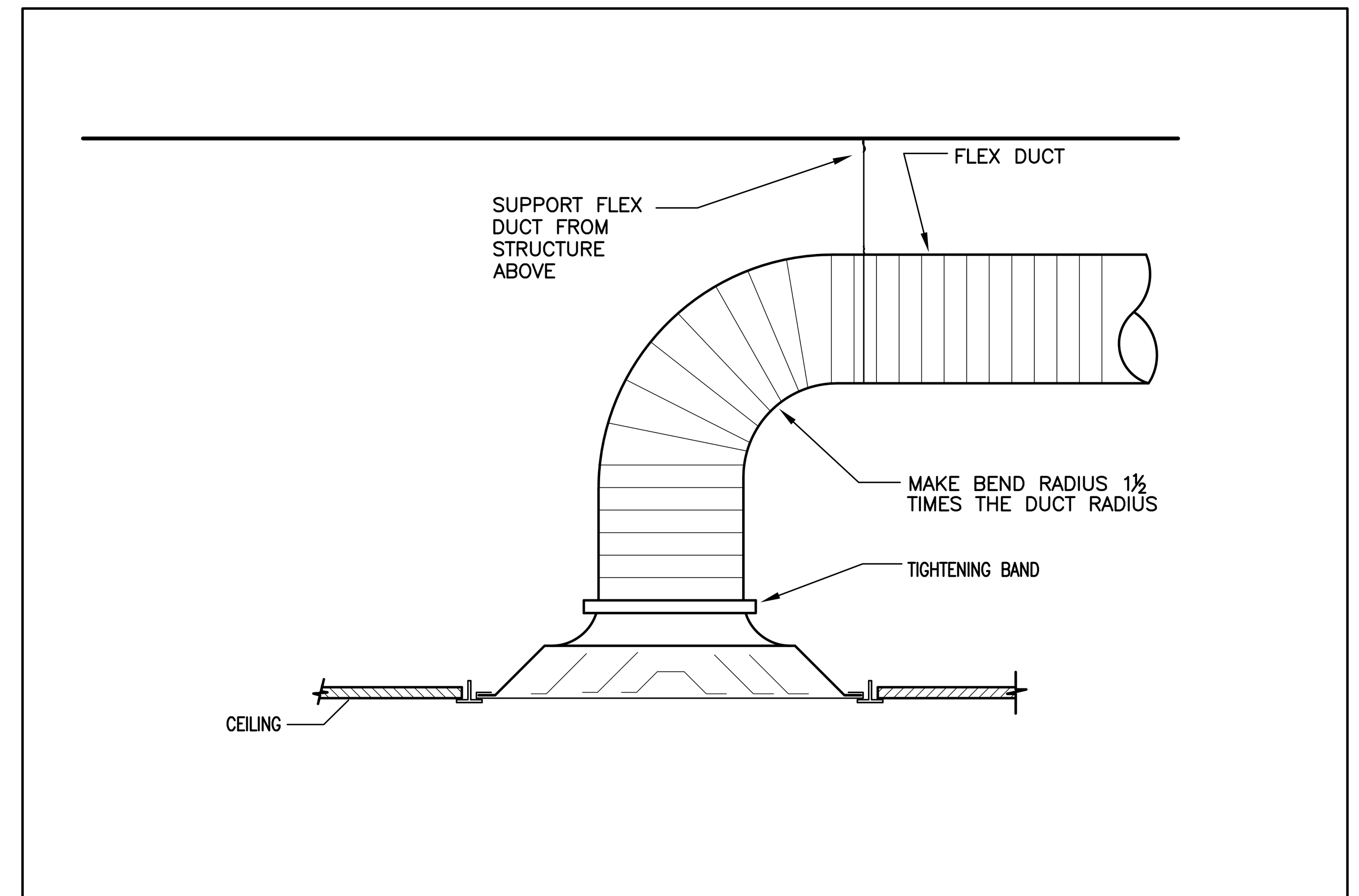

DIFFUSER CONNECTION DETAIL

SCALE: NONE

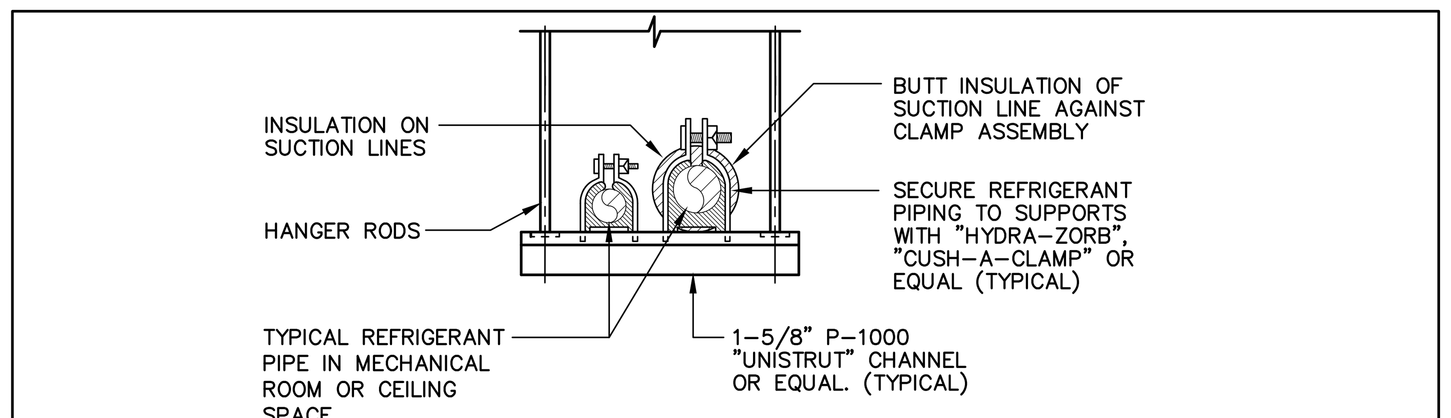

TYPICAL SUSPENDED REFRIGERANT PIPE SUPPORT

SCALE: NONE

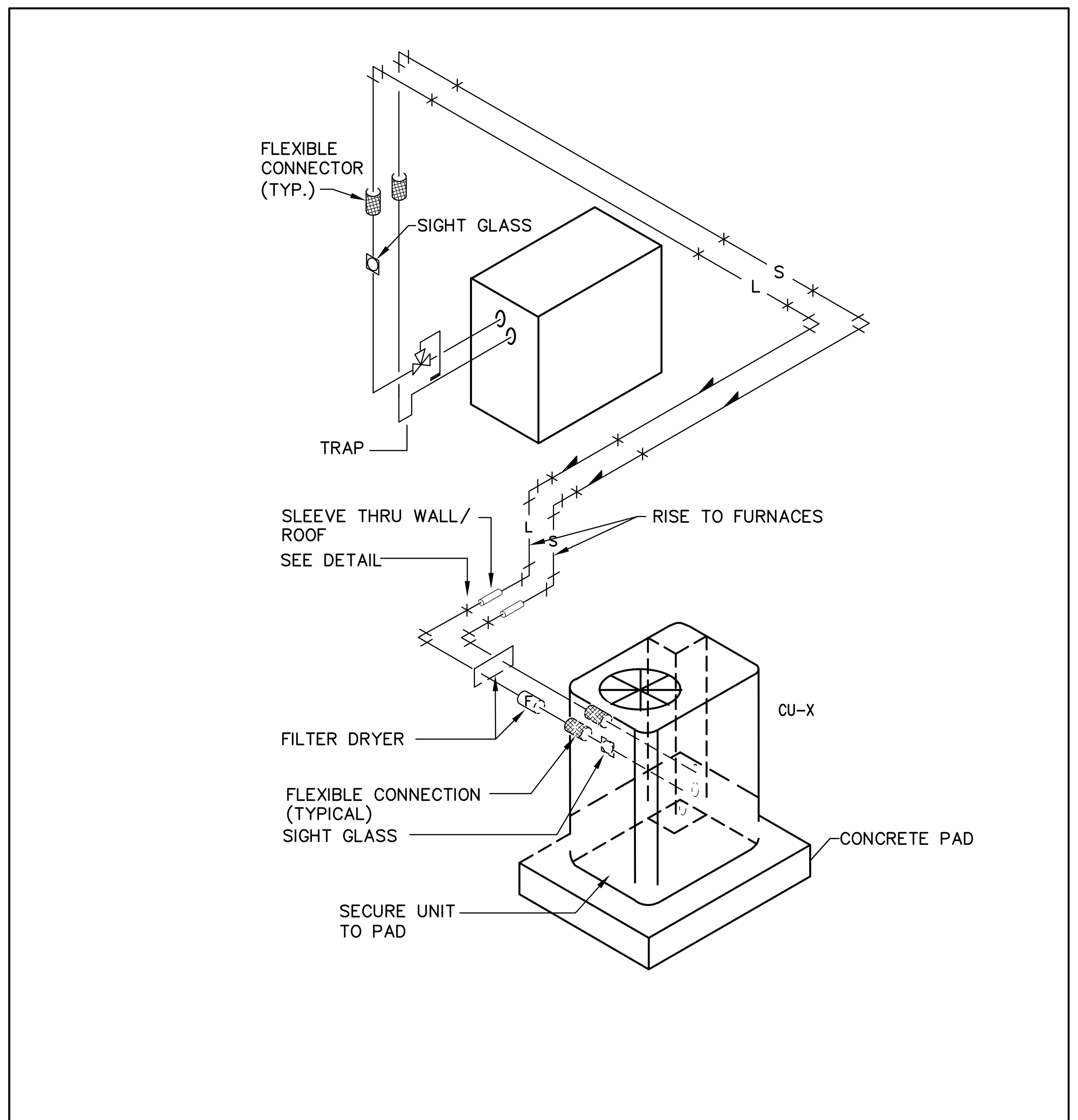

TYPICAL REFRIGERANT SCHEME

SCALE: NONE

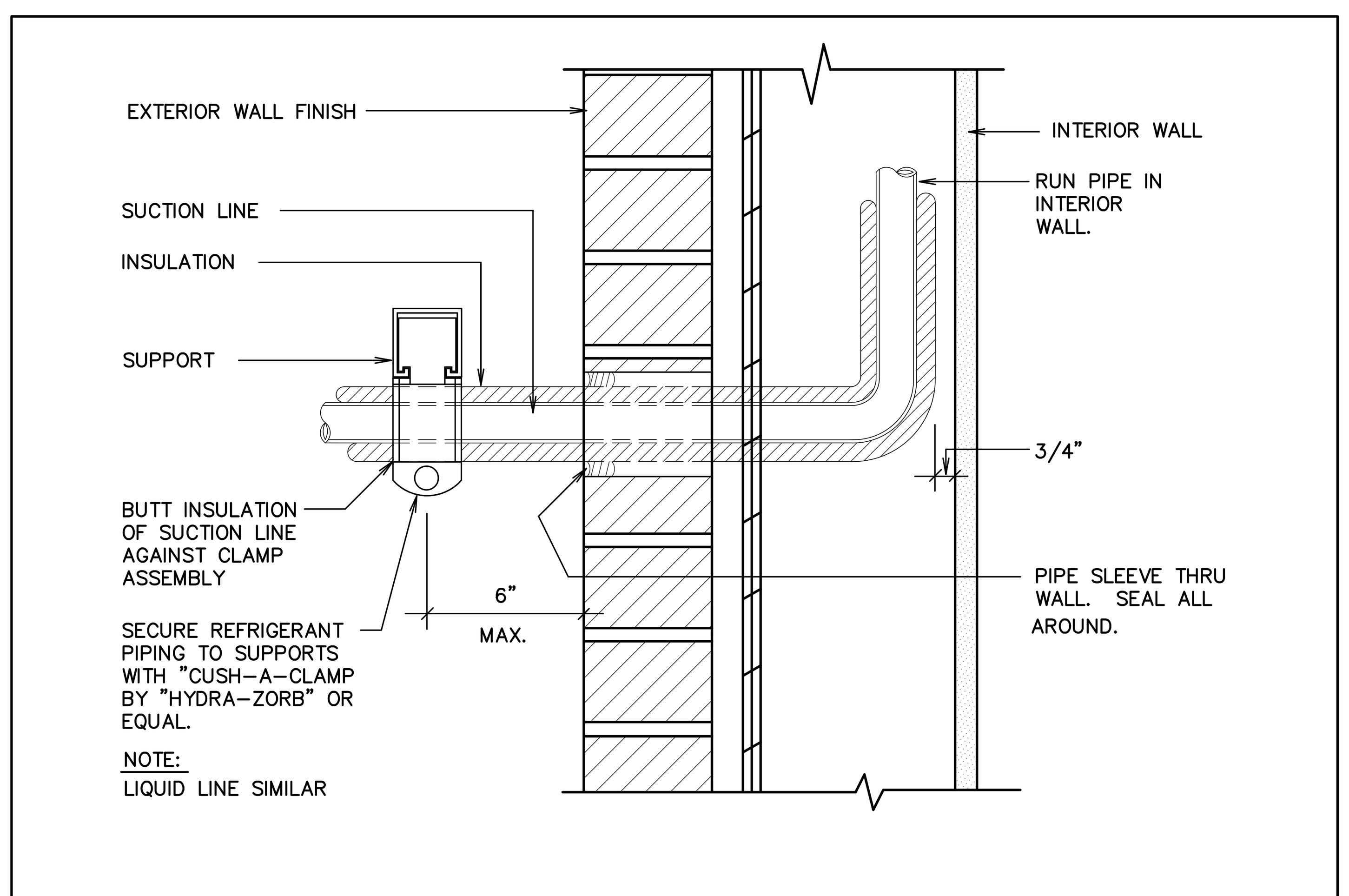

TYPICAL REFRIGERANT PIPE SUPPORT AT WALL

SCALE: NONE

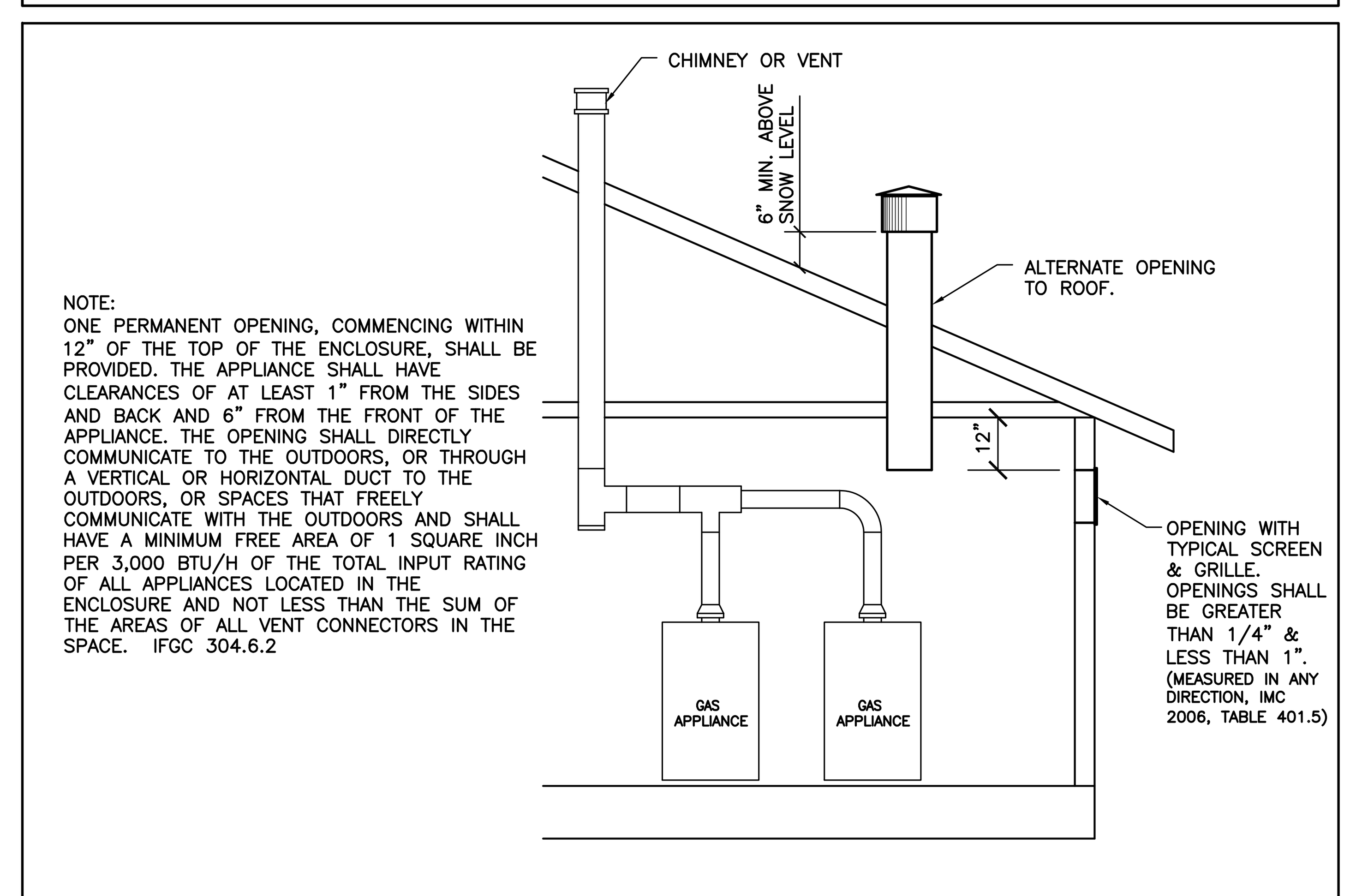

ONE COMBUSTION AIR OPENING DETAIL

SCALE: NONE

State of Utah
Department of Administrative Services
DFCM
Division of Facilities Construction & Management
4110 State Office Building
Salt Lake City, Utah 84114
Phone: (801) 538 - 3018
Fax: (801) 538 - 3267
http://dfcm.utah.gov

ROYAL ENGINEERING
ELECTRICAL MECHANICAL
2335 SOUTH STATE SUITE 225 PROVO, UTAH 84606
PHONE: 801375.2228 FAX: 801375.2676

COPYRIGHT© JOB# J10037 DATE PLOTTED: 05/24/2010

THESE DOCUMENTS ARE INSTRUMENTS OF PROFESSIONAL SERVICE AND THE INFORMATION CONTAINED HEREIN IS INCOMPLETE UNLESS IN CONJUNCTION WITH ROYAL ENGINEERING'S INTERPRETATIONS, DECISIONS, OBSERVATIONS AND ADMINISTRATIONS. USE OR REPRODUCTION OF THESE DOCUMENTS IN WHOLE OR IN PART WITHOUT ROYAL ENGINEERING'S CONSENT IS IN VIOLATION OF COMMON LAW, COPYRIGHTS, STATUTORY AND OTHER RESERVED RIGHTS. REFER TO ACT 17 U.S.C. PAR. 511 (1991), WHICH PREEMPTS STATE AND LOCAL PUBLIC RECORD ACTS. REFER TO ACT 17 U.S.C. PAR. 301 (1991).

BUILDING NAME:

PROPERTY# 15278
USOR - DSVBI
TRAINING HOUSING
Salt Lake City, Utah

PROJECT TITLE:

USOR - Division of Services for the Blind and Visually Impaired TRAINING HOUSING

MARK	DATE	DESCRIPTION

ISSUE TYPE: Construction Document Phase

ISSUE DATE: 04.30.2010

DFCM PROJECT NO: 09240200
CAD PROJECT NO:
CAD DWG FILE: J10037 Mech All.dwg
DRAWN BY: SJN
CHK'D BY: MLM
COPYRIGHT: STATE OF UTAH

SHEET TITLE

Mechanical Details

SHEET NUMBER

MH-202

SHEET 50 OF 58

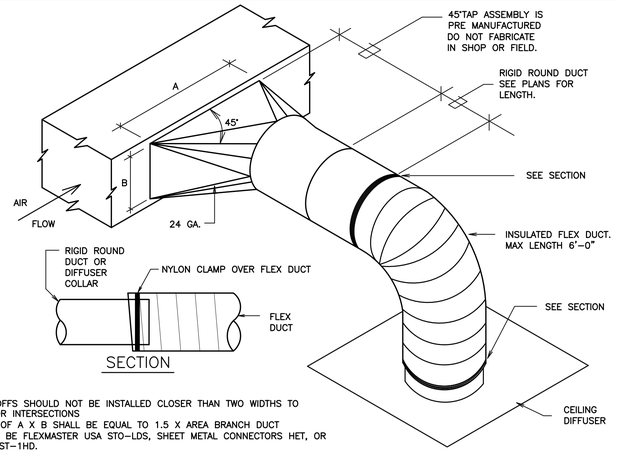

NOTES:
(1)TAKE-OFFS SHOULD NOT BE INSTALLED CLOSER THAN TWO WIDTHS TO ELBOWS OR INTERSECTIONS
(2) AREA OF A X B SHALL BE EQUAL TO 1.5 X AREA BRANCH DUCT
(3) SHALL BE FLEXMASTER USA STO-LDS, SHEET METAL CONNECTORS HET, OR AIR-RITE ST-1HD.

ROUND TAKE-OFF

SCALE: NONE

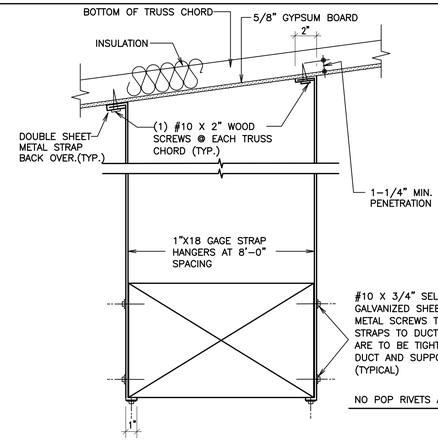

TYPICAL DUCT STRAP HANGER DETAIL

SCALE: NONE

NOTE:
WHERE A CLOSET IS DESIGNED FOR THE INSTALLATION OF A CLOTHES DRYER, AN OPENING HAVING AN AREA OF NOT LESS THAN 100 SQUARE INCHES SHALL BE PROVIDED IN THE CLOSET ENCLOSURE IMC 504.5

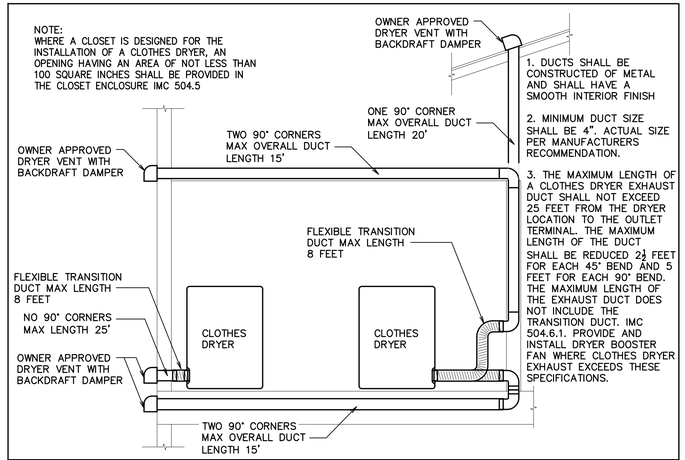

1. DUCTS SHALL BE CONSTRUCTED OF METAL AND SHALL HAVE A SMOOTH INTERIOR FINISH

2. MINIMUM DUCT SIZE SHALL BE 4". ACTUAL SIZE PER MANUFACTURERS RECOMMENDATION.

3. THE MAXIMUM LENGTH OF A CLOTHES DRYER EXHAUST DUCT SHALL NOT EXCEED 25 FEET FROM THE DRYER LOCATION TO THE OUTLET TERMINAL. THE MAXIMUM LENGTH OF THE DUCT SHALL BE REDUCED 2½ FEET FOR EACH 45° BEND AND 5 FEET FOR EACH 90° BEND. THE MAXIMUM LENGTH OF THE EXHAUST DUCT DOES NOT INCLUDE THE TRANSITION DUCT. IMC 504.6.1. PROVIDE AND INSTALL DRYER BOOSTER FAN WHERE CLOTHES DRYER EXHAUST EXCEEDS THESE SPECIFICATIONS.

TYPICAL CLOTHES DRYER EXHAUST ROUTING DIAGRAM

SCALE: NONE

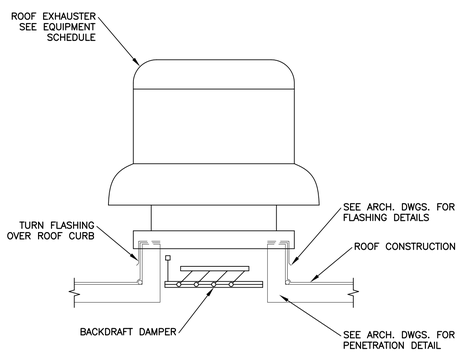

EXHAUST FAN SHALL HAVE MECHANICAL CONNECTION TO ROOF STRUCTURE BELOW. CONNECTION SHALL NOT BE TO CURB OR ROOF DECK. CONNECTION MUST RESIST ALL SUBJECTED FORCES AS IF EXHAUST FAN WERE PART OF THE ROOF STRUCTURE.

EXHAUST FAN DETAIL

SCALE: NONE

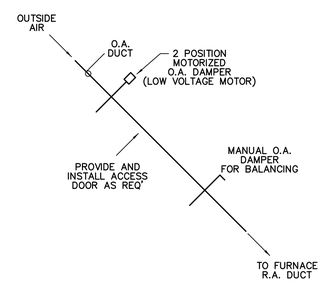

TYPICAL OUTSIDE AIR DUCT DETAIL

SCALE: NONE

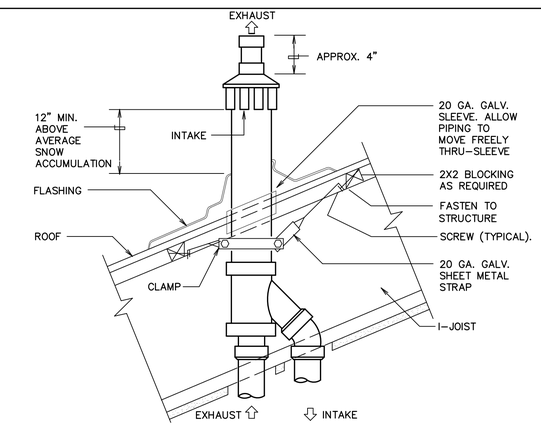

NOTE:
USE EXTENSION KIT NECESSARY TO ACHIEVE CLEARANCE ABOVE SNOW LEVEL.

TYPICAL CONCENTRIC ROOF TERMINATION DETAIL

SCALE: NONE

DIMENSION OF LONGEST SIDE, INCHES	SHEET METAL GAGE (ALL FOUR SIDES)	TRANSVERSE REINFORCING (1)					
		MINIMUM REINFORCING ANGLE SIZE AND MAXIMUM LONGITUDINAL SPACING BETWEEN TRANSVERSE JOINTS &/OR INTERMEDIATE REINFORCING	AT JOINTS				
			MIN. H. IN.	PLAIN S SLIP	HEMMED S SLIP	ALTER'NT BAR SLIP	REINFORCED BAR SLIP
				RECOMMENDED GAGE	RECOMMENDED GAGE	RECOMMENDED GAGE	RECOMMENDED GAGE
UP THRU 12	26	NONE REQUIRED	1	26	26	24	24
13 – 18	24	NONE REQUIRED	1	24	24	24	24
19 – 30	24	1"X1"X1/8" @ 60 IN	1	24	24	24	24
31 – 36	22	1"X1"X1/8" @ 60 IN	1	–	–	22	22

(1) TRANSVERSE REINFORCING SIZE IS DETERMINED BY DIMENSION OF SIDE TO WHICH ANGLE IS APPLIED.

(2) LONGITUDINAL JOINTS TO BE PITTSBURG OR SNAP LOCK TYPE.

DUCT CONSTRUCTION DETAIL

SCALE: NONE

NOTE:
ALL TRANSVERSE AND LONGITUDINAL EDGES OF LINER TO BE COATED WITH ADHESIVE.

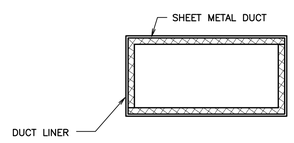

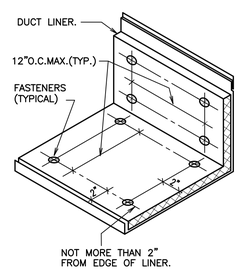

MINIMUM DUCT INSULATION R-VALUES FOR UNCONDITIONED SPACES PER 2006 IECC 503.2.7
SUPPLY = R5
RETURN = R5

MINIMUM DUCT INSULATION R-VALUES WHEN LOCATED OUTSIDE THE BUILDING ENVELOPE PER 2006 IECC 503.2.7
SUPPLY = R8
RETURN = R8

DUCT LINER DETAIL

SCALE: NONE

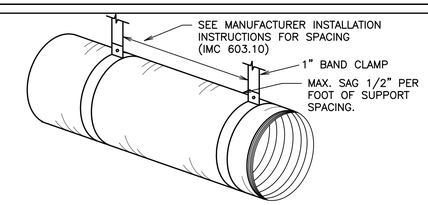

FLEXIBLE DUCT STRAP HANGER DETAIL

SCALE: NONE

State of Utah
Department of Administrative Services
Division of Facilities Construction & Management
4110 State Office Building
Salt Lake City, Utah 84114
Phone: (801) 538 - 3018
Fax: (801) 538 - 3267
http://dfcm.utah.gov

ROYAL ENGINEERING
ELECTRICAL: 2336 SOUTH STATE SUITE 225 PHONE: 801.375.2226
MECHANICAL: PROVO, UTAH 84606 FAX: 801.375.2676

COPYRIGHT© JOB# J10037 DATE PLOTTED: 05/24/2010
THESE DOCUMENTS ARE INSTRUMENTS OF PROFESSIONAL SERVICE AND THE INFORMATION CONTAINED HEREIN IS INCOMPLETE UNLESS IN CONJUNCTION WITH OTHER INSTRUMENTS OF SERVICE. REPRODUCTION, DISTRIBUTION OR ELECTRONIC RETRANSMISSION; USE OR REPRODUCTION, DISTRIBUTION OR ELECTRONIC RETRANSMISSION IN WHOLE OR IN PART WITHOUT WRITTEN AUTHORIZATION FROM ROYAL ENGINEERING IS PROHIBITED. ROYAL ENGINEERING RETAINS OWNERSHIP AND OWNERSHIP OF COPYRIGHTS IN THESE DOCUMENTS. ROYAL ENGINEERING, 2336 SOUTH STATE SUITE 225, PROVO, UTAH 84606 TEL: 801.375.2226 FAX: 801.375.2676 MECHANICAL: 801.375.2676 FAX: 801.119.9111, WHICH PREEMPTS STATE AND LOCAL PUBLIC RECORD ACTS. REFER TO ACT 57 M.R.C. FAX: 801.119.9111.

BUILDING NAME:

PROPERTY# 15278
USOR - DSVBI
TRAINING HOUSING
Salt Lake City, Utah

PROJECT TITLE:

USOR - Division of Services for the Blind and Visually Impaired TRAINING HOUSING

REGISTERED PROFESSIONAL ENGINEER 4858829 MARK L. MAKIN STATE OF UTAH

MARK	DATE	DESCRIPTION

ISSUE TYPE: Construction Document Phase

ISSUE DATE: 04.30.2010

DFCM PROJECT NO: 09240200
CAD PROJECT NO:
CAD DWG FILE: J10037 Mech All.dwg
DRAWN BY: SJN
CHK'D BY: MLM
COPYRIGHT: STATE OF UTAH

SHEET TITLE

Mechanical Details

SHEET NUMBER

MH-203

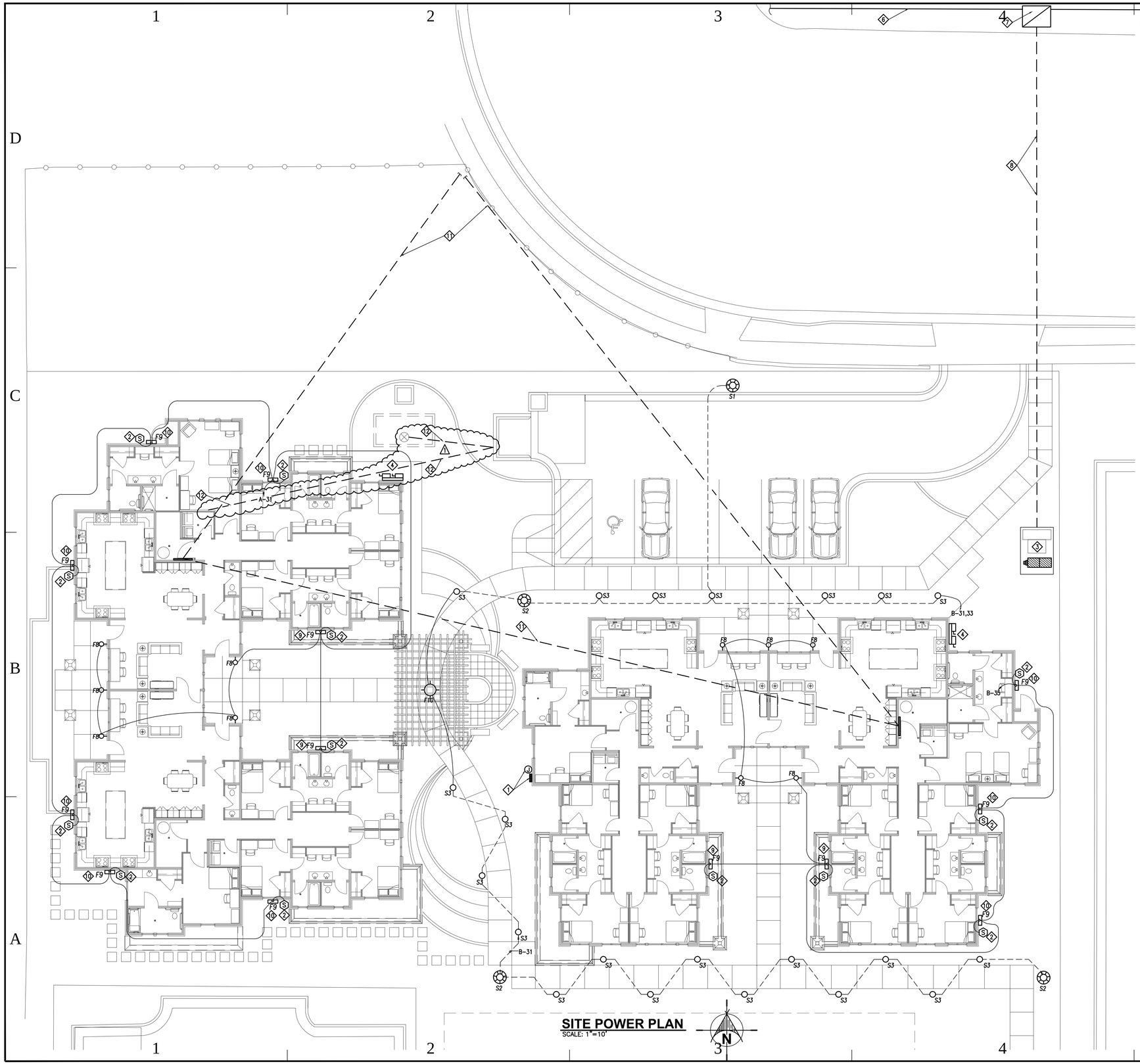

SITE POWER PLAN

SCALE: 1"=10'

ELECTRICAL KEYED NOTES:

1. IRRIGATION CONTROL – COORDINATE WITH LANDSCAPE CONTRACTOR. PROVIDE POWER AS REQUIRED.
2. WATTSTOPPER OUTDOOR MOTION SENSOR (OR EQUAL) TO CONTROL EXTERIOR SECURITY LIGHT.
3. NEW TRANSFORMER, METER BASE, AND VAULT – SEE ELECTRICAL ONE-LINE SHEET EU-502.
4. ELECTRICAL PANEL DISCONNECTS.
5. NOT USED.
6. EXISTING ROCKY MOUNTAIN POWER LINE.
7. NEW ELECTRICAL VAULT TO BE PROVIDED BY E.C. – SEE ONE-LINE SHEET EU-502.
8. NEW TRENCHING AND CONDUIT. TRENCHING IS REQUIRED TO BE COMPLETED UNDER EXISTING ROAD. – SEE ELECTRICAL ONE-LINE SHEET EU-502.
9. COURTYARD SECURITY LIGHT FIXTURES SHALL BE CONTROLLED BY A TIME CLOCK AND MOTION SENSOR – SEE ONE-LINE DIAGRAM SHEET EU-503.
10. SECURITY LIGHT FIXTURE SHALL BE CONTROLLED BY MOTION SENSOR ONLY.
11. TELEPHONE/CABLE CONDUIT AND TRENCHING BY E.C. FROM EXITING TELEPHONE PEDESTAL. – SEE ONE-LINE SHEET EU-502.
12. PROVIDE 20A BREAKER IN PANEL "B1", CONDUIT AND #12 CONDUCTORS TO PROVIDE POWER TO CISTERN PUMP – COORDINATE WITH LANDSCAPE CONTRACTOR.

ELECTRICAL GENERAL NOTES:

1. ALL IRON, STEEL, AND MANUFACTURED GOOD USED ON THIS PROJECT MUST BE COMPLIMENT WITH THE BUY AMERICAN PROVISIONS IN THE AMERICAN RECOVERY AND REINVESTMENT ACT (ARRA). (IRON, STEEL, AND MANUFACTURED GOODS MUST BE PRODUCED IN THE UNITED STATES. A MANUFACTURED GOOD IS A GOODS BROUGHT TO THE CONSTRUCTION SITE FOR INCORPORATION INTO THE BUILDING OR WORK THAT HAS BEEN A) PROCESSED INTO A SPECIFIC FORM OR B) COMBINED WITH OTHER RAW MATERIAL TO CREATE A QUALITATIVELY DIFFERENT MATERIAL.) SEE BUY AMERICAN PROVISIONS OF ARRA FOR DETAILS AND EXCEPTIONS.

State of Utah
Department of Administrative Services

Division of Facilities Construction & Management
4110 State Office Building
Salt Lake City, Utah 84114
Phone: (801) 538 - 3018
Fax: (801) 538 - 3267

http://dfcm.utah.gov

ROYAL ENGINEERING
ELECTRICAL: 2335 SOUTH STATE SUITE 225, PHONE: 801.375.2228
MECHANICAL: PROVO, UTAH 84606, FAX: 801.375.2676

COPYRIGHT© JOB# J10037 DATE PLOTTED: 05/26/2010

THESE DOCUMENTS ARE INSTRUMENTS OF PROFESSIONAL SERVICE AND THE INFORMATION CONTAINED HEREIN IS INCOMPLETE UNLESS IN CONJUNCTION WITH ROYAL ENGINEERING'S INTERPRETATIONS, DECISIONS, OBSERVATIONS AND INTERROGATORIES. ANY REPRODUCTION OF THESE DOCUMENTS IN WHOLE OR IN PART WITHOUT ROYAL ENGINEERING'S CONSENT IS IN VIOLATION OF COMMON LAW COPYRIGHT AND OTHER STATE AND FEDERAL LAWS. ROYAL ENGINEERING'S CONSENT TO REPRODUCE IN WHOLE OR IN PART IS LIKELY WHICH PREEMPTS STATE AND LOCAL PUBLIC RECORD ACTS. REFER TO ACT 17 U.S.C. PAR. 301-1997.

BUILDING NAME:

PROPERTY# 15278
USOR - DSVBI
TRAINING HOUSING
Salt Lake City, Utah

PROJECT TITLE:

USOR - Division of Services for the Blind and Visually Impaired TRAINING HOUSING

REGISTERED PROFESSIONAL ENGINEER
187104
STEVEN R. GRIFFITHS
STATE OF UTAH

MARK	DATE	DESCRIPTION
1	5.27.10	ADDENDUM 1

ISSUE TYPE: Construction Document Phase

ISSUE DATE: 04.30.2010

DFCM PROJECT NO: 09240200
CAD PROJECT NO:
CAD DWG FILE: J10037 ELEC ALL.dwg
DRAWN BY: CON
CHK'D BY: SRG
COPYRIGHT: STATE OF UTAH

SHEET TITLE

SITE POWER PLAN

SHEET NUMBER

ES-101

SHEET 52 OF 58

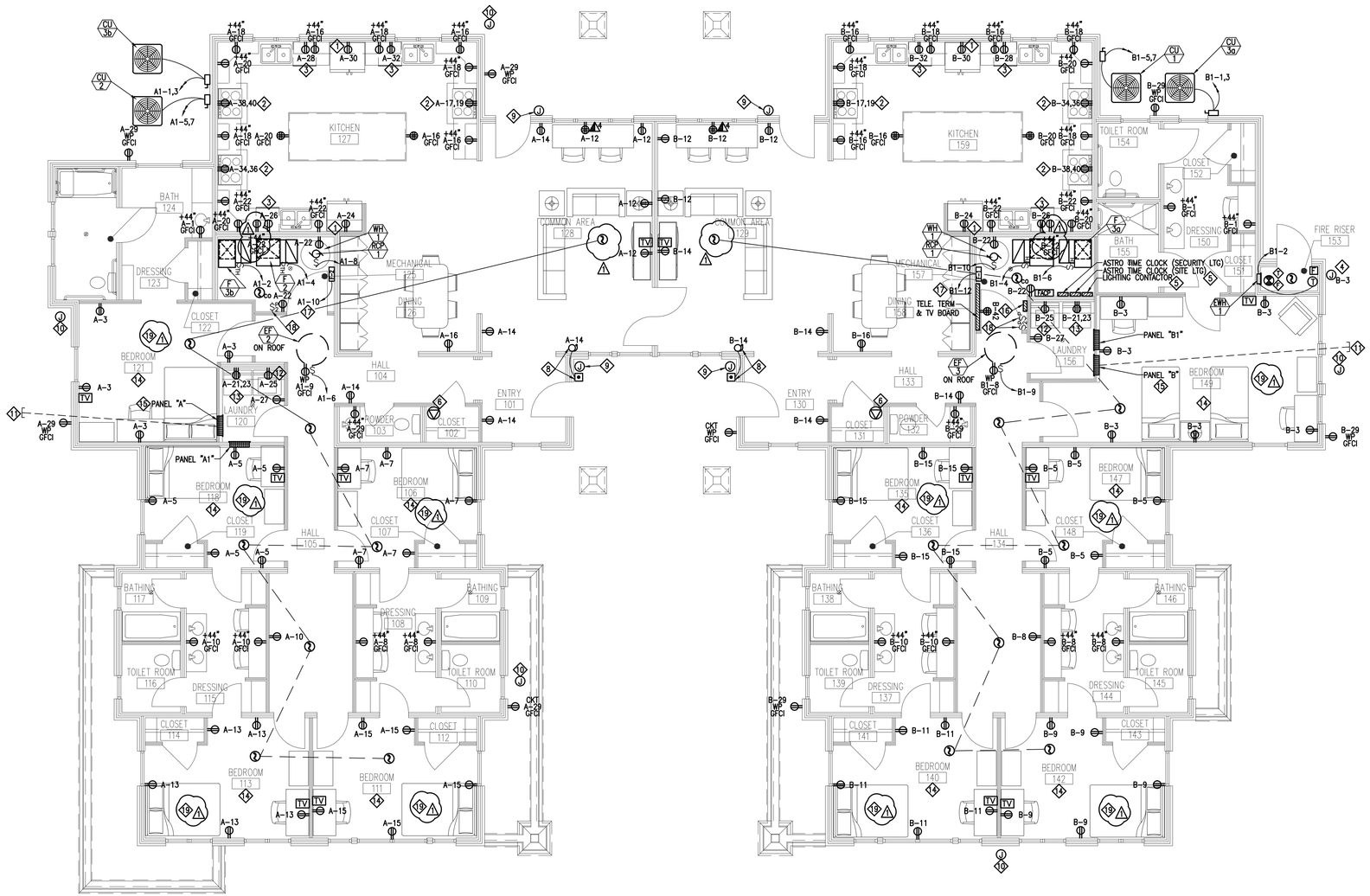

POWER PLAN

SCALE: 3/16" = 1'-0"

ELECTRICAL KEYED NOTES:

1. REFRIGERATOR.
2. RANGE.
3. DISHWASHER.
4. SPRINKLER BELL POWER – SEE FIRE ALARM ONE-LINE.
5. PROVIDE IN EAST UNIT ONLY.
6. CEILING MOUNTED WIRELESS ACCESS POINT.
7. NOT USED.
8. DOOR BELL SYSTEM.
9. CARD READER.
10. ROUGH IN FOR FUTURE SECURITY CAMERA – STUB CONDUIT INTO MECHANICAL ROOM.
11. STUB 1"C FROM PANEL "A" AND "B" TO OUTSIDE AS SHOWN (FOR FUTURE POWER). MARK LOCATION OF CONDUIT.
12. WASHER.
13. DRYER.
14. ALL LIGHTING AND RECEPTACLES SHALL BE CIRCUITED TO A SINGLE 20 AMP BREAKER DEDICATED TO THIS ROOM.
15. STUB (1") CONDUIT FROM PANEL "A" AND "B" INTO ATTIC SPACE. FOR FUTURE POWER.
16. FUTURE SECURITY PANEL LOCATION.
17. PROVIDE 120V CIRCUIT AS SHOWN TO ZONE CONTROL BOX.
18. HEAT CABLE CONTROL SWITCH – SEE SHEET EP-101 FOR HEAT CABLE LOCATIONS AND CIRCUITING.
19. ALL OUTLETS IN THIS ROOM TO BE CONNECTED TO AN AFCI CIRCUIT BREAKER – SEE PANEL SCHEDULES.

ELECTRICAL GENERAL NOTES:

1. ARC FAULT BREAKERS SHALL BE PROVIDED FOR ALL BEDROOM, DINING, AND COMMONS AREA RECEPTACLE CIRCUITS. PER N.E.C. 2008.

ELECTRICAL GENERAL NOTES:

1. ALL IRON, STEEL, AND MANUFACTURED GOOD USED ON THIS PROJECT MUST BE COMPLIMENT WITH THE BUY AMERICAN PROVISIONS IN THE AMERICAN RECOVERY AND REINVESTMENT ACT (ARRA). (IRON, STEEL, AND MANUFACTURED GOODS MUST BE PRODUCED IN THE UNITED STATES. A MANUFACTURED GOOD IS A GOODS BROUGHT TO THE CONSTRUCTION SITE FOR INCORPORATION INTO THE BUILDING OR WORK THAT HAS BEEN A) PROCESSED INTO A SPECIFIC FORM OR B) COMBINED WITH OTHER RAW MATERIAL TO CREATE A QUALITATIVELY DIFFERENT MATERIAL.) SEE BUY AMERICAN PROVISIONS OF ARRA FOR DETAILS AND EXCEPTIONS.

State of Utah
Department of Administrative Services
Division of Facilities Construction & Management
4110 State Office Building
Salt Lake City, Utah 84114
Phone: (801) 538 - 3018
Fax: (801) 538 - 3267
http://dfcm.utah.gov

ROYAL ENGINEERING
ELECTRICAL: 2335 SOUTH STATE SUITE 225, PHONE: 801.375.2228
MECHANICAL: PROVO, UTAH 84606, FAX: 801.375.2676

COPYRIGHT© JOB# J10037 DATE PLOTTED: 05/26/2010
THESE DOCUMENTS ARE INSTRUMENTS OF PROFESSIONAL SERVICE AND THE INFORMATION CONTAINED HEREON IS INCOMPLETE UNLESS IN CONJUNCTION WITH ROYAL ENGINEERING'S INTERPRETATIONS, DECISIONS, OBSERVATIONS AND INTERROGATORIES. THE REPRODUCTION, ALTERATION, OR USE OF THESE DRAWINGS, IN WHOLE OR IN PART WITHOUT ROYAL ENGINEERING'S CONSENT IS IN VIOLATION OF COMMON LAW COPYRIGHT AND OTHER STATE AND FEDERAL LAWS. ROYAL ENGINEERING'S CONSENT TO REUSE IN ANY FORM IS ALSO PROHIBITED. WHICH PREEMPTS STATE AND LOCAL PUBLIC RECORD ACTS. REFER TO ACT 17 U.S.C. PAR. 301-1990.

BUILDING NAME:

PROPERTY# 15278
USOR - DSVBI
TRAINING HOUSING
Salt Lake City, Utah

PROJECT TITLE:

USOR - Division of Services for the Blind and Visually Impaired TRAINING HOUSING

REGISTERED PROFESSIONAL ENGINEER 187104 STEVEN R. GRIFFITHS STATE OF UTAH

MARK	DATE	DESCRIPTION
1	05.27.10	ADDENDUM 1

ISSUE TYPE: Construction Document Phase

ISSUE DATE: 04.30.2010

DFCM PROJECT NO: 09240200
CAD PROJECT NO:
CAD DWG FILE: J10037 ELEC ALL.dwg
DRAWN BY: CON
CHK'D BY: SRG
COPYRIGHT: STATE OF UTAH

SHEET TITLE

POWER PLAN

SHEET NUMBER

EP-101

SHEET 53 OF 58

ELECTRICAL KEYED NOTES:

1. HEAT CABLE RUN APPROXIMATELY 167'-0" WHICH INCLUDES ALL RAIN GUTTERS AND DOWNSPOUT RUN.
2. HEAT CABLE RUN APPROXIMATELY 170'-0" WHICH INCLUDES ALL RAIN GUTTERS AND DOWNSPOUT RUN.
3. HEAT CABLE RUN APPROXIMATELY 164'-0" WHICH INCLUDES ALL RAIN GUTTERS AND DOWNSPOUT RUN.
4. HEAT CABLE RUN APPROXIMATELY 57'-0" WHICH INCLUDES ALL RAIN GUTTERS AND DOWNSPOUT RUNS. BOTH RUNS SHALL BE CONTROLLED AND CIRCUITED TOGETHER.
5. SEE SHEET EP-101 FOR CONTROL SWITCH LOCATIONS. NOTE #18.

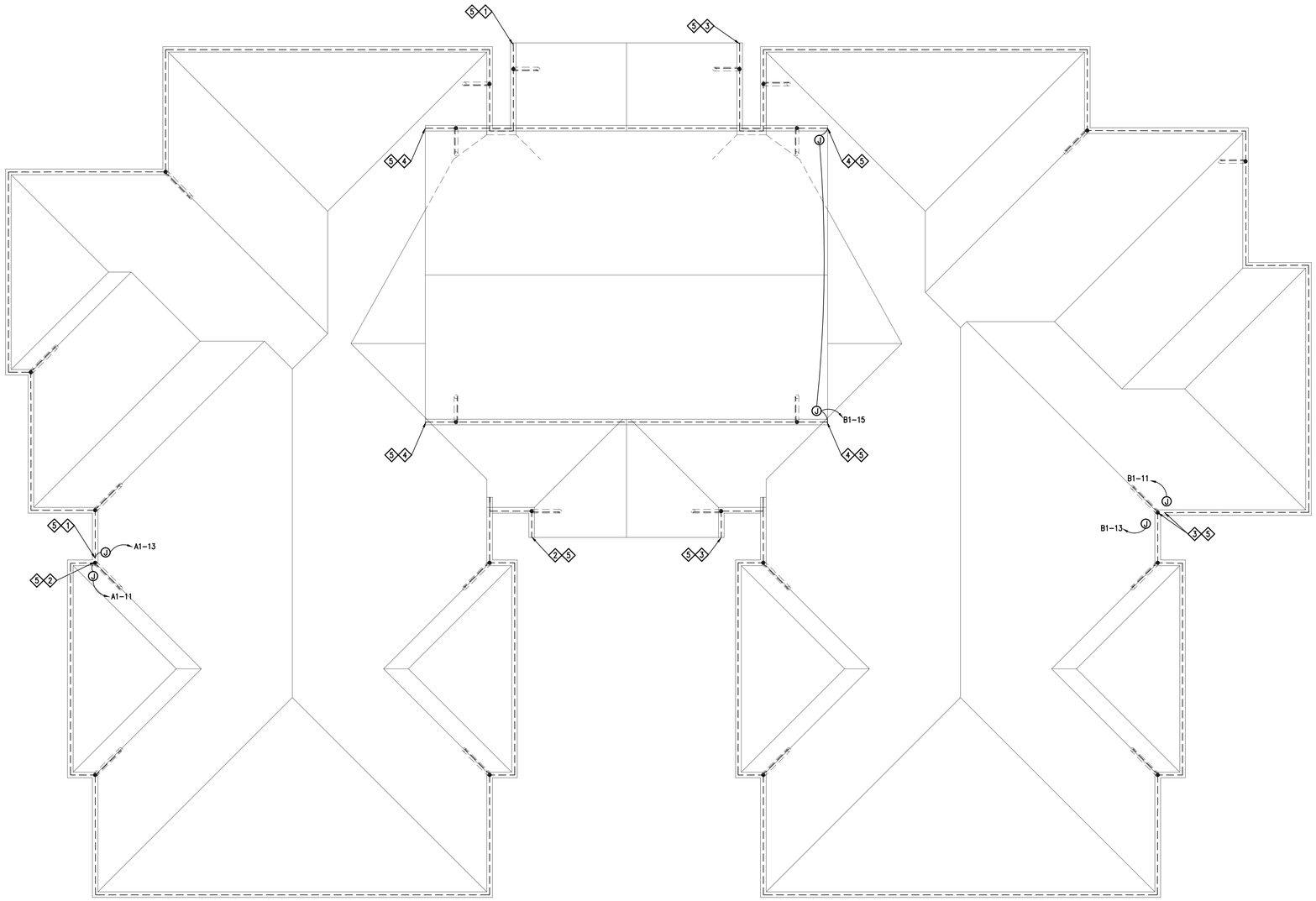

ROOF ICE MELT PLAN
SCALE: 3/16" = 1'-0"

ELECTRICAL GENERAL NOTES:

1. ALL IRON, STEEL, AND MANUFACTURED GOOD USED ON THIS PROJECT MUST BE COMPLIMENT WITH THE BUY AMERICAN PROVISIONS IN THE AMERICAN RECOVERY AND REINVESTMENT ACT (ARRA). (IRON, STEEL, AND MANUFACTURED GOODS MUST BE PRODUCED IN THE UNITED STATES. A MANUFACTURED GOOD IS A GOODS BROUGHT TO THE CONSTRUCTION SITE FOR INCORPORATION INTO THE BUILDING OR WORK THAT HAS BEEN A) PROCESSED INTO A SPECIFIC FORM OR B) COMBINED WITH OTHER RAW MATERIAL TO CREATE A QUALITATIVELY DIFFERENT MATERIAL.) SEE BUY AMERICAN PROVISIONS OF ARRA FOR DETAILS AND EXCEPTIONS.

State of Utah
Department of Administrative Services
Division of Facilities Construction & Management
4110 State Office Building
Salt Lake City, Utah 84114
Phone: (801) 538 - 3018
Fax: (801) 538 - 3267
http://dfcm.utah.gov

ROYAL ENGINEERING
ELECTRICAL: 2335 SOUTH STATE SUITE 225, PHONE: 801.375.2228
MECHANICAL: PROVO, UTAH 84606, FAX: 801.375.2676

COPYRIGHT© JOB# J10037 DATE PLOTTED: 05/26/2010
THESE DOCUMENTS ARE INSTRUMENTS OF PROFESSIONAL SERVICE AND THE INFORMATION CONTAINED HEREIN IS INCOMPLETE UNLESS IN CONJUNCTION WITH ROYAL ENGINEERING'S INTERPRETATIONS, DECISIONS, OBSERVATIONS AND INTERROGATORIES. THESE DOCUMENTS MAY NOT BE REPRODUCED, IN WHOLE OR IN PART WITHOUT ROYAL ENGINEERING'S CONSENT IS IN VIOLATION OF COMMON LAW COPYRIGHT AND OTHER STATE AND FEDERAL LAWS. ROYAL ENGINEERING'S CONSENT IS GIVEN TO PUBLISH THESE DOCUMENTS TO THE PUBLIC DOMAIN UNDER THE UTAH GOVERNMENT RECORDS ACCESS AND MANAGEMENT ACT (U.C.A. 63-2-201 ET SEQ.), WHICH PREEMPTS STATE AND LOCAL PUBLIC RECORD ACTS. REFER TO ACT 17 U.S.C. PAR. 301-1997.

BUILDING NAME:

PROPERTY# 15278
USOR - DSVBI
TRAINING HOUSING
Salt Lake City, Utah

PROJECT TITLE:

USOR - Division of Services for the Blind and Visually Impaired TRAINING HOUSING

REGISTERED PROFESSIONAL ENGINEER 187104 STEVEN R. GRIFFITHS STATE OF UTAH

MARK	DATE	DESCRIPTION
-	-	

ISSUE TYPE: Construction Document Phase

ISSUE DATE: 04.30.2010

DFCM PROJECT NO: 09240200
CAD PROJECT NO:
CAD DWG FILE: J10037 ELEC ALL.dwg
DRAWN BY: CON
CHK'D BY: SRG
COPYRIGHT: STATE OF UTAH

SHEET TITLE

ROOF ICE MELT PLAN

SHEET NUMBER

EP-102

SHEET 54 OF 58

ELECTRICAL KEYED NOTES:

1. ALL LIGHTING AND RECEPTACLES SHALL BE CIRCUITED TO A SINGLE 20 AMP BREAKER DEDICATED TO THIS ROOM.
2. CONNECT EXHAUST HOOD FAN TO NEAREST LIGHTING CIRCUIT AS SHOWN.

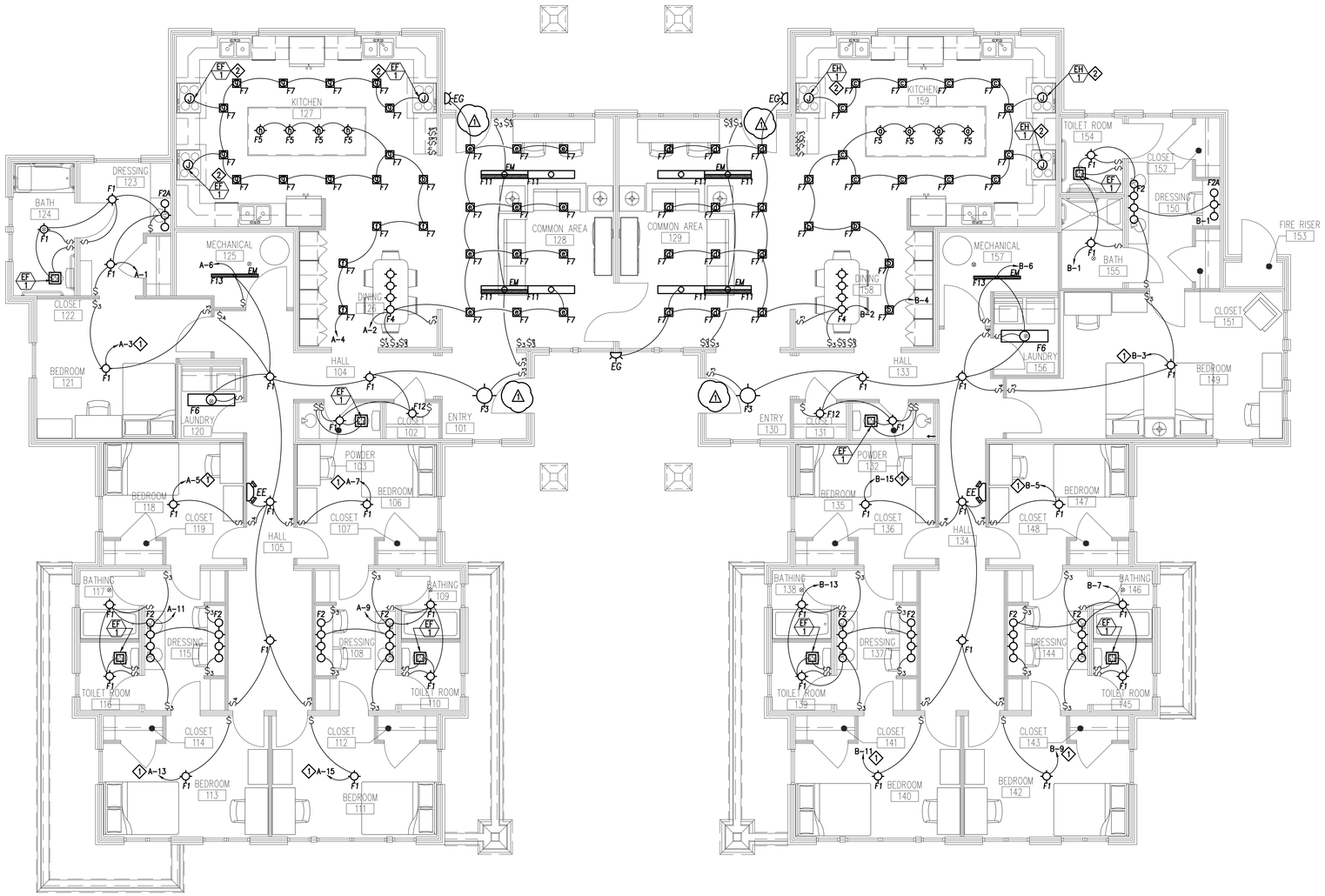

LIGHTING PLAN
SCALE: 3/16" = 1'-0"

ELECTRICAL GENERAL NOTES:

1. ALL IRON, STEEL, AND MANUFACTURED GOOD USED ON THIS PROJECT MUST BE COMPLIMENT WITH THE BUY AMERICAN PROVISIONS IN THE AMERICAN RECOVERY AND REINVESTMENT ACT (ARRA). (IRON, STEEL, AND MANUFACTURED GOODS MUST BE PRODUCED IN THE UNITED STATES. A MANUFACTURED GOOD IS A GOODS BROUGHT TO THE CONSTRUCTION SITE FOR INCORPORATION INTO THE BUILDING OR WORK THAT HAS BEEN A) PROCESSED INTO A SPECIFIC FORM OR B) COMBINED WITH OTHER RAW MATERIAL TO CREATE A QUALITATIVELY DIFFERENT MATERIAL.) SEE BUY AMERICAN PROVISIONS OF ARRA FOR DETAILS AND EXCEPTIONS.

State of Utah
Department of Administrative Services
Division of Facilities Construction & Management
4110 State Office Building
Salt Lake City, Utah 84114
Phone: (801) 538 - 3018
Fax: (801) 538 - 3267
http://dfcm.utah.gov

ROYAL ENGINEERING
ELECTRICAL: 2335 SOUTH STATE SUITE 225, PHONE: 801.375.2228
MECHANICAL: PROVO, UTAH 84606, FAX: 801.375.2676

COPYRIGHT© JOB# J10037 DATE PLOTTED: 05/26/2010
THESE DOCUMENTS ARE INSTRUMENTS OF PROFESSIONAL SERVICE AND THE INFORMATION CONTAINED HEREIN IS INCOMPLETE UNLESS IN CONJUNCTION WITH ROYAL ENGINEERING'S INTERPRETATIONS, DECISIONS, OBSERVATIONS AND FINDINGS. THE USE OF THIS INFORMATION BY ANY PERSON OR ENTITY OTHER THAN OR IN PART WITHOUT ROYAL ENGINEERING'S CONSENT IS IN VIOLATION OF COMMON LAW COPYRIGHT AND STATE AND FEDERAL LAWS. ROYAL ENGINEERING'S CONSENT IS GRANTED ONLY UNDER THE FOLLOWING CONDITIONS: 1) ROYAL ENGINEERING'S INSTRUMENTS OF PROFESSIONAL SERVICE MAY BE REPRODUCED AND DISTRIBUTED FOR THE PURPOSE OF CONSTRUCTION, OPERATION AND MAINTENANCE OF THE PROJECT FOR WHICH ROYAL ENGINEERING WAS ENGAGED TO PROVIDE SERVICES. 2) ROYAL ENGINEERING'S INSTRUMENTS OF PROFESSIONAL SERVICE MAY BE REPRODUCED AND DISTRIBUTED FOR THE PURPOSE OF ADDITIONS TO OR COMPLETION OF THE PROJECT FOR WHICH ROYAL ENGINEERING WAS ENGAGED TO PROVIDE SERVICES, PROVIDED ROYAL ENGINEERING IS GIVEN AT LEAST THIRTY (30) DAYS NOTICE OF SUCH ADDITIONS OR COMPLETION. 3) ROYAL ENGINEERING'S INSTRUMENTS OF PROFESSIONAL SERVICE MAY BE REPRODUCED AND DISTRIBUTED WHEN PREEMPTS STATE AND LOCAL PUBLIC RECORD ACTS. REFER TO ACT 17 U.S.C. PAR. 301 (1991).

BUILDING NAME:

PROPERTY# 15278
USOR - DSVBI
TRAINING HOUSING
Salt Lake City, Utah

PROJECT TITLE:

USOR - Division of Services for the Blind and Visually Impaired TRAINING HOUSING

REGISTERED PROFESSIONAL ENGINEER 187104 STEVEN R. GRIFFITHS STATE OF UTAH

MARK	DATE	DESCRIPTION
1	05.27.10	ADDENDUM 1

ISSUE TYPE: Construction Document Phase

ISSUE DATE: 04.30.2010

DFCM PROJECT NO: 09240200
CAD PROJECT NO:
CAD DWG FILE: J10037 ELEC ALL.dwg
DRAWN BY: CON
CHK'D BY: SRG
COPYRIGHT: STATE OF UTAH

SHEET TITLE

LIGHTING PLAN

SHEET NUMBER

EL-101

LOAD CENTER "A"

VOLTAGE: 240 / 120 VOLTS | BUS RATING (AMPS): 200 | REMARKS:
MOUNTING: SURFACE | PHASE: 1 | MAIN LUGS ONLY
ENCLOSURE: NEMA 1 | WIRE: 3 | SHORT CIRCUIT RATING: 10,000 AMPS (RMS-SYM)

BREAKER			CIRCUIT NAME	FEEDER			CKT. LOAD		LOAD/PHASE (VA)		CKT. LOAD		FEEDER			CIRCUIT NAME	BREAKER		
No.	AMPS	POLE		C	WIRE	GRD	DEMAND FACTOR	WATTS	ØA	ØB	WATTS	DEMAND FACTOR	GRD	WIRE	C		POLE	AMPS	No.
1	20	1	*ROOM 123,124 RECPT	¾"	#12	#12	1.00	768	1,806		1,038	1.00	#12	#12	¾"	ROOM 128 LTG	1	20	2
3	20	1	*ROOM 121 RECPT	¾"	#12	#12	1.00	566		2,192	1,626	1.00	#12	#12	¾"	ROOM 126,127 LTG	1	20	4
5	20	1	*ROOM 119 RECPT	¾"	#12	#12	1.00	746	1,092		346	1.00	#12	#12	¾"	ROOM 102,103,104,105,125 LTG	1	20	6
7	20	1	*ROOM 107 RECPT	¾"	#12	#12	1.00	746		1,106	360	1.00	#12	#12	¾"	*ROOM 108 RECPT	1	20	8
9	20	1	ROOM 108,109,110 LTG	¾"	#12	#12	1.00	878	1,418		540	1.00	#12	#12	¾"	*ROOM 101,125,128 RECPT	1	20	10
11	20	1	ROOM 115,116,117 LTG	¾"	#12	#12	1.00	746		1,646	900	1.00	#12	#12	¾"	ROOM 127 RECPT	1	20	12
13	20	1	*ROOM 113 RECPT	¾"	#12	#12	1.00	746	1,646		900	1.00	#12	#12	¾"	ROOM 127 RECPT	1	20	14
15	20	1	*ROOM 111 RECPT	¾"	#12	#12	1.00	746		1,466	720	1.00	#12	#12	¾"	ROOM 125,127 RECPT	1	20	16
17	50	2	RANGE	¾"	#8	#10	1.00	4,000	4,540		540	1.00	#12	#12	¾"	ROOM 125,127 RECPT	1	20	18
19	50	-	-	-	#8	-	1.00	4,000		4,540	540	1.00	#12	#12	¾"	REFRIGERATOR	1	20	20
21	30	2	DRYER	¾"	#10	#10	1.00	2,500	3,040		540	1.00	#12	#12	¾"	DISH WASHER	1	20	22
23	-	-	-	-	#10	-	1.00	2,500		3,340	840	1.00	#12	#12	¾"	DISH WASHER	1	20	24
25	20	1	WASHER	¾"	#12	#12	1.00	1,200	2,040		840	1.00	#12	#12	¾"	REFIGERATOR	1	20	26
27	20	1	LAUNDRY ROOM RECEPT	¾"	#12	#12	1.00	1,500		2,340	840	1.00	#12	#12	¾"	DISH WASHER	1	20	28
29	20	1	ROOM 103, & EXTERIOR RECPT	¾"	#12	#12	1.00	900	1,740		840	1.00	#12	#12	¾"	REFRIGERATOR	1	20	30
31	20	1	SECURITY LIGHTING	¾"	#12	#12	1.00	770		1,610	840	1.00	#12	#12	¾"	DISH WASHER	1	20	32
33			SPACE				1.00		4,000		4,000	1.00	#10	#8	¾"	RANGE	2	50	34
35			SPACE				1.00			4,000	4,000	1.00	-	#8	-	-	-	-	36
37			SPACE				1.00		4,000		4,000	1.00	#10	#8	¾"	RANGE	2	50	38
39	100	2	LOAD CENTER A1	1¼"	#3	#8	1.00	7,806		11,806	4,000	1.00	-	#8	-	-	-	-	40
41	-	-	-	-	#3	-	1.00	7,542	7,542			1.00				SPACE			42

	ØA	ØB	TOTALS
CONNECTED LOAD (VA)	32,864	34,046	66,910
CONNECTED LOAD (A)			279
DEMAND FACTOR ADJUSTMENTS (VA)	0	0	0
TOTAL LOAD (VA)	32,864	34,046	66,910
TOTAL LOAD (A)			279
PHASE BALANCE	49%	51%	

NOTES :
1. ALL INSULATION ON CONDUCTORS TO BE THHN UNLESS NOTED OTHERWISE. INSULATION ON ALL UNDERGROUND EXTERIOR CONDUCTORS SHALL BE THHW. INSULATION ON ALL UNDERGROUND EXTERIOR CONDUCTORS SHALL BE THHW.
2. LOAD DEMANDS CALCULATED AS PER SECTIONS 210 & 220 OF THE NATIONAL ELECTRICAL CODE.
3. PANEL COVER SHALL BE FIELD MARKED FOR FLASH PROTECTION WITH A PERMANENT LABEL AS REQUIRED BY THE NATIONAL ELECTRICAL CODE SECTION 110. LABEL SHALL READ AS FOLLOWS: "DANGER: POTENTIAL ARC FLASH HAZARD"
4. ABBREVIATIONS: CO-CONVENIENCE OUTLET, RR-RESTROOM, (N)ORTH, (S)OUTH, (E)AST, (W)EST.

*ARC FAULT CIRCUIT BREAKER PER N.E.C. 2008

LOAD CENTER "B"

VOLTAGE: 240 / 120 VOLTS | BUS RATING (AMPS): 200 | REMARKS:
MOUNTING: SURFACE | PHASE: 1 | MAIN LUGS ONLY
ENCLOSURE: NEMA 1 | WIRE: 3 | SHORT CIRCUIT RATING: 10,000 AMPS (RMS-SYM)

BREAKER			CIRCUIT NAME	FEEDER			CKT. LOAD		LOAD/PHASE (VA)		CKT. LOAD		FEEDER			CIRCUIT NAME	BREAKER		
No.	AMPS	POLE		C	WIRE	GRD	DEMAND FACTOR	WATTS	ØA	ØB	WATTS	DEMAND FACTOR	GRD	WIRE	C		POLE	AMPS	No.
1	20	1	*ROOM 150 RECPT	¾"	#12	#12	1.00	842	1,880		1,038	1.00	#12	#12	¾"	ROOM 129 LTG	1	20	2
3	20	1	*ROOM 149 RECPT	¾"	#12	#12	1.00	1,146		2,772	1,626	1.00	#12	#12	¾"	ROOM 157,158 LTG	1	20	4
5	20	1	*ROOM 147 RECPT	¾"	#12	#12	1.00	746	1,066		320	1.00	#12	#12	¾"	ROOM 130,131,132,134,155,156 LTG	1	20	6
7	20	1	ROOM 144,145,146 LIGHTING	¾"	#12	#12	1.00	882		1,422	540	1.00	#12	#12	¾"	*ROOM 144 RECPT	1	20	8
9	20	1	*ROOM 142	¾"	#12	#12	1.00	746	1,106		360	1.00	#12	#12	¾"	*ROOM137 RECPT	1	20	10
11	20	1	*ROOM 140	¾"	#12	#12	1.00	746		1,346	600	1.00	#12	#12	¾"	*ROOM 129 RECPT	1	20	12
13	20	1	ROOM 137,138,139 LIGHTING	¾"	#12	#12	1.00	882	1,782		900	1.00	#12	#12	¾"	*ROOM 129,130,157 RECPT	1	20	14
15	20	1	*ROOM 136 RECPT	¾"	#12	#12	1.00	746		1,466	720	1.00	#12	#12	¾"	ROOM 159 RECPT	1	20	16
17	50	2	RANGE	¾"	#8	#10	1.00	4,000	4,540		540	1.00	#12	#12	¾"	ROOM 159 RECPT	1	20	18
19	-	-	-	-	#8	-	1.00	4,000		4,540	540	1.00	#12	#12	¾"	ROOM 159 RECPT	1	20	20
21	30	2	DRAYER	¾"	#10	#10	1.00	2,500	3,040		540	1.00	#12	#12	¾"	ROOM 159 RECPT	1	20	22
23	-	-	-	-	#10	-	1.00	2,500		3,340	840	1.00	#12	#12	¾"	REFRIGERATOR	1	20	24
25	20	1	WASHER	¾"	#12	#12	1.00	1,200	2,040		840	1.00	#12	#12	¾"	DISH WASHER	1	20	26
27	20	1	LAUNDRY ROOM RECPT	¾"	#12	#12	1.00	1,500		2,340	840	1.00	#12	#12	¾"	DISH WASHER	1	20	28
29	20	1	ROOM 132 & EXTERIOR RECPT	¾"	#12	#12	1.00	900	1,740		840	1.00	#12	#12	¾"	REFRIGERATOR	1	20	30
31	20	1	EXTERIOR LTG	¾"	#12	#12	1.00	960		1,800	840	1.00	#12	#12	¾"	DISH WASHER	1	20	32
33	20	1	EXTERIOR LTG	¾"	#12	#12	1.00	1,272	5,272		4,000	1.00	#10	#8	¾"	RANGE	2	50	34
35	20	1	EXTERIOR LTG	¾"	#12	#12	1.00	550		4,550	4,000	1.00	-	#8	-	-	-	-	36
37	20	1	FACP	¾"	#12	#12	1.00	360	4,360		4,000	1.00	#10	#8	¾"	RANGE	2	50	38
39	100	2	LOAD CENTER B1	1¼"	#3	#8	1.00	9,005		13,005	4,000	1.00	-	#8	-	-	-	-	40
41	-	-	-	-	#3	-	1.00	7,789	8,149		360	1.00	#12	#12	¾"	TELEPHONE TERM AND TV BOARD	1	20	42

	ØA	ØB	TOTALS
CONNECTED LOAD (VA)	34,975	36,581	71,556
CONNECTED LOAD (A)			298
DEMAND FACTOR ADJUSTMENTS (VA)	0	0	0
TOTAL LOAD (VA)	34,975	36,581	71,556
TOTAL LOAD (A)			298
PHASE BALANCE	49%	51%	

NOTES :
1. ALL INSULATION ON CONDUCTORS TO BE THHN UNLESS NOTED OTHERWISE. INSULATION ON ALL UNDERGROUND EXTERIOR CONDUCTORS SHALL BE THHW. INSULATION ON ALL UNDERGROUND EXTERIOR CONDUCTORS SHALL BE THHW.
2. LOAD DEMANDS CALCULATED AS PER SECTIONS 210 & 220 OF THE NATIONAL ELECTRICAL CODE.
3. PANEL COVER SHALL BE FIELD MARKED FOR FLASH PROTECTION WITH A PERMANENT LABEL AS REQUIRED BY THE NATIONAL ELECTRICAL CODE SECTION 110. LABEL SHALL READ AS FOLLOWS: "DANGER: POTENTIAL ARC FLASH HAZARD"
4. ABBREVIATIONS: CO-CONVENIENCE OUTLET, RR-RESTROOM, (N)ORTH, (S)OUTH, (E)AST, (W)EST.

*ARC FAULT CIRCUIT BREAKER PER NEC 2008

LOAD CENTER "A1"

VOLTAGE: 240 / 120 VOLTS | BUS RATING (AMPS): 100 | REMARKS:
MOUNTING: SURFACE | PHASE: 1 | MAIN LUGS ONLY
ENCLOSURE: NEMA 1 | WIRE: 3 | SHORT CIRCUIT RATING: 10,000 AMPS (RMS-SYM)

BREAKER			CIRCUIT NAME	FEEDER			CKT. LOAD		LOAD/PHASE (VA)		CKT. LOAD		FEEDER			CIRCUIT NAME	BREAKER		
No.	AMPS	POLE		C	WIRE	GRD	DEMAND FACTOR	WATTS	ØA	ØB	WATTS	DEMAND FACTOR	GRD	WIRE	C		POLE	AMPS	No.
1	30	2	CONDENSING UNIT 3b	¾"	#10	#10	1.00	2,371	3,511		1,140	1.00	#12	#12	¾"	FURANCE 3b	1	20	2
3	-	-	-	-	#10	-	1.00	2,371		4,123	1,752	1.00	#12	#12	¾"	FURNACE 2	1	20	4
5	40	2	CONDENSING UNIT 2	¾"	#8	#10	1.00	2,891	3,755		864	1.00	#12	#12	¾"	ROOF EXHAUST FAN 2	1	20	6
7	-	-	-	-	#8	-	1.00	2,891		3,419	528	1.00	#12	#12	¾"	RECIRCULATION PUMP	1	20	8
9	20	1	ROOF TOP OUTLET	¾"	#12	#12	1.00	180	540		360	1.00	#12	#12	¾"	ZONE CONTROL BOX	1	20	10
11	20	1	HEAT CABLE	¾"	#12	#12	1.00	2,000		2,000		1.00				SPACE			12
13	20	1	HEAT CABLE	¾"	#12	#12	1.00	2,040	2,040			1.00				SPACE			14
15			SPACE				1.00			0		1.00				SPACE			16
17			SPACE				1.00		0			1.00				SPACE			18
19			SPACE				1.00			0		1.00				SPACE			20

	ØA	ØB	TOTALS
CONNECTED LOAD (VA)	9,846	9,542	19,388
CONNECTED LOAD (A)			81
DEMAND FACTOR ADJUSTMENTS (VA)	0	0	0
TOTAL LOAD (VA)	9,846	9,542	19,388
TOTAL LOAD (A)			81
PHASE BALANCE	51%	49%	

NOTES :
1. ALL INSULATION ON CONDUCTORS TO BE THHN UNLESS NOTED OTHERWISE. INSULATION ON ALL UNDERGROUND EXTERIOR CONDUCTORS SHALL BE THHW. INSULATION ON ALL UNDERGROUND EXTERIOR CONDUCTORS SHALL BE THHW.
2. LOAD DEMANDS CALCULATED AS PER SECTIONS 210 & 220 OF THE NATIONAL ELECTRICAL CODE.
3. PANEL COVER SHALL BE FIELD MARKED FOR FLASH PROTECTION WITH A PERMANENT LABEL AS REQUIRED BY THE NATIONAL ELECTRICAL CODE SECTION 110. LABEL SHALL READ AS FOLLOWS: "DANGER: POTENTIAL ARC FLASH HAZARD"
4. ABBREVIATIONS: CO-CONVENIENCE OUTLET, RR-RESTROOM, (N)ORTH, (S)OUTH, (E)AST, (W)EST.

LOAD CENTER "B1"

VOLTAGE: 240 / 120 VOLTS | BUS RATING (AMPS): 100 | REMARKS:
MOUNTING: SURFACE | PHASE: 1 | MAIN LUGS ONLY
ENCLOSURE: NEMA 1 | WIRE: 3 | SHORT CIRCUIT RATING: 10,000 AMPS (RMS-SYM)

BREAKER			CIRCUIT NAME	FEEDER			CKT. LOAD		LOAD/PHASE (VA)		CKT. LOAD		FEEDER			CIRCUIT NAME	BREAKER		
No.	AMPS	POLE		C	WIRE	GRD	DEMAND FACTOR	WATTS	ØA	ØB	WATTS	DEMAND FACTOR	GRD	WIRE	C		POLE	AMPS	No.
1	30	2	CONDENSING UNIT 3a	¾"	#10	#10	1.00	2,371	3,871		1,500	1.00	#12	#12	¾"	FIRE RISER ROOM HTR	1	20	2
3	-	-	-	-	#10	-	1.00	2,371		4,123	1,752	1.00	#12	#12	¾"	FURNACE 1	1	20	4
5	50	2	CONDENSING UNIT 1	¾"	#8	#10	1.00	3,126	4,266		1,140	1.00	#12	#12	¾"	FURNACE 3a	1	20	6
7	50	-	-	-	#8	-	1.00	3,126		3,306	180	1.00	#12	#12	¾"	ROOF TOP OUTLET	1	20	8
9	20	1	ROOF TOP EXHAUST FAN	¾"	#12	#12	1.00	864	868		4	1.00	#12	#12	¾"	RECIRCULATION PUMP	1	20	10
11	20	1	HEAT CABLE	¾"	#12	#12	1.00	1,968		2,328	360	1.00	#12	#12	¾"	ZONE CONTROL BOX	1	20	12
13	20	1	HEAT CABLE	¾"	#12	#12	1.00	1,968	1,968			1.00				SPACE			14
15	20	1	HEAT CABLE	¾"	#12	#12	1.00	1,368		1,368		1.00				SPACE			16
17			SPACE				1.00		0			1.00				SPACE			18
19			SPACE				1.00			0		1.00				SPACE			20

	ØA	ØB	TOTALS
CONNECTED LOAD (VA)	10,973	11,125	22,098
CONNECTED LOAD (A)			92
DEMAND FACTOR ADJUSTMENTS (VA)	0	0	0
TOTAL LOAD (VA)	10,973	11,125	22,098
TOTAL LOAD (A)			92
PHASE BALANCE	50%	50%	

NOTES :
1. ALL INSULATION ON CONDUCTORS TO BE THHN UNLESS NOTED OTHERWISE. INSULATION ON ALL UNDERGROUND EXTERIOR CONDUCTORS SHALL BE THHW. INSULATION ON ALL UNDERGROUND EXTERIOR CONDUCTORS SHALL BE THHW.
2. LOAD DEMANDS CALCULATED AS PER SECTIONS 210 & 220 OF THE NATIONAL ELECTRICAL CODE.
3. PANEL COVER SHALL BE FIELD MARKED FOR FLASH PROTECTION WITH A PERMANENT LABEL AS REQUIRED BY THE NATIONAL ELECTRICAL CODE SECTION 110. LABEL SHALL READ AS FOLLOWS: "DANGER: POTENTIAL ARC FLASH HAZARD"
4. ABBREVIATIONS: CO-CONVENIENCE OUTLET, RR-RESTROOM, (N)ORTH, (S)OUTH, (E)AST, (W)EST.

EQUIPMENT SCHEDULE

SYMBOL	DESCRIPTION	SERVICE		DISCONNECT		STARTER	LOAD			REMARKS
		VOLTS	PHASE	SIZE	FUSE		HP	VA	AMPS	
EF 1	EXHAUST FAN	120 V	1Ø	INTEGRAL PLUG	-	-	-	23	0.2 A	
EF 2	EXHAUST FAN	120 V	1Ø	TOGGLE SWITCH	-	-	⅓ HP	864	7.2 A	ROOF TOP UNIT
EF 3	EXHAUST FAN	120 V	1Ø	TOGGLE SWITCH	-	-	⅓ HP	864	7.2 A	ROOF TOP UNIT
EH 1	EXHAUST HOOD FAN	120 V	1Ø	TOGGLE SWITCH	-	-	-	216	1.8 A	
EWH 1	ELECTRIC WALL HTR	120 V	1Ø	T STAT	-	-	-	1,500	12.5 A	
F 1	FURNACE FAN	120 V	1Ø	TOGGLE SWITCH	-	-	-	1,752	14.6 A	
F 2	FURNACE FAN	120 V	1Ø	TOGGLE SWITCH	-	-	-	1,752	14.6 A	
F 3a	FURNACE FAN	120 V	1Ø	TOGGLE SWITCH	-	-	-	1,140	9.5 A	
F 3b	FURNACE FAN	120 V	1Ø	TOGGLE SWITCH	-	-	-	1,140	9.5 A	
CU 1	CONDENSING UNIT	240 V	1Ø	60A NEMA 3R	-	-	-	7,214	30.1 A	
CU 2	CONDENSING UNIT	240 V	1Ø	30A NEMA 3R	-	-	-	6,672	27.8 A	
CU 3a	CONDENSING UNIT	240 V	1Ø	30A NEMA 3R	-	-	-	5,472	22.8 A	
CU 3b	CONDENSING UNIT	240 V	1Ø	30A NEMA 3R	-	-	-	5,472	22.8 A	
WH 1	GAS WATER HEATER	120 V	1Ø	PLUG/ CORD	-	-	-	120	1.0 A	CONTROL ONLY
RCP 1	RECIRCULATION PUMP	120 V	1Ø	TOGGLE SWITCH	-	-	⅛ HP	528	4.4 A	

NOTES:
1. VERIFY ALL EQUIPMENT LOCATIONS AND CONNECTION REQUIREMENTS (i.e. VOLTAGE, PHASE, FLA, ETC.) WITH MECHANICAL DRAWINGS/SUBMITTALS BEFORE BEGINNING ROUGH IN.
2. ALL FUSES SHALL BE DUAL ELEMENT TIME DELAY. FINAL BREAKER/FUSE & DISCONNECT SIZE SHALL BE DETERMINED BY MANUFACTURER'S RECOMMENDATION FOR ACTUAL EQUIPMENT INSTALLED.
3. MAXIMUM VALUES INDICATED.
4. DISCONNECTING MEANS NOT REQUIRED FOR EQUIPMENT WITHIN SIGHT (AS DEFINED IN NEC) OF BRANCH PANEL SERVING EQUIPMENT. SEE NEC 422.31 (B).
5. DISCONNECTING MEANS NOT REQUIRED FOR APPLIANCES NOT OVER 300 VA. SEE NEC 422.31 (A).

Electrical Service Calculator
Royal Engineering

Project: TRAINING HOUSING FOR THE BLIND
Location: Salt Lake City, UT
Engineer: Steve Griffiths

Occupancy Type:	Residential, Multi-unit	
Gross Building Area:	11200 sf	
Individual dwelling unit area	2800 sf	
Number of dwelling units	4	
Electrical Loads (per unit)		
Lighting/receptacles:	8400 VA	*Based on NEC 220.3(A) and (B)(10)*
Kitchen Loads:		
Receptacles	3000 VA	*Based on NEC 220.16(A)*
Refridgerator	1200 VA	
Disposal	1200 VA	
Dishwasher	1200 VA	
Range	22500 VA	
Laundry Loads:		
Receptacles	1500 VA	*Based on NEC 220.16(B)*
Washer	1200	
Dryer	5000	
HVAC Loads		
Furnace	2892 VA	
Condensing Unit	12696 VA	
Total Load (per unit)	60788 VA	
Total Building Load	243152 VA	
Demand Factor	45 %	*Based on NEC 220.32*
Total Revised Building Load	109418 VA	
Grand Totals:		
Total Computed Load:	109418 VA	
Voltage:	240 Volts	
Phase:	1	
Total Amperage:	456 Amps	

ELECTRICAL LOAD CALCULATION
OPTIONAL METHOD USED (NEC 220 SECTION IV)

SINGLE UNIT

TOTAL SQUARE FOOTAGE	1,588 SQ FT
UNIT ELECTRICAL LOADS (PER UNIT)	
SMALL APPLIANCE LOAD (INCLUDES FRIDGE)	3,000 VA
LAUNDRY CIRCUIT (INCLUDES WASHER)	1,500 VA
LIGHTING/RECEPTACLE LOAD (sq ft x 3 VA)	4,764 VA
RANGE	7,500 VA
DRYER	5,000 VA
DISHWASHER	1,200 VA
DISPOSAL	828 VA
TOTAL GENERAL LOADS	23,792 VA
10,000 VOLT-AMPERES @ 100%	10,000 VA
13,792 VOLT-AMPERES @ 40%	5,517 VA
TOTAL GENERAL LOADS WITH DEMAND FACTOR APPLIED	15,517 VA
FURNACE @100%	864 VA
AIR CONDITIONER LOAD @100%	3,723 VA
TOTAL UNIT VA	20,104 VA
CALCULATED AMPS FOR 1 PHASE UNIT @ 208 V	97 A
REQUIRED SERVICE SIZE IN AMPS	100 A

ELECTRICAL GENERAL NOTES:

1. ALL IRON, STEEL, AND MANUFACTURED GOOD USED ON THIS PROJECT MUST BE COMPLIMENT WITH THE BUY AMERICAN PROVISIONS IN THE AMERICAN RECOVERY AND REINVESTMENT ACT (ARRA). (IRON, STEEL, AND MANUFACTURED GOODS MUST BE PRODUCED IN THE UNITED STATES. A MANUFACTURED GOOD IS A GOODS BROUGHT TO THE CONSTRUCTION SITE FOR INCORPORATION INTO THE BUILDING OR WORK THAT HAS BEEN A) PROCESSED INTO A SPECIFIC FORM OR B) COMBINED WITH OTHER RAW MATERIAL TO CREATE A QUALITATIVELY DIFFERENT MATERIAL.) SEE BUY AMERICAN PROVISIONS OF ARRA FOR DETAILS AND EXCEPTIONS.

State of Utah
Department of Administrative Services
Division of Facilities Construction & Management
4110 State Office Building
Salt Lake City, Utah 84114
Phone: (801) 538 - 3018
Fax: (801) 538 - 3267
http://dfcm.utah.gov

ROYAL ENGINEERING
ELECTRICAL MECHANICAL
2335 SOUTH STATE SUITE 225 PROVO, UTAH 84606
PHONE: 801.375.2228 FAX: 801.375.2676
COPYRIGHT© JOB# J10037 DATE PLOTTED: 05/26/2010
THESE DOCUMENTS ARE INSTRUMENTS OF PROFESSIONAL SERVICE AND THE INFORMATION CONTAINED HEREIN IS INCOMPLETE UNLESS IN CONJUNCTION WITH ROYAL ENGINEERING'S INTERPRETATIONS, DECISIONS, OBSERVATIONS AND ADMINISTRATIONS. USE OR REPRODUCTION OF THESE DOCUMENTS IN WHOLE OR IN PART WITHOUT ROYAL ENGINEERING'S CONSENT IS IN VIOLATION OF COMMON LAW, COPYRIGHTS, STATUTORY AND OTHER RESERVED RIGHTS. REFER TO ACT 17 U.S.C. PAR. 511 (1991), WHICH PREEMPTS STATE AND LOCAL PUBLIC RECORD ACTS. REFER TO ACT 17 U.S.C. PAR. 301 (1991).

BUILDING NAME:
PROPERTY# 15278
USOR - DSVBI
TRAINING HOUSING
Salt Lake City, Utah

PROJECT TITLE:
USOR - Division of Services for the Blind and Visually Impaired TRAINING HOUSING

REGISTERED PROFESSIONAL ENGINEER 187104 STEVEN R. GRIFFITHS STATE OF UTAH

MARK	DATE	DESCRIPTION
⚠	05.27.10	ADDENDUM 1

ISSUE TYPE: Construction Document Phase
ISSUE DATE: 04.30.2010
DFCM PROJECT NO: 09240200
CAD PROJECT NO:
CAD DWG FILE: J10037 ELEC ALL.dwg
DRAWN BY: CON
CHK'D BY: SRG
COPYRIGHT: STATE OF UTAH

SHEET TITLE
SCHEDULES & DTLS

SHEET NUMBER
EU-501

LIGHT FIXTURE SCHEDULE

FIXTURE NUMBER	FIXTURE MANUFACTURER	FIXTURE CATALOG #	LAMPS TYPE	LAMPS QTY.	FIXTURE VOLTS	FIXTURE WATTS	FIXTURE MOUNTING	DESCRIPTION	REMARKS
F1	KICHLER	3678OZ	FLE26HT3	1	120	28	SEMI FLUSH CEILING	BEDROOMS AND HALLWAYS	PROVIDE WITH "ENERGY STAR" LAMP
F2	LITHONIA	10864-BZA-120	FLE13HT3	4	120	72	SURFACE WALL	VANITY	PROVIDE WITH "ENERGY STAR" LAMPS
F2A	LITHONIA	10863-BZA-120	FLE13HT3	3	120	54	SURFACE WALL	VANITY	PROVIDE WITH "ENERGY STAR" LAMPS
F3	KICHLER	3606OZ	FLE13HT3	3	120	54	SEMI FLUSH CEILING	ENTRY AREA	PROVIDE WITH "ENERGY STAR" LAMPS
F4	LIGHTOLIER	F105-68-F5175	FLE13HT3	2	120	54	SUSPENDED CEILING	DINING ROOM	PROVIDE WITH "ENERGY STAR" LAMPS
F5	LIGHTOLIER	F5104-68-F5152	FLE13HT3	1	120	18	SUSPENDED CEILING	KITCHEN	PROVIDE WITH "ENERGY STAR" LAMP
F6	LITHONIA METALUX DAYBRITE LIGHTOLIER LSI COLUMBIA	LB 2 32 GEB WS-232A-UNV-EB81 CAN232-1/2EB WA4A232-UNV-HI WNA10-232-SSO10-UE AWN4-232-EU	F32T8/SP35 ECO	2	120	66	SURFACE CEILING	1X4 SURFACE FLUORESCENT (2 LAMP)	PROVIDE WITH "ENERGY STAR" LAMPS
F7	LITHONIA PORTFOLIO OMEGA LIGHTOLIER HE WILLIAMS PRESCOLITE	AFV 32TRT 6AR GEB C6042-E-6051-LI S632PLTU-T6CS 100FTU-1146 PV60-132T-EB-CS-BH CFT632EB-STF602SS	32 TRT	1	120	34	RECESSED	FLUOR. DOWNLIGHT W/ALZAK TRIM 32 DTT LAMP	PROVIDE WITH "ENERGY STAR" LAMP
F8	KICHLER	11067AZ	FLE13HT3	1	120	18	SURFACE WALL	PORCH	PROVIDE WITH "ENERGY STAR" LAMP
F9	LITHONIA	WSTM 42TRT MD	42 TRT	1	120	45	SURFACE WALL	TRAPIZOID WALL SCONCE (42 WATT TRIPLE TUBE)	COLOR TO BE SELECTED BY ARCHITECT
F10	LITHONIA	XWLR 54 120 RE LP	32W T9	1	120	34	RECESSED	TRELLIS AREA	PROVIDE WITH "ENERGY STAR" LAMP
F11	PEERLESS	7CRM2-2 54T5HO WHR 4 R4 120 GEB10	54WT5HO	2	120	120	SUSPENDED CEILING	COMMONS AREA	
F12	KICHLER	206OZ	FLE13HT3	1	120	18	SURFACE CEILING	CLOSETS	PROVIDE WITH "ENERGY STAR" LAMP
F13	LITHONIA METALUX DAYBRITE LIGHTOLIER LSI COLUMBIA	C 2 32 GEB SS-232-UNV-EBB1 T232-1/2EB SW4S232HPF-UNV-HI S-232-SSO10-UE CS4-232-EU	F32T8/SP35 ECO	2	120	66	SURFACE/CHAIN	48" DOUBLE TUBE STRIP	
EE	LITHONIA	ELM	INCLUDED	2	120	11.2	SURFACE WALL	EMERGENCY BUGEYE	
EG	LITHONIA MCPHILBEN EXITRONIX DUAL-LITE ISOLITE LIGHTOLIER	AFN DB EXT PDNBZ TR-WB-BR-CL PGZ-HTR EY6S LVL?HR	6W XENON INCLUDED	2	120	12	SURFACE WALL	EMERGENCY EGRESS LIGHT	EMERGENCY EGRESS FINISH SELECTED BY ARCHITECT
EM	BODINE LITHONIA IOTA EXITRONIX DUAL-LITE LIGHTOLIER	B50 PS1100 I-48 XEB-14 UFO-6W PBP5L	----	---	120	----	----	EMERGENCY BALLAST ((2)-4 FOOT T-8 LAMP)	EMERGENCY BALLAST (1)-4 FOOT T8 LAMP, 1100 LUMENS MIN. VERIFY COMPATIBILITY BEFORE ORDERING
⚠									

NOTES:
ALL LUMINAIRES THAT UTILIZE DOUBLE ENDED FLUORESCENT LAMPS AND CONTAIN BALLASTS THAT CAN BE SERVICED IN PLACE SHALL HAVE A DISCONNECTING MEANS AS REQUIRED BY 2008 NEC 410.130 (G)

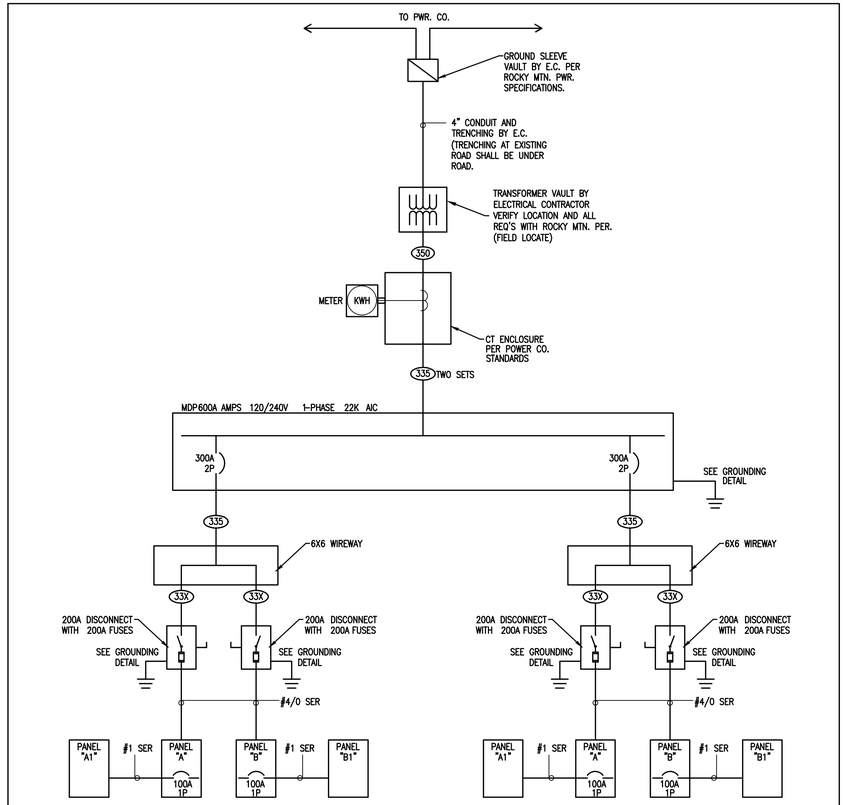

POWER ONE-LINE DIAGRAM

SCALE: NONE

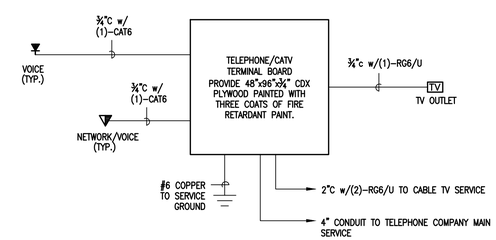

COMMUNICATIONS RISER DIAGRAM

SCALE: NONE

ELECTRICAL GENERAL NOTES:

1. ALL IRON, STEEL, AND MANUFACTURED GOOD USED ON THIS PROJECT MUST BE COMPLIMENT WITH THE BUY AMERICAN PROVISIONS IN THE AMERICAN RECOVERY AND REINVESTMENT ACT (ARRA). (IRON, STEEL, AND MANUFACTURED GOODS MUST BE PRODUCED IN THE UNITED STATES. A MANUFACTURED GOOD IS A GOODS BROUGHT TO THE CONSTRUCTION SITE FOR INCORPORATION INTO THE BUILDING OR WORK THAT HAS BEEN A) PROCESSED INTO A SPECIFIC FORM OR B) COMBINED WITH OTHER RAW MATERIAL TO CREATE A QUALITATIVELY DIFFERENT MATERIAL.) SEE BUY AMERICAN PROVISIONS OF ARRA FOR DETAILS AND EXCEPTIONS.

State of Utah
Department of Administrative Services
Division of Facilities Construction & Management
4110 State Office Building
Salt Lake City, Utah 84114
Phone: (801) 538 - 3018
Fax: (801) 538 - 3267
http://dfcm.utah.gov

ROYAL ENGINEERING
ELECTRICAL: 2936 SOUTH STATE SUITE 225 PHONE: 801.375.2228
MECHANICAL: PROVO, UTAH 84606 FAX: 801.375.2676

COPYRIGHT© JOB# J10037 DATE PLOTTED: 05/26/2010
THESE DOCUMENTS ARE INSTRUMENTS OF PROFESSIONAL SERVICE AND THE INFORMATION CONTAINED HEREIN IS INCOMPLETE UNLESS IN CONJUNCTION WITH ROYAL ENGINEERING'S INTERPRETATIONS, DECISIONS, OBSERVATIONS AND FINDINGS. THESE DOCUMENTS MAY NOT BE REPRODUCED, IN WHOLE OR IN PART WITHOUT ROYAL ENGINEERING'S CONSENT IS IN VIOLATION OF COMMON LAW AND THE COPYRIGHT LAWS OF THE UNITED STATES. THESE DOCUMENTS ARE NOT TO BE FILED WITHOUT ROYAL ENGINEERING'S CONSENT. WHICH PREEMPTS STATE AND LOCAL PUBLIC RECORD ACTS. REFER TO ACT 17 U.S.C. PAR. 301-1997.

BUILDING NAME:

PROPERTY# 15278
USOR - DSVBI
TRAINING HOUSING
Salt Lake City, Utah

PROJECT TITLE:

USOR - Division of Services for the Blind and Visually Impaired
TRAINING HOUSING

REGISTERED PROFESSIONAL ENGINEER 187104 STEVEN R. GRIFFITHS STATE OF UTAH

MARK	DATE	DESCRIPTION
-		

ISSUE TYPE: Construction Document Phase

ISSUE DATE: 04.30.2010

DFCM PROJECT NO: 09240200
CAD PROJECT NO:
CAD DWG FILE: J10037 ELEC ALL.dwg
DRAWN BY: CON
CHK'D BY: SRG
COPYRIGHT: STATE OF UTAH

SHEET TITLE
SCHEDULES & DTLS

SHEET NUMBER
EU-502

SHEET 57 OF 58

NOTE:

1. WHEN AVAILABLE CONTRACTOR SHALL PROVIDE ALL GROUNDING MEANS INDICATED. CONTRACTOR SHALL REFER TO ELECTRICAL ONE-LINE DIAGRAM AND GROUNDING ELECTRODE CONDUCTOR SCHEDULE (THIS DETAIL) FOR GROUNDING ELECTRODE CONDUCTOR SIZE. CONTRACTOR SHALL REFER TO ELECTRICAL SPECIFICATIONS FOR SPECIFICS OF GROUNDING SYSTEM INSTALLATION AND MATERIALS.
2. GROUNDING ROD SHALL BE MIN. 9FT. AWAY FROM IRRIGATION CONTROLLER.

KEYED NOTE:

1. T&B 3900 BU GROUND CLAMP WITH 3/4" CONDUIT HUB AND CABLE CLAMP
2. FULL SIZE GROUNDING ELECTRODE CONDUCTOR IN GRC.
3. EXOTHERMICALLY WELDED (TYPICAL)
4. DRIVEN GROUND RODS ⅝"x8' COPPER/STEEL ON BUILDING EXTERIOR
5. TABLE TAKEN FROM NEC 250.66. UNGROUNDED PHASE CONDUCTOR REFERS TO THE SIZE OF THE LARGEST UNGROUNDED SERVICE-ENTRANCE CONDUCTOR OR EQUIVALENT AREA FOR PARALLEL CONDUCTORS. SEE NEC 250.66.

GROUNDING ELECTRODE CONDUCTOR 5

UNGROUNDED PHASE CONDUCTOR (COPPER)	GRND WIRE SIZE (CU)
#2 OR SMALLER	#8
1 OR 1/0	#6
2/0 OR 3/0	#4
>3/0 THRU 350 KCMIL	#2
>350 KCMIL THRU 600 KCMIL	1/0
>600 KCMIL THRU 1100 KCMIL	2/0
>1100 KCMIL	3/0

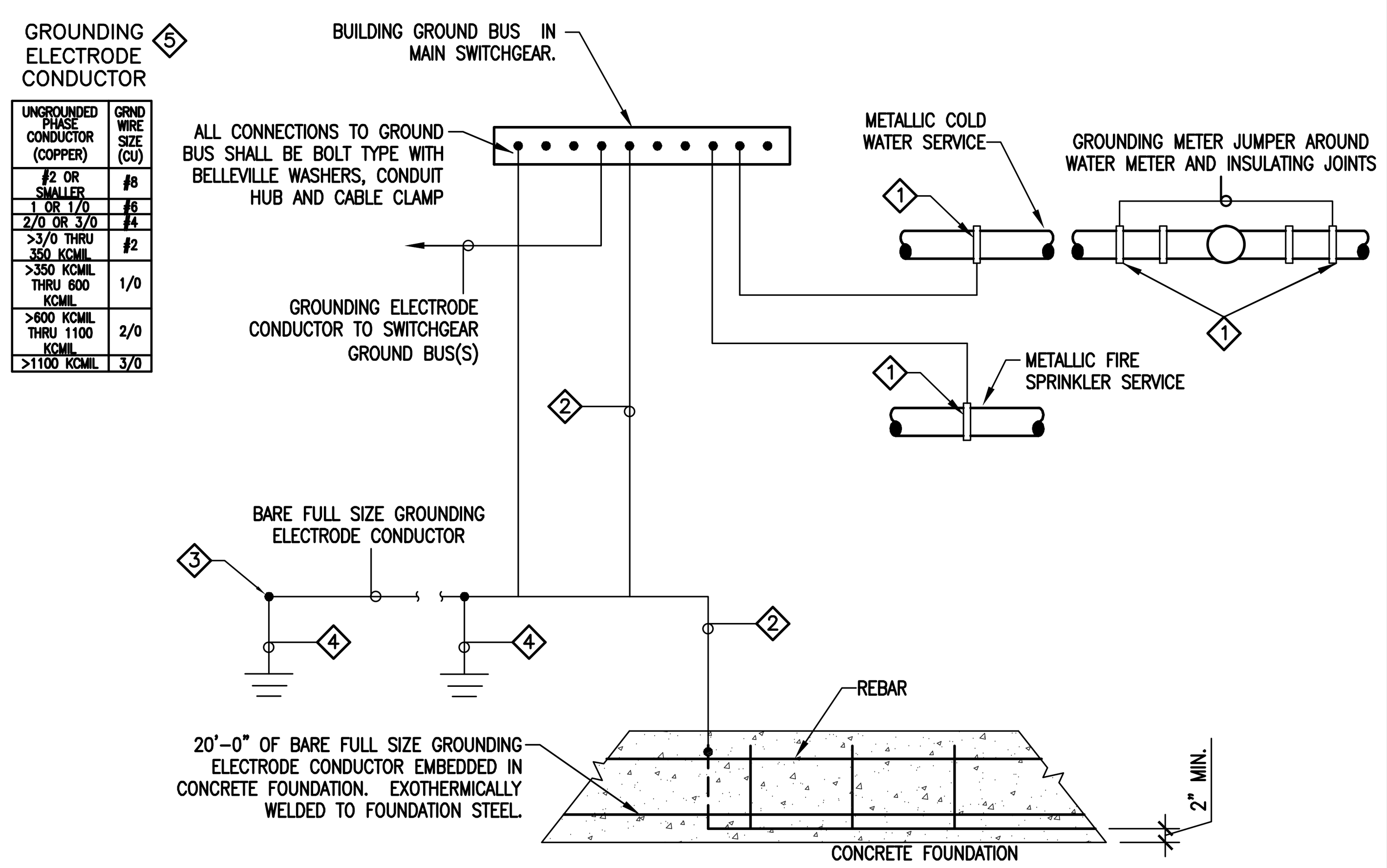

SERVICE GROUNDING DETAIL

SCALE: NONE

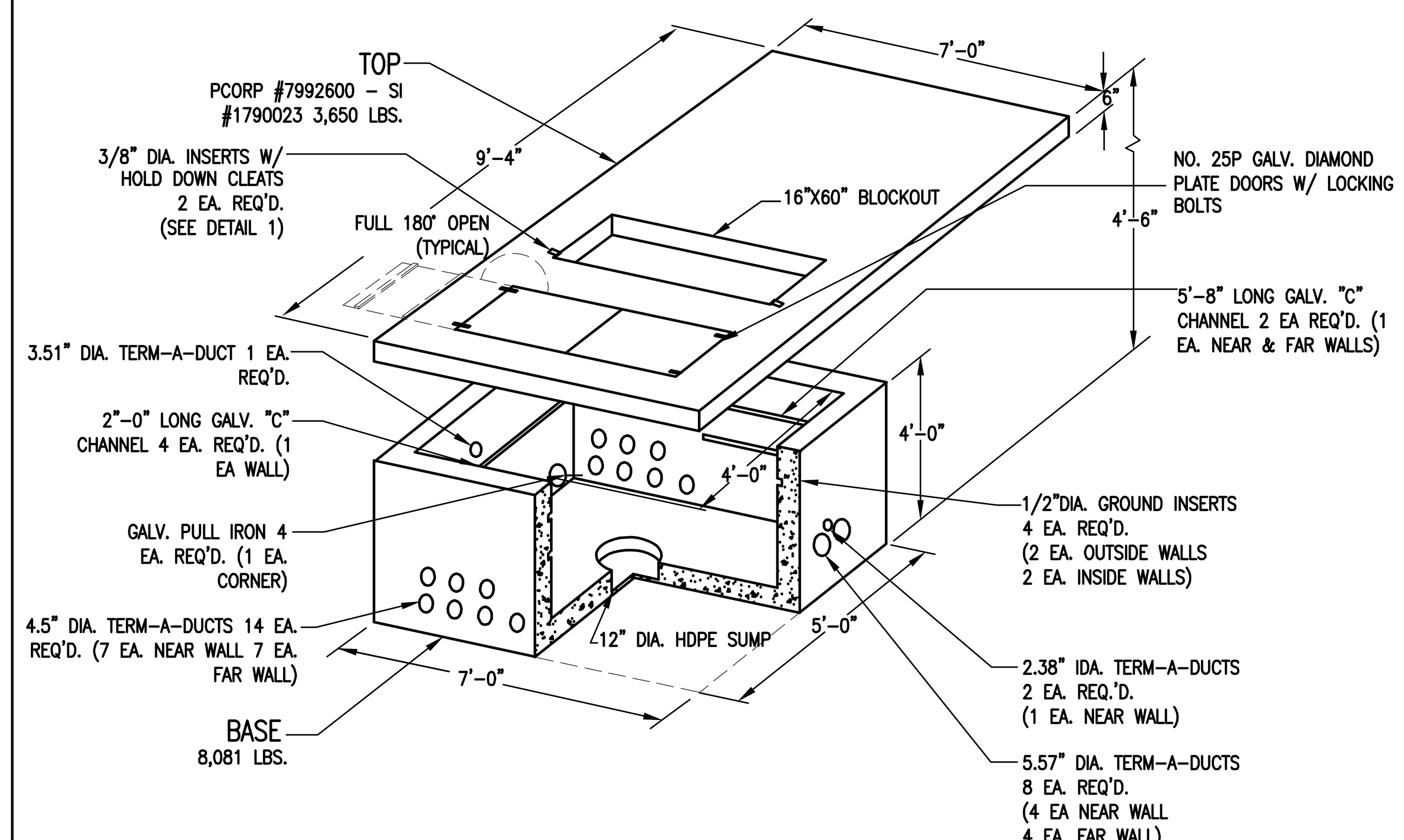

2.4 - 25kV, 3-PHASE TRANSFORMER PADVAULT WITH ACCESS STOCK ITEM 7992600-STOCK ITEM 1790023.

2.4 - 25kV, 3-PHASE TRANSFORMER PAD VAULT WITHOUT ACCESS, STOCK ITEM 7992601-STOCK ITEM 1790024.

2.4- 25kV, 3-PHASE TRANSFORMER PAD, STOCK ITEM 1790021
35kV, 3-PHASE TRANSFORMER PADVAULT WITH ACCESS, STOCK ITEM 7992603-STOCK ITEM 1008977.

35kV, 3-PHASE TRANSFORMER PADVAULT WITHOUT ACCESS STOCK ITEM 7992603-STOCK ITEM 1008975.

35kV, 3-PHASE TRANSFORMER PAD, STOCK ITEM 1008958.

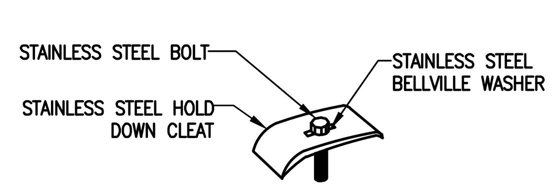

HOLD DOWN CLEAT
DETAIL 1

1-1/4"X2-1/2" STAINLESS STEEL HOLD DOWN CLEAT - 2 REQ'D.
3/8" X 1-1/4" STAINLESS STEEL BOLT - 2 REQ'D.
3/8" STAINLESS STEEL BELLVILLE WASHER - 2 REQ'D.

TRANSFORMER DIMENSIONS OF BASE MEASURED IN FEET & INCHES

KVA SIZE	DEPTH/ LENGTH	WIDTH
75	3'6"	5'8"
150	3'7"	5'8"
225	3'9"	6'
300	3'11"	6'
500	4'	6'
750	4'8"	6'
1000	4'10"	6'
1500	5'3"	6'
2000	5'7"	6'8"
2500	6'9"	5'9"

PADVAULTS SI#1790023 WITH DOORS

MEASURED IN FEET & INCHES		
25kV	9'4"	7'

ROCKY MTN PWR TRANSFORMER PAD VAULT REQUIREMENTS

SCALE: NONE

SITE LIGHTING FIXTURE SCHEDULE

FIXT #	FIXTURE MANUFACTURER	FIXTURE CATALOG #	VOLTS	#/POLE	WATTS	MOUNTING	LAMPS TYPE	LAMPS QTY/FIXT.	POLE MANUFACTURER	POLE HEIGHT	POLE CATALOG #	REMARKS
S1	KIM	FM/BNS1H3/200PMH120/DB-P/A30	120	1	232	POLE	PULSE START 200W MH ENC/COAT	1	KIM	20'-0"	PRA25-6188/DB-P	
S2	KIM	FM/BNS1H3/70PMH120/DB-P/A30	120	1	80	POLE	PULSE START 70W MH ENC/COAT	1	KIM	10'-0"	PRA10-34125FM/DB-P/HB-X1	
S3	KIM	BNB1/70PMH120/DB-P	120	1	80	BOLLARD	PULSE START 70W MH ENC/COAT	1	#N/A	#N/A	#N/A	

ELECTRICAL SYMBOLS

NOTE: ALL SYMBOLS MAY NOT BE USED — DOTTED SYMBOLS INDICATE EXISTING FIXTURE, EQUIPMENT, ETC.

SYMBOL	EXPLANATION	SYMBOL	EXPLANATION
	BRANCH CIRCUIT CONCEALED IN CEILING OR WALL	$	SINGLE POLE SWITCH (SUBSCRIPT AS INDICATED BELOW)
	BRANCH CIRCUIT CONCEALED IN GROUND OR FLOOR	2	TWO POLE SWITCH
		3	3-WAY SWITCH
A-1,3	BRANCH CIRCUIT HOMERUNS TO PANEL	4	4-WAY SWITCH
		D	DIMMER SWITCH
	LIGHTING AND POWER PANELBOARD	K	KEYED SWITCH
		T	TIMER SWITCH
CH 1	MECHANICAL EQUIPMENT SYMBOL	M	MANUAL STARTER WITH THERMAL OVERLOAD
		F	PADDLE FAN 3 SPEED CONTROL
1	KEYED NOTE REFERENCE	OC	OCCUPANCY SENSOR SWITCH
J	JUNCTION BOX	ab	CONTROLLING SWITCH (LETTER INDICATES CONTROL CIRCUIT)
	DUPLEX RECEPTACLE OUTLET	$$	DOUBLE GANG SWITCH
WP / A-3 / REF	MODIFIER / PANEL SPACE ASSIGNMENT / EQUIPMENT DESIGNATION	S	OCCUPANCY SENSOR SWITCH (CEILING MOUNTED)
WP	WEATHERPROOF COVER & LISTED WEATHER RESISTANT DEVICE		MOTOR OUTLET
GFCI	PROTECTED BY FAULT CIRCUIT INTERRUPTER		
+44	MOUNTING HEIGHT ABOVE FLOOR OR GRADE GIVEN IN INCHES.	T	THERMOSTAT OUTLET
REF	REFRIGERATOR		
DW	DISHWASHER	S	REMOTE SENSOR OUTLET
DISP	DISPOSAL		
WASH	WASHING MACHINE		EXHAUST FAN
EWC	ELECTRIC WATER COOLER		
	QUAD RECEPTACLE OUTLET	B	BELL
	SPLIT WIRED DUPLEX RECEPTACLE OUTLET		PUSHBUTTON
	220V RECEPTACLE OUTLET	V	VOLUME CONTROL
	ISOLATED GROUND RECEPTACLE		WALL SPEAKER
	RECEPTACLE FLOOR MOUNTED		CEILING SPEAKER
	RECEPTACLE CEILING MOUNTED		TELEPHONE OUTLET
	SPECIAL RECEPTACLE		COMPUTER DATA OUTLET
	DISCONNECT SWITCH		NETWORK AND VOICE OUTLET
	MOTOR STARTER	TV	TELEVISION OUTLET
	FLUORESCENT FIXTURE (TYPICAL)	P	PHOTOCELL
EM	EMERGENCY LIGHTING UNIT	F	FIRE ALARM PULL STATION
	SURFACE OR PENDANT MOUNTED FIXTURE		FIRE ALARM HORN/STROBE
	RECESSED FIXTURE		FIRE ALARM STROBE
	WALL MOUNTED FIXTURE		SMOKE DETECTOR (SUBSCIPT AS INDICATED BELOW)
	WALL PACK	A	SMOKE ALARM
		B	SMOKE ALARM BATTERY-BACKED
	FLUORESCENT STRIP	D	DUCT SMOKE DETECTOR
		R	SMOKE DETECTOR WITH ELEVATOR RECALL MODULE
	TRACK LIGHTING		HEAT DETECTOR
	EMERGENCY LIGHTING UNIT		WALL MOUNTED EXIT LIGHT (SINGLE FACE)
F1	FIXTURE TYPE SYMBOL		WALL MOUNTED EXIT LIGHT (DOUBLE FACE)
135	ROOM NUMBER		CEILING MOUNTED EXIT LIGHT
©	CONDUIT STUB		CEILING MOUNTED EXIT LIGHT (DOUBLE FACE)
T F	TAMPER AND FLOW	42X	FEEDER TAG (SEE FEEDER SCHEDULE)
FACP	FIRE ALARM CONTROL PANEL	D/H	DOOR HOLDER
CO	C02 DETECTOR	F/S	FIRE/SMOKE DAMPER
			SECURITY CAMERA

GENERAL NOTE:

1. FIRE ALARM SYSTEM IS FOR FIRE SPRINKLER MONITORING ONLY.

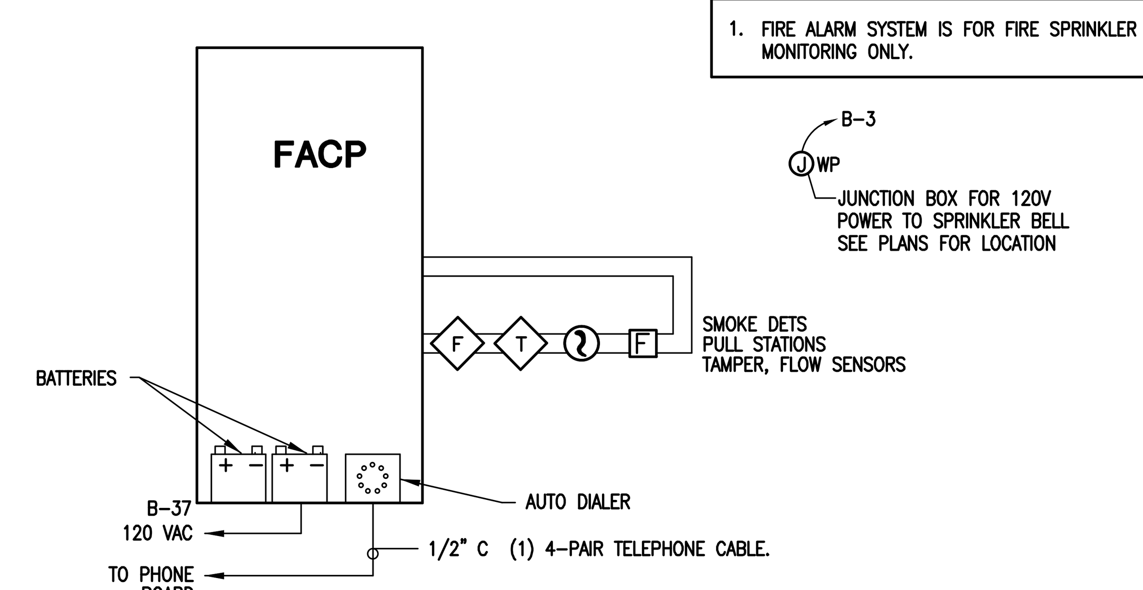

SPRINKLER MONITOR FIRE ALARM RISER DIAGRAM

SCALE: NONE

COPPER FEEDER SCHEDULE

TYPE	CONDUIT SIZE PVC	CONDUIT SIZE EMT	CONDUCTORS QUAN.	CONDUCTORS SIZE	70°C AMP RATING	TYPE	CONDUIT SIZE PVC	CONDUIT SIZE EMT	CONDUCTORS QUAN.	CONDUCTORS SIZE	70°C AMP RATING	TYPE	CONDUIT SIZE PVC	CONDUIT SIZE EMT	CONDUCTORS QUAN.	CONDUCTORS SIZE	70°C AMP RATING
212	3/4"	3/4"	2	#12	25	21	1-1/4"	1-1/4"	2	#1	130	235	2"	2"	2	350 KCMIL	310
312	3/4"	3/4"	3	#12		31	1-1/4"	1-1/4"	3	#1		335	2-1/2"	2-1/2"	3	350 KCMIL	
412	3/4"	3/4"	4	#12		41	1-1/2"	1-1/2"	4	#1		435	3"	2-1/2"	4	350 KCMIL	
20	3/4"	3/4"	2	#10	35	21X	1-1/4"	1-1/4"	2	1/0	150	240	2"	2"	2	400 KCMIL	335
30	3/4"	3/4"	3	#10		31X	1-1/2"	1-1/2"	3	1/0		340	2-1/2"	2-1/2"	3	400 KCMIL	
40	3/4"	3/4"	4	#10		41X	1-1/2"	1-1/2"	4	1/0		440	3"	3"	4	400 KCMIL	
28	3/4"	3/4"	2	#8	50	22X	1-1/4"	1-1/4"	2	2/0	175	250	2-1/2"	2-1/2"	2	500 KCMIL	380
38	3/4"	3/4"	3	#8		32X	1-1/2"	1-1/2"	3	2/0		350	3"	2-1/2"	3	500 KCMIL	
48	3/4"	3/4"	4	#8		42X	2"	2"	4	2/0		450	4"	3-1/2"	4	500 KCMIL	
26	3/4"	3/4"	2	#6	65	23X	1-1/2"	1-1/4"	2	3/0	200	260	2-1/2"	2-1/2"	2	600 KCMIL	420
36	3/4"	3/4"	3	#6		33X	2"	2"	3	3/0		360	3-1/2"	3-1/2"	3	600 KCMIL	
46	1"	1"	4	#6		43X	2"	2"	4	3/0		460	4"	4"	4	600 KCMIL	
24	3/4"	3/4"	2	#4	85	24X	1-1/2"	1-1/2"	2	4/0	230						
34	1"	1"	3	#4		34X	2"	2"	3	4/0							
44	1-1/4"	1-1/4"	4	#4		44X	2-1/2"	2-1/2"	4	4/0							
23	1"	1"	2	#3	100	225	2"	2"	2	250 KCMIL	255						
33	1"	1"	3	#3		325	2"	2"	3	250 KCMIL							
43	1-1/4"	1-1/4"	4	#3		425	3"	2-1/2"	4	250 KCMIL							
22	1"	1"	2	#2	115	230	2"	2"	2	300 KCMIL	285						
32	1-1/4"	1-1/4"	3	#2		330	2-1/2"	2-1/2"	3	300 KCMIL							
42	1-1/4"	1-1/4"	4	#2		430	3"	2-1/2"	4	300 KCMIL							

EQUIPMENT GROUNDING CONDUCTORS SCHEDULE

OVERCURRENT DEVICE	COPPER
15	14
20	12
30	10
40	10
60	10
100	8
200	6
300	4
400	3
500	2
600	1
800	1/0

NOTE:
1. SEE EQUIPMENT GROUND CONDUCTOR SCHEDULES OR SERVICE GROUNDING DETIAL FOR GROUND CONDUCTORS RATING.
2. ALL INSULATION SHALL BE THHN UNLESS NOTED OTHERWISE.
3. PVC CONDUIT SIZE IS BASED ON SCHEDULE 40 PVC. PVC IS APPROVED FOR UNDERGROUND FEEDERS ONLY.

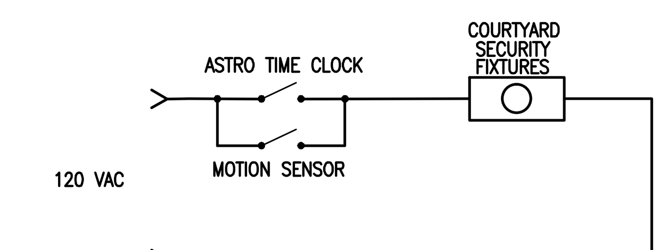

GENERAL NOTES:

1. WIRING DIAGRAM IS CONCEPTUAL. CONTRACTOR MAY NEED TO MAKE ADJUSTMENTS.
2. COURTYARD SECURITY LIGHTS SHALL BE TURNED ON BY TIMECLOCK AND REMAIN ON FOR PREDETERMINED TIME THEN SHUT OFF AND BE OPPERATED BY MOTION SENSOR FOR REMAINDER OF NIGHT.

COURTYARD SECURITY LIGHTING CONTROL WIRING DIAGRAM

SCALE: NONE

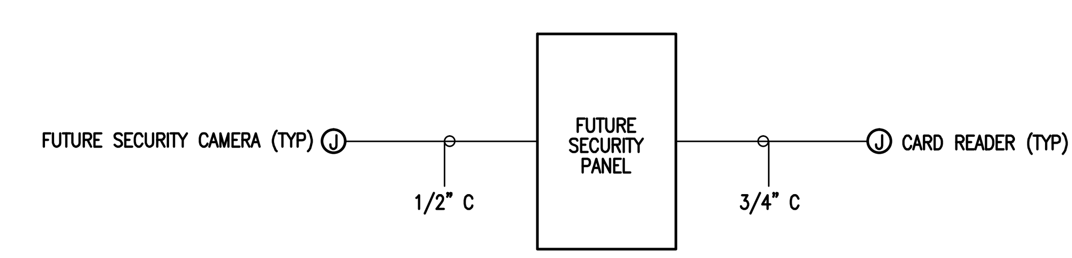

SECURITY SYSTEM RISER DIAGRAM

SCALE: NONE

ELECTRICAL GENERAL NOTES:

1. ALL IRON, STEEL, AND MANUFACTURED GOOD USED ON THIS PROJECT MUST BE COMPLIMENT WITH THE BUY AMERICAN PROVISIONS IN THE AMERICAN RECOVERY AND REINVESTMENT ACT (ARRA). (IRON, STEEL, AND MANUFACTURED GOODS MUST BE PRODUCED IN THE UNITED STATES. A MANUFACTURED GOOD IS A GOODS BROUGHT TO THE CONSTRUCTION SITE FOR INCORPORATION INTO THE BUILDING OR WORK THAT HAS BEEN A) PROCESSED INTO A SPECIFIC FORM OR B) COMBINED WITH OTHER RAW MATERIAL TO CREATE A QUALITATIVELY DIFFERENT MATERIAL.) SEE BUY AMERICAN PROVISIONS OF ARRA FOR DETAILS AND EXCEPTIONS.

State of Utah
Department of Administrative Services
Division of Facilities Construction & Management
4110 State Office Building
Salt Lake City, Utah 84114
Phone: (801) 538 - 3018
Fax: (801) 538 - 3267
http://dfcm.utah.gov

ROYAL ENGINEERING
ELECTRICAL MECHANICAL
2335 SOUTH STATE SUITE 225 PROVO, UTAH 84606
PHONE: 801.375.2228 FAX: 801.375.2676

COPYRIGHT© JOB# J10037 DATE PLOTTED: 05/26/2010
THESE DOCUMENTS ARE INSTRUMENTS OF PROFESSIONAL SERVICE AND THE INFORMATION CONTAINED HEREIN IS INCOMPLETE UNLESS IN CONJUNCTION WITH ROYAL ENGINEERING'S INTERPRETATIONS, DECISIONS, OBSERVATIONS AND ADMINISTRATIONS. USE OR REPRODUCTION OF THESE DOCUMENTS IN WHOLE OR IN PART WITHOUT ROYAL ENGINEERING'S CONSENT IS IN VIOLATION OF COMMON LAW, COPYRIGHTS, STATUTORY AND OTHER RESERVED RIGHTS. REFER TO ACT 17 U.S.C. PAR. 511 (1991). WHICH PREEMPTS STATE AND LOCAL PUBLIC RECORD ACTS. REFER TO ACT 17 U.S.C. PAR. 301 (1991).

BUILDING NAME:

PROPERTY# 15278
USOR - DSVBI
TRAINING HOUSING
Salt Lake City, Utah

PROJECT TITLE:

USOR - Division of Services for the Blind and Visually Impaired TRAINING HOUSING

REGISTERED PROFESSIONAL ENGINEER 187104 STEVEN R. GRIFFITHS STATE OF UTAH

MARK	DATE	DESCRIPTION
-		

ISSUE TYPE: Construction Document Phase

ISSUE DATE: 04.30.2010

DFCM PROJECT NO: 09240200
CAD PROJECT NO:
CAD DWG FILE: J10037 ELEC ALL.dwg
DRAWN BY: CON
CHK'D BY: SRG
COPYRIGHT: STATE OF UTAH

SHEET TITLE

SCHEDULES & DTLS

SHEET NUMBER

EU-503

SHEET 58 OF 58

SECTION 104416 - FIRE EXTINGUISHERS

PART 1 - GENERAL

1.1 SUMMARY

A. Section includes portable, hand-carried fire extinguishers.

B. Related Sections:
1. Division 01 Section “Summary” for “Buy American” requirements of iron, steel, and manufactured goods imposed by the American Recovery and Reinvestment Act of 2009 (ARRA) which is funding this project.

1.2 ACTION SUBMITTALS

A. Product Data: For each type of product indicated.

B. LEED Submittals:
1. Product Data for LEED Credits: Refer to Division 01 Section “Sustainable Design Requirements.”

1.3 INFORMATIONAL SUBMITTALS

A. Warranty: Sample of special warranty.

1.4 CLOSEOUT SUBMITTALS

A. Operation and maintenance data.

1.5 QUALITY ASSURANCE

A. NFPA Compliance: Fabricate and label fire extinguishers to comply with NFPA 10, "Portable Fire Extinguishers."

B. Fire Extinguishers: Listed and labeled for type, rating, and classification by an independent testing agency acceptable to authorities having jurisdiction.

C. Coordinate type and capacity of fire extinguishers with fire protection cabinets to ensure fit and function.

1.6 WARRANTY

A. Special Warranty: Manufacturer's standard form in which manufacturer agrees to repair or replace fire extinguishers that fail in materials or workmanship within specified warranty period.

1. Failures include, but are not limited to, the following:

a. Failure of hydrostatic test according to NFPA 10.
b. Faulty operation of valves or release levers.

2. Warranty Period: Six years from date of Substantial Completion.

PART 2 - PRODUCTS

2.1 PORTABLE, HAND-CARRIED FIRE EXTINGUISHERS

A. Fire Extinguishers: Type, size, and capacity for each fire protection cabinet indicated.

1. Manufacturers: Subject to compliance with requirements, available manufacturers offering products that may be incorporated into the Work include, but are not limited to, the following:

a. Amerex Corporation.
b. Ansul Incorporated; Tyco International Ltd.
c. Badger Fire Protection; a Kidde company.
d. Buckeye Fire Equipment Company.
e. Fire End & Croker Corporation.
f. J. L. Industries, Inc.; a division of Activar Construction Products Group.
g. Kidde Residential and Commercial Division; Subsidiary of Kidde plc.
h. Larsen's Manufacturing Company.
i. Moon-American.
j. Pem All Fire Extinguisher Corp.; a division of PEM Systems, Inc.
k. Potter Roemer LLC.
l. Pyro-Chem; Tyco Safety Products.

2. Instruction Labels: Include pictorial marking system complying with NFPA 10, Appendix B.

B. Clean-Agent Type in Steel Container: UL-rated 2-A:10-B:C, 14-lb (6.4-kg) nominal capacity, with HFC blend agent and inert material in enameled-steel container; with pressure-indicating gage.

PART 3 - EXECUTION

3.1 INSTALLATION

A. Examine fire extinguishers for proper charging and tagging.

1. Remove and replace damaged, defective, or undercharged fire extinguishers.

B. Install fire extinguishers in locations indicated and in compliance with requirements of authorities having jurisdiction.

END OF SECTION 104416

SECTION 104413 - FIRE EXTINGUISHER CABINETS

PART 1 - GENERAL

1.1 SUMMARY

A. Section includes fire protection cabinets for fire extinguishers.

B. Related Sections:
1. Division 01 Section “Summary” for “Buy American” requirements of iron, steel and manufactured goods imposed by the American Recovery and Reinvestment Act of 2009 (ARRA) which is funding this project.

1.2 ACTION SUBMITTALS

A. Product Data: For each type of product indicated.

B. LEED Submittals:
1. Product Data for LEED credits: Refer to Division 01 Section “Sustainable Design Requirements.”

C. Shop Drawings: For fire protection cabinets. Include plans, elevations, sections, details, and attachments to other work.

D. Samples: For each exposed product and for each color and texture specified.

1.3 CLOSEOUT SUBMITTALS

A. Maintenance data.

1.4 QUALITY ASSURANCE

A. Coordinate size of fire protection cabinets to ensure that type and capacity of fire extinguishers indicated are accommodated.

B. Coordinate sizes and locations of fire protection cabinets with wall depths.

PART 2 - PRODUCTS

2.1 MATERIALS

A. Cold-Rolled Steel Sheet: ASTM A 1008/A 1008M, Commercial Steel (CS), Type B.

B. Tempered Float Glass: ASTM C 1048, Kind FT, Condition A, Type I, Quality q3, 3 mm thick, Class 1 (clear).

2.2 FIRE PROTECTION CABINET

A. Cabinet Type: Suitable for fire extinguisher.

1. Products: Subject to compliance with requirements, available products that may be incorporated into the Work include, but are not limited to, the following:

a. Fire End & Croker Corporation;
b. J. L. Industries, Inc., a division of Activar Construction Products Group;
c. Kidde Residential and Commercial Division, Subsidiary of Kidde plc;
d. Larsen's Manufacturing Company;
e. Modern Metal Products, Division of Technico Inc.;
f. Moon-American;
g. Potter Roemer LLC;
h. Watrous Division, American Specialties, Inc.;

B. Cabinet Construction: Nonrated.

C. Cabinet Material: Steel sheet.

D. Semirecessed Cabinet: Cabinet box partially recessed in walls of sufficient depth to suit style of trim indicated; with one-piece combination trim and perimeter door frame overlapping surrounding wall surface with exposed trim face and wall return at outer edge (backbend). Provide where walls are of insufficient depth for recessed cabinets but are of sufficient depth to accommodate semirecessed cabinet installation.

1. Rolled-Edge Trim: 2-1/2-inch (64-mm) backbend depth.

E. Cabinet Trim Material: Steel sheet.

F. Door Material: Steel sheet.

G. Door Style: Fully glazed panel with frame.

H. Door Glazing: Tempered float glass (clear).

I. Door Hardware: Manufacturer's standard door-operating hardware of proper type for cabinet type, trim style, and door material and style indicated.

J. Accessories:

1. Mounting Bracket: Manufacturer's standard steel, designed to secure fire extinguisher to fire protection cabinet, of sizes required for types and capacities of fire extinguishers indicated, with plated or baked-enamel finish.
2. Break-Glass Strike: Manufacturer's standard metal strike, complete with chain and mounting clip, secured to cabinet.
3. Door Lock: Cam lock that allows door to be opened during emergency by pulling sharply on door handle
4. Identification: Lettering complying with authorities having jurisdiction for letter style, size, spacing, and location. Locate as indicated.

a. Identify fire extinguisher in fire protection cabinet with the words "FIRE EXTINGUISHER."

1) Location: Applied to cabinet glazing.
2) Application Process: Decals.
3) Lettering Color: Black.
4) Orientation: Vertical.

K. Finishes:

1. Manufacturer's standard baked-enamel paint for the following:

a. Exterior of cabinet door, and trim, except for those surfaces indicated to receive another finish.
b. Interior of cabinet and door.

2.3 FABRICATION

A. Fire Protection Cabinets: Provide manufacturer's standard box (tub), with trim, frame, door, and hardware to suit cabinet type, trim style, and door style indicated. Miter and weld joints and grind smooth.

PART 3 - EXECUTION

3.1 INSTALLATION

A. Examine walls and partitions for suitable framing depth and blocking where semi-recessed cabinets will be installed and prepare recesses as required by type and size of cabinet and trim style.

B. Install fire protection cabinets in locations and at mounting heights acceptable to authorities having jurisdiction.

C. Fire Protection Cabinets: Fasten cabinets to structure, square and plumb.

D. Identification: Apply decals at locations indicated.

E. Adjust fire protection cabinet doors to operate easily without binding. Verify that integral locking devices operate properly.

F. Replace fire protection cabinets that have been damaged or have deteriorated beyond successful repair by finish touchup or similar minor repair procedures.

END OF SECTION 104413

Information To Build On
Engineering • Consulting • Testing

GEOTECHNICAL ENGINEERING REPORT
PROPOSED USOR TRAINING HOUSING FOR THE BLIND
NEAR 1950 WEST 400 NORTH
SALT LAKE CITY, UTAH

PSI PROJECT No: 0710129

April 21, 2010

Prepared For:
Division of Facilities and Construction Management
4110 State Office Building
Salt Lake City, Utah 84114

Attn: Mr. Dave McKay

Prepared By:

PROFESSIONAL SERVICE INDUSTRIES, INC.
2779 South 600 West
Salt Lake City, Utah
(801) 484 - 8827

Information To Build On
Engineering • Consulting • Testing

April 21, 2010

Mr. Dave McKay
Division of Facilities and Construction Management
4110 State Office Building
Salt Lake City, Utah 84114

SUBJECT: Geotechnical Investigation Report
Proposed USOR Training Housing for the Blind
Near 1950 West 400 North
Salt Lake City, Utah
PSI Project No. 0710129

Dear Mr. McKay:

Professional Service Industries, Inc. (PSI) is pleased to submit this report of a geotechnical investigation for the proposed USOR Training Housing for the Blind to be located near 1950 West 400 North in Salt Lake City, Utah. This report summarizes the work accomplished and provides our recommendations for design and construction of the project.

Based on the results of our field investigation, laboratory testing, and engineering analysis, the proposed site is suitable for the construction from a geotechnical standpoint provided the recommendations of this report are followed. Recommendations regarding the geotechnical aspects of project design and construction are presented in the attached report.

PSI is committed to providing quality services to its clients, commensurate with their wants, needs, and desires. PSI appreciates the opportunity to provide its services on this project. If you have questions pertaining to this project or if we may be of further assistance, please call the undersigned. We appreciate your business and look forward to our next project with you.

Respectfully Submitted,
PROFESSIONAL SERVICE INDUSTRIES, INC.

LICENSED PROFESSIONAL ENGINEER
4-21-10
No. 188305
CHRIS T. GARRIS
STATE OF UTAH

MANUEL E. ZEA, PEI
Staff Engineer

CHRIS T. GARRIS, PE
Principal Consultant

MEZ/ctg
P:\710\Reports\2010\0710129 Blind House DFCM\0710129 Proposed USOR Training Housing for the Blind.doc

TABLE OF CONTENTS

INTRODUCTION

PROJECT DESCRIPTION

SITE DESCRIPTION

3.1 Site Conditions and Topography 1
3.2 Regional Geology 2

FIELD EXPLORATIONS

LABORATORY TESTING

5.1 Consolidation Test 4

SUBSURFACE CONDITIONS

6.1 Soils 4
6.2 Free Water Level 4

CONCLUSIONS AND RECOMMENDATIONS

7.1 Geotechnical Discussion 5
7.2 Site Preparation and Earthwork 5
7.3 Excavations 6
7.4 Structural Fill 6
7.5 Compaction 7
7.6 Foundations 7
7.7 Foundation Settlements 8
7.8 Floor Support 9
7.9 Earthquake and Seismic Design Parameters 9
7.10 Liquefaction Potential 10
7.11 Utility Trenches 10
7.11.1 Utility Trench Backfill 11
7.12 Surface Drainage 11
7.13 Pavement 11
7.13.1 Pavement Drainage and Maintenance 13

DESIGN REVIEW AND CONSTRUCTION SERVICES

GEOTECHNICAL RISK

LIMITATIONS

APPENDI□ A

VICINITY MAP Figure A-1
SITE MAP WITH BORING AND CPT LOCATIONS Figure A-2

APPENDI□ B

BORING LOGS Figures B-1 and B-2
SUMMARY OF LABORATORY TEST RESULTS Figure B-3
CPT LOGS Figures B-4 and B-5

APPENDI□ C

CONSOLIDATION TEST RESULT Figures C-1 and C-2

INTRODUCTION

This report presents the results of a geotechnical investigation for the proposed USOR Training Housing for the Blind to be located near 1950 West 400 North in Salt Lake City, Utah. The services for this project were performed in accordance with Professional Service Industries, Inc. (PSI) Proposal No. PO710-05022 dated March 19, 2010 and authorized by Mr. Dave McKay of DFCM by means of purchase number 78543.

The purpose of this investigation was to explore subsurface materials and conditions at the site and to develop recommendations for earthwork and design and construction of foundations, floor slabs and pavements. This report describes the work accomplished and presents our conclusions and recommendations for the design and construction of the project.

PROJECT DESCRIPTION

Based on the information provided by Division of Facilities and Construction Management (DFCM), PSI understands that the project consists of the construction of two single-story, slab-on-grade residential duplexes that will serve as independent living/housing and training for the blind.

Structural loads were not available at the time of this report. Based on our experience with similar structures, we anticipate maximum column and wall loads on the order of 60 kips and 4 kips per lineal foot, respectively. Site grading information was not available at the time of preparation of this report; however we anticipate that the maximum cuts and fills will not exceed three (3) feet.

The geotechnical recommendations presented herein are based on the available project information including anticipated loads, building locations and layout, and the subsurface conditions described in this report. If the assumed structural loads or any of the noted or assumed information is incorrect, please inform PSI in writing so that we may amend the recommendations presented in this report where appropriate.

SITE DESCRIPTION

SITE CONDITIONS

The project site is located near 1950 West 400 North in Salt Lake City, Utah. The Site Vicinity Map and the Site Map are presented on Figures A-1 and A-2, respectively in Appendix A. At the time of PSI's field investigation, the project site consisted of vacant land covered with weeds and grasses. Concrete block and wooden boxes were piled on the north and south sides of the site. Based on available topographic information and our observations, the ground surface at the project site ranges from about 2 to 3 feet across the site and slopes downward to the north at approximately 2%. The proposed project site is bounded by 400 North Street and residential homes to the north, by a commercial building to the south, by a church building to the east, and by Interstate I-215 to the west. Photo 1 depicts the site and its surroundings at the time of our field investigation.

P□□□□ □: View of Proposed Site Looking East

□□□ R□□□□□□G□□□□□□

According to available geologic maps of the area, the project site is mantled with lacustrine deposits. These deposits typically consist of silts and clays with varying amounts of sand. The project site is located approximately 0.2 miles northeast and 0.35 miles south/southeast of parallel segments of the Taylorsville fault of the West Valley Fault zone. However, no faults are mapped as crossing the proposed development. Earthquake design parameters including Site Class are provided in Section 7.9 of this report.

□□□ FIELD E□PLORATIONS

Subsurface conditions at the project site were explored with two (2) borings, designated as B-1 and B-2, and two (2) cone penetration tests (CPT) soundings, designated as CPT-1 and CPT-2, explored at the approximate locations indicated on Figure A-2 in Appendix A. The two (2) borings were drilled in the proposed buildings footprint area to a depth of about 21½ feet below existing site grade. In addition to the borings, two (2) CPT soundings were pushed within the proposed buildings footprint areas to a depth of about 40 feet below existing site grade. The borings were drilled to characterize the nature, density, and variability of the subsurface soils beneath the proposed construction. The CPT sounding consists of pushing the standard cone into the subsurface soils at a rate of about 0.4 to 0.8 in/sec. and recording the resistance at 0.16 foot intervals. The total cone resistance is made up of side friction on the cone shaft perimeter

and tip pressure. Data usually recorded are the cone side friction (f_s), tip resistance (q_t), and pore water pressure (u). CPT soundings were pushed to obtain more detailed subsurface conditions to properly evaluate the liquefaction potential at the project site and its potential effects on the proposed buildings.

The borings and CPT soundings were located on the site by a PSI representative by measuring approximate distances from known site landmarks. The investigation was performed under the supervision of a PSI Geotechnical Engineer who maintained detailed logs of the subsurface materials and conditions encountered in the borings, and collected representative samples. The borings were logged and the soil encountered was classified in general accordance with the Unified Soil Classification System (USCS). Boring logs, which include project designation and project location, boring number, method of boring, type drill rig and sampling, date of boring, depth of various soil layers, a description of each soil layer including color, consistency and visual grain-size classification, water level information, laboratory test data, stratifications, and classifications based on the USCS are included in Appendix B.

The borings were drilled using a CME-55 truck-mounted drill rig using 3¾-inch inside diameter continuous-flight hollow-stem augers. Samples were obtained at about 2½ to 5 foot intervals in each boring. Both disturbed and relatively undisturbed samples of the soils were obtained for subsequent laboratory testing and examination. Relatively undisturbed samples were obtained using 3-inch outside diameter (OD) Shelby tubes. Disturbed samples were obtained by driving a standard 2-inch OD split-spoon sampler into the soil a distance of 18 inches using a 140-lb hammer dropped from a height of 30 inches. The number of blows required to drive the sampler the last 12 inches is known as the standard penetration resistance, or N-value. The N-values provide a measure of the relative density of granular soils, such as sand, and the relative consistency, or stiffness, of cohesive soils, such as clay or silt.

Disturbed soil samples were examined in the field and representative portions were stored in sealable plastic bags. The samples were transported to our laboratory for further examination and testing. The borings were backfilled up to the ground surface with auger cuttings and on-site soils.

LABORATORY TESTING

Representative samples of soils were tested to evaluate physical and engineering properties. The laboratory testing program included measurements of natural water content, grain size analyses, Atterberg Limits, one-dimensional consolidation tests, and soil classification. The results of the analyses are presented on the Boring Logs (Figures B-1 and B-2), and the Summary of Laboratory Test Results (Figure B-3) in Appendix B.

C T

Two one-dimensional consolidation tests were performed on representative soil samples in accordance with ASTM D 2435. Consolidation test specimens were derived from relatively undisturbed soil samples obtained in the field from depths of about seven and one-half (7½) and 10 feet below existing site grade using 3-inch OD thin-wall steel Shelby tubes. The purpose of the consolidation test is to evaluate the compressibility of the natural soils beneath the proposed structures. Consolidation test results are presented on Figures C-1 and C-2 in Appendix C. Test results suggest that the undisturbed clays are moderately compressible under light to moderate loads.

SUBSURFACE CONDITIONS

S

Soil conditions generally encountered in the borings consist of approximately two (2) inches of undocumented fill consisting of gravel underlain by interlayered stiff to soft silty clay with varying amounts of sand (CL-ML), stiff to very soft lean clay with varying amounts of sand (CL), very soft to soft silt with varying amounts of sand (ML), and very loose to loose silty sand (SM).

Standard penetration resistance values ranged from about one (1) blow per foot to 14 blows per foot in the native fine-grained soils and from about three (3) to seven (7) blows per foot in the native granular soils. Natural soil moisture contents of the selected soil samples tested in the laboratory ranged from about 12 to 42 percent. Some soils tested suggest sensitive conditions in the upper 10 feet of the soil profile where the natural moisture content exceeds the Liquid Limit. For a detailed description of the materials and conditions encountered at boring locations, please refer to Figures B-1 through B-3 in Appendix B.

The subsurface profile described above is a generalized interpretation provided to highlight the major subsurface stratification features and material characteristics. The boring logs included in the Appendix should be reviewed for more specific information. These records include soil description, stratifications, standard penetration resistances, location of samples, and laboratory test data. The stratifications shown on the boring logs represent the conditions only at the boring locations for this study. The stratifications indicated on the boring logs represent the approximate boundary between subsurface materials. The actual transitions may be gradual. Subsurface materials and conditions may vary across relatively short distances at the site and may become apparent with additional explorations or excavation. If soil conditions are found to be different than described herein, we should be allowed to reevaluate our recommendations if necessary.

F W L

Free water was encountered in Borings B-1 and B-2, and in CPT-1 and CPT-2 during PSI's field investigation at depths of ranging from about nine and one-half (9½) to 15 feet. It should be noted that it is possible for the stabilized free water level to be higher than observed in the drilled borehole. Water levels may also fluctuate during the year depending upon climatic, local

irrigation practices and other factors. Additionally, discontinuous zones of perched water may exist at varying locations and depths beneath the ground surface. As a result, groundwater conditions during or after construction may be different than those observed during the field investigation.

Considering that no below-grade structure is proposed for the site, subdrain recommendations have not been included in this report. If the project is different than described above, or if a below-grade structure is to be considered, PSI should be contacted to reevaluate the need for subdrains to protect the proposed structures.

CONCLUSIONS AND RECOMMENDATIONS

GENERAL

The following geotechnical-related recommendations have been developed based on the subsurface conditions encountered in the borings and PSI's understanding of the proposed construction. The primary geotechnical considerations with respect to the development include foundation subgrade preparation and surface drainage. Further details are provided in the following sections of the report.

SITE PREPARATION

PSI recommends that the ground surface within the proposed development and all other areas to receive structural fill be cleared of undocumented fill, organics, vegetation, and unsuitable material. In general, we anticipate that stripping to depths of about six (6) inches will be required to remove undocumented fill and other unsuitable material; however, a greater or lesser amount of stripping may be required locally.

Upon completion of site stripping, the exposed subgrades should be evaluated by a representative of the Geotechnical Engineer to evaluate the exposed soil conditions with respect to the soil conditions observed in our investigation. Proof rolling with heavy construction equipment may be a part of this evaluation for areas to be paved or to receive structural fill. Soils that are observed to rut or deflect excessively (typically greater than ½-inch) under the moving load of a loaded rubber-tired dump truck (typically, 9 ton/axle) or other suitable construction vehicle should be over-excavated down to firm undisturbed native soils or a suitable depth as determined by the Geotechnical Engineer and backfilled with properly placed and compacted structural fill. PSI anticipates that the native subgrade soils may become weaker with increased over-excavation. Stabilization methods may be required, particularly in areas of deeper excavation (foundation excavations) prior to placement and compaction of structural fill. Stabilization should consist of placement of a non-woven filter fabric followed by Tensar® BX-1200 geogrid, or equivalent placed on top of properly prepared subgrade. The geogrid reinforcement should be followed by placement of select granular fill (structural fill or crushed aggregate).

PSI's experience with other projects in the area suggests that the near surface fine-grained soils observed in the subsurface investigation are sensitive to changes in moisture content and/or disturbance from construction traffic. We recommend that consideration be given to constructing a temporary construction road consisting of at least one (1) foot of crushed gravel overlying a geogrid geosynthetic reinforcement layer, such as Tensar® BX-1100 placed over prepared sub-grade to protect the natural subgrade from disturbance from limited construction traffic.

Excavations should be made using an excavator equipped with a smooth edge and supported from outside the excavation. If the subgrade is disturbed during construction, loose or otherwise disturbed soils should be over-excavated to firm, undisturbed soil and backfilled with compacted granular materials as outlined in Section 7.4. PSI recommends that site preparation and earthwork be accomplished during warmer, drier months, typically extending from mid-May to mid-October of the year.

E

Excavations should be performed in accordance with OSHA regulations as stated in 29 CFR Part 1926. The contractor is solely responsible for designing and constructing stable, temporary excavations and should shore, slope, or bench the sides of the excavations as required to maintain stability of both the excavation sides and bottom. The contractor should evaluate the soil exposed in the excavations as part of the required safety procedures. In no case should slope height, slope inclination, or excavation depth, including utility trench excavation depth, exceed those specified by local, state, and federal safety regulations. PSI is providing this information solely as a service to our client. PSI does not assume responsibility for construction site safety or the contractor's or other parties' compliance with local, state, and federal safety or other regulations.

During wet weather, earthen berms or other methods should be used to prevent runoff water from entering the excavations. The bottom of the excavations should be sloped to a collection point. Collected water within the foundation and utility trench excavations should be discharged to a suitable location outside the construction limits.

S F

Based on the results from PSI's field and laboratory investigation, on-site soils are generally not suitable for use as structural fill but may be used as site grading fill and backfill, or as fill in landscaped areas. Imported structural fill should consist of well-graded sand and gravel materials that are free of organic or other deleterious materials. Imported fill material should be approved by the Geotechnical Engineer prior to its delivery to the project site. Structural fill material should meet the specifications presented in Table 1.

T□□□□ □: Structural Fill Gradation Requirements

Sieve Size	Percent Passing by Weight
3 inch	100
¾ inch	85 - 100
No. 4	40 - 80
No. 40	10 – 40
No. 200	5 - 15
Liquid Limit (LL)	≤ 35
Plasticity Index (PI)	15 (Max.) - 4 (Min.)

□□□ C□□ □□□□□□□

Structural fill materials should be moisture conditioned to two (2) percent below optimum to two (2) percent above optimum moisture content. Structural fill should be placed in loose lifts not exceeding nine (9) inches thick and compacted to at least 95 percent of the maximum dry density as determined by the ASTM D 1557 Test Method. Site grading fill or backfill placed beneath pavements, floor slabs or flat work should be compacted to at least 90 percent of the maximum dry density as determined using ASTM D 1557.

Placement and compaction of all fill materials should be observed, tested, and documented by a representative of the Geotechnical Engineer. Tested fill materials that do not achieve either the required dry density or moisture content requirements should be recorded, the location noted, and reported to the contractor and owner. A re-test of that area should be performed after the contractor has performed all necessary remedial measures including moisture conditioning (wetting or drying) and reworking the fill. The Geotechnical Engineer should be retained to observe site stabilization, if required.

□□□ F□□□□□□□□□

The proposed buildings can be supported on spread and/or continuous footings bearing entirely on undisturbed native fine-grained soils or on properly placed and compacted granular structural fill extending down to undisturbed native soils. The following design parameters are recommended for footing design and construction:

- Footings bearing on undisturbed native soils or on properly placed granular structural fill may be designed using a maximum net allowable bearing pressure of 2,000 pounds per square foot (psf). Alternately, shallow foundations placed on at-least two (2) feet of properly placed and compacted granular structural fill extending down to undisturbed natural soils may be designed using a maximum net allowable bearing pressure of 2,500 psf.

- The recommended allowable bearing pressure refers to the total dead load and can be increased by 1/3 to include the sum of all loads including wind and seismic.

- Footings should bear at a minimum depth of 30 inches below final grade for frost protection. For non-frost areas, such as interior footings, a minimum embedment depth of 12 inches is recommended. If the proposed buildings are to be constructed during winter months or if the footings may be subjected to freezing temperatures after foundation construction, then all footings should be protected from freezing.

- Foundations should have minimum lateral dimensions of 18 inches for continuous footings and 24 inches for isolated column footings.

- Structural fill, where required, should extend a minimum of ½ the depth of the fill laterally beyond the outside edge of the footings.

- Footings should be designed in accordance with the International Building Code (IBC), 2009 edition.

Horizontal shear forces can be resisted partially or completely by frictional forces developed between the base of spread footings and the underlying soil. The total frictional resistance between the footing and the soil is the sum of vertical forces (dead load) times the coefficient of friction between the soil and the base of the footing. We recommend a value of 0.25 for the coefficient of friction for concrete placed on undisturbed natural soils and a value of 0.30 for the coefficient of friction for concrete placed on at-least two (2) feet of structural fill. If additional lateral resistance is required, passive soil resistance from embedded retaining walls and/or foundations may be evaluated on the basis of an equivalent fluid having a unit weight of 250 pcf. Lateral earth pressures, including seismic lateral earth pressures may be provided upon request.

We recommend that the footing excavations be observed and documented by PSI's Geotechnical Engineer or his designated technical representative prior to placement of structural fill, concrete or reinforcing steel to verify their suitability for foundation support. Footing observation and concrete placement should occur as quickly as possible to avoid prolonged exposure of the exposed footing excavation to wetting, drying or freezing. The foundation concrete should be placed during the same day the excavation is made. If footing excavations are left open for extended periods, they should be protected to reduce evaporation, moisture infiltration or freezing. Surface run-off should be diverted away from footing excavations.

F S

Total settlement of an individual foundation will vary depending on the plan dimensions of the foundations and the actual load supported. We estimate that total settlement under static loads will not exceed one (1) inch between adjacent footings designed according to the recommendations described in Section 7.6 above. Differential settlements are expected to approach about 75 percent of the estimated total settlement under static conditions.

F S

The proposed buildings floor slabs should be supported either entirely on the native soils or on properly placed and compacted granular structural fill extending down to undisturbed native soil. We recommend that a minimum of six (6) inches of free-draining gravel be placed immediately below the floor slabs and/or exterior flatwork to enhance drainage, promote curing, and aid in the distribution of floor loads. Installation of a vapor retarder beneath the floor may also be considered if moisture sensitive floor coverings and contents are anticipated inside the building. The vapor retarder should be installed in accordance with the manufacturer's recommendations. The floor slab should have adequate number of joints to reduce cracking resulting from any differential movements and shrinkage.

E S D P

The project site is located approximately 0.2 miles northeast and 0.35 miles south/southeast of parallel segments of the Taylorsville fault of the West Valley Fault zone. No faults are mapped as crossing the proposed development. A search of the U.S. Geological Survey National Earthquake Hazard Reduction Program (NEHRP) database resulted in the following probabilistic ground motion values at the bedrock elevation for the project site located at 40.7779 degrees North Latitude and -111.9482 degrees West Longitude as shown in Table 2.

T : Earthquake Design Factors Using the NEHRP Database (IBC-2009)

I M T	I M L	
	Y	Y
Peak Ground Acceleration - PGA (g)	0.727	0.300
0.2 Sec. Spectral Acceleration - S_s (g)	1.709	0.697
1.0 Sec. Spectral Acceleration - S_1 (g)	0.693	0.250

The 2009 Edition International Building Code (IBC) requires the assignment of Site Class for the calculations of earthquake design forces and the structural design based on a 2 percent probability of exceedance in 50 years. Site Class is a function of soil profile i.e., depth of soil and strata type in the top 100 feet below site grades. Based on subsurface conditions encountered at the site and PSI's experience in the area, the soil profile at the project site can be best characterized as Site Class D. Accordingly, site coefficient values F_a = 1.0 and F_v = 1.5 with corresponding SM_s = 1.709 and SM_1 = 1.040 may be used for short and long period seismic design of structures for a seismic event resulting from a 2 percent probability of exceedance in 50 years earthquake only if the period of vibration of the structure is less than or equal to 0.5 seconds.

The parameters provided above are based on subsurface information obtained from relatively shallow explorations and PSI's experience in the project area. The International Building Code (IBC) 2009 Site Class is based on the top 100 feet of subsurface profile, which may require a deeper test boring to a depth of at-least 100 feet below existing site grades or other geophysical

methods to obtain information for the upper 100 feet of the subsurface profile. Other methods such as Refraction Microtremor (ReMi©) survey may also be used to further evaluate and refine the IBC-2009 Site Class designation.

LIQUEFACTION

In general, liquefaction is a condition where soils lose inter-granular strength due to abrupt increases in pore water pressure. Pore water pressure increases typically occur during dynamic loading such as ground shaking during a seismic event. Liquefaction, should it occur on a site, can induce ground settlement and lateral spreading, which can result in damage to the structures. For liquefaction to occur, the following conditions must be present:

- The soil sediments must be in saturated or near-saturated conditions. At least 80-85 percent saturation is generally considered necessary for the liquefaction to occur.
- The soil must be predominately composed of non-plastic material such as sand or silt.
- The soil must be in a loose state.
- The soil must be subjected to dynamic loading, such as an earthquake.

The probabilistic ground acceleration (PGA) values presented in table 2 were used to evaluate liquefaction potential at the site in accordance with procedures outlined in the National Center for Earthquake Engineering and Research Technical Report NCEER-97-0022, dated December 31, 1997. The subsurface soils encountered in CPT data behave as interlayered sand and silty sand. Our analysis indicates that there is a 2 percent chance that the site may experience ground shaking strong enough to induce liquefaction in a 50-year time period. Based on a maximum credible earthquake magnitude M_w = 7.2 the submerged sandy soils encountered in the CPT soundings could experience liquefaction-induced settlement of about 2 inches for this seismic event. The liquefaction-induced settlement is anticipated to occur differentially beneath the structures and in addition to anticipated static settlement described in the geotechnical report. These results should be discussed with a qualified Structural Engineer to evaluate the potential building response to such settlements.

If the estimated liquefaction-induced settlements are considered excessive, mitigation such as compaction grouting, impact piers, rammed aggregate piers, or other methods of reducing the liquefaction potential of the sandy soils beneath the foundations as well as floor slabs may be considered. Alternatively, the building structures could be designed to resist potential liquefaction-induced differential settlements at the ground surface by stiffening the foundations with grade beam connections between spread footings or by using other alternative foundation types such as stone columns, rammed-aggregate piers, etc., to bypass the potential liquefiable zones. PSI would be pleased to further discuss and evaluate these alternatives at your request.

UTILITY

Utility trenches should be kept free from water during excavation, fine grading, pipe laying, jointing, and embedment operations. Surface water should be prevented from entering

trenches. If unstable soils are encountered at invert elevations, it may be necessary to over-excavate and replace the unstable soils with free draining gravel backfill. The depth of over-excavation, if necessary, should be determined by field observation.

Utility Trench Backfill

The backfill placed in utility trench excavations within the limits of the buildings and paved areas should consist of sand, sand and gravel, or crushed rock with a maximum size of up to 1½ inches, and with not more that 5 percent passing the No. 200 sieve (washed analysis). This backfill should be uniformly moisture conditioned, placed in maximum 9 inches-thick lifts (loose) and compacted using vibratory compaction equipment or tamping units to at least 90 percent of the maximum dry density as determined by ASTM D 1557. Flooding or jetting the backfilled trenches with water to attempt to achieve compaction should not be permitted.

Even when placed and compacted under optimum conditions, trench backfill may settle over time. Therefore, all improvements such as floor slabs, footings, and pavements placed over trench backfill should be designed to span over localized irregularities or be designed to allow some differential movement.

Site Drainage

Positive site drainage away from the foundations and drive areas should be established during the construction and maintained throughout the life of proposed construction. Water should not be allowed to collect near the foundations or floor slab areas either during or after construction. Undercut or excavated areas should be sloped towards one corner to facilitate removal of any collected rainwater, groundwater seepage, or surface runoff. Water from roof downspouts of the proposed buildings should be conveyed in pipes that discharge in areas a suitable distance away from the buildings. PSI recommends that a minimum five (5) percent gradient should be maintained for a distance of at least ten (10) feet away from any foundation wall in unpaved areas. Site perimeters should be prepared with silt fences and/or other erosion control devices to keep storm water properly contained and controlled within the site boundaries.

Pavement

PSI anticipates that flexible pavement will be used for the new parking and drive areas. PSI has prepared a pavement design section based on soil characteristics similar to those encountered in the borings drilled at the site and relatively light traffic loads. For design purposes, PSI has based our pavement design on subgrade conditions consisting of unyielding, non-organic native soils or structural/granular fill. PSI has assumed light and heavy traffic consisting of about 40,000 and 50,000 Equivalent Single Axle Loads (ESALs), respectively to characterize the design pavement traffic over a 20-year design period at 80% reliability, California Bearing Ratio (CBR) value of 3, and initial and terminal serviceability of 4.2 and 2.5, respectively. Based on above design criteria, we recommend the pavement sections presented in Table 3 should be used in pavement areas.

T□□□□ □: Flexible Pavement Design Parameters

P□□□□ □□□M□□□□□□□□□	**R□□□□ □ □□□□□ M□□□□ □□ T□□□□□□□□□ □□□□□□□**	
	L□□□□D□□□ S□□□□□□	**H□□□□ D□□□ S□□□□□□**
Asphaltic Concrete	3	3
Granular Base Course	6	8

Pavement materials and workmanship should conform to the Utah Department of Transportation (UDOT) Standard Specifications for Road and Bridge Construction. PSI recommends that the subbase should be prepared before pacing base course material. Subbase preparation is described in Section 7.2 of this report.

Base course and granular borrow materials should be moisture conditioned to near optimum moisture content and placed in lifts not to exceed 8 inches. Granular borrow and base course materials should be compacted to at least 95 percent of the maximum dry density as determined by ASTM D-1557. Base course material used to support pavement section should meet the gradation criteria presented in Table 4.

T□□□□ □: Base Course Gradation Requirements

S□□□□ S□□□	**P□□□□□□□P□□□□□□ □□T□□□A□□□□□□□□ □D□□W□□□□□**		
	1½ inch Size	1 inch Size	¾ inch Size
1½ inch	100	--	--
1 inch	--	100	--
¾ inch	81-91	--	100
½ inch	67-77	79-91	--
3/8 inch	--	--	78-92
No. 4	43-53	49-61	55-67
No. 16	23-29	27-35	28-38
No. 200	6-10	7-11	7-11

We anticipate that typical rigid concrete pavement may be used in the approach apron areas and areas where trash dumpsters are to be parked on the pavement or where a considerable load is transferred from relatively small steel wheels. This should provide better distribution of surface loads to subgrade without causing deformation of the surface. PSI recommends that concrete pavement be designed for a modulus of subgrade reaction of 100 pci. The typical pavement section is presented in Table 5.

T□□□□ □: Rigid Pavement Design Parameters

P□□□□ □□□M□□□□□□□□□	**R□□□□ □ □□□□□ M□□□□ □□ P□□□□ □□□T□□□□□□□□ □□□□□□□**
Concrete (4,000 psi)	5
Granular Base Course	6

Portland Cement Concrete used for the pavement rigid pavement section should be air entrained with approximately six (6) percent air, and the maximum allowable slump should not exceed four (4) inches. Joints for the rigid concrete pavement should be laid in a rectangular or square pattern. Joint spacing should not exceed thirty (30) times the thickness of the slab and should accommodate the contraction and expansion of concrete. Depth of joints should be approximately ¼ times the slab thickness.

P D M

Pavement subgrades should be sloped to provide rapid surface drainage during and after construction. Water allowed to pond on or adjacent to pavement areas could saturate the subgrade or pavement section and cause premature deterioration of pavements, and removal and replacement may be required. Periodic maintenance of the pavement should be anticipated. This should include sealing of cracks and joints and by maintaining proper surface drainage to avoid ponding of water on or near the pavement area.

DESIGN REVIEW AND CONSTRUCTION SERVICES

PSI should be retained to review all geotechnical related portions of the plans and specifications to evaluate whether they are in conformance with the recommendations provided in our report. Additionally, it is our opinion that all construction operations dealing with earthwork and foundations should be observed by a PSI representative to observe compliance with the intent of our recommendations, design concepts, and the plans and specifications. PSI's construction services will allow for timely design changes if site conditions are encountered that are different from those described in this report. If site conditions are different than described in this report, PSI should be notified so that we can re-evaluate our recommendations if necessary.

GEOTECHNICAL RISK

The concept of risk is an important aspect of the geotechnical evaluation. The primary reason for this is that the analytical methods used to develop geotechnical recommendations do not comprise an exact science. The analytical tools which Geotechnical Engineer uses are generally empirical and must be used in conjunction with engineering judgment and experience. Therefore, the solutions and recommendations presented in the geotechnical evaluation should not be considered risk-free and, more importantly, are not a guarantee that the interaction between the soils and the proposed structure will perform as planned. The engineering recommendations presented in the preceding sections constitute PSI's professional estimate of those measures that are necessary for the proposed structures to perform according to the proposed design based on the information generated and referenced during this evaluation, and PSI's experience in working with these conditions.

LIMITATIONS

The recommendations submitted are based on the available subsurface information obtained by PSI, and information provided by DFCM. If there are any revisions to the plans for this project or if deviations from the subsurface conditions noted in this report are encountered during

construction, PSI should be notified immediately to determine if changes in the foundation and/or other recommendations are required. If PSI is not retained to perform these functions, PSI cannot be responsible for the impact of those conditions on the performance of the project. The Geotechnical Engineer warrants that the findings, recommendations, specifications, or professional advice contained herein have been made in accordance with generally accepted professional geotechnical engineering practices in the local area. No other warranties are implied or expressed. The Geotechnical Engineer should be retained and provided the opportunity to review the final design plans and specifications to check that our engineering recommendations have been properly incorporated into the design documents. At that time, it may be necessary to submit supplementary recommendations. This report has been prepared for the exclusive use of DFCM and their respective successors and assigns for the specific application to the proposed USOR Training Housing for the Blind to be located near 1950 West 400 North in Salt Lake City, Utah.

APPENDIX A

VARIABLE MAP
SAMPLE PROFILE BASED ON CPT LEVELS

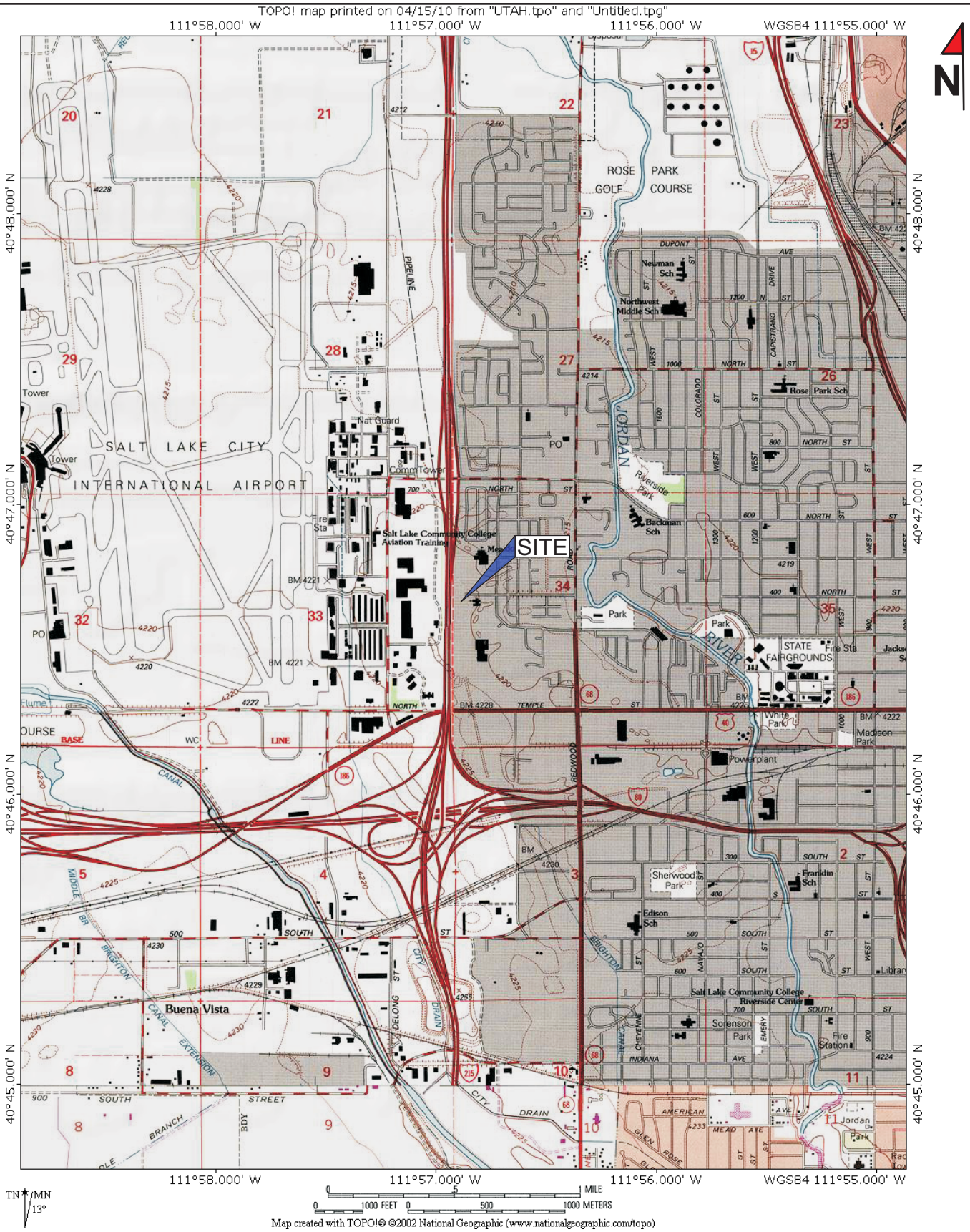

psi Information To Build On
Engineering • Consulting • Testing

Project:
Proposed USOR Training Housing for the Blind
Near 1950 400 North
Salt Lake City, Utah

Project No: 0710129

SITE VICINITY MAP

Drawn By: MEZ
Checked By: CTG
Date: April, 2010

Scale: As Shown

APPROXIMATE BORING AND CPT LOCATIONS

psi Information To Build On Engineering • Consulting • Testing	Project: Proposed USOR Training Housing for the Blind Near 1950 West 400 North Salt Lake City, Utah Project No: 0710129	Drawn By: MEZ Checked By: CG Date: 4/10/2010	SITE MAP WITH BORING LOCATIONS Approximate Scale: 1”=85’

APPENDI□ B

B□□□□□ L□□□
S□□ □ □□□ □□L□□□□□□□□□ T□□□R□□□□□□
CPT L□□□

2779 South 600 West
Salt Lake City, Utah 84115
PH: (801) 484-8827
Fax: (801) 487-3312

LOG OF BORING B-□

PSI Job No.:	0710129	Drilling Method:	Hollow Stem Auger
Project:	Proposed USOR Training Housing for the Blind	Sampling Method:	Split Spoon/Shelby Tube
Location:	Approximately 1950 West 400 North Salt Lake City, Utah	Hammer Type:	CME Automatic
		Boring Location:	

WATER LEVELS

While Drilling	13 Feet
Upon Completion	12.5 Feet
Delay	N/A

Station: N/A
Offset: N/A

Elevation (feet)	Depth, (feet)	Graphic Log	Sample Type	Sample No.	Recovery (inches)	MATERIAL DESCRIPTION	USCS Classification	SPT Blows per 6-inch (SS)	Moisture, %	Additional Remarks
	0					**F□□:** -- Gravel, gray, with vegetation				
						S□□□ CLAY □ □□□ S□□□: -- dark brown to brown, stiff to soft				
				1	18		CL-ML	4-7-6 N=13	12	
	5			2	24				25	LL = 25 PL = 20 Fines=84.3%
						L□□□ CLAY: -- grayish-brown, very soft			37	
				3	18			1-1-1 N=2		
	10					-- with interbedded sand seams below 10 feet			40	LL = 48 PL = 22 Fines=94.5%
				4	24					
							CL			
	15								42	
				5	18			1-0-1 N=1		
						S□□□ SAND: -- grayish-brown, very loose				
	20						SM		25	Fines=12.2%
				6	18			3-1-2 N=3		
						-- Boring Terminated @ 21.5 feet				

STANDARD PENETRATION TEST DATA
N in blows/ft ◎
× Moisture ◪ PL ✚ LL
0 25 50
STRENGTH, tsf
▲ Qu ✳ Qp
0 2.0 4.0

Completion Depth:	21.5 ft
Date Boring Started:	3/26/10
Date Boring Completed:	3/26/10
Logged By:	MEZ
Drilling Contractor:	DPS

Sample Types:
Auger Cutting, Split-Spoon, Rock Core, Shelby Tube, Hand Auger, Texas Cone

Latitude:
Longitude:
Drill Rig: CME-55
Remarks:

Figure B-1

The stratification lines represent approximate boundaries. The transition may be gradual.

2779 South 600 West
Salt Lake City, Utah 84115
PH: (801) 484-8827
Fax: (801) 487-3312

LOG OF BORING B-□

PSI Job No.:	0710129	Drilling Method:	Hollow Stem Auger
Project:	Proposed USOR Training Housing for the Blind	Sampling Method:	Split Spoon/Shelby Tube
Location:	Approximately 1950 West 400 North Salt Lake City, Utah	Hammer Type:	CME Automatic
		Boring Location:	

WATER LEVELS

While Drilling	15 Feet
Upon Completion	15 Feet
Delay	N/A

Station: N/A
Offset: N/A

Elevation (feet)	Depth, (feet)	Graphic Log	Sample Type	Sample No.	Recovery (inches)	MATERIAL DESCRIPTION	USCS Classification	SPT Blows per 6-inch (SS)	Moisture, %	Additional Remarks
	0					**F□□:** -- Gravel, gray, with vegetation **S□□□□ L□□□ CLAY:** -- dark brown to brown, stiff				
				1	18			5-7-7 N=14		
	5			2	18			3-2-3 N=5	21	Fines=52.3%
				3	24	**SILT:** -- grayish-brown, very soft to soft, with interbedded sand seams	ML		34	LL = 29 PL = 24 Fines=94.8%
	10			4	18	**L□□□ CLAY:** -- brown, soft		0-0-2 N=2		
	15			5	18			1-1-2 N=3		
						S□□□□ SAND: -- grayish-brown, loose				
	20			6	18			3-3-4 N=7		
						-- Boring Terminated @ 21.5 feet				

STANDARD PENETRATION TEST DATA
N in blows/ft ◎
× Moisture ◪ PL ✚ LL
0 25 50
STRENGTH, tsf
▲ Qu ✳ Qp
0 2.0 4.0

Completion Depth:	21.5 ft
Date Boring Started:	3/26/10
Date Boring Completed:	3/26/10
Logged By:	MEZ
Drilling Contractor:	DPS

Sample Types:
Auger Cutting
Split-Spoon
Rock Core
Shelby Tube
Hand Auger
Texas Cone

Latitude:
Longitude:
Drill Rig: CME-55
Remarks:

Figure B-2

The stratification lines represent approximate boundaries. The transition may be gradual.

Laboratory Summary Sheet

Borehole	Approx. Depth	Liquid Limit	Plastic Limit	Plasticity Index	Qu (tsf)	%<#200 Sieve	Est. Specific Gravity	Water Content (%)	Dry Density (pcf)	Satur-ation (%)	Void Ratio
B-1	2.5							12			
B-1	5.0	25	20	5		84.3%		25			
B-1	7.5							37			
B-1	10.0	48	22	26		94.5%		40			
B-1	15.0							42			
B-1	20.0					12.2%		25			
B-2	5.0					52.3%		21			
B-2	7.5	29	24	4		94.8%		34			

2779 South 600 West
Salt Lake City, Utah 84115
PH: (801) 484-8827
Fax: (801) 487-3312

Summary of **L**aboratory **R**esults

PSI Job No.: 0710129
Project: Proposed USOR Training Housing for the Blind
Location: Approximately 1950 West 400 North
Salt Lake City, Utah

Figure B-3

CONETEC

PSI

Job No: 10-321
Date: 03:26:10 10:09
Site: 400 NORTH 1955 WEST

Sounding: CPT-01
Cone: 242:T1500F15U500

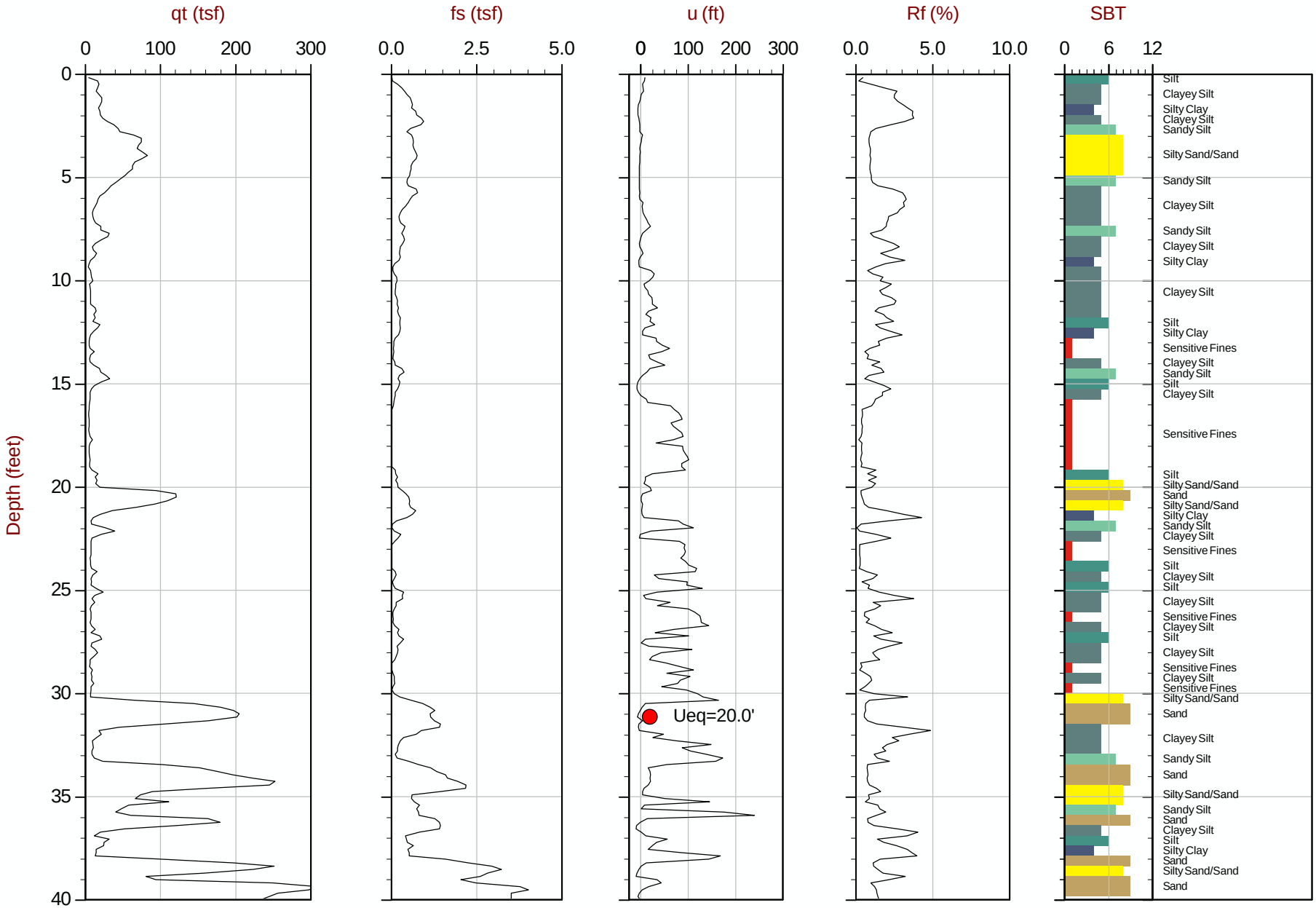

Max Depth: 12.200 m / 40.03 ft
Depth Inc: 0.050 m / 0.164 ft
Avg Int: 0.150 m

File: 321CP01.COR
Unit Wt: SBT Chart Soil Zones

SBT: Lunne, Robertson and Powell, 1997

● Equilibrium Pore Pressure from Dissipation

CONETEC

PSI

Job No: 10-321
Date: 03:26:10 10:51
Site: 400 NORTH 1955 WEST

Sounding: CPT-02
Cone: 242:T1500F15U500

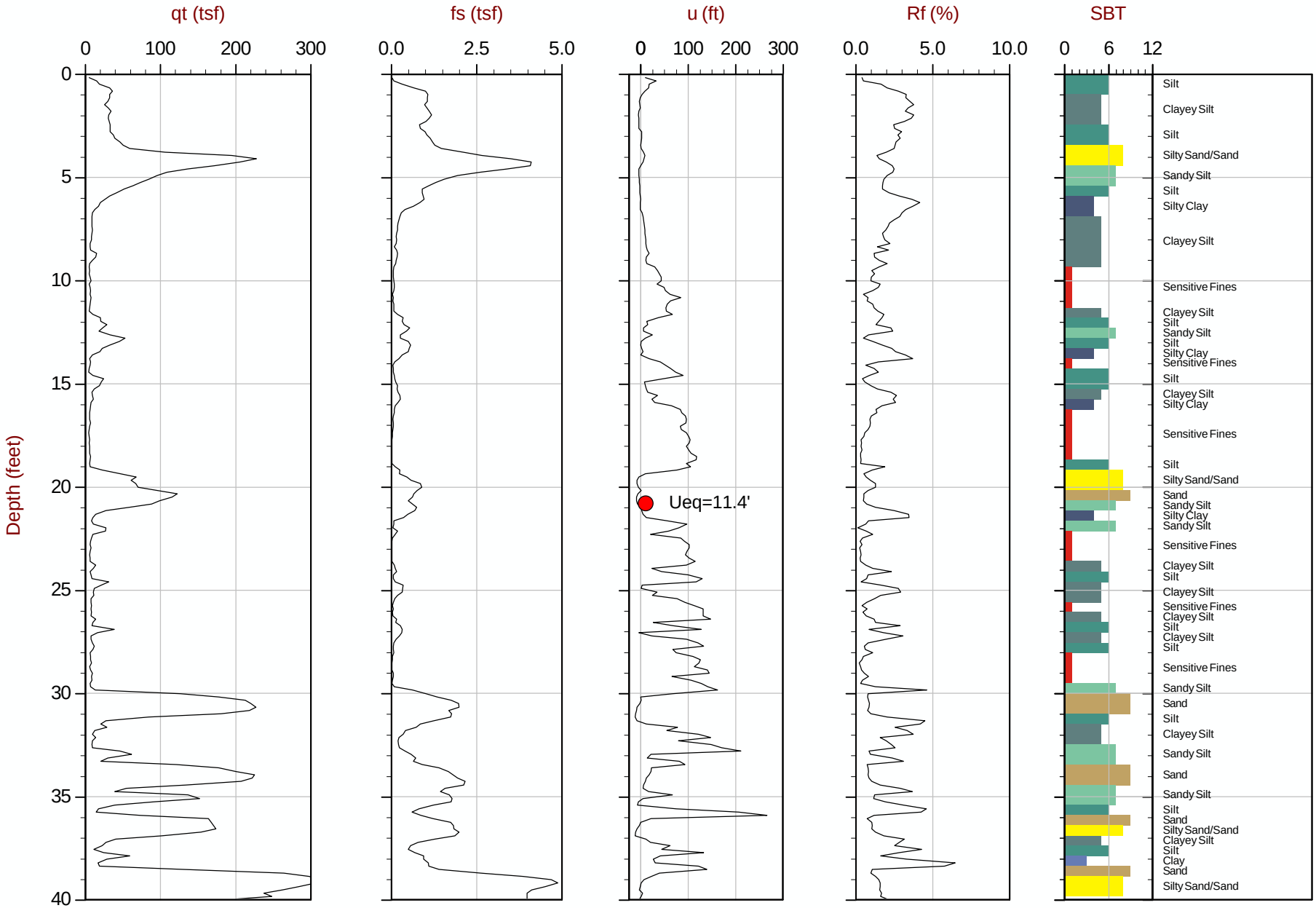

Max Depth: 12.200 m / 40.03 ft
Depth Inc: 0.050 m / 0.164 ft
Avg Int: 0.150 m

File: 321CP02.COR
Unit Wt: SBT Chart Soil Zones

SBT: Lunne, Robertson and Powell, 1997

● Equilibrium Pore Pressure from Dissipation

APPENDIX C

CONTRACTOR

C□□□□□□□-D C□□□□□□□□□□□□ T□□□

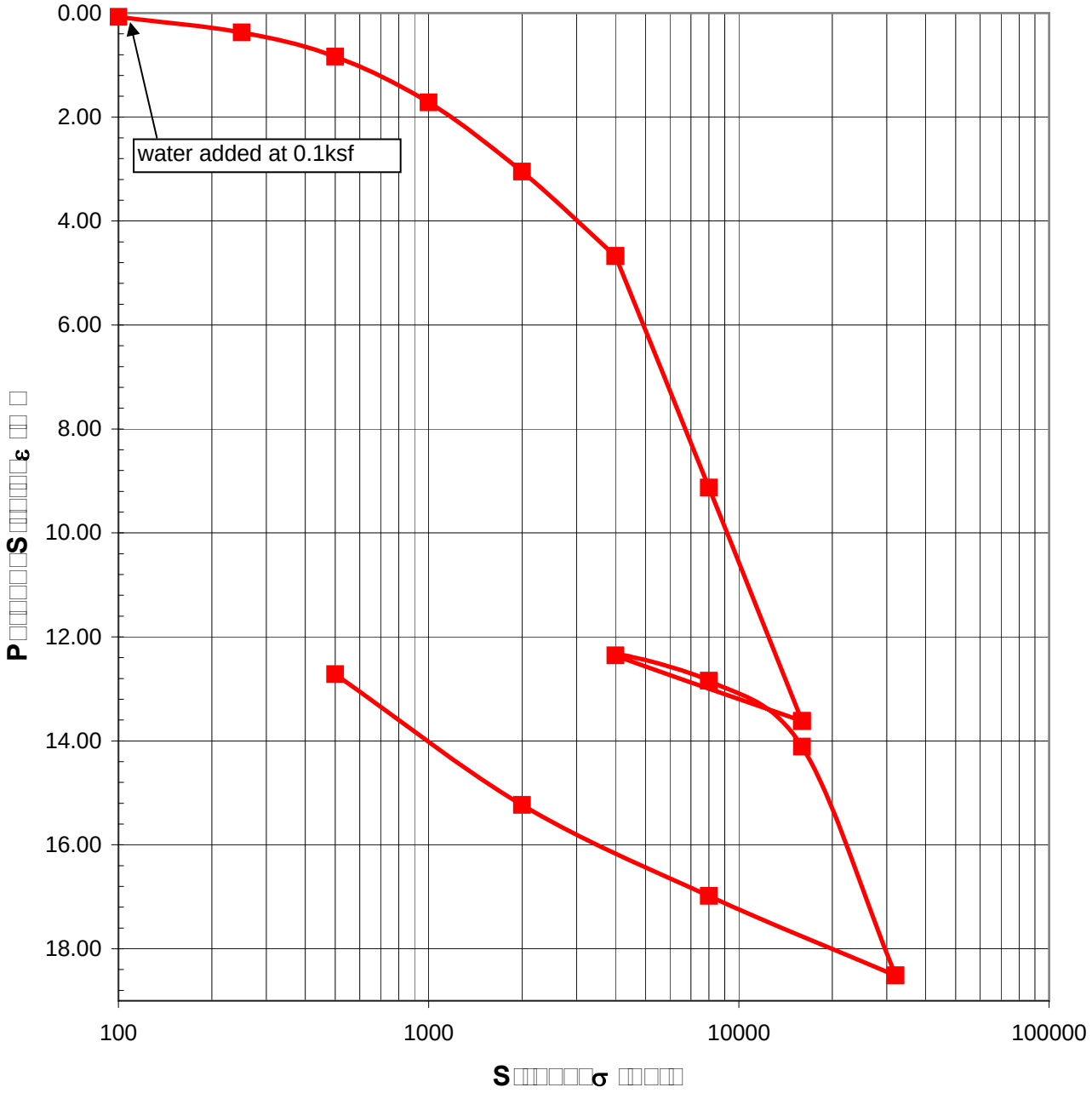

Sample Location	B-1	**Dry Density**	78	pcf
Sample Depth (ft)	10	**Initial Moisture Content**	40.0	%
Sample Description	Lean Clay	**Collapse**	N/M	%
USCS Classification	CL	**Swell**	N/M	%

psi Information To Build On Engineering • Consulting • Testing	P□□□□□□□ USOR T□□□□□□□ H□□□□□□	Job No.	710129
	□-D C□□□□□□□□□□□□ T□□□	Figure No.	C-1

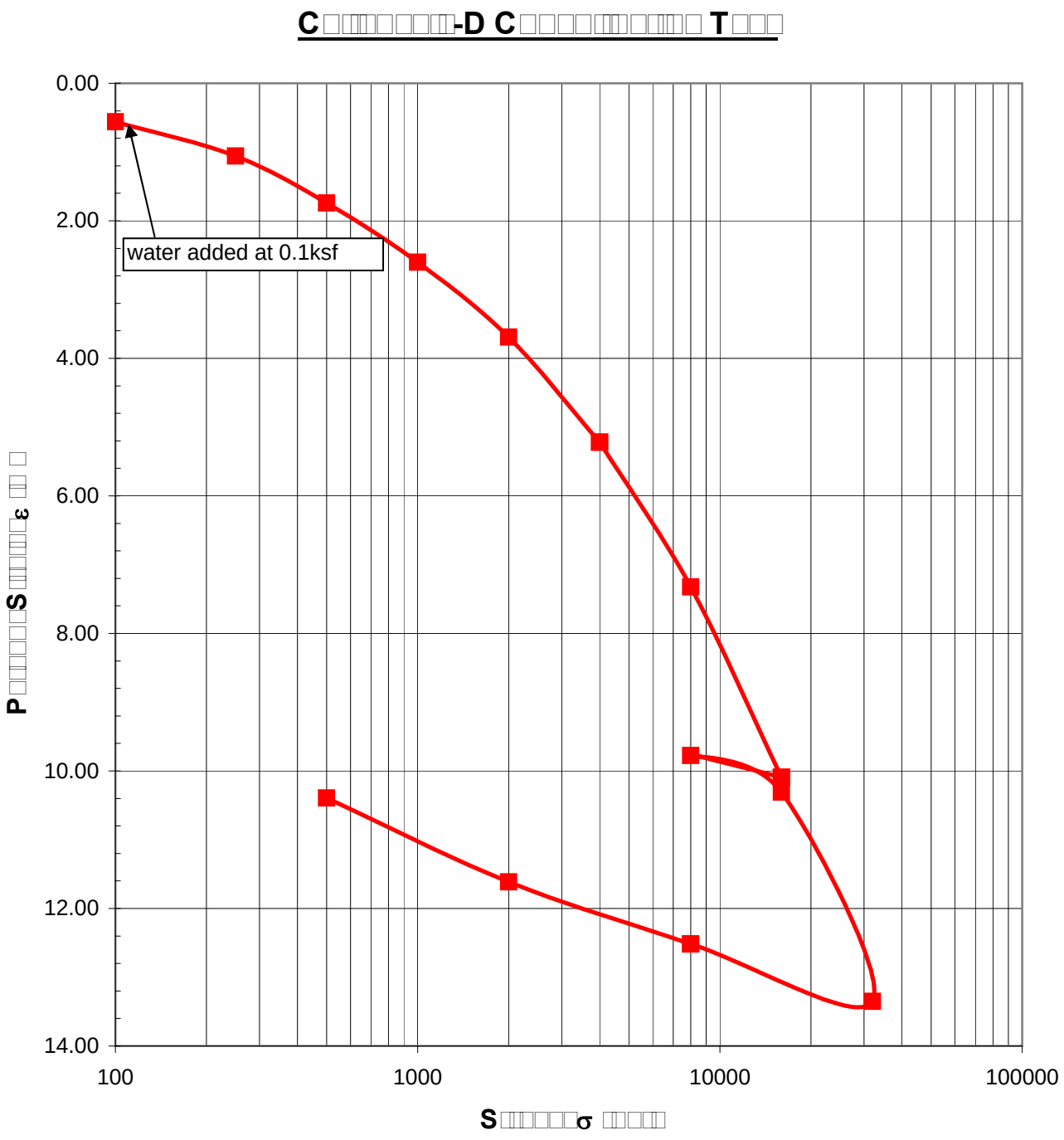

Sample Location	B-2	**Dry Density**	86	pcf
Sample Depth (ft)	7.5	**Initial Moisture Content**	33.1	%
Sample Description	Silt	**Collapse**	N/M	%
USCS Classification	ML	**Swell**	N/M	%

psi Information To Build On Engineering • Consulting • Testing	**P USOR T H**	Job No.	710129
	-D C T	Figure No.	C-2