UTAH VALLEY UNIVERSITY
FACILITIES BUILDING IMPROVEMENTS

OREM, UTAH

DFCM PROJECT NO. 09247790

State of Utah– Department of Administrative Services

DIVISION OF FACILITIES CONSTRUCTION AND MANAGEMENT

4110 State Office Building / Salt Lake City, Utah 84114 / 538–3018

August 2nd, 2010

State of Utah

Department of Administrative Services

Division of Facilities Construction & Management
4110 State Office Building
Salt Lake City, Utah 84114
Phone: (801) 538 - 3018
Fax: (801) 538 - 3267
Internet: http://www.dfcm.state.ut.us

Utah Valley University
Orem, Utah

CREATED BY: P+A architects

P+A architects
821 East Kensington Ave.
Salt Lake City, Utah 84105
P: 801.484.1161
F: 801.485.4640
e-mail parchitects@comcast.net

STATE OF UTAH 281110 LICENSED ARCHITECT

architecture planning design

CONSULTANT:

PROJECT TITLE:
UTAH VALLEY UNIVERSITY
NEW PARKING AND
FACILITIES DEPARTMENT
BUILDING

UTAH VALLEY UNIVERSITY
936 SOUTH 400 WEST
OREM, UTAH

REVISIONS

MARK	DATE	DESCRIPTION

ISSUE TYPE: CONSTRUCTION DOCUMENTS

ISSUE DATE: August 2nd, 2010

CAD PROJECT NO: 09247790
CAD DWG FILE:
DRAWN BY: BRIAN AND SCOTT
CHK'D BY: SCOTT

COPYRIGHT: P&A architects

KEY PLAN

SHEET TITLE

COVER SHEET

SHEET NUMBER

A-G1000

UTAH VALLEY UNIVERSITY
FACILITIES BUILDING IMPROVEMENTS

OREM, UTAH

DFCM PROJECT NO. 09247790

ABBREVIATIONS

Reference to materials or methods have been made on the drawings in accordance with the following abbreviations:

#	NUMBER	GWB.	GYPSUM WALL BOARD
'	FEET	GYP. BD.	GYPSUM WALL BOARD
"	INCHES	HC.	HANDICAPPED
&	AND	HDW.	HARDWARE
@	AT	H.M.	HOLLOW METAL
Ø	DIAMETER	HORIZ.	HORIZONTAL
ADJ	ADJUSTABLE	HR.	HOUR
AFF	ABOVE FINISH FLOOR	HT.	HEIGHT
ALUM	ALUMINUM	HVAC	HEATING/VENTILATION/ AIR CONDITIONING
ASTM	AMERICAN SOCIETY FOR TESTING MATERIALS	HYD	HYDRANT
ATS	AUTOMATIC TRANSFER SWITCH	I.D.	INSIDE DIAMETER
		INFO	INFORMATION
BD	BOARD	INSUL.	INSULATION
BITUM.	BITUMINOUS	LAV.	LAVATORY
BLDG	BUILDING	LT.	LIGHT
B.M.	BENCHMARK	MATL.	MATERIAL
B.O.	BOTTOM OF	MAX.	MAXIMUM
BRG.	BEARING	MECH.	MECHANICAL
BTWN.	BETWEEN	MFR.	MANUFACTURER
CER.	CERAMIC	MIN.	MINIMUM
CJ	CONSTRUCTION JOINT	MISC.	MISCELLANEOUS
CLG.	CEILING	M.O.	MASONRY OPENING
CLR.	CLEAR	MTL.	METAL
CMU	CONCRETE MASONRY UNIT	NIC	NOT IN CONTRACT
COL.	COLUMN	NO.	NUMBER
CONC.	CONCRETE	N.T.S.	NOT TO SCALE
CONT.	CONTINUOUS	O.C.	ON CENTER
CONST.	CONSTRUCTION	O.D.	OUTSIDE DIAMETER
COORD.	COORDINATE	O.H.	OVERHEAD
CTJ	CONTRACTION JOINT	OPP.	OPPOSITE
DBL.	DOUBLE	PART.	PARTITION
DPW	DIRECTOR OF PUBLIC WORKS	PERP.	PERPENDICULAR
DIA.	DIAMETER	PL.	PLATE
DPG	DUGWAY PROVING GROUND	PNTD.	PAINTED
DTL.	DETAIL	PSI	POUNDS PER SQUARE INCH
DWGS.	DRAWINGS	R.D.	ROOF DRAIN
EA.	EACH	RAD.	RADIUS
EJ	EXPANSION JOINT	REINF.	REINFORCED
ELEV.	ELEVATION	REQ'D	REQUIRED
EQ.	EQUAL	RET.	RETURN
E.S.	EACH SIDE	REV.	REVERSED
EXIST.	EXISTING	RM.	ROOM
EXP.AN.	EXPANSION	R.O.	ROUGH OPENING
EXT.	EXTERIOR	SCHED.	SCHEDULE
E.W.C.	ELECTRIC WATER COOLER	SHR.	SHOWER
F.D.	FLOOR DRAIN	SHT.	SHEET
FDN.	FOUNDATION	SIM.	SIMILAR
F.E.	FIRE EXTINGUISHER	SPEC.	SPECIFICATION
F.E.C.	FIRE EXTINGUISHER CABINET	STD.	STANDARD
F.F.	FINISH FLOOR	STR.	STRUCTURAL
FIN.	FINISH	SUSP.	SUSPENDED
FLR.	FLOOR	THRU	THROUGH
F.L.	FLOW LINE	T.O.	TOP OF
FTG.	FOOTING	T.O.A.	TOP OF ASPHALT
GA.	GAGE	T.O.C.	TOP OF CURB
GALV.	GALVANIZED	T.O.F.	TOP OF FOOTING
GF-CI	GOVERNMENT FURNISHED CONTRACTOR INSTALLED	T.O.S.	TOP OF SLAB OR SIDEWALK
		T.O.W.	TOP OF WALL
GF-GI	GOVERNMENT FURNISHED GOVERNMENT INSTALLED	TYP.	TYPICAL
		VERT.	VERTICAL
G.I.	GALVANIZED STEEL	VEST.	VESTIBULE
GND.	GROUND	W/	WITH
GOVT.	GOVERNMENT	WD	WOOD

DESIGN TEAM

Architect
P+A architects
821 East Kensington Ave.
Salt Lake City, Utah 84105
P: 801.484.1161
F: 801.485.4640
e-mail parchitects@comcast.net
Contact: Scott Prior

Structural
Vector Engineering
9138 South State Street, Suite 101
Sandy, Utah 84070
P: 801.990.1775
F: 801.990.1776
Contact: Jacob Proctor

Mechanical
Van Boerum Frank
330 South 300 East
Salt Lake City, Utah 84111
P: 801.530.3148
F: 801.530.3150
Contact: Steve Shepard

Electrical
Van Boerum Frank
330 South 300 East
Salt Lake City, Utah 84111
P: 801.530.3148
F: 801.530.3150
Contact: Ryan Van Voast

D.F.C.M.
4110 State Office Building
Salt Lake City, Utah 84114
P: 801.209.9104
F: 801.538.3267
Contact: Mike Ambre

GRAPHIC KEY

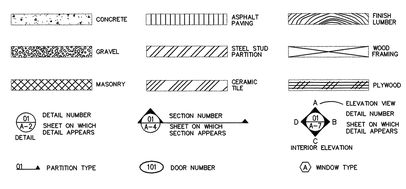

VICINITY MAP

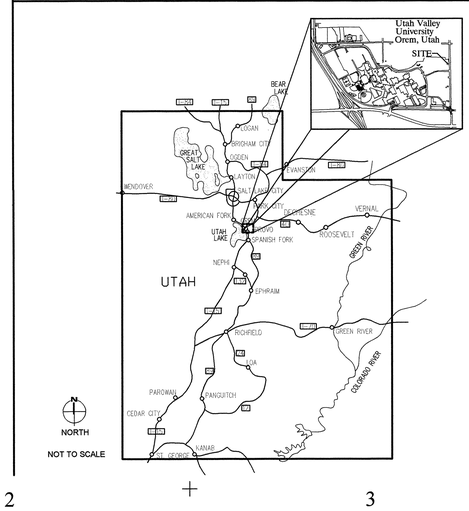

LIST OF DRAWINGS

GENERAL
- AG-1000 COVER SHEET
- AG-1001 COVER SHEET AND GENERAL INFORMATION

ARCHITECTURAL DRAWINGS
- A-SS100 SITE SURVEY
- A-SD101 SITE DEMOLITION PLAN
- A-SP102 SITE PLAN
- A-SD103 SITE DETAILS
- A-FP100 MAIN LEVEL FLOOR PLAN
- A-FP101 SECOND LEVEL FLOOR PLAN
- A-CP102 MAIN LEVEL REFLECTED CEILING PLAN
- A-CP103 SECOND LEVEL REFLECTED CEILING PLAN
- A-RP104 ROOF PLAN
- A-BE200 BUILDING ELEVATIONS
- A-BS300 BUILDING SECTIONS
- A-BS301 BUILDING SECTIONS
- A-WS400 WALL SECTIONS
- A-WS401 WALL SECTIONS
- A-WS402 WALL SECTIONS
- A-SS500 STAIR SECTION, ENLARGED STAIR AND ELEVATOR PLANS
- A-SS501 STAIR SECTION AND STAIR DETAILS
- A-SH600 DOOR AND ROOM FINISH SCHEDUELES, WALL TYPES
- A-SH601 DOOR AND WINDOW FRAME TYPES
- A-DT700 DOOR AND WINDOW DETAILS
- A-DT701 DOOR AND WINDOW DETAILS
- A-IE800 INTERIOR ELEVATIONS AND FIXTURE AND SIGNS MOUNTING HEIGHTS
- A-IE801 INTERIOR ELEVATIONS AND CASEWORK SECTIONS
- A-BD900 BUILDING DETAILS
- A-BD901 BUILDING DETAILS

STRUCTURAL
- S-100 STRUCTUAL GENERAL NOTES
- S-101 STANDARD DETAILS
- S-200 FOUNDATION PLAN
- S-201 FLOOR FRAMING PLAN
- S-202 ROOF FRAMING PLAN
- S-300 FOUNDATION AND FRAME DETAILS
- S-301 STRUCTURAL DETAILS
- S-302 STRUCTURAL DETAILS
- S-400 SPECIAL INSPECTION FORMS

MECHANICAL
- M-001 MECHANICAL SYMBOLS AND ABBREVIATIONS
- M-100 MAIN LEVEL MECHANICAL FLOOR PLAN
- M-101 SECOND LEVEL MECHANICAL FLOOR PLAN
- M-501 MECHANICAL DETAILS
- M-601 MECHANICAL SCHEDULES
- M-701 MECHANICAL SCHEMATIC
- MP-100 MAIN LEVEL MECHANICAL PIPING FLOOR PLAN
- MP-101 SECOND LEVEL MECHANICAL PIPING FLOOR PLAN

PLUMBING
- P-100 MAIN LEVEL PLUMBING FLOOR PLAN
- P-101 SECOND LEVEL PLUMBING FLOOR PLAN
- P-501 PLUMBING DETAILS
- P-502 PLUMBING DETAILS
- P-503 PLUMBING NOTES AND ABBREVIATIONS
- P-504 PLUMBING DETAILS
- P-601 PLUMBING SCHEDULES

ELECTRICAL
- E001 GENERAL NOTES AND SCHEDULES
- E002 ELECTRICAL SCHEDULES
- E003 CONCHECK REPORT
- ED100 ELECTRICAL SITE DEMOLITION PLAN
- E100 ELECTRICAL SITE PLAN
- E200 MAIN LEVEL LIGHTING PLAN
- E201 SECOND LEVEL LIGHTING PLAN
- E300 MAIN LEVEL POWER PLAN
- E301 SECOND LEVEL POWER PLAN
- E400 MAIN LEVEL SYSTEM PLAN
- E401 SECOND LEVEL SYSTEM PLAN
- E500 ELECTRICAL RISER AND PANEL SCHEDULE
- E600 ELECTRICAL DETAILS

DFCM DESIGN AND CODE CRITERIA

APPLICABLE CODES

	Year		Year
International Building Code	2006	National Electrical Code	2008
International Mechanical Code	2006	Uniform Code for	
International Plumbing Code	2006	Building Conservation	N/A
International Fire Code	2006	ADA Accessibility	
International Energy Conservation Code	N/A	Guidelines	ICC/ANSI A117.1

A. Occupancy and Group: B
Change in Use: Yes ___ No NO Mixed Occupancy: Yes ___ No X
Special Use and Occupancy (e.g. High Rise, Covered Mall): NO
B. Seismic Design Category: D Design Wind Speed: 90 mph
C. Type of Construction (circle one):
I A I B II A II B III A III B IV HT V A (V B)
D. Fire Resistance Rating Requirements for the Exterior Walls based on the fire separation distance (in hours):
North: N/A South: N/A East: N/A West: N/A
E. Mixed Occupancies: NO Nonseparated Uses: NO
F: Sprinklers:
Required: YES Provided: YES Type of Sprinkler System: WET PIPE
G: Number of Stories: 2 Building Height: 26'-10"
H: Actual Area per Floor (square feet): 6,200
I: Tabular Area: 9,000
J: Area Modifications:

a) $A_a = A_t + \left[\frac{A_1 I_1}{100}\right] + \left[\frac{A_2 I_2}{100}\right]$ $\quad I_f = 100\left[\frac{F}{P} - 0.25\right]\frac{W}{30}$

b) Sum of the Ratio Calculations for Mixed Occupancies:
$\frac{\text{Actual Area}}{\text{Allowable Area}} \leq 1$

c) Total Allowable Area for:
1) One Story: —
2) Two Story: $A_a(2)$ —
3) Three Story: $A_a(3)$ —

d) Unlimited Area Building: Yes ___ No X Code Section: N/A
K. Fire Resistance Rating Requirements for Building Elements (hours).

Element	Hours	Assembly Listing	Element	Hours	Assembly Listing
Exterior Bearing Walls	0	—	Floors - Ceiling Floors	0	—
Interior Bearing Walls	0	—	Roofs - Ceiling Roofs	0	—
Exterior Non-Bearing Walls	0	—	Exterior Doors and Windows	0	—
Structural Frame	0	—	Shaft Enclosures	0	SEE WALL TYPES
Partitions - Permanent	0	—	Fire Walls	0	—
Fire Barriers	0	—	Fire Partitions	0	—
			Smoke Partitions	0	—

L. Design Occupant Load: 108
Exit Width Required: 32" Exit Width Provided: 4'-6"
M. Minimum Number of Required Plumbing Facilities:
a) Water Closets - Required (m) 3 (f) 3 Provided (m) 3 (f) 3
b) Lavatories - Required (m) 1 (f) 1 Provided (m) 1 (f) 1
c) Bath Tubs or Showers: NOT PROVIDED
d) Drinking Fountains: 2 PROVIDED Service Sinks: 1 PROVIDED

FOOTNOTES:
1) In case of conflict with the U.S. Department of Justice Federal Registers Parts I through X - ADA Guidelines and specific reference to the International Building Code Accessibility Chapters, the more restrictive requirement shall govern.
2) Additional Code Information shall be provided at the discretion of the Building Official for Complex Buildings. Including, but not limited to:
a) High Rise Requirements.
b) Atriums.
c) Performance Based Criteria.
d) Means or Egress Analysis.
e) Fire Assembly Locator Sheet.
f) Exterior and Interior Accessibility Route.
g) Fire Stopping, Including Tested Design Number.

3) Deferred Submittals As Listed Below To Be Submitted To The Building Official
a. Every Structure, And Portion Thereof, Including Non Structural Components That Are Permanently Attached To The Structura And Their Suttoports And Attachments, Shall Be Designed And Constructed To Resist The Effects Of Earthquake Motion In Accordance With ASCE 7-05. Reference IBC Section 1613.1
b. A licensed inspector shall be hired by the State of Utah to provide inspections and reports. All written reports shall be provided to the architect, DFCM Project Manager and Enzo Calfa head of state plans inspectors.

Deferred Submittals:

1. The requirements for deferred submittale may be met by providing a project specific design prepared by a registered design professional in the state where where the project is being constructed and a manufacture's certification the the component is seismically qualified. Copies of the testing and calculations must be submitted as part of the submittal documents.
2. Glass fiber reinforced concrete wall panels see specification
3. Curtain wall window framing system see specification
4. Mechancial items as per specification section 15241 "Vibration Isolation and Seismic Restraint" Mechanical items as noted in specification are not to be installed until approval has been given by the Building Official (per IBC 106.3.4.2)
5. Electrical items as per specification section 16073 and 16074 "Hangers and Supports for Electrical Systems" and "Vibration Seismic Control For Electrical Systems" Electrical items as noted in specification are not to be installed until approval has been given by the Building Official (per IBC 106.3.4.2)

OCCUPANCY LOAD

1. OCCUPANCY LOAD UPPER LEVEL = 51 OCCUPANTS
2. OCCUPANCY LOAD REMAINING AREA = 57 OCCUPANTS

TOTAL = 108 OCCUPANTS

FIXTURE REQUIREMENTS

1. 108/2 = 54 MALE AND 54 FEMALE OCCUPANTS
2. 54 MALE OCCUPANTS 3 FIXTURES REQUIRED 6 FIXTURES PROVIDED TWO LAVATORIES PROVIDED
3. 54 FEMALE OCCUPANTS 3 FIXTURES REQUIRED 6 FIXTURES PROVIDED TWO LAVATORIES PROVIDED
4. TWO SERVICE SINK PROVIDED
5. FOUR ELECTRIC WATER COOLERS PROVIDED.

State of Utah
Department of Administrative Services
Division of Facilities Construction & Management
4110 State Office Building
Salt Lake City, Utah 84114
Phone: (801) 538 - 3018
Fax: (801) 538 - 3267
Internet: http://www.dfcm.state.ut.us

Utah Valley University
Orem, Utah

CREATED BY: P+A architects
P+A architects
821 East Kensington Ave.
Salt Lake City, Utah 84105
P: 801.484.1161
F: 801.485.4640
e-mail parchitects@comcast.net

STATE OF UTAH 261110 LICENSED ARCHITECT

architecture planning design

CONSULTANT:

PROJECT TITLE:
UTAH VALLEY UNIVERSITY
NEW PARKING AND
FACILITIES DEPARTMENT
BUILDING

UTAH VALLEY UNIVERSITY
936 SOUTH 400 WEST
OREM, UTAH

REVISIONS

MARK	DATE	DESCRIPTION

ISSUE TYPE: CONSTRUCTION DOCUMENTS

ISSUE DATE: August 2nd, 2010

CAD PROJECT NO: 09247790
CAD DWG FILE:
DRAWN BY: BRIAN AND SCOTT
CHK'D BY: SCOTT
COPYRIGHT: P&A architects

KEY PLAN

SHEET TITLE
GENERAL INFORMATION

SHEET NUMBER
A-G1001

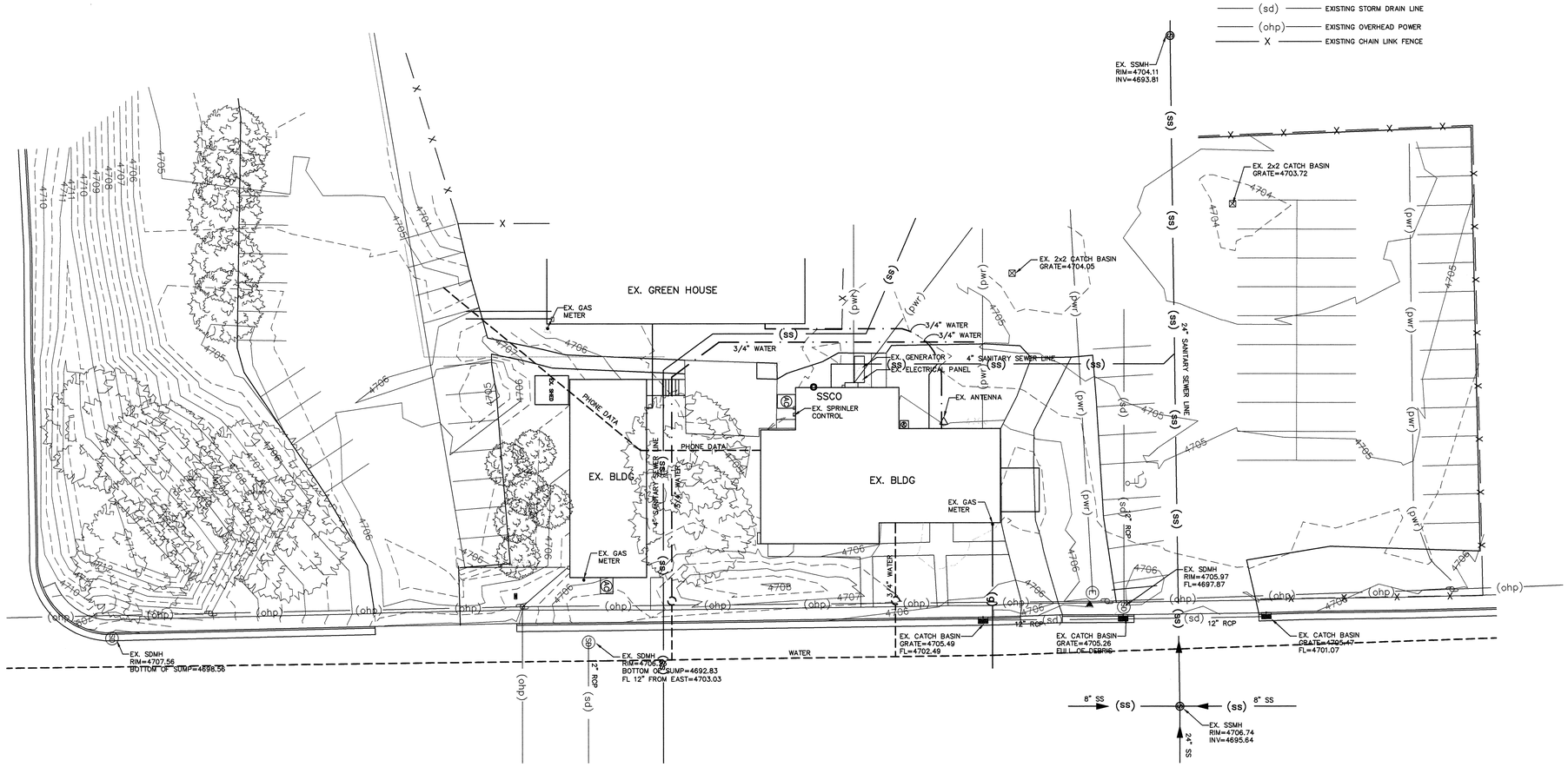

01 ASS100 SITE SURVEY
SCALE 1/16" = 1'-0"

State of Utah
Department of Administrative Services
Division of Facilities Construction & Management
4110 State Office Building
Salt Lake City, Utah 84114
Phone: (801) 538 - 3018
Fax: (801) 538 - 3267
Internet: http://www.dfcm.state.ut.us

Utah Valley University
Orem, Utah

CREATED BY: P+A architects
P+A architects
821 East Kensington Ave.
Salt Lake City, Utah 84105
P: 801.484.1161
F: 801.485.4640
e-mail parchitects@comcast.net

STATE OF UTAH 25110 LICENSED ARCHITECT

architecture planning design

CONSULTANT:

PROJECT TITLE:
UTAH VALLEY UNIVERSITY NEW PARKING AND FACILITIES DEPARTMENT BUILDING

UTAH VALLEY UNIVERSITY
936 SOUTH 400 WEST
OREM, UTAH

REVISIONS

MARK	DATE	DESCRIPTION

ISSUE TYPE: CONSTRUCTION DOCUMENTS

ISSUE DATE: August 2nd, 2010

CAD PROJECT NO: 09247790
CAD DWG FILE:
DRAWN BY: BRIAN AND SCOTT
CHK'D BY: SCOTT
COPYRIGHT: P&A architects

KEY PLAN

SHEET TITLE
SITE SURVEY

SHEET NUMBER
A-SS100

GENERAL NOTES

1. ITEMS AS NOTED TO BE RETURNED TO OWNER SHALL BE RETURNED TO OWNERS STORAGE FACILITY. OWNERS EXISTING STORAGE BUILDING IS APPROXIMATLLY ¾ MILES FORM CONSTRUCTION SITE.

LEGEND

LOCATION OF EXISTING ASPHALT TO BE REMOVED

LOCATION OF EXISTING CONCRETE WALKWAYS AND DRIVE APPROACHES TO BE REMOVED

ALL ITEMS INDICATED IN THIS AREA INCLUDING EXISTING PLANTINGS AND GRASS TO BE REMOVED. NO ORGANIC MATERIAL WITHIN THIS AREA SHAL BE LEFT ONCE NEW CONSTRUCTION BEGINS. GENERAL CONTRACTOR SHALL STRIP EXISTING 8" OF TOP SOIL FROM AREAS WHERE NEW LANDSCAPING WILL BE LOCATED. GENERAL CONTRACTOR SHALL PROVIDE 8" OF NEW TOP SOIL IN THESE LOCATIONS. SEE NEW SITE PLAN.

CONTRACT LIMIT LINE

REFERENCE NOTES

1. EXISTING TREES AND ROOT SYSTEM TO BE REMOVED.
2. EXISTING HOUSE TO BE DEMOLISHED AND REMOVED. REMOVE ALL CONSTRUCTION MATERIALS
3. EXISTING CONCRETE SIDEWALK TO BE REMOVED.
4. EXISTING CONCRETE DRIVEWAY TO BE REMOVED.
5. EXISTING GENERATOR TO BE REMOVED AND RETURNED TO OWNER.
6. EXISTING A/C UNITS TO BE DISCONNECTED AND RETURNED TO OWNER.
7. EXISTING AREA OF LANDSCAPING TO BE REMOVED. ASSOCIATED SPRINKLER SYSTEM TO BE REMOVED AND CAPPED AS NECESSARY TO RECONNECT FUTURE SPRINKLER SYSTEM
8. EXISTING GAS LINE TO BUILDING TO BE REMOVED AND CAPPED
9. EXISTING WATER LINE TO BE REMOVED BACK TO METER
10. EXISTING BUILDING ELECTRICAL PANEL LOCATION. DISCONNECT EXISTING POWER
11. GENERAL CONTRACTORS STAGING AREA.
12. CONSTRUCTION TRAILER LOCATION
13. SELF CONTAINED TOILET LOCATION
14. GENERAL CONTRACTORS PARKING AREA
15. EXISTING ANTENNA TO BE REMOVED AND RETURNED TO OWNER
16. EXISTING WATER LINE TO BE REMOVED
17. EXISTING SANITARY SEWER LINE TO BE REMOVED AND CAPPED
18. EXISTING SANITARY SEWER CAPPED LOCATION
19. EXISTING POWER LINE TO BE REMOVED.
20. EXISTING BRICK PAVERS TO BE REMOVED
21. ALL CONCRETE AND ASPHALT SHALL BE SAW-CUT PRIOR TO REMOVAL
22. EXISTING WATER METER LOCATION
23. EXISTING CONCRETE SIDE WALK TO REMAIN UNDISTURBED
24. EXISTING PHONE AND DATA LINES TO BE RELOCATED AS PER NEW PLANS.
25. EXISTING BUILDINGS TO REMAIN UNDISTURBED
26. GENERAL CONTRACTOR SHALL CONNECT EXISTING WATER LINE AT THIS LOCATION TO EXISTING GREEN HOUSE WHERE PREVIOUS WATER LINE WAS DISCONNECTED
27. EXISTING CONCRETE CURB AND GUTTER TO BE REMOVED
28. EXISTING CATCH BASINS TO BE KEPT CLEAN AND CLEAR
29. EXISTING PARKING LOT STRIPING TO BE REMOVED TO PROVIDE NEW PARKING LOT STRIPING. SEE NEW SITE PLAN.

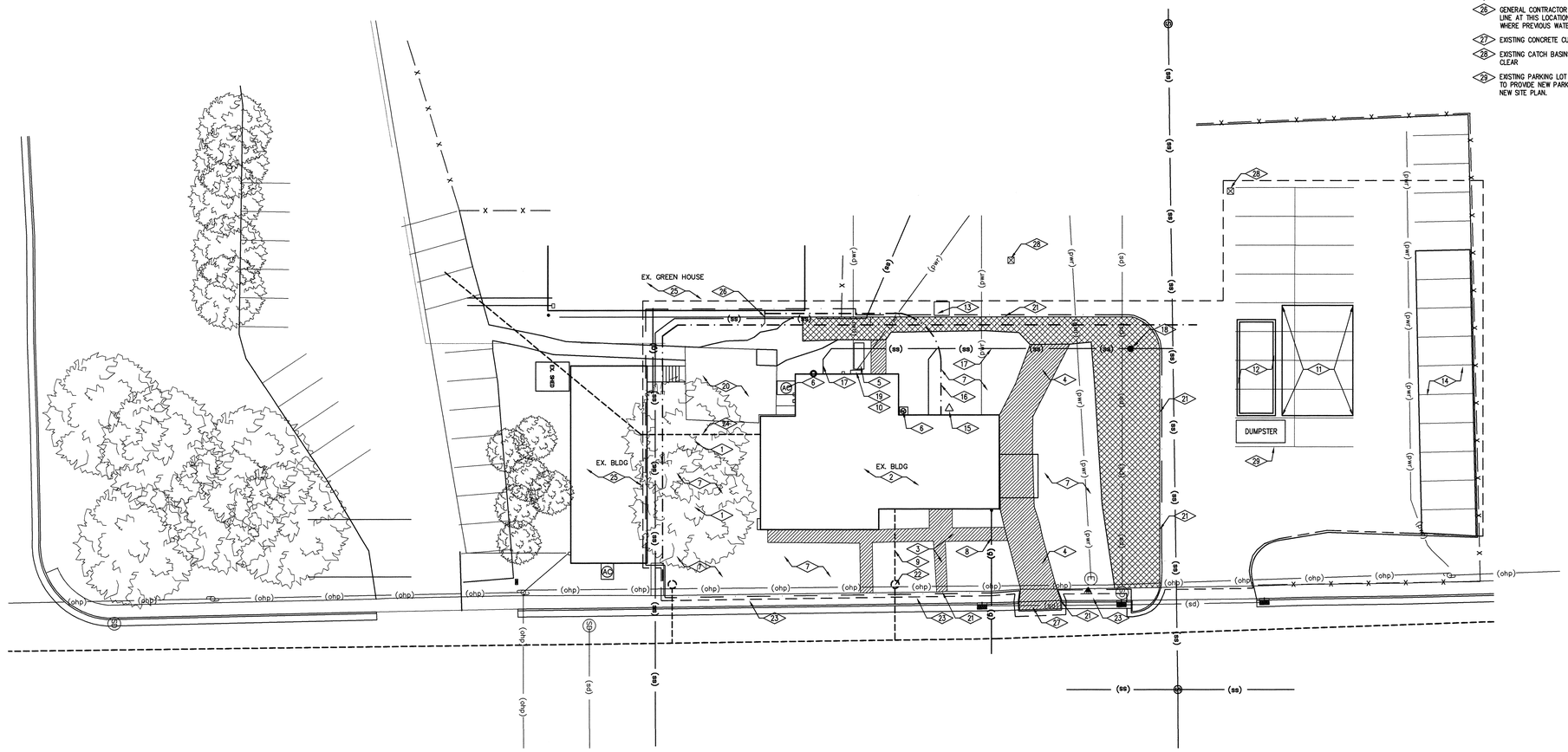

PLAN NORTH

01 ASD101 SITE DEMOLITION PLAN

SCALE 1/16" = 1'-0"

State of Utah

Department of Administrative Services

Division of Facilities Construction & Management
4110 State Office Building
Salt Lake City, Utah 84114
Phone: (801) 538 - 3018
Fax: (801) 538 - 3267
Internet: http://www.dfcm.state.ut.us

Utah Valley University
Orem, Utah

CREATED BY: P+A architects

P+A architects
821 East Kensington Ave.
Salt Lake City, Utah 84105
P: 801.484.1161
F: 801.485.4640
e-mail parchitects@comcast.net

STATE OF UTAH
JOHN P. ALLEN
281110
6/2/10
LICENSED ARCHITECT

architecture planning design

CONSULTANT:

PROJECT TITLE:

UTAH VALLEY UNIVERSITY
NEW PARKING AND
FACILITIES DEPARTMENT
BUILDING

UTAH VALLEY UNIVERSITY
936 SOUTH 400 WEST
OREM, UTAH

REVISIONS

MARK	DATE	DESCRIPTION

ISSUE TYPE: CONSTRUCTION DOCUMENTS

ISSUE DATE: August 2nd, 2010

CAD PROJECT NO: 09247790
CAD DWG FILE:
DRAWN BY: BRIAN AND SCOTT
CHK'D BY: SCOTT

COPYRIGHT: P&A architects

KEY PLAN

SHEET TITLE

SITE DEMOLITION PLAN

SHEET NUMBER

A-SD101

REFERENCE NOTES

1. EXISTING STRUCTURE NOT TO BE DISTURBED
2. NEW CONCRETE CURB AND GUTTER, SEE DETAIL ON DRAWING ASD103
3. NEW 4" CONCRETE SIDEWALK OVER 4" GRAVEL BASE, SEE DETAILS ON DRAWING ASD103
4. EXISTING POWER POLE TO REMAIN UNDISTURBED.
5. EXISTING CONCRETE SIDEWALK TO REMAIN UNDISTURBED..
6. STORM DRAIN LINE CLEAN OUT, SEE DETAIL
7. NEW STOP AND WASTE VALVE, SEE DETAILS.
8. PAINTED WITH TRAFFIC WHITE PAINT, "NO PARKING" AND STRIPING.
9. ADA VAN PARKING SIGN, SEE DETAIL 06/ASD103
10. DOUBLE DASHED LINE AT CONCRETE SIDEWALK LOCATIONS INDICATES (3) 4" PVC PIPES INSTALL BY G.C. WITH ENDS PRESSURE CAPPED FOR FUTURE SPRINKLER LINES. GENERAL CONTRACTOR SHALL MARK LOCATION OF CONDUITS.
11. PAINTED INTERNATIONAL ADA PARKING SYMBOL
12. NOT USED.
13. NEW SEWER LINE TO TIE INTO EXISTING SEWER LINE AT THIS LOCATION. PROVIDE CLEAN OUT AT TIE-IN LOCATION..
14. PARKING SPACE AND ACCESS AISLE SLOPE SHALL NOT BE STEEPER THAN 1:48 AND THE ACCESS AISLE SHALL BE AT THE SAME LEVEL AS THE PARKING SPACE IT SERVES.
15. 24"x48" CAST-IN PLACE TRUNCATED DOME DETECTABLE WARNING SYSTEM. USE "ADA WALKWAY INC". CAST IN PLACE TRUNCATED DOME WARNING SYSTEM OR EQUAL. CONTACT NUMBER 1-866-838-5638
16. NEW WATER LINE TO BE CONNECT TO NEW WATER METER. WATER METER TO BE PROVIDED BY OWNER.
17. NEW CONCRETE SIDEWALKS SLOPE SHALL NOT BE STEEPER THAN 1:48
18. SLOPE AT DOOR LANDING NOT TO EXCEED 1:48
19. GENERAL CONTRACTOR TO VERIFY EXISTYING DEPTH OF EXISTING SEWER LINE AT THIS LOCATION. SEE DRAWING ASS100.
20. TRANSFORMER LOCATION.
21. GENERAL CONTRACTOR SHALL PROVIDE NEW TOP SOIL TO CREATE A 2% MINIMUM SLOPE AWAY FROM NEW STRUCTURE AS PER IBC 1803.3.
22. NEW LIGHT POLE AND CONCRETE BASE. GENERAL CONTRACTOR IS RESPONSIBLE FOR SAW CUTTING EXISTING ASPHALT, TRENCHING, PLACING ELECTRICAL POWER LINES, BACKFILLING AND REPAVING ASPHALT, SEE ELECTRICAL DRAWINGS.
23. NEW 4" ASPHALT OVER 6" COMPACTED ROAD BASE REPAIR, SEE SPECIFICATIONS..
24. NEW CONCRETE CORNER @ DRIVE APPROACH AS PER OREM CITY CONSTRUCTION STANDARDS.
25. BUILDING SETBACK LINE.
26. NEW CONCRETE CURB AND GUTTER AS PER OREM CITY CONSTRUCTION STANDARDS.
27. NEW CONCRETE SIDEWALK AS PER OREM CITY CONSTRUCTION STANDARDS.
28. SET BACK POINT CRITICAL LOCATION.
29. NEW BUILDING LOCATION. PROVIDE STRUCTURAL FILL AS PER THE SOILS REPORT IN SPECIFICATION.
30. GENERAL CONTRACTOR SHALL PROVIDE 8" OF NEW TOP SOIL AT ALL AREAS ON LANDSCAPING.
31. NEW CONCRETE CURB RAMP SEE ENLARGED PLAN DRAWING ASD103
32. EXISTING MANHOLE COVERS TO REMAIN UNDISTURBED
33. CONCRETE STAIR WITH PAINTED PIPE HANDRAILING, SEE SECTION DRAWING ASD103
34. EXISTING 8" I.D. P.V.C. WATER LINE APPROXIMATELY 4'-8" BELOW TOP OF EXISTING SURFACE
35. EXISTING (2) TWO 4" I.D. P.V.C. ELECTRICAL CONDUITS APPROXIMATELY 3'-2" BELOW TOP OF EXISTING SURFACE.
36. EXISTING 4" I.D. P.V.C. FIBER OPTICS CONDUITS APPROXIMATELY 3'-2" BELOW TOP OF EXISTING SURFACE.
37. ADA PARKING STALL SIGN, SEE DETAIL 14/ASD103

GENERAL SITE NOTES

1. REFER TO ROOF PLAN FOR FULL DESCRIPTION OF ROOF SLOPE.
2. GENERAL CONTRACTOR IS RESPONSIBLE FOR THE REPLACEMENT OF ANY EXISTING CONCRETE SIDEWALKS, ASPHALT PAVING, FENCING, LANDSCAPING, ETC. DISTURBED OR DESTOYED DURING CONSTRUCTION.
3. GENERAL CONTRACTOR SHALL VERIFY ALL EXISTING SITE CONDITIONS PRIOR TO BIDDING.
4. GENERAL CONTRACTOR SHALL GRADE AND SMOOTH EXISTING SITE AREA TO CREATE A SMOOTH AND NATURALLY FINISHED SITE APPEARANCE. SITE SHALL LOOK NATURALLY FINISHED WHEN CONSTRUCTION OF PROJECT IS COMPLETED
5. IT SHALL BE THE CONTRACTOR'S RESPONSIBILITY TO PERFORM CONSTRUCTION AS PER THE CONTRACT DOCUMENTS. ANY ADDITIONS, DELETIONS, OR CHANGES SHALL FIRST MEET WITH THE APPROVAL OF THE ENGINEER AND THE OWNER.
6. EXISTING FACILITIES:
   THE CONTRACTOR SHALL TAKE ALL PRECAUTIONARY MEASURES NECESSARY TO PROTECT EXISTING UTILITIES AND IMPROVEMENTS, WHICH ARE TO REMAIN IN PLACE, FROM DAMAGE. ALL SUCH UTILITIES AND IMPROVEMENTS OR STRUCTURES DAMAGED BY THE CONTRACTOR'S OPERATIONS SHALL BE REPAIRED OR RECONSTRUCTED TO ORIGINAL OR BETTER CONDITION TO THE SATISFACTION OF THE OWNER AT THE EXPENSE OF THE CONTRACTOR.
7. JOINTS AND FITTINGS:
   SIZE OF FITTINGS SHOWN ON THE PLANS SHALL CORRESPOND TO ADJACENT STRAIGHT RUN OF PIPE, UNLESS INDICATED OTHERWISE. TYPE OF JOINT AND FITTING MATERIAL SHALL BE THE SAME AS SHOWN FOR ADJACENT STRAIGHT RUN OF PIPE. ALL JOINTS SHALL BE WATER TIGHT AND CONFORM TO APPROPRIATE PRESSURE RATINGS AS STATED IN THE WRITTEN SPECIFICATIONS.
8. UTILITY LOCATIONS:
   THE LOCATIONS OF EXISTING UTILITIES, DITCHES, CONDUITS, AND UNDERGROUND STRUCTURES SHOWN ON THE PLANS ARE APPROXIMATE ONLY. THE CONTRACTOR SHALL BE RESPONSIBLE FOR VERIFYING THE LOCATION OF, AND PRESERVING, ALL UTILITIES IMPACTED BY THE CONSTRUCTION
9. EXCAVATION SAFETY:
   EXCAVATION LIMITS SHOWN IN THE DETAILS ARE GRAPHICAL REPRESENTATIONS ONLY, AND DO NOT REPRESENT ACTUAL EXCAVATION LIMITS OR SAFE TRENCH CONDITIONS REQUIRED TO COMPLETE THE WORK. THE CONTRACTOR IS SOLELY RESPONSIBLE FOR CONFORMANCE WITH LOCAL AND FEDERAL CODES GOVERNING SHORING AND BRACING OF EXCAVATIONS AND TRENCHES, AND FOR PROTECTION OF WORKERS. TRENCH EXCAVATION TO BE IN ACCORDANCE WITH OSHA SAFETY AND HEALTH STANDARDS FOR CONSTRUCTION (29 CFR 1926).
10. TRENCH EXCAVATION:
    CONTRACTOR SHALL EXCAVATE MATERIALS OF ALL DESCRIPTION AND OF WHATEVER SUBSTANCES ENCOUNTERED TO THE DEPTHS OR GRADE LINE AS SPECIFIED ON THE PLANS OR REQUIRED TO ACCOMPLISH THE WORK. MAXIMUM TRENCH LENGTH OPEN AT ANY GIVEN TIME WILL NOT EXCEED 700 FEET UNLESS OTHERWISE APPROVED BY THE ENGINEER.
11. TYPICAL TRENCH SECTIONS SHALL BE IN ACCORDANCE WITH STANDARD DETAIL.
12. CONTRACTOR TO VERIFY DEPTHS OF BURIED UTILITIES IN THE FIELD BY POT HOLING AHEAD OF PIPELINE CONSTRUCTION TO AVOID CONFLICTS WITH DESIGNED PIPELINE GRADE AND ALIGNMENT. IF A CONFLICT ARISES RESULTING FROM THE CONTRACTOR NEGLECTING TO POTHOLE UTILITIES, THE CONTRACTOR SHALL RESOLVE THE CONFLICT WITHOUT ADDITIONAL COST OR CLAIM TO THE OWNER AND IN A MANNER APPROVED BY THE ENGINEER.
13. NO CHANGE IN DESIGN LOCATION OR GRADE SHALL BE MADE BY THE CONTRACTOR WITHOUT THE WRITTEN APPROVAL OF AUTHORIZED REPRESENTATIVE.
14. THE CONTRACTOR SHALL BE RESPONSIBLE FOR VERIFYING THE LOCATION OF SERVICE LINES FOR SEWER, WATER AND OTHER UTILITIES, AND REPAIRING ANY DAMAGE TO SUCH LINES AS A RESULT OF THE CONTRACTOR'S OPERATIONS.
15. CONTRACTOR SHALL ADJUST GRADE OF NEW MANHOLE RIMS, NEW CLEAN OUT RIMS AND INLET GRATES TO MATCH ELEVATIONS OF EXISTING ROADWAY OR GUTTER.
16. CONTRACTOR SHALL PLUG ENDS OF ABANDONED PIPES WITH CONCRETE.
17. EROSION AND SEDIMENTATION CONTROL:
    CONTRACTOR SHALL CONSTRUCT BERMS AND/OR DRAINAGE DITCHES AS NEEDED TO KEEP STORM RUNOFF AND IRRIGATION FLOWS FROM ENTERING CONSTRUCTION EXCAVATIONS OR INTERFERING WITH CONSTRUCTION EFFORTS.

LEGEND

- NEW 4" CONCRETE SLAB OVER 4" COMPACTED GRAVEL BASE, SEE DETAILS
- NEW 4" ASPHALT OVER 6" COMPACTED ROAD BASE
- NW — NEW 2½" FLEXIBLE POLYETHYLENE PIPING WATER LINE. USE CENCORE HDPE 160 PSI, PE3408, SIDR9, PREMINUM GRADE WATER PIPING WITH ALL REQUIRED ELBOWS AND REQUIRED FASTENERS.
- NS — NEW 4" PVC SEWER LINE, JM EAGLE GRAVITY PVC SEWER PIPING, SDR 35 (PS46) ASTM D3034, SEE TRENCH SECTION ON DRAWING ASD103
- SD — NEW SEWER PIPE AND FITTINGS TO CONFORM WITH UNIFORM PLUMBING CODE (UPC) AND BE 4" DIAMETER AND MEET ASTM D1785 DWV SCHEDULE 40. A MINIMUM ONE FOOT OF COVER IS REQUIRED OR ENCASING IS REQUIRED.
- ADA ACCESSIBLE ROUTES
- EW — EXISTING 8" P.V.C. WATER LINE APPROXIMATELY 4'-8" BELOW TOP OF EXISTING SURFACE
- FOL — EXISTING 4" P.V.C. FIBER OPTICS LINE APPROXIMATELY 3'-2" BELOW TOP OF EXISTING SURFACE
- EP2 — EXISTING (2) 4" P.V.C. POWER LINES APPROXIMATELY 3'-2" BELOW TOP OF EXISTING SURFACE

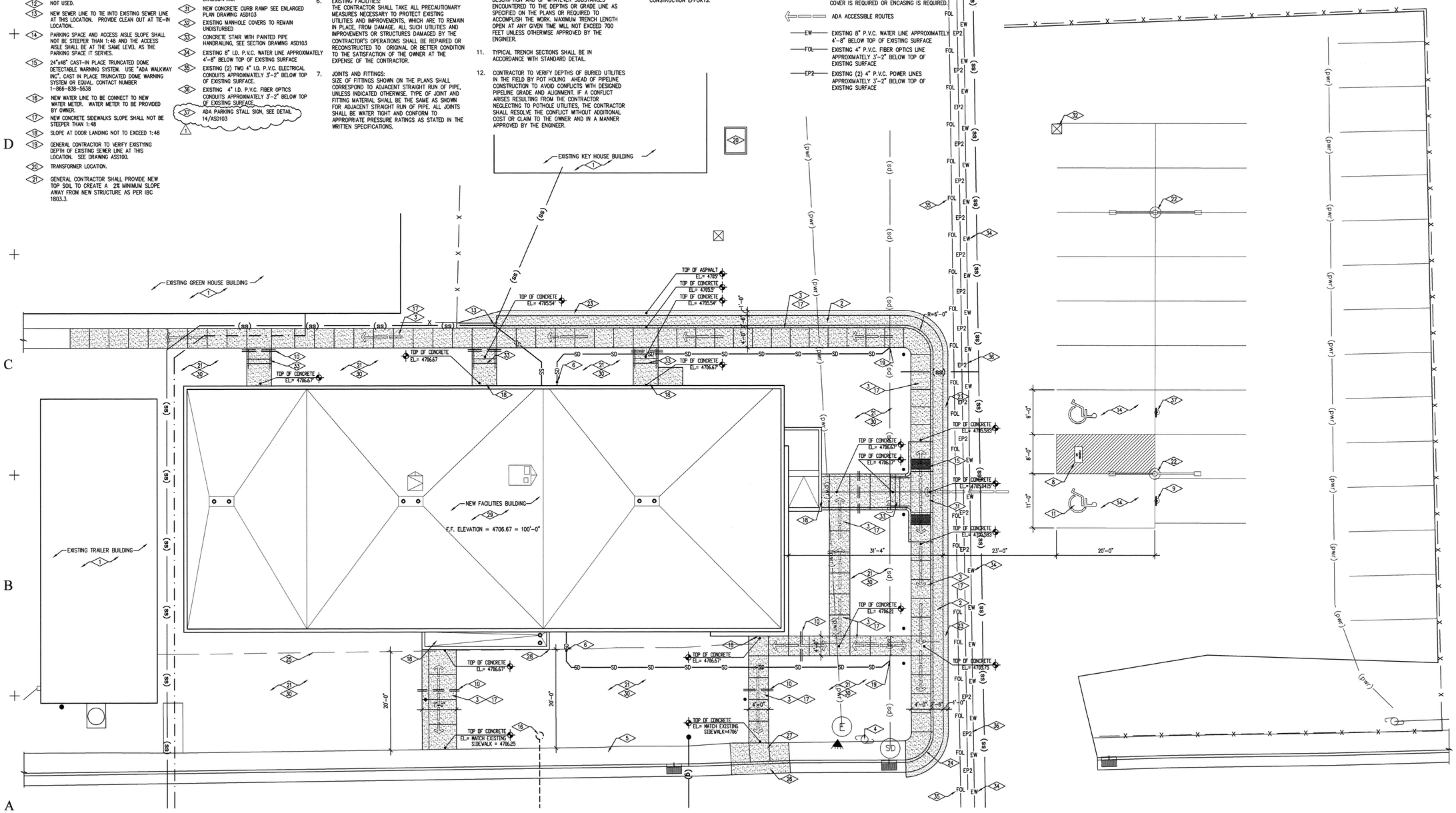

01 A-SP102 SITE PLAN
SCALE 1/8" = 1'-0"
PLAN NORTH

State of Utah
Department of Administrative Services
Division of Facilities Construction & Management
4110 State Office Building
Salt Lake City, Utah 84114
Phone: (801) 538 - 3018
Fax: (801) 538 - 3267
Internet: http://www.dfcm.state.ut.us

Utah Valley University
Orem, Utah

CREATED BY: P+A architects
P+A architects
821 East Kensington Ave.
Salt Lake City, Utah 84105
P: 801.484.1161
F: 801.485.4640
e-mail parchitects@comcast.net

STATE OF UTAH 281110 LICENSED ARCHITECT

architecture planning design

CONSULTANT:

PROJECT TITLE:
UTAH VALLEY UNIVERSITY
NEW PARKING AND
FACILITIES DEPARTMENT
BUILDING

UTAH VALLEY UNIVERSITY
936 SOUTH 400 WEST
OREM, UTAH

REVISIONS

MARK	DATE	DESCRIPTION

ISSUE TYPE: CONSTRUCTION DOCUMENTS

ISSUE DATE: August 2nd, 2010

CAD PROJECT NO: 09247790
CAD DWG FILE:
DRAWN BY: BRIAN AND SCOTT
CHK'D BY: SCOTT
COPYRIGHT: P&A architects

KEY PLAN

SHEET TITLE

SITE PLAN

SHEET NUMBER

A-SP102

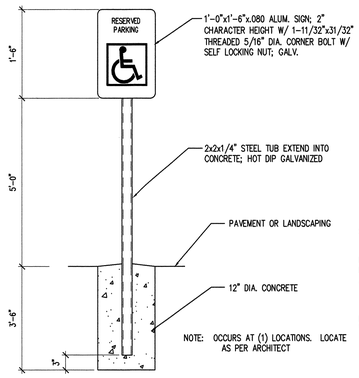

14 ASD103 ADA PARKING STALL SIGN
SCALE 1" = 1'-0"

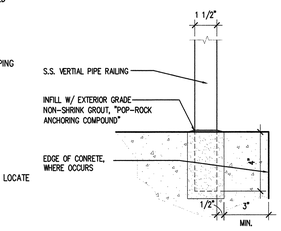

13 ASD103 VERTICAL SUPPORT
SCALE 3" = 1'-0"

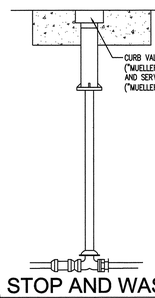

11 ASD103 STOP AND WASTE VALVE
SCALE N.T.S.

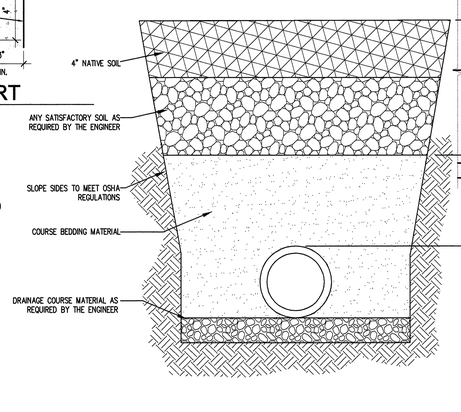

10 ASD103 TYP. TRENCH SECTION
SCALE N.T.S.

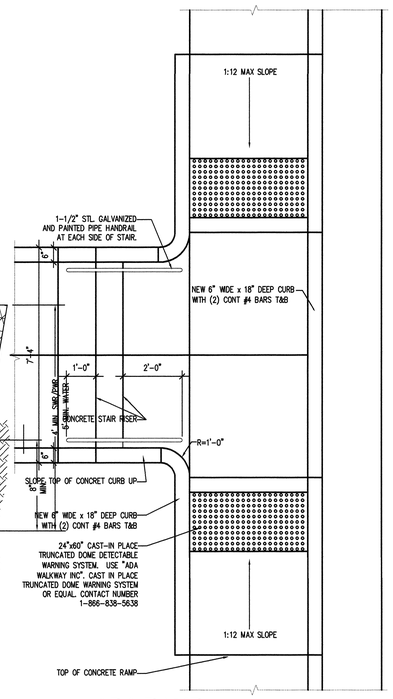

09 ASD103 ADA RAMP
SCALE 1/2" = 1'-0"

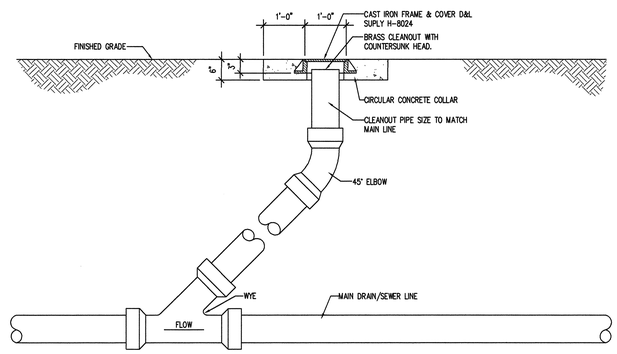

12 ASD103 SEWER CLEANOUT DETAIL
SCALE N.T.S.

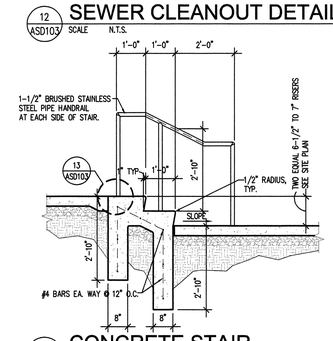

08 ASD103 CONCRETE STAIR
SCALE 1/2" = 1'-0"

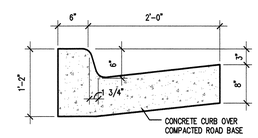

07 ASD103 CURB DETAIL
SCALE 1" = 1'-0"

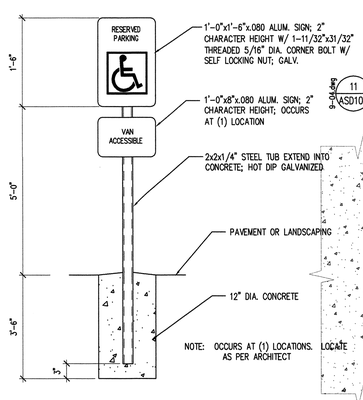

06 ASD103 ADA PARKING VAN STALL SIGN
SCALE 1" = 1'-0"

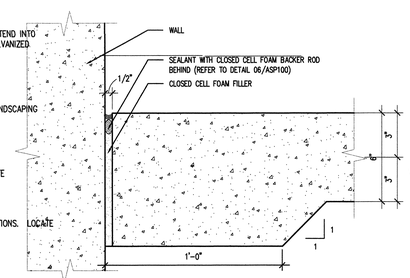

05 ASD103 SLAB PERIMETER JOINT
SCALE 3" = 1'-0"

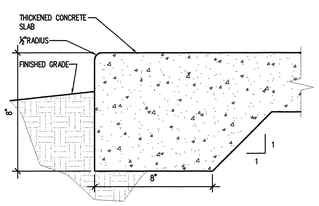

04 ASD103 SLAB PERIMETER JOINT
SCALE 3" = 1'-0"

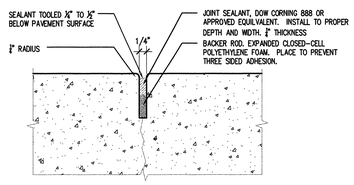

03 ASD103 TYP. JOINT SEALANT
SCALE 6" = 1'-0"

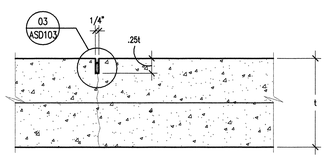

02 ASD103 TYP. SLAB CONT. JOINT
SCALE 3" = 1'-0"

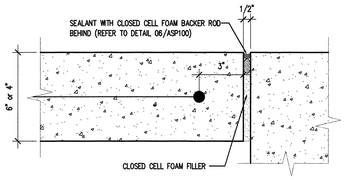

01 ASD103 TYP. SLAB EXP. JOINT
SCALE 3" = 1'-0"

State of Utah
Department of Administrative Services
Division of Facilities Construction & Management
4110 State Office Building
Salt Lake City, Utah 84114
Phone: (801) 538 - 3018
Fax: (801) 538 - 3267
Internet: http://www.dfcm.state.ut.us

Utah Valley University
Orem, Utah

CREATED BY: P+A architects
P+A architects
821 East Kensington Ave.
Salt Lake City, Utah 84105
P: 801.484.1161
F: 801.485.4640
e-mail parchitects@comcast.net

STATE OF UTAH 281140 LICENSED ARCHITECT

architecture planning design

CONSULTANT:

PROJECT TITLE:
UTAH VALLEY UNIVERSITY NEW PARKING AND FACILITIES DEPARTMENT BUILDING

UTAH VALLEY UNIVERSITY
936 SOUTH 400 WEST
OREM, UTAH

REVISIONS

MARK	DATE	DESCRIPTION

ISSUE TYPE: CONSTRUCTION DOCUMENTS

ISSUE DATE: August 2nd, 2010

CAD PROJECT NO: 09247790
CAD DWG FILE:
DRAWN BY: BRIAN AND SCOTT
CHK'D BY: SCOTT
COPYRIGHT: P&A architects

KEY PLAN

SHEET TITLE
SITE DETAILS

SHEET NUMBER
A-SD103

GENERAL NOTES

1. UPON COMPLETION OF CONSTRUCTION IT IS THE GENERAL CONTRACTOR RESPONSIBILITY TO THOROUGHLY CLEAN ALL AREAS IN WHICH CONSTRUCTION TOOK PLACE AND AREAS AFFECTED BY THE CONSTRUCTION. THE GENERAL CONTRACTOR SHALL CLEAN ALL CARPET, REMOVE ALL DUST, CLEAN DOORS AND FRAMES, LIGHT FIXTURES, CEILING SYSTEMS, MECHANICAL GRILLS, ELECTRICAL PANELS, WINDOW SYSTEMS AND GLAZING ETC..
2. REFER TO FINISH SCHEDULE FOR ADDITIONAL FINISH NOTES.

LEGEND

- RM. NAME / 100 — ROOM TAG
- 101A — DOOR TAG
- 03 — WALL TYPE, SEE WALL TYPE THIS SHEET
- W1 — WINDOW TAG
- S.R.F.E. — SEMI-RECESSED CLASS A,B,C. 20LB FIRE EXTINGUISHER, SEE SPECIFICATION
- DASHED LINE AT WINDOWS INDICATES LOCATION OF HORIZONTAL BLINDS, SEE SPECIFICATION SECTION
- WF — NEW HIGH/LOW ELECTRIC WATER COOLERS, SEE PLUMBING DRAWINGS
- BRICK VENEER LOCATIONS, SEE ELEVATIONS.
- METAL WALL PANEL SYSTEM LOCATIONS, SEE ELEVATIONS.

REFERENCE NOTES

1. CASEWORK, SEE INTERIOR ELEVATIONS.
2. METAL TOILET PARTITIONS, SEE SPECIFICATIONS
3. STEEL COLUMNS, SEE STRUCTURAL.
4. VENDING MACHINE LOCATIONS, N.I.C.
5. REFRIGERATOR, N.I.C.
6. SINK, SEE PLUMBING DRAWINGS.
7. 5'-0" A.D.A. TURNING RADIUS.
8. JANITORS SINK, SEE PLUMBING DRAWINGS
9. WINDOW COVERINGS, SEE SPECIFICATIONS
10. STEEL STAIR AND GUARDRAILING/HANDRAILING SYSTEM, SEE SECTIONS AND DETAILS.
11. CURTAIN WALL WINDOW FRAMING AND GLAZING SYSTEM, SEE DETAILS AND SPECIFICATIONS.
12. WATER CLOSET, SEE PLUMBING DRAWINGS.
13. URINAL, SEE PLUMBING DRAWINGS.
14. LAVATORY, SEE PLUMBING DRAWINGS.
15. GFRC BUILDING PANELS AT COLUMN LOCATIONS
16. 4" RECESS IN GYPSUM BOARD WALL FOR FUTURE FLAT SCREEN T.V.. RECESS SHALL BE 7'-0" WIDE x 4'-0"HIGH WITH BOTTOM OF RECESS SET AT 4'-0-" A.F.F.
17. COPY MACHINE LOCATION, N.I.C.
18. SHREDDER MACHINE LOCATION, N.I.C.
19. 3" AIR SPACE AT STAIR 108
20. SEE ENLARGED PLANS FOOR WALL CONSTRUCTION AT ELEVATOR SHAFT WALL.

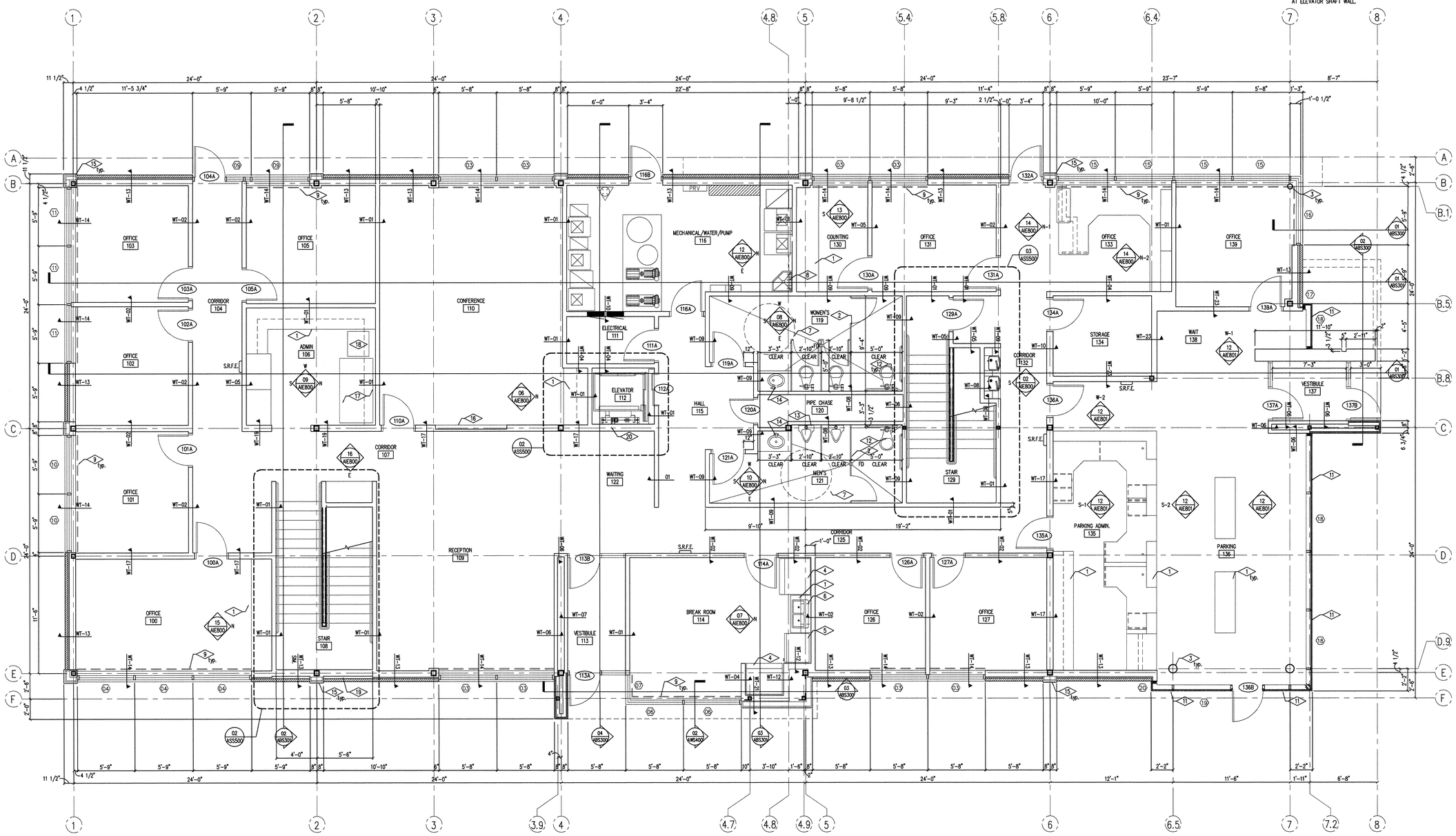

01 / AFP100 MAIN LEVEL FLOOR PLAN
SCALE 1/4" = 1'-0"

PLAN NORTH

State of Utah
Department of Administrative Services
Division of Facilities Construction & Management
4110 State Office Building
Salt Lake City, Utah 84114
Phone: (801) 538 - 3018
Fax: (801) 538 - 3267
Internet: http://www.dfcm.state.ut.us

Utah Valley University
Orem, Utah

CREATED BY: P+A architects
P+A architects
821 East Kensington Ave.
Salt Lake City, Utah 84105
P: 801.484.1161
F: 801.485.4640
e-mail parchitects@comcast.net

STATE OF UTAH LICENSED ARCHITECT

☐ architecture ☐ planning ☐ design

CONSULTANT:

PROJECT TITLE:
UTAH VALLEY UNIVERSITY NEW PARKING AND FACILITIES DEPARTMENT BUILDING

UTAH VALLEY UNIVERSITY
936 SOUTH 400 WEST
OREM, UTAH

REVISIONS

MARK	DATE	DESCRIPTION

ISSUE TYPE: CONSTRUCTION DOCUMENTS

ISSUE DATE: August 2nd, 2010

CAD PROJECT NO: 09247790
CAD DWG FILE:
DRAWN BY: BRIAN AND SCOTT
CHK'D BY: SCOTT
COPYRIGHT: P&A architects

KEY PLAN

SHEET TITLE

MAIN LEVEL FLOOR PLAN

SHEET NUMBER

A-FP100

REFERENCE NOTES

1. GYPSUM BOARD WALL TO BE PRIMED AND PAINTED WALL. PROVIDE 4" COVED RUBBER BASE AT PAINTED WALL LOCATIONS.
2. FUTURE WATER COOLER LOCATION
3. STEEL COLUMNS, SEE STRUCTURAL.
4. FUTURE JANITORS SINK, SEE PLUMBING DRAWINGS
5. WINDOW COVERINGS, SEE SPECIFICATIONS
6. STEEL STAIR AND GUARDRAILING/HANDRAILING SYSTEM, SEE SECTIONS AND DETAILS.
7. CURTAIN WALL WINDOW FRAMING AND GLAZING SYSTEM, SEE DETAILS AND SPECIFICATIONS.
8. GFRC BUILDING PANELS AT COLUMN LOCATIONS
9. ROOF ACCESS LADDER, SEE DETAILS AND ROOF PLAN
10. STAINLESS STEEL AND GLASS GUARDRAILING SYSTEM, SEE DETAILS AND INTERIOR ELEVATIONS.
11. VCT TRANSITION STRIP, SEE DETAIL.
12. 3" AIR SPACE AT STAIR 108
13. SEE ENLARGED PLANS FOR WALL CONSTRUCTION AT SHAFT SUPPORT WALL LOCATION.

LEGEND

- RM. NAME / 100 — ROOM TAG
- 101A — DOOR TAG
- 03 — WALL TYPE, SEE WALL TYPE THIS SHEET
- 01 — WINDOW TAG
- S.R.F.E. — SEMI-RECESSED CLASS A,B,C. 20LB FIRE EXTINGUISHER, SEE SPECIFICATION
- DASHED LINE AT WINDOWS INDICATES LOCATION OF HORIZONTAL BLINDS, SEE SPECIFICATION SECTION
- WF — NEW HIGH/LOW ELECTRIC WATER COOLERS, SEE PLUMBING DRAWINGS
- BRICK VENEER LOCATIONS, SEE ELEVATIONS.
- METAL WALL PANEL SYSTEM LOCATIONS, SEE ELEVATIONS.

GENERAL NOTES

1. UPON COMPLETION OF CONSTRUCTION IT IS THE GENERAL CONTRACTOR RESPONSIBILITY TO THOROUGHLY CLEAN ALL AREAS IN WHICH CONSTRUCTION TOOK PLACE AND AREAS AFFECTED BY THE CONSTRUCTION. THE GENERAL CONTRACTOR SHALL CLEAN ALL CARPET, REMOVE ALL DUST, CLEAN DOORS AND FRAMES, LIGHT FIXTURES, CEILING SYSTEMS, MECHANICAL GRILLS, ELECTRICAL PANELS, WINDOW SYSTEMS AND GLAZING ETC..
2. REFER TO FINISH SCHEDULE FOR ADDITIONAL FINISH NOTES.

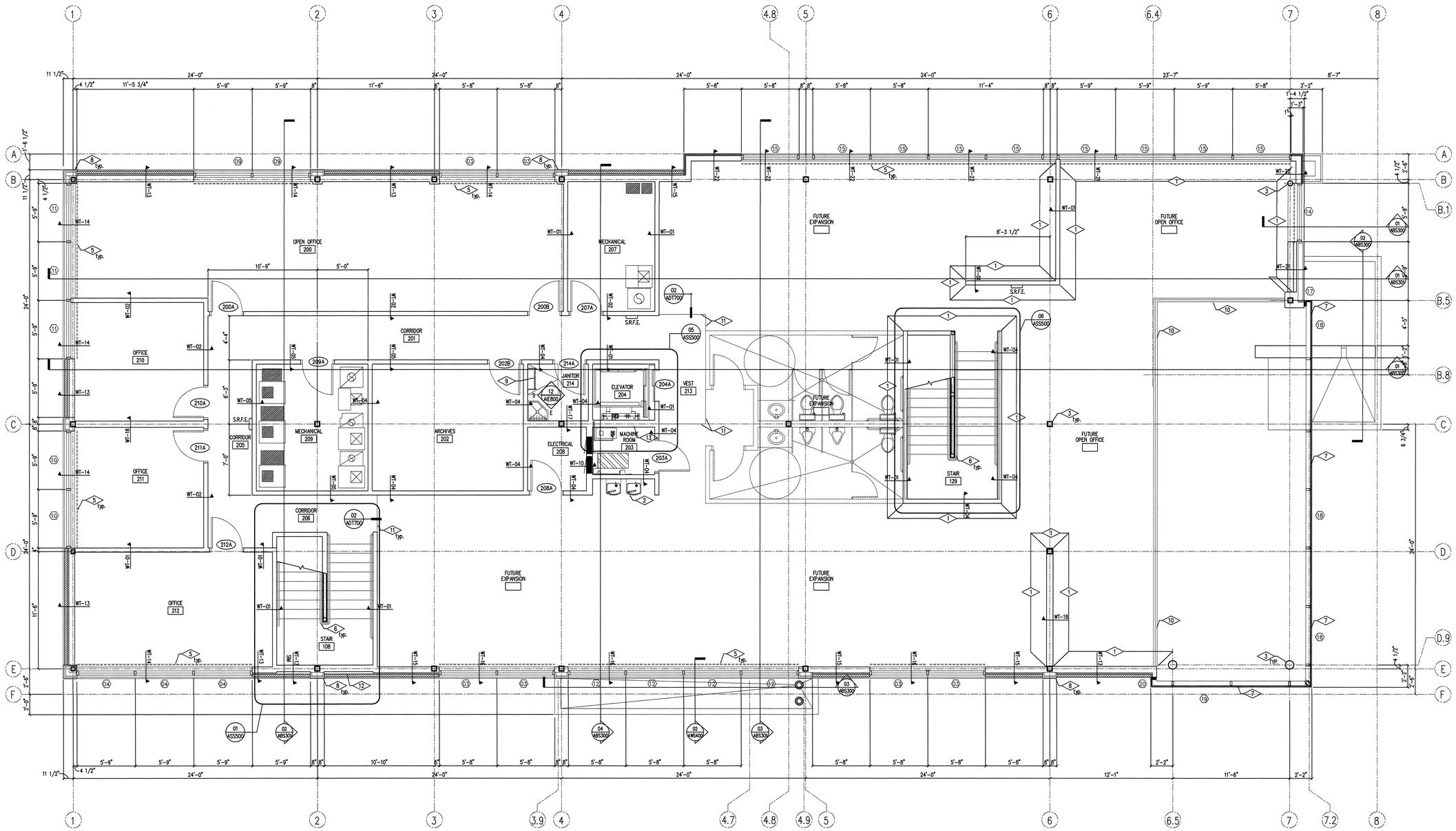

01 AFP101 SECOND LEVEL FLOOR PLAN
SCALE 1/4" = 1'-0"

PLAN NORTH

State of Utah
Department of Administrative Services
Division of Facilities Construction & Management
4110 State Office Building
Salt Lake City, Utah 84114
Phone: (801) 538 - 3018
Fax: (801) 538 - 3267
Internet: http://www.dfcm.state.ut.us

Utah Valley University
Orem, Utah

CREATED BY: P+A architects
P+A architects
821 East Kensington Ave.
Salt Lake City, Utah 84105
P: 801.484.1161
F: 801.485.4640
e-mail parchitects@comcast.net

STATE OF UTAH 20110 LICENSED ARCHITECT

architecture planning design

CONSULTANT:

PROJECT TITLE:
UTAH VALLEY UNIVERSITY
NEW PARKING AND
FACILITIES DEPARTMENT
BUILDING

UTAH VALLEY UNIVERSITY
936 SOUTH 400 WEST
OREM, UTAH

REVISIONS

MARK	DATE	DESCRIPTION

ISSUE TYPE: CONSTRUCTION DOCUMENTS

ISSUE DATE: August 2nd, 2010

CAD PROJECT NO: 09247790
CAD DWG FILE:
DRAWN BY: BRIAN AND SCOTT
CHK'D BY: SCOTT
COPYRIGHT: P&A architects

KEY PLAN

SHEET TITLE

SECOND LEVEL FLOOR PLAN

SHEET NUMBER

A-FP101

REFERENCE NOTES

1. REVEAL LOCATION IN GYPSUM BOARD CEILING, SEE DETAIL
2. SEE DRAWING CP103 FOR LIGHTING AND CEILING SYSTEM THIS AREA

CEILING LEGEND

- 101 / 8'-0" / C1 — ROOM NUMBER / CEILING HEIGHT / CEILING TYPE
- 2x4 FLUORESCENT LAY-IN LIGHT FIXTURE. SEE ELECTRICAL DRAWINGS.
- H — HANGING 8'-0" DIRECT/INDIRECT CEILING MOUNTED LIGHT FIXTURE, SEE ELECTRICAL DRAWINGS
- H — HANGING 4'-0" DIRECT/INDIRECT CEILING MOUNTED LIGHT FIXTURE, SEE ELECTRICAL DRAWINGS
- NEW RECESSED CAN LIGHT FIXTURE, SEE ELECTRICAL DRAWINGS
- S — SURFACE MOUNTED LIGHT FIXTURE, SEE ELECTRICAL DRAWINGS
- TRACK LIGHT FIXTURE, SEE ELECTRICAL DRAWINGS
- RLFM — RECESSED WALL LIGHT FIXTURE IN METAL PANELS, SEE ELECTRICAL DRAWINGS
- RLFGB — RECESSED WALL LIGHT FIXTURE IN GYPSUM BOARD, SEE ELECTRICAL DRAWINGS
- WALL MOUNTED LIGHT FIXTURE, SEE ELECTRICAL DRAWINGS
- EXIT SIGN, SEE ELECTRICAL DRAWINGS.
- SUPPLY AIR DIFFUSER CONTRACTOR TO VERIFY LOCATION WITH MECHANICAL DRAWINGS
- RETURN AIR DIFFUSER GENERAL CONTRACTOR TO VERIFY WITH MECHANICAL DRAWINGS
- CEILING EXHAUST FAN, SEE MECHANICAL DRAWINGS

GENERAL NOTES

1. REFER TO FINISH SCHEDULE FOR ADDITIONAL FINISH NOTES.
2. NEW SUSPENDED CEILING GRIDS SHALL BE CENTERED IN SPACES AS SHOWN ON REFLECTED CEILING PLANS, UNLESS SHOWN OTHERWISE.
3. SEE DETAIL FOR LAY IN CEILING TILE HORIZONTAL RESTRAINT
4. HEAVY DUTY "T-BAR" GRID SYSTEM SHALL BE USED.
5. EXCEPT WHERE RIGID BRACES ARE USED TO LIMIT LATERIAL DEFLECTIONS, SPRINKLER HEADS AND OTHER PENATRATIONS SHALL HAVE A 2" OVERSIZE RING, SLEEVE OR ADAPTER THROUGHT THE CEILING TILE TO ALLOW FOR FREE MOIVEMENTOF AT LEAST 1" IN ALL DIRECTIONS.
6. CABLE TRAYS AND ELECTRICAL CONDUITS SHALL BE INDEPENDENTLY SUPPORTED AND BRACED INDEPENDENTLY OF THE CEILING.
7. ALL NEW SUSPENDED CEILING CEILING INSTALLATIONS SHALL BE AS PER ASCE 7 AND SEISCA REQUIREMENTS.

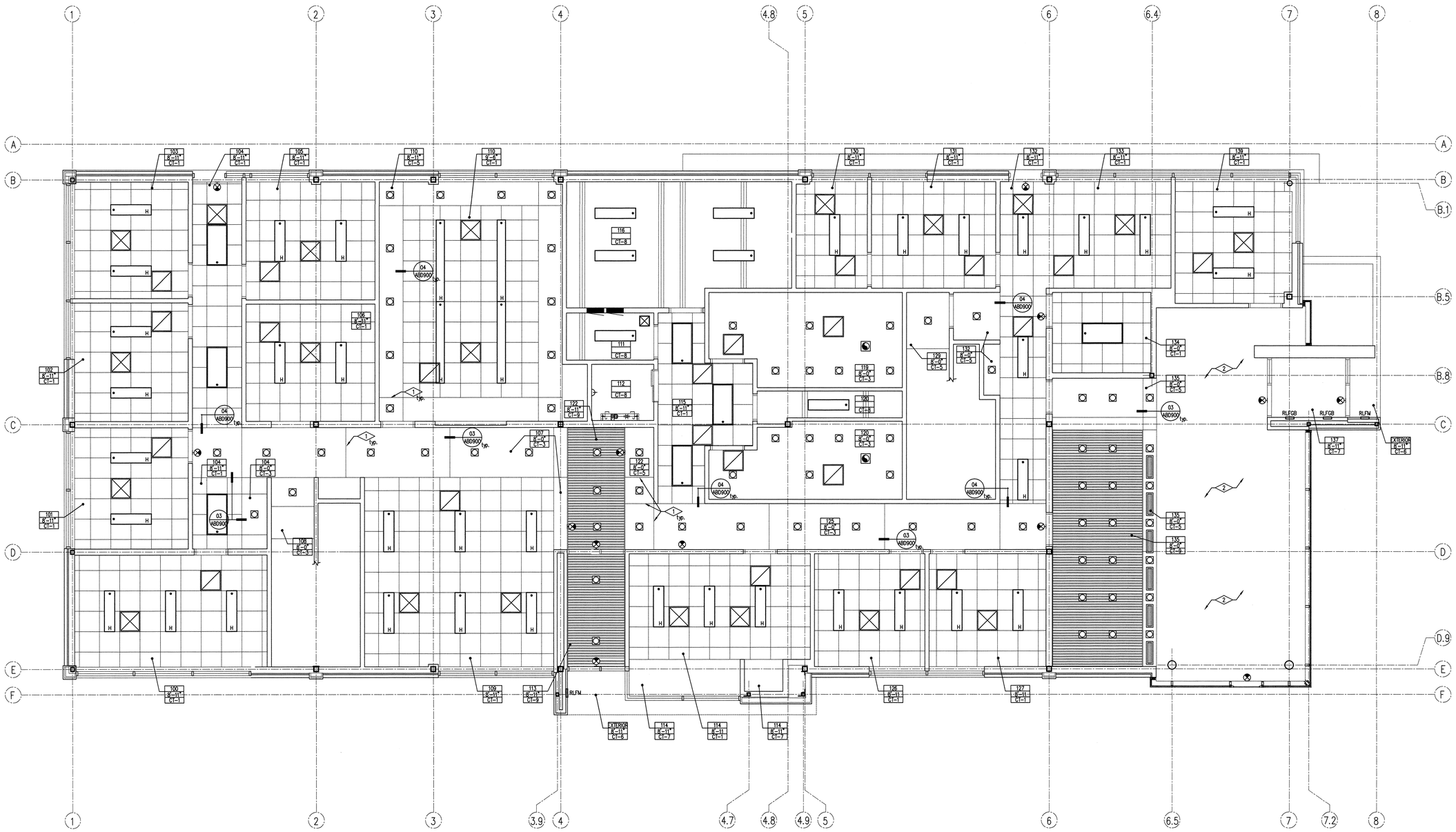

PLAN NORTH

01 / A-CP102 FIRST FLOOR CEILING PLAN

SCALE 1/4" = 1'-0"

State of Utah

Department of Administrative Services

Division of Facilities Construction & Management
4110 State Office Building
Salt Lake City, Utah 84114
Phone: (801) 538 - 3018
Fax: (801) 538 - 3267
Internet: http://www.dfcm.state.ut.us

Utah Valley University
Orem, Utah

CREATED BY: P+A architects

P+A architects
821 East Kensington Ave.
Salt Lake City, Utah 84105
P: 801.484.1161
F: 801.485.4640
e-mail parchitects@comcast.net

STATE OF UTAH — 251110 — LICENSED ARCHITECT

architecture planning design

CONSULTANT:

PROJECT TITLE:

UTAH VALLEY UNIVERSITY
NEW PARKING AND
FACILITIES DEPARTMENT
BUILDING

UTAH VALLEY UNIVERSITY
936 SOUTH 400 WEST
OREM, UTAH

REVISIONS

MARK	DATE	DESCRIPTION

ISSUE TYPE: CONSTRUCTION DOCUMENTS

ISSUE DATE: August 2nd, 2010

CAD PROJECT NO: 09247790
CAD DWG FILE:
DRAWN BY: BRIAN AND SCOTT
CHK'D BY: SCOTT

COPYRIGHT: P&A architects

KEY PLAN

SHEET TITLE

FIRST FLOOR
CEILING PLAN

SHEET NUMBER

A-CP102

REFERENCE NOTES

1. REVEAL LOCATION IN GYPSUM BOARD CEILING, SEE DETAIL
2. UPPER CEILING TO EXTEND OVER LOWER CEILING, SEE SECTIONS.
3. GYPSUM BOARD BULKHEAD, SEE DETAILS

CEILING LEGEND

- 101 / 9'-0" / CI — ROOM NUMBER / CEILING HEIGHT / CEILING TYPE
- 2x4 FLUORESCENT LAY-IN LIGHT FIXTURE. SEE ELECTRICAL DRAWINGS.
- H — HANGING 8'-0" DIRECT/INDIRECT CEILING MOUNTED LIGHT FIXTURE, SEE ELECTRICAL DRAWINGS
- H — HANGING 4'-0" DIRECT/INDIRECT CEILING MOUNTED LIGHT FIXTURE, SEE ELECTRICAL DRAWINGS
- NEW RECESSED CAN LIGHT FIXTURE, SEE ELECTRICAL DRAWINGS
- S — SURFACE MOUNTED LIGHT FIXTURE, SEE ELECTRICAL DRAWINGS
- TRACK LIGHT FIXTURE, SEE ELECTRICAL DRAWINGS
- RLFM — RECESSED WALL LIGHT FIXTURE IN METAL PANELS, SEE ELECTRICAL DRAWINGS
- RLFGB — RECESSED WALL LIGHT FIXTURE IN GYPSUM BOARD, SEE ELECTRICAL DRAWINGS
- WALL MOUNTED LIGHT FIXTURE, SEE ELECTRICAL DRAWINGS
- HANGING PENDANT LIGHT, SEE ELECTRICAL DRAWINGS
- EXIT SIGN, SEE ELECTRICAL DRAWINGS.
- SUPPLY AIR DIFFUSER CONTRACTOR TO VERIFY LOCATION WITH MECHANICAL DRAWINGS
- RETURN AIR DIFFUSER GENERAL CONTRACTOR TO VERIFY WITH MECHANICAL DRAWINGS
- CEILING EXHAUST FAN, SEE MECHANICAL DRAWINGS

GENERAL NOTES

1. REFER TO FINISH SCHEDULE FOR ADDITIONAL FINISH NOTES.
2. NEW SUSPENDED CEILING GRIDS SHALL BE CENTERED IN SPACES AS SHOWN ON REFLECTED CEILING PLANS, UNLESS SHOWN OTHERWISE.
3. SEE DETAIL FOR LAY IN CEILING TILE HORIZONTAL RESTRAINT
4. HEAVY DUTY "T-BAR" GRID SYSTEM SHALL BE USED.
5. EXCEPT WHERE RIGID BRACES ARE USED TO LIMIT LATERIAL DEFLECTIONS, SPRINKLER HEADS AND OTHER PENATRATIONS SHALL HAVE A 2" OVERSIZE RING, SLEEVE OR ADAPTER THROUGHT THE CEILING TILE TO ALLOW FOR FREE MOIVEMENTOF AT LEAST 1" IN ALL DIRECTIONS.
6. CABLE TRAYS AND ELECTRICAL CONDUITS SHALL BE INDEPENDENTLY SUPPORTED AND BRACED INDEPENDENTLY OF THE CEILING.
7. ALL NEW SUSPENDED CEILING CEILING INSTALLATIONS SHALL BE AS PER ASCE 7 AND SEISCA REQUIREMENTS.

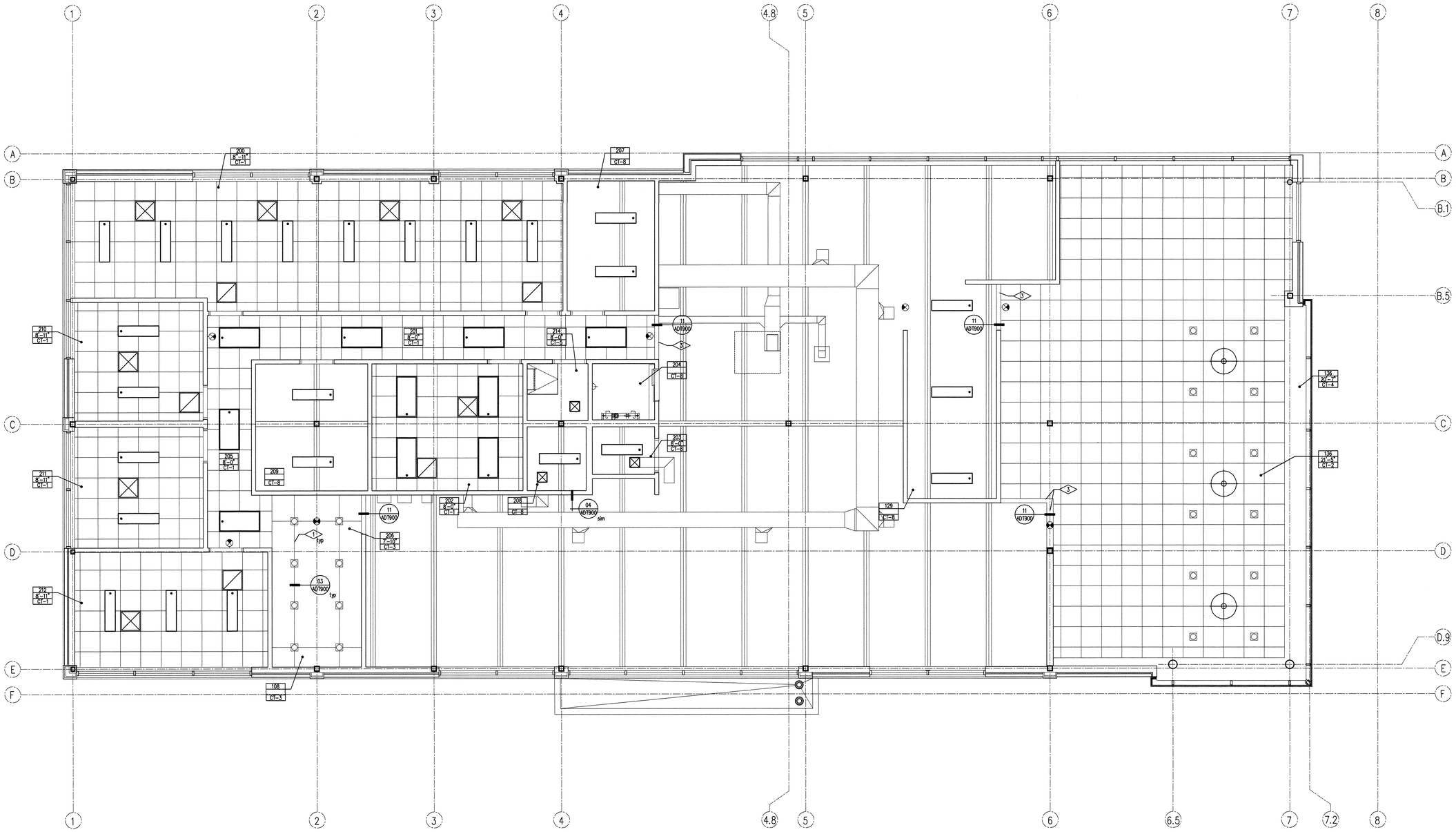

PLAN NORTH

01 A0P103 SECOND FLOOR CEILING PLAN
SCALE 1/4" = 1'-0"

State of Utah
Department of Administrative Services
Division of Facilities Construction & Management
4110 State Office Building
Salt Lake City, Utah 84114
Phone: (801) 538 - 3018
Fax: (801) 538 - 3267
Internet: http://www.dfcm.state.ut.us

Utah Valley University
Orem, Utah

CREATED BY: P+A architects
P+A architects
821 East Kensington Ave.
Salt Lake City, Utah 84105
P: 801.484.1161
F: 801.485.4640
e-mail parchitects@comcast.net

STATE OF UTAH LICENSED ARCHITECT 3-10-10

architecture planning design

CONSULTANT:

PROJECT TITLE:
UTAH VALLEY UNIVERSITY
NEW PARKING AND
FACILITIES DEPARTMENT
BUILDING

UTAH VALLEY UNIVERSITY
936 SOUTH 400 WEST
OREM, UTAH

REVISIONS

MARK	DATE	DESCRIPTION

ISSUE TYPE: CONSTRUCTION DOCUMENTS

ISSUE DATE: August 2nd, 2010

CAD PROJECT NO: 09247790
CAD DWG FILE:
DRAWN BY: BRIAN AND SCOTT
CHK'D BY: SCOTT
COPYRIGHT: P&A architects

KEY PLAN

SHEET TITLE

SECOND FLOOR
CEILING PLAN

SHEET NUMBER

A-CP103

GENERAL NOTES

1. ALL SAFETY STANDARD AND REQUIREMENTS ARE THE RESPONSIBILITY OF THE CONTRACTOR.
2. BEFORE FABRICATION OF ANY SHEET METAL WORK, SUBMIT SHOP DRAWINGS TO PROJECT ARCHITECT FOR REVIEW AND APPROVAL.
3. COMPLY WITH ALL MANUFACTURER'S SPECIFICATIONS AND RECOMMENDATIONS.
4. FIELD VERIFY ALL DIMENSIONS PRIOR TO ORDERING ANY MATERIALS, VERIFY ALL EXISTING CONDITIONS AND DIMENSIONS. DO NOT SCALE DRAWINGS FOR QUANTITIES.
5. AT THE END OF CONSTRUCTION, CONTRACTOR IS TO CLEAN OUT AND FLUSH ALL ROOF DRAIN LINES TO MAKE SURE THEY ARE NOT PLUGGED AND ARE IN WORKING CONDITION.
6. ALL ROOF AREAS MUST SLOPE TO DRAIN. POND WATER IS NOT ACCEPTABLE. ALL TAPERED INSULATION, CRICKETS, SADDLES AND ANY OTHER APPURTENANCES NECESSARY TO ACCOMPLISH THIS TASK ARE PART OF THIS CONTRACT.
7. PROVIDE SEALANT AND PAINT ALL ROOF PENETRATIONS. NOTE: DO NOT PAINT ALUMINUM OR STAINLESS STEEL HOODS, VENTS, ETC.
8. ALL EXISTING AND NEW PIPE AND VENT PIPES SHALL RECEIVE PRE MANUFACTURED PIPE BOOTS ONLY.
9. ROOFING SYSTEM TESTING AS PER U.L. BASIC STANDARDS FOR ROOING PRODUCT INVESTIGATION,

   INSTALLATION AS PER FIRESTONE ROOFING CLASS "A" ROOFING SYSTEMS, E.P.D.M. U.L. ITEM NUMBER A,MA,105 ROOFING SYSTEM, MECHANICALLY FASTENED UP TO ½" MAX SLOPE.

   FULLY ADHEARED SYSTEM AS PER FIRESTONE ROOFING CLASS "A", E.P.D.M. U.L. ITEM NUMBER A,FA 29 OR A,FA,66 ROOFING SYSTEM, FULLY ADHEARED UP TO 3 ½" MAX SLOPE.

LEGEND

- ARROW INDICATES DIRECTION OF EXISTING SLOPE
- P.R.D. = EXISTING PRIMARY ROOF DRAIN LOCATION. REUSE EXISTING PRIMARY ROOF DRAINS AND BASKETS, SEE DETAILS 03 & 04/AD7501
- S.R.D. = SECONDARY ROOF DRAIN LOCATION. REUSE EXISTING SECENDARY ROOF DRAINS AND BASKETS, SEE DETAILS 03 & 04/AD7501
- NEW REINFORCED WALKWAY PADS SEE DETAIL 02/AD7500 AND SPECIFICATION.
- HATCH PATTERN INDICATED THE LOCATION WHERE NEW ⅜" PER FOOT TAPERED POLYISOCUANURATE RIGID INSULATION SHALL BE PROVIDED. THIS SHALL BE PROVIDED IN ADDITION TO THE NEW 4" RIGID POLYISOCYANURATE.

REFERENCE NOTES

1. MECHANICALLY FASTENED EPDM ROOF MEMBRANE OVER NEW 4" MECHANICALLY FASTENED POLYISOCYANURATE RIDGED INSUALTION BOARD, SEE SPECIFICATION
2. FULLY ADHERED EPDM ROOF MEMBRANE OVER ½" DENZ DECK PRIME OVER MIN. 2" MECHANICALLY FASTENED POLYISOCYANURATE RIDGED INSULATION BOARD. PROVIDE TAPERED INSULATION AT ¼" PER FOOT TO ROOF DRAINS AT LOWER ROOF AREAS
3. NEW REINFORCED ROOFING MEMBRANE WALKWAY PADS, SEE LEGEND AND DETAIL
4. PROVIDE A NEW ROOF ACCESS HATCH "BABCOCK-DAVIS" OR EQUAL INSULATED. MODEL NUMBER BRHG 36"x36" SEE DETAIL
5. NEW, GALVANIZED ROOF HATCH SAFETY RAILING SYSTEM. SAFETY RAILING TO MEET ALL OSHA SAFETY REQUIREMENTS, SEE DETAIL
6. RIDGE LINE.
7. VALLEY LINE.
8. LOWER ROOF BELOW
9. SLOPED TOP OF METAL WALL PANEL SYSTEM BELOW.
10. TOP OF CONCRETE WALL BELOW
11. ROOF TOP MECHANICAL UNITS, SEE MECHANICAL DRAWINGS
12. FULLY ADHERED EPDM ROOF MEMBRANE OVER ½" DENZ DECK PRIME OVER ⅜" PER FOOT TAPERED POLYISOCYANURATE RIGID INSULATION
13. ROOF SCUPPER AT CONCRETE WALL, SEE DETAIL 23/AD7900

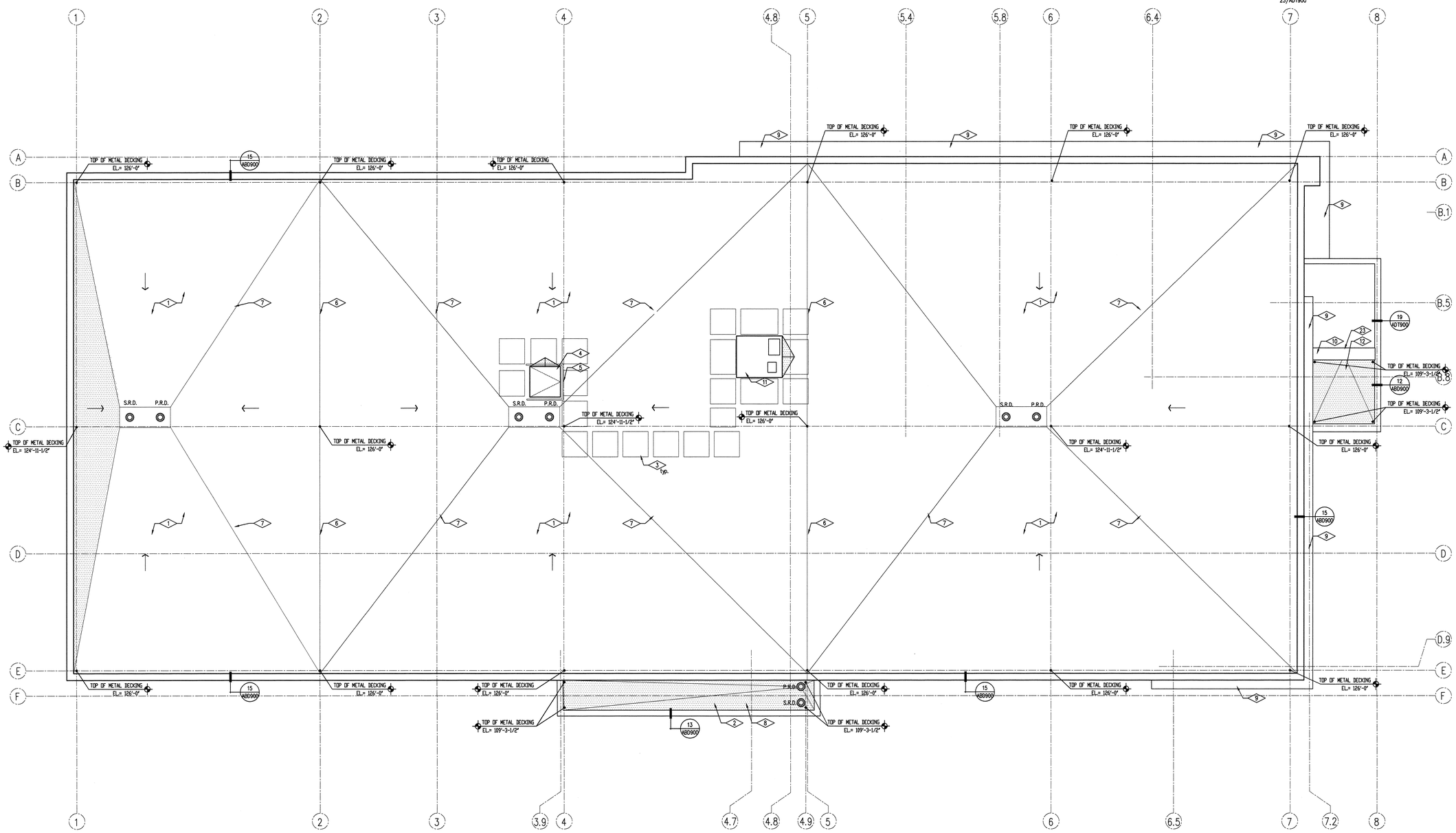

01 ARP104 ROOF PLAN
SCALE 1/4" = 1'-0"

PLAN NORTH

State of Utah
Department of Administrative Services
Division of Facilities Construction & Management
4110 State Office Building
Salt Lake City, Utah 84114
Phone: (801) 538 - 3018
Fax: (801) 538 - 3267
Internet: http://www.dfcm.state.ut.us

Utah Valley University
Orem, Utah

CREATED BY: P+A architects
P+A architects
821 East Kensington Ave.
Salt Lake City, Utah 84105
P: 801.484.1161
F: 801.485.4640
e-mail parchitects@comcast.net

STATE OF UTAH 281110 LICENSED ARCHITECT

☐ architecture ☐ planning ☐ design

CONSULTANT:

PROJECT TITLE:
UTAH VALLEY UNIVERSITY
NEW PARKING AND
FACILITIES DEPARTMENT
BUILDING

UTAH VALLEY UNIVERSITY
936 SOUTH 400 WEST
OREM, UTAH

REVISIONS

MARK	DATE	DESCRIPTION

ISSUE TYPE: CONSTRUCTION DOCUMENTS

ISSUE DATE: August 2nd, 2010

CAD PROJECT NO: 09247790
CAD DWG FILE:
DRAWN BY: BRIAN AND SCOTT
CHK'D BY: SCOTT
COPYRIGHT: P&A architects

KEY PLAN

SHEET TITLE

ROOF PLAN

SHEET NUMBER

A-RP104

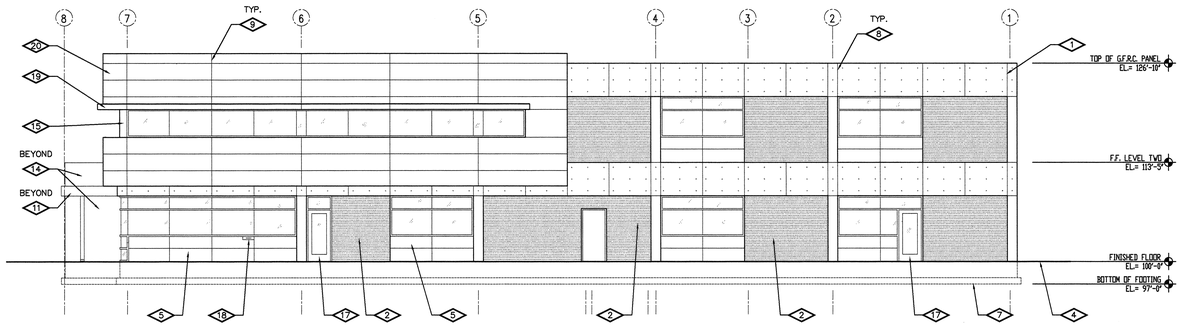

04 ABE200 **WEST ELEVATION**
SCALE 1/8" = 1'-0"

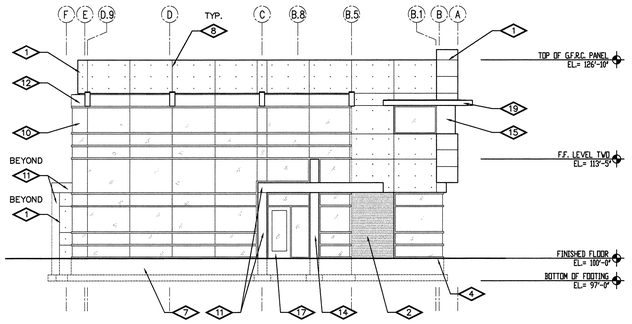

03 ABE200 **NORTH ELEVATION**
SCALE 1/8" = 1'-0"

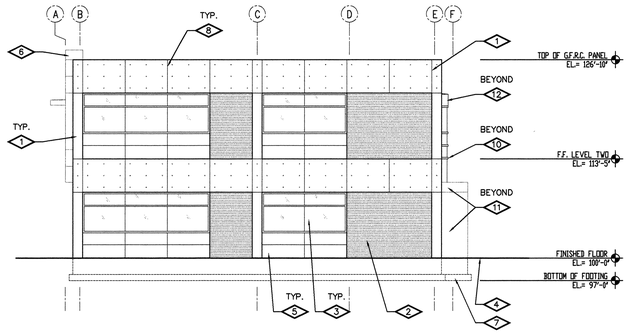

02 ABE200 **SOUTH ELEVATION**
SCALE 1/8" = 1'-0"

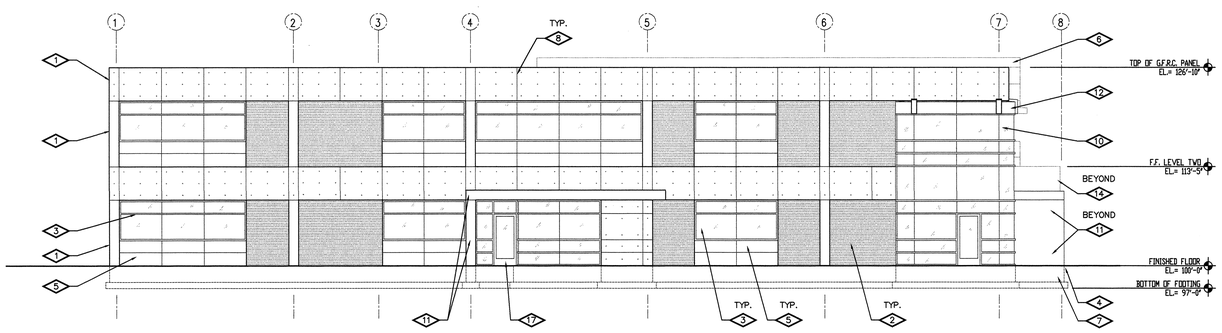

01 ABE200 **EAST ELEVATION**
SCALE 1/8" = 1'-0"

REFERENCE NOTES

1. GFRC WALL PANEL SYSTEM, SEE SECTIONS & SPECIFICATIONS, PROVIDE 1" CONE TIE AS SHOWN
2. SEALED BRICK VENEER, SEE SPECIFICATION
3. ANODIZED ALUMINUM STOREFRONT WINDOW SYSTEM, SEE WINDOW TYPES & WINDOW DETAILS
4. FINISHED GRADE, SEE SITE PLAN
5. METAL WALL PANEL SYSTEM LOCATED BELOW ALUMINUM STOREFRONT WINDOW SYSTEM
6. BUILDING BEYOND
7. FOOTING & FOUNDATION, SEE STRUCTURAL DRAWINGS
8. REVEAL IN GFRC PANEL SYSTEM, SEE DETAILS
9. REVEAL IN METAL PANEL WALL SYSTEM, SEE DETAILS
10. ANODIZED ALUMINUM CURTAIN WALL WINDOW SYSTEM, SEE DETAILS & SPECIFICATIONS.
11. METAL WALL PANEL SYSTEM AT ENTRY WALL & CANOPY.
12. METAL WALL PANEL SYSTEM ABOVE CURTAIN WALL WINDOW SYSTEM.
13. NOT USED.
14. VERTICAL CONCRETE WALL ELEMENT AT ENTRANCE.
15. METAL WALL PANEL SYSTEM @ UPPER LEVEL CORNER LOCATION
16. METAL WALL PANEL SYSTEM
17. ANODIZED ALUMINUM STOREFRONT ENTRANCE SYSTEM, SEE DOOR & WINDOW TYPES AND DETAILS.
18. MAIL DROP BOX.
19. METAL WALL PANEL OVERHANG SHADING SYSTEM ABOVE WINDOWS, SEE WALL SECTIONS.
20. METAL WALL PANEL SYSTEM AT BUILD-OUT, SEE BUILDING AND WALL SECTIONS

State of Utah
Department of Administrative Services

Division of Facilities Construction & Management
4110 State Office Building
Salt Lake City, Utah 84114
Phone: (801) 538 - 3018
Fax: (801) 538 - 3267
Internet: http://www.dfcm.state.ut.us

Utah Valley University
Orem, Utah

CREATED BY: P+A architects
P+A architects
821 East Kensington Ave.
Salt Lake City, Utah 84105
P: 801.484.1161
F: 801.485.4640
e-mail parchitects@comcast.net

STATE OF UTAH 251110 LICENSED ARCHITECT

☐ architecture ☐ planning ☐ design

CONSULTANT:

PROJECT TITLE:
UTAH VALLEY UNIVERSITY
NEW PARKING AND
FACILITIES DEPARTMENT
BUILDING

UTAH VALLEY UNIVERSITY
936 SOUTH 400 WEST
OREM, UTAH

REVISIONS

MARK	DATE	DESCRIPTION

ISSUE TYPE: CONSTRUCTION DOCUMENTS

ISSUE DATE: August 2nd, 2010

CAD PROJECT NO: 09247790
CAD DWG FILE:
DRAWN BY: BRIAN AND SCOTT
CHK'D BY: SCOTT
COPYRIGHT: P&A architects

KEY PLAN

SHEET TITLE

BUILDING ELEVATIONS

SHEET NUMBER

A-BE200

ASSEMBLY TYPES

V1 VENEER WALL ASSEMBLY
- SEAL BRICK VENEER, SEE SPECIFICATION
- AIR SPACE
- 15LB ASPHALT IMPREGNATED BUILDING PAPER
- 1/2" EXTERIOR SHEALTHING
- 6" 24 GA. METAL STUDS @ 16" O.C., SEE SPEC.
- R-19 BATT INSULATION
- CONT. 6 MIL. VAPOR BARRIER
- PAINTED 3 5/8" TYPE 'X' GYP. BD., SEE SPEC.

V2 GFRC WALL ASSEMBLY
- GFRC EXTERIOR PANEL SYSTEM , SEE SPECIFICATION
- AIR SPACE
- 15LB ASPHALT IMPREGNATED BUILDING PAPER
- 1/2" EXTERIOR SHEALTHING
- 6" 24 GA. METAL STUDS @ 16" O.C., SEE SPEC.
- R-19 BATT INSULATION
- CONT. 6 MIL. VAPOR BARRIER
- PAINTED 3 5/8" TYPE 'X' GYP. BD. (WHERE SHOWN), SEE SPEC.

V3 METAL PANEL WALL ASSEMBLY
- 2" METAL WALL PANEL SYSTEM, SEE SPECIFICATION
- AIR SPACE
- 15LB ASPHALT IMPREGNATED BUILDING PAPER
- 1/2" EXTERIOR SHEALTHING
- 6" 24 GA. METAL STUDS @ 16" O.C., SEE SPEC.
- R-19 BATT INSULATION
- CONT. 6 MIL. VAPOR BARRIER
- PAINTED 3 5/8" TYPE 'X' GYP. BD., SEE SPEC.

V4 FOUNDATION WALL ASSEMBLY
- CONCRETE FOUNDATION WALL, SEE STRUCTURAL DWGS.
- 2" PERIMETER INSULATION
- OVER 1/2" PROTECTION BOARD

V5 METAL PANEL WALL (DOUBLE) ASSEMBLY
- 2" METAL WALL PANEL SYSTEM, SEE SPECIFICATION
- AIR SPACE
- 15LB ASPHALT IMPREGNATED BUILDING PAPER
- 1/2" EXTERIOR SHEALTHING
- 6" 24 GA. METAL STUDS @ 16" O.C., SEE SPEC.
- AIR SPACE
- 6" 24 GA. METAL STUDS @ 16" O.C., SEE SPEC.
- 1/2" EXTERIOR SHEALTHING
- 15LB ASPHALT IMPREGNATED BUILDING PAPER
- AIR SPACE
- 2" METAL WALL PANEL SYSTEM, SEE SPECIFICATION

H1 FLOOR ASSEMBLY
- 4" CONCRETE SLAB
- OVER 6 MIL. VAPOR BARRIER
- OVER COMPACTED GRAVEL BASE, SEE SPECIFICATION

H2 FLOOR/CEILING ASSEMBLY
- CONCRETE SLAB
- OVER METAL DECK SYSTEM, SEE STRUCTURAL DWGS.
- STEEL JOIST FRAMING SYSTEM, SEE STRUCT. DWGS.
- LAY-IN CEILING SYSTEM (WHERE SHOWN), SEE REFLECTED CEILING PLAN & SPECIFICATION

H3 ROOF/CEILING ASSEMBLY
- EPDM ROOFING MEMBRANE SYSTEM; MEMBRANE TO BE FULLY ADHERED TO VERTICAL SURFACES AND MECHANICALLY FASTENED TO HORIZONTAL SURFACES, SEE ROOF PLAN
- OVER 4" POLYISOCYANURATE RIGID INSULATION SYSTEM
- OVER METAL DECKING
- STEEL JOIST FRAMING SYSTEM, SEE STRUCT. DWGS.
- LAY-IN CEILING SYSTEM, SEE REFLECTED CEILING PLAN & SPECIFICATION

REFERENCE NOTES

1. CEILING SYSTEM, SEE REFLECTED CEILING PLAN
2. NOT USED
3. NOT USED
4. SEEL FRAMING SYSTEM, SEE STRUCTURAL DRAWINGS.
5. NOT USED
6. CONCRETE FOOTING SYSTEM, SEE STRUCTURAL DRAWINGS.
7. NOT USED
8. NOT USED
9. FINISH GRADE
10. BUILDING BEYOND
11. OPENING BEYOND
12. METAL STUDS FRAMING & GYPSUM BOARD WALL ASSEMBLY, SEE WALL TYPES.
13. STEEL COLUMN, SEE STRUCTURAL FRAMING PLANS.
14. BATHROOM ACCESSORIES, SEE INTERIOR ELEVATIONS.
15. CASEWORK, SEE INTERIOR ELEVATIONS.
16. NOT USED
17. NOT USED
18. ANODIZED ALUMINUM STOREFRONT WINDOW SYSTEM, SEE WINDOW TYPES & SPECIFICATION
19. CURTAIN WALL FRAMING & GLAZING SYSTEM, SEE SPECIFICATION.
20. PLUMBING FIXTURES, SEE PLUMBING DRAWINGS AND SPECIFICATION.
21. NOT USED
22. STEEL STAIR SYSTEM AND GUARDRAIL SYSTEM, SEE ENLARGED SECTIONS & PLANS.
23. ELEVATOR SHAFT, SEE PLANS & SPECIFICATIONS.
24. DOOR BEYOND
25. LIGHT FIXTURE, SEE ELECTRICAL DRAWINGS.
26. BRUSHED STAINLESS STEEL GUARD FAILING FRAMING STESM WITH GLASS INFILL, SEE GUARDRAIL SECTION & DETAILS
27. CONCRETE WALL BEYOND
28. STOREFRONT ENTRANCE SYSTEM, SEE WINDOW & DOOR TYPES.
29. METAL CANOPY @ WINDOW, SEE WALL SECTION & STRUCTURAL TIONS.

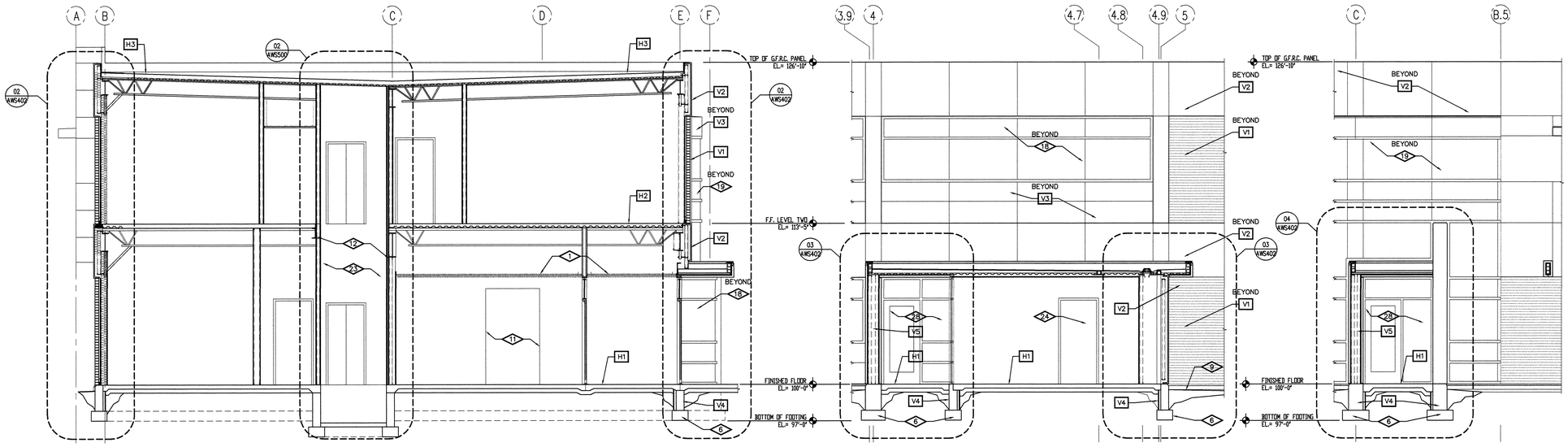

04 ABS300 BUILDING SECTION SCALE 1/4" = 1'-0"

03 ABS300 BUILDING SECTION SCALE 1/4" = 1'-0"

02 ABS300 BUILDING SECTION SCALE 1/4" = 1'-0"

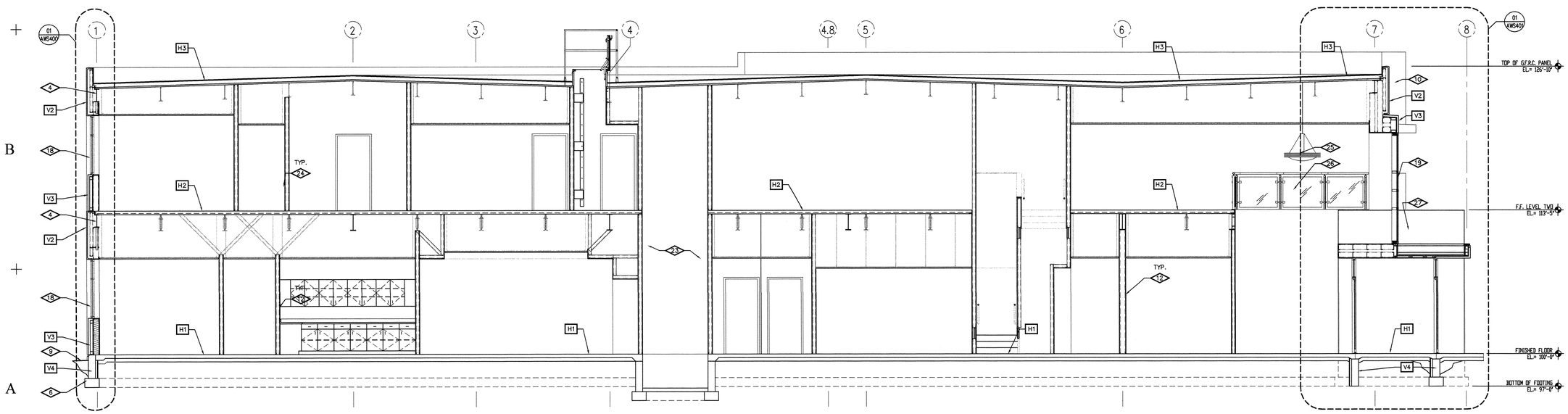

01 ABS300 BUILDING SECTION SCALE 1/4" = 1'-0"

State of Utah
Department of Administrative Services
Division of Facilities Construction & Management
4110 State Office Building
Salt Lake City, Utah 84114
Phone: (801) 538 - 3018
Fax: (801) 538 - 3267
Internet: http://www.dfcm.state.ut.us

Utah Valley University
Orem, Utah

CREATED BY: P+A architects
P+A architects
821 East Kensington Ave.
Salt Lake City, Utah 84105
P: 801.484.1161
F: 801.485.4640
e-mail parchitects@comcast.net

STATE OF UTAH 211110 LICENSED ARCHITECT

architecture planning design

CONSULTANT:

PROJECT TITLE:
UTAH VALLEY UNIVERSITY
NEW PARKING AND
FACILITIES DEPARTMENT
BUILDING

UTAH VALLEY UNIVERSITY
936 SOUTH 400 WEST
OREM, UTAH

REVISIONS

MARK	DATE	DESCRIPTION

ISSUE TYPE: CONSTRUCTION DOCUMENTS

ISSUE DATE: August 2nd, 2010

CAD PROJECT NO: 09247790
CAD DWG FILE:
DRAWN BY: BRIAN AND SCOTT
CHK'D BY: SCOTT
COPYRIGHT: P&A architects

KEY PLAN

SHEET TITLE

BUILDING SECTIONS

SHEET NUMBER

A-BS300

ASSEMBLY TYPES

V1 VENEER WALL ASSEMBLY
- -SEAL BRICK VENEER, SEE SPECIFICATION
- -AIR SPACE
- -15LB ASPHALT IMPREGNATED BUILDING PAPER
- -1/2" EXTERIOR SHEALTHING
- -6" 24 GA. METAL STUDS @ 16" O.C., SEE SPEC.
- -R-19 BATT INSULATION
- -CONT. 6 MIL. VAPOR BARRIER
- -PAINTED 3 ⅝" TYPE 'X' GYP. BD., SEE SPEC.

V2 GFRC WALL ASSEMBLY
- -GFRC EXTERIOR PANEL SYSTEM , SEE SPECIFICATION
- -AIR SPACE
- -15LB ASPHALT IMPREGNATED BUILDING PAPER
- -1/2" EXTERIOR SHEALTHING
- -6" 24 GA. METAL STUDS @ 16" O.C., SEE SPEC.
- -R-19 BATT INSULATION
- -CONT. 6 MIL. VAPOR BARRIER
- -PAINTED 3 ⅝" TYPE 'X' GYP. BD. (WHERE SHOWN), SEE SPEC.

V3 METAL PANEL WALL ASSEMBLY
- -2" METAL WALL PANEL SYSTEM, SEE SPECIFICATION
- -AIR SPACE
- -15LB ASPHALT IMPREGNATED BUILDING PAPER
- -1/2" EXTERIOR SHEALTHING
- -6" 24 GA. METAL STUDS @ 16" O.C., SEE SPEC.
- -R-19 BATT INSULATION
- -CONT. 6 MIL. VAPOR BARRIER
- -PAINTED 3 ⅝" TYPE 'X' GYP. BD., SEE SPEC.

V4 FOUNDATION WALL ASSEMBLY
- -CONCRETE FOUNDATION WALL, SEE STRUCTURAL DWGS.
- -2" PERIMETER INSULATION
- -OVER ½" PROTECTION BOARD

V5 METAL PANEL WALL (DOUBLE) ASSEMBLY
- -2" METAL WALL PANEL SYSTEM, SEE SPECIFICATION
- -AIR SPACE
- -15LB ASPHALT IMPREGNATED BUILDING PAPER
- -1/2" EXTERIOR SHEALTHING
- -6" 24 GA. METAL STUDS @ 16" O.C., SEE SPEC.
- -AIR SPACE
- -6" 24 GA. METAL STUDS @ 16" O.C., SEE SPEC.
- -1/2" EXTERIOR SHEALTHING
- -15LB ASPHALT IMPREGNATED BUILDING PAPER
- -AIR SPACE
- -2" METAL WALL PANEL SYSTEM, SEE SPECIFICATION

H1 FLOOR ASSEMBLY
- -4" CONCRETE SLAB
- -OVER 6 MIL. VAPOR BARRIER
- -OVER COMPACTED GRAVEL BASE, SEE SPECIFICATION

H2 FLOOR/CEILING ASSEMBLY
- -CONCRETE SLAB
- -OVER METAL DECK SYSTEM, SEE STRUCTURAL DWGS.
- -STEEL JOIST FRAMING SYSTEM, SEE STRUCT. DWGS.
- -LAY-IN CEILING SYSTEM (WHERE SHOWN), SEE REFLECTED CEILING PLAN & SPECIFICATION

H3 ROOF/CEILING ASSEMBLY
- -EPDM ROOFING MEMBRANE SYSTEM; MEMBRANE TO BE FULLY ADHERED TO VERTICAL SURFACES AND MECHANICALLY FASTENED TO HORIZONTAL SURFACES, SEE ROOF PLAN
- -OVER 4" POLYISOCYANURATE RIGID INSULATION SYSTEM
- -OVER METAL DECKING
- -STEEL JOIST FRAMING SYSTEM, SEE STRUCT. DWGS.
- -LAY-IN CEILING SYSTEM, SEE REFLECTED CEILING PLAN & SPECIFICATION

REFERENCE NOTES

1. CEILING SYSTEM, SEE REFLECTED CEILING PLAN
2. NOT USED
3. NOT USED
4. SEEL FRAMING SYSTEM, SEE STRUCTURAL DRAWINGS.
5. NOT USED
6. CONCRETE FOOTING SYSTEM, SEE STRUCTURAL DRAWINGS.
7. NOT USED
8. NOT USED
9. FINISH GRADE
10. BUILDING BEYOND
11. OPENING BEYOND
12. METAL STUDS FRAMING & GYPSUM BOARD WALL ASSEMBLY, SEE WALL TYPES.
13. STEEL COLUMN, SEE STRUCTURAL FRAMING PLANS.
14. BATHROOM ACCESSORIES, SEE INTERIOR ELEVATIONS.
15. CASEWORK, SEE INTERIOR ELEVATIONS.
16. NOT USED
17. NOT USED
18. ANODIZED ALUMINUM STOREFRONT WINDOW SYSTEM, SEE WINDOW TYPES & SPECIFICATION
19. CURTAIN WALL FRAMING & GLAZING SYSTEM, SEE SPECIFICATION.
20. PLUMBING FIXTURES, SEE PLUMBING DRAWINGS AND SPECIFICATION.
21. NOT USED
22. STEEL STAIR SYSTEM AND GUARDRAIL SYSTEM, SEE ENLARGED SECTIONS & PLANS.
23. ELEVATOR SHAFT, SEE PLANS & SPECIFICATIONS.
24. DOOR BEYOND
25. LIGHT FIXTURE, SEE ELECTRICAL DRAWINGS.
26. BRUSHED STAINLESS STEEL GUARD FAILING FRAMING STESM WTH GLASS INFILL, SEE GUARDRAIL SECTION & DETAILS
27. CONCRETE WALL BEYOND
28. STOREFRONT ENTRANCE SYSTEM, SEE WINDOW & DOOR TYPES.
29. METAL CANOPY @ WINDOW, SEE WALL SECTION & STRUCTURAL.TIONS.

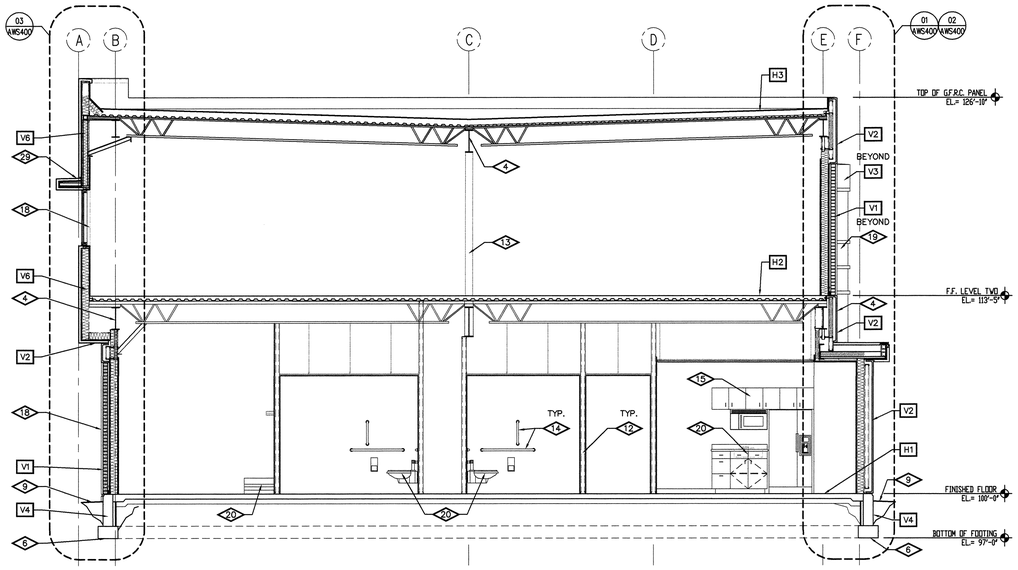

03 ABS301 BUILDING SECTION
SCALE 1/4" = 1'-0"

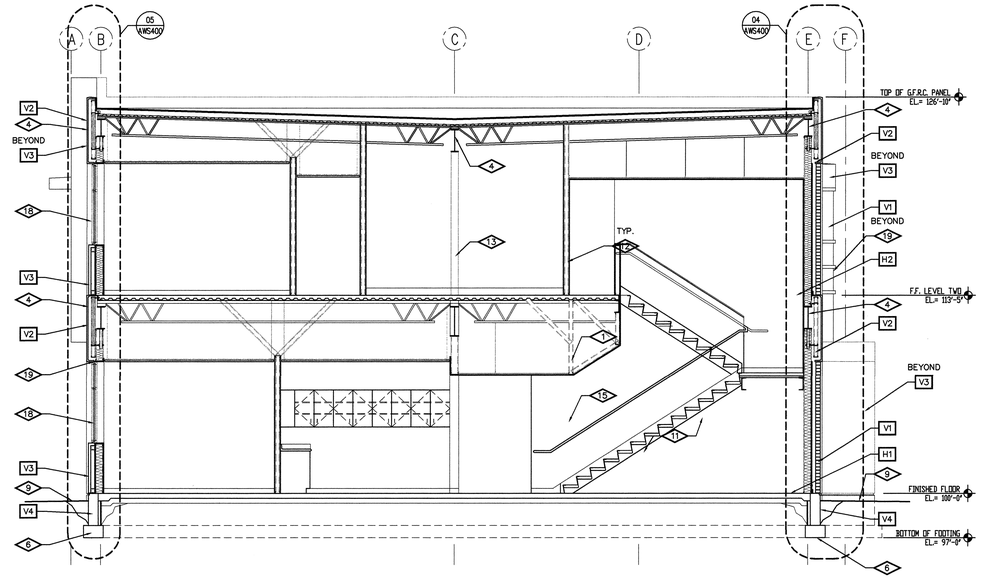

02 ABS301 BUILDING SECTION
SCALE 1/4" = 1'-0"

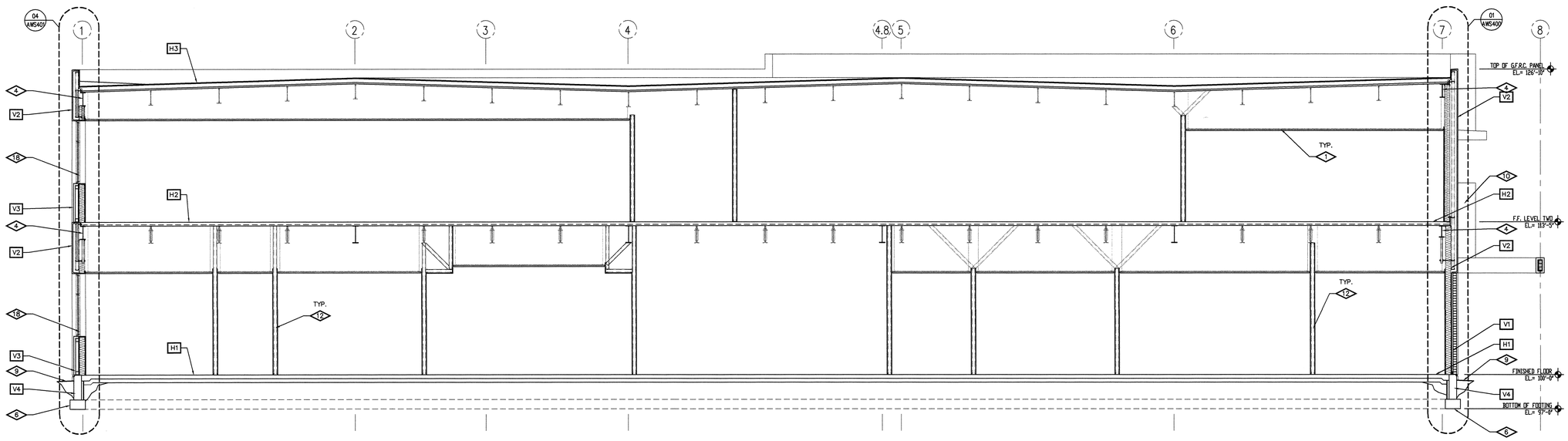

01 ABS301 BUILDING SECTION
SCALE 1/4" = 1'-0"

State of Utah
Department of Administrative Services
Division of Facilities Construction & Management
4110 State Office Building
Salt Lake City, Utah 84114
Phone: (801) 538 - 3018
Fax: (801) 538 - 3267
Internet: http://www.dfcm.state.ut.us

Utah Valley University
Orem, Utah

CREATED BY: P+A architects
P+A architects
821 East Kensington Ave.
Salt Lake City, Utah 84105
P: 801.484.1161
F: 801.485.4640
e-mail parchitects@comcast.net

STATE OF UTAH 281110 LICENSED ARCHITECT

architecture planning design

CONSULTANT:

PROJECT TITLE:
UTAH VALLEY UNIVERSITY
NEW PARKING AND
FACILITIES DEPARTMENT
BUILDING

UTAH VALLEY UNIVERSITY
936 SOUTH 400 WEST
OREM, UTAH

REVISIONS

MARK	DATE	DESCRIPTION

ISSUE TYPE: CONSTRUCTION DOCUMENTS

ISSUE DATE: August 2nd, 2010

CAD PROJECT NO: 09247790
CAD DWG FILE:
DRAWN BY: BRIAN AND SCOTT
CHK'D BY: SCOTT
COPYRIGHT: P&A architects

KEY PLAN

SHEET TITLE

BUILDING SECTIONS

SHEET NUMBER

A-BS301

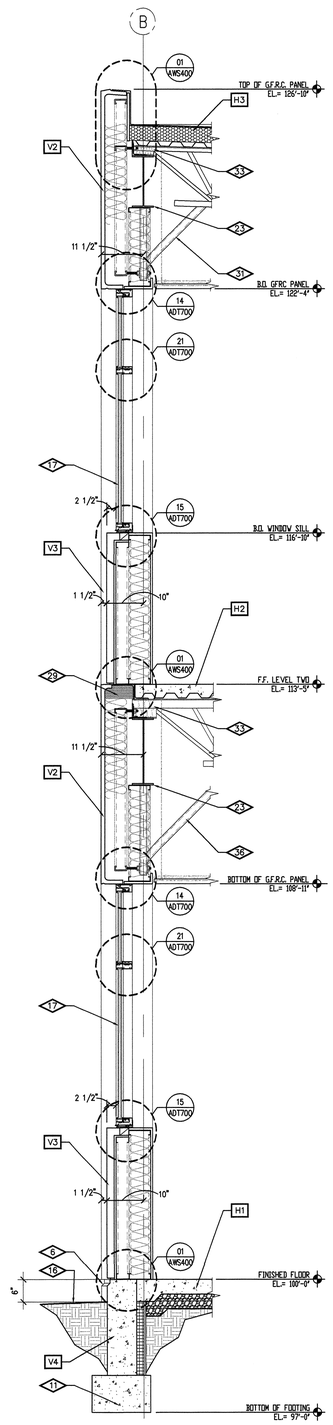

05 WALL SECTION
WALL01 A-WS400 SCALE 3/4" = 1'-0"

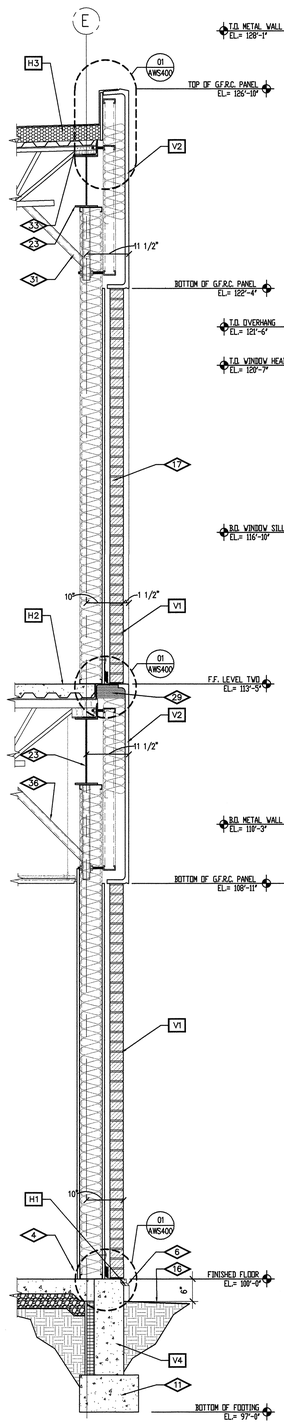

04 WALL SECTION
WALL01 A-WS400 SCALE 3/4" = 1'-0"

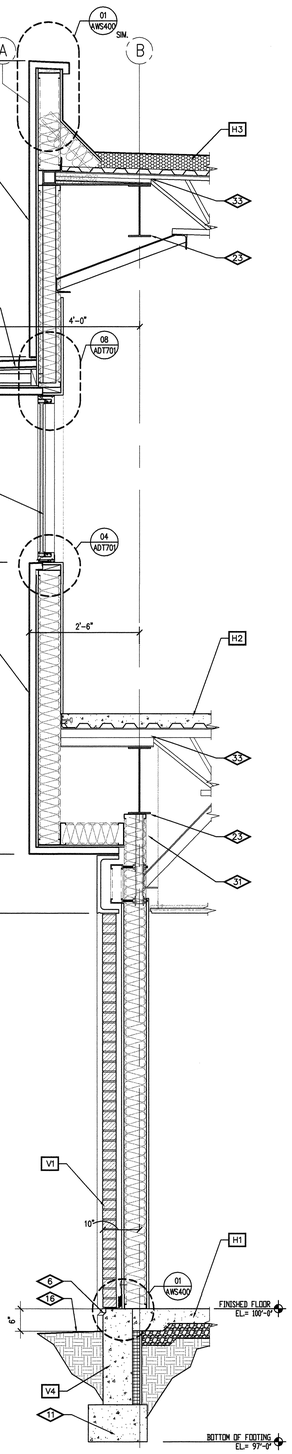

03 WALL SECTION
WALL01 A-WS400 SCALE 3/4" = 1'-0"

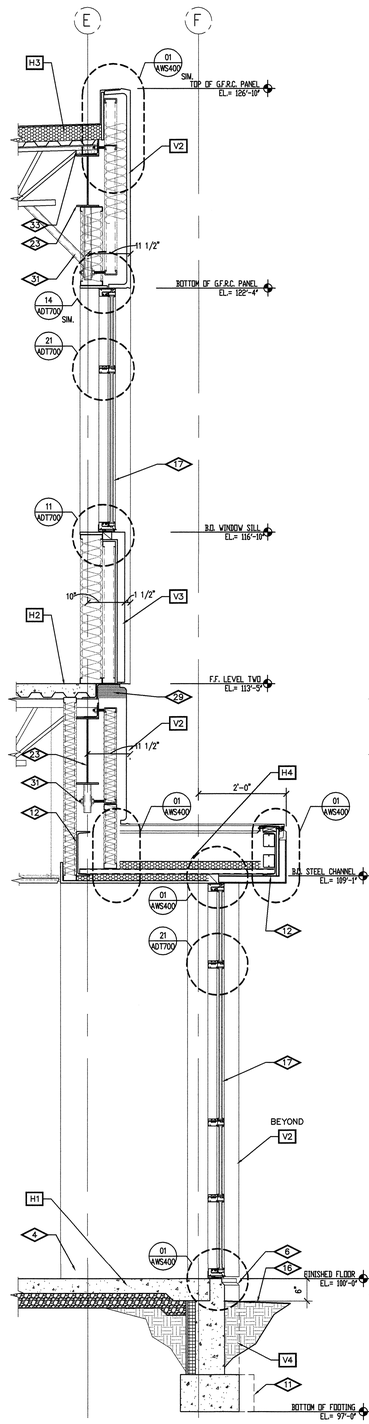

02 WALL SECTION
WALL01 A-WS400 SCALE 3/4" = 1'-0"

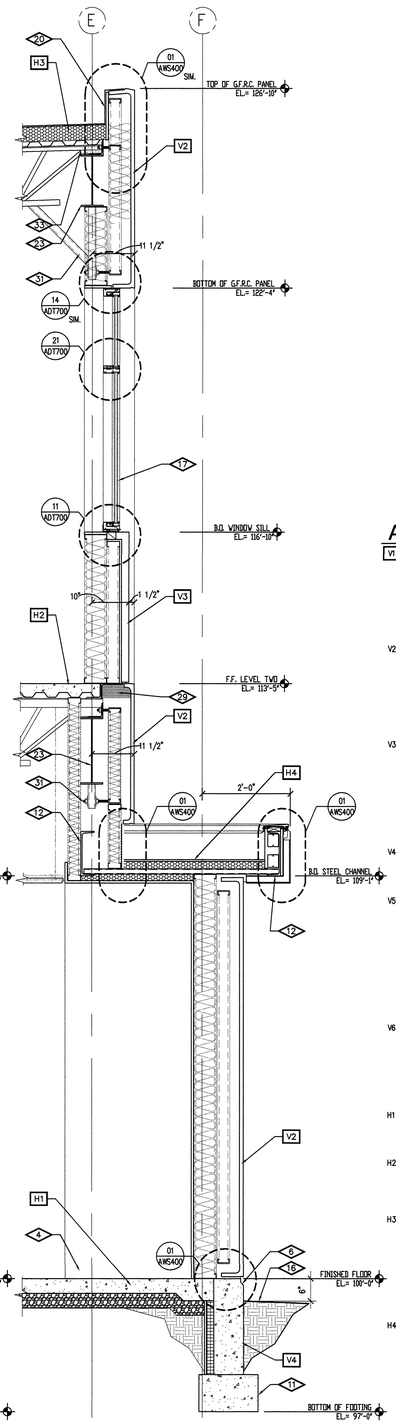

01 WALL SECTION
WALL01 A-WS400 SCALE 3/4" = 1'-0"

REFERENCE NOTES

1. G.F.R.C. EXTERIOR WALL PANEL SYSTEM, SEE SPECIFICATION
2. 20 GA. METAL STUDS @ 16" O.C., SEE SPECIFICATIONS
3. PAINTED 5/8" TYPE 'X' GYPSUM BOARD, SEE FINISH SCHEDULE
4. BASE AS SCHEDULED
5. ½" PROTECTION BOARD ON 2" PERIMETER INSULATION
6. REVEAL AT FOUNDATION WALL, SEE DETAIL
7. 4" CONCRETE SLAB ON 6 MIL VAPOR BARRIER ON 4" COMPACTED GRAVEL BASE, SEE STRUCTURAL
8. 2" METAL WALL PANEL SYSTEM, SEE SPECIFICATION
9. STEEL JOIST FRAMING SYSTEM, SEE STRUCTURAL DRAWINGS
10. METAL DECKING, SEE STRUCTURAL DRAWINGS
11. CONCRETE FOOTING & FOUNDATION SYSTEM, SEE STRUCTURAL DRAWINGS
12. STEEL CHANNEL, SEE STRUCTURAL
13. R-19 BATT INSULATION
14. STEEL ANGLE, SEE STRUCTURAL DRAWINGS
15. NOT USED
16. FINISH GRADE, SEE SITE PLAN DRAWINGS
17. ANODIZED ALUMINUM WINDOW FRAME AND GLAZING SYSTEM, SEE DETAILS AND SPECIFICATIONS
18. 6", 20 GA. METAL STUDS @ 16" O.C., SEE SPECIFICATIONS
19. CONT. 6 MIL. VAPOR BARRIER. " DENZ GOLD, SEE SPECIFICATION
20. ½" DENZ PRIME., SEE SPECIFICATIONS.
21. EPDM ROOFING MEMBRANE SYSTEM ON 4" POLYISOCYANURATE RIGID INSULATION SYSTEM. ROOF MEMBRANE TO BE FULLY ADHERED TO VERTICAL SURFACES AND MECHANICALLY FASTENED TO HORIZONTAL SURFACES, SEE ROOF PLAN.
22. TREATED WOOD BLOCKING.
23. STEEL BEAM, SEE STRUCTURAL DRAWINGS AND SPECIFICATIONS ,
24. 24 GA. METAL STUDS @ 16" O.C., SEE SPECIFICATIONS
25. CONCRETE SLAB ON METAL DECKING SYSTEM, SEE STRUCTURAL DRAWINGS
26. LAY-IN CEILING SYSTEM, SEE REFLECTED CEILING PLAN AND SPECIFICATIONS.
27. R-11 BATT INSULATION
28. SEALED BRICK VENEER, SEE SPECIFICATION
29. FIRE SAFING AT FLOOR LEVEL, SEE SPECIFICATION
30. AIRSPACE
31. SUPPORT FOR GFRC WALL PANEL SYSTEM
32. 6" 16 GA METAL STUD FRAMING AT 16" O.C. FOR CANOPY SUPPORT
33. PROVIDE BATT INSULATION @ LOCATIONS BETWEEN METAL DECKING & TOP OF STEEL BEAM
34. 6" 16 GA DIAGONAL BRACING AT 32" O.C. FOR CANOPY SUPPORT
35. EXTERIOR SHEATHING ATTACHED TO T.S. FRAMING @ CANOPY
36. DIAGONAL BRACING FOR GFRC WALL PANEL SYSTEM, SEE STRUCTURAL
37. ½" APA RATED EXTERIOR SHEATHING
38. 15 LB ASPHALT IMPREGNATED BUILDING PAPER
39. ¾" CHAMFER AT CONCRETE WALL
40. METAL PANEL WALL SYSTEM ATTACHED TO EXTERIOR SHEATHING ATTACHED TO 6"; 16 GA METAL STUD FRAMING @ 16" O.C.
41. CURTAIN WALL WINDOW FRAMING & GLAZING SYSTEM, SEE SPECIFICATION
42. ALUMINUM STOREFRONT ENTRANCE SYSTEM, SEE SPECIFICATIONS
43. TREATED 2X FRAMING @ 16" O.C.
44. RIGID POLYSTYRENE INSULATION
45. FULLY ADHERED EPDM
46. ROOF DRAIN, SEE DETAIL & PLUMBING DRAWINGS
47. ROOF SCUPPER WITH PRE-FINISHED ALUMINUM DOWN SPOUT RECESSED IN CONCRETE WALL. ALUMINUM FINISH TO MATCH METAL WALL PANELS.

ASSEMBLY TYPES

V1 VENEER WALL ASSEMBLY
- SEAL BRICK VENEER, SEE SPECIFICATION
- AIR SPACE
- 15LB ASPHALT IMPREGNATED BUILDING PAPER
- 1/2" EXTERIOR SHEATHING
- 6" 24 GA. METAL STUDS @ 16" O.C., SEE SPEC.
- R-19 BATT INSULATION
- CONT. 6 MIL. VAPOR BARRIER
- PAINTED ⅝" TYPE 'X' GYP. BD., SEE SPEC.

V2 GFRC WALL ASSEMBLY
- GFRC EXTERIOR PANEL SYSTEM , SEE SPECIFICATION
- AIR SPACE
- 15LB ASPHALT IMPREGNATED BUILDING PAPER
- 1/2" EXTERIOR SHEATHING
- 6" 24 GA. METAL STUDS @ 16" O.C., SEE SPEC.
- R-19 BATT INSULATION
- CONT. 6 MIL. VAPOR BARRIER
- PAINTED ⅝" TYPE 'X' GYP. BD. (WHERE SHOWN), SEE SPEC.

V3 METAL PANEL WALL ASSEMBLY
- 2" METAL WALL PANEL SYSTEM, SEE SPECIFICATION
- AIR SPACE
- 15LB ASPHALT IMPREGNATED BUILDING PAPER
- 1/2" EXTERIOR SHEATHING
- 3-¾"24 GA. METAL STUDS 2 16" O.C. SEE SPECIFICATION.
- 6" 24 GA. METAL STUDS @ 16" O.C., SEE SPEC.
- R-19 BATT INSULATION
- CONT. 6 MIL. VAPOR BARRIER
- PAINTED ⅝" TYPE 'X' GYP. BD. (WHERE SHOWN), SEE SPEC.

V4 FOUNDATION WALL ASSEMBLY
- CONCRETE FOUNDATION WALL, SEE STRUCTURAL DWGS.
- 2" PERIMETER INSULATION
- OVER ½" PROTECTION BOARD

V5 METAL PANEL WALL (DOUBLE) ASSEMBLY
- 2" METAL WALL PANEL SYSTEM, SEE SPECIFICATION
- AIR SPACE
- 15LB ASPHALT IMPREGNATED BUILDING PAPER
- 1/2" EXTERIOR SHEATHING
- 3-5/8" 24 GA. METAL STUDS @ 16" O.C., SEE SPEC.
- AIR SPACE
- 3-5/8" 24 GA. METAL STUDS @ 16" O.C., SEE SPEC.
- 1/2" EXTERIOR SHEATHING
- 15LB ASPHALT IMPREGNATED BUILDING PAPER
- AIR SPACE
- 2" METAL WALL PANEL SYSTEM, SEE SPECIFICATION

V6 METAL PANEL WALL ASSEMBLY
- 2" METAL WALL PANEL SYSTEM, SEE SPECIFICATION
- 15LB ASPHALT IMPREGNATED BUILDING PAPER
- 1/2" EXTERIOR SHEATHING
- 6" 18 GA. METAL STUDS @ 16" O.C., SEE SPEC.
- R-19 BATT INSULATION
- CONT. 6 MIL. VAPOR BARRIER
- PAINTED ⅝" TYPE 'X' GYP. BD. (WHERE SHOWN), SEE SPEC.

H1 FLOOR ASSEMBLY
- 4" CONCRETE SLAB
- OVER 6 MIL. VAPOR BARRIER
- OVER COMPACTED GRAVEL BASE, SEE SPECIFICATION

H2 FLOOR/CEILING ASSEMBLY
- CONCRETE SLAB
- OVER METAL DECK SYSTEM, SEE STRUCTURAL DWGS.
- STEEL JOIST FRAMING SYSTEM, SEE STRUCT. DWGS.
- CEILING SYSTEM, SEE REFLECTED CEILING PLAN & SPECIFICATION

H3 ROOF/CEILING ASSEMBLY
- EPDM ROOFING MEMBRANE SYSTEM; MEMBRANE TO BE FULLY ADHERED TO VERTICAL SURFACES AND MECHANICALLY FASTENED TO HORIZONTAL SURFACES, SEE ROOF PLAN
- VERTICAL SURFACES ½" DENZ DECK PRIME
- OVER 4" POLYISOCYANURATE RIGID INSULATION SYSTEM, ¼" TAPPERED WHERE SHOWN, SEE ROOF PLAN
- OVER METAL DECKING
- STEEL JOIST FRAMING SYSTEM, SEE STRUCT. DWGS.
- CEILING SYSTEM, SEE REFLECTED CEILING PLAN & SPECIFICATION

H4 CANOPY ROOF/CEILING ASSEMBLY
- EPDM ROOFING MEMBRANE SYSTEM; MEMBRANE TO BE FULLY ADHERED TO VERTICAL AND HORIZONTAL SURFACES, SEE ROOF PLAN
- OVER ½" DENZ DECK PRIME
- OVER MIN. 2" POLYISOCYANURATE RIGID INSULATION SYSTEM
- OVER ¼" TAPPERED POLYISOCYANURATE RIGID INSULATION.
- OVER METAL DECKING
- 2" METAL WALL PANEL SYSTEM (AT EXTERIOR), SEE SPECIFICATION
- OVER 2" POLYSTYRENE RIGID INSULATION SYSTEM, WITH 2X TREATED FRAMING 16" O.C. (AT INTERIOR)
- PAINTED ⅝" TYPE 'X' GYP. BD., SEE SPEC. (AT INTERIOR)

H5 CANOPY ROOF/CEILING ASSEMBLY
- EPDM ROOFING MEMBRANE SYSTEM; MEMBRANE TO BE FULLY ADHERED TO VERTICAL AND HORIZONTAL SURFACES, SEE ROOF PLAN
- OVER ½" DENZ DECK PRIME
- OVER ¼" TAPPERED POLYISOCYANURATE RIGID INSULATION.
- OVER METAL DECKING
- 2" METAL WALL PANEL SYSTEM (AT EXTERIOR), SEE SPECIFICATION
- OVER 2" POLYSTYRENE RIGID INSULATION SYSTEM, WITH 2X TREATED FRAMING 16" O.C. (AT INTERIOR)
- PAINTED ⅝" TYPE 'X' GYP. BD., SEE SPEC. (AT INTERIOR)

State of Utah
Department of Administrative Services
Division of Facilities Construction & Management
4110 State Office Building
Salt Lake City, Utah 84114
Phone: (801) 538 - 3018
Fax: (801) 538 - 3267
Internet: http://www.dfcm.state.ut.us

Utah Valley University
Orem, Utah

CREATED BY: P+A architects
P+A architects
821 East Kensington Ave.
Salt Lake City, Utah 84105
P: 801.484.1161
F: 801.485.4640
e-mail parchitects@comcast.net

STATE OF UTAH 161110 LICENSED ARCHITECT

architecture planning design

CONSULTANT:

PROJECT TITLE:
UTAH VALLEY UNIVERSITY
NEW PARKING AND
FACILITIES DEPARTMENT
BUILDING

UTAH VALLEY UNIVERSITY
936 SOUTH 400 WEST
OREM, UTAH

REVISIONS

MARK	DATE	DESCRIPTION

ISSUE TYPE: CONSTRUCTION DOCUMENTS

ISSUE DATE: August 2nd, 2010

CAD PROJECT NO: 09247790
CAD DWG FILE:
DRAWN BY: BRIAN AND SCOTT
CHK'D BY: SCOTT

COPYRIGHT: P&A architects

KEY PLAN

SHEET TITLE

WALL SECTIONS

SHEET NUMBER

A-WS400

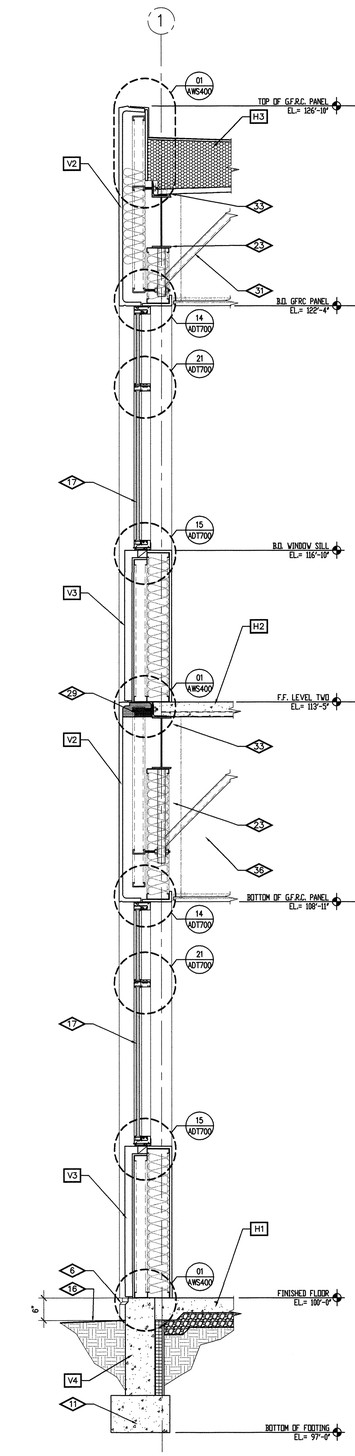

04 AWS401 WALL SECTION
SCALE 3/4" = 1'-0"

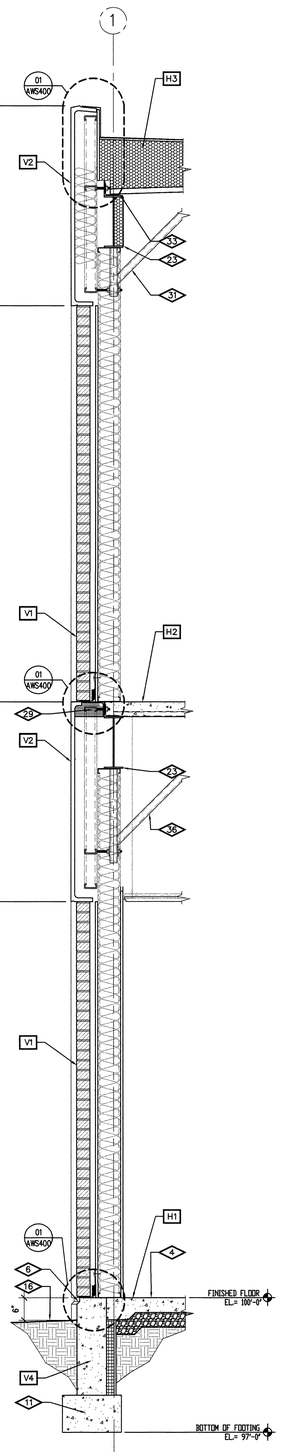

03 AWS401 WALL SECTION
SCALE 3/4" = 1'-0"

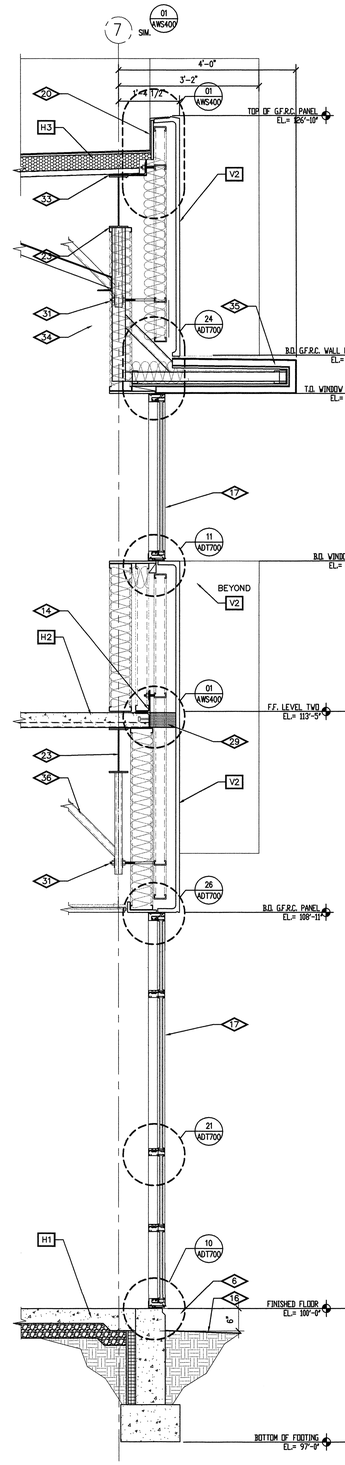

02 AWS401 WALL SECTION
SCALE 3/4" = 1'-0"

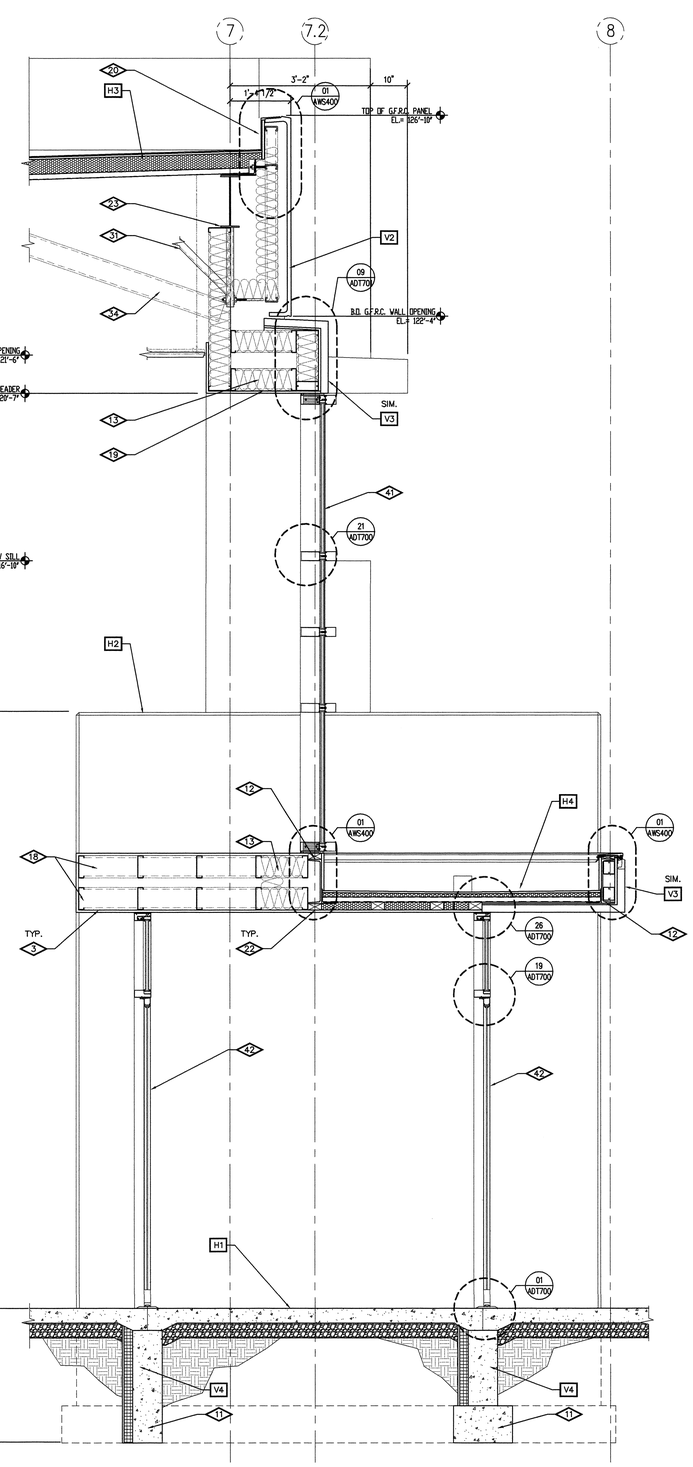

01 AWS401 WALL SECTION
SCALE 3/4" = 1'-0"

REFERENCE NOTES

1. G.F.R.C. EXTERIOR WALL PANEL SYSTEM, SEE SPECIFICATION
2. 20 GA. METAL STUDS @ 16" O.C., SEE SPECIFICATIONS
3. PAINTED 5/8" TYPE 'X' GYPSUM BOARD, SEE FINISH SCHEDULE
4. BASE AS SCHEDULED
5. ½" PROTECTION BOARD ON 2" PERIMETER INSULATION
6. REVEAL AT FOUNDATION WALL, SEE DETAIL
7. 4" CONCRETE SLAB ON 6 MIL VAPOR BARRIER ON 4" COMPACTED GRAVEL BASE, SEE STRUCTURAL
8. 2" METAL WALL PANEL SYSTEM, SEE SPECIFICATION
9. STEEL JOIST FRAMING SYSTEM, SEE STRUCTURAL DRAWINGS
10. METAL DECKING, SEE STRUCTURAL DRAWINGS
11. CONCRETE FOOTING & FOUNDATION SYSTEM, SEE STRUCTURAL DRAWINGS
12. STEEL CHANNEL, SEE STRUCTURAL
13. R-19 BATT INSULATION
14. STEEL ANGLE, SEE STRUCTURAL DRAWINGS
15. NOT USED
16. FINISH GRADE, SEE SITE PLAN DRAWINGS
17. ANODIZED ALUMINUM WINDOW FRAME AND GLAZING SYSTEM, SEE DETAILS AND SPECIFICATIONS
18. 6", 20 GA. METAL STUDS @ 16" O.C., SEE SPECIFICATIONS
19. CONT. 6 MIL. VAPOR BARRIER. " DENZ GOLD, SEE SPECIFICATION
20. ⅜" DENZ PRIME., SEE SPECIFICATIONS.
21. EPDM ROOFING MEMBRANE SYSTEM ON 4" POLYISOCYANURATE RIGID INSULATION SYSTEM. ROOF MEMBRANE TO BE FULLY ADHERED TO VERTICAL SURFACES AND MECHANICALLY FASTENED TO HORIZONTAL SURFACES, SEE ROOF PLAN.
22. TREATED WOOD BLOCKING.
23. STEEL BEAM, SEE STRUCTURAL DRAWINGS AND SPECIFICATIONS ,
24. 24 GA. METAL STUDS @ 16" O.C., SEE SPECIFICATIONS
25. CONCRETE SLAB ON METAL DECKING SYSTEM, SEE STRUCTURAL DRAWINGS
26. LAY-IN CEILING SYSTEM, SEE REFLECTED CEILING PLAN AND SPECIFICATIONS.
27. R-11 BATT INSULATION
28. SEALED BRICK VENEER, SEE SPECIFICATION
29. FIRE SAFING AT FLOOR LEVEL, SEE SPECIFICATION
30. AIRSPACE
31. SUPPORT FOR GFRC WALL PANEL SYSTEM
32. 6" 16 GA METAL STUD FRAMING AT 16" O.C. FOR CANOPY SUPPORT
33. PROVIDE BATT INSULATION @ LOCATIONS BETWEEN METAL DECKING & TOP OF STEEL BEAM
34. 6" 16 GA DIAGONAL BRACING AT 32" O.C. FOR CANOPY SUPPORT
35. EXTERIOR SHEATHING ATTACHED TO T.S. FRAMING @ CANOPY
36. DIAGONAL BRACING FOR GFRC WALL PANEL SYSTEM, SEE STRUCTURAL
37. ½" APA RATED EXTERIOR SHEATHING
38. 15 LB ASPHALT IMPREGNATED BUILDING PAPER
39. ¾" CHAMFER AT CONCRETE WALL
40. METAL PANEL WALL SYSTEM ATTACHED TO EXTERIOR SHEATHING ATTACHED TO 6"; 16 GA METAL STUD FRAMING @ 16" O.C.
41. CURTAIN WALL WINDOW FRAMING & GLAZING SYSTEM, SEE SPECIFICATION
42. ALUMINUM STOREFRONT ENTRANCE SYSTEM, SEE SPECIFICATIONS
43. TREATED 2X FRAMING @ 16" O.C.
44. RIGID POLYSTYRENE INSULATION
45. FULLY ADHERED EPDM
46. ROOF DRAIN, SEE DETAIL & PLUMBING DRAWINGS
47. ROOF SCUPPER WITH PRE-FINISHED ALUMINUM DOWN SPOUT RECESSED IN CONCRETE WALL. ALUMINUM FINISH TO MATCH METAL WALL PANELS.

ASSEMBLY TYPES

V1 VENEER WALL ASSEMBLY
- SEAL BRICK VENEER, SEE SPECIFICATION
- AIR SPACE
- 15LB ASPHALT IMPREGNATED BUILDING PAPER
- 1/2" EXTERIOR SHEATHING
- 6" 24 GA. METAL STUDS @ 16" O.C., SEE SPEC.
- R-19 BATT INSULATION
- CONT. 6 MIL. VAPOR BARRIER
- PAINTED ⅝" TYPE 'X' GYP. BD., SEE SPEC.

V2 GFRC WALL ASSEMBLY
- GFRC EXTERIOR PANEL SYSTEM , SEE SPECIFICATION
- AIR SPACE
- 15LB ASPHALT IMPREGNATED BUILDING PAPER
- 1/2" EXTERIOR SHEATHING
- 6" 24 GA. METAL STUDS @ 16" O.C., SEE SPEC.
- R-19 BATT INSULATION
- CONT. 6 MIL. VAPOR BARRIER
- PAINTED ⅝" TYPE 'X' GYP. BD. (WHERE SHOWN), SEE SPEC.

V3 METAL PANEL WALL ASSEMBLY
- 2" METAL WALL PANEL SYSTEM, SEE SPECIFICATION
- AIR SPACE
- 15LB ASPHALT IMPREGNATED BUILDING PAPER
- 1/2" EXTERIOR SHEATHING
- 3-⅝"24 GA. METAL STUDS 2 16" O.C. SEE SPECIFICATION.
- 6" 24 GA. METAL STUDS @ 16" O.C., SEE SPEC.
- R-19 BATT INSULATION
- CONT. 6 MIL. VAPOR BARRIER
- PAINTED ⅝" TYPE 'X' GYP. BD. (WHERE SHOWN), SEE SPEC.

V4 FOUNDATION WALL ASSEMBLY
- CONCRETE FOUNDATION WALL, SEE STRUCTURAL DWGS.
- 2" PERIMETER INSULATION
- OVER ½" PROTECTION BOARD

V5 METAL PANEL WALL (DOUBLE) ASSEMBLY
- 2" METAL WALL PANEL SYSTEM, SEE SPECIFICATION
- AIR SPACE
- 15LB ASPHALT IMPREGNATED BUILDING PAPER
- 1/2" EXTERIOR SHEATHING
- 3-5/8" 24 GA. METAL STUDS @ 16" O.C., SEE SPEC.
- AIR SPACE
- 3-5/8" 24 GA. METAL STUDS @ 16" O.C., SEE SPEC.
- 1/2" EXTERIOR SHEATHING
- 15LB ASPHALT IMPREGNATED BUILDING PAPER
- AIR SPACE
- 2" METAL WALL PANEL SYSTEM, SEE SPECIFICATION

V6 METAL PANEL WALL ASSEMBLY
- 2" METAL WALL PANEL SYSTEM, SEE SPECIFICATION
- 15LB ASPHALT IMPREGNATED BUILDING PAPER
- 1/2" EXTERIOR SHEATHING
- 6" 18 GA. METAL STUDS @ 16" O.C., SEE SPEC.
- R-19 BATT INSULATION
- CONT. 6 MIL. VAPOR BARRIER
- PAINTED ⅝" TYPE 'X' GYP. BD. (WHERE SHOWN), SEE SPEC.

H1 FLOOR ASSEMBLY
- 4" CONCRETE SLAB
- OVER 6 MIL. VAPOR BARRIER
- OVER COMPACTED GRAVEL BASE, SEE SPECIFICATION

H2 FLOOR/CEILING ASSEMBLY
- CONCRETE SLAB
- OVER METAL DECK SYSTEM, SEE STRUCTURAL DWGS.
- STEEL JOIST FRAMING SYSTEM, SEE STRUCT. DWGS.
- CEILING SYSTEM, SEE REFLECTED CEILING PLAN & SPECIFICATION

H3 ROOF/CEILING ASSEMBLY
- EPDM ROOFING MEMBRANE SYSTEM; MEMBRANE TO BE FULLY ADHERED TO VERTICAL SURFACES AND MECHANICALLY FASTENED TO HORIZONTAL SURFACES, SEE ROOF PLAN
- VERTICAL SURFACES ⅜" DENZ DECK PRIME
- OVER 4" POLYISOCYANURATE RIGID INSULATION SYSTEM, ¼" TAPPERED WHERE SHOWN, SEE ROOF PLAN
- OVER METAL DECKING
- STEEL JOIST FRAMING SYSTEM, SEE STRUCT. DWGS.
- CEILING SYSTEM, SEE REFLECTED CEILING PLAN & SPECIFICATION

H4 CANOPY ROOF/CEILING ASSEMBLY
- EPDM ROOFING MEMBRANE SYSTEM; MEMBRANE TO BE FULLY ADHERED TO VERTICAL AND HORIZONTAL SURFACES, SEE ROOF PLAN
- OVER ⅜" DENZ DECK PRIME
- OVER MIN. 2" POLYISOCYANURATE RIGID INSULATION SYSTEM
- OVER ¼" TAPPERED POLYISOCYANURATE RIGID INSULATION.
- OVER METAL DECKING
- 2" METAL WALL PANEL SYSTEM (AT EXTERIOR), SEE SPECIFICATION
- OVER 2" POLYSTYRENE RIGID INSULATION SYSTEM, WITH 2X TREATED FRAMING 16" O.C. (AT INTERIOR)
- PAINTED ⅝" TYPE 'X' GYP. BD., SEE SPEC. (AT INTERIOR)

H5 CANOPY ROOF/CEILING ASSEMBLY
- EPDM ROOFING MEMBRANE SYSTEM; MEMBRANE TO BE FULLY ADHERED TO VERTICAL AND HORIZONTAL SURFACES, SEE ROOF PLAN
- OVER ⅜" DENZ DECK PRIME
- OVER ¼" TAPPERED POLYISOCYANURATE RIGID INSULATION.
- OVER METAL DECKING
- 2" METAL WALL PANEL SYSTEM (AT EXTERIOR), SEE SPECIFICATION
- OVER 2" POLYSTYRENE RIGID INSULATION SYSTEM, WITH 2X TREATED FRAMING 16" O.C. (AT INTERIOR)
- PAINTED ⅝" TYPE 'X' GYP. BD., SEE SPEC. (AT INTERIOR)

State of Utah
Department of Administrative Services
Division of Facilities Construction & Management
4110 State Office Building
Salt Lake City, Utah 84114
Phone: (801) 538 - 3018
Fax: (801) 538 - 3267
Internet: http://www.dfcm.state.ut.us

Utah Valley University
Orem, Utah

CREATED BY: P+A architects
P+A architects
821 East Kensington Ave.
Salt Lake City, Utah 84105
P: 801.484.1161
F: 801.485.4640
e-mail parchitects@comcast.net

STATE OF UTAH
JOHN P. ALLEN
5510
LICENSED ARCHITECT

architecture planning design

CONSULTANT:

PROJECT TITLE:
UTAH VALLEY UNIVERSITY
NEW PARKING AND
FACILITIES DEPARTMENT
BUILDING

UTAH VALLEY UNIVERSITY
936 SOUTH 400 WEST
OREM, UTAH

REVISIONS

MARK	DATE	DESCRIPTION

ISSUE TYPE: CONSTRUCTION DOCUMENTS

ISSUE DATE: August 2nd, 2010

CAD PROJECT NO: 09247790
CAD DWG FILE:
DRAWN BY: BRIAN AND SCOTT
CHK'D BY: SCOTT

COPYRIGHT: P&A architects

KEY PLAN

SHEET TITLE
WALL SECTIONS

SHEET NUMBER
A-WS401

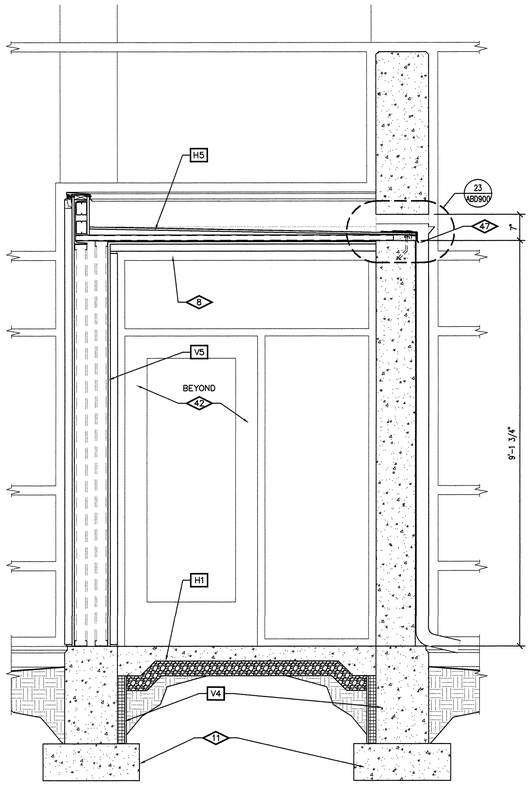

04 / A-WS402 WALL SECTION
SCALE 3/4" = 1'-0"

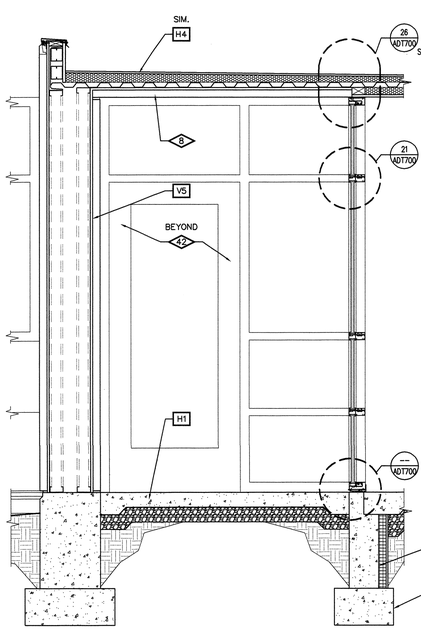

03 / A-WS402 WALL SECTION
SCALE 3/4" = 1'-0"

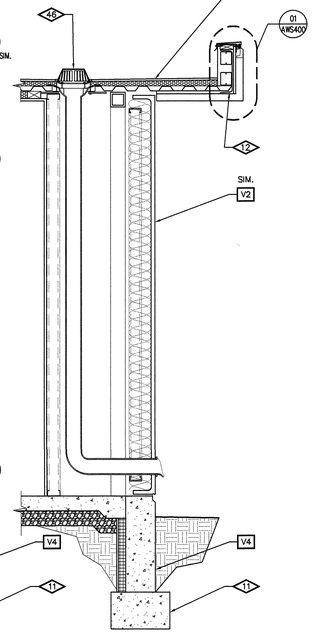

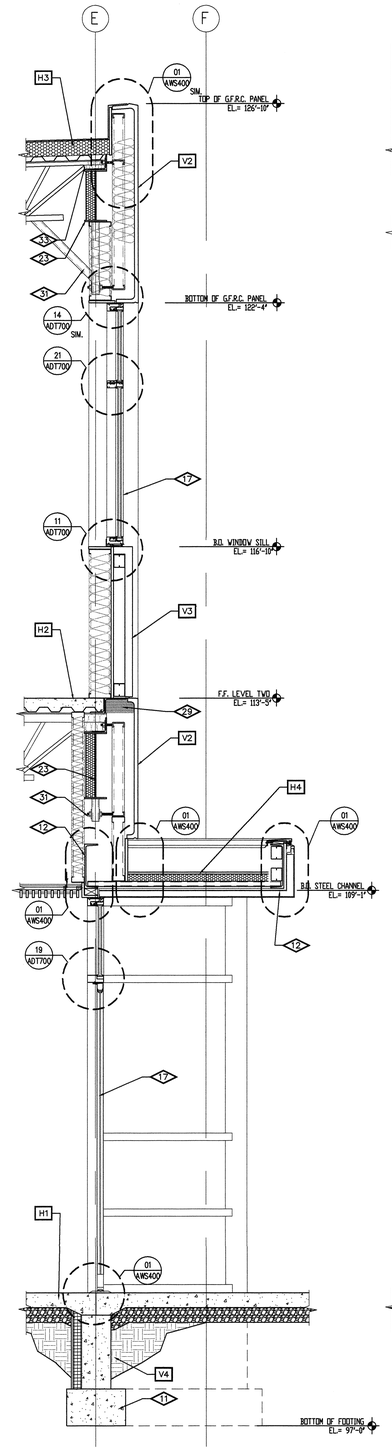

02 / A-WS402 WALL SECTION
SCALE 3/4" = 1'-0"

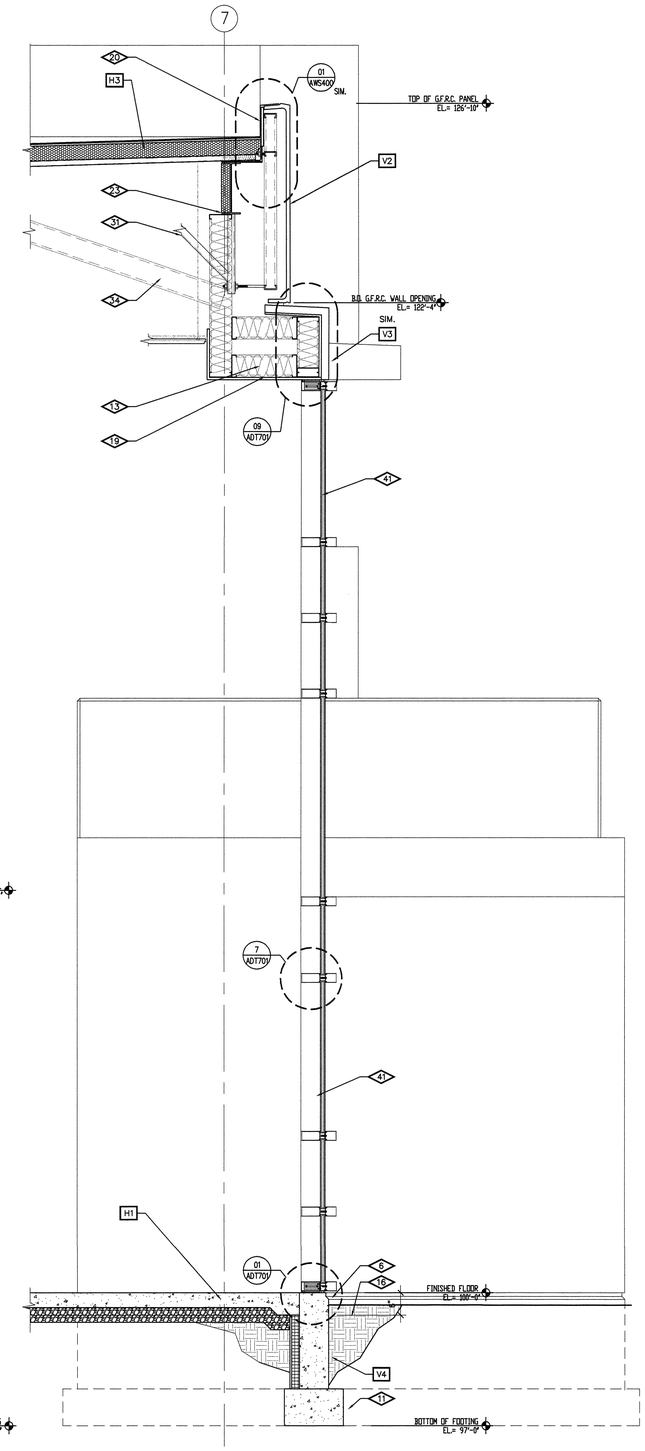

01 / A-WS402 WALL SECTION
SCALE 3/4" = 1'-0"

REFERENCE NOTES

1. G.F.R.C. EXTERIOR WALL PANEL SYSTEM, SEE SPECIFICATION
2. 20 GA. METAL STUDS @ 16" O.C., SEE SPECIFICATIONS
3. PAINTED 5/8" TYPE 'X' GYPSUM BOARD, SEE FINISH SCHEDULE
4. BASE AS SCHEDULED
5. ½" PROTECTION BOARD ON 2" PERIMETER INSULATION
6. REVEAL AT FOUNDATION WALL, SEE DETAIL
7. 4" CONCRETE SLAB ON 6 MIL VAPOR BARRIER ON 4" COMPACTED GRAVEL BASE, SEE STRUCTURAL
8. 2" METAL WALL PANEL SYSTEM, SEE SPECIFICATION
9. STEEL JOIST FRAMING SYSTEM, SEE STRUCTURAL DRAWINGS
10. METAL DECKING, SEE STRUCTURAL DRAWINGS
11. CONCRETE FOOTING & FOUNDATION SYSTEM, SEE STRUCTURAL DRAWINGS
12. STEEL CHANNEL, SEE STRUCTURAL
13. R-19 BATT INSULATION
14. STEEL ANGLE, SEE STRUCTURAL DRAWINGS
15. NOT USED
16. FINISH GRADE, SEE SITE PLAN DRAWINGS
17. ANODIZED ALUMINUM WINDOW FRAME AND GLAZING SYSTEM, SEE DETAILS AND SPECIFICATIONS
18. 6", 20 GA. METAL STUDS @ 16" O.C., SEE SPECIFICATIONS
19. CONT. 6 MIL. VAPOR BARRIER. " DENZ GOLD, SEE SPECIFICATION
20. ½" DENZ PRIME., SEE SPECIFICATIONS.
21. EPDM ROOFING MEMBRANE SYSTEM ON 4" POLYISOCYANURATE RIGID INSULATION SYSTEM. ROOF MEMBRANE TO BE FULLY ADHERED TO VERTICAL SURFACES AND MECHANICALLY FASTENED TO HORIZONTAL SURFACES, SEE ROOF PLAN.
22. TREATED WOOD BLOCKING.
23. STEEL BEAM, SEE STRUCTURAL DRAWINGS AND SPECIFICATIONS ,
24. 24 GA. METAL STUDS @ 16" O.C., SEE SPECIFICATIONS
25. CONCRETE SLAB ON METAL DECKING SYSTEM, SEE STRUCTURAL DRAWINGS
26. LAY-IN CEILING SYSTEM, SEE REFLECTED CEILING PLAN AND SPECIFICATIONS.
27. R-11 BATT INSULATION
28. SEALED BRICK VENEER, SEE SPECIFICATION
29. FIRE SAFING AT FLOOR LEVEL, SEE SPECIFICATION
30. AIRSPACE
31. SUPPORT FOR GFRC WALL PANEL SYSTEM
32. 6" 16 GA METAL STUD FRAMING AT 16" O.C. FOR CANOPY SUPPORT
33. PROVIDE BATT INSULATION @ LOCATIONS BETWEEN METAL DECKING & TOP OF STEEL BEAM
34. 6" 16 GA DIAGONAL BRACING AT 32" O.C. FOR CANOPY SUPPORT
35. EXTERIOR SHEATHING ATTACHED TO T.S. FRAMING @ CANOPY
36. DIAGONAL BRACING FOR GFRC WALL PANEL SYSTEM, SEE STRUCTURAL
37. ½" APA RATED EXTERIOR SHEATHING
38. 15 LB ASPHALT IMPREGNATED BUILDING PAPER
39. ¾" CHAMFER AT CONCRETE WALL
40. METAL PANEL WALL SYSTEM ATTACHED TO EXTERIOR SHEATHING ATTACHED TO 6"; 16 GA METAL STUD FRAMING @ 16" O.C.
41. CURTAIN WALL WINDOW FRAMING & GLAZING SYSTEM, SEE SPECIFICATION
42. ALUMINUM STOREFRONT ENTRANCE SYSTEM, SEE SPECIFICATIONS
43. TREATED 2X FRAMING @ 16" O.C.
44. RIGID POLYSTYRENE INSULATION
45. FULLY ADHERED EPDM
46. ROOF DRAIN, SEE DETAIL & PLUMBING DRAWINGS
47. ROOF SCUPPER WITH PRE-FINISHED ALUMINUM DOWN SPOUT RECESSED IN CONCRETE WALL. ALUMINUM FINISH TO MATCH METAL WALL PANELS.

ASSEMBLY TYPES

V1 VENEER WALL ASSEMBLY
- SEAL BRICK VENEER, SEE SPECIFICATION
- AIR SPACE
- 15LB ASPHALT IMPREGNATED BUILDING PAPER
- 1/2" EXTERIOR SHEATHING
- 6" 24 GA. METAL STUDS @ 16" O.C., SEE SPEC.
- R-19 BATT INSULATION
- CONT. 6 MIL. VAPOR BARRIER
- PAINTED ⅝" TYPE 'X' GYP. BD., SEE SPEC.

V2 GFRC WALL ASSEMBLY
- GFRC EXTERIOR PANEL SYSTEM , SEE SPECIFICATION
- AIR SPACE
- 15LB ASPHALT IMPREGNATED BUILDING PAPER
- 1/2" EXTERIOR SHEATHING
- 6" 24 GA. METAL STUDS @ 16" O.C., SEE SPEC.
- R-19 BATT INSULATION
- CONT. 6 MIL. VAPOR BARRIER
- PAINTED ⅝" TYPE 'X' GYP. BD. (WHERE SHOWN), SEE SPEC.

V3 METAL PANEL WALL ASSEMBLY
- 2" METAL WALL PANEL SYSTEM, SEE SPECIFICATION
- AIR SPACE
- 15LB ASPHALT IMPREGNATED BUILDING PAPER
- 1/2" EXTERIOR SHEATHING
- 3-⅝"24 GA. METAL STUDS 2 16" O.C. SEE SPECIFICATION.
- 6" 24 GA. METAL STUDS @ 16" O.C., SEE SPEC.
- R-19 BATT INSULATION
- CONT. 6 MIL. VAPOR BARRIER
- PAINTED ⅝" TYPE 'X' GYP. BD. (WHERE SHOWN), SEE SPEC.

V4 FOUNDATION WALL ASSEMBLY
- CONCRETE FOUNDATION WALL, SEE STRUCTURAL DWGS.
- 2" PERIMETER INSULATION
- OVER ½" PROTECTION BOARD

V5 METAL PANEL WALL (DOUBLE) ASSEMBLY
- 2" METAL WALL PANEL SYSTEM, SEE SPECIFICATION
- AIR SPACE
- 15LB ASPHALT IMPREGNATED BUILDING PAPER
- 1/2" EXTERIOR SHEATHING
- 3-5/8" 24 GA. METAL STUDS @ 16" O.C., SEE SPEC.
- AIR SPACE
- 3-5/8" 24 GA. METAL STUDS @ 16" O.C., SEE SPEC.
- 1/2" EXTERIOR SHEATHING
- 15LB ASPHALT IMPREGNATED BUILDING PAPER
- AIR SPACE
- 2" METAL WALL PANEL SYSTEM, SEE SPECIFICATION

V6 METAL PANEL WALL ASSEMBLY
- 2" METAL WALL PANEL SYSTEM, SEE SPECIFICATION
- 15LB ASPHALT IMPREGNATED BUILDING PAPER
- 1/2" EXTERIOR SHEATHING
- 6" 18 GA. METAL STUDS @ 16" O.C., SEE SPEC.
- R-19 BATT INSULATION
- CONT. 6 MIL. VAPOR BARRIER
- PAINTED ⅝" TYPE 'X' GYP. BD. (WHERE SHOWN), SEE SPEC.

H1 FLOOR ASSEMBLY
- 4" CONCRETE SLAB
- OVER 6 MIL. VAPOR BARRIER
- OVER COMPACTED GRAVEL BASE, SEE SPECIFICATION

H2 FLOOR/CEILING ASSEMBLY
- CONCRETE SLAB
- OVER METAL DECK SYSTEM, SEE STRUCTURAL DWGS.
- STEEL JOIST FRAMING SYSTEM, SEE STRUCT. DWGS.
- CEILING SYSTEM, SEE REFLECTED CEILING PLAN & SPECIFICATION

H3 ROOF/CEILING ASSEMBLY
- EPDM ROOFING MEMBRANE SYSTEM; MEMBRANE TO BE FULLY ADHERED TO VERTICAL SURFACES AND MECHANICALLY FASTENED TO HORIZONTAL SURFACES, SEE ROOF PLAN
- VERTICAL SURFACES ½" DENZ DECK PRIME
- OVER 4" POLYISOCYANURATE RIGID INSULATION SYSTEM, ¼" TAPPERED WHERE SHOWN, SEE ROOF PLAN
- OVER METAL DECKING
- STEEL JOIST FRAMING SYSTEM, SEE STRUCT. DWGS.
- CEILING SYSTEM, SEE REFLECTED CEILING PLAN & SPECIFICATION

H4 CANOPY ROOF/CEILING ASSEMBLY
- EPDM ROOFING MEMBRANE SYSTEM; MEMBRANE TO BE FULLY ADHERED TO VERTICAL AND HORIZONTAL SURFACES, SEE ROOF PLAN
- OVER ½" DENZ DECK PRIME
- OVER MIN. 2" POLYISOCYANURATE RIGID INSULATION SYSTEM
- OVER ¼" TAPPERED POLYISOCYANURATE RIGID INSULATION.
- OVER METAL DECKING
- 2" METAL WALL PANEL SYSTEM (AT EXTERIOR), SEE SPECIFICATION
- OVER 2" POLYSTYRENE RIGID INSULATION SYSTEM, WITH 2X TREATED FRAMING 16" O.C. (AT INTERIOR)
- PAINTED ⅝" TYPE 'X' GYP. BD., SEE SPEC. (AT INTERIOR)

H5 CANOPY ROOF/CEILING ASSEMBLY
- EPDM ROOFING MEMBRANE SYSTEM; MEMBRANE TO BE FULLY ADHERED TO VERTICAL AND HORIZONTAL SURFACES, SEE ROOF PLAN
- OVER ½" DENZ DECK PRIME
- OVER ¼" TAPPERED POLYISOCYANURATE RIGID INSULATION.
- OVER METAL DECKING
- 2" METAL WALL PANEL SYSTEM (AT EXTERIOR), SEE SPECIFICATION
- OVER 2" POLYSTYRENE RIGID INSULATION SYSTEM, WITH 2X TREATED FRAMING 16" O.C. (AT INTERIOR)
- PAINTED ⅝" TYPE 'X' GYP. BD., SEE SPEC. (AT INTERIOR)

State of Utah
Department of Administrative Services
Division of Facilities Construction & Management
4110 State Office Building
Salt Lake City, Utah 84114
Phone: (801) 538 - 3018
Fax: (801) 538 - 3267
Internet: http://www.dfcm.state.ut.us

Utah Valley University
Orem, Utah

CREATED BY: P+A architects
P+A architects
821 East Kensington Ave.
Salt Lake City, Utah 84105
P: 801.484.1161
F: 801.485.4640
e-mail parchitects@comcast.net

STATE OF UTAH CERTIFICATE 261110 LICENSED ARCHITECT

architecture planning design

CONSULTANT:

PROJECT TITLE:
UTAH VALLEY UNIVERSITY
NEW PARKING AND
FACILITIES DEPARTMENT
BUILDING

UTAH VALLEY UNIVERSITY
936 SOUTH 400 WEST
OREM, UTAH

REVISIONS

MARK	DATE	DESCRIPTION

ISSUE TYPE: CONSTRUCTION DOCUMENTS

ISSUE DATE: August 2nd, 2010

CAD PROJECT NO: 09247790
CAD DWG FILE:
DRAWN BY: BRIAN AND SCOTT
CHK'D BY: SCOTT
COPYRIGHT: P&A architects

KEY PLAN

SHEET TITLE

WALL SECTIONS

SHEET NUMBER

A-WS402

STAIR FINISH NOTES

1. GENERAL CONTRACTOR TO PROVIDE "ARMSTRONG" OR "JOHNSONITE" OR EQUAL RUBBER STAIR BASE FOR BOTH STAIR 108 AND 129. GENERAL CONTRACTOR TO PROVIDE ALL REQUIRED ADHESIVES ETC.. FOR INSTALLATION

2. ALL EXPOSED STEEL STAIR AND HAND RAILING SURFACES SHALL BE PRIMED AND PAINTED, COLOR BY ARCHITECT

DFCM APPROVED STEEL FABRICATORS

COMPANY NAME

1. AMERICAN BUILDING COMPANY
2. AMFAB STEEL
3. BEHLEN MFG. CO.
4. BRAHMA STEEL
5. CBC STEEL BUILDING
6. CECO BUILDING SYSTEMS
7. CO BUILDING SYSTEMS INC.
8. F&J STEEL FABRICATIONS, INC
9. GARCO BUILDING SYSTEMS
10. GEM (GOLDEN EMPIRE MFG.)
11. HC2 STEEL BUILDING SYSTEMS
12. J7 STEEL
13. LEGACY STEEL FABRICATORS
14. LUNDAHL IRONWORKS COMPANY
15. MARK STEEL CORP.
16. MASCO, INC.
17. NCI BUILDING SYSTEMS LP
18. NUCOR BUILDING SYSTEMS
19. PORTER CORP.
20. EAGLE SPAN
21. S&S STEEL
22. TECH STEEL, INC.
23. UTAH ORNAMENTAL & IRON WORKS
24. VERCO DECKING INC.
25. VP BUILDINGS
26. VULCRAFT GROUP

COMPANY CONTACT INFORMATION CAN BE FOUND ON THE DFCM WEB SITE.

REFERENCE NOTES

1. 1.315" DIA PAINTED PIPE HANDRAIL WELDED TO BRACKETS.
2. STEEL ANGLE, SEE STRUCTURAL
3. PAINTED GYPSUM BOARD WALLS, SEE WALL TYPES
4. STEEL STAIR FRAMING, SEE STRUCTURAL
5. 3⅝" METAL STUD FRAMING @ 16" O.C.
6. STEEL COLUMN, SEE STRUCTURAL
7. CONCRETE FILLED STAIR PAN WELDED TO STRINGER
8. 2X12 STEEL STAIR STRINGER, SEE STRUCTURAL
9. PAINTED 1½" METAL DECKING, SEE STRUCTURAL
10. ¾" DIA. PAINTED STEEL HANDRAILING BRACKET, SEE DETAIL.
11. CONCRETE OVER METAL DECKING AT @ LANDING, SEE STRUCTURAL
12. DOOR BEYOND
13. CONCRETE FLOOR SLAB OVER 6MIL VAPOR BARIOR OVER GRAVEL BASE, SEE STRUCTURAL
14. RETURN HANDRAILING BACK TO WALL
15. STEEL CHANNEL, SEE STRUCTURAL.
16. 3-⅝" METAL STUD DIAG. BRACING AT 16" O.C.
17. ⅝" TYPE "X" GYPSUM BOARD PRIMED AND PAINTED
18. EXTERIOR WALL SEE WALL SECTIONS
19. STEEL BEAM, SEE STRUCTURAL
20. FOOTING AND FOUNDATION, SEE STRUCTURAL
21. FINISH GRADE
22. DASHED LINE INDICATES STEEL STAIR STRINGER LOCATED INSIDE OF METAL STUD FRAMED WALL SYSTEM
23. DASHED LINE INDICATES PAINED PIPE HAND RAILING ON OPPOSITE SIDE OF WALL
24. DASHED LINE INDICATES CONCRETE FILLED STEEL STAIR PAN ON OPPOSITE SIDE OF WALL
25. WOOD WALL CAP WITH REVEAL, SEE DETAIL
26. CONCRETE SLAB OVER METAL DECKING
27. CLOSURE ANGLE, SEE STRUCTURAL
28. 2"x6" WOOD STUD WALL @ 16" O.C. WITH ½" PLYWOD SHEATHING ON EASCH SIDE.
29. VERTICAL ELEVATOR SHAFT SUPPORT, SEE DETAIL.
30. 4"x4"x⅜" T.S. GUARD RAILING SUPPORT CONT. WELDED TO THE TOP OF STEEL STRINGER. CUT AND SHAPE T.S. SO THAT SIDES OF T.S. EXTEND OVER FACE OF STEEL STAIR STRINGER AND CONT. WELD TO FACE OF STRINGER
31. ROOF MEMBRANE ON MIN. 4" POLYISOCYANURATE RIGID INSULATION, SEE ROOF PLAN.
32. STEEL ROOF DECK, SEE STRUCTURAL

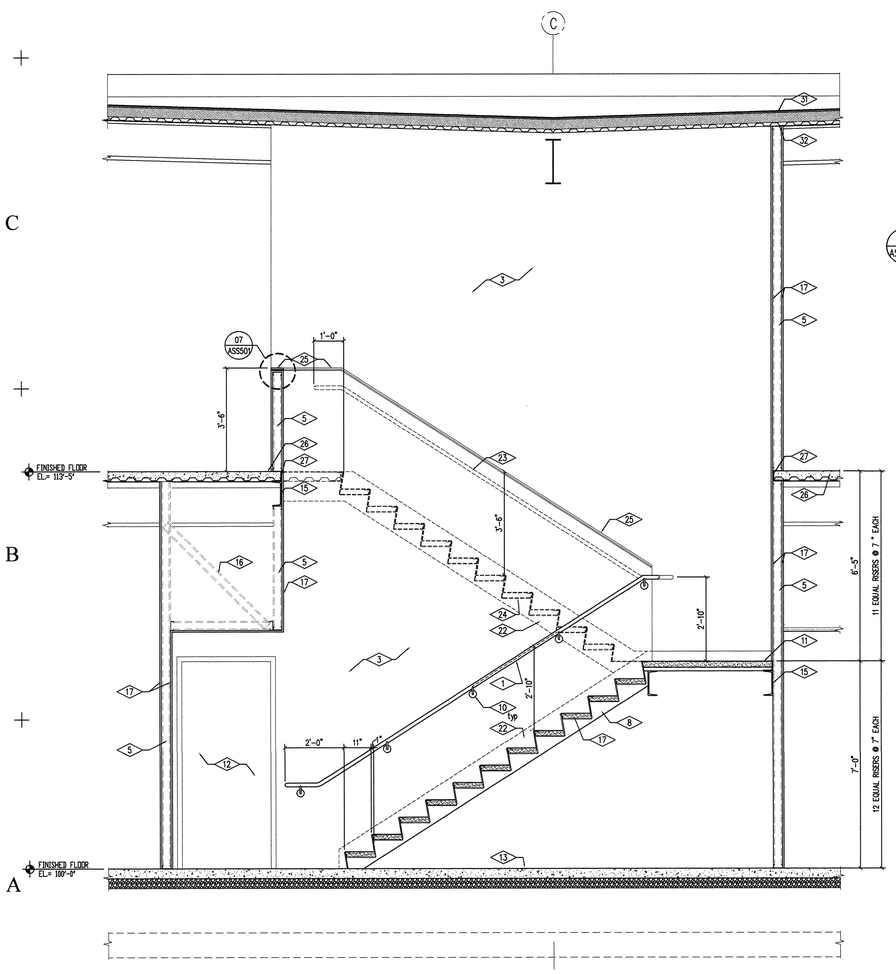

04 ASS500 STAIR 129 SECTION
SCALE 3" = 1'-0"

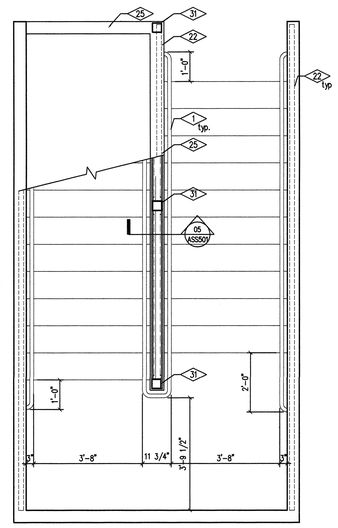

06 ASS500 STAIR 129 ENLARGED PLAN
SCALE 3" = 1'-0"

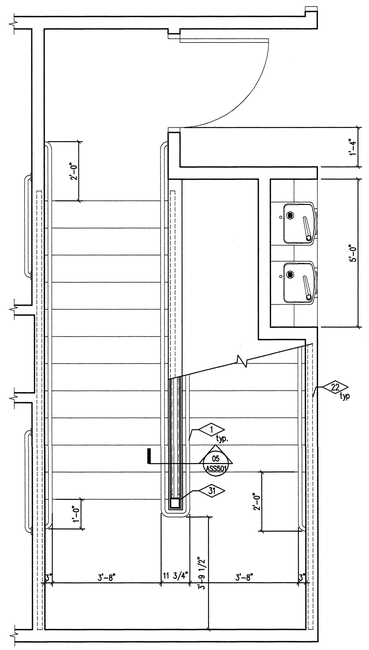

03 ASS500 STAIR 129 ENLARGED PLAN
SCALE 3" = 1'-0"

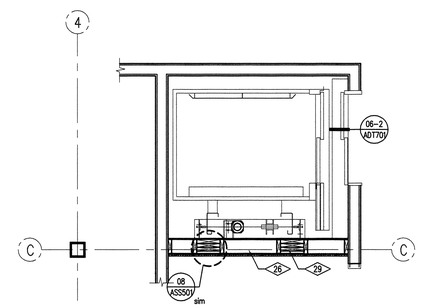

05 ASS500 ELEVATOR PLAN (UPPER LEVEL)
SCALE 3" = 1'-0"

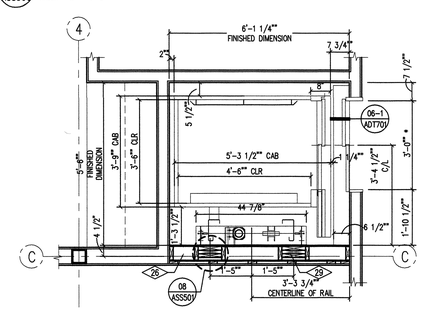

02 ASS500 ELEVATOR PLAN (LOWER LEVEL)
SCALE 3" = 1'-0"

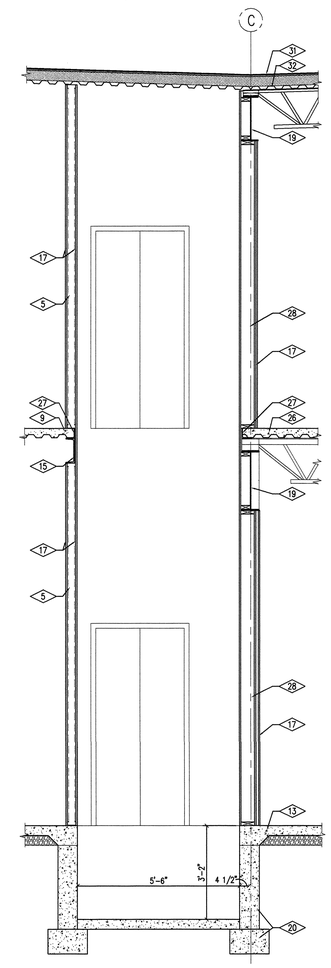

01 ASS500 ELEVATOR SHAFT SECTION
SCALE 3" = 1'-0"

State of Utah
Department of Administrative Services
Division of Facilities Construction & Management
4110 State Office Building
Salt Lake City, Utah 84114
Phone: (801) 538 - 3018
Fax: (801) 538 - 3267
Internet: http://www.dfcm.state.ut.us

Utah Valley University
Orem, Utah

CREATED BY: P+A architects
P+A architects
821 East Kensington Ave.
Salt Lake City, Utah 84105
P: 801.484.1161
F: 801.485.4640
e-mail parchitects@comcast.net

STATE OF UTAH CHRISTOPHER P. ANDERSON 241110 LICENSED ARCHITECT

☐ architecture ☐ planning ☐ design

CONSULTANT:

PROJECT TITLE:

REVISIONS

MARK	DATE	DESCRIPTION

ISSUE TYPE:

ISSUE DATE:

CAD PROJECT NO:
CAD DWG FILE:
DRAWN BY: BRIAN AND SCOTT
CHK'D BY: SCOTT
COPYRIGHT: P&A architects

KEY PLAN

SHEET TITLE

STAIR AND ELEVATOR SECTIONS

SHEET NUMBER

A-SS500

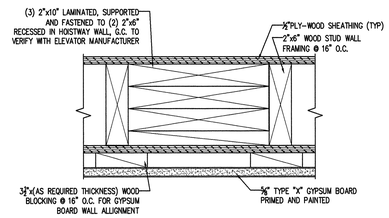

08 ASS501 PLAN DETAIL
SCALE 3" = 1'-0"

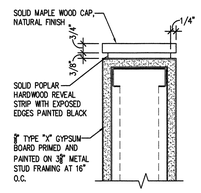

07 ASS501 WALL CAP DETAIL
SCALE 3" = 1'-0"

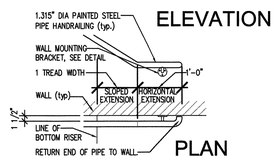

06 ASS501 HANDRAIL DETAIL
SCALE N.T.S.

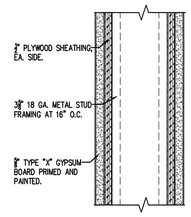

05 ASS501 GUARDRAIL WALL DETAIL
SCALE 3" = 1'-0"

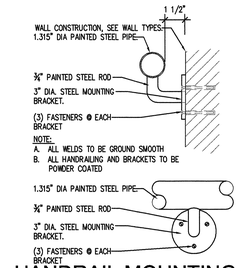

04 ASS501 HANDRAIL MOUNTING DET.
SCALE 3" = 1'-0"

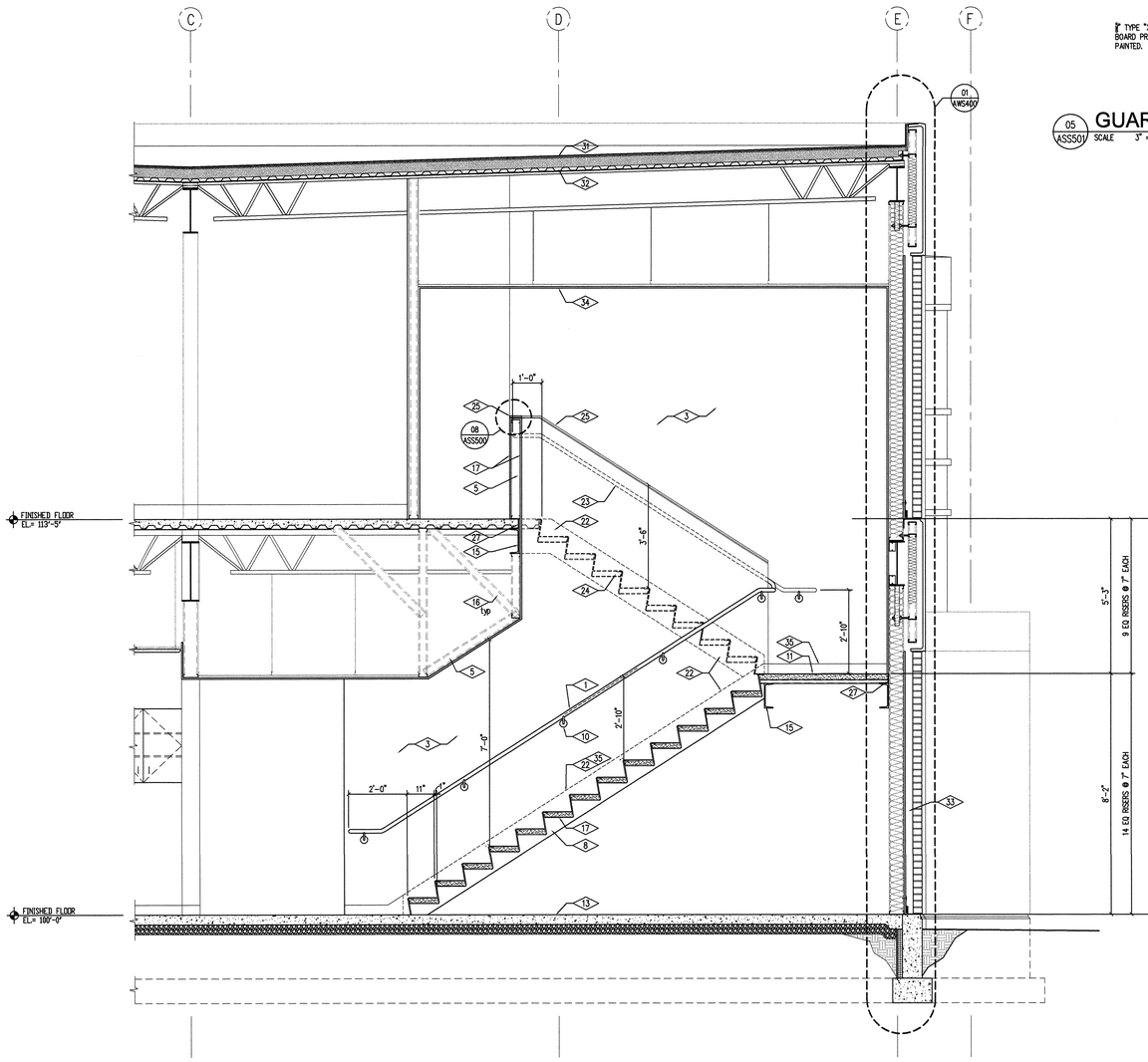

03 ASS501 STAIR 108 SECTION
SCALE 3" = 1'-0"

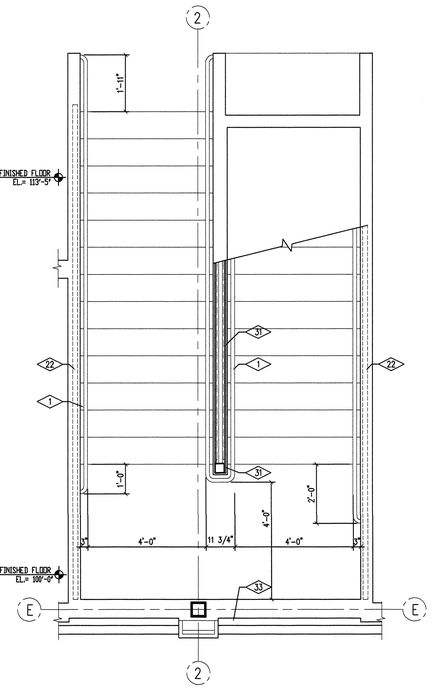

02 ASS501 STAIR 108 ENLARGED PLAN
SCALE 3" = 1'-0"

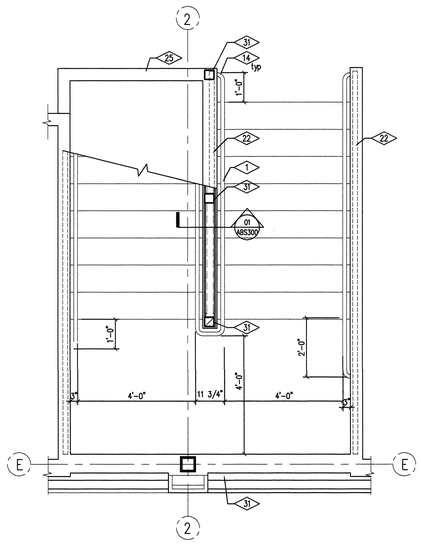

01 ASS501 STAIR 108 ENLARGED PLAN
SCALE 3" = 1'-0"

REFERENCE NOTES

1. 1.315" DIA PAINTED PIPE HANDRAIL WELDED TO BRACKETS.
2. STEEL ANGLE, SEE STRUCTURAL
3. PAINTED GYPSUM BOARD WALLS, SEE WALL TYPES
4. STEEL STAIR FRAMING, SEE STRUCTURAL
5. 3⅝" METAL STUD FRAMING @ 16" O.C.
6. STEEL COLUMN, SEE STRUCTURAL
7. CONCRETE FILLED STAIR PAN WELDED TO STRINGER
8. 2X12 STEEL STAIR STRINGER, SEE STRUCTURAL
9. PAINTED 1½" METAL DECKING, SEE STRUCTURAL
10. ¾" DIA. PAINTED STEEL HANDRAILING BRACKET, SEE DETAIL.
11. CONCRETE OVER METAL DECKING AT @ LANDING, SEE STRUCTURAL
12. DOOR BEYOND
13. CONCRETE FLOOR SLAB OVER 6MIL VAPOR BARRIOR OVER GRAVEL BASE, SEE STRUCTURAL
14. RETURN HANDRAILING BACK TO WALL
15. STEEL CHANNEL, SEE STRUCTURAL.
16. 3-⅝" METAL STUD DIAG. BRACING AT 16" O.C.
17. ⅝" TYPE "X" GYPSUM BOARD PRIMED AND PAINTED
18. EXTERIOR WALL SEE WALL SECTIONS
19. STEEL BEAM, SEE STRUCTURAL
20. FOOTING AND FOUNDATION, SEE STRUCTURAL
21. FINISH GRADE
22. DASHED LINE INDICATES STEEL STAIR STRINGER LOCATED INSIDE OF METAL STUD FRAMED WALL SYSTEM.
23. DASHED LINE INDICATES PAINED PIPE HAND RAILING ON OPPOSITE SIDE OF WALL
24. DASHED LINE INDICATES CONCRETE FILLED STEEL STAIR PAN ON OPPOSITE SIDE OF WALL
25. WOOD WALL CAP WITH REVEAL, SEE DETAIL
26. CONCRETE SLAB OVER METAL DECKING
27. CLOSURE ANGLE, SEE STRUCTURAL
28. 2"x6" WOOD STUD WALL @ 16" O.C. WITH ½" PLYWOD SHEATHING ON EASCH SIDE.
29. VERTICAL ELEVATOR SHAFT SUPPORT, SEE DETAIL.
30. 4"x4"x⅜" T.S. GUARD RAILING SUPPORT CONT. WELDED TO THE TOP OF STEEL STRINGER. CUT AND SHAPE T.S. SO THAT SIDES OF T.S. EXTEND OVER FACE OF STEEL STAIR STRINGER AND CONT. WELD TO FACE OF STRINGER
31. ROOF MEMBRANE ON MIN. 4" POLYISOCYANURATE RIGID INSULATION, SEE ROOF PLAN.
32. STEEL ROOF DECK, SEE STRUCTURAL
33. 3" AIR SPACE AT STAIR 108 LOCATION
34. CEILING SYSTEM, SEE REFLECTED CEILING PLAN
35. RUBBER BASE AS SCHEDULED

STAIR FINISH NOTES

1. GENERAL CONTRACTOR TO PROVIDE "ARMSTRONG" OR "JHONSONITE" OR EQUAL RUBBER STAIR BASE FOR BOTH STAIR 108 AND 129. GENERAL CONTRACTOR TO PROVIDE ALL REQUIRED ADHESIVES ETC., FOR INSTALLATION
2. ALL EXPOSED STEEL STAIR AND HAND RAILING SURFACES SHALL BE PRIMED AND PAINTED, COLOR BY ARCHITECT

State of Utah
Department of Administrative Services
Division of Facilities Construction & Management
4110 State Office Building
Salt Lake City, Utah 84114
Phone: (801) 538 - 3018
Fax: (801) 538 - 3267
Internet: http://www.dfcm.state.ut.us

Utah Valley University
Orem, Utah

CREATED BY: P+A architects
P+A architects
821 East Kensington Ave.
Salt Lake City, Utah 84105
P: 801.484.1161
F: 801.485.4640
e-mail parchitects@comcast.net

STATE OF UTAH LICENSED ARCHITECT 281110

architecture planning design

CONSULTANT:

PROJECT TITLE:

REVISIONS

MARK	DATE	DESCRIPTION

ISSUE TYPE:

ISSUE DATE:

CAD PROJECT NO:
CAD DWG FILE:
DRAWN BY: BRIAN AND SCOTT
CHK'D BY: SCOTT
COPYRIGHT: P&A architects

KEY PLAN

SHEET TITLE

STAIR SECTION AND DETAILS

SHEET NUMBER

A-SS501

DOOR	SINGLE/PAIR	DOOR SIZE WxH	DOOR DEPTH	DOOR TYPE	DOOR MATL	DOOR FINISH	FRAME DEPTH	FRAME TYPE	FRAME MATL	FRAME FINISH	DETAIL HEAD	DETAIL JAMB	DETAIL THRSH	HARDWARE SET	FIRE RATING DOOR & FRAME	NOTES
100A	S	3'-0" X 7'-0"	1 ¾"	B	WD	STAIN	7 ¾"	01	HM	PAINT	08/ADT700	08/ADT700	———	09	—	
101A	S	3'-0" X 7'-0"	1 ¾"	B	WD	STAIN	6"	01	HM	PAINT	07/ADT700	07/ADT700	———	09	—	
102A	S	3'-0" X 7'-0"	1 ¾"	B	WD	STAIN	6"	01	HM	PAINT	07/ADT700	07/ADT700	———	09	—	
103A	S	3'-0" X 7'-0"	1 ¾"	B	WD	STAIN	6"	01	HM	PAINT	07/ADT700	07/ADT700	———	09	—	
104A	S	3'-0" X 7'-0"	1 ½"	A	AL	ANOD	4 ½"	09	AL	ANOD	19/ADT700	9,18,19/700	01/ADT700	AL-01	—	
105A	S	3'-0" X 7'-0"	1 ¾"	B	WD	STAIN	6"	01	HM	PAINT	07/ADT700	07/ADT700		09	—	
110A	S	3'-0" X 7'-0"	1 ¾"	B	WD	STAIN	7 ¾"	01	HM	PAINT	08/ADT700	08/ADT700		09	—	
111A	S	3'-0" X 7'-0"	1 ¾"	B	WD	STAIN	6"	01	HM	PAINT	07/ADT700	07/ADT700	02/ADT700	06	—	
112A	S	3'-0" X 7'-0"		D	STEEL	S.S.					02/ADT701	02/ADT701	06-1/ADT701	01	—	DOOR AND FRAME TO BE STAINLESS STEEL BY ELEVATOR MANUFACTURER
113A	S	3'-0" X 7'-0"	1 ½"	A	AL	ANOD	4 ½"	02	AL	ANOD	19/ADT700	13/ADT700	01/ADT700	AL-01	—	
113B	S	3'-0" X 7'-0"	1 ½"	A	AL	ANOD	4 ½"	02	AL	ANOD	19/ADT700	06/ADT700	01/ADT700	AL-02	—	
114A	S	3'-0" X 7'-0"	1 ¾"	C	WD	STAIN	6"	01	HM	PAINT	07/ADT700	07/ADT700		09	—	
116A	S	3'-0" X 7'-0"	1 ¾"	B	WD	STAIN	7 ¾"	01	HM	PAINT	08/ADT700	08/ADT700	02/ADT700	06		
116B	S	3'-0" X 7'-0"	1 ¾"	E	HM	PAINT	7 ¾"	01	HM	PAINT	08/ADT700	08/ADT700	01/ADT700	02	—	
119A	S	3'-0" X 7'-0"	1 ¾"	B	WD	STAIN	6"	01	HM	PAINT	07/ADT700	07/ADT700	05/ADT700	11	—	
120A	S	2'-4" X 7'-0"	1 ¾"	B	WD	STAIN	6"	01	HM	PAINT	07/ADT700	07/ADT700	02/ADT700	08	—	
121A	S	3'-0" X 7'-0"	1 ¾"	B	WD	STAIN	6"	01	HM	PAINT	07/ADT700	07/ADT700	05/ADT700	11	—	
126A	S	3'-0" X 7'-0"	1 ¾"	B	WD	STAIN	6"	01	HM	PAINT	07/ADT700	07/ADT700		09	—	
127A	S	3'-0" X 7'-0"	1 ¾"	B	WD	STAIN	6"	01	HM	PAINT	07/ADT700	07/ADT700		09	—	
129A	S	3'-0" X 7'-0"	1 ¾"	B	WD	STAIN	6"	01	HM	PAINT	07/ADT700	07/ADT700	02/ADT700	07	—	
130A	S	3'-0" X 7'-0"	1 ¾"	B	WD	STAIN	6"	01	HM	PAINT	07/ADT700	07/ADT700		10	—	
131A	S	3'-0" X 7'-0"	1 ¾"	B	WD	STAIN	6"	01	HM	PAINT	07/ADT700	07/ADT700		09	—	
132A	S	3'-0" X 7'-0"	1 ½"	A	AL	ANOD	4 ½"	02	AL	ANOD	19/ADT700	18/ADT700	01/ADT700	AL-01	—	
134A	S	3'-0" X 7'-0"	1 ¾"	B	WD	STAIN	7 ¾"	01	HM	PAINT	08/ADT700	08/ADT700		03	—	
135A	S	3'-0" X 7'-0"	1 ¾"	B	WD	STAIN	7 ¾"	01	HM	PAINT	08/ADT700	08/ADT700		10	—	
136A	S	3'-0" X 7'-0"	1 ¾"	B	WD	STAIN	7 ¾"	01	HM	PAINT	08/ADT700	08/ADT700		10	—	
136B	S	3'-0" X 7'-0"	1 ½"	A	AL	ANOD	7 ½"		AL	ANOD	11/ADT701	11/ADT701	01/ADT700	AL-01	—	
137A	S	3'-0" X 7'-0"	1 ½"	A	AL	ANOD	4 ½"	02	AL	ANOD	19/ADT700	13/ADT700	01/ADT700	AL-02	—	
137B	S	3'-0" X 7'-0"	1 ½"	A	AL	ANOD	4 ½"	02	AL	ANOD	19/ADT700	06/ADT700	01/ADT700	AL-01	—	
139A	S	3'-0" X 7'-0"	1 ¾"	B	WD	STAIN	6"	01	HM	PAINT	07/ADT700	07/ADT700		09	—	
200A	S	3'-0" X 7'-0"	1 ¾"	B	WD	STAIN	6"	01	HM	PAINT	07/ADT700	07/ADT700		10	—	
200B	S	3'-0" X 7'-0"	1 ¾"	B	WD	STAIN	6"	01	HM	PAINT	07/ADT700	07/ADT700		10	—	
202A	S	3'-0" X 7'-0"	1 ¾"	B	WD	STAIN	6"	01	HM	PAINT	07/ADT700	07/ADT700		03	—	
203A	S	3'-0" X 7'-0"	1 ¾"	B	WD	STAIN	6"	01	HM	PAINT	07/ADT700	07/ADT700		04	—	
204A	S	3'-0" X 7'-0"		D	STEEL	S.S.					02/ADT701	02/ADT701	06-2/ADT701	01	—	DOOR AND FRAME TO BE STAINLESS STEEL BY ELEVATOR MANUFACTURER
207A	S	3'-0" X 7'-0"	1 ¾"	B	WD	STAIN	6"	01	HM	PAINT	07/ADT700	07/ADT700	02/ADT700	06	—	
208A	S	3'-0" X 7'-0"	1 ¾"	B	WD	STAIN	6"	01	HM	PAINT	07/ADT700	07/ADT700	02/ADT700	06	—	
209A	S	3'-0" X 7'-0"	1 ¾"	B	WD	STAIN	6"	01	HM	PAINT	07/ADT700	07/ADT700	02/ADT700	06	—	
210A	S	3'-0" X 7'-0"	1 ¾"	B	WD	STAIN	6"	01	HM	PAINT	07/ADT700	07/ADT700	———	09	—	
211A	S	3'-0" X 7'-0"	1 ¾"	B	WD	STAIN	6"	01	HM	PAINT	07/ADT700	07/ADT700	———	09	—	
212A	S	3'-0" X 7'-0"	1 ¾"	B	WD	STAIN	6"	01	HM	PAINT	07/ADT700	07/ADT700	———	09	—	
214A	S	3'-0" X 7'-0"	1 ¾"	B	WD	STAIN	6"	01	HM	PAINT	07/ADT700	07/ADT700	02/ADT700	06	—	

DOOR AND FRAME SCHEDULE

BASE TYPES

B1	4" STRIGHT EDGE RUBBER BASE, SEE SPECIFICATION
B2	4" COVED RUBBER BASE, SEE SPECIFICATION
B3	COVED CERAMIC TILE BASE
B4	6" COVED RUBBER BASE, SEE SPECIFICATION
B5	"JOHNSONITE" OR PREAPPROVED EQUAL RUBBER STAIR STRINGER

FLOOR FINISHES

F1	CARPET, SEE SPECIFICATION
F2	CERAMIC FLOOR TILE
F3	SEALED CONCRETE
F4	12"x12" VCT, SEE SPECIFICATION

WALL FINISHES

W1	PRIMED & PAINTED GYPSUM BOARD, SEE SPECIFICATION
W2	CERAMIC WALL TILE, SEE INTERIOR ELEVATIONS
W3	FRP WALL PANELS
W4	EXPOSED CONCRETE
W5	PREMIUM GRADE CHEERY VENEER PLYWOOD WALL PANELS (SEE INTERIOR ELEVATIONS)

CEILING TYPES

CT-1	2'x2' LAY-IN CEILING TILE IN NEW SUSPENDED GRID SYSTEM, SEE SPECITFICATION.
CT-2	ARMSTRONG OR EQUAL, METAL WORKS "EFFECTS" WOOD LOOKS 2'X2' CEILING SYSTEM WITH 15/16" EFFECTS BLACK VECTOR SUSPENSION SYSTEM. SEE DETAILS FOR EFFECTS EDGE TRIM PROFILE.
CT-3	PRIMED AND PAINTED ⅝" TYPE "X" GYPSUM BOARD ON ⅞" METAL HAT CHANNELS AT 16" O.C. ON 1-½" COLD ROLLED STEEL CHANNELS AT 4'-0" O.C.
CT-4	PRIMED AND PAINTED ⅝" TYPE "X" GYPSUM BOARD ON 6" METAL STUD FRAMING @ 16" O.C.
CT-5	PRIMED AND PAINTED ⅝" TYPE "X" GYPSUM BOARD ON 3 ⅝" METAL STUD FRAMING @ 16" O.C.
CT-6	2" INSULATED METAL PANEL SYSTEM ON EXTERIOR SHEATHING ON METAL DECKING SYSTEM
CT-7	PRIMED AND PAINTED ⅝" TYPE "X" GYPSUM BOARD ON SHAPED 2X BLOCKING @ 16" O.C. ON METAL DECKING
CT-8	EXPOSED TO STRUCTURE
CT-9	VENT WOOD HANGING WOOD CEILING SYSTEM, SEE SPECIFICATION.

GENERAL NOTES

1. H.M. = HOLLOW METAL
2. S.S. = STAINLESS STEEL
3. A.L. = ANODIZED ALUMINUM
4. P.S. = PAINTED STEEL
5. ANOD = ANODIZED
6. ALL H.M. DOOR FRAMES SHALL BE SPRAY PAINTED. PAINTING WITH A ROLLER OR BRUSH WILL NOT BE ACCEPTABLE.

FINISH NOTES:

1. SEE FINISH FLOOR PLAN FOR ADDITIONAL FINISH NOTES.

ROOM FINISH SCHEDULE

ROOM NO	ROOM NAME	FLOOR	BASE	WALLS NORTH	WALLS EAST	WALLS SOUTH	WALLS WEST	CEILING TYPE	CEILING HEIGHT	NOTES
100	OFFICE	F1	B1	W1	W1	W1	W1	CT-1	8'-11"	
101	OFFICE	F1	B1	W1	W1	W1	W1	CT-1	8'-11"	
102	OFFICE	F1	B1	W1	W1	W1	W1	CT-1	8'-11"	
103	OFFICE	F1	B1	W1	W1	W1	W1	CT-1	8'-11"	
104	CORRIDOR	F1	B1	W1	W1	W1	W1	CT-1 / CT-5	8'-11" / 8'-0"	
105	OFFICE	F1	B1	W1	W1	W1	W1	CT-1	8'-11"	
106	ADMINISTRATION	F1	B1	W1	W1	W1	W1	CT-1	8'-11"	
107	CORRIDOR	F1	B1	W1	W1	W1	W1	CT-3	8'-0"	
108	STAIR	F1	B5	W1	W1	W1	W1	CT-5 / CT-3	8'-0" / 7'-10"	
109	RECEPTION	F1	B1	W1	W1	W1	W1	CT-1	8'-11"	
110	CONFERENCE	F1	B1	W1	W1	W1	W1	CT-5 / CT-1	8'-11" / 9'-6"	
111	ELECTRICAL	F3	B4	W1	W1	W1	W1	CT-8	—	
112	ELEVATOR	—	—	—	—	—	—	—	—	SEE SPECIFICATION FOR ELEVATOR AND INTERIOR CAR FINISH
113	VESTIBULE	F1	B1	W1	—	W1	—	CT-9	8'-11"	
114	BREAK ROOM	F1	B1	W1	W1	W1	W1	CT-7 / CT-1	8'-11" / 8'-11"	
115	HALL	F1	B1	W1	W1	W1	W1	CT-1	8'-11"	
116	MECHANICAL/ WATER RISER/ JAN.	F3	B4	W1	W1	W1	W1	CT-8	—	
119	WOMENS	F2	B3	W1 / W2	W1 / W2	W1 / W2	W1 / W2	CT-3	8'-0"	
120	PIPE CHASE	F3	—	—	—	—	—	—	—	
121	MENS	F2	B3	W1 / W2	W1 / W2	W1 / W2	W1 / W2	CT-3	8'-0"	
122	WAITING	F1	B1	W1	W1	W1	W1	CT-9 / CT-5	8'-11" / 8'-0"	
125	CORRIDOR	F1	B1	W1	W1	W1	W1	CT-3	8'-0"	
126	OFFICE	F1	B1	W1	W1	W1	W1	CT-1	8'-11"	
127	OFFICE	F1	B1	W1	W1	W1	W1	CT-1	8'-11"	
129	STAIR	F3	B5	W1	W1	W1	W1	CT-3 / CT-8	8'-0"	
130	COUNTING	F1	B1	W1	W1	W1	W1	CT-1	8'-11"	
131	OFFICE	F1	B1	W1	W1	W1	W1	CT-1	8'-11"	
132	CORRIDOR	F1	B1	W1	W1	W1	W1	CT-1 / CT-5	8'-11" / 8'-0"	
133	OFFICE	F1	B1	W1	W1	W1	W1	CT-1	8'-11"	
134	STORAGE	F1	B1	W1	W1	W1	W1	CT-1	8'-0"	
135	PARKING ADMIN.	F1	B1	W1	W1	W1	W1	CT-9 / CT-5	8'-0"	
136	PARKING	F1	B1	W1	W1	W5	W5	CT-2 / CT-4	21'-5" / 20'-7"	
137	VESTIBULE	F1	B1	—	W1	—	W4	CT-7	8'-11"	
138	WAITING	F1	B1	W1	W1	W5	W5	CT-2 / CT-4	21'-5" / 20'-7"	
139	OFFICE	F1	B1	W1	W1	W1	W1	CT-1	8'-11"	
200	OPEN OFFICE	F1	B1	W1	W1	W1	W1	CT-1	8'-11"	
201	CORRIDOR	F1	B1	W1	W1	W1	W1	CT-1	8'-0"	
202	ARCHIVE	F1	B1	W1	W1	W1	W1	CT-1	8'-0"	
203	MACHINE ROOM	F3	B4	W1	W1	W1	W1	CT-8	8'-0"	
204	ELEVATOR	—	—	—	—	—	—	—	—	SEE SPECIFICATION FOR ELEVATOR AND INTERIOR CAR FINISH
205	CORRIDOR	F1	B1	W1	W1	W1	W1	CT-1	8'-0"	
206	CORRIDOR	F1	B1	W1	W1	W1	W1	CT-1	8'-0"	
207	MECHANCIAL	F3	B4	W1	W1	W1	W1	CT-8	—	
208	ELECTRICAL	F3	B4	W1	W1	W1	W1	CT-8	—	
209	MECHANICAL	F3	B4	W1	W1	W1	W1	CT-8	—	
210	OFFICE	F1	B1	W1	W1	W1	W1	CT-1	8'-11"	
211	OFFICE	F1	B1	W1	W1	W1	W1	CT-1	8'-11"	
212	OFFICE	F1	B1	W1	W1	W1	W1	CT-1	8'-11"	
213	VEST.	F1	B1	—	—	W1	—	CT-8	—	
214	JANITOR	F3	B4	W1	W1	W1	W1	CT-5	8'-0"	

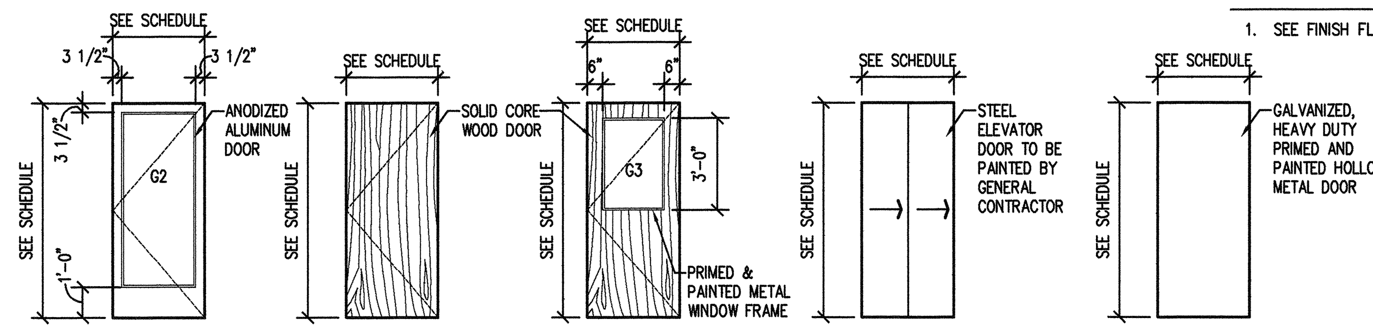

TYPE "A" TYPE "B" TYPE "C" TYPE "D" TYPE "E"

02 ASH600 **DOOR TYPES** SCALE 1/4" = 1'-0" T-02.dwg

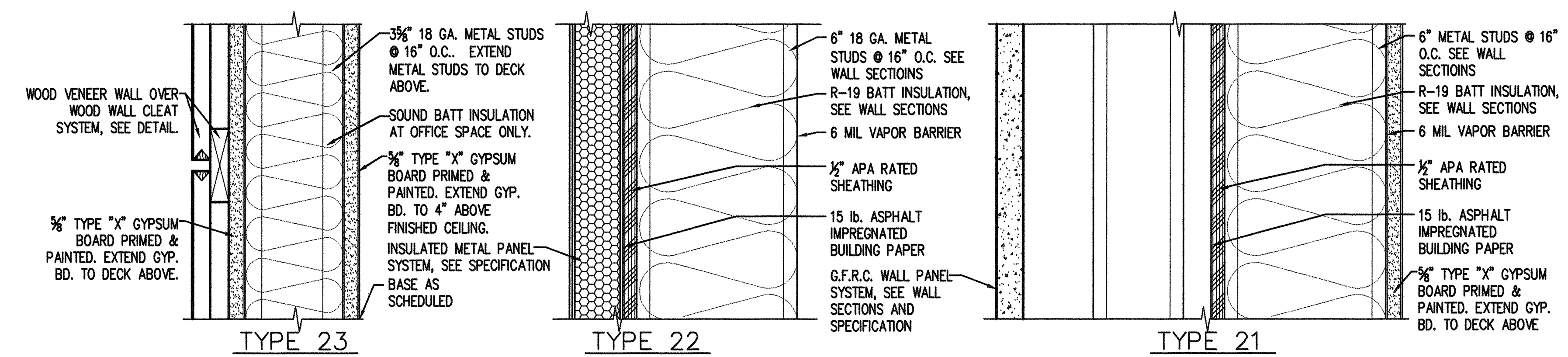

TYPE 23 TYPE 22 TYPE 21

01 ASH600 **WALL TYPES** SCALE 3" = 1'-0"

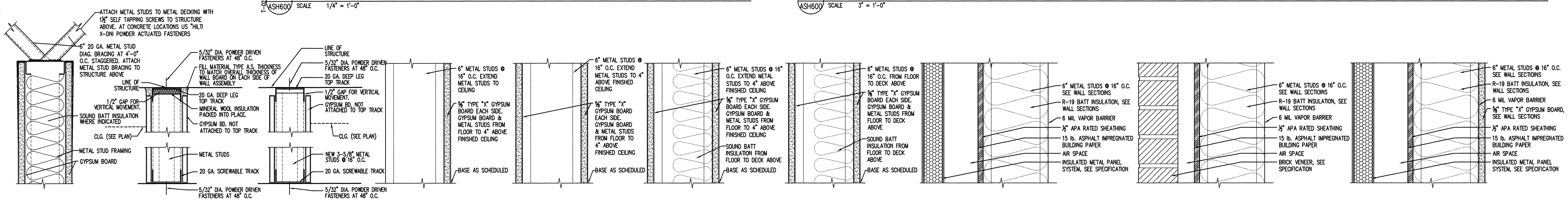

TOP OF WALL BRACING / HEAD DETAIL FIRE RATED WALLS / HEAD DETAIL NON FIRE RATED WALLS / TYPE 20 / TYPE 19 / TYPE 18 / TYPE 17 / TYPE 16 / TYPE 15 / TYPE 14

01 ASH600 **WALL TYPES** SCALE 3" = 1'-0" 9-05.dwg

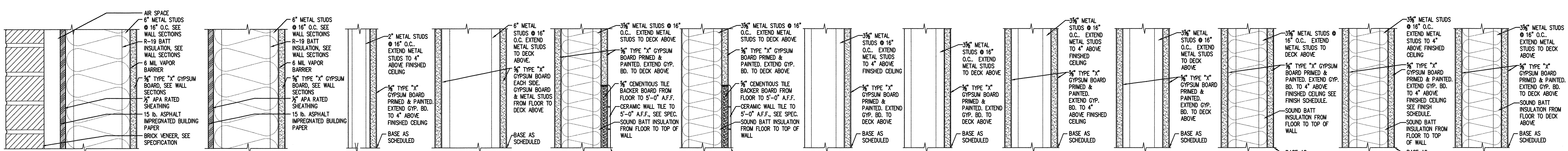

TYPE 13 / TYPE 12 / TYPE 11 / TYPE 10 / TYPE 09 / TYPE 08 / TYPE 07 / TYPE 06 / TYPE 05 / TYPE 04 / TYPE 03 / TYPE 02 / TYPE 01

01 ASH600 **WALL TYPES** SCALE 3" = 1'-0" 9-05.dwg

State of Utah

Department of Administrative Services

Division of Facilities Construction & Management
4110 State Office Building
Salt Lake City, Utah 84114
Phone: (801) 538 - 3018
Fax: (801) 538 - 3267
Internet: http://www.dfcm.state.ut.us

Utah Valley University
Orem, Utah

CREATED BY: P+A architects
P+A architects
821 East Kensington Ave.
Salt Lake City, Utah 84105
P: 801.484.1161
F: 801.485.4640
e-mail parchitects@comcast.net

STATE OF UTAH — SCOTT R. PATER — 261110 — 8/2/10 — LICENSED ARCHITECT

architecture planning design

CONSULTANT:

PROJECT TITLE:
UTAH VALLEY UNIVERSITY NEW PARKING AND FACILITIES DEPARTMENT BUILDING

UTAH VALLEY UNIVERSITY
936 SOUTH 400 WEST
OREM, UTAH

REVISIONS

MARK	DATE	DESCRIPTION

ISSUE TYPE: CONSTRUCTION DOCUMENTS

ISSUE DATE: August 2nd, 2010

CAD PROJECT NO: 09247790
CAD DWG FILE:
DRAWN BY: BRIAN AND SCOTT
CHK'D BY: SCOTT
COPYRIGHT: P&A architects

KEY PLAN

SHEET TITLE

DOOR AND FINISH SCHEDULES DOOR TYPES

SHEET NUMBER

A-SH600

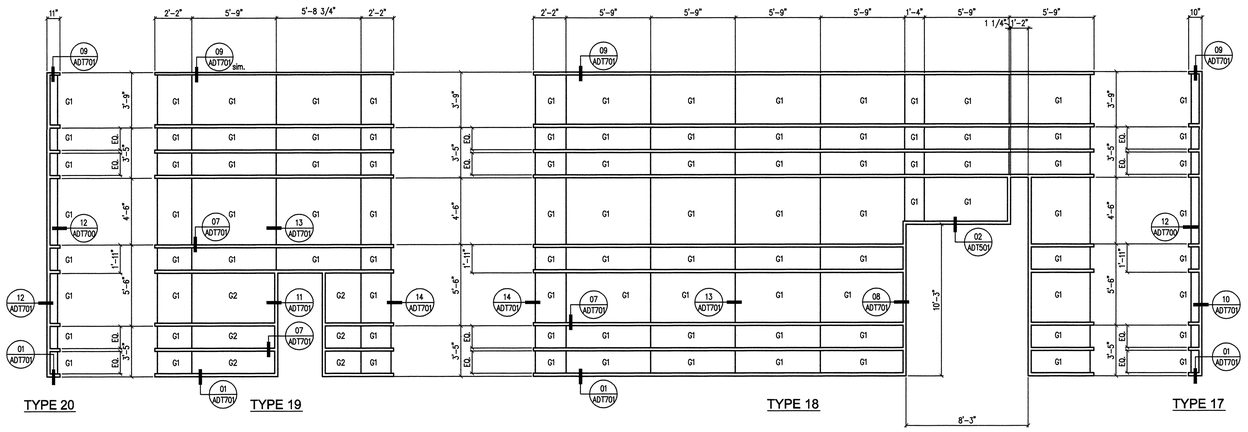

04 ASH601 CURTAIN WALL WINDOW SYSTEM SCALE 1/4" = 1'-0"

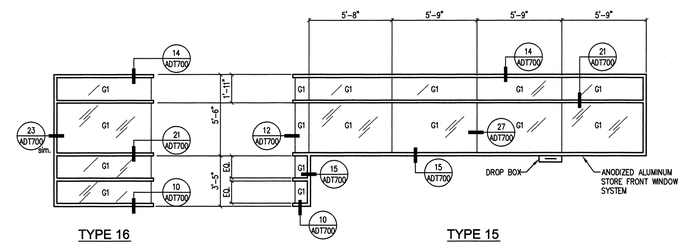

03 ASH601 WINDOW TYPES SCALE 1/4" = 1'-0"

GLAZING TYPES	
G1	1" INSULATED GLAZING, SEE SPECIFICATION
G2	1" INSULATED, TEMPERED GLAZING, SEE SPECIFICATION

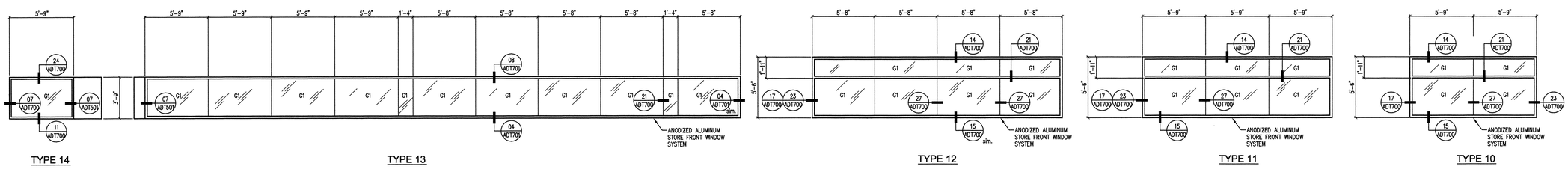

02 ASH601 WINDOW TYPES SCALE 1/4" = 1'-0"

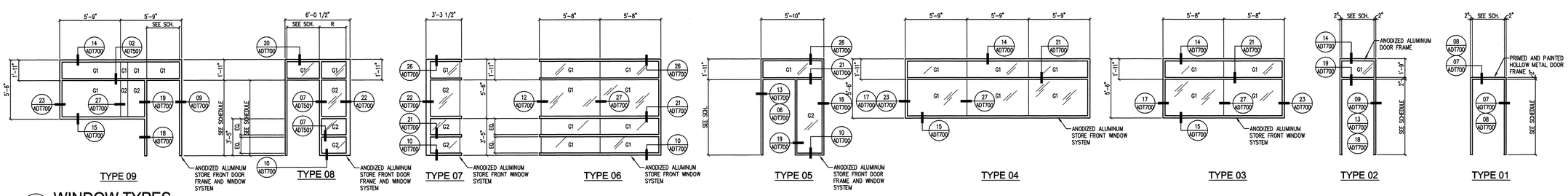

01 ASH601 WINDOW TYPES SCALE 1/4" = 1'-0"

State of Utah
Department of Administrative Services
Division of Facilities Construction & Management
4110 State Office Building
Salt Lake City, Utah 84114
Phone: (801) 538 - 3018
Fax: (801) 538 - 3267
Internet: http://www.dfcm.state.ut.us

Utah Valley University
Orem, Utah

CREATED BY: P+A architects
P+A architects
821 East Kensington Ave.
Salt Lake City, Utah 84105
P: 801.484.1161
F: 801.485.4640
e-mail parchitects@comcast.net

STATE OF UTAH LICENSED ARCHITECT

architecture planning design

CONSULTANT:

PROJECT TITLE:
UTAH VALLEY UNIVERSITY
NEW PARKING AND FACILITIES DEPARTMENT BUILDING

UTAH VALLEY UNIVERSITY
936 SOUTH 400 WEST
OREM, UTAH

REVISIONS

MARK	DATE	DESCRIPTION

ISSUE TYPE: CONSTRUCTION DOCUMENTS

ISSUE DATE: August 2nd, 2010

CAD PROJECT NO: 09247790
CAD DWG FILE:
DRAWN BY: BRIAN AND SCOTT
CHK'D BY: SCOTT
COPYRIGHT: P&A architects

KEY PLAN

SHEET TITLE
DOOR AND WINDOW FRAME TYPES

SHEET NUMBER
A-SH601

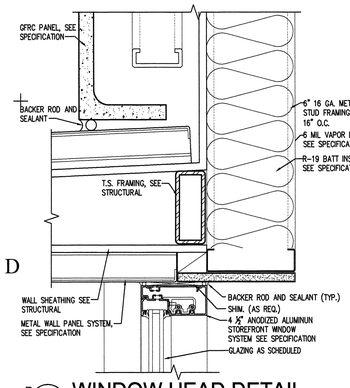

9-05.dwg 24 ADT700 WINDOW HEAD DETAIL
SCALE 3" = 1'-0"

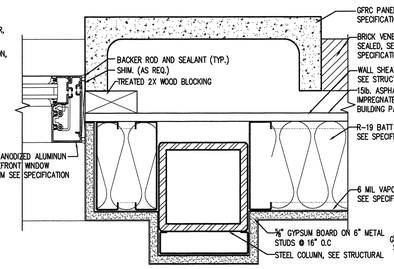

9-05.dwg 23 ADT700 WINDOW JAMB DETAIL
SCALE 3" = 1'-0"

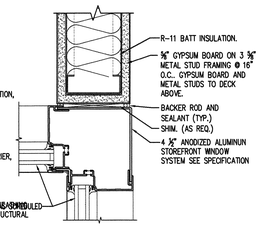

9-05.dwg 22 ADT700 CORNER DETAIL
SCALE 3" = 1'-0"

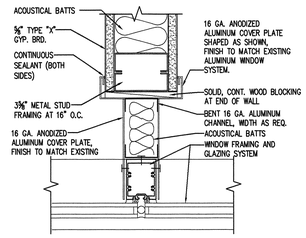

9-05.dwg 28 ADT700 WALL TO MULLION DETAIL
SCALE 3" = 1'-0"

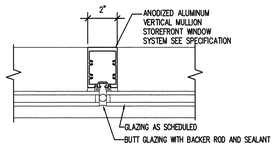

9-05.dwg 27 ADT700 WINDOW DETAIL
SCALE 3" = 1'-0"

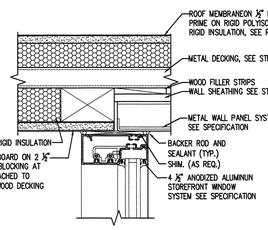

9-05.dwg 26 ADT700 WINDOW HEAD DETAIL
SCALE 3" = 1'-0"

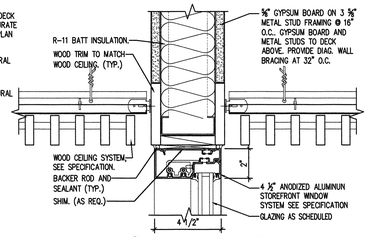

9-05.dwg 25 ADT700 WINDOW HEAD DETAIL
SCALE 3" = 1'-0"

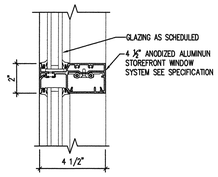

9-05.dwg 21 ADT700 WINDOW MULLION DETAIL
SCALE 3" = 1'-0"

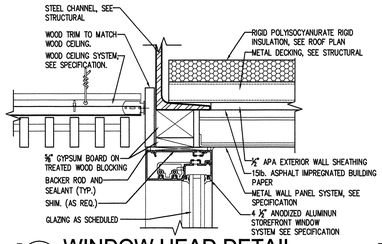

9-05.dwg 20 ADT700 WINDOW HEAD DETAIL
SCALE 3" = 1'-0"

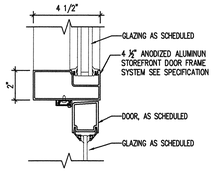

9-05.dwg 19 ADT700 DOOR JAMB/HEAD DETAIL
SCALE 3" = 1'-0"

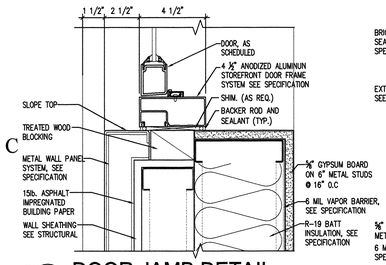

9-05.dwg 18 ADT700 DOOR JAMB DETAIL
SCALE 3" = 1'-0"

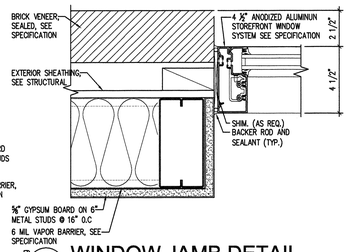

9-05.dwg 17 ADT700 WINDOW JAMB DETAIL
SCALE 3" = 1'-0"

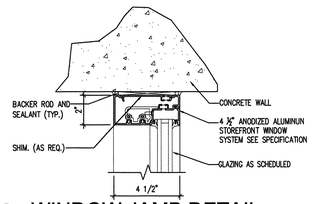

9-05.dwg 16 ADT700 WINDOW JAMB DETAIL
SCALE 3" = 1'-0"

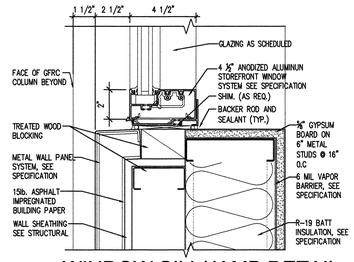

9-05.dwg 15 ADT700 WINDOW SILL/JAMB DETAIL
SCALE 3" = 1'-0"

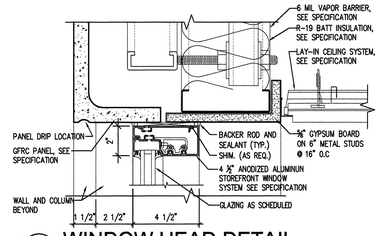

9-05.dwg 14 ADT700 WINDOW HEAD DETAIL
SCALE 3" = 1'-0"

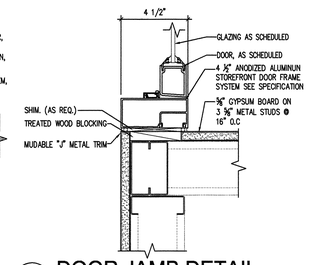

9-05.dwg 13 ADT700 DOOR JAMB DETAIL
SCALE 3" = 1'-0"

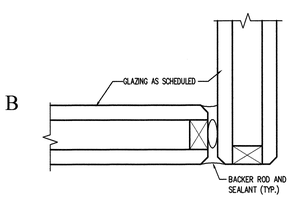

9-05.dwg 12 ADT700 BUTT GLAZING
SCALE: FULL

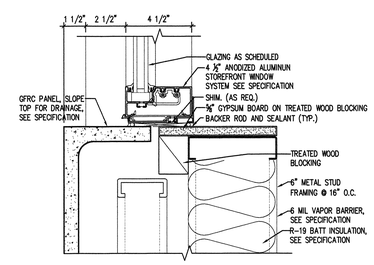

9-05.dwg 11 ADT700 WINDOW SILL DETAIL
SCALE 3" = 1'-0"

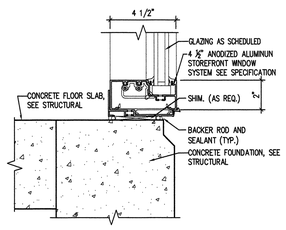

9-05.dwg 10 ADT700 WINDOW SILL DETAIL
SCALE 3" = 1'-0"

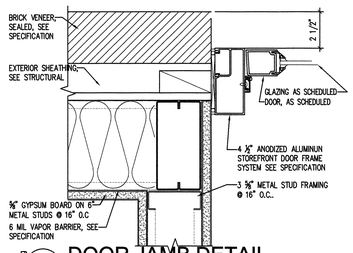

9-05.dwg 09 ADT700 DOOR JAMB DETAIL
SCALE 3" = 1'-0"

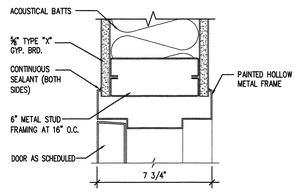

9-05.dwg 08 ADT700 JAMB / HEAD DETAIL
SCALE 3" = 1'-0"

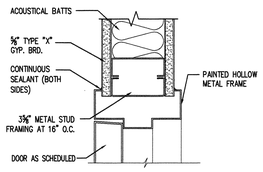

9-05.dwg 07 ADT700 JAMB / HEAD DETAIL
SCALE 3" = 1'-0"

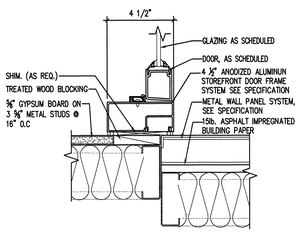

9-05.dwg 06 ADT700 DOOR JAMB DETAIL
SCALE 3" = 1'-0"

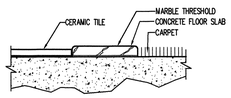

9-11.dwg 05 ADT700 THRESHOLD
SCALE 3" = 1'-0"

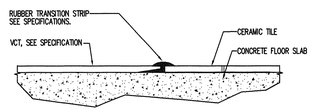

9-11.dwg 04 ADT700 THRESHOLD
SCALE 3" = 1'-0"

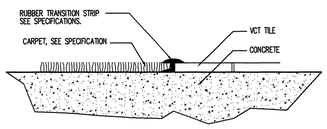

9-11.dwg 03 ADT700 THRESHOLD
SCALE 3" = 1'-0"

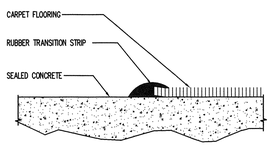

9/(5/05).dwg 02 ADT700 VCT THRESHOLD
SCALE 3" = 1'-0"

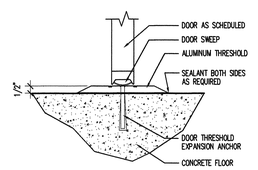

9-11.dwg 01 ADT700 THRESHOLD
SCALE 3" = 1'-0"

State of Utah
Department of Administrative Services
Division of Facilities Construction & Management
4110 State Office Building
Salt Lake City, Utah 84114
Phone: (801) 538 - 3018
Fax: (801) 538 - 3267
Internet: http://www.dfcm.state.ut.us

Utah Valley University
Orem, Utah

CREATED BY: P+A architects
P+A architects
821 East Kensington Ave.
Salt Lake City, Utah 84105
P: 801.484.1161
F: 801.485.4640
e-mail parchitects@comcast.net

STATE OF UTAH
LICENSED ARCHITECT

architecture planning design

CONSULTANT:

PROJECT TITLE:
UTAH VALLEY UNIVERSITY
NEW PARKING AND FACILITIES DEPARTMENT BUILDING

UTAH VALLEY UNIVERSITY
936 SOUTH 400 WEST
OREM, UTAH

REVISIONS

MARK	DATE	DESCRIPTION

ISSUE TYPE: CONSTRUCTION DOCUMENTS

ISSUE DATE: August 2nd, 2010

CAD PROJECT NO: 09247790
CAD DWG FILE:
DRAWN BY: BRIAN AND SCOTT
CHK'D BY: SCOTT
COPYRIGHT: P&A architects

KEY PLAN

SHEET TITLE
DOOR AND WINDOW DETAILS

SHEET NUMBER
A-DT700

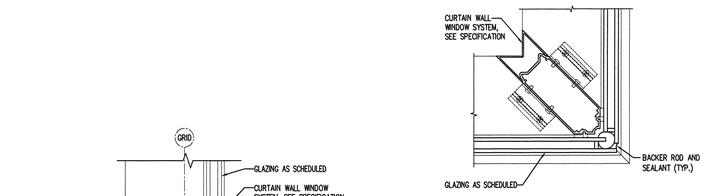

14 ADT701 WINDOW DETAIL

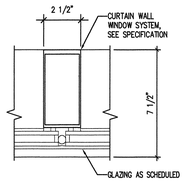

13 ADT701 WINDOW DETAIL

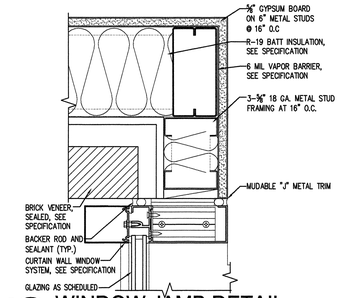

12 ADT701 WINDOW JAMB DETAIL

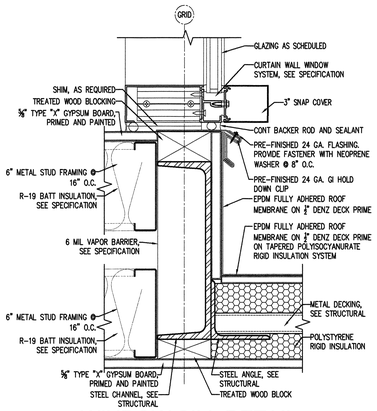

15 ADT701 WINDOW SILL DETAIL
SCALE 3" = 1'-0"

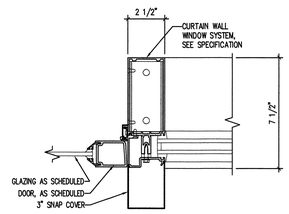

11 ADT701 DOOR JAMB/HEAD DETAIL

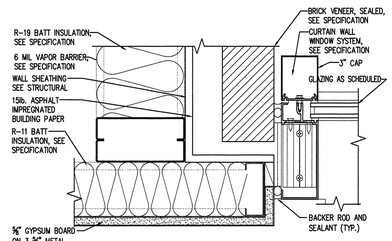

10 ADT701 WINDOW JAMB DETAIL

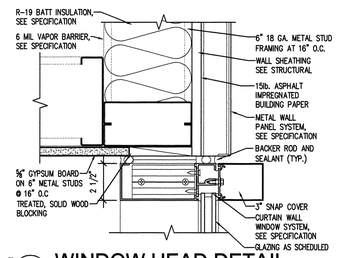

09 ADT701 WINDOW HEAD DETAIL
SCALE 3" = 1'-0"

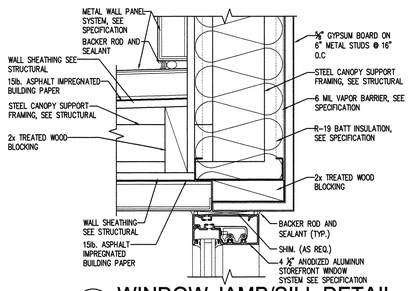

08 ADT701 WINDOW JAMB/SILL DETAIL
SCALE 3" = 1'-0"

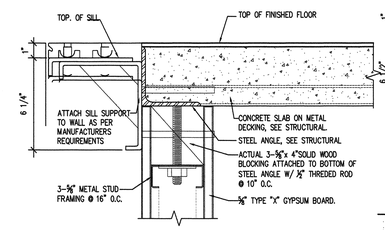

06-2 ADT701 DOOR SEAL AT ELEVATOR
SCALE 3" = 1'-0"

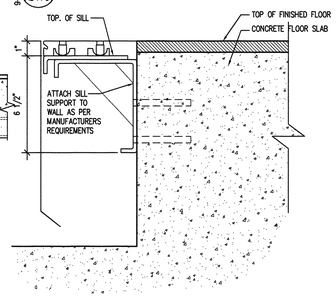

06-1 ADT701 DOOR SEAL AT ELEVATOR
SCALE 3" = 1'-0"

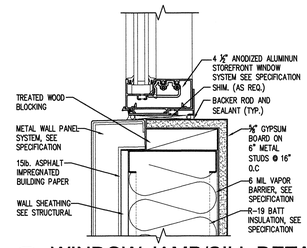

04 ADT701 WINDOW JAMB/SILL DETAIL
SCALE 3" = 1'-0"

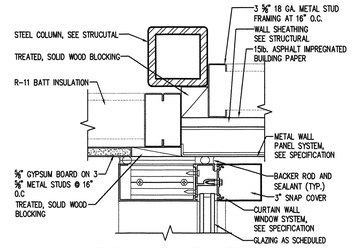

03 ADT701 WINDOW JAMB DETAIL

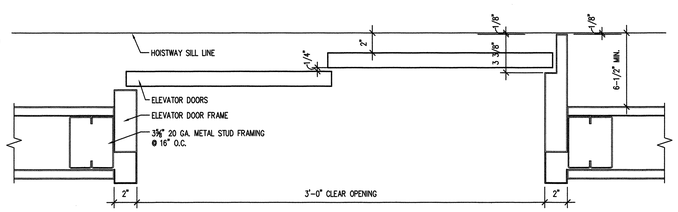

02 ADT701 PLAN VIEW ELEVATOR DOOR
SCALE 3" = 1'-0"

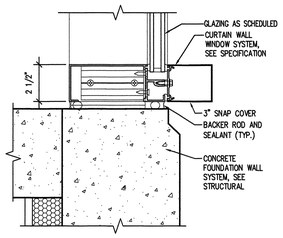

01 ADT701 WINDOW SILL DETAIL
SCALE 3" = 1'-0"

State of Utah
Department of Administrative Services
Division of Facilities Construction & Management
4110 State Office Building
Salt Lake City, Utah 84114
Phone: (801) 538 - 3018
Fax: (801) 538 - 3267
Internet: http://www.dfcm.state.ut.us

Utah Valley University
Orem, Utah

CREATED BY: P+A architects
P+A architects
821 East Kensington Ave.
Salt Lake City, Utah 84105
P: 801.484.1161
F: 801.485.4640
e-mail parchitects@comcast.net

architecture planning design

CONSULTANT:

PROJECT TITLE:
UTAH VALLEY UNIVERSITY NEW PARKING AND FACILITIES DEPARTMENT BUILDING

UTAH VALLEY UNIVERSITY
936 SOUTH 400 WEST
OREM, UTAH

REVISIONS

MARK	DATE	DESCRIPTION

ISSUE TYPE: CONSTRUCTION DOCUMENTS

ISSUE DATE: August 2nd, 2010

CAD PROJECT NO: 09247790
CAD DWG FILE:
DRAWN BY: BRIAN AND SCOTT
CHK'D BY: SCOTT
COPYRIGHT: P&A architects

KEY PLAN

SHEET TITLE
DOOR AND WINDOW DETAILS

SHEET NUMBER
A-DT701

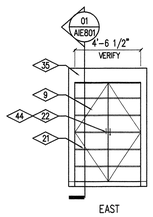

16 AIE800 INTERIOR EL CORRIDOR
SCALE 1/4" = 1'-0"

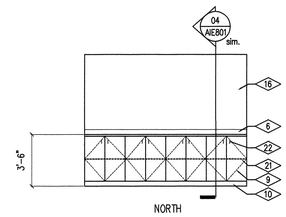

15 AIE800 INT. EL. OFFICE 100
SCALE 1/4" = 1'-0"

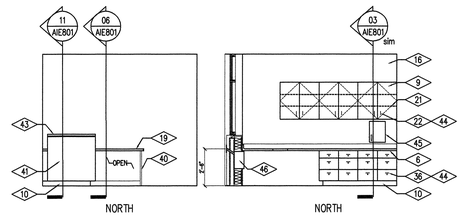

14 AIE800 OFFICE 133
SCALE 1/4" = 1'-0"

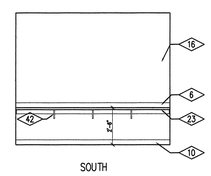

13 AIE800 COUNTING 130
SCALE 1/4" = 1'-0"

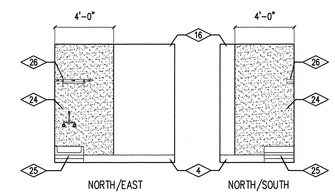

12 AIE800 ROOM 116 AND 213
SCALE 1/4" = 1'-0"

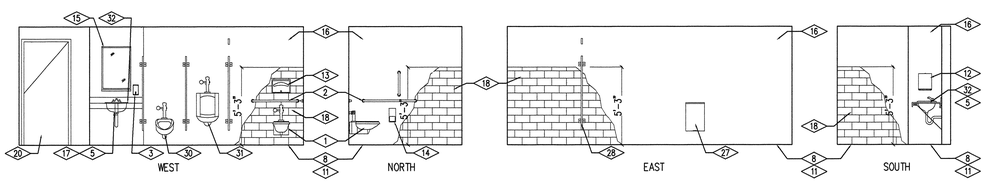

10 AIE800 INTERIOR ELEVATION MENS
SCALE 1/4" = 1'-0"

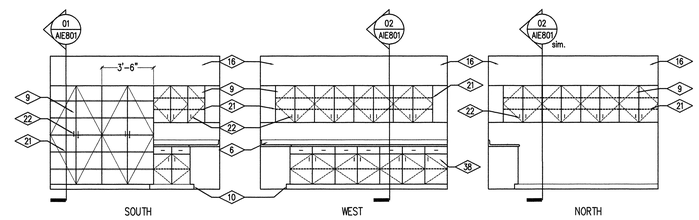

09 AIE800 INTERIOR ELEVATION ADMIN
SCALE 1/4" = 1'-0"

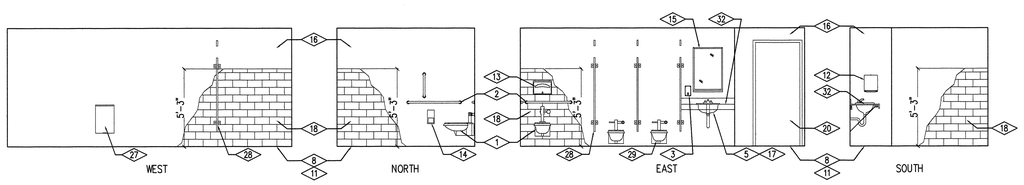

08 AIE800 INTERIOR ELEVATION WOMENS
SCALE 1/4" = 1'-0"

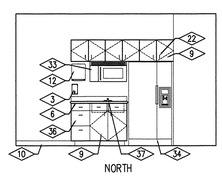

07 AIE800 INT. EL. BREAK 114
SCALE 1/4" = 1'-0"

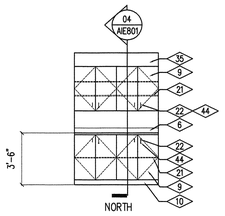

06 AIE800 INT. EL. CONFERENCE 110
SCALE 1/4" = 1'-0"

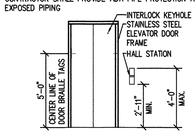

ELEVATOR DOOR ELEVATION

05 AIE800 ELEVATOR DOOR
SCALE 1/4" = 1'-0"

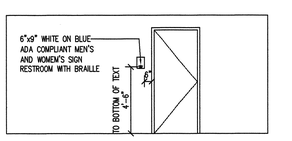

PROVIDE TWO RESTROOM SIGNS
ONE AT DOOR 119A
ONE AT DOOR 121A

04 AIE800 BUILDING SIGNAGE
SCALE 1/4" = 1'-0"

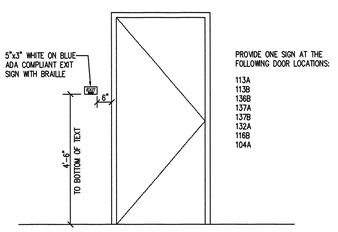

PROVIDE ONE SIGN AT THE FOLLOWING DOOR LOCATIONS:

113A
113B
136B
137A
137B
132A
116B
104A

03 AIE800 BUILDING SIGNAGE
SCALE 1/2" = 1'-0"

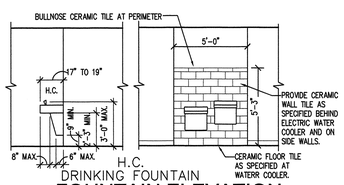

FOUNTAIN ELEVATION
AND MOUNTING HEIGHT

02 AIE800 SCALE 1/4" = 1'-0"

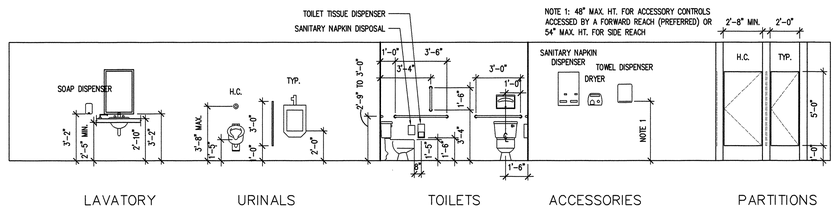

01 AIE800 STANDARD MOUNTING HEIGHTS
SCALE

REFERENCE NOTES

1. ACCESSIBLE WATER CLOSET, SEE PLUMBING DRAWINGS
2. WALL MOUNTED GRAB BAR, SEE SPECIFICATION
3. WALL MOUNTED SOAP DISPENSER, SEE SPECIFICATION
4. 6" COVED RUBBER BASE, SEE SPECIFICATION.
5. LAVATORY, SEE PLUMBING DRAWINGS
6. PRE-FORMED PLASTIC LAMINATE COUNTERTOP W/ FULL 180 DEGREE BULL NOSE & PRE-FORMED BACKSPLASH, SEE SECTION
7. STORE FRONT DOOR AND WINDOW SYSTEM, SEE SPECIFICATION
8. CERAMIC FLOOR TILE, SEE SPECIFICATION
9. PLASTIC LAMINATE CASE WORK, SEE INTERIOR ELEVATIONS, SECTIONS & SPECIFICATIONS
10. 4" STRIGHT EDGE RUBBER BASE, SEE SPECIFICATION 09653
11. COVED CERAMIC TILE BASE AT RESTROOM LOCATOINS
12. PAPER TOWEL DISPENSER, SEE SPECIFICATION
13. SANITATION SEAT COVERING DISPENSER, SEE SPECIFICATION 10801
14. TOILET PAPER DISPENSER, SEE SPECIFICATION
15. MIRROR, SEE SPECIFICATION
16. PRIMED AND PAINTED GYPSUM BOARD WALL, SEE FINISH SCHEDULE
17. CONTRACTOR SHALL PROVIDE INSULATED ADA PIPE PROTECTION AT ALL EXPOSED PIPING AND SHUT OFF VALVES AS PER ANSI 606.6. THERE SHALL BE NO SHARP OR ABRASIVE SURFACES UNDER LAVATORIES AND SINKS.
18. CERAMIC TILE WAINSCOT, SEE SPECIFICATION.
19. ADA ACCESSIBLE COUNTER, SEE CASEWORK SECTIONS
20. DOOR AND FRAME, SEE DOOR SCHEDULE
21. MELAMINE OVER ¾" PLYWOOD SHELVES, SEE SECTION.
22. CASEWORK DOOR PULLS, SEE SPECIFICATION
23. DASHED LINES INDICATE PLASTIC LAMINATE OVER ¾" PLYWOOD COUNTERTOP SUPPORTS.
24. FRP AT JANITORS SINK LOCATION, SEE SPECIFICATION
25. JANITORS SINK, SEE PLUMBING DRAWINGS
26. WALL MOUNTED MOP RACK WITH SHELF, SEE SPECIFICATION
27. WASTE BASKET, SEE SPECIFICATION.
28. OVERHEAD BRACED TOILET PARTITION, SEE SPECIFICATION.
29. WATER CLOSET, SEE PLUMBING DRAWINGS
30. HANDICAP URINAL, SEE PLUMBING DRAWINGS
31. URINAL, SEE PLUMBING DRAWINGS
32. PLASTIC LAMINATE COUNTERTOP AT RESTROOM LOCATION SEE SECTION.
33. MICROWAVE OVEN BY OWNER. COORDINATE LOCATION WITH ELECTRICAL DRAWINGS.
34. REFRIGERATOR BY OWNER.
35. DROPPED GYPSUM BOARD SOFFIT AT CONFERENCE ROOM.
36. PLASTIC LAMINATE DRAWERS, SEE SECTIONS AND SPECIFICATIONS.
37. BREAK ROOM SINK, SEE PLUMBING DRAWINGS.
38. PLASTIC LAMINATE CABINETS, SEE SECTIONS.
39. PLASTIC LAMINATE RECEPTION COUNTER TOP W/ FULL 180 DEGREE BULLNOSE, SEE SECTIONS.
40. PLASTIC LAMINATE OVER ¾" PLYWOOD COUNTERTOP SUPPORT.
41. PLASTIC LAMINATE RECEPTION COUNTER.
42. PAINTED METEL COUNTER TOP SUPPORT BRACKETS
43. CORIAN OR PRE-APPROVED EQUAL SOLID SURFACING COUNTER TOP AND BACK SPALSH
44. HIGH SECURITY LOCKABLE CASEWORK
45. "HPC" KEYKABS KEY STORAGE CABINET, MODEL NUMBER SKU: KEKAB-120, DIMENSIONS 17"x13"x3¾".
46. "PERMA-VAULT" THROUGH THE WALL DEPOSITORY MODEL NUMBER PRO-903-M WITH OPTIONAL EXTERIOR EXTENSION CHUTE FOR EXTERIOR WALL INSTALLATION MODEL NUMBER PRO-CH-9032 WITH OPTIONAL COVER PLATE FINISHED TO MATCH EXTERIOR METAL WALL PANELS MODEL NUMBER PRO-COV-903. COVER PLATE TO BE POWDER COATED FINISH TO MATCH METAL WALL PANEL SYSTEM. PROVIDE ALL BLOCKING IN METAL STUD WALL FRAMING AS REQUIRED FOR INSTALLATION.

GENERAL NOTES

1. REFER TO FINISH SCHEDULE FOR ADDITIONAL FINISH NOTES
2. CONTRACTOR SHALL PROVIDE ADDITIONAL STUDS AS REQUIRED FOR PARTITION AND FIXTURE INSTALLATIONS
3. GENERAL CONTRACTOR SHALL PROVIDE ALL NECESSARY BACKING AND ADDITIONAL STUDS AS REQUIRED FOR INSTALLATION OF TOILET PARTITIONS, URINAL SCREENS, ALL PLUMBING FIXTURES, APPLIANCES, COUNTER TOPS ETC. GENERAL CONTRACTOR SHALL BE RESPONSIBLE TO PROVIDE ALL BACKING REQUIRED TOILET ROOM ACCESSORIES.
4. CONTRACTOR TO FIELD VERIFY LOCATION AND PLACEMENT OF ALL FIXTURES AND ACCESSORIES AND COORDINATE WITH A.D.A. REQUIREMENTS
5. PROVIDE PLYWOOD BEHIND ALL MIRROR SURFACES FLUSH WITH TILE. EXTEND TILE 2" INSIDE EDGE OF MIRROR TO CONCEAL EDGE, TYPICAL.
6. TILE AT WALLS TO INCLUDE 15% FACTOR FOR ACCENT COLOR. PATTERN FOR ACCENT BANDS TO BE PROVIDED DURING CONSTRUCTION PERIOD USING FULL AND HALF SIZE PIECES (HALF SIZES MAY INCLUDE DIAGONAL CUTS).
7. ALL CORNERS AND TERMINATORS AT TILE SHALL BE BULLNOSED
8. CONTRACTOR SHALL PROVIDE ADA PIPE PROTECTION AT ALL EXPOSED PIPING

State of Utah
Department of Administrative Services
Division of Facilities
Construction & Management
4110 State Office Building
Salt Lake City, Utah 84114
Phone: (801) 538 - 3018
Fax: (801) 538 - 3267
Internet: http://www.dfcm.state.ut.us

Utah Valley
University
Orem, Utah

CREATED BY: P+A architects
P+A architects
821 East Kensington Ave.
Salt Lake City, Utah 84105
P: 801.484.1161
F: 801.485.4640
e-mail parchitects@comcast.net

STATE OF UTAH
REGISTERED
KEVIN J. ROLLO
161110
LICENSED ARCHITECT

architecture planning design

CONSULTANT:

PROJECT TITLE:
UTAH VALLEY UNIVERSITY
NEW PARKING AND
FACILITIES DEPARTMENT
BUILDING

UTAH VALLEY UNIVERSITY
936 SOUTH 400 WEST
OREM, UTAH

REVISIONS

MARK	DATE	DESCRIPTION

ISSUE TYPE: CONSTRUCTION DOCUMENTS

ISSUE DATE: August 2nd, 2010

CAD PROJECT NO: 09247790
CAD DWG FILE:
DRAWN BY: BRIAN AND SCOTT
CHK'D BY: SCOTT
COPYRIGHT: P&A architects

KEY PLAN

SHEET TITLE
INTERIOR ELEVATIONS
AND CASEWORK
DETAILS

SHEET NUMBER
A-IE800

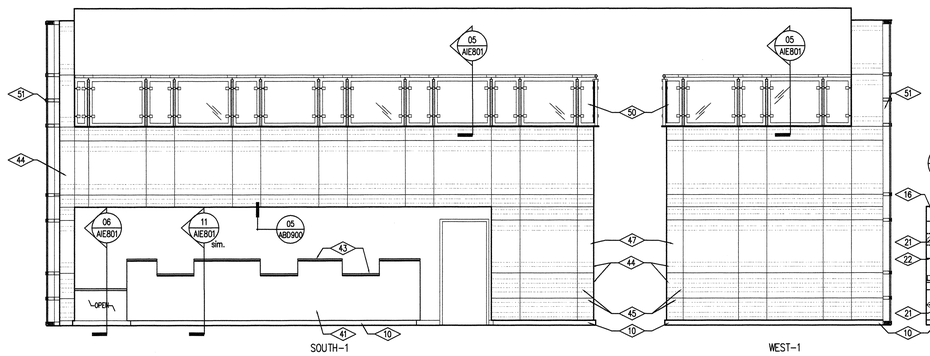

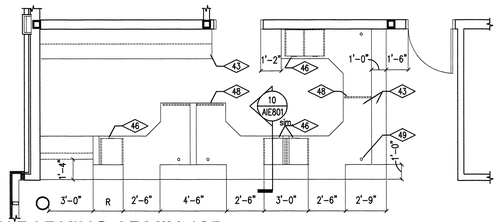

13 AIE801 PLAN VIEW PARKING ADMIN 135
1/4" = 1'-0"

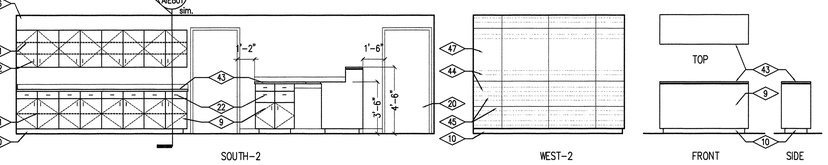

12 AIE801 INTERIOR ELEVATIONS PARKING ADMIN. 135 AND PARKING 136
SCALE 1/4" = 1'-0"

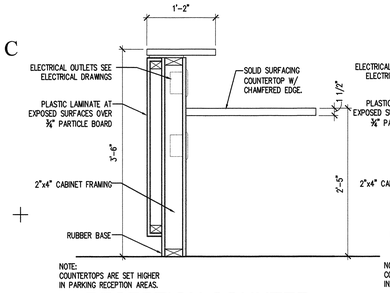

11 AIE801 RECEPTION COUNTER
SCALE 1" = 1'-0"

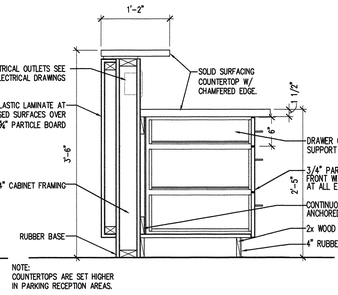

10 AIE801 RECEPTION COUNTER
SCALE 1" = 1'-0"

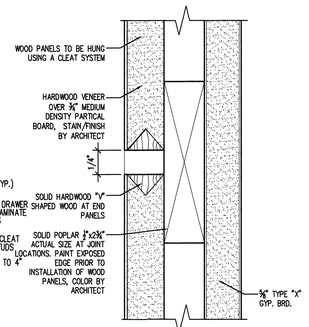

09 AIE801 DETAIL (AT REVEALS)
SCALE FULL

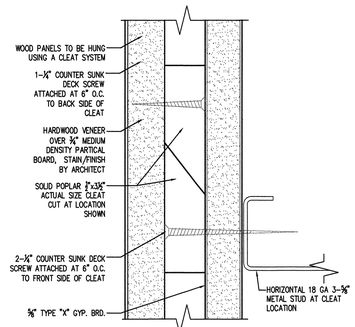

08 AIE801 CLEAT DETAIL
SCALE FULL

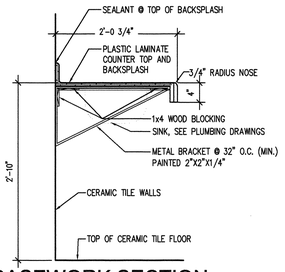

07 AIE801 CASEWORK SECTION
SCALE 1" = 1'-0"

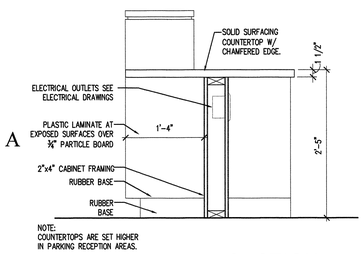

06 AIE801 ADA COUNTER SECTION
SCALE 1" = 1'-0"

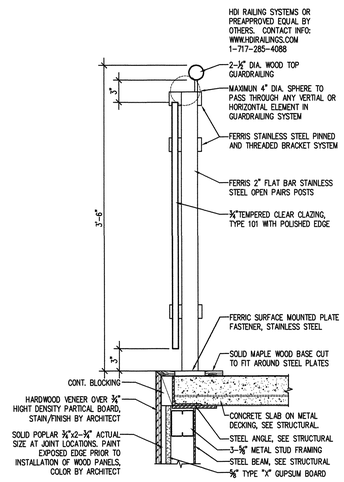

05 AIE801 GUARDRAILING SECTION
SCALE 1 1/2" = 1'-0"

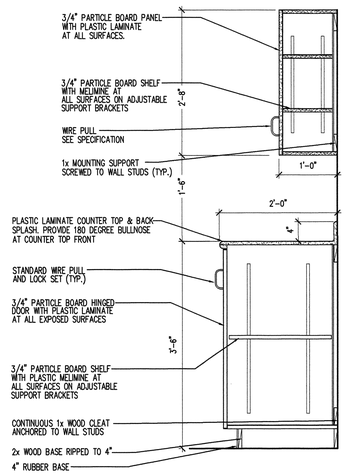

04 AIE801 CASEWORK SECTION
SCALE 1" = 1'-0"

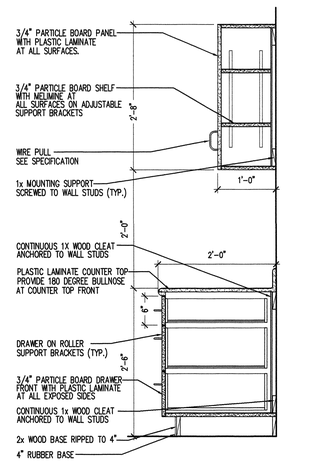

03 AIE801 CASEWORK SECTION
SCALE 1" = 1'-0"

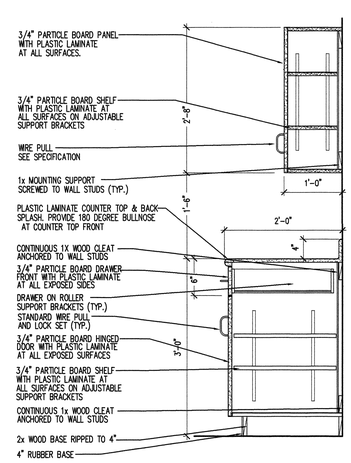

02 AIE801 CASEWORK SECTION
SCALE 1" = 1'-0"

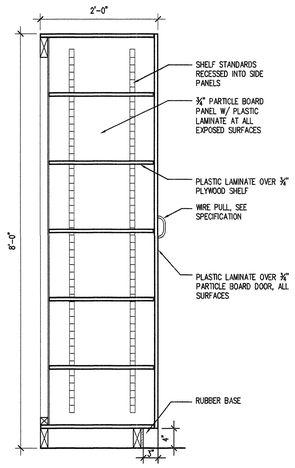

01 AIE801 CASEWORK SECTION
SCALE 1" = 1'-0"

REFERENCE NOTES

1. ACCESSIBLE WATER CLOSET, SEE PLUMBING DRAWINGS
2. WALL MOUNTED GRAB BAR, SEE SPECIFICATION
3. WALL MOUNTED SOAP DISPENSER, SEE SPECIFICATION
4. 6" COVED RUBBER BASE, SEE SPECIFICATION.
5. LAVATORY, SEE PLUMBING DRAWINGS
6. PRE-FORMED PLASTIC LAMINATE COUNTERTOP W/ FULL 180° DEGREE BULL NOSE & PRE-FORMED BACKSPLASH, SEE SECTION
7. STORE FRONT DOOR AND WINDOW SYSTEM, SEE SPECIFICATION
8. CERAMIC FLOOR TILE, SEE SPECIFICATION
9. PLASTIC LAMINATE CASE WORK, SEE INTERIOR ELEVATIONS, SECTIONS & SPECIFICATIONS
10. 4" STRIGHT EDGE RUBBER BASE, SEE SPECIFICATION 09653
11. COVED CERAMIC TILE BASE AT RESTROOM LOCATOINS
12. PAPER TOWEL DISPENSER, SEE SPECIFICATION
13. SANITATION SEAT COVERING DISPENSER, SEE SPECIFICATION 10801
14. TOILET PAPER DISPENSER, SEE SPECIFICATION
15. MIRROR, SEE SPECIFICATION
16. PRIMED AND PAINTED GYPSUM BOARD WALL, SEE FINISH SCHEDULE
17. CONTRACTOR SHALL PROVIDE ADA PIPE PROTECTION AT ALL EXPOSED PIPING
18. CERAMIC TILE WAINSCOT, SEE SPECIFICATION.
19. ADA ACCESSIBLE COUNTER, SEE CASEWORK SECTIONS
20. DOOR AND FRAME, SEE DOOR SCHEDULE
21. MELAMINE OVER ¾" PLYWOOD SHELVES, SEE SECTION.
22. CASEWORK DOOR PULLS, SEE SPECIFICATION
23. DASHED LINES INDICATE PLASTIC LAMINATE OVER ¾" PLYWOOD COUNTERTOP SUPPORTS.
24. FRP AT JANITORS SINK LOCATION, SEE SPECIFICATION
25. JANITORS SINK, SEE PLUMBING DRAWINGS
26. WALL MOUNTED MOP RACK WITH SHELF, SEE SPECIFICATION
27. WASTE BASKET, SEE SPECIFICATION.
28. OVERHEAD BRACED TOILET PARTITION, SEE SPECIFICATION.
29. WATER CLOSET, SEE PLUMBING DRAWINGS
30. HANDICAP URINAL, SEE PLUMBING DRAWINGS
31. URINAL, SEE PLUMBING DRAWINGS
32. PLASTIC LAMINATE COUNTERTOP AT RESTROOM LOCATION SEE SECTION.
33. MICROWAVE OVEN BY OWNER. COORDINATE LOCATION WITH ELECTRICAL DRAWINGS.
34. REFRIGERATOR BY OWNER.
35. DROPPED GYPSUM BOARD SOFFIT AT CONFERENCE ROOM.
36. PLASTIC LAMINATE DRAWERS, SEE SECTIONS AND SPECIFICATIONS.
37. BREAK ROOM SINK, SEE PLUMBING DRAWINGS.
38. PLASTIC LAMINATE CABINETS, SEE SECTIONS.
39. PLASTIC LAMINATE RECEPTION COUNTER TOP W/ FULL 180 DEGREE BULLNOSE, SEE SECTIONS.
40. PLASTIC LAMINATE OVER ¾" PLYWOOD COUNTERTOP SUPPORT.
41. PLASTIC LAMINATE RECEPTION COUNTER.
42. PAINTED METEL COUNTER TOP SUPPORT BRACKETS
43. CORIAN OR PRE-APPROVED EQUAL SOLID SURFACING COUNTER TOP AND BACK SPALSH
44. LOCATION OF CLEAT WOOD WALL SUPPORTS, SEE DETAIL THIS SHEET
45. REVEAL AT WOOD VENEER WALL, SEE DETAIL THIS SHEET.
46. DASHED LINES REPRESENT BASE CABINETS BELOW.
47. WHITE BIRCH VENEER OVER ¾" MEDIUM DENSITY PARTICLE BOARD WALL PANEL SYSTEM HUNG USING GRAVITY WALL CLEAT SYSTEM
48. DASHED LINES REPRESENT PLASTIC LAMINATE OVER 1" PLYWOOD COUNTERTOP SUPPORT BELOW.
49. 2" GROMMET AT COUNTER TOP.
50. 2nd LEVEL GUARD RAILING SYSTEM, SEE DETAIL THIS SHEET.
51. CURTAIN WALL WINDOW SYSTEM, SEE WINDOW TYPES..

GENERAL NOTES

1. REFER TO FINISH SCHEDULE FOR ADDITIONAL FINISH NOTES
2. CONTRACTOR SHALL PROVIDE ADDITIONAL STUDS AS REQUIRED FOR PARTITION AND FIXTURE INSTALLATIONS
3. GENERAL CONTRACTOR SHALL PROVIDE ALL NECESSARY BACKING AND ADDITIONAL STUDS AS REQUIRED FOR INSTALLATION OF TOILET PARTITIONS, URINAL SCREENS, ALL PLUMBING FIXTURES, APPLIANCES, COUNTER TOPS ETC. GENERAL CONTRACTOR SHALL BE RESPONSIBLE TO PROVIDE ALL BACKING REQUIRED TOILET ROOM ACCESSORIES.
4. CONTRACTOR TO FIELD VERIFY LOCATION AND PLACEMENT OF ALL FIXTURES AND ACCESSORIES AND COORDINATE WITH A.D.A. REQUIREMENTS

State of Utah
Department of Administrative Services
Division of Facilities Construction & Management
4110 State Office Building
Salt Lake City, Utah 84114
Phone: (801) 538 - 3018
Fax: (801) 538 - 3267
Internet: http://www.dfcm.state.ut.us

Utah Valley University
Orem, Utah

CREATED BY: P+A architects
P+A architects
821 East Kensington Ave.
Salt Lake City, Utah 84105
P: 801.484.1161
F: 801.485.4640
e-mail parchitects@comcast.net

STATE OF UTAH CERTIFIED ARCHITECT 251110

☐ architecture ☐ planning ☐ design

CONSULTANT:

PROJECT TITLE:
UTAH VALLEY UNIVERSITY NEW PARKING AND FACILITIES DEPARTMENT BUILDING

UTAH VALLEY UNIVERSITY
936 SOUTH 400 WEST
OREM, UTAH

REVISIONS

MARK	DATE	DESCRIPTION

ISSUE TYPE: CONSTRUCTION DOCUMENTS

ISSUE DATE: August 2nd, 2010

CAD PROJECT NO: 09247790
CAD DWG FILE:
DRAWN BY: BRIAN AND SCOTT
CHK'D BY: SCOTT

COPYRIGHT: P&A architects

KEY PLAN

SHEET TITLE
INTERIOR ELEVATIONS AND CASEWORK DETAILS

SHEET NUMBER
A-IE801

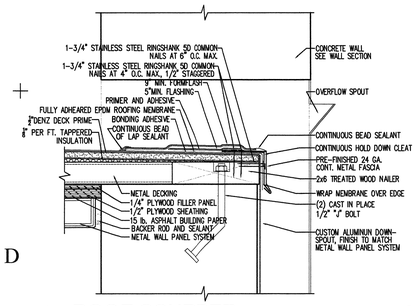

23 ABD900 ROOF SCUPPER
SCALE 3" = 1'-0"

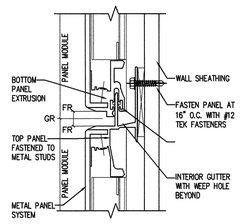

22 ABD900 METAL WALL PANEL DET.
SCALE 3" = 1'-0"

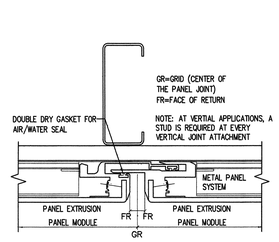

21 ABD900 METAL WALL PANEL DET.
SCALE 3" = 1'-0"

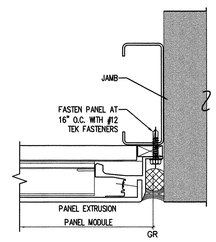

20 ABD900 METAL WALL PANEL DET.
SCALE 3" = 1'-0"

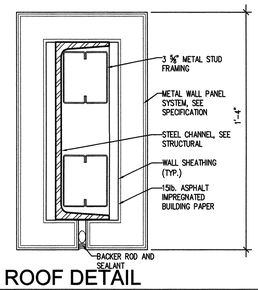

19 ABD900 ROOF DETAIL
SCALE 3" = 1'-0"

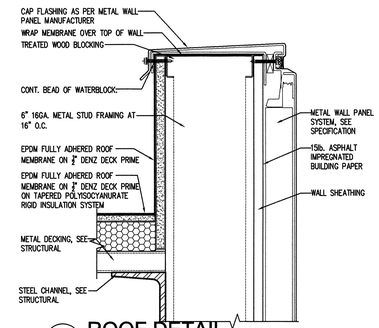

18 ABD900 ROOF DETAIL
SCALE 3" = 1'-0"

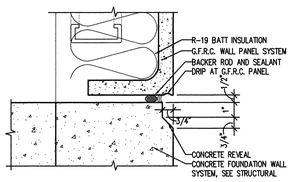

17 ABD900 WALL DETAIL
SCALE 3" = 1'-0"

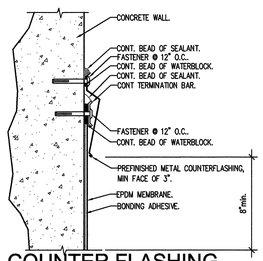

16 ABD900 COUNTER FLASHING
SCALE 3" = 1'-0"

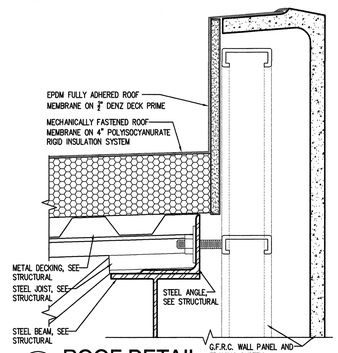

15 ABD900 ROOF DETAIL
SCALE 3" = 1'-0"

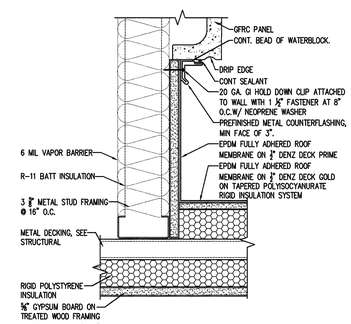

14 ABD900 ROOF DETAIL
SCALE 3" = 1'-0"

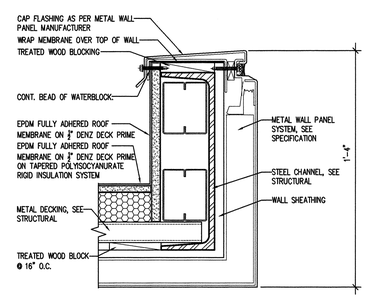

13 ABD900 ROOF DETAIL
SCALE 3" = 1'-0"

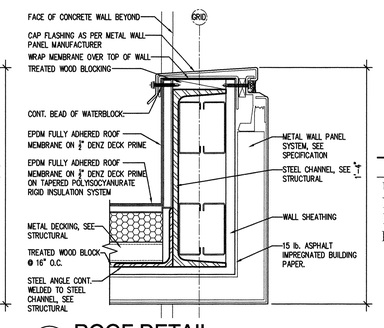

12 ABD900 ROOF DETAIL
SCALE 3" = 1'-0"

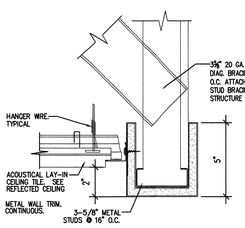

11 ABD900 BULK HEAD DETAIL
SCALE: 3" = 1'-0"

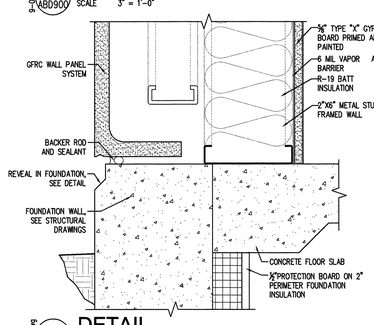

10 ABD900 DETAIL
SCALE: 3" = 1'-0"

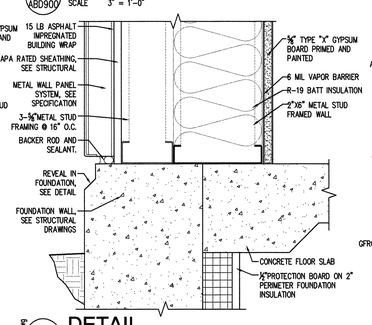

09 ABD900 DETAIL
SCALE: 3" = 1'-0"

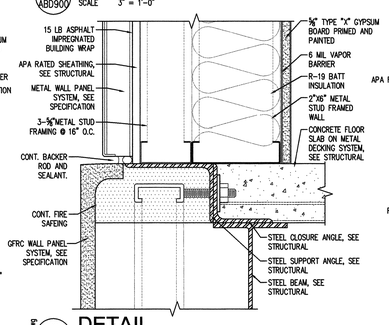

08 ABD900 DETAIL
SCALE: 3" = 1'-0"

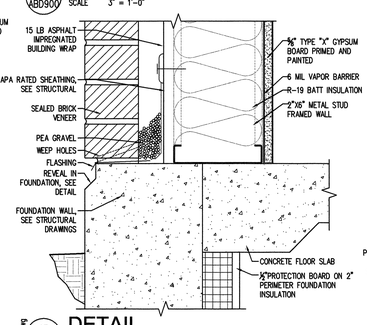

07 ABD900 DETAIL
SCALE: 3" = 1'-0"

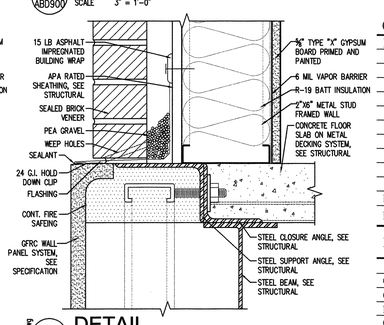

06 ABD900 DETAIL
SCALE: 3" = 1'-0"

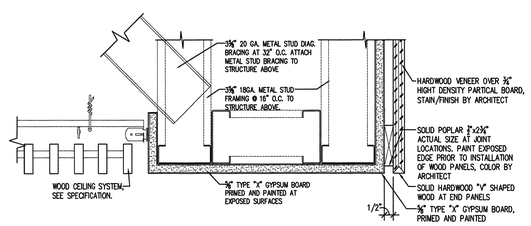

05 ABD900 CEILING DETAIL
SCALE: 3" = 1'-0"

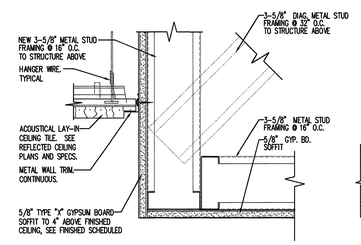

04 ABD900 SOFFIT DETAIL
SCALE 3" = 1'-0"

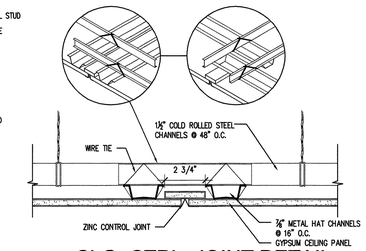

03 ABD900 CLG. CTRL. JOINT DETAIL
SCALE 3" = 1'-0"

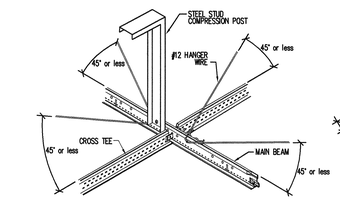

02 ABD900 HOR. RESTRAINT DETAIL
SCALE 3" = 1'-0"

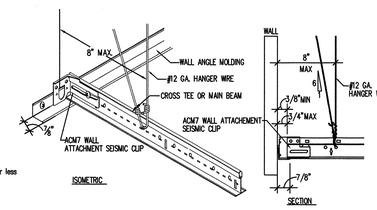

01 ABD900 LAY-IN CEILING DETAIL
SCALE 3" = 1'-0"

State of Utah
Department of Administrative Services
Division of Facilities Construction & Management
4110 State Office Building
Salt Lake City, Utah 84114
Phone: (801) 538 - 3018
Fax: (801) 538 - 3267
Internet: http://www.dfcm.state.ut.us

Utah Valley University
Orem, Utah

CREATED BY: P+A architects
P+A architects
821 East Kensington Ave.
Salt Lake City, Utah 84105
P: 801.484.1161
F: 801.485.4640
e-mail parchitects@comcast.net

architecture planning design

CONSULTANT:

PROJECT TITLE:
UTAH VALLEY UNIVERSITY NEW PARKING AND FACILITIES DEPARTMENT BUILDING

UTAH VALLEY UNIVERSITY
936 SOUTH 400 WEST
OREM, UTAH

REVISIONS

MARK	DATE	DESCRIPTION

ISSUE TYPE: CONSTRUCTION DOCUMENTS
ISSUE DATE: August 2nd, 2010

CAD PROJECT NO: 09247790
CAD DWG FILE:
DRAWN BY: BRIAN AND SCOTT
CHK'D BY: SCOTT
COPYRIGHT: P&A architects

KEY PLAN

SHEET TITLE
CEILING AND BUILDING DETAILS

SHEET NUMBER
A-BD900

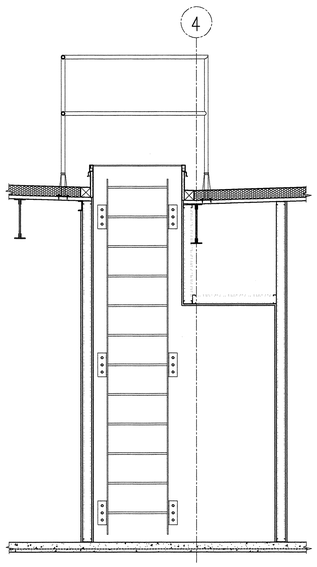

10 ABD901 LADDER ELEVATION SCALE 1/2" = 1'-0"

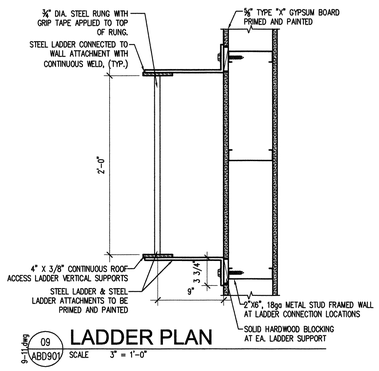

09 ABD901 LADDER PLAN SCALE 3" = 1'-0"

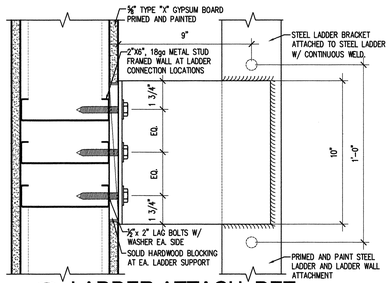

08 ABD901 LADDER ATTACH. DET SCALE 3" = 1'-0"

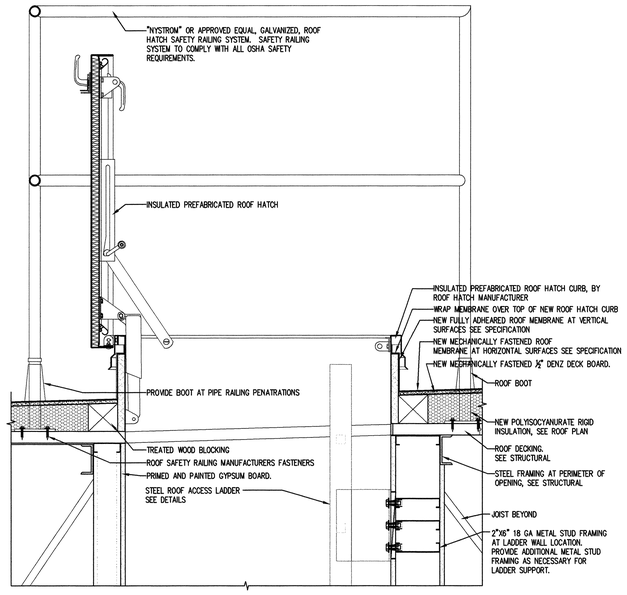

07 ABD901 HATCH DETAIL SCALE 1-1/2" = 1'-0"

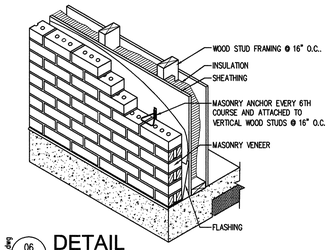

06 ABD901 DETAIL SCALE: N.T.S.

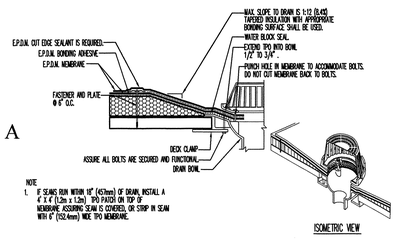

05 ABD901 ROOF DRAIN SCALE N.T.S.

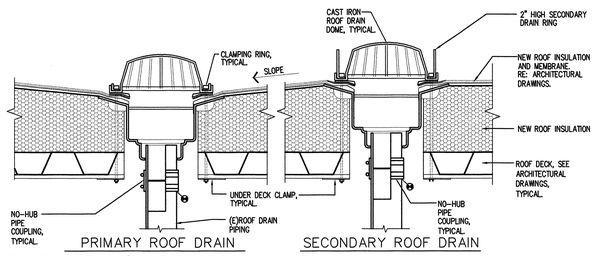

04 ABD901 ROOF DRAINS N.T.S.

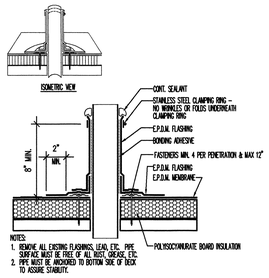

03 ABD901 PIPE WRAP SCALE N.T.S.

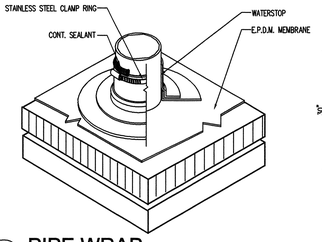

02 ABD901 PIPE WRAP SCALE N.T.S.

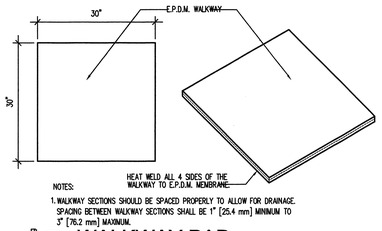

01 ABD901 WALKWAY PAD SCALE N.T.S.

State of Utah

Department of Administrative Services

Division of Facilities Construction & Management
4110 State Office Building
Salt Lake City, Utah 84114
Phone: (801) 538 - 3018
Fax: (801) 538 - 3267
Internet: http://www.dfcm.state.ut.us

Utah Valley University
Orem, Utah

CREATED BY: P+A architects

P+A architects
821 East Kensington Ave.
Salt Lake City, Utah 84105
P: 801.484.1161
F: 801.485.4640
e-mail parchitects@comcast.net

STATE OF UTAH LICENSED ARCHITECT

architecture planning design

CONSULTANT:

PROJECT TITLE:

UTAH VALLEY UNIVERSITY
NEW PARKING AND
FACILITIES DEPARTMENT
BUILDING

UTAH VALLEY UNIVERSITY
936 SOUTH 400 WEST
OREM, UTAH

REVISIONS

MARK	DATE	DESCRIPTION

ISSUE TYPE: CONSTRUCTION DOCUMENTS

ISSUE DATE: August 2nd, 2010

CAD PROJECT NO: 09247790
CAD DWG FILE:
DRAWN BY: BRIAN AND SCOTT
CHK'D BY: SCOTT
COPYRIGHT: P&A architects

KEY PLAN

SHEET TITLE

ROOF AND ROOF ACCESS DETAILS

SHEET NUMBER

A-BD901

STRUCTURAL GENERAL NOTES

A. GENERAL

1. The contractor shall verify all dimensions prior to starting construction. The architect shall be notified of any discrepancies or inconsistencies.
2. Dimensions shall take precedence over scale shown on drawings.
3. Notes and details on drawings shall take precedence over general notes and typical notes.
4. All work shall conform to the minimum standards of the following code. The 2006 edition of the International Building Code, and any other regulating agencies which have authority over any portion of the work, and those codes and standards listed in these notes and specifications.
5. See architectural drawings for the following:
   - Size and location of all door and window openings, except as noted.
   - Size and location of all interior and exterior nonbearing partitions.
   - Size and location of all concrete curbs, floor drains, slopes, depressed areas, changes in level, chamfers, grooves, inserts, etc.
   - Size and location of floor and roof openings except as shown
   - Floor and roof finishes
   - Stair framing and details (except as shown)
6. See mechanical, plumbing, and electrical drawings for the following:
   - Pipe runs, sleeves, hangers, trenches, wall and slab openings, etc. Except as shown or noted.
   - Electrical conduit runs, boxes, outlets in walls and slabs.
   - Concrete inserts for electrical, mechanical or plumbing fixtures.
   - Size and location of machine or equipment bases, anchor bolts for mounts.
7. The contract structural drawings and specifications represent the finished structure. They do not indicate the method of construction. The contractor shall provide all measures necessary to protect the structure during construction. Such measure shall include, but not be limited to, bracing, shoring for loads due to construction equipment, etc. Observation visits to the site by the structural engineer shall not include inspection of the above structural members.
8. Openings, pockets, etc. larger than 6 inches shall not be placed in slabs, decks, beams, joists, columns, walls, etc. unless specifically detailed on the structural drawings. Notify the structural engineer when drawings by others show openings, pockets, etc. not shown on the structural drawings, but which are located on structural members.
9. ASTM specifications noted shall be the latest revision.
10. Contractor shall investigate site during clearing and earthwork operations for filled excavations or buried structures such as cesspools, cisterns, foundations, etc. If any such structures are found, the structural engineer shall be notified immediately.
11. Construction materials shall be spread out if placed on floors or roof. Load shall not exceed the design live load per square foot. Provide adequate shoring and/or bracing where structure has not attained design strength.
12. Design Loads:
    - Roof:
      - 18 psf DEAD
      - 20 psf LIVE
      - 32 psf SNOW (Pg = 45 psf)
        SNOW Is = 1.10
    - Floor:
      - 70 psf DEAD
      - 50 psf LIVE (Reducible)
      - 125 psf Live in Archive Room
    - Wind:
      - Velocity 90 mph (3 sec. Gust)
      - Exposure "B"
      - Importance: 1.15
      - Internal Coefficient: 1.0
      - Components and Cladding: See Individual Locations
    - Seismic:
      - S_s = 1.17 S_1 = 0.49
      - S_{DS} = 0.8 S_{D1} = 0.49
      - Importance: 1.0
      - Seismic Design Category "D"
      - Occupancy Category: "II"
      - Site Class: "C"
      - V = 120.5 kips
      - System: Special Concentric Braced Frames
      - Method: Equivalent Lateral Force
    - Flood Loads: Not Applicable
    - Special Loads: Not Applicable

B. FOUNDATION

1. Footings are designed based on an allowable soil pressure of 2000 PSF per the project soils report. Footings and foundations have been designed in accordance with the soils report prepared by:

   Applied Geotechnical Engineering Conultants
   Job Number: 1090751
   Date: December 3, 2009

2. Contractor shall provide for proper de-watering of excavations from surface water, ground water, seepage, etc.
3. Footings shall be placed according to depths shown on the drawings.
4. Footing back fill and utility trench back fill within building area shall be mechanically compacted in layers. Flooding will not be permitted.
5. All abandoned footings, utilities, etc. that interfere with new construction shall be removed.
6. The soil under perimeter beams and slabs shall be above optimum moisture as described in the referenced geotechnical report prior to concrete placement and shall be verified by the soils engineer.
7. Holdown anchor bolts shall meet the requirements of detail 2/S1.1.
8. All ½" dia. anchor bolts may be replaced with ICBO approved ½" dia. wedge or sleeve anchors or Titen HD screws at the same spacing. Provide a min. of 4" embedment.

C. CONCRETE

1. All phases of work pertaining to the concrete construction shall conform to the "Building Code Requirements for Reinforced Concrete" (ACI 318 latest approved edition) with modifications as noted in the drawings and specifications.
2. Reinforced concrete design is by the "ultimate strength design method", ACI 318-(latest edition)
3. Schedule of structural concrete 28-day strengths and types:

Location in structure	Strength PSI	Type
Slabs on Grade	4000	Hard rock
Footings	4000	Hard rock

   Design based on 2500 PSI, 28-day strength, special inspection is required only where indicated on foundation plans.
4. Concrete mix design shall be submitted to the engineer for approval with the following requirements:
   a. Compressive strength at age 28 days as specified above.
   b. Large aggregate-hardrock, ¾" maximum size conforming to ASTM C-33
   c. Cement-ASTM C-150, Type I or II Portland cement
   d. Maximum slump 5-inches, max water cement ratio: 0.50
   e. No admixtures, except for entrained air, and as approved by the engineer.
5. Concrete mixing operations, etc. shall conform to ASTM C-94
6. Placement of concrete shall conform to ACI standard 514 and project specifications.
7. Clear coverage of concrete over outer reinforcing bars shall be as follows: Concrete poured directly against earth - 3 inches clear, structural slabs - 3/4 inches clear (top and bottom), formed concrete with earth back fill - 2 inches clear.
8. All reinforcing bars, anchor bolts and other concrete inserts shall be well secured in position prior to placing concrete.
9. Provide sleeves for plumbing and electrical openings in concrete before placing. Do not cut any reinforcing that may conflict. Coring in concrete is not permitted except as shown. Notify the structural engineer in advance of conditions not shown on the drawings.
10. Conduit or pipe size (O.D.) shall not exceed 30% of slab thickness and shall be placed between the top and bottom reinforcing, unless specifically detailed otherwise. Concentrations of conduits or pipes shall be avoided except where detailed openings are provided.
11. Modulus of elasticity of concrete, when tested in accordance with ASTM C-460, shall be at least the value given by the equations in section 8.5.1 of ACI 318 for the specified 28-day strength.
12. Shrinkage of concrete, when tested in accordance with ASTM C-157, shall not exceed 0.00040 inches/inch.

D. REINFORCING STEEL

1. Reinforcing bars shall conform to the requirements of ASTM A-615 grade 60.
2. All reinforcing bar bends shall be made cold
3. Minimum lap of welded wire fabric shall be 6 inches or one full mesh and one half, which ever is greater.
4. All bars shall be marked so their identification can be made when the final in-place inspection is made.
5. Rebar splices are to be: Class "B"
6. Reinforcing splices shall be made only where indicated on the drawings.
7. Dowels between footings and walls or columns shall be the same grade, size and spacing or number as the vertical reinforcing, respectively.

E. METAL DECKING

1. Steel decking shall be manufactured by Verco in depths and gages shown on the structural drawing. Exception: alternate decking design & manufacturer may be used with engineers approval. Alternate decking design shall provide equivalent vertical load & shear load capacity as original decking design.
2. The gage and attachment of the deck is designed to provide a diaphragm shear capacity. Other ICC approved methods of attachment and gage will be acceptable as an equal if they meet the diaphragm shear capacity as decking design shown on structural drawings.
3. All steel decking finish shall be galvanized.

F. OPEN WEB STEEL JOISTS

1. Open web steel joists shall be engineered and fabricated in accordance with the 2006 International Building Code, Chapter 22, Section 2206 and the requirements of the Steel Joist Institute (SJI). The manufacturer shall design joists and girders for uniform loads shown, plus additional concentrated loads, axial loads, uplift loads, etc. as noted on the framing plans and details.
2. Limit LL deflection to L/360 and TL deflection to L/240.
3. Provide horizontal or diagonal type bridging for joists as required complying with SJI specifications.
4. Provide bridging anchors for ends of bridging lines terminating at walls or beams.
5. Provide end anchorages to secure joists to adjacent construction, complying with SJI specifications.
6. All joists shall be shop painted. Remove loose scale, heavy rust, and other foreign materials from fabricated joists and accessories before application of shop paint.
7. Provide temporary bridging, connections, and anchors to ensure lateral stability during construction. Hoisting cables shall not be slackened until erection bridging is installed and anchored.
8. Install bridging simultaneously with joist erection, before construction loads are applied. Anchor ends of bridging lines at top and bottom chords where terminating at walls or beams.
9. Weld joists to supporting steel framework where indicated in accordance with details and SJI specifications. Coordinate welding sequence and procedure with placing of joists.
10. Steel joists and girders to be a deferred submittal, shop drawings to be submitted to and approved by the Engineer-of-Record prior to building department submittal.
11. Design all joists for 1.0K axial load unless noted otherwise on plans.
12. Design all girders for 10.0K axial load unless noted otherwise on plans.
13. Joists shall be designed for an additional 500 lbs concentrated load at any one panel point.
14. Girders shall be designed for an additional 1000 lbs concentrated load at any one panel point.
15. Align joist panel points to facilitate duct passage where required by the Architectural or Mechanical drawings. Align joist panel points to facilitate sprinkler branch line passage.
16. Joist manufacture to add the weight of the sprinkler mains, 4" diameter and larger, to the joists and affected girder panel points.
17. A certificate of compliance must be submitted to the building official upon completion of fabrication per IBC 2206.5.

I. LIGHT GAGE STEEL FRAMING

1. All steel studs shall be painted and be the type, size, and gauge shown on the plans.
2. 14 and 16 gauge studs and joists shall be formed from mill certified "prime steel" conforming to ASTM A570 grade 50 steel. 18 and 20 gauge studs and all painted track, bridging, end enclosures and accessories shall e formed from steel that conforms to the requirements of ASTM 611, grade C with a minimum yield strength of 33 ksi.
3. All studs, track and accessories shall be primed with rust-inhibitive paint meeting the performance requirements of TT-P-636C.
4. All framing components shall be cut squarely for attachment to perpendicular members, or as required for an angular fit against abutting members. Members shall be held positively in place until properly fastened.
5. Axially loaded studs shall be installed in a manner which will ensure that ends of the studs are positioned against the inside track web, prior to stud and track attachment.
6. Tracks shall be securely anchored to the supporting structure as shown on the plans.
7. Complete uniform and level bearing support shall be provided for the bottom track.
8. At track butt joints, abutting pieces of track shall be securely anchored to a common structural element, or they shall be butt welded or spliced together.
9. Studs shall be plumbed, aligned and securely attached to the flanges or webs of both upper an lower tracks.
10. Framed wall openings shall include headers and supporting studs as shown on the plans.
11. Temporary bracing shall be provided until erection is completed.
12. Wall stud bridging shall be installed in a manner to provide resistance to both minor axis bending and rotation. Bridging rows shall be equally spaced not to exceed 5'-0" o.c.
13. Splices in axially loaded studs shall not be permitted.
14. Connection hardware shall be ICC approved.

J. SHOP DRAWINGS

1. Shop drawings shall be submitted for all structural items in addition to items required by architectural specifications.
2. The contractor shall review all shop drawings prior to submittal. Items not in accordance with contract drawings shall be flagged for review.
3. Verify all dimensions with architect.
4. Any changes, substitutions, or deviations from original contract drawings shall be redlined or flagged by submitting parties, shall be considered approved after engineers review, unless noted otherwise.
5. The engineer has the right to approve or disapprove any changes to the original drawings at anytime before or after shop drawings review.
6. The shop drawings do not replace the original contract drawings. Items omitted or shown incorrectly and are not flagged by the structural engineer or architect are not to be considered changes to the original contract drawings.
7. The adequacy of engineering designs and layout performed by the others rests with the designing or submitting authority.
8. Reviewing is intended only as an aid to the contractor in obtaining correct shop drawings. Responsibility for corrections shall rest with the contractor.

L. STRUCTURAL STEEL

1. Hot-rolled structural steel shapes & plates shall be per ASTM A36 with the following exception. All W-Flange shapes shall be per ASTM A992.
2. Structural steel pipe shall be per ASTM A53 grade B, Tube steel per ASTM A500 Grade B.
3. Nuts & bolts in structural steel connections shall be per ASTM 325N, with hardened washers. Design is based upon bearing type connections with thread not excluded, therefore, no special inspection required.
4. Anchor bolts shall be per ASTM A307, U.N.O.
5. Welds shall be by E70XX, low hydrogen electrodes, all welding shall be performed in a shop approved by the building official.
6. Grout material for base plates shall be non-metallic, non-shrink, pre-packaged grout conforming to ASTM C 1107.

K. SPECIAL INSPECTION / QUALITY ASSURANCE PLAN

1. The seismic lateral load resisting system consists of Special Concentric Braced Frames
2. Special inspections shall be required:
   * All field welding (periodic at field welds ≤ 5/16")
   * All concrete foundation walls (periodic)
   * All high-strength bolting operations
   * All post-installed anchorage to concrete (continuous at epoxy grout applications)
   * Column Anchorage to foundation
   * All CMU walls
   a. All special inspections shall be performed by an independent certified inspector from an established testing agency, licensed and approved by the building department.
   b. The testing agency shall send copies of all structural testing and inspection reports directly to Vector Structural Engineers and all interested parties.
3. Structural testing is not required.
4. All reports shall be distributed on a monthly basis to the engineer of record, owner, contractor, and to the building official.
5. No structural observation is required. However, the engineer of record reserves the right to make field observations during construction approximately once per week.
6. See sheet S400 for Special Inspection Tables.

SHEET INDEX

SHT #	SHEET NAME	ORIGINAL	MM-DD-YY	MM-DD-YY	MM-DD-YY	MM-DD-YY	MM-DD-YY	MM-DD-YY	MM-DD-YY	MM-DD-YY	MM-DD-YY
S100	STRUCTURAL GENERAL NOTES	●									
S101	STANDARD DETAILS	●									
S200	FOUNDATION PLAN	●									
S201	FLOOR FRAMING PLAN	●									
S202	ROOF FRAMING PLAN	●									
S300	FOUNDATION AND FRAME DETAILS	●									
S301	FRAMING DETAILS	●									
S302	FRAMING DETAILS	●									
S400	SPECIAL INSPECTION TABLES	●									

ABBREVIATIONS

A.B.	ANCHOR BOLT	LVL	LAMINATED VENEER LUMBER
ARCH'L	ARCHITECTURAL DRAWINGS	MFR	MANUFACTURED
BLDG	BUILDING	N.T.S.	NOT TO SCALE
BLK	BLOCK	o/	OVER
BLK'G	BLOCKING	O.C.	ON CENTER
BM	BEAM	OPT'L	OPTIONAL
CANT'L	CANTILEVERED	O.S.B.	ORIENTED STRAND BOARD
℄	CENTER LINE	P.S.L.	PARALLEL STRAND LUMBER
CLG	CEILING	PL	PLATE
CMU	CONCRETE MASONRY UNIT	REQ'D	REQUIRED
COL	COLUMN	SHTH'G	SHEATHING
CONT	CONTINUOUS	SHT	SHEET
DBL	DOUBLE	SIM	SIMILAR
DTL	DETAIL	STL	STEEL
EL	ELEVATION	SW	STRONG-WALL
EOR	ENGINEER OF RECORD	T.O.F.	TOP OF FOOTING
FND	FOUNDATION	T.O.W.	TOP OF WALL
FTG	FOOTING	T&B	TOP AND BOTTOM
GL	GLUE LAMINATED (BEAM)	TYP.	TYPICAL
HDR	HEADER	U.N.O.	UNLESS NOTED OTHERWISE
HORIZ.	HORIZONTAL	VERT.	VERTICAL
H.D.	HOLD DOWN	w/	WITH
L.S.L	LAMINATED STRAND LUMBER		

RELEASE DATE AUGUST 2, 2010

State of Utah
Department of Administrative Services
Division of Facilities Construction & Management
4110 State Office Building
Salt Lake City, Utah 84114
Phone: (801) 538 - 3018
Fax: (801) 538 - 3267
Internet: http://www.dfcm.state.ut.us

Utah Valley University
Orem, Utah

CREATED BY: P+A architects
P+A architects
821 East Kensington Ave.
Salt Lake City, Utah 84105
P: 801.484.1161
F: 801.485.4640
e-mail parchitects@comcast.net

architecture ☐ planning ☐ design

CONSULTANT:
VECTOR engineers
9138 S. State Street, Suite 101 (801) 990-1775
Sandy, Utah 84070 (801) 990-1776 FAX
U1044-015-091
Professional Structural Engineer No. 5539760 Jacob S. Proctor State of Utah
AUG 0 2 2010

PROJECT TITLE:
UTAH VALLEY UNIVERSITY
NEW PARKING AND FACILITIES DEPARTMENT BUILDING

UTAH VALLEY UNIVERSITY
936 SOUTH 400 WEST
OREM, UTAH

REVISIONS

MARK	DATE	DESCRIPTION

ISSUE TYPE: CONSTRUCTION DOCUMENTS
ISSUE DATE: 2nd August, 2010
CAD PROJECT NO: 09247790
CAD DWG FILE:
DRAWN BY: MIKE AND JACOB
CHK'D BY: SCOTT
COPYRIGHT: P&A architects

KEY PLAN

SHEET TITLE
STRUCTURAL GENERAL NOTES

SHEET NUMBER
S100

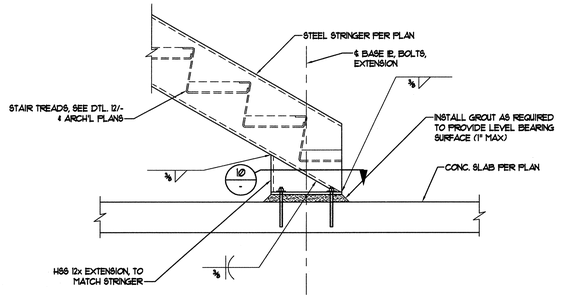

N.T.S. **9**

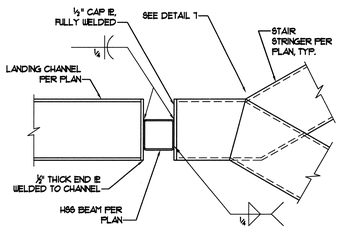

NOTE:
DECK AND STAIR TREADS NOT SHOWN FOR CLARITY

N.T.S. **13**

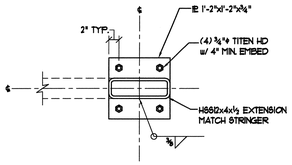

N.T.S. **10**

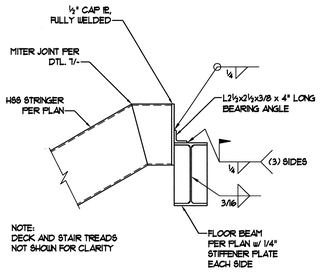

NOTE:
DECK AND STAIR TREADS NOT SHOWN FOR CLARITY

N.T.S. **14**

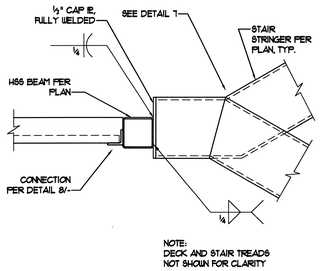

NOTE:
DECK AND STAIR TREADS NOT SHOWN FOR CLARITY

N.T.S. **11**

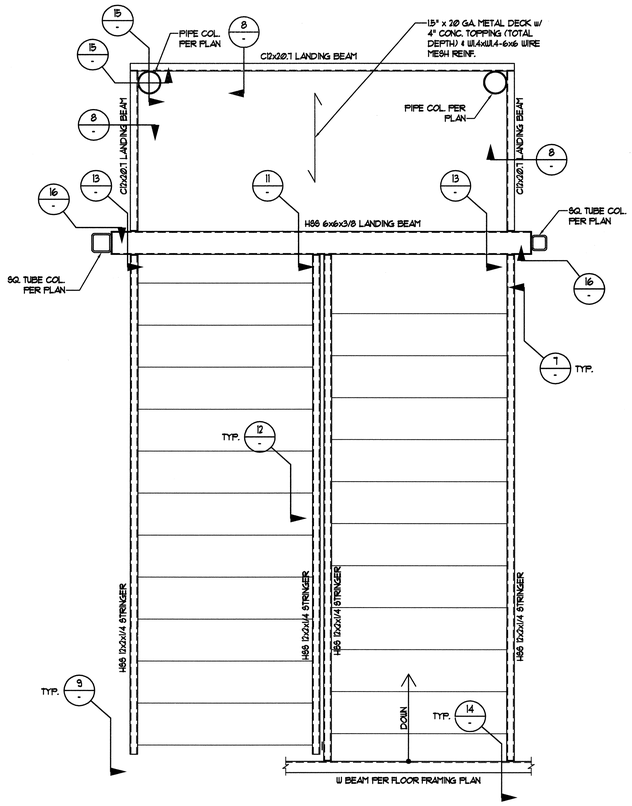

NOTE:
SEE ARCHITECTURAL PLANS FOR STAIRWAY DIMENSIONS.

STAIR PLAN

N.T.S. **5**

FOOTING SCHEDULE		
MARK	SIZE	REBAR
F2.0	2'-0" SQ. x 12" DEEP	(3) # 4 EACH WAY
F2.5	2'-6" SQ. x 12" DEEP	(4) # 4 EACH WAY
F3.0	3'-0" SQ. x 12" DEEP	(4) # 4 EACH WAY
F3.5	3'-6" SQ. x 12" DEEP	(5) # 4 EACH WAY
F4.0	4'-0" SQ. x 12" DEEP	(6) # 4 EACH WAY
F4.5	4'-6" SQ. x 12" DEEP	(6) # 4 EACH WAY
F5.0	5'-0" SQ. x 12" DEEP	(7) # 4 EACH WAY
F5.5	5'-6" SQ. x 13" DEEP	(8) # 4 EACH WAY
F6.0	6'-0" SQ. x 13" DEEP	(8) # 4 EACH WAY
F6.5	6'-6" SQ. x 18" DEEP	(6) # 4 EACH WAY TOP AND BOTTOM
F7.0	7'-0" SQ. x 18" DEEP	(7) # 4 EACH WAY TOP AND BOTTOM
F7.5	7'-6" SQ. x 18" DEEP	(8) # 4 EACH WAY TOP AND BOTTOM
F8.0	8'-0" SQ. x 18" DEEP	(8) # 4 EACH WAY TOP AND BOTTOM
F8.5	8'-6" SQ. x 18" DEEP	(9) # 4 EACH WAY TOP AND BOTTOM

STANDARD SPOT FOOTING SCHEDULE

N.T.S. **1**

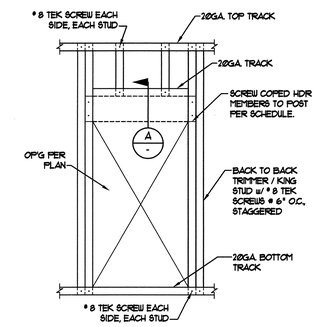

NOTE: INTERIOR NON-BEARING WALLS: 20 GA. 1625" x 4" @ 24" O.C. U.N.O.
TYPICAL BEARING WALLS: 20 GA. 1625" x 6" @ 16" O.C. U.N.O.

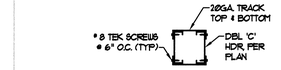

NOTE: SCREW COPED HDR MEMBERS TO TRIMMER PER SCHEDULE.

A BOX HEADER

CONNECTION SCHEDULE		
HEADER (2-PLY)	SCREW TYPE	# OF SCREWS
800S162-54	# 10	7 EA MEMBER

NOTE: 1. GAGE OF TRIMMER / KING STUD AT MINIMUM TO MATCH THAT OF HEADER.
2. 800S162-54 INDICATES: 8" WIDE (800), 1-5/8" FLANGE WIDTH (162), & 54 MILS THICKNESS.

N.T.S. **2**

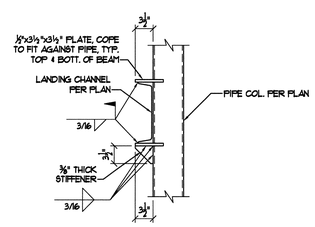

N.T.S. **15**

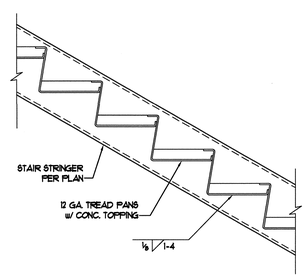

N.T.S. **12**

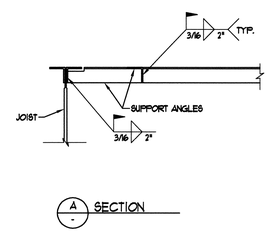

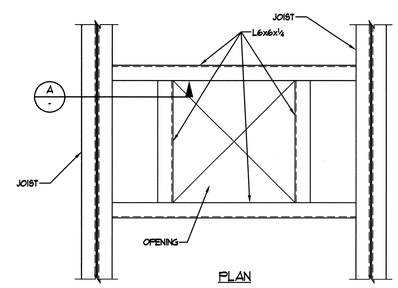

TYPICAL ROOF OPENING

N.T.S. **6**

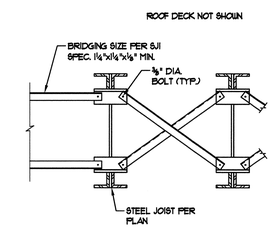

TYPICAL JOIST BRIDGING

N.T.S. **3**

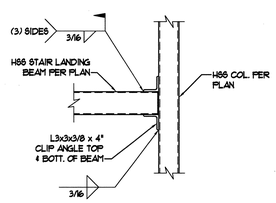

N.T.S. **16**

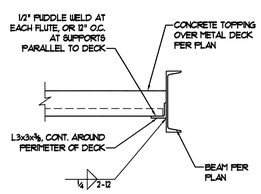

N.T.S. **8**

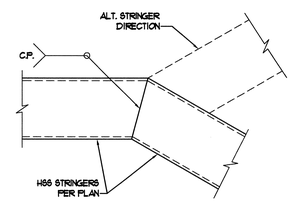

NOTE:
DECK AND STAIR TREADS NOT SHOWN FOR CLARITY

N.T.S. **7**

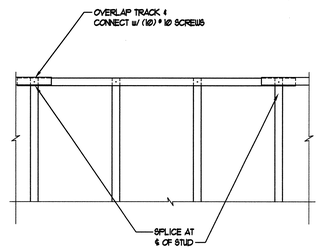

TYPICAL TOP TRACK SPLICE

N.T.S. **4**

State of Utah
Department of Administrative Services
Division of Facilities Construction & Management
4110 State Office Building
Salt Lake City, Utah 84114
Phone: (801) 538 - 3018
Fax: (801) 538 - 3267
Internet: http://www.dfcm.state.ut.us

Utah Valley University
Orem, Utah

CREATED BY: P+A architects
P+A architects
821 East Kensington Ave.
Salt Lake City, Utah 84105
P: 801.484.1161
F: 801.485.4640
e-mail parchitects@comcast.net
architecture planning design

CONSULTANT:
VECTOR engineers
9138 S. STATE STREET, SUITE 101 (801) 990-1775
SANDY, UTAH 84070 (801) 990-1776 FAX
U1044-015-091
PROFESSIONAL STRUCTURAL ENGINEER No. 5339760 JACOB S. PROCTOR STATE OF UTAH
AUG 0 2 2010

PROJECT TITLE:
UTAH VALLEY UNIVERSITY NEW PARKING AND FACILITIES DEPARTMENT BUILDING

UTAH VALLEY UNIVERSITY
936 SOUTH 400 WEST
OREM, UTAH

REVISIONS

MARK	DATE	DESCRIPTION

ISSUE TYPE: CONSTRUCTION DOCUMENTS
ISSUE DATE: 2nd August, 2010

CAD PROJECT NO: 09247790
CAD DWG FILE:
DRAWN BY: MIKE AND JACOB
CHK'D BY: SCOTT
COPYRIGHT: P&A architects

KEY PLAN

SHEET TITLE
STANDARD DETAILS

SHEET NUMBER
S101

FOUNDATION NOTES:

1. CONTRACTOR SHALL VERIFY DIMENSIONS W/ ARCHITECTURAL DRAWINGS PRIOR TO CONSTRUCTION.
2. ISOLATED FOOTINGS & INTERIOR STRIP FOOTINGS TO BE CENTERED BELOW POSTS & BEARING, RESPECTIVELY.
3. SEE SHEET S101 FOR FOOTING SCHEDULE.

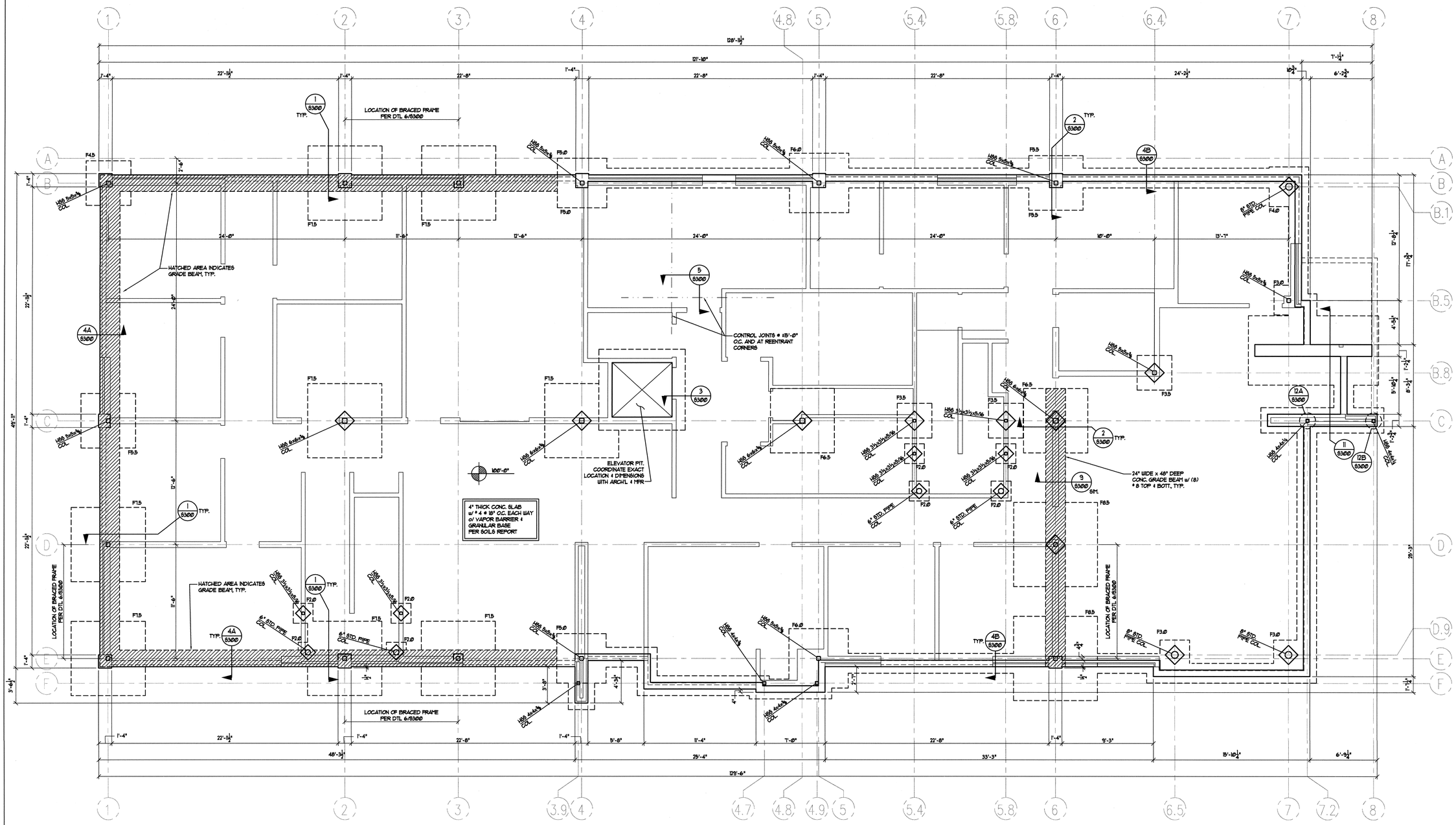

FOUNDATION PLAN

1/4" = 1'-0"

State of Utah

Department of Administrative Services

Division of Facilities Construction & Management
4110 State Office Building
Salt Lake City, Utah 84114
Phone: (801) 538 - 3018
Fax: (801) 538 - 3267
Internet: http://www.dfcm.state.ut.us

Utah Valley University
Orem, Utah

CREATED BY: P+A architects

P+A architects
821 East Kensington Ave.
Salt Lake City, Utah 84105
P: 801.484.1161
F: 801.485.4640
e-mail parchitects@comcast.net

architecture ▯ planning ▯ design

CONSULTANT:

VECTOR engineers
9138 S. STATE STREET, SUITE 101 (801) 990-1775
SANDY, UTAH 84070 (801) 990-1776 FAX

U1044-015-091

PROFESSIONAL STRUCTURAL ENGINEER No. 5359760 JACOB S. PROCTOR STATE OF UTAH
AUG 0 2 2010

PROJECT TITLE:

UTAH VALLEY UNIVERSITY NEW PARKING AND FACILITIES DEPARTMENT BUILDING

UTAH VALLEY UNIVERSITY
936 SOUTH 400 WEST
OREM, UTAH

REVISIONS

MARK	DATE	DESCRIPTION

ISSUE TYPE: CONSTRUCTION DOCUMENTS

ISSUE DATE: 2nd August, 2010

CAD PROJECT NO: 09247790
CAD DWG FILE:
DRAWN BY: MIKE AND JACOB
CHK'D BY: SCOTT

COPYRIGHT: P&A architects

KEY PLAN

SHEET TITLE

FOUNDATION PLAN

SHEET NUMBER

S200

NOTES:
1. SEE DTL 2/6101 FOR SIZES OF STEEL STUDS AND HEADERS
2. INDICATES 125 PSF LIVE LOAD
3. SEE DTL 5/6101 FOR TYPICAL CMU CONSTRUCTION & LINTEL SIZES
4. FLOOR TRUSS DESIGN TO BE VERIFIED BY MFR FOR LOADS SHOWN ON PLANS (TL/LL) PLF.

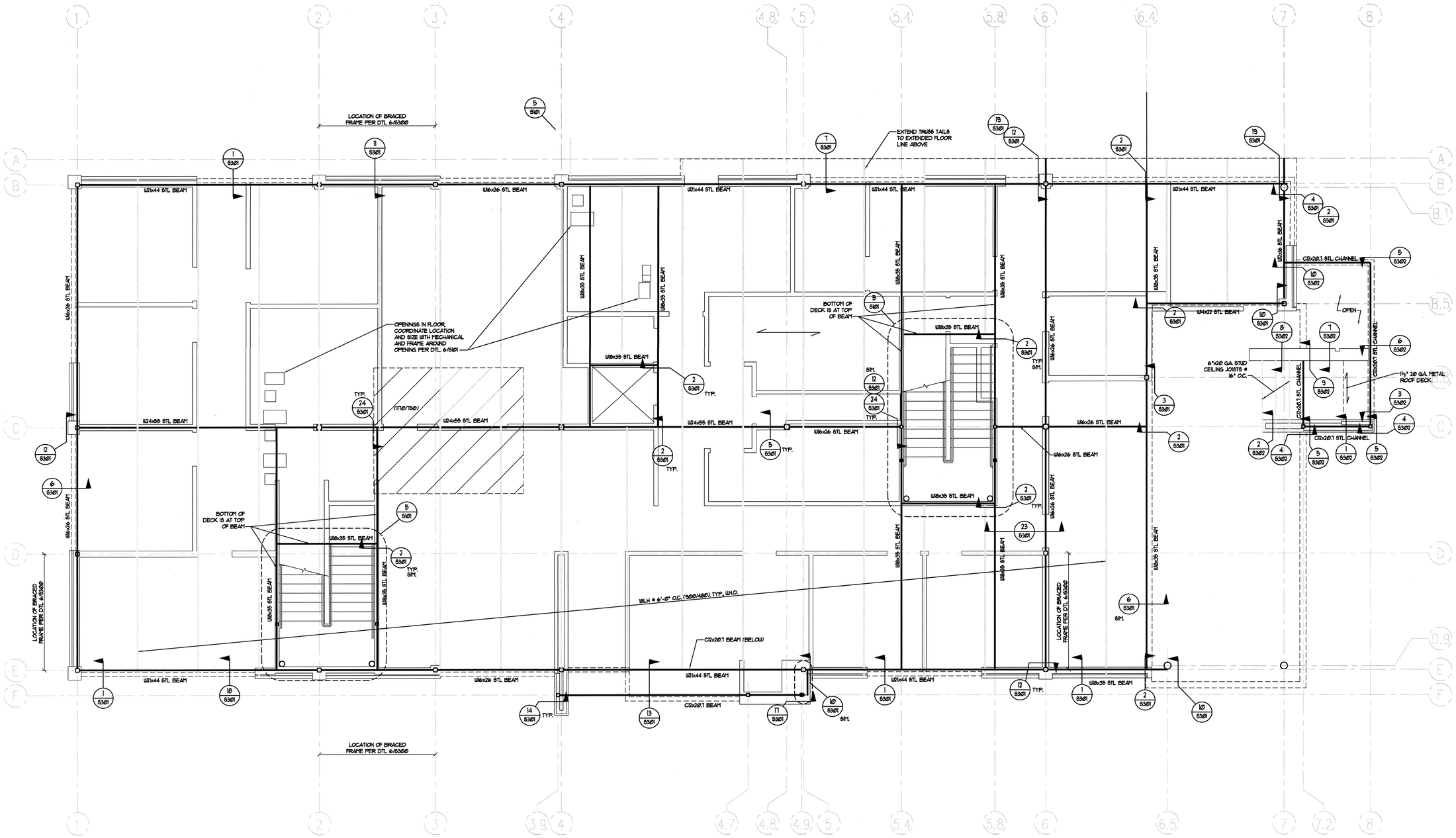

INDICATES SPAN DIRECTION OF 1½" 20 GA. METAL FLOOR DECK (3 FORMLOCK w/(4) WELDS PER SHEET TO SUPPORTS) w/ 4½" MAX CONC. TOPPING w/# 4 BARS @ 24" O.C.

NOTE:
1. SEE ARCH'L ROOF PLAN FOR T.O.S. ELEVATIONS & SLOPE OF JOISTS.
2. STEEL BEAM & COL. SIZES ARE MINIMUM REQ'D. BEAM & COL. NOT PART OF BRACE FRAMES MAY BE "UP SIZED" AT THE CONTRACTORS OPTION.

UPPER FLOOR FRAMING PLAN

1/4" = 1'-0"

State of Utah
Department of Administrative Services
Division of Facilities Construction & Management
4110 State Office Building
Salt Lake City, Utah 84114
Phone: (801) 538 - 3018
Fax: (801) 538 - 3267
Internet: http://www.dfcm.state.ut.us

Utah Valley University
Orem, Utah

CREATED BY: P+A architects
P+A architects
821 East Kensington Ave.
Salt Lake City, Utah 84105
P: 801.484.1161
F: 801.485.4640
e-mail parchitects@comcast.net
architecture planning design

CONSULTANT:
VECTOR engineers
9138 S. State Street, Suite 101 (801) 990-177
Sandy, Utah 84070 (801) 990-1776 FA
U1044-015-09

PROFESSIONAL STRUCTURAL ENGINEER No. 5339760 JACOB S. PROCTOR STATE OF UTAH
AUG 0 2 2010

PROJECT TITLE:
UTAH VALLEY UNIVERSITY NEW PARKING AND FACILITIES DEPARTMENT BUILDING

UTAH VALLEY UNIVERSITY
936 SOUTH 400 WEST
OREM, UTAH

REVISIONS

MARK	DATE	DESCRIPTION

ISSUE TYPE: CONSTRUCTION DOCUMENT
ISSUE DATE: 2nd August, 2010

CAD PROJECT NO: 09247790
CAD DWG FILE:
DRAWN BY: MIKE AND JACOB
CHK'D BY: SCOTT
COPYRIGHT: P&A architects

KEY PLAN

SHEET TITLE
FLOOR FRAMING PLAN

SHEET NUMBER
S201

NOTES:
1. SEE DTL 2/S601 FOR SIZES OF STEEL STUDS AND HEADERS
2. ROOF TRUSS DESIGN TO BE VERIFIED BY MFR FOR LOADS SHOWN ON PLANS (TL/LL) PLF.

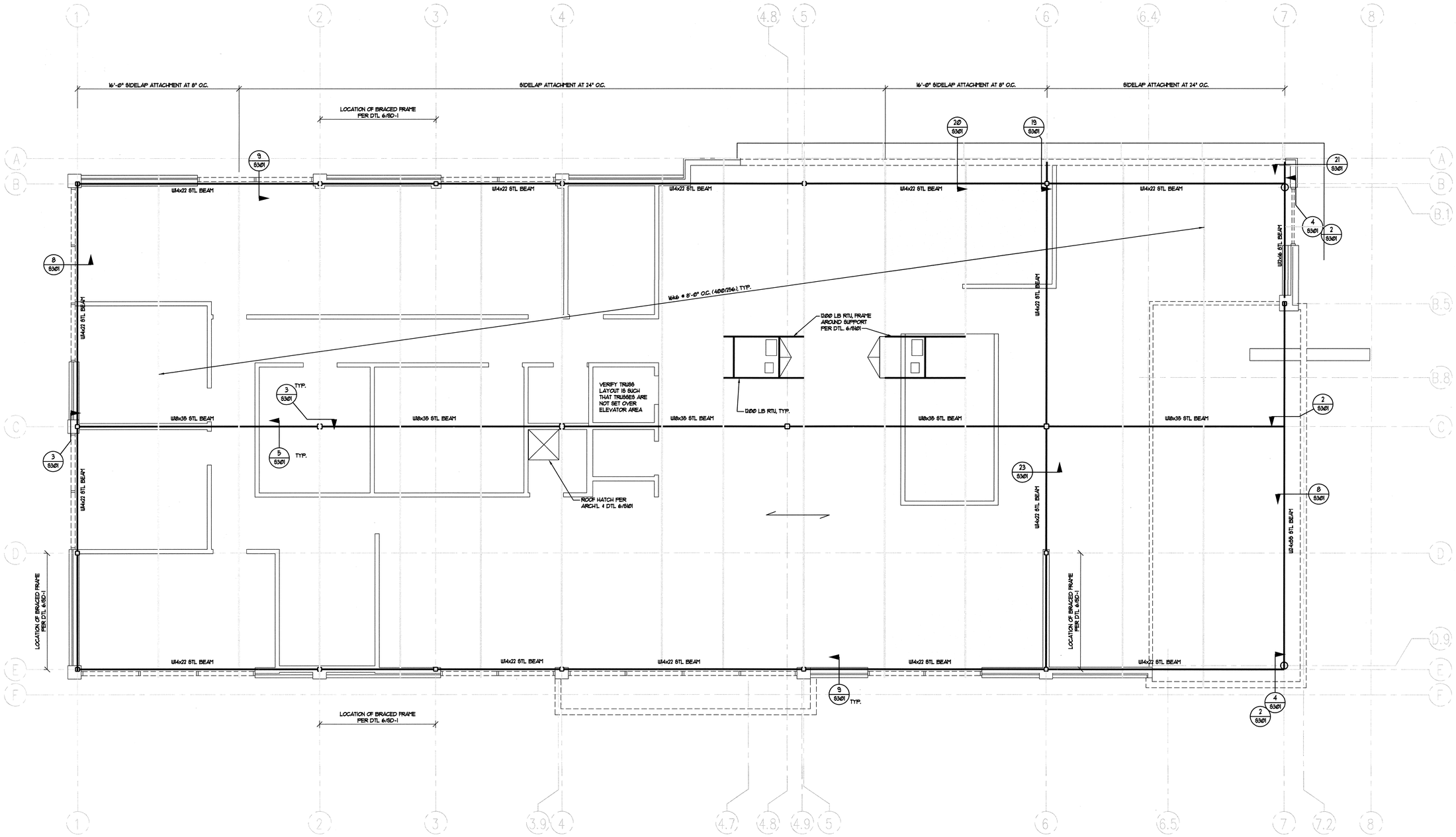

INDICATES SPAN DIRECTION OF 1½" 20 GA. METAL ROOF DECK PLB-36 w/ V&C SIDELAP ATTACHMENT PER PLAN, w/ (1) HILTI X-EDNT9 @ SUPPORTS

NOTE:
1. SEE ARCHITECTURAL PLAN FOR T.O.S. ELEVATIONS & SLOPE OF JOISTS.
2. SEE FOUNDATION PLAN FOR COLUMN SIZES.

ROOF FRAMING PLAN

1/4" = 1'-0"

State of Utah
Department of Administrative Services

Division of Facilities Construction & Management
4110 State Office Building
Salt Lake City, Utah 84114
Phone: (801) 538 - 3018
Fax: (801) 538 - 3267
Internet: http://www.dfcm.state.ut.us

Utah Valley University
Orem, Utah

CREATED BY: P+A architects

P+A architects
821 East Kensington Ave.
Salt Lake City, Utah 84105
P: 801.484.1161
F: 801.485.4640
e-mail parchitects@comcast.net

architecture ☐ planning ☐ design

CONSULTANT:

VECTOR ENGINEERS
9138 S. STATE STREET, SUITE 101 (801) 990-1775
SANDY, UTAH 84070 (801) 990-1776 FAX

U1044-015-091

PROFESSIONAL STRUCTURAL ENGINEER
No. 5339760
JACOB S. PROCTOR
STATE OF UTAH

AUG 0 2 2010

PROJECT TITLE:

UTAH VALLEY UNIVERSITY
NEW PARKING AND
FACILITIES DEPARTMENT
BUILDING

UTAH VALLEY UNIVERSITY
936 SOUTH 400 WEST
OREM, UTAH

REVISIONS

MARK	DATE	DESCRIPTION

ISSUE TYPE: CONSTRUCTION DOCUMENTS

ISSUE DATE: 2nd August, 2010

CAD PROJECT NO: 09247790
CAD DWG FILE:
DRAWN BY: MIKE AND JACOB
CHK'D BY: SCOTT

COPYRIGHT: P&A architects

KEY PLAN

SHEET TITLE

ROOF FRAMING PLAN

SHEET NUMBER

S202

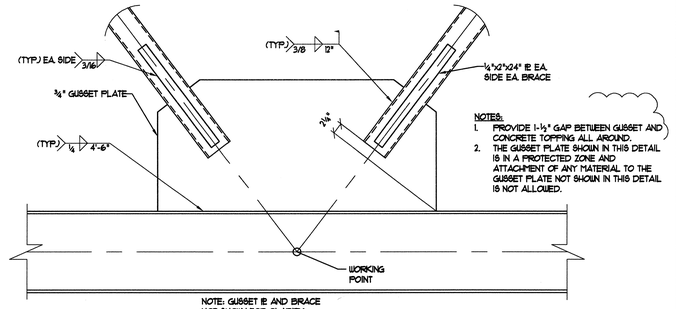

N.T.S. 10

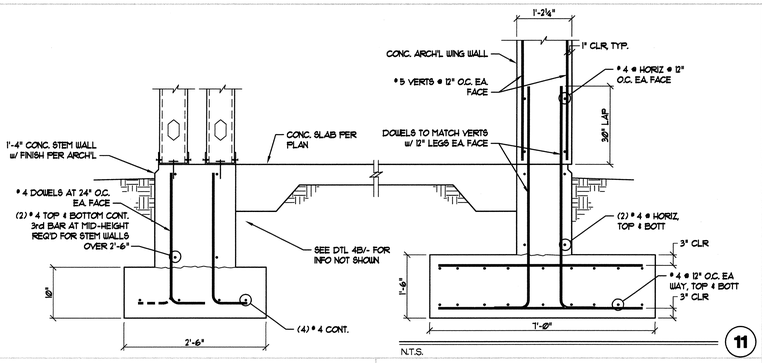

N.T.S. 11

NOTE:
THE CENTER 1/4 OF EACH BRACE SHOWN IN THIS DETAIL IS IN A PROTECTED ZONE AND ATTACHMENT OF ANY MATERIAL TO THE GUSSET PLATE NOT SHOWN IN THIS DETAIL IS NOT ALLOWED.

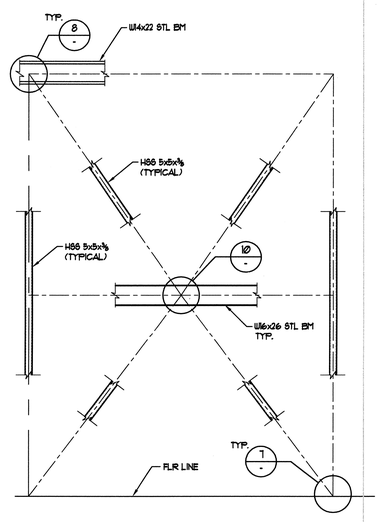

N.T.S. 6

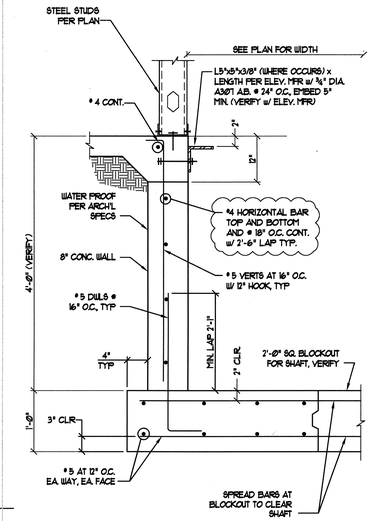

N.T.S. 3

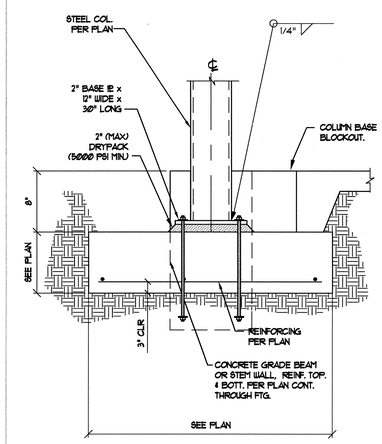

N.T.S. 1

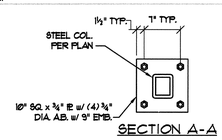

SECTION A-A

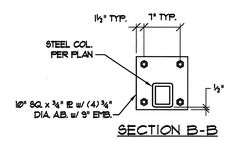

SECTION B-B

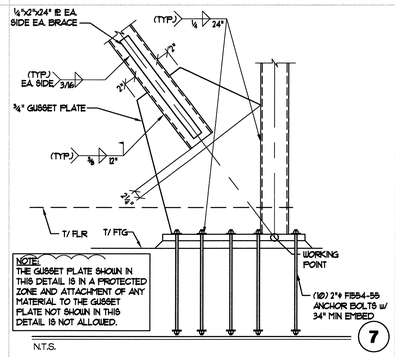

N.T.S. 7

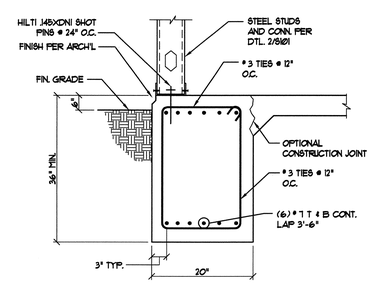

N.T.S. 4A

PLAN VIEW

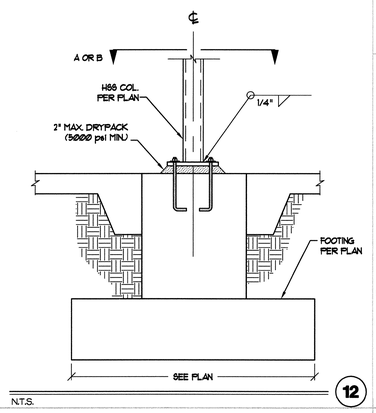

N.T.S. 12

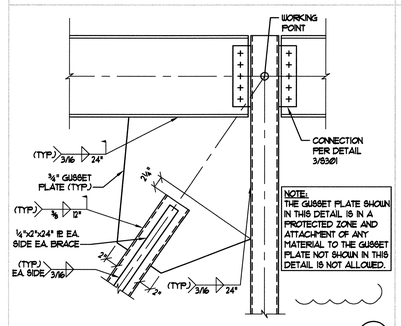

N.T.S. 8

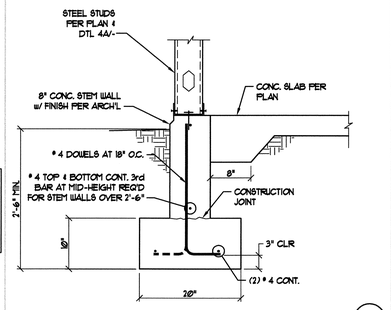

N.T.S. 4B

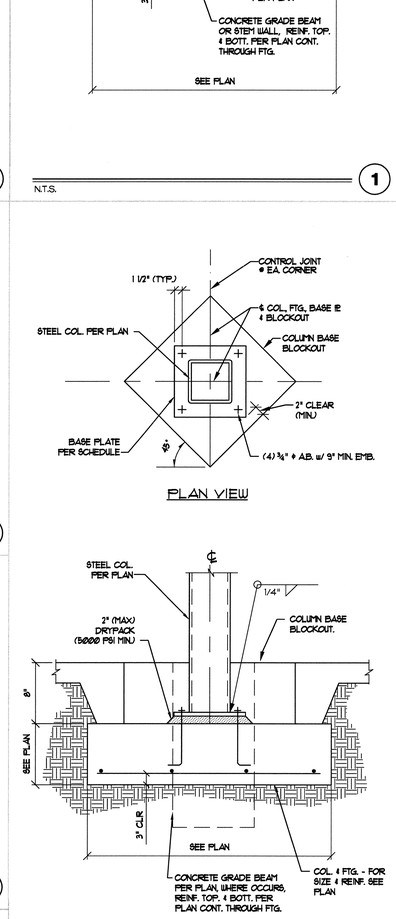

N.T.S. 2

BASE PLATE SCHEDULE	
FOOTING SIZE	BASE PLATE
F6.5 < FTG. ≤ F7.5	12"x12"x1 1/4" PLATE
F4.5 < FTG. ≤ F6.5	12"x12"x1" PLATE
F3.0 < FTG. ≤ F4.5	12"x12"x3/4" PLATE
FTG. ≤ F3.0	10"x10"x3/4" PLATE

NOTE:
COLUMNS INTERIOR

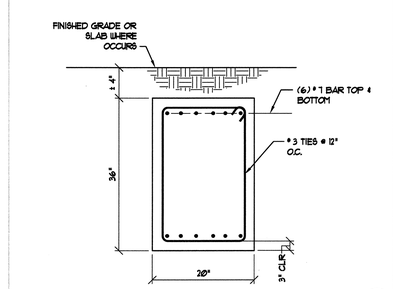

N.T.S. 9

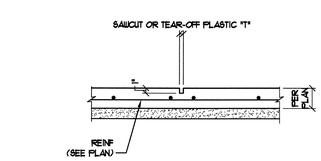

N.T.S. 5

State of Utah
Department of Administrative Services
Division of Facilities Construction & Management
4110 State Office Building
Salt Lake City, Utah 84114
Phone: (801) 538 - 3018
Fax: (801) 538 - 3267
Internet: http://www.dfcm.state.ut.us

Utah Valley University
Orem, Utah

CREATED BY: P+A architects
P+A architects
821 East Kensington Ave.
Salt Lake City, Utah 84105
P: 801.484.1161
F: 801.485.4640
e-mail parchitects@comcast.net
architecture planning design

CONSULTANT:
VECTOR engineers
9138 S. STATE STREET, SUITE 101 (801) 990-1775
SANDY, UTAH 84070 (801) 990-1776 FAX
U1044-015-091
PROFESSIONAL STRUCTURAL ENGINEER No. 5339766 JACOB S. PROCTOR STATE OF UTAH
AUG 0 2 2010

PROJECT TITLE:
UTAH VALLEY UNIVERSITY NEW PARKING AND FACILITIES DEPARTMENT BUILDING

UTAH VALLEY UNIVERSITY
936 SOUTH 400 WEST
OREM, UTAH

REVISIONS

MARK	DATE	DESCRIPTION

ISSUE TYPE: CONSTRUCTION DOCUMENTS
ISSUE DATE: 2nd August, 2010

CAD PROJECT NO: 09247790
CAD DWG FILE:
DRAWN BY: MIKE AND JACOB
CHK'D BY: SCOTT
COPYRIGHT: P&A architects

KEY PLAN

SHEET TITLE
FOUNDATION AND FRAME DETAILS

SHEET NUMBER
S300

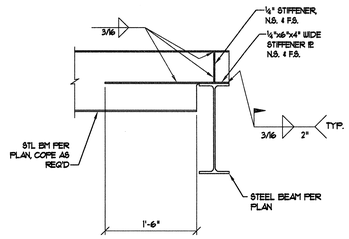

N.T.S. **24**

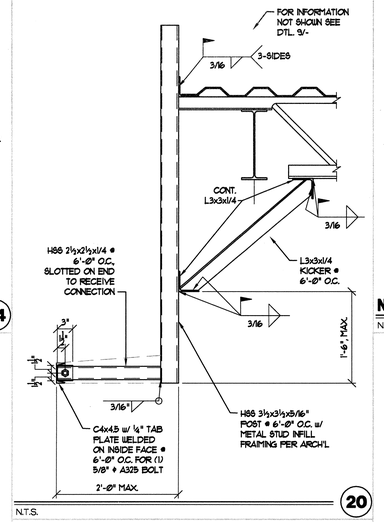

N.T.S. **20**

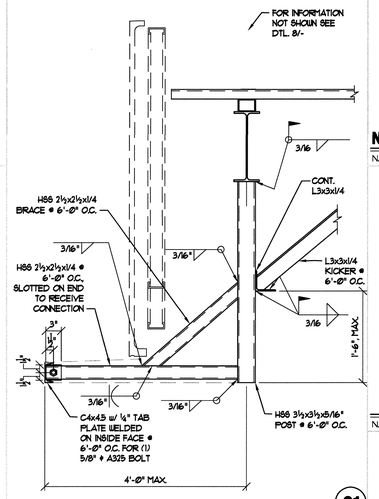

N.T.S. **21**

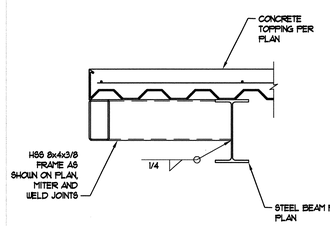

N.T.S. **22**

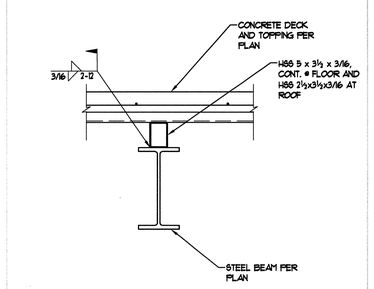

N.T.S. **23**

NOT USED

N.T.S. **15**

NOT USED

N.T.S. **16**

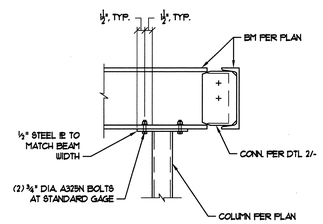

N.T.S. **17**

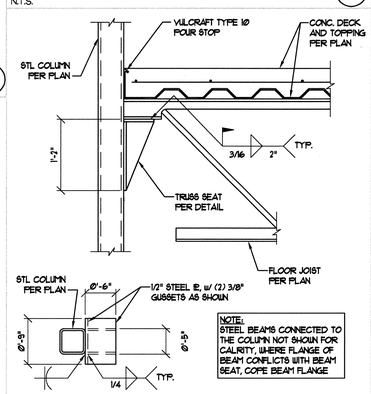

TRUSS SEAT DETAIL

N.T.S. **18**

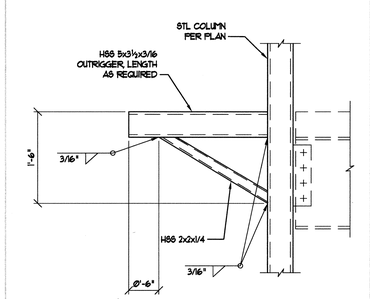

N.T.S. **19**

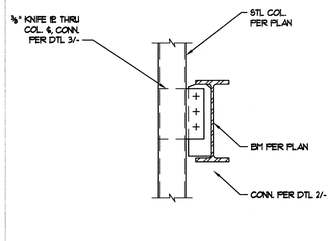

N.T.S. **10**

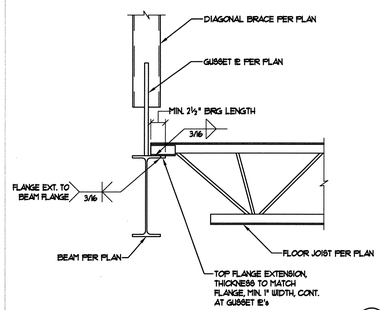

N.T.S. **11**

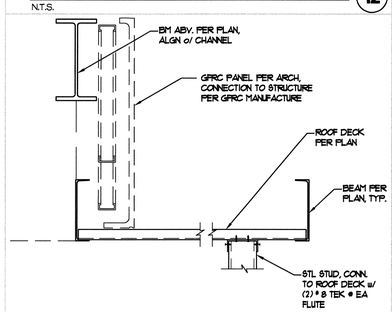

N.T.S. **13**

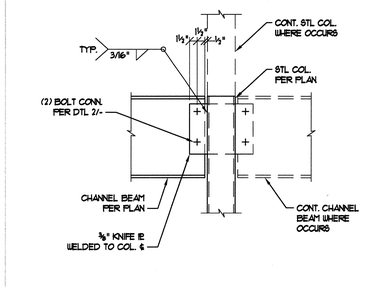

N.T.S. **14**

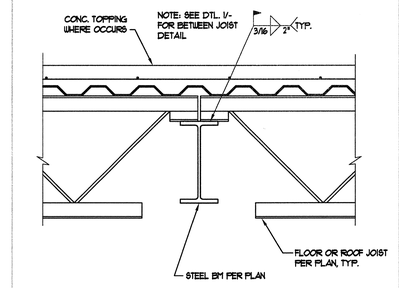

N.T.S. **5**

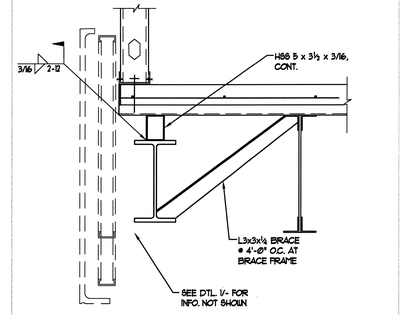

N.T.S. **6**

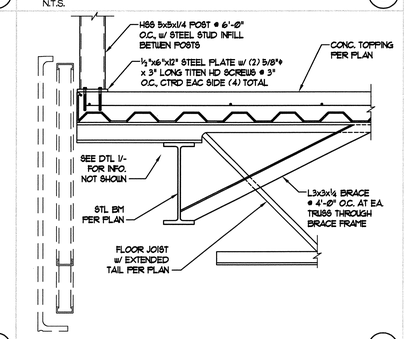

N.T.S. **7**

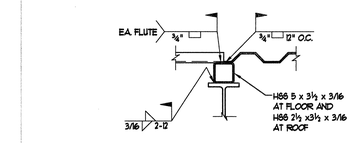

BETWEEN JOISTS

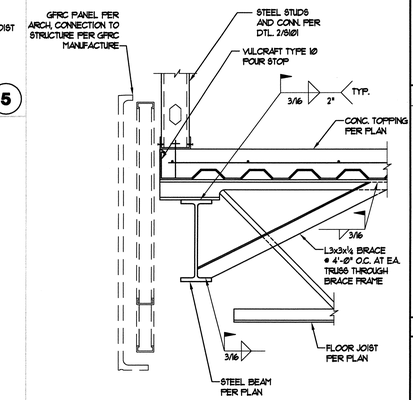

N.T.S. **1**

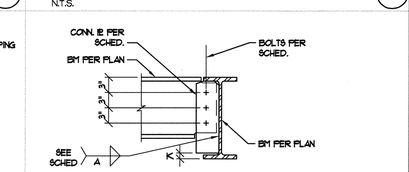

BEAM CONNECTION SCHEDULE			
SHEAR IE CONNECTION			
MEMBER (DEPTH)	# OF BOLTS CONN. 3/4" DIA. A325N	IE t	WELD SIZE A
8"	2	5/16"	1/4"
8"-10"	2	5/16"	1/4"
12"-14"	3	5/16"	1/4"
15"-16"	4	3/8"	5/16"
18"-21"	5	3/8"	5/16"
24"	6	3/8"	5/16"

N.T.S. **2**

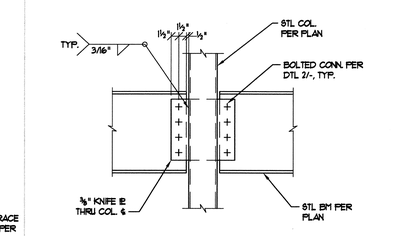

N.T.S. **3**

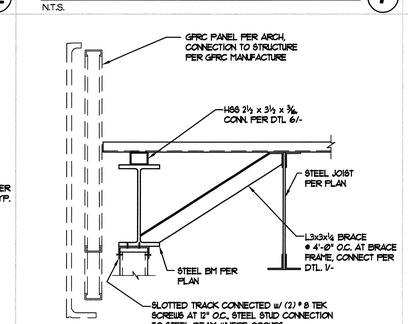

N.T.S. **8**

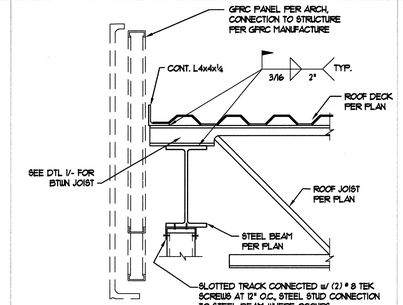

N.T.S. **9**

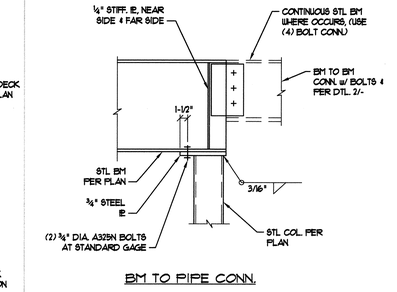

BM TO PIPE CONN.

N.T.S. **4**

State of Utah

Department of Administrative Services

Division of Facilities Construction & Management
4110 State Office Building
Salt Lake City, Utah 84114
Phone: (801) 538 - 3018
Fax: (801) 538 - 3267
Internet: http://www.dfcm.state.ut.us

Utah Valley University
Orem, Utah

CREATED BY: P+A architects

P+A architects
821 East Kensington Ave.
Salt Lake City, Utah 84105
P: 801.484.1161
F: 801.485.4640
e-mail parchitects@comcast.net

architecture planning design

CONSULTANT:

VECTOR engineers
9138 S. STATE STREET, SUITE 101 (801) 990-1775
SANDY, UTAH 84070 (801) 990-1776 FAX
U1044-015-091

PROFESSIONAL STRUCTURAL ENGINEER No. 5339760 JACOB S. PROCTOR STATE OF UTAH

AUG 0 2 2010

PROJECT TITLE:

UTAH VALLEY UNIVERSITY
NEW PARKING AND FACILITIES DEPARTMENT BUILDING

UTAH VALLEY UNIVERSITY
936 SOUTH 400 WEST
OREM, UTAH

REVISIONS

MARK	DATE	DESCRIPTION

ISSUE TYPE: CONSTRUCTION DOCUMENTS

ISSUE DATE: 2nd August, 2010

CAD PROJECT NO: 09247790
CAD DWG FILE:
DRAWN BY: MIKE AND JACOB
CHK'D BY: SCOTT

COPYRIGHT: P&A architects

KEY PLAN

SHEET TITLE

STRUCTURAL DETAILS

SHEET NUMBER

S301

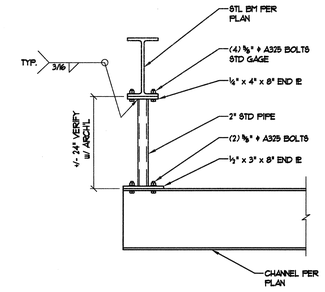

N.T.S. 10

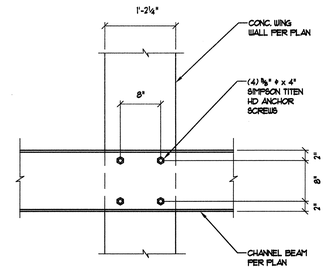

SECTION A-A

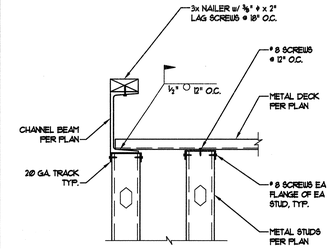

N.T.S. 1

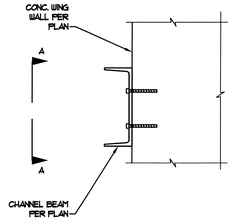

N.T.S. 6

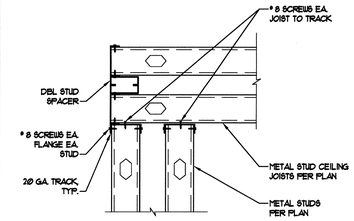

N.T.S. 2

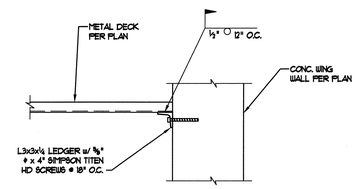

N.T.S. 7

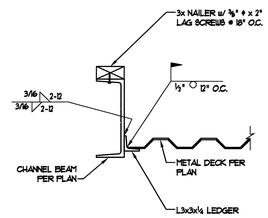

N.T.S. 3

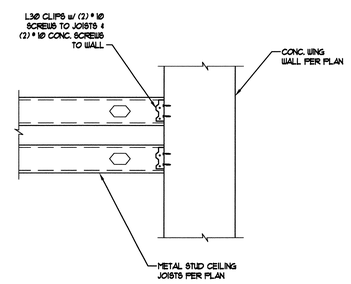

N.T.S. 8

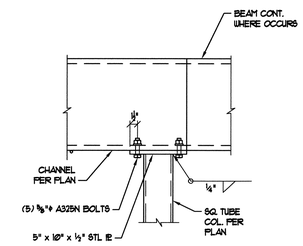

BM TO PIPE CONN.

N.T.S. 4

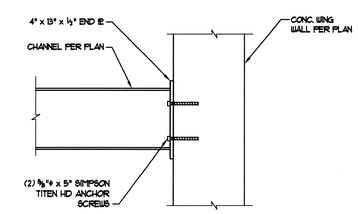

N.T.S. 9

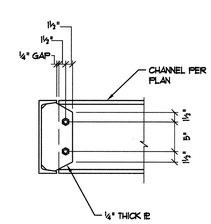

N.T.S. 5

State of Utah

Department of Administrative Services

Division of Facilities Construction & Management
4110 State Office Building
Salt Lake City, Utah 84114
Phone: (801) 538 - 3018
Fax: (801) 538 - 3267
Internet: http://www.dfcm.state.ut.us

Utah Valley University
Orem, Utah

CREATED BY: P+A architects

P+A architects
821 East Kensington Ave.
Salt Lake City, Utah 84105
P: 801.484.1161
F: 801.485.4640
e-mail parchitects@comcast.net

architecture planning design

CONSULTANT:

VECTOR engineers
9138 S. State Street, Suite 101 (801) 990-1775
Sandy, Utah 84070 (801) 990-1776 FAX

U1044-015-091

PROFESSIONAL STRUCTURAL ENGINEER No. 5339169 JACOB S. PROCTOR STATE OF UTAH

AUG 0 2 2010

PROJECT TITLE:

UTAH VALLEY UNIVERSITY NEW PARKING AND FACILITIES DEPARTMENT BUILDING

UTAH VALLEY UNIVERSITY
936 SOUTH 400 WEST
OREM, UTAH

REVISIONS

MARK	DATE	DESCRIPTION

ISSUE TYPE: CONSTRUCTION DOCUMENTS

ISSUE DATE: 2nd August, 2010

CAD PROJECT NO: 09247790
CAD DWG FILE:
DRAWN BY: MIKE AND JACOB
CHKD BY: SCOTT

COPYRIGHT: P&A architects

KEY PLAN

SHEET TITLE

STRUCTURAL DETAILS

SHEET NUMBER

S302

SPECIAL INSPECTION AND TESTING (IBC 1704)

Indicate required Special inspections for project by checking the appropriate boxes:

FABRICATORS (IBC1704.2)

☐ Approved Fabricator	Fabricators Name:
☐ Unapproved Fabricator	Fabricators Name:

In-plant inspections
☒ Steel Construction ☒ Welding ☒ Details

STEEL (IBC1704.3)

Item			Reference/Comments
High Strength Bolting(1704.3.3)	☐ Continuous	☒ Periodic	VERIFY BOLT SIZE, NUMBER AND SPACING
WELDING (1704.3.1)			
Details (1704.3.2)			
Complete & partial penetration groove welds	☒ Continuous	☐ Periodic	VERIFY WELD SIZE, LENGTH AND STRENGTH
Multipass fillet welds	☒ Continuous	☐ Periodic	VERIFY WELD SIZE, LENGTH AND STRENGTH
Single-pass fillet welds > 5/16"	☒ Continuous	☐ Periodic	VERIFY WELD SIZE, LENGTH AND STRENGTH
Single-pass fillet welds ≤ 5/16"	☐ Continuous	☒ Periodic	VERIFY WELD SIZE, LENGTH AND STRENGTH
Floor & roof deck welds	☐ Continuous	☒ Periodic	VERIFY WELD SIZE AND SPACING
REINFORCEMENT STEEL	☐ Continuous		
Verification of weldability	☐ Continuous	☐ Periodic	
Shear wall and shear reinforcement	☐ Continuous	☐ Periodic	
Other reinforcement	☐ Continuous	☐ Periodic	
Steel frame joint details	☐ Continuous	☒ Periodic	VERIFY MEMBER AND PLATE SIZE

CONCRETE CONSTRUCTION (IBC1704.4)

Item			Reference/Comments
Materials (1704.4.1)	☐ Continuous	☐ Periodic	
Steel placement	☐ Continuous	☒ Periodic	VERIFY LOCATION, SIZE, AND STRENGTH
Steel welding	☐ Continuous	☐ Periodic	
Bolts prior & during placement	☐ Continuous	☒ Periodic	VERIFY LOCATION, SIZE, AND STRENGTH
Use of required design mix	☐ Continuous	☒ Periodic	
Concrete sampling for strength test, slump, air content, and temperature of concrete	☐ Continuous	☒ Periodic	
Concrete & shotcrete placement	☐ Continuous	☐ Periodic	
Curing temperature and techniques	☐ Continuous	☐ Periodic	
Pre-stressed concrete	☐ Continuous	☐ Periodic	
Pre-cast concrete	☐ Continuous	☐ Periodic	
Posttentsioned concrete	☐ Continuous	☐ Periodic	
Form work	☐ Continuous	☐ Periodic	

MASONRY CONSTRUCTION (IBC1704.5)

Item	Reference/Comments
As masonry construction begins:	

Site prepared mortar	☐ Continuous	☐ Periodic	
Construction of mortar joints	☐ Continuous	☐ Periodic	
Location of reinforcement, connectors, pre-stressing tendons and anchorages	☐ Continuous	☐ Periodic	
Pre-stressing technique	☐ Continuous	☐ Periodic	
Grade and size of pre-stressing tendons and anchorages	☐ Continuous	☐ Periodic	
Inspection program verify:			
Size and location of structural elements	☐ Continuous	☐ Periodic	
Type, size and location of anchors	☐ Continuous	☐ Periodic	
Size, grade and type of reinforcement	☐ Continuous	☐ Periodic	
Welding of reinforcement	☐ Continuous	☐ Periodic	
Cold and hot weather protection	☐ Continuous	☐ Periodic	
Application and measurement of pre-stressing force	☐ Continuous	☐ Periodic	
Prior to grouting verify			
Clean grout space	☐ Continuous	☐ Periodic	
Placement of reinforcement	☐ Continuous	☐ Periodic	
Grout mix	☐ Continuous	☐ Periodic	
Mortar joints	☐ Continuous	☐ Periodic	
Grout placement	☐ Continuous	☐ Periodic	
Grout and mortar specimens and prisms	☐ Continuous	☐ Periodic	
Construction and submittal compliance verification	☐ Continuous	☐ Periodic	
Empirical masonry – Cat. I-III (1708.1.1)	☐ Continuous	☐ Periodic	
Empirical masonry – Cat. IV (1708.1.1)	☐ Continuous	☐ Periodic	
Engineered masonry – Cat. I-III 1708.1.1	☐ Continuous	☐ Periodic	
Engineered masonry – Cat. IV (1708.1.1)	☐ Continuous	☐ Periodic	
Engineering & pre-stressing steel (1708.3)	☐ Continuous	☐ Periodic	
Structural steel (1708.4)	☐ Continuous	☐ Periodic	
Qualification of mechanical & electrical equipment (1708.5)	☐ Continuous	☐ Periodic	
Seismically isolated structures (1708.6)	☐ Continuous	☐ Periodic	
Testing for seismic resistance is	☐ Continuous	☐ Periodic	

WOOD CONSTRUCTION (IBC1704.6)

Item			Reference/Comments
Prefabricated elements & assembly	☐ Continuous	☐ Periodic	

SOILS CONSTRUCTION (IBC1704.7)

Item			Reference/Comments
Site preparation	☐ Continuous	☒ Periodic	VERIFY REMOVAL OF UNDOCUMENTED FILL AND PLACEMENT OF STRUCTURAL FILL PER SOILS REPORT.

Structural fill material	☐ Continuous	☐ Periodic
Structural fill lift thickness	☐ Continuous	☐ Periodic
Structural fill soil densities	☐ Continuous	☐ Periodic
Backfill soils materials	☐ Continuous	☐ Periodic
Backfill soil densities	☐ Continuous	☐ Periodic
Fill material under side walks and parking	☐ Continuous	☐ Periodic
Fill soil densities under side walks and parking	☐ Continuous	☐ Periodic

PILE FOUNDATIONS (IBC1704.8)

Item			Reference/Comments
Observe driving operation and reporting	☐ Continuous	☐ Periodic	
Verify placement & installation data	☐ Continuous	☐ Periodic	

PIER FOUNDATIONS (IBC1704.9)

Item			Reference/Comments
Observe drilling operation and reporting	☐ Continuous	☐ Periodic	
Verify placement & installation data	☐ Continuous	☐ Periodic	

SPRAYED FIRE-RESISTANT MATERIALS (IBC1704.10)

Item			Reference/Comments
Structural member surface conditions	☐ Continuous	☐ Periodic	
Material application	☐ Continuous	☐ Periodic	
Material thickness	☐ Continuous	☐ Periodic	
Material density	☐ Continuous	☐ Periodic	
Bonding strength	☐ Continuous	☐ Periodic	

MASTIC AND INTUMESCENT FIRE-RESISTANT COATINGS (IBC1704.11)

Item			Reference/Comments
Material and instillation	☐ Continuous	☐ Periodic	

EXTERIOR INSTULATION AND FINISH SYSTEMS (EIFS) (IBC1704.12)

Item			Reference/Comments
Material and instillation	☐ Continuous	☐ Periodic	

ALTERNITIVE CONSTRUCTION METHODS OR MATERIALS (IBC1704.13)

Item			Reference/Comments
Material and instillation	☐ Continuous	☐ Periodic	

EPOXY (IBC1704.13)

Item			Reference/Comments
Material and instillation	☐ Continuous	☐ Periodic	

SMOKE CONTROL (IBC1704.14)

Item			Reference/Comments
Material	☐ Continuous	☐ Periodic	

Instillation	☐ Continuous	☐ Periodic

Special inspection for seismic resistance (IBC1707)

Item			Reference/Comments
Structural Steel (1707.2)	☐ Continuous	☒ Periodic	
Structural Wood (1707.3)	☐ Continuous	☐ Periodic	
Cold-formed steel framing (1707.4)	☐ Continuous	☐ Periodic	
Pier foundations (1707.5)	☐ Continuous	☐ Periodic	
Storage racks & access floors (1707.6)	☐ Continuous	☐ Periodic	
Architectural components (1707.7)	☐ Continuous	☐ Periodic	
Mechanical & electrical items (1707.8)	☐ Continuous	☐ Periodic	
Designated systems verification (1707.9)	☐ Continuous	☐ Periodic	
Seismic isolation systems (1707.10)	☐ Continuous	☐ Periodic	

Inspection of seismic resistance are not required per IBC 1705.3 ☐

OTHER (ARCHITECTURAL COMPONENTS)

Item			Reference/Comments
BRICK VENEER	☐ Continuous	☒ Periodic	ATTACHEMENT TO STRUCTURE
GFRC PANELS	☐ Continuous	☒ Periodic	ATTACHEMENT TO STRUCTURE

Special Inspectors Shall:

- Be approved by the Building Official prior to performing any duties;
- Provide proof of licensure as a special inspector by the State of Utah for each type of inspection;
- Inspection reports are to meet the requirements of IBC 1704.1.2 and DFCM standards;
- Inspection reports are to be submitted to the code consultant, architect, DFCM project manager, and the State of Utah Building Official within 48 hrs. of inspections;
- A final inspection report shall be submitted following completion of the project documenting the types of special inspections performed and a statement indicating that the structure is in compliance with the drawings, specifications and applicable codes. IBC 1704.1.2

NOTE:

ALL SPECIAL INSPECTION IS TO BE PER CHAPTER 17 OF THE 2006 IBC. COMMENTS LISTED THE REFERENCE/COMMENTS SECTION OF THE FORM ARE BRIEF BASIC EXPLANATIONS OF THE SPECIAL INSPECTIONS ONLY.

State of Utah
Department of Administrative Services
Division of Facilities Construction & Management
4110 State Office Building
Salt Lake City, Utah 84114
Phone: (801) 538 - 3018
Fax: (801) 538 - 3267
Internet: http://www.dfcm.state.ut.us

Utah Valley University
Orem, Utah

CREATED BY: P+A architects
P+A architects
821 East Kensington Ave.
Salt Lake City, Utah 84105
P: 801.484.1161
F: 801.485.4640
e-mail parchitects@comcast.net
architecture planning design

CONSULTANT:
VECTOR engineers
9138 S. State Street, Suite 101 (801) 990-1775
Sandy, Utah 84070 (801) 990-1776 FAX
U1044-015-091
PROFESSIONAL STRUCTURAL ENGINEER No. 6339760 JACOB S. PROCTOR STATE OF UTAH
AUG 0 2 2010

PROJECT TITLE:
UTAH VALLEY UNIVERSITY NEW PARKING AND FACILITIES DEPARTMENT BUILDING

UTAH VALLEY UNIVERSITY
936 SOUTH 400 WEST
OREM, UTAH

REVISIONS

MARK	DATE	DESCRIPTION

ISSUE TYPE: CONSTRUCTION DOCUMENTS
ISSUE DATE: 2nd August, 2010

CAD PROJECT NO: 09247790
CAD DWG FILE:
DRAWN BY: MIKE AND JACOB
CHK'D BY: SCOTT
COPYRIGHT: P&A architects

KEY PLAN

SHEET TITLE
SPECIAL INSPECTION FORMS

SHEET NUMBER
S400

LEGEND OF MECHANICAL SYMBOLS AND ABBREVIATIONS

MECHANICAL

	POSITIVE PRESSURE DUCT – RISE
	POSITIVE PRESSURE DUCT – DROP
	NEGATIVE PRESSURE DUCT – RISE
	NEGATIVE PRESSURE DUCT – DROP
	ROUND DUCT – RISE
	ROUND DUCT – DROP
	UNDER FLOOR DUCT
	TURNING VANES
	FRESH AIR LOUVER
	RELIEF AIR OR EXHAUST AIR LOUVER
12X12 / 200	CEILING SUPPLY DIFFUSER (TOP FIGURES INDICATE NECK SIZE. BOTTOM FIGURE INDICATES CFM.)
22X22 / 200	CEILING RETURN REGISTER
12X12 / 200	CEILING EXHAUST REGISTER, (BALANCE TO MATCH SUPPLY IF RETURN CFM IS NOT SHOWN)
24X10 / 200	SIDEWALL SUPPLY REGISTER
24X10 / 200	SIDEWALL EXHAUST OR RETURN REGISTER
12X12 / 200	CEILING SUPPLY DIFFUSER WITH FLEXIBLE DUCT
12X12 / 200	CEILING AIR GRILLE WITH FLEXIBLE DUCT
	CEILING RETURN AIR GRILE W/ SOUND BOOT
3–1" SLOTS @ 48" / 400	LINEAR DIFFUSER WITH PLENUM AND FLEXIBLE DUCT CONNECTION. NO. OF SLOTS & SIZE OF SLOT ON TOP, ACTIVE LENGTH AND CFM ON BOTTOM
	FLEXIBLE DUCT CONNECTION
	FLEXIBLE DUCT
	FAN
12/8 FO	FLAT OVAL DUCT WITH NET INSIDE DIMENSIONS SHOWN IN INCHES.
12/8	RECTANGULAR DUCT WITH NET INSIDE DIMENSIONS SHOWN IN INCHES.
12ø	ROUND DUCT WITH NET INSIDE DIMENSIONS SHOWN IN INCHES.
UP	INCLINED RISE (WITH RESPECT TO AIR FLOW 15° NOMINAL INCLINE WITH RADIUS TURNS=DEPTH OF DUCT.)
DN	INCLINED DROP
W R	R/W=1. ROUND DUCT SIMILAR TO RECTANGULAR
12/12 8/8	RECTANGULAR TO RECTANGULAR OR ROUND TO ROUND DUCT TRANSFORMATION MAXIMUM 15° INCLUDED ANGLE EXCEPT WHERE SHOWN OTHERWISE.
12/12 12ø	RECTANGULAR TO ROUND DUCT TRANSFORMATION
R	BRANCH DUCT SPLIT WITH 6" WIDTH AND MIN. R=WIDTH OF BRANCH DUCT DOWNSTREAM. ELBOW TURNING VANE OPTIONAL.
150 250 45° DIA DIA	TAP ENTRY AREA EQUALS 150% OF BRANCH AREA
12ø 12/12 R R	HIGH EFFICIENCY FITTING
	MANUAL VOLUME DAMPER
FD	FIRE DAMPER IN DUCT, W/ ACCESS PANEL REQD.
FSD	COMBINATION FIRE/SMOKE DAMPER W/ ACCESS PANEL
SD	SMOKE DAMPER W/ ACCESS PANEL
BDD	BACK DRAFT DAMPER
ATC OR	ATC DAMPER
AD	ACCESS PANEL IN DUCT OR PLENUM
	HEATING OR COOLING COIL IN DUCT
	SINGLE DUCT AIR TERMINAL BOX VARIABLE OR CONSTANT VOLUME. MIN. 1–1/2 TERMINAL INLET SIZE STRAIGHT DUCT AT TERMINAL INLET.
	4–WAY BLOW PATTERN
	3–WAY BLOW PATTERN
	2–WAY BLOW PATTERN
	2–WAY BLOW PATTERN
	1–WAY BLOW PATTERN
SD	DUCT SMOKE DETECTOR
	UNIT HEATER

PLUMBING

	FLOOR SINK
	FLOOR DRAIN
FCO / COTG	FLOOR CLEAN–OUT OR CLEAN–OUT TO GRADE
	ROOF DRAIN
	DOWNSPOUT NOZZLE
	ARROW INDICATES DIRECTION OF FLOW IN PIPE
	CHECK VALVE
	PRESSURE REDUCING, EXTERNAL PRESSURE VALVE
	PRESSURE REDUCING, SELF CONTAINED VALVE
	ATC VALVE – 2 WAY
	ATC VALVE – 3 WAY
	SOLENOID VALVE
	GATE VALVE
	GATE VALVE – NON RISING STEM
	GLOBE VALVE
	TEMPERATURE AND PRESSURE TEST PORT
PS	PRESSURE SWITCH
	GAS COCK
8.5 GPM	CALIBRATED BALANCING VALVE WITH GPM INDICATED
RPBP	REDUCED PRESSURE BACKFLOW PREVENTOR W/ DRAIN PAN
	BRANCH – BOTTOM CONNECTION
	BRANCH – TOP CONNECTION
	BRANCH – SIDE CONNECTION
	RISE OR DROP
	RISER – DOWN (ELBOW)
	RISER – DOWN (ELBOW)
VTR	VENT THRU ROOF
	WATER HAMMER ARRESTOR
	INLINE PUMP
	INLINE PUMP
	CLEAN–OUT
	RELIEF VALVE
	ANGLE VALVE
	FLOW METER
	UNION
	BALANCING COCK
	SHUT–OFF COCK FOR USE WITH PRESSURE GAUGE
	FLEXIBLE EXPANSION JOINT
	THERMOMETER – TEMP RANGE AS INDICATED
	PRESSURE GAUGE WITH SHUT–OFF COCK
	PRESSURE GAUGE WITH PIGTAIL
	LATERAL STRAINER WITH BLOW–OFF VALVE, PROVIDE HOSE END WITH CAP WHERE DISCHARGE IS NOT PIPED TO DRAIN
	BALL VALVE (PIPE SIZES 2" AND SMALLER) BUTTERFLY VALVE (PIPE SIZES 2–1/2" AND LARGER)
	MOTOR OPERATED BUTTERFLY VALVE
	VALVE IN RISE
	AIR VENT–MANUAL
	AIR VENT–AUTO
	FLOW SWITCH
	REDUCER
	CONCENTRIC REDUCER
	ECCENTRIC REDUCER

PLUMBING CONT.

	THERMOSTATIC MIXING VALVE
	HOSE BIBB
	PIPE CAP
S	SWITCH
S	SENSOR
T	THERMOSTAT
TN	NIGHT THERMOSTAT
	FILL PORT
	DRAIN PAN AND P–TRAP
(NAME)	FIXTURE FROM LEVEL ABOVE
GPM LB/HR.	FLOW METER ORIFICE
	FLANGE
	90° ELBOW
	STEAM TRAP, F&T=FLOAT & THERMOSTATIC 45° ELBOW
F&T	B=BUCKET, T=THERMOSTATIC
DN	LEADER INDICATES DOWNWARD SLOPE
	DEMOLITION
	ALIGNMENT GUIDE
	ANCHOR
	LUBRICATED PLUG COCK

SYMBOLS

P–1	PLUMBING FIXTURES
	POINT OF CONNECTION
A / M–101	SECTION TAG – TOP FIGURE IS SECTION NO. BOTTOM FIGURE IS SHEET NO.
A / M101	DETAIL TAG – TOP FIGURE IS DETAIL NO. BOTTOM FIGURE IS SHEET NO.
EF / 1	EQUIPMENT IDENTIFICATION
1	KEYED NOTE IDENTIFICATION

FIRE

	HOSE VALVE
	NRS GATE VALVE WITH SUPERVISION
	FLOW SWITCH
	FIRE RISER
	SPRINKLER HEAD
F	FIRE SPRINKLER WATER

LINETYPES

AV	ACID VENT
AW	ACID WASTE
BBD	BOILER BLOW DOWN
BF	BOILER FEED WATER
B	BRINE
CO2	CARBON DIOXIDE
CA	COMPRESSED AIR
CF	CHEMICAL FEED
CHWS	CHILLED WATER SUPPLY
CHWR	CHILLED WATER RETURN
CS	CONDENSER WATER SUPPLY
CR	CONDENSER WATER RETURN
	DOMESTIC COLD WATER (DCW)
	DOMESTIC HOT WATER (DHW)
	DOMESTIC HOT WATER RETURN (DHWR)
DI	DEIONIZED WATER SUPPLY
DIR	DEIONIZED WATER RETURN
E(NAME)	EXISTING PIPING
(NAME)	EXISTING PIPING TO BE REMOVED
GHR	GLYCOL HEAT RECOVERY PIPING
G(NAME)	GLYCOL PIPING SOLUTION
FOR	FUEL OIL RETURN
FOS	FUEL OIL SUPPLY
FOV	FUEL OIL VENT
G	NATURAL GAS
HG	HOT GAS
HFR	HELICOPTER FUEL RETURN
HFS	HELICOPTER FUEL SUPPLY
HP(NAME)	HIGH PRESSURE DOMESTIC WATER
HPC	HIGH PRESSURE CONDENSATE
HPS	HIGH PRESSURE STEAM
HWR	HEATING HOT WATER RETURN
HWS	HEATING HOT WATER SUPPLY
IA	INSTRUMENT AIR
IA 120	INSTRUMENT AIR AT PRESSURE INDICATED
LA	LAB AIR
LV	LAB VACUUM
LPC	LOW PRESSURE CONDENSATE
LPG	LIQUIFIED PETROLEUM GAS
LPS	LOW PRESSURE STEAM
MA	MEDICAL AIR
MA 120	MEDICAL AIR AT PRESSURE INDICATED
MPC	MEDIUM PRESSURE CONDENSATE
MPS	MEDIUM PRESSURE STEAM
MUW	MAKE UP WATER
MV	MEDICAL VACUUM
N	NITROGEN
N2O	NITROUS OXIDE
OX	MEDICAL OXYGEN
OX 120	MEDICAL OXYGEN AT PRESSURE INDICATED
	PUMPED CONDENSATE

LINETYPES CONT.

RO	REVERSE OSMOSIS WATER SUPPLY
ROR	REVERSE OSMOSIS WATER RETURN
RD	ROOF DRAIN
RDO	ROOF DRAIN OVERFLOW
RL	REFRIGERANT LIQUID
RS	REFRIGERANT SUCTION
	SEWER (BELOW FLOOR)
	SEWER (ABOVE FLOOR)
SW	SOFT DOMESTIC WATER (SW)
V	VACUUM
	VENT (SEWER)

MECH. GENERAL NOTES

1. ALL CEILING DIFFUSERS SHOWN AS SUCH ARE CD–1, CFM AS NOTED, UNLESS OTHERWISE NOTED. REFER TO DETAIL 1/M–501. (CFM)
2. ALL CEILING RETURN GRILLES SHOWN AS SUCH ARE RG–1 UNLESS OTHERWISE NOTED. PROVIDE SOUND BOOT PER DETAIL 2/M–501.
3. ALL CEILING EXHAUST GRILLES SHOWN AS SUCH ARE EG–1, CFM AS NOTED, UNLESS OTHER–WISE NOTED. (CFM)
4. DO NOT ROUTE DUCTS AND PIPES ABOVE ELECTRICAL PANELS. ALL ELECTRICAL PANELS MUST HAVE CLEAR ACCESS SPACE IN FRONT OF PANEL 4'–0" DEEP AND 6'–6" HIGH. DO NOT ROUTE DUCTS AND PIPES IN ELECTRICAL ROOMS, EXCEPT DUCTS AND PIPES SERVING THE ROOM.
5. COORDINATE EXACT LOCATIONS OF CEILING DIFFUSERS AND GRILLES WITH ARCHITECTURAL REFLECTED CEILING PLAN.
6. REFER TO HEAT PUMP DETAILS 8/M–501, 9/M–501 & 10/M–501.
7. ALL DUCT DIMENSIONS ARE INSIDE FREE AREA DIMENSIONS. ADJUST SHEET METAL DIMENSION FOR LINED DUCT.
8. PROVIDE CEILING ACCESS PANELS AS REQUIRED WHERE MECHANICAL EQUIPMENT, VALVES, VAV BOXES, FIRE DAMPERS, ETC. ARE LOCATED ABOVE INACCESSIBLE CEILINGS.
9. ALL DUCT AND FLUE PENETRATIONS THRU 1 HOUR ROOF ASSEMBLY TO BE ENCLOSED WITH 2 SHEET ROCK LAYERS FROM SHEET ROCK AT BOTTOM OF ROOF TRUSSES TO ROOF DECK.
10. STEEL ROOF DECK SHALL NOT BE USED TO SUPPORT LOADS FROM PIPING, DUCTWORK OR EQUIPMENT, UNLESS NOTED OTHERWISE. HANGER LOADS LESS THAN 50 LBS. MAY BE HUNG FROM THE STEEL ROOF DECK IN CASES WHEN HANGING FROM THE STEEL ROOF DECK CANNOT BE AVOIDED; THE ATTACHMENT METHOD MUST DISTRIBUTE THE LOAD ACROSS THE DECK AS APPROVED BY THE STRUCTURAL ENGINEER.

State of Utah
Department of Administrative Services
Division of Facilities Construction & Management
4110 State Office Building
Salt Lake City, Utah 84114
Phone: (801) 538 - 3018
Fax: (801) 538 - 3267
Internet: http://www.dfcm.state.ut.us

Utah Valley University
Orem, Utah

CREATED BY: P+A architects
P+A architects
821 East Kensington Ave.
Salt Lake City, Utah 84105
P: 801.484.1161
F: 801.485.4640
e-mail parchitects@comcast.net

architecture planning design

CONSULTANT:
VAN BOERUM & FRANK ASSOCIATES INC.
WWW.VBFA.COM CONSULTING ENGINEERS
Salt Lake City - Logan - St. George - Tempe - Pocatello
330 South 300 East 801.530.3148 T
Salt Lake City, UT 84111 801.530.3150 F
VBFA Project Number:09422
LICENSED BUSINESS ENTITY ENGINEER NO. 189989 STEVEN T. SHEPHERD 7/29/10 STATE OF UTAH

PROJECT TITLE:
UTAH VALLEY UNIVERSITY NEW PARKING AND FACILITIES DEPARTMENT BUILDING

UTAH VALLEY UNIVERSITY
936 SOUTH 400 WEST
OREM, UTAH

REVISIONS

MARK	DATE	DESCRIPTION

ISSUE TYPE: CONSTRUCTION DOCUMENTS

ISSUE DATE: August 02, 2010

CAD PROJECT NO: 09247790
CAD DWG FILE:
DRAWN BY: E.J./K.M
CHK'D BY: S.S/S.J
COPYRIGHT: P&A architects

KEY PLAN

SHEET TITLE
MECHANICAL SYMBOLS & ABBREVIATIONS

SHEET NUMBER
M-001

KEYED NOTES

1. PLUMBING EQUIPMENT, SEE PLUMBING PLANS.
2. PROVIDE AND INSTALL 4" CONCRETE HOUSEKEEPING PAD.
3. COORDINATE EXACT LOCATIONS OF DUCT DROPS/RISER WITH STRUCTURAL AND OPENING OF HEAT PUMP TRANSITION DUCT SIZE TO OPENING OF HEAT PUMP.
4. COORDINATE EXACT LOCATIONS OF ERV DUCT DROPS WITH STRUCTURAL AND HP BELOW.
5. MECHANICAL PIPING EQUIPMENT. SEE MP-100.
6. PROVIDE OPENING FOR RETURN AIR ABOVE CEILING, AREA OF OPENING AS INDICATED.

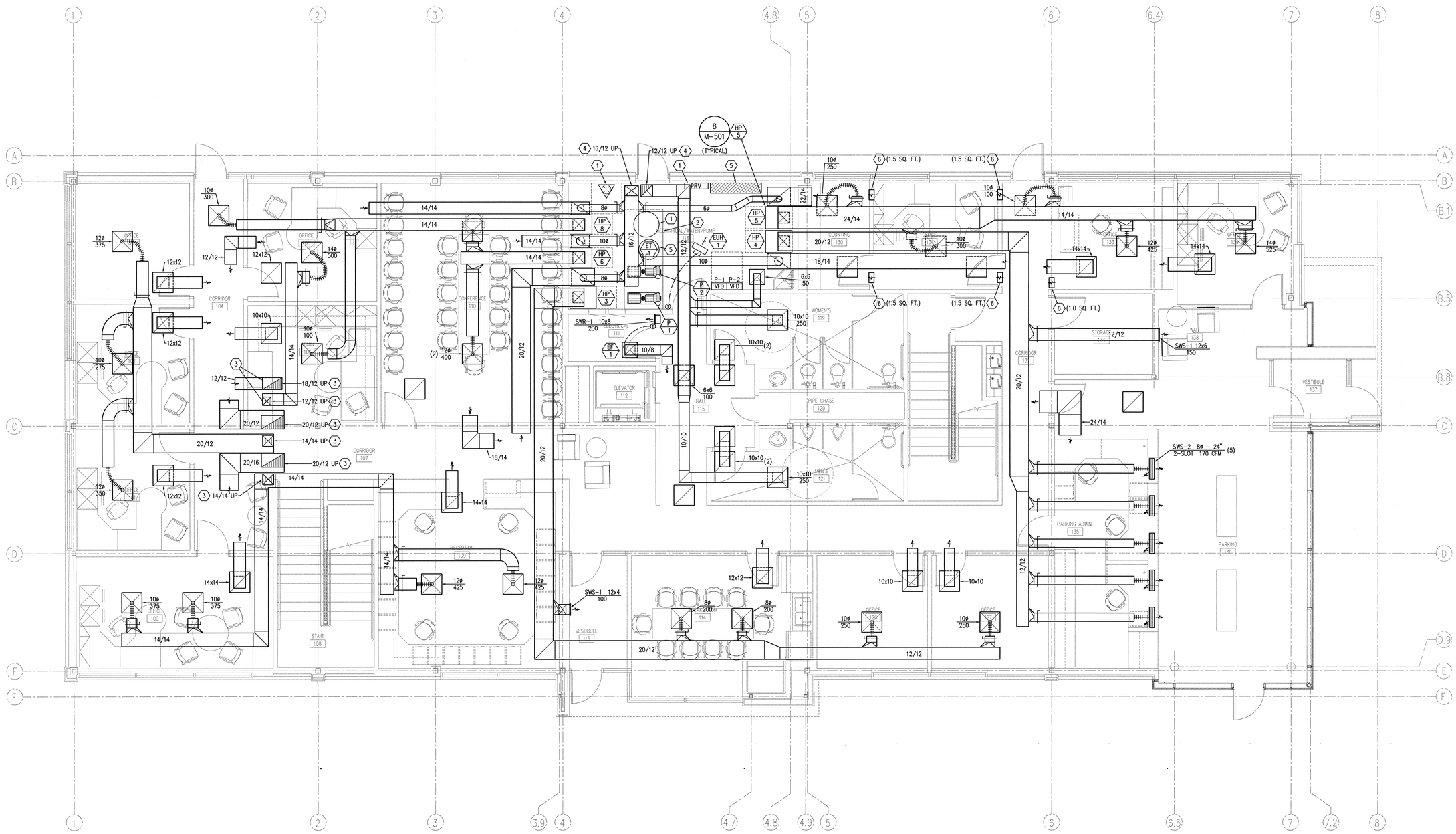

MAIN LEVEL MECHANICAL FLOOR PLAN

01 M-100 SCALE 1/4" = 1'-0"

PLAN NORTH

State of Utah
Department of Administrative Services
Division of Facilities Construction & Management
4110 State Office Building
Salt Lake City, Utah 84114
Phone: (801) 538 - 3018
Fax: (801) 538 - 3267
Internet: http://www.dfcm.state.ut.us

Utah Valley University
Orem, Utah

CREATED BY: P+A architects
P+A architects
821 East Kensington Ave.
Salt Lake City, Utah 84105
P: 801.484.1161
F: 801.485.4640
e-mail parchitects@comcast.net

architecture planning design

CONSULTANT:

VAN BOERUM & FRANK ASSOCIATES INC.
WWW.VBFA.COM CONSULTING ENGINEERS
Salt Lake City · Logan · St. George · Tempe · Pocatello
330 South 300 East 801.530.3148 T
Salt Lake City, UT 84111 801.530.3150 F
VBFA Project Number:09422

LICENSED PROFESSIONAL ENGINEER No. 189969 STEVEN T. SHEPHERD 7-29-10 STATE OF UTAH

PROJECT TITLE:

UTAH VALLEY UNIVERSITY
NEW PARKING AND
FACILITIES DEPARTMENT
BUILDING

UTAH VALLEY UNIVERSITY
936 SOUTH 400 WEST
OREM, UTAH

REVISIONS

MARK	DATE	DESCRIPTION

ISSUE TYPE: CONSTRUCTION DOCUMENTS

ISSUE DATE: August 02, 2010

CAD PROJECT NO: 09247790
CAD DWG FILE:
DRAWN BY: E.J./K.M
CHK'D BY: S.S/S.J

COPYRIGHT: P&A architects

KEY PLAN

SHEET TITLE

MAIN LEVEL
MECHANICAL
FLOOR PLAN

SHEET NUMBER

M-100

KEYED NOTES

1. COORDINATE EXACT LOCATION OF DUCT DROP / RISE WITH STRUCTURAL, AND WITH OPENING OF HEAT PUMP. TRANSITION FROM DUCT SIZE TO OPENING OF HEAT PUMP.
2. DUCT TO BE OPEN TO SPACE.
3. BALANCE TO CFM SHOWN.

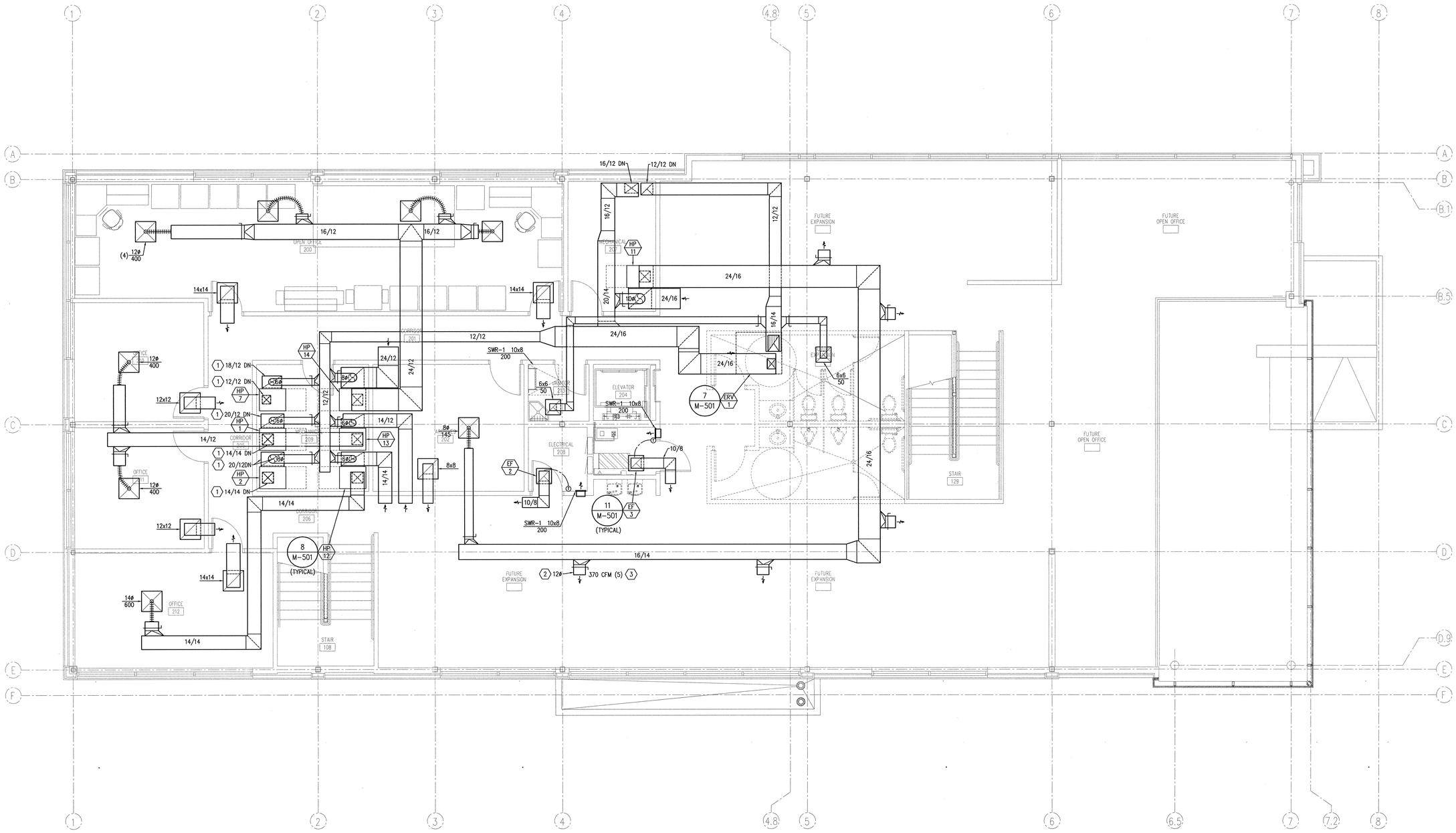

01 M-101 SECOND LEVEL MECHANICAL FLOOR PLAN

SCALE 1/4" = 1'-0"

State of Utah

Department of Administrative Services

Division of Facilities Construction & Management
4110 State Office Building
Salt Lake City, Utah 84114
Phone: (801) 538 - 3018
Fax: (801) 538 - 3267
Internet: http://www.dfcm.state.ut.us

Utah Valley University
Orem, Utah

CREATED BY: P+A architects

P+A architects
821 East Kensington Ave.
Salt Lake City, Utah 84105
P: 801.484.1161
F: 801.485.4640
e-mail parchitects@comcast.net

architecture planning design

CONSULTANT:

VAN BOERUM & FRANK ASSOCIATES INC.
WWW.VBFA.COM CONSULTING ENGINEERS
Salt Lake City - Logan - St. George - Tempe - Pocatello
330 South 300 East 801.530.3148 T
Salt Lake City, UT 84111 801.530.3150 F
VBFA Project Number:09422

LICENSED PROFESSIONAL ENGINEER No. 189989 STEVEN T. SHEPHERD 7/29/10 STATE OF UTAH

PROJECT TITLE:

UTAH VALLEY UNIVERSITY NEW PARKING AND FACILITIES DEPARTMENT BUILDING

UTAH VALLEY UNIVERSITY
936 SOUTH 400 WEST
OREM, UTAH

REVISIONS

MARK	DATE	DESCRIPTION

ISSUE TYPE:CONSTRUCTION DOCUMENTS

ISSUE DATE: August 02, 2010

CAD PROJECT NO: 09247790
CAD DWG FILE:
DRAWN BY: E.J./K.M
CHK'D BY: S.S/S.J

COPYRIGHT: P&A architects

KEY PLAN

SHEET TITLE

SECOND LEVEL MECHANICAL FLOOR PLAN

SHEET NUMBER

M-101

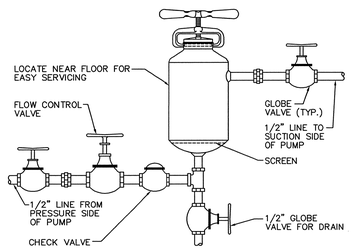

13 / M-501 POT TYPE CHEMICAL FEEDER DETAIL
NO SCALE

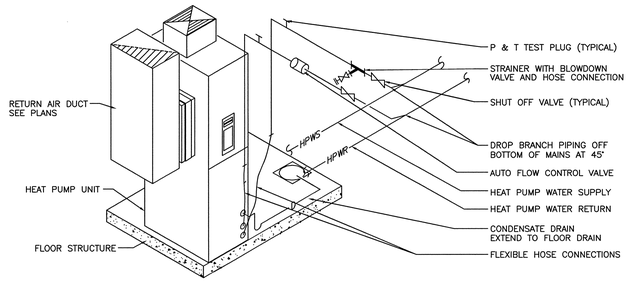

9 / M-501 VERTICAL HEAT PUMP PIPING CONECTIONS DETAIL
NO SCALE

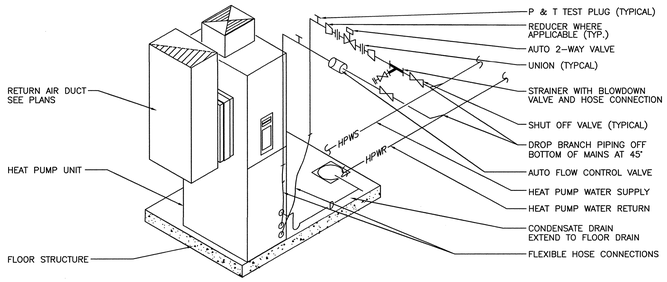

10 / M-501 VERTICAL HEAT PUMP PIPING W/2-WAY VALVE DETAIL
NO SCALE

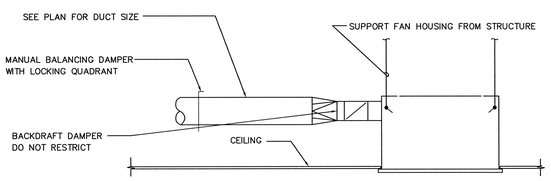

11 / M-501 CEILING MOUNTED EXHAUST FAN DETAIL
NO SCALE

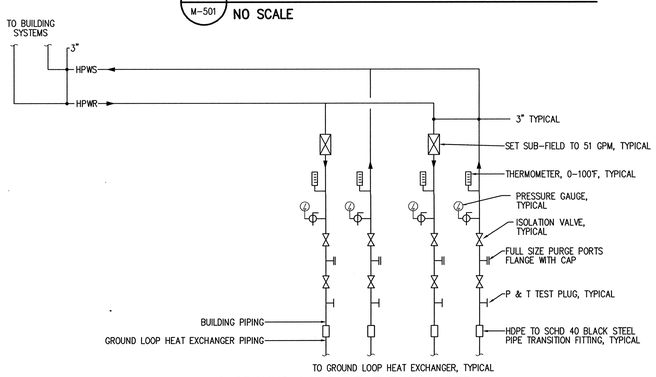

12 / M-501 GROUND LOOP HEAT EXCHANGER BORE FIELD PIPING HEADER DETAIL
NO SCALE

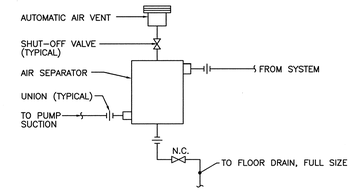

5 / M-501 AIR SEPARATOR DETAIL
NO SCALE

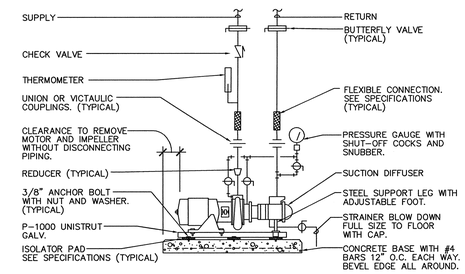

6 / M-501 PUMP CONNECTION DETAIL
NO SCALE

NOTE: ANCHOR UNIT TO PRE-FAB ROOF CURB PER SEISMIC RESTRAINT REQUIREMENTS.

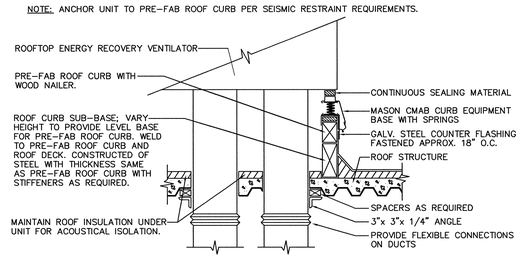

7 / M-501 ENERGY RECOVERY UNIT ON SPRING BASE DETAIL
NO SCALE

NOTE:
UPFLOW UNIT SHOWN. DOWNFLOW UNITS SHALL BE SIMILAR.

DUCT SIZE SCHEDULE

DUCT SEGMENT	SIZE
SUPPLY DUCT OUTLET	AxB
SUPPLY DUCT TO SPACE	CxD(SEE PLAN FOR C/D)
RETURN DUCT INLET	FxE(F IS UNIT RETURN OPENING WIDTH)
RETURN DUCT RISE	FxG
RETURN DUCT TO SPACE	HxG(SEE PLAN FOR H/G)
OUTSIDE AIR DUCT	J⌀(SEE PLANS)

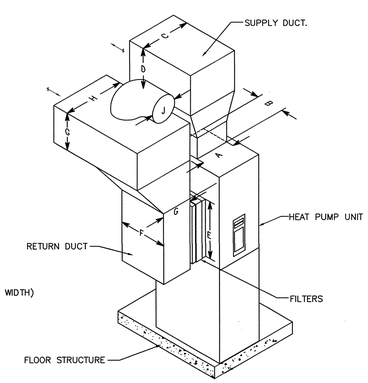

8 / M-501 VERTICAL HEAT PUMP DUCTWORK DETAIL
NO SCALE

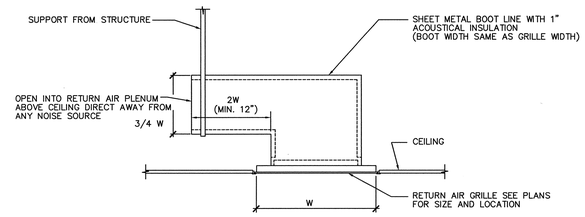

1 / M-501 RETURN AIR SOUND BOOT DETAIL
NO SCALE

NOTES:
1. EXHAUST AND RETURN GRILLES ARE SIMILAR.
2. EITHER METHOD IS ACCEPTABLE

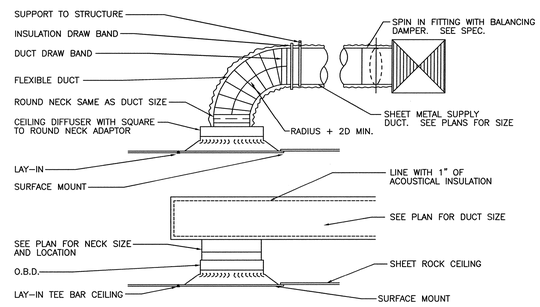

2 / M-501 CEILING DIFFUSER DETAIL
NO SCALE

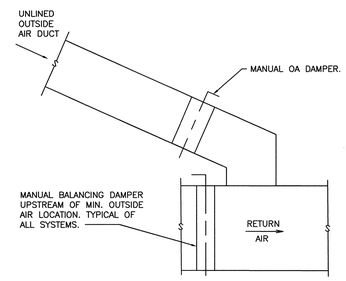

3 / M-501 TYPICAL OUTSIDE AIR DUCT DETAIL
NO SCALE

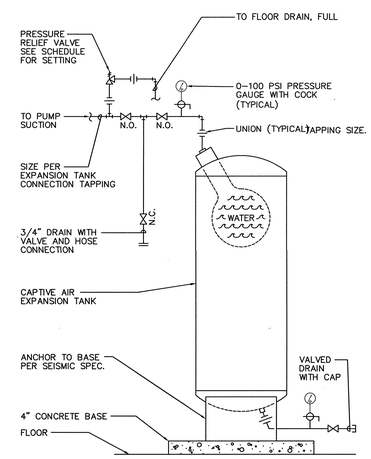

4 / M-501 EXPANSION TANK DETAIL
NO SCALE

State of Utah
Department of Administrative Services
Division of Facilities Construction & Management
4110 State Office Building
Salt Lake City, Utah 84114
Phone: (801) 538 - 3018
Fax: (801) 538 - 3267
Internet: http://www.dfcm.state.ut.us

Utah Valley University
Orem, Utah

CREATED BY: P+A architects
P+A architects
821 East Kensington Ave.
Salt Lake City, Utah 84105
P: 801.484.1161
F: 801.485.4640
e-mail parchitects@comcast.net

architecture planning design

CONSULTANT:
VAN BOERUM & FRANK ASSOCIATES INC.
WWW.VBFA.COM CONSULTING ENGINEERS
Salt Lake City · Logan · St. George · Tempe · Pocatello
330 South 300 East 801.530.3148 T
Salt Lake City, UT 84111 801.530.3150 F
VBFA Project Number:09422
LICENSED PROFESSIONAL ENGINEER No. 185939 STEVEN T. SHEPHERD 7-29-10 STATE OF UTAH

PROJECT TITLE:
UTAH VALLEY UNIVERSITY NEW PARKING AND FACILITIES DEPARTMENT BUILDING

UTAH VALLEY UNIVERSITY
936 SOUTH 400 WEST
OREM, UTAH

REVISIONS

MARK	DATE	DESCRIPTION

ISSUE TYPE: CONSTRUCTION DOCUMENTS

ISSUE DATE: August 02, 2010

CAD PROJECT NO:	09247790
CAD DWG FILE:	
DRAWN BY:	E.J./K.M
CHK'D BY:	S.S/S.J

COPYRIGHT: P&A architects

KEY PLAN

SHEET TITLE
MECHANICAL DETAILS

SHEET NUMBER
M-501

FLUID-TO-AIR HEAT PUMP SCHEDULE

ID	MANUFACTURER	MODEL NO.	ARRANGEMENT	AIR SIDE TOTAL AIRFLOW RATE (CFM)	EXT STATIC PRESSURE (IN H2O)	OUTSIDE AIRFLOW RATE (CFM)	COOLING ENT AIR TEMP. DB/WB ("F)	COOLING LVG AIR TEMP. DB ("F)	COOLING TOTAL COOLING LOAD (BTUH)	COOLING SENSIBLE COOLING LOAD (BTUH)	HEAT OF REJECT (BTUH)	HEATING ENT AIR TEMP. DB/WB ("F)	HEATING LVG AIR TEMP. DB ("F)	HEATING HEATING LOAD (MBH)	FLUID WORKING FLUID	FLUID FLOW RATE (GPM)	COOLING ENT / LVG WATER TEMP. ("F)	HEATING ENT / LVG WATER TEMP. ("F)	MAXIMUM WATER PRESSURE DROP (FT)	BRANCH PIPE SIZE (IN)	WATER CONNECTION SIZE (IN)	CONDENSATE CONNECTION SIZE (IN)	ELECTRICAL COP	ELECTRICAL MCA	ELECTRICAL VOLT/PH/HZ	PHYSICAL LENGTH / WIDTH / HEIGHT (IN)	NOTES
HP-1	CLIMATE MASTER	TS036	VERTICAL-DOWNFLOW	1000	0.50	60	80/62	52	32,700	32,200	39,200	60	86.2	30,000	5% METH	7.5	80 / 90.5	40 / 33.6	9.6	1-1/4	3/4	3/4	4.91	17.3	208/3/60	26 / 31 / 51	1, 3, 4, 6, 7,8
HP-2	CLIMATE MASTER	TS048	VERTICAL-DOWNFLOW	1600	0.50	120	80/62	49	46,800	44,300	57,200	60	91.3	44,400	5% METH	10.0	80 / 91.4	40 / 33.2	7.9	1-1/2	1	3/4	4.34	25.3	208/3/60	26 / 31 / 55	1, 3, 4, 6, 7,8
HP-3	CLIMATE MASTER	TS036	VERTICAL-UPFLOW	1000	0.50	200	80/62	52	32,700	32,200	39,200	60	86.2	30,000	5% METH	7.5	80 / 90.5	40 / 33.6	9.6	1-1/4	3/4	3/4	4.91	17.3	208/3/60	26 / 31 / 51	2, 3, 4, 6, 7,8
HP-4	CLIMATE MASTER	TS036	VERTICAL-UPFLOW	1000	0.50	300	80/62	52	32,700	32,200	39,200	60	86.2	30,000	5% METH	7.5	80 / 90.5	40 / 33.6	9.6	1-1/4	3/4	3/4	4.91	17.3	208/3/60	26 / 31 / 51	1, 3, 4, 6, 7,8
HP-5	CLIMATE MASTER	TS048	VERTICAL-UPFLOW	1600	0.50	80	80/62	49	46,800	44,300	57,200	60	91.3	44,400	5% METH	10.0	80 / 91.4	40 / 33.2	7.9	1-1/2	1	3/4	4.34	25.3	208/3/60	26 / 31 / 55	1, 3, 4, 5, 6, 7,8
HP-6	CLIMATE MASTER	TS018	VERTICAL-UPFLOW	800	0.50	300	80/62	53	18,300	18,300	22,600	60	93.6	16,200	5% METH	3.8	80 / 92.1	40 / 33.6	4.0	1	3/4	3/4	3.90	15.6	208/3/60	23 / 26 / 45	1, 3, 4, 6, 7,8
HP-7	CLIMATE MASTER	TS018	VERTICAL-DOWNFLOW	500	0.50	20	80/62	44	11,300	10,400	14,100	60	89.0	11,200	5% METH	2.5	80 / 91.3	40 / 33.2	4.5	3/4	1/2	3/4	4.21	15.6	208/3/60	23 / 22 / 35	1, 3, 4, 6, 7,8
HP-8	CLIMATE MASTER	TS012	VERTICAL-UPFLOW	400	0.50	200	80/62	44	11,300	10,400	14,100	60	89.0	11,200	5% METH	2.5	80 / 91.3	40 / 33.2	4.5	3/4	1/2	3/4	4.21	7	208/3/60	23 / 22 / 35	1, 3, 4, 6, 7,8
HP-9	CLIMATE MASTER	TS060	VERTICAL-UPFLOW	1990	0.50	300	80/62	52	53,500	53,500	68,200	60	89.0	49,800	5% METH	12	80 / 91.1	40 / 33.4	16.0	1-1/2	1	3/4	3.90	28.5	208/3/60	26 / 31 / 59	1, 3, 4, 6, 7, 8
HP-10	CLIMATE MASTER	TS036	VERTICAL-UPFLOW	1200	0.50	200	80/62	52	32,700	32,200	39,200	60	86.2	30,000	5% METH	7.5	80 / 90.5	40 / 33.6	9.6	1-1/4	3/4	3/4	4.91	17.3	208/3/60	26 / 31 / 51	1, 3, 4, 6, 7, 8
HP-11	CLIMATE MASTER	TS060	VERTICAL-UPFLOW	1990	0.50	250	80/62	52	53,500	53,500	68,200	60	89.0	49,800	5% METH	12	80 / 91.1	40 / 33.4	16.0	1-1/2	1	3/4	3.90	28.5	208/3/60	26 / 31 / 59	2, 3, 4, 6, 7,8
HP-12	CLIMATE MASTER	TS018	VERTICAL-UPFLOW	600	0.50	100	80/62	50	17,200	14,600	21,500	60	90.1	16,700	5% METH	3.8	80 / 91.5	40 / 33.3	4.0	1	3/4	3/4	3.98	12.3	208/3/60	23 / 26 / 45	1, 3, 4, 6, 7,8
HP-13	CLIMATE MASTER	TS018	VERTICAL-UPFLOW	800	0.50	100	80/62	53	18,300	18,300	22,600	60	93.6	16,200	5% METH	3.8	80 / 92.1	40 / 33.6	4.0	1	3/4	3/4	3.90	15.6	208/3/60	23 / 26 / 45	1, 3, 4, 6, 7,8
HP-14	CLIMATE MASTER	TS048	VERTICAL-UPFLOW	1600	0.50	150	80/62	49	46,800	44,300	57,200	60	91.3	44,400	5% METH	10.0	80 / 91.4	40 / 33.2	7.9	1-1/2	1	3/4	4.34	25.3	208/3/60	26 / 31 / 55	2, 3, 4, 6, 7,8

1. VERTICAL WATER SOURCE HEAT PUMP, C/W 2-WAY CONTROL VALVE
2. VERTICAL WATER SOURCE HEAT PUMP, NO CONTROL VALVE
3. REFRIGERANTS SHALL BE R410A.
4. CAPACITIES BASED ON 4500 FEET ELEVATION
5. PROVIDE HEAT RECLAIM DESUPERHEATER COIL, CONTROLS AND ETC.
6. ALL UNITS SHALL HAVE ECM MOTORS, AND FILTER RACKS
7. UNIT SHALL COME WITH STARTER
8. TERMINATE CONDENSATE LINES ABOVE NEAREST FLOOR DRAIN

GRILLES, REGISTERS AND DIFFUSERS

ID	MANUFACTURER	MODEL	MAX NC	DESCRIPTION
CD-1	EH PRICE	SPD	30	SQUARE PLAQUE FACE CEILING DIFFUSERS. REMOVABLE FACE, C.W./O.B.D. FRAME SHALL BE FOR SURFACE OR LAY-IN MOUNTING AS REQUIRED BY CEILING TYPE. LAY-IN FRAMES SHALL BE 24" x 24", 24" x 12" OR 12" x 12" AS REQUIRED TO FIT CEILING TILE SPACE AVAILABLE.
RG-1	EH PRICE	PDDR	30	PERFORATED FACE RETURN AIR UNIT, REMOVABLE FACE & CORE. FRAME SHALL BE FOR SURFACE OR LAY-IN MOUNTING AS REQUIRED BY CEILING TYPE. LAY-IN FRAMES HSLL BE 24" x 24", 24" x 12" OR 12" x 12" AS REQUIRED TO FIT CEILING TILE SPACE AVAILABLE. AIR QUANTITY SHALL MATCH ROOM SUPPLY OR EXHAUST AIR QUANTITY.
EG-1	EH PRICE	80	30	CRATE TYPE CEILING RETURN AIR UNIT, WITH OBD. REMOVABLE FACE AND CORE. FRAME SHALL BE FOR SURFACE OR LAY-IN MOUNTING AS REQUIRED BY CEILING TYPE. LAY-IN FRAMES SHALL BE 24" x 24", 24" x 12" OR 12" x 12" AS REQUIRED TO FIT CEILING TILE SPACE AVAILABLE. UNITS SHALL HAVE 1/2" x 1/2" x 1/2" SQUARES.
SWS-1	EH PRICE	LPB	30	LINEAR BAR YPE, ALUMINUM COUNTER TOP GRILLE, 1000 STANDARD BORDER, NARROW SPACING WIDTH, TYPE 16A CORE, AND OBD. COLOR AND FINISH BY ARCHITECT.
SWS-2	EH PRICE	ASPI - 210 TYPE 21/31	30	2 SLOT LINEAR CEILING DIFFUSER WITH FULLY ADJUSTABLE AIR PATTERN AND FLOW CONTROL VANES FOR ONE OR TWO WAY THROW PATTERN. UNITS SHALL HAVE 1" SLOTS AND INSULATED PLENUM WITH ROUND DUCT CONNECTION. FOR SURFACE OR LAY-IN MOUNTING AS REQUIRED. UNIT SHALL BE CURVED FACE FOR EXPOSED DUCT MOUNTING AS REQUIED.
SWR-1	EH PRICE	535	30	SIDEWALL RETURN AIR GRILLE. HORIZONTAL STATIONARY 45 DEG DEFLECTION VANES SET ON 1/2 INCH CENTER, COMPLETE WITH OBD ADJUSTABLE THROUGH FACE.

PUMP SCHEDULE

ID	MANUFACTURER AND MODEL NUMBER	LOCATION	TYPE	FLUID FLOW RATE (GPM)	FLUID WORKING FLUID	FLUID HEAD LOSS (FT)	PUMP EFFICIENCY (%)	PUMP CONSTRUCTION	ELECTRICAL MOTOR SIZE (HP)	ELECTRICAL MOTOR BHP (HP)	ELECTRICAL MOTOR SPEED (RPM)	ELECTRICAL VOLT/PH/HZ	NOTES
P-1	BELL & GOSSETT 1-1/2BC	MECH ROOM 116	NOTE 1	101	5 % METH	95	62%	BASE-MOUNTED	7.5	5.48	1750	208/3/60	1,2,3,4
P-2	BELL & GOSSETT 1-1/2BC	MECH ROOM 116	NOTE 1	101	5 % METH	95	62%	BASE-MOUNTED	7.5	5.48	1750	208/3/60	1,2,3,4

1. BASE-MOUNTED, END SUCTION CENTRIFUGAL PUMP
2. PUMPS ARE PRIMARY / STANDBY
3. PUMPS TO BE VFD COMPATIBLE
4. BALANCE FLOW RATE TO 81 GPM. FUTURE FLOW RATE TO BE 101 GPM

EXHAUST FAN SCHEDULE

ID	MANUFACTURER AND MODEL NUMBER	LOCATION	TYPE	AIR TYPE	AIR MAXIMUM AIRFLOW RATE (CFM)	AIR STATIC PRESSURE (IN. WATER)	FAN OUTLET VELOCITY (FPM)	FAN SPEED (RPM)	FAN STATIC EFFICIENCY (%)	ELECTRICAL MOTOR SIZE (HP)	ELECTRICAL MOTOR BHP (HP)	ELECTRICAL MOTOR SPEED (RPM)	ELECTRICAL VOLT/PH/HZ	PHYSICAL LENGTH/ WIDTH/ HEIGHT (IN)	CONTROL	NOTES
EF-1	COOK GC-182	ELEC 111	NOTE 2	EXH	200	0.4	603	1400	23%	138 W	138 W	1750	115/1/60	14 / 15 / 7	A	1,2
EF-2	COOK GC-182	ELEC 208	NOTE 2	EXH	200	0.4	603	1400	23%	138 W	138 W	1750	115/1/60	14 / 15 / 7	A	1,2
EF-3	COOK GC-182	MACHINE 203	NOTE 2	EXH	200	0.4	603	1400	23%	138 W	138 W	1750	115/1/60	14 / 15 / 7	A	1,2

1. ALL CAPACITIES BASED ON 4500 FEET ELEVATION
2. CEILING MOUNTED INLINE EXHAUST FAN. PROVIDE GRAVITY BACKDRAFT DAMPER, INTEGRAL THERMAL OVERLOAD PROTECTION.

A. CONTROL: THERMOSTAT

AIR-TO-AIR ENERGY RECOVERY SCHEDULE

ID	MANUFACTURER AND MODEL NUMBER	LOCATION	USAGE	OUTSIDE/SUPPLY AIRFLOW RATE (CFM)	OUTSIDE/SUPPLY ENTERING TEMP. DB/WB ("F)	OUTSIDE/SUPPLY LEAVING TEMP. DB/WB ("F)	OUTSIDE/SUPPLY STATIC PRESSURE (IN. WATER)	RETURN/EXHAUST AIRFLOW RATE (CFM)	RETURN/EXHAUST ENTERING TEMP. DB/WB ("F)	RETURN/EXHAUST LEAVING TEMP. DB/WB ("F)	RETURN/EXHAUST STATIC PRESSURE (IN. WATER)	EFFECTIVE SENSIBLE/ LATENT (%)	ELECTRICAL MIN CIRCUIT AMPS	ELECTRICAL FROST CONTROL (KW)	ELECTRICAL MOTOR V/PH/HZ	PHYSICAL LENGTH/ WIDTH/ HEIGHT (IN)	NOTES
ERV-1	COOK ERV-2500	ROOF	HEAT	2380	20 / 15	46 / 38	1	1250	72 / 55	22 / 18	0.7	95% / 92%	62.55	13.6	208/3/60	52 / 52 / 50	1,2,3,4,5,6
			COOL	2380	97 / 62	85 / 61	1	1250	72 / 59	96 / 62	0.7						

1. ROOFTOP ENERGY RECOVERY VENTILATOR, VERTICAL ARRANGEMENT CONSISTING OF ENERGY RECOVERY WHEEL, SUPPLY AND EXHAUST BLOWERS, BELT-DRIVE, FILTER, ELECTRIC COIL, AND FROST CONTROL.
2. UNIT TO COME WITH MOTORIZED OUTSIDE AIR DAMPER, GRAVITY EXHAUST DAMPER, EXHAUST HOOD WITH BIRD SCREEN, INTAKE HOOD WITH WASHABLE FILTERS, STARTER AND DISCONNECT, CONTROLS AND SINGLE POWER CONNECTION.
3. PROVIDE SPRING VIBRATION CURB
4. CAPACITIES BASED ON 4500 FEET ELEVATION.
5. BALANCE OUTSIDE/SUPPLY AIRFLOW TO 1880 CFM. FUTURE OUTSIDE AIRFLOW IS 2380 CFM
6. BALANCE RETURN/EXHAUST AIRFLOW TO 750 CFM. FUTURE EXHASUT AIRFLOW IS 1250 CFM

ELECTRIC UNIT HEATER SCHEDULE

ID	MANUFACTURER AND MODEL NUMBER	LOCATION	TYPE	USAGE	AIR AIRFLOW RATE (CFM)	AIR LOAD (BTU/H)	AIR ENTERING TEMP. DB ("F)	AIR LEAVING TEMP. DB ("F)	ELECTRICAL KW	ELECTRICAL VOLT/PH/HZ	NOTES
EUH-1	QMARK - MUH03-21	MECH 116	VERTICAL	HEATING	350	7,500	60	87	3	208/1/60	1

1. VERTICAL ELECTRIC UNIT HEATER

EXPANSION TANK SCHEDULE

ID	MANUFACTURER AND MODEL NUMBER	LOCATION	TYPE	FLUID WORKING FLUID	FLUID MIN. TANK/ ACCEPTANCE (GAL)	PHYSICAL TANK SIZE (GAL)	PHYSICAL RELIEF VALVE (PSIG)	PHYSICAL DIA./ HEIGHT (IN)	PHYSICAL NPT FITTING (IN)	NOTES
ET-1	BELL & GOSSETT B-200	MECH ROOM 116	BLADDER	5% METH	53	53	75	24 / 39	1	1

1. ASME CERTIFIED

AIR SEPARATOR SCHEDULE

ID	MANUFACTURER AND MODEL NUMBER	LOCATION	TYPE	FLUID FLOW RATE (GPM)	FLUID WORKING FLUID	FLUID HEAD LOSS (FT)	NOTES
AS-1	BELL & GOSSETT RL-4	MECH ROOM 116	INLINE	101	5% METH	3	1

1. ASME CERTIFIED

State of Utah
Department of Administrative Services
Division of Facilities Construction & Management
4110 State Office Building
Salt Lake City, Utah 84114
Phone: (801) 538 - 3018
Fax: (801) 538 - 3267
Internet: http://www.dfcm.state.ut.us

Utah Valley University
Orem, Utah

CREATED BY: P+A architects
P+A architects
821 East Kensington Ave.
Salt Lake City, Utah 84105
P: 801.484.1161
F: 801.485.4640
e-mail parchitects@comcast.net

architecture planning design

CONSULTANT:
VAN BOERUM & FRANK ASSOCIATES INC.
CONSULTING ENGINEERS
WWW.VBFA.COM
Salt Lake City - Logan - St. George - Tempe - Pocatello
330 South 300 East 801.530.3148 T
Salt Lake City, UT 84111 801.530.3150 F
VBFA Project Number:09422
LICENSED PROFESSIONAL ENGINEER No. 189980 STEVEN T. SHEPHERD 7/29/10 STATE OF UTAH

PROJECT TITLE:
UTAH VALLEY UNIVERSITY
NEW PARKING AND
FACILITIES DEPARTMENT
BUILDING

UTAH VALLEY UNIVERSITY
936 SOUTH 400 WEST
OREM, UTAH

REVISIONS

MARK	DATE	DESCRIPTION

ISSUE TYPE:CONSTRUCTION DOCUMENTS
ISSUE DATE: August 02, 2010

CAD PROJECT NO: 09247790
CAD DWG FILE:
DRAWN BY: E.J./K.M
CHK'D BY: S.S/S.J
COPYRIGHT: P&A architects

KEY PLAN

SHEET TITLE
MECHANICAL SCHEDULES

SHEET NUMBER
M-601

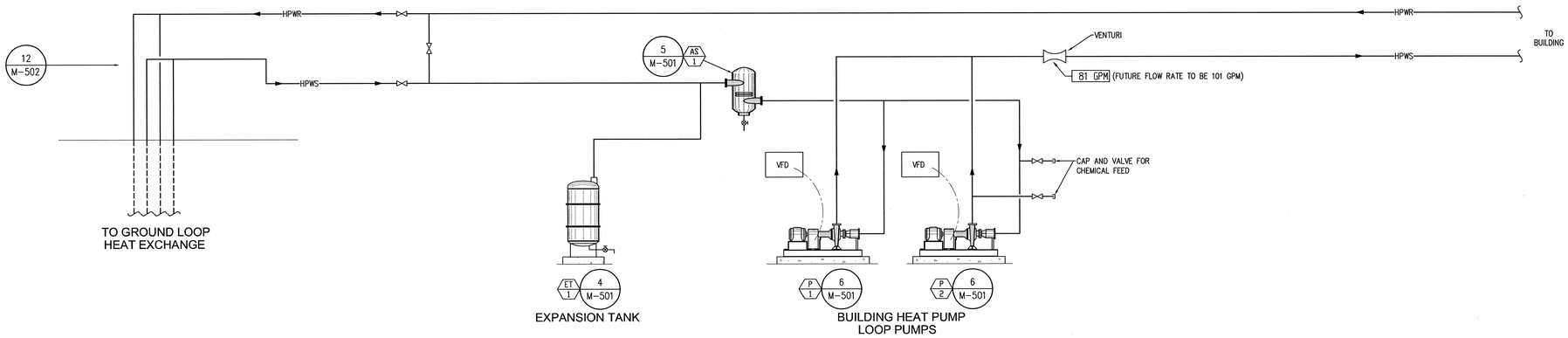

1 M-701 MECHANICAL PIPING SCHEMATIC
NO SCALE

State of Utah

Department of Administrative Services

Division of Facilities
Construction & Management
4110 State Office Building
Salt Lake City, Utah 84114
Phone: (801) 538 - 3018
Fax: (801) 538 - 3267
Internet: http://www.dfcm.state.ut.us

Utah Valley University
Orem, Utah

CREATED BY: P+A architects

P+A architects
821 East Kensington Ave.
Salt Lake City, Utah 84105
P: 801.484.1161
F: 801.485.4640
e-mail parchitects@comcast.net

architecture planning design

CONSULTANT:

VAN BOERUM & FRANK ASSOCIATES INC.
WWW.VBFA.COM CONSULTING ENGINEERS
Salt Lake City - Logan - St. George - Tempe - Pocatello
330 South 300 East 801.530.3148 T
Salt Lake City, UT 84111 801.530.3150 F
VBFA Project Number:09422

LICENSED PROFESSIONAL ENGINEER
No. 189969
STEVEN T. SHEPHERD
7/22/10
STATE OF UTAH

PROJECT TITLE:

UTAH VALLEY UNIVERSITY
NEW PARKING AND
FACILITIES DEPARTMENT
BUILDING

UTAH VALLEY UNIVERSITY
936 SOUTH 400 WEST
OREM, UTAH

REVISIONS

MARK	DATE	DESCRIPTION

ISSUE TYPE: CONSTRUCTION DOCUMENTS

ISSUE DATE: August 02, 2010

CAD PROJECT NO: 09247790
CAD DWG FILE:
DRAWN BY: E.J./K.M
CHK'D BY: S.S/S.J

COPYRIGHT: P&A architects

KEY PLAN

SHEET TITLE

MECHANICAL
SCHEMATIC

SHEET NUMBER

M-701

KEYED NOTES

1. EXTEND 3/4" CONDENSATE DRAIN PIPE FROM HEAT PUMP AND TERMINATE ABOVE NEAREST FLOOR DRAIN.
2. PROVIDE AND INSTALL 4" CONCRETE HOUSEKEEPING PAD.
3. PLUMBING EQUIPMENT, SEE PLUMBING DRAWINGS.
4. EXTEND AND CONNECT PIPING FROM DESUPERHEATER LOCATED IN HEAT PUMP-5 TO WATER HEATER-1.

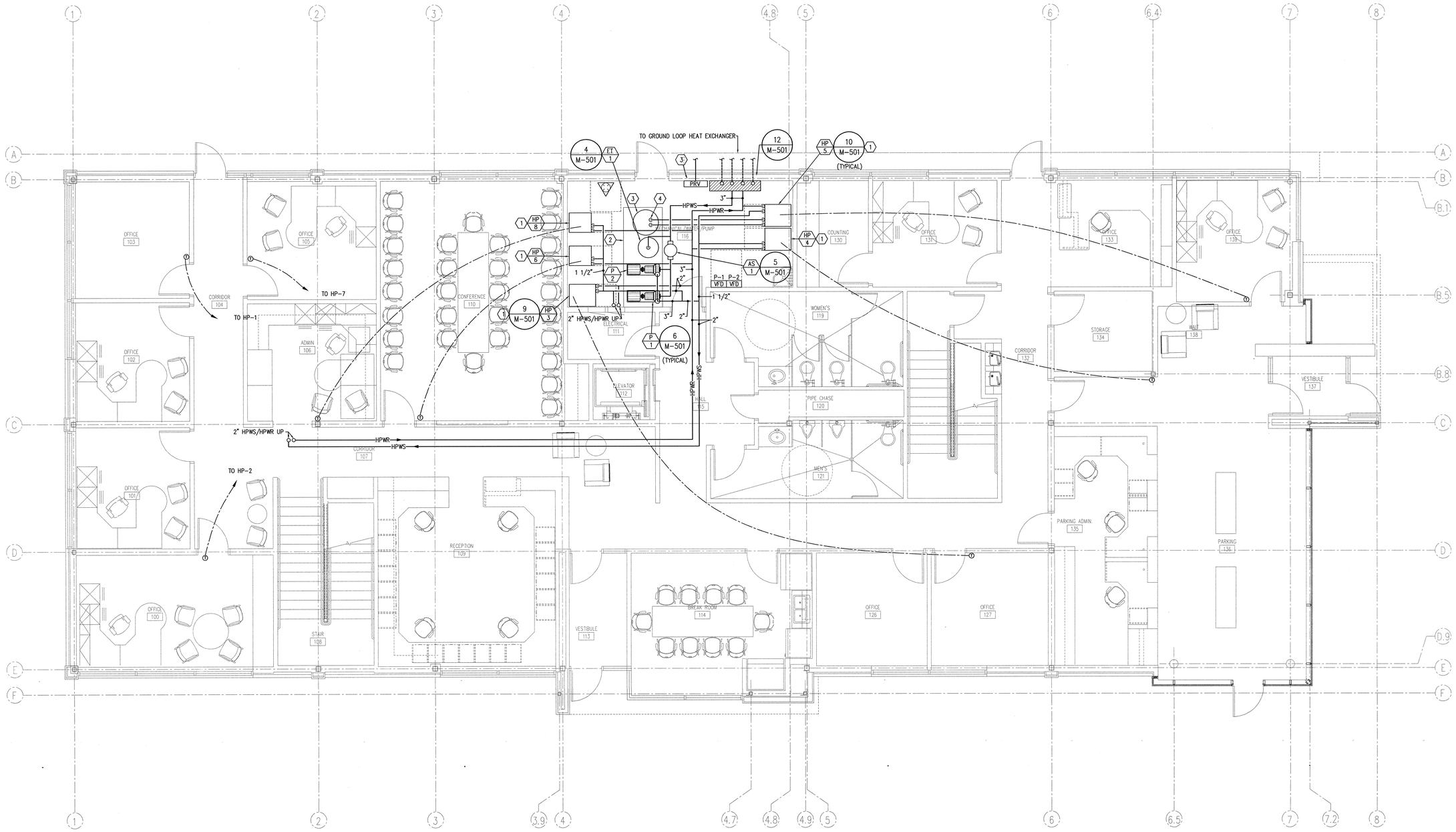

01 M-100 MAIN LEVEL MECHANICAL PIPING FLOOR PLAN

SCALE 1/4" = 1'-0"

PLAN NORTH

State of Utah

Department of Administrative Services

Division of Facilities Construction & Management
4110 State Office Building
Salt Lake City, Utah 84114
Phone: (801) 538 - 3018
Fax: (801) 538 - 3267
Internet: http://www.dfcm.state.ut.us

Utah Valley University
Orem, Utah

CREATED BY: P+A architects

P+A architects
821 East Kensington Ave.
Salt Lake City, Utah 84105
P: 801.484.1161
F: 801.485.4640
e-mail parchitects@comcast.net

architecture planning design

CONSULTANT:

VAN BOERUM & FRANK ASSOCIATES INC.
WWW.VBFA.COM CONSULTING ENGINEERS
Salt Lake City - Logan - St. George - Tempe - Pocatello
330 South 300 East 801.530.3148 T
Salt Lake City, UT 84111 801.530.3150 F
VBFA Project Number:09422

LICENSED PROFESSIONAL ENGINEER No. 189969 STEVEN T. SHEPHERD 7/29/10 STATE OF UTAH

PROJECT TITLE:

UTAH VALLEY UNIVERSITY
NEW PARKING AND
FACILITIES DEPARTMENT
BUILDING

UTAH VALLEY UNIVERSITY
936 SOUTH 400 WEST
OREM, UTAH

REVISIONS

MARK	DATE	DESCRIPTION

ISSUE TYPE:CONSTRUCTION DOCUMENTS

ISSUE DATE: August 02, 2010

CAD PROJECT NO: 09247790
CAD DWG FILE:
DRAWN BY: E.J./K.M
CHK'D BY: S.S/S.J

COPYRIGHT: P&A architects

KEY PLAN

SHEET TITLE

MAIN LEVEL
MECHANICAL
PIPING FLOOR PLAN

SHEET NUMBER

MP-100

KEYED NOTES

1. SHUT OFF VALVES, TYPICAL.
2. EXTEND 3/4" CONDENSATE DRAIN PIPE FROM HEAT PUMP AND TERMINATE ABOVE NEAREST FLOOR DRAIN.

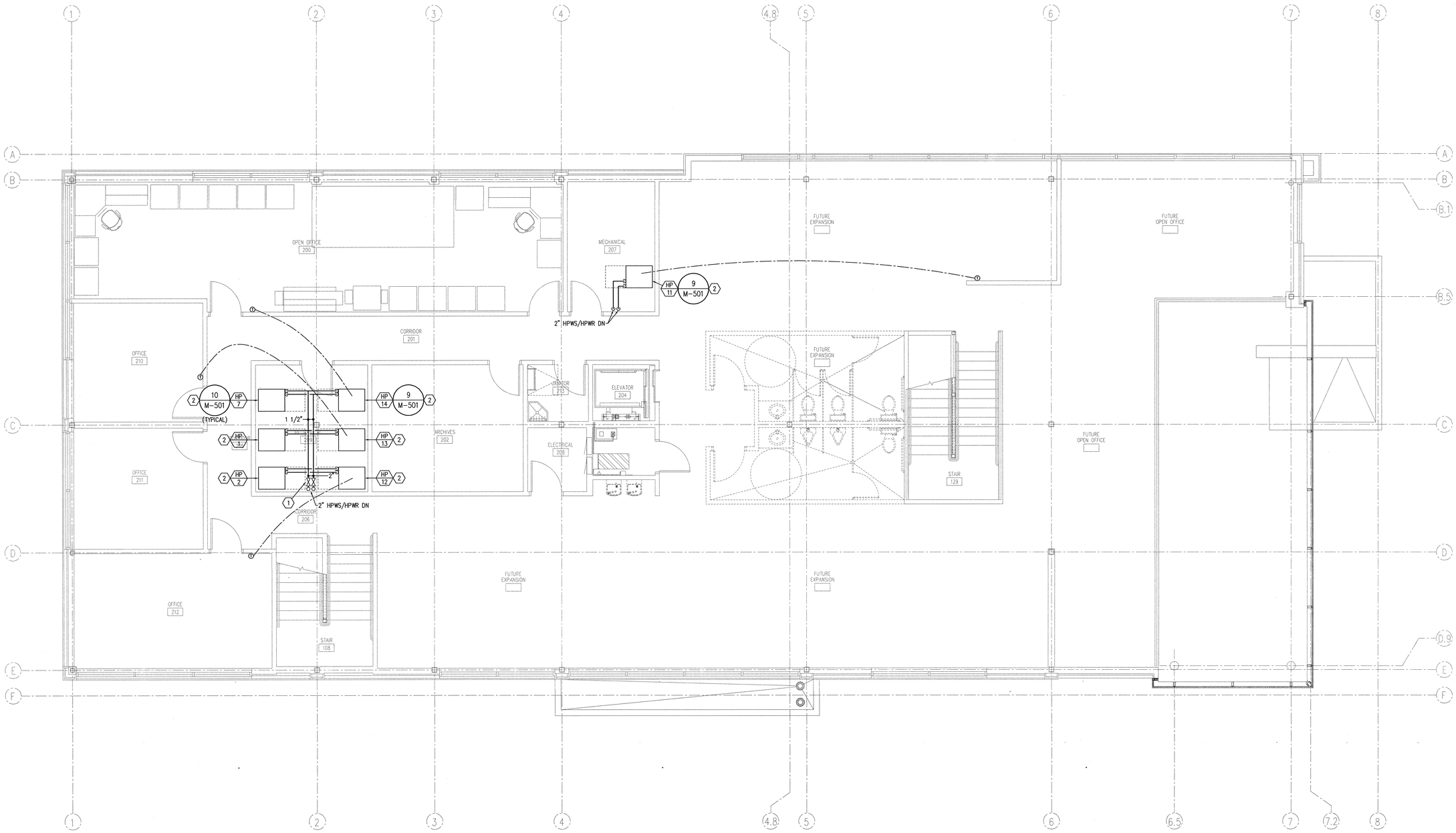

PLAN NORTH

01 / M-101 SECOND LEVEL MECHANICAL PIPING FLOOR PLAN

SCALE 1/4" = 1'-0"

State of Utah
Department of Administrative Services
Division of Facilities Construction & Management
4110 State Office Building
Salt Lake City, Utah 84114
Phone: (801) 538 - 3018
Fax: (801) 538 - 3267
Internet: http://www.dfcm.state.ut.us

Utah Valley University
Orem, Utah

CREATED BY: P+A architects
P+A architects
821 East Kensington Ave.
Salt Lake City, Utah 84105
P: 801.484.1161
F: 801.485.4640
e-mail parchitects@comcast.net

architecture planning design

CONSULTANT:
VAN BOERUM & FRANK ASSOCIATES INC.
WWW.VBFA.COM CONSULTING ENGINEERS
Salt Lake City · Logan · St. George · Tempe · Pocatello
330 South 300 East 801.530.3148 T
Salt Lake City, UT 84111 801.530.3150 F
VBFA Project Number:09422

LICENSED PROFESSIONAL ENGINEER No. 189189 STEVEN T. SHEPHERD 7/22/10 STATE OF UTAH

PROJECT TITLE:

UTAH VALLEY UNIVERSITY NEW PARKING AND FACILITIES DEPARTMENT BUILDING

UTAH VALLEY UNIVERSITY
936 SOUTH 400 WEST
OREM, UTAH

REVISIONS

MARK	DATE	DESCRIPTION

ISSUE TYPE:CONSTRUCTION DOCUMENTS

ISSUE DATE: August 02, 2010

CAD PROJECT NO: 09247790
CAD DWG FILE:
DRAWN BY: E.J./K.M
CHK'D BY: S.S/S.J

COPYRIGHT: P&A architects

KEY PLAN

SHEET TITLE

SECOND LEVEL MECHANICAL PIPING FLOOR PLAN

SHEET NUMBER

MP-101

GENERAL NOTES

1. ANY EXISTING SURFACES WHICH ARE CUT OR MODIFIED FOR THE INSTALLATION OF THIS CONTRACT OR OTHERWISE DAMAGED DURING THIS WORK SHALL BE REPAIRED, PATCHED AND/OR REFINISHED TO MATCH EXISTING ADJACENT SURFACES.

(#) KEYED NOTES

1. DOMESTIC WATER PRV IN RISER, SEE DETAIL.
2. SEE CIVIL PLANS FOR CONTINUATION.
3. COORDINATE PIPING WITH DUCTWORK, TYPICAL.
4. COORDINATE FLOOR DRAIN LOCATION WITH EQUIPMENT.
5. PIPING FOR DESUPERHEATER SEE DETAIL, COORDINATE WITH MECHANICAL PLANS.
6. COORDINATE EQUIPMENT WITH MECHANICAL PLANS, TYPICAL.
7. TO FIRE DEPARTMENT CONNECTION.
8. TO FIRE RISER.
9. ELECTRONIC HORN/STROBE. COORDINATE WIRING WITH ELECTRICAL.
10. GATE VALVE WITH VALVE BOX ACCESS AT GRADE NEXT TO TEE AT MAIN. SEE DETAIL.
11. CL52 DUCTILE IRON PIPE IS TO EXTEND 5' FROM BUILDING EXTERIOR. PIPE IS TO BE BURIED AT A DEPTH OF 5'.

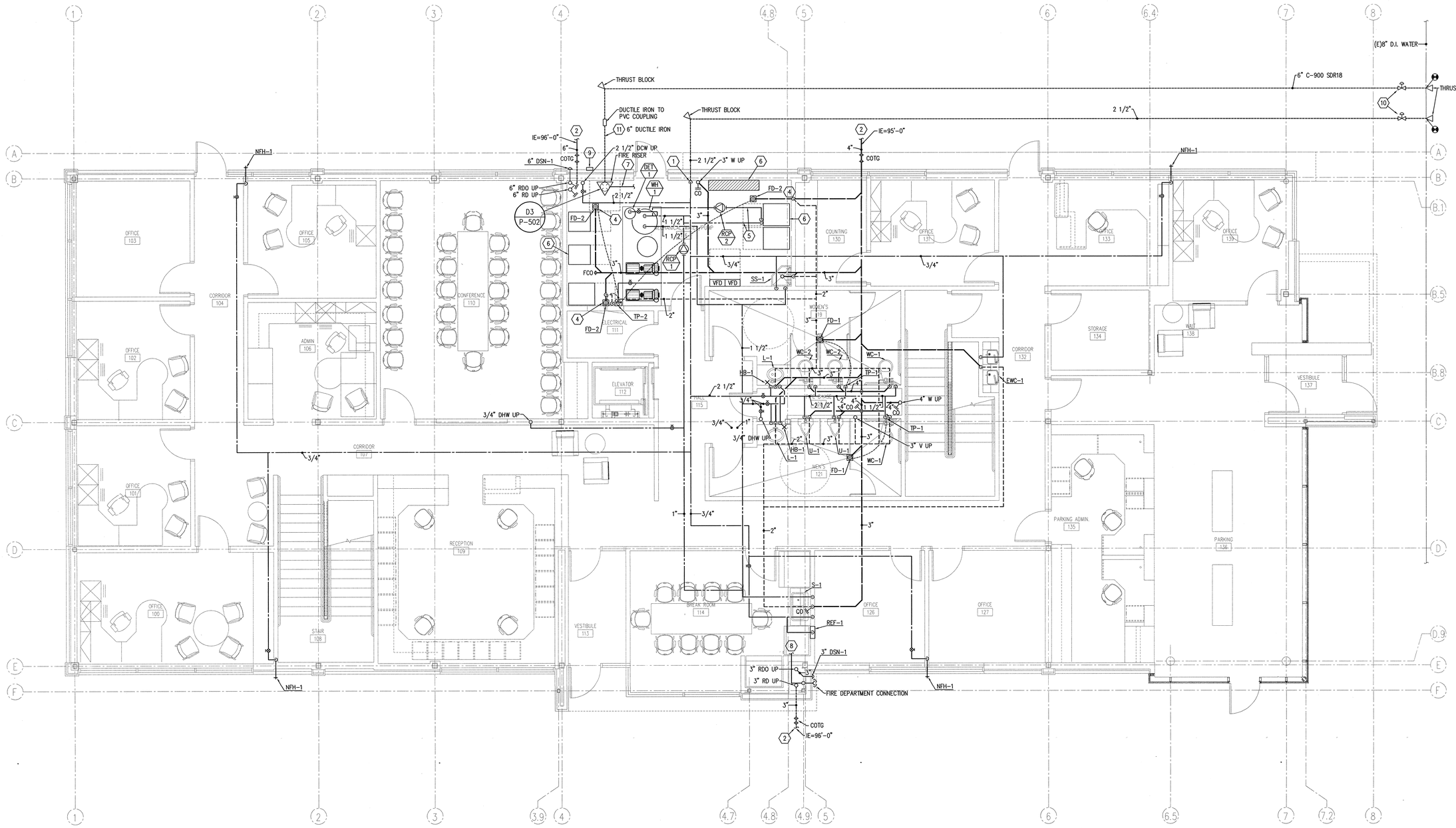

01 P-100 MAIN LEVEL PLUMBING FLOOR PLAN

SCALE 1/4" = 1'-0"

PLAN NORTH

State of Utah

Department of Administrative Services

Division of Facilities Construction & Management
4110 State Office Building
Salt Lake City, Utah 84114
Phone: (801) 538 - 3018
Fax: (801) 538 - 3267
Internet: http://www.dfcm.state.ut.us

Utah Valley University
Orem, Utah

CREATED BY: P+A architects

P+A architects
821 East Kensington Ave.
Salt Lake City, Utah 84105
P: 801.484.1161
F: 801.485.4640
e-mail parchitects@comcast.net

architecture planning design

CONSULTANT:

VAN BOERUM & FRANK ASSOCIATES INC.
WWW.VBFA.COM CONSULTING ENGINEERS
Salt Lake City - Logan - St. George - Tempe - Pocatello
330 South 300 East 801.530.3148 T
Salt Lake City, UT 84111 801.530.3150 F
VBFA Project Number:09422

LICENSED PROFESSIONAL ENGINEER No. 189989 STEVEN T. SHEPHERD 7/29/10 STATE OF UTAH

PROJECT TITLE:

UTAH VALLEY UNIVERSITY NEW PARKING AND FACILITIES DEPARTMENT BUILDING

UTAH VALLEY UNIVERSITY
936 SOUTH 400 WEST
OREM, UTAH

REVISIONS

MARK	DATE	DESCRIPTION

ISSUE TYPE:CONSTRUCTION DOCUMENTS

ISSUE DATE: August 02, 2010

CAD PROJECT NO:	09247790
CAD DWG FILE:	
DRAWN BY:	E.J./K.M
CHK'D BY:	S.S/S.J

COPYRIGHT: P&A architects

KEY PLAN

SHEET TITLE

MAIN LEVEL PLUMBING FLOOR PLAN

SHEET NUMBER

P-100

KEYED NOTES

1. PROVIDE ROUGH-IN FOR FUTURE PLUMBING FIXTURE.
2. STUB WASTE LINE ABOVE FLOOR FOR FUTURE FIXTURE.
3. CAPPED LINE FOR FUTURE FIXTURE.
4. PROVIDE CAPPED LINE WITH SHUT-OFF VALVE.
5. COORDINATE PIPING WITH DUCTWORK, TYPICAL.
6. COORDINATE FLOOR DRAIN LOCATION WITH EQUIPMENT.
7. COORDINATE EQUIPMENT WITH MECHANICAL PLANS, TYPICAL.

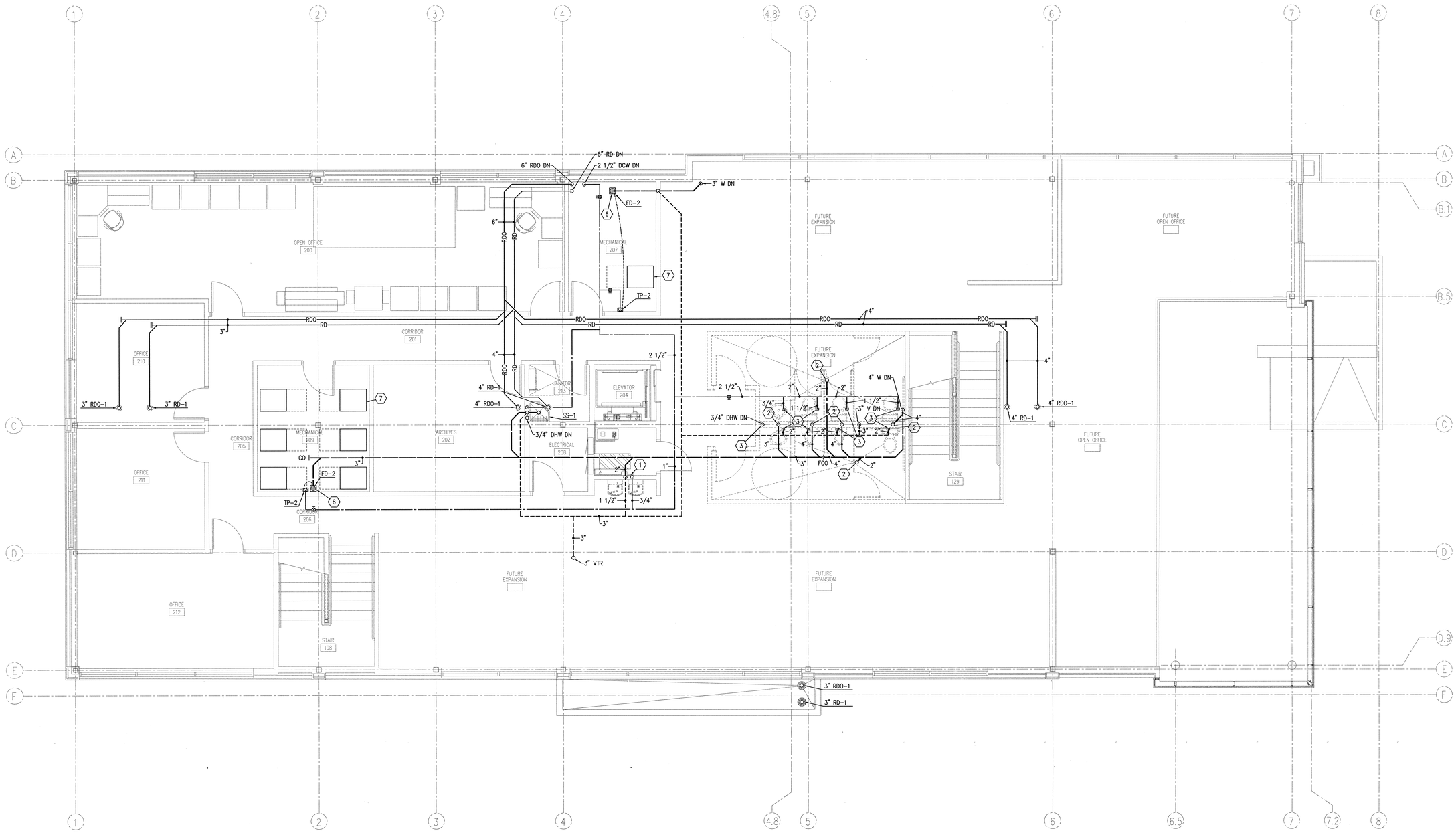

PLAN NORTH

01 P-101 SECOND LEVEL PLUMBING FLOOR PLAN

SCALE 1/4" = 1'-0"

State of Utah
Department of Administrative Services
Division of Facilities Construction & Management
4110 State Office Building
Salt Lake City, Utah 84114
Phone: (801) 538 - 3018
Fax: (801) 538 - 3267
Internet: http://www.dfcm.state.ut.us

Utah Valley University
Orem, Utah

CREATED BY: P+A architects
P+A architects
821 East Kensington Ave.
Salt Lake City, Utah 84105
P: 801.484.1161
F: 801.485.4640
e-mail parchitects@comcast.net

architecture planning design

CONSULTANT:
VAN BOERUM & FRANK ASSOCIATES INC.
WWW.VBFA.COM CONSULTING ENGINEERS
Salt Lake City · Logan · St. George · Tempe · Pocatello
330 South 300 East 801.530.3148 T
Salt Lake City, UT 84111 801.530.3150 F
VBFA Project Number:09422
LICENSED PROFESSIONAL ENGINEER No. 189680 STEVEN T. SHEPHERD 7/29/10 STATE OF UTAH

PROJECT TITLE:
UTAH VALLEY UNIVERSITY NEW PARKING AND FACILITIES DEPARTMENT BUILDING

UTAH VALLEY UNIVERSITY
936 SOUTH 400 WEST
OREM, UTAH

REVISIONS

MARK	DATE	DESCRIPTION

ISSUE TYPE: CONSTRUCTION DOCUMENTS

ISSUE DATE: August 02, 2010

CAD PROJECT NO: 09247790
CAD DWG FILE:
DRAWN BY: E.J./K.M
CHK'D BY: S.S/S.J

COPYRIGHT: P&A architects

KEY PLAN

SHEET TITLE
SECOND LEVEL PLUMBING FLOOR PLAN

SHEET NUMBER
P-101

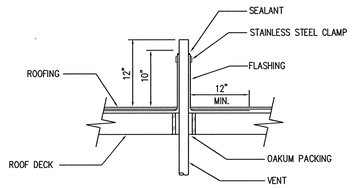

5 / P-501 VENT THRU ROOF FLASHING & SLEEVING DETAIL
NO SCALE
DETAIL

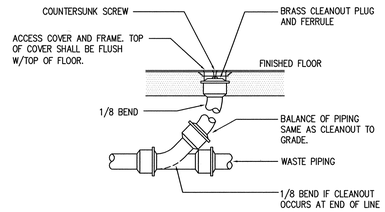

1 / P-501 FLOOR CLEANOUT DETAIL
NO SCALE

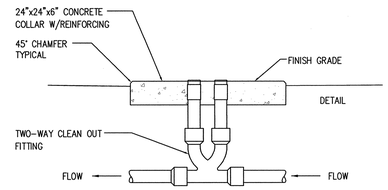

6 / P-501 CLEANOUT TO GRADE DETAIL (C.O.T.G.)
NO SCALE

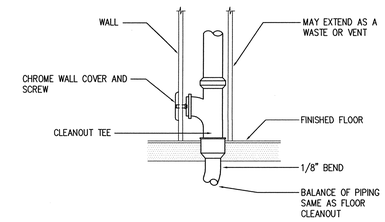

2 / P-501 WALL CLEANOUT DETAIL
NO SCALE

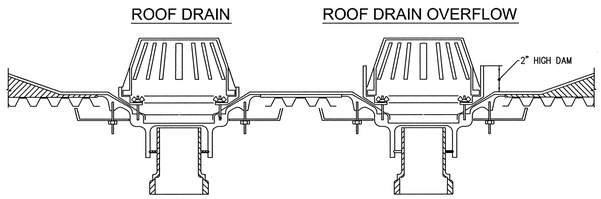

7 / P-501 ROOF DRAIN DETAIL
NO SCALE

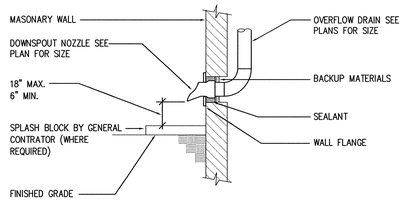

3 / P-501 DOWNSPOUT NOZZLE DETAIL
NO SCALE

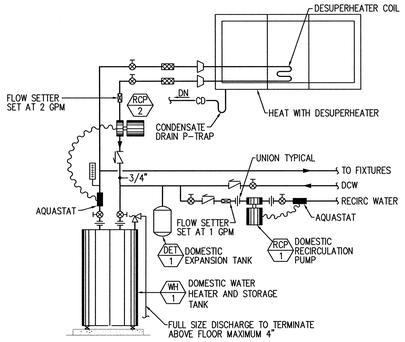

8 / P-501 ELECTRIC WATER HEATER/DESUPERHEATER DETAIL
NO SCALE

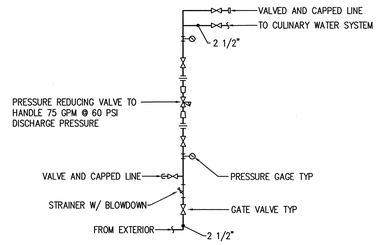

4 / P-501 PRV DETAIL
NO SCALE

BRANCH WATER LINE SCHEDULE

FIXTURE	FIXTURE UNITS	QUANTITY OF FIXTURES SERVED BY					
		1/2"	3/4"	1"	1-1/4"	1-1/2"	2"
WATER CLOSET (FLUSH VALVE)	10	---	---	1	3	5	15
WATER CLOSET (TANK TYPE)	3	1	2	4	10	---	---
URINAL	5	---	1	2	6	10	30
LAVATORY	2	1	3	6	15	25	---
SERVICE SINK	4	---	1	3	---	---	---
QUANTITY OF FIXTURE UNITS SERVED BY	---	3	6	12	30	50	150

NOTE:
WHERE PIPING IS SIZED ON DRAWINGS IT SHALL BE FOLLOWED. OTHERWISE INSTALL ACCORDING TO TABLE. WHERE FIXTURES ON A BRANCH ARE MIXED. TAKE THE SUM OF FIXTURE UNITS TO DETERMINE SIZING. THE BRANCHES SHALL BE REDUCED AS THE LOAD IS TAKEN OFF. MINIMUM SIZE TO ONE (1) FIXTURE SHALL BE 1/2".

State of Utah
Department of Administrative Services
Division of Facilities Construction & Management
4110 State Office Building
Salt Lake City, Utah 84114
Phone: (801) 538 - 3018
Fax: (801) 538 - 3267
Internet: http://www.dfcm.state.ut.us

Utah Valley University
Orem, Utah

CREATED BY: P+A architects
P+A architects
821 East Kensington Ave.
Salt Lake City, Utah 84105
P: 801.484.1161
F: 801.485.4640
e-mail parchitects@comcast.net

architecture planning design

CONSULTANT:
VAN BOERUM & FRANK ASSOCIATES INC.
WWW.VBFA.COM CONSULTING ENGINEERS
Salt Lake City - Logan - St. George - Tempe - Pocatello
330 South 300 East 801.530.3148 T
Salt Lake City, UT 84111 801.530.3150 F
VBFA Project Number:09422
LICENSED PROFESSIONAL ENGINEER No. 189949 STEVEN T. SHEPHERD 7/29/10 STATE OF UTAH

PROJECT TITLE:
UTAH VALLEY UNIVERSITY NEW PARKING AND FACILITIES DEPARTMENT BUILDING

UTAH VALLEY UNIVERSITY
936 SOUTH 400 WEST
OREM, UTAH

REVISIONS

MARK	DATE	DESCRIPTION

ISSUE TYPE: CONSTRUCTION DOCUMENTS
ISSUE DATE: August 02, 2010

CAD PROJECT NO: 09247790
CAD DWG FILE:
DRAWN BY: E.J./K.M
CHK'D BY: S.S/S.J
COPYRIGHT: P&A architects

KEY PLAN

SHEET TITLE
PLUMBING DETAILS

SHEET NUMBER
P-501

D1 TYPICAL GATE VALVE

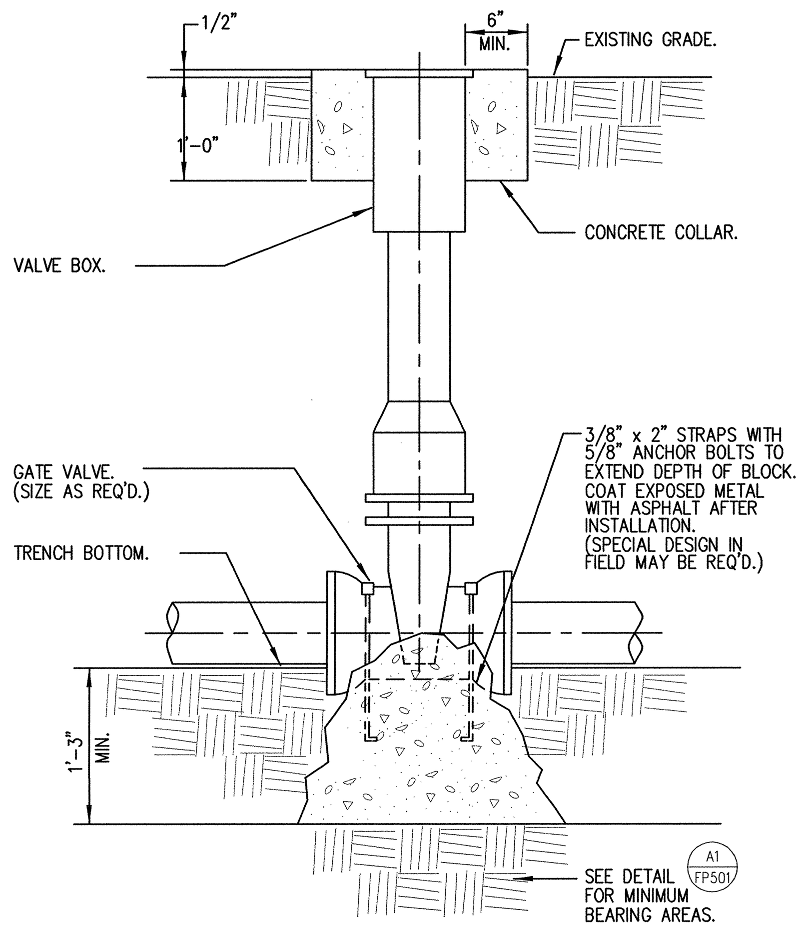

D1 P-502 TYPICAL GATE VALVE
NO SCALE

D3 FIRE SPRINKLER RISER DETAIL

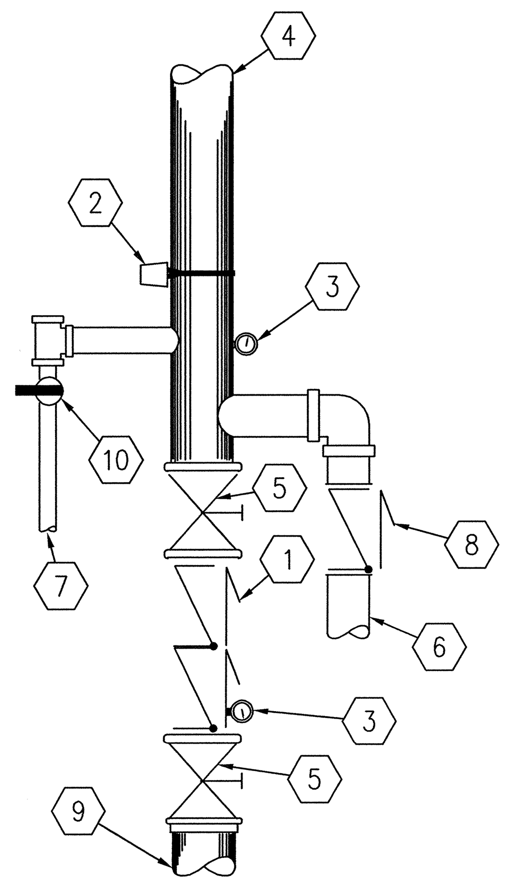

1. DOUBLE CHECK VALVE ASSEMBLY
2. FLOW SWITCH TO HORN STROBE ALARM, WIRING BY DIVISION 16.
3. WATER PRESSURE GAGE
4. TO WET SYSTEM.
5. CONTROL VALVE WITH TAMPER SWITCH, WIRING BY DIVISION 16.
6. TO FIRE DEPARTMENT CONNECTION.
7. MAIN DRAIN PIPED TO EXTERIOR.
8. CHECK VALVE
9. FIRE LINE FROM SUPPLY. PROVIDE GALVANIZED PIPING UP TO VALVE ASSEMBLY. PROVIDE RESTRAINTS, FLEXIBLE COUPLINGS, AND ANNULAR CLEARANCE AS REQUIRED BY NFPA.
10. MAINTENANCE VALVE

D3 P-502 FIRE SPRINKLER RISER DETAIL
NO SCALE

D5 FLANGED SPIGOT THROUGH FLOOR

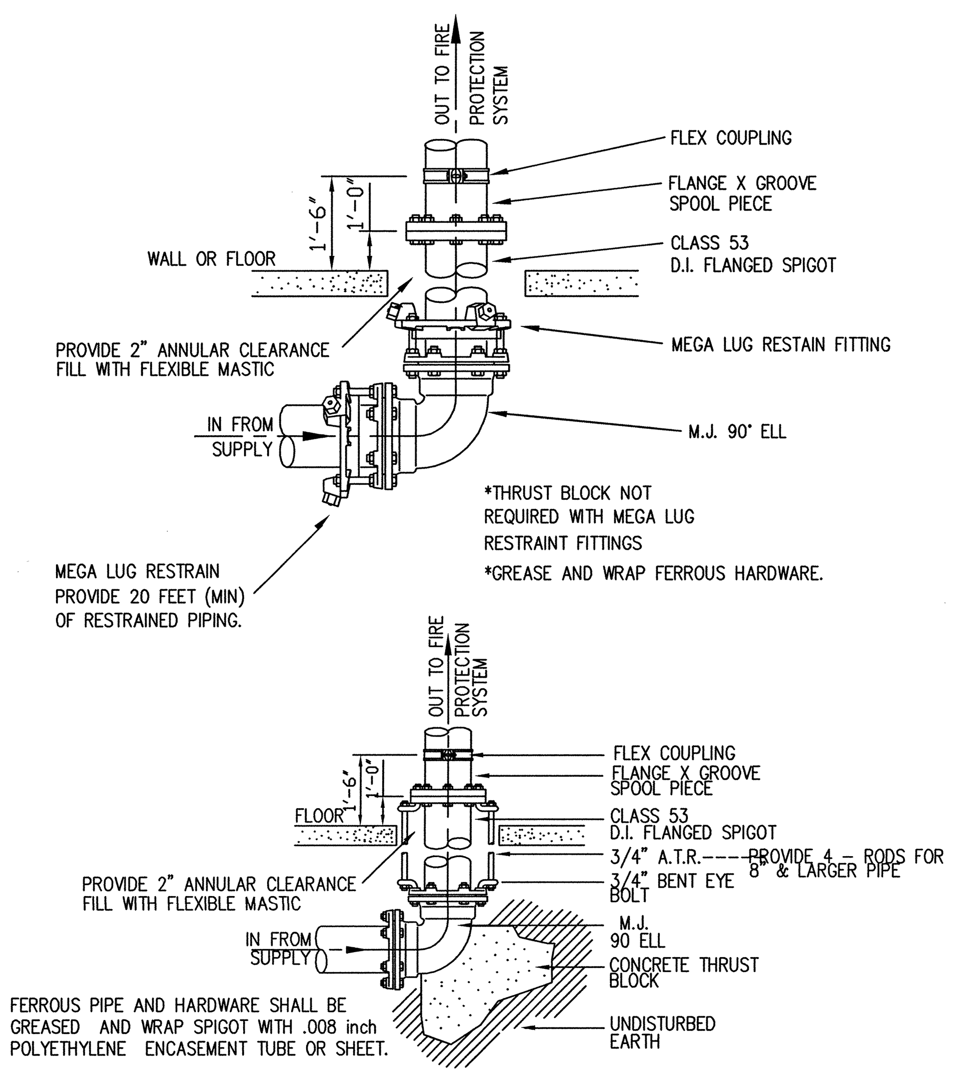

D5 P-502 FLANGED SPIGOT THROUGH FLOOR
NO SCALE

A1 DIRECT BEARING THRUST RESTRAINTS

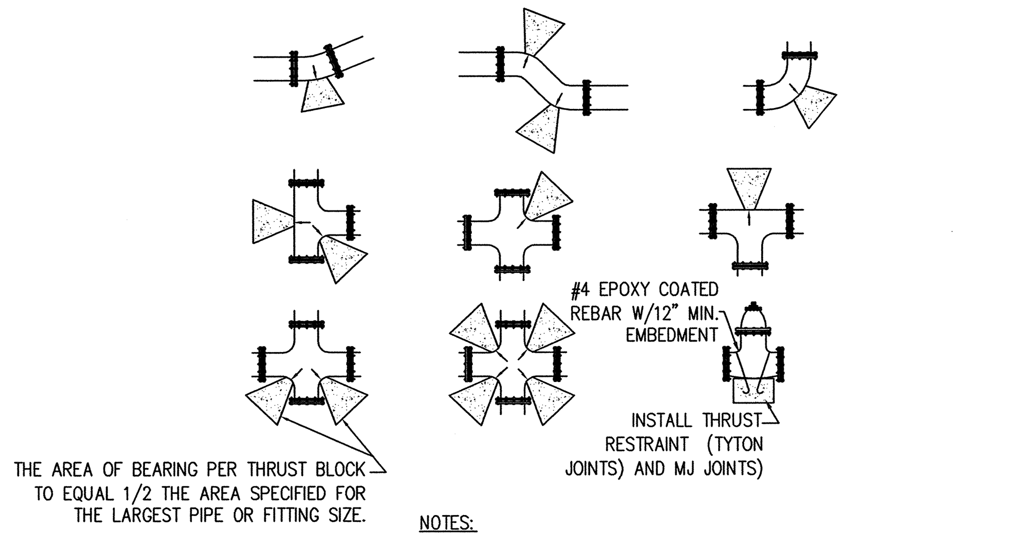

MINIMUM BEARING AREA IN SQ. FT.

SIZE OF PIPE	TEES, VALVES DEAD ENDS	90° BENDS	45° BENDS	22 1/2° BENDS	11 1/4° BENDS
4"	2	3	2	2	2
6"	4	5.5	3	1.5	1
8"	6.5	9.5	5	2.75	1.5
12"	14	20	11	5.5	3
14"	19	26.5	14.5	7.5	4
16"	24	34	18.5	9.5	6
20"	27	52	28.5	14.5	16
24"	53	74	41	21	53
30"	81	114	62	32	16

NOTES:
1. ALL WORK MUST BE INSPECTED AND APPROVED BY THE AUTHORIZING AUTHORITY PRIOR TO BACKFIELD.
2. THRUST BLOCKS OR RESTRAINTS MUST BE POURED AGAINST UNDISTURBED SOIL.
3. CONCRETE MUST HAVE A MINIMUM OF 2,000 P.S.I. COMPRESSIVE STRENGTH IN 28 DAYS.
4. CONCRETE MUST BE ALLOWED TO CURE FOR 5 DAYS PRIOR TO PRESSURIZING WATER LINES OR HAVE ADDITIONAL, APPROVED THRUST RESTRAINTS INSTALLED PRIOR TO PRESSURIZATION OF THE WATER LINE.
5. ALL PIPE JOINTS ARE TO BE LEFT ACCESSIBLE.
6. REINFORCING STEEL BARS ARE TO BE EPOXY COATED IN ACCORDANCE WITH AWWA RECOMMENDATIONS. EPOXY IS TO BE A MINIMUM THICKNESS OF 15 MIL.
7. ALL EXPOSED METAL SURFACES ARE TO BE COATED WITH CHEVRON POLY FM-1 GREASE AND WRAPPED WITH 8 MIL. MINIMUM THICKNESS OF POLYETHYLENE SHEETING OR TUBING.
8. THRUST DESIGN FOR PIPE SIZES OR CONFIGURATIONS THAT ARE NOT SHOWN REQUIRE A SPECIAL DESIGN.
9. BEARING AREAS, VOLUMES, AND SPECIAL THRUST BLOCKING OR RESTRAINING DETAILS TAKE PRECEDENCE OVER THIS STANDARD.
10. RESTRAIN SIZING ASSUMES A MAXIMUM OPERATING PRESSURE OF 150 P.S.I., TEST PRESSURE OF 200 P.S.I., AND A 2,000 LBS. SOIL BEARING STRESS. OPERATING PRESSURES IN EXCESS OF 150 P.S.I. OR SOILS WITH LESS THAN A MINIMUM OF 2,000 LBS. BEARING STRESS WILL REQUIRE A SPECIAL DESIGN.
11. MINIMUM YIELD STRENGTH OF THE STEEL TIE DOWNS IS TO BE 70,000 P.S.I.
12. INSTALL APPROPRIATELY SIZED THRUST BLOCKING ON ALL BLIND FLANGES, MJ PLUGS AND CAPS.
13. LOCKING RESTRAINT DEVICES MAY BE USED IN CONJUNCTION WITH CONCRETE THRUST BLOCKING. (AT THE OPTION OF THE ENGINEER)

A1 P-502 DIRECT BEARING THRUST RESTRAINTS
NO SCALE

A3 TIE DOWN THRUST RESTRAINTS

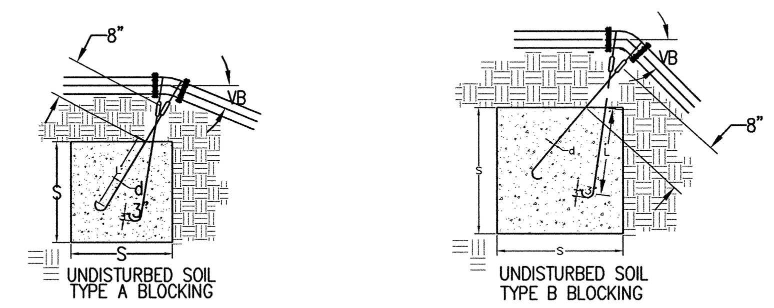

TYPE A BLOCKING FOR 11 1/4° – 22 1/2° VERT. BENDS

PIPE SIZE NOMIN. DIAMETER – INCH	VB: VERTICAL BEND DEGREES	NO. OF CU FT. OF CONC. BLOCKING	S: SIDE OF CUBE FEET	d: DIAMETER OF SHACK OR REBAR – INCH	L: DEPTH OF RODS IN CONCRETE FT.
4"	11 1/4°	8	2.0	5/8"	1.5
	22 1/2°	15.6	2.5	#4	2.0
6"	11 1/4°	15.6	2.5	#4	2.0
	22 1/2°	34.3	3.25	#4	
8"	11 1/4°	27	3.0	#4	2.0
	22 1/2°	64	4.0	#4	
12"	11 1/4°	64	4.0	#4	2.0
	22 1/2°	125	5.0	#4	3.0
16"	11 1/4°	107	4.25	#5	3.0
	22 1/2°	216	6.0	#5	4.0
20"	11 1/4°	138	5.17	#5	3.5
	22 1/2°	334	6.94	#5	4.0
24"	11 1/4°	240	6.22	#5	4.0
	22 1/2°	476	7.81	#5	4.0
30"	11 1/4°	369	7.17	#5	4.0
	22 1/2°	733	9.02	#5	4.0

TYPE B BLOCKING FOR 45° VERTICAL BENDS

PIPE SIZE NOMIN. DIAMETER – INCH	VB: VERTICAL BEND DEGREES	NO. OF CU FT. OF CONC. BLOCKING	S: SIDE OF CUBE FEET	d: DIAMETER OF SHACK OR REBAR – INCH	L: DEPTH OF RODS IN CONCRETE FT.
4"	45°	1	3.0	5/8" #4	2.0
6"		2.37	4.0	5/8" #4	2.5
8"		3.97	4.75	5/8" #4	2.0
12"		9.04	6.25	5/8" #4	4.0
16"		17.24	7.75	#5 #5	4.0
20"		26.52	5.17	#5 #5	4.0
24"		37.82	10.07	#5 #5	4.0
30"		58.26	11.63	#5 #5	4.0

NOTES:
1. ALL WORK MUST BE INSPECTED AND APPROVED BY THE AUTHORIZING AUTHORITY PRIOR TO BACK FILL.
2. THRUST BLOCKS OR RESTRAINTS MUST BE PLACED ON UNDISTURBED SOIL.
3. CONCRETE MUST HAVE A MINIMUM OF 2,000 P.S.I. COMPRESSIVE STRENGTH IN 28 DAYS.
4. CONCRETE MUST BE ALLOWED TO CURE FOR 5 DAYS PRIOR TO PRESSURIZING THE WATER LINES OR HAVE ADDITIONAL, APPROVED THRUST RESTRAINTS INSTALLED PRIOR TO PRESSURIZATION OF THE WATER LINE.
5. MINIMUM YIELD STRENGTH OF THE STAINLESS STEEL TIE DOWNS ARE TO BE 70,000 P.S.I.
6. REINFORCING STEEL BARS ARE TO BE EPOXY COATED IN ACCORDANCE WITH AWWA RECOMMENDATIONS. THE EPOXY IS TO HAVE A MINIMUM THICKNESS OF 15 MILS.
7. ALL EXPOSED METAL SURFACES ARE TO BE COATED WITH CHEVRON POLY FM-1 GREASE AND WRAPPED WITH A MINIMUM OF 8 MILS. REQUIRE A SPECIAL DESIGN. THICKNESS OF POLYETHYLENE SHEETING OR TUBING.
8. THRUST DESIGN FOR PIPE SIZES OR CONFIGURATIONS NOT SHOWN STANDARD.
9. BEARING AREAS, VOLUMES, AND SPECIAL THRUST BLOCKING OR RESTRAINING DETAILS SHOWN ON PLANS TAKE PRECEDENCE OVER THIS WILL REQUIRE A SPECIAL DESIGN.
10. RESTRAINT SIZING ASSUMES A MAXIMUM OPERATING PRESSURE OF 150 P.S.I., OPERATING PRESSURE RANGES IN EXCESS OF 150 P.S.I.

A3 P-502 TIE DOWN THRUST RESTRAINTS
NO SCALE

A5 HORIZONTAL LOOP

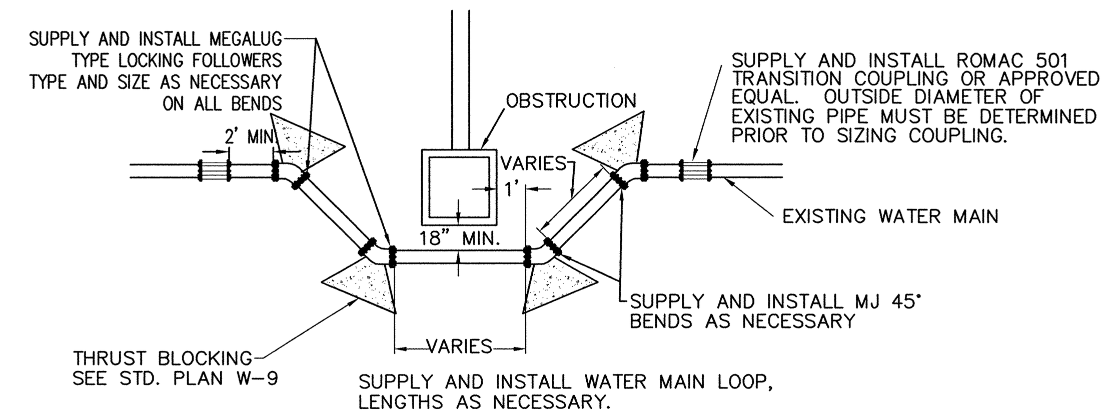

LOOP DETAIL
N.T.S.

NOTES:
1 ALL BENDS, COUPLINGS AND FITTINGS ARE TO BE RATED EQUAL TO, OR BETTER ANSI/AWWA- C110/A21.10 AND ANSI/AWWA-C111/A21.11 STANDARDS @ A MINIMUM PRESSURE RATING OF 250 PSI. FOR CAST IRON, OR 350 PSI. FOR DUCTILE IRON.
2 P.V.C. PIPE IS TO BE RATED TO AWWA C900 CLASS 150 SDR 18 SPECIFICATIONS, OR CLASS 52 DUCTILE IRON.
3 THRUST RESTRAINTS AND BLOCKING IS TO BE INSTALLED ACCORDING TO THE CONDITIONS IN THE FIELD, REFER TO AUTHORIZING AUTHORITIES STANDARD SPECIFICATIONS AND PLANS FOR MINIMUM REQUIREMENTS.
4 ALL PIPE, FITTINGS, COUPLINGS, THRUST RESTRAINTS AND BLOCKING ARE TO BE IN ACCORDANCE WITH AUTHORIZING AUTHORITIES STANDARD PLANS.
5 ALL FITTINGS, COUPLINGS, VALVES AND MECHANICAL JOINTS ARE TO BE COATED WITH CHEVRON FM 1 NON-OXIDE GREASE OR APPROVED EQUAL AND COVERED WITH 8 MIL. MINIMUM POLYETHYLENE SHEETING.
6 CONNECTIONS TO TRANSITE (ASBESTOS CEMENT.) (A.C.) PIPE WILL REQUIRE TRANSITION OR FABRICATED COUPLINGS.
7 FOR P.V.C. PIPE LOOP, INSTALL MEGALUG TYPE LOCKING FOLLOWERS SERIES 2000PV OR 1100PV (OR APPROVED EQUAL) AS NECESSARY ON ALL MJ BENDS.

A5 P-502 HORIZONTAL LOOP
NO SCALE

State of Utah
Department of Administrative Services
Division of Facilities Construction & Management
4110 State Office Building
Salt Lake City, Utah 84114
Phone: (801) 538 - 3018
Fax: (801) 538 - 3267
Internet: http://www.dfcm.state.ut.us

Utah Valley University
Orem, Utah

CREATED BY: P+A architects
P+A architects
821 East Kensington Ave.
Salt Lake City, Utah 84105
P: 801.484.1161
F: 801.485.4640
e-mail parchitects@comcast.net
architecture planning design

CONSULTANT:
VAN BOERUM & FRANK ASSOCIATES INC.
WWW.VBFA.COM CONSULTING ENGINEERS
Salt Lake City · Logan · St. George · Tempe · Pocatello
330 South 300 East 801.530.3148 T
Salt Lake City, UT 84111 801.530.3150 F
VBFA Project Number:09422
LICENSED PROFESSIONAL ENGINEER No. 189989 STEVEN T. SHEPHERD 7/29/10 STATE OF UTAH

PROJECT TITLE:
UTAH VALLEY UNIVERSITY NEW PARKING AND FACILITIES DEPARTMENT BUILDING

UTAH VALLEY UNIVERSITY
936 SOUTH 400 WEST
OREM, UTAH

REVISIONS

MARK	DATE	DESCRIPTION

ISSUE TYPE: CONSTRUCTION DOCUMENTS
ISSUE DATE: August 02, 2010

CAD PROJECT NO: 09247790
CAD DWG FILE:
DRAWN BY: E.J./K.M
CHK'D BY: S.S/S.J
COPYRIGHT: P&A architects
KEY PLAN

SHEET TITLE
DETAILS

SHEET NUMBER
P-502

ABBREVIATIONS

AARV = AUTOMATIC AIR RELEASE VALVE
AAVV = AUTOMATIC AIR VACUUM VALVE
ABS = ACRYLONITRILE BUTADIENE STYRENE
ACARV = AUTOMATIC COMBINATION AIR RELEASE VALVE
ACC = ASPHALTIC COATED CONCRETE
ACP = ASBESTOS CEMENT PIPE (TRANSITE)
ADPT. = ADAPTER
AGA = AMERICAN GAS ASSOCIATION
AISI = AMERICAN IRON & STEEL INSTITUTE
ANSI = AMERICAN NATIONAL STANDARDS INSTITUTE
APHA = AMERICAN PUBLIC HEALTH ASSOCIATION
API = AMERICAN PETROLEUM INSTITUTE
ASA = AMERICAN STANDARDS ASSOCIATION
ASCE = AMERICAN SOCIETY OF CIVIL ENGINEERING
ASHRAE = AMERICAN SOCIETY OF HEATING, REFRIGERATION, AND AIR CONDITIONING ENGINEERS
ASME = AMERICAN SOCIETY OF MECHANICAL ENGINEERS
ASPH. = ASPHALT
ASSE = AMERICAN SOCIETY OF SANITARY ENGINEERS
ASSY. = ASSEMBLY
ASTM = AMERICAN SOCIETY FOR TESTING AND MATERIALS
AWWA = AMERICAN WATER WORKS ASSOCIATION

BD = BEND
BFP = BACKFLOW PREVENTER
BFV = BUTTERFLY VALVE
BOCA = BUILDING OFFICIALS CONFERENCE OF AMERICA
BV = BALL VALVE

C = CENTIGRADE
CB = CATCH BASIN
CDA = COPPER DEVELOPMENT ASSOCIATION
CI = CAST IRON (SEWER PIPE)
CIP = CAST IRON PIPE (BEFORE 1940 PIT CAST)
CISPI = CAST IRON SOIL PIPE INSTITUTE
CKV = CHECK VALVE
CMP CAS = CORRUGATED METAL PIPE CASING
CO = CLEAN OUT
CONC = CONCRETE
COND = CONDENSATE
COTG = CLEAN OUT TO GRADE
CPE = CHLORINATED POLYETHYLENE
CPVC = CHLORINATED POLYVINYL CHLORIDE
CS = CAST STEEL
CU = COPPER
CV = CHECK VALVE
CW = CULINARY WATER

D = DIAMETER OR ø
DC = DOUBLE CHECK VALVE ASSEMBLY (BACKFLOW PREVENTER)
DCDC = DOUBLE CHECK – DETECTOR CHECK VALVE ASSEMBLY (BACKFLOW PREVENTER)
DEG = DEGREE OR °
DIA. – DIAMETER
DIP = DUCTILE IRON PIPE
DWG = DRAWING

EHCI = EXTRA HEAVY CAST IRON
EXT = EXTEND

F = FAHRENHEIT
FC = FACE OF CURB
FE = IRON
FL = FLOW LINE
FL EL = FLOW LINE ELEVATION
FL IN = FLOW LINE ELEVATION IN FLOW
FL OUT = FLOW LINE ELEVATION OUT FLOW
FLG = FLANGED
FTG = FITTING

G = GAS
GALV = GALVANIZED
GI = GALVANIZED IRON
GLBVLV = GLOBE VALVE
GRNBRG = GREENBERG
GV = GATE VALE

HDPE = HIGH DENSITY POLYETHYLENE
HOWE = HOWELL
HTW = HIGH TEMPERATURE WATER
HYD = HYDRANT

IAPMO = INTERNATIONAL ASSOCIATION OF PLUMBING AND MECHANICAL OFFICIALS
ICBO = INTERNATIONAL CONFERENCE OF BUILDING OFFICIALS
INC = INCREASER
INV = INVERT
INV EL = INVERT ELEVATION
INV IN = INVERT ELEVATION IN FLOW
INV OUT = INVERT ELEVATION OUT FLOW
IPS = IRON PIPE SIZE
IS = INSTALLATION STANDARD

KEN = KENNEDY

Lb. = POUND
LB = LARGE BELL
LR = LONG RADIUS

MH = MANHOLE
MJ = MECHANICAL JOINT
MW = MANWAY

NDTS = NOT DRAWN TO SCALE
NIC = NOT IN CONTRACT
No. = NUMBER
NTS = NOT TO SCALE

OB = OPEN BELL

PB = POLYBUTYLENE
PCCP = PRE-STRESSED CONCRETE CYLINDER PIPE
PE = POLYETHYLENE
PIV = POST INDICATOR VALVE
POC = POINT OF CONNECTION
P.S. = PACIFIC STATES
PT = PLUGGED TEE
PVB = PRESSURE VACUUM BREAKER
PVC = POLYVINYL CHLORIDE

R = RADIUS OR RAD
RD = ROOF DRAIN
RED = REDUCER
REG = REGULATOR
RP = REDUCED PRESSURE PRINCIPLE BACKFLOW PREVENTION ASSEMBLY
RPDC = REDUCED PRESSURE PRINCIPLE DETECTION ASSEMBLY

SD = STORM DRAIN
SDMH = STORM DRAIN MANHOLE
SPEC = SPECIFICATION
SPIG = SPIGOT
SS = SANITARY SEWER
SSMH = SANITARY SEWER MANHOLE
STD = STANDARD
STM = STEAM

TBC = TOP BACK OF CURB
TD = TRENCH DRAIN
TJ = TYTON JOINT

UL = UNDERWRITERS LABORATORY
UPL = UTAH POWER (ELECTRICAL POWER)
USW = U. S. WEST (TELEPHONE)

VAL = VALVE OR VLV
VB = VACUUM BREAKER
VCP = VITRIFIED CLAY PIPE

WAT = WATROUS
WOV = WASH OUT VALVE
WQA = WATER QUALITY ASSOCIATION

A2 / P-503 ABBREVIATIONS, LINE TYPES & SYMBOLS
NO SCALE

GENERAL NOTES

1. CONTRACTOR TO PROVIDE AND DISTRIBUTE APPROVED WRITTEN NOTICE OF TO ALL RESIDENTS LOCATED IN THE CONSTRUCTION AREA AT LEAST 24 HOURS PRIOR TO CONSTRUCTION. WRITTEN NOTICE TO BE APPROVED BY THE SALT LAKE CITY DEPARTMENT OF PUBLIC UTILITIES PROJECT ENGINEER.
2. CONTRACTOR TO OBTAIN ALL NECESSARY PERMIT(S) AND COMPLY WITH ALL REQUIREMENTS.
3. CONTRACTOR TO PROVIDE MARSHALL AND PROCTOR TEST DATA 24 HOURS PRIOR TO USE, CERTIFIED IN WRITING FROM A LAB RECOGNIZED AND ACCEPTED BY OREM CITY PUBLIC SERVICES.
4. ALL EXPOSED NUTS AND BOLTS TO BE COATED WITH A NON-OXIDE WAX AND WRAPPED IN 8-MIL POLYETHYLENE.
5. ALL SALVAGED PIPE AND/OR FITTINGS TO BE RETURNED TO THE OREM CITY DEPARTMENT OF PUBLIC UTILITIES SHOPS.
6. CONTRACTOR TO PLACE TEMPORARY STREET ASPHALT SURFACES IF THE WORK IS ACCOMPLISHED AT A TIME WHEN PERMANENT ASPHALT SURFACING MATERIAL IS NOT AVAILABLE. AT THE TIME PERMANENT ASPHALT BECOMES AVAILABLE THE IS TO FURNISH AND PLACE ASPHALT PER SALT LAKE CONTRACTOR STANDARDS. CONTRACTOR TO GUARANTEE THE ASPHALT RESTORATION FOR A PERIOD OF TWO YEARS FROM THE DATE OF COMPLETION.
7. ALL STEEL PIPE, EXCEPT CASING PIPE AND PCCP, TO BE EPOXY COATED AND LINED.
8. CONTRACTOR IS RESPONSIBLE TO FURNISH ALL MATERIALS NECESSARY TO COMPLETE THE PROJECT.
9. CONCRETE VALVE BOXES BEING ABANDONED TO HAVE THE TOPS BROKEN OUT AND BE BACKFILLED WITH SAND TO 96% COMPACTION AND SURFACE RESTORED.
10. TRAFFIC CONTROL TO CONFORM TO THE MOST CURRENT EDITION OF PART 6 OF "MANUAL ON UNIFORM TRAFFIC CONTROL DEVICES" FOR SALT LAKE COUNTY AND STATE ROADS.
11. CONTRACTOR TO VERIFY DEPTHS OF UTILITIES IN THE FIELD BY POT HOLING A MINIMUM OF 300 FEET AHEAD OF PIPELINE CONSTRUCTION TO AVOID CONFLICTS WITH DESIGNED PIPELINE GRADE AND ALIGNMENT. IF A CONFLICT ARISES RESULTING FROM THE CONTRACTOR NEGLECTING TO POT HOLE UTILITIES, THE CONTRACTOR TO RESOLVE THE CONFLICT WITHOUT ADDITIONAL COST OR CLAIM TO THE OWNER.
12. ALL CONSTRUCTION TO CONFORM WITH UTAH PUBLIC WORKS STANDARD SPECIFICATIONS FOR CONSTRUCTION (1991 EDITION).
13. USE CLASS B PIPE ZONE BACKFILL PER DETAIL C5/FP5.3 FOR ALL PUBLIC UTILITIES PROJECTS.
14. ALL ELEVATIONS ARE U.S.G.S. DATUM.
15. CONTRACTOR TO INSTALL INVERT COVERS IN ALL SEWER MANHOLES IN THE PROJECT AREA.
16. NO GROUNDWATER OR DEBRIS TO BE ALLOWED TO ENTER THE NEW PIPE DURING CONSTRUCTION.
17. CONTRACTOR TO NOTIFY UTILITY COMPANIES 2 WEEKS IN ADVANCE OF UTILITY CONFLICTS REQUIRING RELOCATION OF MAINLINES, 1 WEEK IN ADVANCE OF CONFLICTS REQUIRING RELOCATION OF SERVICE LATERALS.
18. CONTRACTOR TO INSTALL WATER SERVICE LINE, METER YOKE AND METER BOX WITH LID AT THE CENTER OF EACH LOT WITHIN THE SUBDIVISION. METER BOX TO BE PLACED IN THE PARK STRIP OR WITHIN 7' OF THE RIGHT-OF-WAY LINE. SERVICE LINE TO EXTEND PERPENDICULAR FROM THE MAIN.

A4 / P-503 GENERAL NOTES FOR CONSTRUCTION IN SLC PUBLIC WAY

State of Utah
Department of Administrative Services
Division of Facilities Construction & Management
4110 State Office Building
Salt Lake City, Utah 84114
Phone: (801) 538 - 3018
Fax: (801) 538 - 3267
Internet: http://www.dfcm.state.ut.us

Utah Valley University
Orem, Utah

CREATED BY: P+A architects
P+A architects
821 East Kensington Ave.
Salt Lake City, Utah 84105
P: 801.484.1161
F: 801.485.4640
e-mail parchitects@comcast.net

architecture planning design

CONSULTANT:
VAN BOERUM & FRANK ASSOCIATES INC.
WWW.VBFA.COM CONSULTING ENGINEERS
Salt Lake City · Logan · St. George · Tempe · Pocatello
330 South 300 East 801.530.3148 T
Salt Lake City, UT 84111 801.530.3150 F
VBFA Project Number:09422
LICENSED PROFESSIONAL ENGINEER No. 189980 STEVEN T. SHEPHERD 7/29/10 STATE OF UTAH

PROJECT TITLE:
UTAH VALLEY UNIVERSITY NEW PARKING AND FACILITIES DEPARTMENT BUILDING

UTAH VALLEY UNIVERSITY
936 SOUTH 400 WEST
OREM, UTAH

REVISIONS

MARK	DATE	DESCRIPTION

ISSUE TYPE:CONSTRUCTION DOCUMENTS
ISSUE DATE: August 02, 2010

CAD PROJECT NO: 09247790
CAD DWG FILE:
DRAWN BY: E.J./K.M
CHK'D BY: S.S/S.J
COPYRIGHT: P&A architects

KEY PLAN

SHEET TITLE
GENERAL NOTES & ABBREVIATIONS

SHEET NUMBER
P-503

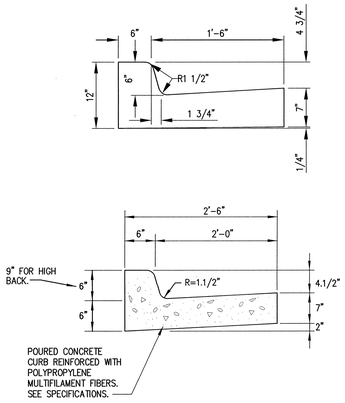

NOTES:

1 CONCRETE SHALL BE MONOLITHIC CLASS 4000 APWA 03304.

2 PLACE EXPANSION CONTRACTION JOINTS AT ALL BC AND EC POINTS. PLACE CONTROL JOINTS AT 10' INTERVALS.

3 PLACE JOINT FILLER STRIPS BETWEEN WALK AND CURB TO DEPTH OF CONCRETE PLUS ONE INCH WITH TOP SET FLUSH WITH TOP BACK OF CURB.

C1 / P-504 CONCRETE CURB AND GUTTER
NO SCALE

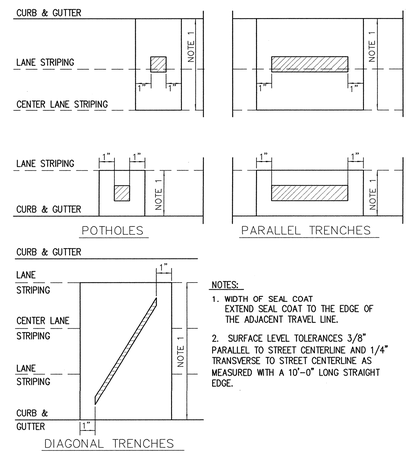

NOTES:

1. WIDTH OF SEAL COAT EXTEND SEAL COAT TO THE EDGE OF THE ADJACENT TRAVEL LINE.

2. SURFACE LEVEL TOLERANCES 3/8" PARALLEL TO STREET CENTERLINE AND 1/4" TRANSVERSE TO STREET CENTERLINE AS MEASURED WITH A 10'-0" LONG STRAIGHT EDGE.

C3 / P-504 MINIMUM SEAL COAT LIMITS FOR STREET AND PARKING LOT EXCAVATIONS
NO SCALE

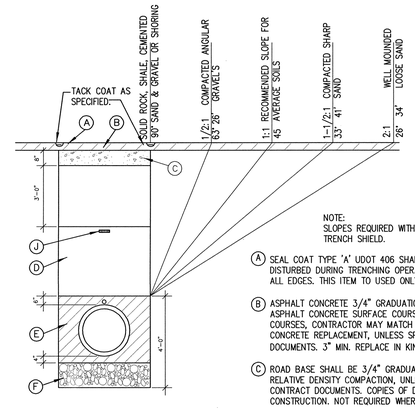

NOTE:
SLOPES REQUIRED WITHOUT SHORING OR TRENCH SHIELD.

(A) SEAL COAT TYPE 'A' UDOT 406 SHALL EXTEND TO EDGE OF ANY TRAFFIC LANE DISTURBED DURING TRENCHING OPERATION. SEE DETAIL CIV-MISC-3. FEATHER ALL EDGES. THIS ITEM TO USED ONLY WHEN REQUIRED.

(B) ASPHALT CONCRETE 3/4" GRADUATION, UDOT PG-64 OR BETTER, PER UDOT. WHERE ASPHALT CONCRETE SURFACE COURSES OVERLAY FORMER PORTLAND CEMENT COURSES, CONTRACTOR MAY MATCH EXISTING MATERIALS OR USE ASPHALT CONCRETE REPLACEMENT, UNLESS SPECIFIED OTHERWISE IN THE CONTRACT DOCUMENTS. 3" MIN. REPLACE IN KIND.7" FOR UDOT RIGHT OF WAY, PER UDOT.

(C) ROAD BASE SHALL BE 3/4" GRADUATION, UDOT 301.02 AT 96% MINIMUM RELATIVE DENSITY COMPACTION, UNLESS SPECIFIED OTHERWISE IN THE CONTRACT DOCUMENTS. COPIES OF DENSITIES TO CAMPUS DESIGN AND CONSTRUCTION. NOT REQUIRED WHERE FLOWABLE FILL IS USED.

(D) TRENCH BACK FILL ABOVE PIPE ZONE AND BELOW ROAD BASE WITH APPROVED MATERIAL AT 96% MINIMUM RELATIVE DENSITY COMPACTION. COPIES OF DENSITIES TO CAMPUS DESIGN AND CONSTRUCTION. MINIMUM 2-INCH MINUS GRANULAR BACKFILL BORROW PER APWA 02055. MATERIAL MUST BE FREE OF SLAG OR RECYCLED ASPHALT.

(E) PIPE ZONE SHALL BE BACK FILLED WITH FILL SAND AT 96% MINIMUM RELATIVE DENSITY COMPACTION. FORM TO PROVIDE SUPPORT ALONG ENTIRE BARREL OF PIPE (BOTTOM QUADRANT). PLACE AND COMPACT REMAINDER OF PIPE ZONE MATERIAL IN 6-INCH LIFTS, SO THAT NO VOIDS EXIST AROUND PIPE. SEE CLASS B PIPE ZONE BACKFILL REQUIREMENTS.

(F) TRENCH STABILIZATION MATERIAL SHALL BE 2" MINUS SEWER ROCK. DEPTH AS REQUIRED.

(J) MAGNETIC MARKING TAPE, MAXIMUM DEPTH 18 INCHES BELOW FINAL SURFACE

C5 / P-504 TRENCH BACK FILL & ROAD SURFACE RESTORATION
NO SCALE

CONCRETE PATCH

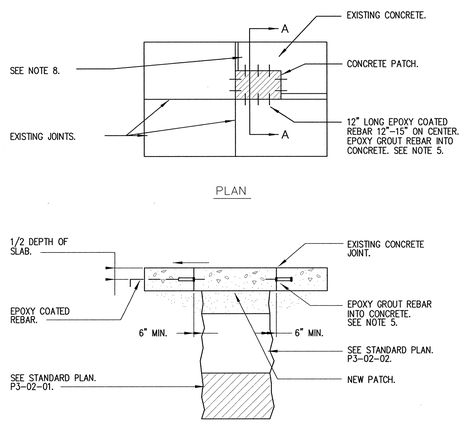

NOTES:

1. SAW THE CONCRETE PAVEMENT FULL DEPTH.

2. PROVIDE CONCRETE TO THE SAME DEPTH OF THE EXISTING CONCRETE PAVEMENT. CONCRETE TO BE CLASS 40 B IN ACCORDANCE WITH STANDARD SPECIFICATION SYSTEM 03000.

3. UNTREATED BASE COURSE SPECIFICATION 02221 1 INCH OR 3/4" INCH GRADATION LAID IN LEVEL COURSES. NO MORE THAN 8" LIFTS.

4. ASTM A 615 GRADE 60 EPOXY COATED REBAR. SIZE OF BAR TO BE 1/8 OF DEPTH OF CONCRETE. BARS SHALL BE SPACED 12 TO 15 INCHES ON CENTER. DRILL INTO ALL EDGES A MINIMUM OF 9 INCHES AND EPOXY GROUT IN PLACE. MINIMUM OF TWO BARS PER SIDE OF PATCH.

5. EPOXY WILL CONFORM WITH AASHTO SECTION M235 LATEST EDITION.

6. EDGES MUST BE CLEANED OF ALL LOOSE DIRT, OIL AND LOOSE DEBRIS TO INSURE A GOOD BOND.

7. IF DISTANCE BETWEEN EDGE OF PATCH AND JOINT IS LESS THAN FOUR FEET, REMOVE PAVEMENT TO JOINT. DO NOT CUT PAST JOINT INTO NEXT JOB.

8. RE-- ESTABLISH THE JOINT PATTERN OF THE CONCRETE PAVEMENT. SAW CUT THE JOINTS AND PROVIDE REQUIRED SEALANT IN ACCORDANCE WITH STANDARD SPECIFICATIONS 02515.

9. IF THE PATCH IS MADE ADJACENT TO THE CURB AND GUTTER, MANHOLES OR OTHER PERMANENT STRUCTURES, DO NOT TIE THE PAVEMENT TO THE PATCH WITH DOWELS. USE A TYPE 'A' JOINT. IN ACCORDANCE WITH STANDARD PLAN CP-03-01.

10. IF THE PAVEMENT HAS A LEAN CONCRETE BASE, REESTABLISH THE BASE AT THE DEPTH AND STRENGTH OF THE EXISTING LEAN CONCRETE BASE.

A2 / P-504 CONCRETE PATCH
NO SCALE

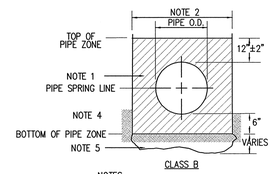

NOTES:

1 PLACE GRADED GRANULAR BACK FILL (MAXIMUM 2" SIZE) IN PIPE ZONE AT OPTIMUM MOISTURE IN HORIZONTAL 8" DEEP LOOSE LAYERS. IF FLEXIBLE PIPE IS USED, MAXIMUM 3/4" SIZE. COMPACT TO 96% ASTM D698 DRY DENSITY WITH NO DENSITY TEST LESS THAN 92%.

2 MINIMUM WIDTH OF TRENCH MEASURED AT THE SPRING LINE OF THE PIPE, INCLUDING ANY NECESSARY SHEATHING.

PIPE I.D.	WIDTH
LESS THAN 21"	O.D. + 24"
21" TO 44"	O.D. + 24"
GREATER THAN 44"	O.D. + 30"

I.D. MEANS INSIDE DIAMETER OF THE PIPE BARREL
O.D. MEANS THE OUTSIDE DIAMETER OF THE PIPE BARREL.

3 INSTALL PIPE IN THE CENTER OF THE TRENCH.

4 CONCRETE: APWA 03304 CLASS 2000 MINIMUM.

5 FOR FOUNDATION STABILIZATION, USE APWA 02060 2-INCH MINUS SEWER ROCK. MATERIAL MAY NOT CONTAIN SLAG OR RECYCLED ASPHALT.

A5 / P-504 PIPE ZONE BACKFILLING
NO SCALE

State of Utah
Department of Administrative Services
Division of Facilities Construction & Management
4110 State Office Building
Salt Lake City, Utah 84114
Phone: (801) 538 - 3018
Fax: (801) 538 - 3267
Internet: http://www.dfcm.state.ut.us

Utah Valley University
Orem, Utah

CREATED BY: P+A architects
P+A architects
821 East Kensington Ave.
Salt Lake City, Utah 84105
P: 801.484.1161
F: 801.485.4640
e-mail parchitects@comcast.net

architecture planning design

CONSULTANT:
VAN BOERUM & FRANK ASSOCIATES INC.
WWW.VBFA.COM CONSULTING ENGINEERS
Salt Lake City - Logan - St. George - Tempe - Pocatello
330 South 300 East 801.530.3148 T
Salt Lake City, UT 84111 801.530.3150 F
VBFA Project Number:09422
LICENSED PROFESSIONAL ENGINEER No. 189889 STEVEN T. SHEPHERD 7/29/10 STATE OF UTAH

PROJECT TITLE:
UTAH VALLEY UNIVERSITY NEW PARKING AND FACILITIES DEPARTMENT BUILDING

UTAH VALLEY UNIVERSITY
936 SOUTH 400 WEST
OREM, UTAH

REVISIONS

MARK	DATE	DESCRIPTION

ISSUE TYPE: CONSTRUCTION DOCUMENTS

ISSUE DATE: August 02, 2010

CAD PROJECT NO: 09247790
CAD DWG FILE:
DRAWN BY: E.J./K.M
CHK'D BY: S.S/S.J
COPYRIGHT: P&A architects

KEY PLAN

SHEET TITLE
DETAILS

SHEET NUMBER
P-504

PLUMBING FIXTURE SCHEDULE

ID	FIXTURE	CW (IN)	HW (IN)	W (IN)	V (IN)	NOTES	SPECIFICATION
DSN-1	DOWN SPOUT NOZZLE	-.-	-.-	-.-	-.-	SEE PLANS FOR SIZE	DOWNSPOUT NOZZLE: SMITH 1770 DOWNSPOUT NOZZLE WITH CAST BRONZE BODY AND FLANGE.
EWC-1	ELECTRIC WATER COOLER	1/2	-.-	1 1/2	1 1/2	-.-	ELECTRIC WATER COOLER: ELKAY EZSTL8C DUAL STATION, WALL MOUNTED, BARRIER FREE, ADA ELECTRIC WATER COOLER WITH FLEXIBLE BUBBLER GUARD, STAINLESS STEEL BOWLS AND CONTROL BUTTONS ON FRONT AND SIDES. COMPRESSOR TO BE 115V, 60 HZ WITH CAPACITY TO DELIVER AT LEAST 8.0 GPH OF 50ºF WATER. 1-1/2" CAST BRASS CHROME-PLATED P-TRAPS. ADA SIDE TO BE ON THE LEFT.
FD-1	FLOOR DRAIN	-.-	-.-	2	2	-.-	FLOOR DRAIN: SMITH FIGURE 2005Y-P050 FLOOR DRAIN WITH CAST IRON BODY AND FLASHING COLLAR WITH 6" ROUND NICKEL BRONZE ADJUSTABLE STRAINER HEAD WITH SECURED GRATE AND TRAP PRIMER CONNECTION.
FD-2	FLOOR DRAIN	-.-	-.-	2	2	MECHANICAL ROOM	FLOOR DRAIN (MECHANICAL ROOM): SMITH 2220Y-P050 FLOOR DRAIN WITH CAST IRON BODY AND FLASHING COLLAR WITH 8" CAST IRON GRATE AND SEDIMENT BUCKET, 2" OUTLET, NO-HUB CONNECTION; PROVIDE P-TRAP WITH TRAP PRIMER CONNECTION.
HB-1	HOSE BIBB	3/4	-.-	-.-	-.-	-.-	HOSE BIBB: ACORN 8121 BENT NOSE HOSE VALVE WITH VACUUM BREAKER, 7" MALE HOSE THREAD AND LOOSE KEY HANDLE.
L-1	LAVATORY	1/2	1/2	1 1/2	1 1/2	COUNTER MOUNTED, SENSOR FAUCET	LAVATORY (COUNTER MOUNTED): KOHLER K-2196-4 PENNINGTON SELF RIMMING VITREOUS CHINA OVAL LAVATORY WITH 4" FAUCET CENTERS; K-7715 OPEN GRID STRAINER; TECHNICAL CONCEPTS 500484 MILANO BATTERY POWERED SENSOR FAUCET WITH 0.5 GPM MAXIMUM FLOW. FAUCET TO BE PROVIDED WITH FACTORY MIXING VALVE WITH 3/8" COMPRESSION CONNECTIONS AND IN-LINE CHECKS. PROVIDE WATTS NO. 7 DUAL CHECKS IN HOT AND COLD SUPPLIES. PROVIDE VANDAL RESISTANT AERATOR, PROVIDE LOOSE KEY ANGLE STOPS AND CHROME PLATED COPPER SUPPLIES AND 17 GA. CAST BRASS, CHROME PLATED "P" TRAP. COVER ALL EXPOSED PIPING WITH WHITE "HANDI-LAV GUARD" PROTECTOR AS NEEDED TO MEET ADA REQUIREMENTS.
NFH-1	NON FREEZE WALL HYDRANT	3/4	-.-	-.-	-.-	-.-	NON-FREEZE HYDRANT: SMITH 5609QT NON-FREEZE WALL HYDRANT FOR WALL THICKNESS SHOWN ON PLAN. BRONZE HYDRANT, 3/4-INCH CONNECTION WITH BRASS CASING, INTEGRAL SELF-DRAINING VACUUM BREAKER, AND LOOSE KEY.
RD-1	ROOF DRAIN	-.-	-.-	-.-	-.-	SEE PLANS FOR SIZE	ROOF DRAIN: SMITH FIGURE 1010Y CAST IRON BODY WITH COMBINED FLASHING CLAMP AND CAST IRON GRAVEL STOP, CAST IRON DOME, EXTENSION, SUMP RECEIVER AND UNDERDECK CLAMP.
RDO-1	ROOF DRAIN OVERFLOW	-.-	-.-	-.-	-.-	SEE PLANS FOR SIZE	ROOF DRAIN OVERFLOW: SMITH FIGURE 1080Y CAST IRON BODY WITH COMBINED FLASHING CLAMP AND CAST IRON GRAVEL STOP, CAST IRON DOME, 2" HIGH WATER COLLAR, EXTENSION, SUMP RECEIVER AND UNDERDECK CLAMP.
REF-1	REFRIGERATOR CONNECTION	1/2	-.-	-.-	-.-	-.-	WATER OUTLET: LSP OB-801 PLASTIC ICEMAKER BOX WITH QUARTER TURN BALL VALVE WITH 1/4" OUTLET.
S-1	BREAKROOM SINK	1/2	1/2	2	1 1/2	COUNTER MOUNTED, DOUBLE COMPARTMENT	SINK: JUST DL-1933-A-GR TWO 14" X 14" X 7-1/2" DEEP BOWLS, 18-GAUGE, TYPE 304 STAINLESS STEEL, COUNTER MOUNTED SINK WITH 8" CENTERS DRILLING; CHICAGO 786-GN2FC FAUCET, NO. 317 4" WRIST BLADES, GN2 RIGID/SWING CONVERTIBLE GOOSE NECK WITH 1.6 GPM FC LAMINAR FLOW CONTROL AND PLAIN END SPOUT RING; FLEXIBLE STAINLESS STEEL SUPPLIES WITH LOOSE KEY ANGLE STOPS; JUST J-35 STAINLESS STEEL CUP STRAINER AND CAST BRASS P-TRAP WITH CLEAN-OUT PLUG.
SS-1	SERVICE SINK	3/4	3/4	3	2	-.-	JANITOR SINK (FLOOR MOUNTED, CORNER): KOHLER K6710, WHITBY, 28 X 28-INCH, ENAMELED CAST IRON FLOOR-MOUNTED CORNER MODEL, K9146-3" DRAIN WITH STRAINER, NO. K8940 REMOVABLE VINYL-COATED RIM GUARD; CHICAGO 897 FAUCET WITH VACUUM BREAKER, SCREWDRIVER STOPS IN SHANKS, 5 FOOT RUBBER HOSE AND WALL HOOK, 853.
TP-1	TRAP PRIMER	1/2	-.-	-.-	-.-	FLUSH VALVE TYPE	TRAP PRIMER: PRECISION PLUMBING PRODUCTS, INC. (PPP) FVP-1VB FLUSH VALVE PRIMER FOR ONE DRAIN; 1/2" COPPER TUBE CONNECTION TO FLOOR DRAIN P-TRAP, INSTALL PER MANUFACTURER'S INSTRUCTIONS.
TP-2	TRAP PRIMER	1/2	-.-	-.-	-.-	SOLINOID TYPE, 120V	TRAP PRIMER: PRECISION PLUMBING PRODUCTS, INC. (PPP) MPB-500-115V MINI-PRIME ELECTRONIC TRAP PRIMING MANIFOLD WITH TIMER AND BOX; FOR 1 TO 4 FLOOR DRAINS; 1/2" COPPER TUBE CONNECTION TO EACH FLOOR DRAIN P-TRAP, PROVIDE DISTRIBUTION UNITS AS NEEDED FOR NUMBER OF FLOOR DRAINS SERVED, INSTALL PER MANUFACTURER'S INSTRUCTIONS.
WC-1	WATER CLOSET	1	-.-	4	2	WALL HUNG, SENSOR FLUSH VALVE, ADA	WATER CLOSET: KOHLER K-4330 KINGSTON VITREOUS CHINA, WALL MOUNTED, ELONGATED BOWL TOILET WITH K-4670-C LUSTRA OPEN FRONT SEAT; SLOAN REGAL OPTIMA SMO MODEL 111-SMO LOW CONSUMPTION EXPOSED, BATTERY POWERED, SIDE MOUNT SENSOR OPERATED, 1.6 GPF FLUSH VALVE; SMITH 0210 HORIZONTAL (LEFT OR RIGHT HAND AS REQUIRED) OR SMITH 0230 VERTICAL ADJUSTABLE CARRIER WITH FOOT SUPPORT; INSTALL ACTUATOR ON WIDE SIDE OF FIXTURE; SEE ARCHITECTURAL DRAWINGS FOR MOUNTING HEIGHTS.
WC-2	WATER CLOSET	1	-.-	4	2	WALL HUNG, SENSOR FLUSH VALVE	WATER CLOSET: KOHLER K-4330 KINGSTON VITREOUS CHINA, WALL MOUNTED, ELONGATED BOWL TOILET WITH K-4670-C LUSTRA OPEN FRONT SEAT; SLOAN REGAL OPTIMA SMO MODEL 111-SMO LOW CONSUMPTION EXPOSED, BATTERY POWERED, SIDE MOUNT SENSOR OPERATED, 1.6 GPF FLUSH VALVE; SMITH 0210 HORIZONTAL (LEFT OR RIGHT HAND AS REQUIRED) OR SMITH 0230 VERTICAL ADJUSTABLE CARRIER WITH FOOT SUPPORT; INSTALL ACTUATOR ON WIDE SIDE OF FIXTURE; SEE ARCHITECTURAL DRAWINGS FOR MOUNTING HEIGHTS.

1. ALL UNDER GROUND WASTE AND VENT SHALL BE 2" OR GREATER PER DRAWINGS.

DOMESTIC EXPANSION TANK SCHEDULE

			FLUID		PHYSICAL					
ID	MANUFACTURER AND MODEL NUMBER	TYPE	WORKING FLUID	MIN. TANK/ ACCEPTANCE (GAL)	TANK SIZE (GAL)	RELIEF VALVE (PSIG)	DIAMETER (IN)	HEIGHT (IN)	NPT FITTING (IN)	NOTES
DET-1	THERM-X-TROL ST-12	BUTYL DIAPHRAGM	WATER	1.0	4.4	150	11	15	3/4	1

1. TANK LINER SUITABLE FOR POTABLE WATER

DOMESTIC PUMP SCHEDULE

			FLUID			PUMP	ELECTRICAL			
ID	MANUFACTURER AND MODEL NUMBER	SERVICE	FLOW RATE (GPM)	WORKING FLUID	HEAD LOSS (FT)	CONSTRUCTION	MOTOR SIZE	MOTOR SPEED (RPM)	VOLT/PH/HZ	NOTES
RCP-1	B&G NBF-12F/LW	DOMESTIC HOT WATER	5	DOMESTIC WATER	10	ALL BRONZE	55 W	2800	120/1/60	-.-
RCP-2	B&G PR SERIES 3/4	DESUPERHEATER	2	DOMESTIC WATER	10	ALL BRONZE	1/6 HP	1750	120/1/60	-.-

ELECTRIC WATER HEATER SCHEDULE

			ELECTRICAL		PHYSICAL			
ID	MANUFACTURER AND MODEL NUMBER	RECOVERY RATE @ 90 F DELTA T	(KW)	V/PH	TANK SIZE (GAL)	DIAMETER (IN)	HEIGHT (IN)	NOTES
WH-1	AO SMITH PXHT 80	21	4.5	208/1	80	26	62	-.-

State of Utah
Department of Administrative Services
Division of Facilities Construction & Management
4110 State Office Building
Salt Lake City, Utah 84114
Phone: (801) 538 - 3018
Fax: (801) 538 - 3267
Internet: http://www.dfcm.state.ut.us

Utah Valley University
Orem, Utah

CREATED BY: P+A architects
P+A architects
821 East Kensington Ave.
Salt Lake City, Utah 84105
P: 801.484.1161
F: 801.485.4640
e-mail parchitects@comcast.net

architecture planning design

CONSULTANT:
VAN BOERUM & FRANK ASSOCIATES INC.
WWW.VBFA.COM CONSULTING ENGINEERS
Salt Lake City - Logan - St. George - Tempe - Pocatello
330 South 300 East 801.530.3148 T
Salt Lake City, UT 84111 801.530.3150 F
VBFA Project Number:09422
LICENSED PROFESSIONAL ENGINEER No. 189889 STEVEN T. SHEPHERD 1/29/10 STATE OF UTAH

PROJECT TITLE:
UTAH VALLEY UNIVERSITY NEW PARKING AND FACILITIES DEPARTMENT BUILDING

UTAH VALLEY UNIVERSITY
936 SOUTH 400 WEST
OREM, UTAH

REVISIONS

MARK	DATE	DESCRIPTION

ISSUE TYPE:CONSTRUCTION DOCUMENTS

ISSUE DATE: August 02, 2010

CAD PROJECT NO: 09247790
CAD DWG FILE:
DRAWN BY: E.J./K.M
CHK'D BY: S.S/S.J
COPYRIGHT: P&A architects

KEY PLAN

SHEET TITLE

PLUMBING SCHEDULES

SHEET NUMBER

P-601

ELECTRICAL SYMBOL SCHEDULE (CONT).

SYMBOL	DEVICE/FIXTURE DESCRIPTION	NOTES
	FLUORESCENT LIGHT FIXTURE	(1) (2) (3)
	FLUORESCENT EMERGENCY LIGHT FIXTURE	(1) (2) (3) (4)
	EXIT LIGHT FIXTURE – WALL MOUNT	(1) (2) (4)
	EXIT FIXTURE – ONE WAY WALL MOUNT	(1) (2) (4) (5)
	EXIT FIXTURE – TWO WAY WALL MOUNT	(1) (2) (4) (5)
	EXIT LIGHT FIXTURE – CEILING MOUNT	(1) (2) (4)
	EXIT FIXTURE – ONE WAY CEILING MOUNT	(1) (2) (4) (5)
	EXIT FIXTURE – TWO WAY CEILING MOUNT	(1) (2) (4) (5)
	RECESSED LIGHT FIXTURE	(1) (3)
	WALL LIGHT FIXTURE	(1) (2)
	AREA LIGHT FIXTURE – POLE MOUNTED	(1) (2)
	CEILING LIGHT FIXTURE	(1) (2)
	PENDANT LIGHT FIXTURE	(1) (2) (3)
S	SINGLE POLE SWITCH	(6)
S_3	THREE WAY SWITCH	(6)
S_4	FOUR WAY SWITCH	(6)
S_X	DIMMER SWITCH	.
S_O	WALL SWITCH OCCUPANCY SENSOR	(6)
	DUPLEX CONVENIENCE OUTLET, GROUNDING TYPE	(6)
	DUPLEX CONVENIENCE OUTLET – GFI	(6)
	DOUBLE DUPLEX OUTLET	(6)
	DUPLEX CONVENIENCE OUTLET – FLOOR	(6) (15) (16)
D V	RECEPTACLE & DATA/TELEPHONE	(16)(17)
V	DUAL TELEPHONE/DATA FLOOR	(15) (16) (17)
	TELEVISION OUTLET	(6) (11)
J	JUNCTION BOX	(12)
PC	PHOTO-ELECTRIC CELL WITH RELAY	(10)
	DISCONNECT SWITCH	(8) (13)
F	FUSED DISCONNECT SWITCH	(8) (13)
	PANEL BOARD	
	PANEL BOARD RECESSED	
	FACP	
R	POWER RELAY (DPDT) IN NEMA 1 ENCLOSURE	(8) (18)
S 75	HORN STROBE 75 CD	(11) (23)
S	STROBE 15/75 CD	(11) (23)
	FIRE ALARM HORN	(11) (23)
TS	TAMPER SWITCH	(23)
FS	FLOW SWITCH	(23)
	PHOTOELECTRIC SMOKE DETECTOR	(11) (23)
	CEILING ONE WAY DUAL TECHNOLOGY OCCUPANCY SENSOR SWITCH	(7)
	CEILING DUAL TECHNOLOGY OCCUPANCY SENSOR	(7)
	WALL OCCUPANCY DUAL TECHNOLOGY SENSING SWITCH	(7)
	MOTOR	(22)
	MOTOR ON ROOF	
	MECHANICAL EQUIPMENT	

	WRING IN CND IN CEILING OR WALL
	CONDUIT TURNED UP
	CIRCUIT HOME RUN TO PANEL. 3 CONDUCTORS INCLUDING THE EQUIPMENT GROUND CONDUCTOR.
	CIRCUIT HOME RUN TO PANEL. NUMBER OF ARROW HEADS INDICATE NUMBER OF CIRCUITS. SLASH MARKS INDICATE NUMBER OF CONDUCTORS. EX. TWO CIRCUITS, FOUR CONDUCTORS, COMMON NEUTRAL AND THREE CIRCUITS WITH 7 CONDUCTORS (SEPERATE NEUTRAL PER CIRCUIT). BOTH EX. INCLUDE AN EQUIP. GROUND.
	WRING IN CND IN GROUND OR FLOOR
	CONDUIT TURNED DOWN

INSTALL CONDUIT AS DRAWN ON THE PLANS. THE ONLY EXCEPTIONS ARE THOSE AUTHORIZED IN WRITING BY THE ENGINEER. ALL CONDUITS SHALL INCLUDE AN EQUIPMENT GROUND CONDUCTOR SIZED PER NEC.

NOTES/ABBREVIATIONS

AFF – ABOVE FINISHED FLOOR, AFG – ABOVE FINISHED GRADE,
AIC – AMPS INTERRUPTING CAPACITY, BC – BARE COPPER, BFC – BELOW FINISHED CEILING,
BFG – BELOW FINISHED GRADE, CND. OR C. – CONDUIT, CLG – INSTALLED IN CEILING,
CT – CURRENT TRANSDUCER, DFA – DROP FROM ABOVE, EC – ELECTRICAL CONTRACTOR,
EV – ELECTRO VOICE, GC – GENERAL CONTRACTOR, GND – GROUND,
MC – MECHANICAL CONTRACTOR, MCA – MINIMUM CIRCUIT AMPS,
P.C. – PLUMBING CONTRACTOR, POC – POINT OF CONNECTION, POS – POINT OF SALES,
RMC – RIGID METAL CONDUIT, SCA – SHORT CIRCUIT AMPERES,
TC – TEMP. CONTROL CONTRACTOR, UNO – UNLESS NOTED OTHERWISE, VA – VOLT/AMPS,
VIF – VERIFY IN FIELD, WP – WEATHER PROOF/NEMA 3R

1. SEE LIGHTING FIXTURE SCHEDULE FOR TYPE AND SPECIFICS.
2. SEE LIGHTING FIXTURE SCHEDULE FOR MOUNTING OF FIXTURE.
3. WIRE FIXTURE FROM ADJACENT J-BOX
4. PROVIDE UN-SWITCHED CONDUCTOR TO EMERGENCY BALLAST
5. PROVIDE DIRECTIONAL ARROWS AS SHOWN ON THE PLANS
6. ACCEPTABLE EQUALS ARE P&S, LEVITON, COOPER, HUBBELL
7. ACCEPTABLE EQUALS ARE HUBBELL, WATT STOPPER, SENSOR SWITCH
8. ACCEPTABLE EQUALS ARE GENERAL ELECTRIC, ALLEN-BRADLEY, SQUARE D
9. ACCEPTABLE EQUALS ARE LEVITON, P&S, HUBBELL, COOPER
10. ACCEPTABLE EQUALS ARE INTERMATIC, PARAGON, EZ-CONTROL
11. USE A 4" X 4" BOX WITH A MUD RING TO MATCH THE DEVICE AND INSTALLATION.
12. PROVIDE MUD RING AND/OR BOX COVER APPROPRIATE FOR DEVICE/FIXTURE SERVED.
13. USE HEAVY DUTY FOR 480 VOLT.
14. SIZE TO THE EQUIPMENT BEING CONTROLLED
15. PROVIDE A FLOOR BOX HUBBELL S1PFB/SISP, TWO HXJSEBK, ONE IM2K1BK, AND FIVE IMB1BK W/FLANGE TO MATCH FLOOR TYPE.
16. PROVIDE A FLOOR BOX HUBBELL S1PFB/SISP WITH ONE IM2K1BK, TWO IMB1BK AND ONE HBL2162BK.
17. ACCEPTABLE EQUALS ARE HUBBELL, ORTRONICS, SIEMON
18. MATCH THE VOLTAGE OF THE RELAY WITH THAT OF THE CONTROLLING CIRCUIT.
19. MOUNT SWITCH AT DOOR JAM PER MANUFACTURERS INSTRUCTIONS.
20. FEED THE STYLE LINE RECEP. FROM THE GFCI OUTLET SO BOTH ARE GFCI PROTECTED.
21. PROVIDE HANDY BOX (RACO 663 OR EQUAL) MOUNT DIRECTLY TO FURNACE FUSE 15 AMP OR AS INDICATED ON PLANS.
22. SWITCH WITH LIGHTS UNLESS INDICATED OTHERWISE.
23. PROVIDE DEVICE UL LISTED TO BE USED WITH THE EXISTING FIRE ALARM PANEL/SYSTEM.
24. PROVIDE TIMER INTERVAL AS SHOWN ON DRAWINGS OR LISTED IN SPECIFICATIONS.
25. USE POWER PACK BZ-100E-P.
26. PROVIDE RACEWAY WITH OUTLETS 12" ON CENTER. UNO.

CONDUIT/CONDUCTOR SCHEDULE

MARK	AMPS	CONDUIT CABLE	CONDUCTOR QTY	CONDUCTOR SIZE	CONDUCTOR INSUL	REMARKS
12	20	3/4"	2	12	(1)	(2)
12	20	3/4"	3	12	(1)	(2)
20	30	3/4"	2	10	(1)	(2)
20	30	1"	2	10	(1)	(2)
30	30	3/4"	3	10	(1)	(2)
28	50	3/4"	2	8	(1)	(2)
28	50	1"	2	8	(1)	(2)
38	50	1"	3	8	(1)	(2)
36	65	1"	3	6	(1)	(2)
43	100	1 1/2"	4	3	(1)	(2)
41	130	2"	4	1	(1)	(2)
430	200	2 1/2"	4	3/0	(1)	(2)
435	310	3"	4	350	(1)	(2)
450	380	4"	4	500	(1)	(2)

NOTE:
(1) THHN/THWN-2.
(2) ALL CONDUIT SHALL CONTAIN A SEPARATE EQUIPMENT GROUNDING CONDUCTOR SIZED IN ACCORDANCE WITH THE NEC. ACCOUNT FOR PARALLEL RUNS.

SUFFIX:
"A" INDICATES ALUMINUM CONDUCTORS
"Y" INDICATES YELLOW ISOLATED GROUND CONDUCTOR IN ADDITION TO THE GROUND CONDUCTOR IN NOTE ABOVE.

GENERAL NOTES

22. UNDERGROUND CONDUIT FOR SITE LIGHTING SHALL BE BURIED 24" B.F.G. AND SHALL HAVE ONE (1) #10 THHN GREEN GROUND CONDUCTOR TO GROUND ALL LUMINAIRES.

23. ELECTRICAL CONTRACTOR SHALL COORDINATE WITH THE EQUIPMENT SUPPLIERS ON THE EXACT LOCATIONS OF ALL EQUIPMENT AND REQUIRED ELECTRICAL CONNECTIONS PRIOR TO ROUGH-IN. THE EC SHALL MAKE THE FINAL CONNECTION TO ALL EQUIPMENT.

24. AFTER THE FACILITY IS COMPLETE AND BEEN IN FULL OPERATION FOR TWO WEEKS THE ELECTRICAL CONTRACTOR SHALL OBTAIN THE UTILITY DEMAND, THE SYSTEM VOLTAGE (PHASE TO PHASE AND PHASE TO GROUND) AND AN AMMETER READING (EACH PHASE) ON THE MAIN FEEDERS. THESE READINGS SHALL BE OBTAINED DURING NORMAL OPERATING HOURS FOR THE FACILITY AND SHALL BE RECORDED AND A COPY SENT TO THE ENGINEER.

GENERAL NOTES

1. THE ELECTRICAL SYSTEMS DEFINED BY THESE PLANS AND SPECIFICATIONS ARE TO BE CONSTRUCTED AS COMPLETE AND OPERABLE SYSTEMS AND SHALL BE BID WITH THIS INTENT. THE CONTRACTOR SHALL VISIT THE SITE, READ ALL THE RELEVANT DOCUMENTS AND BECOME FAMILIAR WITH THE TYPE OF CONSTRUCTION AND WORK TO BE ACCOMPLISHED. SHOULD ANY ERROR, OMISSION OR CONFLICT EXIST IN EITHER THE PLANS OR SPECIFICATIONS, THE CONTRACTOR SHALL NOTIFY THE ENGINEER IN WRITING BEFORE SUBMITTING HIS BID PRICE SO A CHANGE CAN BE ISSUED IN A PRE-BID ADDENDUM. OTHERWISE, THE CONTRACTOR AND/OR EQUIPMENT SUPPLIER SHALL SUPPLY THE PROPER MATERIALS AND LABOR TO INSTALL COMPLETE AND OPERABLE SYSTEMS AT THEIR OWN EXPENSE. WHEN EACH ELECTRICAL SYSTEM IS COMPLETE, THE CONTRACTOR SHALL TEST AND CONFIRM IT'S PROPER OPERATION. ANY INCOMPLETE SYSTEM SHALL BE MADE COMPLETE AND OPERABLE.

2. THE ARCHITECTURAL AND MECHANICAL PLANS ARE CONSIDERED A PART OF THE ELECTRICAL DOCUMENTS SO FAR AS THEY APPLY. THE ELECTRICAL CONTRACTOR SHALL REFER TO AND COORDINATE WITH THEM. NO EXTRA COST SHALL BE ALLOWED FOR FAILURE TO COORDINATE THE CONTRACT DOCUMENTS WITH OTHER TRADES AND/OR IF EQUIPMENT DIMENSIONS ARE GREATER THAN SPECIFIED AND/OR DIMENSIONED ON THE PLANS.

3. NO ADDITIONS TO THE CONTRACTOR BID WILL BE ALLOWED FOR CHANGES MADE NECESSARY BY INTERFERENCE WITH OTHER WORK.

4. THE ELECTRICAL CONTRACTOR SHALL PROVIDE EQUIPMENT, MATERIALS AND LABOR FOR THE CONNECTIONS OF ALL EQUIPMENT SHOWN ON THE PLANS – ARCHITECTURAL, MECHANICAL, ETC.

5. THIS PROJECT IS TO BE INSTALLED IN STRICT ACCORDANCE WITH LOCAL AND STATE CODES AND THE NEC. IF AT ANY TIME DURING CONSTRUCTION, OR AFTER, SOMETHING IS FOUND TO BE INSTALLED IN VIOLATION OF THE CODES LISTED ABOVE, IT SHALL BE CORRECTED AT THE CONTRACTORS EXPENSE.

6. ELECTRICAL CONTRACTOR SHALL CONFIRM THE EXACT LOCATION OF THE OWNER SERVICE TRANSFORMER, BEFORE INSTALLING THE PAD AND SERVICE CONDUIT.

7. THE ELECTRICAL CONTRACTOR SHALL COORDINATE THE SERVICE FEEDER TO THE BUILDING WITH THE OWNER. PROVIDE LABOR AND CONDUIT, CONDUCTORS, TRANSFORMER LUGS, METER BASES, METER CONDUIT, CONDUCTORS, ETC., AS REQUIRED FOR A COMPLETE ELECTRIC SERVICE TO THIS FACILITY.

8. THE EC SHALL INSTALL A SEPARATE EQUIPMENT GROUNDING CONDUCTOR IN EACH CONDUIT RUN. CONDUIT SHALL NOT BE USED AS AN EQUIPMENT GROUNDING CONDUCTOR. THE EC SHALL GROUND THE ELECTRICAL SYSTEM IN ACCORDANCE WITH LOCAL AND NATIONAL CODES.

9. THE CONTRACTOR SHALL NOTIFY THE MANUFACTURER THAT THE LAYOUT AND DIMENSIONS ARE CRITICAL FOR ALL PANELS, SWITCHGEAR, ETC. AND NO PIECE OF EQUIPMENT SHALL EXCEED THE PHYSICAL SIZE INDICATED ON THE PLANS.

10. ELECTRICAL CONTRACTOR SHALL CONFIRM MINIMUM CODE (NEC) WORKING CLEARANCE BEFORE INSTALLING ANY ELECTRICAL PANELS OR CABINETS AND SHALL MOVE THE PANELS AT HIS EXPENSE IF REJECTED BY AN INSPECTOR. IF CLEARANCE IS NOT POSSIBLE, THE DESIGNER SHALL BE NOTIFIED IMMEDIATELY IN WRITING.

11. THE CONTRACTOR SHALL ALLOW THE MOVEMENT, BEFORE ROUGH-IN, OF ANY ELECTRICAL PANEL, DEVICE, LUMINAIRE, ETC. A DISTANCE OF 10 FEET WITHOUT REQUIRING ADDITIONAL COST TO THE PROJECT.

12. THE ELECTRICAL CONTRACTOR SHALL SECURE ALL CONDUIT TO THE STRUCTURE AS IT IS SET IN PLACE USING INDUSTRY STANDARD METHODS AND PRACTICES.

13. TO ASSURE ALL DEVICES ARE RIGIDLY SET, THE ELECTRICAL CONTRACTOR SHALL SECURE ALL DEVICE BOXES WITH BRACKETS, HANGERS, ETC. DESIGNED FOR THE APPLICATION. ANY DEVICE BOXES NOT SECURED WILL BE MADE SECURE AT THE CONTRACTORS EXPENSE.

14. THE ELECTRICAL CONTRACTOR SHALL PROVIDE THE TELEPHONE SERVICE CONDUIT WITH A NYLON PULL CORD INSTALLED. EC SHALL CONFIRM ROUTING, SIZE, AND LOCATION OF THE TELEPHONE SERVICE CONDUIT, AND THE MAIN TELEPHONE BOARD WITH THE OWNER AND EACH TELEPHONE OUTLET WITH OWNER PRIOR TO ROUGH-IN.

15. EC SHALL INSTALL A 3/4" CONDUIT WITH (1) #6 BARE COPPER CONDUCTOR FROM TELEPHONE PANEL TO THE MAIN ELECTRICAL GROUNDING BUS.

16. BEFORE ANY ELECTRICAL CONDUIT, BOXES, ETC. ARE COVERED (FLOOR, CEILINGS, WALLS, ETC.), THEY SHALL BE APPROVED BY THE INSPECTING OFFICER (INSPECTOR). THE UNCOVERING AND REPLACEMENT OF ELECTRICAL WORK FOR THE INSPECTION PURPOSES WILL BE AT THE COST OF THE ELECTRICAL CONTRACTOR.

17. DO NOT INSTALL CONDUIT IN BOND BEAMS.

18. LENGTHS OF FLEXIBLE CONDUIT GREATER THAN 48 INCHES SHALL NOT BE INSTALLED ON THIS PROJECT, EXCEPT WHIPS ON LUMINAIRES, WHICH MAY BE UP TO ELEVEN (11) FEET IN LENGTH. FLEXIBLE CONDUIT SHALL NOT BE CONCEALED.

19. ALL BATTERY POWERED OR CONTINUOUS BURN LUMINAIRES SHOWN ON THE PLANS, SUCH AS EXIT LIGHTS, NIGHT LIGHTS, OR EMERGENCY LIGHTS, SHALL BE CONNECTED TO THE UN-SWITCHED LEG OF THE LIGHTING CIRCUIT FEEDING THAT AREA.

20. LUMINAIRES INSTALLED IN THE MECHANICAL ROOM SHALL BE PLACED SO THAT ALL EQUIPMENT IS ADEQUATELY ILLUMINATED AFTER THE MECHANICAL EQUIPMENT IS IN PLACE.

21. ALL LUMINAIRES SHALL BE SUPPORTED FROM THE BUILDING STRUCTURE AND NOT THE CEILING GRID OR OTHER NONSTRUCTURAL MEMBER.

State of Utah
Department of Administrative Services
Division of Facilities Construction & Management
4110 State Office Building
Salt Lake City, Utah 84114
Phone: (801) 538 - 3018
Fax: (801) 538 - 3267
Internet: http://www.dfcm.state.ut.us

Utah Valley University
Orem, Utah

CREATED BY: P+A architects
P+A architects
821 East Kensington Ave.
Salt Lake City, Utah 84105
P: 801.484.1161
F: 801.485.4640
e-mail parchitects@comcast.net

architecture planning design

CONSULTANT:
VAN BOERUM & FRANK ASSOCIATES INC.
WWW.VBFA.COM CONSULTING ENGINEERS
Salt Lake City - Logan - St. George - Tempe - Pocatello
330 South 300 East 801.530.3148 T
Salt Lake City, UT 84111 801.530.3150 F
VBFA Project Number:9422
No. 5246941 STAN W. JOHNS 07/29/10 STATE OF UTAH

PROJECT TITLE:
UTAH VALLEY UNIVERSITY
NEW PARKING AND
FACILITIES DEPARTMENT
BUILDING

UTAH VALLEY UNIVERSITY
936 SOUTH 400 WEST
OREM, UTAH

REVISIONS

MARK	DATE	DESCRIPTION

ISSUE TYPE: CONSTRUCTION DOCUMENTS

ISSUE DATE: August 02, 2010

CAD PROJECT NO: 09247790
CAD DWG FILE:
DRAWN BY: E.J./K.M
CHK'D BY: S.S/S.J

COPYRIGHT: P&A architects

KEY PLAN

SHEET TITLE
GENERAL NOTES AND SCHEDULES

SHEET NUMBER
E-001

MECHANICAL EQUIPMENT SCHEDULE

MARK	DESCRIPTION	ELECTRICAL V/PH	LOAD (kW)	HP	FLA	MCA	MOCP	DISCONNECT SIZE/POLE	FUSE SIZE	NOTES
EF-1	EXHAUST FAN	115/1	0.138							1
EF-2	EXHAUST FAN	115/1	0.138							1
EF-3	EXHAUST FAN	115/1	0.138							1
ERV-1	ENERGY RECOVERY	208/3				62.5	60			1
EUH-1	ELECTRIC UNIT HEATER	208/1	3		14.5					1
EWC-1	ELECTRIC WATER COOLER	120/1	0.35							4
HP-1	HEAT PUMP	208/3				17.3	25	30A/3P	N/A	5
HP-2	HEAT PUMP	208/3				25.3	35	40A/3P	N/A	6
HP-3	HEAT PUMP	208/3				17.3	25	30A/3P	25	2
HP-4	HEAT PUMP	208/3				17.3	25	30A/3P	25	2
HP-5	HEAT PUMP	208/3				25.3	35	60A/3P	35	2
HP-6	HEAT PUMP	208/3				15.6	20	30A/3P	20	2
HP-7	HEAT PUMP	208/3				15.6	20	30A/3P	N/A	5
HP-8	HEAT PUMP	208/3				7.0	15	30A/3P	15	2
HP-9	HEAT PUMP (ALTERNATE)	208/3				28.5	45	60A/3P	45	2
HP-10	HEAT PUMP (ALTERNATE)	208/3				17.3	25	30A/3P	25	2
HP-11	HEAT PUMP	208/3				28.5	45	60A/3P	45	2
HP-12	HEAT PUMP	208/3				12.3	20	30A/3P	N/A	5
HP-13	HEAT PUMP	208/3				15.6	20	30A/3P	N/A	5
HP-14	HEAT PUMP	208/3				25.3	35	40A/3P	N/A	6
P-1	PUMP	208/3		7.5						3,8
P-2	PUMP	208/3		7.5						3,8
RCP-1	RECIRC PUMP	120/1	0.055							4,9
RCP-1	RECIRC PUMP	120/1		1/6						4,9
TP-1	TRAP PRIMER	120/1	0.1							
TP-2	TRAP PRIMER	120/1	0.1							
WH-1	GAS WATER HEATER	208/1	4.5					30A/3P	N/A	

V/PH/Hz = VOLTAGE / PHASE / HERTZ
MCA = MINIMUM CIRCUIT AMPACITY
MOCP = MAXIMUM OVER CURRENT PROTECTION LISTED BY THE MANUFACTURER

NOTES:
(1) UNIT PROVIDED WITH DISCONNECT.
(2) PROVIDE FUSED DISCONNECT WITH FUSE SIZED TO THE MAX. LISTED BY THE MANUFACTURER.
(3) PROVIDE VFD (MITSUBISHI FR-F720-00250 OR APPROVED EQUAL) TO CONTROL PUMP.
(4) MAKE CONNECTION TO CONTROL UNIT. CONFIRM REQUIREMENTS WITH MC.
(5) PROVIDE NON-FUSED 30A RATED DISCONNECT HUBBELL HBL13760 OR APPROVED EQUAL
(6) PROVIDE NON-FUSED 40A RATED DISCONNECT HUBBELL HBL7843D IN HBL1370 OR APPROVED EQUAL
(7) PROVIDE NON-FUSED 50A RATED DISCONNECT HUBBELL HBL7853D IN NEMA1 ENCLOSURE OR APPROVED EQUAL
(8) INTERLOCK VFD FOR BOTH PUMPS SO THEY OPERATE IN PRIMARY/STANDBY CONFIGURATION.
(9) PROVIDE A DISCONNECT AT UNIT (HUBBELL HBL13720 OR EQUAL).

LUMINAIRE SCHEDULE

TYPE	DESCRIPTION	MANUFACTURER	CATALOG NUMBER	VOLTS	LAMPS QTY	LAMPS MODEL	MOUNTING	VA	NOTES
L1	2'X4' - FLUORESCENT - RECESSED, INDIRECT LAY-IN	COLUMBIA	STR24-232G-MPO-EP	120	2	F028/835/XP/SS/ECO	RECESSED	56 VA	
		DAYBRITE	2AVG228-PMW-UNV-1/2EB10R						
L1E	2'X4' - FLUORESCENT - RECESSED, INDIRECT LAY-IN WITH INTEGRAL 1200 LUMEN EMERGENCY BALLAST	COLUMBIA	STR24-232G-MPO-EP-EM	120	2	F028/835/XP/SS/ECO	RECESSED	56 VA	
		DAYBRITE	2AVG228-PMW-UNV-1/2EB10R-E5						
L2	COMPACT FLOURESCENT RECESSED, 6" HORIZONTAL SINGLE LAMP	PRESCOLITE	CFT632HEB-STF602H-WT	120	1	32W TT	RECESSED	32 VA	
		OMEGA	S61H32PLT-U-T61H-CS						
		PORTFOLIO	C6142E - 6151LI-WF						
L2E	COMPACT FLOURESCENT RECESSED, 6" HORIZONTAL SINGLE LAMP , LOW PROFILE WITH INTEGRAL 800 LUMEN EMERGENCY BALLAST	PRESCOLITE	CFT632HEB-STF602H-WT-EL	120	1	32W TT	RECESSED	32 VA	
		OMEGA	S61H26/32/42PLT-IE-U-T61H-CS-IE						
		PORTFOLIO	C6142EEM- 6151ELI-WF						
L3	COMPACT FLOURESCENT RECESSED, 6" HORIZONTAL SINGLE LAMP, WHEAT COLORED TRIM	PRESCOLITE	CFT632HEB-STF602H-LW	120	1	32W TT	RECESSED	32 VA	
		OMEGA	S61H32PLT-U-T61H-WT						
		PORTFOLIO	C6142E - 6151LI-WH						
L3E	COMPACT FLOURESCENT RECESSED, 6" HORIZONTAL SINGLE LAMP, WHEAT COLORED TRIM WITH INTEGRAL 800 LUMEN EMERGENCY BALLAST	PRESCOLITE	CFT632HEB-STF602H-LW-EL	120	1	32W TT	RECESSED	32 VA	
		OMEGA	S61H32PLT-U-T61H-WT-IE						
		PORTFOLIO	C6142E - 6151ELI-WH						
L4	4' LINEAR DIRECT/INDIRECT FLUORSCENT FIXTURE	ALERA	CVSL-4-3T8-70/30-EB8-MW4	120	3	F028/835/XP/SS/ECO	SUSPENDED 7'6" AFF	84 VA	
L4E	4' LINEAR DIRECT/INDIRECT FLUORSCENT FIXTURE WITH INTEGRAL 1200 LUMEN EMERGENCY BALLAST	ALERA	CVSL-4-3T8-70/30-EB8-MW4	120	3	F028/835/XP/SS/ECO	SUSPENDED 7'6" AFF	84 VA	
L5	16' LINEAR DIRECT/INDIRECT FLUORESCENT FIXTURE	ALERA	CVSL-16-2T8-70/300-CM-48-EP-120-SCE	120	8	F028/835/XP/SS/ECO	SUSPENDED 7'6" AFF	224 VA	
		FINELITE	S12IE-WCB-16-2T8-SC-91W-OPEN-UNV-FA50"-CE						
		CORELITE	IQ-WE-2T8-1C-UNV-AC-48"-XX-16'						
L6	POLYCARBONATE SELF POWERED WHITE EXIT SIGN WITH SELF DIAGNOSTICS AND UNIVERSAL CHEVERON KIT	DUALLITE	LX-U-G-W-E	120	N/A	LED (INCLUDED)	UNIVERSAL	5 VA	
		MCPHILBEN	CXXL-3-GW						
		SURELITES	LPX70GWHSD						
L7	DECORATIVE WALL SCONCE	WINONA	5251-W2-F-120-FAH4-SFBA	120	2	26W TT	RECESSED 6'AFF	52 VA	
L8	DECORATIVE EXTERIOR WALL SCONCE WET LOCATION RATED	WINONA	5305-WL-R-18-CFTR26W-120-FAH4-SFBA	120	1	26W TT	RECESSED 6'8"AFF	27 VA	
L9	EMERGENCY EGRESS LIGHT	HUBBELL	PG-Z-HTR	120	N/A	LED (INCLUDED)	WALL 9'AFF	5 VA	
L10	LUMINOUS 36" BOWL SUSPENDED PENDANT WITH DUST COVER	SHAPER	12157R-36-3-39-T5/1/40-120-SCBA	120	3	39W BX	SUSPENDED 15'6" AFF	120 VA	
		LAM	LDL35-4/39-1382D-G-N-CN-XX-SFBA-SCBA-120-DC						
		SCOTT	S2007-3BX39-SF-OA						
L11	48" - INDUSTRIAL FLOURESCENT - 2 LAMP SURFACE/CHAIN MOUNTED FIXTURE WITH REFLECTOR AND WIRE GUARD	METALUX	ICF-228-UNV-VWG/ICF-4FT	120	2	F028/835/XP/SS/ECO	SURFACE/CHAIN	56 VA	
		LITHONIA	L 2 28 MVOLT WGL						
		DAYBRITE	IS228-UNV-1/2EB-FKR-173						
		COLUMBIA	CSR4-228-ST-EU-CSRWG4						
L11E	48" - INDUSTRIAL FLOURESCENT - 2 LAMP SURFACE/CHAIN MOUNTED FIXTURE WITH INTEGRAL 1200 LUMEN EMERGENCY BALAST, REFLECTOR AND WIRE GUARD	METALUX	ICF-228-UNV-VWG/ICF-4FT	120	2	F028/835/XP/SS/ECO	SURFACE/CHAIN	56 VA	
		LITHONIA	L 2 28 MVOLT WGL						
		DAYBRITE	IS228-UNV-1/2EB-FKR-173						
		COLUMBIA	CSR4-228-ST-EU-CSRWG4						
L12	DECORATIVE WALL SCONCE	SHAPER	611-19-CFL/1/27/120	120	1	27W CFL	WALL	27 VA	
		BROWNLEE	1509-CBA-26-ES3						
		WINONA	Q212359-1-1-CFL/27-120						
L13	2'X4' - FLUORESCENT - RECESSED, STATIC, 2 LAMP SPECIFICATIONS GRADE LENSED TROFFER	METALUX	2GC8-328A125-UNV-EB1	120	2	F028/835/XP/SS/ECO	RECESSED	106 VA	
		LITHONIA	2SP8 G 3 28 A12125 MVOLT GEB10IS						
		DAYBRITE	2SPG-328-FS-12-UNV-1/3EB						
		COLUMBIA	ST824-328G-FSA12125-3EU						
L14	ELEVATOR PIT LIGHT: CLEAR TEMPERED GLASS GLOBE, U.L. LISTED FOR USE IN WET LOCATIONS	EXCELINE	RLW-100-IN-L-CG-C-1	120	1	100W A/19	WALL ARM MOUNT	100W	
		LUMARK	IV-VW-1-G				ON FLUSH OR RECESSED		
		RAL	VPWB100GG75				OUTLET BOX		
		HUBBELL	VBGG-150						
L15	SELF LUMINOUS EXIT SIGN	DUAL LITE	SLM-S-G-W-20	N/A	N/A				
P4	LIGHT POLES: DOUBLE HEAD, MULTI-TAP BALLAST; TYPE IV DISTRIBUTION; 25 FOOT SQUARE STRAIGHT STEEL POLE	VISIONAIRE	2 AME-2 T4 250PS/SSS-25	208	2	250 W PSMH	POLE	290 VA	

NOTES: THE FIXTURES LISTED IN THIS SCHEDULE REPRESENT THE QUALITY AND TYPE OF FIXTURES DESIRED. EQUALS OF THOSE MANUFACTURERS NOTED IN THE REMARKS ARE ACCEPTED. FOR THOSE FIXTURES WITHOUT A MANUFACTURE DESIGNATION IN THE REMARK COLUMN THE SUPPLIER MAY SUBMIT A FIXTURE THEY BELIEVE TO BE EQUAL TO THE ONE SPECIFIED. TO BE ACCEPTABLE THE FIXTURES SUBMITTED MUST BE OF THE SAME TYPE AND MATERIAL AS THAT SPECIFIED AND MUST RECEIVE APPROVAL FROM THE ENGINEER BY ADDENDUM PRIOR TO BID.

1)

State of Utah
Department of Administrative Services
Division of Facilities Construction & Management
4110 State Office Building
Salt Lake City, Utah 84114
Phone: (801) 538 - 3018
Fax: (801) 538 - 3267
Internet: http://www.dfcm.state.ut.us

Utah Valley University
Orem, Utah

CREATED BY: P+A architects
P+A architects
821 East Kensington Ave.
Salt Lake City, Utah 84105
P: 801.484.1161
F: 801.485.4640
e-mail parchitects@comcast.net

architecture planning design

CONSULTANT:
VAN BOERUM & FRANK ASSOCIATES INC.
WWW.VBFA.COM CONSULTING ENGINEERS
Salt Lake City · Logan · St. George · Tempe · Pocatello
330 South 300 East 801.530.3148 T
Salt Lake City, UT 84111 801.530.3150 F
VBFA Project Number:9422
LICENSED PROFESSIONAL ENGINEER No. 5246941 STAN W. JOHNS 07/29/10 STATE OF UTAH

PROJECT TITLE:
UTAH VALLEY UNIVERSITY
NEW PARKING AND
FACILITIES DEPARTMENT
BUILDING

UTAH VALLEY UNIVERSITY
936 SOUTH 400 WEST
OREM, UTAH

REVISIONS

MARK	DATE	DESCRIPTION

ISSUE TYPE: CONSTRUCTION DOCUMENTS

ISSUE DATE: August 02, 2010

CAD PROJECT NO: 09247790
CAD DWG FILE:
DRAWN BY: E.J./K.M
CHK'D BY: S.S/S.J

COPYRIGHT: P&A architects

KEY PLAN

SHEET TITLE
ELECTRICAL SCHEDULES

SHEET NUMBER
E-002

COM*check* Software Version 3.8.0

Interior Lighting Compliance Certificate

2009 IECC

Section 1: Project Information

Project Type: **New Construction**
Project Title : UVU facilities bldg

Construction Site: Owner/Agent: Designer/Contractor:

Section 2: Interior Lighting and Power Calculation

A Area Category	B Floor Area (ft2)	C Allowed Watts / ft2	D Allowed Watts (B x C)
Office	12000	1	12000
		Total Allowed Watts =	12000

Section 3: Interior Lighting Fixture Schedule

A Fixture ID : Description / Lamp / Wattage Per Lamp / Ballast	B Lamps/ Fixture	C # of Fixtures	D Fixture Watt.	E (C X D)
Office (12000 sq.ft.)				
Linear Fluorescent 3: L1: 48" T8 28W (Super T8) / Electronic	2	16	50	800
Compact Fluorescent 1: L2: Triple 4-pin 32W / Electronic	1	75	35	2625
Linear Fluorescent 4: L3: 48" T8 28W (Super T8) / Electronic	2	17	50	850
Linear Fluorescent 3 copy 1: L4: 48" T8 28W (Super T8) / Electronic	3	51	75	3825
Linear Fluorescent 3 copy 2: L5: 48" T8 28W (Super T8) / Electronic	2	2	50	100
Compact Fluorescent 2: L7: Twin Tube 24/26/27W / Electronic	2	2	43	86
Compact Fluorescent 2 copy 1: L8: Twin Tube 24/26/27W / Electronic	1	2	21	42
Compact Fluorescent 4: L10: BIAX 39W / Electronic	3	3	123	369
Linear Fluorescent 5: L11: 48" T8 28W (Super T8) / Electronic	2	22	50	1100
Compact Fluorescent 5: L12: Twin Tube 24/26/27W / Electronic	1	7	21	147
Linear Fluorescent 5 copy 1: L13: 48" T8 28W (Super T8) / Electronic	2	1	50	50
Incandescent 1: L14: ELEV PIT LIGHT / Incandescent 100W	1	1	100	100
			Total Proposed Watts =	10094

Section 4: Requirements Checklist

Lighting Wattage:

☐ 1. Total proposed watts must be less than or equal to total allowed watts.

Allowed Watts	Proposed Watts	Complies
12000	10094	YES

Controls, Switching, and Wiring:

☐ 2. Daylight zones under skylights more than 15 feet from the perimeter have lighting controls separate from daylight zones adjacent to vertical fenestration.
☐ 3. Daylight zones have individual lighting controls independent from that of the general area lighting.

Exceptions:

☐ Contiguous daylight zones spanning no more than two orientations are allowed to be controlled by a single controlling device.
☐ Daylight spaces enclosed by walls or ceiling height partitions and containing two or fewer light fixtures are not required to have a separate switch for general area lighting.

☐ 4. Independent controls for each space (switch/occupancy sensor).

Exceptions:

☐ Areas designated as security or emergency areas that must be continuously illuminated.
☐ Lighting in stairways or corridors that are elements of the means of egress.

☐ 5. Master switch at entry to hotel/motel guest room.
☐ 6. Individual dwelling units separately metered.
☐ 7. Medical task lighting or art/history display lighting claimed to be exempt from compliance has a control device independent of the control of the nonexempt lighting.
☐ 8. Each space required to have a manual control also allows for reducing the connected lighting load by at least 50 percent by either controlling all luminaires, dual switching of alternate rows of luminaires, alternate luminaires, or alternate lamps, switching the middle lamp luminaires independently of other lamps, or switching each luminaire or each lamp.

Exceptions:

☐ Only one luminaire in space.
☐ An occupant-sensing device controls the area.
☐ The area is a corridor, storeroom, restroom, public lobby or sleeping unit.
☐ Areas that use less than 0.6 Watts/sq.ft.

☐ 9. Automatic lighting shutoff control in buildings larger than 5,000 sq.ft.

Exceptions:

☐ Sleeping units, patient care areas; and spaces where automatic shutoff would endanger safety or security.

☐ 10. Photocell/astronomical time switch on exterior lights.

Exceptions:

☐ Lighting intended for 24 hour use.

☐ 11. Tandem wired one-lamp and three-lamp ballasted luminaires (No single-lamp ballasts).

Exceptions:

☐ Electronic high-frequency ballasts; Luminaires on emergency circuits or with no available pair.

Interior Lighting PASSES: Design 16% better than code

Section 5: Compliance Statement

Compliance Statement: The proposed lighting design represented in this document is consistent with the building plans, specifications and other calculations submitted with this permit application. The proposed lighting system has been designed to meet the 2009 IECC requirements in COM*check* Version 3.8.0 and to comply with the mandatory requirements in the Compliance Checklist.

Ryan VanWoert Engineer — Name - Title
Signature
7/29/10 — Date

COM*check* Software Version 3.8.0

Exterior Lighting Compliance Certificate

2009 IECC

Section 1: Project Information

Project Type: **New Construction**
Project Title : UVU facilities bldg
Exterior Lighting Zone: **2 (Light industrial area with limited nighttime use)**

Construction Site: Owner/Agent: Designer/Contractor:

Section 2: Exterior Lighting Area/Surface Power Calculation

A Exterior Area/Surface	B Quantity	C Allowed Watts / Unit	D Tradable Wattage	E Allowed Watts (B x C)	F Proposed Watts
Parking area	15000 ft2	0.06	Yes	900	600
			Total Tradable Watts* =	900	600
			Total Allowed Watts =	900	
			Total Allowed Supplemental Watts** =	600	

* Wattage tradeoffs are only allowed between tradable areas/surfaces.
** A supplemental allowance equal to 600 watts may be applied toward compliance of both non-tradable and tradable areas/surfaces.

Section 3: Exterior Lighting Fixture Schedule

A Fixture ID : Description / Lamp / Wattage Per Lamp / Ballast	B Lamps/ Fixture	C # of Fixtures	D Fixture Watt.	E (C X D)
Parking area (15000 ft2): Tradable Wattage				
P4: Metal Halide 250W / Pulse start	2	2	300	600
			Total Tradable Proposed Watts =	600

Section 4: Requirements Checklist

Lighting Wattage:

☐ 1. Within each non-tradable area/surface, total proposed watts must be less than or equal to total allowed watts. Across all tradable areas/surfaces, total proposed watts must be less than or equal to total allowed watts.

Compliance: Passes.

Controls, Switching, and Wiring:

☐ 2. All exemption claims are associated with fixtures that have a control device independent of the control of the nonexempt lighting.
☐ 3. Lighting not designated for dusk-to-dawn operation is controlled by either a a photosensor (with time switch), or an astronomical time switch.
☐ 4. Lighting designated for dusk-to-dawn operation is controlled by an astronomical time switch or photosensor.
☐ 5. All time switches are capable of retaining programming and the time setting during loss of power for a period of at least 10 hours.

Exterior Lighting Efficacy:

☐ 6. All exterior building grounds luminaires that operate at greater than 100W have minimum efficacy of 60 lumen/watt.

Exceptions:

☐ Lighting that has been claimed as exempt and is identified as such in Section 3 table above.

☐ Lighting that is specifically designated as required by a health or life safety statue, ordinance, or regulation.
☐ Emergency lighting that is automatically off during normal building operation.
☐ Lighting that is controlled by motion sensor.

Exterior Lighting PASSES: Design 60% better than code

Section 5: Compliance Statement

Compliance Statement: The proposed exterior lighting design represented in this document is consistent with the building plans, specifications and other calculations submitted with this permit application. The proposed lighting system has been designed to meet the 2009 IECC requirements in COM*check* Version 3.8.0 and to comply with the mandatory requirements in the Compliance Checklist.

Ryan VanWoert — Name - Title
Signature
7/29/10 — Date

State of Utah
Department of Administrative Services
Division of Facilities Construction & Management
4110 State Office Building
Salt Lake City, Utah 84114
Phone: (801) 538 - 3018
Fax: (801) 538 - 3267
Internet: http://www.dfcm.state.ut.us

Utah Valley University
Orem, Utah

CREATED BY: P+A architects
P+A architects
821 East Kensington Ave.
Salt Lake City, Utah 84105
P: 801.484.1161
F: 801.485.4640
e-mail parchitects@comcast.net

architecture planning design

CONSULTANT:
VAN BOERUM & FRANK ASSOCIATES INC.
WWW.VBFA.COM CONSULTING ENGINEERS
Salt Lake City - Logan - St. George - Tempe - Pocatello
330 South 300 East 801.530.3148 T
Salt Lake City, UT 84111 801.530.3150 F
VBFA Project Number:9422

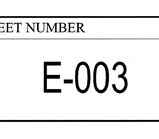

PROJECT TITLE:
UTAH VALLEY UNIVERSITY NEW PARKING AND FACILITIES DEPARTMENT BUILDING

UTAH VALLEY UNIVERSITY
936 SOUTH 400 WEST
OREM, UTAH

REVISIONS

MARK	DATE	DESCRIPTION

ISSUE TYPE: CONSTRUCTION DOCUMENTS
ISSUE DATE: August 02, 2010

CAD PROJECT NO: 09247790
CAD DWG FILE:
DRAWN BY: E.J./K.M
CHK'D BY: S.S/S.J
COPYRIGHT: P&A architects

KEY PLAN

SHEET TITLE
ELECTRICAL SCHEDULES

SHEET NUMBER
E-003

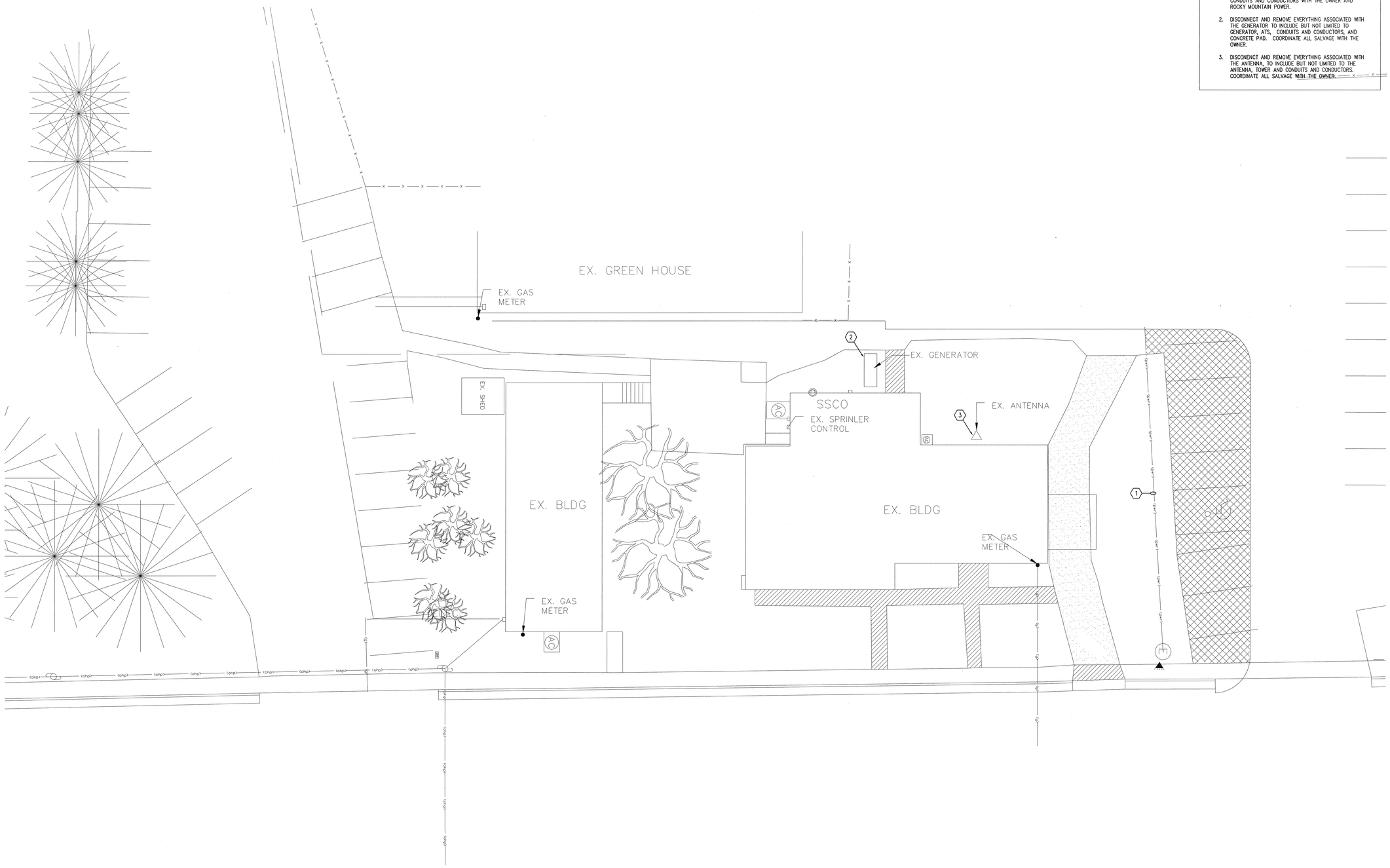

KEYED NOTES

1. CONTRACTOR SHALL COORDINATE DISCONNECTION OF POWER TO THE BUILDING WITH ROCKY MOUNTAIN POWER. APPROXIMATE LOCATIONS SHOWN FOR THE POWER CONDUIT AND CONDUCTORS. COORDINATE SALVAGE OF CONDUITS AND CONDUCTIORS WITH THE OWNER AND ROCKY MOUNTAIN POWER.
2. DISCONNECT AND REMOVE EVERYTHING ASSOCIATED WITH THE GENERATOR TO INCLUDE BUT NOT LIMITED TO GENERATOR, ATS, CONDUITS AND CONDUCTORS, AND CONCRETE PAD. COORDINATE ALL SALVAGE WITH THE OWNER.
3. DISCONENCT AND REMOVE EVERYTHING ASSOCIATED WITH THE ANTENNA, TO INCLUDE BUT NOT LIMITED TO THE ANTENNA, TOWER AND CONDUITS AND CONDUCTORS. COORDINATE ALL SALVAGE WITH THE OWNER.

ELECTRICAL SITE DEMOLITION PLAN

ED100 SCALE: 1" = 20'-0"

State of Utah
Department of Administrative Services
Division of Facilities Construction & Management
4110 State Office Building
Salt Lake City, Utah 84114
Phone: (801) 538 - 3018
Fax: (801) 538 - 3267
Internet: http://www.dfcm.state.ut.us

Utah Valley University
Orem, Utah

CREATED BY: P+A architects
P+A architects
821 East Kensington Ave.
Salt Lake City, Utah 84105
P: 801.484.1161
F: 801.485.4640
e-mail parchitects@comcast.net

architecture planning design

CONSULTANT:
VAN BOERUM & FRANK ASSOCIATES INC.
WWW.VBFA.COM CONSULTING ENGINEERS
Salt Lake City - Logan - St. George - Tempe - Pocatello
330 South 300 East 801.530.3148 T
Salt Lake City, UT 84111 801.530.3150 F
VBFA Project Number:9422
No. 5246941 STAN W. JOHNS 07/29/10 STATE OF UTAH

PROJECT TITLE:
UTAH VALLEY UNIVERSITY NEW PARKING AND FACILITIES DEPARTMENT BUILDING

UTAH VALLEY UNIVERSITY
936 SOUTH 400 WEST
OREM, UTAH

REVISIONS

MARK	DATE	DESCRIPTION

ISSUE TYPE: CONSTRUCTION DOCUMENTS

ISSUE DATE: August 02, 2010

CAD PROJECT NO: 09247790
CAD DWG FILE:
DRAWN BY: E.J./K.M
CHK'D BY: S.S/S.J

COPYRIGHT: P&A architects

KEY PLAN

SHEET TITLE
ELECTRICAL SITE DEMOLITION PLAN

SHEET NUMBER
ED100

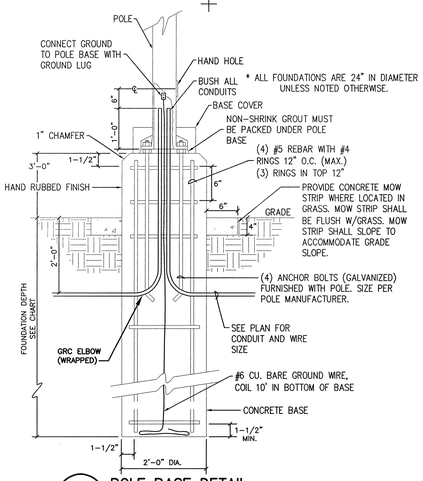

1D / E-100 POLE BASE DETAIL
NO SCALE

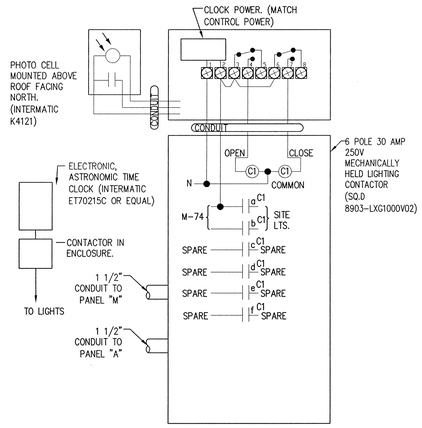

2D / E-100 TIME CLOCK DETAIL
NO SCALE

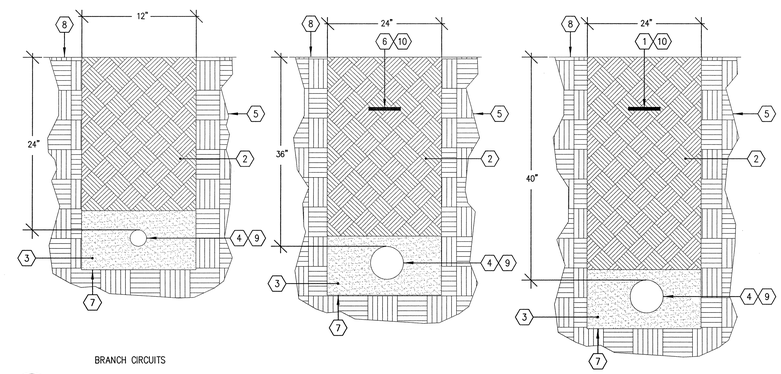

4D / E-100 TRENCH DETAIL
NO SCALE

KEYED NOTES

1. MARKER TAPE WITH THE WORDS, "CAUTION BURIED ELECTRIC CONDUITS BELOW" DIRECTLY OVER POWER CONDUITS 6" MINIMUM BELOW GRADE.
2. CLEAN BACKFILL CONTAINING NO ROCKS LARGER THAN 4" DIA.
3. BACKFILL MATERIAL WITHIN 4" OF THE CONDUIT SHALL PASS THRUOGH A 3/4" SIEVE FRAME AND CONTAIN LESS THAN 30 PERCENT ROCK SOLIDS BY VOLUME.
4. PROVIDE SPECIFIED CONDUIT.
5. UNDISTURBED EARTH.
6. MARKER TAPE WITH THE WORDS, "CAUTION BURIED DATA/COMMUNICATION CONDUIT BELOW" DIRECTLY OVER DATA/COMM CONDUITS.
7. TRENCHES SHALL BE A UNIFORM DEPTH FOR ENTIRE LENGTH OF TRENCH SO CONDUITS CAN SIT FLAT (HORIZONTAL) WITH THE GROUND.
8. FINISHED GRADE.
9. PROVIDE PULL ROPES IN EMPTY CONDUITS.
10. ALL MARKER TAPE SHALL CONTAIN #10 TRACER WIRE.
11. 4"C. FOR COMMUNICATIONS TO KEY SHOP APPROXIMATE LOCATION SHOWN. CONFIRM EXACT LOCATION WITH THE OWNERS IT GROUP AND ARCHITECT PRIOR TO ROUGH IN.
12. 4"C. FOR COMMUNICATIONS APPROXIMATE LOCATION SHOWN. CONFIRM EXACT LOCATION WITH OWNERS IT GROUP AND ARCHITECT PRIOR TO ROUGH IN. PROVIDE GALVANIZED 90 DEGREE CONDUIT SWEEP UP THE POLE.
13. PRIMARY POWER FEED APPROXIMATE LOCATION SHOWN. CONFIRM EXACT LOCATION WITH CHEVRON AND THE OWNER PRIOR TO ROUGH IN.
14. APPROXIMATE LOCATION SHOWN FOR THE CHEVRON PROVIDED TRANSFORMER.
15. CT CABINET FOR FUTURE METERING PROVISIONS REFER TO THE POWER RISER ON SHEET E500 FOR MORE INFORMATION.

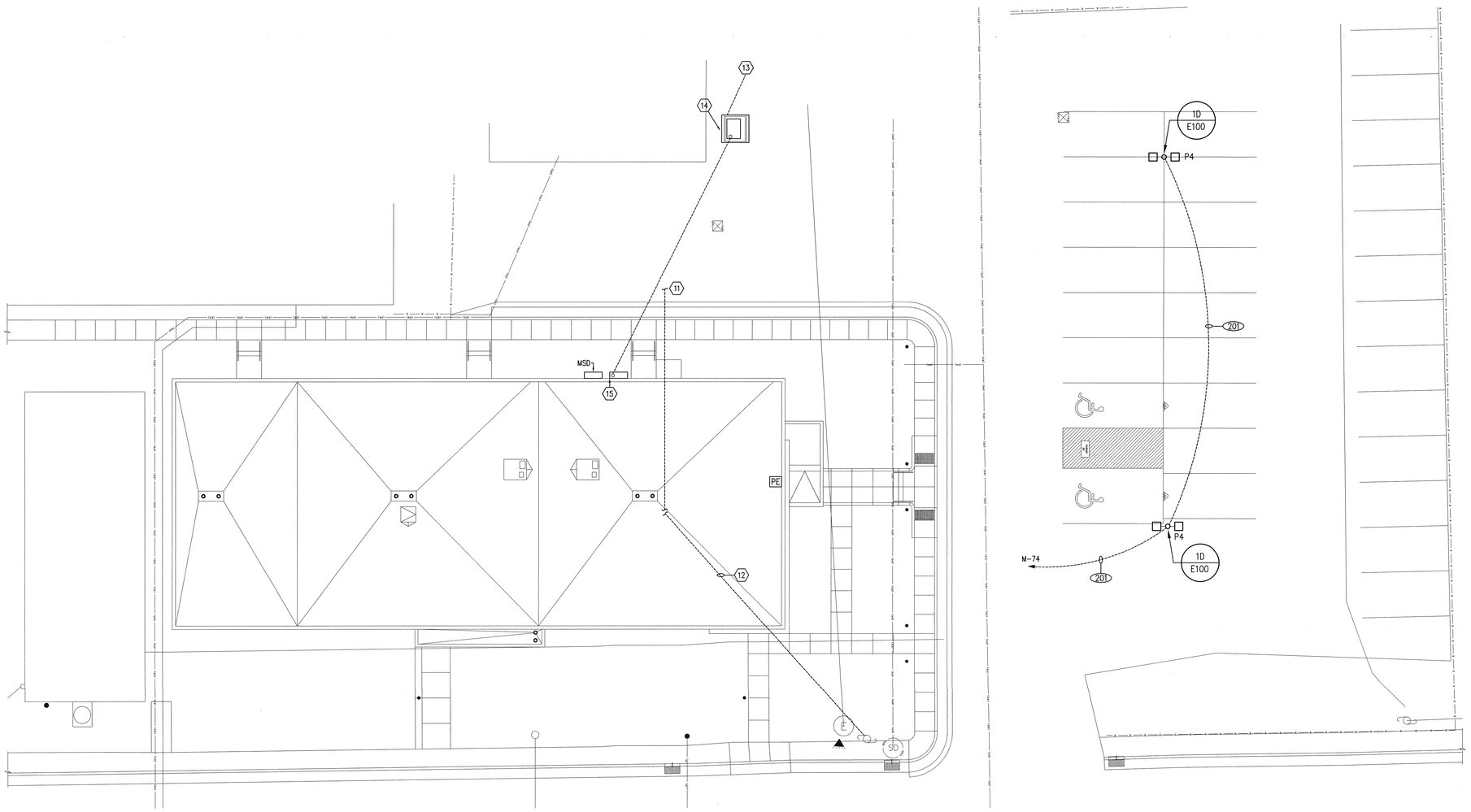

ELECTRICAL SITE PLAN
E-100 SCALE: 1" = 10'-0"

State of Utah
Department of Administrative Services
Division of Facilities Construction & Management
4110 State Office Building
Salt Lake City, Utah 84114
Phone: (801) 538 - 3018
Fax: (801) 538 - 3267
Internet: http://www.dfcm.state.ut.us

Utah Valley University
Orem, Utah

CREATED BY: P+A architects
P+A architects
821 East Kensington Ave.
Salt Lake City, Utah 84105
P: 801.484.1161
F: 801.485.4640
e-mail parchitects@comcast.net

architecture planning design

CONSULTANT:

VAN BOERUM & FRANK ASSOCIATES INC.
WWW.VBFA.COM CONSULTING ENGINEERS
Salt Lake City - Logan - St. George - Tempe - Pocatello
330 South 300 East 801.530.3148 T
Salt Lake City, UT 84111 801.530.3150 F
VBFA Project Number:9422_
No. 5246941 STAN W. JOHNS 07/29/10 STATE OF UTAH

PROJECT TITLE:
UTAH VALLEY UNIVERSITY NEW PARKING AND FACILITIES DEPARTMENT BUILDING

UTAH VALLEY UNIVERSITY
936 SOUTH 400 WEST
OREM, UTAH

REVISIONS

MARK	DATE	DESCRIPTION

ISSUE TYPE: CONSTRUCTION DOCUMENTS

ISSUE DATE: August 02, 2010

CAD PROJECT NO: 09247790
CAD DWG FILE:
DRAWN BY: E.J./K.M
CHK'D BY: S.S/S.J
COPYRIGHT: P&A architects

KEY PLAN

SHEET TITLE
ELECTRICAL SITE PLAN

SHEET NUMBER
E-100

KEYED NOTES

1. ROUTE CONDUIT UNDER SLAB IN APPROXIMATE LOCATION SHOWN FOR LIGHTS IN THE VESTIBULE. COORDINATE EXACT STUB UP LOCATION IN VESTIBULE WALL WITH ARCHITECT PRIOR TO ROUGH IN.
2. REFER TO POWER PLAN SHET E300 FOR PIT RECEPTACLE LOCATION.
3. ALIGN FIXTURES L8 AND L9, FIXTURE TYPE L8 SHALL BE MOUNTED BELOW FIXTURE TYPE L9.

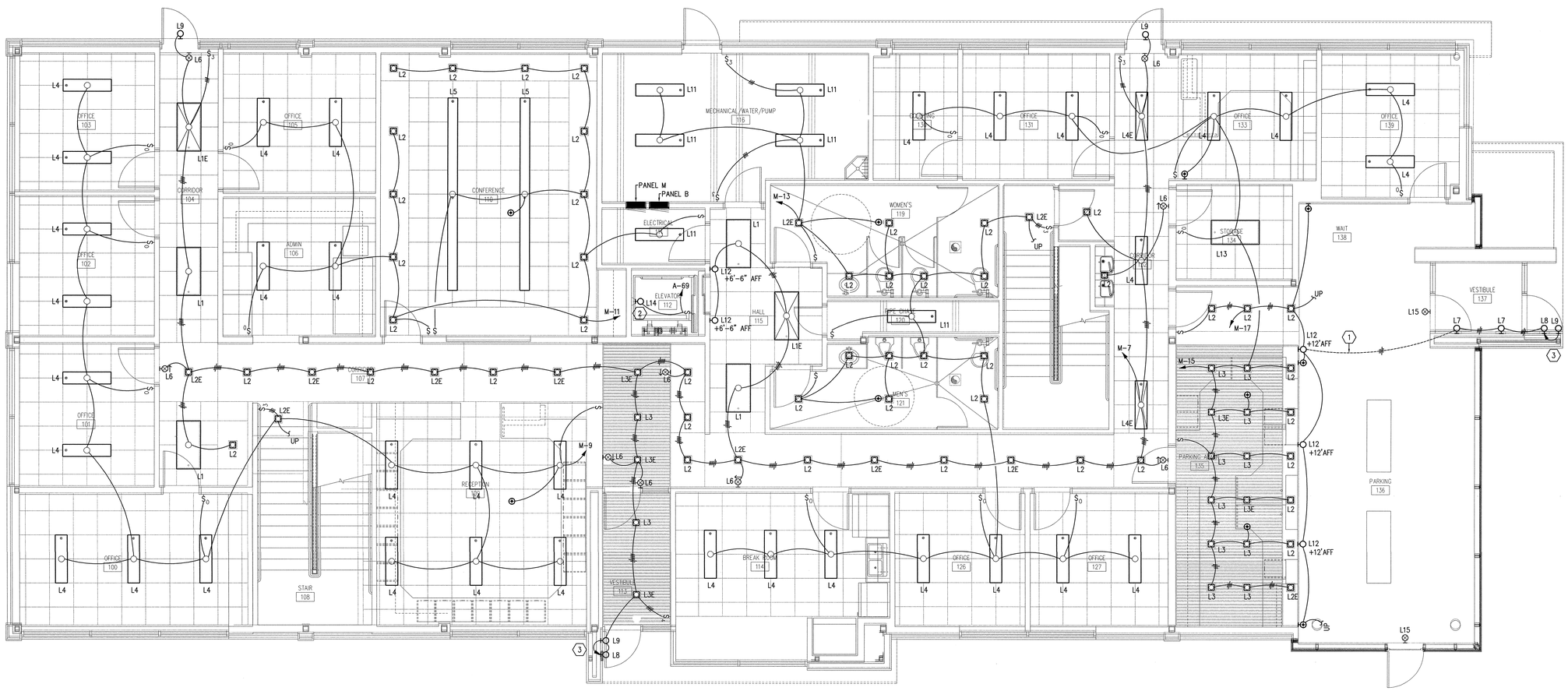

MAIN LEVEL LIGHTING PLAN
E-200 SCALE: 1/4" = 1'-0"

State of Utah
Department of Administrative Services
Division of Facilities Construction & Management
4110 State Office Building
Salt Lake City, Utah 84114
Phone: (801) 538 - 3018
Fax: (801) 538 - 3267
Internet: http://www.dfcm.state.ut.us

Utah Valley University
Orem, Utah

CREATED BY: P+A architects
P+A architects
821 East Kensington Ave.
Salt Lake City, Utah 84105
P: 801.484.1161
F: 801.485.4640
e-mail parchitects@comcast.net

architecture planning design

CONSULTANT:
VAN BOERUM & FRANK ASSOCIATES INC.
WWW.VBFA.COM CONSULTING ENGINEERS
Salt Lake City · Logan · St. George · Tempe · Pocatello
330 South 300 East 801.530.3148 T
Salt Lake City, UT 84111 801.530.3150 F
VBFA Project Number:9422
No. 5246941 STAN W. JOHNS 07/29/10 STATE OF UTAH

PROJECT TITLE:
UTAH VALLEY UNIVERSITY NEW PARKING AND FACILITIES DEPARTMENT BUILDING

UTAH VALLEY UNIVERSITY
936 SOUTH 400 WEST
OREM, UTAH

REVISIONS

MARK	DATE	DESCRIPTION

ISSUE TYPE: CONSTRUCTION DOCUMENTS
ISSUE DATE: August 02, 2010

CAD PROJECT NO: 09247790
CAD DWG FILE:
DRAWN BY: E.J./K.M
CHK'D BY: S.S/S.J
COPYRIGHT: P&A architects

KEY PLAN

SHEET TITLE
MAIN LEVEL LIGHTING PLAN

SHEET NUMBER
E-200

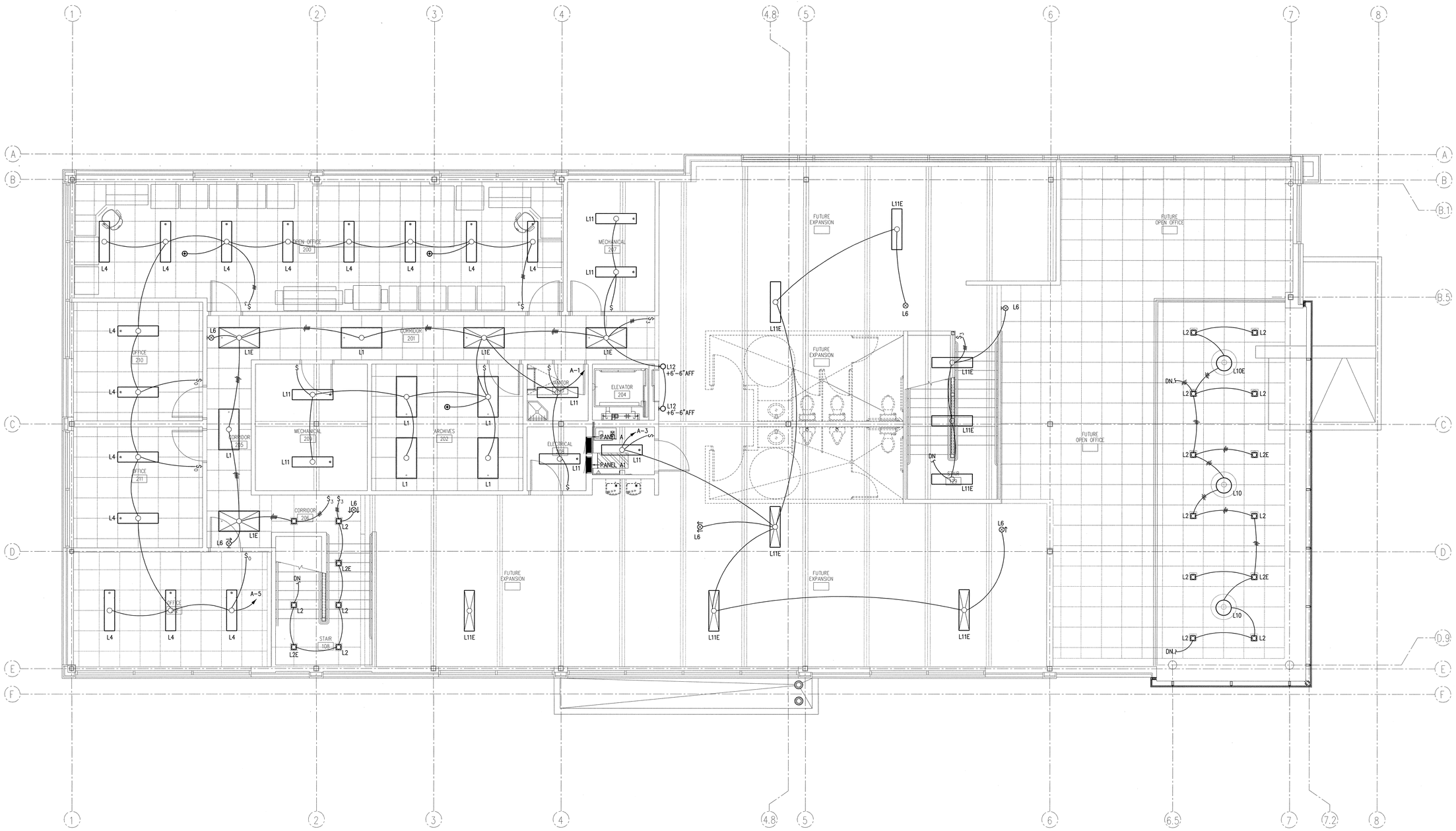

SECOND LEVEL LIGHTING PLAN

E-201 SCALE: 1/4" = 1'-0"

State of Utah

Department of Administrative Services

Division of Facilities Construction & Management
4110 State Office Building
Salt Lake City, Utah 84114
Phone: (801) 538 - 3018
Fax: (801) 538 - 3267
Internet: http://www.dfcm.state.ut.us

Utah Valley University
Orem, Utah

CREATED BY: P+A architects
P+A architects
821 East Kensington Ave.
Salt Lake City, Utah 84105
P: 801.484.1161
F: 801.485.4640
e-mail parchitects@comcast.net

architecture planning design

CONSULTANT:

VAN BOERUM & FRANK ASSOCIATES INC.
WWW.VBFA.COM CONSULTING ENGINEERS
Salt Lake City - Logan - St. George - Tempe - Pocatello
330 South 300 East 801.530.3148 T
Salt Lake City, UT 84111 801.530.3150 F
VBFA Project Number:9422

No. 5246941
STAN W. JOHNS
07/29/10
STATE OF UTAH

PROJECT TITLE:

UTAH VALLEY UNIVERSITY
NEW PARKING AND
FACILITIES DEPARTMENT
BUILDING

UTAH VALLEY UNIVERSITY
936 SOUTH 400 WEST
OREM, UTAH

REVISIONS

MARK	DATE	DESCRIPTION

ISSUE TYPE: CONSTRUCTION DOCUMENTS

ISSUE DATE: August 02, 2010

CAD PROJECT NO: 09247790
CAD DWG FILE:
DRAWN BY: E.J./K.M
CHK'D BY: S.S/S.J

COPYRIGHT: P&A architects

KEY PLAN

SHEET TITLE

SECOND LEVEL
LIGHTING PLAN

SHEET NUMBER

E-201

KEYED NOTES

1. PROVIDE A 4" CONDUIT WITH PULL CORD AND LONG SWEEP 90 DEGREE BENDS FROM THE PHONE/DATA BOARD TO THE STREET ON THE NORTHEAST SIDE OF THE BUILDING. SEE THE SITE PLAN SHEET E100.
2. PROVIDE A 4" CONDUIT WITH PULL CORD AND LONG SWEEP 90 DEGREE BENDS FROM THE PHONE/DATA BOARD TO THE KEY SHOP ON THE WEST SIDE OF THE BUILDING. SEE THE SITE PLAN SHEET E100.
3. ELEVATOR PIT OUTLET, CIRCUIT WITH ELEVATOR PIT LIGHT. REFER TO LIGHTING PLANS FOR MORE INFORMATION.
4. INSTALL RECEPTACLE IN THE SIDE OF THE MILLWORK AS POSSIBLE. COORDINATE WITH MILLWORK SUPPLIER PRIOR TO ROUGH-IN.
5. SERVICE DISCONNECT SWITCH. SEE THE RISER DIAGRAM ON SHEET E500. CONFIRM LOCATION WITH OWNER PRIOR TO ROUGH-IN.
6. SERVICE CT CABINET. SEE RISER DIAGRAM ON SHEET E500. CONFIRM LOCATION WITH OWNER PRIOR TO ROUGH-IN.
7. EC SHALL INSTALL THE CONDUITS UNDER THE FLOOR AS INDICATED AND KEEP THE HOME RUNS AS SHORT AS POSSIBLE. IF THE CONDUITS ARE NOT INSTALLED UNDER THE FLOOR AND DIRECT TO THE PANELS THEN THE ENGINEER SHALL BE NOTIFIED AND THE HOME RUN CONDUCTORS SHALL BE #8.

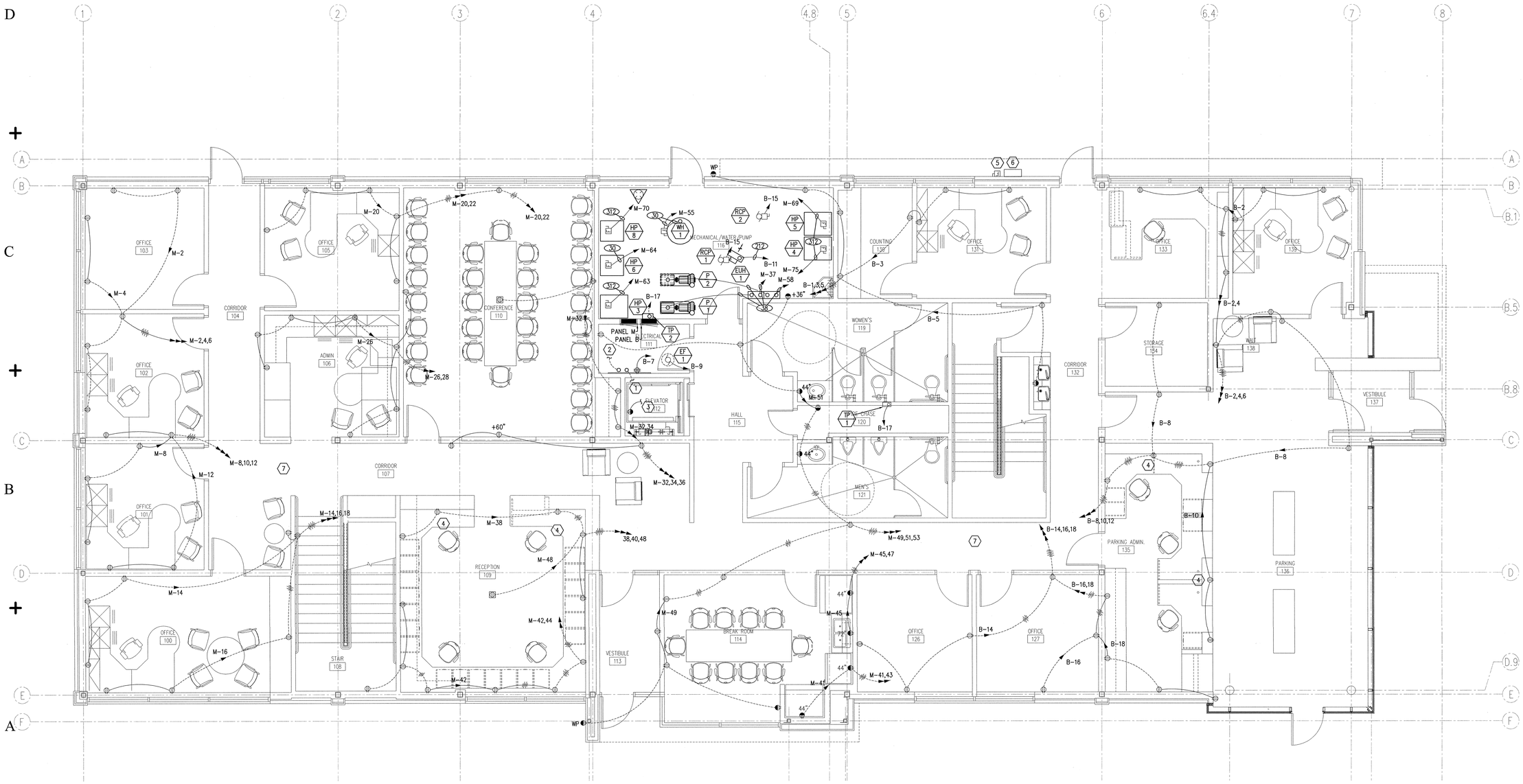

MAIN LEVEL POWER PLAN
E-300
SCALE: 1/4" = 1'-0"

State of Utah
Department of Administrative Services
Division of Facilities Construction & Management
4110 State Office Building
Salt Lake City, Utah 84114
Phone: (801) 538 - 3018
Fax: (801) 538 - 3267
Internet: http://www.dfcm.state.ut.us

Utah Valley University
Orem, Utah

CREATED BY: P+A architects
P+A architects
821 East Kensington Ave.
Salt Lake City, Utah 84105
P: 801.484.1161
F: 801.485.4640
e-mail parchitects@comcast.net

architecture planning design

CONSULTANT:
VAN BOERUM & FRANK ASSOCIATES INC.
WWW.VBFA.COM CONSULTING ENGINEERS
Salt Lake City - Logan - St. George - Tempe - Pocatello
330 South 300 East 801.530.3148 T
Salt Lake City, UT 84111 801.530.3150 F
VBFA Project Number:9422
No. 5246941 STAN W. JOHNS 07/29/10 STATE OF UTAH

PROJECT TITLE:
UTAH VALLEY UNIVERSITY NEW PARKING AND FACILITIES DEPARTMENT BUILDING

UTAH VALLEY UNIVERSITY
936 SOUTH 400 WEST
OREM, UTAH

REVISIONS

MARK	DATE	DESCRIPTION

ISSUE TYPE: CONSTRUCTION DOCUMENTS

ISSUE DATE: August 02, 2010

CAD PROJECT NO: 09247790
CAD DWG FILE:
DRAWN BY: E.J./K.M
CHK'D BY: S.S/S.J
COPYRIGHT: P&A architects

KEY PLAN

SHEET TITLE
MAIN LEVEL POWER PLAN

SHEET NUMBER
E-300

KEYED NOTES

1. PROVIDE WEATHER PROOF RECEPTACLE ON THE ERV. COORDINATE INSTALLATION LOCATION WITH MC PRIOR TO ROUGH-IN.
2. PROVIDE THREE POLE, NEMA1, FUSED, DISCONNECT SWITCH (SQ. D 3130-D321N OR APPROVED EQUAL) FOR THE ELEVATOR POWER FUSED AT 30AMPS. ONE OF THE POLES IS FOR BATTERY LOWERING. CONFIRM REQUIREMENTS WITH THE ELEVATOR SUPPLIER PRIOR TO ROUGH-IN.
3. PROVIDE TWO POLE, NEMA1, FUSED, DISCONNECT SWITCH (SQ. D 3130-D221N OR APPROVED EQUAL) FOR THE ELEVATOR CAR LIGHTING FUSED AT 15AMPS. CONFIRM REQUIREMENTS WITH THE ELEVATOR SUPPLIER PRIOR TO ROUGH-IN.
4. PANEL A. PROVIDE TEN 3/4" CONDUITS FROM PANEL A TO AN ACCESSIBLE LOCATION ABOVE THE PANEL FOR FUTURE USE.
5. PANEL A1. PROVIDE EIGHTEEN 3/4" CONDUITS FROM PANEL A1 TO AN ACCESSIBLE LOCATION ABOVE THE PANEL.
6. EC SHALL INSTALL THE CONDUITS UNDER THE FLOOR AS INDICATED AND KEEP THE HOME RUNS AS SHORT AS POSSIBLE. IF THE CONDUITS ARE NOT INSTALLED UNDER THE FLOOR AND DIRECT TO THE PANELS THEN THE ENGINEER SHALL BE NOTIFIED AND THE HOME RUN CONDUCTORS SHALL BE #8.

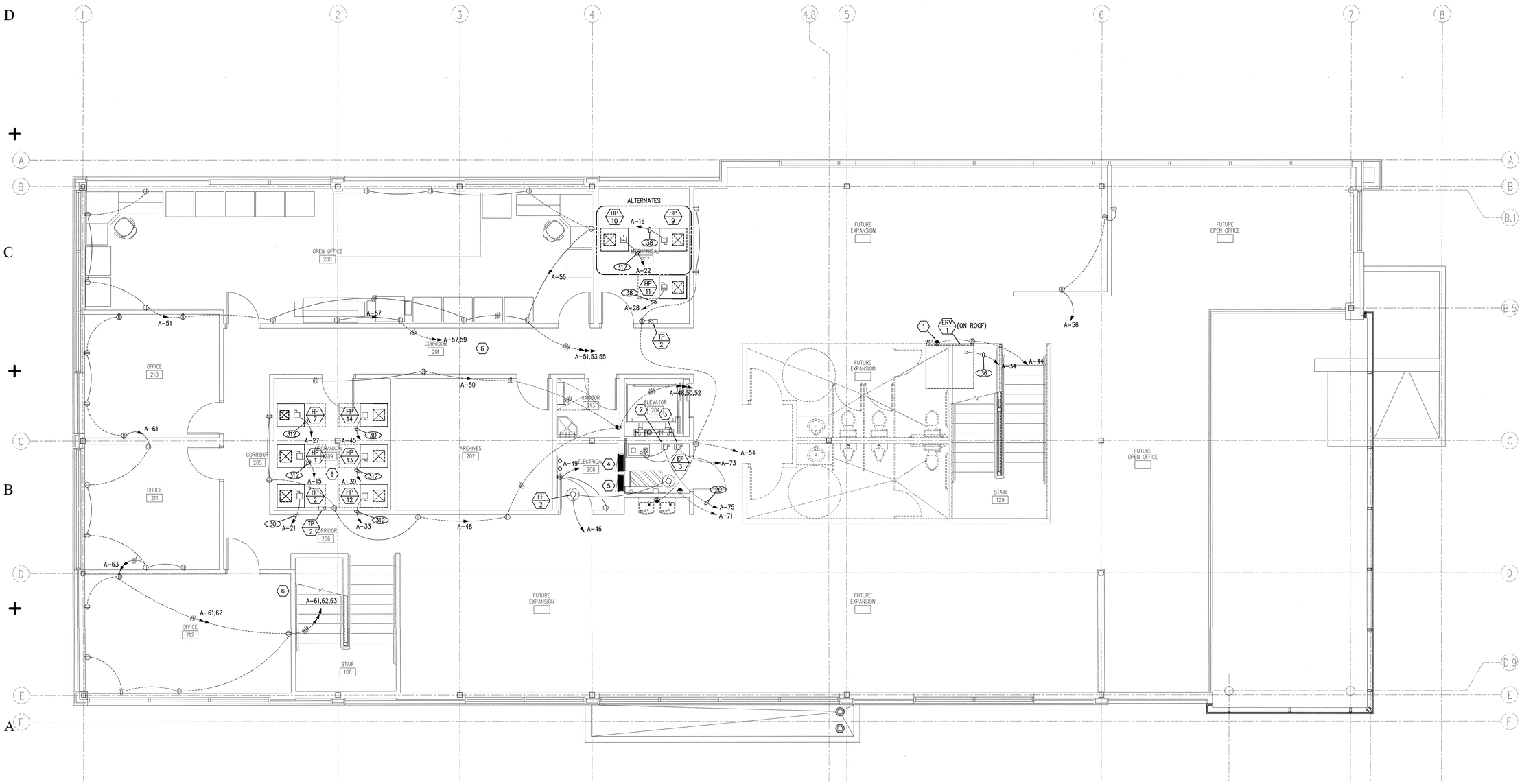

SECOND LEVEL POWER PLAN
E-301 SCALE: 1/4" = 1'-0"

State of Utah
Department of Administrative Services
Division of Facilities Construction & Management
4110 State Office Building
Salt Lake City, Utah 84114
Phone: (801) 538 - 3018
Fax: (801) 538 - 3267
Internet: http://www.dfcm.state.ut.us

Utah Valley University
Orem, Utah

CREATED BY: P+A architects
P+A architects
821 East Konsington Ave.
Salt Lake City, Utah 84105
P: 801.484.1161
F: 801.485.4640
e-mail parchitects@comcast.net

architecture planning design

CONSULTANT:
VAN BOERUM & FRANK ASSOCIATES INC.
WWW.VBFA.COM CONSULTING ENGINEERS
Salt Lake City - Logan - St. George - Tempe - Pocatello
330 South 300 East 801.530.3148 T
Salt Lake City, UT 84111 801.530.3150 F
VBFA Project Number:9422

PROJECT TITLE:
UTAH VALLEY UNIVERSITY NEW PARKING AND FACILITIES DEPARTMENT BUILDING

UTAH VALLEY UNIVERSITY
936 SOUTH 400 WEST
OREM, UTAH

REVISIONS

MARK	DATE	DESCRIPTION

ISSUE TYPE: CONSTRUCTION DOCUMENTS

ISSUE DATE: August 02, 2010

CAD PROJECT NO: 09247790
CAD DWG FILE:
DRAWN BY: E.J./K.M
CHK'D BY: S.S/S.J
COPYRIGHT: P&A architects

KEY PLAN

SHEET TITLE
SECOND LEVEL POWER PLAN

SHEET NUMBER
E-301

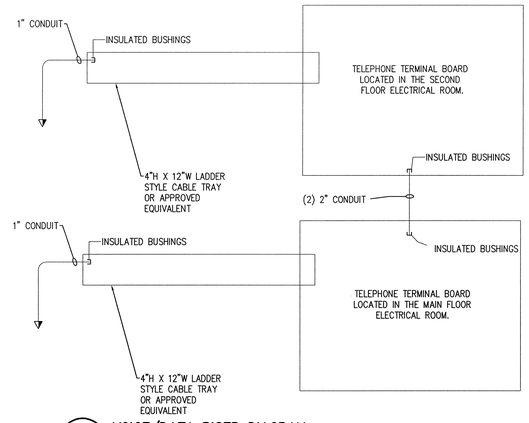

4D / E400 VOICE/DATA RISER DIAGRAM

NO SCALE

KEYED NOTES

1. 12"X4" LADDER STYLE CABLE TRAY. REFER TO SPECIFICATIONS FOR MORE INFORMATION. COORDINATE EXACT LOCATION WITH OWNER & ARCHITECT PRIOR TO ROUGH-IN.
2. ROUTE 1"C. BELOW SLAB INTO WALL INDICATED FOR DATA AND EXTEND INTO CABLE TRAY.
3. 4"C. FOR COMMUNICATIONS TO THE KEY SHOP REFER TO THE SITE PLAN FOR MORE INFORMATION.
4. 4"C. FOR COMMUNICATIONS TO THE STREET. REFER TO SITE PLAN FOR MORE INFORMATION.
5. EXTEND (2) 2"C. INTO THE ELECTRICAL ROOM ON THE SECOND FLOOR.
6. PROVIDE (1) 1-1/2" CONDUIT CONCEILED IN WALL IN APPROXIMATE LOCATION SHOWN FOR AV CONNECTIONS. CONFIRM EXACT LOCATION IN WALLS WITH OWNER AND ARCHITECT PRIOR TO ROUGH IN.
7. APPROXIMATE LOCATION SHOWN. COORDINATE WITH CASEWORK INSTALLER AND CONFIRM EXACT LOCATION WITH ARCHITECT AND OWNER PRIOR TO ROUGH IN.

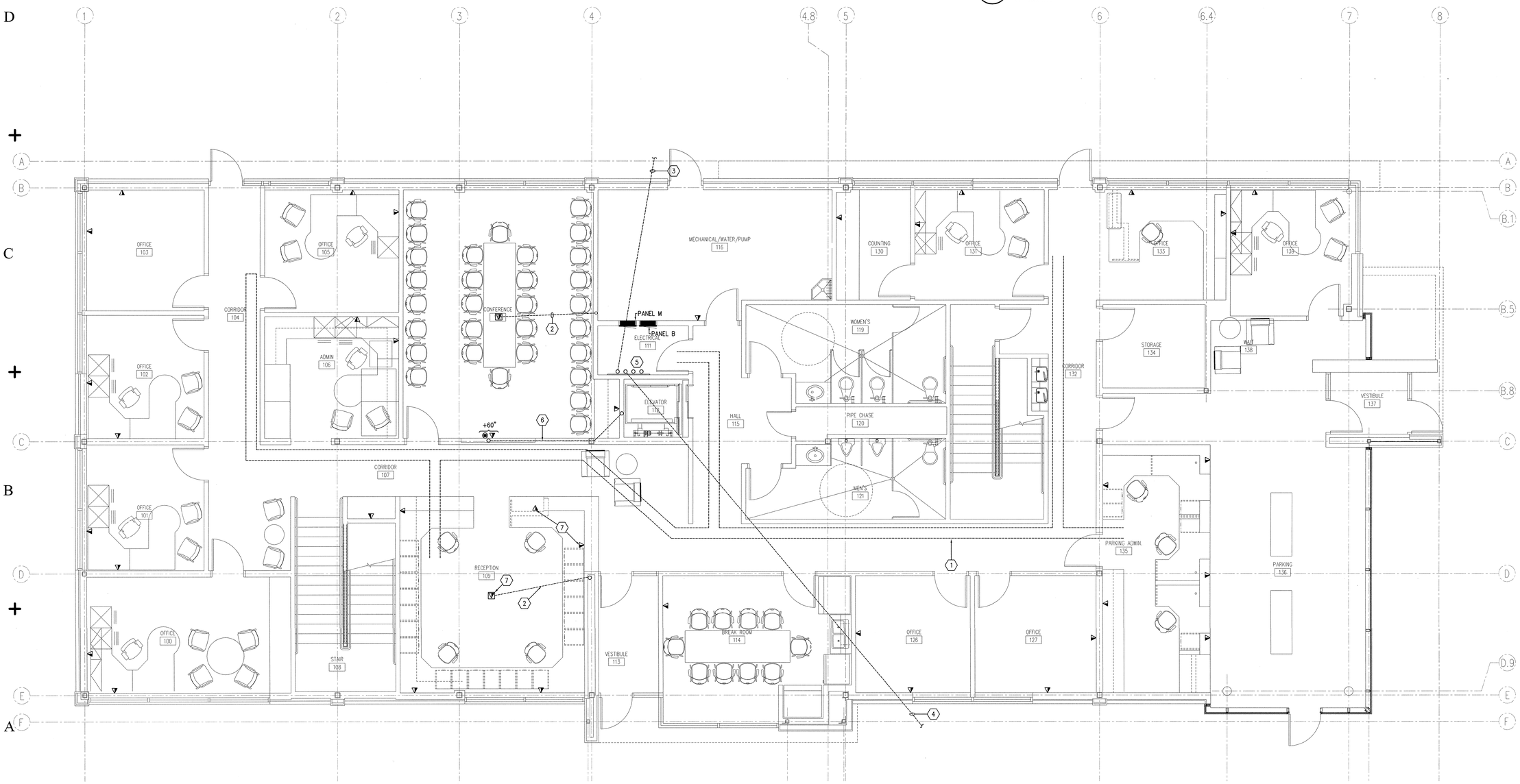

E-400 MAIN LEVEL SYSTEMS PLAN

SCALE: 1/4" = 1'-0"

0' 4' 8'

State of Utah

Department of Administrative Services

Division of Facilities Construction & Management
4110 State Office Building
Salt Lake City, Utah 84114
Phone: (801) 538 - 3018
Fax: (801) 538 - 3267
Internet: http://www.dfcm.state.ut.us

Utah Valley University
Orem, Utah

CREATED BY: P+A architects

P+A architects
821 East Kensington Ave.
Salt Lake City, Utah 84105
P: 801.484.1161
F: 801.485.4640
e-mail parchitects@comcast.net

architecture planning design

CONSULTANT:

VAN BOERUM & FRANK ASSOCIATES INC.
WWW.VBFA.COM CONSULTING ENGINEERS
Salt Lake City · Logan · St. George · Tempe · Pocatello
330 South 300 East 801.530.3148 T
Salt Lake City, UT 84111 801.530.3150 F
VBFA Project Number:9422_

REGISTERED PROFESSIONAL ENGINEER No. 5246941 STAN W. JOHNS 07/29/10 STATE OF UTAH

PROJECT TITLE:

UTAH VALLEY UNIVERSITY NEW PARKING AND FACILITIES DEPARTMENT BUILDING

UTAH VALLEY UNIVERSITY
936 SOUTH 400 WEST
OREM, UTAH

REVISIONS

MARK	DATE	DESCRIPTION

ISSUE TYPE: CONSTRUCTION DOCUMENTS

ISSUE DATE: August 02, 2010

CAD PROJECT NO: 09247790
CAD DWG FILE:
DRAWN BY: E.J./K.M
CHK'D BY: S.S/S.J
COPYRIGHT: P&A architects

KEY PLAN

SHEET TITLE

MAIN LEVEL SYSTEMS PLAN

SHEET NUMBER

E-400

KEYED NOTES

1. 12"X4" LADDER STYLE CABLE TRAY. REFER TO SPECIFICATIONS FOR MORE INFORMATION. COORDINATE EXACT LOCATION WITH OWNER & ARCHITECT PRIOR TO ROUGH-IN.
2. (2)2" CONDUITS FROM MAIN FLOOR TELEPHONE BOARD.

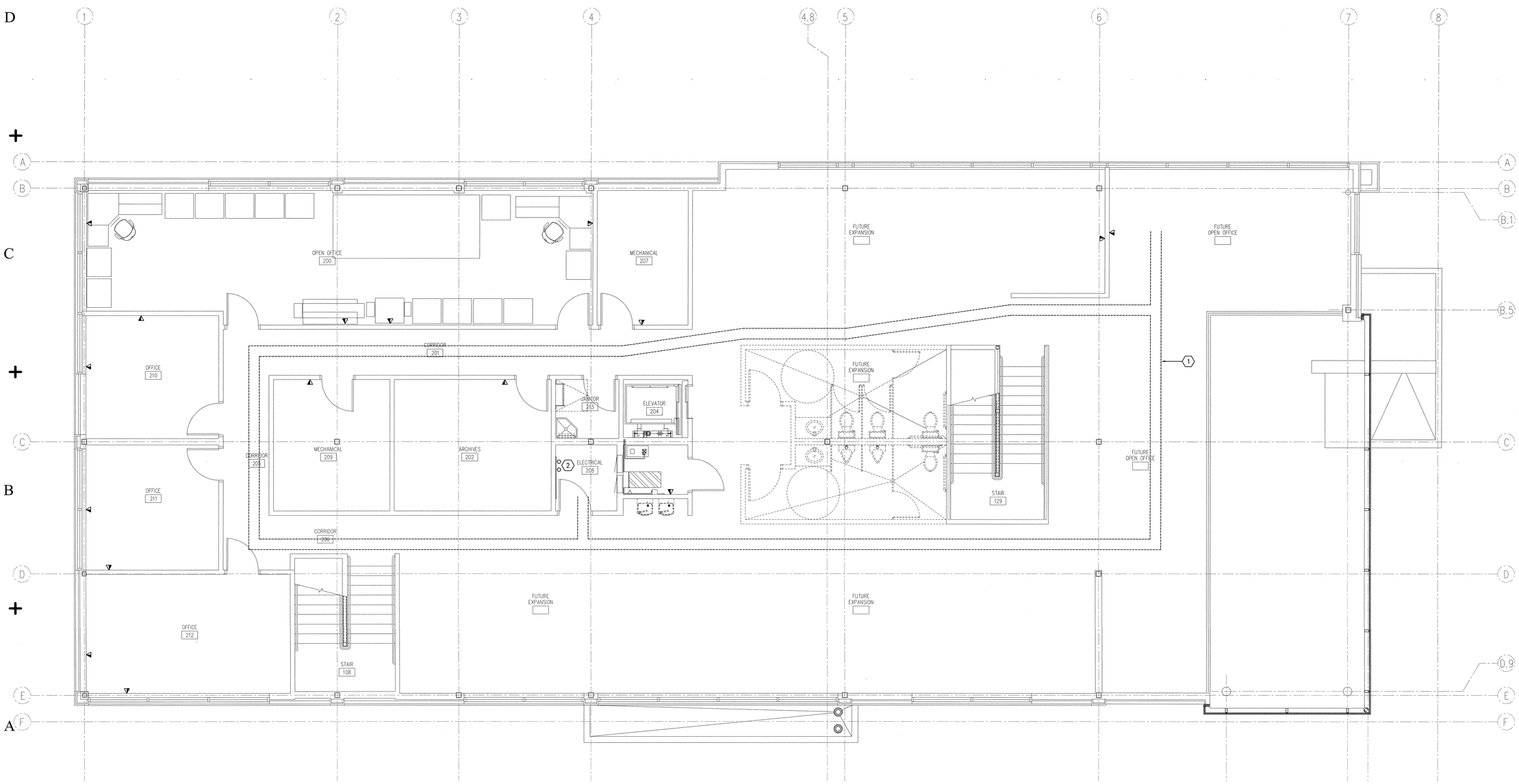

SECOND LEVEL SYSTEMS PLAN
E-401 SCALE: 1/4" = 1'-0"

State of Utah
Department of Administrative Services
Division of Facilities Construction & Management
4110 State Office Building
Salt Lake City, Utah 84114
Phone: (801) 538 - 3018
Fax: (801) 538 - 3267
Internet: http://www.dfcm.state.ut.us

Utah Valley University
Orem, Utah

CREATED BY: P+A architects
P+A architects
821 East Kensington Ave.
Salt Lake City, Utah 84105
P: 801.484.1161
F: 801.485.4640
e-mail parchitects@comcast.net

architecture planning design

CONSULTANT:

VAN BOERUM & FRANK ASSOCIATES INC.
WWW.VBFA.COM CONSULTING ENGINEERS
Salt Lake City · Logan · St. George · Tempe · Pocatello
330 South 300 East 801.530.3148 T
Salt Lake City, UT 84111 801.530.3150 F
VBFA Project Number:9422

REGISTERED PROFESSIONAL ENGINEER No. 5246941 STAN W. JOHNS 07/29/10 STATE OF UTAH

PROJECT TITLE:

UTAH VALLEY UNIVERSITY NEW PARKING AND FACILITIES DEPARTMENT BUILDING

UTAH VALLEY UNIVERSITY
936 SOUTH 400 WEST
OREM, UTAH

REVISIONS

MARK	DATE	DESCRIPTION

ISSUE TYPE: CONSTRUCTION DOCUMENTS

ISSUE DATE: August 02, 2010

CAD PROJECT NO: 09247790
CAD DWG FILE:
DRAWN BY: E.J./K.M
CHK'D BY: S.S/S.J

COPYRIGHT: P&A architects

KEY PLAN

SHEET TITLE

SECOND LEVEL SYSTEMS PLAN

SHEET NUMBER

E-401

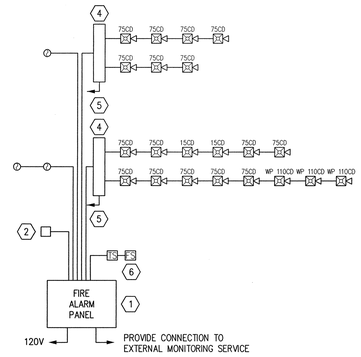

D4 / E-402 FIRE ALARM SYSTEM SCHEMATIC
NO SCALE

KEYED NOTES

1. FIRE ALARM CONTROL PANEL. CONFIRM LOCATION WITH OWNER PRIOR TO INSTALLATION.
2. REMOTE ANNUNCIATOR. CONFIRM LOCATION WITH FIRE MARSHAL AND OWNER PRIOR TO ROUGH-IN.
3. FIRE SPRINKLER HORN. PROVIDE 120V CONNECTION TO HORN THROUGH ACTIVATION SWITCH ON THE FIRE RISER.
4. HORN/STROBE AUXILIARY POWER SUPPLY AS REQUIRED TO DRIVE INDICATING DEVICES. PROVIDE A SMOKE DETECTOR AT EACH POWER SUPPLY LOCATION. CONFIRM AND PROVIDE ALL REQUIREMENTS OF THE FIRE MARSHAL.
5. PROVIDE 120V POWER TO EACH AUXILLIARY POWER SUPPLY.
6. TAMPER/FLOW SWITCHES PROVIDED BY MC. CONFIRM QUANTITY, LOCATION AND REQUIREMENTS WITH MC AND MAKE CONNECTION TO THE FIRE ALARM PANEL.

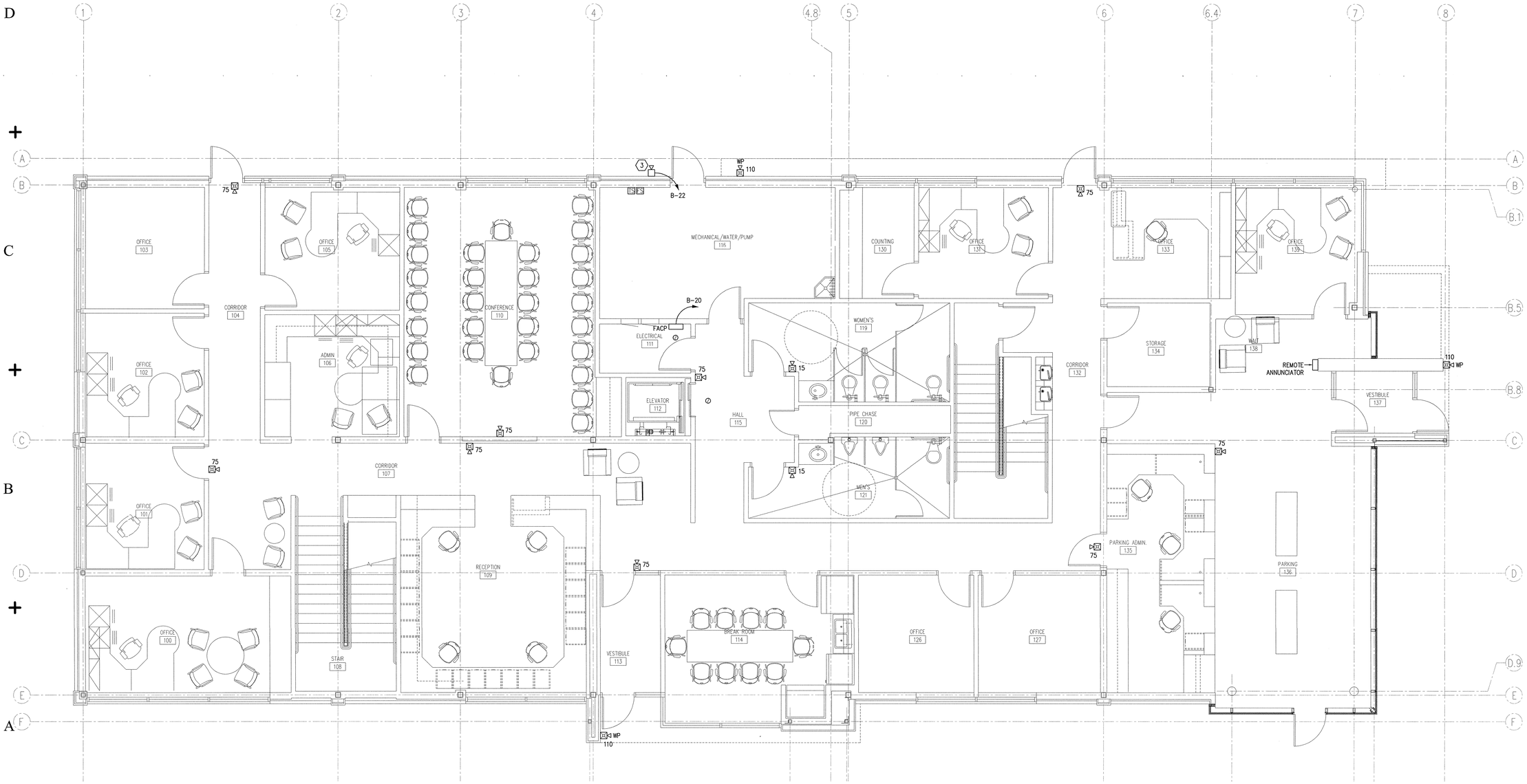

MAIN LEVEL FIRE ALARM PLAN
SCALE: 1/4" = 1'-0"

State of Utah
Department of Administrative Services

Division of Facilities Construction & Management
4110 State Office Building
Salt Lake City, Utah 84114
Phone: (801) 538 - 3018
Fax: (801) 538 - 3267
Internet: http://www.dfcm.state.ut.us

Utah Valley University
Orem, Utah

CREATED BY: P+A architects
P+A architects
821 East Kensington Ave.
Salt Lake City, Utah 84105
P: 801.484.1161
F: 801.485.4640
e-mail parchitects@comcast.net

architecture planning design

CONSULTANT:

VAN BOERUM & FRANK ASSOCIATES INC.
WWW.VBFA.COM CONSULTING ENGINEERS
Salt Lake City · Logan · St. George · Tempe · Pocatello
330 South 300 East 801.530.3148 T
Salt Lake City, UT 84111 801.530.3150 F
VBFA Project Number: 9402

PROJECT TITLE:
UTAH VALLEY UNIVERSITY NEW PARKING AND FACILITIES DEPARTMENT BUILDING

UTAH VALLEY UNIVERSITY
936 SOUTH 400 WEST
OREM, UTAH

REVISIONS

MARK	DATE	DESCRIPTION

ISSUE TYPE: CONSTRUCTION DOCUMENTS
ISSUE DATE: August 02, 2010

CAD PROJECT NO: 09247790
CAD DWG FILE:
DRAWN BY: E.J./K.M
CHK'D BY: S.S/S.J
COPYRIGHT: P&A architects

KEY PLAN

SHEET TITLE
MAIN LEVEL FIRE ALARM PLAN

SHEET NUMBER
E-402

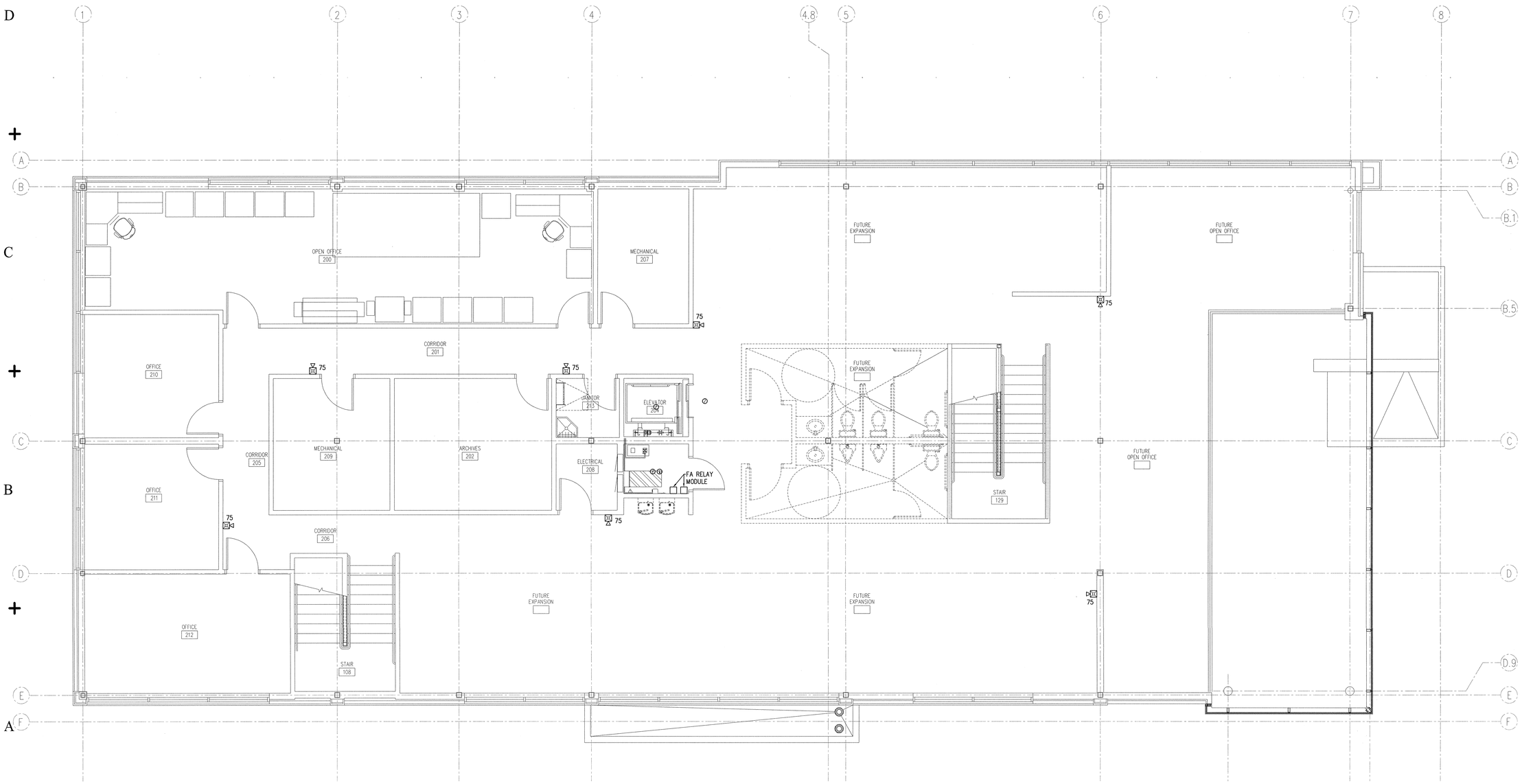

SECOND LEVEL FIRE ALARM PLAN

E-403 SCALE: 1/4" = 1'-0"

0' 4' 8'

State of Utah

Department of Administrative Services

Division of Facilities
Construction & Management
4110 State Office Building
Salt Lake City, Utah 84114
Phone: (801) 538 - 3018
Fax: (801) 538 - 3267
Internet: http://www.dfcm.state.ut.us

Utah Valley University
Orem, Utah

CREATED BY: P+A architects

P+A architects
821 East Konsington Ave.
Salt Lake City, Utah 84105
P: 801.484.1161
F: 801.485.4640
e-mail parchitects@comcast.net

architecture planning design

CONSULTANT:

VAN BOERUM & FRANK ASSOCIATES INC.
WWW.VBFA.COM CONSULTING ENGINEERS
Salt Lake City · Logan · St. George · Tempe · Pocatello
330 South 300 East 801.530.3148 T
Salt Lake City, UT 84111 801.530.3150 F
VBFA Project Number:9422_

No. 5246941
STAN W. JOHNS
07/29/10
STATE OF UTAH

PROJECT TITLE:

UTAH VALLEY UNIVERSITY NEW PARKING AND FACILITIES DEPARTMENT BUILDING

UTAH VALLEY UNIVERSITY
936 SOUTH 400 WEST
OREM, UTAH

REVISIONS

MARK	DATE	DESCRIPTION

ISSUE TYPE: CONSTRUCTION DOCUMENTS

ISSUE DATE: August 02, 2010

CAD PROJECT NO: 09247790
CAD DWG FILE:
DRAWN BY: E.J./K.M
CHK'D BY: S.S/S.J

COPYRIGHT: P&A architects

KEY PLAN

SHEET TITLE

SECOND LEVEL FIRE ALARM PLAN

SHEET NUMBER

E-403

A

PANEL: NQ | VOLTAGE: 208Y/120 | MOUNTING: X FLUSH ___ SURFACE | FEED: ___ TOP X BOTTOM | MAINS: 400 AMP X LUGS ___ BREAKER | DIMS.: 20" W 5.75" D 68" H | SPECIAL EQUIPMENT: X GROUND BUS, X SUB-FEED BRKR, ___ NEMA 3R, ___ SURGE PROTECTOR

TYPE: ELECTRICAL 208 | LOCATION: | AIC 42,000 AMPS

CIR NO.	CIRCUIT DESCRIPTION	OUTLETS CODE	OUTLETS LTS	OUTLETS CO	OUTLETS MIS	BRKR P	BRKR AMP	WIRE SIZE	CIRCUIT LOAD	COMBINED PHASES A	COMBINED PHASES B	COMBINED PHASES C	CIRCUIT LOAD	WIRE SIZE	BRKR AMP	BRKR P	OUTLETS MIS	OUTLETS CO	OUTLETS LTS	OUTLETS CODE	CIRCUIT DESCRIPTION	CIR NO.
1	LEVEL 2 LTS		17		1	20	10		1130	1130			0		-	-	-				-	2
3	LEVEL 2 LTS		7		1	20	10		450		450		0		125	3	1				1,3 PANEL A1	4
5	LEVEL 2 LTS		15		1	20	10		1440			1440	0		-	-	-				-	6
7	SPARE					20			0	0					-	-					SPARE	8
9	SPARE					20			0		0				25	3					SPARE	10
11	SPARE					20			0			0			-	-					SPARE	12
13	-	-			-	-	-		2078	5496			3418		-	-				-	-	14
15	HP-1	1			1	3	25		2078		5496		3418		45	3	1			1	HP-9	16
17	-	-			-	-	-		2078			5496	3418		-	-	-			-	-	18
19	-	-			-	-	-		3038	5113			2075		-	-	-			-	-	20
21	HP-2	1			1	3	35		3038		5113		2075		25	3	1			1	HP-10	22
23	-	-			-	-	-		3038			5113	2075		-	-	-			-	-	24
25	-	-			-	-	-		1871	5289			3418		-	-	-			-	-	26
27	HP-7	1			1	3	20		1871		5289		3418		45	3	1			1	HP-11	28
29	-	-			-	-	-		1871			5289	3418		-	-	-			-	-	30
31	-	-			-	-	-		1477	8977			7500		-	-	-			-	-	32
33	HP-12	1			1	3	20		1477		8977		7500		60	3	1			1	ERV-1	34
35	-	-			-	-	-		1477			8977	7500		-	-	-			-	-	36
37	-	-			-	-	-		1871	1871					-	-					-	38
39	HP-13	1			1	3	20		1871		1871				35	3					SPARE	40
41	-	-			-	-	-		1871			1871			-	-					-	42
43	-	-			-	-	-		3034	3674			640	12	20	1	1	3			ROOF & MECH 207	44
45	HP-14	1			1	3	35		3035		3311		276	12	15	1	2				EF-2&3	46
47	-	-			-	-	-		3035			3855	820	10	20	1	1	4			FUTURE & RM 209	48
49	ELECTRICAL 208				2	1	20	12	1200	1920			720	10	20	1		4			ARCHIVES 202	50
51	OPEN OFFICE 200 S		3		1	1	20	10	1140		1860		720	10	20	1		4			ARCHIVES 202	52
53	OPEN OFFICE 200		4		1	1	20	10	720			1920	1200	12	20	1	2	4			WTR COOLER & COS	54
55	OPEN OFFICE 200 W		3		1	1	20	10	1140	1680			540	12	20	1		3			FUTURE OFFICE	56
57	PLOTTER					1	1	20	10	1200		1200			20	1					SPARE	58
59	COPIER					1	1	20	10	1200			1200		20	1					SPARE	60
61	OFFICE 210		4			1	20	10	720	720					20	1					SPARE	62
63	OFFICE 211		5			1	20	10	900		900				20	1					SPARE	64
65	OFFICE 212		6			1	20	10	1080			1080			20	1					SPARE	66
67	SPARE					1	20		0	0					20	1					SPARE	68
69	ELEVATOR PIT				2	1	20	12	500		500				20	1					SPARE	70
71	ELEVATOR RM		1			1	20	12	180			180			20	1					SPARE	72
73	ELEVATOR CAR PWR				1	1	20	12	1400	1400					20	1					SPARE	74
75	ELEVATOR	1				2	30		1783		1783				20	1					SPARE	76
77	-					-			1783			1783			20	1					SPARE	78
									VA	37270	36750	38204	114	KVA								
									DIV	38488	37217	38204	AV. AMPS									
									AMPS	321	310	318	316	A								

1 = SEE DRAWINGS FOR CONDUIT & CONDUCTOR SIZE; 2 = SHUNT-TRIP BREAKER; 3 = SUBFEED BREAKER; 4 = PROVIDE LOCK OFF DEVICE; 5 = GFCI BREAKER; 6 = GFEP BREAKER

THIS PANEL, ALL OF ITS LUGS, BREAKERS, ETC. SHALL BE RATED FOR 75° C

A1

PANEL: NQ | VOLTAGE: 208Y/120 | MOUNTING: X FLUSH ___ SURFACE | FEED: ___ TOP X BOTTOM | MAINS: 225 AMP X LUGS ___ BREAKER | DIMS.: 20" W 5.75" D 38" H | SPECIAL EQUIPMENT: X GROUND BUS, ___ SUB-FEED BRKR, ___ NEMA 3R, ___ SURGE PROTECTOR

TYPE: ELECTRICAL 208 | LOCATION: | PHASE 3 WIRES 4 | AIC 42,000 AMPS

CIR NO.	CIRCUIT DESCRIPTION	OUTLETS CODE	OUTLETS LTS	OUTLETS CO	OUTLETS MIS	BRKR P	BRKR AMP	WIRE SIZE	CIRCUIT LOAD	COMBINED PHASES A	COMBINED PHASES B	COMBINED PHASES C	CIRCUIT LOAD	WIRE SIZE	BRKR AMP	BRKR P	OUTLETS MIS	OUTLETS CO	OUTLETS LTS	OUTLETS CODE	CIRCUIT DESCRIPTION	CIR NO.
1	SPARE					1	20			0					20	1					SPARE	2
3	SPARE					1	20				0				20	1					SPARE	4
5	SPARE					1	20					0			20	1					SPARE	6
7	SPARE					1	20			0					20	1					SPARE	8
9	SPARE					1	20				0				20	1					SPARE	10
11	SPARE					1	20					0			20	1					SPARE	12
13	SPARE					1	20			0					20	1					SPARE	14
15	SPARE					1	20				0				20	1					SPARE	16
17	SPARE					1	20					0			20	1					SPARE	18
19	SPARE					1	20			0					20	1					SPARE	20
21	SPARE					1	20				0				20	1					SPARE	22
23	SPARE					1	20					0			20	1					SPARE	24
25	SPARE					1	20			0					20	1					SPARE	26
27	SPARE					1	20				0				20	1					SPARE	28
29	SPARE					1	20					0			20	1					SPARE	30
31	SPARE					1	20			0					20	1					SPARE	32
33	SPARE					1	20				0				20	1					SPARE	34
35	SPARE					1	20					0			20	1					SPARE	36
37	SPARE					1	20			0					20	1					SPARE	38
39	SPARE					1	20				0				20	1					SPARE	40
41	SPARE					1	20					0			20	1					SPARE	42
									VA	0	0	0	0	KVA								
									DIV	0	0	0	AV. AMPS									
									AMPS	0	0	0	0	A								

1 = SEE DRAWINGS FOR CONDUIT & CONDUCTOR SIZE; 2 = SHUNT-TRIP BREAKER; 3 = SUBFEED BREAKER; 4 = PROVIDE LOCK OFF DEVICE; 5 = GFCI BREAKER; 6 = GFEP BREAKER

THIS PANEL, ALL OF ITS LUGS, BREAKERS, ETC. SHALL BE RATED FOR 75° C

B

PANEL: NQ | VOLTAGE: 208Y/120 | MOUNTING: X FLUSH ___ SURFACE | FEED: ___ TOP X BOTTOM | MAINS: 225 AMP X LUGS ___ BREAKER | DIMS.: 20" W 5.75" D 38" H | SPECIAL EQUIPMENT: X GROUND BUS, ___ SUB-FEED BRKR, ___ NEMA 3R, ___ SURGE PROTECTOR

TYPE: ELECTRICAL 128 | LOCATION: | PHASE 3 WIRES 4 | AIC 42,000 AMPS

CIR NO.	CIRCUIT DESCRIPTION	OUTLETS CODE	OUTLETS LTS	OUTLETS CO	OUTLETS MIS	BRKR P	BRKR AMP	WIRE SIZE	CIRCUIT LOAD	COMBINED PHASES A	COMBINED PHASES B	COMBINED PHASES C	CIRCUIT LOAD	WIRE SIZE	BRKR AMP	BRKR P	OUTLETS MIS	OUTLETS CO	OUTLETS LTS	OUTLETS CODE	CIRCUIT DESCRIPTION	CIR NO.
1	RM 116,120			4		1	20	12	720	1440			720	12	20	1		4			OFFICE 139	2
3	OFFICE 131			3		1	20	12	540		1260		720	12	20	1		4			OFFICE 133	4
5	CORR. WTR COOLER			2		1	20	10	1000			1900	900	12	20	1		5			RM 133,138,139	6
7	ELECTRICAL 128			2		1	20	12	360	1260			900	12	20	1		5			RM 134,136	8
9	EF-1				1	1	15	12	150		1650		1500	12	20	1	3				PARKING ADMIN	10
11	EUH-1	1			1	2	20		1500			2310	810	12	20	1	1	2			PARKING ADMIN	12
13	-				-				1500	2220			720	12	20	1		4			OFFICE 126	14
15	RCP-1, RCP-2				1	1	20	12	500		1220		720	12	20	1		4			OFFICE 127	16
17	TP-2				1	1	15	12	100			820	720	12	20	1		4			PARKING ADMIN	18
19	SPARE					1	20			500			500	12	20	1				4	FACP	20
21	SPARE					1	20				500		500	12	20	1	1				SPRINKLER BELL	22
23	SPARE					1	20					0			20	1					SPARE	24
25	SPARE					1	20			0					20	1					SPARE	26
27	SPARE					1	20				0				20	1					SPARE	28
29	SPARE					1	20					0			20	1					SPARE	30
31	SPARE					1	20			0					20	1					SPARE	32
33	SPARE					1	20				0				20	1					SPARE	34
35	SPARE					1	20					0			20	1					SPARE	36
37	SPARE					1	20			0					20	1					SPARE	38
39	SPARE					1	20				0				20	1					SPARE	40
41	SPARE					1	20					0			20	1					SPARE	42
									VA	5420	4630	5030	16	KVA								
									DIV	5420	5130	5233	AV. AMPS									
									AMPS	45	43	44	44	A								

1 = SEE DRAWINGS FOR CONDUIT & CONDUCTOR SIZE; 2 = SHUNT-TRIP BREAKER; 3 = SUBFEED BREAKER; 4 = PROVIDE LOCK ON/OFF DEVICE; 5 = GFCI BREAKER; 6 = GFEP BREAKER

THIS PANEL, ALL OF ITS LUGS, BREAKERS, ETC. SHALL BE RATED FOR 75° C

SERVICE LOAD CALCULATIONS

DESCRIPTION	LOAD	DEMAND	NEW LOAD	AMPS
CONTINUOUS	19856	1.25	24820	
NON-CONTINUOUS	128282	1	128282	
RECEPTACLES	10000	1	10000	
RECEPTACLES > 10K	20120	0.5	10060	
LARGEST MOTOR	12249	1.25	15311	
MOTORS	15815	1	15815	
TOTAL SERVICE LOAD			204288 = 567.1	

M

PANEL: NQ | VOLTAGE: 208Y/120 | MOUNTING: X FLUSH ___ SURFACE | FEED: ___ TOP X BOTTOM | MAINS: 400 AMP X LUGS ___ BREAKER | DIMS.: 20" W 5.75" D 68" H | SPECIAL EQUIPMENT: X GROUND BUS, ___ SUB-FEED BRKR, ___ NEMA 3R, ___ SURGE PROTECTOR

TYPE: ELECTRICAL 114 | LOCATION: | PHASE 3 WIRES 4 | AIC 42,000 AMPS

CIR NO.	CIRCUIT DESCRIPTION	OUTLETS CODE	OUTLETS LTS	OUTLETS CO	OUTLETS MIS	BRKR P	BRKR AMP	WIRE SIZE	CIRCUIT LOAD	COMBINED PHASES A	COMBINED PHASES B	COMBINED PHASES C	CIRCUIT LOAD	WIRE SIZE	BRKR AMP	BRKR P	OUTLETS MIS	OUTLETS CO	OUTLETS LTS	OUTLETS CODE	CIRCUIT DESCRIPTION	CIR NO.
1	-					-	-			540			540	10	20	1	1	3			OFFICE 103	2
3	SPARE					3	50				540		540	10	20	1	1	3			OFFICE 103	4
5	-					-	-					540	540	10	20	1	1	3			OFFICE 102	6
7	CORRIDOR		36			1	20	10	1490	2030			540	10	20	1	1	3			OFFICE 101	8
9	OFFICE LTS		22			1	20	10	1484		2024		540	10	20	1	1	3			OFFICE 102	10
11	CONF RM		28			1	20	10	1488			2028	540	10	20	1	1	3			OFFICE 101	12
13	OFFICE LTS		30			1	20	10	1580	2120			540	10	20	1	1	3			OFFICE 100	14
15	ADMIN OFFICE LTS		26			1	20	12	1220		1580		360	10	20	1	1	2			OFFICE 100	16
17	ENTRANCE LTS		25			1	20	12	1048			1768	720	10	20	1	1	4			RM 100,104,108	18
19	SPARE					1	20			540			540	10	20	1	1	3			OFFICE 105	20
21	SPARE					1	20				540		540	10	20	1	1	3			OFFICE 105	22
23	SPARE					1	20					0	0		20	1					SPARE	24
25	SPARE					1	20			720			720	10	20	1	1	4			OFFICE 106	26
27	SPARE					1	20				540		540	10	20	1	1	3			OFFICE 106	28
29	SPARE					1	20					0			20	1					SPARE	30
31	SPARE					1	20			540			540	12	20	1	1	3			CONFERENCE 110	32
33	SPARE					1	20				540		540	12	20	1	1	3			CONFERENCE 110	34
35	-	-			-	-	-		4083			4803	720	12	20	1	1	4			CONFERENCE 110	36
37	P-1	1			1	3	50		4083	4623			540	10	20	1	1	3			RECEPTION 109	38
39	-	-			-	-	-		4083		4623		540	10	20	1	1	3			RECEPTION 109	40
41	VENDING				1	1	20	12	1100			1640	540	10	20	1	1	3			ADMIN 108	42
43	REFRIGERATOR				1	1	20	12	1100	1640			540	10	20	1	1	3			RECEPTION 109	44
45	MICROWAVE				1	1	20	12	1650		1650				20	1					SPARE	46
47	VENDING				1	1	20	12	1100			1460	360	10	20	1	2				RECEPTION 109	48
49	RM 113, 114			4		1	20	12	720	6140			5420		-	-				-	-	50
51	RM 111,116,119			4		1	20	12	720		5350		4630		100	3	1			1	PANEL B	52
53	RM 114,120,121,125			5		1	20	12	900			5930	5030		-	-	-			-	-	54
55	WH-1	1			1	2	25		2250	6333			4083		-	-	-			-	-	56
57	-	-			-	-	-		2250		6333		4083		50	3	1			1	P-2	58
59	SPARE					1	20		0			4083	4083		-	-	-			-	-	60
61	-	-			-	-	-		2078	3951			1873		-	-	-			-	-	62
63	HP-3	1			1	3	25		2078		3951		1873		20	3	1			1	HP-6	64
65	-	-			-	-	-		2078			3951	1873		-	-	-			-	-	66
67	-	-			-	-	-		3038	3879			841		-	-	-			-	-	68
69	HP-5	1			1	3	35		3038		3879		841		15	3	1			1	HP-8	70
71	-	-			-	-	-		3038			3879	841		-	-	-	-		-	-	72
73	-	-			-	-	-		2078	3078			1000		20	2		4		1	SITE LIGHTING	74
75	HP-4	1			1	3	25		2078		3078		1000		-	-		-		-	-	76
77	-	-			-	-	-		2078			2078			20	1					SPARE	78
									VA	36134	34628	32160	107	KVA								
									DIV	37529	35931	33171	AV. AMPS									
									AMPS	313	299	276	296	A								

1 = SEE DRAWINGS FOR CONDUIT & CONDUCTOR SIZE; 2 = SHUNT-TRIP BREAKER; 3 = SUBFEED BREAKER; 4 = PROVIDE LOCK OFF DEVICE; 5 = GFCI BREAKER; 6 = GFEP BREAKER

THIS PANEL, ALL OF ITS LUGS, BREAKERS, ETC. SHALL BE RATED FOR 75° C

MSD

PANEL: I-LINE | VOLTAGE: 208Y/120 | MOUNTING: X FLUSH ___ SURFACE | FEED: ___ TOP X BOTTOM | MAINS: 800 AMP X LUGS ___ BREAKER | DIMS.: 20" W 5.75" D 35" H | SPECIAL EQUIPMENT: X GROUND BUS, ___ SUB-FEED BRKR, X NEMA 3R, ___ SURGE PROTECTOR

TYPE: OUTSIDE | LOCATION: | PHASE 3 WIRES 4 | AIC 42,000 AMPS

CIR NO.	CIRCUIT DESCRIPTION	OUTLETS CODE	OUTLETS LTS	OUTLETS CO	OUTLETS MIS	BRKR P	BRKR AMP	WIRE SIZE	CIRCUIT LOAD	COMBINED PHASES A	COMBINED PHASES B	COMBINED PHASES C	CIRCUIT LOAD	WIRE SIZE	BRKR AMP	BRKR P	OUTLETS MIS	OUTLETS CO	OUTLETS LTS	OUTLETS CODE	CIRCUIT DESCRIPTION	CIR NO.
1	-					-	-		36134	73404			37270		-	-					-	2
3	PANEL M					3	400		34628		71378		36750		400	3					PANEL A	4
5	-					-	-		32160			70364	38204		-	-					-	6
7	-					-				0						-					-	8
9	SPACE					3					0					3					SPACE	10
11	-					-						0				-					-	12
									VA	73404	71378	70364	215	KVA								
									DIV	73404	71378	70364	AV. AMPS									
									AMPS	612	595	586	597	A								

1 = SEE DRAWINGS FOR CONDUIT & CONDUCTOR SIZE; 2 = SHUNT-TRIP BREAKER; 3 = SUBFEED BREAKER; 4 = PROVIDE LOCK OFF DEVICE; 5 = GFCI BREAKER; 6 = GFEP BREAKER

THIS PANEL, ALL OF ITS LUGS, BREAKERS, ETC. SHALL BE RATED FOR 75° C

KEYED NOTES

1. EC SHALL PROVIDE 20' OF #4 BARE COPPER ENCASED BY AT LEAST 2 INCHES OF CONCRETE FOUNDATION OR FOOTING THAT IS IN DIRECT CONTACT WITH THE EARTH PER NEC 250.52(A)(3).
2. PROVIDE A 800A CT CABINET AND WIRE IT HOWEVER, THERE WILL BE NO CT OR METER INSTALLED AT THIS TIME.
3. OWNER PROVIDED TRANSFORMER. CONFIRM EXACT LOCATION OF TRANSFORMER WITH OWNER PRIOR TO ROUGH-IN.
4. DO NOT PROVIDE AN EQUIPMENT GROUNDING CONDUCTOR IN THESE CONDUITS.
5. PROVIDE A NEMA-3R, MAIN SERVICE DISTRIBUTION PANEL "MSD" SQUARE-D I-LINE TYPE HCM 1448 OR APPROVED EQUIVALENT. PROVIDE PROVISIONS TO PREVENT MORE THAN 6 BREAKERS FROM BEING INSTALLED. CONFIRM EXACT LOCATION OF DISCONNECT WITH OWNER PRIOR TO ROUGH-IN.

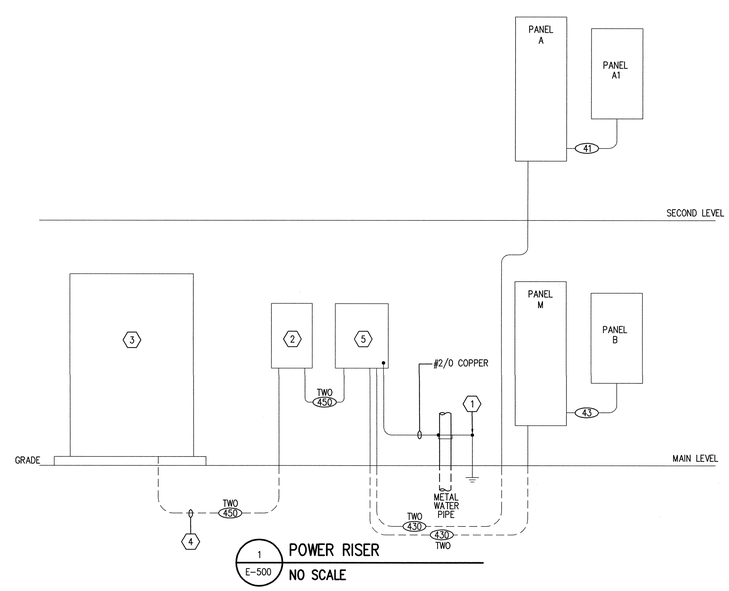

1 / E-500 POWER RISER
NO SCALE

State of Utah
Department of Administrative Services
Division of Facilities Construction & Management
4110 State Office Building
Salt Lake City, Utah 84114
Phone: (801) 538 - 3018
Fax: (801) 538 - 3267
Internet: http://www.dfcm.state.ut.us

Utah Valley University
Orem, Utah

CREATED BY: P+A architects
P+A architects
821 East Kensington Ave.
Salt Lake City, Utah 84105
P: 801.484.1161
F: 801.485.4640
e-mail parchitects@comcast.net

architecture planning design

CONSULTANT:
VAN BOERUM & FRANK ASSOCIATES INC.
WWW.VBFA.COM CONSULTING ENGINEERS
Salt Lake City - Logan - St. George - Tempe - Pocatello
330 South 300 East 801.530.3148 T
Salt Lake City, UT 84111 801.530.3150 F
VBFA Project Number:9422
LICENSED PROFESSIONAL ENGINEER No. 5246941 STAN W. JOHNS 07/29/10 STATE OF UTAH

PROJECT TITLE:
UTAH VALLEY UNIVERSITY
NEW PARKING AND
FACILITIES DEPARTMENT
BUILDING

UTAH VALLEY UNIVERSITY
936 SOUTH 400 WEST
OREM, UTAH

REVISIONS

MARK	DATE	DESCRIPTION

ISSUE TYPE: CONSTRUCTION DOCUMENTS

ISSUE DATE: August 02, 2010

CAD PROJECT NO: 09247790
CAD DWG FILE:
DRAWN BY: E.J./K.M
CHK'D BY: S.S/S.J
COPYRIGHT: P&A architects

KEY PLAN

SHEET TITLE

ELECTRICAL RISER & PANEL SCHEDULES

SHEET NUMBER

E-500

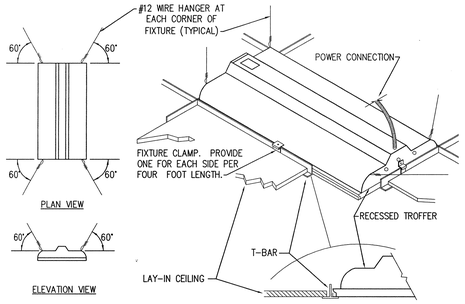

1D / E-600 TYPICAL RECESSED FIXTURE MOUNTING
NO SCALE

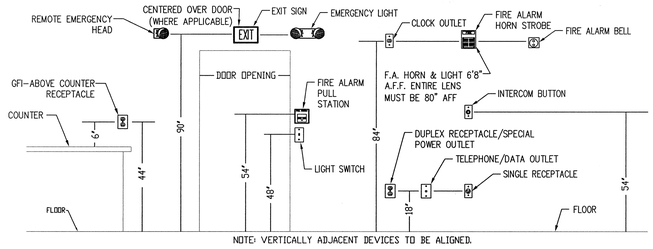

3D / E-600 MOUNTING HEIGHT DETAIL
NO SCALE

State of Utah
Department of Administrative Services
Division of Facilities Construction & Management
4110 State Office Building
Salt Lake City, Utah 84114
Phone: (801) 538 - 3018
Fax: (801) 538 - 3267
Internet: http://www.dfcm.state.ut.us

Utah Valley University
Orem, Utah

CREATED BY: P+A architects
P+A architects
821 East Kensington Ave.
Salt Lake City, Utah 84105
P: 801.484.1161
F: 801.485.4640
e-mail parchitects@comcast.net

architecture planning design

CONSULTANT:

VAN BOERUM & FRANK ASSOCIATES INC.
WWW.VBFA.COM CONSULTING ENGINEERS
Salt Lake City - Logan - St. George - Tempe - Pocatello
330 South 300 East 801.530.3148 T
Salt Lake City, UT 84111 801.530.3150 F
VBFA Project Number:9422_

REGISTERED PROFESSIONAL ENGINEER No. 5246941 STAN W. JOHNS 07/29/10 STATE OF UTAH

PROJECT TITLE:

UTAH VALLEY UNIVERSITY NEW PARKING AND FACILITIES DEPARTMENT BUILDING

UTAH VALLEY UNIVERSITY
936 SOUTH 400 WEST
OREM, UTAH

REVISIONS

MARK	DATE	DESCRIPTION

ISSUE TYPE: CONSTRUCTION DOCUMENTS

ISSUE DATE: August 02, 2010

CAD PROJECT NO: 09247790
CAD DWG FILE:
DRAWN BY: E.J./K.M
CHK'D BY: S.S/S.J

COPYRIGHT: P&A architects

KEY PLAN

SHEET TITLE

ELECTRICAL DETAILS

SHEET NUMBER

E-600