State of Utah–Department of Administrative Services

DIVISION OF FACILITIES CONSTRUCTION AND MANAGEMENT

4110 State Office Building/Salt Lake City, Utah 84114/538–3018

Utah State Mail Center Office Renovation

250 North 1950 West
Salt Lake City, Utah

DFCM Project # 09258310

Construction Documents

NJRA Architects, Inc.
370 East 500 South, Suite 101
Salt Lake City, Utah 84111

Phone: 801. 364. 9259
Fax: 801. 521. 0420
www.njraarchitects.com

STATE OF UTAH
SELVAM RAJAVELU
267857
LICENSED ARCHITECT

Division of Facilities Construction & Management
Utah State Mail Center
Office Renovation

DFCM Project #: 09258310
250 North 1950 West
Salt Lake City, Utah

ISSUE
March 10, 2010 - Const. Documents 100%

NJRA Project #: 10901.00

Cover Sheet

G-001

ABBREVIATIONS

A/C	AIR CONDITIONING
ACOUS	ACOUSTICAL
AD	AREA DRAIN
AFF	ABOVE FINISH FLOOR
AVE	AVENUE
B/M	BENCH MARK
BC	BOTTOM OF CURB
BLDG	BUILDING
BLKG	BLOCKING
BOT	BOTTOM
BRG	BEARING
BS	BOTH SIDES
BSMT	BASEMENT
C&G	CURB AND GUTTER
CG	CORNER GUARD
CJ	CONTROL OR CONSTRUCTION JOINT
CMU	CONCRETE MASONRY UNIT
CO	CLEAN OUT
CONC	CONCRETE
CONT	CONTINUOUS
DEMO	DEMOLITION
DF	DRINKING FOUNTAIN
DIAG	DIAGONAL
DIAM	DIAMETER
DIFF	DIFFUSER
DIM	DIMENSION
DS	DOWNSPOUT
E	EAST
EA	EACH
EJ	EXPANSION JOINT
ELEC	ELECTRIC(AL)
ENCL	ENCLOSURE
EP	EDGE OF PAVEMENT
EQ	EQUAL
EQPT	EQUIPMENT
ES	EACH SIDE
EWC	ELECTRICAL WATER COOLER
EXT	EXTERIOR
FA	FIRE ALARM
FCO	FLOOR CLEAN OUT
FD	FLOOR DRAIN
FE	FIRE EXTINGUISHER
FEC	FIRE EXTINGUISHER CABINET
FF	FINISH FLOOR
FG	FINISH GRADE
FH	FIRE HYDRANT
FHC	FIRE HOSE CABINET
FL	FLOOR
FOC	FACE OF CONCRETE
FOF	FACE OF FINISH
FOM	FACE OF MASONRY
FOS	FACE OF STUD
FPRF	FIREPROOFING
FS	FLOOR SINK
FSP	FIRE SPRINKLER
FWC	FABRIC WALL COVERING
GA	GAUGE
GALV	GALVANIZED
GB	GRAB BAR
GC	GENERAL CONTRACTOR
GFRC	GLASS FIBER REINFORCED CONCRETE
GLU LAM	GLUE LAMINATED BEAM
GYP	GYPSUM
HB	HOSE BIB
HDCP	HANDICAP (PED)
HM	HOLLOW METAL
HORIZ	HORIZONTAL
HP	HIGH POINT OR HORSEPOWER
HT	HEIGHT
HVAC	HEATING, VENTILATING, AIR CONDITIONING
ID	INSIDE DIMENSION/ DIAMETER
IE	INVERT ELEVATION
IN	INCH
INT	INTERIOR
JT	JOINT
KBD	ARTICULATED KEYBOARD TRAY
KO	KNOCKOUT
KOP	KNOCK OUT PANEL
LAB	LABORATORY
LAM	LAMINATED
LAV	LAVATORY
LB	POUND
LH	LEFT HAND
LIN	LINEAR
LLH	LONG LEG HORIZONTAL
LLV	LONG LEG VERTICAL
LONG	LONGITUDINAL
LP	LOW POINT
MAX	MAXIMUM
MC	MEDICINE CABINET
MDL	MEDIUM DENSITY LAMINATE
MECH	MECHANICAL
MEZZ	MEZZANINE
MH	MANHOLE
MM	MILLIMETER
MIN	MINIMUM
MIR	MIRROR
MISC	MISCELLANEOUS
MLDG	MOLDING
MO	MASONRY OPENING
MON	MONUMENT
MTL	METAL
N	NORTH
NC	NURSE CALL
NEG	NEGATIVE
NIC	NOT IN CONTRACT
NOM	NOMINAL
NTS	NOT TO SCALE
O/O	OUT TO OUT
O/	OVER
OA	OVERALL
OC	ON CENTER
OD	OUTSIDE DIMENSION/ DIAMETER
OFCI	OWNER FURNISHED CONTRACTOR INSTALLED
OFOI	OWNER FURNISHED OWNER INSTALLED
ORD	OVERFLOW ROOF DRAIN
ORIG.	ORIGINAL
OZ	OUNCE
PL	PLATE
PL	PROPERTY LINE
PLAM	PLASTIC LAMINATE
POS	POSITIVE
PR	PAIR
PREFAB	PREFABRICATED
PREFIN	PREFINISHED
PTD	PAPER TOWEL DISPENSER
PTR	PAPER TOWEL RECEPTACLE
PTS	PNEUMATIC TUBE STATION
RAD	RADIUS
RD	ROOF DRAIN
REF	REFERENCE
REINF	REINFORCE (MENT)
REQD	REQUIRED
REV	REVISION
RFG	ROOFING
RH	RIGHT HAND
RM	ROOM
RO	ROUGH OPENING
ROW	RIGHT OF WAY
RV	ROOF VENT
S	SOUTH/SINK
SCHED	SCHEDULE
SD	STORM DRAIN OR SOAP DISPENSER/DISH
SIM	SIMILAR
SM	SHEET METAL
SMS	SHEET METAL SCREW
SPEC	SPECIFICATIONS
SQ YD	SQUARE YARD
SQ FT	SQUARE FOOT
SQ IN	SQUARE INCH
SS	STAINLESS STEEL
ST	STREET
STD	STANDARD
STOR	STORAGE
STRUC	STRUCTURAL
SUSP	SUSPENDED
SYM	SYMMETRICAL
T&B	TOP AND BOTTOM
T&G	TONGUE AND GROOVE
TC	TOP OF CURB
TOC	TOP OF CONCRETE/CURB
TOF	TOP OF FOOTING
TOJ	TOP OF JOIST
TOL	TOLERANCE
TOPO	TOPOGRAPHIC
TOS	TOP OF STEEL/SLAB
TOW	TOP OF WALL
TP	TOP OF PAVEMENT
TRANS	TRANSFORMER
TRTD	TREATED
TS	TUBE STEEL
TV	TELEVISION
TYP	TYPICAL
U/S	UNDER SIDE
U/C	UNDER CABINET
UL	UNDERWRITERS LABORATORIES
UNFIN	UNFINISHED
UNO	UNLESS NOTED OTHERWISE
VCT	VINYL COMPOSITION TILE
VEST	VESTIBULE
VWC	VINYL WALL COVERING
W/O	WITHOUT
W/	WITH
W	WEST/WASTE/WATER
WB	WALLBOARD
WD	WOOD
WG	WIRE GLASS
WT	WEIGHT
WWF	WELDED WIRE FABRIC
YB	YARD BOX
YD	YARD DRAIN
@	AT
ℙ	PLATE OR PROPERTY LINE
℄	CENTERLINE
&	AND
∠	ANGLE
ϕ	DIAMETER

GENERAL NOTES

1. MECHANICAL AND ELECTRICAL DRAWINGS ARE SUPPLEMENTAL TO THE ARCHITECTURAL DRAWINGS. IT SHALL BE THE RESPONSIBILITY OF THE GENERAL CONTRACTOR TO CHECK WITH THE ARCHITECTURAL DRAWINGS BEFORE THE INSTALLATION OF MECHANICAL OR ELECTRICAL CONSTRUCTION. ANY DISCREPANCIES BETWEEN THE ARCHITECTURAL AND CONSULTING ENGINEERS' DRAWINGS SHALL BE BROUGHT TO THE ARCHITECT'S ATTENTION FOR CLARIFICATION. ANY CONSTRUCTION INSTALLED IN CONFLICT WITH THE ARCHITECTURAL DRAWINGS SHALL BE CORRECTED BY THE GENERAL CONTRACTOR AT HIS OWN EXPENSE AND AT NO EXPENSE TO THE OWNER OR ARCHITECT.

2. ALL WORK SHALL COMPLY WITH THE CURRENT ADA ACCESSIBILITY GUIDELINES (AMERICANS WITH DISABILITIES ACT).

3. CODES GOVERNING THIS WORK INCLUDE, BUT ARE NOT LIMITED TO THE FOLLOWING: 2009 INTERNATIONAL BUILDING CODE, APPLICABLE OSHA REGULATIONS. REQUIREMENTS OF CODES AND REGULATIONS SHALL BE CONSIDERED AS MINIMUM. WHERE THE CONTRACT DOCUMENTS EXCEED (WITHOUT VIOLATING) CODE AND REGULATION REQUIREMENTS, CONTRACT DOCUMENTS SHALL TAKE PRECEDENCE. WHERE CODES CONFLICT, THE MORE STRINGENT SHALL APPLY.

4. THE CONTRACTOR SHALL PROVIDE ADEQUATE BARRICADES AND PROTECTIVE DEVICES SEPARATING CONSTRUCTION AREAS. TEMPORARY PASSAGES SHALL BE PROVIDED AS REQUIRED. THE CORRIDORS AND OTHER AREAS SHALL BE SEPARATED FROM THE CONSTRUCTION ZONE BY A NON-COMBUSTIBLE BARRIER FASTENED SECURELY TOP AND BOTTOM AND AT EACH END. PRIOR TO DELIVERY OF MATERIALS TO CONSTRUCTION ZONE AND REMOVAL OF WASTE FROM SITE THE CONTRACTOR SHALL CHECK WITH THE OWNER FOR AN ACCEPTABLE ROUTE AND TIME. ALL DOORS IN THE TEMPORARY PASSAGES SHALL HAVE A 44" CLEAR WIDTH AND BE FUNCTIONAL AT ALL TIMES TO SERVE AS THE REQUIRED EXIT FROM THE RATED CORRIDOR.

5. THE CONTRACTOR SHALL BE RESPONSIBLE FOR THE PROPER LOCATION AND SIZE OF OPENINGS FOR ALL TRADES AND SHALL COORDINATE ALL CONSTRUCTION AS INDICATED BY THE CONTRACT DOCUMENTS, INCLUDING SHOP DRAWINGS REVIEWED BY THE ARCHITECT.

6. CONTRACTOR SHALL VERIFY ALL EXISTING CONDITIONS AND NOTIFY THE ARCHITECT OF ANY DISCREPANCIES PRIOR TO COMMENCEMENT OF WORK.

7. CONTRACTOR SHALL COORDINATE WITH THE OWNER ALL MEASURES TO ACCOMPLISH THE WORK WITH THE MINIMUM OF INTERRUPTION TO NORMAL BUILDING PROCEDURES. SYSTEM SHUTDOWNS OF HVAC, PLUMBING, ELECTRICAL, AND NOISY CONSTRUCTION INCLUDING ROTO HAMMER, SAW CUTTING, CONCRETE ANCHORS, ETC. SHALL BE COORDINATED WITH THE OWNER AT LEAST 72 HOURS PRIOR TO COMMENCEMENT.

8. ALL DIMENSIONS ARE SHOWN TO FACE OF FINISH OF NEW CONSTRUCTION AND FACE OF FINISH OF EXISTING CONSTRUCTION, UNLESS NOTED OTHERWISE.

9. ALL DRAWINGS, THOUGH NOTED TO SCALE ARE FOR ILLUSTRATION ONLY. THE CONTRACTOR SHALL NOT SCALE DRAWINGS.

10. WHEN A DETAIL IS IDENTIFIED AS TYPICAL, THE CONTRACTOR IS TO APPLY THIS DETAIL IN ESTIMATING AND CONSTRUCTION TO EVERY LIKE CONDITION WHETHER OR NOT THE REFERENCE IS REPEATED IN EVERY INSTANCE.

11. ALL PENETRATIONS INTO SOUND OR FIRE RATED PARTITIONS, FLOORS OR CEILING ASSEMBLIES SHALL BE SEALED WITH APPROVED PERMANENT RESILIENT SEALANT. REFER TO IBC 2009 FOR REQUIREMENTS FOR OPENINGS IN FIRE RATED WALLS. FOR OPENINGS LESS THAN 16 SQUARE INCHES, THE SPACE BETWEEN THE WALL AND ALLOWED PENETRATIONS MUST BE SEALED TO PREVENT THE MOVEMENT OF HOT FLAME OR GASES. ELECTRICAL DEVICES, RECESSED CABINETS, ETC. SHALL BE SEALED, LINED, INSULATED OR OTHERWISE TREATED TO MAINTAIN THE INTEGRITY OF THE ASSEMBLY. SEE PENETRATION DETAILS.

12. DRAWINGS HAVE BEEN DETAILED IN COMPLIANCE WITH U.L. LISTING REQUIREMENTS AND ICBO REPORTS FOR THE MATERIALS SPECIFIED. IF AN ALTERNATE OR SUBSTITUTED MATERIAL IS ACCEPTED AS AN EQUAL BY THE GENERAL CONTRACTOR, HE WILL ASSUME THE RESPONSIBILITY FOR WHATEVER CONSTRUCTION MODIFICATION AND/OR ADDITIONAL COSTS ARE REQUIRED

13. ALL TRASH SHALL BE REMOVED DAILY. BUILDING MATERIALS MAY NOT BE STORED IN THE CORRIDORS AT ANY TIME. BLOCKAGE OF ANY REQUIRED EXIT IS PROHIBITED.

14. THE CONTRACTOR SHALL VERIFY SIZES AND LOCATIONS OF WATER AND DRAIN INSTALLATIONS AND OTHER REQUIRED SERVICES WITH EQUIPMENT MANUFACTURERS.

15. ABBREVIATIONS THROUGHOUT THE PLAN ARE THOSE IN COMMON USE. THE ARCHITECT SHALL DEFINE THE INTENT OF ANY IN QUESTION.

16. INTERIOR FINISHES SHALL CONFORM TO THE REQUIREMENTS OF CHAPTER 8 OF 2009 I.B.C.

17. CONTRACTOR SHALL REFER TO THE PROJECT MANUAL FOR A COMPLETE LIST OF GENERAL CONDITIONS, SPECIAL CONDITIONS AND OTHER NOTES.

18. INSTALL METAL CORNER BEADS AT ALL EXPOSED WALLBOARD EDGES. INSTALL CASING BEADS WHEREVER WALLBOARD, PLASTER, ETC ABUTS A DISSIMILAR FINISH MATERIAL. ALL DOOR SIZES SHOWN ON DOOR SYMBOLS ARE OPENING SIZES. ALLOWANCE FOR THRESHOLDS, ETC. SHOULD BE CONSIDERED. ALL DOORS AND FRAMES SHALL BE REINFORCED WHERE REQUIRED FOR CLOSERS, STOPS AND HARDWARE.

19. ALL WOOD TRIMS, SPACER, FILLER, ETC. THROUGHOUT JOB SHALL BE FIRE RETARDANT PRESSURE-TREATED, AS PER 2009 I.B.C. CONTRACTOR SHALL LOCATE BACKING PLATES BEHIND ALL WALL MOUNTED EQUIPMENT, CASEWORK, WALL MOUNTED DOOR STOPS AND ACCESSORIES TO ENSURE POSITIVE ATTACHMENT TO THE STRUCTURE. SEE RELEVANT DETAILS.

20. ELEVATIONS ARE WITH RESPECT TO FINISH FLOOR ELEVATION. VERIFY FINISH FLOOR HEIGHT.

GENERAL SYMBOL LEGEND

- RIGID INSULATION
- WOOD FRAMING - CONTINUOUS
- WOOD FRAMING - NON-CONTINUOUS
- GYPSUM BOARD
- STEEL (SECTION OR STUD PARTITION)
- GRAVEL
- CONCRETE (SECTION)
- STUCCO OR CONCRETE (ELEVATION)
- PLYWOOD
- FINISH WOOD
- BRICK
- CONCRETE MASONRY UNIT
- EARTH
- ALUMINUM
- BATT INSULATION
- ACOUSTICAL CEILING TILE
- ASPHALT PAVING
- STONE
- A — GRID LINE
- 1 — KEYED NOTE
- A1 / A-410 — DETAIL REFERENCE
- A1 / A-303 — BUILDING / WALL SECTION
- DIRECTION NORTH
- AA — WINDOW TAG
- 102 / B — DOOR TAG
- OFFICE / 100 — ROOM NAME AND NUMBER
- 1 — WALL TYPES
- E3/A-212 — INTERIOR ELEVATION
- 234 — EQUIPMENT TAG
- OL 15 — OCCUPANT LOAD
- TD 150 — TRAVEL DISTANCE

DRAWING INDEX

GENERAL DRAWINGS

G-001 TITLE SHEET
G-002 GENERAL INFORMATION SHEET
G-003 CODE COMPLIANCE PLAN
G-005 ADA ROUTE
G-004 CONSTRUCTION PROTECTION PLAN
G-006 SPECIAL INSPECTIONS

STRUCTURAL DRAWINGS
S101 GENERAL STRUCTURAL NOTES
S102 GENERAL STRUCTURAL NOTES
S201 FOUNDATION PLAN
S202 FRAMING PLAN
S501 STRUCTURAL DETAILS
S502 STRUCTURAL DETAILS

ARCHITECTURAL DRAWINGS

A-100 OVERALL FLOOR PLAN
A-102 LEVEL 1 DEMOLITION PLAN
A-103 LEVEL 1 DEMOLITION PLAN
A-104 FLOOR PLANS
A-105 ENLARGED FLOOR PLANS
A-106 ENLARGED FLOOR PLANS
A-107 REFLECTED CEILING PLANS
A-108 FINISH FLOOR PLANS
A-109 CANOPY ROOF PLAN
A-201 EXTERIOR ELEVATIONS
A-202 INTERIOR ELEVATIONS
A-301 BUILDING SECTIONS
A-501 DETAILS
A-502 DETAILS
A-503 DETAILS
A-504 DETAILS
A-505 DETAILS
A-801 DOOR & WINDOW TYPES

MECHANICAL DRAWINGS
ME001 MECHANICAL COVERSHEET
ME002 MECHANICAL SPECIFICATIONS
ME501 MECHANICAL DETAILS
ME601 MECHANICAL SCHEDULES
MD101 MECHANICAL DEMOLITION FLOOR PLANS
MH101 MECHANICAL FLOOR PLANS
MH301 MECHANICAL SECTION

ELECTRICAL DRAWINGS
EE001 SYMBOL SCHEDULE, SHEET INDEX
ED101 DEMOLITION PLAN
EP101 POWER PLAN
EP501 DETAILS
EP502 DETAILS
EL101 LIGHTING PLAN, LIGHTING FIXTURE SCHEDULE

PLUMBING DRAWINGS
PE001 PLUMBING COVER SHEET
PL101 PLUMBING FLOOR PLANS

DEFERRED SUBMITTALS

SUBMITTALS SHALL BE SUBMITTED TO THE BUILDING OFFICIAL FOR REVIEW WITH AN ACCOMPANIED LETTER FROM THE ARCHITECT STATING THAT THE DRAWINGS ARE IN CONFORMANCE WITH HIS DESIGN. SUBMITTALS FOR FIRE ALARMS AND SUPPRESSION SHALL BE SUBMITTED TO THE STATE FIRE MARSHAL FOR THEIR APPROVAL. NO WORK SHALL COMMENCE UNITL THE BUILDING OFFICIAL HAS APPROVED THE SUBMITTALS. ALL SUBMITTALS SHALL BE SUBMITTED TWO WEEKS PRIOR TO INSTALLATION.

COLD FORMED STEEL
CONCRETE SLAB
FOOTING & FOUNDATION
FRAMING
GYPSUM BOARD
REINFORCING STEEL
STRUCTURAL STEEL
WELDING
SIESMIC BRACING FOR SUSPENDED CIELINGS
SIGNAGE
SIESMIC BRACING CALCULATIONS FOR DUCTWORK
FIRE ALARM AND SUPPRESSION SYSTEM
MECHANICAL EQUIPMENT
LIGHTING FIXTURES
FRAMES AND DOORS
DOOR HARDWARE

NONSTRUCTURAL COMPONENT CHECKLIST

ITEM DESCRIPTION	*NOT REQUIRED*	*ON CONST. DOCUMENTS*	*DEFERRED SUBMITTAL*	*COMMENTS*
Architectural Components:				
Interior Nonstructural Walls & Partitions		X		SEE A-504
Cantilever Elements *(i.e. parapets, etc.)*	X			
Exterior Nonstructural Wall Elements	X			
Veneer	X			
Penthouses	X			
Ceilings *(i.e. suspended grid or hard-lid)*			X	SEISMIC BRACING
Cabinets *(i.e. storage cabinets, equip, etc.)*	X			
Access Floors	X			
Storage Racks	X			
Appendages & Ornamentations	X			
Signs & Billboards			X	SIGNAGE SUBMITTAL
Other:				
Other:				
MEP Components:				
Fire Sprinklers	X			
Mechanical Equipment *(i.e. HVAC, fans, air handlers, boilers, furnaces, tanks, chillers, water heaters, heat exchangers, evaporators, engines, turbines, pumps, compressors, MFR equipment, etc.)*			X	MECHANICAL SUBMITTAL
Electrical Equipment *(i.e. generators, batteries, inverters, transformers, MCC, panel boards, switch gear, cabinets, etc.)*	X			
Elevator & Escalator Components	X			
Communication Equipment, Computers, Instrumentation, and Controls	X			
Roof-mounted Chimneys, Stacks, Cooling & Electrical Towers	X			
Lighting Fixtures			X	ELECTRICAL SUBMITTAL
Vibration Isolated Components	X			
Piping & Conduit Systems			X	MECHANICAL SUBMITTAL
Ductwork *(including in-line components)*			X	MECHANICAL SUBMITTAL
Conveyors	X			
Cable Trays	X			
Other:				
Other:				

NOTES:

1. Deferred submittals for seismic restraint of nonstructural components must be submitted to the DFCM Building Official a minimum of two weeks prior to the planned installation in order to allow for plan review and forwarding to inspectors. In the event that the submittal is deficient additional time may become necessary.
2. If seismic restraints of non-structural components are installed prior to receiving DFCM approval they shall not be covered or concealed until receiving both plan review and inspection approval. Further, installers are proceeding at their own risk until plan review and inspection approval occurs.
3. The requirements for seismic restraint of nonstructural components cannot be satisfied by a general reference to Design Manuals. The design professional may utilize these manuals as a basis of their design, but must provide all supporting documentation to ensure that the design conforms to the requirements of ASCE 7-05, Chapter 13.
4. Submittals must include details of the proposed seismic restraint of nonstructural components. These details must show specific information relating to the materials, type, size, and locations of anchorages; materials used for bracing; attachment requirements of bracing to structure and component; and locations of transverse and longitudinal sway bracing and rod stiffeners. Submittals may also require structural calculations, engineering reports, test data, and/or specifications to ensure code compliance.

PROJECT DIRECTORY

ARCHITECT

NJRA ARCHITECTS, INC.
370 EAST 500 SOUTH, SUITE # 101
SALT LAKE CITY, UTAH 84111
TELEPHONE: (801) 364-9259 FAX: (801) 521-0420

CONTACT:
PROJECT ARCHITECT: SELVAM RAJAVELU, AIA
E-MAIL: selraj@njraarchitects.com

PROJECT MANAGER: HANA WRIGHT
E-MAIL: hwright@njraarchitects.com

STRUCTURAL ENGINEER

DUNN ASSOCIATES, INC.
380 WEST 800 SOUTH, SUITE 100
SALT LAKE CITY, UTAH 84101
TELEPHONE: (801) 575-8877 FAX: (801) 575-8875

CONTACT: RUSSELL MERRILL, P.E.
E-MAIL: rmerrill@dunn-se.com

MECHANICAL ENGINEER

SPECTRUM ENGINEERS
175 SOUTH MAIN ST., SUITE 300
SALT LAKE CITY, UTAH 84111
TELEPHONE: (801) 328-5151 FAX: (801) 328-5155

CONTACT: ROBERT PAUL, PE., LEED AP
E-MAIL: rob@spectrum-engineers.com

ELECTRICAL ENGINEER

SPECTRUM ENGINEERS
175 SOUTH MAIN ST., SUITE 300
SALT LAKE CITY, UTAH 84111
TELEPHONE: (801) 328-5151 FAX: (801) 328-5155

CONTACT: PETER JOHANSEN, PE
E-MAIL: pej@spectrum-engineers.com

LOCATION MAP

REMODEL LOCATION

NJRA ARCHITECTS

NJRA Architects, Inc.
370 East 500 South, Suite 101
Salt Lake City, Utah 84111

Phone: 801. 364. 9259
Fax: 801. 521. 0420
www.njraarchitects.com

STATE OF UTAH
SELVAM RAJAVELU
267857
LICENSED ARCHITECT

Division of Facilities Construction & Management
Utah State Mail Center
Office Renovation

DFCM Project #:09238310
250 North 1950 West
Salt Lake City, Utah

ISSUE
March 10, 2010 - Const. Documents 100%

NJRA Project #: 10901.00

General Information Sheet

G-002

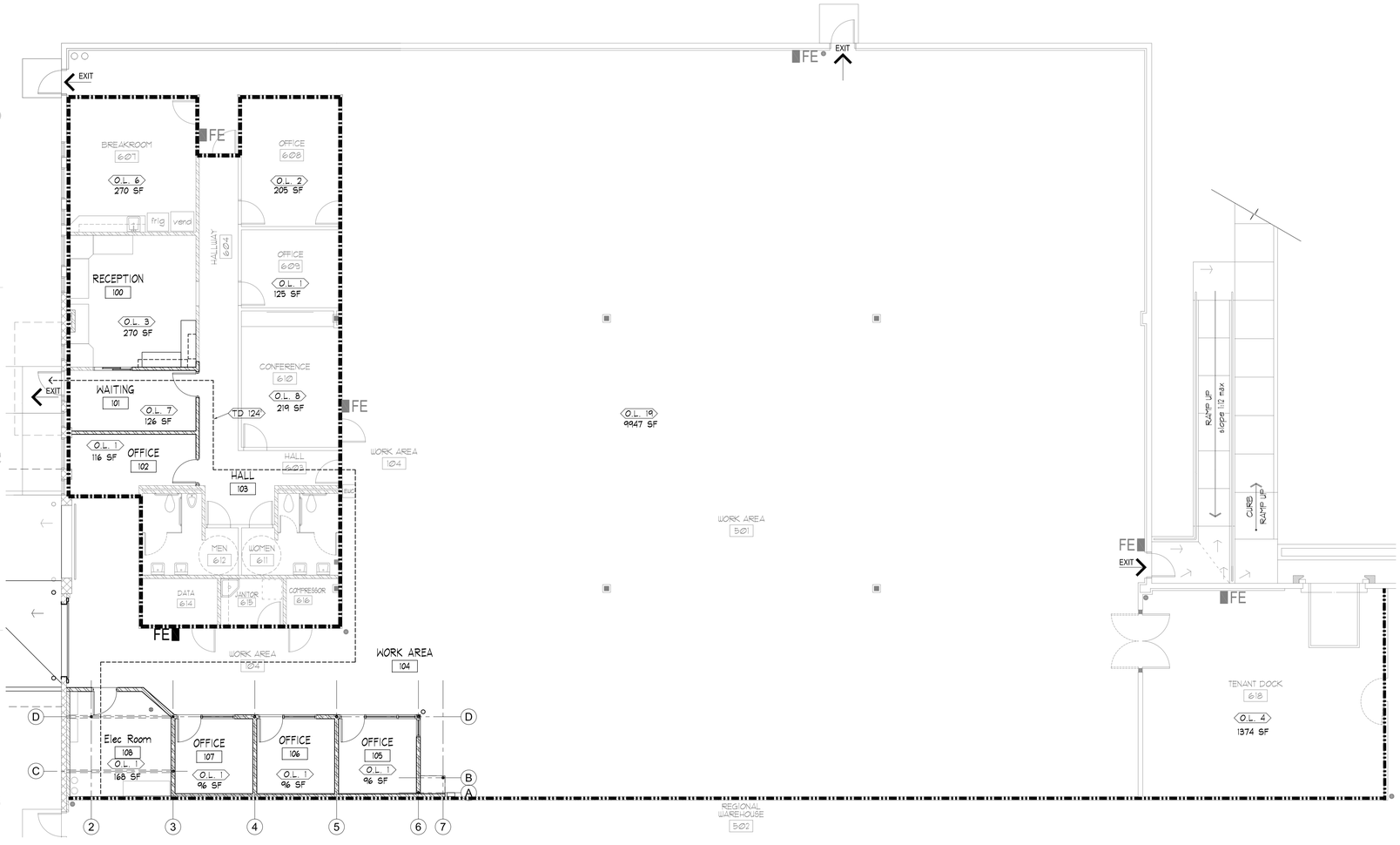

B1 Code Compliance Floor Plan
1/8" = 1'-0"

NORTH

CODE ANALYSIS

APPLICABLE CODES

	Year		Year
International Building Code	2006	National Electrical Code	2008
International Mechanical Code	2006	Uniform Code for Building Conservation	2006
International Plumbing Code	2006	ADA Accessibility Guildelines	2006
International Fire Code	2006		
International Energy Conservation Code	2006		

A. Occupancy and Group: B

Change in Use: Yes ____ No X Mixed Occupancy: Yes X No ____
Special Use and Occupancy (e.g. High Rise, Covered Mall): ____

B. Seismic Design Category: D Design Wind Speed: 90 mph

C. Type of Construction (circle one):

I/A I/B II/A (II/B) III/A III/B IV/HT V/A V/B

D. Fire Resistance Rating Requirements for the Exterior Walls based on the fire separation distance (in hours):

North: EXISTING South: EXISTING East: EXISTING West: EXISTING

E. Mixed Occupancies: ____ Nonseparated Uses: X

F: Sprinklers:

Required: ____ Provided: ____ Type of Sprinkler System: EXISTING FULLY AUTOMATIC

G: Number of Stories: 1 Building Height: 20'-4"

H: Actual Area per Floor (square feet): Level 1: 14,057 sf

I: Tabular Area: 14,057 sf

J: Area Modifications:

a) $A_a = A_t + \left[\frac{A_t I_f}{100}\right] + \left[\frac{A_t I_a}{100}\right]$ $I_f = 100\left[\frac{F}{P} - 0.25\right]\frac{W}{30}$

b) Sum of the Ratio Calculations for Mixed Occupancies:

$\frac{\text{Actual Area}}{\text{Allowable Area}} \leq 1$

c) Total Allowable Area for:
1) One Story: UNLIMITED
2) Two Story: A_a(2)____
3) Three Story: A_a(3)____

d) Unlimited Area Building: Yes X No ____ Code Section: 507.3

K. Fire Resistance Rating Requirements for Building Elements (hours).

Element	Hours	Assembly Listing	Element	Hours	Assembly Listing
Exterior Bearing Walls	0		Floors - Ceiling Floors	0	
Interior Bearing Walls	0		Roofs - Ceiling Roofs	0	
Exterior Non-Bearing Walls	0		Exterior Doors and Windows	0	
Structural Frame	0		Shaft Enclosures	1	
Partitions - Permanent	0		Fire Walls	1	
Fire Barriers	1		Fire Partitions	1	
			Smoke Partitions	1	

L. Design Occupant Load: 55

Exit Width Required: 8.25" Exit Width Provided: 144"
OCCUPANT LOAD OF 55 MULTIPLIED BY .15 EGRESS WIDTH PER OCCUPANT
4 EXITS AT 36" EACH PROVIDED

M. Minimum Number of Required Plumbing Facilities:

a) Water Closets - Required (m) NA (f) ____ Provided (m) NA (f) ____
b) Lavatories - Required (m) NA (f) ____ Provided (m) NA (f) ____
c) Bath Tubs or Showers: NA
d) Drinking Fountains: NA Service Sinks: NA

FOOTNOTES:

1) In case of conflict with the U.S. Department of Justice Federal Registers Parts I through V - ADA Guidelines and specific reference to the International Building Code Accessibility Chapters, the more restrictive requirement shall govern.
2) Additional Code Information shall be provided at the discretion of the Building Official for Complex Buildings. Including, but not limited to:
   a) High Rise Requirements.
   b) Atriums.
   c) Performance Based Criteria.
   d) Means or Egress Analysis.
   e) Fire Assembly Locator Sheet.
   f) Exterior and Interior Accessibility Route.
   g) Fire Stopping, Including Tested Design Number.

LEGEND

O.L. 100	OCCUPANT LOAD	FE	NEW FIRE EXTINGUISHER
TD 100	TRAVEL DISTANCE	FE	EXISTING FIRE EXTINGUISHER
	EXISTING FIRE BARRIER		1 HOUR FIRE RESISTANCE
	EXISTING FIRE BARRIER		2 HOUR FIRE RESISTANCE

NJRA Architects, Inc.
370 East 500 South, Suite 101
Salt Lake City, Utah 84111

Phone: 801. 364. 9259
Fax: 801. 521. 0420
www.njraarchitects.com

STATE OF UTAH
SELVAM RAJAVELU
267857
LICENSED ARCHITECT

Division of Facilities Construction & Management
Utah State Mail Center
Office Renovation

DFCM Project #: 09258310
250 North 1950 West
Salt Lake City, Utah

ISSUE
March 10, 2010 - Const. Documents 100%

NJRA Project #: 10901.00

Code Compliance Floor Plan

G-003

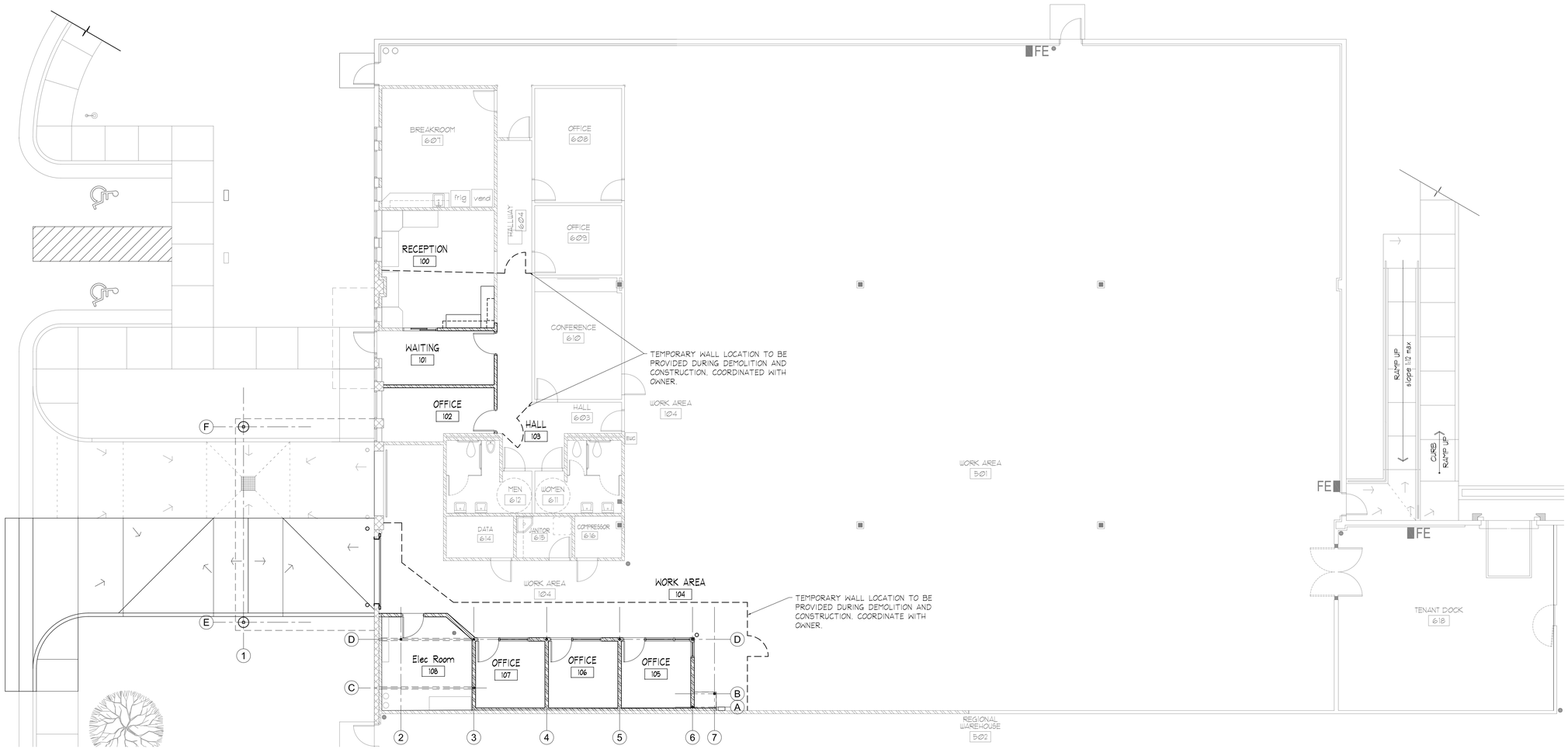

B1 CONSTRUCTION AND DEMOLITION PROTECTION PLAN

1/8" = 1'-0"

NORTH

NJRA Architects, Inc.
370 East 500 South, Suite 101
Salt Lake City, Utah 84111

Phone: 801. 364. 9259
Fax: 801. 521. 0420
www.njraarchitects.com

STATE OF UTAH
SELVAM RAJAVELU
267857
LICENSED ARCHITECT

Division of Facilities Construction & Management

Utah State Mail Center
Office Renovation

DFCM Project #: 09258310
250 North 1950 West
Salt Lake City, Utah

ISSUE

March 10, 2010 - Const. Documents 100%

NJRA Project #: 10901.00

CONSTRUCTION PROTECTION PLAN

G-004

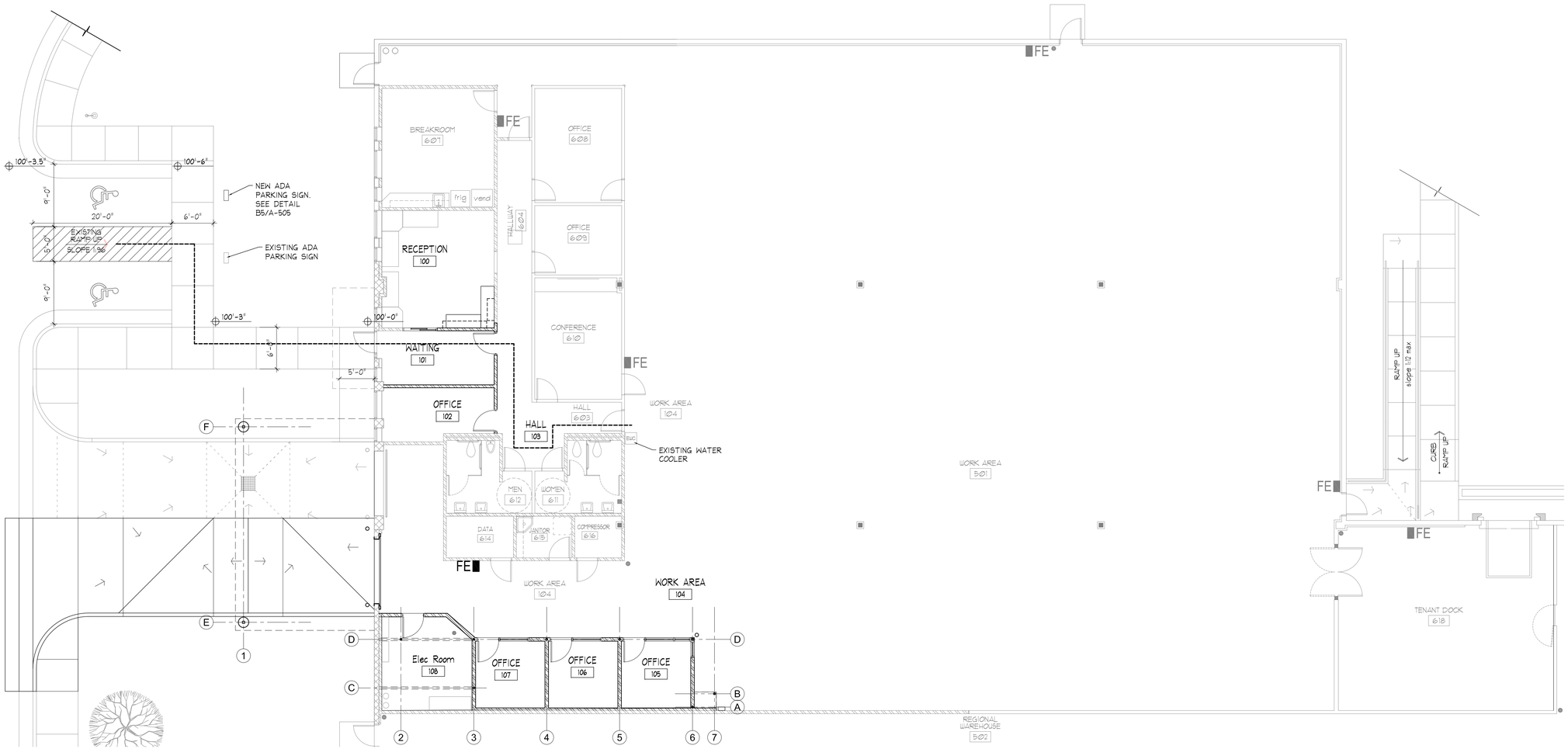

B1 ADA Route Floor Plan
1/8" = 1'-0"

NJRA Architects, Inc.
370 East 500 South, Suite 101
Salt Lake City, Utah 84111

Phone: 801. 364. 9259
Fax: 801. 521. 0420
www.njraarchitects.com

STATE OF UTAH
SELVAM RAJAVELU
267857
LICENSED ARCHITECT

Division of Facilities Construction & Management
Utah State Mail Center
Office Renovation

DFCM Project #: 09258310
250 North 1950 West
Salt Lake City, Utah

ISSUE
March 10, 2010 - Const. Documents 100%

NJRA Project #: 10901.00

ADA Route

G-005

SPECIAL INSPECTION AND TESTING UNDER THE PROVISIONS OF IBC 1704 AND FOR MISCELLANEOUS AREAS

Indicate required Special inspections for project by checking the appropriate boxes and provide specific instructions as to the inspection requirements and the expectations of the architect, engineer and owner:

FABRICATORS (IBC 1704.2)

☒ Approved Fabricator	Fabricators Name:
☐ Unapproved Fabricator	Fabricators Name:

In-plant inspections
☐ Steel Construction ☐ Welding ☐ Details

STEEL (IBC 1704.3)

Item			Detailed Instructions and Frequencies
High Strength Bolting(1704.3.3)	☐ Continuous	☒ Periodic	Inspect after steel is installed and prior to finish mat.
WELDING (1704.3.1)			
Details (1704.3.2)			
Complete & partial penetration groove welds	☐ Continuous	☐ Periodic	
Multipass fillet welds	☐ Continuous	☐ Periodic	
Single-pass fillet welds > 5/16"	☐ Continuous	☐ Periodic	
Single-pass fillet welds ≤ 5/16"	☐ Continuous	☒ Periodic	Inspect after steel is installed and prior to finish mat.
Floor & roof deck welds	☐ Continuous	☒ Periodic	Inspect after steel is installed and prior to finish mat.
REINFORCEMENT STEEL	☐ Continuous		
Verification of weldability	☐ Continuous	☐ Periodic	
Shear wall and shear reinforcement	☐ Continuous	☐ Periodic	
Other reinforcement	☐ Continuous	☐ Periodic	
Steel frame joint details	☐ Continuous	☐ Periodic	

CONCRETE CONSTRUCTION (IBC 1704.4)

Item			Detailed Instructions and Frequencies
Materials (1704.4.1)	☐ Continuous	☐ Periodic	
Steel placement	☐ Continuous	☒ Periodic	Inspect size and placement prior to concrete placement.
Steel welding	☐ Continuous	☐ Periodic	
Bolts prior & during placement	☐ Continuous	☒ Periodic	Inspect size and placement prior to concrete placement.
Use of required design mix	☐ Continuous	☒ Periodic	Check ticket with each load
Concrete sampling for strength test, slump, air content, and temperature of concrete	☐ Continuous	☒ Periodic	In accordance with specifications
Concrete & shotcrete placement	☒ Continuous	☐ Periodic	In accordance with specifications
Curing temperature and techniques	☐ Continuous	☒ Periodic	In accordance with specifications
Pre-stressed concrete	☐ Continuous	☐ Periodic	
Pre-cast concrete	☐ Continuous	☐ Periodic	
Posttensioned concrete	☐ Continuous	☐ Periodic	
Form work	☐ Continuous	☐ Periodic	

WOOD CONSTRUCTION (IBC 1704.6)

Item			Detailed Instructions and Frequencies
Structural wood panel diaphragms and shear walls	☐ Continuous	☒ Periodic	In accordance with Structural General Notes.

SOILS CONSTRUCTION (IBC 1704.7)

Item			Detailed Instructions and Frequencies
Site preparation	☐ Continuous	☒ Periodic	Periodic because the quantity is very limited.
Structural fill material	☐ Continuous	☒ Periodic	Periodic because the quantity is very limited.
Structural fill lift thickness	☐ Continuous	☒ Periodic	Periodic because the quantity is very limited.
Structural fill soil densities	☐ Continuous	☒ Periodic	Periodic because the quantity is very limited.
Backfill soils materials	☐ Continuous	☒ Periodic	Periodic because the quantity is very limited.
Backfill soil densities	☐ Continuous	☒ Periodic	Periodic because the quantity is very limited.

SPRAYED FIRE-RESISTANT MATERIALS (IBC 1704.10)

Item			Detailed Instructions and Frequencies
Structural member surface conditions	☐ Continuous	☐ Periodic	
Material application	☐ Continuous	☐ Periodic	
Material thickness	☐ Continuous	☐ Periodic	
Material density	☐ Continuous	☐ Periodic	
Bonding strength	☐ Continuous	☐ Periodic	

MASTIC AND INTUMESCENT FIRE-RESISTANT COATINGS (IBC 1704.11)

Item			Detailed Instructions and Frequencies
Material and installation	☐ Continuous	☐ Periodic	

EXTERIOR INSULATION AND FINISH SYSTEMS (EIFS) (IBC 1704.12)

Item			Detailed Instructions and Frequencies
Material and installation	☐ Continuous	☐ Periodic	

ALTERNITIVE CONSTRUCTION METHODS OR MATERIALS (IBC 1704.13)

Item			Detailed Instructions and Frequencies
Material and installation	☐ Continuous	☐ Periodic	

EPOXY (IBC 1704.13)

Item			Detailed Instructions and Frequencies
Material and installation (specify locations)	☐ Continuous	☐ Periodic	

SMOKE CONTROL (IBC 1704.14)

Item			Detailed Instructions and Frequencies
Material	☐ Continuous	☐ Periodic	
Installation	☐ Continuous	☐ Periodic	

Special inspection for seismic resistance (IBC 1707)

Item			Detailed Instructions and Frequencies
Structural Steel (1707.2)	☐ Continuous	☒ Periodic	Steel fabricator must be on the approved fabricator list for DFCM
Structural Wood (1707.3)	☐ Continuous	☐ Periodic	
Cold–formed steel framing (1707.4)	☐ Continuous	☒ Periodic	Identification markings to conform to ASTM standards specified in the approved construction documents. Inspection of steel frame joint details for compliance with approved construction documents: A. details such a stiffening and bracing. B. member locations. C. Application of joint details at each connection.
Pier foundations (1707.5)	☐ Continuous	☐ Periodic	
Storage racks & access floors (1707.6)	☐ Continuous	☐ Periodic	
Architectural components (1707.7)	☐ Continuous	☐ Periodic	
Mechanical & electrical items (1707.8)	☐ Continuous	☐ Periodic	
Designated systems verification (1707.9)	☐ Continuous	☐ Periodic	
Seismic isolation systems (1707.10)	☐ Continuous	☐ Periodic	

MISCELLANEOUS AREAS

These inspections are recommended by the Architect/Engineer and approved by DFCM.

			Detailed Instructions and Frequencies
Suspended Ceiling Grid Clips	☐ Continuous	☐ Periodic	
Suspended Ceiling wire spacing (Seismic)	☐ Continuous	☒ Periodic	Inspect after installation prior to closing up ceiling. All splayed wires shall be at 45 degrees, 12 gauge spaced 4'-0" on center.
Soils backfill (specify locations and frequency)	☐ Continuous	☐ Periodic	
Soils for curb and gutter (specify locations and frequency)	☐ Continuous	☐ Periodic	
Soils for parking lots (specify locations and frequency)	☐ Continuous	☐ Periodic	
Soils for utility trench backfill	☐ Continuous	☐ Periodic	
Reinforcement for slab on grade sidewalks and drive approaches (specify locations and frequency)	☐ Continuous	☒ Periodic	Check prior to covering with concrete.
Reinforcement for interior slab on grade (specify locations and frequency)	☐ Continuous	☐ Periodic	
Concrete testing for slab on grade sidewalks and drive approaches (specify locations and frequency)	☐ Continuous	☒ Periodic	At the time of fresh concrete is sampled to fabricate specimens for strengths tests, perform slump and air content, and determine the temperature of concrete.
Concrete testing for interior slab on grade (specify locations and frequency)	☐ Continuous	☐ Periodic	
Masonry Veneer (specify locations and frequency)	☐ Continuous	☐ Periodic	
Asphalt inspection (specify locations and frequency)	☐ Continuous	☐ Periodic	
Asphalt testing (specify locations and frequency)	☐ Continuous	☐ Periodic	
Inspection of seismic resistance (specify locations and frequency)	☐ Continuous	☐ Periodic	
Steam and water line welding (specify locations and frequency)	☐ Continuous	☐ Periodic	
Seismic supports for duct work and sealing of joints for duct work	☐ Continuous	☒ Periodic	Inspect after installation
Seismic supports for electrical raceways, cable trays and lights	☐ Continuous	☒ Periodic	Inspect prior to closing up ceiling.
Seismic supports for plumbing lines including gas, water and steam and condensation	☐ Continuous	☐ Periodic	
Seismic bracing for mechanical units both on slab and suspended	☐ Continuous	☒ Periodic	Inspect after installation
	☐ Continuous	☐ Periodic	
	☐ Continuous	☐ Periodic	
	☐ Continuous	☐ Periodic	
	☐ Continuous	☐ Periodic	
	☐ Continuous	☐ Periodic	
	☐ Continuous	☐ Periodic	
	☐ Continuous	☐ Periodic	
	☐ Continuous	☐ Periodic	
	☐ Continuous	☐ Periodic	
	☐ Continuous	☐ Periodic	
	☐ Continuous	☐ Periodic	

Special Inspectors Shall:

- Be approved by the Building Official prior to performing any duties;
- Provide proof of licensure as a special inspector by the State of Utah for each type of inspection;
- Inspection reports are to meet the requirements of IBC 1704.1.2 and DFCM standards;
- Inspection reports are to be submitted to the code consultant, architect, DFCM project manager, and the State of Utah Building Official within 48 hrs. of inspections;
- A final inspection report shall be submitted following completion of the project documenting the types of special inspections performed and a statement indicating that the structure is in compliance with the drawings, specifications and applicable codes. IBC 1704.1.2

Updated October 8, 2009

NJRA ARCHITECTS
NJRA Architects, Inc.
370 East 500 South, Suite 101
Salt Lake City, Utah 84111
Phone: 801. 364. 9259
Fax: 801. 521. 0420
www.njraarchitects.com

STATE OF UTAH
SELVAM RAJAVELU
267857
LICENSED ARCHITECT

Division of Facilities Construction & Management
Utah State Mail Center
Office Renovation

DFCM Project #: 09258310
250 North 1950 West
Salt Lake City, Utah

ISSUE
March 10, 2010 - Const. Documents 100%

NJRA Project #: 10901.00

Special Inspections

G-006

GENERAL STRUCTURAL NOTES

GENERAL

1. The structural notes are intended to complement the project specifications. Specific notes and details in the drawings shall govern over the structural notes and typical details.
2. Typical details and sections shall apply where specific details are not shown.
3. The contractor shall verify all site conditions and dimensions. If actual conditions differ from those shown in the contract drawings, the contractor shall immediately notify the architect/engineer before proceeding with the fabrication or construction of any affected elements.
4. Changes to these contract drawings may be made only by an authorized representative of Dunn Associates, Inc. Dunn Associates, Inc. shall not be held responsible or liable for any claims arising directly or indirectly from changes made without written authorization by an authorized representative of Dunn Associates, Inc.
5. Omissions or conflicts between the contract drawings and/or specifications shall be brought to the attention of the architect/engineer before proceeding with any work involved. In case of conflict, follow the most stringent requirement as directed by the architect/engineer at no additional cost to the owner.
6. The contractor shall submit a written request to the architect/engineer before proceeding with any changes, substitutions, or modifications. Any work done by the contractor before receiving written approval will be at the contractor's risk.
7. The contractor shall coordinate with all trades any items that are to be integrated into the structural system such as openings, penetrations, mechanical and electrical equipment, etc. Sizes and locations of mechanical and other equipment that differs from those shown on the contract drawings shall be reported to the architect/engineer.
8. The contractor shall be responsible for means, methods, techniques, sequences, and procedures in order to comply with the contract drawings and specifications. The contractor shall provide adequate shoring and bracing as required for the chosen method of erection. Shoring and bracing shall remain in place until final connections for the permanent members are completed. The building shall not be considered stable until all connections are completed. Walls shall not be considered self-supporting and shall be braced until the floor/roof system is completed.
9. Site observations by a field representative of Dunn Associates, Inc. shall not be construed as approval of construction, the procedures, nor special inspection.
10. Detailing and shop drawing production for structural elements will require information (including dimensions) contained in the architectural, structural and/or other consultants' drawings. The structural drawings shall be used in conjunction with the architectural and other consultant's drawings. Most dimensions and most non-structural elements such as elevations, depressions, slopes, mechanical housekeeping pads, etc. are not shown in the structural drawings. See the Architectural Drawings for dimensions, doors, windows, non-bearing interior and exterior walls, elevations, slopes, stairs, curbs, drains, recesses, depressions, railings, waterproofing, finishes, chamfers, kerfs, etc.
11. Review of shop drawing submittals by Dunn Associates, Inc. is for general compliance only and is not intended for approval. The shop drawing review shall not relieve the contractor from the responsibility of completing the project according to the contract documents.
12. Shop drawings made from reproductions of the structural drawings will be rejected unless the contractor signs a release agreement prior to the shop drawings being reviewed. The contractor may also obtain electronic files of the plan sheets after signing a release agreement. Electronic files of the detail sheets and schedule sheets will not be made available.
13. All work shall be done in accordance with OSHA requirements. Potential conflicts between these documents and OSHA requirements shall be brought to the attention of the structural engineer before proceeding with the work.

BASIS OF DESIGN

1.	Governing Building Code	International Building Code 2009
2.	Occupancy Category	II
3.	Floor Live Loads	
3.1.	Uniformly Distributed Loads	
3.1.1.	Storage Mezzanine	125 psf
3.2.	Concentrated Loads, all areas	2000 lbs
4.	Roof Snow Load	
4.1.	Ground Snow Load	Pg = 43 psf
4.2.	Flat Roof Snow Load	Pf = 36.1 psf
4.3.	Snow Exposure Factor	Ce = 1.0
4.4.	Thermal Factor	Ct = 1.2
4.5.	Snow Load Importance Factor	Is = 1.0
5.	Wind Load	
5.1.	Basic Wind Speed (3 Second Gust)	90 mph
5.2.	Wind Importance Factor	1.00
5.3.	Wind Exposure	C
5.4.	Internal Pressure Coefficient	± 0.18
6.	Seismic Design Criteria	
6.1.	Mapped Spectral Response Accelerations	
6.1.1.	Short Period Acceleration	SS = 1.707
6.2.	Spectral Response Coefficients	
6.2.1.	Short Period Acceleration	SDS = 1.138
6.2.	Site Class (Soil Profile)	D
6.3.	Seismic Importance Factor	1.0
6.4.	Seismic Design Category	D
6.5.	Effective Structural Seismic Weight	W
6.6.	Basic Seismic Force Resisting System	
6.6.1.	Response Modification Coefficient	R = 6.5 for Mezz. R = 1.25 for canopy
6.7.	Analysis Procedure	Equivalent Lateral Force
7.	Serviceability Criteria	
7.1.	Deflection Limits	Total / Live/Snow
	Floor	L/240 / L/360
	Roof	L/240 / L/360

CONCRETE

1. Materials unless noted otherwise:
   - 1.1. Normal Weight aggregates — ASTM C 33
   - 1.2. Fly Ash, Class F Pozzolan — ASTM C618
   - 1.3. Reinforcing Steel
     - 1.3.1. General — ASTM 615 Grade 60-60ksi
   - 1.4. Deformed Bar Anchors (DBA) — ASTM A496
   - 1.5. Headed Stud Anchors (HSA) — ASTM A108
   - 1.6. Anchor Bolts: See steel and/or wood section(s) of general notes.
   - 1.7. Admixtures: Air-entraining admixtures shall comply with ASTM C 260 (when used). Calcium chloride shall not be added to the concrete mix. Unreinforced concrete slabs on grade may have calcium chloride not exceeding one percent.
   - 1.8. Type I/II cement complying with ASTM C-150 shall be used for all concrete unless other types are required by the soils report.
   - 1.9. The water/cement ratio for concrete 4000 psi and greater shall not exceed 0.50 (grout mixes are excluded).
   - 1.10. The slump of all concrete shall be limited to 4" unless plasticizers are used.
   - 1.11. Provide air entraining as recommended by ACI 318.
   - 1.12. Air entrainment shall be adjusted for the use of admixtures and fly ash.
   - 1.13. Fly Ash shall be a maximum of 20% of the cementitious material.
   - 1.14. No aluminum conduit or product containing aluminum or any other material injurious to concrete shall be embedded in concrete.
2. Compressive strengths of concrete at 28 days shall be as follows:
   - 2.1. Footings — 4000 psi
   - 2.2. Columns and Piers — 4000 psi
3. Reinforcement shall have the following concrete cover: — Clear Cover
   - 3.1. Cast-in-place Concrete
     - 3.1.1. Cast against and permanently exposed to earth — 3"
     - 3.1.2. Formed concrete exposed to earth or weather:
       - #6 thru #18 bars — 2"
       - #5 and smaller bars — 1 1/2"
     - 3.1.3. Concrete not exposed to weather or in contact with ground:
       - Slabs, Walls, Joists; #11 bars and smaller — 3/4"
       - Beams, Columns: Primary Reinforcement, Ties, Stirrups, Spirals — 1 1/2"
   - 3.2. Construction
   - 3.1. Use chairs or other support devices recommended by the CRSI to support bar and tie reinforcement bars and WWF prior to placing concrete. WWF shall be continuously supported at 36" on center maximum. Reinforcing steel for slabs on grade shall be adequately supported on precast concrete units. Lifting the reinforcing off the grade during placement of concrete is not permitted.
   - 3.2. Contractor shall coordinate placement of all openings, curbs, dowels, sleeves, conduits, bolts, inserts and other embedded items prior to concrete placement.
   - 3.3. All embeds and dowels shall be securely tied to formwork or to adjacent reinforcing prior to the placement of concrete.
   - 3.4. No pipes, ducts, sleeves, etc. shall be placed in structural concrete unless specifically detailed or approved by the structural engineer. Penetrations through walls when approved shall be built into the wall prior to concrete placement. Penetrations will not be allowed in footings or grade beams unless detailed. Piping shall be routed around these elements and footings stepped to avoid piping.
   - 3.5. Reinforcing bars shall not be welded unless specifically shown on drawings. In such cases, use only AWS standards. Do not substitute reinforcing bars for DBAs or HSAs.
   - 3.6. Top of concrete columns shall be flush (±1/4") with bottom of supported cast-in-place members.
4. Detailing:
   - 4.1. Lap splice lengths shall be detailed to comply with 48 bar diamiters.
     - 4.1.1. At joints provide reinforcing dowels to match the member reinforcing, unless noted otherwise.
   - 4.2. All vertical reinforcing shall be doweled to footings, or to the structure below with the same size and spacing as the vertical reinforcing for the element above. Dowels extending into footings shall terminate with a 90° standard hook and shall extend to within 4" of the bottom of the footing. Footing dowels (#8 bars and smaller) with hooks need not extend more than 20" into footings.
   - 4.3. See details for reinforcing around miscellaneous openings (8" to 36" wide). For openings wider than 36", contact the engineer. All recesses that interrupt reinforcing shall be reinforced the same as an opening.
5. Contractor required to submit concrete mix design for review by the engineer prior to any placement of concrete.

STRUCTURAL STEEL

1. Codes and Standards: Fabrication and installation shall comply with the latest edition of the following:
   - 1.1. American Institute of Steel Construction (AISC), "Specification for the Design, Fabrication and Erection of Structural Steel for Buildings," with "Commentary".
   - 1.2. AISC "Code of Standard Practice" excluding sections 3.4, 4.4 and 4.4.1.
   - 1.3. AISC "Specification for Structural Joints Using ASTM A325 or A490 Bolts"
   - 1.4. AISC "Seismic Provisions for Structural Steel Buildings."
   - 1.5. American Welding Society (AWS), Structural Welding Codes D1.1, D1.3, D1.4, and D1.8, except as modified by the "Steel Construction Manual".
2. Material:
   - 2.1. Wide Flange Sections — ASTM A992 (50 ksi)
   - 2.2. Plate
     - 2.2.1. Typical — ASTM A36
     - 2.2.2. Braced/Moment Frames — ASTM A572 Grade 50
   - 2.3. Hollow Structural Shapes
     - 2.3.1. Rectangular — ASTM A500 Grade B (46 ksi)
   - 2.4. Other Structural Shapes (M, C, etc) — ASTM A36
   - 2.5. Bolted Connections — ASTM A325
   - 2.6. Anchor Bolts
     - 2.6.1. Cantilevered Columns: ASTM F1554 Grade 55 (equiv to A572 Grade 55) with ASTM A563 heavy hex nuts with ASTM F436 minimum 5/16" thick washers.
   - 2.7. Deformed Bar Anchors (DBA) — ASTM A496
   - 2.8. Headed Stud Anchors (HSA) — ASTM A108
   - 2.9. Non-Shrink Grout — ASTM C1107 Grade B

   Non-shrink grout shall be prepackaged, non-metallic and non-gaseous.
   Furnish certified independent test data to Structural Engineer.
   Fluid Consistency (flow cone) = 20 to 30 seconds
   Compressive Strength in 28 days = 7,500 psi
3. Structural Detailing
   - 3.1. Provide full depth web stiffener plates at each side of all beams at all bearing points. Stiffener plates shall be the thickness called out below unless noted otherwise. Stiffeners shall be welded on both sides of the plate-to-flange and plate-to-web interfaces. Do not weld into the web-to-flange fillet region of the member.

FLANGE WIDTH	STIFFENER THICKNESS & WELD SIZE
Less than 8 1/4"	1/4" & 3/16"
8 1/4" to 12 1/4"	3/8" & 1/4"
12 1/4" to 16 1/2"	1/2" & 5/16"
16 1/2" to 20 3/4"	5/8" & 3/8"

   - 3.2. Bolting and Fasteners
     - 3.2.1. Ordinary steel-to-steel connections, simple span framing, and beam/girder-to-bearing plates are the standard connection used throughout the design drawings, unless noted otherwise.

POST-INSTALLED ANCHORS

1. Follow all ICC Evaluation Report and manufacturers' requirements and recommendations for post-installed anchor installation. Where conflicts may exist, the most stringent requirement applies.
2. All holes in hollow, brick, or stone masonry shall be performed in the "rotary-only" mode with the hammer function off.
3. Follow manufacturer and ICC evaluation report requirements for installation temperature of adhesive anchors. Adhesive anchors shall not be installed or cured outside of approved temperature ranges.
   - 3.1. Adhesive anchors in concrete shall be
     - 3.1.1. HIT RE-500 SD by Hilti (ESR-2322) - normal weight concrete only
     - 3.1.2. SET-XP by Simpson (ESR-2508)
     - 3.1.3. PE1000+ by Powers Fasteners (ESR-2583) - 1/2" to 7/8" diameter only
   - 3.2. Adhesive anchors in grouted masonry shall be
     - 3.2.1. HIT HY-150 MAX by Hilti (ESR-1967)
     - 3.2.2. SET by Simpson (ESR-1772)
4. Mechanical (Expansion) anchors
   - 4.1. Mechanical anchors in concrete shall be
     - 4.1.1. Kwik Bolt TZ by Hilti (ESR-1917)
     - 4.1.2. Strong-Bolt by Simpson (ESR-1771)
     - 4.1.3. Titen HD by Simpson (ESR-2713)
     - 4.1.4. Trubolt+ by ITW Redhead (ESR-2427)
   - 4.2. Mechanical anchors in grouted masonry shall be
     - 4.2.1. Kwik Bolt 3 by Hilti (ESR-1385)
     - 4.2.2. Titen HD by Simpson (ESR-1056)
     - 4.2.3. Wedge-All by Simpson (ESR-1396)
5. The Contractor may submit, for review and approval, the manufacturer's ICC evaluation report of alternate anchor systems. The alternate method shall provide minimum capacities equal to or greater than those in the above noted anchors. The alternate method shall be approved by the engineer of record prior to the substitution.
6. Special Inspection and Testing
   - 6.1. Special inspection shall be performed according to the requirements of the ICC evaluation report, per section 1704.13 of the IBC. Periodic inspection is allowed for mechanical anchors per section 6.6 of ICC-ES AC193.
   - 6.2. Testing shall be done according to the more stringent requirements of the ICC evaluation report and the values listed below.
     - 6.2.1. Mechanical anchors shall be tension tested to twice the allowable tension load listed in the ICC evaluation report.

COLD FORMED STEEL

1. Wall System Performance Requirements
   - 1.1. All systems intended for use to enclose the building shall comply with the following criteria for interstory drift as required by ASCE 7-05 as interpreted or defined herein and as modified or supplemented herein. Systems shall be detailed to accommodate vertical building movement (live load deflection) in conjunction with interstory drift.
     - 1.1.1. All components and systems shall be designed and detailed for elastic (probable) interstory drift (lateral displacement of one floor relative to adjacent floors as indicated in the General Structural Notes. For this given magnitude of movement, all systems and/or elements and/or components shall remain intact, undamaged and all sealant joints integral to or placed between systems shall remain intact, uncompromised, without failures or breaches. Joints, jointing and/or jointery shall be designed such that sealant materials flex, compress and/or shear within limits recommended by the sealant manufacturers so as to remain an effective barrier for water and air infiltration.
     - 1.1.2. In addition, all systems, elements and components shall be designed and detailed for amplified interstory (credible) as indicated in the General Structural Notes such that no failure or distress occurs to systems, and/or components, and/or elements and/or connections except joint sealant is allowed to fail. Under no circumstances shall elements and/or components come in contract with adjacent systems, elements and/or components.
     - 1.1.3. Systems with glazing are intended to keep all members and glazing intact and connected to the building. Glazing shall not break or become dislodged from its restraints. Gaskets may fail and may dislodge but shall not let glass escape its restraint.
     - 1.1.4. Allowance shall be made for sealant to occupy some finite space when compressed beyond its working limit (suggest ±15% of its static joint width).
   - 1.2. All system connections shall comply with requirements of ASCE 7-05, Chapter 13.
   - 1.3. All systems shall be coordinated with all associated adjoining and interface in systems such that consistency is maintained throughout the exterior closure regarding the mode (sliding or racking) in which the system performs to meet interstory drift and other design criteria.
   - 1.4. Systems and details shall be consistent with the architectural intent for joint sizes and system details to the largest extent possible, or where required, modified only after prior approval.
2. Cold Formed Steel Framing
   - 2.1. The design of cold formed steel and low alloy steel structural members shall be in accordance with AISI-NASPEC, North American Specification for the Design of Cold-Formed Steel Structural Members.
   - 2.2. The design, installation and construction of cold formed steel for structural and non-structural framing shall be in accordance with AISI-CFSD, Standard for Cold-Formed Steel Framing - General Provisions.
   - 2.3. All steel framing members shall comply with ASTM C995.
   - 2.4. Follow all manufacturers' guidelines and recommendations for all products.
   - 2.5. Unless noted otherwise, all welded connections shall be done according to AWS standards.
   - 2.6. All interior non-bearing steel stud walls that extend above the ceiling but do not attach to the structure above shall be braced with diagonal metal-stud braces (45°). The kl/r ratio of the brace shall not exceed 200 and shall not be spaced further apart than 10'-0" on center. Connect diagonal braces to the top of the steel stud walls and to the top flange of the steel beams with (2) #10 tek screws minimum. Where a concrete deck occurs above, use two powder-driven fasteners per diagonal brace. Other approved methods may be used.
   - 2.7. Anchor bolts: See steel section of general notes.
3. Connection Hardware
   - 3.1. Exterior framing shall be attached to primary structure to provide vertical and lateral drift as indicated in these drawings. The "DriftTrack DTSL" by the Steel Network or equivalent is suitable to meet this requirement. Inside and outside corner joints shall be detailed to accommodate the lateral drift indicated. See architectural drawings for joint location and details.
   - 3.2. All connection hardware (examples: "StiffClip", "VertiClip", "DriftClip", "BridgeClip", etc) shown shall be supplied by:

     The Steel Network, Inc.
     3221 Wellington Court
     Raleigh, NC 27615
     Phone: (888) 474-4876
     www.steelnetwork.com
   - 3.3. Install all hardware per the manufacturer's guidelines and recommendations.
   - 3.4. The contractor may submit an alternate connection method for approval by Dunn Associates, Inc. and the Architect.
4. Wood Structural Panel Sheathing
   - 4.1. Wood structural panels shall comply with US DOC PS 1 or PS 2 and shall be manufactured using exterior glue. See schedule for sheathing thickness and screw spacings.
   - 4.2. Wood structural panels shall be attached to steel framing and blocking with flat-head self-drilling tapping screws with a minimum head diameter of 0.292".
   - 4.3. Structural panels may be installed either perpendicular or parallel to the framing members.
   - 4.4. All edges of the sheets shall be attached to framing members or blocking.
4.5. Flat strap blocking, when used, shall be a minimum of 1 1/2" wide and of the same material and equal or greater thickness as the track and studs.

100% Const. Docs.
May 07, 2010

NOTE:
THESE STRUCTURAL DRAWINGS ARE BASED ON ARCHITECTURAL DRAWINGS DATED 04.23.2010

DIMENSIONS AND ELEVATIONS, AS THEY RELATE TO THE BUILDING IN GENERAL, i.e. GRID TO GRID DIMENSIONS OR DECK BEARING ELEVATIONS, ARE SUPPLIED BY THE ARCHITECT. THEY ARE PROVIDED ON THE STRUCTURAL PLANS AND DETAILS FOR THE CONVENIENCE OF THE CONTRACTOR. VERIFY DIMENSIONS AND ELEVATIONS WITH ARCHITECTURAL DRAWINGS.

DUNN
DUNN ASSOCIATES, INC
Consulting Structural Engineers
EMAIL: ENG@DUNN-SE.COM
PH: 801-575-8877 FAX: 801-575-8875

This drawing, as an instrument of professional service, is the property of DUNN ASSOCIATES INC. and shall not be used, in whole or part, for any other project without the written permission of an authorized representative of DUNN ASSOCIATES INC. Unauthorized use will be prosecuted to the fullest extent of the law. Copyright © 2009 by DUNN ASSOCIATES INC.

NJRA ARCHITECTS
NJRA Architects, Inc.
370 East 500 South, Suite 101
Salt Lake City, Utah 84111
Phone: 801. 364. 9259
Fax: 801. 521. 0420
www.njraarchitects.com

Division of Facilities Construction & Management
Utah State Mail Center
Office Renovation

DFCM Project #: 09258310
250 North 1950 West
Salt Lake City, Utah

ISSUE
March 10, 2010 - Const. Documents 100%

NJRA Project #: 10901.00
Dunn Project #: 10020
Designed By: Russel Merrel
Reviewed By: Paul McMullin
Drawn By: Alan Bennion

General Structural Notes

S101

GENERAL STRUCTURAL NOTES

METAL DECKING

1. Steel deck shall comply with the latest requirements of the Steel Deck Institute.
2. Steel deck material shall comply with the manufacturer's ICC Report and have a minimum yield strength of 33ksi.
3. All deck shall be 3-span continuous minimum. In areas where 3-span conditions are not possible, the contractor shall provide heavier gauge deck as required to provide the equivalent loading of the specified deck under a 3-span condition.
4. Steel roof deck shall not be used to support loads from plumbing, HVAC ducts, light fixtures, architectural elements, or equipment of any kind, unless specifically noted.
5. All members supporting deck shall be dry before welding.
6. Crimp seams before button punching or welding interlocking seams.
7. All welds performed on the steel deck are to be painted.
8. Steel roof deck shall be painted with interlocking side seams with the following minimum properties:

Type/Ga	S(in3/ft)	I (in4/ft)	Allowable shear value	Notes
1 1/2" B/20	0.235	0.216	700 plf for 7'-0" span	Typ. Roof

8.1. Weld steel roof deck to supporting framing members with 3/4" diameter puddle welds at the following spacings (Closer spacings may be used to develop minimum shear requirements):
- 8.1.1. 6" on center to all supports perpendicular to deck corrugations (7 welds per 36" sheet).
- 8.1.2. 6" on center to all supports parallel to deck corrugations.
- 8.1.3. Interlocking side seams between adjacent pieces of decking may be attached with one of the following:
  - 8.1.1.1. "Verco Sidelap Connections" by Verco Manufacturing (VSC) at 12" on center minimum using the "Verco Punchlok System."
  - 8.1.1.2. "ASC DeltaGrip side seam connection" by ASC Steel Deck at 12" on center minimum.
  - 8.1.1.3. 1 1/2" long top seam welds 12" on center minimum. Closer spacing may be used to develop minimum shear requirements.

8.2. At the Contractor's option, Hilti X-EDN19/X-EDNK 22 powder-actuated fasteners may be used in lieu of puddle welds. Follow fastener manufacturer's recommendations for installation. Fasteners shall be installed at the following spacings (Closer spacings may be used to develop minimum shear requirements):
- 8.2.1. 6" on center to all supports perpendicular to deck corrugations (7 fasteners per 36" sheet).
- 8.2.2. 6" on center to all supports parallel to deck corrugations.
- 8.2.3. Interlocking side seams between adjacent pieces of decking may be attached with "Verco Sidelap Connections" by Verco Manufacturing (VSC) at 4" on center Closer spacing may be used to develop minimum shear requirements.

8.3. The Contractor may submit, for review and approval, the manufacturer's ICC report of an alternate method of deck attachment. The alternate method shall provide minimum deck diaphragm shear values equal to or greater than those noted above. The alternate method shall be approved by the engineer of record prior to the substitution.

8.4. Provide a 2" minimum bearing and an 8" lap at the splice points, centering the splice over the support.

QUALITY ASSURANCE PLAN/SPECIAL INSPECTION REQUIREMENTS

1. Seismic/Wind-force-resisting systems:
   - 1.1. Wood panel shear walls
   - 1.2. Steel cantilevered columns
   - 1.3. Wood diaphragms

   See specific discipline drawings for additional designated seismic systems requiring special inspection which are not contained in the structural drawings.
2. Special inspection and testing as required by the IBC shall be provided by an independent agency employed by the owner unless waived by the building official. The contractor shall coordinate and cooperate with the required inspections/tests as indicated below, referring to the IBC section indicated as appropriate.
3. Special inspection reports from the inspector shall be sent to the engineer and building official.
   - 3.1. Bring any discrepancies to the contractor's immediate attention.
   - 3.2. Notify the engineer of any non-passing work that the contractor cannot readily correct.
   - 3.3. Any uncorrected discrepancies shall be brought to the attention of the engineer and building official prior to completion of that phase of the work.
   - 3.4. A final report documenting required special inspections and corrections of any discrepancies shall be provided.
4. Special Inspectors
   - 4.1. Special inspectors shall be qualified persons who shall demonstrate competence, to the satisfaction of the building official, for inspection of the particular type of construction or operation requiring special inspection.
5. Section 1704: Special Inspections
   - 5.1. Fabricators : The steel fabrication shall be performed by a DFCM approved fabricator.
   - 5.2. Steel (1704.3): Special inspection is required during the fabrication of any load-bearing members and assemblies, unless the fabricator and/or erector demonstrate prior approval by the jurisdiction where fabricated steel will be installed.
     - 5.2.1. Perform all welding and welding special inspection activities in accordance with AWS D1.1, D1.3, D1.4, and D1.8 as appropriate for the material form and welding methods employed. Approved methods and acceptance criteria are established in these codes.
     - 5.2.2. Perform all bolting and bolting inspection in accordance with AISC Specification for Structural Joints Using A325 and A490 Bolts.
     - 5.2.3. Continuous Special Inspection of welding is required for:
       - 5.2.3.1. Complete and partial penetration welds, except flare-bevel groove welds
       - 5.2.3.2. Multi-pass fillet welds
       - 5.2.3.3. Single-pass fillet welds larger than 5/16"
     - 5.2.4. Periodic Special Inspection of welding is required for (Inspect 25% of welds while welding operations are taking place):
       - 5.2.4.1. Single-pass fillet welds equal to or smaller than 5/16"
       - 5.2.4.2. Floor and roof deck arc spot, puddle welds
       - 5.2.4.3. Welding of stairs and railing systems, cold formed steel studs/joists.
     - 5.2.5. Periodic Special Inspection of all bolts is required as follows:
       - 5.2.5.1. Verify the proper grade of fasteners are installed where indicated in the approved construction drawings.
       - 5.2.5.2. Verify the storage and cleanliness of high strength fasteners meets AISC requirements.
       - 5.2.5.3. Store fasteners in protected storage until released for use. Temperature control is not required. Do not use fastener components showing rust, dirt, or grit. Cleaning or modifying fastener components from the as-delivered condition is not permitted.
       - 5.2.5.4. Verify the faying surfaces have been brought into firm contact, the bolts are in a snug tight condition, and that washers have been used as required.
   - 5.3. Concrete (1704.4): Concrete construction shall be special inspected according to Table 1704.4, except in buildings 3 stories or less above the grade plane where structural design of continuous concrete footings is based on compressive strength, f'c, no greater than 2500 psi. In the absence of sufficient data or documentation showing conformance to quality standards for materials, testing shall be required to determine material properties under the direction of the building official according to Chapter 3 of ACI 318.
   - 5.4. Structural wood panel shear walls and diaphragms: Inspect panel thickness and grade, fastener size and spacing and proper installation. Proper installation includes framing member and plywood and fastener head being tight. The fastener head should slightly divit the panel surface but not puncture the surface.
   - 5.5. Special Cases (1704.15): Special inspect all post-installed anchors per ICC report.

LEGEND OF MARKS AND ABBREVIATIONS

AB	Anchor Bolt	JST	Joist
ABV	Above		
ALT	Alternate	K	Kip(S) = 1000 Pounds
ARCH	Architect	KLF	Kips Per Lineal Foot
		KSF	Kips Per Square Foot
BLDG	Building		
BLK	Blocking	LB	Pounds (#)
BLW	Below	LOC	Location
BM	Beam		
BOTT	Bottom	MAX	Maximum
BRG	Bearing	MEZZ	Mezzanine
BTW	Between	MFR	Manufacturer
		MIN	Minimum
CL	Center Line	MISC	Miscellaneous
COL	Column	MTL	Metal
CONC	Concrete		
CONN	Connection	NTS	Not To Scale
CONT	Continuous		
COORD	Coordinate	oc	On Center
CTR	Center	OPNG	Opening
		OPP	Opposite
DB	Deck Bearing		
DBL	Double	PERP	Perpendicular
DET	Detail	PL	Plate
DIA	Diameter	PLF	Pounds per Lineal Foot
DIM	Dimension	PSF	Pounds per Square Foot
DWG	Drawing	PSI	Pounds per Square Inch
(E)	Existing	REINF	Reinforce
EA	Each	REQD	Required
EL	Elevation		
ENGR	Engineer	SCHED	Schedule
EQ	Equal	SIM	Similar
EW	Each Way	SOG	Slab on Grade
EJ	Expansion Joint	STD	Standard
EXT	Exterior	STIFF	Stiffener
		STL	Steel
FLR	Floor	STRUCT	Structural
FND	Foundation	SW	Shear Wall
FTG	Footing		
		T&B	Top and Bottom
ga	Gage	TEMP	Temperature
GALV	Galvanized	THRU	Through
GSN	General Structural Notes	T/	Top of
		TYP	Typical
HORIZ	Horizontal		
=HSS	Hollow Structural Section	UNO	Unless Noted Otherwise
ICBO	International Conference of Building Officials	VERT	Vertical
IBC	International Building Code	W/	With
ICC	International Code Council	WWR	Welded Wire Reinforcement
INT	Interior	WP	Working Point

100% Const. Docs.
May 07, 2010

NOTE:
THESE STRUCTURAL DRAWINGS ARE BASED ON ARCHITECTURAL DRAWINGS DATED 04.23.2010

DIMENSIONS AND ELEVATIONS, AS THEY RELATE TO THE BUILDING IN GENERAL, i.e. GRID TO GRID DIMENSIONS OR DECK BEARING ELEVATIONS, ARE SUPPLIED BY THE ARCHITECT. THEY ARE PROVIDED ON THE STRUCTURAL PLANS AND DETAILS FOR THE CONVENIENCE OF THE CONTRACTOR. VERIFY DIMENSIONS AND ELEVATIONS WITH ARCHITECTURAL DRAWINGS.

DUNN
DUNN ASSOCIATES, INC
Consulting Structural Engineers
EMAIL: ENG@DUNN-SE.COM
PH: 801-575-8877 FAX: 801-575-8875

This drawing, as an instrument of professional service, is the property of DUNN ASSOCIATES INC., and shall not be used, in whole or part, for any other project without the written permission of an authorized representative of DUNN ASSOCIATES INC. Unauthorized use will be prosecuted to the fullest extent of the law. Copyright © 2009 by DUNN ASSOCIATES INC.

NJRA ARCHITECTS
NJRA Architects, Inc.
370 East 500 South, Suite 101
Salt Lake City, Utah 84111
Phone: 801. 364. 9259
Fax: 801. 521. 0420
www.njraarchitects.com

Division of Facilities Construction & Management
Utah State Mail Center
Office Renovation

DFCM Project #: 09258310
250 North 1950 West
Salt Lake City, Utah

ISSUE
March 10, 2010 - Const. Documents 100%

NJRA Project #: 10901.00
Dunn Project #: 10020
Designed By: Russel Merrel
Reviewed By: Paul McMullin
Drawn By: Alan Bennion

General Structural Notes

S102

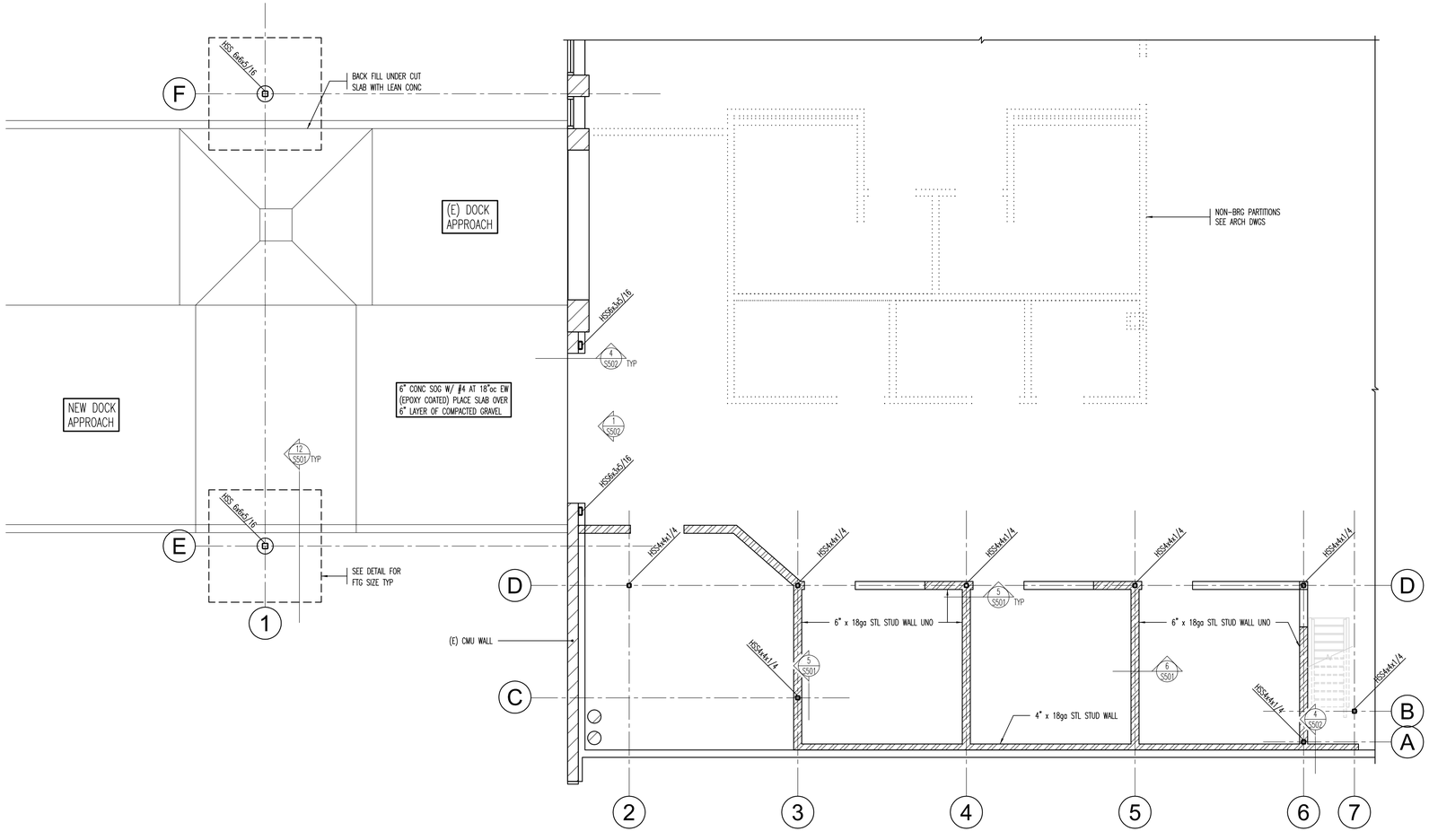

FOUNDATION PLAN

SCALE: 1/4"=1'-0"

FOOTING AND FOUNDATION PLAN NOTES:

1. SEE ARCHITECTURAL DRAWINGS AND CIVIL DRAWINGS FOR EXTERIOR CONCRETE WORK AT DOORS, SIDEWALKS, ETC.
2. CENTER ALL SPOT FOOTINGS UNDER COLUMNS AS SHOWN ON PLAN, TYPICAL UNO.
3. SEE ARCHITECTURAL DRAWINGS FOR DIMENSIONS TO ALL STEEL COLUMNS.
4. PLACE 8" MIN STRUCT FILL BENEATH FOOTINGS.

MARKS & SYMBOLS LEGEND

- SECTION MARK / SHEET NUMBER
- FRAME EL MARK, SEE FRAME EL ON (1/S502)
- STEEL STUD WALL, SEE DETAILS
- NON-BRG ARCH WALL
- STL COL, SEE DETAILS

100% Const. Docs.
May 07, 2010

NOTE:
THESE STRUCTURAL DRAWINGS ARE BASED ON ARCHITECTURAL DRAWINGS DATED 04.23.2010

DIMENSIONS AND ELEVATIONS, AS THEY RELATE TO THE BUILDING IN GENERAL, i.e. GRID TO GRID DIMENSIONS OR DECK BEARING ELEVATIONS, ARE SUPPLIED BY THE ARCHITECT. THEY ARE PROVIDED ON THE STRUCTURAL PLANS AND DETAILS FOR THE CONVENIENCE OF THE CONTRACTOR. VERIFY DIMENSIONS AND ELEVATIONS WITH ARCHITECTURAL DRAWINGS.

DUNN
DUNN ASSOCIATES, INC
Consulting Structural Engineers
EMAIL: ENG@DUNN-SE.COM
PH: 801-575-8877 FAX: 801-575-8875

This drawing, as an instrument of professional service, is the property of DUNN ASSOCIATES INC. and shall not be used, in whole or part, for any other project without the written permission of an authorized representative of DUNN ASSOCIATES INC. Unauthorized use will be prosecuted to the fullest extent of the law. Copyright © 2009 by DUNN ASSOCIATES INC.

NJRA ARCHITECTS
NJRA Architects, Inc.
370 East 500 South, Suite 101
Salt Lake City, Utah 84111
Phone: 801. 364. 9259
Fax: 801. 521. 0420
www.njraarchitects.com

Division of Facilities Construction & Management
Utah State Mail Center Office Renovation

DFCM Project #: 09258310
250 North 1950 West
Salt Lake City, Utah

ISSUE
March 10, 2010 - Const. Documents 100%

NJRA Project #: 10901.00
Dunn Project #: 10020
Designed By: Russel Merrel
Reviewed By: Paul McMullin
Drawn By: Alan Bennion

Foundation Plan

S201

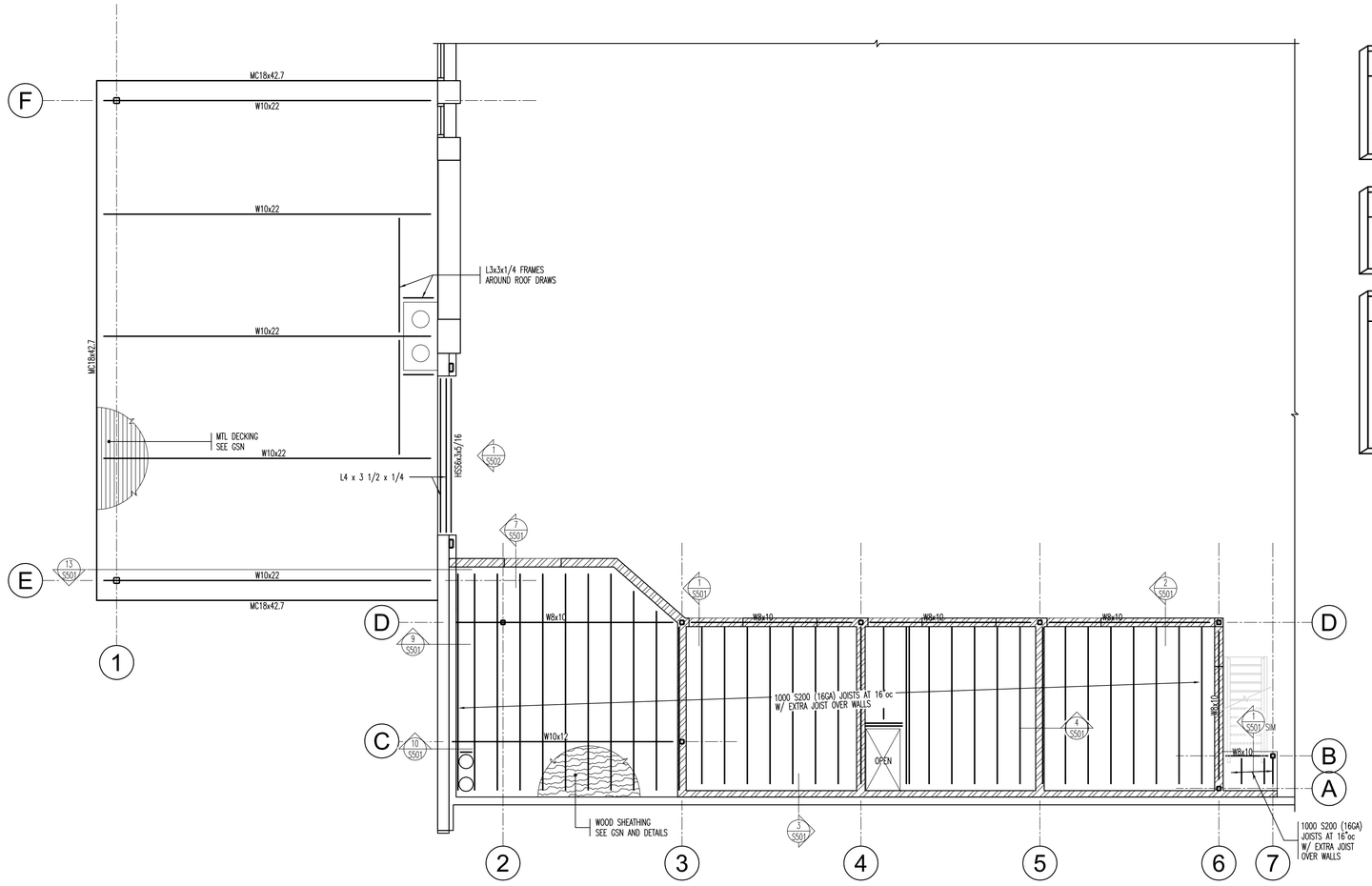

MEZZANINE AND CANOPY FRAMING PLAN

SCALE: 1/4"=1'-0"

FLOOR FRAMING PLAN NOTES:

1. TYPICAL FLOOR SHEATHING TO BE: 3/4" FIRE TREATED PLYWOOD. SEE DETAILS FOR FASTENER REQUIREMENTS.
2. SEE ARCHITECTURAL DRAWINGS FOR ALL CEILING AND FIRE RATING REQUIREMENTS.
3. DESIGN-BUILD STEEL SHIPS LADDER BY FABRICATOR.
4. ALL WALLS SHALL BE SHEATHED USING 1/2" SHEATHING AND NAILING AT 6"oc AT ALL PANEL EDGES AND SUPPORTS, UNO.

ROOF FRAMING PLAN NOTES:

1. VERIFY ROOF SLOPES, DRAINS, AND DECK BEARING ELEVATIONS WITH ARCHITECTURAL DRAWINGS.
2. PROVIDE L3x3x1/4 FRAMES TO SUPPORT ROOF DECK AROUND ROOF DRAINS.

MARKS & SYMBOLS LEGEND

- SECTION MARK / SHEET NUMBER
- FRAME EL MARK, SEE FRAME EL ON (1/S502)
- MTL ROOF DECK, SEE GSN ON (S101)
- STL COL, SEE DETAILS

100% Const. Docs.
May 07, 2010

NOTE:
THESE STRUCTURAL DRAWINGS ARE BASED ON ARCHITECTURAL DRAWINGS DATED 04.23.2010

DIMENSIONS AND ELEVATIONS, AS THEY RELATE TO THE BUILDING IN GENERAL, i.e. GRID TO GRID DIMENSIONS OR DECK BEARING ELEVATIONS, ARE SUPPLIED BY THE ARCHITECT. THEY ARE PROVIDED ON THE STRUCTURAL PLANS AND DETAILS FOR THE CONVENIENCE OF THE CONTRACTOR. VERIFY DIMENSIONS AND ELEVATIONS WITH ARCHITECTURAL DRAWINGS.

DUNN
DUNN ASSOCIATES, INC
Consulting Structural Engineers
EMAIL: ENG@DUNN-SE.COM
PH: 801-575-8877 FAX: 801-575-8875

This drawing, as an instrument of professional service, is the property of DUNN ASSOCIATES INC. and shall not be used, in whole or part, for any other project without the written permission of an authorized representative of DUNN ASSOCIATES INC. Unauthorized use will be prosecuted to the fullest extent of the law. Copyright © 2009 by DUNN ASSOCIATES INC.

NJRA ARCHITECTS
NJRA Architects, Inc.
370 East 500 South, Suite 101
Salt Lake City, Utah 84111
Phone: 801. 364. 9259
Fax: 801. 521. 0420
www.njraarchitects.com

Division of Facilities Construction & Management
Utah State Mail Center Office Renovation

DFCM Project #: 09258310
230 North 1950 West
Salt Lake City, Utah

ISSUE
March 10, 2010 - Const. Documents 100%

NJRA Project #: 10901.00
Dunn Project #: 10020
Designed By: Russel Merrel
Reviewed By: Paul McMullin
Drawn By: Alan Bennion

Framing Plan

S202

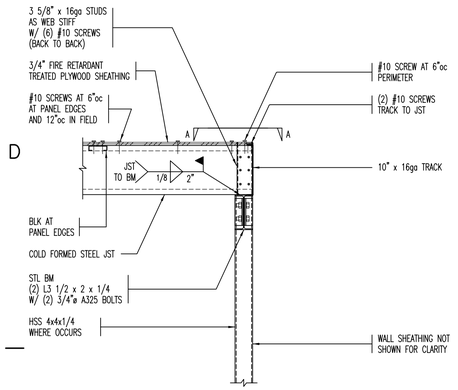

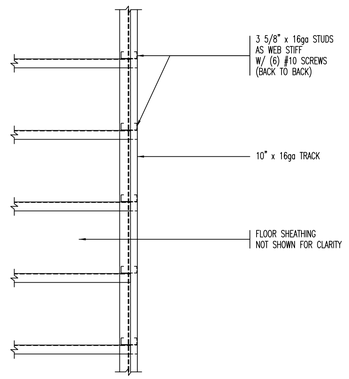

PLAN VIEW SECTION A–A

1 MEZZANINE DETAIL
100205601
NO SCALE

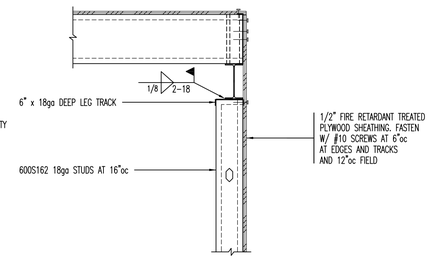

2 MEZZANINE DETAIL
100205601
NO SCALE

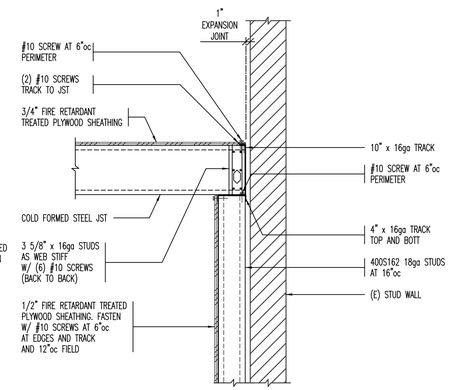

3 MEZZANINE DETAIL
100205601
NO SCALE

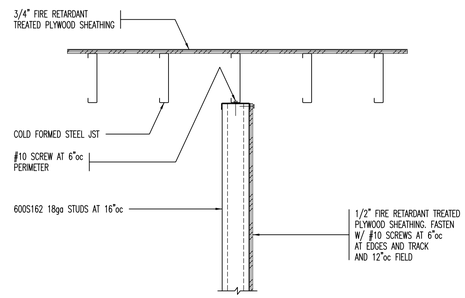

4 MEZZANINE DETAIL
100205601
NO SCALE

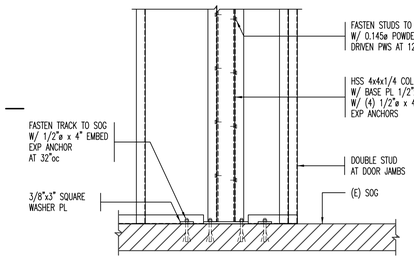

5 DETAIL
100205601
NO SCALE

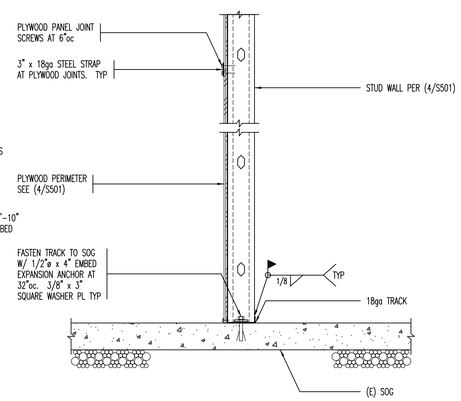

6 STUD WALL BASE DETAIL
100205601
NO SCALE

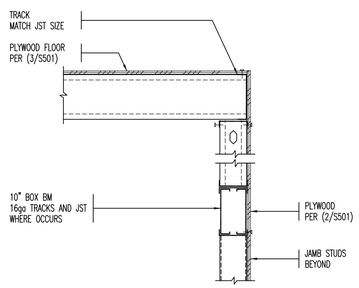

7 JOIST CONNECTION DETAIL
100205601
NO SCALE

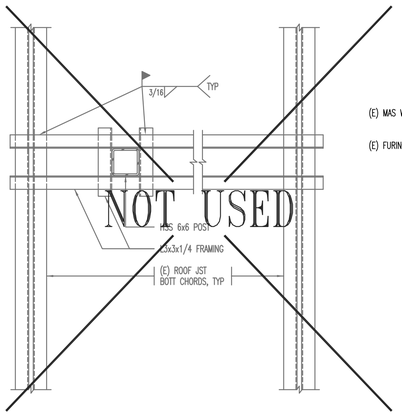

8 POST BRACING
100205601
NO SCALE

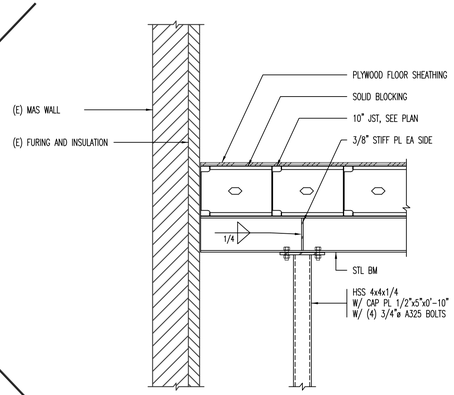

9 STEEL BEAM CONNECTION DETAIL
100205601
NO SCALE

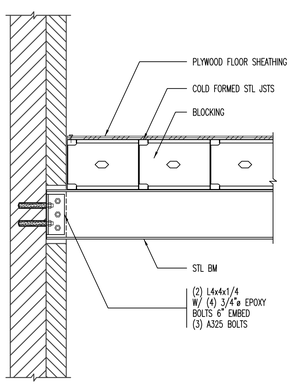

10 STEEL BEAM CONNECTION DETAIL
100205601
NO SCALE

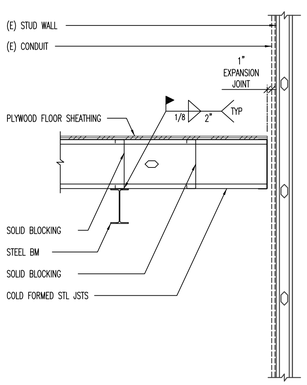

11 DETAIL
100205601
NO SCALE

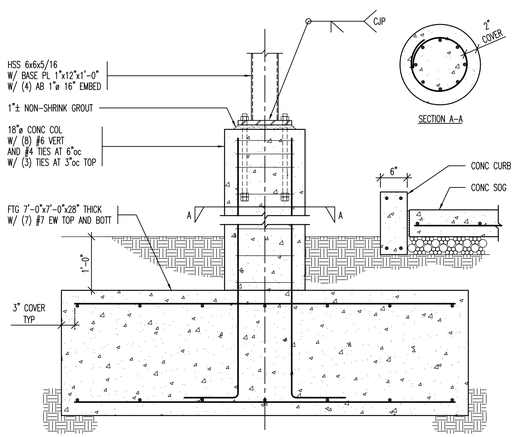

12 CONCRETE PIER DETAIL
100205601
NO SCALE

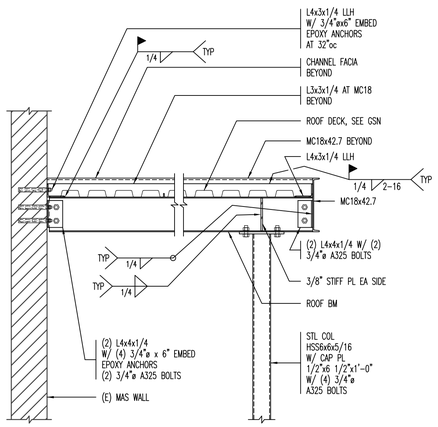

13 DETAIL
100205601
NO SCALE

100% Const. Docs.
May 07, 2010

NOTE:
THESE STRUCTURAL DRAWINGS ARE BASED ON ARCHITECTURAL DRAWINGS DATED 04.23.2010

DIMENSIONS AND ELEVATIONS, AS THEY RELATE TO THE BUILDING IN GENERAL, i.e. GRID TO GRID DIMENSIONS OR DECK BEARING ELEVATIONS, ARE SUPPLIED BY THE ARCHITECT. THEY ARE PROVIDED ON THE STRUCTURAL PLANS AND DETAILS FOR THE CONVENIENCE OF THE CONTRACTOR. VERIFY DIMENSIONS AND ELEVATIONS WITH ARCHITECTURAL DRAWINGS.

DUNN
DUNN ASSOCIATES, INC
Consulting Structural Engineers
EMAIL: ENG@DUNN-SE.COM
PH: 801-575-8877 FAX: 801-575-8875

This drawing, as an instrument of professional service, is the property of DUNN ASSOCIATES INC. and shall not be used, in whole or part, for any other project without the written permission of an authorized representative of DUNN ASSOCIATES INC. Unauthorized use will be prosecuted to the fullest extent of the law. Copyright © 2009 by DUNN ASSOCIATES INC.

NJRA ARCHITECTS
NJRA Architects, Inc.
370 East 500 South, Suite 101
Salt Lake City, Utah 84111
Phone: 801. 364. 9259
Fax: 801. 521. 0420
www.njraarchitects.com

Division of Facilities Construction & Management
Utah State Mail Center
Office Renovation

DFCM Project #: 09258310
250 North 1950 West
Salt Lake City, Utah

ISSUE
March 10, 2010 - Const. Documents 100%

NJRA Project #: 10901.00
Dunn Project #: 10020
Designed By: Russel Merrel
Reviewed By: Paul McMullin
Drawn By: Alan Bennion

Details

S501

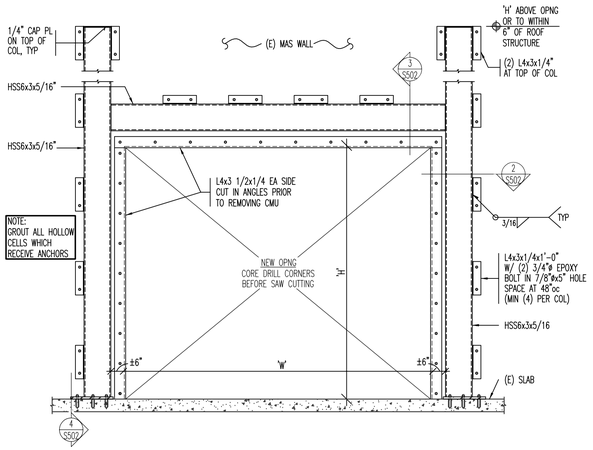

1 TUBE STEEL COLUMN TO SLAB DETAIL

NO SCALE

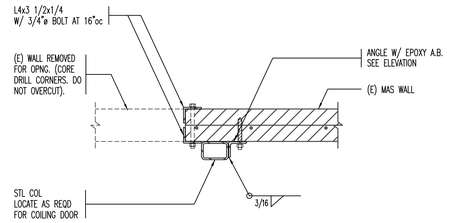

2 TUBE STEEL COLUMN TO EXISTING MAS WALL.

NO SCALE

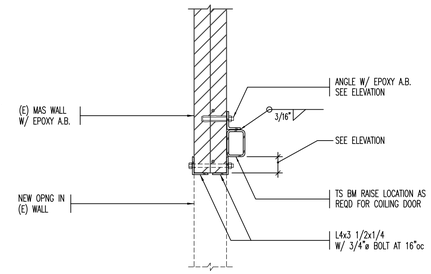

3 TUBE STEEL BEAM TO WALL DETAIL

NO SCALE

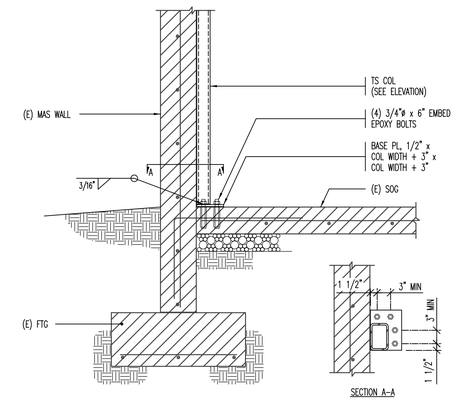

4 TUBE STEEL COLUMN TO SLAB DETAIL

NO SCALE

100% Const. Docs.
May 07, 2010

NOTE:
THESE STRUCTURAL DRAWINGS ARE BASED ON ARCHITECTURAL DRAWINGS DATED 04.23.2010

DIMENSIONS AND ELEVATIONS, AS THEY RELATE TO THE BUILDING IN GENERAL, i.e. GRID TO GRID DIMENSIONS OR DECK BEARING ELEVATIONS, ARE SUPPLIED BY THE ARCHITECT. THEY ARE PROVIDED ON THE STRUCTURAL PLANS AND DETAILS FOR THE CONVENIENCE OF THE CONTRACTOR. VERIFY DIMENSIONS AND ELEVATIONS WITH ARCHITECTURAL DRAWINGS.

DUNN
DUNN ASSOCIATES, INC
Consulting Structural Engineers
EMAIL: ENG@DUNN-SE.COM
PH: 801-575-8877 FAX: 801-575-8875

This drawing, as an instrument of professional service, is the property of DUNN ASSOCIATES INC. and shall not be used, in whole or part, for any other project without the written permission of an authorized representative of DUNN ASSOCIATES INC. Unauthorized use will be prosecuted to the fullest extent of the law. Copyright © 2009 by DUNN ASSOCIATES INC.

NJRA ARCHITECTS
NJRA Architects, Inc.
370 East 500 South, Suite 101
Salt Lake City, Utah 84111
Phone: 801. 364. 9259
Fax: 801. 521. 0420
www.njraarchitects.com

Division of Facilities Construction & Management
Utah State Mail Center
Office Renovation

DFCM Project #: 09258310
230 North 1950 West
Salt Lake City, Utah

ISSUE
March 10, 2010 - Const. Documents 100%

NJRA Project #: 10901.00
Dunn Project #: 10020
Designed By: Russel Merrel
Reviewed By: Paul McMullin
Drawn By: Alan Bennion

Details

S502

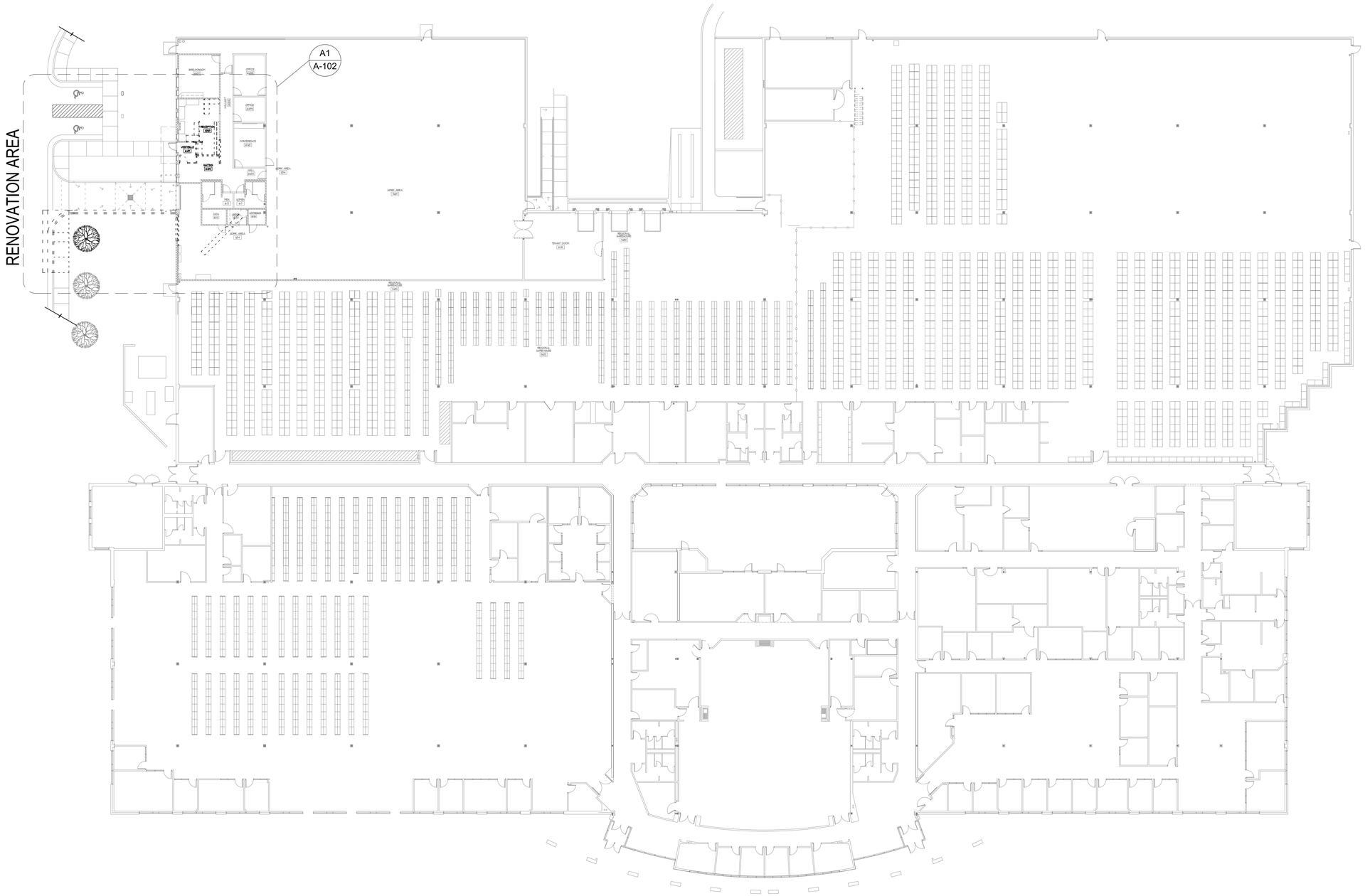

A1 Overall Floor Plan
NOT TO SCALE

NORTH

NJRA Architects, Inc.
370 East 500 South, Suite 101
Salt Lake City, Utah 84111

Phone: 801. 364. 9259
Fax: 801. 521. 0420
www.njraarchitects.com

STATE OF UTAH
SELVAM RAJAVELU
267857
LICENSED ARCHITECT

Division of Facilities Construction & Management
Utah State Mail Center
Office Renovation

DFCM Project #: 09258310
250 North 1950 West
Salt Lake City, Utah

ISSUE
March 10, 2010 - Const. Documents 100%

NJRA Project #: 10901.00

Overall Floor Plan

A-100

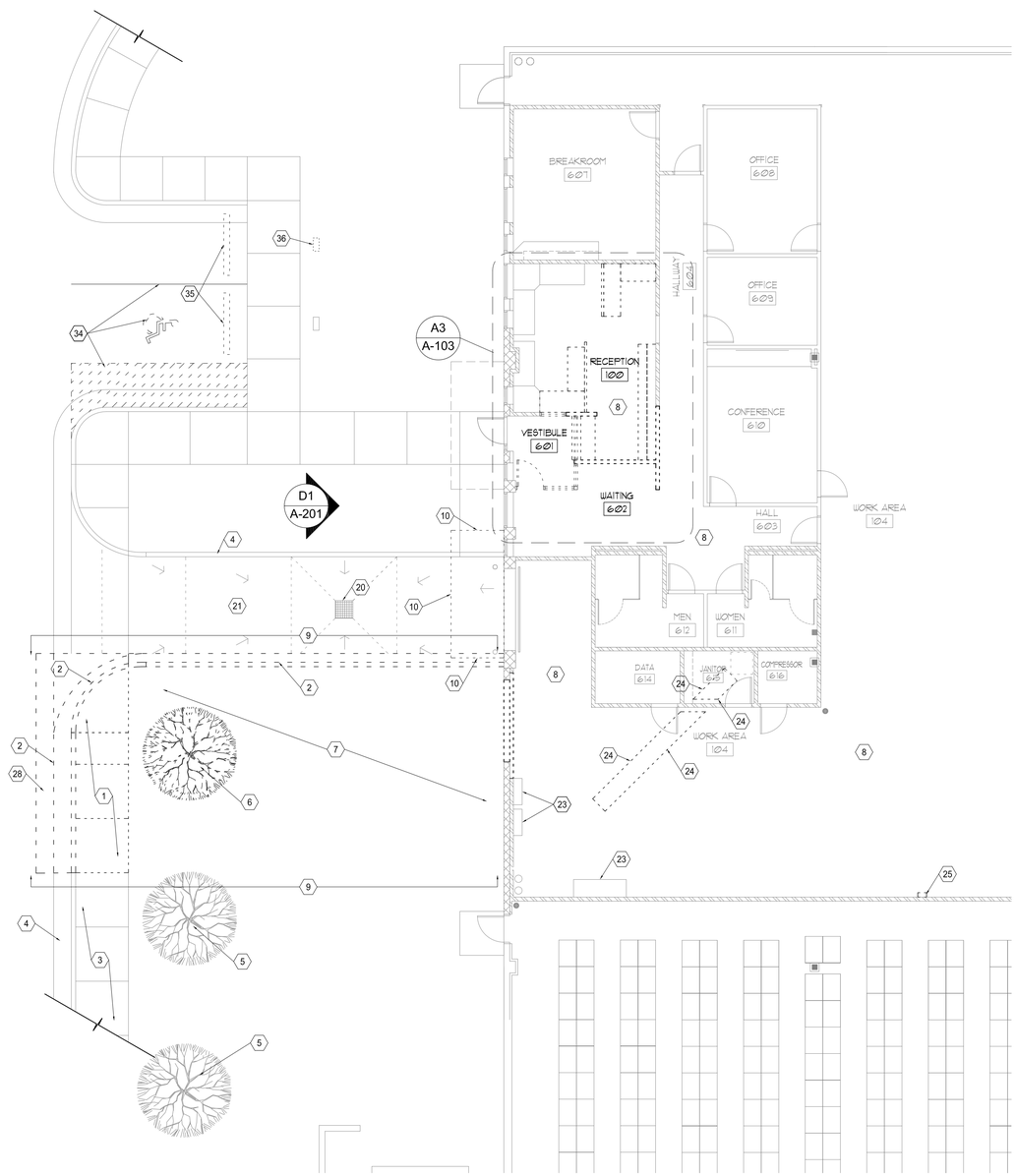

A1 Level 1 Demolition Floor Plan
1/8" = 1'-0"

NORTH

KEYED NOTES

NOTE: KEYED NOTES ARE COMMON FOR SHEETS A-102 - A-103. HENCE SOME KEYED NOTES MAY NOT APPEAR ON DRAWINGS IN THIS SHEET.

1. EXISTING CONCRETE SIDEWALK TO BE REMOVED.

2. EXISTING CONCRETE CURB AND GUTTER TO BE REMOVED.

3. EXISTING CONCRETE SIDEWALK TO REMAIN.

4. EXISTING CONCRETE CURB AND GUTTER TO REMAIN.

5. EXISTING TREES, SHRUBS, OR LANDSCAPING TO REMAIN. PROTECT FROM DAMAGE DURING DEMOLITION AND CONSTRUCTION ACTIVITIES.

6. EXISTING TREE TO BE REMOVED.

7. EXISTING GRASS AND ASSOCIATED SPRINKLER SYSTEM TO BE REMOVED IN THIS AREA.

8. EXISTING BUILDING TO REMAIN. BUILDING WILL BE USED DURING CONSTRUCTION. COORDINATE ALL ITEMS AFFECTING THE BUILDING, INCLUDING UTILITY SHUT-DOWNS, LARGE AND NOISY EQUIPMENT OPERATION, ETC., WITH BUILDING USERS.

9. COORDINATE EDGE OF DEMOLITION WITH REQUIRED WORK AND NEW SITE PLAN.

10. EXISTING OVERHEAD CANOPY TO BE REMOVED. PATCH AND REPAIR CMU WALL.

11. EXISTING ALUMINUM WINDOW AND DOOR ASSEMBLY TO BE REMOVED. SAVE AND PROTECT DOOR TO BE REUSED LATER.

12. OVERHEAD CABINETS TO BE REMOVED SAVE AND PROTECT DURING DEMOLITION AND CONSTRUCTION FOR RE-INSTALLATION IN NEW LOCATION.

13. WALLS TO BE REMOVED.

14. WINDOW TO BE REMOVED SAVE AND PROTECT DURING DEMOLITION AND CONSTRUCTION FOR RE-INSTALLATION.

15. COUNTERTOP TO BE REMOVED.

16. EXISTING LIGHTING TO BE REMOVED.

17. CEILING GRID AND TILES TO BE REMOVED. SAVE AND PROTECT DURING DEMOLITION AND CONSTRUCTION FOR RE-INSTALLATION.

18. EXISTING MECHANICAL AIR RETURN AND DIFFUSERS TO BE REMOVED. SEE MECHANICAL DRAWINGS FOR EXTENT OF MECHANICAL DUCT REMOVAL.

19. EXISTING GYPSUM BOARD CEILING TO BE REMOVED.

20. EXISTING CATCH BASIN TO REMAIN.

21. EXISTING CONCRETE PAVING TO REMAIN.

22. WINDOW TO BE REMOVED.

23. EXISTING EQUIPMENT TO REMAIN. PROTECT DURING DEMOLITION AND CONSTRUCTION.

24. EXISTING 6-1/2" CONCRETE FLOOR TO BE SAW CUT AND REMOVED IN THIS AREA FOR NEW SEWER LINE. PATCH CONCRETE PER DETAIL B3/A505. SEE PLUMBING DRAWINGS.

25. EXISTING BTU METER TO BE REMOVED AND REINSTALLED DIRECTLY ABOVE, ACCESSIBLE FROM NEW MEZZANINE LEVEL.

26. EXISTING CARPET TO BE REMOVED AND MODIFIED. PROTECT DURING DEMOLITION AND CONSTRUCTION FOR RE-INSTALLATION.

27. REMOVE EXISTING FLOOR COVERING.

28. REMOVE EXISTING ASHPALT PAVING.

29. REMOVE BASE CABINETS AND COUNTERTOP. SAVE AND PROTECT DURING DEMOLITION AND CONSTRUCTION. RETURN TO UTAH STATE MAIL.

30. CASEWORK PARTITION WALLS TO BE REMOVED.

31. REMOVE CASEWORK. PROTECT DURING DEMOLITION AND CONSTRUCTION FOR RE-INSTALLLATION IN SAME LOCATION.

32. REMOVE CASEWORK. PROTECT DURING DEMOLITION AND CONSTRUCTION FOR RE-INSTALLATION IN NEW LOCATION.

33. REMOVE CASEWORK. PROTECT DURING DEMOLITION AND CONSTRUCTION. RETURN TO UTAH STATE MAIL.

34. REMOV EXISTING PARKING PAINT.

35. REMOVE EXISTING PARKING CURB. SAVE AND PROTECT DURING DEMOLITION AND CONSTRUCTION TO BE REINSTALLED.

36. REMOVE EXISTING PARKING SIGN.

GENERAL NOTES

A. NOT ALL TREES AND VEGETATION ARE SHOWN ON THIS PLAN. COORDINATE WITH ARCHITECT IF QUESTIONS ARISE REGARDING DEMOLITION OR PRESERVATION OF EXISTING LANDSCAPING.

B. WORK WILL STILL BE CONDUCTED AND WORKERS WILL BE OCCUPYING AREAS OF THE BUILDING DURING DEMOLITION AND CONSTRUCTION. CARE SHOULD BE TAKEN TO ISOLATE CONSTRUCTION ACTIVITIES FROM WORKERS.

C. EXISTING CEILING GRID, TILES AND MECHANICAL GRILLES AND DIFFUSERS SHALL BE REMOVED TO ALLOW FOR DEMOLITION AND NEW CONSTRUCTION. CEILING GRID, TILES AND MECHANICAL GRILLES AND DIFFUSERS SHALL BE PROTECTED DURING DEMOLITION AND NEW CONSTRUCTION AND WILL BE CLEANED AND USED FOR RE INSTALLATION

NJRA ARCHITECTS

NJRA Architects, Inc.
370 East 500 South, Suite 101
Salt Lake City, Utah 84111

Phone: 801. 364. 9259
Fax: 801. 521. 0420
www.njraarchitects.com

STATE OF UTAH
SELVAM RAJAVELU
267857
LICENSED ARCHITECT

Division of Facilities Construction & Management
Utah State Mail Center
Office Renovation

DFCM Project #: 09258310
250 North 1950 West
Salt Lake City, Utah

ISSUE
March 10, 2010 - Const. Documents 100%

NJRA Project #: 10901.00

Level 1
Demolition Plan

A-102

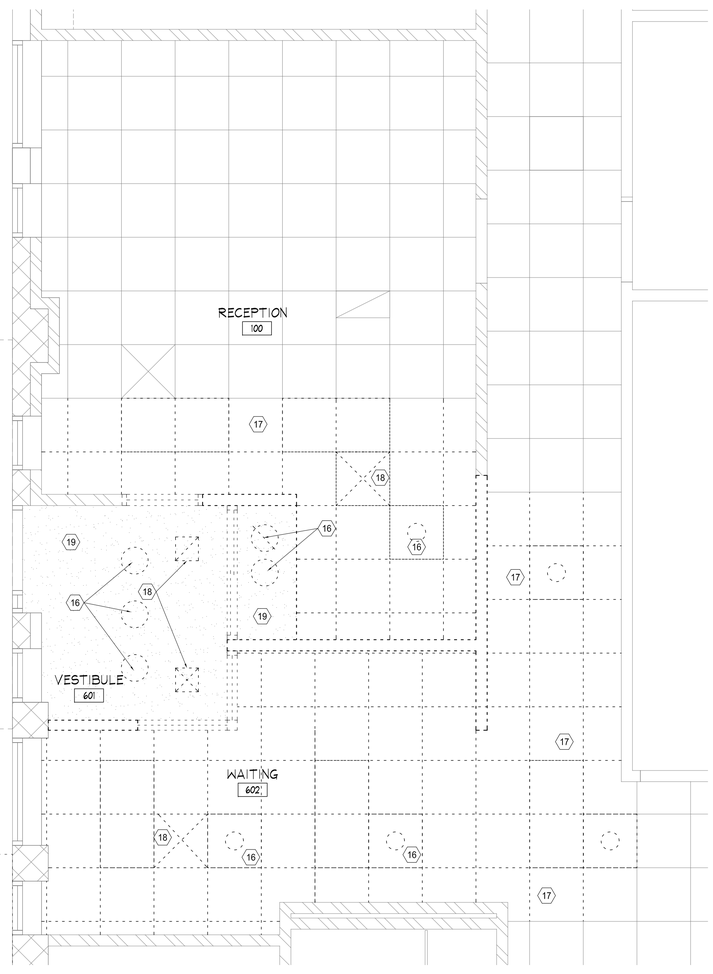

A1 Level 1 Demolition Ceiling Plan
3/8" = 1'-0"
NORTH

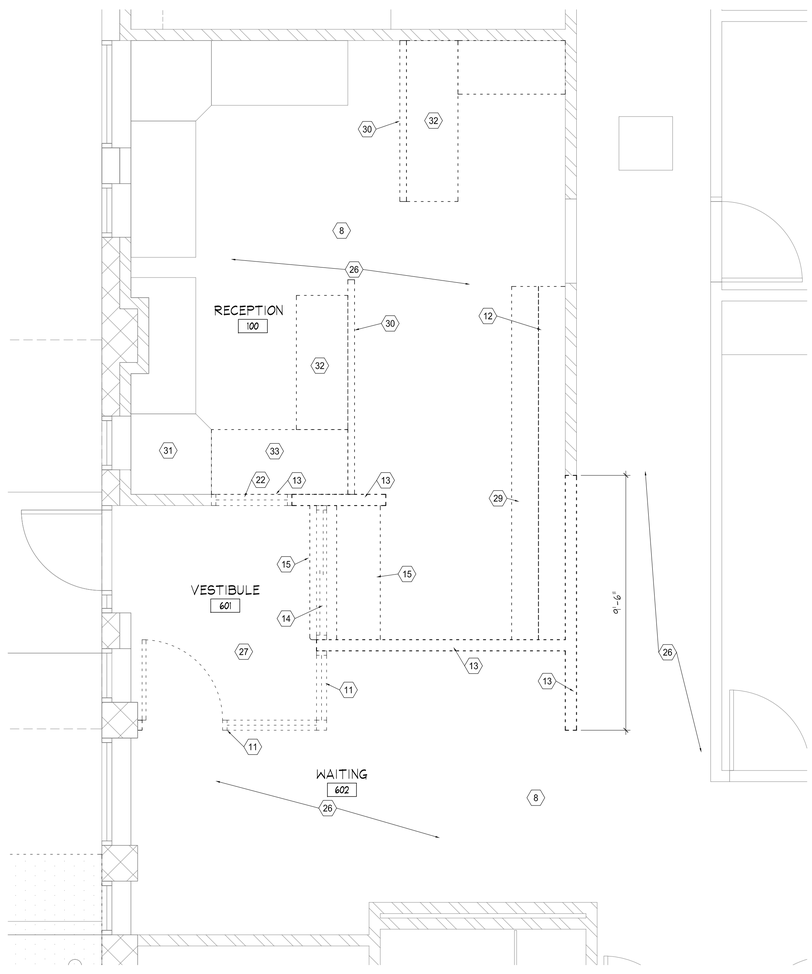

A3 Level 1 Demolition Floor Plan
3/8" = 1'-0"
NORTH

KEYED NOTES

NOTE: KEYED NOTES ARE COMMON FOR SHEETS A-102 - A-103. HENCE SOME KEYED NOTES MAY NOT APPEAR ON DRAWINGS IN THIS SHEET.

1. EXISTING CONCRETE SIDEWALK TO BE REMOVED.

2. EXISTING CONCRETE CURB AND GUTTER TO BE REMOVED.

3. EXISTING CONCRETE SIDEWALK TO REMAIN.

4. EXISTING CONCRETE CURB AND GUTTER TO REMAIN.

5. EXISTING TREES, SHRUBS, OR LANDSCAPING TO REMAIN. PROTECT FROM DAMAGE DURING DEMOLITION AND CONSTRUCTION ACTIVITIES.

6. EXISTING TREE TO BE REMOVED.

7. EXISTING GRASS AND ASSOCIATED SPRINKLER SYSTEM TO BE REMOVED IN THIS AREA.

8. EXISTING BUILDING TO REMAIN. BUILDING WILL BE USED DURING CONSTRUCTION. COORDINATE ALL ITEMS AFFECTING THE BUILDING, INCLUDING UTILITY SHUT-DOWNS, LARGE AND NOISY EQUIPMENT OPERATION, ETC., WITH BUILDING USERS.

9. COORDINATE EDGE OF DEMOLITION WITH REQUIRED WORK AND NEW SITE PLAN.

10. EXISTING OVERHEAD CANOPY TO BE REMOVED. PATCH AND REPAIR CMU WALL.

11. EXISTING ALUMINUM WINDOW AND DOOR ASSEMBLY TO BE REMOVED. SAVE AND PROTECT DOOR TO BE REUSED LATER.

12. OVERHEAD CABINETS TO BE REMOVED SAVE AND PROTECT DURING DEMOLITION AND CONSTRUCTION FOR RE-INSTALLATION IN NEW LOCATION.

13. WALLS TO BE REMOVED.

14. WINDOW TO BE REMOVED SAVE AND PROTECT DURING DEMOLITION AND CONSTRUCTION FOR RE-INSTALLATION.

15. COUNTERTOP TO BE REMOVED.

16. EXISTING LIGHTING TO BE REMOVED.

17. CEILING GRID AND TILES TO BE REMOVED. SAVE AND PROTECT DURING DEMOLITION AND CONSTRUCTION FOR RE-INSTALLATION.

18. EXISTING MECHANICAL AIR RETURN AND DIFFUSERS TO BE REMOVED. SEE MECHANICAL DRAWINGS FOR EXTENT OF MECHANICAL DUCT REMOVAL.

19. EXISTING GYPSUM BOARD CEILING TO BE REMOVED.

20. EXISTING CATCH BASIN TO REMAIN.

21. EXISTING CONCRETE PAVING TO REMAIN.

22. WINDOW TO BE REMOVED.

23. EXISTING EQUIPMENT TO REMAIN. PROTECT DURING DEMOLITION AND CONSTRUCTION.

24. EXISTING 6-1/2" CONCRETE FLOOR TO BE SAW CUT AND REMOVED IN THIS AREA FOR NEW SEWER LINE. PATCH CONCRETE PER DETAIL B3/A505. SEE PLUMBING DRAWINGS.

25. EXISTING BTU METER TO BE REMOVED AND REINSTALLED DIRECTLY ABOVE, ACCESSIBLE FROM NEW MEZZANINE LEVEL.

26. EXISTING CARPET TO BE REMOVED AND MODIFIED. PROTECT DURING DEMOLITION AND CONSTRUCTION FOR RE-INSTALLATION.

27. REMOVE EXISTING FLOOR COVERING.

28. REMOVE EXISTING ASHPALT PAVING.

29. REMOVE BASE CABINETS AND COUNTERTOP. SAVE AND PROTECT DURING DEMOLITION AND CONSTRUCTION. RETURN TO UTAH STATE MAIL.

30. CASEWORK PARTITION WALLS TO BE REMOVED.

31. REMOVE CASEWORK. PROTECT DURING DEMOLITION AND CONSTRUCTION FOR RE-INSTALLLATION IN SAME LOCATION.

32. REMOVE CASEWORK. PROTECT DURING DEMOLITION AND CONSTRUCTION FOR RE-INSTALLATION IN NEW LOCATION.

33. REMOVE CASEWORK. PROTECT DURING DEMOLITION AND CONSTRUCTION. RETURN TO UTAH STATE MAIL.

34. REMOV EXISTING PARKING PAINT.

35. REMOVE EXISTING PARKING CURB. SAVE AND PROTECT DURING DEMOLITION AND CONSTRUCTION TO BE REINSTALLED.

36. REMOVE EXISTING PARKING SIGN.

GENERAL NOTES

A. NOT ALL TREES AND VEGETATION ARE SHOWN ON THIS PLAN. COORDINATE WITH ARCHITECT IF QUESTIONS ARISE REGARDING DEMOLITION OR PRESERVATION OF EXISTING LANDSCAPING.

B. WORK WILL STILL BE CONDUCTED AND WORKERS WILL BE OCCUPYING AREAS OF THE BUILDING DURING DEMOLITION AND CONSTRUCTION. CARE SHOULD BE TAKEN TO ISOLATE CONSTRUCTION ACTIVITIES FROM WORKERS.

C. EXISTING CEILING GRID, TILES AND MECHANICAL GRILLES AND DIFFUSERS SHALL BE REMOVED TO ALLOW FOR DEMOLITION AND NEW CONSTRUCTION. CEILING GRID, TILES AND MECHANICAL GRILLES AND DIFFUSERS SHALL BE PROTECTED DURING DEMOLITION AND NEW CONSTRUCTION AND WILL BE CLEANED AND USED FOR RE INSTALLATION

NJRA ARCHITECTS
NJRA Architects, Inc.
370 East 500 South, Suite 101
Salt Lake City, Utah 84111
Phone: 801. 364. 9259
Fax: 801. 521. 0420
www.njraarchitects.com

STATE OF UTAH
SELVAM RAJAVELU
267857
LICENSED ARCHITECT

Division of Facilities Construction & Management
Utah State Mail Center
Office Renovation

DFCM Project #: 09258310
250 North 1950 West
Salt Lake City, Utah

ISSUE
March 10, 2010 - Const. Documents 100%

NJRA Project #: 10901.00

Level 1
Demolition Plan

A-103

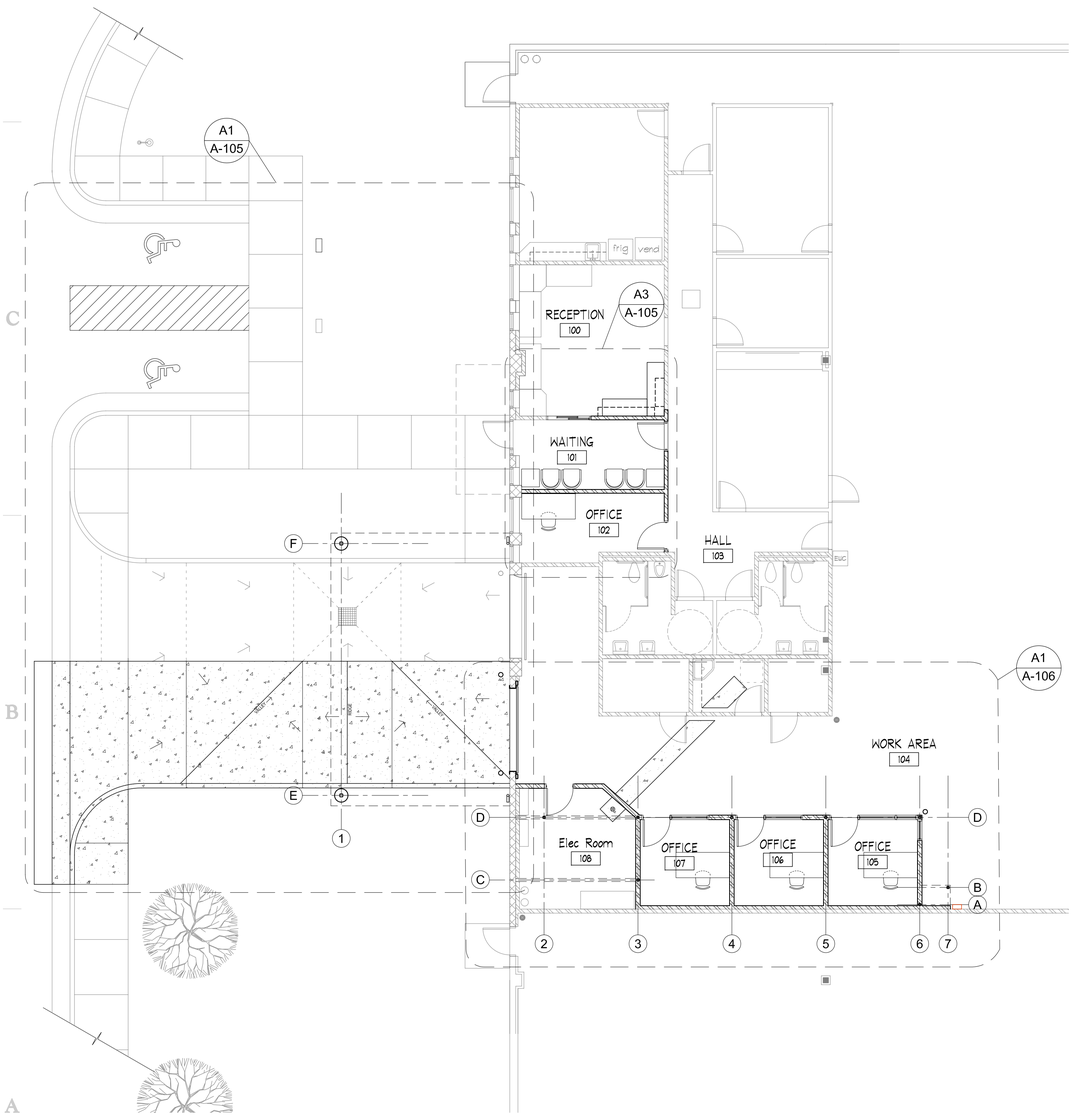

A1 Level 1 Floor Plan
1/8" = 1'-0"
NORTH

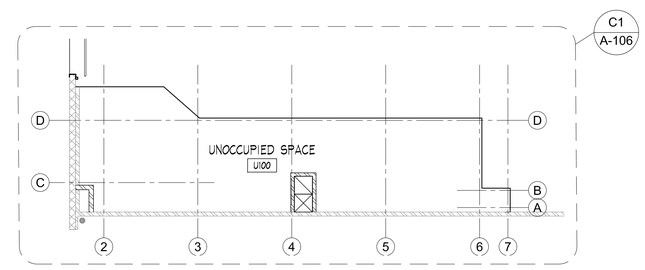

A3 Unoccupied Space Plan
1/8" = 1'-0"
NORTH

KEYED NOTES

NOTE: KEYED NOTES ARE COMMON FOR SHEETS A-104 TO A-106. HENCE SOME KEYED NOTES MAY NOT APPEAR ON DRAWINGS IN THIS SHEET.

1. LINE OF TRANSITION BETWEEN FLOOR COVERINGS. SEE FINISH FLOOR PLANS.

2. EQUIPMENT, FURNITURE, ETC., NOT IN CONTRACT.

3. EXISTING CABINETS AND CASEWORK RE-INSTALLED. SEE INTERIOR ELEVATIONS.

4. OPENINGS IN FLOOR FOR EXISTING PIPES AND MECHANICAL DUCT WORK.

5. CANOPY. SEE ROOF PLAN C1/A109.

6. OVERHEAD COILING DOOR TRACK ATTACH TO EXISTING MASONRY WALL PER MANUFACTURERS RECOMMENDATIONS, UTILIZING APPROVED ANCHORS LISTED ON SHEET S101.

7. NOT USED.

8. CANOPY COLUMNS. SEE DETAIL C4/A501.

9. BOLLARD. SEE DETAIL. D4/A501

10. EXISTING CONCRETE SIDEWALK.

11. EXISTING CONCRETE CURB AND GUTTER.

12. EXISTING TREES, SHRUBS, OR LANDSCAPING.

13. CURB AND GUTTER. SEE DETAIL A1/A501.

14. SIDEWALK. SEE DETAIL A1/A501.

15. LANDSCAPING. REPLACE LAWN AREA AND ASSOCIATED WATER SPRINKLERS AS TO MAKE THE SYSTEM WORK PROPERLY.

16. EXISTING CATCH BASIN.

17. EXISTING CONCRETE PAVING.

18. CONCRETE PAVING. 6" THICK. SEE DETAIL B1/A501.

19. EXISTING BTU METER RELOCATED.

20. EXISTING MECHANICAL AND ELECTRICAL EQUIPMENT TO REMAIN. PROTECT DURING DEMOLITION AND CONSTRUCTION.

21. SHORT WALLS BUILT AROUND EXISTING PIPING AND NEW MECHANICAL DUCTS. SEE WALL TYPES.

22. FLOOR DRAIN. SEE PLUMBING DRAWINGS.

23. CONCRETE INFILL. SEE DETAIL B3/A505.

24. CUT AND REMOVE ASPHALT PAVING FOR NEW GUTTER INSTALLATION. PATCH ASPHALT PAVING WITH THICKNESS MATCHING EXISTING PAVING.

25. DOWNSPOUT GALVENIZED 3" DIAMETER SCH 40 PIPE. FULLY WELDED. GRIND ALL WELDS SMOOTH. SEE DETAIL A5/A505 FOR ANCHORAGE TO WALL.

26. REINSTALLED PARKING CURBS.

27. NEW PARKING PAINT.

28. NEW ACCESSIBLE PARKING SIGN. SEE DETAIL B5/A505

29. EXISTING ACCESSIBLE PARKING SIGN.

LEGEND

OFFICE — ROOM NAME
114 — ROOM NUMBER

1 — DENOTES WALL SECTION. SEE A1/A504

W A — DOOR NUMBER. SEE DOOR SCHEDULE, SHEET A801

A — WINDOW TAG. SEE WINDOW SCHEDULE C1, D1/A801

NJRA ARCHITECTS

NJRA Architects, Inc.
370 East 500 South, Suite 101
Salt Lake City, Utah 84111

Phone: 801. 364. 9259
Fax: 801. 521. 0420
www.njraarchitects.com

STATE OF UTAH
SELVAM RAJAVELU
267857
LICENSED ARCHITECT

Division of Facilities Construction & Management
Utah State Mail Center
Office Renovation

DFCM Project #: 09258310
250 North 1950 West
Salt Lake City, Utah

ISSUE
March 10, 2010 - Const. Documents 100%

NJRA Project #: 10901.00

Floor Plans

A-104

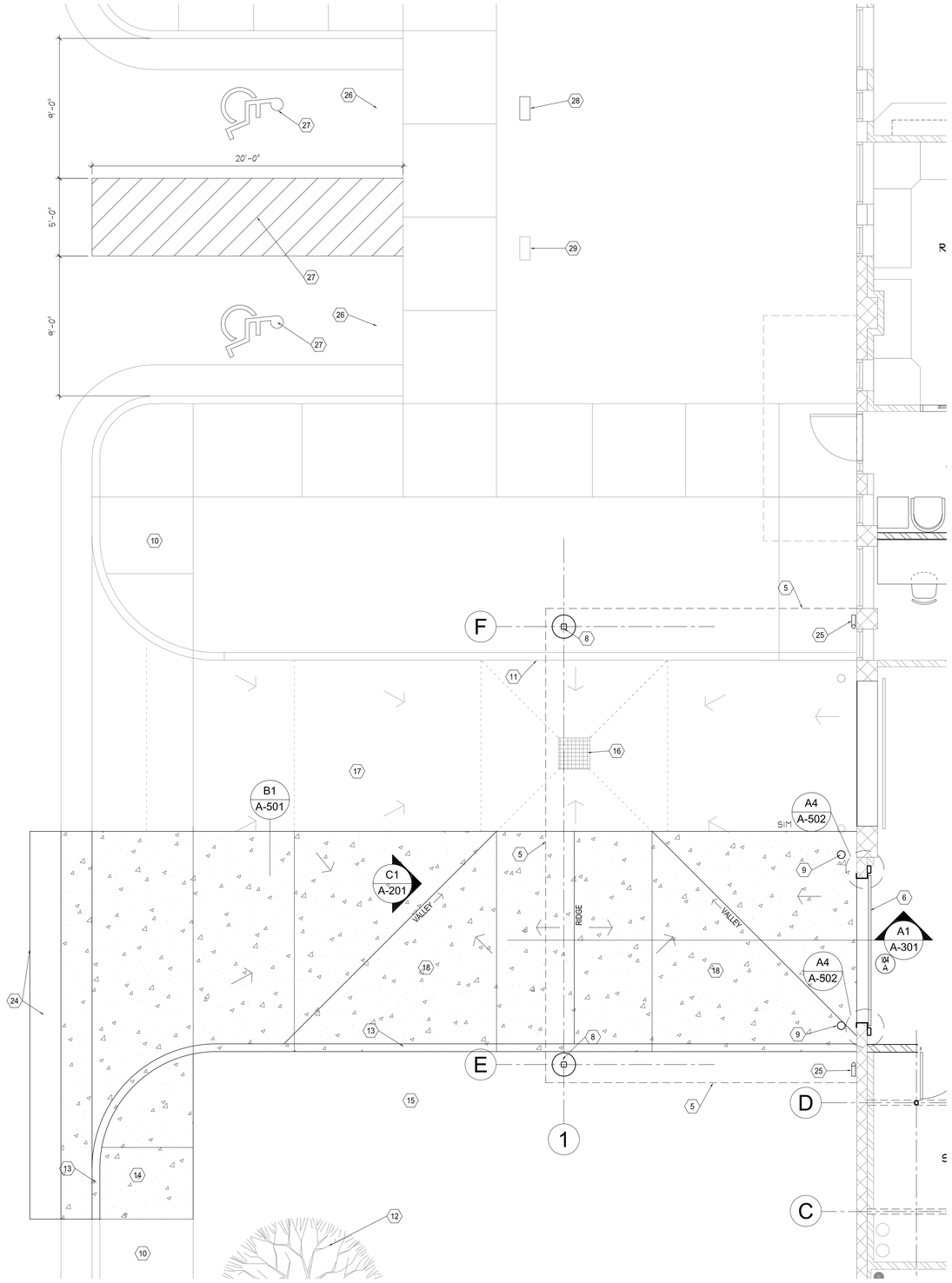

A1 Level 1 Floor Plan
1/4" = 1'-0"

NORTH

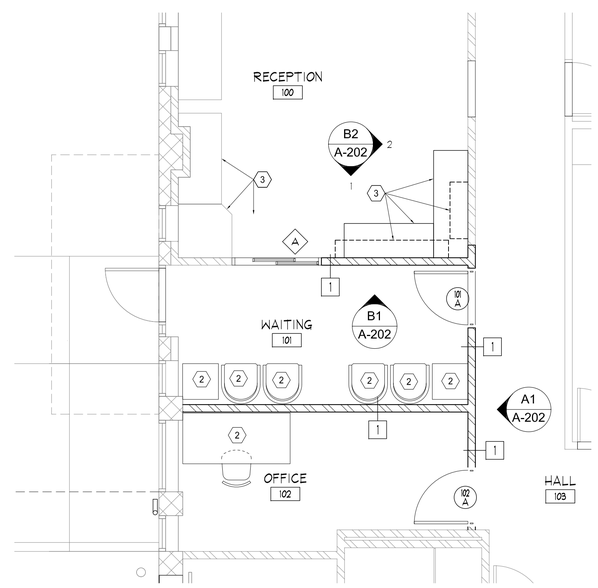

A3 Level 1 Floor Plan
1/4" = 1'-0"

NORTH

KEYED NOTES

NOTE: KEYED NOTES ARE COMMON FOR SHEETS A-104 TO A-106. HENCE SOME KEYED NOTES MAY NOT APPEAR ON DRAWINGS IN THIS SHEET.

1. LINE OF TRANSITION BETWEEN FLOOR COVERINGS. SEE FINISH FLOOR PLANS.

2. EQUIPMENT, FURNITURE, ETC., NOT IN CONTRACT.

3. EXISTING CABINETS AND CASEWORK RE-INSTALLED. SEE INTERIOR ELEVATIONS.

4. OPENINGS IN FLOOR FOR EXISTING PIPES AND MECHANICAL DUCT WORK.

5. CANOPY. SEE ROOF PLAN C1/A109.

6. OVERHEAD COILING DOOR TRACK ATTACH TO EXISTING MASONRY WALL PER MANUFACTURERS RECOMMENDATIONS, UTILIZING APPROVED ANCHORS LISTED ON SHEET S101.

7. NOT USED.

8. CANOPY COLUMNS. SEE DETAIL C4/A501.

9. BOLLARD. SEE DETAIL. D4/A501

10. EXISTING CONCRETE SIDEWALK.

11. EXISTING CONCRETE CURB AND GUTTER.

12. EXISTING TREES, SHRUBS, OR LANDSCAPING.

13. CURB AND GUTTER. SEE DETAIL A1/A501.

14. SIDEWALK. SEE DETAIL A1/A501.

15. LANDSCAPING. REPLACE LAWN AREA AND ASSOCIATED WATER SPRINKLERS AS TO MAKE THE SYSTEM WORK PROPERLY.

16. EXISTING CATCH BASIN.

17. EXISTING CONCRETE PAVING.

18. CONCRETE PAVING. 6" THICK. SEE DETAIL B1/A501.

19. EXISTING BTU METER RELOCATED.

20. EXISTING MECHANICAL AND ELECTRICAL EQUIPMENT TO REMAIN. PROTECT DURING DEMOLITION AND CONSTRUCTION.

21. SHORT WALLS BUILT AROUND EXISTING PIPING AND NEW MECHANICAL DUCTS. SEE WALL TYPES.

22. FLOOR DRAIN. SEE PLUMBING DRAWINGS.

23. CONCRETE INFILL. SEE DETAIL B3/A505.

24. CUT AND REMOVE ASPHALT PAVING FOR NEW GUTTER INSTALLATION. PATCH ASPHALT PAVING WITH THICKNESS MATCHING EXISTING PAVING.

25. DOWNSPOUT GALVENIZED 3" DIAMETER SCH 40 PIPE. FULLY WELDED. GRIND ALL WELDS SMOOTH. SEE DETAIL A5/A505 FOR ANCHORAGE TO WALL.

26. REINSTALLED PARKING CURBS.

27. NEW PARKING PAINT.

28. NEW ACCESSIBLE PARKING SIGN. SEE DETAIL B5/A505

29. EXISTING ACCESSIBLE PARKING SIGN.

LEGEND

OFFICE 114 — ROOM NAME / ROOM NUMBER

1 — DENOTES WALL SECTION. SEE A1/A504

101 A — DOOR NUMBER. SEE DOOR SCHEDULE, SHEET A801

A — WINDOW TAG. SEE WINDOW SCHEDULE C1, D1/A801

NJRA ARCHITECTS

NJRA Architects, Inc.
370 East 500 South, Suite 101
Salt Lake City, Utah 84111

Phone: 801. 364. 9259
Fax: 801. 521. 0420
www.njraarchitects.com

STATE OF UTAH
SELVAM RAJAVELU
267857
LICENSED ARCHITECT

Division of Facilities Construction & Management
Utah State Mail Center
Office Renovation

DFCM Project #: 09258310
250 North 1950 West
Salt Lake City, Utah

ISSUE
March 10, 2010 - Const. Documents 100%

NJRA Project #: 10901.00

Enlarged Floor Plans

A-105

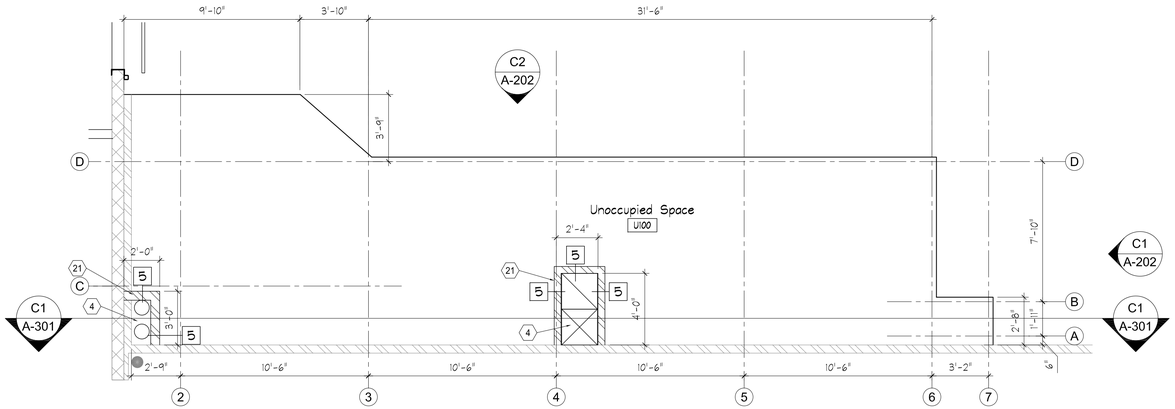

C1 Unoccupied Space

1/4" = 1'-0"

NORTH

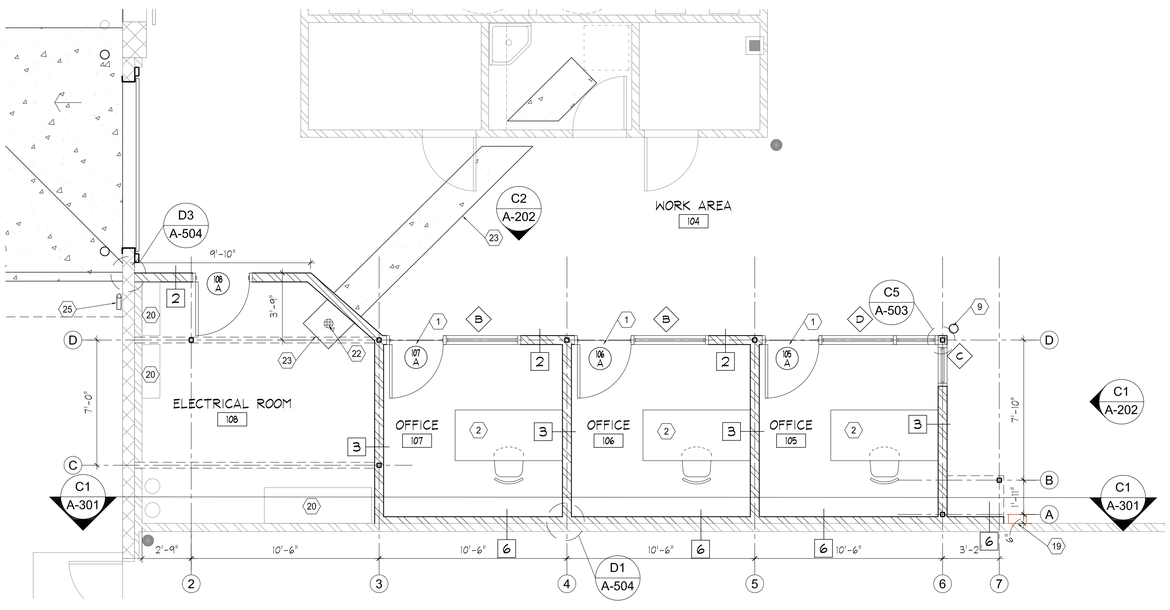

A1 Level 1 Floor Plan

1/4" = 1'-0"

NORTH

KEYED NOTES

NOTE: KEYED NOTES ARE COMMON FOR SHEETS A-104 TO A-106. HENCE SOME KEYED NOTES MAY NOT APPEAR ON DRAWINGS IN THIS SHEET.

1. LINE OF TRANSITION BETWEEN FLOOR COVERINGS. SEE FINISH FLOOR PLANS.

2. EQUIPMENT, FURNITURE, ETC., NOT IN CONTRACT.

3. EXISTING CABINETS AND CASEWORK RE-INSTALLED. SEE INTERIOR ELEVATIONS.

4. OPENINGS IN FLOOR FOR EXISTING PIPES AND MECHANICAL DUCT WORK.

5. CANOPY. SEE ROOF PLAN C1/A109.

6. OVERHEAD COILING DOOR TRACK ATTACH TO EXISTING MASONRY WALL PER MANUFACTURERS RECOMMENDATIONS, UTILIZING APPROVED ANCHORS LISTED ON SHEET S101.

7. NOT USED.

8. CANOPY COLUMNS. SEE DETAIL C4/A501.

9. BOLLARD. SEE DETAIL. D4/A501

10. EXISTING CONCRETE SIDEWALK.

11. EXISTING CONCRETE CURB AND GUTTER.

12. EXISTING TREES, SHRUBS, OR LANDSCAPING.

13. CURB AND GUTTER. SEE DETAIL A1/A501.

14. SIDEWALK. SEE DETAIL A1/A501.

15. LANDSCAPING. REPLACE LAWN AREA AND ASSOCIATED WATER SPRINKLERS AS TO MAKE THE SYSTEM WORK PROPERLY.

16. EXISTING CATCH BASIN.

17. EXISTING CONCRETE PAVING.

18. CONCRETE PAVING. 6" THICK. SEE DETAIL B1/A501.

19. EXISTING BTU METER RELOCATED.

20. EXISTING MECHANICAL AND ELECTRICAL EQUIPMENT TO REMAIN. PROTECT DURING DEMOLITION AND CONSTRUCTION.

21. SHORT WALLS BUILT AROUND EXISTING PIPING AND NEW MECHANICAL DUCTS. SEE WALL TYPES.

22. FLOOR DRAIN. SEE PLUMBING DRAWINGS.

23. CONCRETE INFILL. SEE DETAIL B3/A505.

24. CUT AND REMOVE ASPHALT PAVING FOR NEW GUTTER INSTALLATION. PATCH ASPHALT PAVING WITH THICKNESS MATCHING EXISTING PAVING.

25. DOWNSPOUT GALVENIZED 3" DIAMETER SCH 40 PIPE. FULLY WELDED. GRIND ALL WELDS SMOOTH. SEE DETAIL A5/A505 FOR ANCHORAGE TO WALL.

26. REINSTALLED PARKING CURBS.

27. NEW PARKING PAINT.

28. NEW ACCESSIBLE PARKING SIGN. SEE DETAIL B5/A505

29. EXISTING ACCESSIBLE PARKING SIGN.

LEGEND

OFFICE — ROOM NAME
114 — ROOM NUMBER

1 — DENOTES WALL SECTION. SEE A1/A504

101 A — DOOR NUMBER. SEE DOOR SCHEDULE, SHEET A801

A — WINDOW TAG. SEE WINDOW SCHEDULE C1, D1/A801

NJRA Architects, Inc.
370 East 500 South, Suite 101
Salt Lake City, Utah 84111

Phone: 801. 364. 9259
Fax: 801. 521. 0420
www.njraarchitects.com

STATE OF UTAH
SELVAM RAJAVELU
267857
LICENSED ARCHITECT

Division of Facilities Construction & Management
Utah State Mail Center
Office Renovation

DFCM Project #: 09258310
250 North 1950 West
Salt Lake City, Utah

ISSUE
March 10, 2010 - Const. Documents 100%

NJRA Project #: 10901.00

Enlarged Floor Plans

A-106

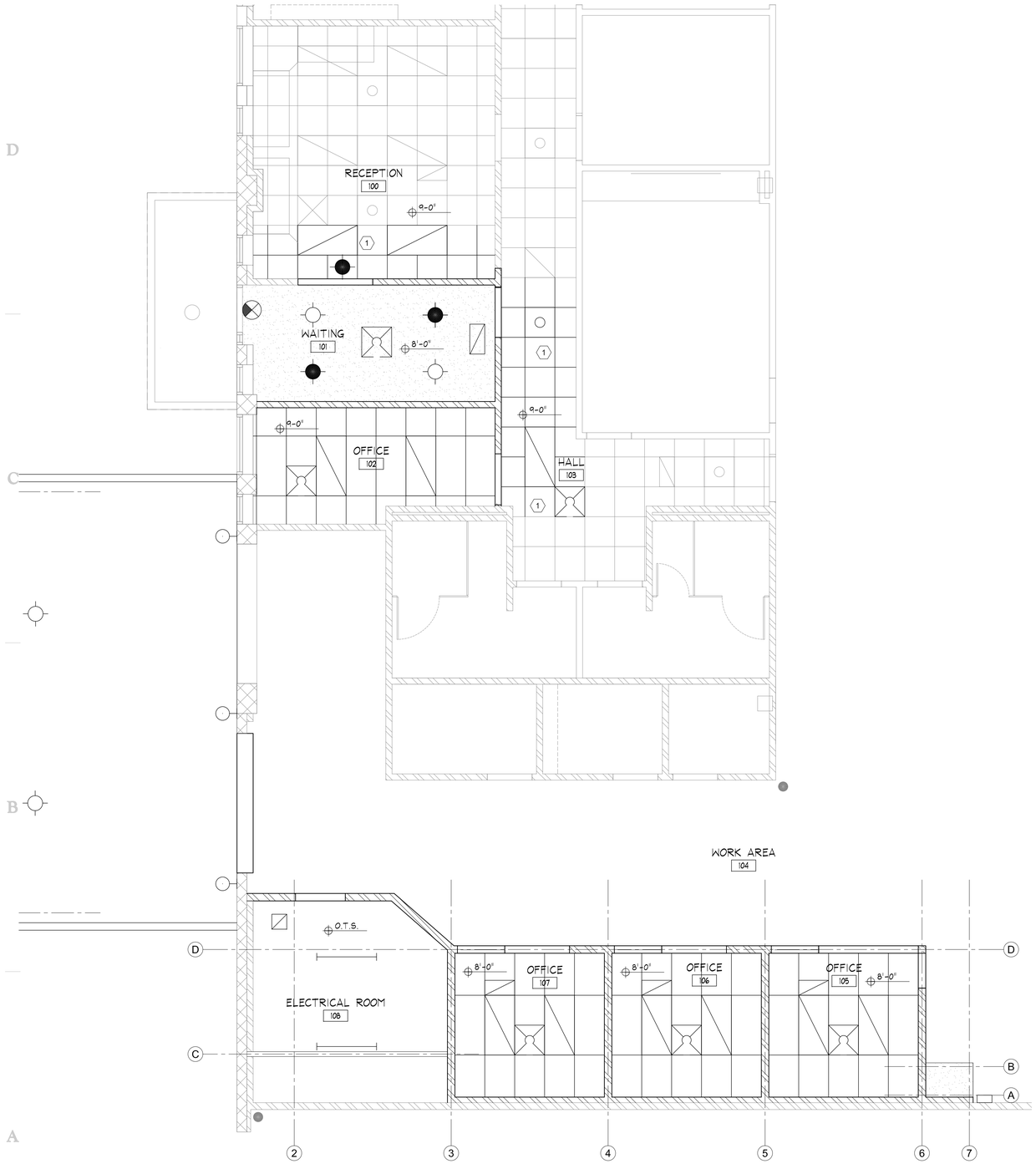

A1 Level 1 Reflected Ceiling Plan
1/4" = 1'-0"

NORTH

LEGEND

OFFICE — ROOM NAME
114 — ROOM NUMBER

NEW CEILING
2' X 4' LAY-IN ACOUSTICAL PANEL CEILING. SEE DETAILS C1,B1/A-502.

NEW CEILING
2' X 2' LAY-IN ACOUSTICAL PANEL CEILING. SEE DETAILS C1,B1/A-502.
EXISTING CEILING

SUSPENDED GYPSUM BOARD CEILING OR SOFFIT. SEE DETAILS A1/A502.

CEILING ACCESS PANEL

SUPPLY AIR DIFFUSER

RETURN AIR GRILLE

EXHAUST FAN

8'-0" — CEILING HEIGHT FROM FLOOR

O.T.S — OPEN TO STRUCTURE

WALL MOUNTED EXTERIOR LIGHT FIXTURE

FLUORESCENT LIGHT FIXTURE

EXIT SIGNS

EMERGENCY RECESSED LIGHT FIXTURE

RECESSED LIGHT FIXTURE

KEYED NOTES

1. LAY-IN ACOUSTICAL CEILING TILES IN THIS AREA SHALL BE REPLACED WITH EXISTING TILES THAT WERE SAVED FROM THE DEMOLITION PHASE.

GENERAL NOTES

A. EXISTING CEILING GRID, TILES AND MECHANICAL GRILLES AND DIFFUSERS SHALL BE REMOVED TO ALLOW FOR DEMOLITION AND NEW CONSTRUCTION. CEILING GRID, TILES AND MECHANICAL GRILLES AND DIFFUSERS SHALL BE PROTECTED DURING DEMOLITION AND NEW CONSTRUCTION AND WILL USED FOR RE INSTALLATION

B. SEE MECHANICAL DRAWINGS FOR DIFFUSER LOCATION IN CEILING. CONTRACTOR SHALL COORDINATE WITH LIGHT FIXTURES (AS INDICATED IN ELECTRICAL DRAWINGS) AND MOVE DIFFUSERS AROUND THE LIGHT FIXTURE IF THERE IS ANY CONFLICT BETWEEN THE TWO.

C. SOME OF THE ITEMS ON CEILING INDICATED IN MECHANICAL AND ELECTRICAL DRAWINGS, MAY OR MAY NOT BE INDICATED ON ARCHITECTURAL CEILING PLANS. SEE MECHANICAL AND ELECTRICAL DRAWINGS AND COORDINATE WITH ARCHITECT FOR ANY REQUIRED CLARIFICATIONS.

D. CONTRACTOR SHALL PROVIDE UNISTRUTS AS INDICATED IN DETAIL C5/A-502 WHENEVER DUCTS INTERFERE WITH CEILING SUSPENSION SYSTEM.

NJRA ARCHITECTS

NJRA Architects, Inc.
370 East 500 South, Suite 101
Salt Lake City, Utah 84111

Phone: 801. 364. 9259
Fax: 801. 521. 0420
www.njraarchitects.com

STATE OF UTAH
SELVAM RAJAVELU
267857
LICENSED ARCHITECT

Division of Facilities Construction & Management
Utah State Mail Center
Office Renovation

DFCM Project #: 09258310
250 North 1950 West
Salt Lake City, Utah

ISSUE
March 10, 2010 - Const. Documents 100%

NJRA Project #: 10901.00

Reflected Ceiling Plans

A-107

KEYED NOTES

1. LINE OF TRANSITION BETWEEN FLOOR COVERINGS. SEE DETAIL D1/A501

2. LINE OF TRANSITION BETWEEN FLOOR COVERINGS. SEE DETAIL A5/A501

F1 — FLOOR FINISHES ARE INDICATED AS F1, F2, F3, ETC. SEE "FINISH SCHEDULE" FOR FLOOR COVERING TYPE. THE FLOOR FINISH INDICATED SHALL APPLY TO THE ENTIRE ROOM OR AREA UNLESS NOTED SPECIFICALLY WITH A TRANSITION LINE AND DIFFERENT FLOOR COVERING IN THE ADJACENT ROOM OR AREA. FLOOR COVERING TRANSITIONS ARE INDICATED WITH KEYED NOTES. TRANSITIONS THAT OCCUR BELOW DOORS ARE NOT INDICATED. PRIOR TO INSTALLATION, CLARIFY WITH ARCHITECT FOR TRANSITION LOCATIONS FOR SPECIFIC CONDITIONS.

B1 — WALL BASES ARE INDICATED AS B1, B2, B3, ETC. SEE "FINISH SCHEDULE" FOR WALL BASE TYPE. THE WALL BASE INDICATED SHALL APPLY TO ALL THE WALLS IN THE ROOM OR AREA UNLESS NOTED SPECIFICALLY WITH ARROW MARKS POINTING TO CERTAIN WALLS THAT REQUIRES A DIFFERENT BASE. SEE INTERIOR ELEVATIONS FOR TRANSITION WHERE DIFFERENT WALL BASES ARE INDICATED FOR THE SAME WALL.

W1 — WALL FINISHES ARE INDICATED AS W1, W2, W3, ETC. SEE "FINISH SCHEDULE" FOR WALL FINISH TYPE. THE WALL FINISH INDICATED SHALL APPLY TO ALL THE WALLS IN THE ROOM OR AREA UNLESS NOTED SPECIFICALLY WITH ARROW MARKS POINTING TO CERTAIN WALLS THAT REQUIRES A DIFFERENT FINISH. SEE INTERIOR ELEVATIONS FOR TRANSITION WHERE DIFFERENT WALL FINISHES ARE INDICATED FOR THE SAME WALL.

S1 — SIGNS ARE INDICATED AS S1, S2, S3, ETC. SEE DETAIL A1/A-505 FOR SIGN TYPE. PRIOR TO INSTALLATION, CLARIFY WITH ARCHITECT FOR SIGN LOCATIONS FOR SPECIFIC CONDITIONS.

FINISH SCHEDULE

LEGEND	DESCRIPTION	MANUFACTURER	STYLE	MODEL #	COLOR	REMARKS
F1 - FLOOR FINISH	CARPET - RE-INSTALL EXISTING	-	-	-	-	
F2 - FLOOR FINISH	CARPET	-	-	-	-	1,2
F3 - FLOOR FINISH	ENTRY CARPET	-	-	-	-	1,2
F4 - FLOOR FINISH	EXISTING CONCRETE	-	-	-	-	
B1 - WALL BASE	RUBBER BASE - 4"	-	-	-	-	1,2
		-	-	-	-	
W1 - WALL FINISH	PAINT - TO MATCH EXISTING					1,3
		-	-	-	-	

REMARKS:

1. BASIS-OF-DESIGN FOR FINISHES: ALL FINISHES INDICATED ARE BASED ON THE NAMED MANUFACTURER AND PRODUCT, SUBJECT TO COMPLIANCE WITH REQUIREMENTS, PROVIDE THE NAMED PRODUCT OR A COMPARABLE PRODUCT BY ONE OF THE MANUFACTURER'S SPECIFIED IN THE RELATED SPECIFICATION SECTIONS.
2. CARPET AND RESILIENT BASE SHALL BE OWNER FURNISHED AND OWNER INSTALLED ITEM.
3. TO MATCH EXISTING CONDITIONS.

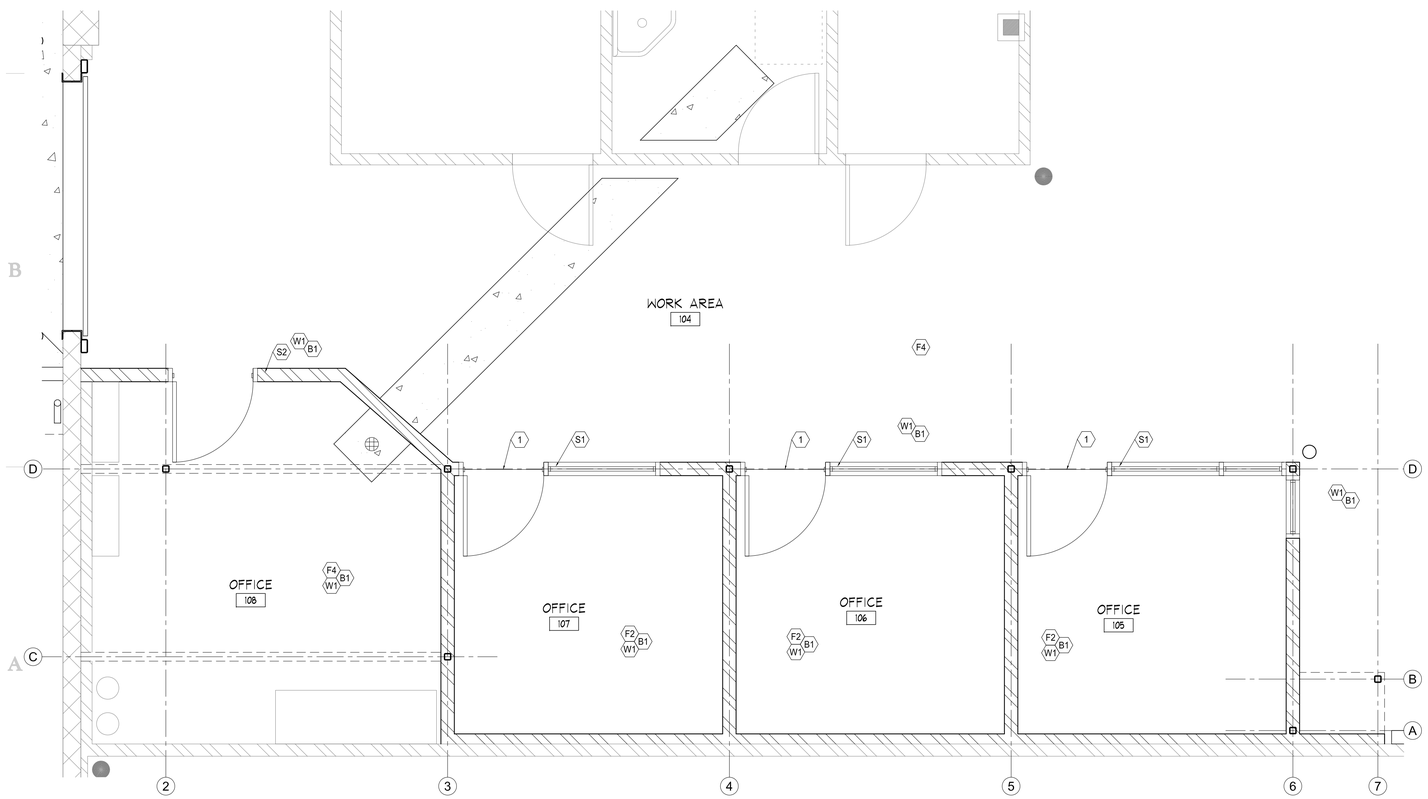

A1 Level 1 Finish Floor Plan
3/8" = 1'-0"

NORTH

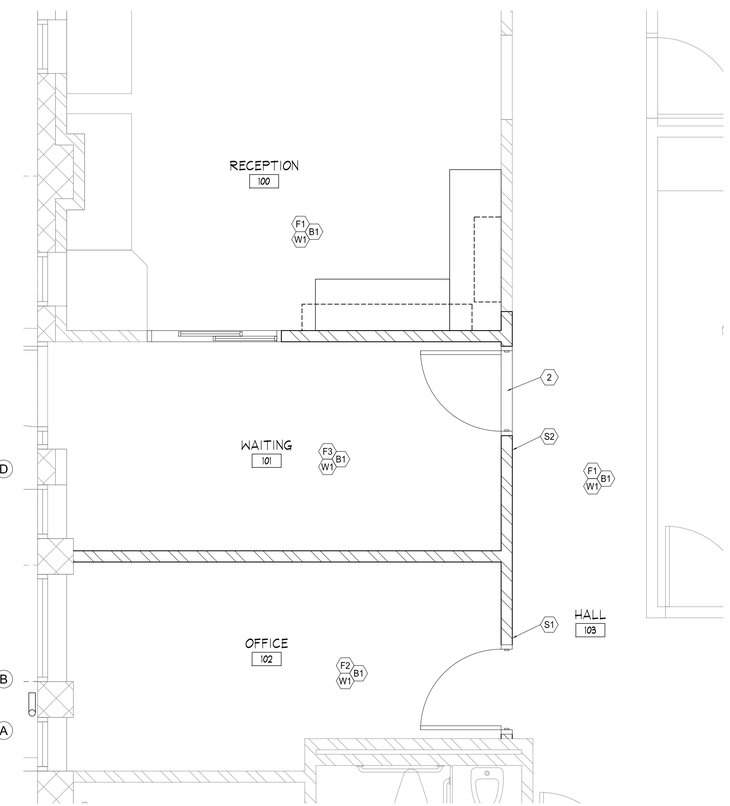

A4 Level 1 Finish Floor Plan
3/8" = 1'-0"

NORTH

NJRA Architects, Inc.
370 East 500 South, Suite 101
Salt Lake City, Utah 84111

Phone: 801. 364. 9259
Fax: 801. 521. 0420
www.njraarchitects.com

STATE OF UTAH
SELVAM RAJAVELU
267857
LICENSED ARCHITECT

Division of Facilities Construction & Management
Utah State Mail Center
Office Renovation

DFCM Project #: 09258310
250 North 1950 West
Salt Lake City, Utah

ISSUE
March 10, 2010 - Const. Documents 100%

NJRA Project #: 10901.00

Finish Floor Plans

A-108

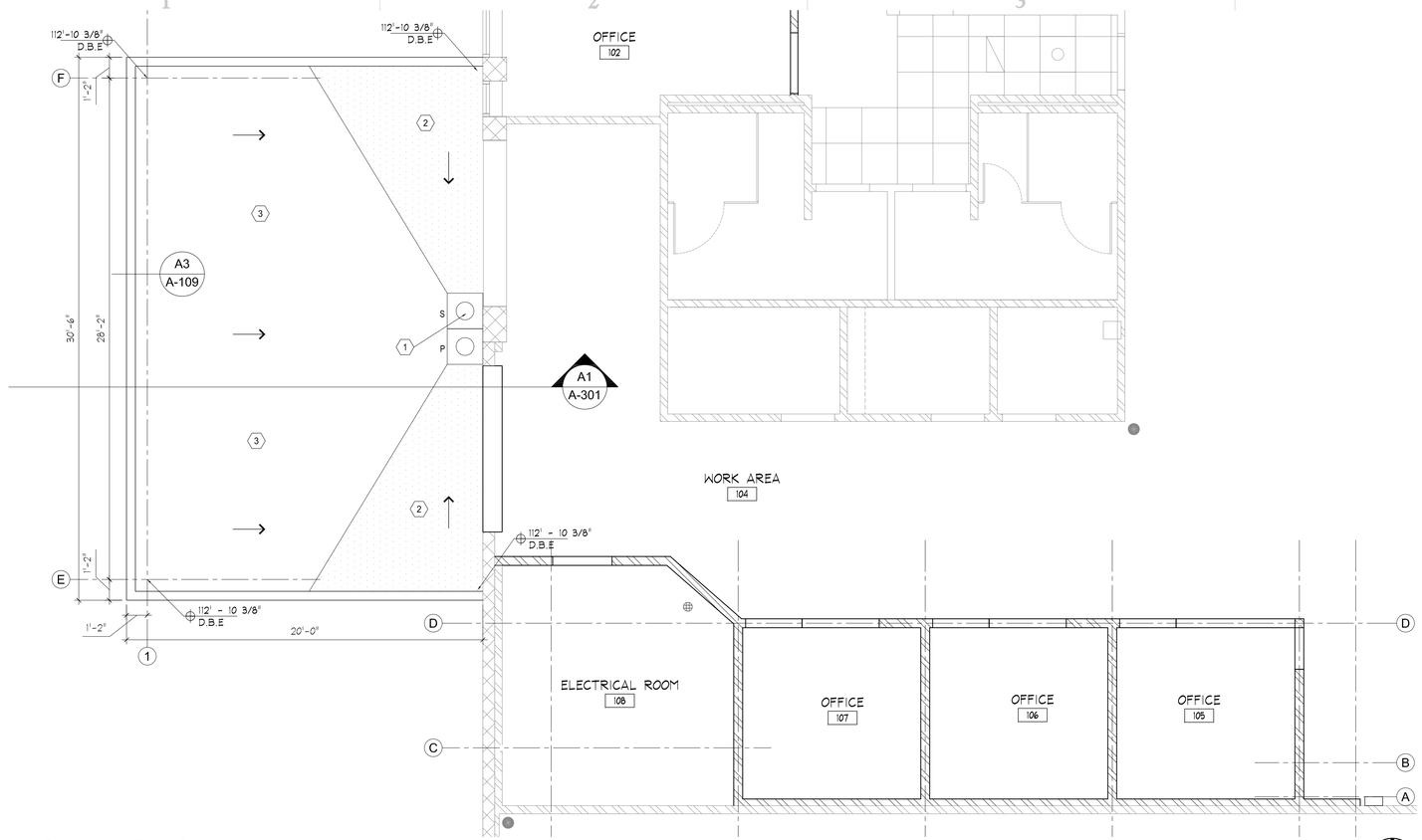

C1 Canopy Roof Plan

1/4"=1'-0'

NORTH

KEYED NOTES

1. ROOF DRAIN.
2. BUILT UP RIGID INSULATION CRICKET.
3. SINGLE PLY ROOFING MEMBRANE. SLOPE @ 1/4" PER FOOT MINIMUM.

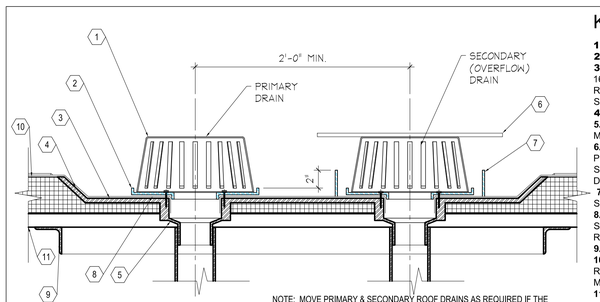

NOTE: MOVE PRIMARY & SECONDARY ROOF DRAINS AS REQUIRED IF THE LOCATION OF DRAINS INDICATED ON THE ROOF PLANS CONFLICTS WITH THE STRUCTURAL STEEL JOISTS SUPPORTING THE ROOF.

A1 Roof Drain Detail

Scale: 1-1/2" = 1'-0"

KEYED NOTES

1. METAL STRAINER. SEE PLUMBING DRAWINGS.
2. METAL CLAMPING RING. SEE PLUMBING DRAWINGS.
3. 30" SQUARE MINIMUM, 2 1/2 TO 4 POUND LEAD OR 16 OZ. SOFT COPPER FLASHING SET ON FINISHED ROOF IN COMPATIBLE ROOF CEMENT. PRIME TOP SURFACE BEFORE STRIPPING.
4. SINGLE-PLY ROOF MEMBRANE.
5. DRAIN BOWL WITH REQUIRED DECK CLAMP. SEE MECHANICAL DRAWINGS.
6. SHEET METAL PLATE. GALVANIZED 16 GAUGE PLATE WITH ROUNDED EDGES, ATTACHED TO METAL STRAINER. EDGES SHALL EXTEND 2" BEYOND THE DRAIN BOWL. SEE PLUMBING DRAWINGS.
7. METAL OVERFLOW COLLAR, 2" HIGH, AT ALL SECONDARY DRAINS.
8. MEMBRANE FIELD , METAL FLASHING AND STRIPPING PLIES ALL EXTEND UNDER CLAMPING RING.
9. STEEL ANGLE. SEE STRUCTURAL DRAWINGS.
10. SINGLE-PLY ROOFING MEMBRANE OVER TAPERED, RIGID INSULATION. ATTACH INSULATION MECHANICALLY OVER ROOF DECK.
11. ROOF DECK. SEE STRUCTURAL DRAWINGS.

KEYED NOTES

1. STEEL CHANNEL. SEE STRUCTURAL DRAWINGS.
2. METAL DECKING, 1 1/2" THICK.
3. SINGLE PLY ROOFING MEMBRANE OVER TAPPERED RIGID INSULATION. RIGID INSULATION SHALL BE ATTCHED TO METAL DECKING.
4. METAL FLASHING, 24 GAUGE.
5. STEEL BAR, 1/4" X 3/4". CONTINUOUS WELD TO STEEL CHANNEL.
6. CONTINUOUS SEALANT.

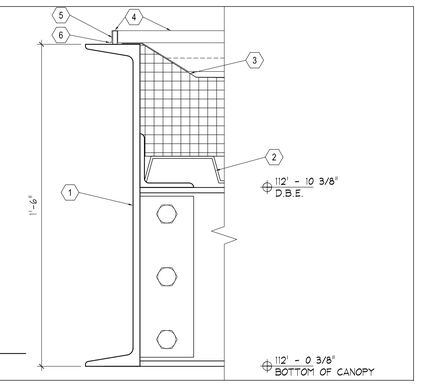

A3 Canopy Detail

Scale: 3" = 1'-0"

LEGEND

	PRIMARY & SECONDARY ROOF DRAIN. SEE DETAIL A1/A109 AND MECHANICAL DRAWINGS.
	TAPERED INSULATION CRICKET WITH 1/4" PER FOOT SLOPE MINIMUM ALONG VALLEY AND 1/2" PER FOOT SLOPE MINIMUM ACROSS CRICKET.
100'-0" T.O.C.	TOP OF CURB ELEVATION
100'-0" D.B.E.	DECK BEARING ELEVATION
100'-0" T.O.M.	TOP OF MASONRY WALL
→	DIRECTION OF ROOF SLOPE TOWARDS ROOF DRAIN OR SCUPPER.

NJRA ARCHITECTS

NJRA Architects, Inc.
370 East 500 South, Suite 101
Salt Lake City, Utah 84111

Phone: 801. 364. 9259
Fax: 801. 521. 0420
www.njraarchitects.com

STATE OF UTAH
SELVAM RAJAVELU
267857
LICENSED ARCHITECT

Division of Facilities Construction & Management

Utah State Mail Center Office Renovation

DFCM Project #: 09258310
250 North 1950 West
Salt Lake City, Utah

ISSUE

March 10, 2010 - Const. Documents 100%

NJRA Project #: 10901.00

Canopy Roof Plan

A-109

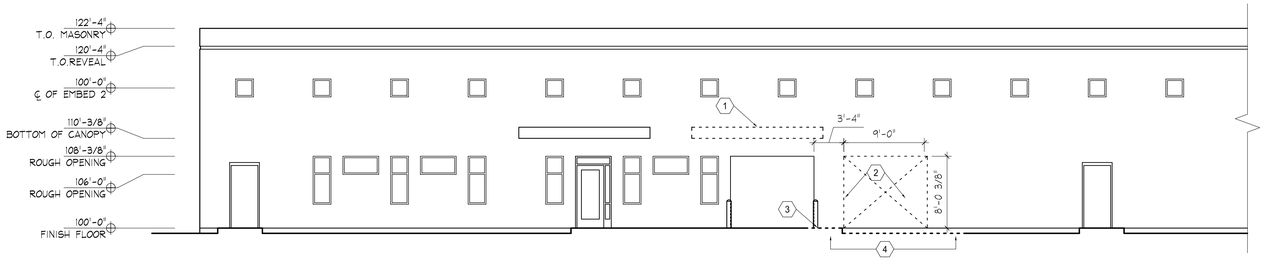

D1 Exterior Elevation - Demolition

1/8" = 1'-0"

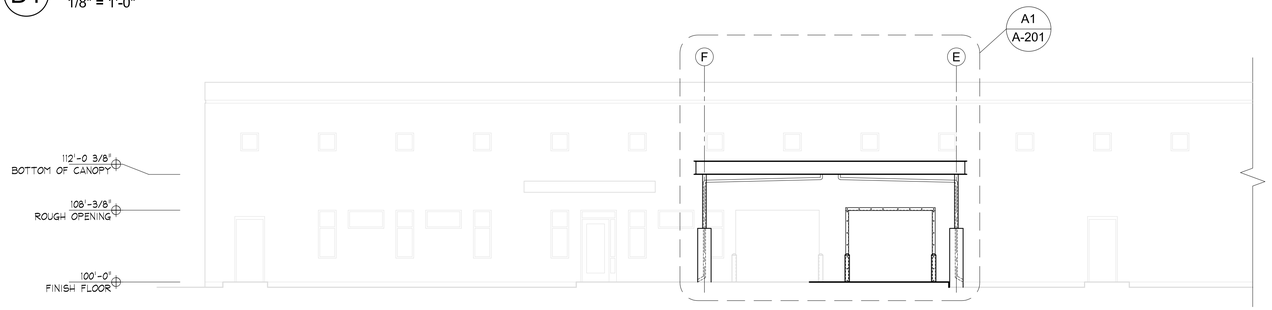

C1 Exterior Elevation

1/8" = 1'-0"

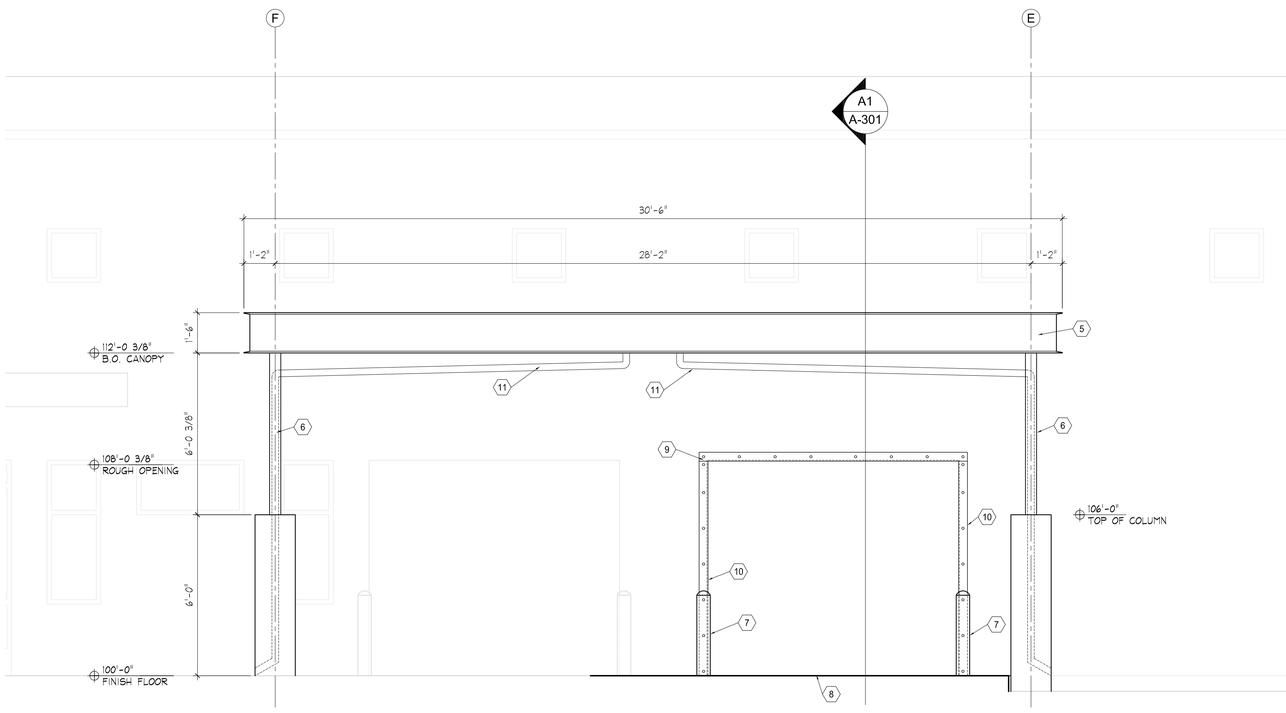

A1 Exterior Elevation

3/8" = 1'-0"

KEYED NOTES

1. REMOVE EXISTING CANOPY. PATCH AND REPAIR AS NEEDED.

2. REMOVE EXISTING C.M.U. IN THIS AREA.

3. REMOVE EXISTING CONCRETE CURB AND GUTTER. PROTECT REMAINING CONCRETE DURING DEMOLITION AND CONSTRUCTION.

4. REMOVE EXISTING LANDSCAPING AND IRRIGATION PIPING IN DESIGNATED AREA.

5. CANOPY SEE DETAIL C3/A-502.

6. STEEL COLUMNS EMBEDDED IN CONCRETE. SEE DETAIL C4/A-501

7. PIPE BOLLARDS. PAINTED SAFETY YELLOW. SEE DETAIL D4/A-501

8. CONCRETE PAVEMENT.

9. STEEL ANGLE HEADER. SEE DETAIL A5/A-502

10. STEEL ANGLE SUPPORTS. SEE DETAIL A4/A-502

11. ROOF DRAIN DOWN SPOUT. 3" DIAMETER GALVANIZED SCH 40 PIPE FULLY WELDED. GRIND ALL WELDS SMOOTH.

GENERAL NOTES

A. ALL STEEL COMPONENTS EXPOSED TO WEATHER SHALL BE GALVANIZED.

NJRA ARCHITECTS

NJRA Architects, Inc.
370 East 500 South, Suite 101
Salt Lake City, Utah 84111

Phone: 801. 364. 9259
Fax: 801. 521. 0420
www.njraarchitects.com

STATE OF UTAH
SELVAM RAJAVELU
267857
LICENSED ARCHITECT

Division of Facilities Construction & Management

Utah State Mail Center
Office Renovation

DFCM Project #: 09258310
250 North 1950 West
Salt Lake City, Utah

ISSUE
March 10, 2010 - Const. Documents 100%

NJRA Project #: 10901.00

Exterior Elevations

A-201

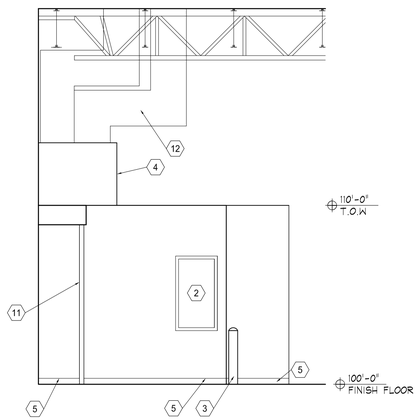

C1 Work Area 104
1/4" = 1'-0"

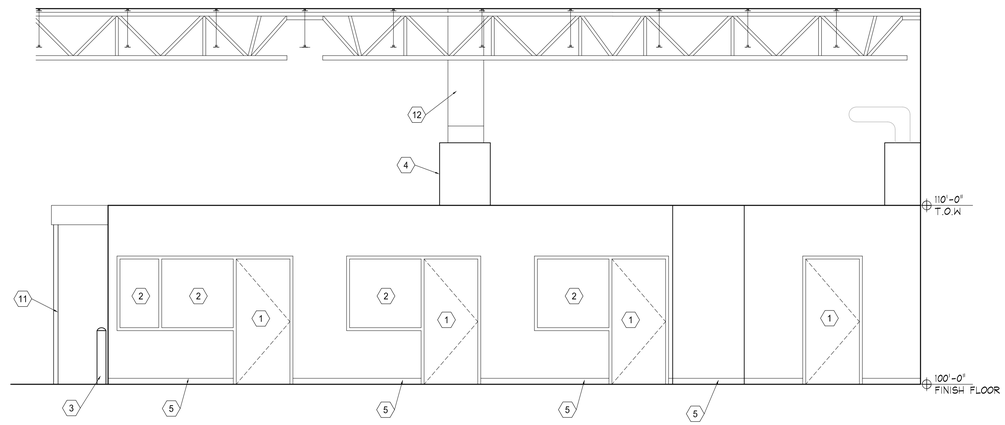

C2 Work Area 104
1/4" = 1'-0"

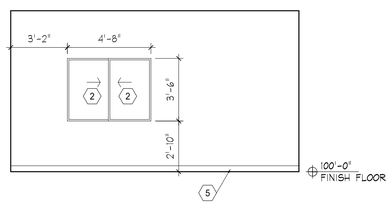

B1 Waiting 101
1/4" = 1'-0"

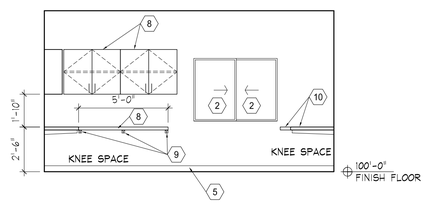

ELEVATION 1

B2 Reception 100
1/4" = 1'-0"

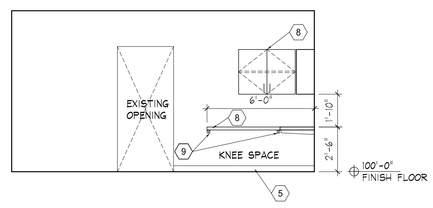

ELEVATION 2

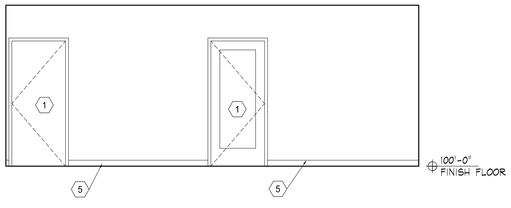

A1 Hall 103
1/4" = 1'-0"

KEYED NOTES

1. DOOR. SEE DOOR SCHEDULE. SEE FLOOR PLAN FOR DOOR NUMBER.

2. WINDOW. SEE WINDOW SCHEDULE. SEE FLOOR PLAN FOR WINDOW NUMBER.

3. PIPE BOLLARD. SEE DETAIL D4/A-501

4. SHORT WALL SURROUNDING MECHANICAL AND EXISTING PIPES. SEE FLOOR PLAN FOR WALLS TYPES.

5. WALL BASE. SEE FINISH SCHEDULE.

6. NOT USED.

7. NOT USED.

8. EXISTING CASEWORK. RE-INSTALLED

9. CASEWORK SUPPORTS TO MATCH EXISTING.

10. CASEWORK RE-INSTALLED INTO EXISTING LOCATION.

11. STEEL COLUMN. SEE STRUCTURAL DRAWINGS.

12. MECHANICAL DUCT. SEE MECHANICAL DRAWINGS.

NJRA Architects, Inc.
370 East 500 South, Suite 101
Salt Lake City, Utah 84111

Phone: 801. 364. 9259
Fax: 801. 521. 0420
www.njraarchitects.com

STATE OF UTAH
SELVAM RAJAVELU
267857
LICENSED ARCHITECT

Division of Facilities Construction & Management
Utah State Mail Center
Office Renovation

DFCM Project #: 09258310
250 North 1950 West
Salt Lake City, Utah

ISSUE
March 10, 2010 - Const. Documents 100%

NJRA Project #: 10901.00

Interior
Elevations

A-202

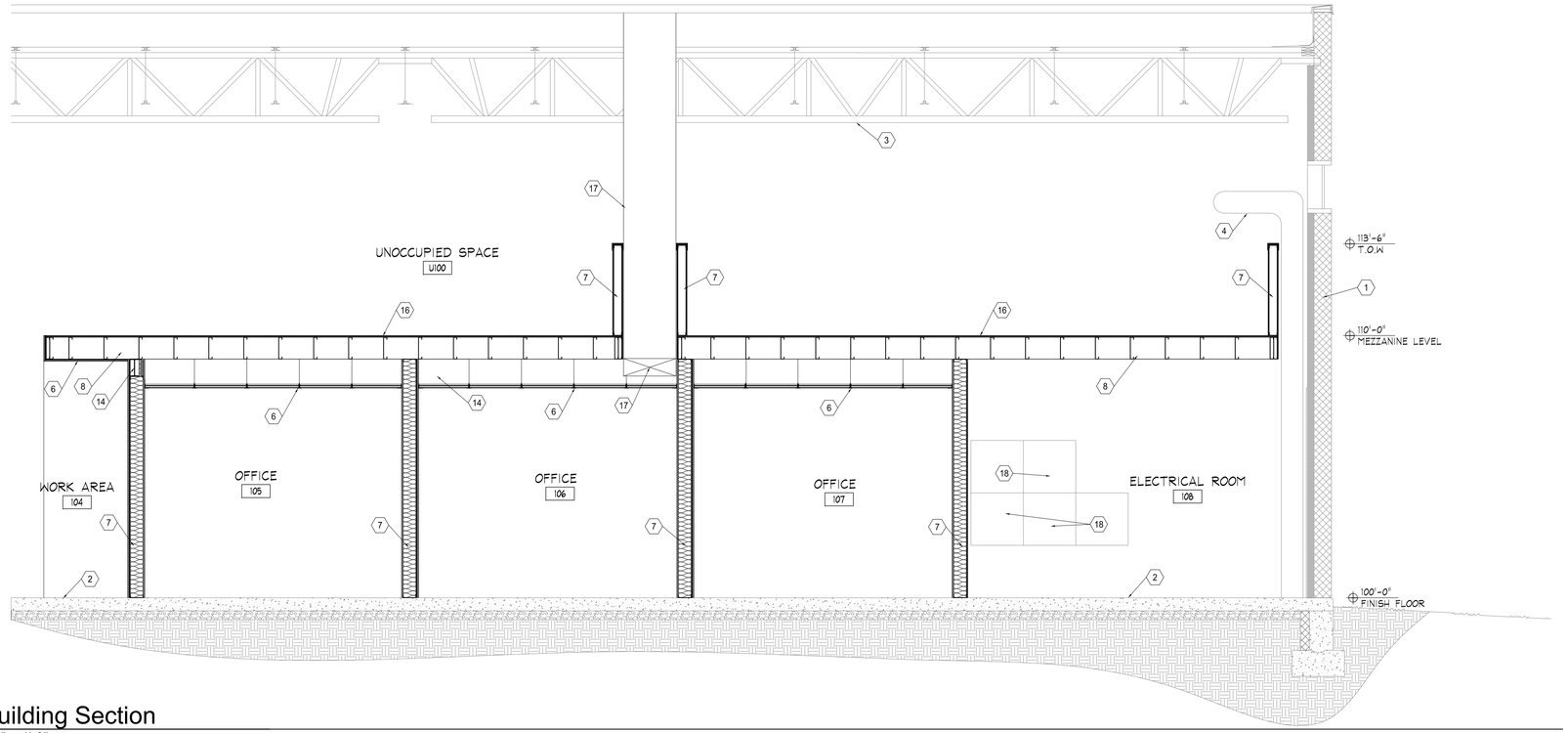

C1 Building Section
3/8" = 1'-0"

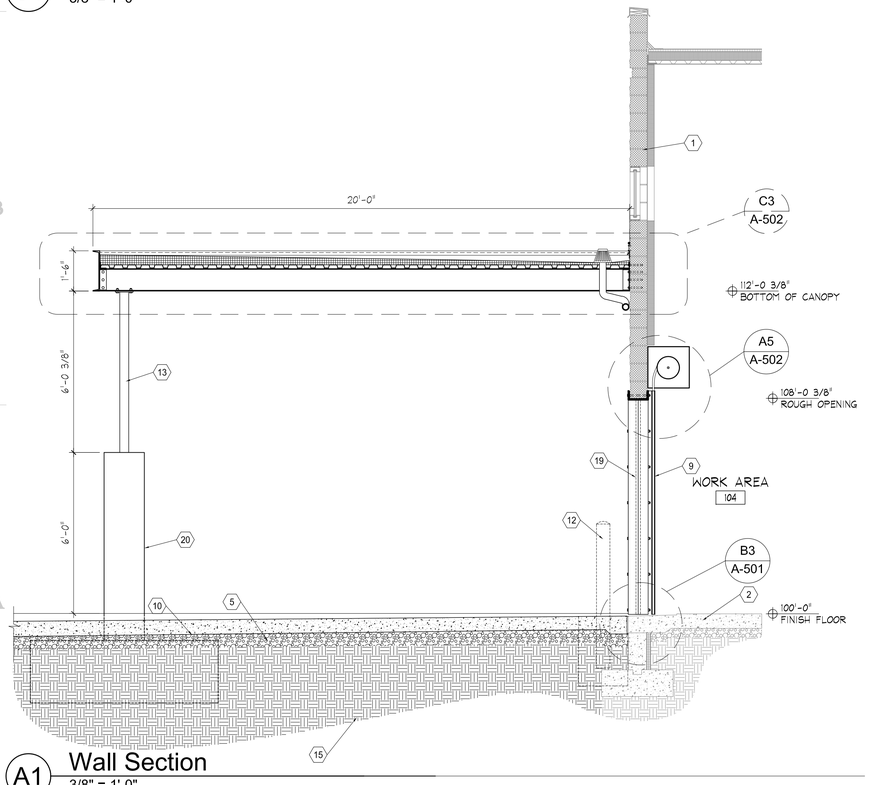

A1 Wall Section
3/8" = 1'-0"

KEYED NOTES

NOTE: KEYED NOTES INDICATED BELOW ARE COMMON FOR SHEETS A-301. HENCE SOME KEYED NOTES IN THIS BOX MAY NOT APPEAR ON DRAWINGS IN THIS SHEET.

1. EXISTING WALL ASSEMBLY.

2. EXISTING CONCRETE FLOOR.

3. EXISTING STRUCTURE.

4. EXISTING PLUMBING. PROTECT DURING CONSTRUCTION.

5. DRAINAGE GRAVEL 6" THICK.

6. CEILING. SEE REFLECTED CEILING PLANS FOR CEILING TYPE AND HEIGHT.

7. METAL STUD FRAMING. BASED ON THE LOCATION INDICATED IN FLOOR PLAN. SEE FLOOR PLAN FOR WALL TYPE NUMBER. SEE STRUCTURAL DRAWINGS.

8. STEEL JOIST. COORDINATE WITH STRUCTURAL DRAWINGS FOR JOIST DEPTH, SPACING CONNECTION DETAILS ETC.

9. DOOR. SEE DOOR SCHEDULE (DOOR NUMBERS ARE INDICATED IN FLOOR PLAN SHEETS).

10. EXTERIOR CONCRETE PAVING. SEE STRUCTURAL DRAWINGS. SLOPE AWAY FROM BUILDING MIN. 1/4" PER FOOT.

12. PIPE BOLLARD. SEE DETAIL D4/A-501.

13. STEEL COLUMN. SEE STRUCTURAL DRAWINGS.

14. STEEL BEAM. SEE STRUCTURAL DRAWINGS.

15. COMPACTED SUBGRADE.

16. FIRE RETARDANT TREATED PLYWOOD SHEATHING , 3/4" THICK .

17. MECHANICAL DUCT WORK. SEE MECHANICAL DRAWINGS.

18. EXISTING EQUIPMENT TO REMAIN. PROTECT DURING DEMOLITION AND CONSTRUCTION.

19. TRANSPARENT DOOR CURTAIN.

20. CONCRETE COLUMN. SEE STRUCTURAL DRAWINGS.

NJRA Architects, Inc.
370 East 500 South, Suite 101
Salt Lake City, Utah 84111

Phone: 801. 364. 9259
Fax: 801. 521. 0420
www.njraarchitects.com

STATE OF UTAH
SELVAM RAJAVELU
267857
LICENSED ARCHITECT

Division of Facilities Construction & Management
Utah State Mail Center
Office Renovation

DFCM Project #: 09258310
250 North 1950 West
Salt Lake City, Utah

ISSUE
March 10, 2010 - Const. Documents 100%

NJRA Project #: 10901.00

Building Sections

A-301

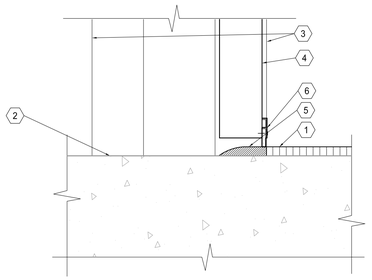

KEYED NOTES

1. CARPET FLOOR COVERING. SEE FINISH SCHEDULE.
2. EXISTING CONCRETE FLOOR.
3. DOOR FRAME. SEE DOOR SCHEDULE
4. SCHEDULED DOOR. SEE DOOR SCHEDULE.
5. VINYL TRANSITION STRIP ADHERED TO CONCRETE PER MANUFACTURER'S RECOMMENDATIONS. LOCATE STRIP @ CENTER OF DOOR.
6. DOOR SWEEP PER HARDWARE DETAIL.

D1 Carpet to Concrete Transition Detail

Scale: 6" = 1'-0"

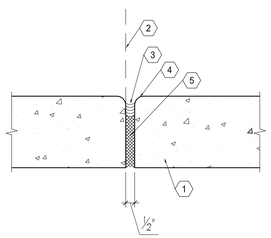

Expansion Joint

KEYED NOTES

1. CONCRETE SLAB, 6" THICK. SEE STRUCTURAL DRAWINGS FOR TYPICAL STEEL REINFORCEMENT REQUIREMENTS.
2. LINE OF BUILDING, AS OCCURS.
3. PROVIDE CONTINUOUS SEALANT AT BUILDING EDGE.
4. PROVIDE 1/2" RADIUS AT EDGES.
5. EXPANSION JOINT FILLER.
6. SAW CUT OR TOOLED JOINT 3/4" THICK. FOR SAW CUT PROCESS, CUT WITHIN 6 HOURS OF CONCRETE POUR.
7. PROVIDE KEY AT CONSTRUCTION JOINT.
8. EPOXY COATED DOWEL, 18" LONG @ 12" O.C.
9. EXISTING CONCRETE SLAB.

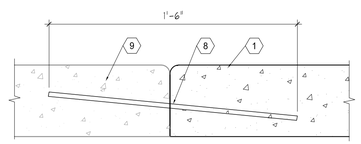

Epoxy Dowell Joint

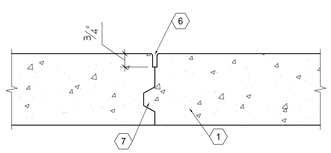

Construction Joint

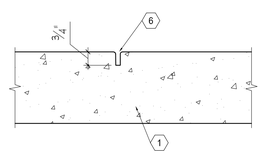

Control Joint

B1 Joint Details

Scale: 3" = 1'-0"

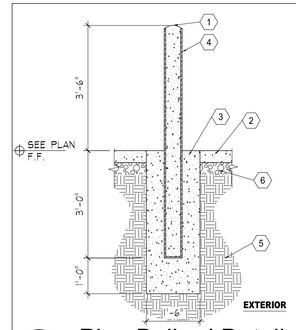

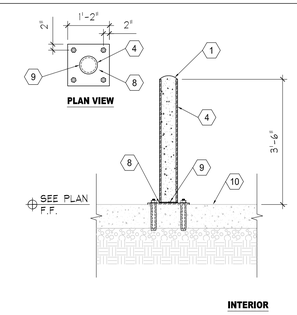

KEYED NOTES

1. FILL STEEL PIPE WITH CONCRETE AND ROUND OFF.
2. CONCRETE PAVING.
3. CONCRETE FOOTING, 18" DIAMETER.
4. GALVANIZED STEEL PIPE, 6" DIAMETER x 0.432 INCH WALL THICKNESS. PRIME AND PAINT STEEL PIPE WITH SAFETY YELLOW COLOR.
5. COMPACTED SUB-GRADE.
6. GRAVEL SUB-BASE.
8. GALVANIZED STEEL PLATE 1'-2" x 1'-2" x ½" THICKNESS. ATTACH TO THICKENED SLAB W/ (4) ¾" Ø BOLTS & THREADED ROD SET IN EPOXY. 8-INCH MINIMUM EMBED.
9. WELD ALL-AROUND AT BASE PLATE.
10. EXISTING CONCRETE SLAB. SEE FLOOR PLAN AND STRUCTURAL DRAWINGS.

D4 Pipe Bollard Detail

Scale: 1/2" = 1'-0"

KEYED NOTES

1. STEEL COLUMN. CENTERED WITHIN THE CONCRETE COLUMN BASE. SEE STRUCTURAL DRAWINGS.
2. CONCRETE BASE COLUMN.

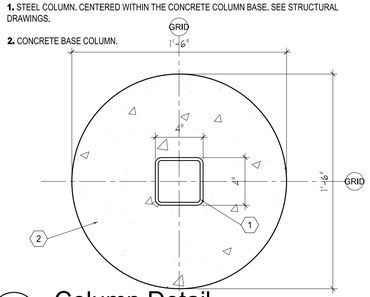

C4 Column Detail

Scale: 2" = 1'-0"

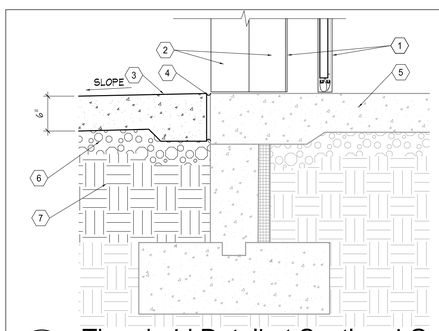

KEYED NOTES

1. GALVANIZED OVERHEAD COILING DOOR & DOOR TRACK. SEE DOOR SCHEDULE.
2. GALVANIZED BENT STEEL ANGLES.
3. EXTERIOR CONCRETE PAVING.
4. BUILDING EXPANSION JOINT. SEE DETAIL B1/A-501.
5. EXISTING CONCRETE SLAB.
6. 6" DRAINAGE FILL.
7. COMPACTED SUB GRADE.

B3 Threshold Detail at Sectional Garage Door

Scale: 1" = 1'-0"

KEYED NOTES

1. FINISH FLOOR COVERING AS OCCURS. SEE FINISH SCHEDULE.
2. DOOR FRAME, AS OCCURS. SEE DOOR SCHEDULE
3. SCHEDULED DOOR, SEE DOOR SCHEDULE.
4. 1/2" MAX ALUMINUM THRESHOLD.

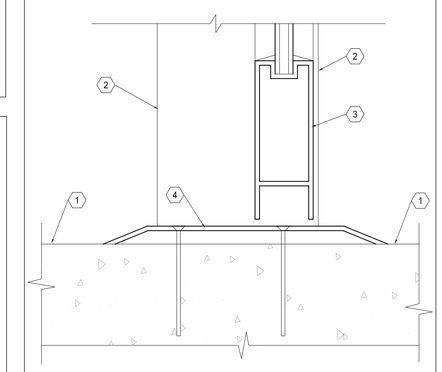

A5 Transition Detail

Scale: 6" = 1'-0"

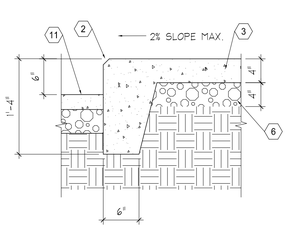

Sidewalk Edge Detail

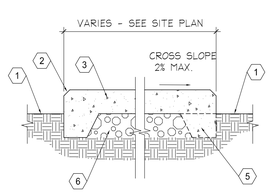

Sidewalk Detail

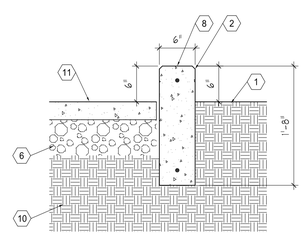

Raised Curb Detail

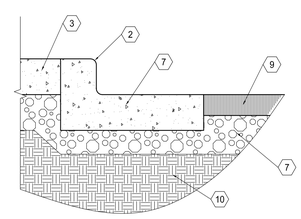

Curb & Gutter Detail

KEYED NOTES

1. LANDSCAPING, AS OCCURS.
2. CHAMFER 1" TYPICAL AT ALL EXPOSED EDGES.
3. CONCRETE SLAB, 4" THICK. SEE STRUCTURAL DRAWINGS FOR TYPICAL STEEL REINFORCEMENT REQUIREMENTS.
4. PROVIDE CONTROL JOINTS @ 5'-0" O.C. MAX. & EXPANSION JOINTS @ 20'-0" O.C. MAX. PROVIDE EXPANSION JOINT AT SIDEWALK INTERSECTIONS AND WHERE SIDEWALK ABUTS BUILDING WALLS.
5. THIS PORTION OF CONCRETE SHOWN DASHED IS NOT REQUIRED WHERE SIDEWALK ABUTS CURB & GUTTER.
6. DRAINAGE GRAVEL, 4" THICK.
7. CONCRETE CURB AND GUTTER.
8. CONCRETE CURB WITH #5 BARS, CONTINUOUS AT TOP & BOTTOM. CHAMFER TOP EXPOSED EDGES.
9. ASPHALT PAVING.
10. COMPACTED SUB GRADE.
11. CONCRETE PAVING.

NOTE:
SEE DETAIL B1/A-501, FOR TYPICAL JOINT CONSTRUCTION AND EDGE DETAILS.

A1 Site Details

Scale: 1" = 1'-0"

NJRA ARCHITECTS

NJRA Architects, Inc.
370 East 500 South, Suite 101
Salt Lake City, Utah 84111

Phone: 801. 364. 9259
Fax: 801. 521. 0420
www.njraarchitects.com

STATE OF UTAH
SELVAM RAJAVELU
267857
LICENSED ARCHITECT

Division of Facilities Construction & Management
Utah State Mail Center
Office Renovation

DFCM Project #: 09258310
250 North 1950 West
Salt Lake City, Utah

ISSUE
March 10, 2010 - Const. Documents 100%

NJRA Project #: 10901.00

Details

A-501

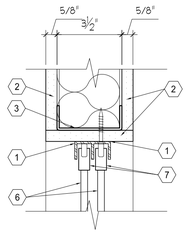

SECTION VIEW

KEYED NOTES

1. CONTINUOUS SEALANT ON BOTH SIDES OF THE FRAME.
2. GYPSUM BOARD, 5/8" THICK, ATTACHED TO METAL STUD FRAMING. SEE WALL TYPES.
3. STEEL RUNNER (18 GAUGE) FASTENED WITH SCREWS TO STRUT STUDS AT EACH END.
6. GLAZING, SEE WINDOW SCHEDULE.
7. SLIDING WINDOW METAL FRAME. SEE WINDOW SCHEDULE. INSTALL PER MANUFACTURERS RECOMMMENDATIONS

D1 Sliding Window Head Detail

Scale: 3" = 1'-0"

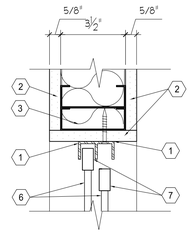

PLAN VIEW

KEYED NOTES

1. CONTINUOUS SEALANT ON BOTH SIDES OF THE FRAME.
2. GYPSUM BOARD, 5/8" THICK, ATTACHED TO METAL STUD FRAMING. SEE WALL TYPES.
3. STEEL RUNNER (18 GAUGE) FASTENED WITH SCREWS TO STRUT STUDS AT EACH END.
6. GLAZING, SEE WINDOW SCHEDULE.
7. SLIDING WINDOW METAL FRAME. SEE WINDOW SCHEDULE. INSTALL PER MANUFACTURERS RECOMMMENDATIONS

D3 Window Jamb Detail

Scale: 3" = 1'-0"

KEYED NOTES

1. STEEL BEAM, AS OCCURS.
2. STEEL JOIST, AS OCCURS.
3. MECHANICAL DUCTS. SEE MECHANICAL DRAWINGS.
4. LINE OF WALL.
5. UNISTRUT P1000, 6" LONG, SUSPENDED FROM STRUCTURE ABOVE.
6. THREADED ROD, 5/8" THICK. PROVIDE NUTS, WASHERS, CLAMPS, ETC. AS REQUIRED FOR COMPLETE INSTALLATION.
7. UNISTRUT, P1000, CROSS BRACE TO STRUCTURE. PROVIDE NUTS, WASHERS, CLAMPS, ETC. AS REQUIRED FOR COMPLETE INSTALLATION.
8. UNISTRUT, P1001 AT 2'-0" O.C. SUSPENDED FROM STRUCTURE ABOVE.
9. LIGHT FIXTURE SUSPENDED FROM UNISTRUT ONLY. DO NOT HANG FIXTURES FROM DUCTS.
10. CEILING. SEE REFLECTED CEILING PLAN FOR HEIGHT. SUSPEND CEILING GRID FROM UNISTRUT ONLY. CONTRACTOR SHALL NOT SUSPEND LIGHTS, GRIDS, ETC. FROM DUCTS.

NOTE: CONTRACTOR SHALL PROVIDE UNISTRUTS AS INDICATED IN THIS DETAIL WHEREVER DUCT INTERFERES WITH CEILING SUSPENSION SYSTEM.

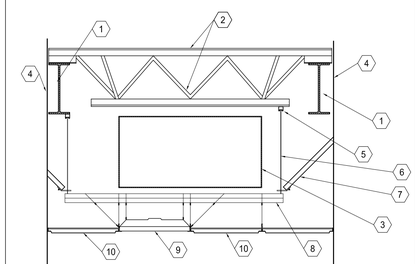

C5 Ceiling Detail

Scale: 1/2" = 1'-0"

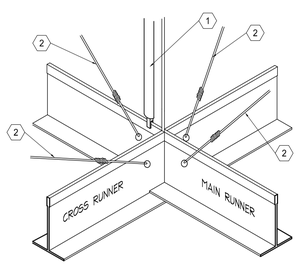

KEYED NOTES

1. RIGID HORIZONTAL RESTRAINT FROM CEILING GRID TO STRUCTURE ABOVE.
2. CLASS 1 ZINC COATED, SOFT TEMPERED WIRES, 12 GAUGE MIN.

NOTE:

A. CEILING GRIDS IN ROOMS OR AREAS GREATER THAN 1,000 SQ. FT. SHALL HAVE A RIGID HORIZONTAL RESTRAINT FROM CEILING TO STRUCTURE ABOVE AT EVERY 144 SQ. FT.

B. ALL SPLAYED WIRES SHALL BE AT 45° ANGLE, 12 GAUGE AND GALVANIZED.

C. WHEN CEILING AREA EXCEEDS 2,500 SQ. FT. PROVIDE SEISMIC SEPARATION JOINT APPROVED BY CEILING GRID MANUFACTURER AND ARCHITECT.

D. LATERAL BRACING SHALL BE PLACED 6'-0" FROM WALL AND 12'-0" O.C.

E. ENDS OF MAIN BEAMS AND CROSS TEE MUST BE TIED TOGETHER TO PREVENT SPREADING.

F. GRID SYSTEM TO BE OF HEAVY DUTY GRADE.

C1 Acoustical Grid Seismic Detail

Not To Scale

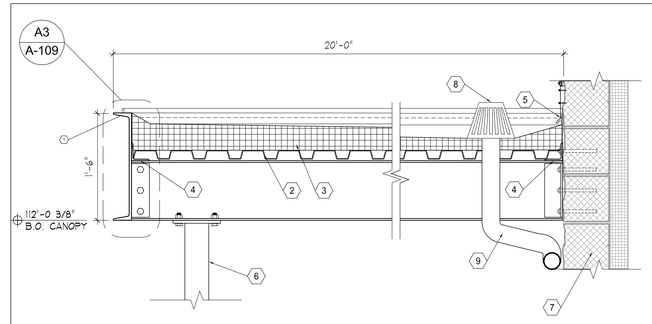

KEYED NOTES

1. STEEL CHANNEL. SEE STRUCTURAL DRAWINGS.
2. METAL DECKING, 1 1/2" THICK.
3. SINGLE-PLY ROOFING MEMBRANE OVER TAPERED RIGID INSULATION. RIGID INSULATION SHALL BE ATTACHED TO METAL DECKING.
4. STEEL ANGLE. SEE STRUCTURAL DRAWINGS.
5. REGLET - INSTALL AS PER MANUFACTURERS GUIDELINES. PROVIDE COMPRESSIBLE ELASTOMERIC TAPE TO SPAN WALL IRREGULARITIES AND MORTAR JOINTS OF MASONRY WALLS.
6. STEEL COLUMN. SEE STRUCTURAL DRAWINGS.
7. EXISTING WALL ASSEMBLY.
8. ROOF DRAIN. SEE DETAIL A1/A109
9. DOWNSPOUT. GALVANIZED 3" DIAMETER SCH 40 PIPE FULLY WELDED, GRIND ALL WELDS SMOOTH.

NOTE: ALL STEEL COMPONENTS SHALL BE GALVANIZED.

C3 Canopy Detail

Scale: 1" = 1'-0"

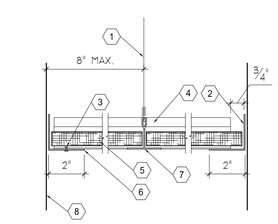

KEYED NOTES

1. CLASS 1 ZINC COATED, SOFT TEMPERED WIRES, 12 GAUGE MIN. @ 4'-0" O.C.
2. PROVIDE 3/4" GAP BETWEEN CEILING GRID AND ANGLE ON TWO ADJACENT SIDES OF THE ROOM. DO NOT ATTACH CEILING GRID TO WALL ANGLE.
3. ATTACH CEILING GRID TO WALL ANGLE ON TWO ADJACENT SIDES OF THE ROOM.
4. EXPOSED CROSS RUNNER ATTACHED TO MAIN RUNNERS.
5. ACOUSTICAL CEILING TILES. SEE CEILING PLANS.
6. SUPPORTING CLOSURE ANGLE AT CEILING PERIMETER ATTACHED TO WALL.
7. EXPOSED MAIN RUNNER SHALL BE HEAVY DUTY T-BAR GRID SYSTEM SUSPENDED FROM STRUCTURE ABOVE. THIS END OF THE GRID SHALL REST UPON AND BE FREE TO SLIDE ON THE CLOSURE ANGLE.
8. LINE OF WALL.

B1 Ceiling Grid Detail

Scale: 3" = 1'-0"

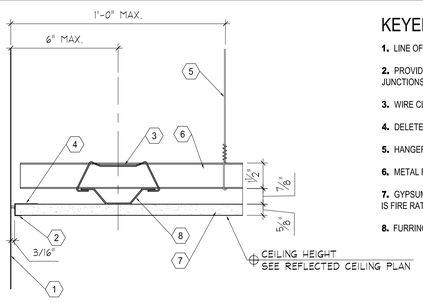

KEYED NOTES

1. LINE OF C.M.U. OR GYPSUM BOARD WALL AS OCCURS.
2. PROVIDE "J" SHAPED METAL TRIM WITH CONTINUOUS SEALANT AT ALL MASONRY WALL JUNCTIONS.
3. WIRE CLIP OR TIE.
4. DELETE METAL TRIM AND CONTINUE GYPSUM BOARD IF CEILING ABUTS GYPSUM BOARD WALL.
5. HANGER WIRE, 8 GAUGE, @ 4'-0" O.C. MAXIMUM AND WITHIN 12" OF THE WALL TYPICAL.
6. METAL RUNNER CHANNELS, 1 11/2" THICK, @ 48" O.C.
7. GYPSUM BOARD, 5/8" THICK, ATTACHED TO METAL FURRING CHANNEL. USE TYPE 'X' IF CEILING IS FIRE RATED.
8. FURRING CHANNEL, 7/8" THICK, @ 2'-0" O.C. MAXIMUM

A1 Gypsum Board Ceiling Detail

Scale: 3" = 1'-0"

KEYED NOTES

1. EXISTING WALL ASSEMBLY.
2. CONTINUOUS CAULKING ON BOTH SIDES OF FRAME. VERIFY CAULKING COLOR WITH ARCHITECT.
3. OVERHEAD COILING DOOR TRACK ATTACH PER MANUFACTURERS RECOMMENDATIONS.
4. STEEL ANGLE. SEE STRUCTURAL DRAWINGS
5. DOOR, SEE DOOR SCHEDULE FOR DOOR TYPE.
6. STEEL COLUMN. SEE STRUCTURAL DRAWINGS.
7. FIRE RETARDANT TREATED PLYWOOD SHEATHING, 1/2" THICK, OVER 3" RIGID INSULATION.
9. BOLT. GALVANIZED 3/4" DIAMETER @ 1'-6" O.C. SPACED EQUALLY, CENTERED ON OPENING.

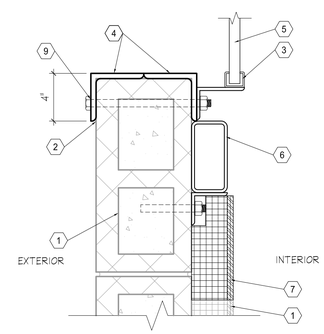

PLAN VIEW

A4 Coiling Door Jamb

Scale: 2" = 1'-0"

KEYED NOTES

1. EXISTING WALL ASSEMBLY.
2. CONTINUOUS CAULKING ON BOTH SIDES OF FRAME. VERIFY CAULKING COLOR WITH ARCHITECT.
3. OVERHEAD COILING DOOR TRACK, ATTACH TO EXISTING MASONRY WALL PER MANUFACTURERS RECOMMENDATIONS, UTILIZING APPROVED ANCHORS LISTED ON SHEET S101.
4. STEEL ANGLE. SEE STRUCTURAL DRAWINGS. PRIME & PAINT, VERIFY COLOR WITH ARCHITECT.
5. DOOR, SEE DOOR SCHEDULE FOR DOOR TYPE.
6. BOLT. GALVANIZED 3/4" DIAMETER @ 1'-6" O.C. SPACED EQUALLY, CENTERED ON OPENING.
7. TRANSPARENT DOOR CURTAIN.

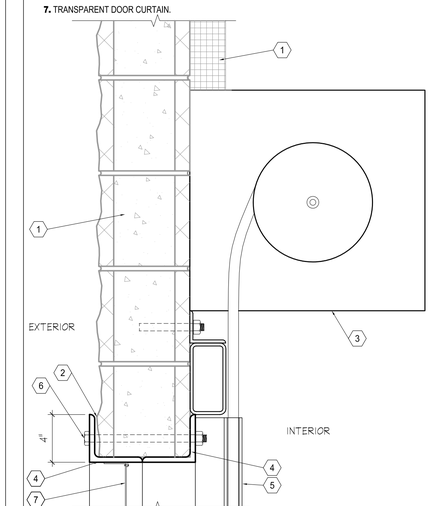

SECTION VIEW

A5 Coiling Door Head

Scale: 2" = 1'-0"

NJRA Architects, Inc.
370 East 500 South, Suite 101
Salt Lake City, Utah 84111

Phone: 801. 364. 9259
Fax: 801. 521. 0420
www.njraarchitects.com

STATE OF UTAH
SELVAM RAJAVELU
267857
LICENSED ARCHITECT

Division of Facilities Construction & Management
Utah State Mail Center
Office Renovation

DFCM Project #: 09258310
250 North 1950 West
Salt Lake City, Utah

ISSUE
March 10, 2010 - Const. Documents 100%

NJRA Project #: 10901.00

Details

A-502

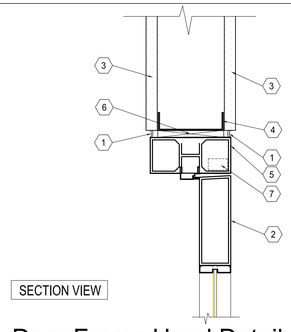

SECTION VIEW

KEYED NOTES

1. CONTINUOUS SEALANT ON BOTH SIDES OF THE FRAME.
2. DOOR, SEE DOOR SCHEDULE.
3. GYPSUM BOARD, 5/8" THICK, ATTACHED TO METAL STUD FRAMING. SEE WALL TYPES.
4. STEEL RUNNER (18 GAUGE) FASTENED WITH SCREWS TO STRUT STUDS AT EACH END.
5. DOOR FRAME, SEE DOOR SCHEDULE FOR FRAME TYPE.
6. WOOD BLOCKING.
7. PROVIDE SWITCH INSIDE THE FRAME FOR SECURITY ALARM. COORDINATE ROUTING OF CONDUIT INSIDE THE DOOR FRAME WITH ELECTRICAL CONTRACTOR. SEE ELECTRICAL DRAWINGS.

D1 Door Frame Head Detail

Scale: 3" = 1'-0"

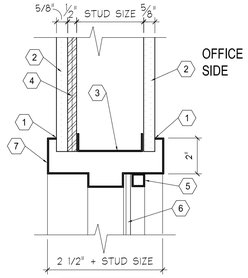

SECTION VIEW

KEYED NOTES

1. CONTINUOUS SEALANT ON BOTH SIDES OF THE FRAME.
2. GYPSUM BOARD, 5/8" THICK, ATTACHED TO METAL STUD FRAMING. SEE WALL TYPES.
3. STEEL RUNNER (18 GAUGE) FASTENED WITH SCREWS TO STRUT STUDS AT EACH END.
4. FIRE RETARDANT TREATED PLYWOOD SHEATHING, 1/2" THICK. ATTACH TO METAL STUD FRAMING. SEE WALL TYPES.
5. WINDOW GLAZING STOP. STOPS SHALL BE LOCATED ON THE OFFICE ROOM SIDE.
6. GLAZING, SEE WINDOW SCHEDULE.
7. HOLLOW METAL WINDOW FRAME. PAINT FRAME, SEE PROJECT MANUAL.

D3 Window Head Detail

Scale: 3" = 1'-0"

KEYED NOTES

1. HOLLOW METAL WINDOW FRAME. PAINT FRAME, SEE PROJECT MANUAL.
2. STEEL STRUCTURE, SEE STRUCTURAL DRAWINGS.
3. CONTINOUS SEALANT.
4. WINDOW GLAZING STOP. STOPS SHALL BE LOCATED ON THE OFFICE ROOM SIDE.
5. GLAZING, SEE WINDOW SCHEDULE.
6. GYPSUM BOARD, 5/8" THICK, ATTACHED TO METAL STUD FRAMING. SEE WALL TYPES.
7. METAL STUDS (18 GAUGE) AT FRAME JAMBS, WALL ENDS, ETC., PROVIDE STEEL STRAPS (6" HIGH 16 GAUGE STRAPS AT 2'-0" O.C.) FASTENED TO BOTH STUDS ON EACH SIDE. SEE FLOOR PLAN AND WALL SECTIONS FOR METAL STUD SIZES.
8. FIRE RETARDANT TREATED PLYWOOD, 1/2" THICK. ATTACH TO METAL STUD FRAMING. SEE WALL TYPES.
9. WINDOW FRAME, BEYOND.

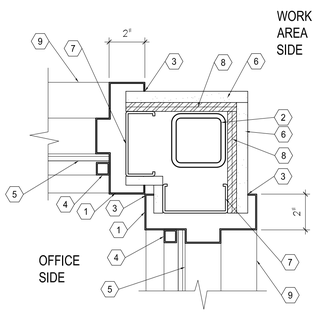

PLAN VIEW

C5 Window Jamb Detail

Scale: 3" = 1'-0"

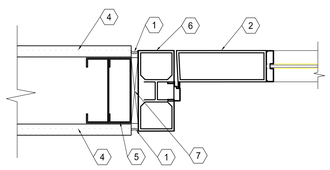

PLAN VIEW

KEYED NOTES

1. CONTINUOUS SEALANT ON BOTH SIDES OF THE FRAME.
2. DOOR, SEE DOOR SCHEDULE.
4. GYPSUM BOARD, 5/8" THICK, ATTACHED TO METAL STUD FRAMING. SEE WALL TYPES.
5. PROVIDE DOUBLE METAL STUDS (18 GAUGE) AT FRAME JAMBS, WALL ENDS, ETC., PROVIDE STEEL STRAPS (6" HIGH 16 GAUGE STRAPS AT 2'-0" O.C.) FASTENED TO BOTH STUDS ON EACH SIDE. SEE FLOOR PLAN AND WALL SECTIONS FOR METAL STUD SIZES.
6. DOOR FRAME, SEE DOOR SCHEDULE FOR FRAME TYPE.
7. WOOD BLOCKING.

C1 Door Frame Jamb Detail

Scale: 3" = 1'-0"

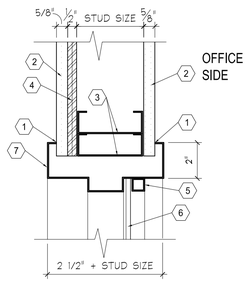

PLAN VIEW

KEYED NOTES

1. CONTINUOUS SEALANT ON BOTH SIDES OF THE FRAME.
2. GYPSUM BOARD, 5/8" THICK, ATTACHED TO METAL STUD FRAMING. SEE WALL TYPES.
3. PROVIDE DOUBLE METAL STUDS (18 GAUGE) AT FRAME JAMBS, WALL ENDS, ETC., PROVIDE STEEL STRAPS (6" HIGH 16 GAUGE STRAPS AT 2'-0" O.C.) FASTENED TO BOTH STUDS ON EACH SIDE. SEE FLOOR PLAN AND WALL SECTIONS FOR METAL STUD SIZES.
4. FIRE RETARDANT TREATED PLYWOOD SHEATHING, 1/2" THICK. ATTACH TO METAL STUD FRAMING. SEE WALL TYPES.
5. WINDOW GLAZING STOP. STOPS SHALL BE LOCATED ON THE OFFICE ROOM SIDE.
6. GLAZING, SEE WINDOW SCHEDULE.
7. HOLLOW METAL WINDOW FRAME. PAINT FRAME, SEE PROJECT MANUAL.

C3 Window Jamb Detail

Scale: 3" = 1'-0"

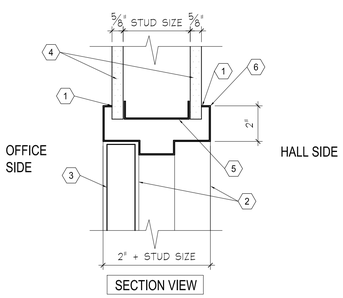

SECTION VIEW

KEYED NOTES

1. CONTINUOUS SEALANT ON BOTH SIDES OF THE FRAME.
2. DOOR FRAME SEEN BEYOND.
3. DOOR, SEE DOOR SCHEDULE FOR DOOR TYPE.
4. GYPSUM BOARD, 5/8" THICK, ATTACHED TO METAL STUDS. SEE WALL TYPES.
5. STEEL RUNNER (18 GAUGE) FASTENED WITH SCREWS TO STRUT STUDS AT EACH END.
6. DOOR FRAME, SEE DOOR SCHEDULE FOR FRAME TYPE. FRAME THICKNESS VARIES WITH WALL THICKNESS. SEE FLOOR PLAN AND WALL SECTIONS. PAINT FRAME.

B1 Door Frame Head Detail

Scale: 3" = 1'-0"

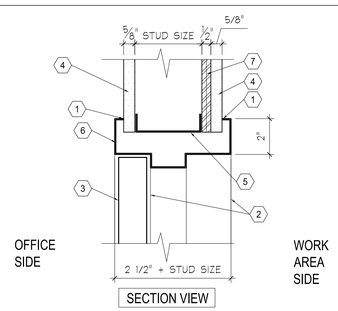

SECTION VIEW

KEYED NOTES

1. CONTINUOUS SEALANT ON BOTH SIDES OF THE FRAME.
2. DOOR FRAME SEEN BEYOND.
3. DOOR, SEE DOOR SCHEDULE FOR DOOR TYPE.
4. GYPSUM BOARD, 5/8" THICK, ATTACHED TO METAL STUDS. SEE WALL TYPES.
5. STEEL RUNNER (18 GAUGE) FASTENED WITH SCREWS TO STRUT STUDS AT EACH END.
6. DOOR FRAME, SEE DOOR SCHEDULE FOR FRAME TYPE. FRAME THICKNESS VARIES WITH WALL THICKNESS. SEE FLOOR PLAN AND WALL SECTIONS. PAINT FRAME.
7. FIRE RETARDANT TREATED PLYWOOD SHEATHING, 1/2" THICK. ATTACH TO METAL STUD FRAMING. SEE WALL TYPES.

B3 Door Frame Head Detail

Scale: 3" = 1'-0"

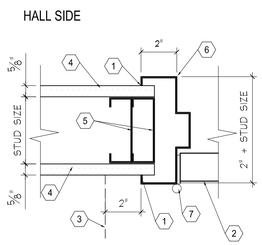

PLAN VIEW

KEYED NOTES

1. CONTINUOUS SEALANT ON BOTH SIDES OF THE FRAME.
2. DOOR, SEE DOOR SCHEDULE FOR DOOR TYPE.
3. LINE OF WALL AS OCCURS.
4. GYPSUM BOARD, 5/8" THICK, ATTACHED TO METAL STUD FRAMING. SEE WALL TYPES.
5. PROVIDE DOUBLE METAL STUDS (18 GAUGE) AT FRAME JAMBS, WALL ENDS, ETC., PROVIDE STEEL STRAPS (6" HIGH 16 GAUGE STRAPS AT 2'-0" O.C.) FASTENED TO BOTH STUDS ON EACH SIDE. SEE FLOOR PLAN AND WALL SECTIONS FOR METAL STUD SIZES.
6. DOOR FRAME, SEE DOOR SCHEDULE FOR FRAME TYPE. FRAME THICKNESS VARIES WITH WALL THICKNESS. SEE FLOOR PLAN AND WALL SECTIONS. PAINT FRAME.
7. DOOR HINGE AS OCCURS. SEE DOOR AND HARDWARE SCHEDULE. SEE FLOOR PLAN FOR DOOR SWING.

A1 Door Frame Jamb Detail

Scale: 3" = 1'-0"

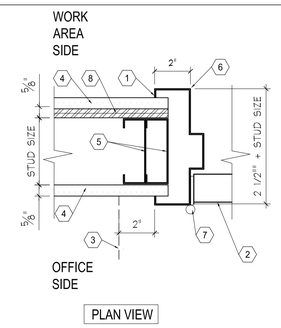

PLAN VIEW

KEYED NOTES

1. CONTINUOUS SEALANT ON BOTH SIDES OF THE FRAME.
2. DOOR, SEE DOOR SCHEDULE FOR DOOR TYPE.
3. LINE OF WALL AS OCCURS.
4. GYPSUM BOARD, 5/8" THICK, ATTACHED TO METAL STUD FRAMING. SEE WALL TYPES.
5. PROVIDE DOUBLE METAL STUDS (18 GAUGE) AT FRAME JAMBS, WALL ENDS, ETC., PROVIDE STEEL STRAPS (6" HIGH 16 GAUGE STRAPS AT 2'-0" O.C.) FASTENED TO BOTH STUDS ON EACH SIDE. SEE FLOOR PLAN AND WALL SECTIONS FOR METAL STUD SIZES.
6. DOOR FRAME, SEE DOOR SCHEDULE FOR FRAME TYPE. FRAME THICKNESS VARIES WITH WALL THICKNESS. SEE FLOOR PLAN AND WALL SECTIONS. PAINT FRAME.
7. DOOR HINGE AS OCCURS. SEE DOOR AND HARDWARE SCHEDULE. SEE FLOOR PLAN FOR DOOR SWING.
8. FIRE RETARDANT TREATED PLYWOOD SHEATHING, 1/2" THICK. ATTACH TO METAL STUD FRAMING. SEE WALL TYPES.

A3 Door Frame Jamb Detail

Scale: 3" = 1'-0"

NJRA ARCHITECTS

NJRA Architects, Inc.
370 East 500 South, Suite 101
Salt Lake City, Utah 84111

Phone: 801. 364. 9259
Fax: 801. 521. 0420
www.njraarchitects.com

STATE OF UTAH
SELVAM RAJAVELU
267857
LICENSED ARCHITECT

Division of Facilities Construction & Management
Utah State Mail Center
Office Renovation

DFCM Project #:09258310
250 North 1950 West
Salt Lake City, Utah

ISSUE
March 10, 2010 - Const. Documents 100%

NJRA Project #: 10901.00

Details

A-503

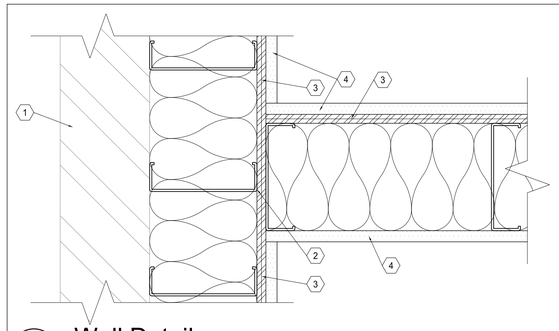

KEYED NOTES

1. EXISTING STUD WALL.

2. 6" METAL C STUD.

3. FIRE RETARDANT TREATED PLYWOOD SHEATHING, 1/2" THICK.

4. GYPSUM BOARD, 5/8" THICK

D1 Wall Detail

Scale: 3" = 1'-0"

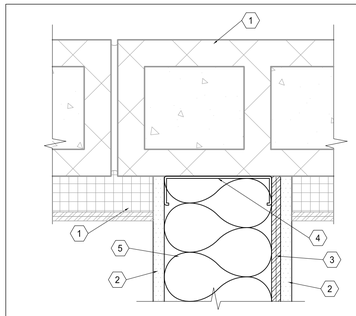

KEYED NOTES

1. EXISTING WALL ASSEMBLY.

2. 5/8" GYPSUM BOARD

3. FIRE RETARDANT TREATED 1/2" PLYWOOD SHEATHING.

4. 6" METAL STUD

5. BATT. INSULATION

D3 Typical Wall Joint Detail

Scale: 3" = 1'-0"

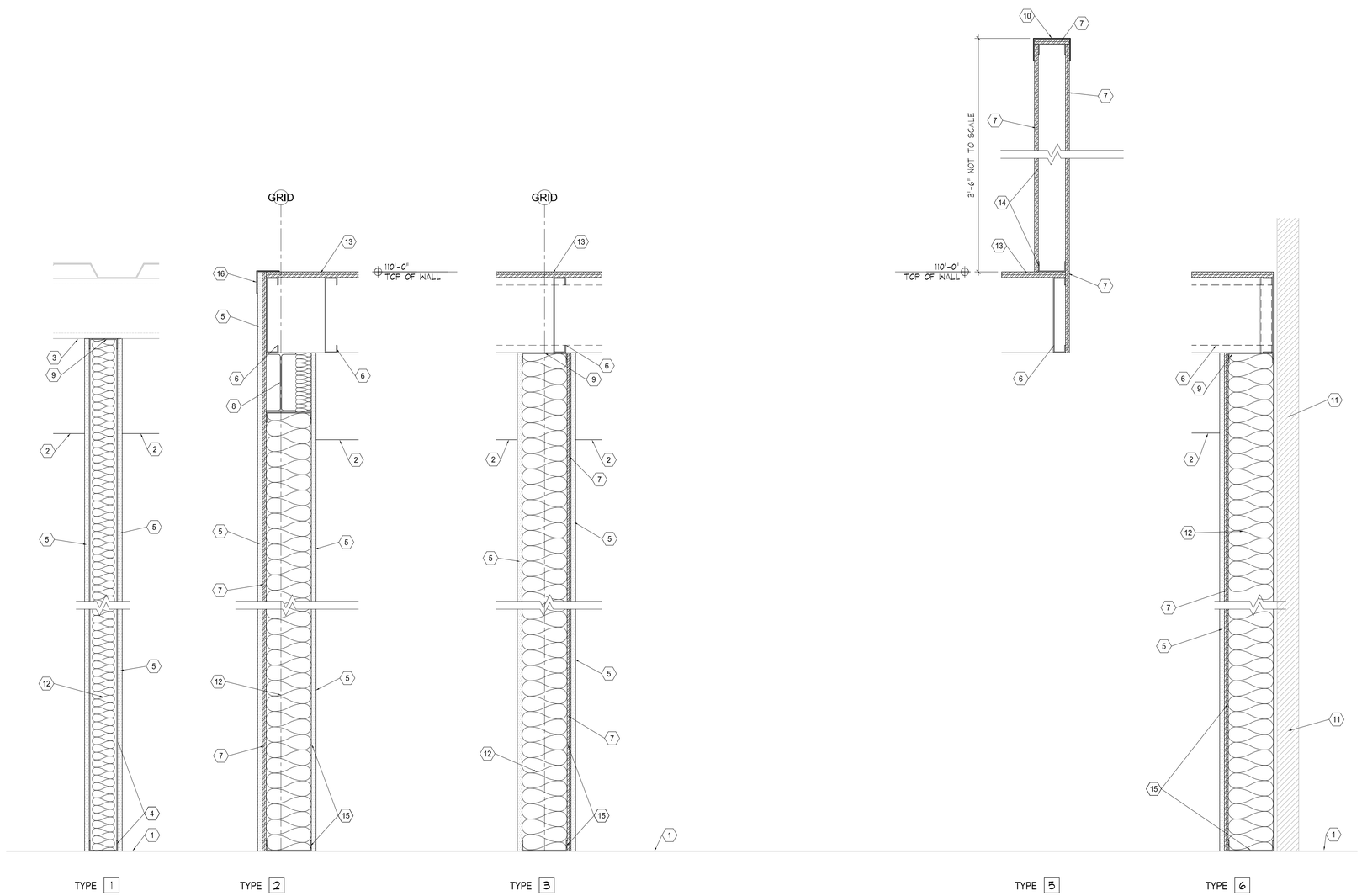

KEYED NOTES

1. LINE OF EXISTING FLOOR.

2. CEILING. SEE REFLECTED CEILING PLAN FOR CEILING TYPE AND HEIGHT.

3. EXISTING STRUCTURE ABOVE.

4. 3 1/2" METAL STUD FRAMING. BASED ON LOCATION INDICATED IN FLOOR PLAN, METAL STUDS AT 16" O.C. WITH TRACK RUNNERS AT TOP AND BOTTOM. BOTTOM RUNNER SHALL BE ATTACHED TO CONCRETE FLOOR WITH FASTENERS AT 16" O.C. STAGGERED. PROVIDE SOUND BATT INSULATION BETWEEN STUDS.

5. GYPSUM BOARD, 5/8" THICK, ATTACHED TO METAL STUD FRAMING AND/OR FIRE RETARDANT TREATED PLYWOOD SHEATHING.

6. METAL FLOOR JOISTS.

7. FIRE RETARDANT TREATED PLYWOOD SHEATHING, 1/2" THICK, ATTACHED TO METAL STUD FRAMING.

8. STEEL BEAM, WHERE OCCURS. SEE STRUCTURAL DRAWINGS.

9. ATTACH METAL RUNNER TO UNDERSIDE OF STRUCTURE.

10. TOP OF WALL STEEL 'C' ANGLE. PAINTED.

11. EXISTING WALL.

12. BATT INSULATION.

13. FIRE RETARDANT TREATED PLYWOOD SHEATHING, 3/4" THICK, ATTACHED TO METAL FLOOR JOISTS.

14. 3 5/8" METAL STUD FRAMING. BASED ON LOCATION INDICATED IN FLOOR PLAN, METAL STUDS AT 16" O.C. WITH TRACK RUNNERS AT TOP AND BOTTOM. BOTTOM RUNNER SHALL BE ATTACHED TO FIRE RETARDANT TREATED PLYWOOD SHEATHING FLOOR FLOOR WITH FASTENERS AT 16" O.C. STAGGERED.

15. 6" METAL STUD FRAMING. BASED ON LOCATION INDICATED IN FLOOR PLAN, METAL STUDS AT 16" O.C. WITH TRACK RUNNERS AT TOP AND BOTTOM. BOTTOM RUNNER SHALL BE ATTACHED TO CONCRETE FLOOR WITH FASTENERS AT 16" O.C. STAGGERED. PROVIDE SOUND BATT INSULATION BETWEEN STUDS.

16. TOP OF WALL STEEL ANGLE. PAINTED.

GENERAL NOTES

A. CONTRACTOR SHALL VERIFY ITEMS LIKE SEMI OR FULLY RECESSED MISCELLANEOUS BOXES, PANELS, PLUMBING LINES, CONDUITS, PIPES, ETC. THAT ARE CONCEALED IN THE WALL. IF 3-5/8" METAL STUD ARE INADEQUATE, CONTRACTOR SHALL NOTIFY THE ARCHITECT AND USE 6" STUDS. COORDINATE WITH ALL THE CONSULTANT DRAWINGS PRIOR TO WALL CONSTRUCTION AND USE 6" OR 8", 20 GAUGE MINIMUM, METAL STUDS FOR FRAMING IN LIEU OF 3-5/8" METAL STUDS.

A1 Wall Section

Scale: 1-1/2" = 1'-0"

NJRA ARCHITECTS

NJRA Architects, Inc.
370 East 500 South, Suite 101
Salt Lake City, Utah 84111

Phone: 801. 364. 9259
Fax: 801. 521. 0420
www.njraarchitects.com

STATE OF UTAH
SELVAM RAJAVELU
267857
LICENSED ARCHITECT

Division of Facilities Construction & Management

Utah State Mail Center Office Renovation

DFCM Project #: 09258310
250 North 1950 West
Salt Lake City, Utah

ISSUE

March 10, 2010 - Const. Documents 100%

NJRA Project #: 10901.00

Details

A-504

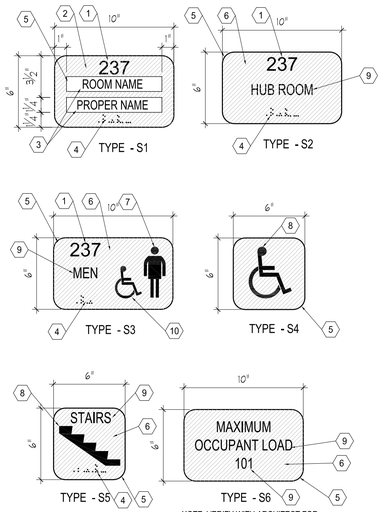

NOTE: VERIFY WITH ARCHITECT FOR ACTUAL OCCUPANT LOAD.

KEYED NOTES

1. ROOM NUMBER (1/32" RAISED TEXT CHARACTERS, HELVETICA FONT, MATTE FINISHED OPAQUE ACRYLIC SHEET) ATTACHED TO FRONT PANEL.

2. MATTE FINISHED OPAQUE ACRYLIC FRONT PANEL (WITH TRANSPARENT WINDOW) ATTACHED TO BASE PANEL.

3. TRANSPARENT WINDOW FOR TEXT INSERT (HELVETICA FONT). TEXT INSERT SHALL BE FURNISHED AND INSTALLED BY SIGN CONTRACTOR.

4. BRAILLE CHARACTERS AS PER A.D.A. (AMERICANS WITH DISABILITIES ACT) REQUIREMENTS DENOTING ROOM NUMBER AND NAME.

5. RADIUS CORNER, 1" TYPICAL.

6. MATTE FINISHED OPAQUE ACRYLIC FRONT PANEL ATTACHED TO BASE PANEL.

7. PROVIDE APPROPRIATE SYMBOL FOR MEN, WOMEN, OR UNISEX TOILET ROOM AS OCCURS.

8. PROVIDE APPROPRIATE SYMBOL FOR STAIR, DISABLED SIGN, ETC. AS INDICATED.

9. ROOM NAME (1/32" RAISED TEXT CHARACTERS, HELVETICA FONT, MATTE FINISHED OPAQUE ACRYLIC SHEET) ATTACHED TO FRONT PANEL.

10. PROVIDE DISABLED SYMBOL AS INDICATED IN THE SIGN FOR ALL ROOMS THAT ARE WHEEL CHAIR ACCESSIBLE.

11. DOCK DOOR NUMBER, 1 & 2, (1/32" RAISED TEXT CHARACTERS, HELVETICA FONT, MATTE FINISHED OPAQUE ACRYLIC SHEET) ATTACHED TO FRONT PANEL. VERIFY MOUNTING LOCATION WITH OWNER. FURNISH DIRECTIONAL ARROW.

NOTE:

1. PROVIDE ROOM SIGN AT EACH DOORWAY OR A WALL OPENING LEADING TO A ROOM. SEE FINISH FLOOR PLAN FOR REQUIRED NUMBER OF SIGNS, SIGN TYPE, ROOM NAMES, ETC.

2. SIGN CONTRACTOR SHALL COORDINATE WITH OWNER AND PROVIDE TEXT INSERTS FOR OCCUPANT'S PROPER NAME FOR ALL "TYPE - S1" WALL SIGNS.

3. ALL COLORS SHALL BE SELECTED BY ARCHITECT AND MOUNTED ON WALL OR DOOR PER DETAIL A3/A-505.

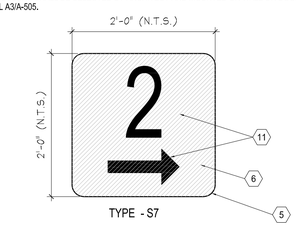

A1 Room Signage Detail

Scale: 2" = 1'-0"

KEYED NOTES

1. TYPE "A", "B", "C", OR "E" SIGN. SEE FINISH SCHEDULE FOR FOR VARIOUS SIGN TYPE LOCATIONS. SEE DETAIL C1/A-505.

2. TYPE "D" SIGN AT ALL ACCESSIBLE LOCATIONS. SEE FINISH SCHEDULE.

3. DOOR FRAME. SEE DOOR SCHEDULE.

4. DOOR. SEE DOOR SCHEDULE.

5. OPENING IN WALL.

6. LINE OF FLOOR.

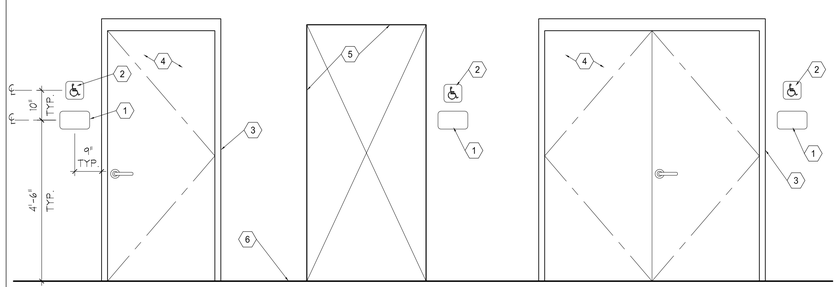

C1 Sign Mounting Detail

Scale: 1/2" = 1'-0"

KEYED NOTES

1. EXISTING CONCRETE FLOOR SLAB TO REMAIN.
2. SAW CUT FLOOR SLAB AT AN ANGLE AS INDICATED AND REMOVE CONCRETE, GRAVEL AND DIRT AS REQUIRED FOR PIPE INSTALLATION. TAKE REQUIRED MEASURES NOT TO CUT EXISTING POWER CONDUIT, PLUMBING LINES BURIED UNDERNEATH THE SLAB.
3. CONTRACTOR SHALL DETERMINE THIS DIMENSION BASED ON THE DEPTH OF PIPE LOCATION. DEPTH VARIES DUE TO THE PIPE SLOPE FOR DRAINAGE.

KEYED NOTES

4. SEWER PIPE. SEE MECHANICAL DRAWINGS FOR SIZE, RUN, TYPE, ETC.
5. CORE DRILL EXISTING CONCRETE SLAB AND PROVIDE DOWELS (# 3 BARS, 8" LONG, SET AT 16" O.C.) SET IN EPOXY AT AN ANGLE AS INDICATED.
6. NEW 6-1/2" THICK CONCRETE OVER 4" THICK DRAINAGE GRAVEL. NEW CONCRETE SHALL BE FLUSH WITH EXISTING SLAB.

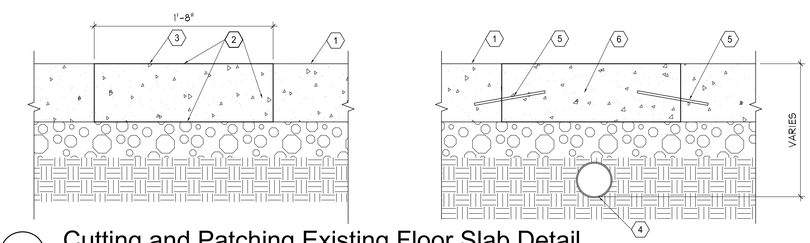

B3 Cutting and Patching Existing Floor Slab Detail

Scale: 1-1/2" = 1'-0"

KEYED NOTES

1. LINE OF WALL.

2. MATTE FINISHED, OPAQUE ACRYLIC SHEET BASE PANEL ATTACHED TO SHIM PLATE.

3. ROOM NUMBER (1/32" RAISED TEXT CHARACTERS, HELVETICA FONT, MATTE FINISHED OPAQUE ACRYLIC SHEET) ATTACHED TO FRONT PANEL.

4. MATTE FINISHED OPAQUE ACRYLIC FRONT PANEL (WITH TRANSPARENT WINDOW) ATTACHED TO BASE PANEL.

5. CONCEALED ALUMINUM SHIM PLATE,1/8" THICK. WITH PRE-DRILLED HOLES FOR COUNTERSUNK FASTENERS. USE APPROPRIATE FASTENERS DEPENDING ON THE SUBSTRATE.

6. BRAILLE CHARACTERS AS PER A.D.A. (AMERICANS WITH DISABILITIES ACT) REQUIREMENTS DENOTING ROOM NUMBER AND NAME.

7. RECESS 1/16" FOR TEXT INSERT, FOR SIGN "TYPE - A" ONLY.

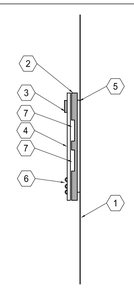

NOTE:

TYPE "A" SIGN SHOWN. MOUNTING FOR OTHER SIGN TYPES SHALL BE SIMILAR.

A3 Sign Mounting Detail

Scale: 3" = 1'-0"

KEYED NOTES

1. FIBERGLASS PLATE WITH PAINTED SIGN.

2. STEEL PIPE, 2" DIAMETER, GALVANIZED.

3. SIGN POLE EMBEDDED IN CONCRETE.

4. EARTH.

5. POLE BASE, SEE B2/A501.

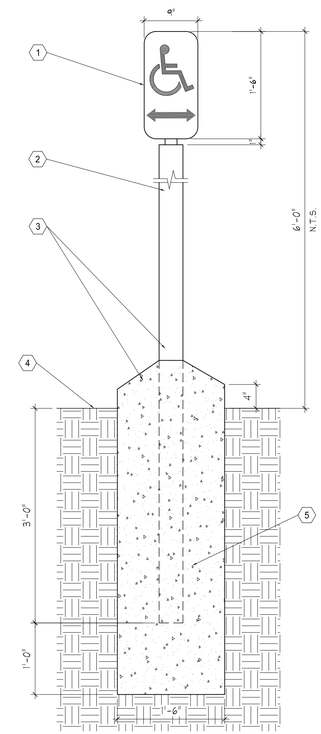

B5 Sign Detail

Scale: 1" = 1'-0"

KEYED NOTES

1. EXISTING CMU WALL.

2. DOWNSPOUT, 3" DIAMETER SCH 40 PIPE GALVANIZED STEEL. FULLY WELDED. GRIND ALL WELDS SMOOTH.

3. DOWNSPOUT HANGER

4. FASTENERS

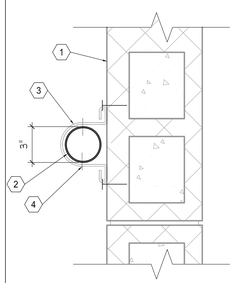

A5 Downspout Detail

Scale: 2" = 1'-0"

NJRA Architects, Inc.
370 East 500 South, Suite 101
Salt Lake City, Utah 84111

Phone: 801. 364. 9259
Fax: 801. 521. 0420
www.njraarchitects.com

STATE OF UTAH
SELVAM RAJAVELU
267857
LICENSED ARCHITECT

Division of Facilities Construction & Management
Utah State Mail Center
Office Renovation

DFCM Project #: 09258310
250 North 1950 West
Salt Lake City, Utah

ISSUE
March 10, 2010 - Const. Documents 100%

NJRA Project #: 10901.00

Details

A-505

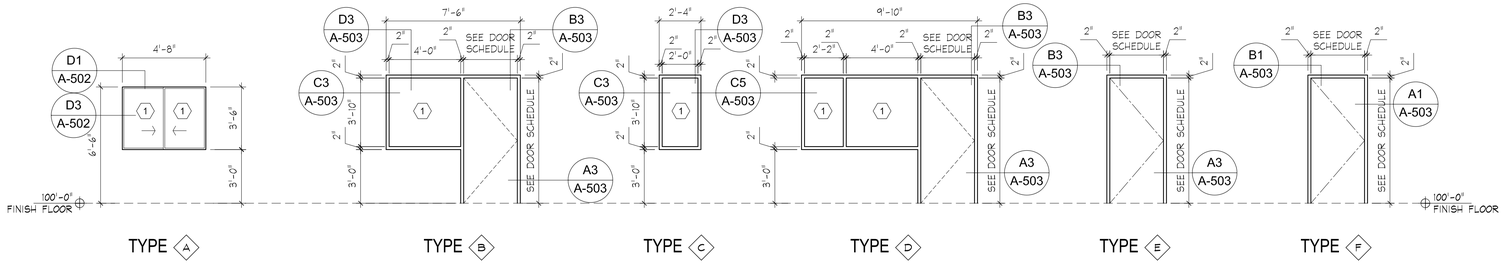

D1 Hollow Metal Frame Types For Door & Windows

1/4" = 1'-0"

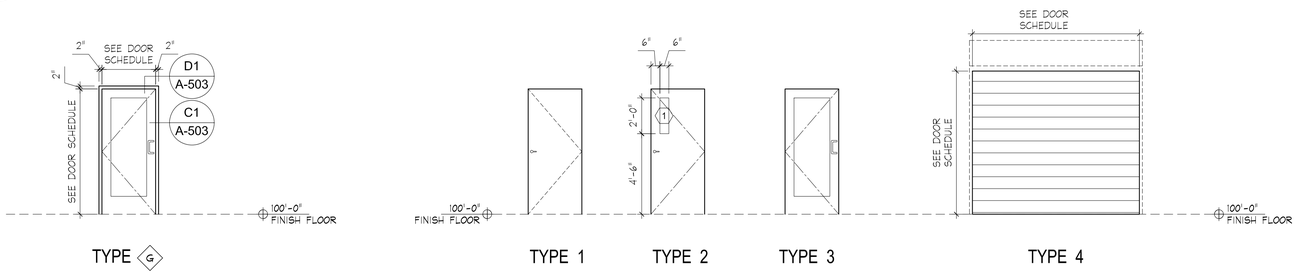

C1 Aluminum Frame Type

1/4" = 1'-0"

C2 Door Elevations

1/4" = 1'-0"

DOOR SCHEDULE

DOOR NUMBER	DOOR SIZE	DOOR ELEVATION SEE C2/A-801	DOOR MATERIAL	FRAME ELEVATION	FRAME MATERIAL	FRAME DETAILS: JAMB	FRAME DETAILS: HEAD	FRAME DETAILS: THRESHOLD	DOOR NUMBER	FIRE RATING (IN MINUTES)	DOOR HARDWARE SET (NOTE: SEE HARDWARE SETS (THIS PAGE) AND **PROJECT MANUAL**.)	REMARKS
101A	3' - 0" x 7' - 0"	3	ALUMINUM	G (C1/A-801)	ALUMINUM	C1/A-503	D1/A-503	A5/A-501	101A		HW SET 05	1, 2, 4
102A	3' - 0" x 7' - 0"	2	WOOD	F (D1/A-801)	HOLLOW METAL	A1/A-503	B1/A-503		102A		HW SET 03	
104A	8' - 0" x 9' - 4"	4	INSULATED STEEL			A4/A-502	A5/A-502	B3/A-501	104A		HW SET 01	4,5
105A	3' - 0" x 7' - 0"	1	HOLLOW METAL	D (D1/A-801)	HOLLOW METAL	A3/A-503	B3/A-503	D1/A-501	105A		HW SET 02	3
106A	3' - 0" x 7' - 0"	1	HOLLOW METAL	B (D1/A-801)	HOLLOW METAL	A3/A-503	B3/A-503	D1/A-501	106A		HW SET 02	3
107A	3' - 0" x 7' - 0"	1	HOLLOW METAL	B (D1/A-801)	HOLLOW METAL	A3/A-503	B3/A-503	D1/A-501	107A		HW SET 02	3
108A	3' - 0" x 7' - 0"	1	HOLLOW METAL	E (D1/A-801)	HOLLOW METAL	A3/A-503	B3/A-503		108A		HW SET 04	

REMARKS

1. ALUMINUM FRAME, HEAVY DUTY 2" X 4 1/2" FRAMES AT ALL DOOR JAMBS AND HEADS. FRAMES SHALL HAVE BAKED FINISH WITH COLOR SELECTED BY ARCHITECT.

2. EXISTING DOOR, RE-INSTALLED.

3. SOUND SEAL AND SOUND SWEEP.

4. CARD READER.

5. MOTOR OPERATED.

KEYED NOTES

1. CLEAR, TEMPERED, GLAZING 1/4" THICK.

GENERAL NOTES

A. FIELD VERIFY WINDOW AND DOOR FRAME OPENING SIZES BEFORE FRAME INSTALLATION.

DOOR HARDWARE SETS

HW 01:
EACH TO HAVE:
1 EA CONTROLLER CT1000-KLC-PS-EIR SCE
1 EA SMART CARD READER SXF1100 BLK SCE
1 REMAINING DOOR HARDWARE BY MANUFACTURER B/O

HW 02:
EACH TO HAVE:
3 EA HINGE 5BB1 4.5X4.5 652 IVE
1 EA OFFICE LOCK L9050P 17A(MATCH EXISTING KEY AND LEVER) 626 SCH
1 EA KICK PLATE 8400 10" X 2" LDW 630 IVE
1 EA WALLS STOP WS407CCV 630 IVE
1 SET SEALS 5050B BRN NGP
1 EA DOOR BOTTOM 4440SA AL NGP

HW 03:
EACH TO HAVE:
3 EA HINGE 5BB1 4.5X4.5 652 IVE
1 EA OFFICE LOCK L9050P 17A (MATCH EXISTING KAY AND LEVER) 626 SCH
1 EA KICK PLATE 8400 10"X2" LDW 630 IVE
1 EA WALL STOP WS407CCV 630 IVE
3 EA SILENCER SR64 GRY IVE

HW 04:
EACH TO HAVE:
3 EA HINGE 5BB1 4.5X4.5 652 IVE
1 EA STOREROOM LOCK L9080P 17A (TO MATCH EXISTING KEY AND LEVER) 626 SCH
1 EA SURFACE CLOSER SC71 HO/DS 689 FAL
1 EA KICK PLATE 8400 10"X2" LDW 630 IVE
1 EA WALL STOP WS407CCV 630 IVE
3 EA SILENCER SR64 GRY IVE

HW 05:
EACH TO HAVE:
1 EA DEADLATCH 4900 SERIES 628 ADA
1 EA DEALATCH LEVER 4560 628 ADA
1 EA MORTISE CYLINDER MORTISE CYLINDER(MATCH EXISTING) 626
1 EA ELEC STRIKE 7100 X 24VDC 630 ADA
1 EA CONTROLLER CT1000-KLC-PS-EIR SCE
1 EA SMART CARD READER SXF1100 BLK SCE
RE USE BALANCE OF EXISTING HARDWARE

ENTRANCE BY CARD READER. USER PRESENTS CREDENTIAL, ELECTRIC STRIKE KEEPER RELEASES, USER OPENS DOOR.

NJRA Architects, Inc.
370 East 500 South, Suite 101
Salt Lake City, Utah 84111

Phone: 801. 364. 9259
Fax: 801. 521. 0420
www.njraarchitects.com

STATE OF UTAH
SELVAM RAJAVELU
267857
LICENSED ARCHITECT

Division of Facilities Construction & Management
Utah State Mail Center
Office Renovation

DFCM Project #: 09238310
250 North 1950 West
Salt Lake City, Utah

ISSUE
March 10, 2010 - Const. Documents 100%

NJRA Project #: 10901.00

Door & Window Types

A-801

SYMBOL LEGEND

SYMBOL	DESCRIPTION
DUCTWORK	
SINGLE LINE / DOUBLE LINE	DESCRIPTION
	RECTANGULAR SUPPLY DUCT UP
	RECTANGULAR SUPPLY DUCT DOWN
	RECTANGULAR RETURN DUCT UP
	RECTANGULAR RETURN DUCT DOWN
	RECTANGULAR EXHAUST DUCT UP
	RECTANGULAR EXHAUST DUCT DOWN
	ROUND DUCT UP
	ROUND DUCT DOWN
	ACOUSTICALLY LINED RECTANGULAR DUCT
	90° RECTANGULAR ELBOW WITH TURNING VANES
	90° RADIUS ELBOW R=1.5
	DUCT SIZE OR SHAPE TRANSITION
	OPPOSED BLADE BALANCING DAMPER (O.B.D.) IN RECT DUCT
	BUTTERFLY BALANCING DAMPER IN ROUND DUCTS
	COMBINATION TEE
	SQUARE OR RECTANGULAR CEILING DIFFUSER
	ROUND FLEXIBLE DUCT
	RETURN GRILLE
	EXHAUST GRILLE
	EXISTING DUCT
	DUCT TO BE REMOVED
HVAC SYMBOLS	
(T)	THERMOSTAT
(S)	TEMPERATURE SENSOR
(H)	HUMIDISTAT
VFD VFC	VARIABLE FREQUENCY MOTOR CONTROLER

SYMBOL LEGEND

SYMBOL	DESCRIPTION
REFERENCE AND LINE SYMBOLS	
# / SHEET	DETAIL INDICATOR: # INDICATES DETAIL NUMBER, SHEET INDICATES DRAWING SHEET WHERE DETAIL IS SHOWN.
# / SHEET	ELEVATION OR SECTION INDICATOR, EXTERIOR: # INDICATES ELEVATION OR SECTION NUMBER, SHEET INDICATES DRAWING SHEET WHERE ELEVATION OR SECTION IS SHOWN.
100	ROOM OR SPACE NUMBER.
1	KEYNOTE INDICATOR.
	REVISION INDICATOR.
CU-1	EQUIPMENT INDICATOR.
TYPE / CFM / SIZE	DIFFUSER/GRILLE INDICATOR.
TYPE / SIZE	DIFFUSER/GRILLE INDICATOR.
	BREAK, STRAIGHT.
	BREAK, ROUND.
MATCH LINE / SEE XX/X-XXX	MATCH LINE INDICATOR.
--------	HIDDEN FEATURES LINE: HIDDEN, THIN LINE.
—·—·—	CONTRACT LIMIT LINE: DASHDOT, WIDE LINE.
	NEW CONNECTION POINT TO EXISTING.

ABBREVIATIONS

NOTE: ALL ABBREVIATIONS MAY NOT BE USED

AD	ACCESS DOOR	MCA	MINIMUM CIRCUIT AMPS
AIR COND	AIR CONDITION(-ING,-ED)	MFR	MANUFACTURER
APD	AIR PRESSURE DROP	MIN	MINIMUM
BD	BALANCING DAMPER	N/A	NOT APPLICABLE
BHP	BRAKE HORSE POWER	NC	NORMALLY CLOSED
BTU	BRITISH THERMAL UNIT	NC	NOISE CRITERIA
BTUH	BTU/HOUR	NIC	NOT IN CONTRACT
CFH	CUBIC FEET PER HOUR	NO	NORMALLY OPEN
CFM	CUBIC FEET PER MINUTE	NPSH	NET POSITIVE SUCTION HEAD
CLG	COOLING	NTS	NOT TO SCALE
COMP	COMPONENT	OA	OUTSIDE AIR
COND	CONDENS(-ER, -ING, -ATION)	OD	OUTSIDE DIAMETER
CV	CONTROL VALVE	OZ	OUNCE
CW	COLD WATER	PD	PRESSURE DROP OR DIFFERENCE
DIA	DIAMETER	PG	PROPYLENE GLYCOL
DISCH	DISCHARGE	PH	PHASE
DP	DEPTH OR DEEP	PPM	PARTS PER MILLION
DB	DRY BULB TEMPERATURE	PRESS	PRESSURE
(E)	EXISTING	PSF	POUNDS PER SQUARE FOOT
EER	ENERGY EFFICIENCY RATIO	PSI	POUNDS PER SQUARE INCH
EFF	EFFICIENCY	PSIA	PSI ABSOLUTE
EG	ETHYLENE GLYCOL	PSIG	PSI GAUGE
ELEC	ELECTRIC	R	THERMAL RESISTANCE
ELEV	ELEVATION	RA	RETURN AIR
ENT	ENTERING	RECIRC	RECIRCULATE
EVAP	EVAPORAT(-E, -ING, -ED, -OR)	REFR	REFRIGERATION
EWT	ENTERING WATER TEMPERATURE	REQD	REQUIRED
EXT	EXTERNAL	RLA	RATED --- AMPS
(F)	FUTURE	RPM	REVOLUTIONS PER MINUTE
F	FAHRENHEIT	RW	RAINWATER
FC	FLEXIBLE CONNECT(-OR, -ION)	SA	SUPPLY AIR
FD	FIRE DAMPER	SC	SHADING COEFFICIENT
FLA	FULL LOAD AMPS	SCFM	STANDARD CUBIC FEET PER MINUTE
FPI	FINS PER INCH	SCW	SOFT COLD WATER
FPM	FEET PER MINUTE	SF	SAFETY FACTOR
FPS	FEET PER SECOND	SH	SENSIBLE HEAT
FSD	FIRE SMOKE DAMPER	SL	SEA LEVEL
FT	FEET	SP	STATIC PRESSURE
GAL	GALLON(S)	SPECS(S)	SPECIFICATION(S)
GPH	GALLONS PER HOUR	SQ	SQUARE
GPM	GALLONS PER MINUTE	STD	STANDARD
HD	HEAD	STM	STEAM
HG	MERCURY	TEMP	TEMPERATURE
HR	HOUR	TD	TEMP. DROP OR DIFF.
HT	HEIGHT	THERM	THERMAL
HTG	HEATING	TOT	TOTAL
HP	HORSE POWER	TSTAT	THERMOSTAT
HW	HOT WATER	V	VOLT
HZ	HERTZ(FREQUENCY)	VAC	VACUUM
ID	INSIDE DIAMETER	VAV	VARIABLE AIR VOLUME
IN	INCH	VEL	VELOCITY
KW	KILOWATT	VENT	VENT, VENTILATION
LAT	LEAVING AIR TEMPERATURE	VERT	VERTICAL
LBS	POUNDS	VFC/VFD	VARIABLE FREQUENCY MOTOR CONTROLLER
LG	LENGTH	VOL	VOLUME
LH	LATENT HEAT	WC	WATER COLUMN
LRA	LOCKED ROTOR AMPS	WG	WATER GAUGE
LVG	LEAVING	WPD	WATER PRESSURE DROP
LWT	LEAVING WATER TEMPERATURE	WTR	WATER
MAX	MAXIMUM	WT	WEIGHT
MBH	THOUSAND BTU PER HOUR	WB	WET BULB TEMP
		YR	YEAR

MECHANICAL SHEET INDEX

SHEET NO	SHEET TITLE
ME001	MECHANICAL COVER SHEET
ME002	MECHANICAL SPECIFICATIONS
ME501	MECHANICAL DETAILS
ME601	MECHANICAL SCHEDULES
MD101	MECHANICAL DEMOLITION FLOOR PLANS
MH101	MECHANICAL FLOOR PLANS
MH301	MECHANICAL SECTION

MECHANICAL GENERAL NOTES

1. THE MECHANICAL DRAWINGS SHOW THE GENERAL DESIGN, ARRANGEMENT AND EXTENT OF THE MECHANICAL SYSTEM. BECAUSE OF THE SMALL SCALE OF THE DRAWINGS, THESE DRAWINGS DO NOT SHOW ALL OFFSETS, BENDS OR ELBOWS NECESSARY FOR THE COMPLETE INSTALLATION IN THE SPACE PROVIDED. CONTRACTOR SHALL MAKE SUCH SLIGHT ALTERATIONS AS MAY BE NECESSARY TO MAKE THE SYSTEM COMPLETE AND OPERATIONAL IN ACCORDANCE WITH THE DESIGN INTENT.

   MAJOR DEVIATIONS SUCH AS CHANGES IN COMPONENT SIZES, WEIGHTS, QUANTITIES OR MATERIAL REQUIRE PRIOR APPROVAL BY THE DESIGN ENGINEER.
2. THE DRAWINGS AND SPECIFICATIONS HAVE BEEN PREPARED TO SUPPLEMENT EACH OTHER AND SHALL BE INTERPRETED AS AN INTEGRAL UNIT WITH THE ITEMS SHOWN ON ONE AND NOT THE OTHER BEING FURNISHED AND INSTALLED AS THOUGH SHOWN AND CALLED OUT IN BOTH.
3. THE ENTIRE MECHANICAL INSTALLATION SHALL CONFORM TO THE REQUIREMENTS OF THE MOST RECENTLY ADOPTED BUILDING CODES, MECHANICAL CODE, PLUMBING CODE, ELECTRICAL CODE, AND ALL OTHER APPLICABLE CITY, COUNTY, STATE, AN FEDERAL CODES AN REGULATIONS IN EFFECT.
4. THE ENTIRE MECHANICAL INSTALLATION SHALL CONFORM TO ANY CODES, RULES, REGULATIONS AND REQUIREMENTS OF THE STATE OF UTAH DEPARTMENT OF FACILITIES CONSTRUCTION AND MANAGEMENT (DFCM).
5. PRIOR TO FABRICATION AND INSTALLATION OF ANY MECHANICAL COMPONENT THE CONTRACTOR SHALL COORDINATE THE INSTALLATION OF ALL MECHANICAL WORK WITH ALL OTHER BUILDING TRADES, INCLUDING BUILDING TRADES HIRED DIRECTLY BY THE OWNER. WHERE CONFLICTS MAY OCCUR, THEY SHALL BE RESOLVED PRIOR TO INSTALLATION.
6. THE SPACE ABOVE ALL CEILINGS IS LIMITED. CAREFUL COORDINATION IS REQUIRED WITH ALL TRADES BEFORE ANY PIPE, DUCT, OR EQUIPMENT IS ORDERED AND OR INSTALLED. ANY CONFLICTS AND/OR CHANGES FOUND DURING INSTALLATION THAT RESULTS FROM THE LACK OF COORDINATION BY THE CONTRACTORS DURING THE SHOP DRAWING PROCESS ARE THE RESPONSIBILITY OF THE CONTRACTOR.
7. ALL MECHANICAL INFORMATION IS NOT SHOWN ON THE MECHANICAL DRAWINGS. THE CONTRACTOR SHALL BE RESPONSIBLE FOR COORDINATING ALL INFORMATION ON ALL OTHER CONSTRUCTION DOCUMENT.
8. THE CONTRACTOR SHALL BE RESPONSIBLE TO REVIEW AND USE, WHERE APPROPRIATE, ALL THE MECHANICAL DETAILS SHOWN ON THE DRAWINGS. DETAILS MAY OR MAY NOT BE CALLED OUT ON THE DRAWINGS WITH SYMBOLS OR KEYED NOTES. ANY CHANGES RESULTING FROM FAILURE TO INSTALL THE MECHANICAL SYSTEM WITHOUT USING THE INCLUDED DETAILS SHALL BE THE RESPONSIBILITY OF THE CONTRACTOR.
9. THE STRUCTURE SHOWN ON ALL DETAILS MAY OR MAY NOT PERTAIN TO A PORTION OR ANY PORTION OF THE BUILDING. COORDINATE ALL MOUNTING REQUIREMENTS WITH ARCHITECTURAL AND STRUCTURAL DRAWINGS.
10. ANY PART OF THE MECHANICAL INSTALLATION THAT FAILS, IS UNFIT, OR BECOMES DAMAGED DURING CONSTRUCTION SHALL BE REPAIRED OR REPLACES BY THE CONTRACTOR AT NO ADDITIONAL COST TO THE OWNER.
11. SEE ARCHITECTURAL REFLECTED CEILING PLAIN FOR EXACT LOCATION OF ALL CEILING DIFFUSERS AND GRILLES.
12. CONTRACTOR SHALL OPERATE THE SYSTEM AND DEMONSTRATE ALL ASPECTS OF THE SYSTEM TO THE ENGINEER AND/OR OWNER TO PROVE ALL SYSTEMS ARE OPERATIONAL.
13. DURING CONSTRUCTION, THE CONTRACTOR SHALL MAINTAIN A SET OF AS-BUILT REDLINED RECORD DRAINING AT THE PROJECT SITE. ALL CHANGES IN LAYOUT, ROUTING, EQUIPMENT, COMPONENTS, AND ACCESSORIES SHALL BE RECORDED. THESE REDLINED DRAWINGS SHALL BE GIVEN TO THE ARCHITECT/ENGINEER AFTER THE FINAL INSPECTION IN ACCORDANCE WITH SPECIFICATIONS.

GENERAL EQUIPMENT NOTES

1. ALL CAPACITIES ARE AT JOB SITE CONDITIONS AND ARE MINIMUM CAPACITY.
2. ALL MECHANICAL EQUIPMENT SHALL BE INSTALLED TO CONFORM WITH LOCAL SEISMIC REQUIREMENTS AND THE REQUIREMENTS OF THESE CONSTRUCTION DOCUMENTS.
3. VERIFY ALL REQUIRED SERVICE CONNECTIONS, INCLUDING ELECTRICAL CHARACTERISTICS FOR ALL EQUIPMENT PRIOR TO ORDERING EQUIPMENT.
4. ALL EQUIPMENT SHALL BE INDEPENDENTLY SUPPORTED FROM STRUCTURAL MEMBERS.
5. ALL EQUIPMENT SHALL BE INSTALLED IN ACCORDANCE WITH MANUFACTURER'S WRITTEN INSTALLATION INSTRUCTIONS.
6. ALL SIMILAR EQUIPMENT SHALL BE OF THE SAME MANUFACTURER.
7. AIR INLETS AND OUTLETS SHALL BE OF THE SAME MANUFACTURER.
8. THE CONTRACTOR SHALL BE RESPONSIBLE FOR THE HVAC EQUIPMENT CHECK-IN, SAFEKEEPING, AND DAMAGE.

NJRA ARCHITECTS

NJRA Architects, Inc.
370 East 500 South, Suite 101
Salt Lake City, Utah 84111

Phone: 801. 364. 9259
Fax: 801. 521. 0420
www.njraarchitects.com

LICENSED PROFESSIONAL ENGINEER
No. 181527
ROBERT L. PAUL
STATE OF UTAH
3/6/10

Division of Facilities Construction & Management
Utah State Mail Center
Office Renovation

DFCM Project #: 09258310
250 North 1950 West
Salt Lake City, Utah

ISSUE
March 10, 2010 - Const. Documents 100%
2 April 6, 2010 - REV #1

NJRA Project #: 10901.00

MECHANICAL COVER SHEET

ME001

MECHANICAL SPECIFICATIONS

15010 – BASIC MECHANICAL REQUIREMENTS

1. COORDINATE THE LOCATION OF ALL NEW ROOF OPENINGS AND THE LOCATION OF ALL NEW AND RELOCATED ROOF MOUNTED EQUIPMENT WITH THE EXISTING STRUCTURE AND ARCHITECTURAL PLANS PRIOR TO ANY INSTALLATION.
2. V–BELT DRIVES SHALL BE OF FABRIC AND RUBBER CONSTRUCTION. BELT GUARDS SHALL BE PROVIDED FOR ALL EXPOSED BELTS AND DRIVES.
3. PROVIDE 6" CONCRETE HOUSEKEEPING PADS UNDER ALL FLOOR MOUNTED EQUIPMENT.
4. PROPERLY LUBRICATE ALL PIECES OF EQUIPMENT BEFORE TURNING THE SYSTEM OVER TO THE OWNER.

15190 – MECHANICAL IDENTIFICATION

1. PIPE MARKERS:
   PLASTIC TAPE: PROVIDE MANUFACTURER'S STANDARD COLOR–CODED PRESSURE–SENSITIVE (SELF ADHESIVE) VINYL TAPE, NOT LESS THAN 3 MILS THICK. 1–1/2" WIDE TAPE MARKERS ON PIPES WITH OUTSIDE DIAMETERS LESS THAN 6" (INCLUDING INSULATION, IF ANY); 2–1/2" WIDE TAPE FOR LARGER PIPES.
2. COLOR:
   COMPLY WITH ANSI A13.1
3. LETTERING:
   MANUFACTURER'S STANDARD PRE–PRINTED NOMENCLATURE WHICH BEST DESCRIBES PIPING OR DUCT SYSTEM IN EACH INSTANCE OR AS SELECTED BY ARCHITECT OR ENGINEER IN CASES OF VARIANCE WITH NAMES AS SHOWN.
4. ARROWS:
   PRINT EACH MARKER WITH ARROWS INDICATING DIRECTION OF FLOW.

15242 – VIBRATION ISOLATION AND SEISMIC BRACING

1. ALL MECHANICAL EQUIPMENT, DUCTWORK, AND PIPING MUST BE VIBRATION ISOLATED AND SEISMICALLY BRACED FOR THE SITE SPECIFIC SEISMIC DESIGN CATEGORY AND SEISMIC USE GROUP, IN ACCORDANCE WITH THE LATEST ADOPTED EDITIONS OF THE IBC, UBC, ASHRAE, AND SMACNA. PROVIDE SEISMIC PRODUCTS BY AMBER–BOOTH OR MASON INDUSTRIES.
2. IN GENERAL, PROVIDE SPRING MOUNTS TO ATTENUATE LOW FREQUENCY SOUND AND VIBRATION AND NEOPRENE PADS TO ATTENUATE HIGH FREQUENCY SOUND AND VIBRATION. SEISMIC BRACING/MOUNTING CAN BE COMBINED WITH VIBRATION ISOLATION AS APPLICABLE.
3. CONTRACTOR MANUFACTURED SEISMIC BRACING/RESTRAINT METHODS ARE NOT ACCEPTABLE. PROVIDE A SIGNED AND STAMPED LETTER FROM A PROFESSIONAL ENGINEER CERTIFYING THAT THE SUPPLIED PRODUCTS ARE CORRECT FOR THE APPLICATION AND THAT THE INSTALLATION IS IN COMPLIANCE WITH ALL APPLICABLE CODES.

15250 – MECHANICAL INSULATION

1. PIPE INSULATION TO BE SNAP–ON GLASS FIBER TYPE WITH VAPOR JACKET. SEAL ALL ENDS AND JOINTS TO PROVIDE A COMPLETELY SEALED SYSTEM. ALTERNATIVELY, USE FLEXIBLE UNICELLULAR ASTM 534 TYPE 1 INSULATION. USE 1" THICKNESS FOR PIPE UP TO 2"ø, AND 1 1/2" FOR PIPE OVER 2"ø
2. WRAP ALL SUPPLY AND RETURN DUCTWORK WITH 1–1/2" THICK FOIL FACED FIBERGLASS INSULATION. WRAP INSULATION TIGHTLY ON THE DUCT WITH ALL CIRCUMFERENTIAL JOINTS BUTTED AND LONGITUDINAL JOINTS OVERLAPPED A MIN. OF 2". COVER ALL JOINTS WITH FOIL–REINFORCED 'KRAFT' TAPE, 3" WIDE.
3. SEE 15891 FOR LINED RECTANGULAR DUCTWORK.

15420 – DRAINAGE AND VENT SYSTEMS

1. UNDERGROUND BUILDING DRAIN PIPE AND FITTINGS:
   A. NO HUB ABS OR PVC PLASTIC PIPE AND FITTINGS PER ASTM D2661 WITH ASTM D2235 SOLVENT
   OR
   B. ASTM A74 SERVICE WEIGHT, HUB AND SPIGOT CAST IRON SOIL PIPE, OR ASTM A888 (OR CISPI 301) HUBLESS CAST IRON SOIL PIPE WITH ASTM C564 HEAVY DUTY SHIELDED STAINLESS STEEL COUPLINGS.
   C. NO ASTM D2729 PIPE SHALL USED UNDERGROUND.
2. ALL SANITARY DRAINAGE AND VENT PIPING INSIDE AIR PLENUMS AND ANYWHERE IN A FIRE RATED BUILDING SHALL BE NO HUB SERVICE WEIGHT CAST IRON COUPLED PIPE AND FITTINGS WITH COMPRESSION TYPE NEOPRENE GASKETS AND STAINLESS STEEL BANDS. ASTM B306 COPPER PIPE MAY BE USED WITH SOLDERED JOINTS FOR PIPE 3" AND SMALLER.
3. ABOVE GROUND ROOF DRAIN LINES, EXCEPT IN AIR PLENUMS AND ANYWHERE IN A FIRE RATED BUILDING, SHALL BE ABS TYPE DWV PLASTIC PIPE AND FITTINGS PER ASTM D2661 WITH ASTM D2255 SOLVENT, OR PV C PLASTIC PIPE PER ASTM D2665 WITH ASTM D2564 SOLVENT.
4. ALL ROOF DRAIN LINES INSIDE AIR PLENUMS, OR ANYWHERE IN A FIRE RATED BUILDING, SHALL BE SERVICE WEIGHT CAST IRON PIPE TO CISPI STANDARD 301.
5. ALL ROOF DRAIN LINES SHALL BE FULLY INSULATED.
6. INSTALL SANITARY DRAIN LINES 2–1/2" AND LESS WITH A SLOPE OF 2%. INSTALL SANITARY DRAIN LINES 3"–6" WITH A SLOPE OF NOT LESS THAN 1%.
7. SLOPE ROOF DRAIN LINES DOWN IN DIRECTION OF FLOW, 1/8" PER FOOT (1%).

MECHANICAL SPECIFICATIONS

15510 – HYDRONIC PIPING

1. HVAC PIPING SHALL BE COPPER OR SCHEDULE 40 STEEL, SUITABLE FOR THE FLUID AND PRESSURE USED IN THE SYSTEM. PIPING MAY BE THREADED, WELDED, SOLDERED, OR GROOVED COUPLING TYPE. USE 95–5 TIN–ANTIMONY SOLDER.
2. PROVIDE MANUAL AIR VENTS AT ALL PIPING HIGH POINTS IN THE SYSTEM.
3. INSTALL PIPE HANGERS WITH THE FOLLOWING MINIMUM ROD SIZES AND MAXIMUM SPACING. UPON COMPLETION OF HANGER INSTALLATION, ALL ADJUSTMENTS HAVING THE POSSIBILITY OF TURNING SHALL BE LOCKED SECURELY IN PLACE BY DOUBLE NUTTING THE HANGER ROD ATTACHMENT TO THE STRUCTURE, AND AT THE PIPE HANGER.

NOM. PIPE SIZE–INCHES	MAX SPAN–FT	MIN ROD SIZE–INCHES
1	7	3/8
1–1/2	9	3/8
2	10	3/8
3	12	1/2
4	14	5/8
6	17	3/4

15782 – ROOFTOP HEATING AND COOLING UNITS

1. UNITS SHALL BE FACTORY ASSEMBLED AND TESTED, DESIGNED FOR ROOF OR SLAB INSTALLATION, AND CONSISTING OF CHILLED WATER AND HEATING WATER COILS, AND TEMPERATURE CONTROLS, FILTERS AND DAMPERS.
2. MANUFACTURERS:
   A. CARRIER
   B. LENNOX
   C. YORK
   D. AAON
3. PROVIDE UNITS WITH ROOF CURB, ECONOMIZER WITH MINIMUM 100% BAROMETRIC RELIEF, 5 YEAR WARRANTY, AND ONE EXTRA SET OF BELTS AND FILTERS.
4. PROVIDE A COPPER P–TRAP ON ALL ROOFTOP CONDENSATE DRAIN PANS, SIZED THE SAME AS THE OUTLET SIZE OF THE MANUFACTURER'S DRAIN PAN. DRAIN CONDENSATE TO ROOF UNLESS NOT ALLOWED BY LOCAL CODES. PROVIDE A 6" SQUARE (MINIMUM) CONCRETE SPLASH BLOCK UNDERNEATH THE DRAIN OUTLET, WITH A MINIMUM 1" AIR GAP.

15891 – METAL DUCTWORK

1. ALL DUCTWORK SHALL BE CONSTRUCTED, ERECTED, AND TESTED IN ACCORDANCE WITH THE MOST RESTRICTIVE OF LOCAL REGULATIONS AND PROCEDURES DETAILED IN THE ASHRAE HANDBOOK OF FUNDAMENTALS, OR THE APPLICABLE STANDARDS ADOPTED BY THE SHEET METAL AND AIR CONDITIONING CONTRACTOR'S NATIONAL ASSOCIATION, (SMACNA).
2. TRANSITION ALL NEW DUCTWORK TO CONNECT TO EXISTING, AS REQUIRED.
3. DUCTWORK SHALL BE GALVANIZED STEEL THROUGHOUT, FABRICATED AND INSTALLED SO THAT NO VIBRATION OR NOISE RESULTS. IT SHALL BE MADE FROM THE BEST GRADE OF GALVANIZED MILLED STEEL SHEETS OF U.S. STANDARD GAUGE AND BE FREE FROM BLISTERS, SLIVERS, AND PITS. ALL SEAMS SHALL BE AIRTIGHT, THE CONSTRUCTION OF ALL DUCTWORK, INCLUDING GAUGES OF METAL, BRACING LAYOUT, ETC., SHALL BE IN ACCORDANCE WITH SMACNA. SLEEVES FOR FIRE DAMPERS AND DUCT SECTIONS FORMING AN EXTENSION OF THE FIRE WALL SHALL BE 10 GAUGE STEEL.
4. SEAL DUCTWORK ACCORDING TO THE FOLLOWING SMACNA DUCT SEALING CLASS:

DUCT LOCATION	DUCT TYPE			
	SUPPLY		EXHAUST	RETURN
	<2in. Wg.	>2in. Wg.		
OUTDOORS	A	A	A	A
UNCONDITIONED SPACES	B	A	B	B
CONDITIONED SPACES	C	B	B	B
(CONCEALED DUCTWORK) CONDITIONED SPACES (EXPOSED DUCTWORK)	A	A	B	B

5. HANGERS FOR DUCTS UP TO 18" IN WIDTH OR DIAMETER SHALL BE PLACED ON NOT MORE THAN 8 FOOT CENTERS. DUCTS 19" AND OVER IN WIDTH OR DIAMETER SHALL BE SUPPORTED ON NOT MORE THAN 4 FOOT CENTERS. DUCT HANGERS SHALL BE CONSTRUCTED OF GALVANIZED BAND IRON 1–1/8" FOR DUCTS UP TO 36" IN WIDTH OR DIAMETER. HANGERS SHALL EXTEND DOWN SIDES AND A MINIMUM OF 1" UNDER RECTANGULAR DUCTS, AND WRAP COMPLETELY AROUND ROUND DUCTS. ALL DUCTS SHALL BE RIGIDLY SUPPORTED.
6. ALL DUCTWORK SHALL BE CLEANED PRIOR TO THE INSTALLATION OF CEILING AND DIFFUSERS. OPERATE FANS TO BLOW OUT DUCTWORK.
7. RECTANGULAR LOW–PRESSURE SUPPLY AND RETURN AIR DUCTWORK SHALL BE LINED WITH 1" FACED FIBERGLASS INSULATION SECURELY BUTTONED OR LAPPED AND SEALED. INSULATION SHALL BE 1–1/2 POUND DENSITY.
8. DUCT DIMENSIONS SHOWN ON DRAWINGS ARE INSIDE CLEAR AREA AND SHALL BE INCREASED TO ACCOMMODATE INSULATION. DUCT LINER TO BE BY KNAUF GmbH, JOHN–MANSVILLE OR SCHULLER INTERNATIONAL.

MECHANICAL SPECIFICATIONS

15910 – DUCTWORK ACCESSORIES

1. FLEXIBLE DUCTWORK:
   THE FINAL 5 FOOT CONNECTION TO GRILLES AND DIFFUSERS IN LAY–IN CEILINGS, OR TO FLOOR MOUNTED GRILLES, MAY BE MADE WITH FLEXIBLE DUCT, FLEXMASTER TYPE 5M ONLY. ENDS SHALL BE SEALED.
2. SQUARE/RECTANGULAR ELBOWS SHALL BE PROVIDED WITH TURNING VANES.
3. PROVIDE FLEXIBLE CONNECTIONS NOT LESS THAN 4" WIDE CONSTRUCTED OF HEAVY, WATERPROOF, WOVEN PLASTIC COATED GLASS FABRIC AT SUPPLY AND RETURN CONNECTIONS TO FURNACES, AIR HANDLING, ROOFTOP, MAKE–UP AIR OR FAN–COIL UNITS. CORNERS SHALL BE SEWN TIGHT. CONNECTIONS SHALL BE 20 OUNCE VENTFABRICS OR EQUAL.
4. COMBINATION FIRE AND SMOKE DAMPERS OR FIRE DAMPERS IN DUCTWORK THROUGH ALL FLOORS AND FIRE WALLS SHALL BE FURNISHED AND INSTALLED AS REQUIRED TO CONFORM TO THE LATEST NFPA BULLETIN CONCERNING THIS TYPE OF BUILDING AND SHALL BEAR THE U.L. LABEL. DAMPERS, COMPLETE WITH MOUNTING ANGLES, SHALL BE MULTI–BLADE, FUSIBLE LINK, SPRING ACTING WITH 11 GAUGE SLEEVE. FUSIBLE LINK SHALL BE RATED AT 165°F.
5. DUCT MOUNTED BALANCING DAMPERS SHALL BE USED TO CONTROL SUPPLY AIR TO EACH DIFFUSER AND GRILLE. AN OPERATING HEAD SHALL BE PLACED ON THE SIDE OF THE DUCT WITH A POSITIVE LOCKING QUADRANT. DAMPERS SHALL BE PROVIDED IN RETURN AND EXHAUST AIR DUCTS WHERE SHOWN ON DRAWINGS. COORDINATE THE LOCATION OF CEILING ACCESS PANELS.
6. PROVIDE CEILING ACCESS DOORS AT ALL LOCATIONS OF BALANCING DAMPERS, FIRE DAMPERS, FIRE/SMOKE DAMPERS, VALVES, ETC., WHERE THERE IS NOT A LIFT–OUT TYPE CEILING. ACCESS DOORS SHALL BE HINGED OF METAL CONSTRUCTION WITH SCREWDRIVER LATCHES.
7. AT FIRE DAMPERS, A DUCT MOUNTED SHEET METAL HINGED DOOR SHALL BE PROVIDED AND INSTALLED WITH POSITIVE LOCKING HANDLE. WHERE DUCTS ARE INSULATED, COVERS SHALL BE INSULATED.
8. GRAVITY OR BACKDRAFT DAMPERS SHALL BE ALL ALUMINUM CONSTRUCTION, INTERCONNECTED AND BLADED, PRESSURE DROP THROUGH DAMPERS SHALL NOT EXCEED 0.04 INCH W.G.

15932 – GRILLES, DIFFUSER AND LOUVERS

1. ALL GRILLES, DIFFUSERS, AND REGISTERS SHALL BE COMPLETE WITH FRAMES AND RUBBER GASKETS. FINISH FOR ALL REGISTERS, DIFFUSERS, AND GRILLES SHALL BE WHITE.
2. MANUFACTURERS:
   A. KRUEGER
   B. TITUS
   C. PRICE

   SEE SCHEDULE FOR MORE INFORMATION:
3. COORDINATE THE LOCATIONS OF ALL CEILING DIFFUSERS, REGISTERS, AND GRILLES WITH THE ARCHITECTURAL REFLECTED CEILING PLAN, ELECTRICAL LIGHTING LAYOUT, AND ARCHITECTURAL ELEVATIONS.

15970 – AUTOMATIC TEMPERATURE CONTROL SYSTEM

FURNISH AND INSTALL A COMPLETE ELECTRONIC AUTOMATIC TEMPERATURE CONTROL SYSTEM TO MATCH THE EXISTING TSI CONTROLS SYSTEM, TO PROVIDE THE FOLLOWING FUNCTIONS:

1. BUILDING HVAC CONTROL SYSTEM:

A. ROOFTOP HEATING AND AIR CONDITIONING UNITS:
EACH ROOFTOP UNIT SHALL BE PROVIDED WITH A THERMOSTAT, INSTALLED WHERE SHOWN ON PLANS. FULL ECONOMIZER AND MINIMUM OUTDOOR AIR CONTROL SHALL BE PROVIDED BY THE ROOFTOP MANUFACTURER AS A PART OF THE UNIT.

B. THERMOSTATS SHALL BE FROM TSI CONTROLS. ELECTRONIC, PROGRAMMABLE THERMOSTATS WITH COOLING, 1 OR 2 STAGE HEATING, NIGHT SETBACK, A 7–DAY, 24 HOUR CLOCK, L.E.D. INDICATOR, SET POINT ADJUSTMENT AND A FAN ON/AUTO SWITCH.

C. ROOFTOP UNITS SHALL RUN CONTINUOUSLY DURING THE OCCUPIED PERIOD, COOLING SYSTEM SHALL PROVIDE A CONSTANT 55°F SUPPLY AIR TEMPERATURE. THE UNIT'S OUTSIDE, RETURN, AND RELIEF DAMPERS SHALL BE SEQUENCED ACCORDINGLY. ECONOMIZER CYCLE SHALL BE ACTIVATED WHENEVER THE OUTSIDE AIR TEMPERATURE IS BELOW THE MIXED AIR TEMPERATURE AND ABOVE SUPPLY AIR TEMPERATURE SETPOINT. CHILLED WATER AND HEATING WATER VALVES SHALL MODULATE TO SATISFY SPACE REQUIREMENTS. SWITCH BETWEEN HEATING MODE AND COOLING MODE BASED ON ROOM THERMOSTAT.

D. THE CONTROL SYSTEM SHALL CONSIST OF ROOM THERMOSTATS, RELAYS, SELECTOR SWITCHES, PANELS, ALL CONTROL WIRING TO UNITS, TIME CLOCK AND ALL ACCESSORY EQUIPMENT FOR A COMPLETELY INSTALLED AND WORKING SYSTEM. TIE NEW CONTROLS FOR AIR HANDLING UNIT INTO EXISTING CONTROL SYSTEM.

15990 – TESTING, ADJUSTING, AND BALANCING

OBTAIN THE SERVICES OF AN INDEPENDENT TESTING AND BALANCING AGENCY TO BALANCE AND ADJUST THE SYSTEM. THIS SHALL BE DONE BY PERSONS FULLY FAMILIAR WITH SYSTEMS OF THIS TYPE. BALANCING SHALL BE DONE IN ACCORDANCE TO AABC OR NEBB STANDARDS. ALL DATA SHALL BE RECORDED AND A REPORT SUBMITTED TO THE ENGINEER PRIOR TO JOB CLOSE OUT.

DEFINITIONS

NOTE: ALL DEFINITIONS MAY NOT BE USED.

INDICATED: THE TERM "INDICATED" REFERS TO GRAPHIC REPRESENTATIONS, NOTES, OR SCHEDULES ON THE DRAWINGS, OTHER PARAGRAPHS OR SCHEDULES IN THE SPECIFICATIONS, AND SIMILAR REQUIREMENTS IN THE CONTRACT DOCUMENTS. WHERE TERMS SUCH AS "SHOWN", "NOTED", "SCHEDULED", AND "SPECIFIED" ARE USED, IT IS TO HELP THE READER LOCATE THE REFERENCE, NO LIMITATION ON LOCATION IS INTENDED.

DIRECTED: TERMS SUCH AS "DIRECTED", "REQUESTED", AUTHORIZED", "SELECTED", "APPROVED", "REQUIRED", AND "PERMITTED" MEAN "DIRECTED BY THE ENGINEER", "REQUESTED BY THE ENGINEER", AND SIMILAR PHRASES.

APPROVE: THE TERM "APPROVED", WHERE USED IN CONJUNCTION WITH THE ENGINEER'S ACTION ON THE CONTRACTOR'S SUBMITTALS, APPLICATIONS, AND REQUESTS, IS LIMITED TO THE ENGINEER'S DUTIES AND RESPONSIBILITIES AS STATED IN GENERAL AND SUPPLEMENTARY CONDITIONS.

FURNISH: THE TERM "FURNISH" IS USED TO MEAN "SUPPLY AND DELIVER TO THE PROJECT SITE, READY FOR UNLOADING, UNPACKING, ASSEMBLY, INSTALLATION, AND SIMILAR OPERATIONS."

INSTALL: THE TERM "INSTALL" IS USED TO DESCRIBE OPERATIONS AT PROJECT SITE INCLUDING THE ACTUAL "UNLOADING, UNPACKING, ASSEMBLY, ERECTION, PLACING, ANCHORING, APPLYING, WORKING TO DIMENSION, FINISHING, CURING, PROTECTING, CLEANING, AND SIMILAR OPERATIONS TO MAKE THE ITEM FULLY OPERATIONAL."

PROVIDE: THE TERM "PROVIDE" MEANS "TO FURNISH AND INSTALL, COMPLETE AND READY FOR THE INTENDED USE."

INSTALLER: AN "INSTALLER" IS THE CONTRACTOR OR AN ENTITY ENGAGED BY THE CONTRACTOR, EITHER AS AN EMPLOYEE, SUBCONTRACTOR, OR SUB–SUBCONTRACTOR, FOR PERFORMANCE OF A PARTICULAR CONSTRUCTION ACTIVITY, INCLUDING INSTALLATION, ERECTION, APPLICATION, AND SIMILAR OPERATIONS. INSTALLERS ARE REQUIRED TO BE EXPERIENCED IN THE OPERATIONS THEY ARE ENGAGED TO PERFORM.

NJRA ARCHITECTS

NJRA Architects, Inc.
370 East 500 South, Suite 101
Salt Lake City, Utah 84111

Phone: 801. 364. 9259
Fax: 801. 521. 0420
www.njraarchitects.com

LICENSED PROFESSIONAL ENGINEER
No. 181527
ROBERT L. PAUL
STATE OF UTAH
7/6/10

Division of Facilities Construction & Management
Utah State Mail Center
Office Renovation

DFCM Project #: 09258310
250 North 1950 West
Salt Lake City, Utah

ISSUE
March 10, 2010 - Const. Documents 100%
2 April 6, 2010 - REV #1

NJRA Project #: 10901.00

MECHANICAL SPECIFICATIONS

ME002

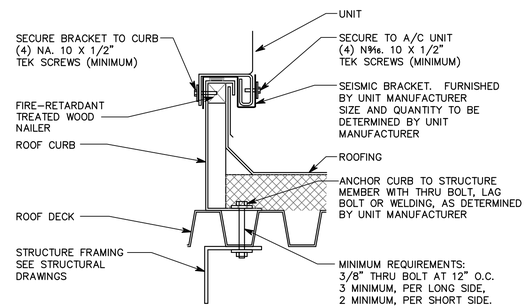

C2 ROOF CURB SEISMIC BRACE

SCALE: NTS

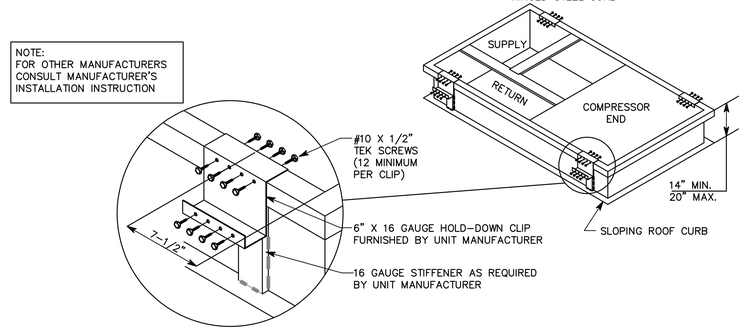

B2 ROOF-TOP AIR CONDITIONING UNIT

SCALE: NTS

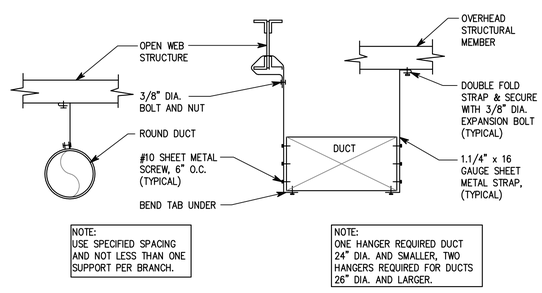

A2 DUCT HANGER

SCALE: NTS

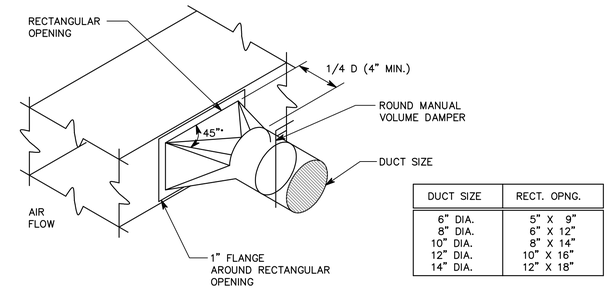

DUCT SIZE	RECT. OPNG.
6" DIA.	5" X 9"
8" DIA.	6" X 12"
10" DIA.	8" X 14"
12" DIA.	10" X 16"
14" DIA.	12" X 18"

D4 HIGH EFFICIENCY TAKE-OFF

SCALE: NTS

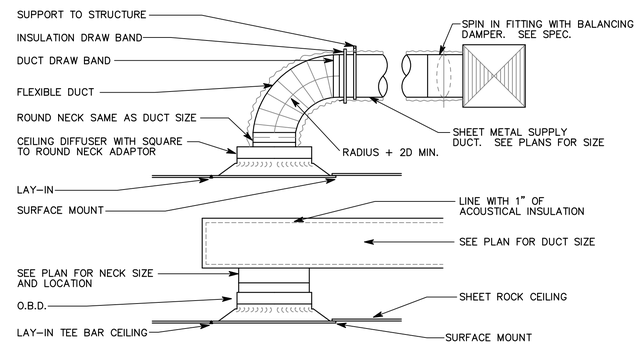

C4 CEILING DIFFUSER DETAIL

SCALE:

NOTES:
1. EXHAUST AND RETURN GRILLES ARE SIMILAR.
2. EITHER METHOD IS ACCEPTABLE

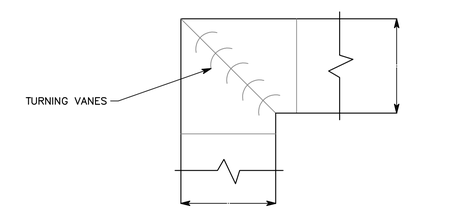

NOTES:
1. ALL TURNING VANES SHALL BE SINGLE VANE TYPE REGARDLESS OF DIMENSION.

B4 TURNING VANES

SCALE: NTS

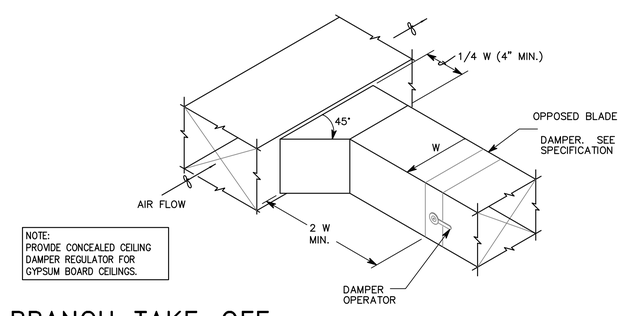

A4 BRANCH TAKE-OFF

SCALE: NTS

NJRA Architects, Inc.
370 East 500 South, Suite 101
Salt Lake City, Utah 84111
Phone: 801. 364. 9259
Fax: 801. 521. 0420
www.njraarchitects.com

LICENSED PROFESSIONAL ENGINEER
No. 181527
ROBERT L. PAUL
STATE OF UTAH
7/6/10

Division of Facilities Construction & Management
Utah State Mail Center
Office Renovation

DFCM Project #: 09258310
250 North 1950 West
Salt Lake City, Utah

ISSUE
March 10, 2010 - Const. Documents 100%
2 April 6, 2010 - REV #1

NJRA Project #: 10901.00

MECHANICAL DETAILS

ME501

ROOF TOP AIR CONDITIONING UNIT SCHEDULE

SYMBOL	LOCATION	MANUFACTURER	MODEL NO.	FAN SECTION				COOLING CAPACITY (NOTE 11)						HEATING CAPACITY (NOTE 12)			FILTERS		ELECTRICAL (NOTE 13)		OPERATING WEIGHT (LBS.)	OPTIONS AND ACCESSORIES	MINIMUM OUTSIDE AIR (CFM)	NOTES
				CFM	EXTERNAL STATIC PRESSURE (IN. W.C.)	FAN SPEED (RPM)	MOTOR (HP)	NOMINAL TONS	TOTAL (BTUH)	SENSIBLE (BTUH)	ENTERING WATER TEMP. (F)	LEAVING WATER TEMP. (F)	FLUID FLOW (GPM)	CAPACITY (BTUH)	ENTERING/ LEAVING WATER TEMP. (F)	FLUID FLOW (GPM)	TYPE	EFFICIENCY	MINIMUM CIRCUIT AMPACITY (MCA)	MAXIMUM OVER-CURRENT PROTECTION (AMPS)				
RTU-1	NEW OFFICES	CARRIER	39SH02	800	0.5	1394	3/4	2.0	24,630	17,010	45.0	55	5.2	38,460	180 / 160	3.9	2" THICK PLEATED	30% (MERV 8)	--	--	600	(1)(2)(3)(4)(5)(6)(7)	80	(8)

OPTIONS AND ACCESSORIES

(1) 14" HIGH SPRING ISOLATION ROOF MOUNTING CURB
(2) SEISMIC HOLD DOWN CLIPS
(3) ANTI-CYCLE RELAY
(4) NON-FUSED DISCONNECT SWITCH
(5) SINGLE POINT WIRING
(6) THRU-THE-BOTTOM SERVICE CONNECTION
(7) 100% ECONOMIZER
(8) ALL CAPACITIES AT SITE ELEVATION

NOTES

(11) COOLING CAPACITY RATED AT 80 F DB AND 67 F. WB ENTERING AIR, 30% GLYCOL IN COIL, 9.9 FT H20 PD
(12) HEATING CAPACITY: HEATING WATER, 4.1 FT H20 PD
(13) ELECTRICAL SERVICE: 277 VOLTS, 60 HERTZ, 1 PHASE

CEILING DIFFUSER, REGISTER & GRILLE SCHEDULE

SYMBOL	DESCRIPTION	SIZES: NOMINAL SIZE (NECK SIZE)	SIZES: AIR FLOW (CFM)	ACCEPTABLE MANUFACTURERS
CD-L	CEILING DIFFUSER FULL LOUVER FACE, REMOVABLE CORE, LAY-IN CEILING MOUNTING, 24" X 24" PANEL SIZE, 4-WAY PATTERN, ROUND NECK, STEEL CONSTRUCTION NC-35 MAXIMUM, TESTED IN ACCORDANCE WITH ADC TEST 1062, OPTIONS & ACCESSORIES: BAKED ENAMELWHITE FINISH	6" DIA. 8" DIA. 10" DIA. 12" DIA. 14" DIA.	120 200 400 700 1000	PRICE SCD TITUS TMS KRUEGER 1400
CD-S	CEILING DIFFUSER FULL LOUVER FACE, REMOVABLE CORE, SURFACE MOUNTING, 4-WAY PATTERN, ROUND NECK, STEEL CONSTRUCTION NC-35 MAXIMUM, TESTED IN ACCORDANCE WITH ADC TEST 1062, OPTIONS & ACCESSORIES: BAKED ENAMEL WHITE FINISH	6" DIA (9"x 9") 8" DIA. (9"x 9") 10" DIA. (10"x 10") 12" DIA. (12"x 12")	120 250 420 700	PRICE SMD TITUS TDC KRUEGER SH
CG-L	CEILING GRILLE REMOVABLE PERFORATED FACEPLATE, ALUMINUM, LAY-IN CEILING MOUNTING, 12" X 24" PANEL SIZE, NC-35 MAXIMUM, TESTED IN ACCORDANCE WITH ADC 1062. ROUND NECK OR SQUARE NECK, SEE DRAWINGS OPTIONS & ACCESSORIES: BAKED ENAMEL WHITE FINISH	6" DIA (6"x 6") 8" DIA. (8"x 8") 10" DIA. (10"x 10")	120 200 420	PRICE PDDR TITUS PAR KRUEGER 56490/56690
CG-S	CEILING GRILLE PERFORATED FACEPLATE, ALUMINUM, SURFACE MOUNTING, NC-35 MAXIMUM, TESTED IN ACCORDANCE WITH ADC 1062. 3/16" HOLES ON 1/4" STAGGERED CENTERS, OPTIONS & ACCESSORIES: BAKED ENAMEL WHITE FINISH	6"x 6" 8"x 8" 10"x 10" 12"x 12" 14"x 14"	130 260 450 700 900	PRICE 10 TITUS 8F KRUEGER S580P
RG	RETURN GRILLE DOUBLE DEFLECTION, AIRFOIL LOUVERS, FRONT BLADES PARALLEL TO LONG DIRECTION 3/4" BLADE SPACING, NC-35 MAXIMUM, EXTRUDED ALUMINUM BLADES AND 1-1/4" FLAT BORDER PROVIDE DUCT BOOT FOR MOUNTING OF RETURN GRILLE ON SQUARE DUCT OPTIONS & ACCESSORIES: WHITE FINISH	12" X 6" 12" X 10"	200 360	PRICE 22 TITUS 272FL KRUEGER AF5880
SG	SUPPLY GRILLE DOUBLE DEFLECTION, AIRFOIL LOUVERS, FRONT BLADES PARALLEL TO SHORT DIRECTION 3/4" BLADE SPACING, NC-35 MAXIMUM, EXTRUDED ALUMINUM BLADES AND 1-1/4" FLAT BORDER PROVIDE DUCT BOOT FOR MOUNTING OF SUPPLY GRILLE ON ROUND DUCT OPTIONS & ACCESSORIES: WHITE FINISH	12" X 6" 12" X 10"	200 360	PRICE 22 TITUS 272FS KRUEGER AF5880

NJRA ARCHITECTS
NJRA Architects, Inc.
370 East 500 South, Suite 101
Salt Lake City, Utah 84111
Phone: 801. 364. 9259
Fax: 801. 521. 0420
www.njraarchitects.com

LICENSED PROFESSIONAL ENGINEER
No. 181527
ROBERT L. PAUL
STATE OF UTAH
4/6/10

Division of Facilities Construction & Management
Utah State Mail Center
Office Renovation

DFCM Project #: 09258310
250 North 1950 West
Salt Lake City, Utah

ISSUE
March 10, 2010 - Const. Documents 100%
2 April 6, 2010 - REV #1

NJRA Project #: 10901.00

MECHANICAL SCHEDULES

ME601

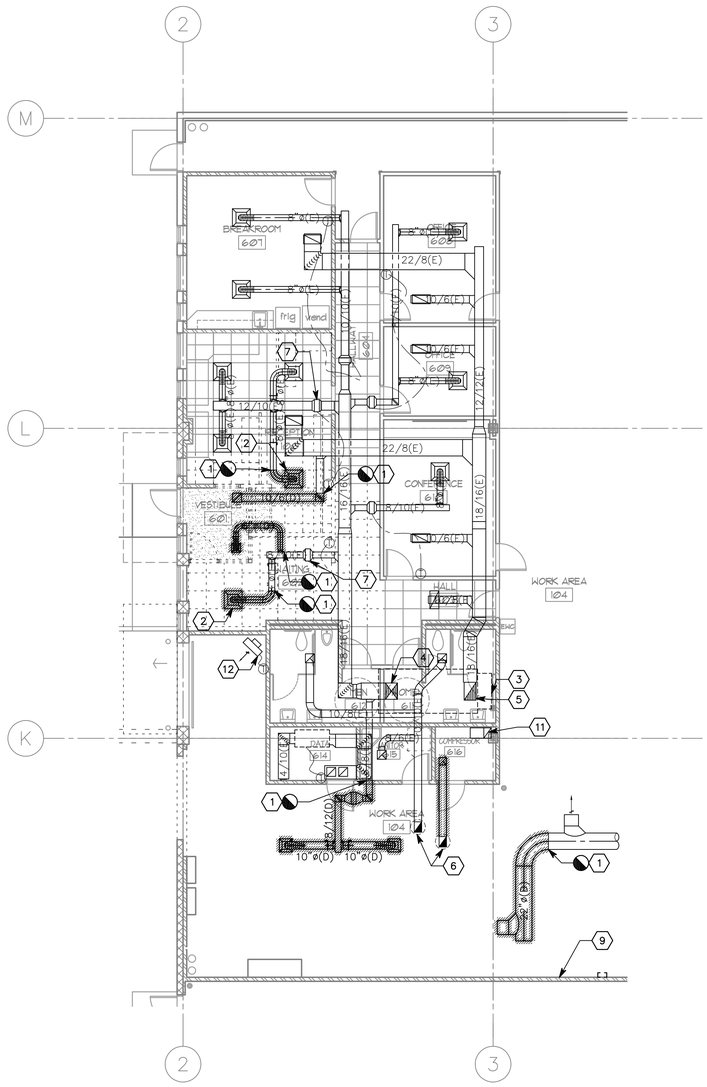

A1 MECHANICAL DEMOLITION FLOOR PLAN

SCALE: 1/8" = 1'-0"

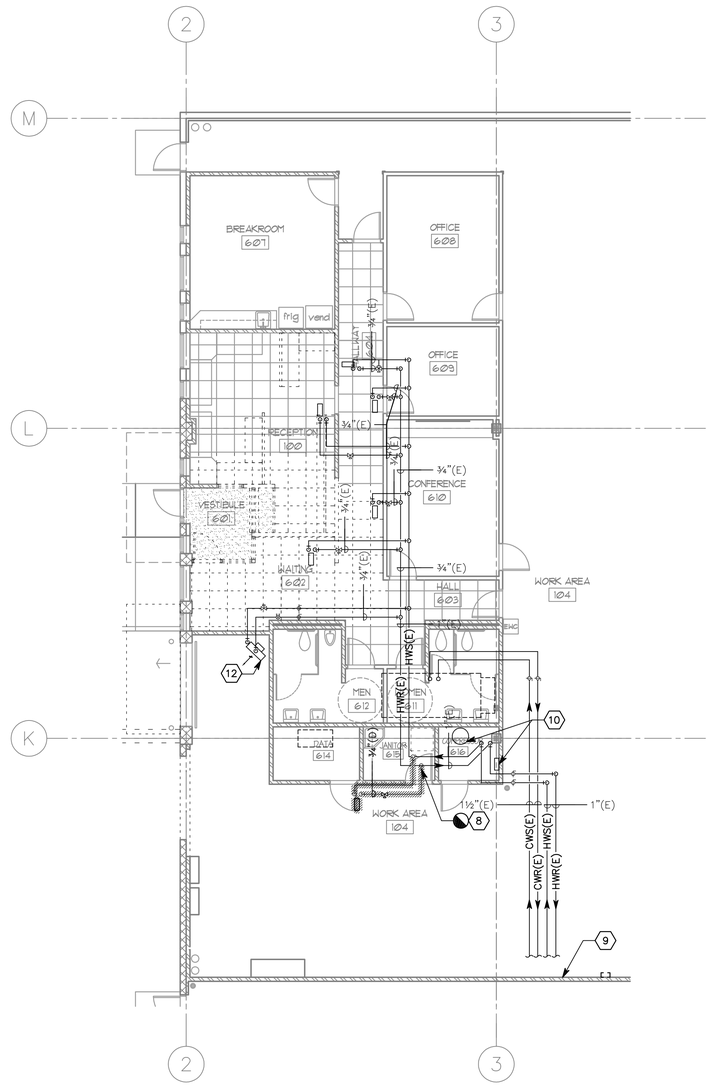

A3 MECHANICAL PIPING DEMOLITION FLOOR PLAN

SCALE: 1/8" = 1'-0"

SHEET KEYNOTES

1. DEMOLISH EXISTING DUCT BACK TO THIS POINT. PROVIDE CAP/SEAL ON REMAINING DUCT. CONTRACTOR TO FIELD VERIFY SIZE AND LOCATION OF EXISTING DUCT.
2. CONTRACTOR TO REMOVE EXISTING SUPPLY DIFFUSER/RETURN GRILLE AND RELOCATE TO NEW POSITION SHOWN ON NEW MECHANICAL PLANS. CLEAN AND PAINT DIFFUSER/GRILLE.
3. EXISTING AIR HANDLER ON ROOF.
4. EXISTING SUPPLY AIR DUCT DOWN FROM AIR HANDLER.
5. EXISTING RETURN AIR DUCT DOWN FROM AIR HANDLER.
6. EXISTING ROOFTOP EXHAUST FAN.
7. REMOVE EXISTING THERMOSTAT AND RELOCATE AS SHOWN ON NEW PLANS.
8. DEMOLISH EXISTING PIPE BACK TO THIS POINT. PROVIDE CAP/SEAL ON REMAINING PIPE. CONTRACTOR TO FIELD VERIFY SIZE AND LOCATION OF EXISTING PIPE.
9. CONTRACTOR TO RELOCATE EXISTING BTU METER FOUND NEAR THIS LOCATION. COORDINATE NEW LOCATION WITH OWNER/ARCHITECT.
10. RELOCATE EXISTING AIR COMPRESSOR AND REFRIGERATED DRYER AND ALL ACCESSORIES TO NEW STORAGE ROOM. EXTEND 1" PIPING TO NEW COMPRESSOR AND DRYER LOCATION. SEE A1/MH101. COORDINATE RELOCATION WITH OTHER TRADES.
11. RELOCATE EXISTING 10/14 TRANSFER DUCT FROM EXISTING COMPRESSOR ROOM TO NEW STORAGE AREA.
12. EXISTING UNIT HEATER TO REMAIN.

NJRA Architects, Inc.
370 East 500 South, Suite 101
Salt Lake City, Utah 84111

Phone: 801. 364. 9259
Fax: 801. 521. 0420
www.njraarchitects.com

LICENSED PROFESSIONAL ENGINEER
No. 181527
ROBERT L. PAUL
STATE OF UTAH
7/6/10

Division of Facilities Construction & Management
Utah State Mail Center
Office Renovation

DFCM Project #: 09258310
250 North 1950 West
Salt Lake City, Utah

ISSUE
March 10, 2010 - Const. Documents 100%
2 April 6, 2010 - REV #1

NJRA Project #: 10901.00

MECHANICAL DEMOLITION FLOOR PLANS

MD101

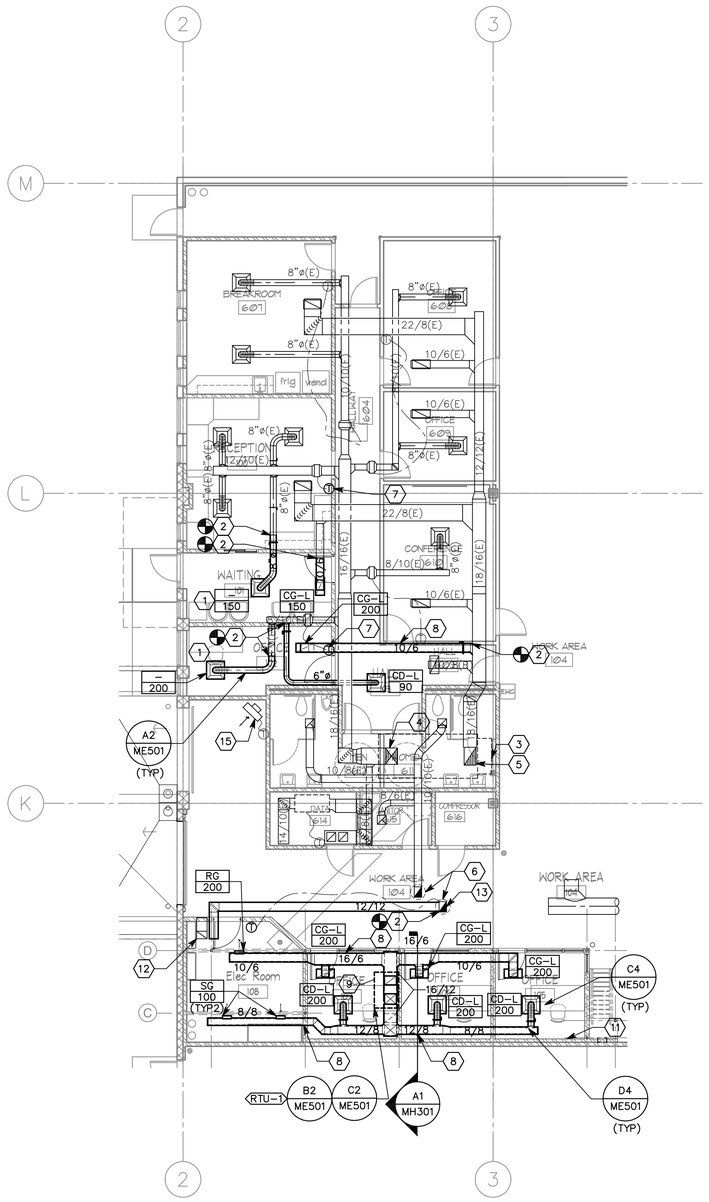

A1 MECHANICAL FLOOR PLAN

SCALE: 1/8" = 1'-0"

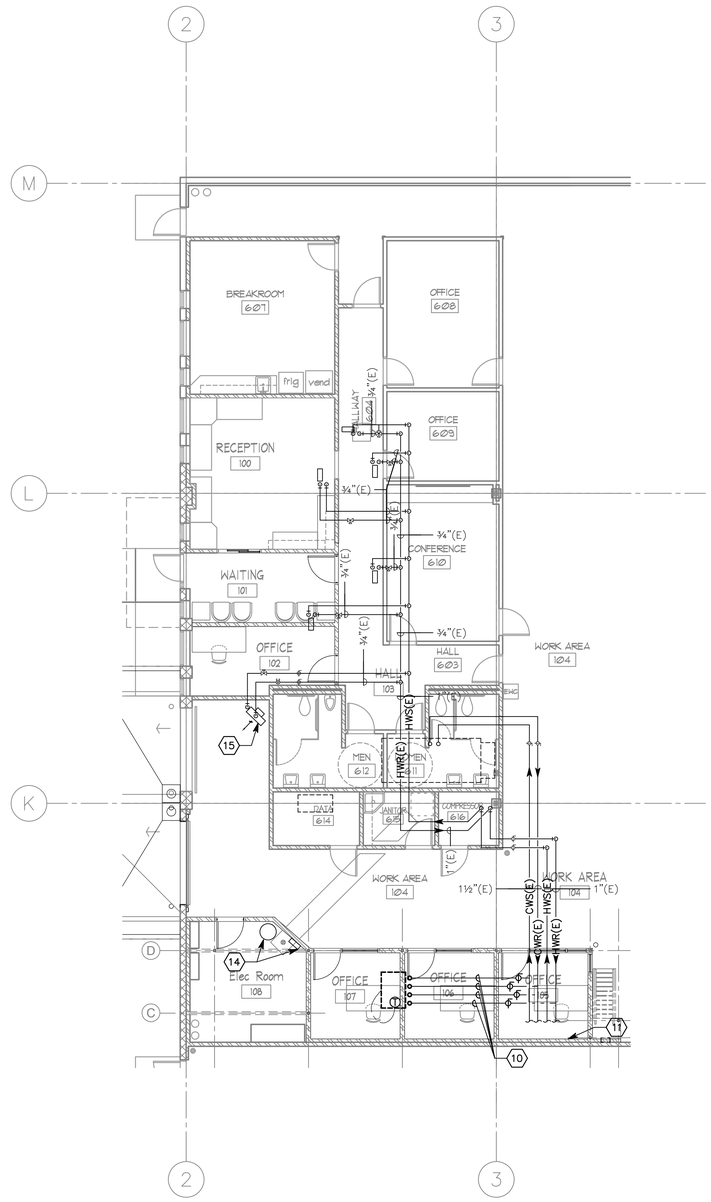

A3 MECHANICAL PIPING FLOOR PLAN

SCALE: 1/8" = 1'-0"

GENERAL SHEET NOTES

1. DUE TO INTERMEDIATE STRUCTURE, DIFFUSER NECK LOCATION IN LAY-IN CEILING MAY NOT MATCH JOIST SPACING. USE MINIMAL AMOUNT OF FLEXIBLE DUCT RUNOUT TO DIFFUSER.
2. DUE TO INTERMEDIATE STRUCTURE, R.A. GRILLE NECK LOCATION IN LAY-IN CEILING MAY NOT MATCH JOIST SPACING. WHERE REQUIRED PROVIDE SHEET METAL PLENUM BOX ATTACHED TO THE R.A. GRILLE ROUTE R.A. DUCT BETWEEN JOIST AND CONNECT R.A. DUCT TO PLENUM BOX.

⬡SHEET KEYNOTES

1. CONTRACTOR TO RELOCATE EXISTING SUPPLY DIFFUSER/RETURN GRILLE AS SHOWN. BALANCE TO CFM SHOWN.
2. POINT OF CONNECTION (TYPICAL). CONNECT NEW DUCT TO EXISTING AT THIS POINT. CONTRACTOR TO FIELD VERIFY SIZE AND LOCATION OF EXISTING DUCT BEFORE BEGINNING ANY NEW WORK.
3. EXISTING AIR HANDLER ON ROOF.
4. EXISTING SUPPLY AIR DUCT DOWN FROM AIR HANDLER.
5. EXISTING RETURN AIR DUCT DOWN FROM AIR HANDLER.
6. EXISTING ROOFTOP EXHAUST FAN.
7. POSITION OF NEW THERMOSTAT.
8. ACOUSTICALLY LINED DUCT. DIMENSIONS SHOWN ARE INSIDE FREE AREA.
9. NEW ROOFTOP UNIT INSTALLED ON ROOF. POSITION A MINIMUM OF 10' AWAY FROM ANY EXHAUST FANS, VENTS THROUGH ROOF, FLUE GAS OUTLETS, AND ROOF EDGE.
10. CONNECT NEW 1" CHILLED WATER SUPPLY/RETURN LINES AND NEW 1" HEATING WATER SUPPLY/RETURN LINES TO NEW ROOFTOP UNIT AND EXISTING MAINS.
11. CONTRACTOR TO RELOCATE EXISTING BTU METERS TO THIS LEVEL ON THE MEZZANINE LEVEL.
12. RELOCATED TRANSFER AIR DUCT. TERMINATE 12" AFF. EXTEND TOP OF DUCT ABOVE CEILING STRUCTURE.
13. INTERLOCK EXHAUST FAN OPERATION WITH ROOM THERMOSTAT.
14. LOCATION OF RELOCATED AIR COMPRESSOR AND REFRIGERATED DRYER. EXTEND 1" PIPING TO NEW LOCATION OF COMPRESSOR AND DRYER. PROVIDE VIBRATION ISOLATION FOR COMPRESSOR AND PIPING. COORDINATE RELOCATION WITH OTHER TRADES.
15. EXISTING UNIT HEATER.

NJRA ARCHITECTS

NJRA Architects, Inc.
370 East 500 South, Suite 101
Salt Lake City, Utah 84111

Phone: 801. 364. 9259
Fax: 801. 521. 0420
www.njraarchitects.com

LICENSED PROFESSIONAL ENGINEER
No. 181527
ROBERT L. PAUL
STATE OF UTAH
3/16/10

Division of Facilities Construction & Management
Utah State Mail Center
Office Renovation

DFCM Project #: 09258310
250 North 1950 West
Salt Lake City, Utah

ISSUE

	March 10, 2010 - Const. Documents 100%
2	April 6, 2010 - REV #1

NJRA Project #: 10901.00

MECHANICAL FLOOR PLANS

MH101

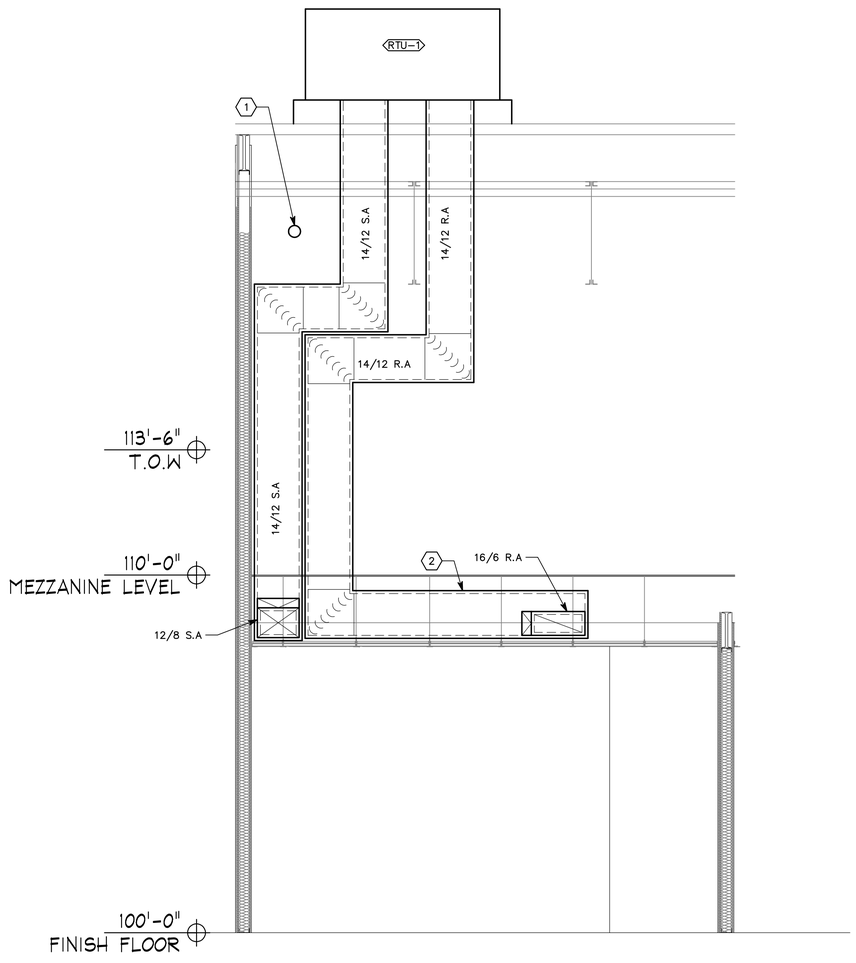

A1 MECHANICAL SECTION
SCALE: 1/2" = 1'-0"

SHEET KEYNOTES

1. EXISTING FIRE SPRINKLER PIPE. CONTRACTOR TO FIELD VERIFY LOCATION OF STRUCTURE, PIPING, AND OTHER EXISTING EQUIPMENT PRIOR TO BEGINNING ANY NEW WORK.
2. RUN DUCT IN JOIST SPACE.

NJRA ARCHITECTS
NJRA Architects, Inc.
370 East 500 South, Suite 101
Salt Lake City, Utah 84111
Phone: 801. 364. 9259
Fax: 801. 521. 0420
www.njraarchitects.com

LICENSED PROFESSIONAL ENGINEER
No. 181527
ROBERT L. PAUL
STATE OF UTAH
7/6/10

Division of Facilities Construction & Management
Utah State Mail Center
Office Renovation

DFCM Project #: 09258310
250 North 1950 West
Salt Lake City, Utah

ISSUE
March 10, 2010 - Const. Documents 100%
2 April 6, 2010 - REV #1

NJRA Project #: 10901.00

MECHANICAL SECTION

MH301

SYMBOL LEGEND

SYMBOL	DESCRIPTION
REFERENCE AND LINE SYMBOLS	
A5 / E-501	DETAIL INDICATOR: A5 INDICATES DETAIL NUMBER, E-501 INDICATES DRAWING SHEET WHERE DETAIL IS SHOWN.
A5 / E-201	ELEVATION OR SECTION INDICATOR, EXTERIOR: A5 INDICATES ELEVATION OR SECTION NUMBER, E-201 INDICATES DRAWING SHEET WHERE ELEVATION OR SECTION IS SHOWN.
A5 / E-201	ELEVATION OR SECTION INDICATOR, INTERIOR: A5 INDICATES ELEVATION OR SECTION NUMBER, E-201 INDICATES DRAWING SHEET WHERE ELEVATION OR SECTION IS SHOWN.
100	ROOM OR SPACE NUMBER.
1	KEYNOTE INDICATOR.
1	REVISION INDICATOR.
CU-1	EQUIPMENT INDICATOR.
	BREAK, STRAIGHT: TO BREAK PARTS OF DRAWING.
	BREAK, ROUND.
	NEW LINE: MEDIUM LINE.
	HIDDEN FEATURES LINE: HIDDEN, THIN LINE.
	PROPERTY LINE: DASHED, WIDE LINE.
	CONTRACT LIMIT LINE: DASHDOT, WIDE LINE.
WIRING METHODS	
	WIRING.
	WIRING TURNED UP OR TOWARDS OBSERVER.
	WIRING TURNED DOWN OR AWAY FROM OBSERVER.
A-1,3,5	BRANCH CIRCUIT HOME RUN TO PANELBOARD: NUMBER OF ARROWS INDICATES NUMBER OF CIRCUITS. LETTER AND NUMBER NOTATIONS IDENTIFY PANEL AND CIRCUIT NUMBERS. USE #12 CONDUCTORS, EXCEPT #10 CONDUCTORS SHALL BE INSTALLED IF DISTANCES EXCEED THOSE SPECIFIED IN SECTION 16120.
1 A-1,3,5	BRANCH CIRCUIT HOME RUN TO PANELBOARD: NUMBER OF ARROWS INDICATES NUMBER OF CIRCUITS. LETTER AND NUMBER NOTATIONS IDENTIFY PANEL AND CIRCUIT NUMBERS. NUMBER IN BOX REFERS TO THE CONDUCTOR AND CONDUIT SCHEDULE. FOR BRANCH WIRING USE #12 CONDUCTORS, EXCEPT #10 CONDUCTORS SHALL BE INSTALLED IF DISTANCES EXCEED THOSE SPECIFIED IN SECTION 16120.
1	CONDUCTOR & CONDUIT ("CC") SCHEDULE INDICATOR. REFER TO ONE-LINE DIAGRAM.
J	JUNCTION BOX.
J C	JUNCTION BOX, CEILING.
	EQUIPMENT CONNECTION
LIGHTING (REFER TO FIXTURE SCHEDULE FOR SYMBOLS)	
(W-3)	FIXTURE IDENTIFICATION: (W-3) INDICATES FIXTURE TYPE AS SCHEDULED.
(W-3)	FIXTURE IDENTIFICATION, EMERGENCY WITH BATTERY PACK, CONNECTED TO GENERATOR AS INDICATED: (W-3) INDICATES FIXTURE TYPE AS SCHEDULED.
	OCCUPANCY SENSOR, CEILING MOUNTED, DIRECTIONAL DUAL TECHNOLOGY – PASSIVE INFRARED AND ULTRASONIC
	OCCUPANCY SENSOR, CEILING MOUNTED DUAL TECHNOLOGY – PASSIVE INFRARED AND ULTRASONIC
WIRING DEVICES	
	RECEPTACLE, DUPLEX: NEMA 5-20R.
A	RECEPTACLE, DUPLEX, ABOVE COUNTER: NEMA 5-20R.
	RECEPTACLE, DUPLEX WITH GROUND FAULT CIRCUIT INTERRUPTER: NEMA 5-20R.
	RECEPTACLE, QUADRAPLEX: NEMA 5-20R.
	RECEPTACLE, DUPLEX, HOSPITAL GRADE: NEMA 5-20R.
	RECEPTACLE, DUPLEX WITH GROUND FAULT CIRCUIT INTERRUPTER: NEMA 5-20R.
	RECEPTACLE, DUPLEX WITH GROUND FAULT CIRCUIT INTERRUPTER, HOSPITAL GRADE: NEMA 5-20R.
WP	RECEPTACLE, DUPLEX WITH GROUND FAULT CIRCUIT INTERRUPTER, WEATHERPROOF: NEMA 5-20R.
	SWITCH, DIMMER.
X $	SWITCH, SINGLE POLE ("x" INDICATES FIXTURES CONTROLLED).
X $3	SWITCH, THREE-WAY ("x" INDICATES FIXTURES CONTROLLED).
X $4	SWITCH, FOUR-WAY ("x" INDICATES FIXTURES CONTROLLED).

STRUCTURED CABLING	
	OUTLET, BUILDING STANDARD COMBINATION TELEPHONE/ DATA COMMUNICATION.
	TELEPHONE TERMINAL BOARD, FIRE TREATED PLYWOOD PAINTED.
ELECTRICAL POWER AND DISTRIBUTION	
	DISCONNECT, FUSED (ONE-LINE DIAGRAM).
	DISCONNECT, NONFUSED (ONE-LINE DIAGRAM).
	CIRCUIT BREAKER, MOLDED CASE (ONE-LINE DIAGRAM).
	MOTOR.
	TRANSFORMER (ONE-LINE DIAGRAM).
225/3 "1H"	PANELBOARD WITH MAIN LUGS ONLY. BUS SIZE AND PHASE AS SHOWN (ONE-LINE DIAGRAM).
225/3 "1H" 225/3 "1H"	PANELBOARD WITH SUB FEED LUGS (ONE-LINE DIAGRAM).
	DISCONNECT SWITCH, FUSED.
	DISCONNECT SWITCH, UNFUSED.
	STARTER, COMBINATION WITH DISCONNECT SWITCH.
	STARTER OR MOTOR CONTROLLER.
	PANELBOARD CABINET, SURFACE MOUNTED, 1 SECTION.
	PANELBOARD CABINET, SURFACE MOUNTED, 2 SECTION.
LP	LIGHTING RELAY, CONTACTOR PANEL, OR DIMMING ENCLOSURE.
$ST	SWITCH, TOGGLE MOTOR STARTER WITH OVERLOAD PROTECTION.
75	TRANSFORMER: NUMBER INDICATES kVA.

DEFINITIONS

NOTE: ALL DEFINITIONS MAY NOT BE USED.

INDICATED: THE TERM "INDICATED" REFERS TO GRAPHIC REPRESENTATIONS, NOTES, OR SCHEDULES ON THE DRAWINGS, OTHER PARAGRAPHS OR SCHEDULES IN THE SPECIFICATIONS, AND SIMILAR REQUIREMENTS IN THE CONTRACT DOCUMENTS. WHERE TERMS SUCH AS "SHOWN", "NOTED", "SCHEDULED", AND "SPECIFIED" ARE USED, IT IS TO HELP THE READER LOCATE THE REFERENCE, NO LIMITATION ON LOCATION IS INTENDED.

DIRECTED: TERMS SUCH AS "DIRECTED", "REQUESTED", AUTHORIZED", "SELECTED", "APPROVED", "REQUIRED", AND "PERMITTED" MEAN "DIRECTED BY THE ENGINEER", "REQUESTED BY THE ENGINEER", AND SIMILAR PHRASES.

APPROVED: THE TERM "APPROVED", WHERE USED IN CONJUNCTION WITH THE ENGINEER'S ACTION ON THE CONTRACTOR'S SUBMITTALS, APPLICATIONS, AND REQUESTS, IS LIMITED TO THE ENGINEER'S DUTIES AND RESPONSIBILITIES AS STATED IN GENERAL AND SUPPLEMENTARY CONDITIONS.

FURNISH: THE TERM "FURNISH" IS USED TO MEAN "SUPPLY AND DELIVER TO THE PROJECT SITE, READY FOR UNLOADING, UNPACKING, ASSEMBLY, INSTALLATION, AND SIMILAR OPERATIONS."

INSTALL: THE TERM "INSTALL" IS USED TO DESCRIBE OPERATIONS AT PROJECT SITE INCLUDING THE ACTUAL "UNLOADING, UNPACKING, ASSEMBLY, ERECTION, PLACING, ANCHORING, APPLYING, WORKING TO DIMENSION, FINISHING, CURING, PROTECTING, CLEANING, AND SIMILAR OPERATIONS."

PROVIDE: THE TERM "PROVIDE" MEANS "TO FURNISH AND INSTALL, COMPLETE AND READY FOR THE INTENDED USE."

INSTALLER: AN "INSTALLER" IS THE CONTRACTOR OR AN ENTITY ENGAGED BY THE CONTRACTOR, EITHER AS AN EMPLOYEE, SUBCONTRACTOR, OR SUB-SUBCONTRACTOR, FOR PERFORMANCE OF A PARTICULAR CONSTRUCTION ACTIVITY, INCLUDING INSTALLATION, ERECTION, APPLICATION, AND SIMILAR OPERATIONS. INSTALLERS ARE REQUIRED TO BE EXPERIENCED IN THE OPERATIONS THEY ARE ENGAGED TO PERFORM.

TECHNOLOGY SYSTEMS: THE TERM "TECHNOLOGY SYSTEMS" IS USED TO DESCRIBE ALL LOW VOLTAGE SYSTEMS GENERALLY REFERRED TO AS "SPECIAL SYSTEMS". THESE SYSTEMS INCLUDE BUT ARE NOT NECESSARILY LIMITED TO ALL SYSTEMS WHICH UTILIZE VOLTAGES OF LESS THAN 71 VOLTS SUCH AS SOUND SYSTEMS, VIDEO SYSTEMS, TV SYSTEMS, SECURITY SYSTEMS, VOICE AND DATA CABLING SYSTEMS, ETC...

ABBREVIATIONS

NOTE: ALL ABBREVIATIONS MAY NOT BE USED.

1P	SINGLE POLE	KV	KILOVOLT
1PH	SINGLE-PHASE	KVA	KILOVOLT AMPERE
1WAY	ONE-WAY	kVAR	KILOVOLT AMPERE REACTIVE
2/C	TWO-CONDUCTOR	kW	KILOWATT
2WAY	TWO-WAY	kWh	KILOWATT HOUR
3/C	THREE-CONDUCTOR	LED	LIGHT EMITTING DIODE
3PH	THREE-PHASE	LFMC	LIQUID TIGHT FLEXIBLE METAL CONDUIT
3WAY	THREE-WAY	LFNC	LIQUID TIGHT FLEXIBLE NONMETALLIC CONDUIT
4OUT	QUADRUPLE RECEPTACLE OUTLET	LPS	LOW PRESSURE SODIUM
4PDT	FOUR-POLE DOUBLE THROW	LRA	LOCKED ROTOR AMPS
4PST	FOUR-POLE SINGLE THROW	LTG	LIGHTING
4W	FOUR-WIRE	LV	LOW VOLTAGE
4WAY	FOUR-WAY	MATV	MASTER ANTENNA TELEVISION SYSTEM
A	ABOVE COUNTER	MAX	MAXIMUM
AC	ARMORED CABLE	MC	METAL CLAD
ADA	AMERICANS WITH DISABILITIES ACT	MCA	MINIMUM CIRCUIT AMPS
ADJ	ADJACENT	MCB	MAIN CIRCUIT BREAKER
AFF	ABOVE FINISHED FLOOR	MCC	MOTOR CONTROL CENTER
AFG	ABOVE FINISHED GRADE	MCP	MOTOR CIRCUIT PROTECTION
AIC	AMPERE INTERRUPTING CAPACITY	MDP	MAIN DISTRIBUTION PANEL
ALUM	ALUMINUM	MG	MOTOR GENERATOR
AMP	AMPERE	MH	MANHOLE
ANN	ANNUNCIATOR	MIN	MINIMUM
AP	ACCESS POINT (WIRELESS DATA)	MLO	MAIN LUGS ONLY
AR	AS REQUIRED	MOCP	MAXIMUM OVERCURRENT PROTECTION
ASC	AMPS SHORT CIRCUIT	NA	NOT APPLICABLE
ATS	AUTOMATIC TRANSFER SWITCH	NC	NORMALLY CLOSED
AV	AUDIO VISUAL	NEC	NATIONAL ELECTRICAL CODE
AWG	AMERICAN WIRE GAGE	NEMA	NATIONAL ELECTRICAL MANUFACTURERS ASSOCIATION
BB XFMR	BUCK-BOOST TRANSFORMER	NFC	NATIONAL FIRE CODE
C	CEILING MOUNTED	NFPA	NATIONAL FIRE PROTECTION ASSOCIATION
CATV	COMMUNITY ANTENNA TELEVISION	NIC	NOT IN CONTRACT
CB	CIRCUIT BREAKER	NL	NIGHT LIGHT
CCBA	CUSTOM COLOR AS SELECTED BY ARCHITECT	NO	NORMALLY OPEN
CCTV	CLOSED CIRCUIT TELEVISION	NTS	NOT TO SCALE
CFBA	CUSTOM FINISH AS SELECTED BY ARCHITECT	OC	ON CENTER
CF/CI	CONTRACTOR FURNISHED/ CONTRACTOR INSTALLED	OCP	OVER CURRENT PROTECTION
CF/OI	CONTRACTOR FURNISHED/ OWNER INSTALLED	OF/CI	OWNER FURNISHED/ CONTRACTOR INSTALLED
CKT	CIRCUIT	OF/OI	OWNER FURNISHED/ OWNER INSTALLED
CM	CONSTRUCTION MANAGER	OFP	OBTAIN FROM PLANS
CND	CONDUIT	OH DR	OVERHEAD (COILING) DOOR
CO	CONVENIENCE OUTLET	OL	OVERLOAD
COR	CONTRACTING OFFICER'S REPRESENTATIVE	PB	PUSHBUTTON
CP	CONTROL PANEL	PF	POWER FACTOR
CT	CURRENT TRANSFORMER	PH	PHASE
CTV	CABLE TELEVISION	PNL	PANEL
CU	COPPER	PT	POTENTIAL TRANSFORMER
dBA	UNIT OF SOUND LEVEL	PTZ	PAN/TILT/ZOOM
DPDT	DOUBLE POLE DOUBLE THROW	QTY	QUANTITY
DS	DISCONNECT SWITCH	R	REMOVE
EA	EACH	RCP	REFLECTED CEILING PLAN
EM	EMERGENCY	RMC	RIGID METAL CONDUIT
EMT	ELECTRICAL METALLIC TUBING	RNC	RIGID NONMETALLIC CONDUIT
ENT	ELECTRICAL NONMETALLIC TUBING	RPM	REVOLUTIONS PER MINUTE
EPO	EMERGENCY POWER OFF	RR	REMOVE AND RELOCATE
EQUIP	EQUIPMENT	SCA	SHORT CIRCUIT AMPS
EX	EXISTING	SCBA	STANDARD COLOR AS SELECTED BY ARCHITECT
F	FURNITURE MOUNTED	SF	SQUARE FOOT (FEET)
FA	FIRE ALARM	SFBA	STANDARD FINISH AS SELECTED BY ARCHITECT
FCP	FIRE ALARM CONTROL PANEL	SPDT	SINGLE POLE, DOUBLE THROW
FLA	FULL LOAD AMPS	SPEC	SPECIFICATION
FMC	FLEXIBLE METALCONDUIT	SPST	SINGLE POLE, SINGLE THROW
FOB	FREIGHT ON BOARD	S/S	START/STOP
FVNR	FULL VOLTAGE NON-REVERSING	ST	SINGLE THROW
FVR	FULL VOLTAGE REVERSING	SWBD	SWITCHBOARD
G	GROUND	SWGR	SWITCHGEAR
GEN	GENERATOR	TL	TWIST LOCK
GFCI	GROUND FAULT CIRCUIT INTERRUPTER	TP	TELEPHONE POLE
GFP	GROUND FAULT PROTECTION	TP	TWISTED PAIR
HD	HEAVY DUTY	TTB	TELEPHONE TERMINAL BOARD
HID	HIGH INTENSITY DISCHARGE	TV	TELEVISION
HOA	HAND-OFF-AUTOMATIC	TVSS	TRANSIENT VOLTAGE SURGE SUPPRESSER
HP	HORSE POWER	TYP	TYPICAL
HPF	HIGH POWER FACTOR	UF	UNDERFLOOR
HPS	HIGH PRESSURE SODIUM	UGND	UNDERGROUND
HV	HIGH VOLTAGE	UPS	UNINTERRUPTIBLE POWER SUPPLY
HZ	HERTZ	V	VOLTS
IG	ISOLATED GROUND	VA	VOLT AMPERE
IMC	INTERMEDIATE METAL CONDUIT	VFC	VARIABLE FREQUENCY CONTROLLER
IN/IS	INSULATED/ISOLATED	W/	WITH
I/O	INPUT/OUTPUT	W/O	WITHOUT
IR	INFRARED	WP	WEATHERPROOF
J-BOX	JUNCTION BOX	XFMR	TRANSFORMER

GENERAL ELECTRICAL NOTES

1. CLARIFICATION METHODS: AT THE TIME OF BIDDING, BIDDERS SHALL FAMILIARIZE THEMSELVES WITH THE DRAWINGS AND SPECIFICATIONS. ANY QUESTIONS, MISUNDERSTANDINGS, CONFLICTS, DELETIONS, DISCONTINUED PRODUCTS, CATALOG NUMBER DISCREPANCIES, DISCREPANCIES BETWEEN THE EQUIPMENT SUPPLIED AND THE INTENT OR FUNCTION OF THE EQUIPMENT, ETC, SHALL BE SUBMITTED TO THE ARCHITECT/ENGINEER IN WRITING FOR CLARIFICATION PRIOR TO ISSUANCE OF THE FINAL ADDENDUM AND BIDDING OF THE PROJECT. WHERE DISCREPANCIES OR MULTIPLE INTERPRETATIONS OCCUR, THE MOST STRINGENT (WHICH IS GENERALLY RECOGNIZED AS THE MOST COSTLY) THAT MEETS THE INTENT OF THE DOCUMENTS SHALL BE ENFORCED.

2. OWNER FURNISHED ITEMS: THE OWNER WILL FURNISH MATERIAL AND EQUIPMENT AS INDICATED IN THE CONTRACT DOCUMENTS TO BE INCORPORATED INTO THE WORK. THESE ITEMS ARE ASSIGNED TO THE INSTALLER AND COSTS FOR RECEIVING, HANDLING, STORAGE, IF REQUIRED, AND INSTALLATION ARE INCLUDED IN THE CONTRACT SUM.

2.A. THE INSTALLER'S RESPONSIBILITIES ARE THE SAME AS IF THE INSTALLER FURNISHED THE MATERIALS OR EQUIPMENT.

2.B. THE OWNER WILL ARRANGE AND PAY FOR DELIVERY OF OWNER FURNISHED ITEMS FREIGHT ON BOARD JOB SITE AND THE INSTALLER WILL INSPECT DELIVERIES FOR DAMAGE. IF OWNER FURNISHED ITEMS ARE DAMAGED, DEFECTIVE OR MISSING, DOCUMENT DAMAGED ITEMS WITH THE TRANSPORT COMPANY AND THE OWNER WILL ARRANGE FOR REPLACEMENT. THE OWNER WILL ALSO ARRANGE FOR MANUFACTURER'S FIELD SERVICES, AND THE DELIVERY OF MANUFACTURER'S WARRANTIES AND BONDS TO THE INSTALLER.

2.C. THE INSTALLER IS RESPONSIBLE FOR DESIGNATING THE DELIVERY DATES OF OWNER FURNISHED ITEMS AND FOR RECEIVING, UNLOADING AND HANDLING OWNER FURNISHED ITEMS AT THE SITE. THE INSTALLER IS RESPONSIBLE FOR PROTECTING OWNER FURNISHED ITEMS FROM DAMAGE, INCLUDING DAMAGE FROM EXPOSURE TO THE ELEMENTS, AND TO REPAIR OR REPLACE ITEMS DAMAGED AS A RESULT OF HIS OPERATIONS.

3. EXPOSED STRUCTURE AREAS (EXCLUDING MECHANICAL, ELECTRICAL, AND COMMUNICATION SPACES): INSTALL RACEWAYS BETWEEN DECK AND STRUCTURE WHEREVER POSSIBLE IN EXPOSED STRUCTURE CEILING AREAS. ROUTE RACEWAYS IN CONCEALED AREAS WHEREVER POSSIBLE. REFER ALL CONDITIONS WHERE RACEWAYS MUST BE INSTALLED WHICH CANNOT COMPLY WITH THESE REQUIREMENTS TO THE ARCHITECT.

4. SUBMITTALS: PROVIDE SUBMITTALS IN THREE RING BINDERS WITH JOB NAME, SUBCONTRACTOR, AND VOLUME ON THE BINDING. PREPARE TABS FOR EACH SPECIFICATION SECTION REQUIRING SUBMITTALS. PREPARE INDEX OF EQUIPMENT SUBMITTED IN EACH TAB.

5. REFLECTED CEILING PLANS: COORDINATE THE LOCATION OF LIGHT FIXTURES WITH THE ARCHITECTURAL REFLECTED CEILING PLANS. REFER ALL DISCREPANCIES TO THE ARCHITECT AND ENGINEER.

6. RACEWAY FOR POWER CIRCUITS MUST BE .75" EMT CONDUIT OR MC CABLE.

7. PROVIDE A DEDICATED NEUTRAL FOR ALL NEW CIRCUITS.

8. PROVIDE DISCONNECT FOR ALL LIGHT FIXTURES WITH BALLASTS.

9. NOT ALL ELECTRICAL DEVICES TO BE REMOVED ARE SHOWN ON DRAWINGS. ELECTRICAL CONTRACTOR IS RESPONSIBLE FOR REMOVING OR RELOCATING ALL ELECTRICAL DEVICES WHICH OBSTRUCT CONSTRUCTION. ELECTRICAL CONTRACTOR IS ALSO RESPONSIBLE FOR MAINTAINING THE WORKING CONDITION OF ALL APPARATUSES NOT IN THE THE CONSTRUCTION AREA. (SEE SPECIFICATION 16050-3.9A).

10. REMOVE ALL ABANDONED LOW VOLTAGE CABLING.

ELECTRICAL SHEET INDEX

SHEET NO	SHEET TITLE
EE001	SYMBOL SCHEDULE, SHEET INDEX
ED101	DEMOLITION PLAN
EP101	POWER PLAN
EP501	DETAILS
EP502	DETAILS
EL101	LIGHTING PLAN, LIGHTING FIXTURE SCHEDULE

NJRA ARCHITECTS

NJRA Architects, Inc.
370 East 500 South, Suite 101
Salt Lake City, Utah 84111

Phone: 801. 364. 9259
Fax: 801. 521. 0420
www.njraarchitects.com

LICENSED PROFESSIONAL ENGINEER No. 165878 PETER E. JOHANSEN 10/28/10 STATE OF UTAH

Division of Facilities Construction & Management
Utah State Mail Center
Office Renovation

DFCM Project #: 09258310
250 North 1950 West
Salt Lake City, Utah

ISSUE
March 10, 2010 - Const. Documents 100%
2 April 6, 2010 - REV #1

NJRA Project #: 10901.00

SYMBOL SCHEDULE, SHEET INDEX

EE001

File Name: P:\2010\20100035\1Drawings\3Sheet\35EE001.dwg Last Plotted: 2010/05/25 @ 9:28 AM By: sts

SHEET KEYNOTES

1. RELOCATE DISCONNECT AND CIRCUIT FOR AIR COMPRESSOR TO NEW STORAGE ROOM 108.

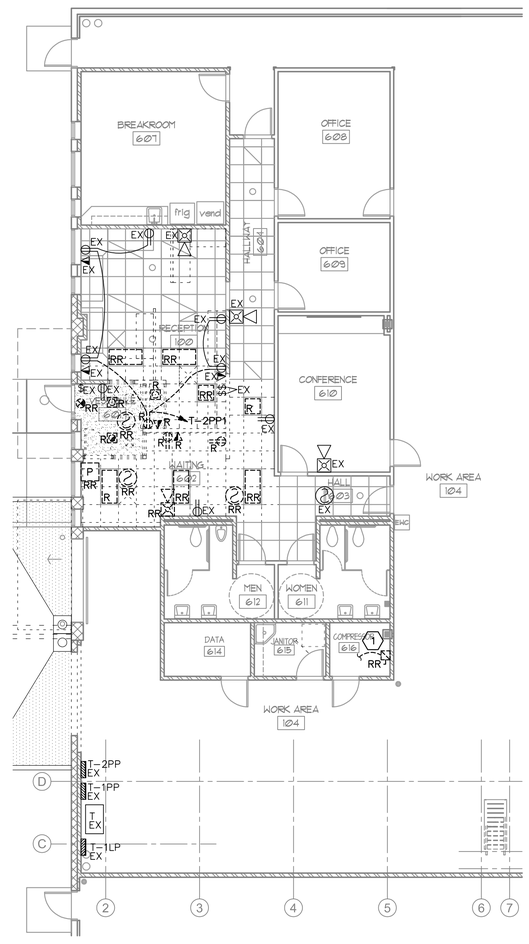

A3 Demolition Plan
1/8" = 1'-0"

NJRA Architects, Inc.
370 East 500 South, Suite 101
Salt Lake City, Utah 84111

Phone: 801. 364. 9259
Fax: 801. 521. 0420
www.njraarchitects.com

LICENSED PROFESSIONAL ENGINEER
No. 165878
PETER E. JOHANSEN
10/26/10
STATE OF UTAH

Division of Facilities Construction & Management
Utah State Mail Center
Office Renovation

DFCM Project #: 09258310
250 North 1950 West
Salt Lake City, Utah

ISSUE
March 10, 2010 - Const. Documents 100%
2 April 6, 2010 - REV #1

NJRA Project #: 10901.00

DEMOLITION PLAN

ED101

File Name: P:\2010\20100035\1Drawings\3Sheet\35ED101.dwg Last Plotted: 2010/05/25 @ 9:27 AM By: sts

GENERAL SHEET NOTES

1. PROVIDE DOUBLE GANG DEEP J-BOXES WITH SINGLE GANG OPENING FOR ALL VOICE/DATA JACKS. RUN .75" CONDUIT FROM J-BOX TO DATA ROOM 614.

SHEET KEYNOTES

1. RELOCATED DISCONNECT FOR AIR COMPRESSOR. RECONNECT TO CIRCUIT WHICH PREVIOUSLY FED UNIT.
2. TIE NEW HORN/STROBE IN WITH EXISTING ANNUNCIATING LOOP. EXISTING FIRE ALARM SYSTEM IS EST II.
3. NEW ROOF TOP UNIT. PROVIDE HEAVY DUTY 30/1, FRS-6 AMP DISCONNECT.

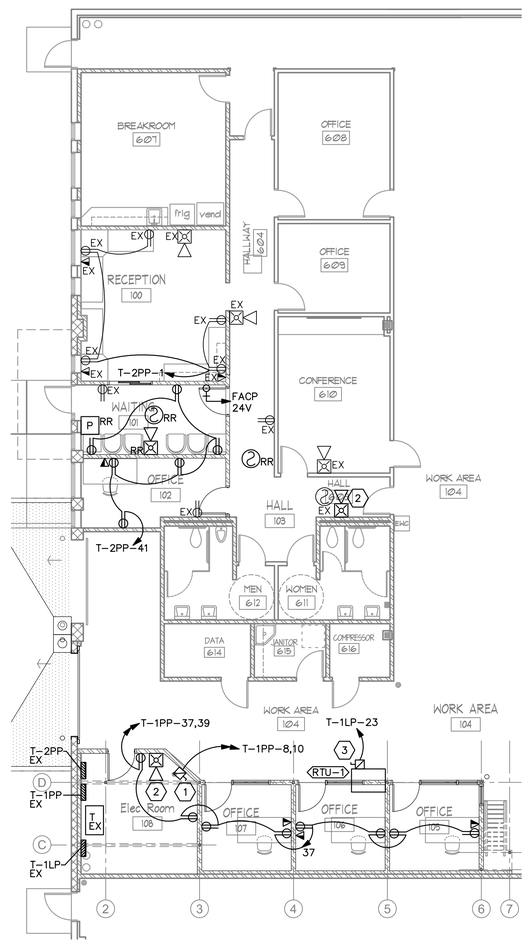

A3 Power Plan
1/8" = 1'-0"

NJRA ARCHITECTS
NJRA Architects, Inc.
370 East 500 South, Suite 101
Salt Lake City, Utah 84111
Phone: 801. 364. 9259
Fax: 801. 521. 0420
www.njraarchitects.com

LICENSED PROFESSIONAL ENGINEER
No. 165878
PETER E. JOHANSEN
10/26/10
STATE OF UTAH

Division of Facilities Construction & Management
Utah State Mail Center
Office Renovation

DFCM Project #: 09258310
250 North 1950 West
Salt Lake City, Utah

ISSUE
March 10, 2010 - Const. Documents 100%
2 April 6, 2010 - REV #1

NJRA Project #: 10901.00

POWER PLAN

EP101

File Name: P:\2010\20100035\1Drawings\3Sheet\35EP101.dwg Last Plotted: 2010/05/25 @ 9:29 AM By: sts

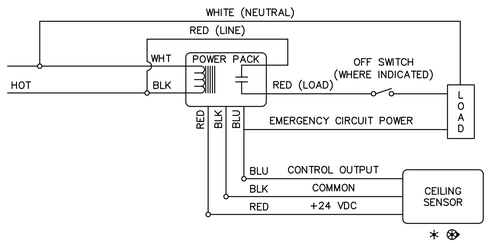

C2 TYPICAL ROOM WITH ONE CEILING SENSOR, WITH OR WITHOUT WALL SWITCH

NO SCALE

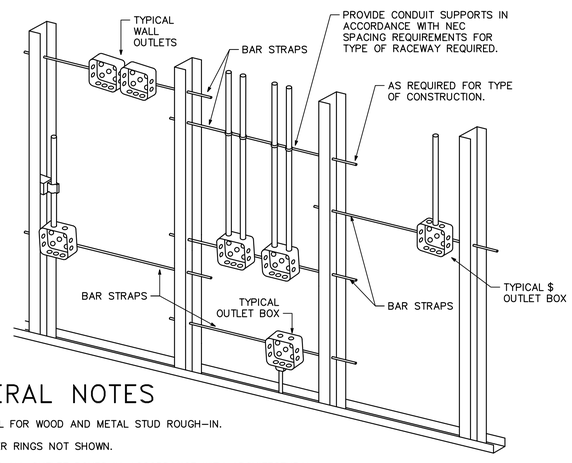

GENERAL NOTES

1. TYPICAL FOR WOOD AND METAL STUD ROUGH–IN.
2. PLASTER RINGS NOT SHOWN.
3. LOCATE ALL OUTLET BOXES IN ACCORDANCE WITH ARCHITECTURAL AND MECHANICAL DRAWINGS AND WITH ALL APPLICABLE SHOP DRAWINGS.
4. IN ACCORDANCE WITH IBC 711.3.2 EXCEPTION 1, OUTLETS ON OPPOSITE SIDES OF WALLS OR PARTITIONS IN THE SAME STUD SPACE IN A RATED FIRE SEPARATION WALL MUST BE SEPARATED BY A MINIMUM OF 24" HORIZONTAL DISTANCE.
5. IN NON–RATED WALLS, OUTLETS ON OPPOSITE SIDES OF WALLS OR PARTITIONS MUST BE SEPARATED BY 16" FOR SOUND ATTENUATION.

A2 TYPICAL ROUGH–IN REQUIREMENTS DETAIL

NTS

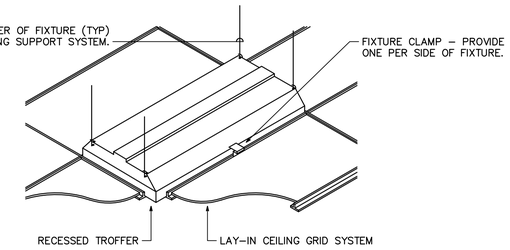

D4 RECESSED FIXTURE MOUNTING DETAIL

SCALE: N.T.S.

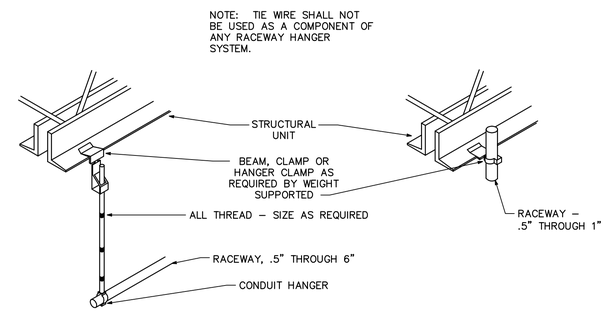

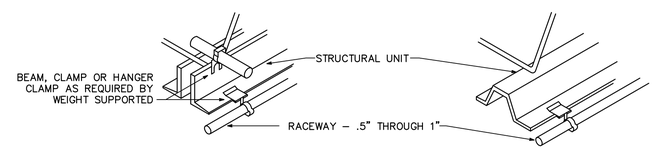

B4 TYPICAL RACEWAY SUPPORT METHODS DETAIL

NTS

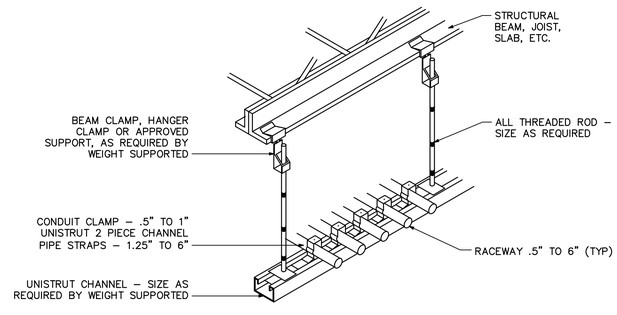

A4 TYPICAL CONDUIT RACK DETAIL

NTS

NJRA ARCHITECTS
NJRA Architects, Inc.
370 East 500 South, Suite 101
Salt Lake City, Utah 84111
Phone: 801. 364. 9259
Fax: 801. 521. 0420
www.njraarchitects.com

LICENSED PROFESSIONAL ENGINEER No. 165878 PETER E. JOHANSEN 04/26/10 STATE OF UTAH

Division of Facilities Construction & Management
Utah State Mail Center
Office Renovation

DFCM Project #: 09258310
250 North 1950 West
Salt Lake City, Utah

ISSUE
March 10, 2010 - Const. Documents 100%
2 April 6, 2010 - REV #1

NJRA Project #: 10901.00

DETAILS

EP501

File Name: P:\2010\20100035\1Drawings\3Sheet\35EP501.dwg Last Plotted: 2010/05/25 @ 9:30 AM By: sts

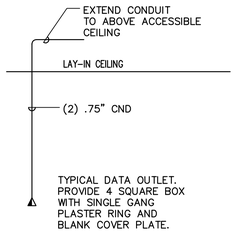

D2 DATA RISER
NTS

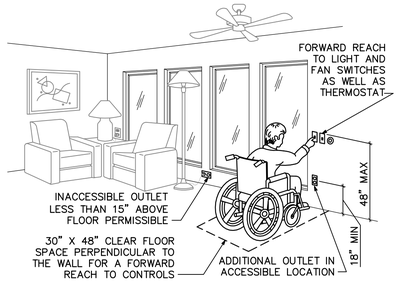

D3 ADA DETAIL
NTS

GENERAL SHEET NOTES

1. DETERMINE MOUNTING HEIGHTS OF ELECTRICAL AND ELECTRONIC EQUIPMENT IN THE FOLLOWING ORDER OF PRIORITY:
   - 1.1. ELEVATIONS (ARCHITECTURAL, ELECTRICAL, MECHANICAL, ETC).
   - 1.2. EQUIPMENT SHOP DRAWINGS.
   - 1.3. FIELD INSTRUCTIONS.
2. LOCATE RECEPTACLES SERVING THE SAME TYPE OF USE AT A UNIFORM HEIGHT UNLESS DIRECTED OTHERWISE.
3. MECHANICAL, ELECTRICAL, AND COMMUNICATION ROOMS: COORDINATE LOCATION OF LIGHTING AND POWER RECEPTACLES WITH EQUIPMENT, PIPING, AND DUCTWORK. DO NOT INSTALL RECEPTACLES BEHIND EQUIPMENT OR WHERE OTHERWISE INACCESSIBLE. POSITION LIGHTING REGARDLESS OF WHERE SHOWN ON DRAWING TO PROVIDE PROPER ILLUMINATION.
4. MOUNT RECEPTACLE BOXES FOR SWITCHES AND RECEPTACLES WITH LONG AXIS OF THE DEVICE VERTICAL UNLESS OTHERWISE INDICATED.
5. SET BOXES WITH PLASTER RINGS FLUSH WITH FINISHED SURFACE.
6. LOCATE BOX COVERS OR DEVICE PLATES SO THEY WILL NOT SPAN DIFFERENT TYPES OF BUILDING FINISHES EITHER VERTICALLY OR HORIZONTALLY.
7. VERIFY ALL DOOR CONDITIONS ON ARCHITECTURAL DRAWINGS PRIOR TO INSTALLING SWITCHES.
8. LOCATE WIRING DEVICES WHICH ARE ADJACENT AND ARE COMPATIBLE VOLTAGES IN ONE PLATE.

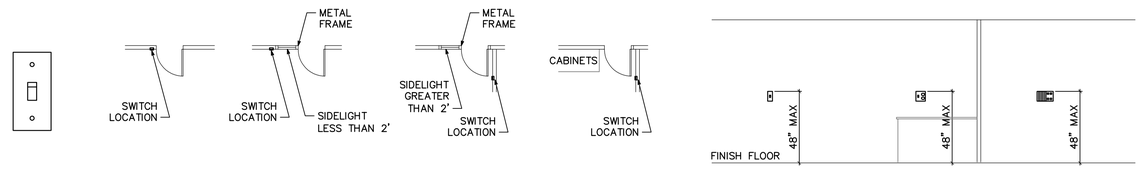

C2 SWITCH MOUNTING DETAILS
NTS

SHEET KEYNOTES

1. LOCATE RECEPTACLES BEHIND DRINKING FOUNTAINS.
2. REFER TO ARCHITECTURAL ELEVATIONS FOR PLACEMENT OF OUTLETS.
3. LOCATE AT BOTTOM OF BEAMS (OR JOISTS) OR AT CEILING. (REDUCE SPACING BY .5 PERPENDICULAR TO BEAM OR JOIST DIRECTION.) FOR OTHER CONDITIONS, REFER TO NFPA 72.
4. LOCATE SMOKE DETECTOR ANYWHERE IN SHADED AREA.
5. LOCATE AT BOTTOM OF BEAMS IF EITHER D/H < .1 OR W/H < .4; OTHERWISE, LOCATE IN BEAM POCKET.

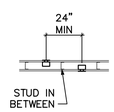

BOXES ON OPPOSITE SIDES OF WALL

B2 BOX MOUNTING DETAILS
NTS

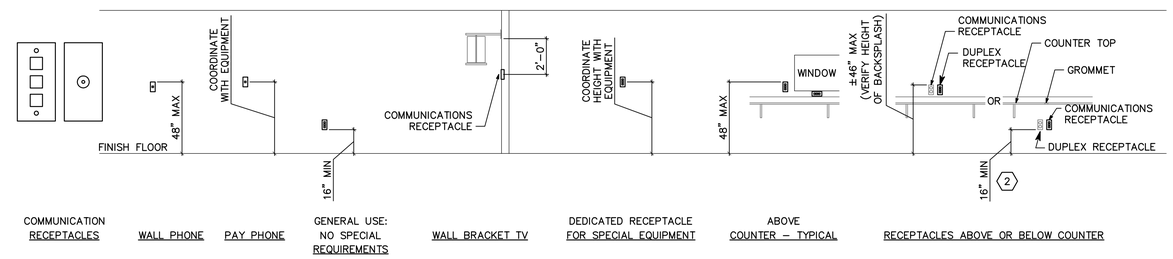

B3 COMMUNICATION MOUNTING DETAILS
NTS

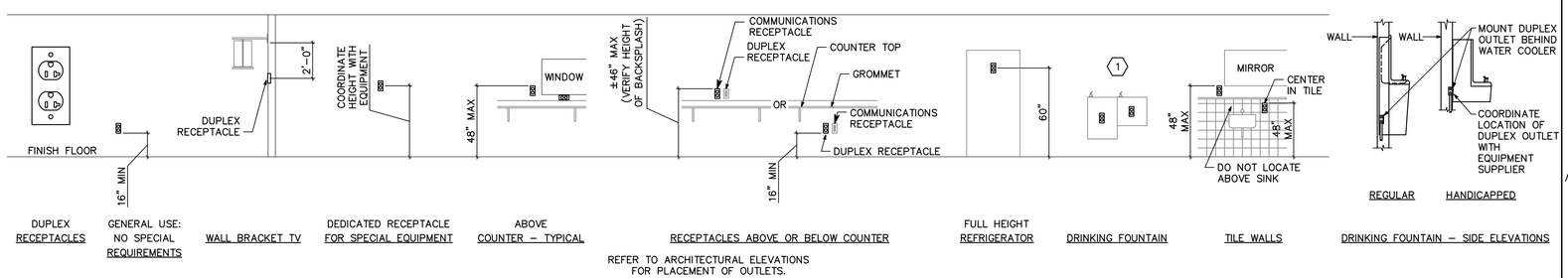

REFER TO ARCHITECTURAL ELEVATIONS FOR PLACEMENT OF OUTLETS.

A2 RECEPTACLE MOUNTING DETAILS
NTS

NJRA ARCHITECTS
NJRA Architects, Inc.
370 East 500 South, Suite 101
Salt Lake City, Utah 84111
Phone: 801. 364. 9259
Fax: 801. 521. 0420
www.njraarchitects.com

LICENSED PROFESSIONAL ENGINEER No. 165878 PETER E. JOHANSEN 04/26/10 STATE OF UTAH

Division of Facilities Construction & Management
Utah State Mail Center
Office Renovation

DFCM Project #: 09258310
250 North 1950 West
Salt Lake City, Utah

ISSUE
March 10, 2010 - Const. Documents 100%
2 April 6, 2010 - REV #1

NJRA Project #: 10901.00

DETAILS

EP502

File Name: P:\2010\20100035\1Drawings\3Sheet\35EP502.dwg Last Plotted: 2010/05/25 @ 9:31 AM By: sts

LIGHTING FIXTURE SCHEDULE

NOTE TO BIDDERS: COMPLY WITH SECTIONS 16511, 16521, AND 16570 OF THE SPECIFICATIONS.
REFER TO SPECIFICATIONS FOR IMPORTANT TECHNICAL REQUIREMENTS FOR LIGHTING FIXTURES, BALLASTS, AND LAMPS. THE CATALOG NUMBERS LISTED BELOW HAVE BEEN CAREFULLY PREPARED TO ASSIST BIDDERS IN SELECTING PRODUCTS TO ACHIEVE THE DESIGN CONCEPT, HOWEVER, PRIOR TO BIDDING, EACH MANUFACTURER SHALL COMPARE THE CATALOG NUMBERS SHOWN WITH THE DESCRIPTION AND REQUIREMENTS ON THE DRAWINGS, AND SHALL NOTIFY THE ARCHITECT/ENGINEER OF ANY DISCREPANCIES. SPECIFICALLY INCLUDED IN THIS EVALUATION SHALL BE THE VERIFYING OF PROPER MOUNTING KITS OR ACCESSORIES TO FACILITATE INSTALLATION AS SHOWN AT EACH LOCATION ON THE DRAWINGS. NO ALLOWANCE OR REDRESS WILL BE ALLOWED FOR DISCREPANCIES THAT WERE NOT REPORTED TO THE ARCHITECT/ENGINEER IN TIME FOR CORRECTION OR CLARIFICATION BEFORE THE BID. THE REPORTING OF ANY AMBIGUITY IS THE RESPONSIBILITY OF THE BIDDER. PROVIDE UNIT PRICES AND FIXTURE BRAND SELECTED FOR ADD/DELETE CHANGES FOR EACH FIXTURE TYPES SHOWN WITHIN 48 BUSINESS HOURS OF THE BID DATE. FAILURE TO COMPLY WITH THIS REQUIREMENT MAY DISQUALIFY THE PRODUCTS AND EMPOWER THE ENGINEER TO DETERMINE FAIR VALUE FOR FIXTURE AND INSTALLATION CHANGES, WITHOUT FURTHER INPUT FROM THE CONTRACTOR OR INSTALLER. SUBMITTAL PACKAGE SHALL INCLUDE LAMP MANUFACTURER AND CATALOG NUMBER ON EACH FIXTURE SHEET. ON ALL PENDANT MOUNTED FIXTURES, PROVIDE A SECOND SET OF PENDANTS, OF A DIFFERENT LENGTH, AS DIRECTED BY THE ARCHITECT/ENGINEER, PROVIDED AND INSTALLED AT NO ADDITIONAL CHARGE. ALL FIXTURES SHALL BE APPROVED BY UL OR ANOTHER ACCEPTABLE TESTING LAB FOR THE PURPOSE INTENDED AND WITH THE LAMP AND BALLAST PROPOSED. CONTRACTOR ALLOWANCE PRICES ARE ACCURATE WHEN THIS JOB WAS SPECIFIED, CONTRACTOR AND ELECTRICAL DISTRIBUTOR SHALL VERIFY THIS ALLOWANCE AND REPORT ANY PROBLEMS TO THE ENGINEER BEFORE THE BID. ALLOWANCE PRICE MAY OR MAY NOT INCLUDE LAMP(S) OR FREIGHT AS NOTED, AND DO NOT INCLUDE ANY TAXES. UNIVERSAL VOLTAGE (120/277) BALLASTS REQUIRED UNLESS NOTED OTHERWISE. DIMENSION SEQUENCE = (LENGTH X WIDTH X DEPTH) IN INCHES.

SYMBOL	MARK	FIXTURE CHARACTERISTICS BODY / AIR / MOUNTING / DOOR LENS/LOUVER/REFLECTOR/OTHER	LAMP	WATTS	VOLTS	MANUFACTURER	CATALOG NUMBER	NOTES
	DF	FLUORESCENT DOWNLIGHT; THERMALLY PROTECTED HOUSING: TO ACCOMMODATE MULTIPLE TRIMS AND REFLECTOR ASSEMBLIES FOR LAMPS AS LISTED BELOW; ELECTRONIC BALLASTS; LOW IRIDESCENT REFLECTOR FINISH (EVEN IF NOT SHOWN IN CATALOG #); SELF FLANGING TRIM UNLESS NOTED.						
	DF-33	RECESSED DOWNLIGHT; 7-8" APERTURE, HORIZONTAL, 32W CF-AMALGAM LAMP, CLEAR.	1-CF-A32 RE835	50W	277/120V	PORTFOLIO	C7132E-7151LI (14 X 13-5/16 X 8)	
						INFINITY	PH75 132T-EB (GX24Q-3) 277 BH (16-1/4 X 12 X 10-5/8)	
						LIGHTOLIER	8037CLW/7132BU (15 X 12 X 7-3/4)	
						LITHONIA	AF 1/32TRT 8AR MVOLT (15-13/16 X 13-7/8 X 11-1/2)	
						OMEGA	S81H32-U-T81H-CS (14-11/16 X 13-1/4 X 6-11/16)	
						PRESCOLITE	CFT832HEB-STF802H (16-1/4 X 14-7/16 X 7-1/8)	
	E2	EXIT SIGN: THERMOPLASTIC HOUSING; UNIVERSAL MOUNTING; UNIVERSAL ARROWS PER PLANS; LED, DIFFUSE LENS PANEL; GREEN LETTERS ON WHITE BACKGROUND. MUST MEET NFPA ILLUMINATION STANDARDS.						
	E2-1	SINGLE FACE:	LED	1W	120/277V	DUAL-LITE	LXSGW	
						EELP	XE 2 GW	
						LITHONIA	LQM S W 1 G 120/277	
						SURE-LITES	LPX60DGW	
						DAY-BRITE	CXL-1-GW	
						CHLORIDE	SLA1GW	
						LIGHTOLIER	LTA1GW	
	E2-2	DUAL FACE:	LED	2W	120/277V	DUAL-LITE	LXUGW	
						EELP	XE 2 GW	
						LITHONIA	LQM S W 3 G 120/277	
						SURE-LITES	LPX60DGW	
						DAY-BRITE	CXL-3-GW	
						CHLORIDE	SLA2GW	
						LIGHTOLIER	LTA2GW	
	DF-94	RECESSED DOWNLIGHT; 12" APERTURE, HORIZONTAL, 2-42W CF-AMALGAM LAMP. REGRESSED WHITE DOOR; CONCAVE HOLOPHANE LENS; ENCLOSED FIXTURE.	2-CF-A42 RE841	100W	277/120V	LITHONIA	LGF-2/42TRT-12RW-CHL-DMHL-120/277	
						OMEGA	OM10-2-42PLT-SPL-FL-120/277	
						PRESCOLITE	CFTD832HEB-WTF806H-SL	
						LIGHTOLIER	LFH8242UE/LR852W	
						INFINITY	PHRL-10-242T-EB-HOL	
						PORT-FLUOR	CL924E-10012P-1G	
						KIRLIN	RR81228-40-HO	
	OC	WALL PACK: ADJUSTABLE CUT OFF; FULL PERIMETER GASKETING: WET LOCATION; STAINLESS STEEL HINGES AND LATCHES; PROJECTING LENS; HPF BALLAST; SEE ELEVATION FOR MOUNTING HEIGHT, COLOR AS SPECIFIED BY ARCHITECT.						
	OC-8	50 PSMH, RECESSED J BOX. TYPE 4 CUTOFF OPTICS, DECORATIVE	50PSMH	70W	277/120V	KIM	WD14D4/50PSMH120/XX	
						LSI	WDRS-FT-50MH-F-MT-XXX-NO	
						GREENLEE	WWS-50MH-MT-FT-CBA-PSB	
						GE	CCSX05M0H1BDKBZD	
						MCGRAW-ED	VWS-50-MH-MT-4S-XX	
	P3	PARABOLIC LOUVER FIXTURES WITH 3" LOUVERS IN PLASTIC PROTECTORS AND FULL DEPTH REFLECTOR; SIZE AS NOTED; PROGRAM START ELECTRONIC BALLASTS PER SPECS; T8 LAMPS; ONE BALLAST PER FIXTURE UNLESS NOTED FOR SWITCHING; STATIC OR AIR RETURN AND HEAT REMOVAL; EARTHQUAKE CLIPS INSTALLED ON ON GRID FIXTURES; HINGED AND LATCHED DOOR; LOW IRIDESCENT LOUVER FINISH, VERTICAL GRAIN DIE STAMPED LOUVERS; TWO FORMED BALLAST COVERS; MAX 1300 CD/M2 ABOVE 45 DEGREES.						
	P3-6	2X4, 18 CELL LAY-IN; SEMI-SPECULAR SILVER, 3-LAMP. STATIC.	3-F32T8 RE835	95W	277/120V	LITHONIA	2PM3NGB-332-18LD-MVOLT-1/3TUBRHP-2R	
						DAYBRITE	2P3GS332-36SL-UNV-1/3-EB-SPEC	
						METALUX	2EP3GX-332S36I-UNV-PROGRAM START-2BC	
						COLUMBIA	P4D24-332G-LD36-S-3EB8LHPRUNV	
						LSI	N2PG18 332 FD SSO10PS 2BC UE	
						LIGHTOLIER	DPS2G18LP332-U-03P	
						HEWILLIAMS	HE3G-D24-332-36S-EB8PXLH3*0S-UNV	
	S	FLUORESCENT STRIP LIGHT: STEEL CONSTRUCTION; WHITE PAINTED FINISH; SUITABLE FOR MOUNTING ON LOW DENSITY CEILINGS; PROGRAM START ELECTRONIC BALLASTS; T8 LAMPS; ONE BALLAST PER FIXTURE WHERE POSSIBLE, UNLESS TWO LEVEL SWITCHING IS SHOWN ON THE PLANS.						
	S-3	4', 2-LAMP.	2-F32T8 RE835	65W	277/120V	LITHONIA	C232-MVOLT-TUBRHP	
						LIGHTOLIER	SW232-U-SOP	
						METALUX	SS-232-UNV-PROGRAM START	
						DAYBRITE	T232-UNV-1/2-EB-SPEC	
						HUBBELL	C232UPS	
						COLUMBIA	CS4-232-EB8120/277 PROG	

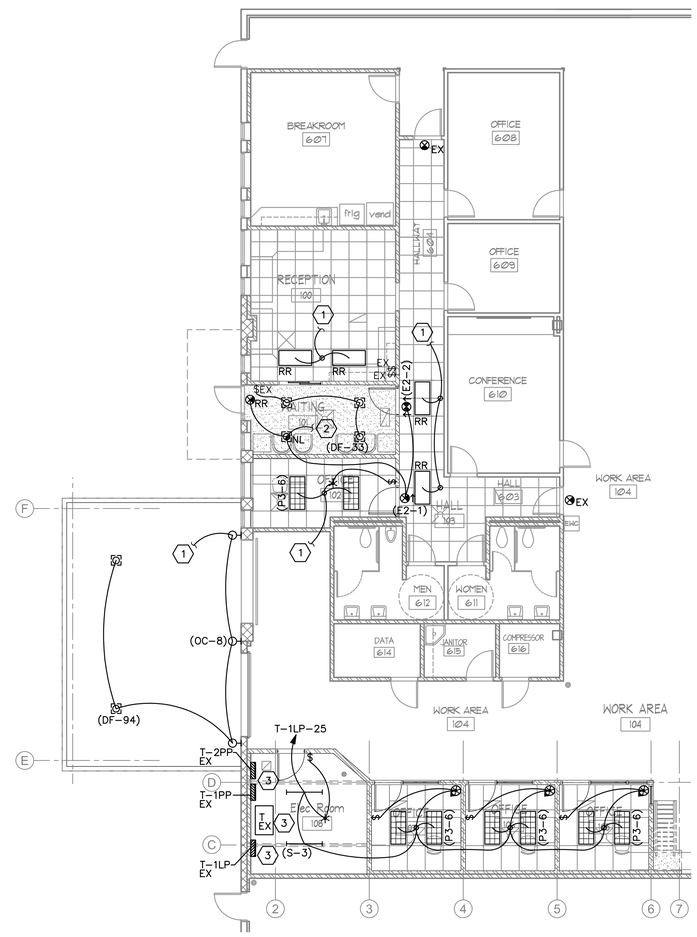

A3 Lighting Plan
1/8" = 1'-0"

GENERAL SHEET NOTES

1. PROVIDE NEW LAMP AND BALLASTS FOR ALL RELOCATED FIXTURES.

SHEET KEYNOTES

1. TIE NEW CAN LIGHTS IN CANOPY AND WALL PACKS IN WITH BUILDING EXTERIOR LIGHTS.
2. RECONNECT TO EMERGENCY CIRCUIT ON GENERATOR WHICH PREVIOUSLY FED AREA.
3. MAINTAIN 3' CLEARANCE IN FRONT OF ELECTRICAL PANELS. CLEARLY MARK CLEARANCE REQUIREMENTS ON FLOOR IN FRONT OF PANEL WITH RED TAPE OR PAINT.

NJRA ARCHITECTS
NJRA Architects, Inc.
370 East 500 South, Suite 101
Salt Lake City, Utah 84111
Phone: 801. 364. 9259
Fax: 801. 521. 0420
www.njraarchitects.com

LICENSED PROFESSIONAL ENGINEER No. 165878 PETER E. JOHANSEN 04/28/10 STATE OF UTAH

Division of Facilities Construction & Management
Utah State Mail Center
Office Renovation

DFCM Project # 09258310
250 North 1950 West
Salt Lake City, Utah

ISSUE
March 10, 2010 - Const. Documents 100%
2 April 6, 2010 - REV #1

NJRA Project #: 10901.00

LIGHTING PLAN

EL101

File Name: P:\2010\20100035\1Drawings\3Sheet\35EL101.dwg Last Plotted: 2010/05/25 @ 9:29 AM By: sts

PLUMBING SPECIFICATIONS

15055 – BASIC PIPING MATERIALS AND METHODS

1. CORE CUT ALL PIPE PENETRATION OF EXISTING MASONRY OR CONCRETE WALLS AND FLOORS. SLEEVE ALL PENETRATIONS THROUGH NEW WALLS AND FLOORS. SEAL ALL PENETRATIONS WATER TIGHT WITH SILICONE SEALANT. USE FIRE RATED SEALANT (3M "FIRE BARRIER" OR EQUAL) FOR 1 HOUR OR 2 HOUR PENETRATIONS.
2. CAULK AROUND ALL PIPING THAT PASSES THROUGH FIRE–RATED PARTITIONS WITH A NON–HARDENING CAULKING SIMILAR TO 3M "FIRE BARRIER".
3. SEAL ALL PIPING THROUGH WALLS AIR TIGHT.

15242 – VIBRATION ISOLATION AND SEISMIC BRACING

1. ALL MECHANICAL EQUIPMENT, DUCTWORK, AND PIPING MUST BE VIBRATION ISOLATED AND SEISMICALLY BRACED FOR THE SITE SPECIFIC SEISMIC DESIGN CATEGORY AND SEISMIC USE GROUP, IN ACCORDANCE WITH THE LATEST ADOPTED EDITIONS OF THE IBC, UBC, ASHRAE, AND SMACNA. PROVIDE SEISMIC PRODUCTS BY AMBER–BOOTH OR MASON INDUSTRIES.
2. IN GENERAL, PROVIDE SPRING MOUNTS TO ATTENUATE LOW FREQUENCY SOUND AND VIBRATION AND NEOPRENE PADS TO ATTENUATE HIGH FREQUENCY SOUND AND VIBRATION. SEISMIC BRACING/MOUNTING CAN BE COMBINED WITH VIBRATION ISOLATION AS APPLICABLE.
3. CONTRACTOR MANUFACTURED SEISMIC BRACING/RESTRAINT METHODS ARE NOT ACCEPTABLE. PROVIDE A SIGNED AND STAMPED LETTER FROM A PROFESSIONAL ENGINEER CERTIFYING THAT THE SUPPLIED PRODUCTS ARE CORRECT FOR THE APPLICATION AND THAT THE INSTALLATION IS IN COMPLIANCE WITH ALL APPLICABLE CODES.

15420 – DRAINAGE AND VENT SYSTEMS

1. UNDERGROUND BUILDING DRAIN PIPE AND FITTINGS:
   A. NO HUB ABS OR PVC PLASTIC PIPE AND FITTINGS PER ASTM D2661 WITH ASTM D2235 SOLVENT
   B. OR
   C. ASTM A74 SERVICE WEIGHT, HUB AND SPIGOT CAST IRON SOIL PIPE, OR ASTM A888 (OR CISPI 301) HUBLESS CAST IRON SOIL PIPE WITH ASTM C564 HEAVY DUTY SHIELDED STAINLESS STEEL COUPLINGS.
   D. NO ASTM D2729 PIPE SHALL USED UNDERGROUND.
2. ABOVE GROUND SANITARY DRAINAGE AND VENT PIPING, IN ALL AREAS EXCEPT AIR PLENUMS AND EXCEPT IN A FIRE RATED BUILDING, SHALL BE ABS TYPE DWV PLASTIC PIPE AND FITTINGS PER ASTM D2661 WITH ASTM D2255 SOLVENT, OR PVC PLASTIC PIPE AND FITTINGS PER ASTM D2665 WITH ASTM D2564 SOLVENT, OR SERVICE WEIGHT, NO HUB CAST IRON COUPLED PIPE AND FITTINGS WITH COMPRESSION TYPE NEOPRENE GASKETS AND STAINLESS STEEL BANDS.
3. ALL SANITARY DRAINAGE AND VENT PIPING INSIDE AIR PLENUMS AND ANYWHERE IN A FIRE RATED BUILDING SHALL BE NO HUB SERVICE WEIGHT CAST IRON COUPLED PIPE AND FITTINGS WITH COMPRESSION TYPE NEOPRENE GASKETS AND STAINLESS STEEL BANDS. ASTM B306 COPPER PIPE MAY BE USED WITH SOLDERED JOINTS FOR PIPE 3" AND SMALLER.
4. ABOVE GROUND ROOF DRAIN LINES, EXCEPT IN AIR PLENUMS AND ANYWHERE IN A FIRE RATED BUILDING, SHALL BE ABS TYPE DWV PLASTIC PIPE AND FITTINGS PER ASTM D2661 WITH ASTM D2255 SOLVENT, OR PV C PLASTIC PIPE PER ASTM D2665 WITH ASTM D2564 SOLVENT.
5. ALL ROOF DRAIN LINES INSIDE AIR PLENUMS, OR ANYWHERE IN A FIRE RATED BUILDING, SHALL BE SERVICE WEIGHT CAST IRON PIPE TO CISPI STANDARD 301.
6. ALL ROOF DRAIN LINES SHALL BE FULLY INSULATED.
7. INSTALL SANITARY DRAIN LINES 2–1/2" AND LESS WITH A SLOPE OF 2%. INSTALL SANITARY DRAIN LINES 3"–6" WITH A SLOPE OF NOT LESS THAN 1%.
8. SLOPE ROOF DRAIN LINES DOWN IN DIRECTION OF FLOW, 1/8" PER FOOT (1%).

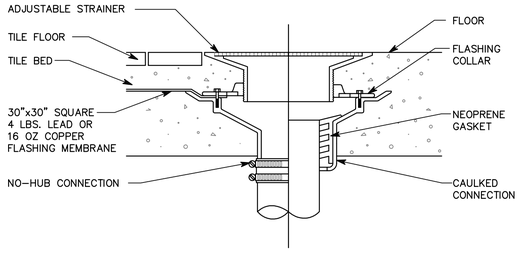

A1 FLOOR DRAIN DETAIL
SCALE:

SYMBOL LEGEND

SYMBOL	DESCRIPTION
REFERENCE AND LINE SYMBOLS	
# / SHEET	DETAIL INDICATOR: # INDICATES DETAIL NUMBER, SHEET INDICATES DRAWING SHEET WHERE DETAIL IS SHOWN.
# / SHEET	ELEVATION OR SECTION INDICATOR, EXTERIOR: # INDICATES ELEVATION OR SECTION NUMBER, SHEET INDICATES DRAWING SHEET WHERE ELEVATION OR SECTION IS SHOWN.
100	ROOM OR SPACE NUMBER.
1	KEYNOTE INDICATOR.
	REVISION INDICATOR.
CU–1	EQUIPMENT INDICATOR.
TYPE / CFM / SIZE	DIFFUSER/GRILLE INDICATOR.
TYPE / SIZE	DIFFUSER/GRILLE INDICATOR.
	BREAK, STRAIGHT.
	BREAK, ROUND.
MATCH LINE / SEE XX/X–XXX	MATCH LINE INDICATOR.
--------	HIDDEN FEATURES LINE: HIDDEN, THIN LINE.
—·—·—	CONTRACT LIMIT LINE: DASHDOT, WIDE LINE.
	NEW CONNECTION POINT TO EXISTING.

ABBREVIATIONS

NOTE: ALL ABBREVIATIONS MAY NOT BE USED

AD	ACCESS DOOR	MCA	MINIMUM CIRCUIT AMPS
AIR	AIR CONDITION(–ING,–ED)	MFR	MANUFACTURER
COND		MIN	MINIMUM
APD	AIR PRESSURE DROP	N/A	NOT APPLICABLE
BD	BALANCING DAMPER	NC	NORMALLY CLOSED
BHP	BRAKE HORSE POWER	NC	NOISE CRITERIA
BTU	BRITISH THERMAL UNIT	NIC	NOT IN CONTRACT
BTUH	BTU/HOUR	NO	NORMALLY OPEN
CFH	CUBIC FEET PER HOUR	NPSH	NET POSITIVE SUCTION
CFM	CUBIC FEET PER MINUTE		HEAD
CLG	COOLING	NTS	NOT TO SCALE
COMP	COMPONENT	OA	OUTSIDE AIR
COND	CONDENS(–ER, –ING, –ATION)	OD	OUTSIDE DIAMETER
		OZ	OUNCE
CV	CONTROL VALVE	PD	PRESSURE DROP OR DIFFERENCE
CW	COLD WATER		
DIA	DIAMETER	PG	PROPYLENE GLYCOL
DISCH	DISCHARGE	PH	PHASE
DP	DEPTH OR DEEP	PPM	PARTS PER MILLION
DB	DRY BULB TEMPERATURE	PRESS	PRESSURE
(E)	EXISTING	PSF	POUNDS PER SQUARE FOOT
EER	ENERGY EFFICIENCY RATIO		
EFF	EFFICIENCY	PSI	POUNDS PER SQUARE INCH
EG	ETHYLENE GLYCOL		
ELEC	ELECTRIC	PSIA	PSI ABSOLUTE
ELEV	ELEVATION	PSIG	PSI GAUGE
ENT	ENTERING	R	THERMAL RESISTANCE
EVAP	EVAPORAT(–E, –ING, –ED, –OR)	RA	RETURN AIR
		RECIRC	RECIRCULATE
EWT	ENTERING WATER TEMPERATURE	REFR	REFRIGERATION
		REQD	REQUIRED
EXT	EXTERNAL	RLA	RATED ––– AMPS
(F)	FUTURE	RPM	REVOLUTIONS PER MINUTE
F	FAHRENHEIT	RW	RAINWATER
FC	FLEXIBLE CONNECT(–OR, –ION)	SA	SUPPLY AIR
		SC	SHADING COEFFICIENT
FD	FIRE DAMPER	SCFM	STANDARD CUBIC FEET PER MINUTE
FLA	FULL LOAD AMPS		
FPI	FINS PER INCH	SCW	SOFT COLD WATER
FPM	FEET PER MINUTE	SF	SAFETY FACTOR
FPS	FEET PER SECOND	SH	SENSIBLE HEAT
FSD	FIRE SMOKE DAMPER	SL	SEA LEVEL
FT	FEET	SP	STATIC PRESSURE
GAL	GALLON(S)	SPECS(S)	SPECIFICATION(S)
GPH	GALLONS PER HOUR	SQ	SQUARE
GPM	GALLONS PER MINUTE	STD	STANDARD
HD	HEAD	STM	STEAM
HG	MERCURY	TEMP	TEMPERATURE
HR	HOUR	TD	TEMP. DROP OR DIFF.
HT	HEIGHT	THERM	THERMAL
HTG	HEATING	TOT	TOTAL
HP	HORSE POWER	TSTAT	THERMOSTAT
HW	HOT WATER	V	VOLT
HZ	HERTZ(FREQUENCY)	VAC	VACUUM
ID	INSIDE DIAMETER	VAV	VARIABLE AIR VOLUME
IN	INCH	VEL	VELOCITY
KW	KILOWATT	VENT	VENT, VENTILATION
LAT	LEAVING AIR TEMPERATURE	VERT	VERTICAL
		VFC/VFD	VARIABLE FREQUENCY MOTOR CONTROLLER
LBS	POUNDS		
LG	LENGTH	VOL	VOLUME
LH	LATENT HEAT	WC	WATER COLUMN
LRA	LOCKED ROTOR AMPS	WG	WATER GAUGE
LVG	LEAVING	WPD	WATER PRESSURE DROP
LWT	LEAVING WATER TEMPERATURE	WTR	WATER
		WT	WEIGHT
MAX	MAXIMUM	WB	WET BULB TEMP
MBH	THOUSAND BTU PER HOUR	YR	YEAR

SYMBOL LEGEND

SYMBOL	DESCRIPTION
VALVES, METERS, AND GAUGES	
	90° ELBOW UP
	90° ELBOW DOWN
	90° TEE UP
	90° TEE DOWN
	UNION
	CAPPED PIPE
	ANCHOR
PLUMBING SYMBOLS	
C.B.	CATCH BASIN
M.H.	MANHOLE
W.H.	WALL HYDRANT
H.B.	HOSE BIBB
	CLEANOUT TO GRADE
	FLOOR CLEANOUT
	WALL CLEANOUT
	1/2 GRATE
	3/4 GRATE
	FULL GRATE
PLUMBING PIPING	
CWV	COMBINATION WASTE AND VENT
	SOIL, WASTE – ABOVE GRADE
	SOIL, WASTE – BELOW GRADE
GW	GREASE WASTE – ABOVE GRADE
GW	GREASE WASTE – BELOW GRADE
	VENT
AV	ACID VENT
AW	ACID WASTE – ABOVE GRADE
AW	ACID WASTE – BELOW GRADE
	COLD WATER
	HOT WATER
	HOT WATER CIRCULATE
180	180°F HOT WATER
180R	180° HOT WATER RETURN
160	160° HOT WATER
160R	160° HOT WATER RETURN
RW	RAINWATER – ABOVE GRADE
RW	RAINWATER – BELOW GRADE
ORW	OVERFLOW RAINWATER ABOVE GRADE
ORW	OVERFLOW RAINWATER BELOW GRADE
SD	STORM DRAIN
VTR	VENT THRU ROOF
	NON POTABLE WATER
(E)	EXISTING PIPE
(E)	EXISTING PIPE TO BE REMOVED
IW	IRRIGATION WATER
SS	SANITARY SEWER

PLUMBING SHEET INDEX

SHEET NO	SHEET TITLE
PE001	PLUMBING COVER SHEET
PL101	PLUMBING FLOOR PLANS

GENERAL PLUMBING NOTES

1. THE PLUMBING DRAWINGS SHOW THE GENERAL DESIGN, ARRANGEMENT AND EXTENT OF THE PLUMBING SYSTEM. BECAUSE OF THE SMALL SCALE OF THE DRAWINGS, THESE DRAWINGS DO NOT SHOW ALL OFFSETS, BENDS OR ELBOWS NECESSARY FOR THE COMPLETE INSTALLATION IN THE SPACE PROVIDED. CONTRACTOR SHALL MAKE SUCH SLIGHT ALTERATIONS AS MAY BE NECESSARY TO MAKE THE SYSTEM COMPLETE AND OPERATIONAL IN ACCORDANCE WITH THE DESIGN INTENT.

   MAJOR DEVIATIONS SUCH AS CHANGES IN COMPONENT SIZES, WEIGHTS, QUANTITIES OR MATERIAL REQUIRE PRIOR APPROVAL BY THE DESIGN ENGINEER.
2. THE DRAWINGS AND SPECIFICATIONS HAVE BEEN PREPARED TO SUPPLEMENT EACH OTHER AND SHALL BE INTERPRETED AS AN INTEGRAL UNIT WITH THE ITEMS SHOWN ON ONE AND NOT THE OTHER BEING FURNISHED AND INSTALLED AS THOUGH SHOWN AND CALLED OUT IN BOTH.
3. THE ENTIRE PLUMBING INSTALLATION SHALL CONFORM TO THE REQUIREMENTS OF THE MOST RECENTLY ADOPTED BUILDING CODES, MECHANICAL CODE, PLUMBING CODE, ELECTRICAL CODE, AND ALL OTHER APPLICABLE CITY, COUNTY, STATE, AN FEDERAL CODES AN REGULATIONS IN EFFECT.
4. THE ENTIRE PLUMBING INSTALLATION SHALL CONFORM TO ANY CODES, RULES, REGULATIONS AND REQUIREMENTS OF THE BUILDING OWNER.
5. PRIOR TO FABRICATION AND INSTALLATION OF ANY PLUMBING COMPONENT THE CONTRACTOR SHALL COORDINATE THE INSTALLATION OF ALL PLUMBING WORK WITH ALL OTHER BUILDING TRADES, INCLUDING BUILDING TRADES HIRED DIRECTLY BY THE OWNER. WHERE CONFLICTS MAY OCCUR, THEY SHALL BE RESOLVED PRIOR TO INSTALLATION.
6. ALL PLUMBING INFORMATION IS NOT SHOWN ON THE PLUMBING DRAWINGS. THE CONTRACTOR SHALL BE RESPONSIBLE FOR COORDINATING ALL INFORMATION ON ALL OTHER CONSTRUCTION DOCUMENT.
7. THE CONTRACTOR SHALL BE RESPONSIBLE TO REVIEW AND USE, WHERE APPROPRIATE, ALL THE PLUMBING DETAILS SHOWN ON THE DRAWINGS. DETAILS MAY OR MAY NOT BE CALLED OUT ON THE DRAWINGS WITH SYMBOLS OR KEYED NOTES. ANY CHANGES RESULTING FROM FAILURE TO INSTALL THE PLUMBING SYSTEM WITHOUT USING THE INCLUDED DETAILS SHALL BE THE RESPONSIBILITY OF THE CONTRACTOR.
8. ANY PART OF THE PLUMBING INSTALLATION THAT FAILS, IS UNFIT, OR BECOMES DAMAGED DURING CONSTRUCTION SHALL BE REPAIRED OR REPLACES BY THE CONTRACTOR AT NO ADDITIONAL COST TO THE OWNER.
9. PROVIDE PROPER PROVISIONS FOR EXPANSION, CONTRACTION, OR MOVEMENT OF ALL PIPING.
10. PROVIDE LARGE ENOUGH PIPE SLEEVES THROUGH WALL OR FLOOR TO ALLOW FOR ANTICIPATED DIFFERENTIAL MOVEMENT.
11. ALL PIPING SHALL BE SUPPORT WITH CLEVIS HANGERS (MSS TYPE 1). PERFORATED METAL STRAPS OR PLASTIC STRAPPING (PLUMBER TAPE) SHALL NOT BE USED TO SUPPORT OR BRACE ANY PIPE.
12. PROVIDE PIPE HANGERS WITHIN 18–INCHES OF ALL CHANGES OF DIRECTION.
13. PROVIDE SWAY BRACING FOR ALL PIPING 4" AND LARGER AT ALL CHANGES IN DIRECTION GREATER THAN 45–DEGREES.
14. ALL STEEL CLEVIS HANGERS USED TO SUPPORT COPPER PIPING SHALL BE COPPER OR PLASTIC COATED.
15. COPPER PIPING SHALL NOT COME IN CONTACT WITH FIRE TREATED LUMBER. PROVIDE ½" THICK SLIP–ON CLOSED CELL INSULATION WHERE COPPER PIPING IS ADJACENT TO FIRE TREATED LUMBER. CLOSED CELL INSULATION SHALL EXTEND A MINIMUM OF 1–1/2" PAST LUMBER.
16. ALL EXPOSED PIPING SHALL BE INSTALLED IN A NEATLY ARRANGED MANNER PARALLEL TO THE BUILDING STRUCTURE.
17. ALL EXPOSED DOMESTIC WATER PIPE IN OCCUPIED SPACES SHALL BE POLISHED CHROME PLATED.
18. ALL EXPOSED DRAINAGE PIPING IN OCCUPIED SPACES INCLUDING TRAPS UNDER SINKS SHALL BE POLISHED CHROME PLATED.
19. DRAWINGS SHOWS GENERAL ARRANGEMENT OF THE DRAIN WASTE AND VENT SYSTEM WITH THE REQUIRED CLEANOUTS. CONTRACTOR SHALL PROVIDE ALL ADDITIONAL CLEANOUTS AS REQUIRED BY THE PLUMBING CODE.
20. ALL SANITARY DRAINAGE SYSTEM PIPING 3" AND LARGER SHALL BE SLOPED IN DIRECTION OF FLOW AT A MINIMUM OF 1/8" PER FOOT.
21. ALL SANITARY DRAINAGE SYSTEM PIPING SMALLER THAN 3" SHALL BE SLOPED IN DIRECTION OF FLOW AT A MINIMUM OF 1/4" PER FOOT.
22. SLOPE VENT SYSTEM TOWARDS DRAINAGE SYSTEM.
23. SIMILAR EQUIPMENT SHALL BE OF THE SAME MANUFACTURER.
24. ALL EQUIPMENT SHALL PROVIDE THE SCHEDULED PERFORMANCE AT THE JOB SITE ELEVATION.
25. FIXTURE AND EQUIPMENT MODEL NUMBERS SHOWN IN PLUMBING FIXTURE SCHEDULE AND PLUMBING EQUIPMENT SCHEDULE ARE SHOWN TO ESTABLISH THE TYPE OF PRODUCT THAT SHALL BE USED. THE SELECTED PRODUCT SHALL MEET THE SCHEDULED PERFORMANCE DATA SHOWN ON THE SCHEDULE EVEN IF A DIFFERENT MODEL IS SUPPLIED THAT IS DIFFERENT THAN THAT SCHEDULED.
26. ALL EQUIPMENT SHALL BE INSTALLED IN STRICT ACCORDANCE WITH THE EQUIPMENT MANUFACTURER'S INSTALLATION INSTRUCTIONS. PROVIDE ALL NECESSARY FITTINGS, TRANSITIONS, VALVES AND OTHER DEVICES AND ACCESSORIES REQUIRED FOR A COMPLETE, WORKABLE INSTALLATION.
27. SEE "PLUMBING FIXTURE SCHEDULE" FOR INDIVIDUAL TRAPS, WASTE, VENT, AND DOMESTIC WATER PIPING FOR INDIVIDUAL FIXTURES.
28. ALL PLUMBING EQUIPMENT SHALL BE LISTED AND LABELED BY AN APPROVED TESTING AGENCY.
29. FIXTURES, EQUIPMENT AND PIPING INSTALLATION SHALL MEET NSF STANDARDS.

NJRA ARCHITECTS
NJRA Architects, Inc.
370 East 500 South, Suite 101
Salt Lake City, Utah 84111
Phone: 801. 364. 9259
Fax: 801. 521. 0420
www.njraarchitects.com

LICENSED PROFESSIONAL ENGINEER
No. 181527
ROBERT L. PAUL
STATE OF UTAH
4/6/10

Division of Facilities Construction & Management
Utah State Mail Center
Office Renovation

DFCM Project #: 09258310
250 North 1950 West
Salt Lake City, Utah

ISSUE
March 10, 2010 - Const. Documents 100%
2 April 6, 2010 - REV #1

NJRA Project #: 10901.00

PLUMBING
COVER SHEET

PE001

PLUMBING FIXTURE/EQUIPMENT SCHEDULE

SYMBOL	FIXTURE	TRAP	WASTE	VENT	DOMESTIC COLD WATER	DOMESTIC HOT WATER	DESCRIPTION		MANUFACTURER	MODEL
FD	FLOOR DRAIN	2"	2"	1-1/2"	---	---	FIXTURE:	5" ROUND NICKEL BRONZE STRAINER	J. R. SMITH	2010-A
RD-3	ROOF DRAIN	---	3"	---	---	---	FIXTURE:	C. I. BODY, UNDERDECK CLAMP, SUMP RECIEVER, ALUMINIUM DOME	J .R. SMITH	1010-C-R-AD
SRD-3	SECONDARY ROOF DRAIN	---	3"	---	---	---	FIXTURE:	C. I. BODY, UNDERDECK CLAMP, SUMP RECIEVER, ALUM. DOME, 2" WATER DAM	J. R. SMITH	1080-C-R-AD
CO	CLEANOUT	---	SAME AS PIPE	---	---	---	EQUIPMENT:	CAST IRON BLIND PLUG	CHARLOTTE PIPE	NH-50
WCO	WALL CLEANOUT	---	SAME AS PIPE	---	---	---			J. R. SMITH	

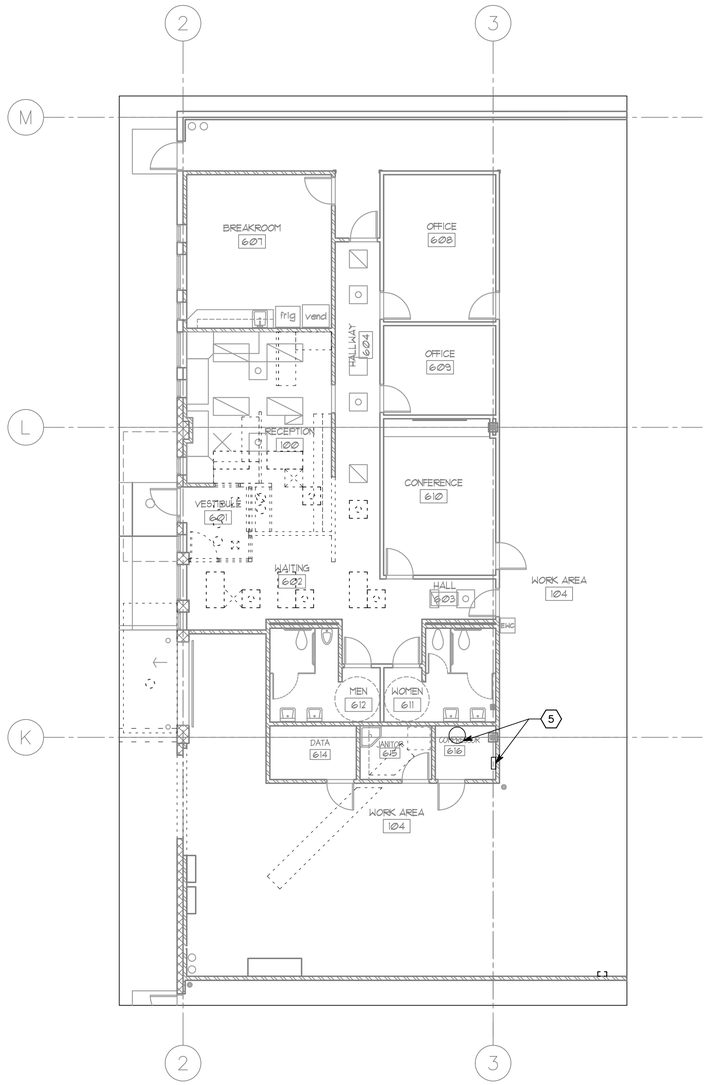

A1 PLUMBING DEMOLITION FLOOR PLAN
SCALE: 1/8" = 1'-0"

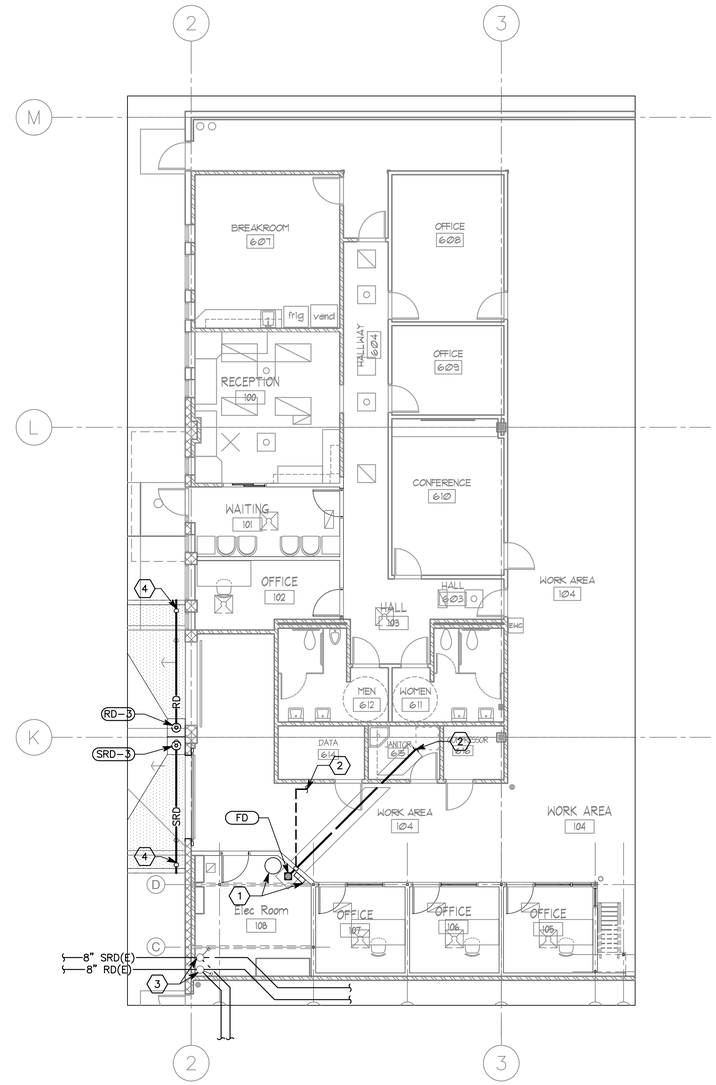

A3 PLUMBING FLOOR PLAN
SCALE: 1/8" = 1'-0"

SHEET KEYNOTES

1. LOCATION OF RELOCATED AIR COMPRESSOR AND REFRIGERATED DRYER. EXTEND 1" PIPING TO NEW LOCATION OF COMPRESSOR AND DRYER. PROVIDE VIBRATION ISOLATION FOR COMPRESSOR AND PIPING. COORDINATE RELOCATION WITH OTHER TRADES.
2. EXTEND 2" WASTE AND VENT TO EXISTING LINES WHERE FOUND.
3. EXISTING 8" OVERFLOW ROOF DRAIN AND ROOF DRAIN LINES DOWN.
4. NEW 3" DIAMETER FULLY WELDED GALVANIZED SCHEDULE 40 PIPE DOWN. PIPE TO DAYLIGHT AT 18" ABOVE GRADE ONTO SPASH BLOCK. COORDINATE WITH ARCHITECT AND OTHER TRADES.
5. RELOCATE EXISTING AIR COMPRESSOR AND REFRIGERATED DRYER AND ALL ACCESSORIES TO NEW STORAGE ROOM. EXTEND 1" PIPING TO NEW COMPRESSOR AND DRYER LOCATION. SEE A3/PL101. COORDINATE RELOCATION WITH OTHER TRADES.

NJRA ARCHITECTS
NJRA Architects, Inc.
370 East 500 South, Suite 101
Salt Lake City, Utah 84111
Phone: 801. 364. 9259
Fax: 801. 521. 0420
www.njraarchitects.com

LICENSED PROFESSIONAL ENGINEER
No. 181527
ROBERT L. PAUL
STATE OF UTAH
7/6/10

Division of Facilities Construction & Management
Utah State Mail Center
Office Renovation

DFCM Project #: 09258310
250 North 1950 West
Salt Lake City, Utah

ISSUE
March 10, 2010 - Const. Documents 100%
2 April 6, 2010 - REV #1

NJRA Project #: 10901.00

PLUMBING FLOOR PLANS

PL101