State of Utah

GARY R. HERBERT
Governor

GREGORY S. BELL
Lieutenant Governor

Department of Administrative Services
KIMBERLY K. HOOD
Executive Director

Division of Facilities Construction and Management
DAVID G. BUXTON
Director

ADDENDUM #1

Date: June 24, 2010

To: Contractors

From: Tim Parkinson, Project Manager, DFCM

Reference: Ogden Bay GLSEP Administration
Division of Wildlife Resources - Hooper, Utah
Project No.09259520

Subject: **Addendum No. 1**

Pages	Addendum	1 page
	Revised Bid Form	2 page
	Architects Addenda	4 pages
	Total	7 pages

Note: This Addendum shall be included as part of the Contract Documents. Items in this Addendum apply to all drawings and specification sections whether referenced or not involving the portion of the work added, deleted, modified, or otherwise addressed in the Addendum. Acknowledge receipt of this Addendum in the space provided on the Bid Form. Failure to do so may subject the Bidder to Disqualification.

While we contend that SB220 should only be potentially applicable to a contract issued after the effective date of said bill, this is to clarify that for purposes of this contract, regardless of the execution or effective dates of this contract, the status of Utah Law and remedies available to the State of Utah and DFCM, as it relates to any matter referred to or affected by said SB220, shall be the Utah law in effect at the time of the issuance of this Addendum.

1.1 SCHEDULE CHANGES – There are no changes to the project schedule.

1.2 GENERAL – Bid Form – One Additive Alternate was added to the bid form.

JRCA Architects, Addenda #1 – Please see attached.

Utah!
Where ideas connect

REVISED BID FORM

NAME OF BIDDER _____ DATE _____

The undersigned, responsive to the "Notice to Contractors" and in accordance with the "Instructions to Bidders", in compliance with your invitation for bids for the Ogden Bay GSLEP Administration Building – Division of Wildlife Resources - Hooper, Utah – DFCM Project No.09259520 and having examined the Contract Documents and the site of the proposed Work and being familiar with all of the conditions surrounding the construction of the proposed Project, including the availability of labor, hereby proposes to furnish all labor, materials and supplies as required for the Work in accordance with the Contract Documents as specified and within the time set forth and at the price stated below. This price is to cover all expenses incurred in performing the Work required under the Contract Documents of which this bid is a part:

I/We acknowledge receipt of the following Addenda: _____

For all work shown on the Drawings and described in the Specifications and Contract Documents, I/we agree to perform for the sum of:

BASE BID:

_____ DOLLARS ($_____)

(In case of discrepancy, written amount shall govern)

ADDITIVE ALTERNATIVE #1 - West End Building Shell for Research Area

_____ DOLLARS ($_____)

(In case of discrepancy, written amount shall govern)

I/We guarantee that the Work will be Substantially Complete by November 15, 2010, should I/we be the successful bidder, and agree to pay liquidated damages in the amount of $250.00 per day for each day after expiration of the Contract Time as stated in Article 3 of the Contractor's Agreement.

This bid shall be good for 45 days after bid opening.

Enclosed is a 5% bid bond, as required, in the sum of _____

The undersigned Contractor's License Number for Utah is _____.

Upon receipt of notice of award of this bid, the undersigned agrees to execute the contract within ten (10) days, unless a shorter time is specified in the Contract Documents, and deliver acceptable Performance and Payment bonds in the prescribed form in the amount of 100% of the Contract Sum for faithful performance of the contract.

The Bid Bond attached, in the amount not less than five percent (5%) of the above bid sum, shall become the property of the Division of Facilities Construction and Management as liquidated damages for delay and additional expense caused thereby in the event that the contract is not executed and/or acceptable l00% Performance and Payment bonds are not delivered within the time set forth.

Type of Organization:

_____
(Corporation, Partnership, Individual, etc.)

Any request and information related to Utah Preference Laws:

_____

Respectfully submitted,

_____
Name of Bidder

ADDRESS:

_____

_____

_____
Authorized Signature

JRCA Architects
577 South 200 East
Salt Lake City, Utah 84111
(801) 533-2100 Phone
(801) 533-2101 Fax
www.jrcadesign.com

Addendum No. 1

DATE: June 23, 2010

PROJECT: GSLEP Administration Building
Hooper, Utah
DFCM Project Number: 09259520

OWNER: DFCM
State of Utah

ARCHITECT: JRCA Architects
577 South 200 East
Salt Lake City, Utah 84111

Incorporate the following revisions to the Specifications, Drawings and other Contract Documents of the above named project. General Items are not referenced. Revisions to the Specifications are referenced by section, page number, and paragraph number. Revisions to the Drawings are referenced by drawing sheet number. This addendum forms part of the Construction Documents.
The end of this Addendum is indicated by the note **"END OF ADDENDUM"**. Attachments are located at the end of the Addendum and are referenced in the Addendum.

DRAWING ITEMS:

Item No.	Section or Sheet No.	Description
1-1	AE202	Add attached Sheet AE202 in its entirety.
1-2	S102	Add attached Sheet S102 in its entirety.
1-3	S103	Add attached Sheet S103 in its entirety.

END OF ADDENDUM

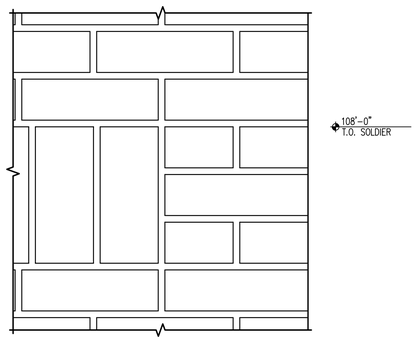

C4 / AE202 SOLDIER COURSE DETAIL
SCALE 3" = 1'-0"
E-01.dwg

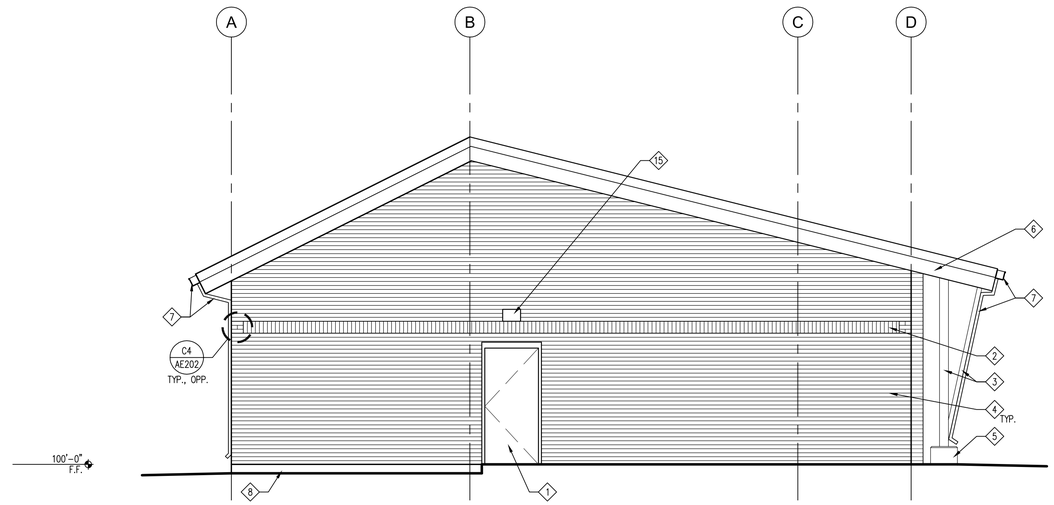

C3 / AE202 WEST ELEVATION (BASE BID AND ADDITIVE ALTERNATE ONE)
SCALE 1/4" = 1'-0"
E-WEST.dwg

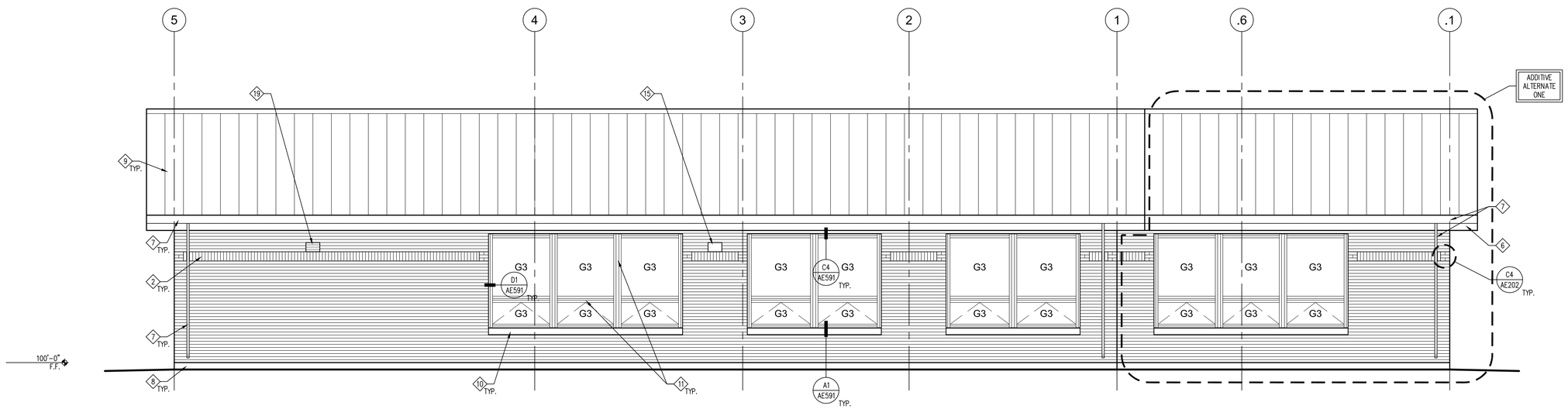

A5 / AE202 NORTH ELEVATION
SCALE 1/4" = 1'-0"
E-NORTH.dwg

GENERAL NOTES:

1. ALL MASONRY JOINTS TO BE RAKED JOINTS
2. ALL MASONRY TO RECEIVE WATER REPELLANT

KEY NOTES:

1. SCHEDULED DOOR & FRAME
2. SOLDIER COURSE
3. STEEL COLUMN, HOT DIP GALVANIZE, PAINT
4. BRICK VENEER
5. CONCRETE PIER
6. SHEET METAL FLASHING FACIA
7. GUTTER SYSTEM
8. CONCRETE FOUNDATION WALL
9. STANDING SEAM METAL ROOF SYSTEM
10. PRE-CAST CONCRETE SILL
11. ALUMINUM WINDOW SYSTEM
12. ALUMINUM STOREFRONT SYSTEM
13. STEEL BRACE; HOT DIP GALVANIZE, PAINT
14. METAL WALL PANEL SYSTEM
15. LIGHT FIXTURE; BOTTOM OF FIXTURE: 108'-0"
16. EXHAUST WALL CAP; ℄ OF WALL CAP: 110'-8"
17. DIMENSIONAL CHARACTER SIGN; 6" HIGH LETTERS; HELVETICA
18. FABRIC SUN SHADE SYSTEM; SEE A4/AE541
19. LOUVER; B.O. LOUVER @ 108'-0"

GLAZING SCHEDULE

G1	1/4" CLEAR
G2	1/4" CLEAR - TEMPERED
G3	1" INSULATED
G4	1" INSULATED - TEMPERED

CONSTRUCTION DOCUMENTS

GSLEP
ADMINISTRATION BUILDING
DIVISION OF WILDLIFE RESOURCES
DFCM PROJECT #09259520
HOOPER, UTAH

JRCA
ARCHITECTS
577 South 200 East
Salt Lake City, Utah 84111
(801) 533-2100 fax: 533-2101 jrcadesign.com

DATE/REVISION	PROJECT #.
04 · 08 · 10	09019

EXTERIOR
ELEVATIONS

AE
202

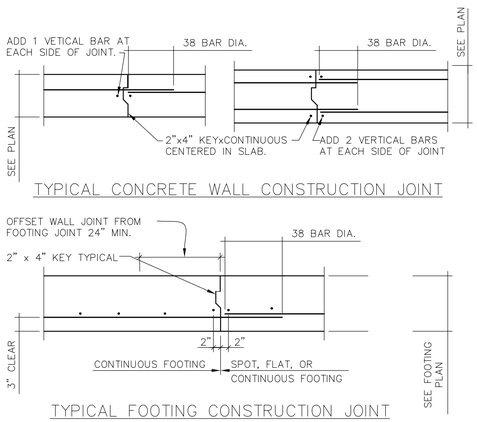

10 TYP. FTG. & WALL CONSTRUCTION JOINT

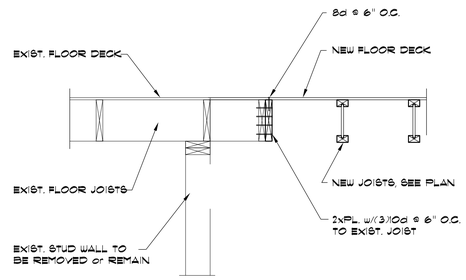

7

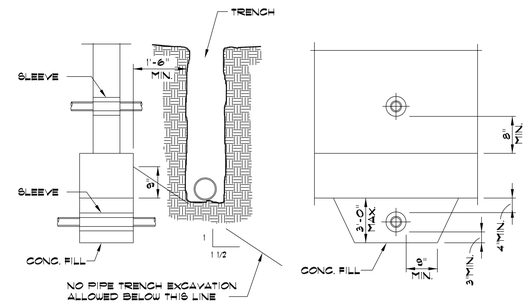

NOTE: CONCRETE FILL TO BE THE SAME WIDTH AS FOOTING & FULL WIDTH OF PIPE TRENCH. PIPE TO CLEAR SLEEVE BY 1/2" ALL AROUND

4 PIPES AT CONCRETE FOOTING

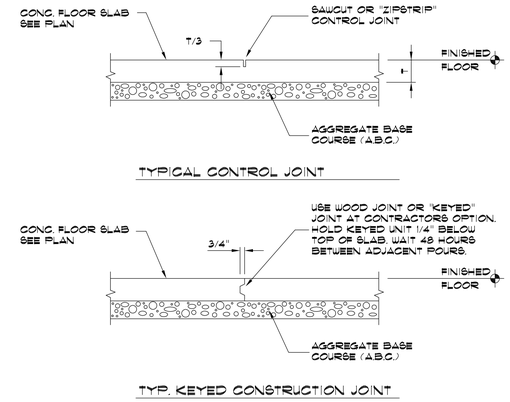

1 TYPICAL CONCRETE FLOOR JOINTS

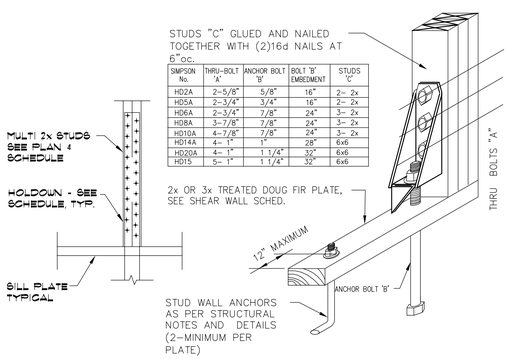

SIMPSON No.	THRU-BOLT 'A'	ANCHOR BOLT 'B'	BOLT 'B' EMBEDMENT	STUDS 'C'
HD2A	2-5/8"	5/8"	16"	2- 2x
HD5A	2-3/4"	3/4"	16"	2- 2x
HD6A	2-3/4"	7/8"	24"	3- 2x
HD8A	3-7/8"	7/8"	24"	3- 2x
HD10A	4-7/8"	7/8"	24"	3- 2x
HD14A	4- 1"	1"	28"	6x6
HD20A	4- 1"	1 1/4"	32"	6x6
HD15	5- 1"	1 1/4"	32"	6x6

11 TYPICAL HOLDOWN TO CONC.

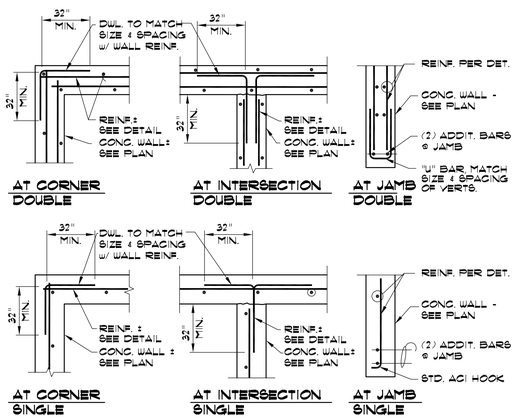

8 TYPICAL CONC. WALL REINF.

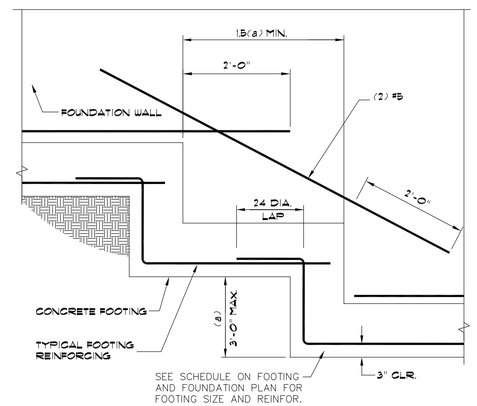

NOTE: REINFORCING MAY BE CONTINUOUS

5 TYPICAL STEPPED FOOTING

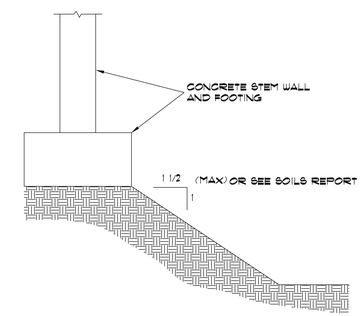

NOTE: TYPICAL FOR ALL EXCAVATION ADJACENT TO ALL WALL OR COLUMN FOOTINGS

2 EXCAVATION ADJACENT TO FOOTING

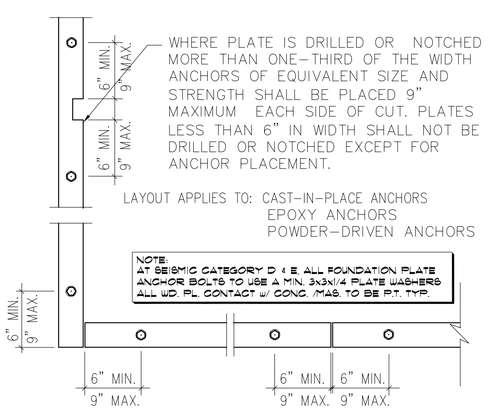

12 TYPICAL ANCHOR BOLTS LAYOUT

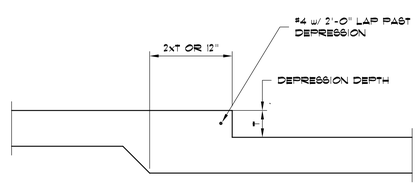

9 TYP. DEPRESSED SLAB ON GRADE

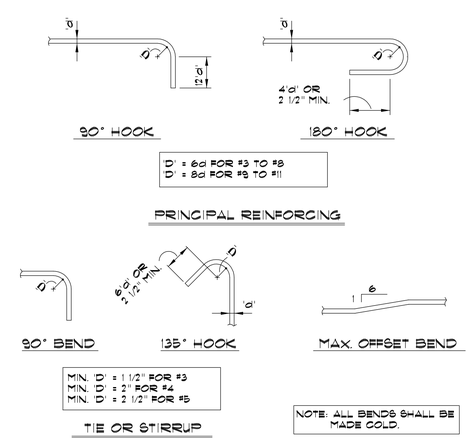

6 TYPICAL REINFORCING BAR BENDS

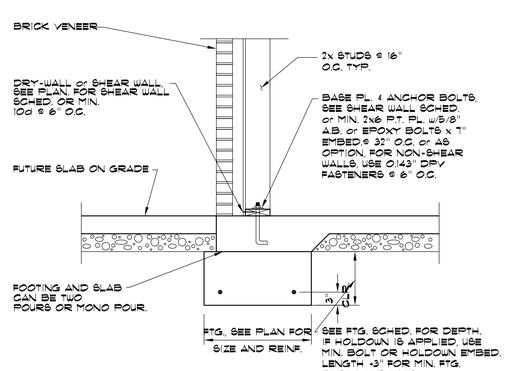

3

Shen Engineers, Inc.
Structural/Seismic Consultants
3335 South 300 East, Ste 250
Salt Lake City, UT 84106
Telephone 801 466-2625
Facsimile 801 466-2656
E-mail: shenengineers@msn.com

LICENSED PROFESSIONAL ENGINEER No. 260129 HUA SHEN STATE OF UTAH

CONSTRUCTION DOCUMENT

GSLEP
ADMINISTRATION BUILDING
DIVISION OF WILDLIFE RESOURCES
DFCM PROJECT #09259520
HOOPER,UTAH

JRCA
ARCHITECTS
577 South 200 East
Salt Lake City, Utah 84111
(801) 533-2100 fax: (801) 533-2101 jrcadesign.com

DATE/REVISION	PROJECT #.
4 • 8 • 10	SEI0026

SHEET DESCRIPTION: TYPICAL STRUCTURAL DETAILS

SHEET NO. S 102

NAIL/STAPLE EQUIVALENT TABLE.				
FLOORS AND ROOF				
NAILS		STAPLES		
SIZE	SPACING	SIZE	SPACING	LENGTH
8d	6"	14 GA	6"	1 1/2"
8d	4"	14 GA	4"	1 1/2"
8d	2 1/2"	14 GA	2 1/2"	1 1/2"
8d	2"	14 GA	2"	1 1/2"
10d	6"	14 GA	4"	1 5/8"*
10d	4"	14 GA	2 1/2"	1 5/8"*
10d	2 1/2"	14 GA	2"	1 5/8"*
* IN 3/4" PLYWOOD USE 2" STAPLES				
WALL				
3/8" PLYWOOD				
8d	6"	14 GA	6"	1 3/8"
8d	4"	14 GA	4"	1 3/8"
8d	3"	14 GA	3"	1 3/8"
8d	2"	14 GA	2"	1 3/8"
1/2" PLYWOOD				
8d	6"	14 GA	6"	1 1/2"
8d	4"	14 GA	3"	1 1/2"
8d	3"	14 GA	2 1/2"	1 1/2"
10d	6"	14 GA	4"	1 1/2"
10d	4"	14 GA	3"	1 1/2"
10d	3"	14 GA	2"	1 1/2"

10 NAIL/STAPLE EQUIVALENT TABLE

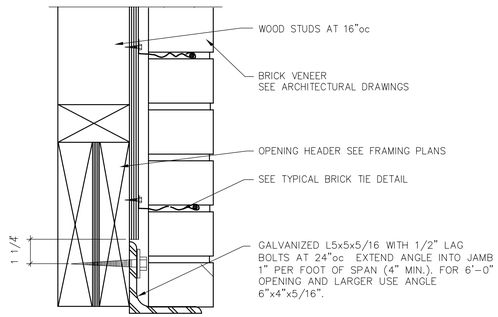

7

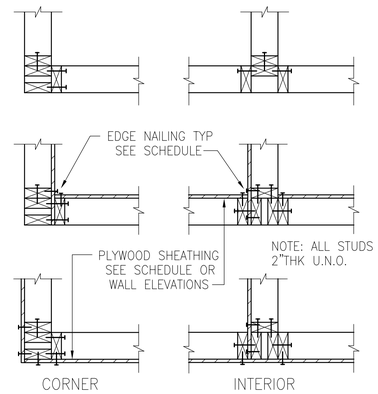

4 TYPICAL WALL INTERSECTION FRAMING

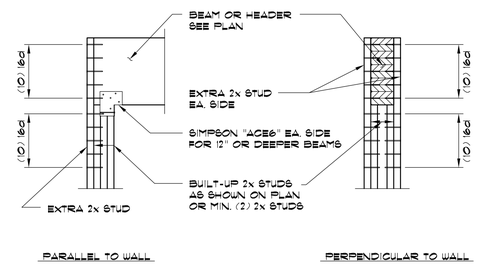

1 TYPICAL WOOD HEADER OR BEAM TO MULTI-STUDS CONNECTION

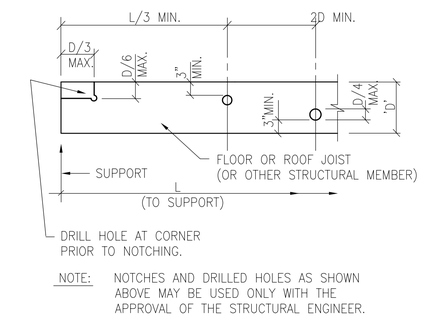

NOTE: NOTCHES AND DRILLED HOLES AS SHOWN ABOVE MAY BE USED ONLY WITH THE APPROVAL OF THE STRUCTURAL ENGINEER.

11 TYPICAL HOLES & NOTCHING IN BEAMS

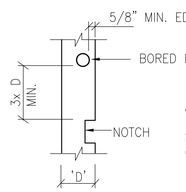

PORTION OF STUD REMAINING AT NOTCHES & HOLES SHALL BE SOUND WITHOUT WEAKNESSES SUCH AS KNOTS, BREAKS, SPLITS OR SLOPE OF GRAIN EXCEEDING 1:8

WOOD STUD SIZE	BEARING		NON-BEARING	
	MAX.Ø HOLE (40%)	MAX.Ø HOLE (25%)	MAX.Ø HOLE (60%)	MAX.Ø HOLE (40%)
2x4	1 3/8"	7/8"	2 1/8"	1 3/8"
2x6	2 3/16"	1 3/8"	3 5/16"	2 3/16"

8 TYPICAL NOTCHING IN WOOD STUDS

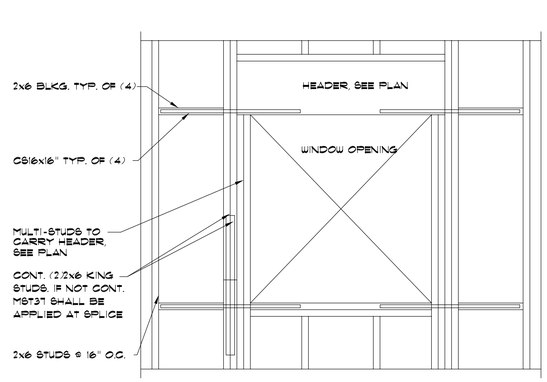

5 REINFORCED WINDOW OPNG. AS SHOWN ON PLAN AS

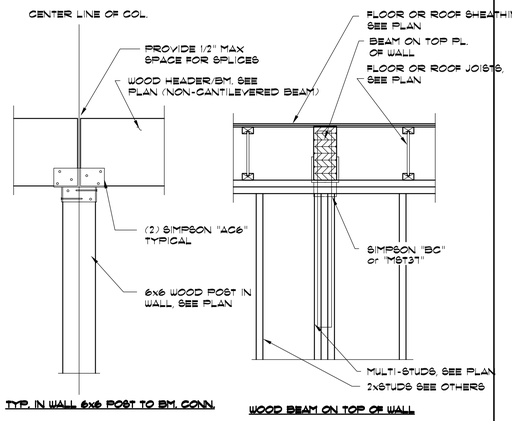

2

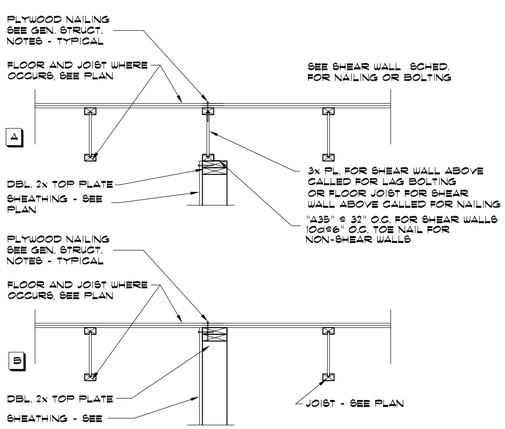

12

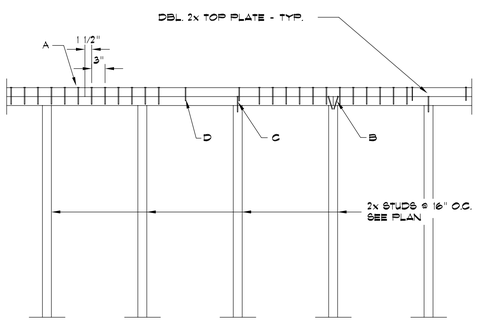

NAILING SCHEDULE	
MARK	DESCRIPTION
A	(24) 16d NAILS AT 3"O.C. .
B	2 - 16d NAILS AT THE END OF EACH PLATE (TOP OR BOTTOM) 4 - TOTAL.
C	2 - 16d NAIL AT EACH STUD.
D	NAIL TOP AND BOTTOM PLATES TOGETHER WITH 2 - 16d NAILS AT 16"O.C. TYPICAL.

9 TYP. TOP PLATE SPLICE @ FLOOR LVL

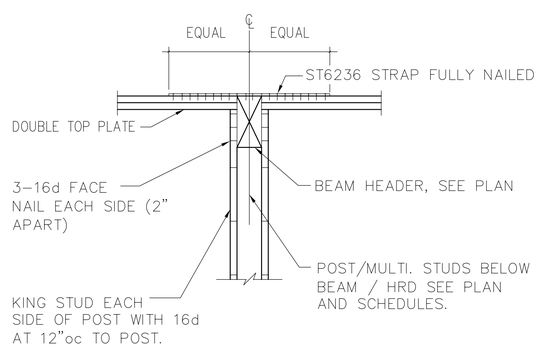

6 TOP PL. THRU BEAM HEADER IN WALL

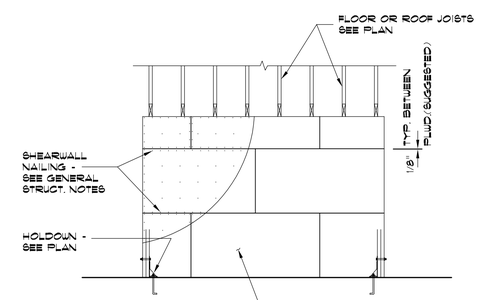

NOTE:
THE PLYWOOD CAN BE PLACED VERTICALLY IF 1/2" PLYWOOD IS USED AND STUDS ARE 16" OR LESS ON CENTER.
1/2"(C-D(C-C) PLWD. CAN BE SUBSTITUTED BY 7/16" OSB

3 TYPICAL SHEAR WALL ELEVATION

Shen Engineers, Inc.
Structural/Seismic Consultants
3335 South 300 East, Ste 250
Salt Lake City, UT 84106
Telephone 801 466-7625
Facsimile 801 466-7636
E-mail: shenengi@msn.com

LICENSED PROFESSIONAL ENGINEER No. 260129 HUA SHEN STATE OF UTAH

CONSTRUCTION DOCUMENT

GSLEP
ADMINISTRATION BUILDING
DIVISION OF WILDLIFE RESOURCES
DFCM PROJECT #09259520
HOOPER,UTAH

JRCA
ARCHITECTS
577 South 200 East
Salt Lake City, Utah 84111
(801) 533-2100 fax: (801) 533-2101 jrcadesign.com

DATE/REVISION	PROJECT #.
4 • 8 • 10	SEI0026

SHEET DESCRIPTION: TYPICAL STRUCTURAL DETAILS

SHEET NO. S 103

Drawings © 2010 JRCA Architects (801) 533-2100 (R.6)