State of Utah

GARY R. HERBERT
Governor

GREGORY S. BELL
Lt. Governor

Department of Administrative Services
KIMBERLY K. HOOD
Executive Director

Division of Facilities Construction and Management
DAVID G. BUXTON
Director

ADDENDUM NO. 1

Date:	August 3, 2010		
To:	Short-Listed Contractors		
From:	Darrell Hunting - Project Manager		
Reference:	Waste Water Treatment Improvements – Kamas Fish Hatchery Division of Wildlife Resources – Kamas, Utah DFCM Project No. 10002520		
Subject:	**Addendum No. 1**		
Pages	Addendum Cover Sheet	1	page
	Specifications	38	pages
	Drawings	3	pages
	Total	42	pages

Note: This Addendum shall be included as part of the Contract Documents. Items in this Addendum apply to all drawings and specification sections whether referenced or not involving the portion of the work added, deleted, modified, or otherwise addressed in the Addendum. Acknowledge receipt of this Addendum in the space provided on the Bid Form. Failure to do so may subject the Bidder to Disqualification.

While we contend that SB220 should only be potentially applicable to a contract issued after the effective date of said bill, this is to clarify that for purposes of this contract, regardless of the execution or effective dates of this contract, the status of Utah Law and remedies available to the State of Utah and DFCM, as it relates to any matter referred to or affected by said SB220, shall be the Utah law in effect at the time of the issuance of this Addendum.

1.1 SCHEDULE CHANGES: No Project Schedule changes.

1.2 GENERAL ITEMS: See attached specifications and drawings.

KAMAS FISH HATCHERY
August 2, 2010

ADDENDUM No. 1
to the
Bidding Requirements , Contract Forms, Conditions of the Contract, Technical Specifications and Drawings for Construction of

SOLIDS DISPOSAL PROJECT

INSTRUCTIONS: BIDDERS SHALL INCORPORATE THE CONTENTS OF THIS ADDENDUM INTO THE BID AND ACKNOWLEDGE RECEIPT THEREOF AND ACCEPTANCE OF ALL CONDITIONS CONTAINED HEREIN.

REPLACE SPECIFICATIONS SECTIONS 15006, 13675 AND 11000 WITH THE ATTACHED SPECIFICATIONS.

REPLACE DRAWINGS –GM-2, GM-4, M-3 WITH THE ATTACHED DRAWINGS GM-2, GM-4, and M-3.

SECTION 11000 - EQUIPMENT GENERAL PROVISIONS

PART 1 -- GENERAL

1.1 THE REQUIREMENT

A. The CONTRACTOR shall provide equipment and appurtenant WORK, complete and operable, in accordance with the Contract Documents.

B. The provisions of this Section shall apply to equipment throughout the Contract except where otherwise indicated.

C. **Equipment Arrangement:** Unless specifically indicated otherwise, the arrangement of equipment indicated is based upon information available at the time of design and is not intended to show exact dimensions particular to a specific manufacturer. Some aspects of the Drawings are diagrammatic and some features of the illustrated equipment arrangement may require revision to meet the actual equipment requirements. Structural supports, foundations, piping and valve connections, and electrical and instrumentation connections indicated may have to be altered to accommodate the equipment provided. No additional payment will be made for such revisions and alterations. Substantiating calculations and drawings shall be submitted prior to beginning the installation of equipment.

1.2 REFERENCE SPECIFICATIONS, CODES, AND STANDARDS

A. Equipment shall be in accordance with the following standards, as applicable and as indicated in each equipment specification:

1. American Society for Testing and Materials (ASTM).

2. American National Standards Institute (ANSI).

3. American Society of Mechanical Engineers (ASME).

4. American Water Works Association (AWWA).

5. American Society of Heating, Refrigerating, and Air Conditioning Engineers (ASHRAE).

6. American Welding Society (AWS).

7. National Fire Protection Association (NFPA).

8. Federal Specifications (FS).

9. National Electrical Manufacturers Association (NEMA).

10. Manufacturer's published recommendations and specifications.

11. General Industry Safety Orders (OSHA).

B. The following standards are referenced in this Section:

ASME B16.1	Cast Iron Pipe Flanges and Flanged Fittings, Class 25, 125, 250, and 800
ASME B16.5	Pipe Flanges and Flanged Fittings, Steel, Nickel Alloy and other Special Alloys
ASME B46.1	Surface Texture
ANSI S12.6	Method for the Measurement of the Real-Ear Attenuation of Hearing Protectors
ASME B1.20.1	General Purpose Pipe Threads (Inch)
ASME B31.1	Power Piping
AWWA C206	Field Welding of Steel Water Pipe
AWWA C207	Steel Pipe Flanges for Waterworks Service - Sizes 4 In. Through 144 In. (100 mm through 3,600 mm)
AWWA D100	Welded Steel Tanks for Water Storage
ASTM A 48	Gray Iron Castings
ASTM A 108	Steel Bars, Carbon, Cold-Finished, Standard Quality

1.3 CONTRACTOR SUBMITTALS

A. Furnish submittals in accordance with Section 01300 - Contractor Submittals.

B. **Shop Drawings:** Furnish complete drawings and technical information for equipment, piping, valves, and controls. Where indicated below and/or required by the ENGINEER, Shop Drawings shall include clear, concise calculations showing equipment anchorage forces and the capacities of the anchorage elements proposed by the CONTRACTOR.

The shop drawing submittals for all equipment and tributary pipe lengths weighing over 400 lbs, and mounted to floors, ceiling, walls or on roofs, are to include calculations that show the wind and/or seismic forces (lateral, uplift, downward) and all connections to carry these forces in the structure. The calculations are to include an analysis using the parameters in Section 2.2 below.

C. **Spare Parts List:** The CONTRACTOR shall obtain from the manufacturer and submit at the same time as Shop Drawings a list of suggested spare parts for each piece of equipment. CONTRACTOR shall also furnish the name, address, and telephone number of the nearest distributor for each piece of equipment.

D. Torsion and Vibration Analyses

1. The CONTRACTOR shall arrange for and submit torsional and lateral vibration analyses for the following equipment types:

a. Engine driven equipment except engine generators.

b. Pumps, blowers, and compressors with constant speed drives of 500 horsepower and greater.

c. Pumps, blowers and compressors with variable speed drives of 100 horsepower and greater.

d. Vertical pumps with universal joints and extended shafts.

e. Other equipment as indicated.

E. **Rotodynamics Analysis**: An experienced specialist from the manufacturer or a highly qualified third party engineer, such as **Engineering Dynamics**, **Mechanical Solutions**, or equal, approved in writing by the ENGINEER, shall perform a complete torsional and lateral vibration analysis for each motor, driven equipment, and variable frequency drive system. The stress analysis shall demonstrate that in no case shall the maximum stress on any component exceed the endurance limits of the motor-flywheel-coupling-driven equipment train materials of construction. Calculation of shaft deflection in the vicinity of the seal journal shall be submitted. Shaft design criteria shall be as indicated. Submit calculations of lateral vibration analysis for the VFD, motor with flywheel, couplings, drive shaft and pump assembly. Submit calculations of torsional analysis for the complete rotating assembly. The analysis report shall include the specific items as follows:

1. The undamped torsional natural frequencies of the complete train shall be at least 25 percent above or 25 percent below any possible (steady state) excitation frequency within the specified operating speed range from minimum to maximum continuous speed respectively.

2. When torsional frequencies fall within the margin specified, a finite element analysis of the rotating assembly shall be prepared to determine the endurance stress factor of safety of the shaft material. The endurance fatigue stress factor of safety is below in a paragraph entitled Shafting. Remedial measures such as adjusting the VFD to jump the critical torsional frequencies will not be acceptable.

3. The CONTRACTOR shall submit a detailed report of the analysis:

   a. A description of the method used to calculate the natural frequencies.

   b. A diagram of the mass elastic system.

   c. A table of the mass moment and torsional stiffness of each element of the mass elastic system.

   d. Campbell Diagram.

   e. A mode shape diagram with peak stresses shown for each resonant frequency.

   f. This analysis shall identify the dry and wet lateral critical(s), plus the torsional critical(s) speeds.

   g. This WORK shall be performed prior to fabrication of the machinery, and it is subject to review by the ENGINEER.

F. Certifications that equipment and equipment supports comply with seismic and wind design criteria from Code.

1.4 QUALITY ASSURANCE

A. **Costs:** Responsibility shall be the CONTRACTOR'S for performing and paying the costs of inspection, startup, testing, adjustment, and instruction services performed by factory representatives. The OWNER will pay for costs of power and water. If available, the OWNER'S operating personnel will provide assistance in the field testing.

B. **Inspection:** The CONTRACTOR shall inform the local authorities, such as building and plumbing inspectors, fire marshal, OSHA inspectors, and others, to witness required tests for piping, plumbing, fire protection systems, pressure vessels, safety systems, and related items to obtain required permits and certificates, and shall pay inspection fees.

C. **Quality and Tolerances:** Tolerances and clearances shall be as shown on the Shop Drawings and shall be closely adhered to.

1. Machine WORK shall be of high-grade workmanship and finish, with due consideration to the special nature or function of the parts. Members without milled ends and which are to be framed to other steel parts of the structure may have a variation in the detailed length of not greater than 1/16-inch for members 30-feet or less in length, and not greater than 1/8-inch for members over 30-feet in length.

2. Castings shall be homogeneous and free from non-metallic inclusions and defects. Surfaces of castings which are not machined shall be cleaned to remove foundry irregularities. Casting defects not exceeding 12.5 percent of the total thickness and where defects will not affect the strength and serviceability of the casting may be repaired by approved welding procedures. The ENGINEER shall be notified of larger defects. No repair welding of such defects shall be carried out without the ENGINEER’S written approval. If the removal of metal for repair reduces the stress resisting cross-section of the casting by more than 25 percent or to such an extent that the computed stress in the remaining metal exceeds the allowable stress by more than 25 percent, then the casting may be rejected. Costs of casting new material shall be the CONTRACTOR’S responsibility as part of the WORK.

3. Materials shall meet the physical and mechanical properties in accordance with the reference standards.

D. **Machine Finish:** The type of finish shall be the most suitable for the application and shall be shown in micro-inches in accordance with ANSI B46.1. The following finishes shall be used:

1. Surface roughness not greater than 63 micro-inches shall be required for surfaces in sliding contact.

2. Surface roughness not greater than 250 micro-inches shall be required for surfaces in contact where a tight joint is not required.

3. Rough finish not greater than 500 micro-inches shall be required for other machined surfaces.

4. Contact surfaces of shafts and stems which pass through stuffing boxes and contact surfaces of bearings shall be finished to not greater than 32 micro-inches.

E. **Manufacturer's Experience:** Equipment manufacturer shall have a record of at least 5 years of successful, troublefree operation in similar applications and size equal or larger than the equipment in this Contract unless otherwise noted.

PART 2 -- PRODUCTS

2.1 GENERAL REQUIREMENTS

A. **Noise Level:** When in operation, no single piece of equipment shall exceed the OSHA noise level requirement of 105 dBA for one hour exposure per day.

B. **High Noise Level Location:** The CONTRACTOR shall provide one personal hearing protection station at each high noise level location. Locations are defined as follows:

1. Outdoor Location: Any single equipment item or any group of equipment items that produce noise exceeding OSHA noise level requirements for a 2 hour exposure. Where such equipment is separated by a distance of more than 20-feet, measured between edges of footings, each group of equipment shall be provided with a separate hearing protection station.

2. Indoor Location

a. Any single equipment item or any group of equipment items located within a single room not normally occupied, that produces noise exceeding OSHA noise level requirements for a 2 hour exposure.

b. Any single equipment item or any group of equipment items located within a single room normally occupied by workers, that produces noise exceeding OSHA noise level requirements for an 8 hour exposure.

C. **Personal Hearing Protection:** The CONTRACTOR shall furnish 3 pairs of high attenuation hearing protectors in the original unopened packaging. The ear protectors shall be capable of meeting the requirements of ANSI S12.6 and shall produce a noise level reduction of 25 dBA at a frequency of 500 Hz. The hearing protectors shall have fluid filled ear cushions and an adjustable, padded headband. The protectors shall be stored in a weatherproof, labeled, steel cabinet, provided at an approved location near the noise producing equipment.

D. **Drive Trains and Service Factors:** Service factors shall be applied in the selection or design of mechanical power transmission components. Components of drive train assemblies between the prime mover and the driven equipment shall be designed and rated to deliver the maximum peak or starting torque, speed, and horsepower. All of the applicable service factors shall be considered, such as mechanical (type of prime mover), load class, start frequency, ventilation, ambient temperature, and fan factors. Drive train components include couplings, shafts, gears and gear drives, drive chains, sprockets, and V-belt drives. Unless otherwise indicated, the following load classifications shall apply in determining service factors:

Type of Equipment	Service Factor	Load Classification
Blowers		
centrifugal or vane	1.0	Uniform
lobe	1.25	Moderate Shock
Centrifugal Fans	1.0	Uniform
Reciprocating Air Compressors		
multi-cylinder	2.0	Heavy Shock
single-cylinder	2.0	Heavy Shock
Pumps		
centrifugal or rotary	1.0	Uniform
reciprocating	1.8	Moderate Shock
progressing cavity	1.0	Uniform
Mixers		
constant density	1.0	Uniform
variable density	1.25	Moderate Shock
rapid mixer	1.25	Moderate Shock
flocculator	1.25	Moderate Shock
sludge mixer	2.5	Moderate Shock
surface aerator	2.5	Heavy Shock
Vacuum Filters	1.25	Moderate Shock

E. Mechanical Service Factors

	Mechanical Service Factors	
	Electric Motor	**Internal Combustion Engine**
Uniform	1.25	1.50
Moderate Shock	1.50	1.75
Heavy Shock	2.00	2.25

F. For thermal rating adjustments such as start frequency, ambient temperature, and hourly duty cycle factor, ventilation factor, and fan factor, refer to gear manufacturer sizing information.

G. For service factors of electric motors, see Section 16460 - Electric Motors.

H. Where load classifications are not indicated, service factors shall be for standard load classifications and for flexible couplings.

I. **Welding:** Unless otherwise indicated, welding shall conform to the following:

1. Latest revision of AWWA D100.

2. Latest revision of AWWA C206.

3. Composite fabricated steel assemblies that are to be erected or installed inside a hydraulic structure, including any fixed or movable structural components of mechanical equipment, shall have continuous seal welds to prevent entrance of air or moisture.

4. Welding shall be by the metal-arc method or gas-shielded arc method as described in the American Welding Society's "Welding Handbook" as supplemented by other pertinent standards of the AWS. Qualification of welders shall be in accordance with the AWS Standards.

5. In assembly and during welding, the component parts shall be adequately clamped, supported, and restrained to minimize distortion and for control of dimensions. Weld reinforcement shall be as specified by the AWS code. Upon completion of welding, weld splatter, flux, slag, and burrs left by attachments shall be removed. Welds shall be repaired to produce a workmanlike appearance with uniform weld contours and dimensions. Sharp corners of material that are to be painted or coated shall be ground to a minimum of 1/32-inch on the flat.

J. **Protective Coating:** Equipment shall be painted or coated in accordance with Section 09800 - Protective Coating, unless otherwise indicated. Non-ferrous metal and corrosion-resisting steel surfaces shall be coated with grease or lubricating oil. Coated surfaces shall be protected from abrasion or other damage during handling, testing, storing, assembly, and shipping.

K. **Potable water contact**: Materials immersed in or exposed to potable water shall be listed as compliant with NSF Standard 61.

L. **Protection of Equipment:** Equipment shall be boxed, crated, or otherwise protected from damage and moisture during shipment, handling, and storage. Equipment shall be protected from exposure to corrosive fumes and shall be kept thoroughly dry. Pumps, motors, drives, electrical equipment, and other equipment having anti-friction or sleeve bearings shall be stored in weathertight storage facilities prior to installation. For extended storage periods, plastic equipment wrappers should be avoided to prevent accumulation of condensate in gears and bearings. In addition, motor space heaters shall be energized and shafts shall be rotated. Equipment delivered to the Site with rust or corroded parts shall be rejected. If equipment develops defects during storage, it shall be disassembled, cleaned, and recoated to restore it to original condition.

M. Identification of Equipment Items

1. At the time of shipping, each item of equipment shall have a legible identifying mark corresponding to the equipment number in the Contract Documents for the particular item.

2. After installation, each item of equipment shall be given permanent identification. Equipment larger than 5 horsepower shall receive stainless steel plate nametags in accordance with Section 10400.

N. **Vibration Isolators:** Air compressors, blowers, engines, inline fans shall be provided with restrained spring-type vibration isolators or pads per manufacturer's written recommendations. Vibration isolations shall be provided with seismic restraint.

O. **Shop Fabrication:** Shop fabrication shall be performed in accordance with the Contract Documents and the Shop Drawings.

P. **Controls:** Equipment and system controls shall be in accordance with Division 17 - Instrumentation.

2.2 EQUIPMENT SUPPORTS AND FOUNDATIONS

A. **Equipment Supports:** Unless otherwise indicated, equipment supports, anchors, and restrainers shall be adequately designed for static, dynamic, wind, and seismic loads as stated in the 2009 International Building Code (IBC), Chapter 16 and ASCE 7-05. Submitted design calculations for equipment supports and anchorage shall bear the signature and seal of an Registered Professional Engineer licensed in the State of Utah, unless otherwise indicated. Calculations shall account for forces and distribution of forces on supporting structures resulting from normal operation, normal operation plus seismic loadings, normal operation plus wind loadings, as well as the other load combinations stated the 2009 IBC.

1. Wall-mounted equipment weighing more than 250 pounds or which is within 18-inches above the floor shall be provided with fabricated steel supports. Pedestals shall be of welded steel. If the supported equipment is a panel or cabinet or is enclosed with removable sides, the pedestal shall match the supported equipment in appearance and dimensions.

B. **Wind Load:** The wind load shall be calculated in accordance with ASCE 7-05, Chapter 6, using the following design parameters:

1.	Wind Speed:	90 mph
2.	Exposure:	C
3.	Importance Factor:	Iw = 1.15

C. **Seismic Loads:** The seismic lateral and vertical forces shall be calculated in accordance with the ASCE 7-05, Chapters 11 and 13, using the following design parameters:

1.	Site Class:	D
2.	Seismic Use Group	III
3.	Seismic Design Category (SDC)	D
4.	Seismic Importance Factor:	Ie = 1.25
5.	Short Period Spectral Acceleration	Ss = 0.558g
6.	1 Second Period Spectral Acceleration	S1 = 0.199g

D. **Hydrodynamic Forces:** Hydrodynamic forces calculated in accordance with AWWA D100, API 650 or ACI 350.3-06 shall be based on the following parameters.

1. Site Class: D
2. Seismic Use Group III
3. Seismic Design Category (SDC) D
4. Seismic Importance Factor: Ie = 1.25
5. Short Period Spectral Acceleration Ss = 0.558g
6. 1 Second Period Spectral Acceleration S1 = 0.199g

E. **Anchors:** Anchor bolts shall be in accordance with Section 05500 - Miscellaneous Metalwork, and shall be designed to resist the above loads. Anchor bolt calculations shall clearly show that the capacity of the anchor and the capacity of the concrete that the anchor is embedded in are adequate to resist all loads stated in the 2009 IBC and ASCE 7-05, including lateral wind and lateral and vertical seismic loads. Reduction factors associated with edge distance, embed length, and bolt spacing shall all be considered and based on the actual dimensions of the concrete that resists the anchorage forces. Anchor bolt details shall include required bolt diameter, embed, and edge distances. Further, the design of Anchors shall consider the ductility requirements stated in ASCE 7-05, Chapter 13, Section 13.4.2 and Chapter 15, Section 15.7.3. Anchor bolt calculations and details shall be submitted and shall bear the signature and seal of a Registered Professional Engineer licensed in the State of Utah.

F. **Equipment Foundations:** Mechanical equipment, tanks, control cabinets, enclosures, and related equipment shall be mounted on minimum 3 ½-inch high concrete bases, unless otherwise indicated. Equipment foundations are indicated on Drawings. The CONTRACTOR, through the equipment manufacturer, shall verify the size and weight of equipment foundation to insure compatibility with equipment. The dimensions of all concrete bases shall be sufficient to provide the edge distances required by the anchor bolt calculations.

2.3 COUPLINGS

A. Mechanical couplings shall be provided between the driver and the driven equipment. Flexible couplings shall be provided between the driver and the driven equipment to accommodate slight angular misalignment, parallel misalignment, end float, and to cushion shock loads. Unless otherwise indicated or recommended by the equipment manufacturer, coupling type shall be furnished with the respective equipment as follows:

Equipment Type	Coupling Type
Horizontal and end suction pumps	Gear or flexible spring
Vertical turbine pumps	3 piece spacer for solid shaft or double nut for hollow shaft

Vertical nonclog pumps, close coupled	Flexible disc pack
Screw pumps	Flexible spring, gear coupling, fluid coupling
Vertical nonclog pumps with extended shaft	Flexible disc pack or Universal joint with carbon fiber composite shaft and steady bearing support(s)
Belt conveyors	Gear coupling for fractional to 7.5 horsepower, Silicone filled fluid coupling for 10 hp and larger
Sludge collector	Gear coupling or jaw clutch
Engine driven pumps	Universal joint type or elastomeric flexible type
Single stage centrifugal blowers	Flexible disc pack
Air compressors	Gear or flexible disc pack

B. Each coupling size shall be determined based on the rated horsepower of the motor, speed of the shaft, and the load classification service factor. The CONTRACTOR shall have the equipment manufacturer select or recommend the size and type of coupling required to suit each specific application.

C. **Differential Settlement:** Where differential settlement between the driver and the driven equipment may occur, 2 sets of universal type couplings shall be provided.

D. **Taper-Lock** or equal bushings may be used to provide for easy installation and removal of shafts of various diameters.

2.4 SHAFTING

A. **General:** Shafting shall be continuous between bearings and shall be sized to transmit the power required. Keyways shall be accurately cut in line. Shafting shall not be turned down at the ends to accommodate bearings or sprockets whose bore is less than the diameter of the shaft. Shafts shall rotate in the end bearings and shall be turned and polished, straight, and true.

B. **Design Criteria**: Shafts shall be designed to carry the steady state and transient loads suitable for unlimited number of load applications, in accordance with ASME B106.1M - Design of Transmission Shafting. Where shafts are subjected to fatigue stresses, such as frequent start and stop cycles, the mean stress shall be determined by using the modified Goodman Diagram. The maximum torsional stress shall not exceed the endurance limit of the shaft after application of the factor of safety of 2 in the endurance limit and the stress concentration factor of the fillets in the shaft and keyway. Stress concentration factor shall be in accordance with ASME Standard B17.1 - Keys and Keyseats.

C. **Materials:** Shafting materials shall be appropriate for the type of service and torque transmitted. Environmental elements such as corrosive gases, moisture, and fluids shall

be taken into consideration. Materials shall be as indicated unless furnished as part of an equipment assembly.

1. Low carbon cold-rolled steel shafting shall conform to ASTM A 108, Grade 1018.

2. Medium carbon cold-rolled shafting shall conform to ASTM A 108, Grade 1045.

3. Other grades of carbon steel alloys shall be suitable for service and load.

4. Corrosion-resistant shafting shall be stainless steel or Monel, whichever is most suitable for the intended service.

D. **Differential Settlement:** Where differential settlement between the driver and the driven equipment may occur, a shaft of sufficient length with 2 sets of universal type couplings shall be provided.

2.5 GEARS AND GEAR DRIVES

A. Unless otherwise indicated, gears shall be of the spur, helical, or spiral-bevel type, designed and manufactured in accordance with AGMA Standards, with a service factor suitable for load class, mechanical service and thermal rating adjustment, a minimum L-10 bearing life of 60,000 hours, and a minimum efficiency of 94 percent. Peak torque, starting torque, and shaft overhung load shall be checked when selecting the gear reducer. Worm gears shall not be used unless specifically approved by the ENGINEER.

B. Gear speed reducers or increasers shall be of the enclosed type, oil- or grease-lubricated and fully sealed, with a breather to allow air to escape but keep dust and dirt out. The casing shall be of cast iron or heavy-duty steel construction with lifting lugs and an inspection cover for each gear train. An oil level sight glass and an oil flow indicator shall be provided, located for easy reading.

C. Gears and gear drives that are part of an equipment assembly shall be shipped fully assembled for field installation.

D. Material selections shall be left to the discretion of the manufacturer, provided the above AGMA values are met. Input and output shafts shall be adequately designed for the service and load requirements. Gears shall be computer-matched for minimum tolerance variation. The output shaft shall have 2 positive seals to prevent oil leakage.

E. Oil level and drain locations shall be easily accessible. Oil coolers or heat exchangers with required appurtenances shall be provided when necessary.

F. Where gear drive input or output shafts from one manufacturer connect to couplings or sprockets from a different manufacturer, the CONTRACTOR shall have the gear drive manufacturer furnish a matching key taped to the shaft for shipment.

2.6 DRIVE CHAINS

A. Power drive chains shall be commercial type roller chains meeting ASME Standards.

B. A chain take-up or tightener shall be provided in every chain drive arrangement to provide easy adjustment.

C. A minimum of one connecting or coupler link shall be provided in each length of roller chain.

D. Chain and attachments shall be of the manufacturer's best standard material and be suitable for the process fluid.

2.7 SPROCKETS

A. **General:** Sprockets shall be used in conjunction with chain drives and chain-type material handling equipment.

B. **Materials:** Unless otherwise indicated, materials shall be as follows:

1. Sprockets with 25 teeth or less, normally used as a driver, shall be made of medium carbon steel in the 0.40 to 0.45 percent carbon range.

2. Type A and B sprockets with 26 teeth or more, normally used as driven sprockets, shall be made of minimum 0.20 percent carbon steel.

3. Large diameter sprockets with Type C hub shall be made of cast iron conforming to ASTM A 48, Class 30.

C. Sprockets shall be accurately machined to ASME Standards. Sprockets shall have deep hardness penetration in tooth sections.

D. Finish bored sprockets shall be furnished complete with keyseat and set screws.

E. To facilitate installation and disassembly, sprockets shall be of the split type or shall be furnished with **Taper-Lock** bushings as required.

F. Idler sprockets shall be provided with brass or Babbitt bushings, complete with oil hole and axial or circumferential grooving with stainless steel tubing and grease fitting extended to an accessible location. Steel collars with set screws may be provided in both sides of the hub.

2.8 V-BELT DRIVES

A. V-belts and sheaves shall be of the best commercial grade and shall conform to ASME, MPTA, and RMA Standards.

B. Unless otherwise indicated, sheaves shall be machined from the finest quality gray cast iron.

C. Sheaves shall be statically balanced. In some applications where vibration is a problem, sheaves shall be dynamically balanced. Sheaves operating at belt speeds exceeding 6,500 fpm may be required to be of special materials and construction.

D. To facilitate installation and disassembly, sheaves shall be provided complete with **Taper-Lock** or **QD** bushings as required.

E. Finish bored sheaves shall be complete with keyseat and set screws.

F. Sliding motor bases shall be provided to adjust the tension of V-belts.

2.9 DRIVE GUARDS

A. Power transmission trains, prime movers, machines, shaft extensions, and moving machine parts shall be guarded to conform with the latest edition OSHA Safety and Health Standards (29CFR1910). The guards shall be constructed of minimum 10-gauge expanded, flattened steel with smooth edges and corners, galvanized after fabrication, and securely fastened. Where required for lubrication or maintenance, guards shall have hinged and latched access doors.

2.10 BEARINGS

A. **General:** Bearings shall conform to the standards of the American Bearing Manufacturers Association, Inc. (ABMA).

B. To assure satisfactory bearing application, fitting practice, mounting, lubrication, sealing, static rating, housing strength, and lubrication shall be considered in bearing selection.

C. Re-lubricatable type bearings shall be equipped with a hydraulic grease fitting in an accessible location and shall have sufficient grease capacity in the bearing chamber.

D. Lubricated-for-life bearings shall be factory-lubricated with the manufacturer's recommended grease to insure maximum bearing life and best performance.

E. **Anti-Friction Type Bearing Life:** Except where otherwise indicated, bearings shall have a minimum L-10 life expectancy of 5 years or 20,000 hours, whichever occurs first. Where so indicated, bearings shall have a minimum rated L-10 life expectancy corresponding to the type of service, as follows:

Type of Service	**Design Life, years**	**L-10 Design Life, hours**
	(whichever comes first)	
8-hour shift	10	20,000
16-hour shift	10	40,000
Continuous	10	60,000

F. Bearing housings shall be of cast iron or steel and bearing mounting arrangement shall be as indicated or as recommended in the published standards of the manufacturer. Split-type housings may be used to facilitate installation, inspection, and disassembly.

G. **Sleeve Type Bearings**: Sleeve-type bearings shall have a cast iron or ductile iron housing and Babbitt or bronze liner. Bearing housing shall be bolted and doweled to the lower casing half. These housings shall be provided with cast iron caps bolted in place and the bearing end caps shall be bored to receive the bearing shells. Sleeve bearings shall be designed on the basis of the maximum allowable load permitted by the bearing manufacturer. If the sleeve bearing is connected to an equipment shaft with a coupling, the coupling transmitted thrust will be assumed to be the maximum motor or equipment thrust. Lubricant, lubrication system, and cooling system shall be as recommended by the bearing manufacturer.

H. **Plate Thrust Bearings**: Thrust bearings shall be the **Kingsbury** Type, designed and manufactured to maintain the shaft in the fixed axial position without undue heating or the necessity of adjustment or attention. Bearings shall be oil lubricated to suit the manufacturer's standard method of lubrication for the specific bearing. If bearing cooling is required, manufacturer shall provide necessary piping, filters, and valves.

2.11 PIPING CONNECTIONS

A. **Pipe Hangers, Supports, and Guides:** Pipe connections to equipment shall be supported, anchored, and guided to avoid stresses and loads on equipment flanges and equipment. Supports and hangers shall be in accordance with Section 15006 - Pipe Supports.

B. **Flanges and Pipe Threads:** Flanges on equipment and appurtenances shall conform to ASME B16.1, Class 125, or B16.5, Class 150, unless otherwise indicated. Pipe threads shall be in accordance with ASME B1.20.1 and Section 15000 - Piping, General.

C. **Flexible Connectors:** Flexible connectors shall be installed in piping connections to engines, blowers, compressors, and other vibrating equipment and in piping systems in accordance with the requirements of Section 15000. Flexible connectors shall be harnessed or otherwise anchored to prevent separation of the pipe where required by the installation.

D. **Insulating Connections:** Insulating bushings, unions, couplings, or flanges, as appropriate, shall be used in accordance with the requirements of the Section 15000.

2.12 GASKETS AND PACKINGS

A. Gaskets shall be in accordance with Section 15000.

B. Packing around valve stems and reciprocating shafts shall be of compressible material, compatible with the fluid being used. Chevron-type "V" packing shall be **Garlock No. 432, John Crane Everseal,** or equal.

C. Packing around rotating shafts (other than valve stems) shall be "O" rings, stuffing boxes, or mechanical seals, as recommended by the manufacturer and approved by the ENGINEER, in accordance with Section 11100 - Pumps, General.

2.13 NAMEPLATES

A. Equipment nameplates of stainless steel shall be engraved or stamped and fastened to the equipment in an accessible location with No. 4 or larger oval head stainless steel screws or drive pins. Nameplates shall contain the manufacturer's name, model, serial number, size, characteristics, and appropriate data describing the machine performance ratings.

2.14 TOOLS AND SPARE PARTS

A. **Tools:** The CONTRACTOR shall furnish one complete set of special wrenches and other special tools necessary for the assembly, adjustment, and dismantling of the equipment. Tools shall be of best quality hardened steel forgings with bright finish. Wrench heads shall have work faces dressed to fit nuts. Tools shall be suitable for professional work and manufactured by **Snap On, Crescent, Stanley,** or equal. The set

of tools shall be neatly mounted in a labeled toolbox of suitable design provided with a hinged cover.

B. **Spare Parts:** The CONTRACTOR shall provide spare parts as indicated in each equipment specification.

2.15 EQUIPMENT LUBRICANTS

A. The CONTRACTOR shall provide lubricants for equipment during shipping, storage, and prior to testing, in accordance with the manufacturer's recommendations. Lubricants that could come in contact with potable water shall be food grade lubricants. After successful initial testing, final testing, and satisfactory completion startup testing per Section 01660 - Equipment Testing and Plant Startup, the CONTRACTOR shall conduct one complete lubricant change on all equipment. In addition, the CONTRACTOR shall be responsible for the proper disposal of used lubricants. The OWNER will then be responsible for subsequent lubricant changes

PART 3 -- EXECUTION

3.1 SERVICES OF MANUFACTURER

A. **Inspection, Startup, and Field Adjustment**: Where required by individual sections, an authorized, experienced, and competent service representative of the manufacturer shall visit the Site for the number of Days indicated in those sections to witness or perform the following and to certify in writing that the equipment and controls have been properly installed, aligned, lubricated, adjusted, and readied for operation.

1. Installation of equipment

2. Inspection, checking, and adjusting the equipment and approving its installation

3. Startup and field testing for proper operation, efficiency, and capacity

4. Performing field adjustments during the test period to ensure that the equipment installation and operation comply with requirements

B. Instruction of the OWNER'S Personnel

1. Where required by the individual equipment sections, an authorized training representative of the manufacturer shall visit the Site for the number of Days indicated in those sections to instruct the OWNER'S personnel in the operation and maintenance of the equipment, including step-by-step troubleshooting with necessary test equipment. Instruction shall be specific to the models of equipment provided.

2. The representative shall have at least 2 years experience in training. A resume of the representative shall be submitted.

3. Training shall be scheduled 3 weeks in advance of the scheduled session.

4. Proposed training material and a detailed outline of each lesson shall be submitted for review. Review comments from the ENGINEER shall be incorporated into the material.

5. The training materials shall remain with the trainees after the session.

6. The OWNER may videotape the training for later use by the OWNER'S personnel.

C. **Vibration Monitoring**: For the equipment types listed in paragraph 1.3D, the CONTRACTOR shall arrange for at least 2 Site visits by the manufacturer's specialist during testing of the equipment covered by torsional and vibration analysis submittals to measure the amount of vibration and prepare written recommendations for keeping the vibration within acceptance limits. If vibration readings exceed the specified or the applicable referenced standard vibration limits for the type of equipment, the CONTRACTOR shall make necessary corrections for the equipment to meet the acceptance criteria.

3.2 INSTALLATION

A. **General:** Equipment shall be installed in accordance with the manufacturer's written recommendations.

B. **Alignment**: Equipment shall be field tested to verify proper alignment.

3.3 PACKAGED EQUIPMENT

A. When any system is furnished as pre-packaged equipment, the CONTRACTOR shall coordinate space and structural requirements, clearances, utility connections, signals, and outputs with Subcontractors to avoid later change orders.

B. If the packaged system has any additional features (as safety interlocks, etc.) other than required by the Contract Documents, the CONTRACTOR shall coordinate such features with the ENGINEER and provide material and labor necessary for a complete installation as required by the manufacturer.

3.4 FIELD ASSEMBLY

A. Studs, cap screws, bolt and nuts used in field assembly shall be coated with **Never Seize** compound or equal.

3.5 WELDING

A. Welds shall be cleaned of weld-slag, splatter, etc. to provide a smooth surface.

3.6 FIELD TESTS

A. Where indicated by the individual equipment sections, equipment shall be field tested after installation to demonstrate satisfactory operation without excessive noise, vibration, or overheating of bearings or motor.

B. The following field testing shall be conducted:

1. Start equipment, check, and operate the equipment over its entire operating range. Vibration level shall be within the amplitude limits as indicated or as recommended by the reference applicable standards.

2. Obtain concurrent readings of motor voltage, amperage, capacity, vibration, and bearing temperatures.

3. Operate equipment indicated in Section 01660.

C. The ENGINEER shall witness field-testing. The CONTRACTOR shall notify the ENGINEER of the test schedule 3 Days in advance.

D. In the event that any equipment fails to meet the test requirements, the equipment shall be modified and retested until it satisfies the requirement.

- END OF SECTION -

SECTION 13675 - POLYETHYLENE TANKS

PART 1 -- GENERAL

1.1 THE REQUIREMENT

A. The CONTRACTOR shall provide polyethylene 30 degrees cone bottom tank, tank supports, heat tracing, insulation and accessories, complete and in place, in accordance with the Contract Documents. Heat tracing and insulation for the cone section shall be field installed by CONTRACTOR.

B. **Unit Responsibility:** The CONTRACTOR shall assign responsibility for furnishing the tank system as indicated including level indication to the tank manufacturer.

1.2 REFERENCE SPECIFICATIONS, CODES, AND STANDARDS

A. Commercial Standards

ASTM D 618	Standard Practice for Conditioning Plastics for Testing
ASTM D 638	Tensile Properties of Plastics
ASTM D 746	Standard Test Method for Brittleness Temperature of Plastics and Elastomers by Impact
ASTM D 790	Standard Test Methods for Flexural Properties of Unreinforced and Reinforced Plastics and Electrical Insulating Materials
ASTM D 883	Standard Terminology Relating to Plastics
ASTM D 1505	Standard Test Methods for Density of Plastics by the Density-Gradient Technique
ASTM D 1525	Standard Test Method for Vicat Softening Temperature of Plastics
ASTM D 1693	Standard Test Method for Environmental Stress-Cracking of Ethylene Plastics
ASTM D 1998	Polyethylene Upright Storage Tanks
ASTM D 2765	Standard Test Methods for Determination of Gel Content and Swell Ratio of Cross-linked Ethylene Plastics
ASTM D 2837	Standard Test Method for Obtaining Hydrostatic Design Basis for Thermoplastic Pipe Materials
ASTM D 3892	Standard Practice for Packaging/Packing of Plastics
ASTM F 412	Standard Terminology Relating to Plastic Piping Systems
ANSI B 16.5	Pipe Flanges and Flanged Fittings
ARM	Low Temperature Impact Resistance (Falling Dart Test Procedure)

1.3 CONTRACTOR SUBMITTALS

A. Furnish submittals in accordance with Section 01300 - Contractor Submittals.

B. Shop Drawing information

1. Tank Material

   a. Data sheet

   b. Information showing compatibility with liquid stored to be stored under the concentration and temperature conditions expected

   c. Color sample

   d. Gasket style and material

   e. Bolting material

2. Dimensioned tank drawings

   a. Location and orientation of openings, fittings, accessories, instrumentation, and anchors and supports

   b. Details of inlet and outlet fittings, manways, flexible connectors, and vents

3. Tank pad requirements such as blockouts where a full drain fitting is required.

4. Calculations stamped and signed by a registered engineer in the state of Utah and certified by the tank manufacturer.

   a. Wall thickness. Hoop stress shall be indicated.

5. Calculations detailing anchor bolt number, size and layout. The calculations shall be signed and stamped by a Registered Professional Engineer licensed in the State of Utah. Anchor bolts shall be designed and checked for loads to be incurred during service, including, but not limited to wind, temperature stress, and earthquake loads.

6. Calculations detailing the structural design of the tanks. The calculations shall be signed and stamped by a registered Professional Engineer licensed in the state of Utah with a minimum of five years experience in polyethelene construction. Tanks shall be designed and checked for loads to be incurrent during service, including, but not limited to wind, snow loads, temperature stress and earthquake loads.

C. Proposed manufacturer warranty

D. Manufacturer's unloading procedure

E. Manufacturer's installation instructions

F. **Manufacturer's Qualifications**: List of installations documenting manufacturer's qualifications. Include names and telephone numbers for tank installations available for the ENGINEER to visit.

G. **Technical Manual:** Include the following in Part 2 - Operational Procedures:

1. Manufacturer's recommendations for installation.

2. Installation and adjustment procedures to include foundation bolt and piping connections to the tank.

3. Repair procedures for typical situations, including small holes, pinholes, and minor cracks in the tank.

H. Factory Test Report

1. Tank nominal capacity and diameter, material, hoop stress design

2. Review audit for wall thickness

3. Fitting placement

4. Visual inspection

I. **Certification**: After inspecting the installed tank, a representative of the manufacturer shall certify in writing that the tank has been installed in accordance with the manufacturer's recommendations. Certification shall be submitted to the ENGINEER.

1.4 QUALITY ASSURANCE

A. Manufacturers Qualifications

1. The tank manufacturer shall have a record of at least 10 installations during the previous 5 years for the tank sizes and for the liquid storeds indicated in this Contract.

1.5 SPECIAL WARRANTY REQUIREMENT

A. The tank shall be warranted for 5 years to be free of defects in material and workmanship.

PART 2 -- PRODUCTS

2.1 GENERAL

A. Tanks shall be rotationally-molded high density crosslinked (HDXLPE) or high density linear polyethylene (HDLPE) as indicated, one piece seamless construction, cylindrical in cross-section, vertical in axis; complete with piping inlets and outlets, drains, and overflows installed by manufacturer; and anchoring system. Tanks shall be in accordance with ASTM D 1998 unless otherwise indicated. Lined or laminated tanks will not be accepted. Tank outlets shall be either molded on the tank and be the same material or mechanically attached to a liquid stored compatible insert encapsulated into the tank wall. Dome and other fittings may be bolted onto the tank. All fittings shall be carbon steel unless otherwise mentioned with EPDM or Viton elastometers. Covered

tanks shall be vented, and where indicated, tanks shall be provided with entrance manways, and exterior coating. Tanks shall be marked to identify the manufacturer, date of manufacture, serial number, capacity, and contents to be stored.

B. Dimensions and tolerances shall be in accordance with ASTM D 1998. Measurements shall be taken with the tank empty, in the vertical position.

2.2 TANKS

A. **Service:** Sludge storage tanks shall be suitable for the following operating conditions:

Equipment number	T-SB-101
Liquid stored	Water with 1% solid fish waste
Concentration, percent	1
Unit weight, lb/gal	8.6
Specific gravity	1.0 - 1.4
pH	6 - 8
Maximum Sludge temperature, deg. F	70
Minimum Sludge temperature, deg. F	40
Minimum ambient air temperature, deg. F	Minus 10

B. Materials shall be virgin polyethylene as compounded and certified by the manufacturer, be the type indicated in the tank schedule, and shall meet or exceed the following:

1. Mechanical Properties of HDLPE Tank Material

Parameter	**ASTM Test Method**	**Value**
Density of resin, gm/cc	D 1505	0.942 to 0.947
Tensile strength, psi (2-inches per min)	D 638	2700
Elongation at break, percent (2-inches per min)	D 638	350
ESCR (100 percent Igepal, Condition A, F50), hours	D 1693	400 to 1000
ESCR (10 percent Igepal, Condition A, F50),	D 1693	200 to 500

hours		
Vicat softening temperature, deg. F	D 1525	235
Flexural modulus, psi	D 790	97,000 to 103,000

2. Resin used in the tank shall be by **Exxon Mobil Liquid storeds,** or equal, and shall contain ultraviolet stabilizer as recommended by the manufacturer. Where black or white tanks are indicated, the resin shall be compounded black or white.

C. Construction

1. The minimum wall thickness of the cylindrical portion at any liquid stored depth shall be determined by ASTM D 1998 as modified by the following equation. Wall thickness shall be tapered, and no wall shall be less than 0.187 inch thick at the top.

   T = (0.433 x ASG x OD x H) / (2 x SD)

   Where:
   - T = wall thickness at any depth, in.
   - ASG = adjusted specific gravity of liquid stored (See Note A)
   - H = depth of liquid stored in tank ft
   - OD = outside diameter of tank, in.
   - SD = hydrostatic design stress, 600 psi (See Note B)

   Note A: The specific gravity of the fluid shall be multiplied by a service factor of 1.5 to 2.2, depending on the characteristics of the material stored within the tank. The service factor shall allow a design margin for a possible temperature excursion above 100 degrees F.

   Note B: The hydrostatic design stress shall be derated for temperatures above 100 deg F in accordance with ASTM D 1998.

   a. The minimum wall thickness shall be sufficient to support its own weight in an upright position without external support. Flat areas shall be provided for attachment of large fittings on the cylindrical portion.

2. The top head shall be integrally molded with the cylindrical wall. Its minimum thickness shall equal the thickness of the top of the wall. The top head of tanks 2000 gal and larger shall provide a minimum of 1300 square inches of flat surface for pipe nozzle locations.

3. The bottom head shall be integrally molded with the cylindrical wall. Knuckle radius shall be in accordance with ASTM D 1998.

4. Tanks with 2000 gal capacity or larger shall have at least 3 lifting lugs molded into the top head. Lugs shall be designed for lifting an empty tank.

5. Tie-down lugs may be molded into the top head.

6. Manway

a. Unless otherwise indicated, bolted sealed top manway shall be 24-inches and be in locations easily accessible from the nearest worker access position. The sealed manway shall be constructed of polyethylene material. The bolts shall be compatible with the liquid stored. Gaskets shall be EPDM or Viton materials.

D. Tank Schedule

Equipment No.	T-SB-101
Configuration (see Note 1)	CD
Material Type	HDLPE
Insulation	Heat traced and Insulated
Tank Specific Gravity	1.9
Nominal diameter, ft	12
Nominal height, ft (see Note 2)	17.9
Nominal capacity, gallons (see Note 5)	11,500
Liquid depth, maximum, ft	15
Manway (see Notes 3 and 4) Mounting Diameter, inches	 TM 24
Exposure (UV protection required if tank is mounted outdoors)	Outdoors
Color	White/Natural (Unpigmented)

Note 1: CD = closed, domed top
CF = closed, flat top
OIF = open, internal flange
OEF = open, external flange
FLR = flat lid, removable
FLH = flat lid, hinged

Note 2: Nominal height of domed top tanks is the dimension measured from the bottom of the cone to the rounded top.

Note 3: TM = top mount
TSM = top and side mount

Note 4: Unless otherwise indicated, manways shall be integrally molded with the tank.

Note 5: Nominal volume shall be calculated based on the straight cylindrical side of the tank.

E. Fittings

1. Tank fittings shall be according to the fitting schedule below. Gasket material shall be Viton or EPDM. Fittings shall be compatible with the liquid stored, be bolted double flanged fittings, Schedule 80, or threaded bulkhead type. Threaded fittings shall use American Standard Pipe Threads. No metals shall be exposed to tank contents.

Item	Fitting Type (See Note 4)	Size (in)
Equipment No.	T-SB-101	
Fill	IMF	4
Overflow	BF-H	4
Tank drain	IMF	4
U-vent	TB	Size by Tank manufacturer
Level indication	PVC double flange bolted fitting (soc x soc) connection. Coordinate opening required for level transducer with CONTRACTOR.	8

Note 4: Refer to Drawings for fitting size and location. Abbreviations for fittings are:

TB: Threaded bulkhead fitting
BF-H: Bolted flange fitting with Hastelloy-C studs and polyethylene encapsulated heads.
BF-SS: Bolted flange fitting with 316 SS studs and polyethylene encapsulated heads.
BF-T Bolted flange fitting with titanium studs and polyethylene encapsulated heads
DB-SD: Double bolt with siphon drain, 316 SS studs, and polyethylene encapsulated heads.
IMF: Integrally molded flanged.
TST: Threaded siphon tube
SWST: Solvent-welded siphon tube
PVC: Double-nut PVC fitting.

a. Bulkhead fittings shall be constructed of PVC, PP, or other material compatible with the liquid stored stored. Gaskets shall be a minimum of 1/4-in thickness and be constructed of 40 to 50 durometer EPDM, 60 to 70 durometer Viton, or material compatible with the liquid stored in the tank.

2. Bolted flange fittings shall be constructed with two 150 psi flanges, two 150 psi flange gaskets, and the correct number and size of all-thread bolts recommended by the flange manufacturer. Flanges shall be constructed of PVC type 1, grade 1. Gaskets shall be min 1/4-in thick, constructed of 40 to 50 durometer EPDM, 60 to 70 durometer Viton, or material compatible with the liquid stored in the tank. There shall be minimum 4 full-thread bolts. Bolt heads may be gasket-flanged or may be encapsulated in a type of polyethylene compatible with the liquid stored stored. If encapsulated, the bolt head shall not contact the fluid in the tank and shall cover the head plus 1/4-in of threads away from the head. Polyethylene shall be color coded to identify the bolt metal underneath. Encapsulated heads shall have a gasket to provide a sealing surface against the inner flange. Bolt holes shall straddle the principal centerline of the tank in accordance with ASME B16.5

3. Integrally Molded Fittings (IMF). These fittings shall be an integral part of the tank and provide complete drainage of liquid through the sidewall of a flat bottom tank. The attachment shall be constructed from a Schedule 80 PVC, stainless steel, or compatible material and be standard at 2-, 3-, 4- or 6-in with inside diameter depending on the tank size.

4. Down Pipes and Fill Pipes: Down pipes and fill pipes shall be supported at 4-ft max intervals with support from standard bulkhead fitting tank attachments or welded PE supports. Down pipes and fill pipes shall be galvanized steel pipe. All pipes connected to the tank shall be independently supported.

5. U-Vents: Each tank must be vented for the material and flow and withdrawal rates expected. Vents should comply with OSHA 1910.106(F)(iii)(2)(IV)(9) or shall be as large as the filling or withdrawal connection, whichever is larger, but in no case less than 1-in nominal inside diameter. U-vents shall be sized by the tank manufacturer and be furnished complete with insect screen. U-vents shall be constructed of PVC or material compatible with the liquid stored stored.

6. Flange Adapters: Adapters may be used to adapt threaded or socket fitting components to 150 psi flange connections. Adapters shall be of material compatible with the liquid stored stored.

7. Ladders: Ladders shall be constructed of carbon steel hot dip galvanized. Safety cages shall be added to ladders. Ladders must be designed to OSHA standard 2206; 1910.27. Ladders shall be mounted to the tank in such a way that tank expansion and contraction are not restricted. Top ladder mounts shall be connected to the tank as appropriate.

8. Cone Bottom Supports: Cone bottom supports shall be for 30 degree style as indicated and have rated gross weight capacity. Design for safety factor of 2.4 on wind and seismic forces. Materials shall be painted steel, Black water based Enamel paint with Rust inhibitor.

9. Attachments: Pipe attachments at fittings shall be equipped with flexible couplers or other provisions for movement. Piping attachments shall allow for 3 to 4 percent movement.

2.3 LEVEL INDICATON

A. **Ultrasonic Transducer**: An Echomax XPS-30 shall be provided to measure the tank level. For Ultrasonic controller, a hydroRanger 200 shall be provided for continuous level measurement. Nema 4X, wall mounted.

2.4 TANK STANDS, SEISMIC, AND WIND RESTRAINT SYSTEM

A. **Tank Design:** Tanks, and their anchorage to the foundation, shall be designed for static and dynamic load combinations as stated in the 2009 International Building Code (IBC), Chapter 16 and ASCE 7-05. Load combinations shall consider the conditions of the tanks empty, full, and partially full, and shall consider the hydrodynamic effects resulting from the contained liquid. The method of calculating the hydrodynamic forces shall be in accordance with API 650 or AWWA D100. The specific gravity of the contained liquid shall be assumed to be the specific gravity stated herein (between 1.1 and 1.4). The design horizontal seismic force shall be the greater of the force determined in the above procedure or 10 percent of gravity.

B. **Design Calculations:** Tank design calculations and details shall be submitted and shall bear the signature and seal of a Registered Professional Engineer licensed in the State of Utah. Tank anchorage calculations and details shall be submitted and shall bear the signature and seal of a Registered Professional Engineer licensed in the State of Utah. Anchor bolt calculations shall consider all failure modes of the steel and the confining concrete. Anchor bolt details shall include required bolt diameter, embed distance, and edge distance.

C. **Wind Load:** The wind load shall be calculated in accordance with ASCE 7-05, Chapter 6, using the following design parameters:

1. Wind Speed: 90 mph
2. Exposure: C
3. Importance Factor: Iw = 1.15

D. **Seismic Loads:** The seismic lateral and vertical forces shall be calculated in accordance with the ASCE 7-05, Chapters 11 and 13, using the following design parameters:

1. Site Class: D
2. Seismic Use Group III
3. Seismic Design Category (SDC) D
4. Seismic Importance Factor: Ie = 1.25
5. Short Period Spectral Acceleration Ss = 0.558g
6. 1 Second Period Spectral Acceleration S1 = 0.199g

E. **Anchors:** Anchor bolts shall be in accordance with Section 05500 - Miscellaneous Metalwork, and shall be designed to resist the above loads. Anchor bolt calculations shall clearly show that the capacity of the anchor and the capacity of the concrete that the

anchor is embedded in are adequate to resist all loads stated in the 2009 IBC and ASCE 7-05, including lateral wind and lateral and vertical seismic loads. Reduction factors associated with edge distance, embed length, and bolt spacing shall all be considered and based on the actual dimensions of the concrete that resists the anchorage forces. Anchor bolt details shall include required bolt diameter, embed, and edge distances. Further, the design of Anchors shall consider the ductility requirements stated in ASCE 7-05, Chapter 13, Section 13.4.2 and Chapter 15, Section 15.7.3. Anchor bolt calculations and details shall be submitted and shall bear the signature and seal of a Registered Professional Engineer licensed in the State of Utah.

F. **Hydrodynamic Forces:** Hydrodynamic forces calculated in accordance with AWWA D100 or API 650 shall be based on the following parameters.

1.	Site Class:	D
2.	Seismic Use Group	III
3.	Seismic Design Category (SDC)	D
4.	Seismic Importance Factor:	Ie = 1.25
5.	Short Period Spectral Acceleration	Ss = 0.558g
6.	1 Second Period Spectral Acceleration	S1 = 0.199g

2.5 SAFETY SIGNS

A. Each tank shall be clearly marked with hazardous material warning signs, 10-inches by 14-inches in size. Each sign shall have the word "DANGER" and the name of the liquid stored, printed in large block letters and mounted directly adjacent to the tank outlet and tank inlet. Each entry manway shall be provided with a sign reading "DANGER--CONFINED SPACE--HAZARDOUS ATMOSPHERE". Signs shall comply with Section 10400 - Identifying Devices and the requirements herein.

2.6 HEAT TRACING AND INSULATION

A. The tank shall be provided with heat tracing system suitable for temperatures as low as minus 10 ^{o}F and to maintain the liquid temperature at 40 ^{o}F. Tank insulation for all but the cone part shall be provided by the tank manufacturer as recommended by heat tracing manufacturer. Additional insulation shall be provided to CONTRACTOR to repair any insulation damaged during shipment. Controls for the heat tracing shall be provided by tank manufacturer and Field installed by CONTRACTOR. Heat tracing manufacturer shall be Calorique or Equal.

2.7 FACTORY TESTING

A. Material Testing

1. Low temperature impact test: Condition samples taken from fitting cutouts frozen for 2 hours at minus 40 degrees F. Perform impact tests in accordance with ASTM D 1998. Specimens less than 1/2-in thick shall be tested at 100 ft.-lb. and specimens equal to or thicker than 1/2 -in shall be tested at 200 ft.-lb.

B. Tank Testing

1. Dimensions: Take exterior dimensions with the tank empty, in the vertical position. Outside diameter tolerance, including out-of-roundness, shall be per ASTM D 1998. Fitting placement tolerance shall be 1/2-in vertical and 2 degrees radial.

2. Visual: Inspect for foreign inclusions, air bubbles, pimples, crazing, cracking, and delamination.

3. Wall Thickness

   a. Tanks 2000 gal or larger shall be measured for wall thickness by ultrasonic methods at 6-in, 1-ft, 2-ft, and 3-ft up the sidewall at zero and 180 degrees around the circumference from the outlet.

   b. Tanks smaller than 2000 gal may be tested during a production run and the results reported as representative of each tank in the run.

4. Hydrostatic test: Following fabrication, the tanks, including inlet and outlet fittings, shall be hydraulically tested with water by filling to the brim for a minimum of 4 hours and inspecting for leaks. Following successful testing, the tank shall be emptied and dried prior to shipment.

C. An affidavit signed by the tank manufacturer shall be furnished indicating that the factory tests have been performed and the indicated requirements have been met.

2.8 MANUFACTURERS, OR EQUAL

A. **Hobbs Tank & Equipment, Inc.**

B. **Snyder Industries, Inc.**

C. **Poly Processing Company**

PART 3 -- EXECUTION

3.1 INSTALLATION

A. Installation shall be in accordance with the manufacturer's recommendations.

3.2 FIELD TESTING

A. After installation of tank and connections, the tank shall be water tested by filling the entire tank with water and monitoring the tank and connections for at least 24 hours. Leaks shall be corrected prior to acceptance. Following successful field testing, the tank shall be completely emptied and dried.

- END OF SECTION -

SECTION 15006 - PIPE SUPPORTS

PART 1 -- GENERAL

1.1 THE REQUIREMENT

A. The CONTRACTOR shall provide pipe supports, hangers, guides, and anchors, complete and in place, in accordance with the Contract Documents.

B. Where pipe support systems are not indicated on the Drawings, the CONTRACTOR shall design and provide the supports in accordance with this Section.

C. Pipe support details indicated in the Contract Drawings are not designed to resist seismic and wind forces. CONTRACTOR shall arrange for the services of a registered professional engineer experienced in pipe support design to design pipe supports. The CONTRACTOR shall provide additional supports as needed to resist such forces per 2009 IBC, ASCE 7-05 and section 2.4 below.

1.2 CONTRACTOR SUBMITTALS

A. Furnish submittals in accordance with Section 01300 - Contractor Submittals.

B. **Shop Drawings:** Shop Drawings shall include the following information:

1. Scaled Drawings of pipe supports, hangers, anchors, and guides showing type and placement.

2. Calculations for special supports and anchors.

PART 2 -- PRODUCTS

2.1 GENERAL REQUIREMENTS

A. **Code Compliance:** Piping systems and pipe connections to equipment shall be properly anchored and supported to prevent undue deflection, vibration, and dislocation due to seismic events, line pressures, pipe weight, fluid weight, liquid movement, thermal changes, vibration, probable forces applied during construction, and stresses on piping, equipment, and structures. Supports and parts thereof shall conform to the requirements of ASME B31.1 - Power Piping, except as supplemented or modified below. Supports for plumbing piping shall be in accordance with the latest edition of the applicable plumbing code or local administration requirements.

B. **Structural Members:** Wherever possible, pipes shall be supported from structural members. Where it is necessary to frame structural members between existing members, such supplementary members shall be provided by the CONTRACTOR. Supplementary members shall be in accordance with the requirements of the building code and the American Institute of Steel Construction and shall be as acceptable to the ENGINEER.

C. **Pipe Hangers:** Pipe hangers shall be capable of supporting the pipe in operation, allowing free expansion and contraction of the piping and preventing excessive stress on equipment. Hangers shall have a means of vertical adjustment after erection. Hangers

shall be designed to prevent becoming disengaged by any movement of the supported pipe. Hangers subject to shock, seismic disturbances, or thrust imposed by the actuation of safety valves shall include hydraulic shock suppressors. Hanger rods shall be subjected to vertical loading only.

D. **Hangers Subject to Horizontal Movements:** At hanger locations where lateral or axial movement is anticipated, suitable linkage shall be provided to permit such movement. Where horizontal pipe movement is greater than 1/2-inch, or where the hanger rod deflection from the vertical is greater than 4 degrees from the cold to the hot position of the pipe, the hanger rod and structural attachment shall be offset in such a manner that the rod is vertical in the hot position.

E. **Spring-Type Hangers:** Spring-type pipe hangers shall be provided for piping subject to vibration or vertical expansion and contraction, such as engine exhausts and similar piping. Spring-type hangers shall be sized to the manufacturer's printed recommendations and the loading conditions encountered. Variable spring supports shall be provided with means to limit misalignment, buckling, eccentric loading, or to prevent overstressing of the spring, and with means to indicate the compression of the spring. Supports shall be capable of accommodating at least 4 times the maximum travel due to thermal expansion.

F. **Thermal Expansion:** Wherever expansion and contraction of piping is expected, a sufficient number of expansion loops or expansion joints shall be provided, together with the necessary rolling or sliding supports, anchors, guides, pivots, and restraints permitting the piping to expand and contract freely away from the anchored points. Components shall be structurally suitable to withstand loads imposed.

G. **Heat Transmission:** Supports, hangers, anchors, and guides shall be so designed and insulated that excessive heat will not be transmitted to the structure or to other equipment.

H. **Riser Supports:** Where practical, risers shall be supported on each floor with riser clamps and lugs, independent of the connected horizontal piping.

I. **Freestanding Piping:** Free-standing pipe connections to equipment such as chemical feeders and pumps shall be firmly attached to steel frames fabricated from angles, channels, or I-beams anchored to the structure. Exterior, free-standing overhead piping shall be supported on fabricated pipe stands consisting of pipe columns anchored to concrete footings, or with horizontal, welded steel angles, and U-bolts or clamps securing the pipes.

J. Materials of Construction

1. General: Pipe support assemblies, including framing, hardware, and anchors, shall be steel construction, galvanized after fabrication, unless otherwise indicated.

2. Submerged Supports: Submerged supports, as well as piping, conduits, and equipment in hydraulic structures within 24-inches of the water level, shall be supported with support assemblies, including framing, hardware, and anchors constructed of Type 316 stainless steel, unless otherwise indicated.

3. Corrosive: Piping in chemical and corrosive areas shall be supported with support assemblies, including framing, hardware, and anchors constructed of Type 316 stainless steel or FRP, unless otherwise indicated.

K. **Point Loads:** Any meters, valves, heavy equipment, and other point loads on PVC, FRP, and other plastic pipes, shall be supported on both sides, according to manufacturer's recommendations to avoid undue pipe stresses and failures. To avoid point loads, supports on PVC, FRP, and other plastic piping shall be equipped with extra wide pipe saddles or galvanized steel shields.

L. **Concrete Anchors:** Unless otherwise indicated, concrete anchors for pipe supports shall be according to the following table. Consult the ENGINEER for any anchor applications not on the table. Anchor embedment shall comply with Section 05500.

Pipe Support Application	Type of Concrete Anchor
New Concrete	Use embedded concrete insert anchors on a grid pattern. Use **Grinnell (Anvil International), Tolco**, or equal.
Existing Concrete	Use non-shrink grouted anchors, metallic type expansion anchors, or epoxy anchors. Exceptions: Metallic type expansion anchors and epoxy anchors are not permitted for pipe supports subject to vibrating loads. Epoxy anchors are not permitted where the concrete temperature is in excess of 100 deg F or higher than the limiting temperature recommended by the manufacturer. Epoxy anchors are not accepted where anchors are subject to vibration or fire.
Vibratory Loads and High Temperature Conditions	Use non-shrink grouted anchors

M. **Noise Reduction:** To reduce transmission of noise in piping systems, copper tubes in buildings and structures shall be wrapped with a 2-inch wide strip of rubber fabric or similar, suitable material at each pipe support, bracket, clip, or hanger.

2.2 SUPPORT SPACING

A. Supports for piping with the longitudinal axis in approximately a horizontal position shall be spaced to prevent excessive sag, bending, and shear stresses in the piping, with special consideration given where components such as flanges and valves impose concentrated loads. Pipe support spacing shall not exceed the maximum spans in the tables below. For temperatures other than ambient temperatures or those listed, and for other piping materials or wall thicknesses, the pipe support spacings shall be modified in accordance with the pipe manufacturer's recommendations. Vertical supports shall be

provided to prevent the pipe from being overstressed from the combination of loading effects.

B. Where support spacing is not indicated on the Drawings, the CONTRACTOR shall use the spacing below.

1. Support Spacing for Schedule 40 and Schedule 80 Steel Pipe

Nominal Pipe Diameter, in	Maximum Span, feet
1/2	6
3/4 and 1	8
1-1/4 to 2	10
3	12
4	14
6	17
8 and 10	19
12 and 14	23
16 and 18	25
20 and greater	30

2. Support Spacing for Welded Fabricated Steel Pipe

Maximum Spans for Pipe Supported in Minimum 90 degree Contact Saddles, feet

Nominal Pipe Diameter, inches	Pipe Wall Thickness, inches									
	3/16	1/4	5/16	3/8	7/16	1/2	5/8	3/4	7/8	1
24	33	37	41	43	45	47				
26	34	38	41	44	46	48				
28	34	38	41	44	47	49				
30	34	38	42	45	48	49				
32	34	39	42	45	48	50				
34	35	39	43	46	48	50				
36	35	39	43	46	49	51	55			
38	35	39	43	46	49	51	55			
40	35	40	43	47	49	52	56			
42	35	40	44	47	50	52	56			

45	--	40	44	47	50	53	57			
48	--	40	44	47	50	53	58	61		
51	--	40	44	48	51	53	58	62		
54	--	40	44	48	51	54	58	62		
57	--	41	45	48	51	54	59	63		
60	--	41	45	48	52	54	59	63	67	70
63	--	41	45	49	52	55	60	64	67	71
66	--	41	45	49	52	55	60	64	68	71
72	--	41	45	49	52	55	61	65	69	72
78	--	41	46	49	53	56	61	66	69	73
84	--	41	46	50	53	56	62	66	70	74
90	--	41	46	50	53	56	62	67	71	74
96	--	42	46	50	54	57	62	67	71	75

For steel pipe sizes not presented in this table, the support spacing shall be designed so that the stress on the pipe does not exceed 5,000 psi. Maximum deflection of pipe shall be limited to 1/360th of the span and shall be calculated by using the formula:

$$L = (7500tD/(32t+D))^{1/2}$$

where: t = Thickness, inches
D = Diameter, inches
L = Maximum span, feet

3. Support Spacing for Ductile-Iron Pipe

Nominal Pipe Diameter, inches	**Maximum Span, feet**
All Diameters	Two supports per pipe length or 10-feet (one of the 2 supports located at joint)

4. Support Spacing for Copper Tubing

Nominal Pipe Diameter, inches	**Maximum Span, feet**
1/2 to 1-1/2	6
2 to 4	10
6 and greater	12

5. Support Spacing for Schedule 80 PVC Pipe

Nominal Pipe Diameter, inches	**Maximum Span At 100 deg F, feet**

1/2	4
3/4	4.5
1	5
1-1/4	5.5
1-1/2	5.75
2	6.25
3	7.5
4	8.25
6	10
8	11
10	12.25
12	13.25

6. Support Spacing for Schedule 80 Polypropylene Pipe

Nominal Pipe Diameter, inches	**Maximum Span at 100 deg F, feet**
1/2	3
3/4	3.5
1	3.75
1-1/4	4
1-1/2	4.25
2	4.5
3	5.5
4	6
6	7.25
8	8
10	8.75

12	9.5

7. Support Spacing for Fiberglass Reinforced Plastic (FRP) Pipe

Nominal Pipe Diameter, inches	**Maximum Span at 100 deg F, feet**
2	8.8
3	10
4	11
6	12.7
8	13.4
10	14
12	15.4
14	16.2
16	17.3
18 and greater	18

2.3 MANUFACTURED SUPPORTS

A. **Stock Parts:** Where not specifically indicated, designs that are generally accepted as exemplifying good engineering practice and using stock or production parts shall be utilized wherever possible. Such parts shall be locally available, new, of best commercial quality, designed and be rated for the intended purpose.

B. Manufacturers, or Equal

1. **Basic Engineers Inc**.

2. **Bergen-Paterson Pipe Support Corp**.

3. **Grinnell Corp. (Anvil International)**

4. **NPS Products, Inc**.

5. **Power Piping Company**

6. **Tolco Incorporated**

2.4 SUPPORT REQUIREMENT FOR VERTICAL AND LATERAL FORCES

A. **General:** Unless otherwise indicated, equipment supports, anchors, and restrainers shall be adequately designed for static, dynamic, wind, and seismic loads as stated in the 2009 International Building Code (IBC), Chapter 16 and ASCE 7-05. Submitted design calculations for equipment supports and anchorage shall bear the signature and seal of an Registered Professional Engineer licensed in the State of Utah, unless otherwise indicated. Calculations shall account for forces and distribution of forces on supporting structures resulting from normal operation, normal operation plus seismic loadings, normal operation plus wind loadings, as well as the other load combinations stated the 2009 IBC.

B. **Wind Load:** The wind load shall be calculated in accordance with ASCE 7-05, Chapter 6, using the following design parameters:

1.	Wind Speed:	90 mph
2.	Exposure:	C
3.	Importance Factor:	Iw = 1.15

C. **Seismic Loads:** The seismic lateral and vertical forces shall be calculated in accordance with the ASCE 7-05, Chapters 11 and 13, using the following design parameters:

1.	Site Class:	D
2.	Seismic Use Group	III
3.	Seismic Design Category (SDC)	D
4.	Seismic Importance Factor:	Ie = 1.25
5.	Short Period Spectral Acceleration	Ss = 0.558g
6.	1 Second Period Spectral Acceleration	S1 = 0.199g

D. **Anchors:** Anchor bolts shall be in accordance with Section 05500 - Miscellaneous Metalwork, and shall be designed to resist the above loads. Anchor bolt calculations shall clearly show that the capacity of the anchor and the capacity of the concrete that the anchor is embedded in are adequate to resist all loads stated in the 2009 IBC and ASCE 7-05, including lateral wind and lateral and vertical seismic loads. Reduction factors associated with edge distance, embed length, and bolt spacing shall all be considered and based on the actual dimensions of the concrete that resists the anchorage forces. Anchor bolt details shall include required bolt diameter, embed, and edge distances. Further, the design of Anchors shall consider the ductility requirements stated in ASCE 7-05, Chapter 13, Section 13.4.2 and Chapter 15, Section 15.7.3 Anchor bolt calculations and details shall be submitted and shall bear the signature and seal of a Registered Professional Engineer licensed in the State of Utah.

E. **Pipe Support Bases:** Pipe support bases are indicated on the Drawings. The CONTRACTOR, through the support manufacturer, shall verify the size and anchor bolt

layout to insure compatibility with base. The dimensions of all concrete bases shall be sufficient to provide the edge distances required by the anchor bolt calculations.

2.5 COATING

A. **Galvanizing:** Unless otherwise indicated, fabricated pipe supports other than stainless steel or non-ferrous supports shall be blast-cleaned after fabrication and hot-dip galvanized in accordance with ASTM A 123 - Zinc (Hot-Dip Galvanized) Coatings on Iron and Steel Products.

B. **Other Coatings:** Other than stainless steel or non-ferrous supports, supports shall receive protective coatings in accordance with the requirements of Section 09800 - Protective Coating.

PART 3 -- EXECUTION

3.1 INSTALLATION

A. **General:** Pipe supports, hangers, brackets, anchors, guides, and inserts shall be fabricated and installed in accordance with the manufacturer's printed instructions and ASME B31.1 - Power Piping. Concrete inserts for pipe hangers and supports shall be coordinated with the formwork.

B. **Appearance:** Pipe supports and hangers shall be positioned to produce an orderly, neat piping system. Hanger rods shall be vertical, without offsets. Hangers shall be adjusted to line up groups of pipes at the proper grade for drainage and venting, as close to ceilings or roofs as possible, without interference with other WORK.

3.2 FABRICATION

A. **Quality Control:** Pipe hangers and supports shall be fabricated and installed by experienced welders and fitters, using the best welding procedures available. Fabricated supports shall be neat in appearance without sharp corners, burrs, and edges.

- END OF SECTION -

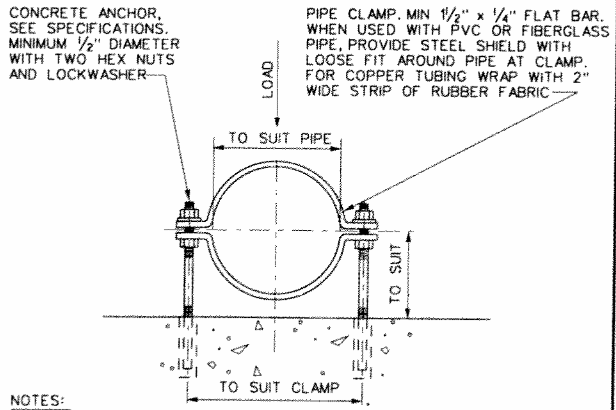

NOTES:

1. GALVANIZE ALL PARTS AFTER FABRICATION. WHERE SUBMERGED, PIPE CLAMP, NUTS, LOCKWASHERS, ANCHORS AND SHIELDS TO BE TYPE 316 STAINLESS STEEL
2. THIS PIPE CLAMP IS LIMITED TO PIPES UP TO 4" DIAMETER INCLUSIVE
3. FOR ADDITIONAL REQUIREMENTS SEE SPECIFICATIONS SECTION 'PIPE SUPPORTS'

PIPE CLAMP

(FOR PIPE 4" DIAMETER AND SMALLER) REV 042202 M-101

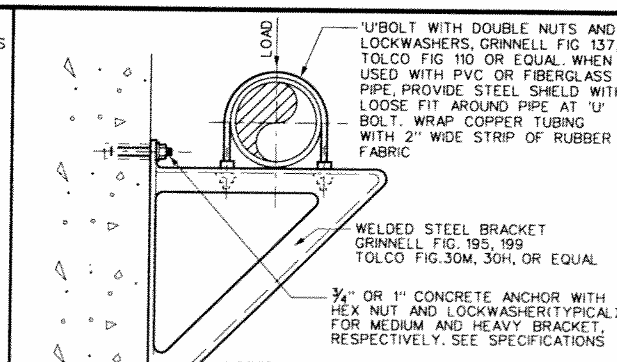

NOTES :

1. GALVANIZE ALL PARTS AFTER FABRICATION. WHERE SUBMERGED, BRACKET, 'U' BOLT, LOCKWASHERS, AND ANCHORS TO BE TYPE 316 STAINLESS STEEL
2. THIS PIPE BRACKET IS LIMITED TO PIPES UP TO 24" DIAMETER, INCLUSIVE
3. THIS PIPE BRACKET SHALL ONLY BE USED ON CONC WALLS WITH A MIN THICKNESS OF 12 INCHES.
4. FOR ADDITIONAL REQUIREMENTS SEE SPECIFICATION SECTION 'PIPE SUPPORTS'.

PIPE BRACKET

(FOR PIPE 24" DIAMETER AND SMALLER) REV 072501 M-104

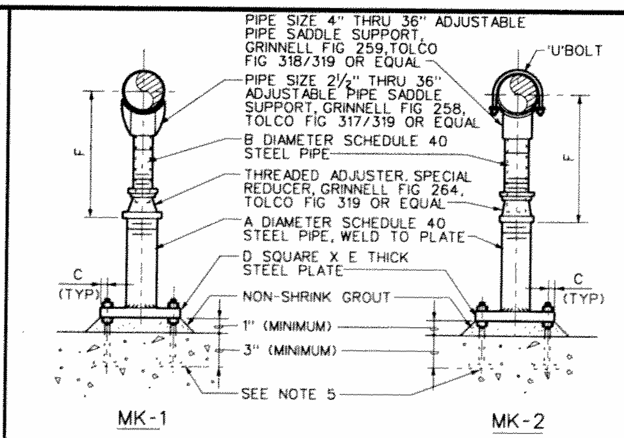

NOTES:

1. FOR ADDITIONAL REQUIREMENTS SEE SPEC SECTION 'PIPE SUPPORTS'.
2. GALVANIZE ALL PARTS AFTER FABRICATION.
3. WHERE PIPE SUPPORT OCCURS ON GRADE REFER TO STRUCTURAL DRAWINGS FOR DETAILS.
4. THIS PIPE SUPPORT IS LIMITED TO PIPE FROM 2 1/2" DIAMETER TO 36" DIAMETER INCLUSIVE.
5. GALVANIZED ANCHOR BOLT OR CONCRETE ANCHOR WITH TWO NUTS AND ONE LOCKWASHER. PROVIDE BAR 4 X 1/2 X 4" WELDED TO BOLT. (TYP OF 4) SEE SPECIFICATIONS.

DIMENSIONS IN INCHES							
NOMINAL PIPE SIZE	A	B	C	D	E	F (APPROX) (MINIMUM)	F (APPROX) (MAXIMUM)
2 1/2	2	1 1/2	1	6	3/8	7	11 1/2
3	2	1 1/2	1	6	3/8	7 5/16	11 13/16
3 1/2	2	1 1/2	1	6	3/8	7 9/16	12 1/16
4	3	•2 1/2/3	1 1/8	7 1/2	1/2	10 1/4	14 3/4
6	3	•2 1/2/3	1 1/8	7 1/2	1/2	11 9/16	16 1/16
8	3	•2 1/2/3	1 1/8	7 1/2	1/2	13 9/16	18 1/16
10	3	•2 1/2/3	1 1/8	7 1/2	1/2	14 5/8	19 1/8
12	3	•2 1/2/3	1 1/8	7 1/2	1/2	15 5/8	20 1/8
14	4	3	1 1/4	9	5/8	18 7/8	23 3/8
16	4	3	1 1/4	9	5/8	19 7/8	24 3/8
18	6	4	1 1/2	11	3/4	22 1/4	26 3/4
20	6	4	1 1/2	11	3/4	23 1/4	27 3/4
24	6	4	1 1/2	11	3/4	26 1/2	31
30	6	4	1 1/2	11	3/4	29 5/8	34 1/8
32	6	4	1 1/2	11	3/4	30 5/8	35 1/8
36	6	4	1 1/2	11	3/4	32 5/8	37 1/8

• SEE MANUFACTURER

ADJUSTABLE PIPE SUPPORT WITH OR WITHOUT 'U' BOLT

REV 011402 M-108

(FOR PIPE 36" DIAMETER AND SMALLER)

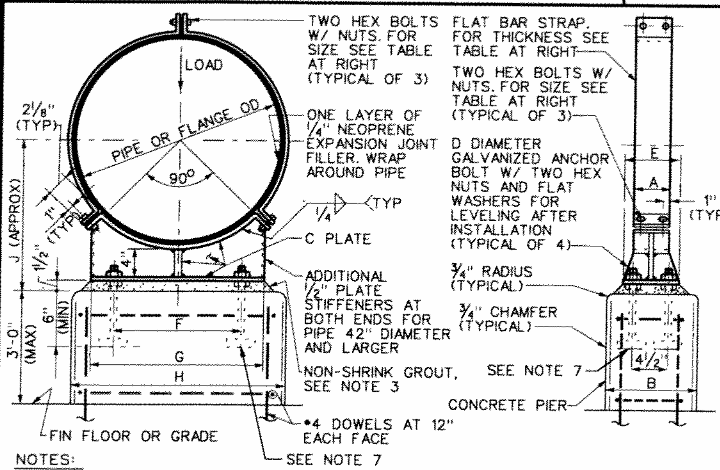

NOTES:

1. WHEN SUPPORTING PIPE AND FLANGE ALTERNATELY ON THE SAME LINE, CONCRETE PIERS FOR PIPE SUPPORTS SHALL ALL HAVE THE SAME DIMENSION 'H' FOR FLANGE SUPPORT
2. PIPE SUPPORTS SHALL BE LOCATED IN PLAN AT POINTS MARKED THUS: (X)
3. WHERE DIFFERENTIAL SETTLEMENT IS LIKELY TO OCCUR, OMIT GROUT AS DIRECTED BY THE ENGINEER
4. GALVANIZE ALL PARTS AFTER FABRICATION
5. WHERE DIRECTED BY THE STRUCTURAL ENGINEER, BOTTOM OF PIERS SHALL EXTEND BELOW BOTTOM OF SLAB
6. WHERE PIPE SUPPORT OCCURS ON GRADE REFER TO STRUCTURAL DRAWINGS FOR DETAILS
7. GALVANIZED ANCHOR BOLT OR CONCRETE ANCHOR WITH TWO NUTS AND ONE LOCKWASHER. PROVIDE BAR 4 X 1/2 X 4" WELDED TO BOLT. (TYP OF 4) SEE SPECIFICATIONS

DIMENSIONS IN INCHES																
NOMINAL PIPE SIZE						STRAP		SUPPORTING PIPE				SUPPORTING FLANGE				
	A	B	C	D	E	BOLT SIZE	FLAT BAR	F	G	H	J	F	G	H	J
6	4	12	3/8	5/8	6	1/2	1/4	4 1/2	8	14	10	6 1/2	11	16	13
8	4	12	3/8	5/8	6	1/2	1/4	5	9 1/2	14	11	7 1/2	13	18	14
10	4	12	3/8	5/8	6	1/2	1/4	6	11	16	12	9	15	20	15
12	4	12	3/8	5/8	6	1/2	1/4	7	13	18	13	10	17	22	16
14	4	12	3/8	5/8	6	1/2	1/4	8	13	18	14	11	18	23	17
16	4	12	3/8	5/8	6	1/2	1/4	9	15	21	15	12	20	26	18
18	4	12	3/8	5/8	6	1/2	1/4	10	16	22	16	13	21	26	19
20	5	12	3/8	5/8	6	5/8	3/8	10	18	24	17	15	23	28	21
22	5	12	3/8	5/8	6	5/8	3/8	12	19	24	18	16	25	30	22
24	5	12	3/8	5/8	6	5/8	3/8	13	21	26	19	16	26	32	23
26	5	12	3/8	3/4	6	5/8	3/8	14	22	28	20	18	28	34	24
30	5	12	3/8	3/4	6	5/8	3/8	16	25	30	22	20	31	36	26
34	5	15	3/8	3/4	6	5/8	3/8	18	28	33	24	22	35	41	29
36	6	15	3/8	3/4	6	3/4	3/8	19	29	34	25	24	36	42	30
42	6	18	1/2	1	8	3/4	3/8	21	33	39	28	27	41	47	33
48	6	18	1/2	1	8	3/4	3/8	24	38	44	31	30	46	52	37
54	6	18	1/2	1	8	3/4	3/8	28	42	48	34	34	50	56	40
60	6	18	1/2	1 1/8	8	3/4	3/8	32	46	52	37	36	56	62	44
66	6	18	1/2	1 1/8	8	3/4	3/8	33	51	58	40	40	61	68	47
72	6	18	1/2	1 1/8	8	3/4	3/8	36	55	62	43	44	65	72	50

PIPE SUPPORT WITH STRAP

(FOR PIPE 72" DIAMETER AND SMALLER) REV 011402 M-110

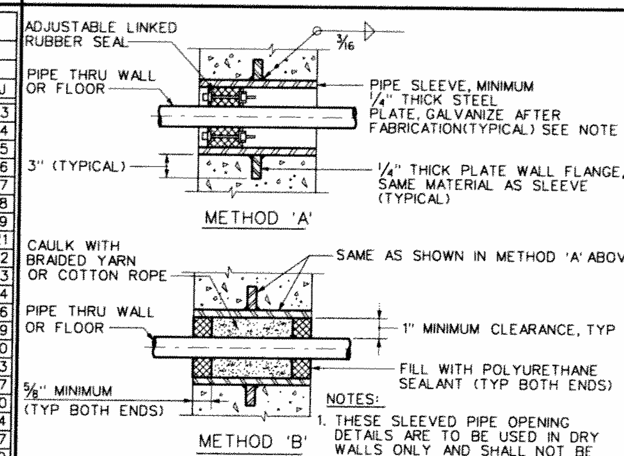

NOTES:

1. THESE SLEEVED PIPE OPENING DETAILS ARE TO BE USED IN DRY WALLS ONLY AND SHALL NOT BE USED FOR WALLS WITH WATER ON ONE OR BOTH SIDES.
2. SLEEVES ARE NOT REQUIRED IN CORE DRILLED WALLS, PENETRATIONS THROUGH EXISTING WALLS, OR FLOORS

SLEEVED PIPE OPENING

REV 011402 M-111

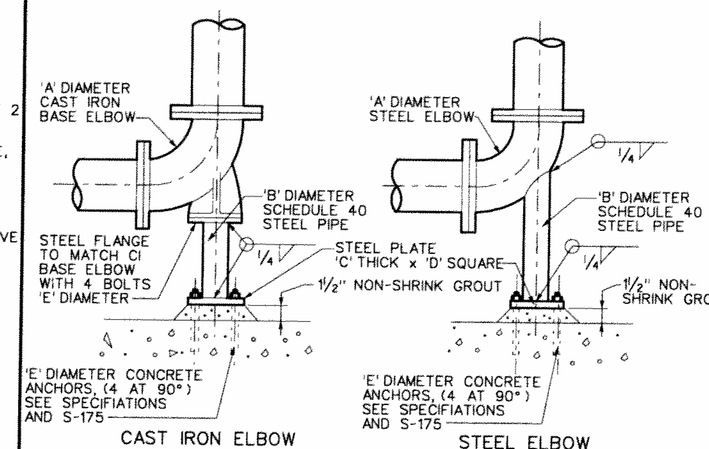

NOTE:

FOR ADDITONAL REQUIREMENTS SEE SPECIFICATION SECTION 'PIPE SUPPORTS'.

DIMENSIONS IN INCHES				
ELBOW 'A' DIAMETER	'B' DIAMETER	'C' THICK	'D' SQUARE	'E' DIAMETER
4	2	3/8	6	5/8
6	2 1/2	3/8	7	5/8
8	4	1/2	9	5/8
10	4	1/2	9	5/8
12	6	1/2	11	3/4
14	6	1/2	11	3/4
16	6	1/2	11	3/4
18	8	1/2	13 1/2	3/4
20	8	1/2	13 1/2	3/4
24	8	1/2	13 1/2	3/4
30	10	3/4	16	7/8
36	12	3/4	19	7/8
42	16	3/4	23 1/2	1
48	18	3/4	25	1 1/8

ELBOW SUPPORT

(FOR PIPE 48" DIAMETER AND SMALLER) REV 062702 M-140

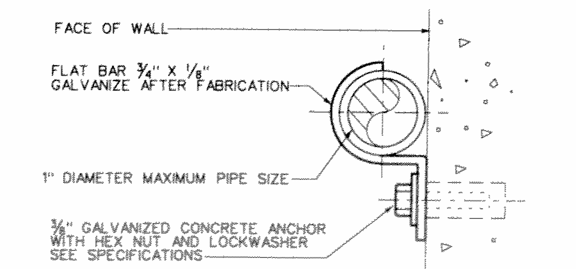

NOTES:

1. WHERE SUBMERGED, FLAT BAR, BOLT, WASHER, SHIELD AND CONCRETE ANCHOR TO BE TYPE 316 STAILESS STEEL
2. WHEN USED WITH PVC OR FIBERGLASS PIPE, PROVIDE STEEL SHIELD WITH LOOSE FIT AROUND PIPE AT CLAMP. WRAP COPPER TUBING WITH 2" WIDE STRIP OF RUBBER FABRIC AT CLAMP.
3. FOR ADDITIONAL REQUIREMENTS SEE SPECIFICATION SECTION 'PIPE SUPPORTS'

PIPE CLAMP FOR INDIVIDUAL PIPES

(FOR PIPE 1" DIAMETER AND SMALLER) REV 072501 M-142

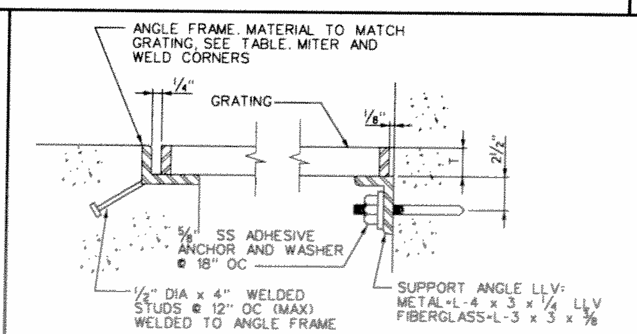

GRATING FRAME TABLE SIZED TO MATCH GRATING (FOR FIBERGLASS USE CONTINUOUS PULTRUDED FIBERGLASS SEAT & ANCHOR)				
GRATING DEPTH T	FRAME ANGLE (STEEL)		GRATING DEPTH T	FRAME ANGLE
1"	1 1/4x1 1/4x1/4 (1 1/4X1 1/4X1/4)		2"	•2 1/2 x 2 1/2 x 1/2
1 1/4"	2 x 1 1/2 x 1/4 (1 1/2X 1 1/2X 1/4)		2 1/4"	2 1/2 x 2 1/2 x 1/4
1 1/2"	1 3/4 x 1 3/4 x 1/4		2 1/2"	3 x 3 x 1/2
1 3/4"	2 x 2 x 1/4			

• OR USE 2 1/2 x 2 1/2 x 1/4 W/1/4" SHIM PLATE WELDED TO BOTTOM

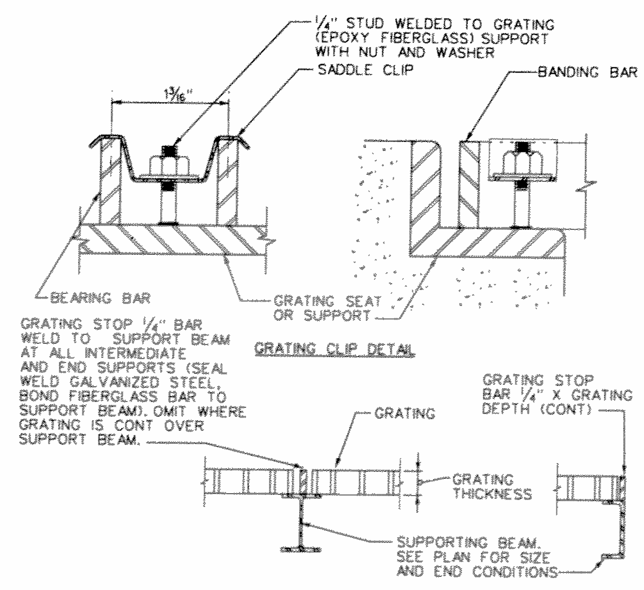

NOTES:

1. UNLESS INDICATED OTHERWISE, ALL GRATING SHALL BE ALUMINUM
2. GRATING DEPTH TO BE DETERMINED BY MANUFACTURER AND APPROVED BY ENGINEER (UNO)
3. ALL ENDS AND OPENINGS SHALL BE BANDED
4. WEIGHT OF GRATING SECTION SHALL NOT EXCEED 80 LBS
5. METAL BEARING BARS SHALL BE DEPTH T x 3/16" @ 1 3/16" OC CROSS BARS SHALL BE @ 4" OC
6. PROVIDE A MINIMUM OF 4 CLIPS PER GRATING PANEL, APPROX 4" FROM PANEL CORNERS. MAXIMUM CLIP SPACING AT 36" OC
7. MATERIALS:
   a. ALUMINUM GRATING - USE ALUMINUM ANGLE SUPPORTS AND STAINLESS STEEL BOLTS AND CLIPS.
   b. GALVANIZED STEEL GRATING - USE STEEL ANGLE SUPPORTS, BOLTS AND CLIPS. GALVANIZE AFTER FABRICATION
   c. STAINLESS STEEL GRATING - USE STAINLESS STEEL ANGLE SUPPORTS, BOLTS AND CLIPS
   d. FIBERGLASS GRATING - USE FIBERGLASS FOR ALL COMPONENTS EXCEPT DRILLED ANCHORS; ALL CUT EDGES SHALL BE SEALED WITH RESIN; BONDING: USE EPOXY ADHESIVE BONDING AGENT

GRATING

M-901

REGISTERED PROFESSIONAL ENGINEER No. 501206-2202 NATHAN W. ZAUGG STATE OF UTAH

REV	DATE	BY	DESCRIPTION
2	7-29-10	RD	ISSUED FOR BID
1	7-13-10	NZ	ISSUED FOR BID

SCALE: NONE

DESIGNED MWH STANDARD
DRAWN MWH STANDARD
CHECKED N. ZAUGG

SUBMITTED BY
NATHAN ZAUGG (PROJECT MANAGER'S NAME) 501206-2202 LICENSE NO. 7-13-10 DATE
STAN POSTMA (COMPANY OFFICER'S NAME) 5149 LICENSE NO. 7-13-10 DATE

MWH

Utah Division of Wildlife Resources
Kamas Fish Hatchery
SOLIDS DISPOSAL PROJECT

MECHANICAL STANDARD DETAILS

SHEET GM-2

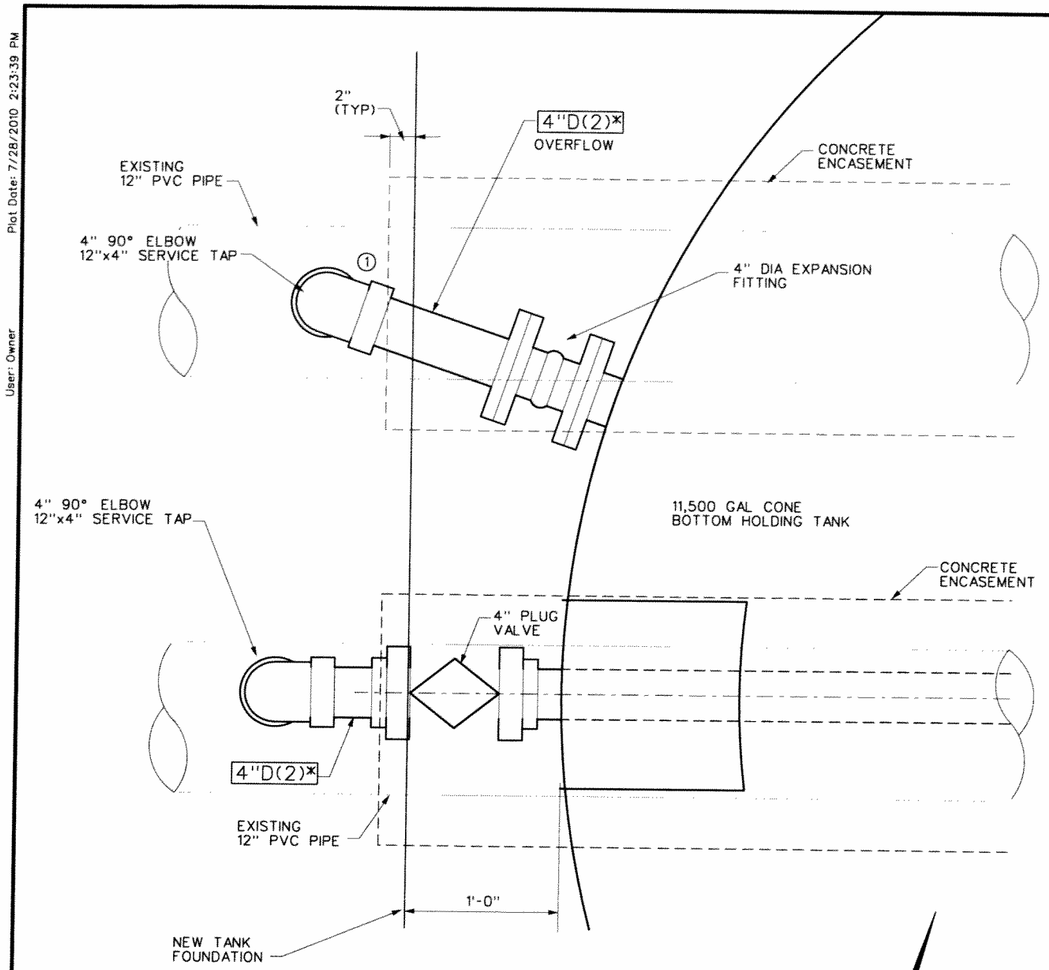

ENLARGEMENT 2 M-1

0 ¼ ½ 1 (SCALE IN FEET)

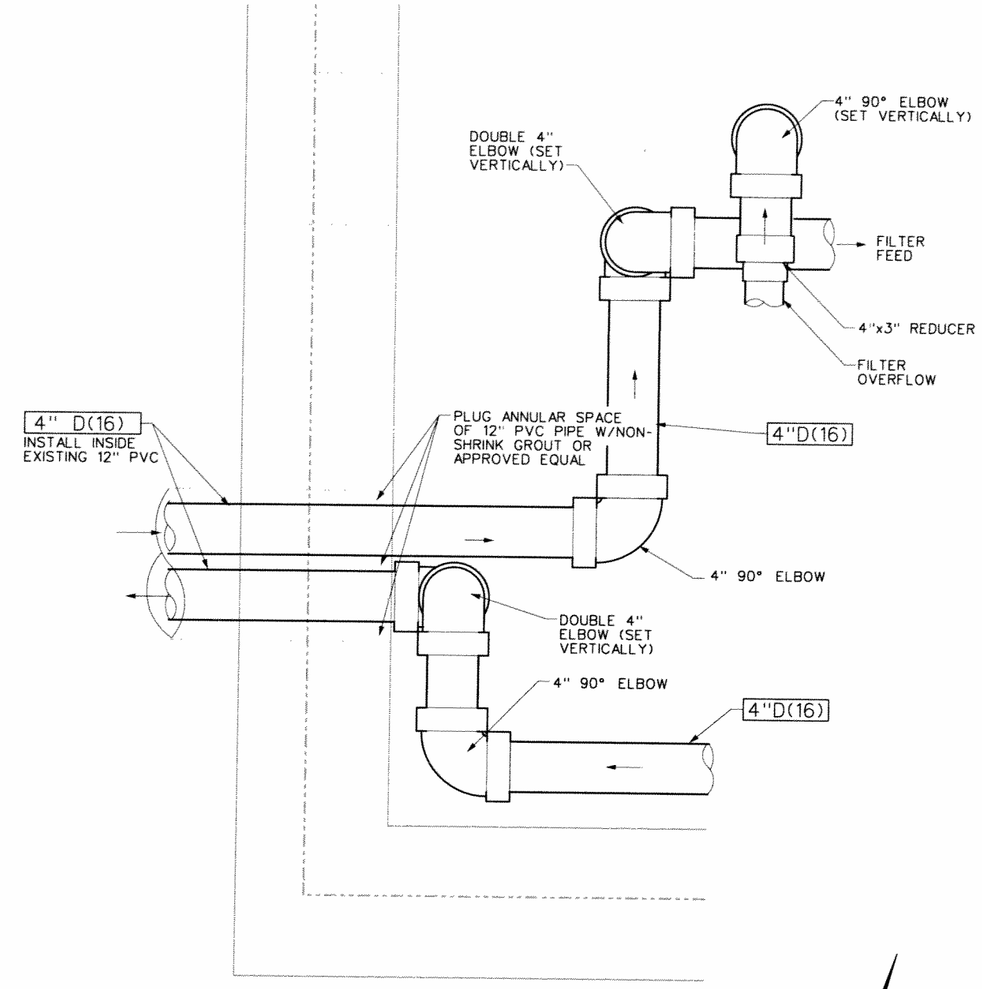

ENLARGEMENT 3 M-1

0 ¼ ½ 1 (SCALE IN FEET)

NOTES:

1. CONTRACTOR SHALL INDEPENDENTLY SUPPORT ALL PIPES CONNECTED TO THE TANK. A GALVANIZED STEEL STRUT SHALL BE PROVIDED AND DESIGNED TO WITHSTAND SEISMIC, WIND, AND SNOW LOADS. CALCULATIONS SHALL BE STAMPED BY A STRUCTURAL ENGINEER REGISTERED IN THE STATE OF UTAH.

REGISTERED PROFESSIONAL ENGINEER No. 501206-2202 NATHAN W. ZAUGG 8/2/2010 STATE OF UTAH

REV	DATE	BY	DESCRIPTION
2	7-29-10	RD	ISSUED FOR BID
1	7-13-10	NZ	ISSUED FOR BID

SCALE: AS SHOWN

DESIGNED R. DIAZ
DRAWN S. SOLLIE
CHECKED N. ZAUGG

SUBMITTED BY
NATHAN ZAUGG (PROJECT MANAGER'S NAME) 501206-2202 LICENSE NO. 7-13-10 DATE
STAN POSTMA (COMPANY OFFICER'S NAME) 5149 LICENSE NO. 7-13-10 DATE

MWH

Utah Division of Wildlife Resources
Kamas Fish Hatchery
SOLIDS DISPOSAL PROJECT

MECHANICAL DETAILS

SHEET GM-4

File: K-GM04.DGN Model: Model DesignScript: MWH_Mstn_Pentable_V85.tbl PlotScale: 1.0000 1 / in. User: Owner Plot Date: 7/28/2010 2:23:39 PM

Plot Date: 7/28/2010 2:46:36 PM
User: Owner
File: k-M003.DGN Model: Model DesignScript: MWH_Mstn_Pentable_V85.tbl PlotScale: 4.0000 " / in.

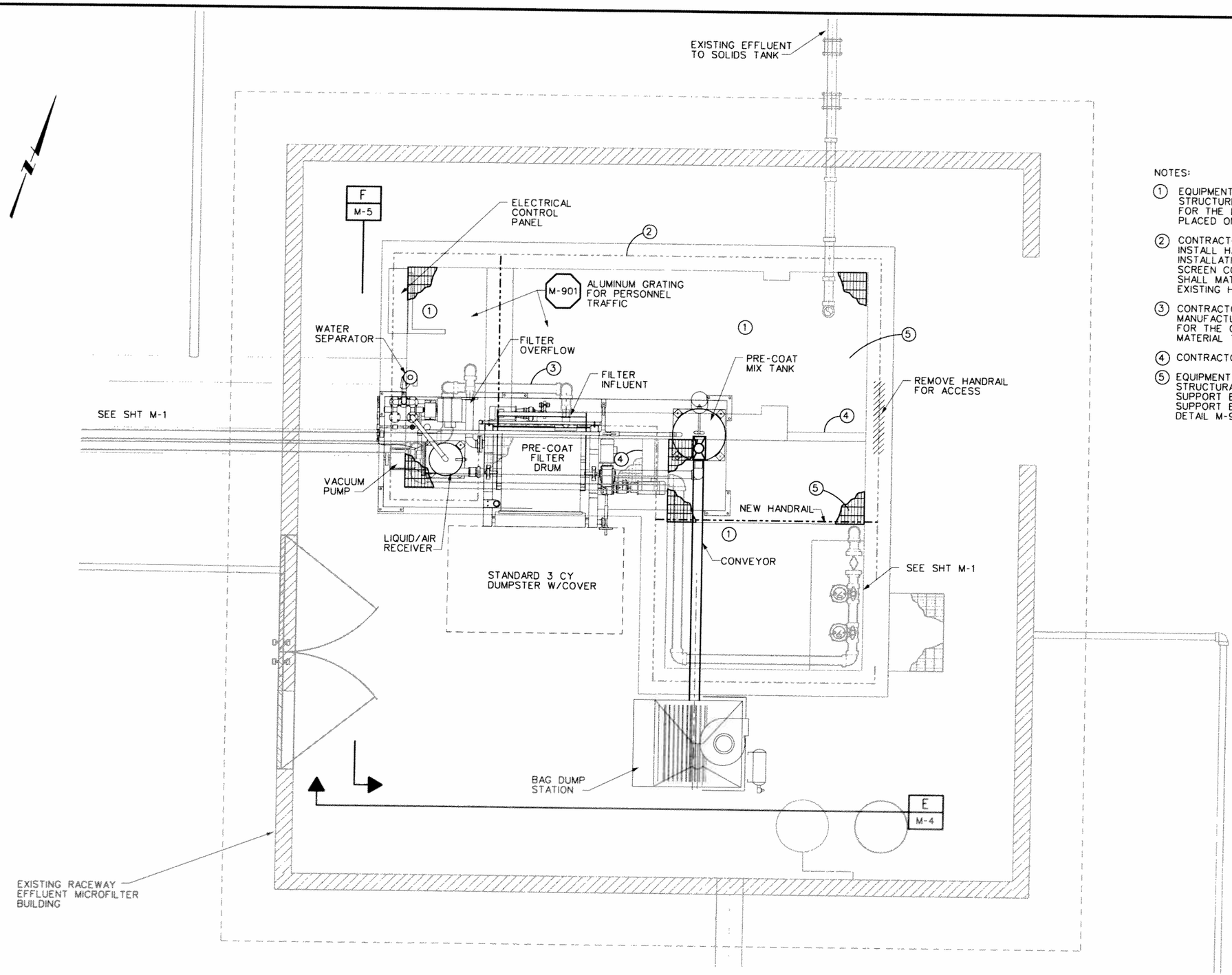

NOTES:

1. EQUIPMENT SHALL BE PLACED ON INDEPENDANT STRUCTURES DESIGNED BY A STRUCTURAL ENGINEER FOR THE LOADS ANTICIPATED AND SHALL NOT BE PLACED ON THE NEW GRATING.
2. CONTRACTOR SHALL REMOVE, RELOCATE AND OR INSTALL HANDRAILING WHERE NEEDED, AFTER INSTALLATION OF VACUUM FILTER AND FLEXIBLE SCREEN CONVEYOR. HANDRAIL AND APPURTENANCES SHALL MATCH STYLE, MATERIAL AND FINISH OF EXISTING HANDRAIL.
3. CONTRACTOR SHALL COORDINATE WITH EQUIPMENT MANUFACTURER AND INSTALL ALL PIPING REQUIRED FOR THE OPERATION OF THE VACUUM FILTER. PIPE MATERIAL TO BE GROUP 16.
4. CONTRACTOR SHALL REMOVE EXISTING GATES.
5. EQUIPMENT MANUFACTURER SHALL PROVIDE STRUCTURAL CALCULATIONS AND SHALL DESIGN THE SUPPORT BEAMS AND THE ANCHORING SYSTEM TO SUPPORT EQUIPMENT PLATFORM AND GRATING. SEE DETAIL M-901/GM-2 FOR GRATING REQUIREMENTS.

REGISTERED PROFESSIONAL ENGINEER
No. 501206-2202
NATHAN W. ZAUGG
7/2/2010
STATE OF UTAH

REV	DATE	BY	DESCRIPTION
2	7-29-10	RD	ISSUED FOR BID
1	7-13-10	NZ	ISSUED FOR BID

SCALE: 0 1 2 4 (SCALE IN FEET)

DESIGNED R. DIAZ
DRAWN S. SOLLIE
CHECKED N. ZAUGG

SUBMITTED BY
NATHAN ZAUGG (PROJECT MANAGER'S NAME) 501206-2202 LICENSE NO. 7-13-10 DATE
STAN POSTMA (COMPANY OFFICER'S NAME) 5149 LICENSE NO. 7-13-10 DATE

MWH

Utah Division of Wildlife Resources
Kamas Fish Hatchery
SOLIDS DISPOSAL PROJECT

PRECOAT VACUUM FILTER LAYOUT

SHEET M-3