GREAT SALT LAKE
MARINA MAINTENANCE BUILDING

13312 WEST 1075 SOUTH
MAGNA, UTAH 84044

CONSTRUCTION DOCUMENTS SEPTEMBER 2, 2010

DFCM # 10029510

MHTN ARCHITECTS, INC.
420 East South Temple
Suite 100
Salt Lake City, Utah 84111
Telephone (801) 595-6700
Telefax (801) 595-6717
www.mhtn.com

JAMES T. DRESSLAR
ARCHITECT, L.L.C.
387 PARK LANE
MOAB, UTAH 84532
435.259.1155 PHONE / FAX

ABBREVIATIONS

AHU	AIR HANDLING UNIT
B	BUSINESS
BDP	BRANCH DISTRIBUTION PANEL
B.O.	BOTTOM OF
CFMF	COLD FORMED METAL FRAMING
CJ	CONTROL JOINT
CW	CASEWORK
CO2P	CARBON DIOXIDE SENSOR PANEL
COMP	COMPRESSOR
D	DRYER / DEEP
DFCM	DIVISOIN OF FACILITIES AND CONTRUCTION MANAGEMENT
DL	DEEP LEG
DN	DOWN
EW	EYE WASH
EWC	ELECTRIC WATER COOLER
FACP	FIRE ALARM CONTROL PANEL
FC	FLOOR / CEILING
FD	FLOOR DRAIN
FEC	FIRE EXTINGUISHER CABINET
FRPP	FIBER REINFORCED PLASTIC PANEL
FS	FLOOR SINK
GA	GYPSUM ASSOCIATION
GM	GAS METER
HR	HOUR
HSA	HEADED STUD ANCHOR
HWH	HEX WASHER HEAD
ICC	INTERNATIONAL CODE COUNCIL
ICF	INSULATED CONCRETE FORM
IJ	ISOLATION JOINT
IM	ICE MACHINE
KSI	KIPS PER SQUARE INCH
LAV	LAVATORY
ORD	OVERFLOW ROOF DRAIN
PH	PHILLIPS HEAD
PRD	PRIMARY ROOF DRAIN
PRV	PRESSURE REDUCING VALVE
R	RISER
RCP	REFLECTED CEILING PLAN
S/T	SHOWER / TOILET
S	SHELF / STORAGE
SD	SELF DRILLER
SF	SQUARE FEET
SHELV	SHELVING
SIM	SIMILAR
SS	SERVICE SINK
T	TOILET / TREAD
(T)	TREATED
TD	TRENCH DRAIN
TMR	THERMOPLASTIC MEMBRANE ROOFING
T.O.	TOP OF
TTB	TELEPHONE TERMINAL BACKBOARD
TYP	TYPICAL
U	UTILITY
UNO	UNLESS NOTED OTHERWISE
UH	UNIT HEATER
W	WASHER
WH	WATER HEATER

SYMBOL LEGEND

- REFERENCE NOTE SYMBOL
- REVISION SYMBOL
- DETAIL NUMBER / DETAIL REFERENCE / SHEET WHERE DETAIL IS SHOWN
- SECTION NUMBER / SECTION REFERENCE / SHEET WHERE SECTION IS SHOWN
- SECTION NUMBER / BUILDING SECTION REFERENCE / SHEET WHERE SECTION IS SHOWN
- ELEVATION NUMBER / ELEVATION REFERENCE / SHEET WHERE ELEVATION IS SHOWN
- SPECIALTY / ACCESSORY SYMBOL – FOR SCHEDULE, SEE
- SIGN SYMBOL – FOR SCHEDULE, SEE
- PLAN NORTH
- ELEVATION DATUM
- SURFACE SLOPE – DOWN
- CONCRETE
- CONTINUOUS WOOD FRAMING
- WOOD BLOCKING
- STEEL
- CEMENT BACKER BOARD
- SOLID SURFACE MATERIAL
- WOOD SHEATHING
- BASE COURSE
- DRAINAGE FILL
- EARTH
- MEDIUM DENSITY FIBER BOARD
- FIBER BOARD
- HOT MIXED ASPHALT PAVING
- GRANULAR BORROW
- ENGINEERED COMPACTED FILL
- COLD FORMED METAL FRAMING FRAMED WALL
- INSULATED CONCRETE FORM WALL

CODE ANALYSIS

APPLICABLE CODES

INTERNATIONAL BUILDING CODE:	2009
INTERNATIONAL MECHANICAL CODE:	2009
INTERNATIONAL FUEL GAS CODE:	2009
INTERNATIONAL PLUMING CODE:	2009
INTERNATIONAL FIRE CODE:	2009
INTERNATIONAL ENERGY CONSERVATION CODE:	2009
NATIONAL ELECTRICAL CODE:	2008
BUILDING CONSERVATION CODE:	2009
ADA ACCESSIBILITY GUIDELINES:	ADA 1994

OCCUPANCY & GROUP: S-1 ACCESSORY NON-SEPARATED
CHANGE IN USE: NO
MIXED OCCUPANCY: YES
SPECIAL USE & OCCUPANCY: NO

SEISMIC DESIGN CATEGORY : D
DESIGN WIND SPEED: 90 MPH
EXPOSURE: D

TYPE OF CONSTRUCTION : IIB

FIRE RESISTANCE RATING
NORTH: 0 SOUTH: 0 EAST: 0 WEST: 0

NONSEPERATED USES: S-1, B ACCESSORY PER SECTION 508.3.1

SPRINKLERS: NO

NUMBER OF STORIES: 1 HEIGHT: 1 STORY

ACTUAL AREA PER FLOOR (SQUARE FEET): 4709 SF (3996 SF + MEZZANINE 708 SF)

TABULAR AREA: (TABLE 503): 9000 SF

AREA MODIFICATIONS: Aa = {At + [At x If] + [At x Is]} If = [F/P-0.25] W / 30
SUM OF THE RATIO CALCULATIONS: $\frac{\text{ACTUAL AREA}}{\text{ALLOWABLE AREA}} \leq 1 \quad \frac{4704}{9000} \leq 1 = .52 \leq 1$

TOTAL ALLOWABLE AREA: ONE STORY 9,000 SF
UNLIMITED AREA BUILDING: NO

FIRE RESISTANCE RATING REQUIREMENTS (HOURS):

EXTERIOR BEARING WALLS:	0
INTERIOR BEARING WALLS:	0
EXTERIOR NON-BEARING WALLS:	0
STRUCTURAL FRAME:	0
PARTITIONS - PERMANENT:	0
FIRE BARRIERS:	0
FLOORS - CEILING FLOORS:	0
ROOFS - CEILING ROOFS:	0
EXTERIOR DOORS & WINDOWS:	0
SHAFT ENCLOSURES:	0
FIRE WALLS:	0
FIRE PARTITIONS:	0
SMOKE PARTITIONS:	0

DESIGN OCCUPANT LOAD: 14 OCCUPANTS

EXIT WIDTH REQUIRED: 5" MIN. 32"
EXIT WIDTH PROVIDED: 102 INCHES

MINIMUM NUMBER OF REQUIRED PLUMBING FACILITIES:
WATER CLOSETS - REQUIRED: 2 PROVIDED: 2
LAVATORIES - REQUIRED: 2 PROVIDED: 2
DRINKING FOUNTAINS: 1
SERVICE SINKS: 1

IMPORTANT NOTE:

FILL MATERIAL TO BE TESTED AND COMPLY WITH THE RECOMMENDATIONS IN GEOTECHNICAL REPORT. EXISTING STRUCTURAL FILL WILL NEED TO BE TESTED PRIOR TO PLACING FOOTINGS AND MAY REQUIRE BEING REMOVED AND RE-COMPACTED.

DEFERRED SUBMITTALS

1. BRACING OF MECHANICAL EQUIPMENT, DUCTWORK & RADIANT HEAT SYSTEM TO BE SUBMITTED BY HVAC CONTRACTOR PER SECTION 15242 OF THE SPECIFICATIONS.

VICINITY MAP

APPROVALS

PROJECT ENGINEER DATE:

STATE OF UTAH
DIVISION OF FACULTIES CONSTRUCTION
AND MANAGEMENT DATE:

INDEX TO DRAWINGS - CONSTRUCTION DOCUMENTS

GENERAL
GI001 COVER SHEET

CIVIL
CS101 SITE PLAN
CG101 GRADING PLAN
CU101 UTILITY PLAN
CD101 DETAIL SHEET
CD102 DETAIL SHEET

STRUCTURAL
S0.01 GENERAL STRUCTURAL NOTES
S0.02 GENERAL STRUCTURAL NOTES
S1.01 FOOTING & FOUNDATION PLAN
S1.11 MEZZANINE FRAMING PLAN
S1.21 ROOF FRAMING PLAN
S5.01 FOOTING & FOUNDATION DETAILS
S5.02 FOOTING & FOUNDATION DETAILS
S5.11 MEZZANINE FRAMING DETAILS
S5.21 ROOF FRAMING DETAILS
S6.01 SCHEDULES
S6.02 SCHEDULES

ARCHITECTURAL
A0.01 LIFE SAFETY PLAN
A1.01 FLOOR PLAN
A1.02 FLOOR DIMENTION PLAN
A1.03 MEZZANINE FLOOR PLAN
A1.04 ROOF PLAN
A2.01 EXTERIOR ELEVATIONS
A2.02 EXTERIOR ELEVATIONS
A3.01 BUILDING SECTIONS
A3.02 BUILDING SECTIONS
A3.03 WALL SECTIONS
A4.01 STAIR PLAN & SECTIONS
A4.02 INTERIOR ELEVATIONS
A5.03 DOOR & WINDOW DETAILS
A5.06 DETAILS
A5.07 DETAILS
A5.08 DETAILS
A5.09 DETAILS
A6.02 DOOR & WINDOW SCHEDULE & TYPES
A6.04 MOUNTING HEIGHTS & FINISH SCHEDULE
A7.01 REFLECTED CEILING PLANS

PLUMBING
PE001 PLUMBING SPECIFICATIONS, GENERAL NOTES & SHEET INDEX
PE501 PLUMBING DETAILS & SCHEDULES
PL101 MAIN FLOOR PLUMBING PLAN
PL102 ROOF PLUMBING PLAN
PL401 ENLARGED PLUMBING PLAN

MECHANICAL
ME001 MECHANICAL SPECIFICATIONS & SHEET INDEX
ME501 MECHANICAL DETAILS & GENERAL NOTES
ME502 MECHANICAL DETAILS
ME601 MECHANICAL SCHEDULES
MH101 MAIN FLOOR MECHANICAL PLAN

ELECTRICAL
EE001 SYMBOL SCHEDULE, SHEET INDEX
EE601 ELECTRICAL SCHEDULES
ES101 ELECTRICAL SITE PLAN
EP101 POWER & FIRE ALARM PLANS
EP501 DETAILS
EP601 ONE LINE DIAGRAM & FIRE ALARM SCHEMATIC
EL101 LIGHTING PLANS
EL601 LIGHTING FIXTURE SCHEDULES

CONSULTANTS

CIVIL
GREAT BASIN ENGINEERS
5746 SOUTH 1475 EAST SUITE 200
OGDEN, UTAH 84403
PHONE: (801) 521-0222
FAX: (801) 392-7544

STRUCTURAL
BHB ENGINEERS
2766 S. MAIN STREET
SALT LAKE CITY, UTAH 84115
PHONE: (801) 355-5656
FAX: (801) 355-5950

PLUMBING
SPECTRUM ENGINEERS
324 S. STATE STREET SUITE 400
SALT LAKE CITY, UTAH 84111
PHONE: (801) 328-5157
FAX: (801) 328-5155

MECHANICAL
SPECTRUM ENGINEERS
324 S. STATE STREET SUITE 400
SALT LAKE CITY, UTAH 84111
PHONE: (801) 328-5157
FAX: (801) 328-5155

ELECTRICAL
SPECTRUM ENGINEERS
324 S. STATE STREET SUITE 400
SALT LAKE CITY, UTAH 84111
PHONE: (801) 328-5157
FAX: (801) 328-5155

GREAT SALT LAKE
MARINA MAINTENANCE BUILDING
DFCM # 10029510
13312 WEST 1075 SOUTH
MAGNA, UTAH 84044

SEAL

MHTN PROJECT NO.
DRAWN BY: CT CHECKED BY: MV, BB

ISSUED:

NO.	DATE	DESCRIPTION

REVISIONS:

NO.	DATE	DESCRIPTION
1	11/24/2010	PLAN CHECK COMMENT & TOILETS
2	12/20/2010	PLAN CHECK COMMENT

SHEET INDEX AND GENERAL INFORMATION

CONSTRUCTION DOCUMENTS
SEPTEMBER 2, 2010

SHEET NUMBER

GI001

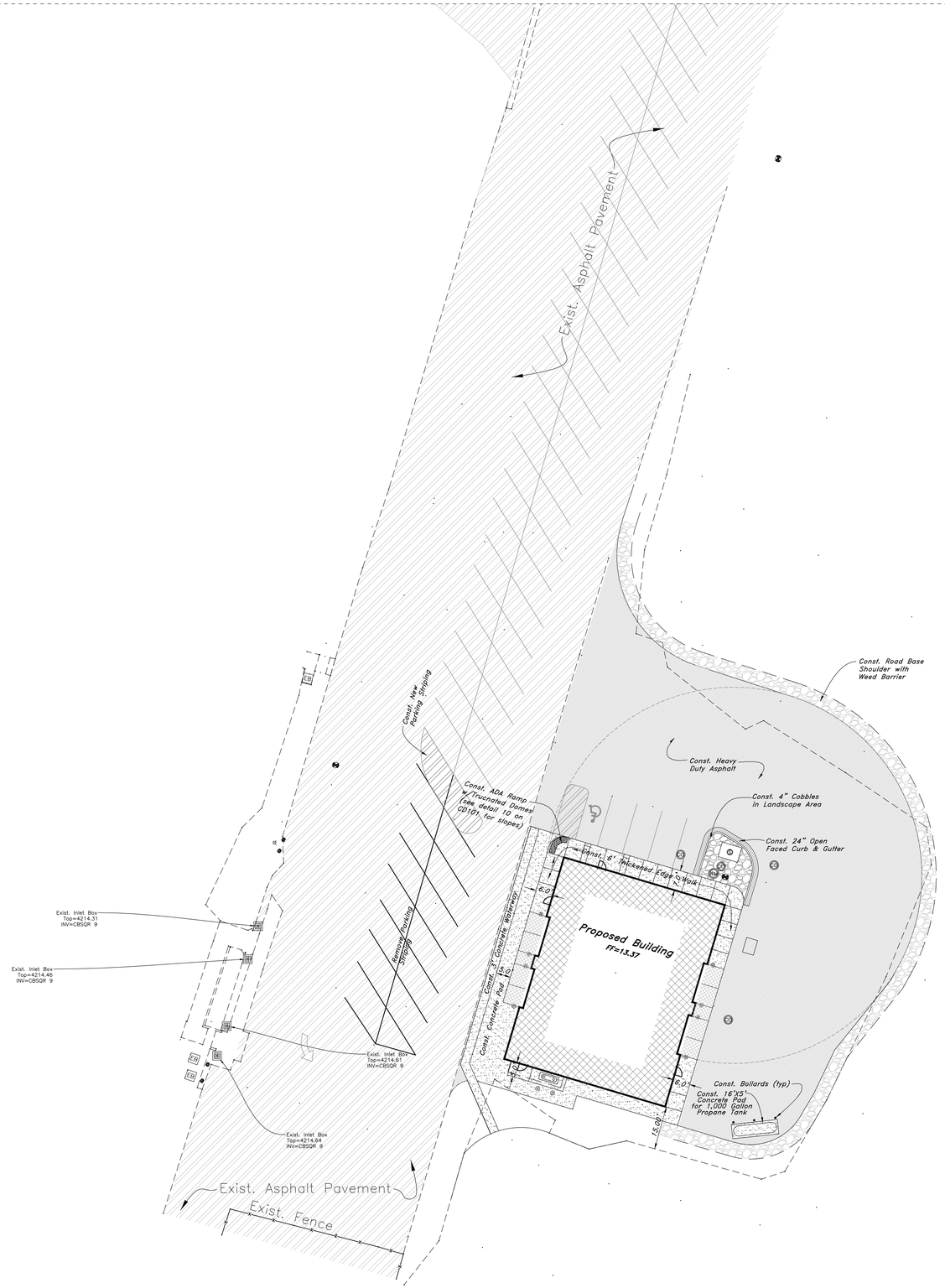

GREAT BASIN ENGINEERING
5746 South 1475 East - Suite 200
Ogden, Utah 84403 Main (801)394-4515
S.L.C (801)521-0222 FAX 801-392-7544
www.greatbasinengineering.com

Scale: 1" = 20'

20 0 10 20 25 30 35 40

Graphic Scale

MHTN Architects, Inc.
420 East South Temple
Suite 100
Salt Lake City, Utah 84111
TEL 801.595.6700
FAX 801.595.6717
www.mhtn.com

JAMES T. DRESSLAR
ARCHITECT, L.L.C.
387 PARK LANE
MOAB, UTAH 84532
435.259.1155 Phone / Fax

GREAT SALT LAKE MARINA MAINTENANCE BUILDING

DFCM # 10029510

13312 WEST 1075 SOUTH
MAGNA, UTAH 84044

SEAL

LICENSED PROFESSIONAL ENGINEER
No. 166484
MARK EUGENE LABBITT
12-8-10
STATE OF UTAH

MHTN PROJECT NO. 2010546

DRAWN BY: TK CHECKED BY: MEB

ISSUED:

NO.	DATE	DESCRIPTION

REVISION DATE:

NO.	DATE	DESCRIPTION

General Site Notes:

1. Stalls designated as handicap will require a painted handicap symbol and sign. (See Details)
2. Fire lane markings and signs to be installed as directed by the Fire Marshall.
3. Aisle markings, directional arrows and stop bars will be painted at each driveway as shown on the plans.
4. See Horizontal Control plan for coordinates, radiuses and detailed dimensions of site improvements.
5. Building sidewalks, ramps, and bollards are building contractor responsible items. See architectural plans.
6. All dimensions are to back of curb unless otherwise noted.

PRIVATE ENGINEER'S NOTICE TO CONTRACTORS

The Contractor agrees that he shall assume sole and complete responsibility for job site conditions during the course of construction of this project, including safety of all persons and property; that this requirement shall apply continuously and not be limited to normal working hours; and that the contractor shall defend, indemnify, and hold the owner and the engineer harmless from any and all liability, real or alleged, in connection with the performance of work on this project, excepting for liability arising from the sole negligence of the owner or the engineer.

ALL CONSTRUCTION TO CONFORM TO CITY STANDARDS AND SPECIFICATIONS IN RIGHT OF WAY

ADA NOTE:

Contractor must maintain a running slope on Accessible routes no steeper than 5.0% (1:20). The cross slope for Accessible routs must be no steeper than 2.0% (1:50). All Accessible routes must have a minimum clear width of 36". If grades on plans do not meet this requirement notify Consultants immediately.

The Client, Contractor, and Subcontractor should immediately notify the Consultant of any conditions of the project that they believe do not comply with the current state of the ADA and/or FHAA.

SHEET NAME

SITE PLAN

SHEET NUMBER

CS101

W:\10N221 MHTN - GSL Marina\dwg\10N221 TS.dwg, 12/8/2010 10:30:28 AM, DWG To PDF.pc3

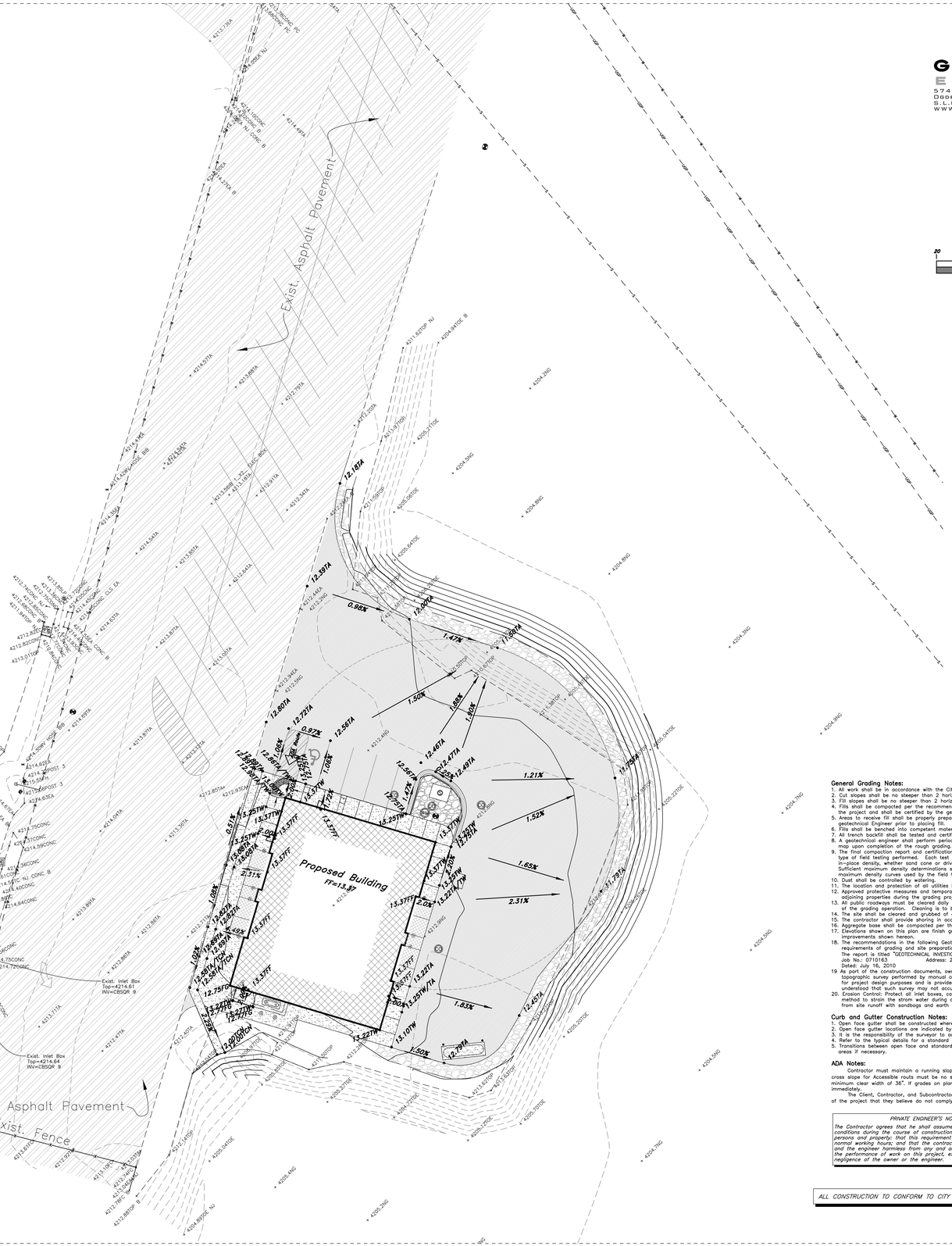

GREAT BASIN ENGINEERING

5746 South 1475 East - Suite 200
Ogden, Utah 84403 Main (801)394-4515
S.L.C (801)521-0222 FAX 801-392-7544
www.greatbasinengineering.com

Scale: 1" = 20'

20 0 10 20 25 30 35 40

Graphic Scale

General Grading Notes:

1. All work shall be in accordance with the City Public Works Standard.
2. Cut slopes shall be no steeper than 2 horizontal to 1 vertical.
3. Fill slopes shall be no steeper than 2 horizontal to 1 vertical.
4. Fills shall be compacted per the recommendations of the geotechnical report prepared for the project and shall be certified by the geotechnical engineer.
5. Areas to receive fill shall be properly prepared and approved by the City inspector and geotechnical Engineer prior to placing fill.
6. Fills shall be benched into competent material as per specifications and geotechnical report.
7. All trench backfill shall be tested and certified by the site geotechnical engineer per the grading code.
8. A geotechnical engineer shall perform periodic inspections and submit a complete report and map upon completion of the rough grading.
9. The final compaction report and certification from the geotechnical engineer shall contain the type of field testing performed. Each test shall be identified with the method of obtaining the in-place density, whether sand cone or drive ring and shall be so noted for each test. Sufficient maximum density determinations shall be performed to verify the accuracy of the maximum density curves used by the field technician.
10. Dust shall be controlled by watering.
11. The location and protection of all utilities is the responsibility of the permitee.
12. Approved protective measures and temporary drainage provisions must be used to protect adjoining properties during the grading project.
13. All public roadways must be cleared daily of all dirt, mud and debris deposited on them as a result of the grading operation. Cleaning is to be done to the satisfaction of the city engineer.
14. The site shall be cleared and grubbed of all vegetation and deleterious matter prior to grading.
15. The contractor shall provide shoring in accordance with OSHA requirements for trench walls.
16. Aggregate base shall be compacted per the geotechnical report prepared for the project.
17. Elevations shown on this plan are finish grades. Rough grades are the subgrades of the improvements shown hereon.
18. The recommendations in the following Geotechnical Engineering Report by PSI Inc. are included in the requirements of grading and site preparation.
    The report is titled "GEOTECHNICAL INVESTIGATION PROPOSED SALT LAKE MARINA BOAT STORAGE"
    Job No.: 0710163 Address: 2779 South 600 West Salt Lake City, Utah
    Dated: July 16, 2010
19 As part of the construction documents, owner has provided contractor with a topographic survey performed by manual or aerial means. Such survey was prepared for project design purposes and is provided to the contractor as a courtesy. It is expressly understood that such survey may not accurately reflect existing topographic conditions.
20. Erosion Control: Protect all inlet boxes, catch basins, etc. with straw bales or other approved method to strain the storm water during construction. Protect surrounding properties and streets from site runoff with sandbags and earth berms.

Curb and Gutter Construction Notes:

1. Open face gutter shall be constructed where drainage is directed away from curb.
2. Open face gutter locations are indicated by shading and notes on site and grading plan.
3. It is the responsibility of the surveyor to adjust top of curb grades at the time construction staking.
4. Refer to the typical details for a standard and open face curb and gutter for dimensions.
5. Transitions between open face and standard curb and gutter are to be smooth. Hand form these areas if necessary.

ADA Notes:

Contractor must maintain a running slope on Accessible routes no steeper than 5.0% (1:20). The cross slope for Accessible routs must be no steeper than 2.0% (1:50). All Accessible routes must have a minimum clear width of 36". If grades on plans do not meet this requirement notify Consultants immediately.

The Client, Contractor, and Subcontractor should immediately notify the Consultant of any conditions of the project that they believe do not comply with the current state of the ADA and/or FHAA.

PRIVATE ENGINEER'S NOTICE TO CONTRACTORS

The Contractor agrees that he shall assume sole and complete responsibility for job site conditions during the course of construction of this project, including safety of all persons and property; that this requirement shall apply continuously and not be limited to normal working hours; and that the contractor shall defend, indemnify, and hold the owner and the engineer harmless from any and all liability, real or alleged, in connection with the performance of work on this project, excepting for liability arising from the sole negligence of the owner or the engineer.

ALL CONSTRUCTION TO CONFORM TO CITY STANDARDS AND SPECIFICATIONS IN RIGHT OF WAY

MHTN Architects, Inc.
420 East South Temple
Suite 100
Salt Lake City, Utah 84111
TEL 801.595.6700
FAX 801.595.6717
www.mhtn.com

JAMES T. DRESSLAR
ARCHITECT, L.L.C.
387 PARK LANE
MOAB, UTAH 84532
435.259.1155 Phone / Fax

GREAT SALT LAKE MARINA MAINTENANCE BUILDING

DFCM # 10029510

13312 WEST 1075 SOUTH
MAGNA, UTAH 84044

SEAL

LICENSED PROFESSIONAL ENGINEER
No. 166684
MARK EUGENE LABBITT
12-8-10
STATE OF UTAH

MHTN PROJECT NO. 2010546

DRAWN BY: TK CHECKED BY: MEB

ISSUED:

NO.	DATE	DESCRIPTION

REVISION DATE:

NO.	DATE	DESCRIPTION

SHEET NAME

GRADING & DRAINAGE PLAN

SHEET NUMBER

CG101

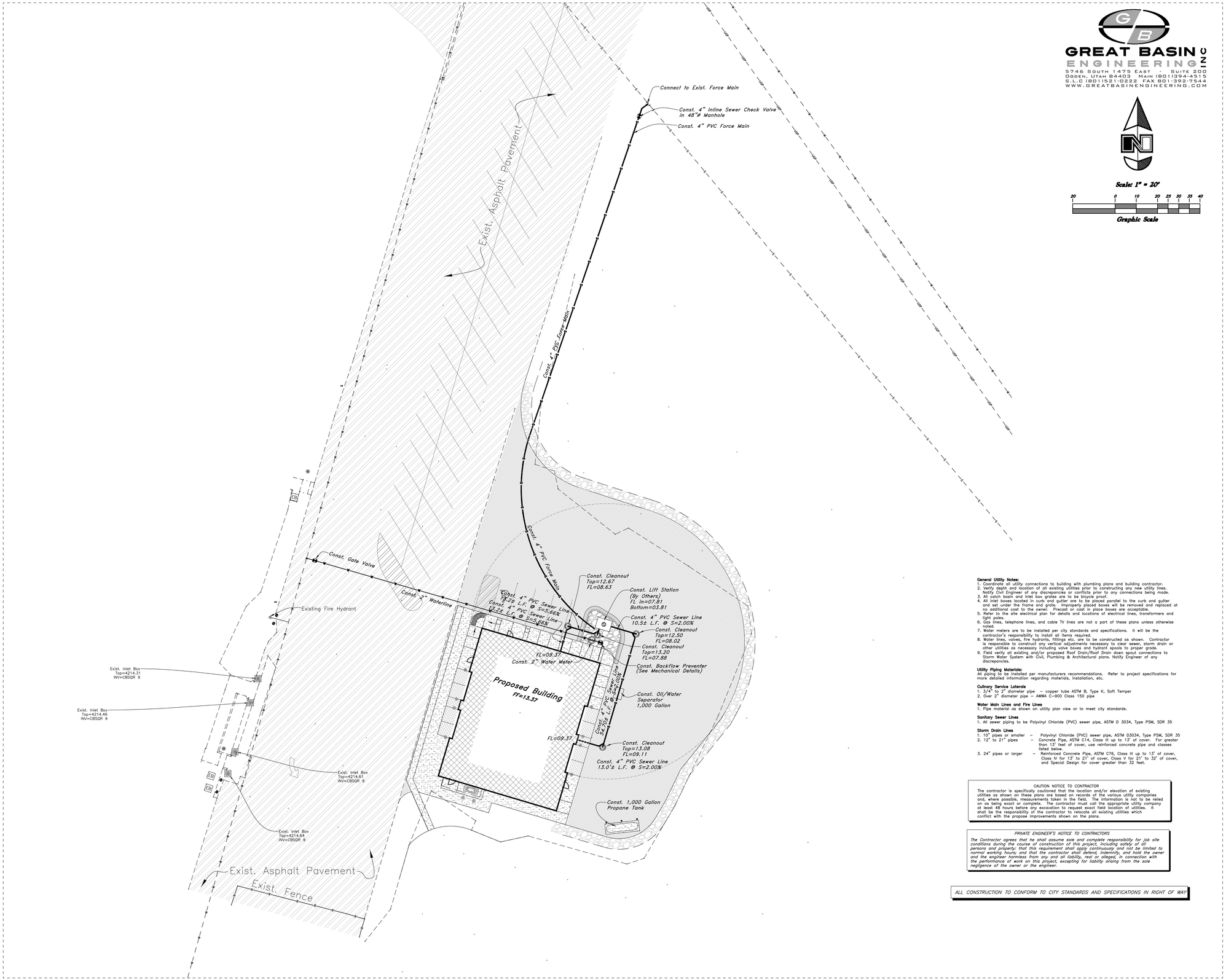

GREAT BASIN ENGINEERING
5746 South 1475 East - Suite 200
Ogden, Utah 84403 Main (801)394-4515
S.L.C (801)521-0222 FAX 801-392-7544
www.greatbasinengineering.com

Scale: 1" = 20'

20 0 10 20 25 30 35 40

Graphic Scale

General Utility Notes:
1. Coordinate all utility connections to building with plumbing plans and building contractor.
2. Verify depth and location of all existing utilities prior to constructing any new utility lines. Notify Civil Engineer of any discrepancies or conflicts prior to any connections being made.
3. All catch basin and inlet box grates are to be bicycle proof.
4. All inlet boxes located in curb and gutter are to be placed parallel to the curb and gutter and set under the frame and grate. Improperly placed boxes will be removed and replaced at no additional cost to the owner. Precast or cast in place boxes are acceptable.
5. Refer to the site electrical plan for details and locations of electrical lines, transformers and light poles.
6. Gas lines, telephone lines, and cable TV lines are not a part of these plans unless otherwise noted.
7. Water meters are to be installed per city standards and specifications. It will be the contractor's responsibility to install all items required.
8. Water lines, valves, fire hydrants, fittings etc. are to be constructed as shown. Contractor is responsible to construct any vertical adjustments necessary to clear sewer, storm drain or other utilities as necessary including valve boxes and hydrant spools to proper grade.
9. Field verify all existing and/or proposed Roof Drain/Roof Drain down spout connections to Storm Water System with Civil, Plumbing & Architectural plans. Notify Engineer of any discrepancies.

Utility Piping Materials:
All piping to be installed per manufacturers recommendations. Refer to project specifications for more detailed information regarding materials, installation, etc.

Culinary Service Laterals
1. 3/4" to 2" diameter pipe – copper tube ASTM B, Type K, Soft Temper
2. Over 2" diameter pipe – AWWA C-900 Class 150 pipe

Water Main Lines and Fire Lines
1. Pipe material as shown on utility plan view or to meet city standards.

Sanitary Sewer Lines
1. All sewer piping to be Polyvinyl Chloride (PVC) sewer pipe, ASTM D 3034, Type PSM, SDR 35

Storm Drain Lines
1. 10" pipes or smaller – Polyvinyl Chloride (PVC) sewer pipe, ASTM D3034, Type PSM, SDR 35
2. 12" to 21" pipes – Concrete Pipe, ASTM C14, Class II up to 13' of cover. For greater than 13' feet of cover, use reinforced concrete pipe and classes listed below.
3. 24" pipes or larger – Reinforced Concrete Pipe, ASTM C76, Class II up to 13' of cover, Class IV for 13' to 21' of cover, Class V for 21' to 32' of cover, and Special Design for cover greater than 32 feet.

CAUTION NOTICE TO CONTRACTOR

The contractor is specifically cautioned that the location and/or elevation of existing utilities as shown on these plans are based on records of the various utility companies and, where possible, measurements taken in the field. The information is not to be relied on as being exact or complete. The contractor must call the appropriate utility company at least 48 hours before any excavation to request exact field location of utilities. It shall be the responsibility of the contractor to relocate all existing utilities which conflict with the propose improvements shown on the plans.

PRIVATE ENGINEER'S NOTICE TO CONTRACTORS

The Contractor agrees that he shall assume sole and complete responsibility for job site conditions during the course of construction of this project, including safety of all persons and property; that this requirement shall apply continuously and not be limited to normal working hours; and that the contractor shall defend, indemnify, and hold the owner and the engineer harmless from any and all liability, real or alleged, in connection with the performance of work on this project, excepting for liability arising from the sole negligence of the owner or the engineer.

ALL CONSTRUCTION TO CONFORM TO CITY STANDARDS AND SPECIFICATIONS IN RIGHT OF WAY

MHTN Architects, Inc.
420 East South Temple
Suite 100
Salt Lake City, Utah 84111
TEL 801.595.6700
FAX 801.595.6717
www.mhtn.com

JAMES T. DRESSLAR
ARCHITECT, L.L.C.
387 PARK LANE
MOAB, UTAH 84532
435.259.1155 Phone / Fax

GREAT SALT LAKE MARINA MAINTENANCE BUILDING

DFCM # 10029510

13312 WEST 1075 SOUTH
MAGNA, UTAH 84044

SEAL

LICENSED PROFESSIONAL ENGINEER
No. 166484
MARK EUGENE LABBITT
12-8-10
STATE OF UTAH

MHTN PROJECT NO. 2010546

DRAWN BY: TK CHECKED BY: MEB

ISSUED:

NO.	DATE	DESCRIPTION

REVISION DATE:

NO.	DATE	DESCRIPTION

SHEET NAME

UTILITY PLAN

SHEET NUMBER

CU101

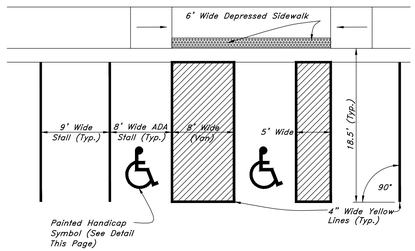

1 Typical ADA Parking Striping Plan

Not to Scale

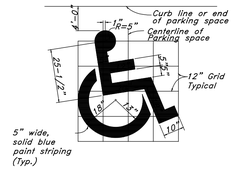

2 Handicap Symbol

Not to Scale

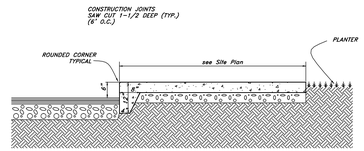

Thickened Edge Walk

3

Not to Scale

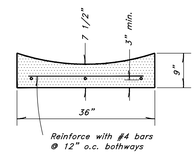

4 Typical Waterway Detail

Not to Scale

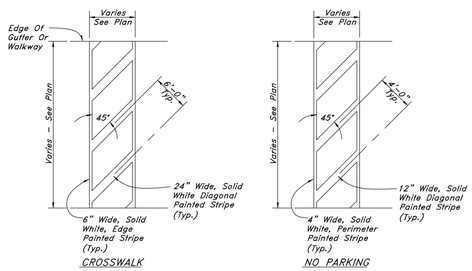

5 Striping

Not to Scale

6

Not to Scale

7

Not to Scale

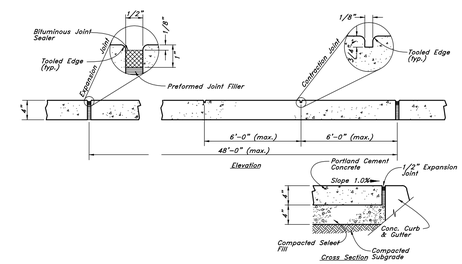

8 Concrete Sidewalk

Not to Scale

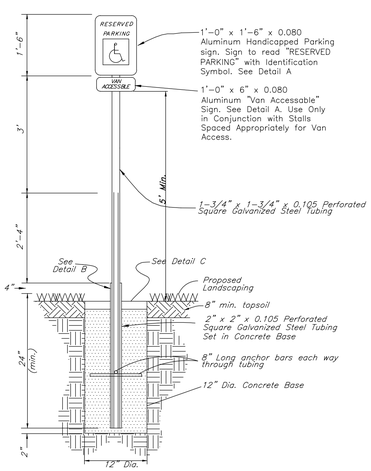

9 Handicapped Parking Sign

Not to Scale

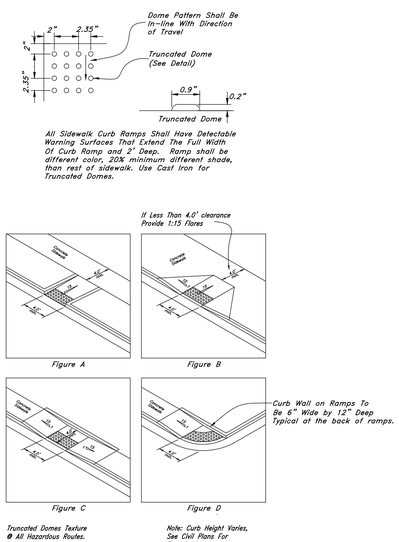

10 Typical ADA Ramp Detail

Not to Scale

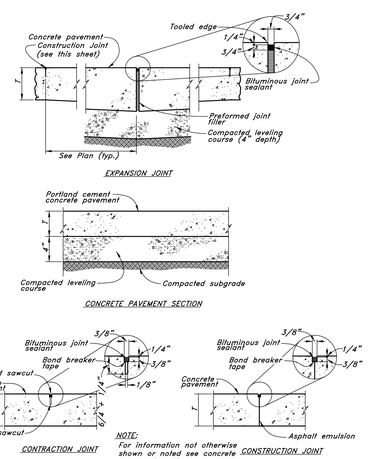

11 Portland Cement Concrete Pavement

Not to Scale

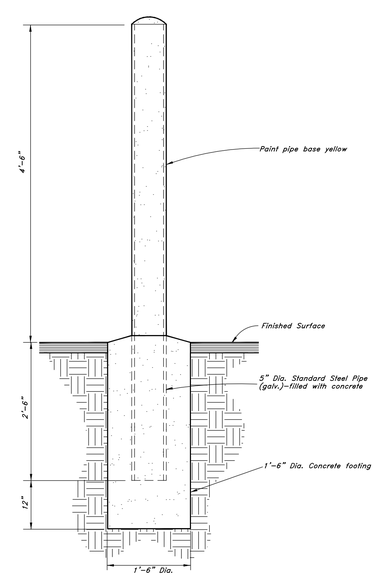

12 BOLLARD DETAIL

Not to Scale

GREAT BASIN ENGINEERING
5746 South 1475 East - Suite 200
Ogden, Utah 84403 Main (801)394-4515
S.L.C (801)521-0222 FAX 801-392-7544
www.greatbasinengineering.com

MHTN Architects, Inc.
420 East South Temple
Suite 100
Salt Lake City, Utah 84111
TEL 801.595.6700
FAX 801.595.6717
www.mhtn.com

JAMES T. DRESSLAR
ARCHITECT, L.L.C.
387 PARK LANE
MOAB, UTAH 84532
435.259.1155 Phone / Fax

GREAT SALT LAKE MARINA MAINTENANCE BUILDING

DFCM # 10029510

13312 WEST 1075 SOUTH
MAGNA, UTAH 84044

SEAL

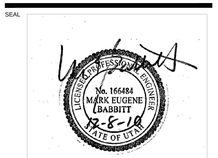

MHTN PROJECT NO. 2010546

DRAWN BY: TK CHECKED BY: MEB

ISSUED:

NO.	DATE	DESCRIPTION

REVISION DATE:

NO.	DATE	DESCRIPTION

SHEET NAME

DETAILS

SHEET NUMBER

CD101

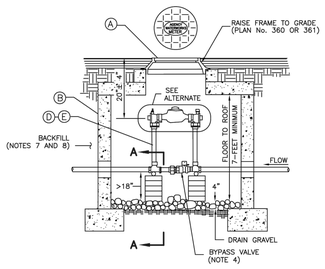

LEGEND			
No.	*	ITEM	DESCRIPTION
A		27" FRAME AND COVER	PLAN No. 502
B		CONCRETE BOX	PLAN No. 505
C		METER BOLTS	5/8" x 2 3/4" BRASS
D		1 1/2" CUSTOM SETTER WITH BYPASS	
E		2" CUSTOM SETTER WITH BYPASS	

* FURNISHED BY UTILITY AGENCY

1 **1 1/2" and 2" meter** Plan No. **522**

August 2001 217

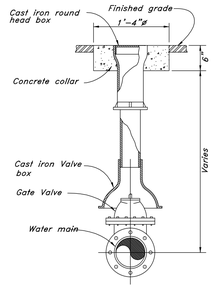

2 **Typical Gate Valve**

Not to Scale

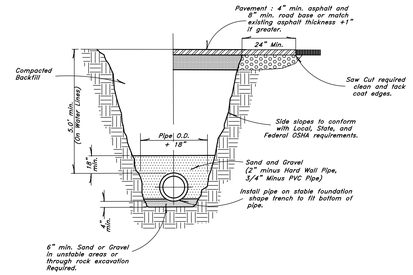

3 **Typical Trench Detail**

Not to Scale

Not to Scale

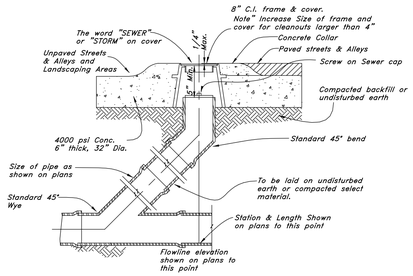

4 **Sewer, Storm, and Roof Drain Cleanout Detail**

Not to Scale

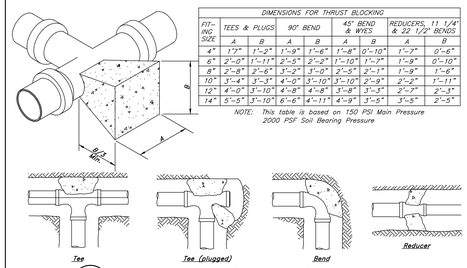

DIMENSIONS FOR THRUST BLOCKING								
FITTING SIZE	TEES & PLUGS		90° BEND		45° BEND & WYES		REDUCERS, 11 1/4° & 22 1/2° BENDS	
	A	B	A	B	A	B	A	B
4"	1'7"	1'-2"	1'-9"	1'-6"	1'-8"	0'-10"	1'-7"	0'-6"
6"	2'-0"	1'-11"	2'-5"	2'-2"	1'-10"	1'-7"	1'-9"	0'-10"
8"	2'-8"	2'-6"	3'-2"	3'-0"	2'-5"	2'-1"	1'-9"	1'-6"
10"	3'-4"	3'-3"	4'-0"	3'-10"	3'-10"	2'-9"	2'-2"	1'-11"
12"	4'-0"	3'-10"	4'-8"	4'-8"	3'-8"	3'-3"	2'-7"	2'-3"
14"	5'-5"	3'-10"	6'-6"	4'-11"	4'-9"	3'-5"	3'-5"	2'-5"

NOTE: This table is based on 150 PSI Main Pressure
2000 PSF Soil Bearing Pressure

5 **Thrust Blocking Details**

Not to Scale

Not to Scale

660 SA 660 SA Oil / Water Separator 575 Gallon

Oldcastle Precast

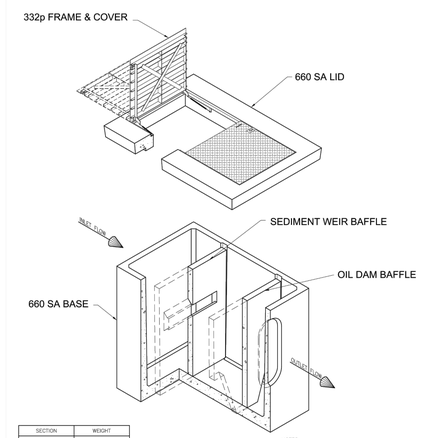

SECTION	WEIGHT
FRAME & COVER	332 #
LID	992 #
WEIR	624 #
DAM	490 #
BASE	5,362 #
TOTAL WEIGHT	7,800 #

NOTES:
1. Vault design complies with ASTM C-857 and C-858 with less than 2' of earth cover and an AASHTO HS-20 loading.
2. 575 Gallon capacity is at a 4" water depth.
3. Contractor to grout baffles in place.
4. Contractor to fill oil lift insert recesses with grout prior to backfill.
5. Contractor must fill the Separator unit with clean water before it is put into service.
6. Lifting insert type and location may change without notice.

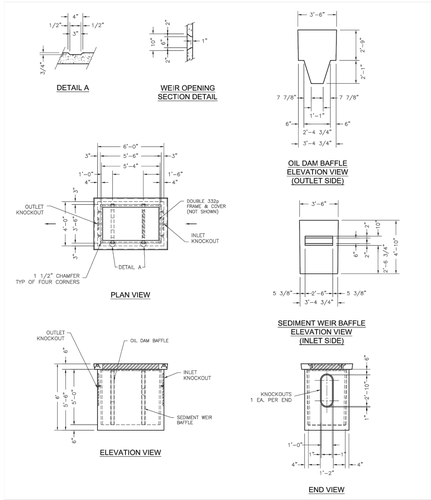

Oldcastle Precast
801 West 12th Street
Ogden, Utah 84404

Phone: (801) 399-1171
Fax: (801) 392-7849

For more information about our products, please visit **oldcastleprecast.com**

oldcastleprecast.com

© 2008 Oldcastle Precast, Inc.

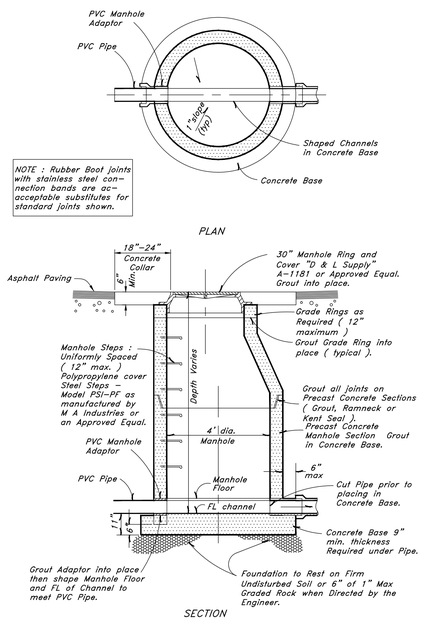

8 **Typical Manhole Detail**

Not to Scale

Not to Scale

Not to Scale

Not to Scale

Not to Scale

GREAT BASIN ENGINEERING
5746 South 1475 East - Suite 200
Ogden, Utah 84403 Main (801)394-4515
S.L.C (801)521-0222 FAX 801-392-7544
WWW.GREATBASINENGINEERING.COM

MHTN Architects, Inc.
420 East South Temple
Suite 100
Salt Lake City, Utah 84111
TEL 801.595.6700
FAX 801.595.6717
www.mhtn.com

JAMES T. DRESSLAR
ARCHITECT, L.L.C.
387 PARK LANE
MOAB, UTAH 84532
435.259.1155 Phone / Fax

GREAT SALT LAKE MARINA MAINTENANCE BUILDING

DFCM # 10029510

13312 WEST 1075 SOUTH
MAGNA, UTAH 84044

SEAL

LICENSED PROFESSIONAL ENGINEER
No. 166484
MARK EUGENE DABBITT
12-8-10
STATE OF UTAH

MHTN PROJECT NO. 2010546

DRAWN BY: TK CHECKED BY: MEB

ISSUED:

NO.	DATE	DESCRIPTION

REVISION DATE:

NO.	DATE	DESCRIPTION

SHEET NAME

DETAILS

SHEET NUMBER

CD102

GENERAL STRUCTURAL NOTES

GENERAL

1. The structural notes are intended to complement the project specifications. Specific notes and details in the drawings shall govern over the structural notes and typical details.
2. Typical details and sections shall apply where specific details are not shown.
3. The contractor shall verify all site conditions and dimensions. If actual conditions differ from those shown in the contract drawings, the contractor shall immediately notify the architect/engineer before proceeding with the fabrication or construction of any effected elements.
4. Omissions or conflicts between the contract drawings and/or specifications shall be brought to the attention of the architect/engineer before proceeding with any work involved. In case of conflict, follow the most stringent requirement as directed by the architect/engineer at no additional cost to the owner.
5. The contractor shall submit a written request to the architect/engineer before proceeding with any changes, substitutions or modifications. Any work done by the contractor before receiving written approval will be at the contractor's risk.
6. The contractor shall coordinate with all trades any items that are to be integrated into the structural system such as openings, penetrations, mechanical and electrical equipment, etc. Sizes and locations of mechanical and other equipment that differs from those shown on the contract drawings shall be reported to the architect/engineer.
7. The contractor shall provide adequate shoring and bracing as required for his method of erection. Shoring and bracing shall remain in place until final connections for the permanent members are completed. The building shall not be considered stable until all connections are completed. Walls shall not be considered self-supporting and shall be braced until the floor/roof system is completed.
8. The contractor shall not cut or core any holes in masonry or concrete walls without prior review by the architect/engineer.
9. Site observations by BHB Consulting Engineers, P.C.'s field representative shall not be construed as approval of construction procedures nor special inspection.
10. Detailing and shop drawing production for structural elements will require information (including dimensions) contained in the architectural, structural and/or other consultants' drawings. The structural drawings shall be used in conjunction with the architectural and other consultant's drawings. Some dimensions and elements such as elevations, depressions, slopes, mechanical housekeeping pads, etc. are not shown in the structural drawings. All dimensions shown on structural drawings shall be verified by contractor with architectural, mechanical and electrical drawings.
11. Review of shop drawing submittals by BHB Consulting Engineers, P.C. is for general compliance only and is not intended for approval. The shop drawing review shall not relieve the contractor from the responsibility of completing the project according to the contract documents.
12. Shop drawings made from reproductions of the contract drawings will be rejected unless the contractor signs a release agreement prior to the shop drawings being reviewed.
13. Only an authorized representative of BHB Consulting Engineers, P.C. may make changes to these contract drawings. BHB Consulting Engineers, P.C. shall not be held responsible or liable for any claims arising directly or indirectly from changes made without written authorization by an authorized representative of BHB Consulting Engineers, P.C.

BASIS OF DESIGN

1. Governing Building Code — International Building Code 2009
2. Roof Snow Load
   a. Ground Snow Load — P_g = 43 psf
   b. Snow Importance Factor — I_s = 1.0
   c. Snow Exposure Coefficient — C_e = 1.0
   d. Thermal Exposure Coefficient — C_t = 1.0
   e. Roof Snow Load — $P_f = 0.7 {*} C_e {*} C_t {*} I_s {*} P_g$ = 30 psf plus Snow Drift
3. Mezzanine Live Loads
   a. Light storage — 125 psf
4. Seismic Loads
   a. Occupancy Category — II
   b. Seismic Importance Factor, I_e — 1.0
   c. Seismic Design Category — D
   d. Mapped Spectral Acceleration
      S_S = 1.15g S_1 = 0.43g
   e. Soil Site Class — E
   f. Soil Site Coefficients
      F_a = 0.90 F_v = 2.4
   g. 5% Damped Design Spectral Response Acceleration
      $S_{DS} = 2/3 {*} F_a {*} S_S$ = 0.69g $S_{D1} = 2/3 {*} F_V {*} S_1$ = 0.69g
   h. Basic Seismic-Force-Resisting System — Special Reinforced Concrete Shear Walls
   i. Response Modification Coefficient — R = 5.0
   j. System Over-strength Factor — 2.5
   k. Deflection Amplification Factor — 5.0
   l. Fundamental Building Period — T = 0.24 seconds
   m. Seismic Response Coefficient — $C_s = S_{DS} {*} I_e / R$; $C_s = S_{D1} {*} I_e / (R{*}T)$
   n. W — Dead Loads of Structure
   o. Base Shear — V= C_S * W = 0.14 W (Strength Design)
   p. Analysis Procedure — Equivalent Lateral Force (Static)
5. Wind Loads
   a. Wind Velocity (3 Second Gust) — 90 mph
   b. Exposure Type — D
   c. Wind Importance Factor, I_W — 1.00
   d. Internal Pressure Coefficient, GC_{pi} — +/-0.18
   e. Topographic Factor, K_{zt} — 1.0

FOUNDATION

1. Soils Report by Professional Services Industries, Inc., Dated July 16 2010.
2. Soil Bearing Pressure:3,000 psf, on Compacted Fill.
3. Frost Protection: 30 inches minimum to bottom of footing.
   Contractor shall field verify that the footing elevations and final grades indicated on the plans will provide the minimum frost protection. The contractor shall notify the architect/engineer if there are any locations where the minimum frost protection might not be achieved prior to placing concrete.
4. Lateral Soil Pressure Fluid Equivalent Density.
   a. Active ....35 pcf (retaining walls)
   b. At Rest ....55 pcf (rigid foundation walls)
   c. Passive..................................300 pcf
5. Coefficient of Friction 0.45

EARTHWORK

1. All footings shall bear on compacted structural fill extending down to suitable natural material. See soils report and detail 8/S5.02.
2. Consult the project specifications and soils report for further earthwork requirements.

1

CONCRETE

1. Materials, unless noted otherwise:
   a. Normal weight aggregates — ASTM C 33
   b. Reinforcing Steel — ASTM 615 Grade 60 (Fy = 60 ksi). Use Grade 40 (Fy = 40 ksi) for field bent dowels with spacings indicated reduced by 1/3.
   c. Deformed Bar Anchors (DBA) — ASTM A496
   d. Headed Stud Anchors (HSA) — ASTM A108
   e. Admixtures:
      i. Air-entraining admixtures comply with ASTM C 260 (when used).
      ii Calcium chloride shall not be added to the concrete mix.
   f. Type I/II cement complying with ASTM C-150 shall be used for all concrete.
   g. Blended cement Type GU complying with ASTM C1157
   h. Fly Ash - ASTM C618, Class F – 20% maximum cementitious content
   i. The water/cement ratios shall meet the requirements of Table 4.3.1 of ACI 318.
   j. Provide air entraining as recommended by Table 4.4.1 of ACI 318.
   k. No aluminum conduit or product containing aluminum or any other material injurious to concrete shall be embedded in concrete.
2. Compressive strengths of concrete at 28 days shall be as follows:
   a. Footings
      Strength..................................5,000 psi
      Classification ....F1, SO, PO, C2
   b. Foundation Walls
      Strength..................................5,000 psi
      Classification ....F2, SO, P1, C2
   c. Interior Slabs on Grade
      Strength..................................5,000 psi
      Classification ....FO, SO, PO, C2
   d. Normal Weight concrete over Steel Deck
      Strength..................................3,500 psi
      Classification ....FO, SO, PO, CO
   e. Insulated Concrete Forms (I.C.F.s)
      Strength..................................4,000 psi
      Classification ....FO, SO, PO, CO
   f. All Site Concrete
      Strength..................................5,000 psi
      Classification ....F3, SO, P1, C2

1

3. 3" thick (6" overall) normal weight concrete slab shall be poured over the steel deck. Reinforce slab with #4 @ 12" o.c. each way. Bar shall be placed 1" to 1-1/2" below the top of the slab.
4. Only one grade or type of concrete shall be poured on the site at any given time.
5. The contractor shall be responsible for the design, detailing, care, placement and removal of all formwork and shores.
   a. Supporting forms and shoring shall not be removed until structural members have acquired sufficient strength to safely support their own weight and any construction load to which they may be subjected. In no case, however, shall forms and shoring be removed in less than 24 hours after concrete placement.
6. Reinforcement shall have the following concrete cover:
   Cast-in-place Concrete:..................................Clear Cover
   a. Cast against and permanently exposed to earth..................................3"
      Slabs #11 bars and smaller..................................2-1/2"
   b. Formed concrete exposed to earth or weather:
      #6 thru #18 bars ....2"
      #5 and smaller bars..................................2"
   c. Concrete not exposed to weather or in contact with ground:
      Slabs, Walls, Joists; #11 bars and smaller..................................3/4"
      Beams, Columns: Primary Reinf., Ties, Stirrups, Spirals.........1-1/2"

1

7. Construction Joints, Control Joints and Contraction Joints:
   a. Provide a formed and beveled 2 x 4 x continuous keyway in all horizontal and vertical construction joints including between top of footing and foundation walls, unless noted otherwise. In addition, all joints shall be intentionally roughened to a full amplitude of approximately 1/4 inch.
   b. Control joints shall be installed in slabs on grade so the length to width ratio of the slab is no more than 1.25:1. Control joints shall be completed within 12 hours of concrete placement. Control joints may be installed by:
      i. Saw cut a depth of 1/4 the thickness of the slab
      ii. Tooled joints a depth of 1/4 the thickness of the slab
   c. Install construction or control joints in slabs on grade at a spacing not to exceed 30 times the slab thickness in any direction, unless noted otherwise. Construction joints shall not exceed a distance of 125'-0" o.c. in any direction.
8. Construction
   a. Use chairs or other support devices recommended by the CRSI to support and tie reinforcement bars and WWF prior to placing concrete. WWF shall be continuously supported at 36" o.c. maximum. Reinforcing steel for slabs on grade shall be adequately supported on precast concrete units. Lifting the reinforcing off the grade during placement of concrete is not permitted.
   b. Concrete to be mechanically consolidated during placement per ACI standards.
   c. Contractor shall coordinate placement of all openings, curbs, dowels, sleeves, conduits, bolts, inserts and other embedded items prior to concrete placement.
   d. All embeds and dowels shall be securely tied to formwork or to adjacent reinforcing prior to the placement of concrete.
   e. No pipes, ducts, sleeves, etc shall be placed in structural concrete unless specifically detailed or approved by the structural engineer. Penetrations through walls when approved shall be built into the wall prior to concrete placement. Penetrations will not be allowed in footings or grade beams unless detailed. Piping shall be routed around these elements and footings stepped to avoid piping.
   f. Reinforcing Bars shall not be welded. Do not substitute reinforcing bars for DBAs or HSAs.
9. Detailing:
   a. Lap splice lengths shall be detailed to comply with the "Concrete Reinforcing Bar Lap Splice Schedule" on sheet S6.01. Splices may be made with mechanical splices capable of 125% tension capacity of the bar being spliced. Mechanical splices shall be the positive connecting type coupler and shall meet all International Building Code requirements. Use "Cadweld", "Lenton" Standard Couplers, "Bar-Lock" or equal with internal protector. If mechanical splices are used, splices or couplers on adjacent bars shall be staggered a minimum of 24" apart along the longitudinal axis of the reinforcing bars.
   b. At joints provide reinforcing dowels to match the member reinforcing, unless noted otherwise.
   c. At all discontinuous control or construction slab on grade joints, provide 2 - #4 x 48 inches.
   d. Provide corner bars at intersecting wall corners using the same bar size and spacing as the horizontal wall reinforcing.
   e. All vertical reinforcing shall be doweled to footings, or to the structure below with the same size and spacing as the vertical reinforcing for the element above. Dowels extending into footings shall terminate with a 90 degree standard hook and shall extend to within 4" of the bottom of the footing. Footing dowels (#8 bars and smaller) with hooks need not extend more than 20" into footings.
   f. Horizontal wall reinforcing shall terminate at ends of walls and openings into the far end of the jamb column with a 90-degree standard hook plus a 6 bar diameter extension. Horizontal wall reinforcing shall be continuous through construction and control joints.
   g. See detail 5/S5.01 for reinforcing around miscellaneous openings (8" to 36" wide). For openings wider than 36", contact the engineer. All recesses that interrupt reinforcing shall be reinforced the same as an opening.
10. Insulated Concrete Forms:
   a. Insulated Concrete Form (ICF) system selected shall have a current ICC-ES approval. The selected ICF system shall be able to accommodate the reinforcement spacing, edge distance and concrete cover called out in these drawings.

INSULATED CONCRETE FORMS – (ICF)

1. Materials, unless noted otherwise:
   a. Insulated Block Modular Forms: Contractor shall submit ICF specifications to the architect / engineer for review.
   b. Concrete and reinforcement: See "CONCRETE" section of "GENERAL STRUCTURAL NOTES".
2. Construction and Detailing:
   a. Tolerance: Plus 1/8" in 10 ft. for alignment and straightness.
   b. Provide keyways and continued reinforcement through construction joints.
   c. The maximum form height of four (4) feet per lift for placement of concrete.
   d. The contractor shall be responsible for locating and placing all required ledgers, plates, bolts, connections and any other hardware.
   e. Contractor is responsible to brace Insulated Concrete Forms prior to placing concrete.
   f. See "CONCRETE" section of "GENERAL STRUCTURAL NOTES".

EPOXY

1. For concrete, the epoxy shall be HIT RE 500-SD by Hilti Corporation, HIT_HY 150 MAX-SD by Hilti Corporation, Epcon G5 by ITW Redhead, Powers PE1000 + by Powers Fasteners Inc, or SET-XP by Simpson Strong Tie. Epcon G5 shall not be used in cracked concrete or for seismic applications.
2. Follow all of the manufacturer's recommendations for epoxy installation.

STRUCTURAL STEEL

1. Material:
   a. Wide Flanges Section — ASTM A992 (50 ksi)
   b. Other shapes & Plates — ASTM A36 (36 ksi)
   c. Square or Rectangular HSS — ASTM A500 (46 ksi) Grade B
   d. Deformed Bar Anchors (DBA) — ASTM A496
   e. Headed Stud Anchors (HSA) — ASTM A108
   f. Anchor Rods — ASTM F1554, Grade 36, with ASTM A563 heavy hex nuts and ASTM F436 hardened washers Grade A
   g. Bolted Connections: — ASTM A325 with ASTM A563 nuts and ASTM F436 hardened washers.
2. Fabrication and construction shall comply with the latest edition of the following Codes and Standards:
   a. American Institute of Steel Construction (AISC), "Specification for the Design, Fabrication and Erection of Structural Steel for Buildings," with "Commentary".
   b. AISC "Code of Standard Practice" excluding the following: Section 3.4, Section 4.4, Section 4.4.1.
   c. AISC "Specification for Structural Joints Using ASTM A325 or A490 Bolts"
   d. American Welding Society (AWS), Structural Welding Code (specific items do not apply when they conflict with the AISC requirements).
   e. AISC "Seismic Provision for Structural Steel Buildings"
3. Welding
   a. All welding and cutting shall be performed by AWS certified welders.
   b. Use E-70 XX or as noted otherwise. E60 XX may be used for welding steel floor and roof decks.
   c. All intersecting steel shapes which are not bolted shall be connected by a fillet weld all around, unless noted otherwise. Where fillet weld sizes are not shown they shall be 1/16" less than the thinnest of the connected parts for thicknesses 1/4" and larger. Fillet welds on plates less than 1/4" shall be of the same size as the thinnest of the connected part.
   d. Reinforcing Bars: Do not weld rebar. Do not substitute reinforcing bars for deformed bar anchors (DBAs), machine bolts, or headed stud anchors (HSAs).
   e. Do not weld anchor bolts, including "tack" welds.
   f. Headed Stud Anchors (HSAs) welding and deformed bar anchor welding shall conform to the manufacturer's specifications.
4. All exposed steel shall receive high performance coating/paint for corrosion protection, unless noted as galvanized or otherwise. Structural steel protection requirements per IBC section 2203.2 shall be met.

1

OPEN WEB STEEL JOISTS

1. All open web steel joists shall be fabricated and erected in accordance with the latest edition of Steel Joist Institute (SJI), "Standard Specifications and Code of Standard Practice".
2. All open web steel joists, bridging and connecting parts shall receive high performance coating/paint for corrosion protection. Structural steel protection requirements per IBC section 2203.2 shall be met.
3. At the completion of fabrication, the steel joist manufacturer shall submit to the building official a certificate of compliance in accordance with IBC Section 1704.2.2 stating if the work was performed in accordance with approved construction documents and with SJI standard specifications.

1

4. Joists with slopes greater than 1/2 inch per foot shall be designed to meet or exceed the load capacities, listed in the SJI load tables, of the joist sizes indicated on the framing plan, as if the joists or girders were installed level.
5. Provide special bearing ends to accommodate slopes from sloped joists, or sloped bearing conditions.
6. Modifications to any joist, including holes through the top and bottom chords, without the written consent and direction from the manufacturer is not allowed.
7. Open web joist deflection shall be limited to L/240 for total loads and L/360 for live load, unless noted otherwise.
8. Joist bridging shown on plans is for schematic purposes only; actual size, quantity and location of bridging shall be determined by the joist supplier per SJI. Coordinate bridging locations to avoid interference with mechanical, electrical and fire protection equipment and skylights.

METAL DECKING

1. Steel deck shall comply with the latest requirements of the Steel Deck Institute.
2. All deck shall be 3-span continuous minimum. In areas where 3-span conditions are not possible, the contractor shall provide heavier gage deck as required to provide the equivalent loading of the deck under a three span condition.
3. Steel roof deck shall not be used to support loads from plumbing, HVAC ducts, light fixtures, architectural elements or equipment of any kind, unless specifically noted. Light weight suspended acoustical ceilings with a total weight of 50 lbs per attachment may be hung from roof deck. The hangers shall be staggered to distribute the loads over multiple deck flutes.
4. All deck supporting members shall be dry before welding.
5. Clinch seams before welding interlocking seams.

Steel Floor Deck
   a. Steel floor deck shall be 3" deep X 18 gage minimum, painted with high performance coating/paint (for corrosion protection), composite type "W" deck with interlocking side seams with the following properties:

	18 Gage
Minimum S ($in^3/_{ft}$) =	0.767
Minimum I ($in^4/_{ft}$) =	1.203

   b. Steel deck with 3" thick (6" overall) normal weight concrete slab shall have a minimum allowable diaphragm shear capacity of 1500 lbs/ft. for a 13'-0" deck span.
   c. Weld deck to supporting framing members with 3/4" diameter puddle welds at the following spacing (Closer spacings may be used to develop minimum shear requirements.):
      i. 12" o.c. to supports perpendicular to deck corrugations (4 welds per 36" wide sheet).
      ii 12" o.c. to all supports parallel to deck corrugations.
   d. Hilti or Pneutek power driven fasteners are acceptable as an alternative to welds provided the connection meets the diaphragm shear capacity given above. For Hilti call 800-879-8000 extension 6337 for connection information comparison. For Pneutek, call 800-431-8665. If Hilti or Pneutek power driven fasteners are used, the contractor shall submit Hilti's / Pneutek calculations to the Architect/Engineer for review. Also if Hilti of Pneutek power driven fasteners are used, a Hilti / Pneutek representative shall be present before the decking is installed to make sure the installer is properly trained in using the equipment. The Hilti / Pneutek representative shall also make a site visit the day after deck has been started to be installed to verify the power driven fasteners are being installed correctly.
   e. Attach interlocking seams with 3/16" Ø button punch at 18" o.c. or with 1 1/2" long top seam welds at 36" o.c. or with Verco PunchLok System at 36" o.c., with ASC DeltaGrip System at 36"o.c. or with Wheeling Seismic Shearloc at 36" o.c. Closer spacing may be used to develop minimum shear requirements. A standard button punch can **not** be used in place of Verco PunchLok, ASC DeltaGrip or Wheeling Seismic Shearloc.
   f. Provide a 2-inch minimum bearing at supports.

Steel Roof Deck
   a. Steel roof deck shall be 1.1/2" deep X 20 gage minimum, painted with high performance coating/paint (for corrosion protection) or galvanized if noted on details, type "B" wide rib deck with interlocking side seams with the following properties:

	20 Gage
Minimum S ($in^3/_{ft}$) =	0.234
Minimum I ($in^4/_{ft}$) =	0.213

   b. Minimum allowable deck diaphragm shear values shall be 796 plf for a 7'-0" deck span.
   c. Weld steel roof deck to supporting framing members with 3/4" diameter puddle welds at the following spacings (Closer spacing may be used to develop minimum shear requirements.):
      i. 6" o.c. to all supports perpendicular to deck corrugations (7 welds per 36" sheet).
      ii. 6" o.c. to all supports parallel to deck corrugations.
   d. Hilti or Pneutek power driven fasteners are acceptable as an alternative to welds provided the connection meets the diaphragm shear capacity given above. For Hilti call 800-879-8000 extension 6337 for connection information comparison. For Pneutek, call 800-431-8665. If Hilti or Pneutek power driven fasteners are used, the contractor shall submit Hilti's / Pneutek calculations to the Architect/Engineer for review. Also if Hilti of Pneutek power driven fasteners are used, a Hilti / Pneutek representative shall be present before the decking is installed to make sure the installer is properly trained in using the equipment. The Hilti / Pneutek representative shall also make a site visit the day after deck has been started to be installed to verify the power driven fasteners are being installed correctly.
   e. Attach interlocking seams with 1 1/2" long top seam welds at 24" o.c. maximum or with Verco PunchLok System at 12" o.c. maximum, with ASC Delta Grip System at 12" o.c. maximum or with Wheeling Gator-Seismic Shearloc at 12" o.c maximum. Closer spacing may be used to develop minimum shear requirements. A standard button punch can **not** be used in place of Verco PunchLok, DeltaGrip or Gator-Seismic Shearloc.

COLD-FORMED STEEL

1. All cold-formed steel shall meet the requirements of "Specifications for the Design of Cold-Formed Steel Structural Members" by American Iron and Steel Institute (AISI).
2. Light Gauge Steel Framing:
   a. Galvanized steel shall meet the minimum requirements of ASTM A653 (Fy = 50 ksi) for 97 mil (12 gauge), 68 mil (14 gauge) and 54 mil (16 gauge). For 43 mil (18 gauge) and lighter galvanized steel shall meet and ASTM A653 (Fy = 33 ksi). Galvanized coatings must meet the ASTM A924.
   b. Follow all manufacturers' recommendations for the use of these products.
   c. Unless noted otherwise, all welded connections shall be done according to AWS standards.
   d. All interior non-bearing steel-stud walls that extend above the ceiling but do not attach to the structure above shall be brace with diagonal metal-stud braces (45 degrees). The kl/r ratio of the brace shall not exceed 200 and shall not be spaced further apart than 10'-0" o.c. Connect diagonal braces to the top of the steel stud walls and to the top flange of the steel beams with two #10 tek screws minimum. Where a concrete deck occurs above, use two powder-driven fasteners per diagonal brace. Other approved methods may be used.

SPECIAL INSPECTION AND QUALITY ASSURANCE

Special inspection and quality assurance, as required by section 1704 thru 1709 of the IBC, shall be provided by an independent agency employed by the owner unless waived by the building official. The contractor shall coordinate and cooperate with the required inspections. All testing and inspection reports shall be sent within 24 hours of the test to the architect, engineer, building official and contractor for review. Special inspection during fabrication is not required if the fabricator is registered and approved to perform such work with out special inspection. Items requiring special inspection and quality assurance are:

1. Soils (IBC 1704.7)
   a. Prior to placement of the prepared fill, the special inspector shall determine that the site has been prepared in accordance with the soils report.
   b. During placement and compaction of the fill material, the special inspector shall determine that the material being used and the maximum lift thickness comply with the soils report.
   c. The special inspector shall determine that the in-place dry density of the compacted fill material complies with the soils report.
      i. Continuous Footing Backfill: At each compacted backfill layer, at least one test for each 40 linear feet or less of wall length, but no fewer than 2 tests.
      ii. Spot Footing Backfill: Minimum of one compaction test for each lift for each spot footing.
   d. See specifications for further requirements.
2. Concrete placement (IBC Section 1704.4)
   a. Continuous special inspection shall be provided
   b. Cylinders, slump, temperature and air-entrainment shall be done for every 50 cubic yards or each day's production if the day's production is less than 50 cubic yards.
   c. Protection of concrete during cold and hot weather
   d. See specifications for further concrete testing requirements.
3. Bolts installed in concrete (IBC Section 1704.4)
   a. All bolts shall be special inspected prior to and during concrete placement.
4. Embeds and Inserts installed in concrete (IBC Section 1704.4)
   a. All embeds and inserts shall be special inspected prior to and during concrete placement.
5. Concrete reinforcing steel placement (IBC Section 1704.4)
   a. All Reinforcing shall be special inspected prior to concrete placement.
6. Structural welding, including steel deck (IBC 1707.2 and 1704.3)
   a. Periodic special inspection of metal floor prior to concrete placement and roof decks.
   b. Periodic special inspection of single pass fillet welds less than or equal to 5/16"
   c. Continuous special inspection of single pass fillet welds greater than 5/16" and multi-pass fillet welds.
   d. Continuous special inspection of complete and partial penetration welds.
7. Metal deck using mechanical attachments (IBC Section 1704.13)
   a. Periodic special inspection of metal floor prior to concrete placement and roof decks. Special inspection shall be done to verify size and spacing of shot pins / screws for deck attachment to the supporting structural. Also special inspection shall be done to verify spacing and size of seam attachments.
8. Epoxy Anchors (IBC Section 1704.13)
   a. Special inspection shall verify all drilled holes' size and depth prior to installation of epoxy and anchor rod.
9. Cold-formed steel framing (IBC 1707.4)
   a. Periodic special inspection is required for screw attachment, bolting, anchoring and other fastening of components within the seismic-force resisting system, including struts, braces and hold downs.

SITE OBSERVATIONS BY STRUCTURAL ENGINEER

1

Site observations, as required by IBC section 1709, shall be done by the Engineer of Record or an approved subordinate at the stages of construction listed below. The contractor shall notify the engineer when he has reached the construction stage listed below and before the work to be observed is covered up, walled in or becomes otherwise hidden from view or in-accessible to any necessary corrections. At the conclusion of the project, the structural observer shall submit to the building official a written statement that the site visits have been made and identify any reported deficiencies that to the best of the structural observer's knowledge have not been resolved (See 1709.1).

1. Prior to footing pours
2. Prior to pouring concrete over metal deck
3. After roof deck is welded and prior to roofing

DEFERRED SUBMITTALS

For the purpose of this section, deferred submittals are defined as per section 106.3.4.2 of the IBC. Submittal documents for deferred submittal items shall be submitted to the engineer, architect and building official for their review for general conformance with the design of the building. The submittals shall be submitted to the Building Official for review with an accompanied letter from the architect stating that the drawings are in conformance with his/her design. Work related to the deferred submittals is not to commence until the Building Official has approved the submittal. Deferred structural submittals for this project are:

1. Open Web Steel Joists

LEGEND OF MARKS AND ABREVIATIONS

AB	ANCHOR BOLT(S)	JT	JOINT
ABV	ABOVE	JST	JOIST
ALT	ALTERNATE		
APPROX	APPROXIMATE	k	KIP(S) = 1000 POUNDS
ARCH	ARCHITECT(URAL)	KLF	KIPS PER LINEAL FOOT
		KSF	KIPS PER SQUARE FOOT
BLDG	BUILDING		
BLW	BELOW	LBS	POUNDS
BM	BEAM	LF	LINEAL FOOT
BOT	BOTTOM	LLH	LONG LEG HORIZONTAL
BRG	BEARING	LLV	LONG LEG VERTICAL
BTWN	BETWEEN	LSV	LONG SIDE VERTICAL
CC.	CENTER-TO CENTER	MAX	MAXIMUM
C.J.	CONST/CONTROL JOINT	MECH	MECHANICAL
COL	COLUMN	MFR	MANUFACTURER
CONC	CONCRETE	MIN	MINIMUM
CONST	CONSTRUCTION	MISC	MISCELLANEOUS
CP-x	CONCRETE PIER		
CTR	CENTER	NIC	NOT IN CONTRACT
CW-x	CONCRETE WALL	NTS	NOT TO SCALE
DB	DECK BEARING	O.C.	ON CENTER
DBA	DEFORMED BAR ANCHOR	O.F.	OUTSIDE FACE
DBE	DECK BEARING ELEVATION	OPNG	OPENING
DBL	DOUBLE	OPP	OPPOSITE
DET	DETAIL		
DIA	DIAMETER	PCF	POUNDS PER CUBIC FOOT
DIM	DIMENSION	PL	PLATE
DN	DOWN	PLF	POUNDS PER LINEAL FOOT
DWG	DRAWING	PNL	PANEL
DWL	DOWEL	PSF	POUNDS PER SQUARE FOOT
		PSI	POUNDS PER SQUARE INCH
EA	EACH	PT	POINT
E.F.	EACH FACE		
E.J.	EXPANSION JOINT	REINF	REINFORCING
ELEC	ELECTRICAL	REQD	REQUIRED
ELEV	ELEVATION	R.D.	ROOF DRAIN
EQUIP	EQUIPMENT	RTU	ROOF TOP UNITS
EQ	EQUAL		
E.W.	EACH WAY	SHT	SHEET
EXST	EXISTING	SI	SPECIAL INSPECTION
EXP	EXPANSION	SIM	SIMILAR
EXT	EXTERIOR	SMU	SUSPENDED MECHANICAL UNITS
		SOG	SLAB-ON-GRADE
FC-x	CONTINUOUS FOOTING MARK	SQ	SQUARE
F.D.	FLOOR DRAIN	STAG	STAGGERED
FDN	FOUNDATION	STD	STANDARD
F.F.	FINISHED FLOOR	STL	STEEL
FR-x	RECTANGULAR FOOTING MARK	STR	STRUCTURAL
FS-x	SQUARE FOOTING MARK	STS	SELF TAPPING SCREWS
FT	FOOT		
FTG	FOOTING	T&B	TOP AND BOTTOM
FTS-x	THICKEN SLAB MARK	TEMP	TEMPERATURE
		THDS	THREADS
GA	GAUGE	T.O.	TOP OF
GALV	GALVANIZED	TOC	TOP OF CONCRETE
GSN	GENERAL STRUCTURAL NOTES	TOD	TOP OF DECK
		TOF	TOP OF FOOTING
HB	HORIZONTAL BRIDGING	TOS	TOP OF STEEL
HORIZ	HORIZONTAL	TOW	TOP OF WALL
HSA	HEADED STUD ANCHOR	TYP	TYPICAL
HT	HEIGHT		
		UNO	UNLESS NOTED OTHERWISE
ICBO	INTERNATIONAL CONFERENCE OF BUILDING OFFICIALS		
		VERT	VERTICAL
IBC	INTERNATIONAL BUILDING CODE		
I.F.	INSIDE FACE	W/	WITH
IN.	INCH	WT	WALL THICKNESS
INT	INTERIOR	WWF	WELDED WIRE FABRIC
		WWM	WELDED WIRE MESH

MHTN ARCHITECTS

MHTN Architects, Inc.
420 East South Temple
Suite 100
Salt Lake City, Utah 84111
TEL 801.595.6700
FAX 801.595.6717
www.mhtn.com

JAMES T. DRESSLAR ARCHITECT, L.L.C.
387 PARK LANE
MOAB, UTAH 84532
435.259.1155 PHONE / FAX

GREAT SALT LAKE
MARINA MAINTENANCE BUILDING
DFCM # 10029510

13312 WEST 1075 SOUTH
MAGNA, UTAH 84044

SEAL

PROFESSIONAL STRUCTURAL ENGINEER
CHRISTIAN LEE HOFHEINS
#323828-2203
STATE OF UTAH
LICENSED
10-04-2010

BHB PROJECT NO. 10238

DRAWN BY: akn CHECKED BY: rs

ISSUED:

NO.	DATE	DESCRIPTION
1	9/2/2010	CONSTRUCTION DOCUMENTS

REVISION DATE:

NO.	DATE	DESCRIPTION
1	9/29/10	STRUCTURAL PLAN CHECK

SHEET NAME

GENERAL STRUCTURAL NOTES
CONSTRUCTION DOCUMENTS
SEPTEMBER 2, 2010

SHEET NUMBER

S0.01

"Engineering Results"
BHB Consulting Engineers
A Professional Corporation
2766 South Main Street
Salt Lake City, Utah 84115
Phone: 801.355.5656
Fax: 801.355.5950
Email: bhb@bhbengineers.com

By: drafts6, Dec 01, 2010 - 1:54pm
G:\2010\10238\Struct\10238_S-001.dwg

GENERAL STRUCTURAL NOTES

SPECIAL INSPECTION AND TESTING UNDER THE PROVISIONS OF 2009 IBC Section 1704 AND FOR MISCELLANEOUS AREAS

Indicate required Special inspections for project by checking the appropriate boxes and provide specific instructions as to the inspection requirements and the expectations of the architect, engineer and owner:

FABRICATORS (IBC 1704.2)

☐ Approved Fabricator	Yes	No	☒ Unapproved Fabricator	Yes	No

Fabricators Name:	
Fabricators plant location	

Required In-plant Inspections ☐ Steel Construction ☒ Welding ☐ Details

STEEL (IBC 1704.3)

Item			Detailed Instructions and Frequencies
WELDING (1704.3.1)			
Details (1704.3.2)			
Single-pass fillet welds > 5/16"	☐ Continuous	☒ Periodic	Verify size and installation procedure of each weld
Single-pass fillet welds ? 5/16"	☐ Continuous	☒ Periodic	Verify size and installation procedure of each weld
Floor & roof deck welds	☐ Continuous	☒ Periodic	Verify size and installation procedure of each weld

CONCRETE CONSTRUCTION (IBC 1704.4)

Item			Detailed Instructions and Frequencies
Steel placement	☐ Continuous	☒ Periodic	Verify size and spacing of installed reinforcing
Bolts prior & during placement	☒ Continuous	☐ Periodic	Verify size and spacing of installed reinforcing
Use of required design mix	☐ Continuous	☒ Periodic	Verify compliance of design mix submittal
Concrete sampling for strength test, slump, air content, and temperature of concrete	☒ Continuous	☐ Periodic	Every 50yd^3 or each production days production if less than 50 yd^3
Concrete & shotcrete placement	☒ Continuous	☐ Periodic	
Curing temperature and techniques	☐ Continuous	☒ Periodic	Confirm installed techniques conform with specification requirements

SOILS CONSTRUCTION (IBC 1704.7)

Item			Detailed Instructions and Frequencies
Site preparation	☐ Continuous	☒ Periodic	Conform requirements from soils engineer are met
Structural fill material	☐ Continuous	☒ Periodic	Conform material meet spec requirements
Structural fill lift thickness	☒ Continuous	☐ Periodic	Conform lifts meet specification requirements
Structural fill soil densities	☒ Continuous	☐ Periodic	Conform densities meet specification requirements
Backfill soils materials	☐ Continuous	☒ Periodic	Conform materials meet specification requirements
Backfill soil densities	☐ Continuous	☒ Periodic	Conform densities meet specification requirements

EPOXY (IBC 1704.13)

Item			Detailed Instructions and Frequencies
Material and installation (specify locations)	☐ Continuous	☒ Periodic	As shown in structural drawing or in locations approved by architect/engineer

SMOKE CONTROL (IBC 1704.14)

Item			Detailed Instructions and Frequencies
Material	☐ Continuous	☒ Periodic	Review contractors submittal
Installation	☐ Continuous	☒ Periodic	Confirm installation is per manuf recommendations

Special inspection for seismic resistance (IBC 1707)

Item			Detailed Instructions and Frequencies
Structural Steel (17072)	☐ Continuous	☒ Periodic	See requirement for special inspection of metal roof and floor decks
Reinforcement for slab on grade sidewalks and drive approaches (specify locations and frequency)	☐ Continuous	☒ Periodic	As defined in "Concrete Construction" Page 1
Reinforcement for interior slab on grade (specify locations and frequency)	☐ Continuous	☒ Periodic	As defined in "Concrete Construction" Page 1
Concrete testing for slab on grade sidewalks and drive approaches (specify locations and frequency)	☒ Continuous	☐ Periodic	As defined in "Concrete Construction" Page 1
Concrete testing for interior slab on grade (specify locations and frequency)	☒ Continuous	☐ Periodic	As defined in "Concrete Construction" Page 1

"Engineering Results"
BHB Consulting Engineers
A Professional Corporation
2766 South Main Street
Salt Lake City, Utah 84115
Phone: 801.355.5656
Fax: 801.355.5950
Email: bhb@bhbengineers.com

MHTN ARCHITECTS
MHTN Architects, Inc.
420 East South Temple
Suite 100
Salt Lake City, Utah 84111
TEL 801.595.6700
FAX 801.595.6717
www.mhtn.com

JAMES T. DRESSLAR
ARCHITECT, L.L.C.
387 PARK LANE
MOAB, UTAH 84532
435.259.1155 Phone / Fax

GREAT SALT LAKE
MARINA MAINTENANCE BUILDING
DFCM # 10029510

13312 WEST 1075 SOUTH
MAGNA, UTAH 84044

SEAL

10-04-2010

BHB PROJECT NO. 10238
DRAWN BY: akn CHECKED BY: rs

ISSUED:

NO.	DATE	DESCRIPTION
1	9/2/2010	CONSTRUCTION DOCUMENTS

REVISION DATE:

NO.	DATE	DESCRIPTION
1	9/29/10	STRUCTURAL PLAN CHECK

SHEET NAME
GENERAL STRUCTURAL NOTES
CONSTRUCTION DOCUMENTS
SEPTEMBER 2, 2010

SHEET NUMBER
S0.02

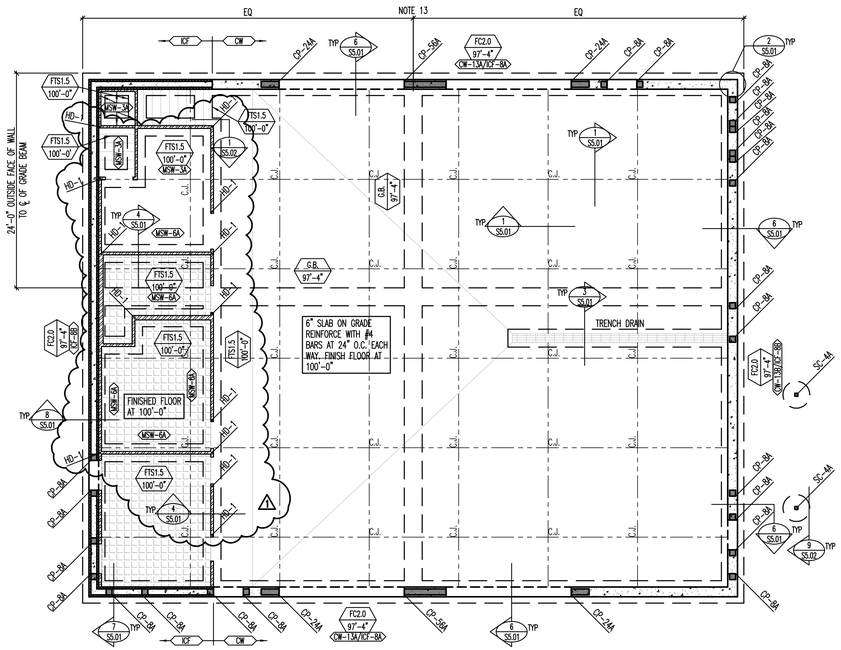

FOOTING AND FOUNDATION PLAN

SCALE: 1/8"=1'-0" 0 4' 8' 16'

NORTH

ICF S-NOTE-FTSS

MARKS AND SYMBOLS LEGEND

	SECTION MARK SHEET NUMBER
	FOOTING OR GRADE BEAM DESIGNATION TOP OF FOOTING OR GRADE BEAM ELEVATION
S——S	INDICATES FOOTING STEP, SEE DETAIL 5/S5.02
	INDICATES INSULATED CONCRETE FORM (ICF) WALL.
	INDICATES CONCRETE WALL.
	DEPRESS FOUNDATION WALL AND POUR SLAB OVER. SEE DETAIL 6, 7/S5.01.
	INDICATES METAL STUD WALL WHICH EXTENDS TO MEZZANINE.
	INDICATES DEPRESSED SLAB, SEE ARCHITECTURAL PLANS.
CW-x	INDICATES CONCRETE FOUNDATION WALL TYPE, SEE SCHEDULE ON SHEET S6.01.
ICF-x	INDICATES ICF WALL TYPE, SEE SCHEDULE ON SHEET S6.01.
MSW-x	INDICATES METAL STUD WALL TYPE, SEE SCHEDULE ON SHEET S6.02.
FCxx	INDICATES CONTINUOUS FOOTING. SEE SCHEDULE ON SHEET S6.01.
FSxx	INDICATES SPOT FOOTING. SEE SCHEDULE ON SHEET S6.01.
FTSxx	INDICATES THICKENED SLAB FOOTING. SEE SCHEDULE ON SHEET S6.01.
C.J.	INDICATES CONTROL/CONSTRUCTION JOINT. SEE DETAILS 1/S5.01.
CP-x	INDICATES CONCRETE PIER TYPE. SEE SCHEDULE ON SHEET S6.01.
G.B.	INDICATES GRADE BEAM, SEE SCHEDULE ON SHEET S6.01.
SC-x	INDICATES STEEL COLUMN. SEE SCHEDULE ON SHEET S6.01.
HD-x	INDICATES HOLDOWN. SEE SCHEDULE ON SHEET S6.02.

FOOTING AND FOUNDATION PLAN NOTES

1. COORDINATE LOCATION OF DEPRESSED SLABS, SLOPED SLABS, AND FLOOR DRAINS WITH ARCHITECTURAL AND MECHANICAL DRAWINGS.
2. SEE ARCHITECTURAL AND CIVIL DRAWINGS FOR EXTERIOR CONCRETE WORK AT DOORS, SIDEWALKS, ETC.
3. SEE ARCHITECTURAL DRAWINGS FOR CONTROL JOINT LOCATIONS.
4. SEE "EARTHWORK" NOTES ON SHEET S0.01 AND DETAIL 8/S5.02 FOR MINIMUM FILL REQUIRED BENEATH FOOTINGS.
5. SEE DETAILS 6/S5.02 AND 7/S5.02 FOR CONDITION WHERE BURIED PIPES RUN PARALLEL AND PERPENDICULAR TO FOOTINGS.
6. SEE DETAILS 1/S5.01 FOR TYPICAL CONTROL/CONSTRUCTION JOINTS IN CONCRETE SLAB ON GRADE.
7. SEE DETAIL 5/S5.02 FOR SLAB REINFORCING WHERE CONTROL JOINTS ARE DISCONTINUOUS.
8. SEE DETAIL 5/S5.01 FOR ADDITIONAL REINFORCING AT MISCELLANEOUS OPENINGS IN CONCRETE WALLS.
9. SEE DETAIL 2/S5.02 FOR CONDITION AT RECESSES IN ICF WALLS.
10. SEE DETAIL 3/S5.02 FOR TERMINATION OF HORIZONTAL REINFORCING IN ICF WALLS.
11. SEE DETAIL 4/S5.02 FOR ANCHORAGE OF HOUSEKEEPING PADS.
12. SEE ARCHITECTURAL DRAWINGS FOR DIMENSIONS TO ALL STEEL COLUMNS.
13. PROVIDE 6" CONCRETE SLAB ON GRADE AT DRIVE ENTRIES REINFORCE WITH #4 BARS AT 24" O.C. EACH WAY, -TYPICAL SEE ARCH AND CIVIL DRAWINGS.

"Engineering Results"
BHB Consulting Engineers
A Professional Corporation
2766 South Main Street
Salt Lake City, Utah 84115
Phone: 801.355.5656
Fax: 801.355.5950
Email: bhb@bhbengineers.com

MHTN ARCHITECTS
MHTN Architects, Inc.
420 East South Temple
Suite 100
Salt Lake City, Utah 84111
TEL 801.595.6700
FAX 801.595.6717
www.mhtn.com

JAMES T. DRESSLAR
ARCHITECT, L.L.C.
387 PARK LANE
MOAB, UTAH 84532
435.259.1155 Phone / Fax

GREAT SALT LAKE MARINA MAINTENANCE BUILDING

DFCM # 10029510

13312 WEST 1075 SOUTH
MAGNA, UTAH 84044

SEAL

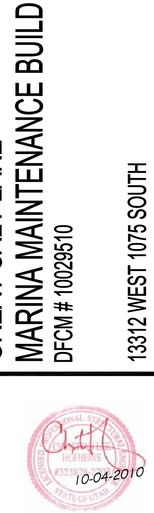

BHB PROJECT NO. 10238

DRAWN BY: akn CHECKED BY: rs

ISSUED:

NO.	DATE	DESCRIPTION
1	9/2/2010	CONSTRUCTION DOCUMENTS

REVISION DATE:

NO.	DATE	DESCRIPTION
1	9/29/10	STRUCTURAL PLAN CHECK

SHEET NAME

FOOTING AND FOUNDATION PLAN

CONSTRUCTION DOCUMENTS
SEPTEMBER 2, 2010

SHEET NUMBER

S1.01

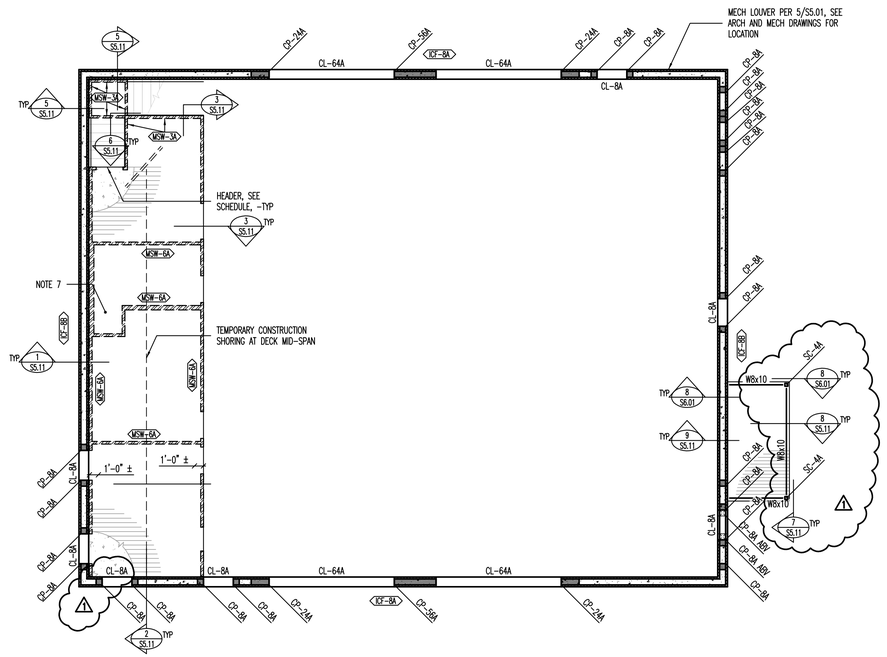

MEZZANINE FRAMING PLAN

SCALE: 1/8"=1'-0"

0 4' 8' 16'

NORTH

ICF S-NOTE-FLOR

MARKS AND SYMBOLS LEGEND

	SECTION MARK SHEET NUMBER
	INDICATES INSULATED CONCRETE FORM (ICF) WALL WHICH EXTENDS ABOVE FLOOR.
	INDICATES CONCRETE OVER METAL FLOOR DECK. SEE GENERAL STRUCTURAL NOTES ON SHEET S0.01.
ICF-x	INDICATES ICF WALL TYPE, SEE SCHEDULE ON SHEET S6.01.
MSW-x	INDICATES METAL STUD WALL, SEE SCHEDULE ON SHEET S6.02.
CP-x	INDICATES CONCRETE PIER. SEE SCHEDULE ON SHEET S6.01.
CL-x	INDICATES CONCRETE LINTEL TYPE. SEE SCHEDULE ON SHEET S6.01.
SC-x	INDICATES STEEL COLUMN. SEE SCHEDULE ON SHEET S6.01.

FLOOR FRAMING PLAN NOTES

1. VERIFY ALL FLOOR OPENINGS FOR MECHANICAL SHAFTS, STAIRS, ETC. WITH ARCHITECTURAL AND MECHANICAL DRAWINGS.
2. SEE DETAIL 5/S5.01 FOR ADDITIONAL REINFORCING AT MISCELLANEOUS OPENINGS IN CONCRETE WALLS.
3. SEE DETAIL 2/S5.02 FOR CONDITION AT RECESSES IN ICF WALLS.
4. SEE DETAIL 3/S5.02 FOR TERMINATION OF HORIZONTAL REINFORCING IN ICF WALLS.
5. SEE DETAIL 4/S5.02 FOR ANCHORAGE OF HOUSEKEEPING PADS.
6. SEE ARCHITECTURAL DRAWINGS FOR DIMENSIONS TO ALL STEEL COLUMNS.
7. REINFORCE OPENING IN FLOOR SLAB PER DETAIL 10/S5.11, SEE ARCH AND PLUMBING DRAWINGS FOR LOCATION.

"Engineering Results"
BHB Consulting Engineers
A Professional Corporation
2766 South Main Street
Salt Lake City, Utah 84115
Phone: 801.355.5656
Fax: 801.355.9950
Email: bhb@bhbengineers.com

MHTN
ARCHITECTS
MHTN Architects, Inc.
420 East South Temple
Suite 100
Salt Lake City, Utah 84111
TEL 801.595.6700
FAX 801.595.6717
www.mhtn.com

JAMES T. DRESSLAR
ARCHITECT, L.L.C.
387 PARK LANE
MOAB, UTAH 84532
435.259.1155 Phone / Fax

GREAT SALT LAKE MARINA MAINTENANCE BUILDING

DFCM # 10029510

13312 WEST 1075 SOUTH
MAGNA, UTAH 84044

SEAL

BHB PROJECT NO. 10238

DRAWN BY: akn CHECKED BY: rs

ISSUED:

NO.	DATE	DESCRIPTION
1	9/2/2010	CONSTRUCTION DOCUMENTS

REVISION DATE:

NO.	DATE	DESCRIPTION
1	9/29/10	STRUCTURAL PLAN CHECK

SHEET NAME

MEZZANINE FRAMING PLAN

CONSTRUCTION DOCUMENTS
SEPTEMBER 2, 2010

SHEET NUMBER

S1.11

Plot date/time: Thur 09, 09:16 - 4:07pm
D:\Autodesk\Revit 2010\Models\10238_S-Floor.rvt

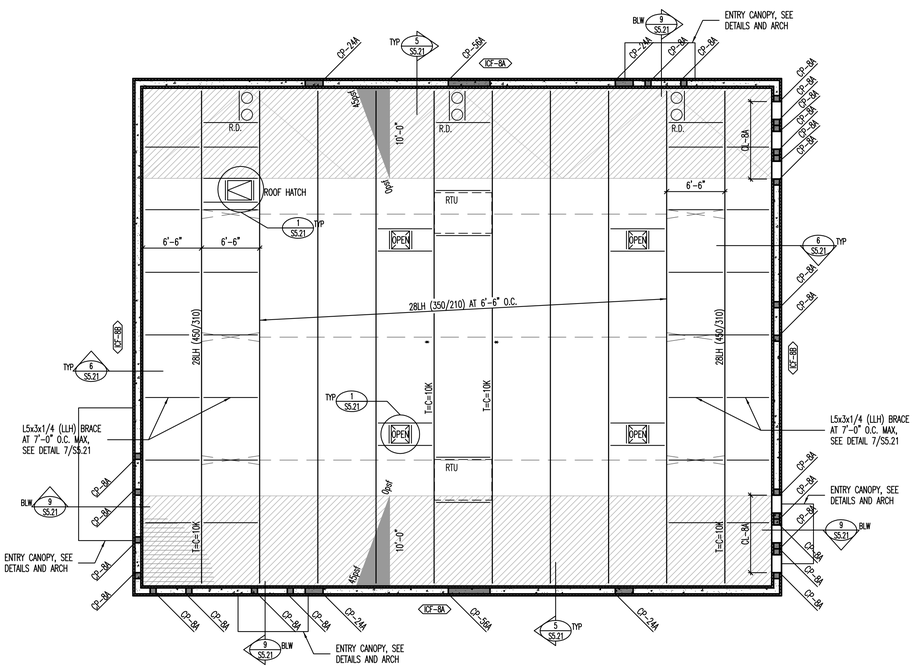

ROOF FRAMING PLAN

SCALE: 1/8"=1'-0"

0 4' 8' 16'

NORTH

SNOW DRIFT LEGEND

DRIFT_S-NOTE-SNOW

INDICATES AREA OF SNOW DRIFT

X Y — INDICATES ADDITIONAL LOADING DUE TO SNOW DRIFT (SEE NOTE #1).
X = LOAD AT DRIFT HIGH POINT
Y = LENGTH OF DRIFT

X Y X — INDICATES ADDITIONAL LOADING DUE TO SNOW DRIFT (SEE NOTE #1).
X = LOAD AT DRIFT HIGH/LOW POINT
Y = LENGTH OF DRIFT

1. SEE PLAN FOR SNOW DRIFT LOADING. THESE LOADS ARE IN ADDITION TO THE JOIST UNIFORM AND POINT LOADS SHOWN ON PLANS. JOIST SUPPLIER TO ADD SNOW DRIFT LOAD TO BOTH JOISTS AND GIRDERS.

MARKS AND SYMBOLS LEGEND

ICF_S-NOTE-ROOF

SECTION MARK
SHEET NUMBER

INDICATES INSULATED CONCRETE FORM (ICF) WALL WHICH EXTENDS ABOVE ROOF.

INDICATES METAL ROOF DECK. SEE GENERAL STRUCTURAL ON SHEET S0.01.

ICF-x — INDICATES ICF WALL TYPE, SEE SCHEDULE ON SHEET S6.01.

* — INDICATES THAT THESE JOISTS SHALL BE DESIGNED FOR AN ADLOAD OF 1000# AT ANY POINT.

T=C=x — INDICATES ADDITIONAL TOP CHORD ALLOWABLE LOAD. DUE TO SEISMIC, NO 1/3 INCREASE ALLOWED.

_LH (**/**) — INDICATES LH-SERIES JOIST WITH ALLOWABLE TOTAL LOAD / ALLOWABLE LIVE (SNOW) LOAD.

CL-x — INDICATES CONCRETE LINTEL TYPE. SEE SCHEDULE ON SHEET S6.01.

R.D. — INDICATES ROOF DRAIN, SEE DETAIL 2/S5.21.

ROOF FRAMING PLAN NOTES

1. VERIFY ALL ROOF OPENINGS FOR MECHANICAL SHAFTS, DRAINS, ETC. WITH ARCHITECTURAL AND MECHANICAL DRAWINGS.
2. JOIST SUPPLIER SHALL DESIGN ALL ROOF JOIST BEARING ENDS AT INSULATED CONCRETE FORM WALLS TO TRANSFER 4000# (ALLOWABLE) AXIAL LOAD THROUGH JOIST BEARING SHOE AND TOP CHORD OF JOIST.
3. ALL JOISTS SHALL HAVE 5" DEEP BEARING ENDS (UNO).
4. ALL ROOF OPENINGS GREATER THAN, OR EQUAL TO, 12" x 12" SHALL BE FRAMED AS INDICATED IN DETAILS 1/S5.21 AND 2/S5.21. FOR OPENINGS WHICH CUT LESS THAN TWO DECK FLUTES, SEE DETAIL 3/S5.21.
5. SEE DETAIL 4/S5.11 WHEN CONCENTRATED LOADS ARE LOCATED MORE THAN 6" FROM JOIST OR JOIST GIRDER PANEL POINT.
6. LOCATE MISCELLANEOUS MECHANICAL OPENINGS BETWEEN JOISTS, NOT UNDERNEATH THEM.
7. OPEN WEB STEEL JOISTS SHALL BE DESIGNED BY THE MANUFACTURER TO SUPPORT THE MECHANICAL AND LATERAL LOADS SHOWN ON THE ROOF FRAMING PLANS IN ADDITION TO THE UNIFORM AND POINT LOADS SHOWN. SEE DETAIL 8/S5.21 FOR TYPICAL HANGING MECHANICAL UNIT SUPPORT DETAIL.
8. JOIST BRIDGING SHOWN ON PLANS IS FOR REPRESENTATION ONLY; ACTUAL SIZE, QUANTITY, AND LOCATION WILL BE DETERMINED BY THE JOIST SUPPLIER PER 'SJI' REQUIREMENTS. ALL BRIDGING AND BRIDGING ANCHORS NEED TO BE IN PLACE BEFORE APPLYING ANY LOADS. WHERE SKYLIGHT OR MECHANICAL UNITS/DUCTS INTERRUPT HORIZONTAL BRIDGING, PROVIDE CROSS BRIDGING AT JOIST SPACES ON EACH SIDE OF THE OPENING. WHERE DIAGONAL BRIDGING CONFLICTS WITH MECHANICAL DUCTS, REMOVE DIAGONAL BRIDGING AND REPLACE WITH HORIZONTAL BRIDGING AFTER ROOF DECK IS IN PLACE.
9. JOIST DESIGNER SHALL DESIGN JOISTS AND SUPPLY ADDITIONAL BRIDGING AS REQUIRED FOR UPLIFT DUE TO WIND. ASSUME:
   DEAD LOAD = 12psf WIND UPLIFT = 20psf (GROSS)
   NO 1/3 STRESS INCREASE ALLOWED.
10. SEE DETAIL 1/S5.02 FOR ADDITIONAL REINFORCING AT MISCELLANEOUS OPENINGS IN CONCRETE WALLS.
11. SEE DETAIL 2/S5.02 FOR CONDITION AT RECESSES IN ICF WALLS.
12. SEE DETAIL 3/S5.02 FOR TERMINATION OF HORIZONTAL REINFORCING IN ICF WALLS.

"Engineering Results"
BHB Consulting Engineers
A Professional Corporation
2766 South Main Street
Salt Lake City, Utah 84115
Phone: 801.355.5656
Fax: 801.355.5990
Email: bhb@bhbengineers.com

MHTN ARCHITECTS
MHTN Architects, Inc.
420 East South Temple
Suite 100
Salt Lake City, Utah 84111
TEL 801.595.6700
FAX 801.595.6717
www.mhtn.com

JAMES T. DRESSLAR
ARCHITECT, L.L.C.
387 PARK LANE
MOAB, UTAH 84532
435.259.1155 Phone / Fax

GREAT SALT LAKE MARINA MAINTENANCE BUILDING

DFCM # 10029510

13312 WEST 1075 SOUTH
MAGNA, UTAH 84044

SEAL

BHB PROJECT NO. 10238

DRAWN BY: akn CHECKED BY: rs

ISSUED:

NO.	DATE	DESCRIPTION
1	9/2/2010	CONSTRUCTION DOCUMENTS

REVISION DATE:

NO.	DATE	DESCRIPTION
1	9/29/10	STRUCTURAL PLAN CHECK

SHEET NAME

ROOF FRAMING PLAN

CONSTRUCTION DOCUMENTS
SEPTEMBER 2, 2010

SHEET NUMBER

S1.21

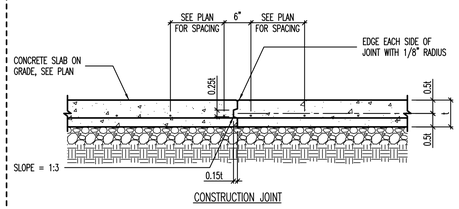

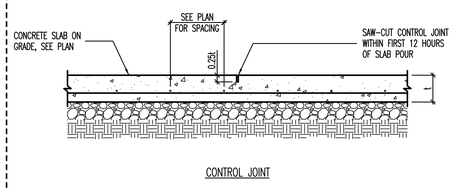

1 TYPICAL SLAB ON GRADE JOINT DETAILS
NO SCALE

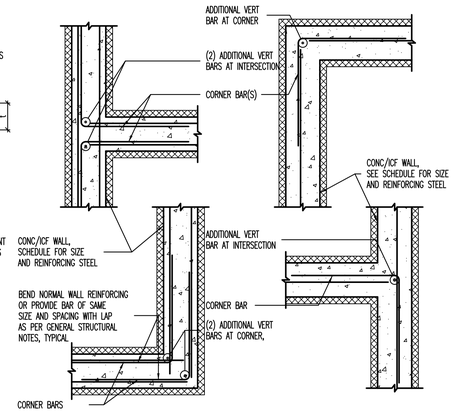

2 TYPICAL CORNER WALL REINFORCING AT CONCRETE/ICF WALLS [PLAN VIEW]
NO SCALE

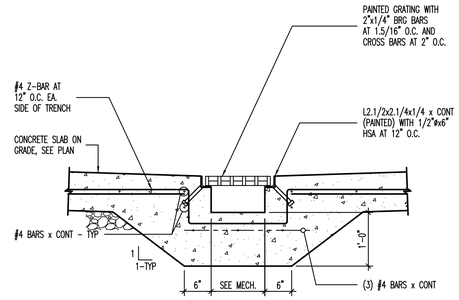

3 TRENCH DRAIN
NO SCALE

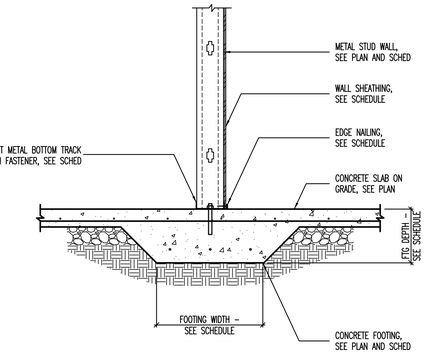

4 THICKENED SLAB FOOTING AT INTERIOR METAL STUD WALL
NO SCALE

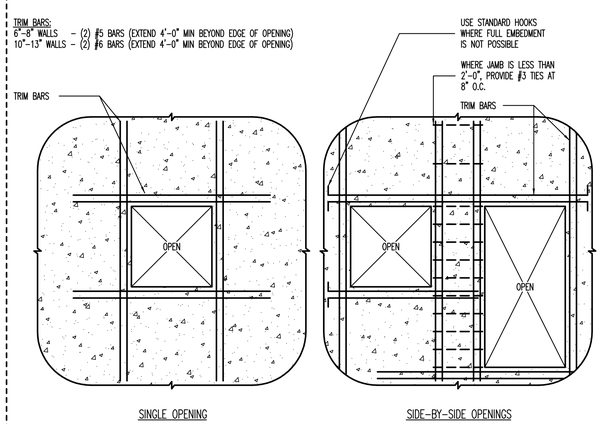

5 TYPICAL REINFORCING FOR MISCELLANEOUS OPENINGS LESS THAN 3'-0" IN CONCRETE/ICF WALLS
WHERE MISCELLANEOUS OPENING WIDTH IS GREATER THAN 3'-0" WIDE, CONTACT STRUCTURAL ENGINEER.
NO SCALE

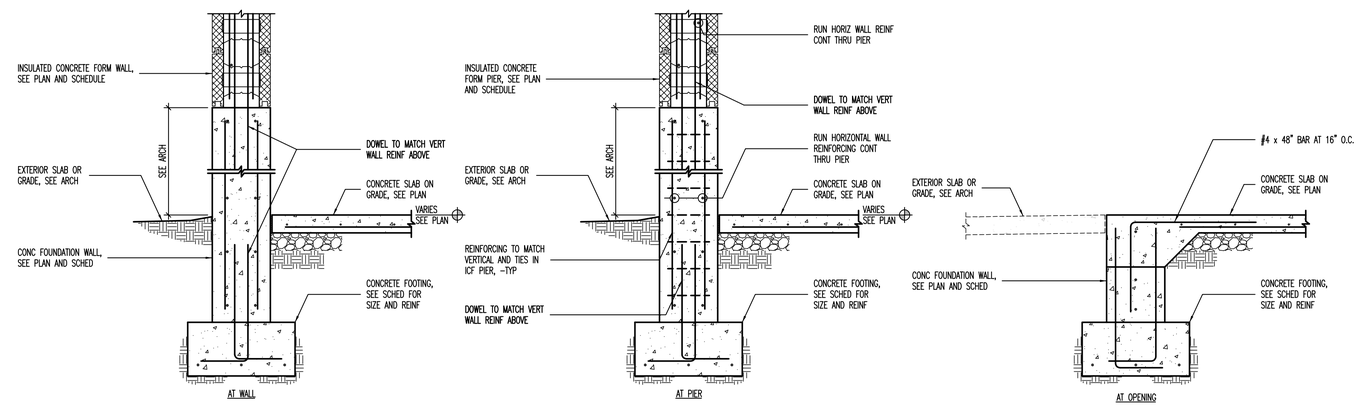

6 TYPICAL INSULATED CONCRETE FORM WALL DETAIL
NO SCALE

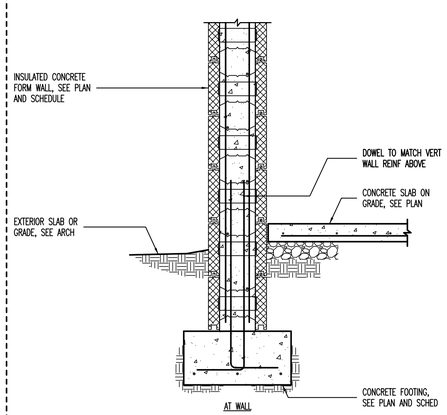

7 TYPICAL EXTERIOR INSULATED CONCRETE FORM WALL
NO SCALE

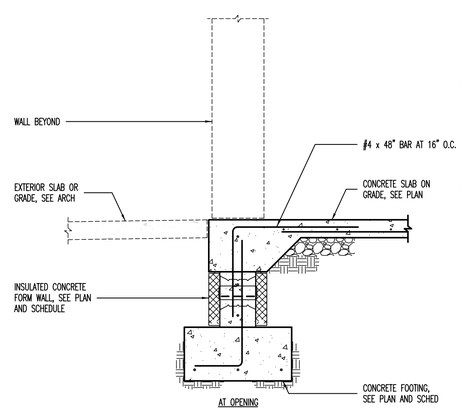

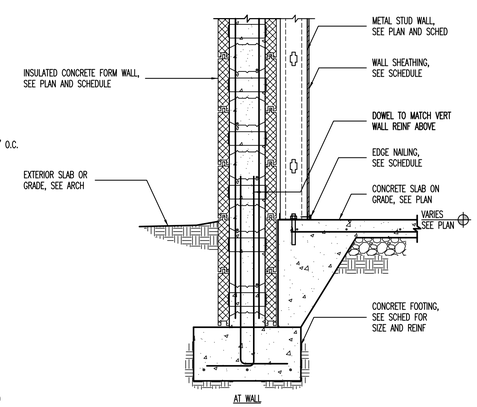

8 TYPICAL INSULATED CONCRETE FORM WALL DETAIL
NO SCALE

MHTN ARCHITECTS
MHTN Architects, Inc.
420 East South Temple
Suite 100
Salt Lake City, Utah 84111
TEL 801.595.6700
FAX 801.595.6717
www.mhtn.com

JAMES T. DRESSLER
ARCHITECT, L.L.C.
387 PARK LANE
MOAB, UTAH 84532
435.259.1155 Phone / Fax

GREAT SALT LAKE MARINA MAINTENANCE BUILDING

DFCM # 10029510

13312 WEST 1075 SOUTH
MAGNA, UTAH 84044

SEAL

10-04-2010

BHB PROJECT NO. 10238

DRAWN BY: akn CHECKED BY: rs

ISSUED:

NO.	DATE	DESCRIPTION
1	9/2/2010	CONSTRUCTION DOCUMENTS

REVISION DATE:

NO.	DATE	DESCRIPTION
1	9/29/10	STRUCTURAL PLAN CHECK

SHEET NAME

FTNG AND FDN DETAILS

CONSTRUCTION DOCUMENTS
SEPTEMBER 2, 2010

SHEET NUMBER

S5.01

"Engineering Results"
BHB Consulting Engineers
A Professional Corporation
2766 South Main Street
Salt Lake City, Utah 84115
Phone: 801.355.5656
Fax: 801.355.5950
Email: bhb@bhbengineers.com

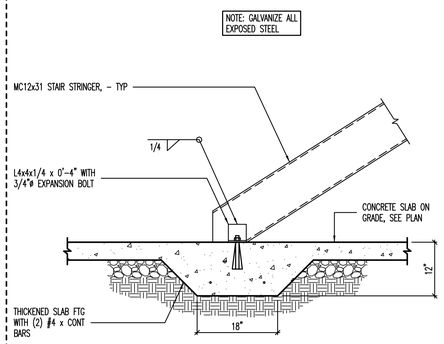

1 TYPICAL STAIR STRINGER BEARING DETAIL
NO SCALE

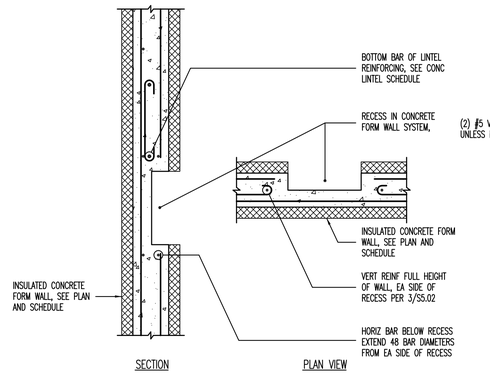

2 TYPICAL REINFORCING AT RECESS IN INSULATED CONCRETE FORM WALL SYSTEM
NO SCALE

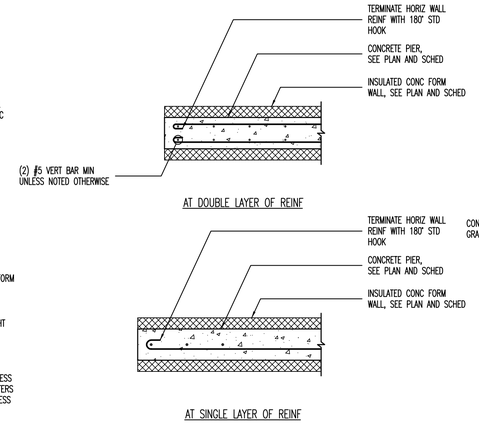

3 TERMINATION OF HORIZONTAL WALL REINFORCING AT ENDS OF WALL [PLAN VIEW]
NO SCALE

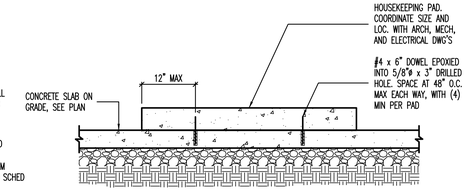

4 HOUSEKEEPING PAD DETAIL
NO SCALE

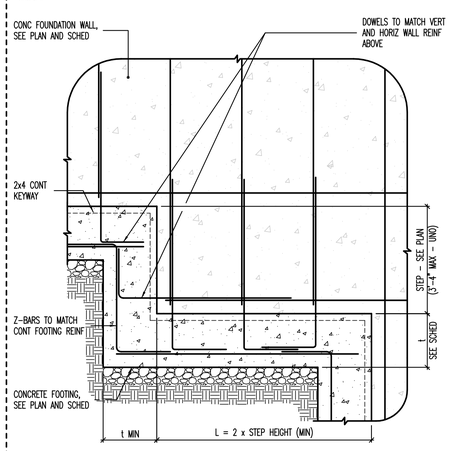

5 TYPICAL FOOTING STEP DETAIL
NO SCALE

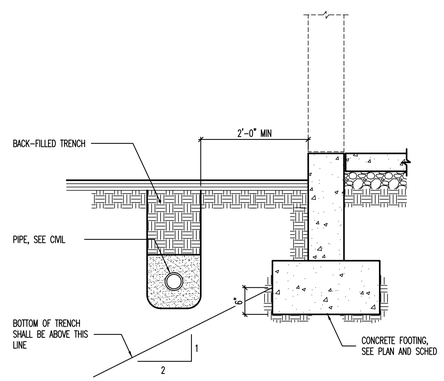

6 CONDITION AT PIPE PARALLEL TO CONCRETE FOOTING
NO SCALE

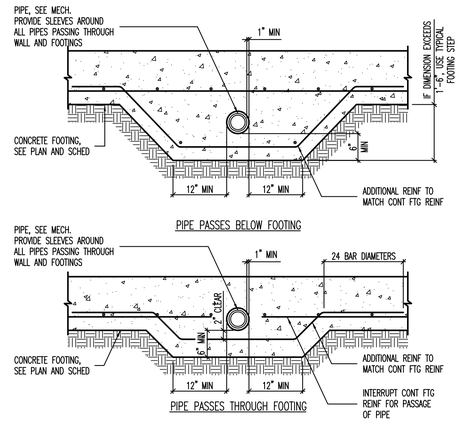

7 CONDITIONS AT PIPE PERPENDICULAR TO FOOTING
NO SCALE

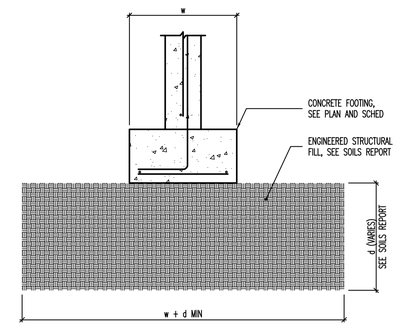

8 ENGINEERED STRUCTURAL FILL DETAIL
NO SCALE

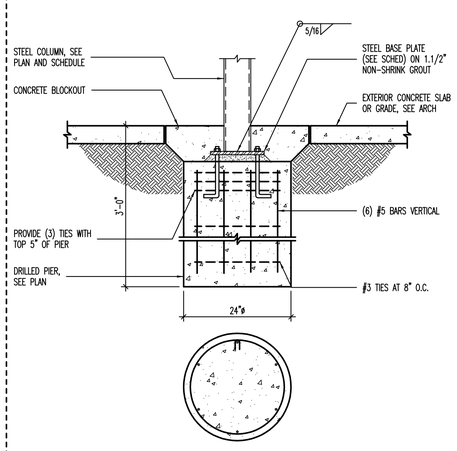

9 STEEL COLUMN BEARING ON DRILLED PIER
NO SCALE

MHTN ARCHITECTS
MHTN Architects, Inc.
420 East South Temple
Suite 100
Salt Lake City, Utah 84111
TEL 801.595.6700
FAX 801.595.6717
www.mhtn.com

JAMES T. DRESSLAR
ARCHITECT, L.L.C.
387 PARK LANE
HOAB, UTAH 84532
435.259.1155 PHONE / FAX

GREAT SALT LAKE MARINA MAINTENANCE BUILDING

DFCM # 10029510

13312 WEST 1075 SOUTH
MAGNA, UTAH 84044

SEAL

BHB PROJECT NO. 10238

DRAWN BY: akn CHECKED BY: rs

ISSUED:

NO.	DATE	DESCRIPTION
1	9/2/2010	CONSTRUCTION DOCUMENTS

REVISION DATE:

NO.	DATE	DESCRIPTION
1	9/29/10	STRUCTURAL PLAN CHECK

SHEET NAME

FTNG AND FDN DETAILS

CONSTRUCTION DOCUMENTS
SEPTEMBER 2, 2010

SHEET NUMBER

S5.02

"Engineering Results"
BHB Consulting Engineers
A Professional Corporation
2766 South Main Street
Salt Lake City, Utah 84115
Phone: 801.355.5656
Fax: 801.355.5950
Email: bhb@bhbengineers.com

By: akn Date: Sep 02, 2010 - 1:07pm
D:\Autodesk Sync Local\10238_S-002.dwg

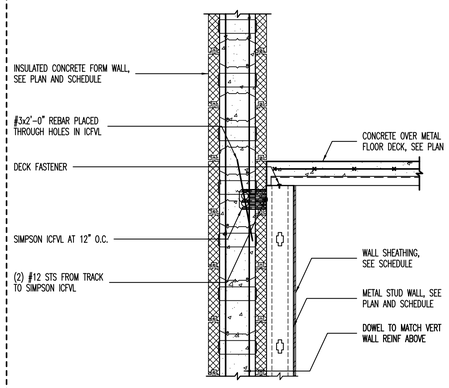

1 STORAGE LEVEL FRAMING DETAIL
NO SCALE
1023B_S-511

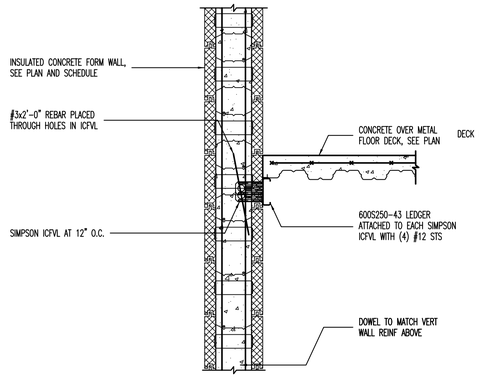

2 STORAGE LEVEL FRAMING DETAIL
NO SCALE
1023B_S-511

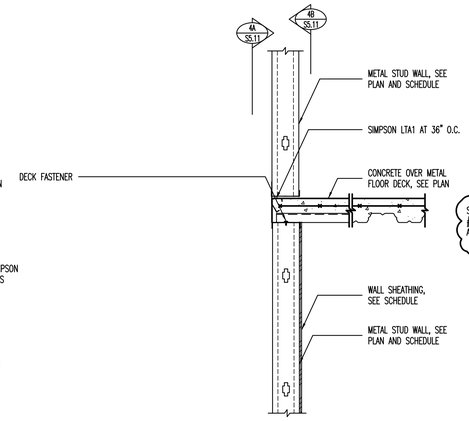

3 STORAGE LEVEL FRAMING DETAIL
NO SCALE
1023B_S-511

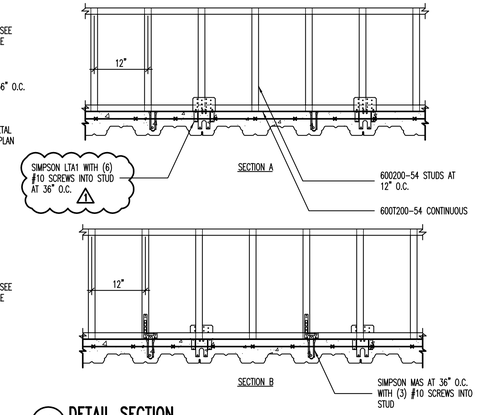

4 DETAIL SECTION
NO SCALE
1023B_S-511

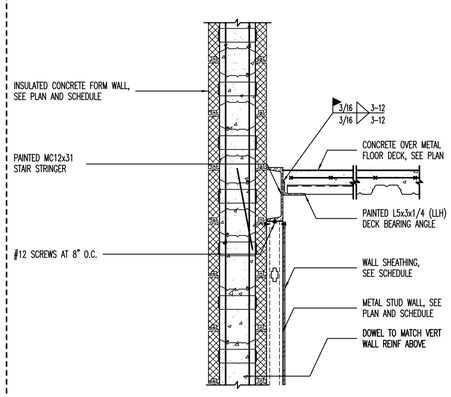

5 STAIR STRINGER DETAIL
NO SCALE
1023B_S-511

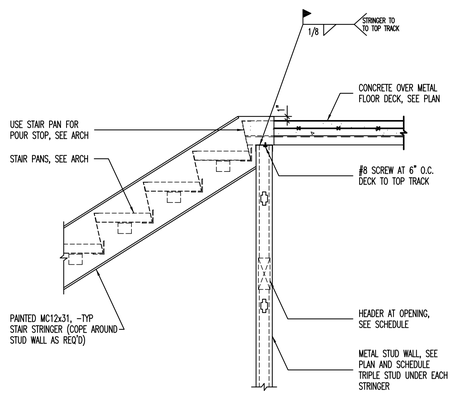

6 TYPICAL STAIR FRAMING DETAIL
NO SCALE
1023B_S-511

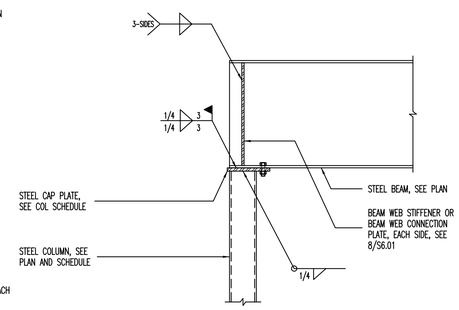

7 TYPICAL STEEL BEAM BEARING AT STEEL COLUMN
NO SCALE
1023B-09

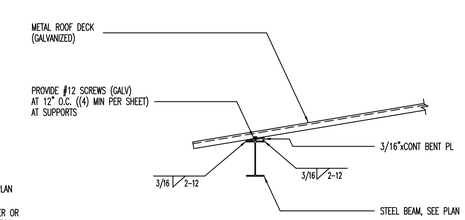

8 COMPRESSOR ENCLOSURE BEAM DETAIL
NO SCALE
1023B_S-511

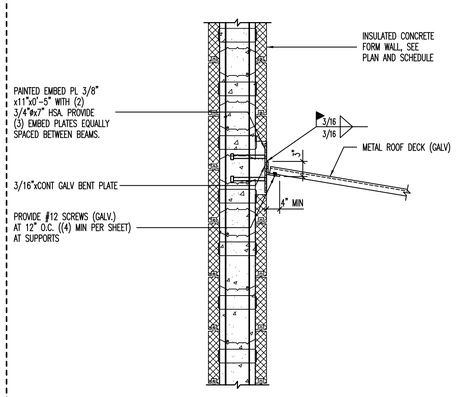

9 ENCLOSURE DECK TO WALL CONNECTION DETAIL
NO SCALE
1023B_S-511

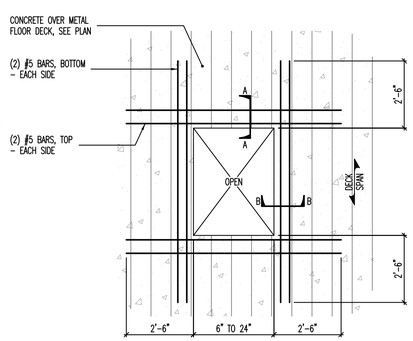

FORMED OPENINGS

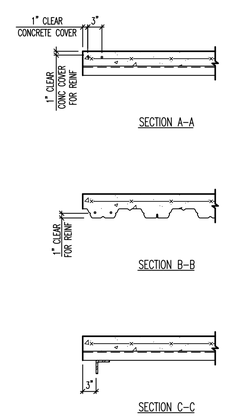

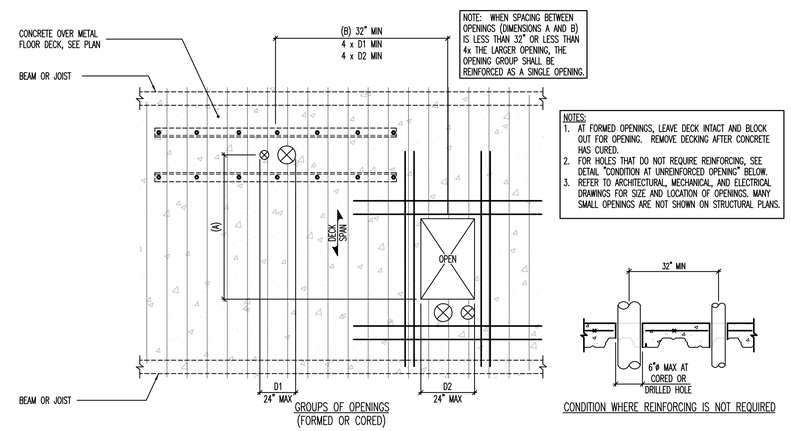

NOTES:
1. AT FORMED OPENINGS, LEAVE DECK INTACT AND BLOCK OUT FOR OPENING. REMOVE DECKING AFTER CONCRETE HAS CURED.
2. FOR HOLES THAT DO NOT REQUIRE REINFORCING, SEE DETAIL "CONDITION AT UNREINFORCED OPENING" BELOW.
3. REFER TO ARCHITECTURAL, MECHANICAL, AND ELECTRICAL DRAWINGS FOR SIZE AND LOCATION OF OPENINGS. MANY SMALL OPENINGS ARE NOT SHOWN ON STRUCTURAL PLANS.

GROUPS OF OPENINGS (FORMED OR CORED)

CONDITION WHERE REINFORCING IS NOT REQUIRED

10 MISCELLANEOUS SMALL OPENINGS IN FLOOR SLAB (UP TO 24")
NO SCALE
1023B_S-511

"Engineering Results"
BHB Consulting Engineers
A Professional Corporation
2766 South Main Street
Salt Lake City, Utah 84115
Phone: 801.355.5656
Fax: 801.355.5950
Email: bhb@bhbengineers.com

MHTN ARCHITECTS
MHTN Architects, Inc.
420 East South Temple
Suite 100
Salt Lake City, Utah 84111
TEL 801.595.6700
FAX 801.595.6717
www.mhtn.com

JAMES T. DRESSLAR
ARCHITECT, L.L.C.
387 PARK LANE
MOAB, UTAH 84532
435.259.1155 Phone / Fax

GREAT SALT LAKE MARINA MAINTENANCE BUILDING

DFCM # 10029510

13312 WEST 1075 SOUTH
MAGNA, UTAH 84044

SEAL

BHB PROJECT NO. 10238

DRAWN BY: akn CHECKED BY: rs

ISSUED:

NO.	DATE	DESCRIPTION
1	9/2/2010	CONSTRUCTION DOCUMENTS

REVISION DATE:

NO.	DATE	DESCRIPTION
1	9/29/10	STRUCTURAL PLAN CHECK

SHEET NAME

MEZZANINE FRAMING DETAILS

CONSTRUCTION DOCUMENTS
SEPTEMBER 2, 2010

SHEET NUMBER

S5.11

Plot date:9/29/10, Plot By: BHB, 1:450pm
P:\Jobs\10238 Dept. Of Corr. Magna\10238_S-511.dwg

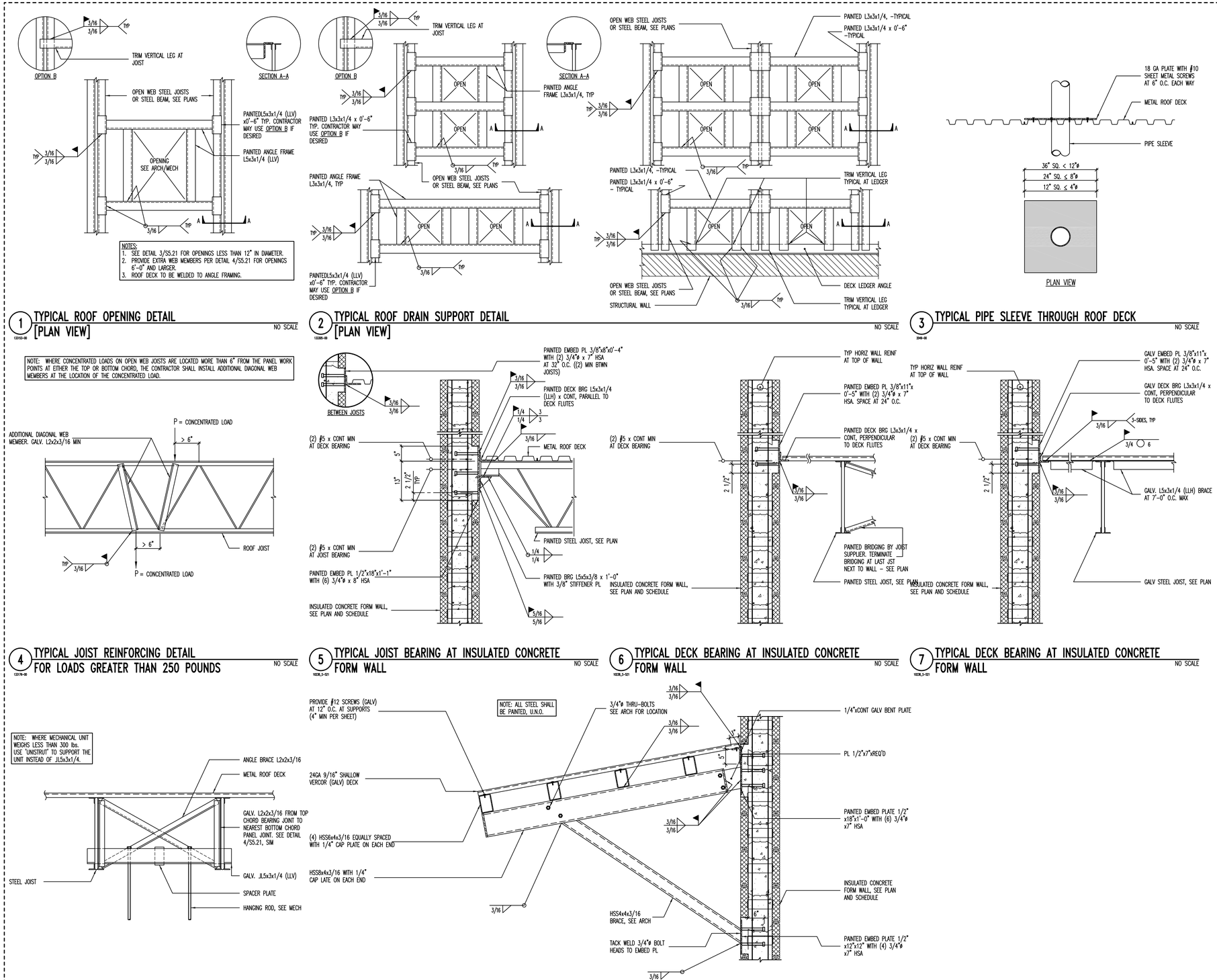

1 TYPICAL ROOF OPENING DETAIL [PLAN VIEW] — NO SCALE

2 TYPICAL ROOF DRAIN SUPPORT DETAIL [PLAN VIEW] — NO SCALE

3 TYPICAL PIPE SLEEVE THROUGH ROOF DECK — NO SCALE

4 TYPICAL JOIST REINFORCING DETAIL FOR LOADS GREATER THAN 250 POUNDS — NO SCALE

5 TYPICAL JOIST BEARING AT INSULATED CONCRETE FORM WALL — NO SCALE

6 TYPICAL DECK BEARING AT INSULATED CONCRETE FORM WALL — NO SCALE

7 TYPICAL DECK BEARING AT INSULATED CONCRETE FORM WALL — NO SCALE

8 TYPICAL HANGING MECHANICAL UNIT SUPPORT DETAIL — NO SCALE

9 CANOPY DETAIL — NO SCALE

MHTN ARCHITECTS
MHTN Architects, Inc.
420 East South Temple
Suite 100
Salt Lake City, Utah 84111
TEL 801.595.6700
FAX 801.595.6717
www.mhtn.com

JAMES T. DRESSLAR ARCHITECT, L.L.C.
387 PARK LANE
MOAB, UTAH 84532
435.259.1155 Phone / Fax

GREAT SALT LAKE MARINA MAINTENANCE BUILDING

DFCM # 10029510

13312 WEST 1075 SOUTH
MAGNA, UTAH 84044

SEAL

BHB PROJECT NO. 10238

DRAWN BY: akn CHECKED BY: rs

ISSUED:

NO.	DATE	DESCRIPTION
1	9/2/2010	CONSTRUCTION DOCUMENTS

REVISION DATE:

NO.	DATE	DESCRIPTION
1	9/29/10	STRUCTURAL PLAN CHECK

SHEET NAME

ROOF FRAMING DETAILS

CONSTRUCTION DOCUMENTS
SEPTEMBER 2, 2010

SHEET NUMBER

S5.21

"Engineering Results"
BHB Consulting Engineers
A Professional Corporation
2766 South Main Street
Salt Lake City, Utah 84115
Phone: 801.355.5656
Fax: 801.355.5950
Email: bhb@bhbengineers.com

Plot date/time: Thu, Sep 02, 2010 - 4:50pm
D:\Autodesk\acad2007\R16.1\UserFiles\bhb\10238_S-501.dwg

CONCRETE FOOTING SCHEDULE

MARK	WIDTH	LENGTH	DEPTH	REINFORCING CROSSWISE No.	REINFORCING CROSSWISE SIZE	REINFORCING CROSSWISE LENGTH	REINFORCING CROSSWISE SPACING	REINFORCING LENGTHWISE No.	REINFORCING LENGTHWISE SIZE	REINFORCING LENGTHWISE LENGTH	REINFORCING LENGTHWISE SPACING	COMMENTS
FTS1.5	1'-6"	CONT	12"	–	–	–	–	3	#4	CONT	EQ	.
FC2.0	2'-0"	CONT	12"	–	–	–	–	3	#4	CONT	EQ	
FC2.5	2'-6"	CONT	12"	–	#5	2'-0"	14"	3	#5	CONT	EQ	
FC3.0	3'-0"	CONT	12"	–	#5	2'-6"	14"	3	#5	CONT	EQ	
FC3.5	3'-6"	CONT	12"	–	#5	3'-0"	14"	3	#5	CONT	EQ	

CONCRETE FOOTING NOTES:
1. PLACE ALL FOOTING REINFORCING IN THE BOTTOM OF THE FOOTING WITH 3" CLEAR CONCRETE COVER (UNO).
2. TOP REINFORCING, WHERE OCCURS, SHALL BE PLACED IN THE TOP OF THE FOOTING WITH 2" MINIMUM CONCRETE COVER.
3. IF FOOTINGS ARE EARTH-FORMED, FOOTINGS SHALL BE 6" LONGER AND WIDER THAN SCHEDULED.
4. SEE GENERAL STRUCTURAL NOTES FOR ADDITIONAL REQUIREMENTS.
5. SOME SCHEDULED FOOTINGS MAY NOT BE USED, SEE FOOTING AND FOUNDATION PLAN FOR FOOTING MARKS.

1 CONCRETE FOOTING SCHEDULE
NO SCALE
SCHED_CONC_FTG-C2500-S2000

INSULATED CONCRETE FORM AND CONCRETE WALL SCHEDULE

MARK	CONCRETE THICKNESS	TOTAL THICKNESS	REINFORCING VERTICAL	REINFORCING HORIZONTAL	REINFORCING TOP AND BOTTOM	WALL TYPE	COMMENTS
CW-13A	13"	–	#4 AT 15" O.C. E.F.	#4 AT 15" O.C. E.F.	(2) #4 BARS	B	
CW-13B	13"	–	#4 AT 12" O.C. E.F.	#4 AT 15" O.C. E.F.	(2) #4 BARS	B	
ICF-8A	8"	13"	#5 AT 15" O.C.	#5 AT 16" O.C.	(1) #5 BAR	A	NOTE 2
ICF-8B	8"	13"	#5 AT 12" O.C.	#5 AT 16" O.C.	(1) #5 BAR	A	NOTE 2

CONCRETE FOUNDATION WALL NOTES:
1. SEE GENERAL STRUCTURAL NOTES FOR ADDITIONAL REQUIREMENTS.
2. STAGGER VERT REINFORCING PLACEMENT DIAGRAM.

WALL REINFORCING PLACEMENT TYPES:

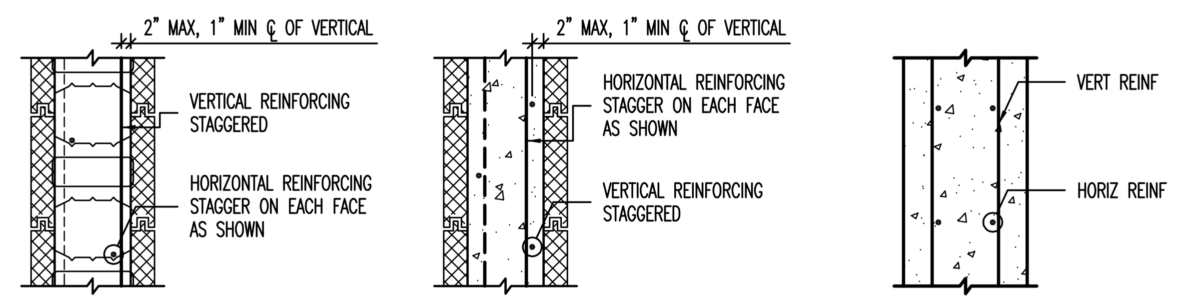

TYPE 'A' ELEVATION — TYPE 'A' PLAN — TYPE 'B'

2 INSULATED CONCRETE FORM AND CONCRETE WALL SCHEDULE
NO SCALE
04146S601

INSULATED CONCRETE FORM LINTEL SCHEDULE

MARK	DEPTH	MAXIMUM SPAN	REINFORCING HORIZONTAL	REINFORCING STIRRUPS	COMMENTS
CL-8A	8"	3'-4"	(1) #7	NONE	.
CL-64A	64"	–	(1) #7 TOP AND BOTTOM	#4 AT 16" O.C.	

CONCRETE LINTEL NOTES:
1. LINTEL WIDTH AND MATERIAL TYPE SHALL BE THE SAME AS THE WALL IN WHICH THE LINTEL IS CONSTRUCTED.
2. GROUT CONCRETE LINTELS MONOLITHICALLY WITH THE SUPPORT WALL OR COLUMN AT EACH END.
3. CONCRETE LINTELS SHALL NOT BE LOCATED DIRECTLY BELOW FLOOR OR ROOF BEAMS OR GIRDERS UNLESS NOTED OTHERWISE ON THE PLANS. JOISTS SHALL NOT BEAR ON ANY LINTEL LESS THAN 16" DEEP. CONSULT THE STRUCTURAL ENGINEER FOR LINTELS NOT SHOWN ON THE PLANS WHICH ARE LOCATED DIRECTLY BELOW FLOOR OR ROOF BEAMS OR GIRDERS.
4. EXTEND ALL HORIZONTAL REINFORCING 48 BAR DIAMETERS MINIMUM BEYOND THE EDGE OF ALL OPENINGS. IF HORIZONTAL REINFORCING CANNOT EXTEND 48 BAR DIAMETERS BEYOND EDGE OF OPENING, PROVIDE 90° STANDARD HOOK.
5. SPLICE TOP BARS AT MIDSPAN OF LINTEL ONLY AND BOTTOM BARS OVER SUPPORTS ONLY.
6. HORIZONTAL WALL REINFORCING SHALL CONTINUE THROUGH CONCRETE LINTELS. WHERE BOTH HORIZONTAL WALL REINFORCING AND LINTEL REINFORCING OCCUR IN THE SAME COURSE, USE THE LARGER REINFORCING.
7. DOWEL VERTICAL REINFORCING OF WALL ABOVE LINTEL INTO THE FULL DEPTH OF LINTEL OR 48 BAR DIAMETERS, WHICHEVER IS LESS.
8. SEE GENERAL STRUCTURAL NOTES FOR ADDITIONAL REQUIREMENTS.

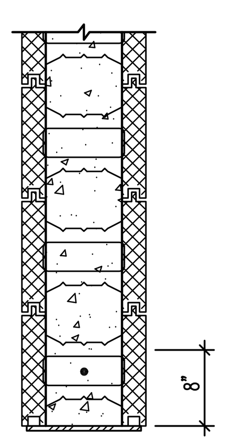

CL-8A

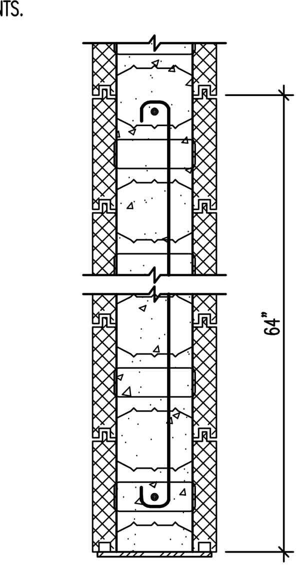

CL-64A

NOTE: TYPICAL HORIZONTAL WALL REINFORCING NOT SHOWN – RUN HORIZONTAL WALL REINFORCING CONTINUOUS THROUGH LINTEL, TYP.

3 INSULATED CONCRETE FORM LINTEL SCHEDULE
NO SCALE
02025S301

By: drafts; Dec 01, 2010 - 1:56pm
G:\2010\10238\Struct\10238_S-601.dwg

CONCRETE PIER SCHEDULE

MARK	PIER SIZE	REINFORCING VERTICAL	REINFORCING TIES	TYPE	COMMENTS
CP-8A	8 x 8	(2) #5 BAR	NONE	A	
CP-24A	8 x 24	(6) #5 BAR	#3 AT 8" O.C.	B	
CP-56A	8 x 56	(14) #5 BAR	(6) #3 AT 8" O.C.	C	

CONCRETE PIER NOTES:
1. INSTALL (3) SETS OF TIES AT 3" O.C. AT TOP OF ALL PIERS (UNO).
2. RUN HORIZONTAL CONCRETE WALL REINFORCING CONTINUOUS THROUGH PIER WHEN PIER IS POURED MONOLITHICALLY WITH CONCRETE WALL.
3. SEE GENERAL STRUCTURAL NOTES FOR ADDITIONAL REQUIREMENTS.

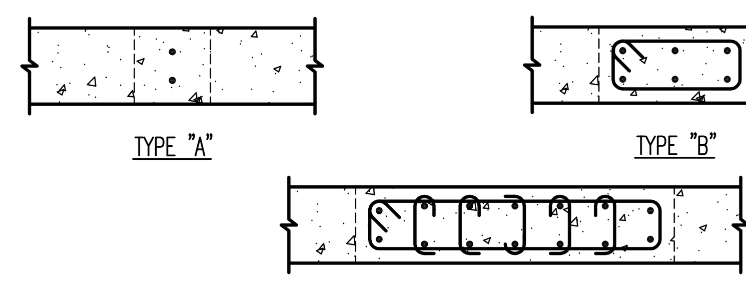

TYPE "A" — TYPE "B" — TYPE "C"

4 CONCRETE PIER SCHEDULE
NO SCALE
SCHED_CONC_PIER-01

CONCRETE REINFORCING BAR LAP SPLICE SCHEDULE

BAR SIZE	f'c = 3000psi REGULAR CLASS A	REGULAR CLASS B	TOP CLASS A	TOP CLASS B	f'c = 4000psi REGULAR CLASS A	REGULAR CLASS B	TOP CLASS A	TOP CLASS B	f'c = 5000psi REGULAR CLASS A	REGULAR CLASS B	TOP CLASS A	TOP CLASS B	f'c = 6000psi REGULAR CLASS A	REGULAR CLASS B	TOP CLASS A	TOP CLASS B
#3	13"	17"	17"	21"	12"	16"	16"	21"	12"	16"	16"	21"	12"	16"	16"	21"
#4	17"	22"	22"	28"	15"	19"	19"	25"	13"	17"	17"	22"	12"	16"	16"	21"
#5	21"	27"	27"	35"	18"	24"	24"	31"	16"	21"	21"	27"	15"	19"	19"	25"
#6	27"	36"	36"	46"	24"	31"	31"	40"	21"	28"	28"	36"	20"	25"	25"	33"
#7	37"	48"	48"	63"	32"	42"	42"	54"	29"	38"	38"	49"	27"	34"	34"	44"
#8	49"	64"	64"	82"	42"	55"	55"	71"	38"	49"	49"	64"	35"	45"	45"	58"
#9	62"	80"	80"	104"	54"	70"	70"	90"	48"	62"	62"	81"	44"	57"	57"	74"
#10	78"	102"	102"	132"	68"	88"	88"	115"	61"	79"	79"	102"	56"	72"	72"	94"
#11	96"	125"	125"	162"	83"	108"	108"	141"	76"	97"	97"	126"	68"	88"	88"	115"

CONCRETE REINFORCING BAR LAP SPLICE NOTES:
1. THIS SCHEDULE SHALL BE USED FOR ALL BAR SPLICES IN CONCRETE WALLS, UNLESS NOTED OTHERWISE.
2. CLASS 'A' SPLICES MAY BE USED ONLY IN CASES WHERE 50% OR LESS OF THE BARS ARE SPLICED WITHIN THE LAP SPLICE LENGTH.
3. CLASS 'B' SPLICES SHALL BE USED FOR ALL SPLICES UNLESS THE REQUIREMENTS OF NOTE No. 2 ABOVE ARE MET.
4. TIES AND STIRRUPS SHALL NOT BE SPLICED.
5. SPLICES FOR BUNDLED BARS:
   a. FOR BUNDLED BARS OF THREE OR LESS, LAP SPLICE LENGTHS SHALL BE MULTIPLIED BY 1.2.
   b. FOR BUNDLED BARS OF FOUR OR MORE, LAP SPLICE LENGTHS SHALL BE MULTIPLIED BY 1.33.
   c. INDIVIDUAL BAR SPLICES WITHIN A BUNDLE SHALL NOT OVERLAP.
   d. ENTIRE BUNDLES SHALL NOT BE LAP SPLICED.
6. FOR ALL LIGHTWEIGHT CONCRETE, LAP LENGTHS SHALL BE MULTIPLIED BY 1.3.
7. FOR ALL EPOXY COATED BARS, LAP LENGTHS SHALL BE MULTIPLIED BY 1.3 FOR TOP BARS AND 1.5 FOR REGULAR BARS.
8. TOP BARS ARE CLASSIFIED AS HORIZONTAL BARS WHERE 12", OR MORE, OF FRESH CONCRETE IS CAST BELOW THE REINFORCING BAR.
9. SEE GENERAL STRUCTURAL NOTES FOR ADDITIONAL REQUIREMENTS.

5 CONCRETE REINFORCING BAR LAP SPLICE SCHEDULE
NO SCALE
SCHED_CONC_REINF-01

CONCRETE GRADE BEAM SCHEDULE

MARK	BEAM SIZE	REINFORCING LENGTHWISE	REINFORCING TIES	TYPE	COMMENTS
GB	12 x 16	(8) #5	(3) #3 AT 8" O.C.	A	.

CONCRETE GRADE BEAM NOTES:
1. GRADE BEAM MAY BE POURED MONOLITHICALLY WITH CONCRETE SLAB ON GRADE.
2. SEE GENERAL STRUCTURAL NOTES FOR ADDITIONAL REQUIREMENTS.

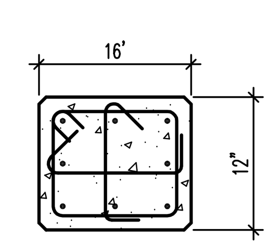

TYPE "A"

6 CONCRETE GRADE BEAM SCHEDULE
NO SCALE
SCHED_CONC_GRBM-01

STEEL COLUMN SCHEDULE

MARK	SIZE	STEEL BASE PLATE	STEEL CAP PLATE	COMMENTS
SC-4A	HSS4x4x3/16	1/2" (SBP-1)	1/2" (SCP-1)	.

STEEL COLUMN NOTES:
1. UNLESS NOTED OTHERWISE, ALL COLUMNS SHALL BE INSTALLED WITH (4) 3/4"ø ANCHOR RODS WITH 3" MINIMUM HOOKS. PROJECT ANCHOR RODS 3" MINIMUM ABOVE THE TOP OF THE BASE PLATE. EMBEDMENT SHALL BE 9" MINIMUM. ALL RODS SHALL BE INSTALLED WITH HARDENED WASHERS BENEATH THE NUT. ANY BOLT HOLES LARGER THAN THE ROD DIAMETER PLUS 5/16" SHALL HAVE 5/16" PLATE WASHERS INSTALLED BENEATH THE HARDENED WASHERS.
2. ALL CAP PLATE BOLTS SHALL BE 3/4"ø A325N BOLTS, TYPICAL UNLESS NOTED OTHERWISE.
3. ANCHOR RODS SHALL NOT BE WELDED (INCLUDING TACK WELDS).
4. SEE GENERAL STRUCTURAL NOTES FOR ADDITIONAL REQUIREMENTS.

STEEL BASE PLATE TYPES:

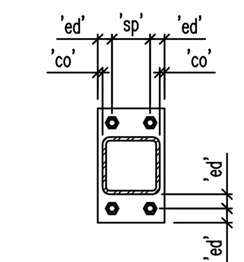

BASE PLATE SBP-1

PLATE LEGEND
co = 1/2" MINIMUM
ed = 1.1/2" MINIMUM
sp = 3" MINIMUM
bc = BEAM OR GIRDER GAGE
w = BEAM OR GIRDER GAGE + 3"
OR
BEAM OR GIRDER WIDTH + 1"
OR
COLUMN WIDTH + 1"
WHICHEVER IS GREATER

STEEL CAP PLATE TYPES:

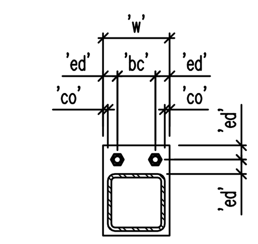

CAP PLATE SCP-1

7 STEEL COLUMN SCHEDULE
NO SCALE
SCHED_STL_COL-01

A-325 BOLT SCHEDULE

MAXIMUM BEAM SIZE IN EACH BEAM DEPTH GROUP	A-325N BOLTS No. PER BEAM	A-325N BOLTS SIZE
W8	2	3/4"ø
W10	2	3/4"ø

① 3/8" SHEAR TAB FOR BEAMS UP TO W21
1/2" SHEAR TAB FOR W24 BEAMS AND LARGER
② 5/16" FILLET WELD EACH SIDE FOR 3/8" PLATE
3/8" FILLET WELD EACH SIDE FOR 1/2" PLATE
③ BOLT EDGE DISTANCE SHALL BE 1.1/2" MIN AT ALL EDGES. BOLT SPACING SHALL BE 3" MIN.

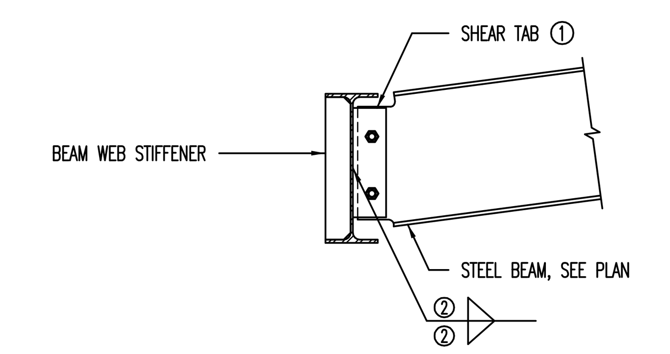

BEAM TO BEAM SHEAR TAB CONNECTION

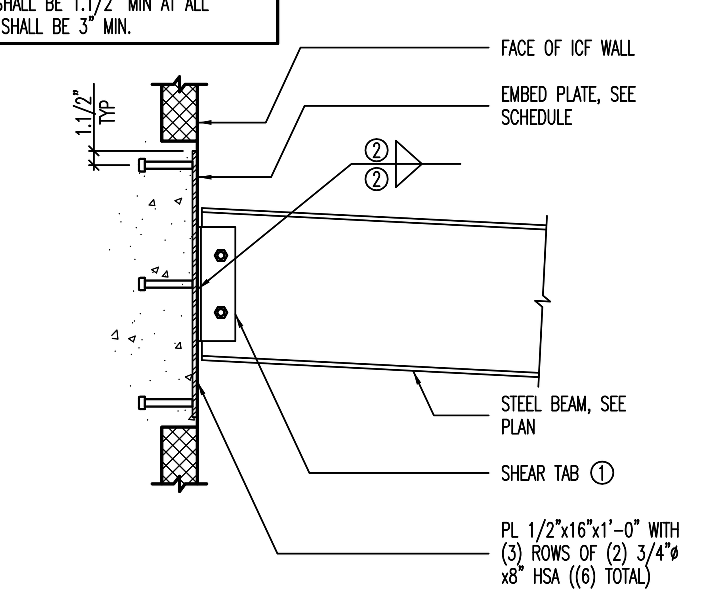

8 EMBED PLATE TO BEAM SHEARTAB CONNECTION
NO SCALE
SCHED_STL_BOLT-TS-01

"Engineering Results"
BHB Consulting Engineers
A Professional Corporation
2766 South Main Street
Salt Lake City, Utah 84115
Phone: 801.355.5656
Fax: 801.355.5950
Email: bhb@bhbengineers.com

MHTN ARCHITECTS
MHTN Architects, Inc.
420 East South Temple
Suite 100
Salt Lake City, Utah 84111
TEL 801.595.6700
FAX 801.595.6717
www.mhtn.com

JAMES T. DRESSLAR ARCHITECT, L.L.C.
387 PARK LANE
MOAB, UTAH 84532
435.259.1155 PHONE / FAX

GREAT SALT LAKE
MARINA MAINTENANCE BUILDING
DFCM # 10029510

13312 WEST 1075 SOUTH
MAGNA, UTAH 84044

SEAL

BHB PROJECT NO. 10238
DRAWN BY: akn CHECKED BY: rs

ISSUED:

NO.	DATE	DESCRIPTION
1	9/2/2010	CONSTRUCTION DOCUMENTS

REVISION DATE:

NO.	DATE	DESCRIPTION
1	9/29/10	STRUCTURAL PLAN CHECK

SHEET NAME
SCHEDULES

CONSTRUCTION DOCUMENTS
SEPTEMBER 2, 2010

SHEET NUMBER
S6.01

METAL STUD SHEARWALL WITH WOOD SHEATHING SCHEDULE

MARK	WALL FRAMING				WALL SHEATHING				COMMENTS
	METAL STUDS	TOP TRACK	BOTTOM TRACK	BOTTOM TRACK FASTENERS	THICKNESS	SCREW SIZE	EDGE FASTENER	FIELD FASTENER	
MSW-3A	362S162-33 AT 16" O.C.	362T125-43	362T125-43	5/8"ø x 4" AT 32" O.C.	7/16"	#8	6" O.C.	12" O.C.	
MSW-6A	600S162-33 AT 16" O.C.	600T125-43	600T125-43	5/8"ø x 4" AT 32" O.C.	7/16"	#8	6" O.C.	12" O.C.	

METAL STUD SHEARWALL NOTES:
1. BOTTOM TRACK FASTENERS TO BE CONCRETE SCREW ANCHOR OR CONCRETE WEDGE ANCHOR SUITABLE FOR CRACKED CONCRETE. INSTALLED WEDGE OR SCREW ANCHORS SHALL HAVE A CURRENT ICC-ES APPROVAL. SPECIAL INSPECTION SHALL BE PREFORMED IN ACCORDANCE WITH THE REPORT.
2. SCREWS SHALL HAVE A MINIMUM HEAD DIAMETER OF .292", IN ACCORDANCE WITH SAE J78.
3. SCREWS SHALL PENETRATE THROUGH FRAMING MEMBER WITH AT LEAST THREE THREADS.
4. STUDS SHALL BE A MINIMUM OF 1.5/8" WIDE WITH A 3/8" MINIMUM RETURN LIP.
5. TRACKS SHALL BE A MINIMUM OF 1.1/4" WIDE.
6. FOR STUD AND TRACK THICKNESSES GREATER THAN 43 MIL. USE Fy=50 KSI STEEL, OTHERWISE USE Fy=33 KSI STEEL.
7. HORIZONTAL BLOCKING SHALL BE PROVIDED AT 4'-0" O.C. MAX.
8. SEE GENERAL STRUCTURAL NOTES FOR ADDITIONAL REQUIREMENTS.

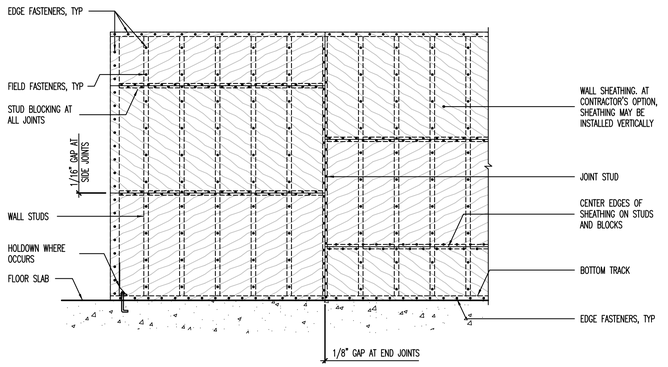

1 METAL STUD SHEARWALL WITH WOOD SHEATHING SCHEDULE [ELEVATION VIEW]

NO SCALE

HEADER/JAMB SCHEDULE FOR METAL STUD WALLS

SPAN	HEADER TYPE	JAMB TYPE	SILL	COMMENTS
0 TO 4'-3"	H1	J1	N/A	

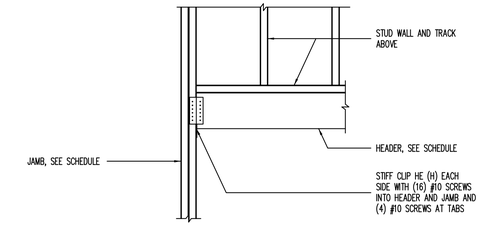

AT METAL STUD JAMB/HEADER

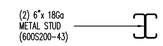

JAMB TYPE "J1"

ATTACH ALL COMPONENTS TOGETHER WITH #10 SCREWS AT 6" O.C.

ALTERNATE ATTACHMENT: ATTACH COMPONENTS 18Ga AND THICKER WITH 1/8"x1" FILLET WELDS AT 12" O.C.

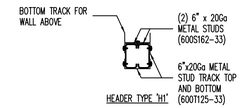

HEADER TYPE "H1"

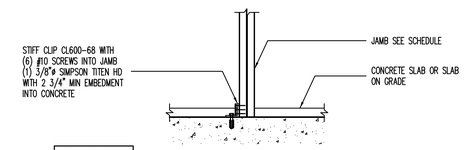

NOTE: METAL STUD FRAMING NOT SHOWN FOR CLARITY

AT METAL STUD JAMBS

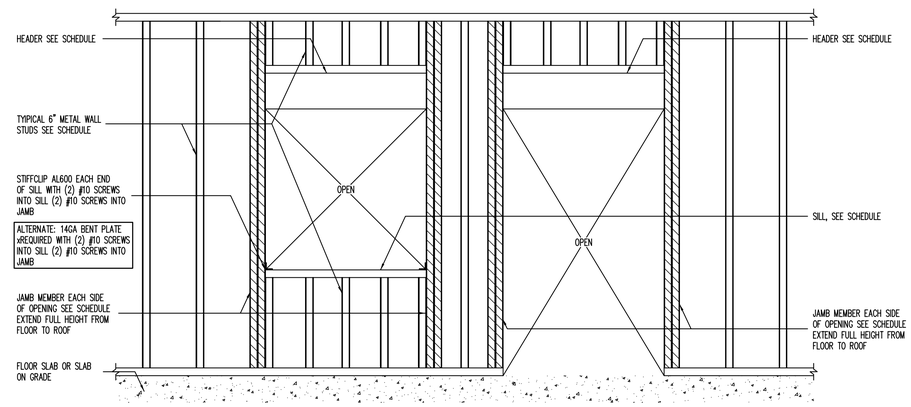

METAL STUD WALL OPENING ELEVATION

2 COLD FORMED METAL FRAMING HEADER AND JAMB SCHEDULE

NO SCALE

HOLDOWN SCHEDULE

MARK	SIMPSON HOLDOWN	BOUNDARY MEMBER	BOUNDARY MEMBER FASTENERS	'HB'	ANCHOR ROD	EMBEDMENT	DETAIL	COMMENTS
HD-1	STHD8	(2) STUDS BACK TO BACK	(12) #10 SCREWS	–	–	8"	A	.

HOLDOWN NOTES:
1. SEE GENERAL STRUCTURAL NOTES FOR ADDITIONAL REQUIREMENTS.

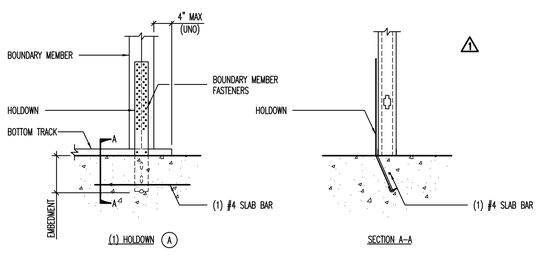

(1) HOLDOWN (A)

SECTION A-A

3 HOLDOWN SCHEDULE

NO SCALE

MHTN ARCHITECTS
MHTN Architects, Inc.
420 East South Temple
Suite 100
Salt Lake City, Utah 84111
TEL 801.595.6700
FAX 801.595.6717
www.mhtn.com

JAMES T. DRESSLAR ARCHITECT, L.L.C.
387 PARK LANE
HOAB, UTAH 84532
435.259.1155 Phone / Fax

GREAT SALT LAKE MARINA MAINTENANCE BUILDING
DFCM # 10029510
13312 WEST 1075 SOUTH
MAGNA, UTAH 84044

SEAL

BHB PROJECT NO. 10238

DRAWN BY: akn CHECKED BY: rs

ISSUED:

NO.	DATE	DESCRIPTION
1	9/2/2010	CONSTRUCTION DOCUMENTS

REVISION DATE:

NO.	DATE	DESCRIPTION
1	9/29/10	STRUCTURAL PLAN CHECK

SHEET NAME

SCHEDULES

CONSTRUCTION DOCUMENTS
SEPTEMBER 2, 2010

SHEET NUMBER

S6.02

"Engineering Results"
BHB Consulting Engineers
A Professional Corporation
2766 South Main Street
Salt Lake City, Utah 84115
Phone: 801.355.5656
Fax: 801.355.3950
Email: bhb@bhbengineers.com

NONSTRUCTURAL COMPONENT CHECKLIST

ITEM DESCRIPTION	NOT REQUIRED	ON CONST. DOCUMENTS	DEFERRED SUBMITTAL	COMMENTS
Architectural Components:				
Interior Nonstructural Walls & Partitions		X		
Cantilever Elements *(i.e. parapets, etc.)*		X		
Exterior Nonstructural Wall Elements		X		
Veneer	N/A			
Penthouses	N/A			
Ceilings *(i.e. suspended grid or hard-lid)*	N/A			
Cabinets *(i.e. storage cabinets, equip, etc.)*	N/A			
Access Floors	N/A			
Storage Racks	N/A			
Appendages & Ornamentations	N/A			
Signs & Billboards	N/A			
Other:				
Other:				
MEP Components:				
Fire Sprinklers				
Mechanical Equipment *(i.e. HVAC, fans, air handlers, boilers furnaces, tanks, chillers, water heaters, heat exchangers, evaporators, engines, turbines, pumps, compressors, MRI equipment, etc.)*			X	PER SECTION 15242
Electrical Equipment *(i.e. generators, batteries, inverters, transformers, MCC, panel boards, switch gear, cabinets, etc.)*		X		
Elevator & Escalator Components	N/A			
Communication Equipment, Computers, Instrumentation, and Controls	N/A			
Roof-mounted Chimneys, Stacks, Cooling & Electrical Towers	N/A			
Lighting Fixtures		X		
Vibration Isolated Components	N/A			
Piping & Conduit Systems			X	
Ductwork *(including in-line components)*			X	PER SECTION 15242
Conveyors	N/A			
Cable Trays	N/A			
Other:				
Other:				

NOTES:

1. Deferred submittals for seismic restraint of nonstructural components must be submitted to the DFCM Building Official a minimum of two weeks prior to the planned installation in order to allow for plan review and forwarding to inspectors. In the event that the submittal is deficient additional time may become necessary.
2. If seismic restraints of non-structural components are installed prior to receiving DFCM approval they shall not be covered or concealed until receiving both plan review and inspection approval. Further, installers are proceeding at their own risk until plan review and inspection approval occurs.
3. The requirements for seismic restraint of nonstructural components cannot be satisfied by a general reference to Design Manuals. The design professional may utilize these manuals as a basis of their design, but must provide all supporting documentation to ensure that the design conforms to the requirements of ASCE 7-05, Chapter 13.
4. Submittals must include details of the proposed seismic restraint of nonstructural components. These details must show specific information relating to the materials, type, size, and locations of anchorages; materials used for bracing; attachment requirements of bracing to structure and component; and locations of transverse and longitudinal sway bracing and rod stiffeners. Submittals may also require structural calculations, engineering reports, test data, and/or specifications to ensure code compliance.

Revised: 02/15/2010

GENERAL NOTES:

PROJECT SUMMARY
1. NEW MUNICIPAL VEHICLE MAINTENANCE FACILITY WITH ASSOCIATED SITE IMPROVEMENTS.

LAND USE CODE:
1. NOT APPLICABLE.

DEFERRED SUBMITTALS (106.3.4.2):
1. STUCCO SYSTEM ICC RESEARCH REPORT: SUBMITTED BY GENERAL CONTRACTOR UPON NOTICE OF CONSIDERATON FOR AWARD OF CONTRACT.
2. INSULATED CONCRETE FORM ICC RESEARCH REPORT: SUBMITTED BY GENERAL CONTRACTOR UPON NOTICE OF CONSIDERATON FOR AWARD OF CONTRACT.
3. CONTRACTOR'S STATEMENT OF RESPONSIBILITY REGARDING CONSTRUCTION OF A MAIN WIND OR SEISMIC FORCE RESISTING SYSTEM, DESIGNATED SEISMIC SYSTEM OR A WIND OR SEISMIC RESISTING COMPONENT LISTED IN THE STATEMENT OF SPECIAL INSPECTIONS: SUBMITTED BY THE GENERAL CONTRACTOR UPON NOTICE OF AWARD OF CONTRACT.

USE AND OCCUPANCY CLASSIFICATION (302):
1. ACTUAL AREA OCCUPANCY CLASSIFICATION (302.1) W/ GROSS FLOOR AREAS COVERED BY ROOF:
   - A. B: BUSINESS (304.1): 223 SF
   - B. S-1: MODERATE HAZARD STORAGE (311.2): 3,723 SF
   - C. S-1: MODERATE HAZARD STORAGE MEZZANINE (311.2): 817 SF
   - D. UN-ASSIGNED EXTERIOR CANOPIES: 226 SF
   - E. TOTAL AREA: 4,989 SF

SPECIAL DETAILED REQUIREMENTS BASED ON USE AND OCCUPANCY – REPAIR GARAGES (406.6):
1. MIXED USE PERMITTED PER 508.3 (406.6.2).
2. MECHANICAL VENTILATION REQUIRED (406.6.3).
3. FLOOR SURFACE SHALL BE CONCRETE (406.6.4).

ALLOWABLE HEIGHT AND AREA (T 503):
1. MOST RESTRICTIVE HEIGHT AND AREA BASED ON S-1 OCCUPANCY GROUP, TYPE II-B CONSTRUCTION: 55' / THREE STORY, 17,500 SQUARE FEET.

MEZZANINES (505):
1. CLEAR HEIGHT ABOVE AND BELOW THE MEZZANINE FLOOR CONSTRUCTION SHALL NOT BE LESS THAN 7' (505.1).
2. AGGREGATE AREA OF A MEZZANINE SHALL NOT EXCEED 1/3 OF THE FLOOR AREA OF THAT ROOM OR SPACE IN WHICH THEY ARE LOCATED (505.2).

INCIDENTAL USE AREAS (508.2):
1. NOT USED. BUILDING CLASSIFIED AS MIXED OCCUPANCY, NON-SEPARATED, PER (508.3.2).

FIRE RESISTANCE RATING REQUIREMENTS FOR BUILDING ELEMENTS (T 601):
1. CONSTRUCTION TYPE II-B: NO REQUIREMENT.

TYPE OF CONSTRUCTION (602):
1. CONSTRUCTION TYPE: II-B (602.2).

FIRE RESISTANCE RATING REQUIREMENTS FOR EXTERIOR WALLS BASED ON FIRE SEPARATION DISTANCE (T 602):
1. >/= 30', CONSTRUCTION TYPE II-B, ALL OCCUPANCIES: NO REQUIREMENT.

COMBUSTIBLE MATERIAL IN TYPE II CONSTRUCTION (603):
1. BLOCKING SUCH AS FOR HANDRAILS, MILLWORK, CABINETS AND WINDOWS AND DOOR FRAMES (603.1, EX 11).
2. HEAVY TIMBER AS PERMITTED BY NOTE d TO TABLE 601 AND SECTION 602.4.7 AND 1406.3. (603.1, EX 16).
3. IN ALL OCCUPANCIES, HEAVY TIMBER SHALL BE ALLOWED (ROOF CONSTRUCTION) WHERE A 1 HR OR LESS FIRE RESISTIANCE RATING IS REQUIRED (T 601, NOTE d).
4. OTHER ROOF FRAMING WHICH DOES NOT SUPPORT FLOOR LOADS, SHALL HAVE MEMBERS NOT < 4" NOMINAL IN WIDTH AND NOT < 6" NOMINAL IN DEPTH (602.4.3).

MAXIMUM AREA OF EXTERIOR WALL OPENINGS (T 704.8):
1. FIRE SEPARATION DISTANCE >30': UNLIMITED, UNPROTECTED OPENINGS PERMITTED.

PARAPETS (704.11):
1. PARAPET NOT REQUIRED IF THE EXTERIOR WALL IS NOT REQUIRED TO BE FIRE RESTIVE RATED BY TABLE 602 BECAUSE OF FIRE SEPARATION DISTANCE.

FIRE DOOR RATINGS (T 715.4):
1. 1 HOUR EXIT ENCLOSURE: 1 HOUR FIRE DOOR ASSEMBLY.

WALL AND CEILING FINISHES (803):
1. INTERIOR WALL AND CEILING FINISH REQUIREMENTS BY OCCUPANCY (T 803.5):
   - A. B, S: CLASS C RATING AT EXIT ENCLOSURES, CORRIDORS, ROOMS AND SPACES (NOTE b.).

AUTOMATIC SPRINKLER SYSTEMS (903):
1. NO REQUIREMENT IF < 12,000 SF, SINGLE STORY (903.2.8.1).

MAXIMUM FLOOR AREA ALLOWANCES PER OCCUPANT (T 1004.1.1):
1. OCCUPANT LOAD FACTOR (S.F. PER OCCUPANT):
   - A. BUSINESS: 100 GROSS
   - B. ACCESSORY STORAGE & MECHANICAL EQUIPMENT ROOMS: 300 GROSS
   - C. INDUSTRIAL: 100 GROSS

DESIGN OCCUPANT LOAD (1004.1):
1. NUMBER OF OCCUPANTS: 41
2. NUMBER OF OCCUPANTS USED TO DETERMINE PLUMBING FIXTURE QUANTITIES: <16

EGRESS WIDTH (1005):
1. EGRESS WIDTH (INCHES / OCCUPANT) PER OCCUPANT SERVED (T 1005.1):
   - A. EGRESS COMPONENT WIDTH FACTOR PER OCCUPANT (WITHOUT SPRINKLER):
2. STAIRWAY: .30"
3. OTHER EGRESS COMPONENTS: .20"
4. REQUIRED EGRESS COMPONENT WIDTH:
   - A. STAIRWAY: .30 X 2 = .6"
   - B. OTHER EGRESS COMPONENTS": .20 X 41 = 8.2"
4. EGRESS COMPONENT WIDTH PROVIDED:
   - A. STAIRWAY: 42"
   - B. EXTERIOR DOORS: 128"

ENCLOSURES UNDER STAIRWAYS (1009.5.3):
1. WALLS AND SOFFITS WITHIN ENCLOSED USABLE SPACES UNDER UNENCLOSED STAIRWAYS SHALL BE PROTECTED BY 1 HOUR FIRE RESISTIVE CONSTRUCTION.

ROOF ACCESS (1009.11.1):
1. ROOF HATCH WITHIN 10' OF ROOF EDGE TO BE PROTECTED BY GUARDS.
2. GUARDS NOT PROPOSED. ROOF HATCH > 10' FROM ROOF EDGE.

EXIT AND EXIT ACCESS DOORWAYS (1015):
1. TWO EXITS OR EXIT ACCESS DOORWAYS SHALL BE PROVIDED FROM SPACES CONTAINING S OCCUPANCY IF >29 OCCUPANTS (T 1015.1).
2. WHERE TWO EXITS OR EXIT ACCESS DOORWAYS ARE REQUIRED FROM A SPACE, THEY SHALL NOT BE SPACED LESS THAN 1/2 OF THE LENGTH OF THE MAXIMUM OVERALL DIAGONAL DIMENSION OF THE AREA SERVED (1015.2.1).

EXIT ACCESS TRAVEL DISTANCE (1016):
1. MAXIMUM EXIT ACCESS TRAVEL DISTANCE FOR B & S OCCUPANCY: 200' (T 1016.1).

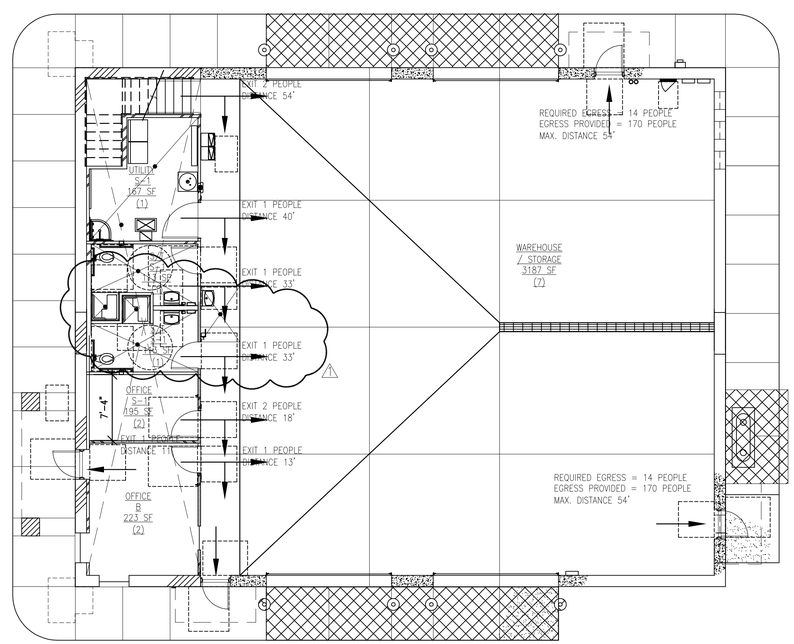

LIFE SAFETY PLAN

SCALE = 1/8" = 1'-0"

MHTN ARCHITECTS
MHTN Architects, Inc.
420 East South Temple
Suite 100
Salt Lake City, Utah 84111
TEL 801.595.6700
FAX 801.595.6717
www.mhtn.com

JAMES T. DRESSLAR
ARCHITECT, L.L.C.
387 PARK LANE
MOAB, UTAH 84532
435.259.1155 PHONE / FAX

GREAT SALT LAKE MARINA MAINTENANCE BUILDING

DFCM # 10029510

13312 WEST 1075 SOUTH
MAGNA, UTAH 84044

SEAL

MHTN PROJECT NO. 2010546

DRAWN BY: CHECKED BY:

ISSUED:

NO.	DATE	DESCRIPTION

REVISION DATE:

NO.	DATE	DESCRIPTION
1	Nov. 23, 2010	PLAN CHECK COMMENTS & TOILETS
2	Dec. 20, 2010	PLAN CHECK COMMENTS

SHEET NAME

LIFE SAFETY PLAN

CONSTRUCTION DOCUMENTS
SEPTEMBER 2, 2010

SHEET NUMBER

A0.01

By: Dressler, James, Dec 06, 2011 - 10:06am
File: C:\Users\jim\Desktop\Magna Building\ Drawings\A0.01.dwg

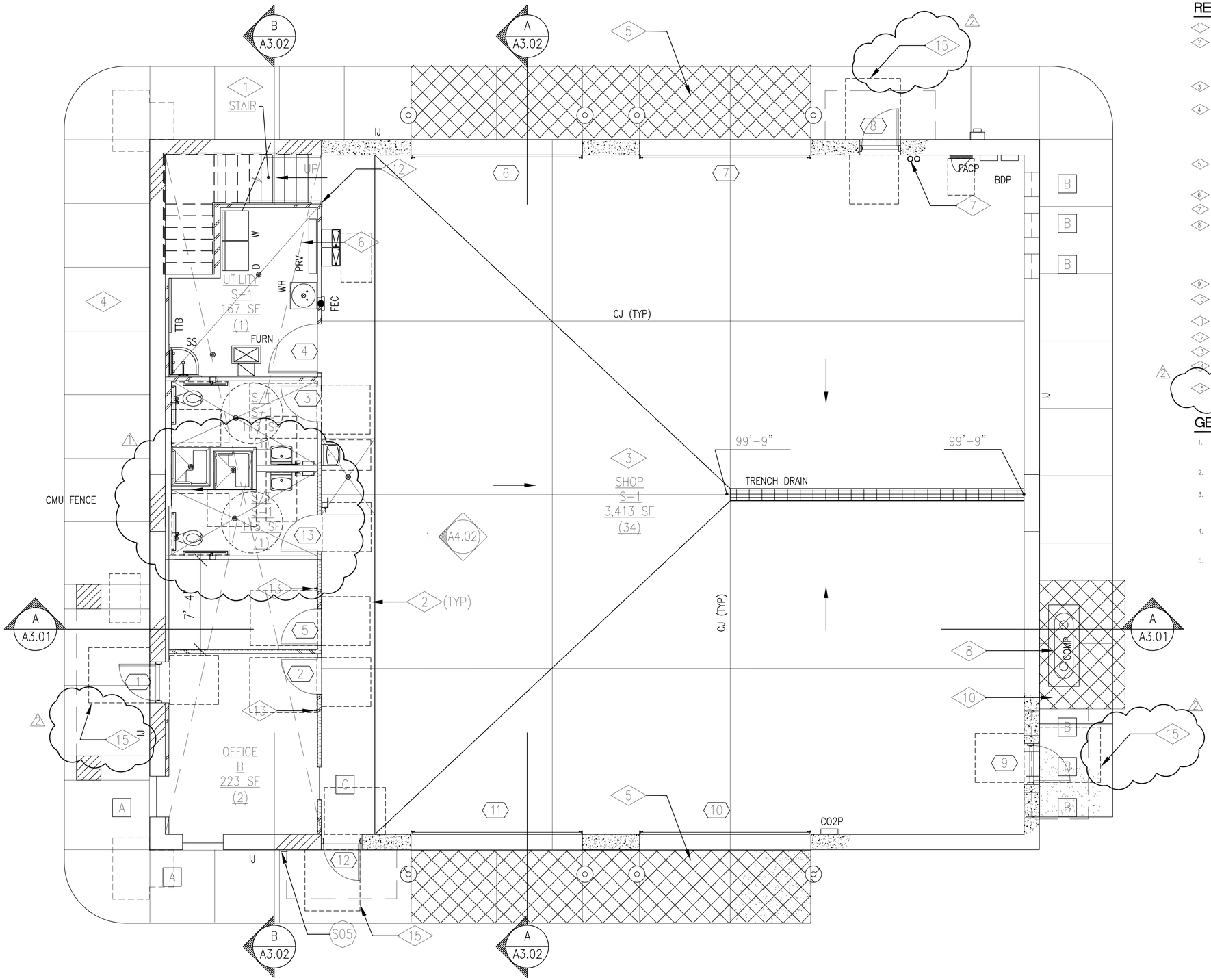

FIRST FLOOR PLAN

0 16' 32' 64'

SCALE: 1/4" = 1'-0"

N

REFERENCE NOTES:

1. CONCRETE FILLED STEEL STAIR ASSEMBLY.
2. DASHED LINE INDICATES ACCESSIBLE FLOOR MANEUVERING SPACE AT DOOR AND FOR WHEELCHAIR ACCESS PER (2/A5.07)
3. 6" REINFORCED CONCRETE SLAB ON 6" DRAINAGE COURSE.
4. 4" CONCRETE WALK / LANDING / APRON ON 4" BASE COURSE. PROVIDE THICKENED, REINFORCED SLAB AT OVERHEAD DOOR OPENINGS INDICATED. PROVIDE REINFORCED WALK / LANDING AT AREA OF AIR COMPRESSOR.
5. HATCHED AREA INDICATES 6" THICK REINFORCED APRON SLAB ON 6" BASE COURSE AT OVERHEAD DOORS.
6. "X" HATCH INDICATES MEZZANINE ABOVE.
7. ROOF DRAIN LEADERS.
8. AIR COMPRESSOR ON 4" HIGH CONCRETE HOUSEKEEPING PAD REINFORCED WITH WIRE WOVEN MESH. SIZE PAD PER SUBMITTAL DRAWINGS OR ACTUAL UNIT DIMENSIONS. SEE SECTION ON (B/A3.01) FOR ENCLOSURE.
9. NOT USED.
10. REINFORCE CONCRETE WALK / LANDING WITH WIRE WOVEN MESH.
11. NOT USED.
12. CORNER GUARD ("L") PER
13. PROVIDE HIGH AND LOW COAT HOOKS.
14. FOR ACCESSIBLE SHOWER DETAIL SEE SHEET A6.04
15. LANDING SLOP NOT TO EXCEED 2% FROM BUILDING. DASHED LINE INDICATES LANDING.

GENERAL NOTES:

1. FOR DIMENSIONS, SEE (—/A1.02)
2. TOP OF SLAB DATUM ELEVATION 100'-0" = 4213.37 PER CIVIL DRAWINGS.
3. PROVIDE JOINTS IN CONCRETE SLAB PER (2/A5.06)
4. FOR LEGEND, SEE (—/A1.03)
5. ALL CFMF FRAMED WALLS ARE BEARING WALLS.

MHTN
ARCHITECTS
MHTN Architects, Inc.
420 East South Temple
Suite 100
Salt Lake City, Utah 84111
TEL 801.595.6700
FAX 801.595.6717
www.mhtn.com

JAMES T. DRESSLAR
ARCHITECT, L.L.C.
387 PARK LANE
MOAB, UTAH 84532
435.259.1155 PHONE / FAX

GREAT SALT LAKE MARINA MAINTENANCE BUILDING

DFCM # 10029510

13312 WEST 1075 SOUTH
MAGNA, UTAH 84044

SEAL

MHTN PROJECT NO. 2010546

DRAWN BY: CHECKED BY:

ISSUED:

NO.	DATE	DESCRIPTION

REVISION DATE:

NO.	DATE	DESCRIPTION
1	Nov. 23, 2010	PLAN CHECK COMMENTS & TOILETS
2	Dec. 20, 2010	PLAN CHECK COMMENTS

SHEET NAME

FLOOR PLAN

CONSTRUCTION DOCUMENTS
SEPTEMBER 2, 2010

SHEET NUMBER

A1.01

By:Cornerd, Tim Nov 9, 2010 - 10:06am
J:\2010\2010546_Great Salt Lake Maintenance Building\1 Drawings\A1.01.dwg

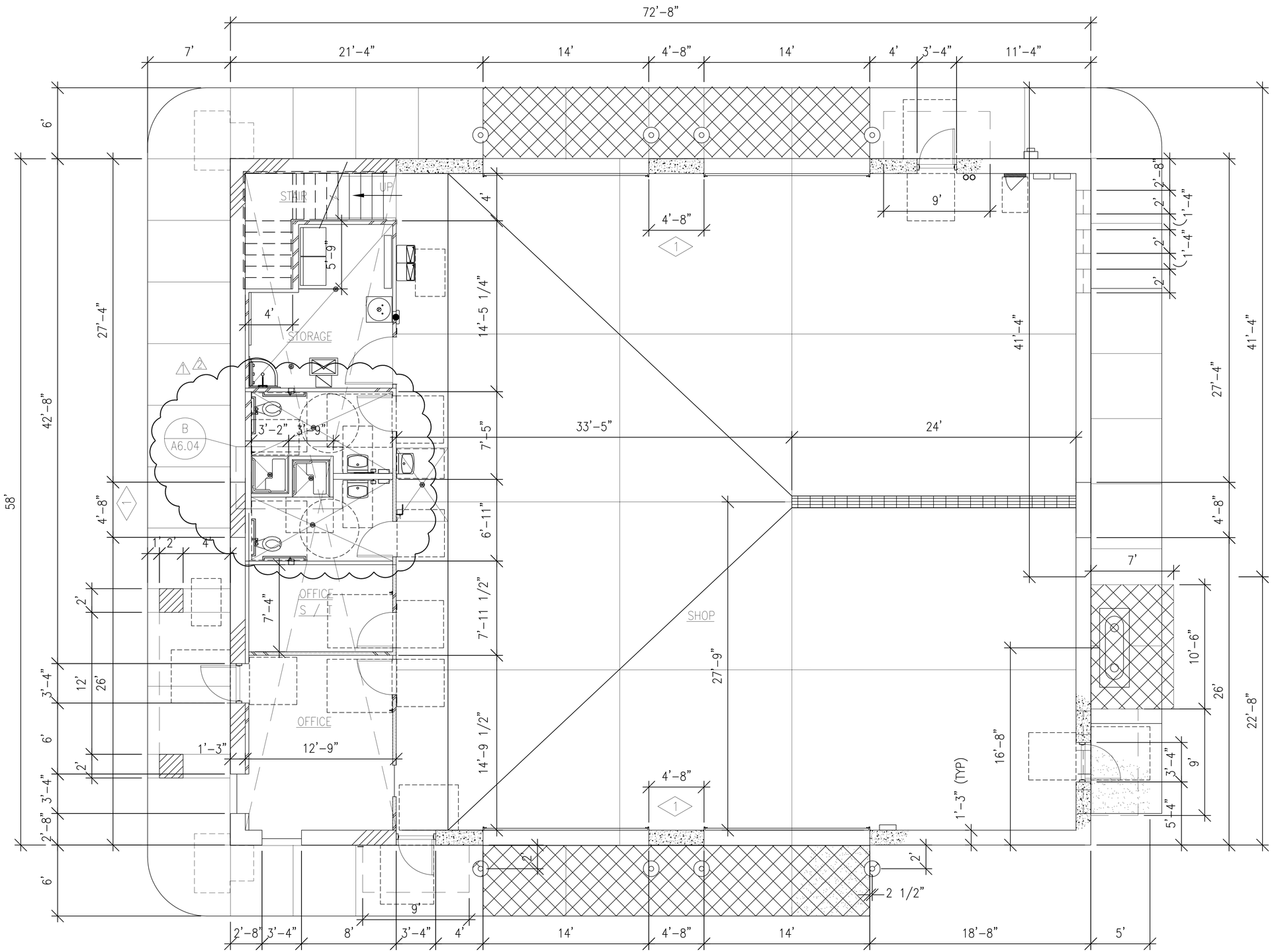

FIRST FLOOR DIMENSION PLAN

0 16' 32' 64'

SCALE: 1/4" = 1'-0"

N

GENERAL NOTES:

1. DIMENSIONS INDICATED ARE FROM FACE OF ICF UNIT / FACE OF STUD UNLESS NOTED OTHERWISE.

REFERENCE NOTES:

1 PROVIDE 15" ICF FULL HEIGHT FROM TOP OF FOUNDATION TO TOP OF PARAPET.

MHTN
ARCHITECTS

MHTN Architects, Inc.
420 East South Temple
Suite 100
Salt Lake City, Utah 84111
TEL 801.595.6700
FAX 801.595.6717
www.mhtn.com

JAMES T. DRESSLAR
ARCHITECT, L.L.C.
387 PARK LANE
HOAB, UTAH 84532
435.259.1155 PHONE / FAX

GREAT SALT LAKE MARINA MAINTENANCE BUILDING

DFCM # 10029510

13312 WEST 1075 SOUTH
MAGNA, UTAH 84044

SEAL

MHTN PROJECT NO. 2010546

DRAWN BY: CHECKED BY:

ISSUED:

NO.	DATE	DESCRIPTION

REVISION DATE:

NO.	DATE	DESCRIPTION
1	Nov. 23, 2010	PLAN CHECK COMMENTS & TOILETS
2	Dec. 20, 2010	PLAN CHECK COMMENTS

SHEET NAME

DIMENSION FLOOR PLAN

CONSTRUCTION DOCUMENTS
SEPTEMBER 2, 2010

SHEET NUMBER

A1.02

By:Gianna P. Jun 8, 2011 - 11:08am
jts:\CD\2010\10029510 GSL Bldg\11 Maintenance Building\ Drawings\A1.02.dwg

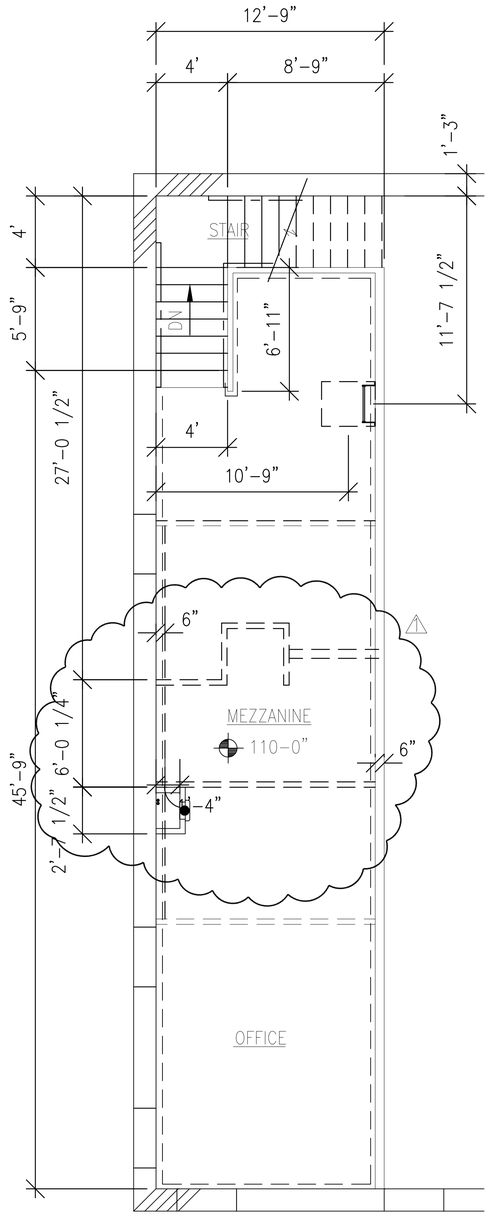

MEZZANINE DIMENSION FLOOR PLAN

0 16' 32' 64'

SCALE: 1/4" = 1'-0"

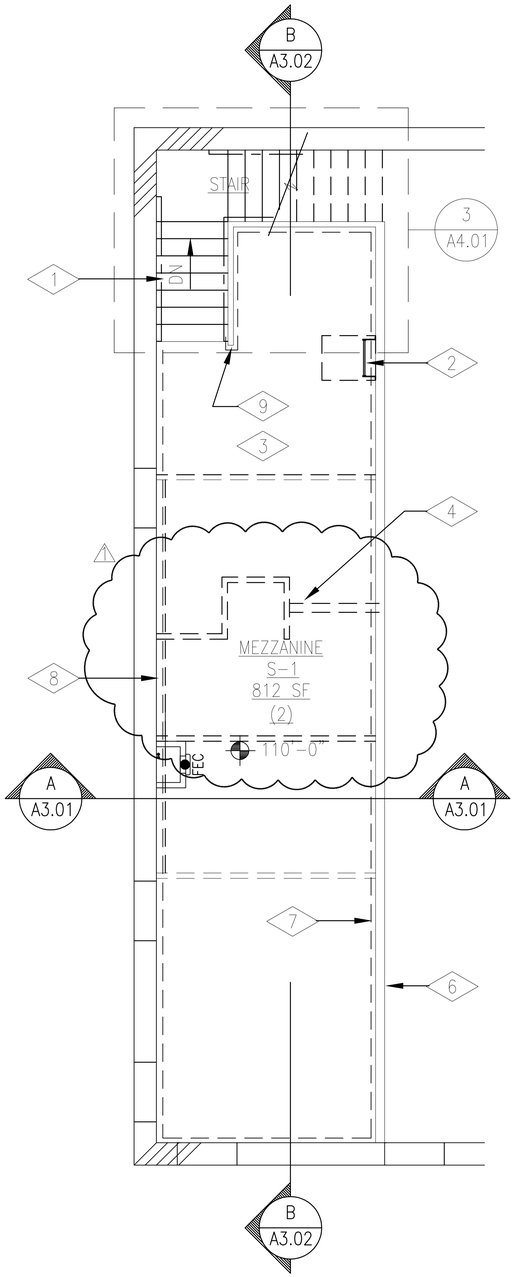

MEZZANINE FLOOR PLAN

0 16' 32' 64'

SCALE: 1/4" = 1'-0"

LEGEND:

15 1/4"		CAST IN PLACE CONCRETE STEM WALL AT EXTERIOR SIDES OF SHOP AREA: STUCCO EXTERIOR FINISH / CAST IN PLACE CONCRETE STEM WALL W/ 15" ICF ABOVE / SCHEDULED WALL FINISH
4 7/8"		3 5/8" CFMF WALL ASSEMBLY: GYP BOARD EACH SIDE / CFMF STUDS AT 16" O.C. / SCHEDULED WALL FINISH EACH SIDE.
7 1/4"		6" CFMF WALL ASSEMBLY: GYP BOARD EACH SIDE / CFMF STUDS AT 16" O.C. (12" AT GUARD WALL) / SCHEDULED WALL FINISH EACH SIDE.
15 7/8"		INSULATED CONCRETE FORM WALL ASSEMBLY: STUCCO EXTERIOR FINISH / 13" ICF W/ 10" GROUTED & REINFORCED CORE PARAPET / GYP BOARD / ADDITIONAL SCHEDULED WALL FINISH WHERE OCCURS.
7 7/8" OR 5 1/2"		SOUND ATTENUATED FRAMED WALL ASSEMBLY: SCHEDULED WALL FINISH EACH SIDE / GYP BOARD / INDICATED CFMF FRAMING / FULL DEPTH ACOUSTICAL BATT INSULATION / TWO LAYERS GYP BOARD ONE SIDE.
20 7/8"		6" CFMF FURRED WALL ASSEMBLY: ICF WALL / CFMF STUDS AT 16" O.C. / GYP BOARD / SCHEDULED WALL FINISH.
19 1/2"		3 5/8" CFMF FURRED WALL ASSEMBLY: ICF WALL ASSEMBLY / CFMF STUDS AT 16" O.C. / GYP BOARD / SCHEDULED WALL FINISH.

NET FINISHED WALL THICKNESS

SHOP ← ROOM NAME
S-1 ← OCCUPANCY GROUP
3,413 SF ← GROSS AREA
(34) ← NUMBER OF OCCUPANTS

NOTES:

1. FOR ICF WALL COMPONENTS, SEE (4/A5.08)

REFERENCE NOTES:

1. CONCRETE FILLED STEEL STAIR ASSEMBLY.
2. METAL FABRICATED LADDER TO ROOF SCUTTLE PER (6/A5.06)
3. MEZZANINE FLOOR / CEILING ASSEMBLY: 6" CONCRETE AND STEEL COMPOSITE DECK / 8 1/2" AIR SPACE/ 3 1/2" CFMF JOISTS AT 24" O.C. / GYP BOARD CEILING / SCHEDULED CEILING FINISH.
4. DASHED LINE INDICATES WALL BELOW.
5. NOT USED.
6. FRAMED GUARD WALL AT OPEN SIDE OF MEZZANINE. PROVIDE DEEP LEG TRACK AT SILL.
7. DASHED LINE INDICATES FRPP WAINSCOT ABOVE BASE. TOP OF WAINSCOT +3'-6".
8. PROVIDE FRAMED CHASE FOR AIR CONDITIONING LINESET FROM ROOF.
9. WRAP FRPP WAINSCOT AROUND END OF WALL TO PROVIDE 4" CORNER GUARD.

GENERAL NOTES:

1. DIMENSIONS INDICATED ARE FROM FACE OF ICF UNIT / FACE OF STUD UNLESS NOTED OTHERWISE.
2. TOP OF SLAB DATUM ELEVATION 100'-0" = 3024 PER CIVIL DRAWINGS.
3. PROVIDE JOINTS IN CONCRETE SLAB PER (2/A5.06)
4. FOR LEGEND, SEE (1/A1.03)
5. ALL CFMF FRAMED WALLS ARE BEARING WALLS.

MHTN ARCHITECTS

MHTN Architects, Inc.
420 East South Temple
Suite 100
Salt Lake City, Utah 84111
TEL 801.595.6700
FAX 801.595.6717
www.mhtn.com

JAMES T. DRESSLAR
ARCHITECT, L.L.C.
387 PARK LANE
MOAB, UTAH 84532
435.259.1155 PHONE / FAX

GREAT SALT LAKE MARINA MAINTENANCE BUILDING

DFCM # 10029510

13312 WEST 1075 SOUTH
MAGNA, UTAH 84044

SEAL

MHTN PROJECT NO. 2010546

DRAWN BY: CHECKED BY:

ISSUED:

NO.	DATE	DESCRIPTION

REVISION DATE:

NO.	DATE	DESCRIPTION
1	Nov. 23, 2010	PLAN CHECK COMMENTS & TOILETS
2	Dec. 20, 2010	PLAN CHECK COMMENTS

SHEET NAME

MEZZANINE FLOOR PLAN

CONSTRUCTION DOCUMENTS
SEPTEMBER 2, 2010

SHEET NUMBER

A1.03

By:Cramer2 Tue 9, 10/10 - 1:00pm
J:\2010\2010546 GSL Marina Maintenance Building\1 Drawings\A1.03.dwg

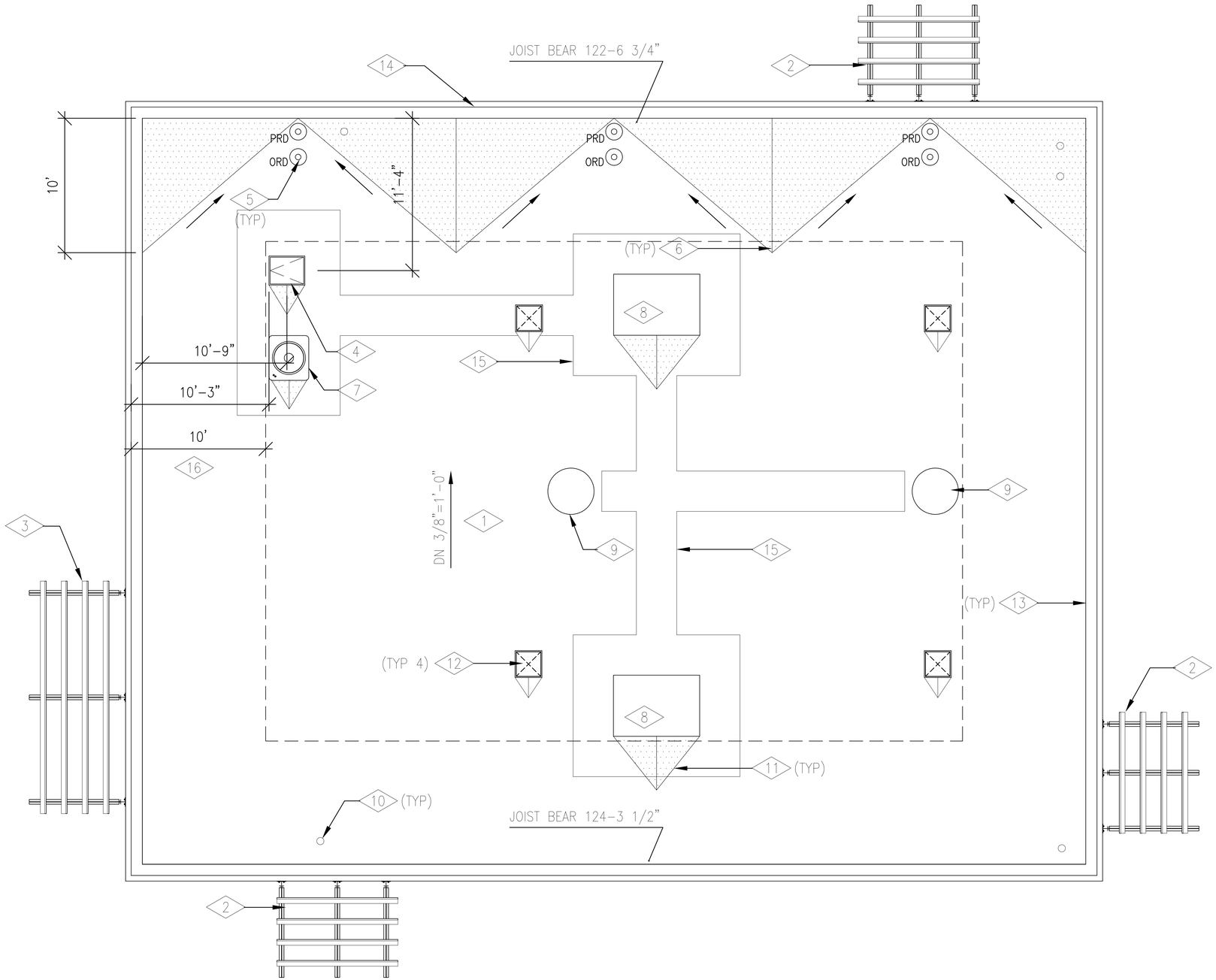

ROOF PLAN

1/4"= 1'-0"

REFERENCE NOTES:

1. LOW SLOPE ROOF ASSEMBLY: THERMOPLASTIC MEMBRANE ROOFING / RIGID INSULATION / METAL DECK / 30" OPEN WEB STEEL JOISTS AT 60" O.C.
2. METAL FABRICATED DOOR CANOPY PER 1/A5.08
3. METAL FABRICATED ENTRY CANOPY PER 2/A5.08
4. 36 X 30 ROOF SCUTTLE WITH METAL FABRICATED LADDER PER 6/A5.06
5. ROOF DRAINS PER 7/A5.08
6. HATCHED AREA INDICATES ROOF CRICKET BUILT UP FROM RIGID INSULATION. PROVIDE POSITIVE SLOPE TO ROOF DRAINS.
7. CONDENSING UNIT.
8. EVAPORATIVE COOLER.
9. EXHAUST FAN.
10. EXHAUST FLUE THRU ROOF FOR UNIT HEATER.
11. PROVIDE RIGID INSULATION CRICKET AT ROOF MOUNTED EQUIPMENT AS REQUIRED TO MAINTAIN POSITIVE ROOF SLOPE AT HIGH SIDE.
12. 24 X 24 SKYLIGHT PER 6/A5.08 LOCATION OF SKYLIGHT TO BE COORDINATED WITH OVERHEAD DOOR.
13. METAL COPING SYSTEM PER 4/A5.09
14. ROOF EDGE.
15. TMR WALKWAY PAD.
16. DASHED LINE INDICATES CLEARANCE FROM ROOF EDGE REQUIRED AT MECHANICAL EQUIPMENT AND ROOF SCUTTLE OPENING.

GENERAL NOTES:

1. FOR THERMOPLASTIC ROOF MEMBRANE DETAILS, SEE 5/A5.08 7/A5.08 3/A5.09

MHTN
ARCHITECTS
MHTN Architects, Inc.
420 East South Temple
Suite 100
Salt Lake City, Utah 84111
TEL 801.595.6700
FAX 801.595.6717
www.mhtn.com

JAMES T. DRESSLAR
ARCHITECT, L.L.C.
387 PARK LANE
MOAB, UTAH 84532
435.259.1155 PHONE / FAX

GREAT SALT LAKE MARINA MAINTENANCE BUILDING

DFCM # 10029510

13312 WEST 1075 SOUTH
MAGNA, UTAH 84044

SEAL

MHTN PROJECT NO. 2010546

DRAWN BY: CHECKED BY:

ISSUED:

NO.	DATE	DESCRIPTION

REVISION DATE:

NO.	DATE	DESCRIPTION
1	Nov. 23, 2010	PLAN CHECK COMMENTS & TOILETS
2	Dec. 20, 2010	PLAN CHECK COMMENTS

SHEET NAME

ROOF PLAN

CONSTRUCTION DOCUMENTS
SEPTEMBER 2, 2010

SHEET NUMBER

A1.04

By Dressler@ Tue, 14 Dec 2010 - 10:07am
P:\2010\2010546 GSL Marina Maintenance Building\Drawings\A1.04.dwg

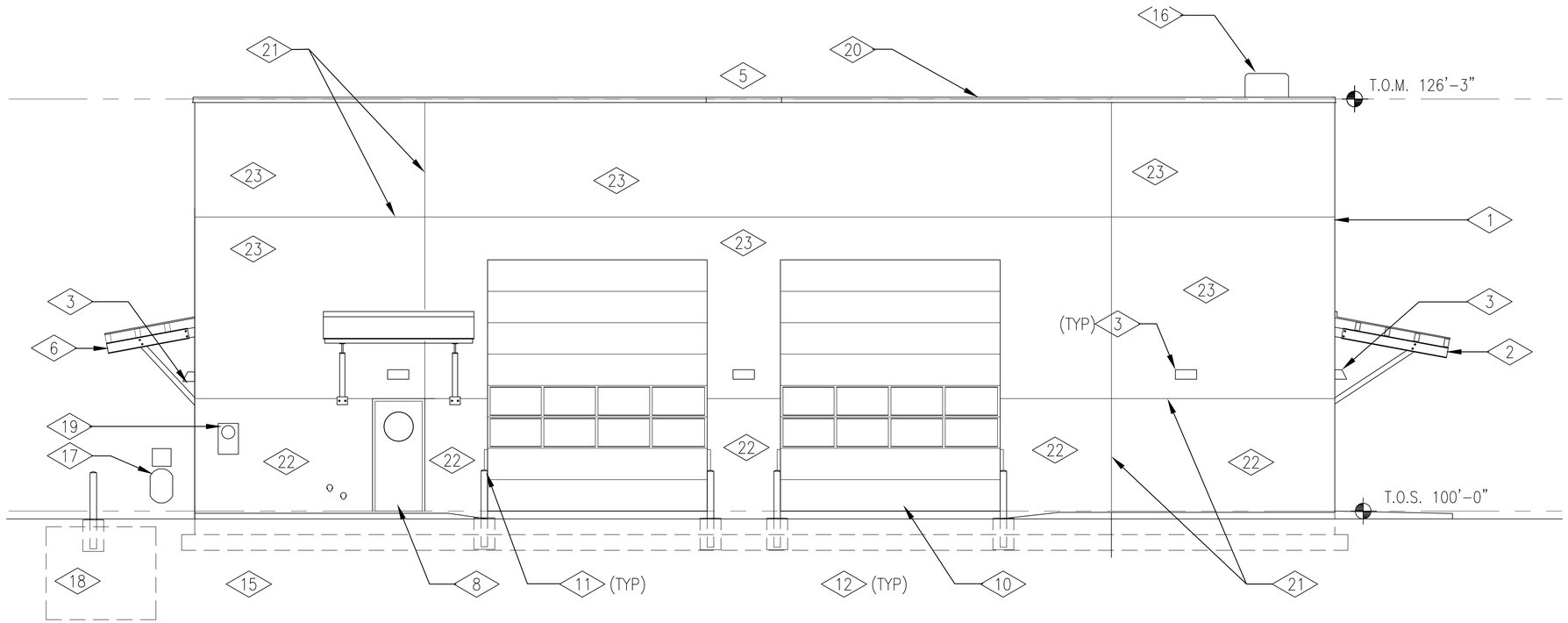

WEST ELEVATION

SCALE : 1/4"= 1'-0"

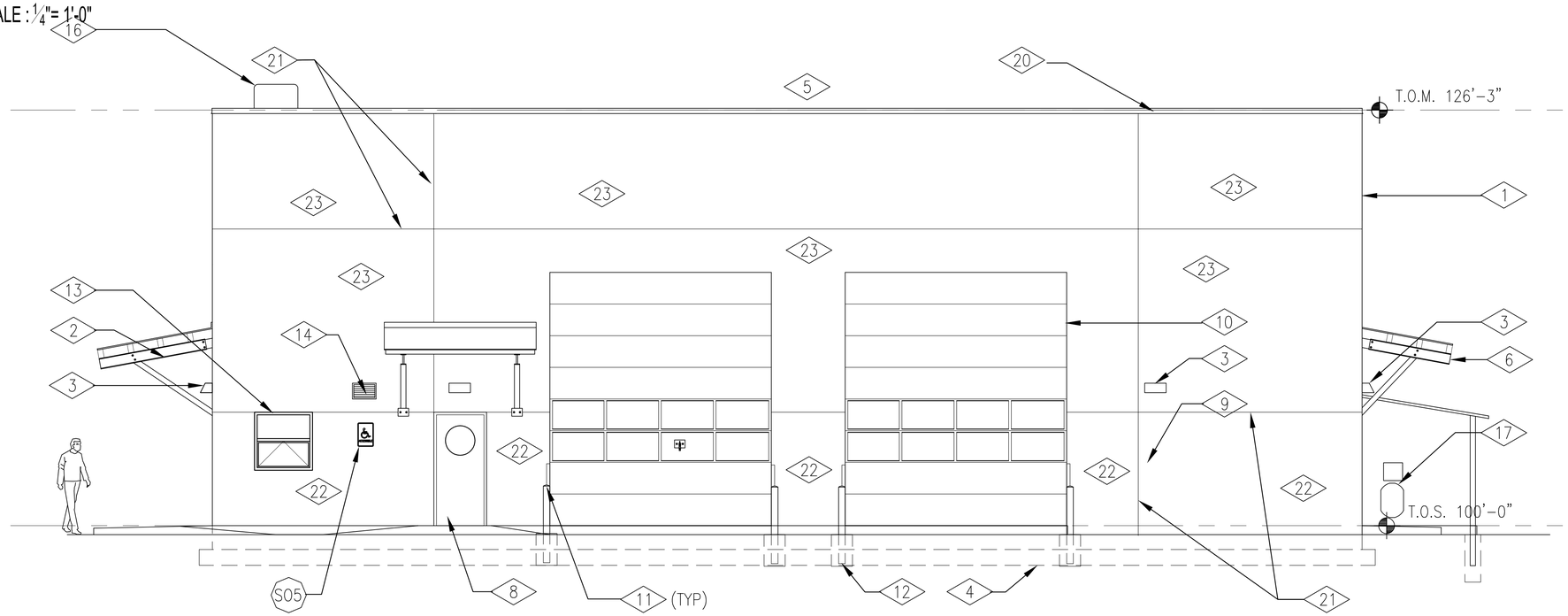

EAST ELEVATION

SCALE : 1/4"= 1'-0"

REFERENCE NOTES:

1. STUCCO SYSTEM ON INSULATED CONCRETE FORM.
2. ENTRY CANOPY PER (2/A5.08)
3. LIGHT FIXTURE.
4. CONCRETE FOUNDATION.
5. PROVIDE 15" ICF FULL HEIGHT FROM TOP OF FOUNDATION TO TOP OF PARAPET.
6. DOOR CANOPY PER (1/A5.08)
7. STUCCO SYSTEM HEAD TRIM FROM 3/4" RIGID INSULATION. MATCH WAINSCOT COLOR.
8. STEEL DOOR ASSEMBLY.
9. STUCCO SYSTEM WAINSCOT COLOR TO MATCH ENTRY STATION. V CUT ICF FOAM TO PROVIDE JOINT.
10. STEEL OVERHEAD SECTIONAL DOOR ASSEMBLY.
11. METAL FABRICATED JAMB GUARDS AT OVERHEAD DOOR PER (5/A5.03)
12. METAL FABRICATED CONCRETE FILLED STEEL PIPE BOLLARD PER (1/A5.06)
13. ALUMINMUM STOREFRONT WINDOW.
14. FRESH AIR INTAKE LOUVER.
15. ROOF DRAIN TERMINATIONS.
16. CONDENSING UNIT.
17. AIR COMPRESSOR, WITH ENCLOSURE PER (B/A3.01)
18. NOT USED.
19. POWER METER & BASE.
20. METAL COPING PER (4/A5.09)
21. REVEAL
22. COLOR 1:
23. COLOR 2:

MHTN ARCHITECTS
MHTN Architects, Inc.
420 East South Temple
Suite 100
Salt Lake City, Utah 84111
TEL 801.595.6700
FAX 801.595.6717
www.mhtn.com

JAMES T. DRESSLAR
ARCHITECT, L.L.C.
387 PARK LANE
MOAB, UTAH 84532
435.259.1155 PHONE / FAX

GREAT SALT LAKE MARINA MAINTENANCE BUILDING

DFCM # 10029510

13312 WEST 1075 SOUTH
MAGNA, UTAH 84044

SEAL

MHTN PROJECT NO: 2010546

DRAWN BY: CHECKED BY:

ISSUED:

NO.	DATE	DESCRIPTION

REVISION DATE:

NO.	DATE	DESCRIPTION
1	Nov. 23, 2010	PLAN CHECK COMMENTS & TOILETS
2	Dec. 20, 2010	PLAN CHECK COMMENTS

SHEET NAME

EXTERIOR ELEVATIONS

CONSTRUCTION DOCUMENTS
SEPTEMBER 2, 2010

SHEET NUMBER

A2.01

By: Connor T. Dec 9, 2010 - 1:05pm
File: G:\2010\2010-026, Salt Lake Maintenance Building\1 Drawings\A2.01.dwg

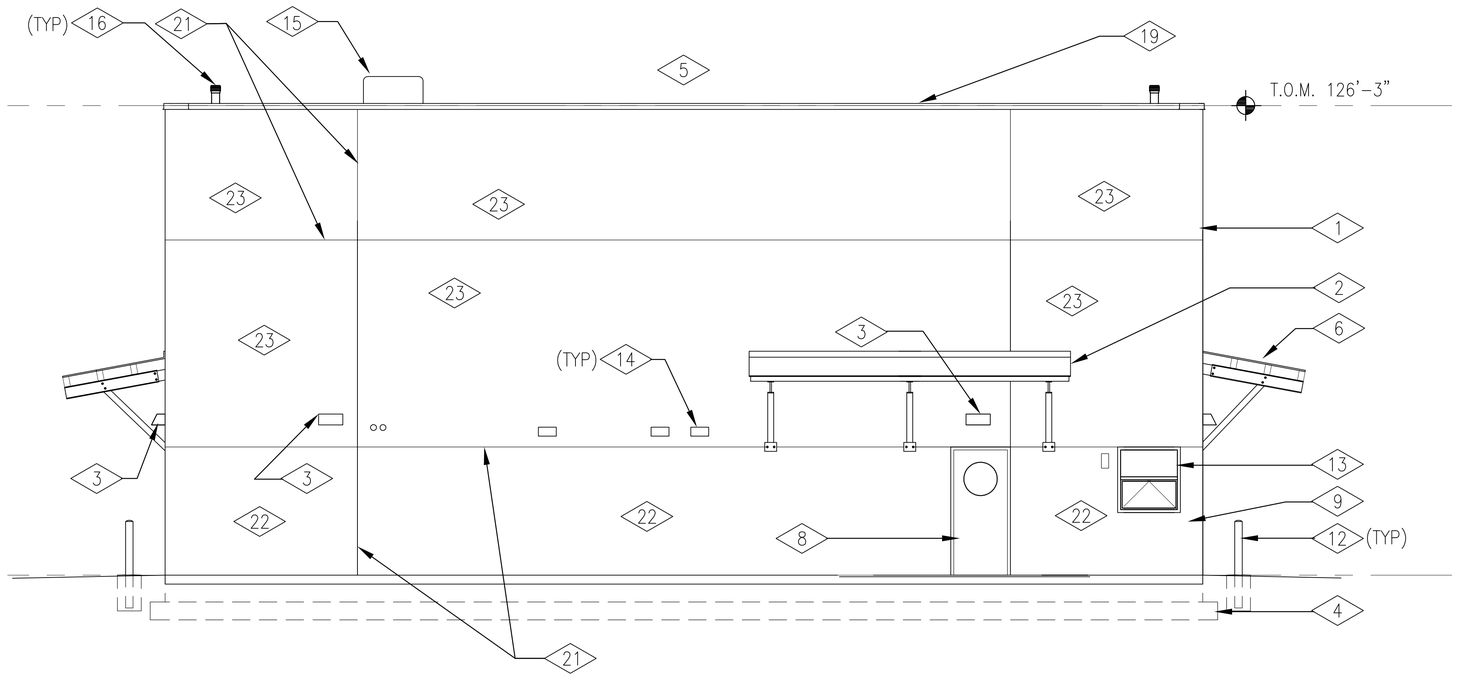

SOUTH ELEVATION

SCALE : 1/4"= 1'-0"

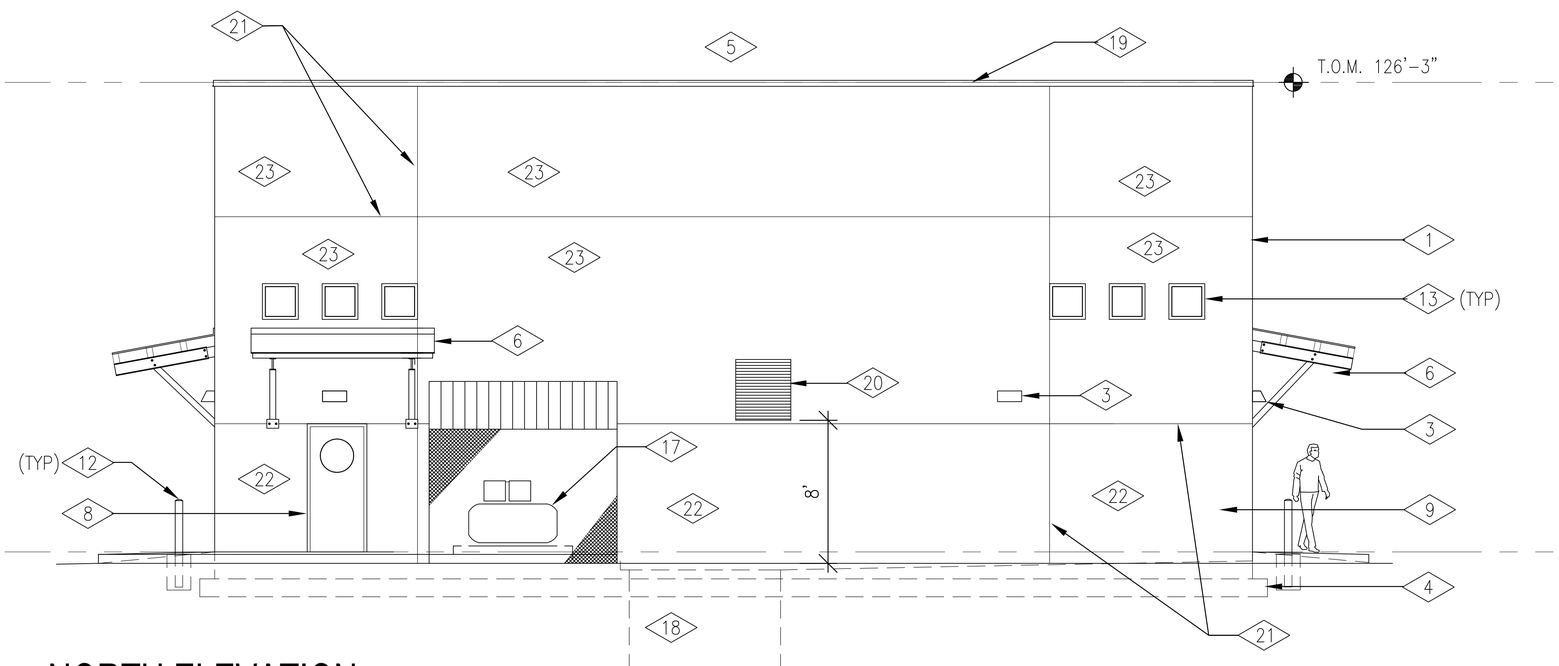

NORTH ELEVATION

SCALE : 1/4"= 1'-0"

REFERENCE NOTES:

1. STUCCO SYSTEM ON INSULATED CONCRETE FORM.
2. ENTRY CANOPY PER (2/A5.08)
3. LIGHT FIXTURE.
4. CONCRETE FOUNDATION.
5. PROVIDE 15" ICF FULL HEIGHT FROM TOP OF FOUNDATION TO TOP OF PARAPET.
6. DOOR CANOPY PER (1/A5.08)
7. STUCCO SYSTEM HEAD TRIM FROM 3/4" RIGID INSULATION. MATCH WAINSCOT COLOR.
8. STEEL DOOR ASSEMBLY.
9. STUCCO SYSTEM WAINSCOT COLOR TO MATCH ENTRY STATION. V CUT ICF FOAM TO PROVIDE JOINT.
10. CONCENTRIC VENTS FOR WATER HEATER AND FURNACE.
11. NOT USED.
12. METAL FABRICATED CONCRETE FILLED STEEL PIPE BOLLARD PER (1/A5.06)
13. ALUMINMUM STOREFRONT WINDOW.
14. EXHAUST DUCT TERMINATION HOOD.
15. CONDENSING UNIT.
16. EXHAUST FLUE THRU ROOF.
17. AIR COMPRESSOR, SEE SECTION (B/A3.01) FOR ENCLOSURE.
18. VEHICLE WASH DOWN SUMP. ESTABLISH BOTTOM OF FOOTING ELEVATION FROM THIS LOCATION OF FINISH GRADE.
19. METAL COPING PER (4/A5.09)
20. L-2 MECHANICAL LOUVER.
21. REVEAL
22. COLOR 1:
23. COLOR 2:

MHTN ARCHITECTS

MHTN Architects, Inc.
420 East South Temple
Suite 100
Salt Lake City, Utah 84111
TEL 801.595.6700
FAX 801.595.6717
www.mhtn.com

JAMES T. DRESSLAR
ARCHITECT, L.L.C.
387 PARK LANE
MOAB, UTAH 84532
435.259.1155 PHONE / FAX

GREAT SALT LAKE
MARINA MAINTENANCE BUILDING
DFCM # 10029510

13312 WEST 1075 SOUTH
MAGNA, UTAH 84044

SEAL

MHTN PROJECT NO. 2010546

DRAWN BY: CHECKED BY:

ISSUED:

NO.	DATE	DESCRIPTION

REVISION DATE:

NO.	DATE	DESCRIPTION
1	Nov. 23, 2010	PLAN CHECK COMMENTS & TOILETS
2	Dec. 20, 2010	PLAN CHECK COMMENTS

SHEET NAME

EXTERIOR ELEVATIONS

CONSTRUCTION DOCUMENTS
SEPTEMBER 2, 2010

SHEET NUMBER

A2.02

By:Dennis T. Dye, A. 10:10, 10:08am
P:\2010\2010-GSL Marina Maintenance Building\1 Drawings\A2.02.dwg

REFERENCE NOTES:

1. REINFORCED CONCRETE SLAB ON DRAINAGE COURSE.
2. LOW SLOPE ROOF ASSEMBLY: THERMOPLASTIC MEMBRANE ROOFING / RIGID INSULATION / METAL DECK / OPEN WEB STEEL JOISTS
3. MEZZANINE FLOOR / CEILING ASSEMBLY: 5" CONCRETE AND STEEL COMPOSITE DECK / 8 1/2" AIR SPACE/ 3 1/2" CFMFM JOISTS AT 24" O.C. / GYP BOARD CEILING / SCHEDULED CEILING FINISH.
4. EXTERIOR WALL ASSEMBLY: STUCCO SYSTEM / 15" INSULATED CONCRETE FORM WITH 11 1/2" ICF ABOVE / GYP BOARD/ SCHEDULED WALL FINISH.
5. FIBER REINFORCED PLASTIC PANEL WAINSCOT ON GYP BOARD.
6. ROOF DRAIN LEADERS.
7. EXISTING ENGINEERED COMPACTED FILL.
8. CONCRETE FOUNDATION WALL AT SHOP.
9. CONDENSING UNIT.
10. EVAPORATIVE COOLER.
11. EXHAUST DUCT THRU ROOF.
12. ROOF SCUTTLE.
13. PROVIDE CFMF BRIDGING AT MIDSPAN OF JOISTS.
14. METAL FABRICATED JAMB GUARDS AT OVERHEAD DOOR PER 5/A5.03

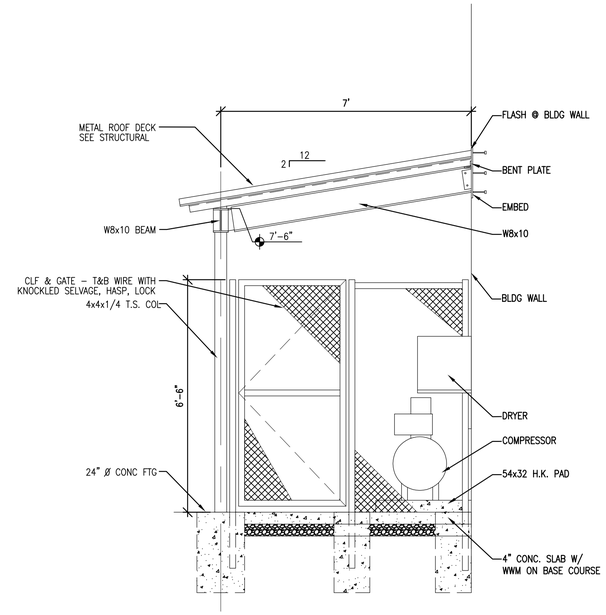

B SECTION (COMPRESSOR ENCLOSURE)

SCALE : 1/2"= 1'-0"

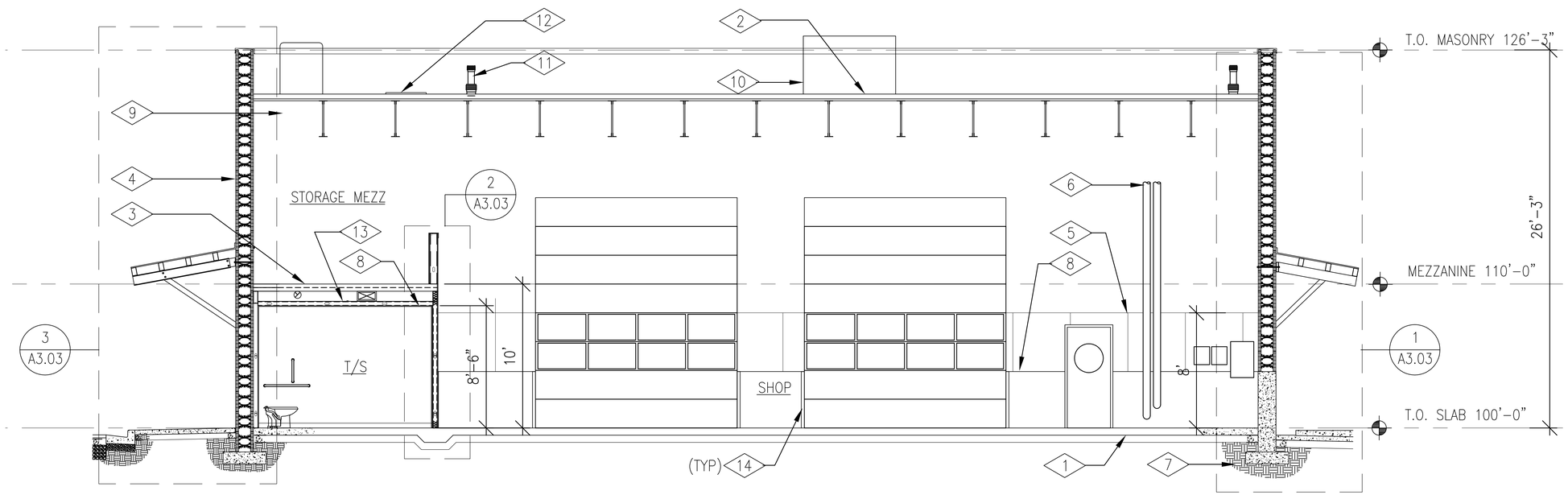

A BUILDING SECTION

SCALE : 1/4"= 1'-0"

MHTN ARCHITECTS

MHTN Architects, Inc.
420 East South Temple
Suite 100
Salt Lake City, Utah 84111
TEL 801.595.6700
FAX 801.595.6717
www.mhtn.com

JAMES T. DRESSLAR
ARCHITECT, L.L.C.
387 PARK LANE
MOAB, UTAH 84532
435.259.1155 PHONE / FAX

GREAT SALT LAKE MARINA MAINTENANCE BUILDING

DFCM # 10029510

13312 WEST 1075 SOUTH
MAGNA, UTAH 84044

SEAL

MHTN PROJECT NO. 2010546

DRAWN BY: CHECKED BY:

ISSUED:

NO.	DATE	DESCRIPTION

REVISION DATE:

NO.	DATE	DESCRIPTION
1	Nov. 23, 2010	PLAN CHECK COMMENTS & TOILETS
2	Dec. 20, 2010	PLAN CHECK COMMENTS

SHEET NAME

BUILDING SECTION

CONSTRUCTION DOCUMENTS
SEPTEMBER 2, 2010

SHEET NUMBER

A3.01

By: Connect, Dec 14, 2010, 5:08pm
J:\2010\2010546 Great Salt Lake Maintenance Building\1 Drawings\A3.01.dwg

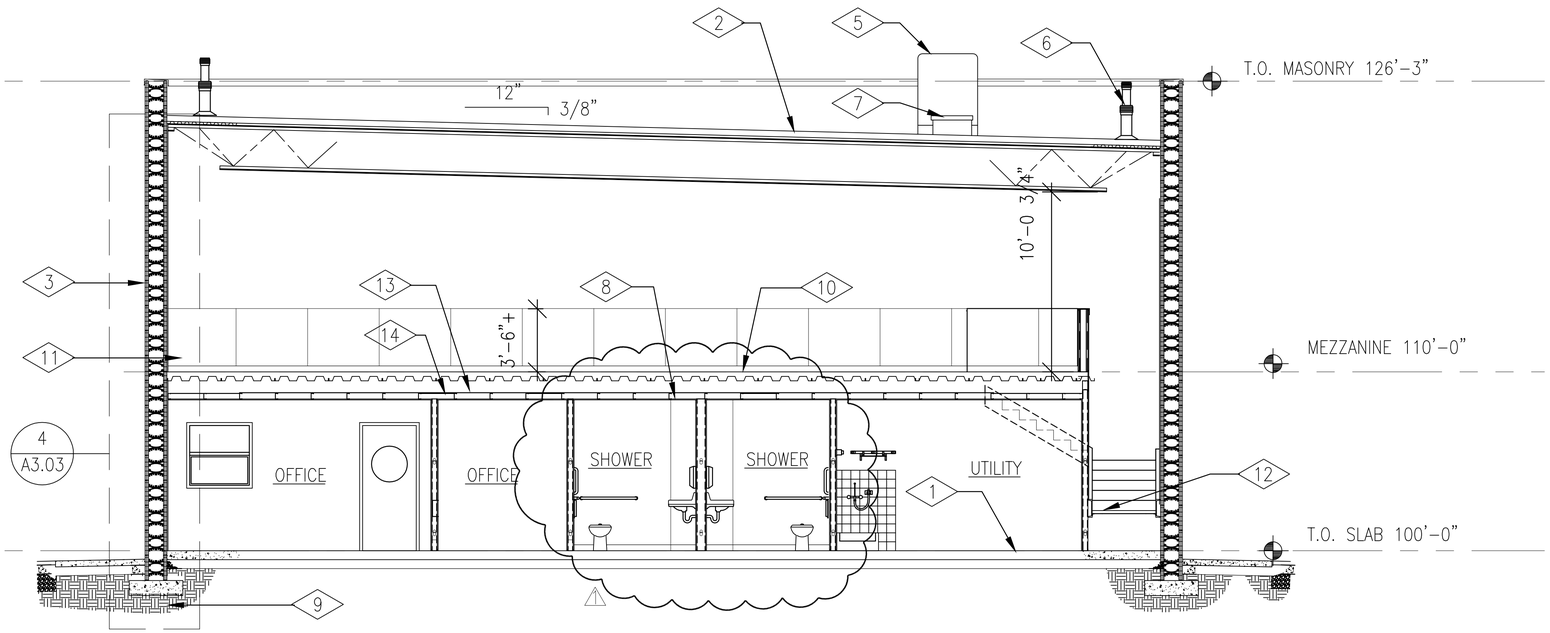

B BUILDING SECTION

SCALE : 1/4"= 1'-0"

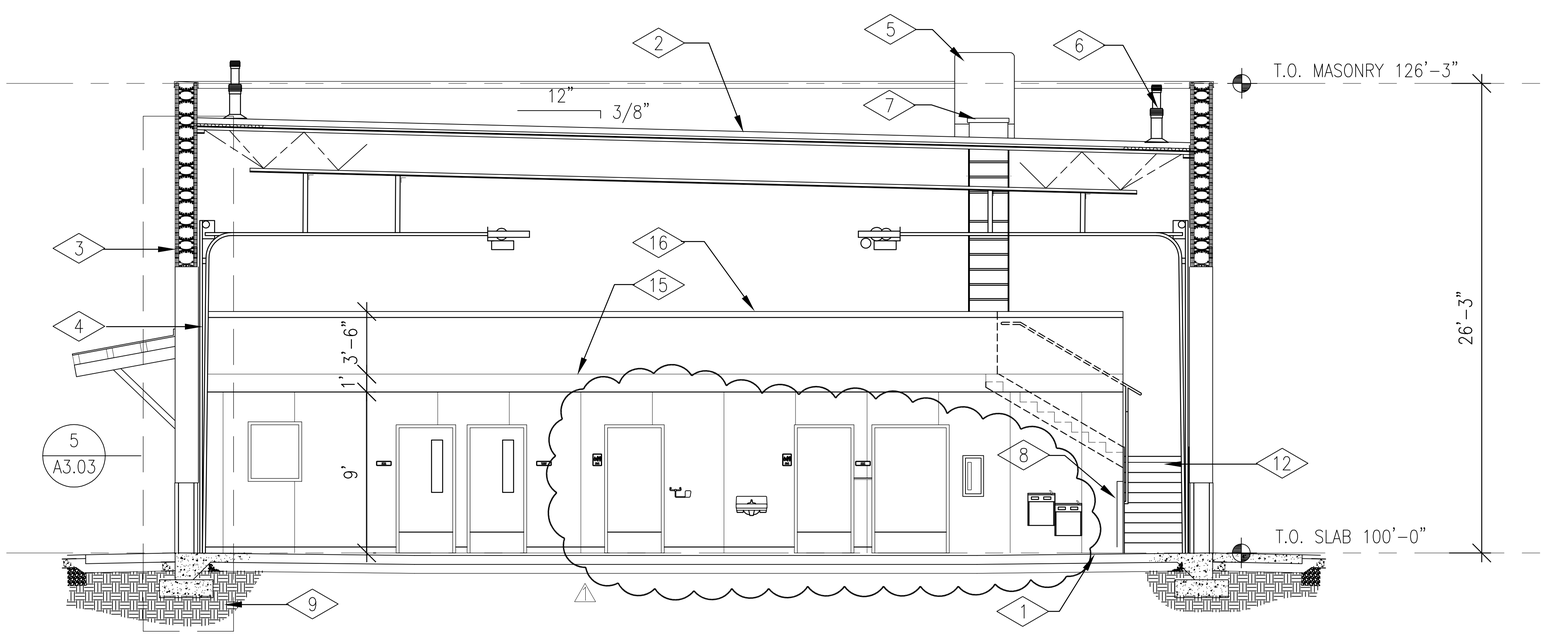

A BUILDING SECTION

SCALE : 1/4"= 1'-0"

REFERENCE NOTES:

1. REINFORCED CONCRETE SLAB ON DRAINAGE COURSE.
2. LOW SLOPE ROOF ASSEMBLY: THERMOPLASTIC MEMBRANE ROOFING / RIGID INSULATION / METAL DECK / SCHEDULED STEEL JOIST.
3. EXTERIOR WALL ASSEMBLY: STUCCO SYSTEM / 13" INSULATED CONCRETE FORM / GYP BOARD/ SCHEDULED WALL FINISH.
4. SECTIONAL OVERHEAD DOOR ASSEMBLY.
5. CONDENSING UNIT.
6. EXHAUST DUCT THRU ROOF.
7. ROOF SCUTTLE.
8. CORNER GUARD ("L") PER 10/A5.06
9. EXISTING ENGNEERED COMPACTED FILL.
10. MEZZANINE FLOOR / CEILING ASSEMBLY: 6" CONCRETE AND STEEL COMPOSITE DECK / 8 1/2" AIR SPACE/ 3 1/2" CFMFM JOISTS AT 24" O.C. / GYP BOARD CEILING / SCHEDULED CEILING FINISH.
11. FIBER REINFORCED PLASTIC PANEL WAINSCOT ON GYP BOARD.
12. CONCRETE FILLED STEEL STAIR ASSEMBLY.
13. PROVIDE CFMF BRIDGING AT MIDSPAN OF JOISTS.
14. CFMF BLOCKING AT 24" O.C. FOR WALL HEAD TRACK ATTACHMENT.
15. PROVIDE GYP BOARD CONTROL JOINT AT FLOOR LINE.
16. WRAP FRPP UP AND OVER WALL TO PROVIDE COPING.

MHTN ARCHITECTS

MHTN Architects, Inc.
420 East South Temple
Suite 100
Salt Lake City, Utah 84111
TEL 801.595.6700
FAX 801.595.6717
www.mhtn.com

JAMES T. DRESSLAR
ARCHITECT, L.L.C.
387 PARK LANE
MOAB, UTAH 84532
435.259.1155 Phone / Fax

GREAT SALT LAKE
MARINA MAINTENANCE BUILDING
DFCM # 10029510

13312 WEST 1075 SOUTH
MAGNA, UTAH 84044

SEAL

MHTN PROJECT NO. 2010546

DRAWN BY: CHECKED BY:

ISSUED:

NO.	DATE	DESCRIPTION

REVISION DATE:

NO.	DATE	DESCRIPTION
1	Nov. 23, 2010	PLAN CHECK COMMENTS & TOILETS
2	Dec. 20, 2010	PLAN CHECK COMMENTS

SHEET NAME

BUILDING SECTION

CONSTRUCTION DOCUMENTS
SEPTEMBER 2, 2010

SHEET NUMBER

A3.02

By: Dressler, Tim, 14 2010, 11:06am
File: C:\DOCUMENTS AND SETTINGS\Administrator\My Documents\Great Salt Lake Maintenance Building\1 Drawings\A3.02.dwg

NOTE:

REFERANCE NOTES ARE FOR WALL SECTIONS DIRECTLY BELOW NOTES.

REFERENCE NOTES: DETAILS 4, 5

1. ELECTRIC DOOR OPERATOR – DRAWBAR TROLLEY TYPE.
2. SECTIONAL OVERHEAD DOOR ASSEMBLY.
3. METAL FABRICATED JAMB GUARD PER (5 / A5.03)
4. HORIZONTAL TRACK ASSEMBLY.
5. HEAD PLATE AND SHAFT.
6. PROVIDE ANGLE FRAMING FOR HORIZONTAL TRACK SUPPORT.
7. MEZZANINE FLOOR / CEILING ASSEMBLY: 6" CONCRETE AND STEEL COMPOSITE DECK / 8 1/2" AIR SPACE/ 3 1/2" CFMFM JOISTS AT 24" O.C. / GYP BOARD CEILING / SCHEDULED CEILING FINISH.
8. EXTERIOR WALL ASSEMBLY: STUCCO SYSTEM / 15" INSULATED CONCRETE FORM WITH 11 1/2" ICF ABOVE / GYP BOARD/ SCHEDULED WALL FINISH.
9. LOW SLOPE ROOF ASSEMBLY: THERMOPLASTIC MEMBRANE ROOFING / RIGID INSULATION / METAL DECK / 30" OPEN WEB STEEL JOISTS
10. REINFORCED CONCRETE SLAB ON DRAINAGE COURSE.
11. CONCRETE WALK ON BASE COURSE.
12. REINFORCED CONCRETE APRON SLAB ON BASE COURSE AT OVERHEAD DOORS.
13. CONCRETE FOOTING.
14. WRAP STUCCO SYSTEM AROUND JAMB AND HEAD OF OPENING. TERMINATE AT JAMB WOOD DOOR BUCK. EXTEND UP 6" AT INTERIOR OF HEAD, TERMINATING AT GYP BOARD.
15. DOOR CANOPY BEYOND PER (1 / A5.08)
16. FIBER REINFORCED PLASTIC PANEL WAINSCOT.
17. EXISTING ENGINEERED COMPACTED FILL.
18. COPE GYP BOARD TIGHT TO JOIST TO MAINTAIN THERMAL BARRIER OVER RIGID ICF INSULATION.

REFERENCE NOTES: DETAILS 1, 2, 3

1. REINFORCED CONCRETE SLAB ON DRAINAGE COURSE.
2. LOW SLOPE ROOF ASSEMBLY: THERMOPLASTIC MEMBRANE ROOFING / RIGID INSULATION / METAL DECK / OPEN WEB STEEL JOISTS
3. MEZZANINE FLOOR / CEILING ASSEMBLY: 6" CONCRETE AND STEEL COMPOSITE DECK / 8 1/2" AIR SPACE/ 3 1/2" CFMF JOISTS AT 24" O.C. / GYP BOARD CEILING / SCHEDULED CEILING FINISH.
4. EXTERIOR WALL ASSEMBLY: STUCCO SYSTEM / 13" INSULATED CONCRETE FORM / GYP BOARD/ SCHEDULED WALL FINISH.
5. FIBER REINFORCED PLASTIC PANEL WAINSCOT.
6. ENTRY CANOPY PER (2 / A5.08)
7. CONCRETE WALK ON BASE COURSE.
8. REINFORCED CONCRETE WALK ON BASE COURSE WITH REINFORCED CONCRETE HOUSEKEEPING PAD CAST ON TOP FOR AIR COMPRESSOR.
9. U CHANNEL HORIZONTAL BRACING.
10. FRAMED GUARD WALL ASSEMBLY: SCHEDULED WALL FINISH EACH SIDE ON GYP BOARD / CFMF STUDS AT 12" O.C. WITH DEEP LEG TRACK AT SILL.
11. SOUND ATTENUATED FRAMED WALL ASSEMBLY: SCHEDULED WALL FINISH EACH SIDE / GYP BOARD / CFMF STUDS AT 16" O.C. / FULL DEPTH ACOUSTICAL BATT INSULATION / TWO LAYERS GYP BOARD ONE SIDE.
12. CONCRETE FOUNDATION WALL.
13. CONCRETE FOOTING.
14. WRAP FRPP UP AND OVER WALL TO PROVIDE COPING.
15. PROVIDE GYP BOARD CONTROL JOINT AT MEZZANINE FLOOR ELEVATION.
16. EXISTING ENGINEERED COMPACTED FILL.
17. RIGID INSULATION.

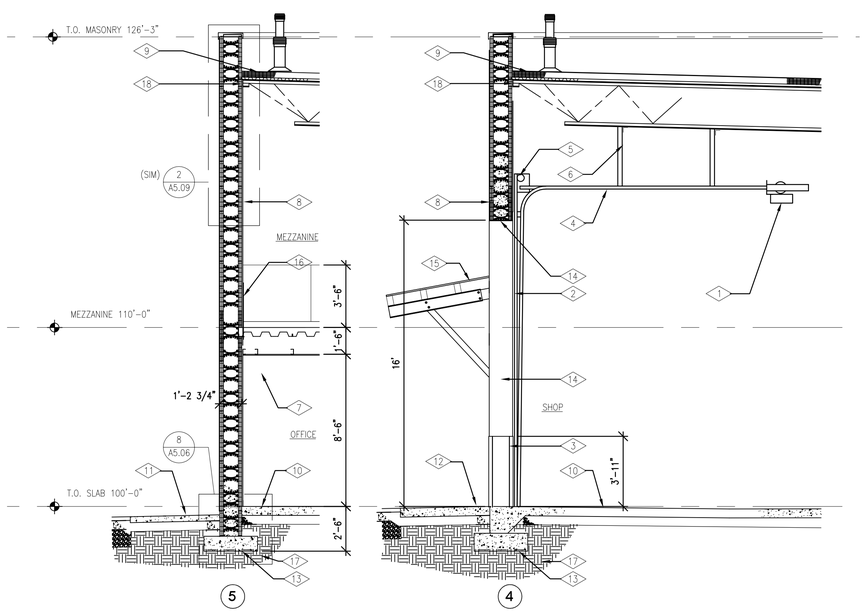

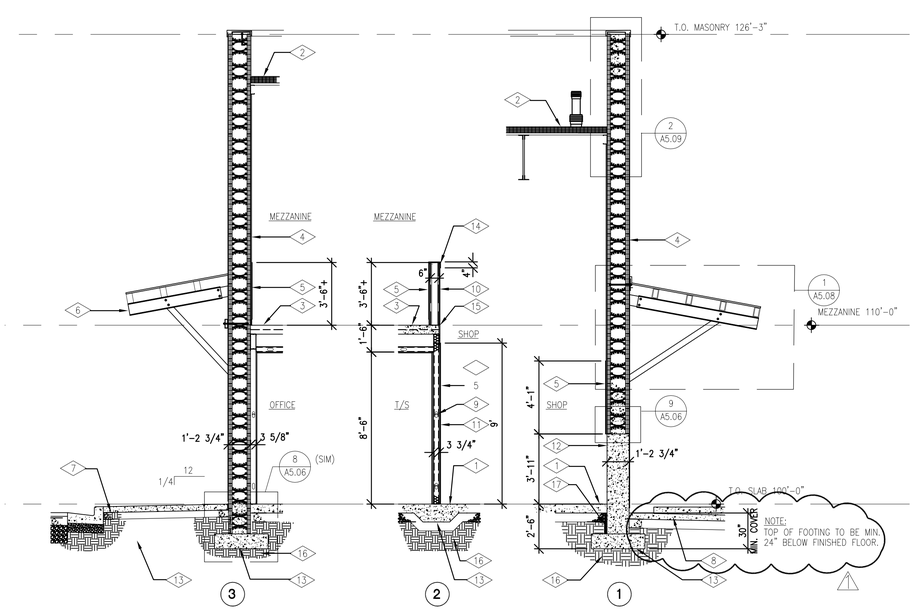

MHTN ARCHITECTS

MHTN Architects, Inc.
420 East South Temple
Suite 100
Salt Lake City, Utah 84111
TEL 801.595.6700
FAX 801.595.6717
www.mhtn.com

JAMES T. DRESSLAR
ARCHITECT, L.L.C.
387 PARK LANE
MOAB, UTAH 84532
435.259.1155 PHONE / FAX

GREAT SALT LAKE MARINA MAINTENANCE BUILDING

DFCM # 10029510

13312 WEST 1075 SOUTH
MAGNA, UTAH 84044

SEAL

MHTN PROJECT NO. 2010546

DRAWN BY: CHECKED BY:

ISSUED:

NO.	DATE	DESCRIPTION

REVISION DATE:

NO.	DATE	DESCRIPTION
1	Nov. 23, 2010	PLAN CHECK COMMENTS & TOILETS
2	Dec. 20, 2010	PLAN CHEck COMMENTS

SHEET NAME

WALL SECTIONS

CONSTRUCTION DOCUMENTS
SEPTEMBER 2, 2010

SHEET NUMBER

A3.03

By Copyright Tue 04 2011 11:14am
C:\Users\jim\Dropbox\GSL Marina Maintenance Building\1 Drawings\A3.03.dwg

NOTE:

REFERENCE NOTES TO THE RIGHT OF DRAWINGS ARE THE NOTES TO BE USED FOR THOSE DRAWINGS.

RATED CONSTRUCTION ASSEMBLIES

ASSEMBLY	GYPSUM ASSOC DESIGN NUMBER	IBC DESIGN NUMBER	DESCRIPTION
1 HR VERTICAL FIRE BARRIER AT STAIRWAY ENCLOSURE	–	T 720.1(2) 13-1.1	5/8" TYPE X GYPSUM BOARD EACH SIDE 3 5/8" CFMF FRAMING AT 16" O.C.
1 HR HORIZONTAL FIRE BARRIER AT STAIRWAY ENCLOSURE	GA FC 1130	–	5/8" TYPE X GYPSUM BOARD CEILING / 3 5/8" CFMF HORIZONTAL JOISTS AT 16" O.C.

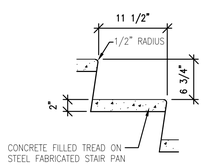

STAIR TREAD / RISER
1" = 1'-0"
5 / A4.01

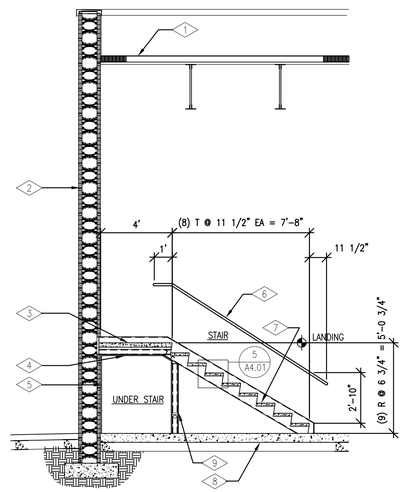

STAIR SECTION
1/4" = 1'-0"
4 / A4.01

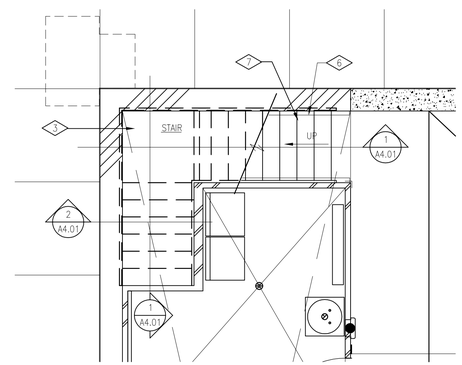

ENLARGED STAIR PLAN
1/4" = 1'-0"
3 / A4.01

REFERENCE NOTES:

1. LOW SLOPE ROOF ASSEMBLY: THERMOPLASTIC MEMBRANE ROOFING / GYP SHEATHING / RIGID INSULATION / METAL DECK / OPEN WEB STEEL JOISTS
2. EXTERIOR WALL ASSEMBLY: STUCCO SYSTEM / 13" INSULATED CONCRETE FORM / GYP BOARD/ SCHEDULED WALL FINISH.
3. 3" CONCRETE STAIR LANDING ON STEEL PAN.
4. 1 HOUR FIRE RESISTIVE RATED ENCLOSURE AT STAIR. PROVIDE TYPE "X" GYP BOARD ON 3 5/8" CFMF JOISTS AT 16" O.C. PER SCHEDULE AT – / A4.01
5. GYP BOARD SCREWED TO ICF WALL ASSEMBLY.
6. METAL FABRICATED PIPE HANDRAIL EACH SIDE OF STAIR PER 3 / A5.07
7. 2" CONCRETE STAIR TREAD ON STEEL PAN SPANNING MC12 CHANNEL STRINGERS.
8. REINFORCED CONCRETE SLAB ON DRAINAGE FILL.
9. 1 HOUR FIRE RESISTIVE RATED ENCLOSURE AT STAIR. PROVIDE TYPE "X" GYP BOARD EACH SIDE OF 3 5/8" CFMF STUDS AT 16" O.C. PER SCHEDULE AT – / A4.01

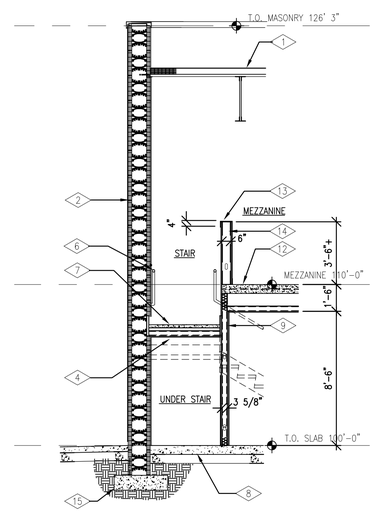

STAIR SECTION
1/4" = 1'-0"
2 / A4.01

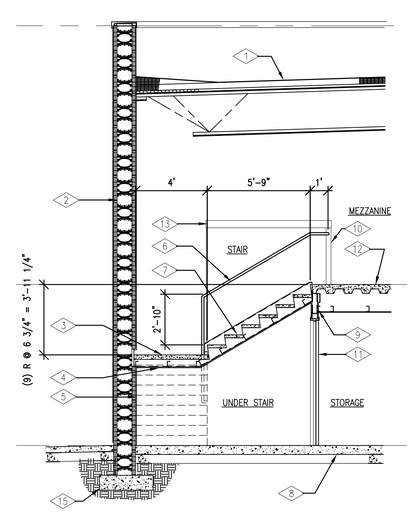

STAIR SECTION
1/4" = 1'-0"
1 / A4.01

REFERENCE NOTES:

1. LOW SLOPE ROOF ASSEMBLY: THERMOPLASTIC MEMBRANE ROOFING / GYP SHEATHING / RIGID INSULATION / METAL DECK / OPEN WEB STEEL JOISTS
2. EXTERIOR WALL ASSEMBLY: STUCCO SYSTEM / 13" INSULATED CONCRETE FORM / GYP BOARD/ SCHEDULED WALL FINISH.
3. 3" CONCRETE STAIR LANDING ON STEEL PAN.
4. 1 HOUR FIRE RESISTIVE RATED ENCLOSURE AT STAIR. PROVIDE (2) LAYERS TYPE "X" GYP BOARD ON 3 5/8" CFMF JOISTS AT 24" O.C. PER SCHEDULE AT – / A4.01
5. GYP BOARD SCREWED TO ICF WALL ASSEMBLY.
6. METAL FABRICATED PIPE HANDRAIL EACH SIDE OF STAIR PER 3 / A5.07
7. 2" CONCRETE STAIR TREAD ON STEEL PAN SPANNING MC12 CHANNEL STRINGERS.
8. REINFORCED CONCRETE SLAB ON DRAINAGE COURSE.
9. 1 HOUR FIRE RESISTIVE RATED ENCLOSURE AT STAIR. PROVIDE TYPE "X" GYP BOARD EACH SIDE OF 3 5/8" CFMF STUDS AT 16" O.C. PER SCHEDULE AT – / A4.01
10. WRAP FRPP WAINSCOT AROUND END OF WALL TO PROVIDE 4" CORNER GUARD.
11. RATED STEEL DOOR ASSEMBLY.
12. MEZZANINE FLOOR / CEILING ASSEMBLY: 6" CONCRETE AND STEEL COMPOSITE DECK / 8 1/2" AIR SPACE / 3 5/8" CFMF JOISTS AT 24" O.C. / GYP BOARD CEILING / SCHEDULED CEILING FINISH.
13. WRAP FRPP WAINSCOT UP, OVER AND DOWN 4" TO PROVIDE WALL COPING AT MEZZANINE GUARD WALL.
14. FRAMED GUARD WALL ASSEMBLY: SCHEDULED WALL FINISH EACH SIDE ON GYP BOARD / 6" CFMF STUDS AT 16" O.C. WITH DEEP LEG TRACK.
15. CONCRETE FOOTING.

MHTN ARCHITECTS
MHTN Architects, Inc.
420 East South Temple
Suite 100
Salt Lake City, Utah 84111
TEL 801.595.6700
FAX 801.595.6717
www.mhtn.com

JAMES T. DRESSLAR
ARCHITECT, L.L.C.
387 PARK LANE
MOAB, UTAH 84532
435.259.1155 PHONE / FAX

GREAT SALT LAKE MARINA MAINTENANCE BUILDING

DFCM # 10029510

13312 WEST 1075 SOUTH
MAGNA, UTAH 84044

SEAL

MHTN PROJECT NO. 2010546

DRAWN BY: CHECKED BY:

ISSUED:

NO.	DATE	DESCRIPTION

REVISION DATE:

NO.	DATE	DESCRIPTION
1	Nov. 23, 2010	PLAN CHECK COMMENTS & TOILETS
2	Dec. 20, 2010	PLAN CHECK COMMENTS

SHEET NAME

STAIR PLAN & SECTIONS

CONSTRUCTION DOCUMENTS
SEPTEMBER 2, 2010

SHEET NUMBER

A4.01

By: Dressler, Tue, Nov 16, 2010 - 11:06am
File: C:\DRESSLAR\GSL Marina Maintenance Building\1 Drawings\A4.01.dwg

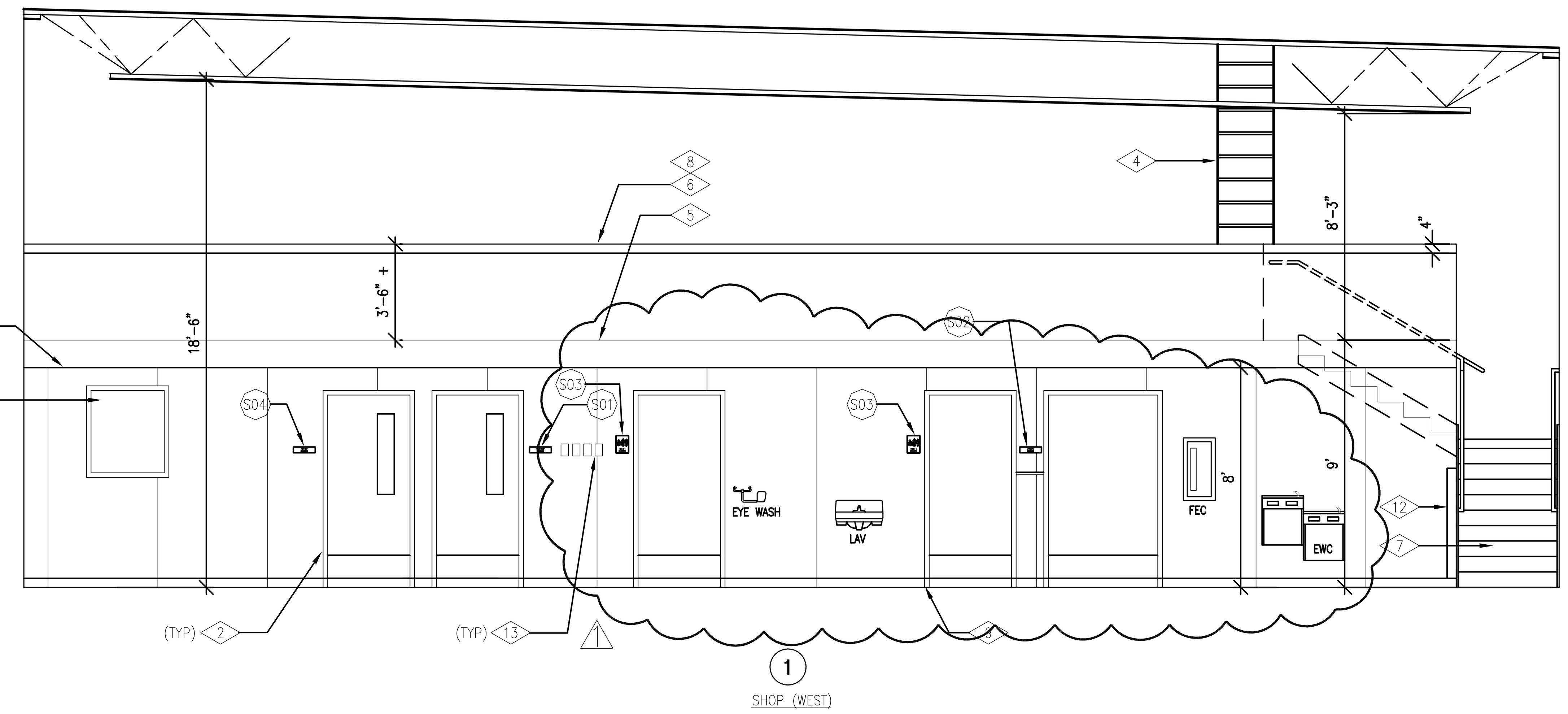

1 INTERIOR ELEVATIONS
1/4" = 1'-0"

INTERIOR ELEVATION REFERENCE NOTES:

1. HOLLOW METAL WINDOW ASSEMBLY.
2. HOLLOW METAL DOOR ASSEMBLY.
3. NOT USED.
4. METAL FABRICATED LADDER PER 6/A5.06
5. PROVIDE GYP BOARD CONTROL JOINT AT FLOOR ELEVATION.
6. FRAMED GUARD WALL AT OPEN SIDE OF MEZZANINE.
7. CONCRETE FILLED STEEL STAIR ASSEMBLY WITH METAL FABRICATED PIPE HANDRAIL EACH SIDE.
8. WRAP FRPP WAINSCOT UP, OVER AND DOWN 4" TO PROVIDE WALL COPING AT MEZZANINE GUARD WALL.
9. RUBBER BASE.
10. FIBER REINFORCED PLASTIC PANEL ON GYP BOARD.
11. NOT USED.
12. CORNER GUARD ("L") PER 10/A5.06
13. ~~OVERHEAD DOOR OPERATOR PUSH PAD.~~
14. SIGNAGE NOTES REFER TO 4/A5.06

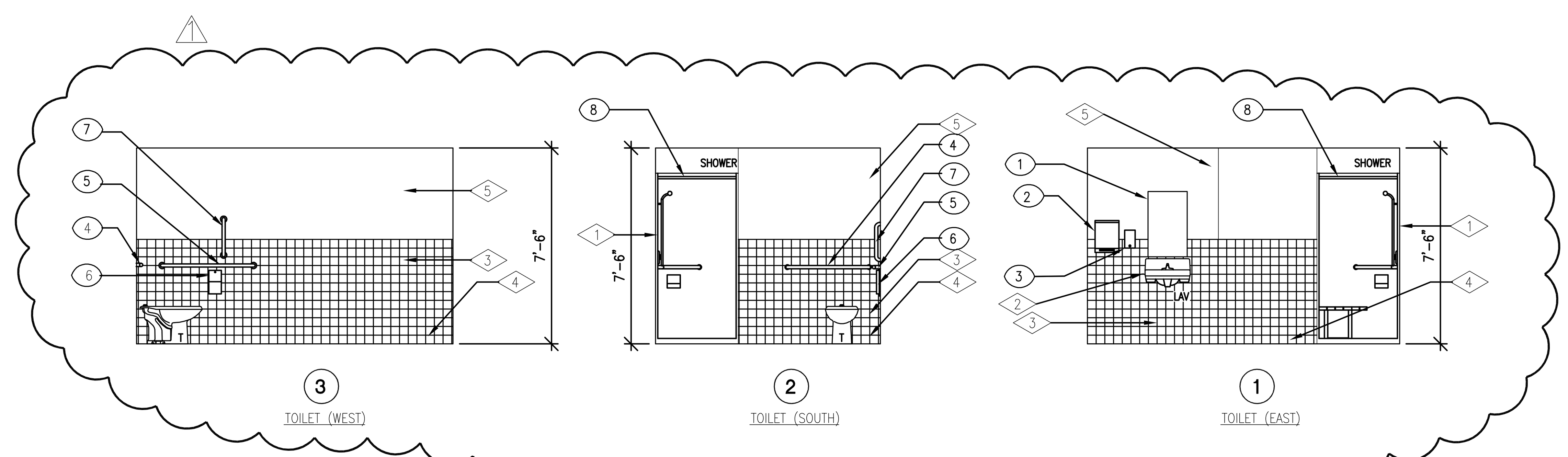

2 RESTROOM ELEVATIONS (NEW TOILET ROOM SIM. TO ABOVE)
1/4" = 1'-0"

RESTROOM ELEVATION REFERENCE NOTES:

1. TRANSFER TYPE ACCESSIBLE SHOWER.
2. PROVIDE PIPE GUARD KIT AT LAVATORY.
3. 4"x4" CERAMIC TILE WAINSCOT TO 4'-0" A.F.F.
4. 4"x4" CERAMIC TILE COVE BASE.
5. PAINTED GYP. BOARD.

TOILET ACCESSORIES:

1. 18 X 30 MIRROR
2. *ACCESSIBLE PAPER TOWEL DISPENSER
3. *ACCESSIBLE LIQUID SOAP DISPENSER
4. 36" GRAB BAR
5. 42" GRAB BAR
6. *TOILET TISSUE DISPENSER
7. 18" GRAB BAR
8. SHOWER CURTAIN ROD
9. 24" MOP RACK
10. HAT AND COAT HOOK

*DENOTES ACCESSORIES PROVIDED BY OWNER

MHTN ARCHITECTS
MHTN Architects, Inc.
420 East South Temple
Suite 100
Salt Lake City, Utah 84111
TEL 801.595.6700
FAX 801.595.6717
www.mhtn.com

JAMES T. DRESSLAR ARCHITECT, L.L.C.
387 PARK LANE
MOAB, UTAH 84532
435.259.1155 PHONE / FAX

GREAT SALT LAKE
MARINA MAINTENANCE BUILDING
DFCM # 10029510

13312 WEST 1075 SOUTH
MAGNA, UTAH 84044

SEAL

MHTN PROJECT NO. 2010546
DRAWN BY: CHECKED BY:

ISSUED:

NO.	DATE	DESCRIPTION

REVISION DATE:

NO.	DATE	DESCRIPTION
1	Nov. 23, 2010	PLAN CHECK COMMENTS & TOILETS
2	Dec. 20, 2010	PLAN CHECK COMMENTS

SHEET NAME
INTERIOR ELEVATIONS
CONSTRUCTION DOCUMENTS
SEPTEMBER 2, 2010

SHEET NUMBER
A4.02

By: CourtneyT; Dec 14, 2010 - 11:07am
J:\K-12\2010546 GSL Marina Maintenance Building\1 Drawings\A4.02.dwg

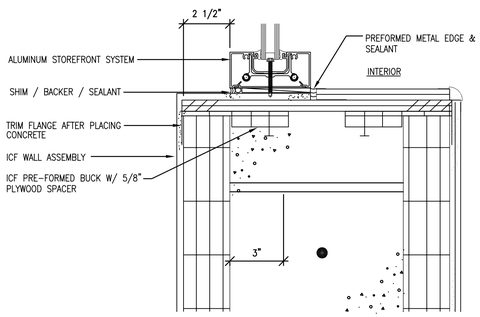

JAMB
3" = 1'-0"
7 A5.03

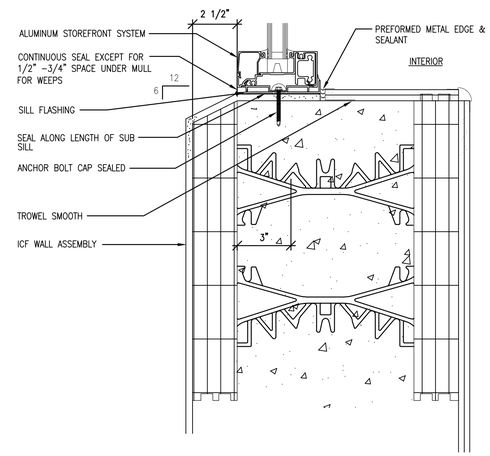

SILL
3" = 1'-0"
6 A5.03

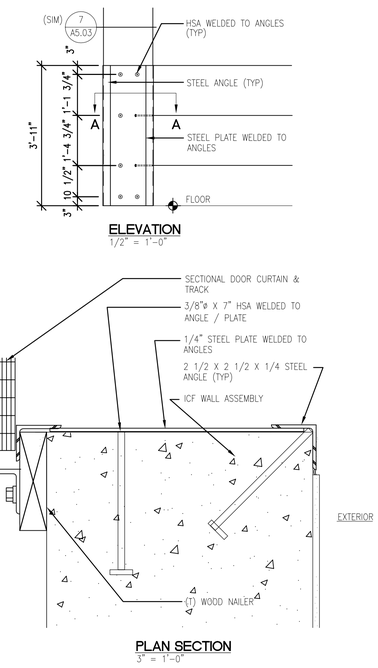

JAMB
3 = 1'-0"
5 A5.03

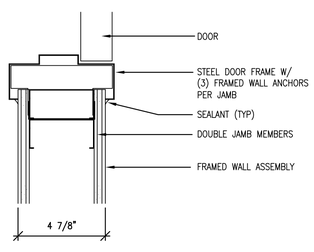

JAMB (HEAD SIM)
3 = 1'-0"
4 A5.03

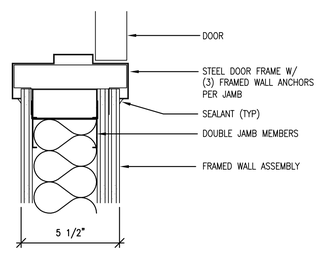

JAMB (HEAD SIM)
3 = 1'-0"
3 A5.03

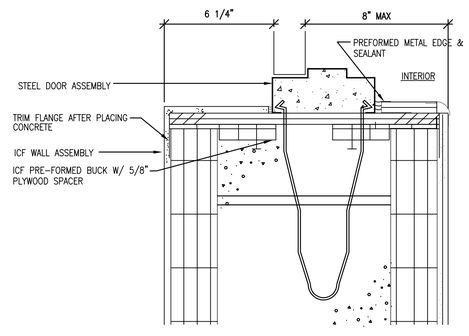

JAMB (HEAD SIM)
3" = 1'-0"
2 A5.03

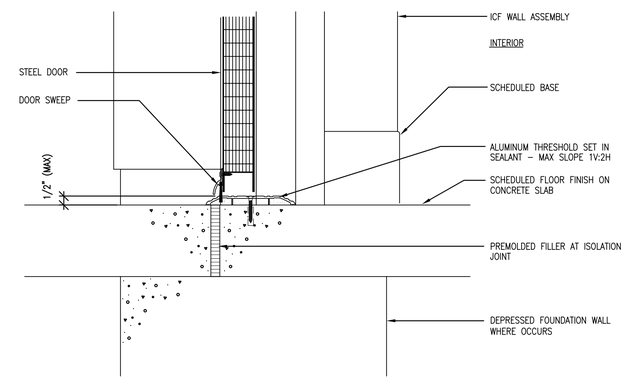

THRESHOLD
3 = 1'-0"
1 A5.03

MHTN ARCHITECTS
MHTN Architects, Inc.
420 East South Temple
Suite 100
Salt Lake City, Utah 84111
TEL 801.595.6700
FAX 801.595.6717
www.mhtn.com

JAMES T. DRESSLAR
ARCHITECT, L.L.C.
387 PARK LANE
MOAB, UTAH 84532
435.259.1155 PHONE / FAX

GREAT SALT LAKE MARINA MAINTENANCE BUILDING

DFCM # 10029510

13312 WEST 1075 SOUTH
MAGNA, UTAH 84044

SEAL

MHTN PROJECT NO: 2010546

DRAWN BY: CHECKED BY:

ISSUED:

NO.	DATE	DESCRIPTION

REVISION DATE:

NO.	DATE	DESCRIPTION
1	Nov. 23, 2010	PLAN CHECK COMMENTS & TOILETS
2	Dec. 20, 2010	PLAN CHECK COMMENTS

SHEET NAME

DOOR & WINDOW DETAILS

CONSTRUCTION DOCUMENTS
SEPTEMBER 2, 2010

SHEET NUMBER

A5.03

By:Cromwell, Eric on 2010, 11:09a
J:\2010\2010546 GSL Marina Maintenance Building\Drawings\A5.03.dwg

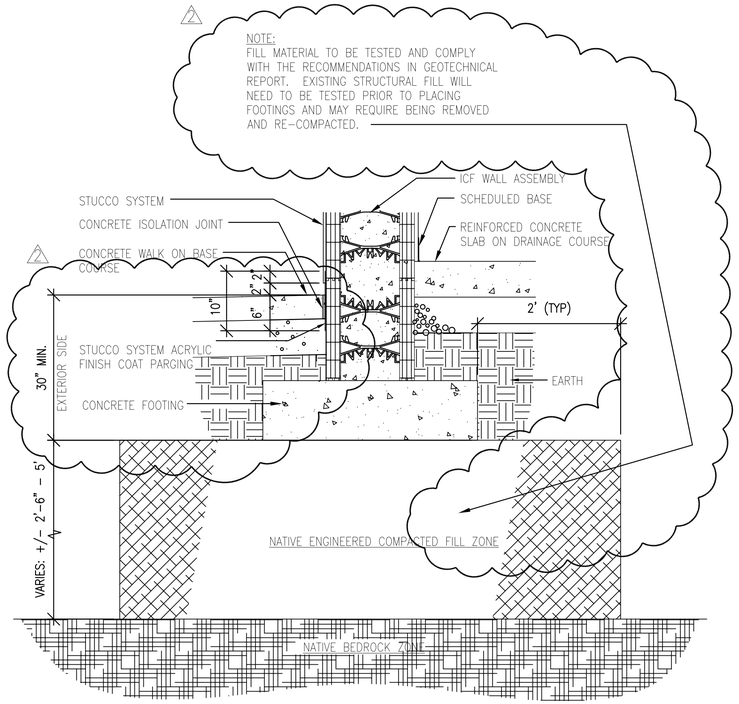

TYPICAL FOUNDATION
1" = 1'-0" — 8 / A5.06

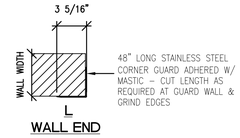

CORNER GUARD
1 1/2" = 1'-0" (UNO) — 10 / A5.06

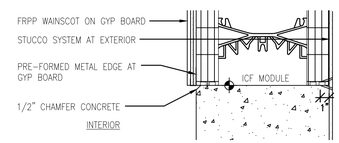

CONCRETE / ICF TRANSITION
1 1/2" = 1'-0" — 9 / A5.06

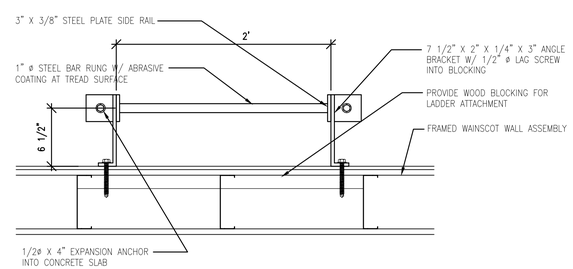

LADDER
1 1/2" = 1'-0" — 7 / A5.06

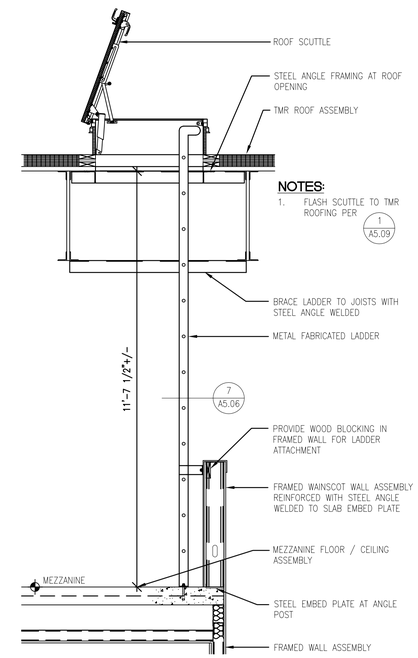

ROOF LADDER + SCUTTLE
1/2" = 1'-0" — 6 / A5.06

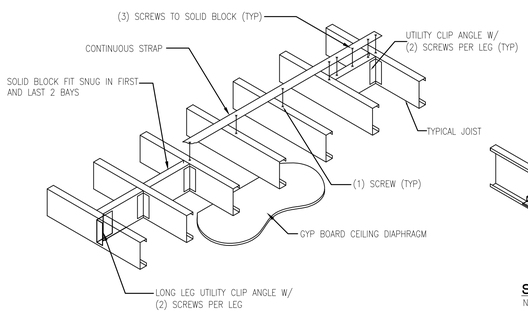

CEILING JOIST BLOCKING
NO SCALE

NOTES:
1. FOR ADDITIONAL CFMF DETAILS, SEE 1 / A5.07

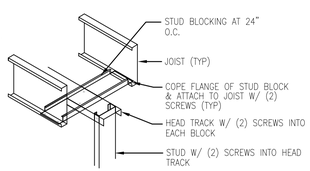

STUD AT CEILING FRAMING
NO SCALE

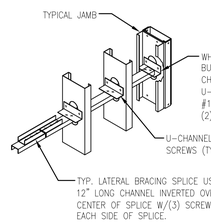

STUD U-CHANNEL BRACING
NO SCALE

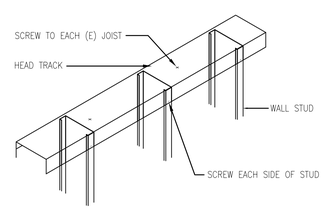

HEAD TRACK
NO SCALE

CFMF DETAILS
NO SCALE — 5 / A5.06

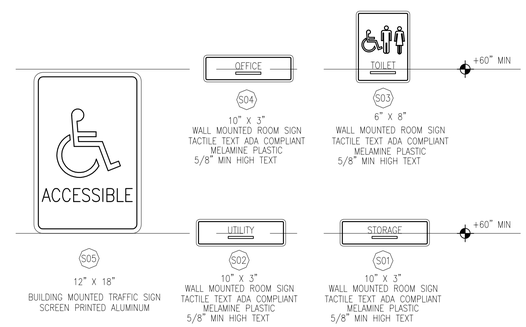

SIGNAGE
1 1/2" = 1'-0" — 4 / A5.06

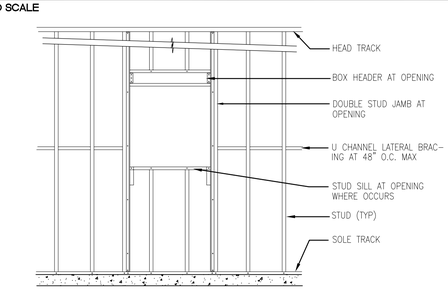

TYPICAL WALL FRAMING
3/8" = 1'-0"

TYPICAL WALL FRAMING
3/8" = 1'-0" — 3 / A5.06

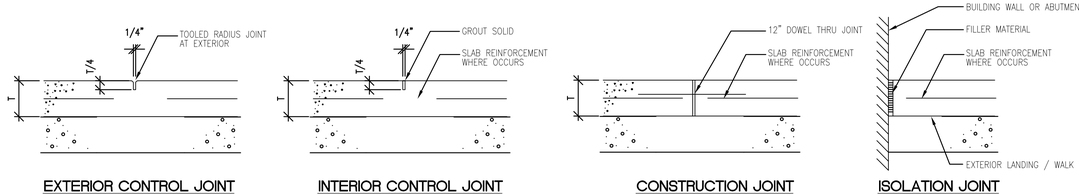

EXTERIOR CONTROL JOINT — INTERIOR CONTROL JOINT — CONSTRUCTION JOINT — ISOLATION JOINT

CONCRETE SLAB JOINTS
1 1/2" = 1'-0" — 2 / A5.06

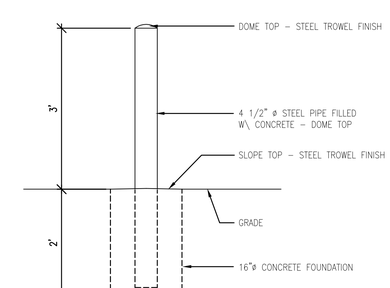

BOLLARD
3/4" = 1'-0" — 1 / A5.06

MHTN ARCHITECTS
MHTN Architects, Inc.
420 East South Temple
Suite 100
Salt Lake City, Utah 84111
TEL 801.595.6700
FAX 801.595.6717
www.mhtn.com

JAMES T. DRESSLAR
ARCHITECT, L.L.C.
387 PARK LANE
MOAB, UTAH 84532
435.259.1155 PHONE / FAX

GREAT SALT LAKE MARINA MAINTENANCE BUILDING
DFCM # 10029510

13312 WEST 1075 SOUTH
MAGNA, UTAH 84044

SEAL

MHTN PROJECT NO. 2010546
DRAWN BY: CHECKED BY:

ISSUED:

NO.	DATE	DESCRIPTION

REVISION DATE:

NO.	DATE	DESCRIPTION
1	Nov. 23, 2010	PLAN CHECK COMMENTS & TOILETS
2	Dec. 20, 2010	PLAN CHECK COMMENTS

SHEET NAME
DETAILS

CONSTRUCTION DOCUMENTS
SEPTEMBER 2, 2010

SHEET NUMBER
A5.06

By: Dressler, T. Jul 06, 2011 - 9:00am
P:\2010\2010-546 Salt Lake Marina Building\1 Drawings\A5.06.dwg

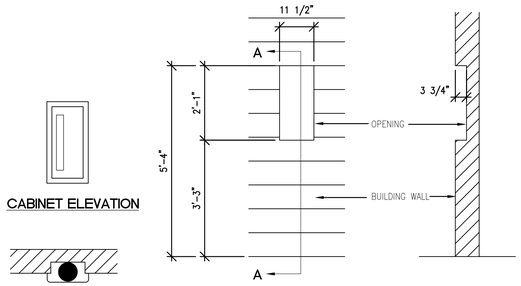

NOTES:

1. VERIFY OPENING DIMENSIONS WITH FIRE EXTINGUISHER CABINET MANUFACTURER'S PRODUCT DATA. OPENING SHOWN IS BASED ON JL INDUSTRIES "1027W10".

FIRE EXTINGUISHER

1/2" = 1'-0"

4 / A5.07

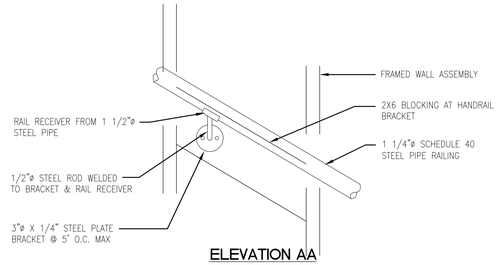

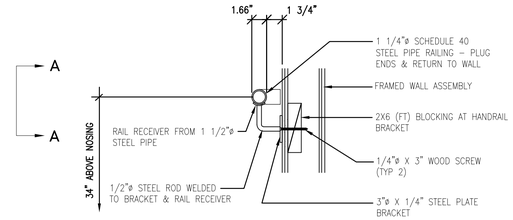

STAIR HANDRAIL

1 1/2" = 1'-0"

3 / A5.07

CFMF MATERIAL:

1. MATERIAL (33 KSI STEEL):
   - A. CLIP ANGLES: 16 GAUGE
   - B. SCREWS: #10–16 X 5/8" HWH OR PH SD UNO
   - C. STRAP: 25 GAUGE
   - D. LOAD BEARING STUDS: 20 GAUGE
   - E. FURRING STUDS: 20 GAUGE
   - F. FURRING CHANNEL: 20 GAUGE
   - G. JOISTS: 18 GAUGE
   - H. TRACK: MATCH ASSOCIATED FRAMING MEMBERS UNO
   - I. CLIP ANGLES, U–CHANNEL BRIDGING: 16 GAUGE
   - J. CORNER ANGLE: MATCH ASSOCIATED FRAMING MEMBERS UNO
   - K. GUARD WALL STUDS: 16 GA
   - L. GUARD WALL TRACK: 16 GA
   - M. 10" BOX HEADER: 18 GA
   - N. 6" BOX HEADER: 20 GA
   - O. BOX HEADER TRACK: 20 GA
   - P. ROOF DECK LEDGER: 16 GA
   - Q. COPING NAILER TRACK: 20 GA

NOTES:

1. FOR ADDITIONAL CFMF DETAILS, SEE 5 / A5.06

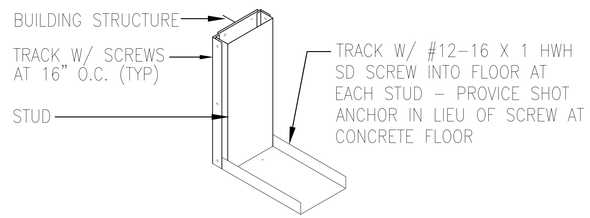

WALL TERMINATION AT BUILDING STRUCTURE

NO SCALE

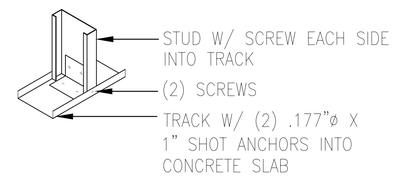

LOAD BEARING STUD AT SILL TRACK

NO SCALE

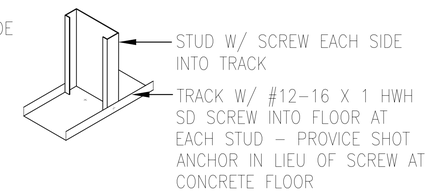

STUD AT SILL TRACK

NO SCALE

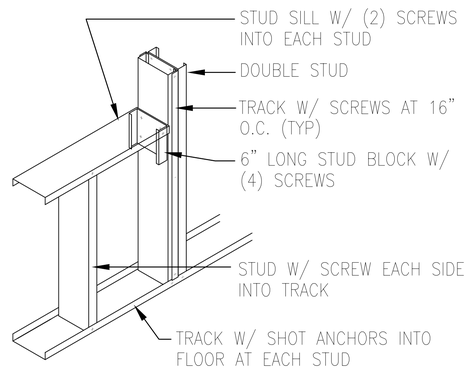

OPENING SILL

NO SCALE

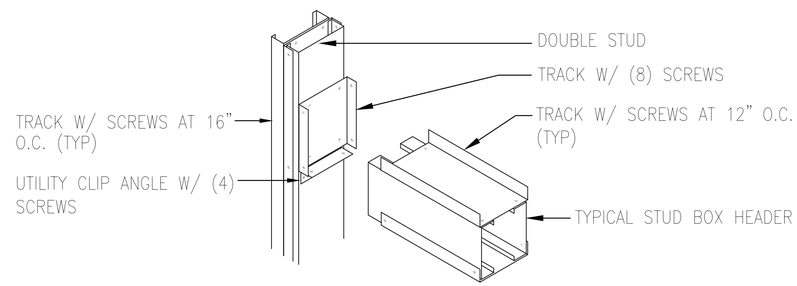

DOOR HEADER / JAMB

NO SCALE

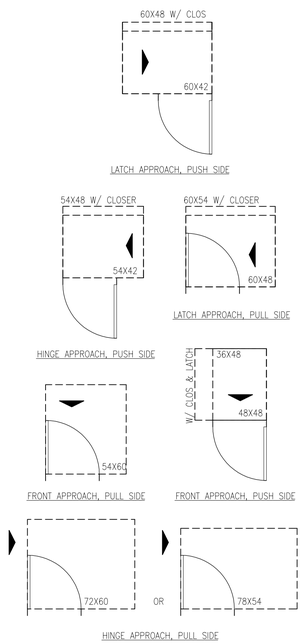

MANEUVERING SPACE AT DOORS

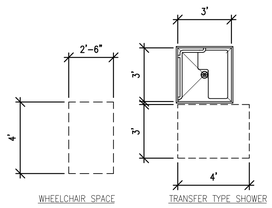

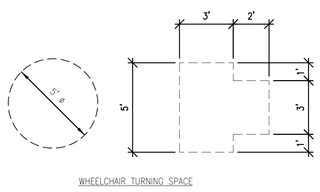

WHEELCHAIR MANEUVERING SPACE

ACCESSIBLE FLOOR MANEUVERING SPACE

1/4" = 1'-0"

2 / A5.07

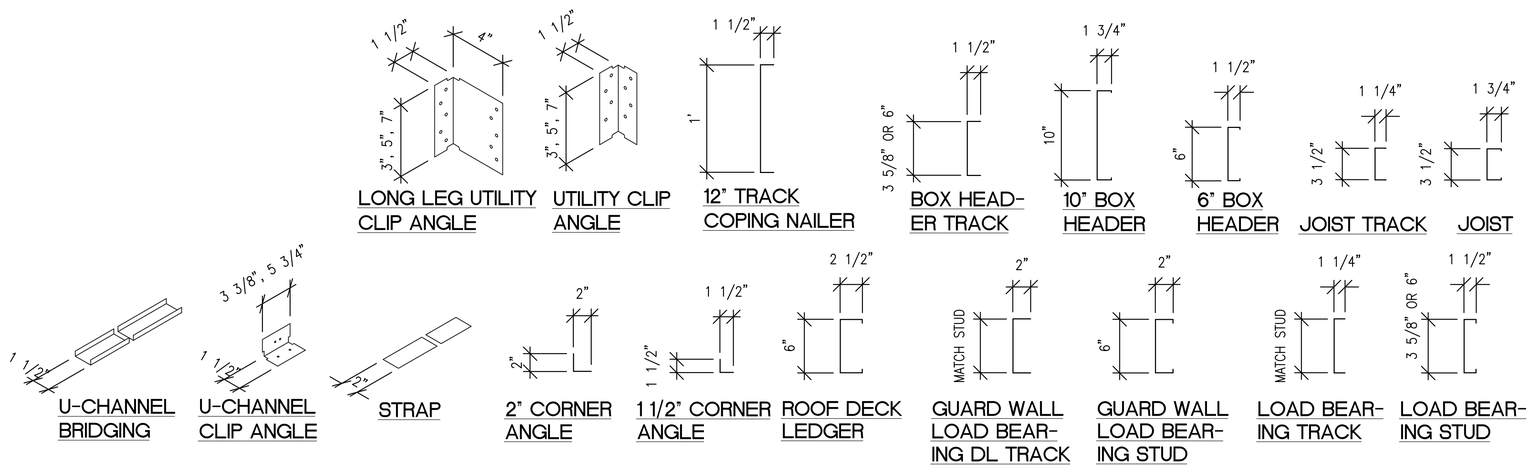

CFMF DETAILS

1 1/2" = 1'-0"

1 / A5.07

MHTN ARCHITECTS

MHTN Architects, Inc.
420 East South Temple
Suite 100
Salt Lake City, Utah 84111
TEL 801.595.6700
FAX 801.595.6717
www.mhtn.com

JAMES T. DRESSLAR
ARCHITECT, L.L.C.
387 PARK LANE
MOAB, UTAH 84532
435.259.1155 PHONE / FAX

GREAT SALT LAKE MARINA MAINTENANCE BUILDING

DFCM # 10029510

13312 WEST 1075 SOUTH
MAGNA, UTAH 84044

SEAL

MHTN PROJECT NO: 2010546

DRAWN BY: CHECKED BY:

ISSUED:

NO.	DATE	DESCRIPTION

REVISION DATE:

NO.	DATE	DESCRIPTION
1	Nov. 23, 2010	PLAN CHECK COMMENTS & TOILETS
2	Dec. 20, 2010	PLAN CHECK COMMENTS

SHEET NAME

DETAILS

CONSTRUCTION DOCUMENTS
SEPTEMBER 2, 2010

SHEET NUMBER

A5.07

By Dressler, Tue, Nov 23, 2010 - 11:06a
P:\2010\2010546_Salt Lake Maintenance Building\Drawings\A507.dwg

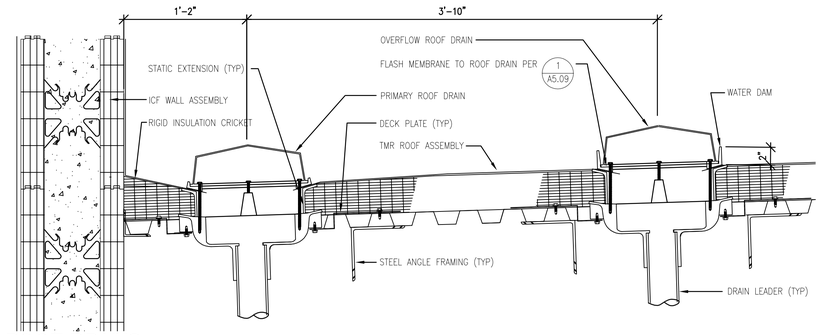

ROOF DRAINS

1 1/2" = 1'-0"

7 A5.08

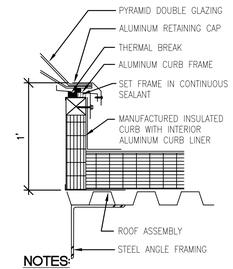

NOTES:

1. FLASH TMR ROOF TO CURB PER 5 A5.08

SKYLIGHT

1 1/2" = 1'-0"

6 A5.08

NOTES:

1. FOR ADDITIONAL THERMOPLASTIC ROOFING DETAILS, SEE 1 A5.09 3 A5.09

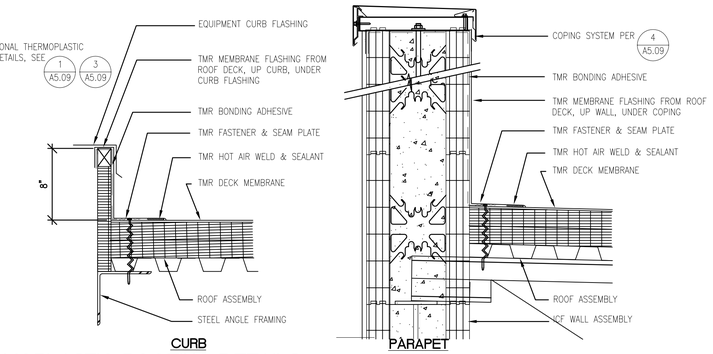

THERMOPLASTIC ROOFING DETAILS

1 1/2" = 1'-0"

5 A5.08

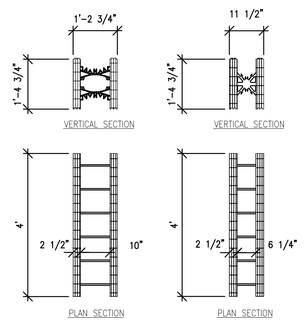

ICF UNITS

1/2" = 1'-0"

4 A5.08

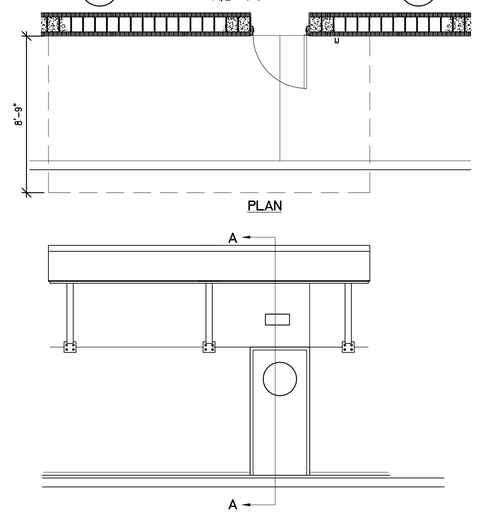

ENTRY CANOPY

1/4" = 1'-0"

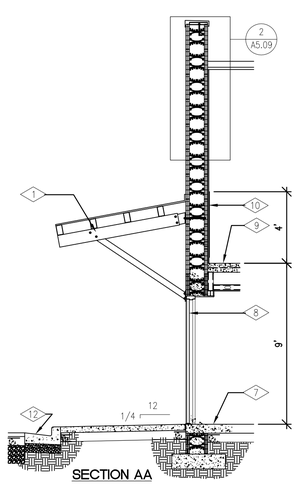

SECTION AA

REFERENCE NOTES:

1. STRUCTURAL STEEL FABRICATED ENTRY CANOPY PER 2 A5.08
2. MANUFACTURED STONE PIER CAPSTONE ON CEMENT BOARD.
3. LIGHT FIXTURE.
4. COLUMN WALL ASSEMBLY: STUCCO FINISH SYSTEM / GYP SHEATHING / 3 5/8" CFMF STUDS.
5. STUCCO SYSTEM TRIM FROM 3/4" RIGID INSULATION.
6. CONCRETE WALK ON BASE COURSE.
7. REINFORCED CONCRETE SLAB ON DRAINAGE COURSE.
8. STEEL DOOR ASSEMBLY.
9. MEZZANINE FLOOR / CEILING ASSEMBLY.
10. FRPP WAINSCOT ON ICF WALL ASSEMBLY.
11. BRACE TOP TRACK OF COLUMN WALL ASSEMBLY WITH CFMF BACK TO COLUMN.
12. CONCRETE CURB AND GUTTER.
13. CONCRETE FOUNDATION.
14. STUCCO SYSTEM WAINSCOT COLOR TO MATCH ENTRY STATION. V CUT ICF FOAM TO PROVIDE JOINT.

3 A5.08

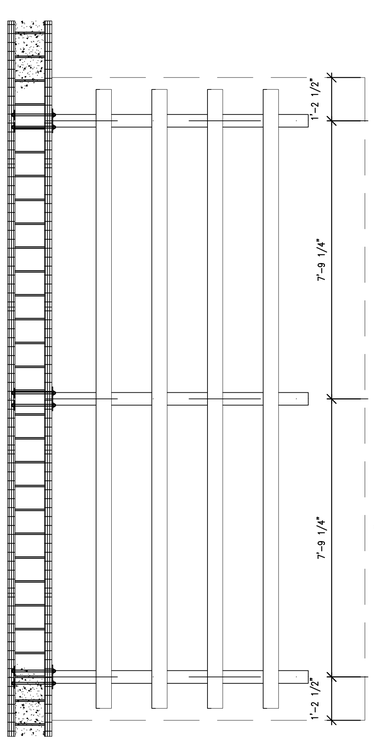

PLAN

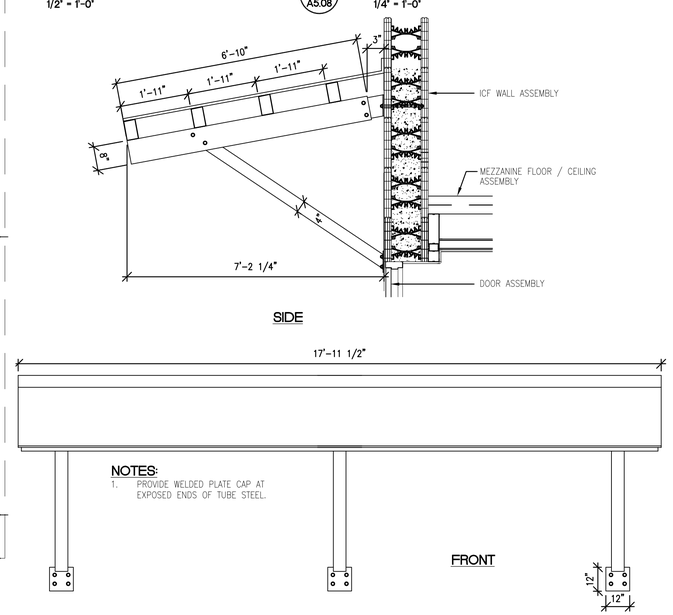

ENTRY CANOPY

1/2" = 1'-0"

2 A5.08

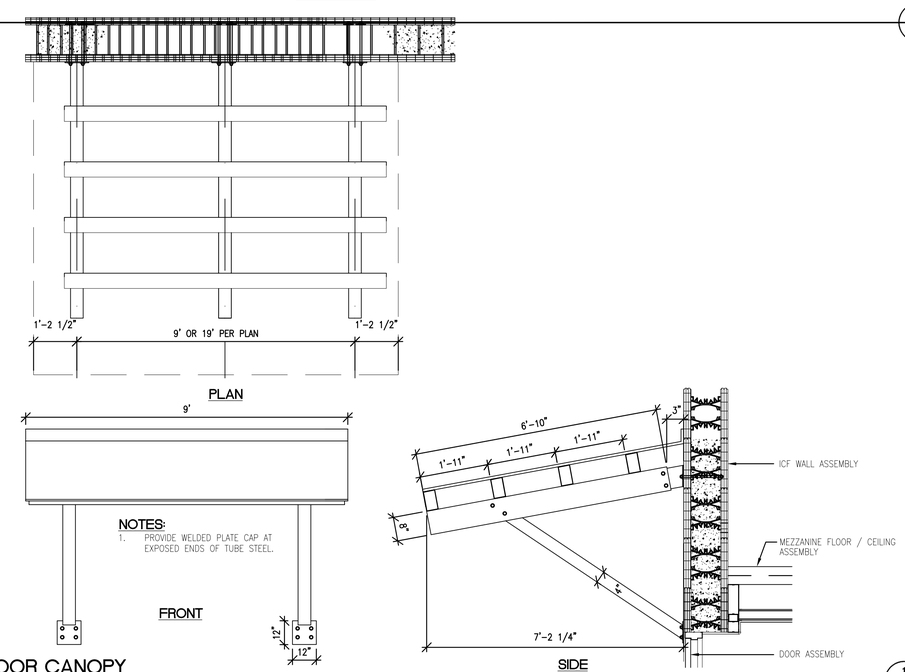

DOOR CANOPY

1/2" = 1'-0"

1 A5.08

MHTN ARCHITECTS

MHTN Architects, Inc.
420 East South Temple
Suite 100
Salt Lake City, Utah 84111
TEL 801.595.6700
FAX 801.595.6717
www.mhtn.com

JAMES T. DRESSLAR
ARCHITECT, L.L.C.
387 PARK LANE
HOAB, UTAH 84532
435.259.1155 PHONE / FAX

GREAT SALT LAKE MARINA MAINTENANCE BUILDING

DFCM # 10029510

13312 WEST 1075 SOUTH
MAGNA, UTAH 84044

SEAL

MHTN PROJECT NO. 2010546

DRAWN BY: CHECKED BY:

ISSUED:

NO.	DATE	DESCRIPTION

REVISION DATE:

NO.	DATE	DESCRIPTION
1	Nov. 23, 2010	PLAN CHECK COMMENTS & TOILETS
2	Dec. 20, 2010	PLAN CHECK COMMENTS

SHEET NAME

DETAILS

CONSTRUCTION DOCUMENTS
SEPTEMBER 2, 2010

SHEET NUMBER

A5.08

By: Cameron D. Sax, 12/20/2010 - 11:16am
P:\2010\2010-046 Great Salt Lake Maintenance Building\1 Drawings\A5.08.dwg

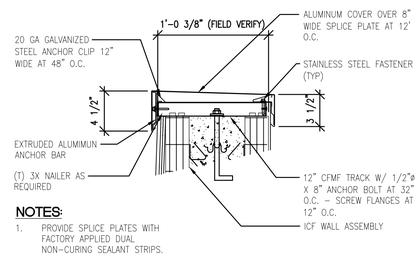

NOTES:

1. PROVIDE SPLICE PLATES WITH FACTORY APPLIED DUAL NON-CURING SEALANT STRIPS.

METAL COPING SYSTEM

1 1/2" = 1'-0"

4 / A5.09

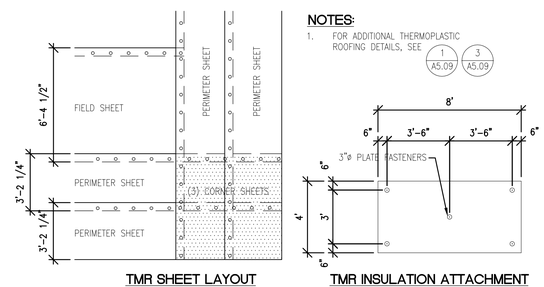

TMR SHEET LAYOUT

1/4"=1'-0"

TMR INSULATION ATTACHMENT

1/4"=1'-0"

NOTES:

1. FOR ADDITIONAL THERMOPLASTIC ROOFING DETAILS, SEE 1/A5.09 3/A5.09

THERMOPLASTIC MEMBRANE ROOFING DETAILS

1/4" = 1'-0"

3 / A5.09

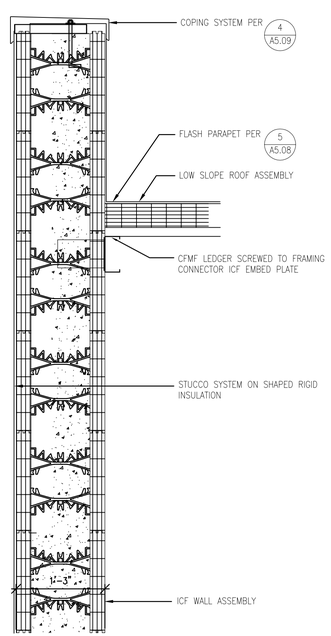

WALL DETAIL

1" = 1'-0"

2 / A5.09

NOTES:

1. FOR ADDITIONAL THERMOPLASTIC ROOFING DETAILS, SEE 5/A5.08 3/A5.09

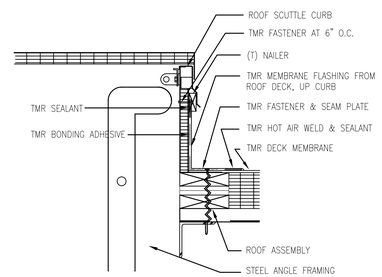

ROOF SCUTTLE

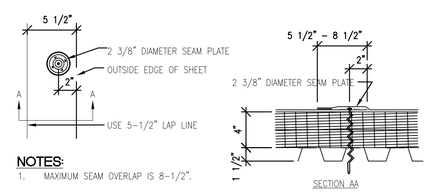

NOTES:

1. MAXIMUM SEAM OVERLAP IS 8-1/2".

SEAM PLATE

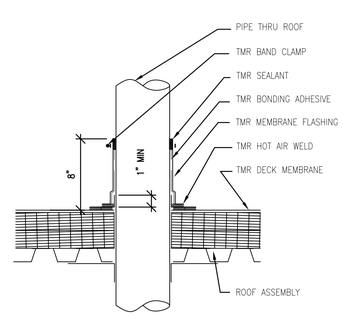

VENT THRU ROOF

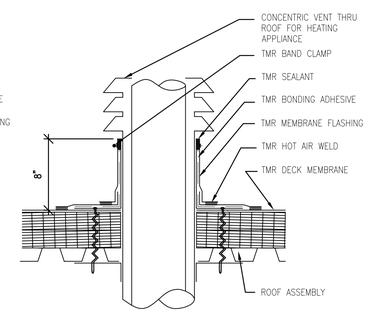

DUCT FLUE THRU ROOF

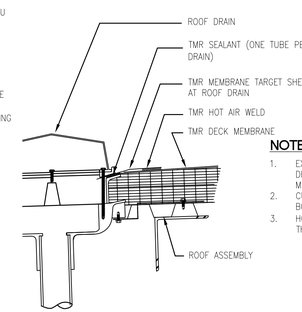

NOTES:

1. EXTEND MEMBRANE 1 1/2" BEYOND DRAIN BOLTS. DO NOT NOTCH MEMBRANE.
2. CUT HOLE IN MEMBRANE TO EQUAL BOLT DIAMETER & INSERT BOLT.
3. HOLE IN MEMBRANE SHALL BE =/> THAN DRAIN PIPE SIZE.

ROOF DRAIN

THERMOPLASTIC MEMBRANE ROOFING DETAILS

1 1/2" = 1'-0"

1 / A5.09

MHTN ARCHITECTS

MHTN Architects, Inc.
420 East South Temple
Suite 100
Salt Lake City, Utah 84111
TEL 801.595.6700
FAX 801.595.6717
www.mhtn.com

JAMES T. DRESSLAR
ARCHITECT, L.L.C.
387 PARK LANE
MOAB, UTAH 84532
435.259.1155 PHONE / FAX

GREAT SALT LAKE MARINA MAINTENANCE BUILDING

DFCM # 10029510

13312 WEST 1075 SOUTH
MAGNA, UTAH 84044

SEAL

MHTN PROJECT NO. 2010546

DRAWN BY: CHECKED BY:

ISSUED:

NO.	DATE	DESCRIPTION

REVISION DATE:

NO.	DATE	DESCRIPTION
1	Nov. 23, 2010	PLAN CHECK COMMENTS & TOILETS
2	Dec. 20, 2010	PLAN CHECK COMMENTS

SHEET NAME

DETAILS

CONSTRUCTION DOCUMENTS
SEPTEMBER 2, 2010

SHEET NUMBER

A5.09

By:Dorsey,T. Dec 14, 2010-11:11am
P:\10029510-GSL Marina Maintenance Building\1 Drawings\A5.09.dwg

DOOR SCHEDULE

MARK	SIZE	DOOR TYPE	FRAME TYPE	DOOR MATL	FRAME MATL	FRAME DEPTH	HEAD	JAMB	THRESH	RATING	HDWR	REMARKS
1	3'-0" X 7'-0" X 1 3/4"	G	1	STEEL	STEEL	5 3/4"	2/A5.03	2/A5.03	1/A5.03	–	1	–
2	3'-0" X 7'-0" X 1 3/4"	N	1	STEEL	STEEL	6 1/2"	3/A5.03	3/A5.03	–	–	2	CLOSER W/ HOLD OPEN
3	3'-0" X 7'-0" X 1 3/4"	F	1	STEEL	STEEL	6 1/2"	3/A5.03	3/A5.03	–	–	3	CLOSER W/ HOLD OPEN
4	3'-0" X 7'-0" X 1 3/4"	N	1	STEEL	STEEL	5 7/8"	4/A5.03	4/A5.03	–	–	4	–
5	4'-0" X 7'-0" X 1 3/4"	F	1	STEEL	STEEL	5 7/8"	4/A5.03	4/A5.03	–	–	4	–
6	14' X 16'	OH	–	STEEL	–	5 3/4"	4/A3.03	5/A5.03	4/A3.03	–	5	POWER OPERATOR
7	14' X 16'	OH	–	STEEL	–	5 3/4"	4/A3.03	5/A5.03	4/A3.03	–	5	POWER OPERATOR
8	3'-0" X 7'-0" X 1 3/4"	G	1	STEEL	STEEL	5 3/4"	2/A5.03	2/A5.03	1/A5.03	–	6	–
9	3'-0" X 7'-0" X 1 3/4"	G	1	STEEL	STEEL	5 3/4"	2/A5.03	2/A5.03	1/A5.03	–	6	–
10	14' X 16'	OH	–	STEEL	–	5 3/4"	4/A3.03	5/A5.03	4/A3.03	–	5	POWER OPERATOR
11	14' X 16'	OH	–	STEEL	–	5 3/4"	4/A3.03	5/A5.03	4/A3.03	–	5	POWER OPERATOR
12	3'-0" X 7'-0" X 1 3/4"	G	1	STEEL	STEEL	5 3/4"	2/A5.03	2/A5.03	1/A5.03	–	6	POWER OPERATOR
13	3'-0" X 7'-0" X 1 3/4"	F	1	STEEL	STEEL	6 1/2"	3/A5.03	3/A5.03	–	–	3	CLOSER W/ HOLD OPEN

HARDWARE GROUPS:

1
- 1 1/2 PR BUTT HINGES
- ENTRANCE LOCKSET
- WEATHERSTRIP
- THRESHOLD
- CLOSER
- SWEEP
- FLOOR STOP

2
- 1 1/2 PR BUTT HINGES
- ENTRANCE / OFFICE LOCKSET
- CLOSER W/ STOP & HOLD OPEN
- WALL STOP
- KICKPLATES

3
- 1 1/2 PR BUTT HINGES
- PRIVACY LOCKSET
- CLOSER W/ STOP & HOLD OPEN
- WALL STOP
- KICKPLATES

4
- 1 1/2 PR BUTT HINGES
- STOREROOM LOCKSET
- WALL STOP
- KICKPLATES

5
- POWER OPERATOR WITH KEYPAD
- WEATHERSTRIP

6
- 1 1/2 PR BUTT HINGES
- ENTRANCE LOCKSET
- CLOSER
- WEATHERSTRIP
- THRESHOLD
- SWEEP
- FLOOR STOP

7
- 1 1/2 PR BUTT HINGES
- STOREROOM LOCKSET
- SMOKE SEAL
- CLOSER
- WALL STOP
- KICK PLATES

DOOR NOTES:

1. HARDWARE FINISH TO BE BHMA 626 (SATIN CHROMIUM PLATED) UNLESS NOTED OTHERWISE.

HARDWARE MANUFACTURERS:

1. HINGES: MCKINNEY TA 2714, 2 BALL BEARING, 4 1/2 X 4 1/2, STAINLESS STEEL. PROVIDE NRP AT EXTERIOR OUT-SWING DOORS.
2. ENTRANCE / OFFICE LOCKSET: SCHLAGE ND50PD
   ENTRANCE LOCKSET: SCHLAGE ND53PD
3. STOREROOM LOCKSET: SCHLAGE ND80PD
   PRIVACY LOCKSET: ND80PD
4. THRESHOLD: PEMKO 171A
5. SWEEP: PEMKO 345AP
6. WALL STOP: HAGER 234W
7. KICKPLATE: IVES 8400 STAINLESS STEEL, 10" HIGH X DOOR WIDTH
8. CLOSER: LCN 1460 W/ STOP & HOLD OPEN WHERE INDICATED
9. FLOOR STOP W/ HOLD OPEN: IVES FS450

HARDWARE MANUFACTURER NOTES:

1. DORMA IS AN APPROVED MANUFACTURER FOR LOCKSETS.

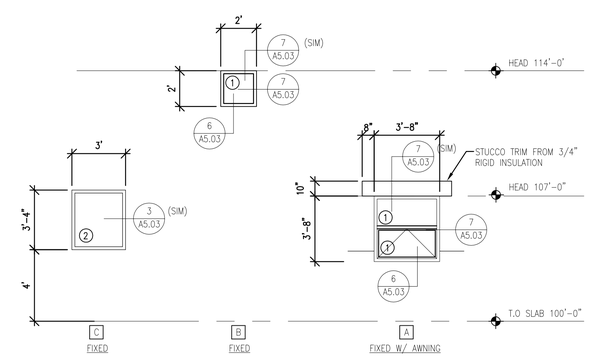

WINDOW GLASS TYPES:

1. TINTED, INSULATED
2. CLEAR, INSULATED

WINDOW SCHEDULE

1/4" = 1'-0"

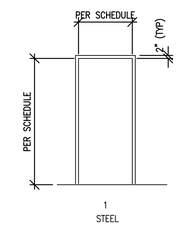

FRAME TYPES

1/4" = 1'-0"

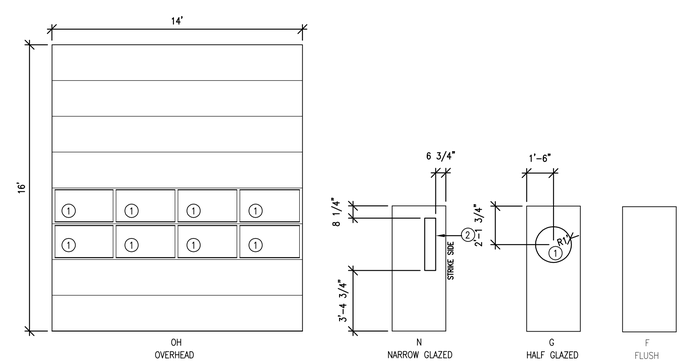

DOOR GLASS TYPES:

1. TINTED, INSULATED, TEMPERED
2. CLEAR, TEMPERED

DOOR TYPES

1/4" = 1'-0"

MHTN ARCHITECTS

MHTN Architects, Inc.
420 East South Temple
Suite 100
Salt Lake City, Utah 84111
TEL 801.595.6700
FAX 801.595.6717
www.mhtn.com

JAMES T. DRESSLAR
ARCHITECT, L.L.C.
387 PARK LANE
MOAB, UTAH 84532
435.259.1155 PHONE / FAX

GREAT SALT LAKE MARINA MAINTENANCE BUILDING

DFCM # 10029510

13312 WEST 1075 SOUTH
MAGNA, UTAH 84044

SEAL

MHTN PROJECT NO. 2010546

DRAWN BY: CHECKED BY:

ISSUED:

NO.	DATE	DESCRIPTION

REVISION DATE:

NO.	DATE	DESCRIPTION
1	Nov. 23, 2010	PLAN CHECK COMMENTS & TOILETS
2	Dec. 20, 2010	PLAN CHECK COMMENTS

SHEET NAME

DOOR & WINDOW SCHEDULE & TYPES

CONSTRUCTION DOCUMENTS
SEPTEMBER 2, 2010

SHEET NUMBER

A6.02

By Dropsheet, Tue, 14 Dec 2010 - 11:11am
J:\Projects\2010\GSL Marina Maintenance Building\Drawings\A602.dwg

FINISH SCHEDULE

ROOM NAME	FLOOR		BASE		WALLS N		WALLS E		WALLS S		WALLS W		CEILING		CEILING HEIGHT	REMARKS
OFFICE	F2	CT-3	B1	BC-1	W1	PC-1	W1	PC-3	W1	PC-1	W1	PC-1	C1	PC-2	7'-6"	–
TOILET	F1	CT-1	B2	BC-2	W5	CT-2	W5	CT-2	W5	CT-2	W5	CT-2	C1	PC-2	7'-6"	–
TOILET	F1	CT-1	B2	BC-2	W5	CT-2	W5	CT-2	W5	CT-2	W5	CT-2	C1	PC-2	7'-6"	–
OFFICE	F2	CT-3	B1	BC-1	W1	PC-1	W1	PC-3	W1	PC-1	W1	PC-1	C1	PC-2	7'-6"	–
SHOP	F4	–	B1	BC-1	W1/W4	PC-1	W1/W4	PC-1	W1	PC-1	W1/W4	PC-1	C2	PC-2	16'-2"	1, 2, 3,
STORAGE	F3	–	B1	BC-1	W1	PC-1	W1	PC-1	W1	PC-1	W1	PC-2	C1	PC-2	7'-6"	–
UNDERSTAIR STORAGE	F3	–	B1	BC-1	W2	PC-2	W2	PC-2	W2	PC-2	W2	PC-2	C1	PC-2	VARIES	–
MEZZANINE	F3	–	B1	BC-1	W1	PC-1	W1/W3	PC-1/FRP1	W1/W3	PC-1/FRP1	W1/W3	PC-1/FRP1	C2	PC-2	7' MIN	1, 3
STAIR	F3	–	–	–	W2	PC-1	W2	PC-1	W2	PC-1	W2	PC-1	C2	PC-2	VARIES	–

REMARKS:

1. PAINT EXPOSED ROOF DECK AND ROOF JOISTS.
2. BASE AT SOUTH WALL ONLY.
3. FRPP WAINSCOT.

FINISHES:

B1 4" HIGH COVED RUBBER BASE

B2 4" HIGH CERAMIC COVE BASE

C1 PAINTED GYP BOARD – EGGSHELL ACRYLIC ENAMEL

C2 PAINTED STRUCTURE – FLAT WATERBORNE ACRYLIC DRY FALL

F1 2"X2" PORCELAIN FLOOR TILE

F2 12"X 12" PORCELAIN FLOOR TILE

F3 SEALED CONCRETE – WATERBASE SEALER

F4 SEALED CONCRETE – EPOXY SEALER

W1 PAINTED GYP BOARD – SEMIGLOSS ACRYLIC ENAMEL

W2 PAINTED GYP BOARD – EGGSHELL ACRYLIC

W3 FIBERGLASS REINFORCED PLASTIC PANEL ON GYP BOARD

W4 PAINTED CONCRETE – SEMIGLOSS WATER BASED EPOXY

W5 4"x4" CERAMIC TILE

COLOR / MATERIAL

BC-1 (BASE COLOR):

BC-2 (BASE COLOR):

PC-1 (PAINT COLOR): SHERWIN WILLIAMS – "BUCKRAM BINDING" (SW0036)

PC-2 (PAINT COLOR): SHERWIN WILLIAMS – "DOVER WHITE" (SW6385)

PC-3 (PAINT COLOR): SHERWIN WILLIAMS – "ROYCROFT ADOBE" (SW0040)

CT-1 (2"x2" CERAMIC TILE) (COLOR):

CT-2 (4"x4") CERAMIC TILE (COLOR):

CT-3 (12"x12" CERAMIC TILE) (COLOR):

FRP-1 (FIBERGLASS REINFORCED PLATIC PANEL COLOR): KEMLITE GLASBORD P –"IVORY" (84)

COLOR SUMMARY:

1. PROVIDE MATERIAL IN COLORS, PAINT, OR MATCH MANUFACTURER'S COLORS AS INDICATED:

A. DIVISION 4
1. MANUFACTURED STONE PIER CAPSTONE: OWENS CORNING "TAUPE".

B. DIVISION 5
1. METAL/STRUCTURAL FABRICATIONS:
A. CANOPY TRELLIS, BOLLARDS: SHERWIN WILLIAMS SW 6461 "ISLE OF PINES".
B. OVERHEAD DOOR JAMB GUARDS, LADDER, STAIRS & STAIR RAILINGS: MATCH STEEL DOOR FRAMES.

C. DIVISION 7
1. STUCCO: MATCH EXISTING ENTRANCE STATION
2. ROOF SCUTTLE: MATCH METAL FABRICATIONS
3. WALL COPING: METAL ERA "DARK BRONZE"

D. DIVISION 8
1. ALUMINUM WINDOWS & STOREFRONT: DARK BRONZE
2. DOOR HARDWARE: STAINLESS STEEL
3. STEEL DOORS: SHERWIN WILLIAMS "GROUNDED" (SW6089)
4. STEEL DOOR FRAMES: SHERWIN WILLIAMS "ROYCROFT ADOBE" (SW0040)
5. OVERHEAD DOORS: OVERHEAD DOOR CORPORATION "INDUSTRIAL BROWN" EXTERIOR, WHITE INTERIOR

E. DIVISION 9
1. GYP BOARD: SCHEDULED
2. SERVICE SINK SURROUND TILE: DALTILE "PEPPER WHITE" (0147)
3. SERVICE SINK SURROUND GROUT: CUSTOM BUILDING PRODUCTS "BRIGHT WHITE" (381)
4. VCT: SCHEDULED
5. SHEET VINYL: SCHEDULED
6. FIBER REINFORCED PLASTIC PANELS: SCHEDULED

F. DIVISION 10
1. BATHROOM ACCESSORIES: STAINLESS STEEL
2. FIRE EXTINGUISHER CABINETS: WHITE
3. INTERIOR SIGNAGE: DARK BRONZE CORE, WHITE FACE

G. DIVISION 15
1. BATHROOM FAUCETS: POLISHED CHROME
2. EXPOSED EXTERIOR EXHAUST DUCT WALL CAP, CONCENTRIC VENTS: MATCH STEEL DOORS
3. TOILET FIXTURES: WHITE PORCELAIN
4. EXPOSED GAS (PROPANE) LINE: BLACK
5. REFRIGERATED WATER COOLER: OASIS – STANDARD SANDSTONE FINISH.
6. INTERIOR AIR TERMINALS: WHITE

H. DIVISION 16
1. DEVICES AND INTERIOR LIGHT FIXTURES: WHITE
2. COVER PLATES: STAINLESS STEEL
3. INTERIOR LIGHT FIXTURE TRIM: WHITE / STAINLESS STEEL.
4. EXTERIOR WALL MOUNTED LIGHT FIXTURES: DARK BRONZE
5. EXTERIOR COLUMN MOUNTED LIGHT FIXTURES: POWDER COAT "VERDE GREEN".
6. METER BASE AND EXPOSED CONDUIT: MATCH STEEL DOORS
7. EXPOSED CONDUIT ON PAINTED SURFACES: MATCH BASE SURFACE

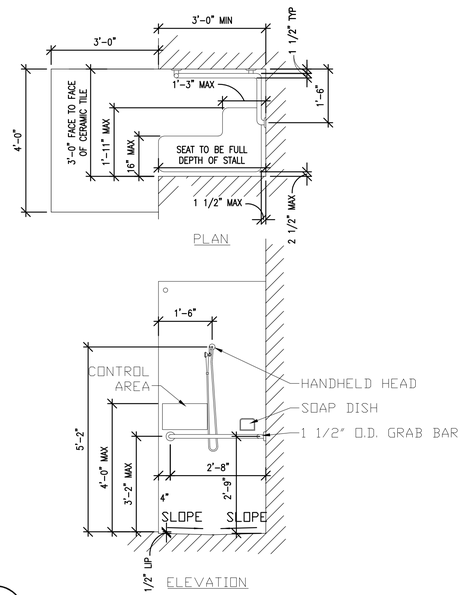

B ACCESSIBLE SHOWER STALL
1/2"= 1'-0"

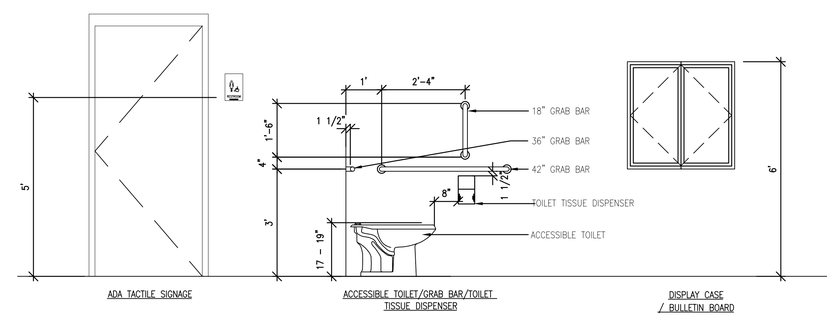

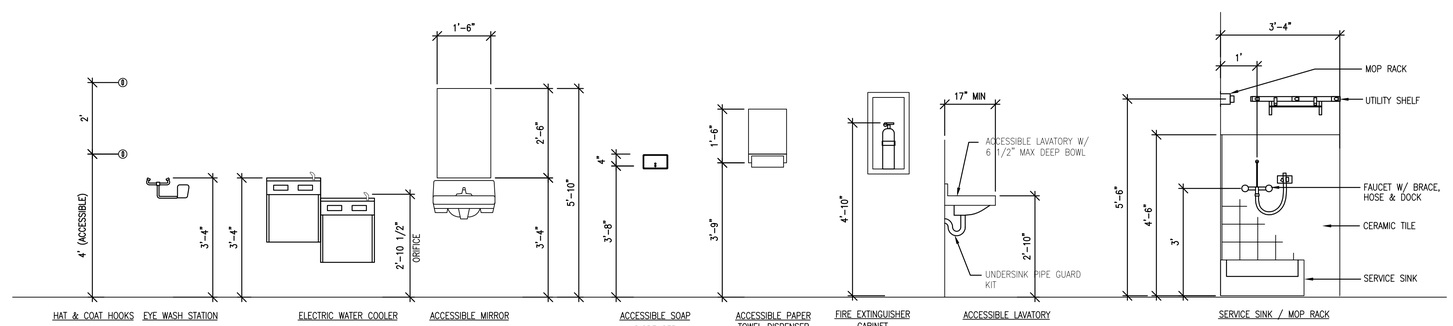

A TYPICAL MOUNTING HEIGHTS
1/2"= 1'-0"

MHTN ARCHITECTS
MHTN Architects, Inc.
420 East South Temple
Suite 100
Salt Lake City, Utah 84111
TEL 801.595.6700
FAX 801.595.6717
www.mhtn.com

JAMES T. DRESSLAR
ARCHITECT, L.L.C.
387 PARK LANE
MOAB, UTAH 84532
435.259.1155 PHONE / FAX

GREAT SALT LAKE MARINA MAINTENANCE BUILDING

DFCM # 10029510

13312 WEST 1075 SOUTH
MAGNA, UTAH 84044

SEAL

MHTN PROJECT NO. 2010546

DRAWN BY: CHECKED BY:

ISSUED:

NO.	DATE	DESCRIPTION

REVISION DATE:

NO.	DATE	DESCRIPTION
1	Nov. 23, 2010	PLAN CHECK COMMENTS & TOILETS
2	Dec. 20, 2010	PLAN CHECK COMMENTS

SHEET NAME

MOUNTING HEIGHTS & FINISH SCHEDULE

CONSTRUCTION DOCUMENTS
SEPTEMBER 2, 2010

SHEET NUMBER

A6.04

By:Dorman,T. Dec 14, 2010, 12:00pm
P:\10029510-GSL Marina Maintenance Building\1 Drawings\A04.dwg

LEGEND

- 36 X 30 ROOF SCUTTLE PER 6/A5.06
- GYP BOARD CEILING
- +7'-6" BOTTOM OF CEILING
- MECHANICAL AIR TERMINAL
- EXPOSED METAL ROOF DECK
- EXPOSED ROOF STRUCTURE
- METAL ACCESS DOOR IN CEILING AS REQUIRED BY SHUT OFF VALVE LOCATIONS – FRAME CEILING AND SIZE DOORS AS NECESSARY
- SUSPENDED UNIT HEATER
- SURFACE MOUNTED LIGHT FIXTURE
- WALL MOUNTED LIGHT FIXTURE
- RECESSED LIGHT FIXTURE
- CHAIN HUNG LIGHT FIXTURE
- 24 X 24 SKYLIGHT

REFERENCE NOTES:

1. METAL FABRICATED DOOR CANOPY PER 1/A5.08
2. METAL FABRICATED ENTRY CANOPY PER 2/A5.08
3. DASHED LINE INDICATES GUARD WALL BELOW.
4. START ROOF JOIST LAYOUT WITH ROOF SCUTTLE CENTERED IN BAY.
5. LOCATION OF SKYLIGHT TO BE COORDINATED WITH OVERHEAD DOOR.

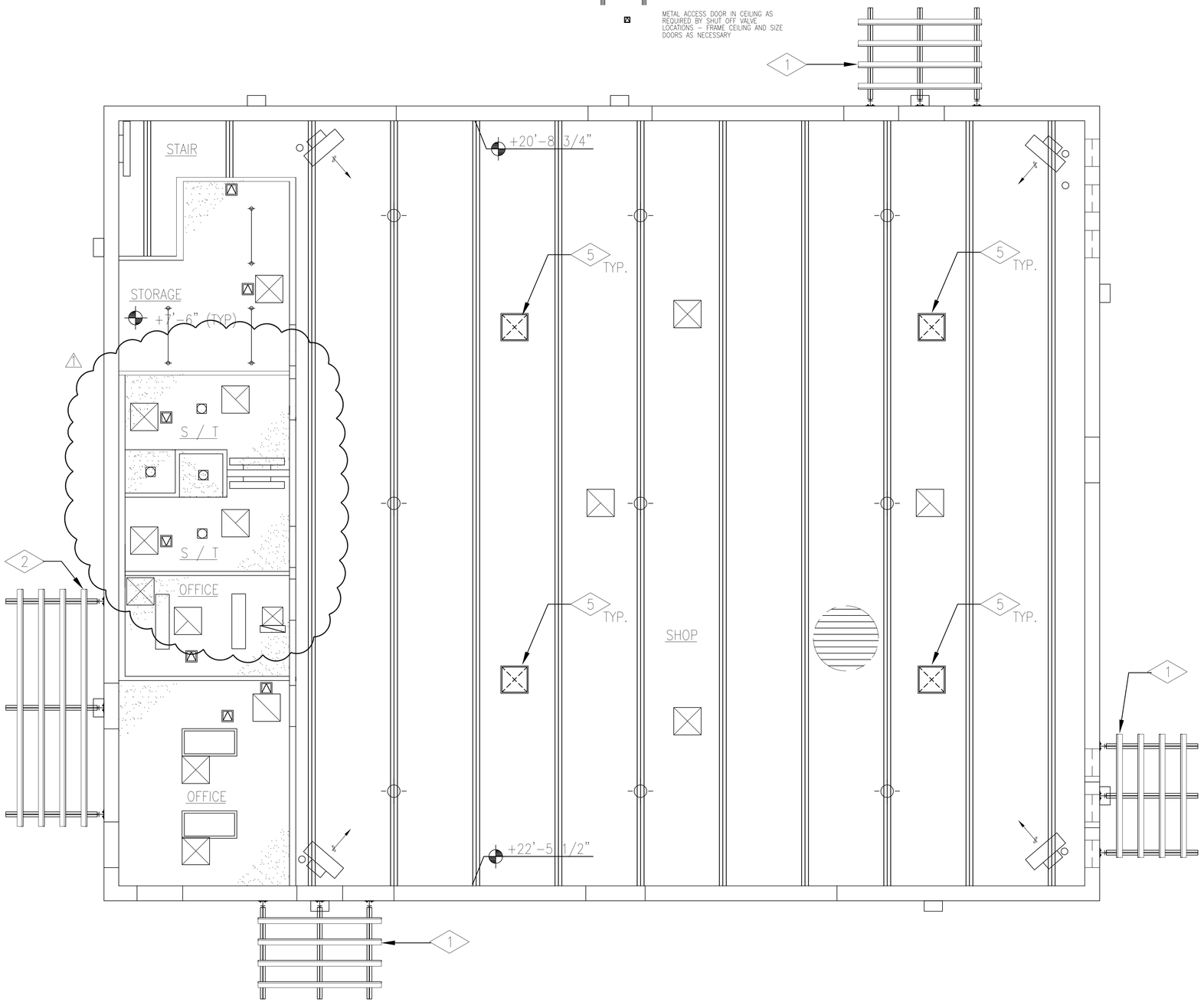

REFLECTED CEILING PLAN

1/4"= 1'-0"

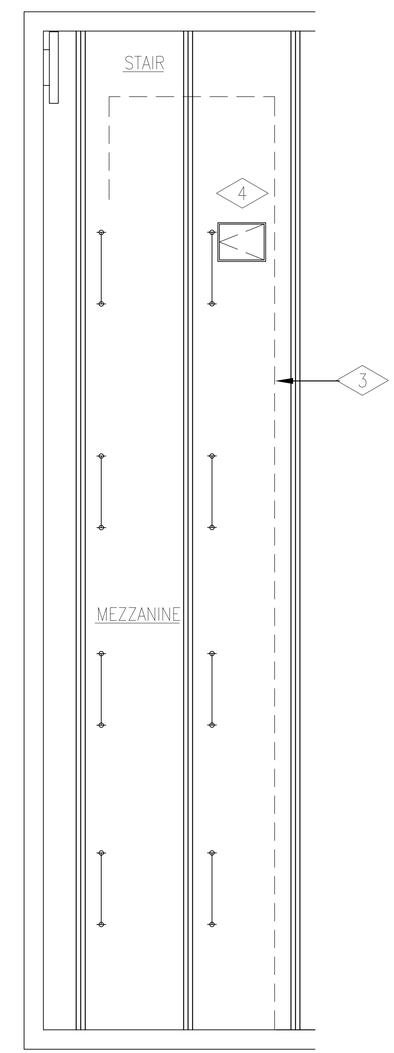

MEZZ. REFLECTED CEILING PLAN

1/4"= 1'-0"

MHTN ARCHITECTS

MHTN Architects, Inc.
420 East South Temple
Suite 100
Salt Lake City, Utah 84111
TEL 801.595.6700
FAX 801.595.6717
www.mhtn.com

JAMES T. DRESSLAR
ARCHITECT, L.L.C.
387 PARK LANE
MOAB, UTAH 84532
435.259.1155 PHONE / FAX

GREAT SALT LAKE MARINA MAINTENANCE BUILDING

DFCM # 10029510

13312 WEST 1075 SOUTH
MAGNA, UTAH 84044

SEAL

MHTN PROJECT NO. 2010546

DRAWN BY: CHECKED BY:

ISSUED:

NO.	DATE	DESCRIPTION

REVISION DATE:

NO.	DATE	DESCRIPTION
1	Nov. 23, 2010	PLAN CHECK COMMENTS & TOILETS
2	Dec. 20, 2010	PLAN CHECK COMMENTS

SHEET NAME

REFLECTED CEILING PLANS

CONSTRUCTION DOCUMENTS
SEPTEMBER 2, 2010

SHEET NUMBER

A7.01

By:Dressler, Tue, 14 Dec 2010 - 12:00pm
P:\2010\2010546 - Magna Maintenance Building\Drawings\A7.01.dwg

PLUMBING SPECIFICATIONS

15055 – BASIC PIPING MATERIALS AND METHODS

1. CORE CUT ALL PIPE PENETRATION OF EXISTING MASONRY OR CONCRETE WALLS AND FLOORS. SLEEVE ALL PENETRATIONS THROUGH NEW WALLS AND FLOORS. SEAL ALL PENETRATIONS WATER TIGHT WITH SILICONE SEALANT. USE FIRE RATED SEALANT (3M "FIRE BARRIER" OR EQUAL) FOR 1 HOUR OR 2 HOUR PENETRATIONS.
2. CAULK AROUND ALL PIPING THAT PASSES THROUGH FIRE–RATED PARTITIONS WITH A NON–HARDENING CAULKING SIMILAR TO 3M "FIRE BARRIER".
3. SEAL ALL PIPING THROUGH WALLS AIR TIGHT.

15242 – VIBRATION ISOLATION AND SEISMIC

1. ALL PLUMBING EQUIPMENT AND PIPING MUST BE VIBRATION ISOLATED AND SEISMICALLY BRACED FOR THE SITE SPECIFIC SEISMIC DESIGN CATEGORY AND SEISMIC USE GROUP, IN ACCORDANCE WITH THE LATEST ADOPTED EDITIONS OF THE BUILDING CODES AND ASHRAE. PROVIDE SEISMIC PRODUCTS BY AMBER–BOOTH OR MASON INDUSTRIES.
2. IN GENERAL, PROVIDE SPRING MOUNTS TO ATTENUATE LOW FREQUENCY SOUND AND VIBRATION. PROVIDE NEOPRENE PADS TO ATTENUATE HIGH FREQUENCY SOUND
3. CONTRACTOR MANUFACTURED SEISMIC BRACING/RESTRAINT METHODS ARE NOT ACCEPTABLE.

15250 – INSULATION

1. PIPE INSULATION: SNAP–ON GLASS FIBER TYPE WITH VAPOR JACKET. SEAL ALL ENDS AND JOINTS TO PROVIDE A COMPLETELY SEALED SYSTEM. ALTERNATIVELY, FOR INTERIOR WATER PIPING, USE FLEXIBLE UNICELLULAR ASTM 534 TYPE 1 INSULATION. USE 1" THICKNESS FOR PIPE UP TO 2"ø AND 1–1/2" FOR PIPE OVER 2"ø
2. PROVIDE ADA COMPLIANT FIXTURES WITH SNAP ON ADA ARTICLE 4.19 22FF COMPLIANT WHITE INSULATION. TRUEBRO LAV GUARD, BASIN GUARD OR LAV SHIELD.

15411 – WATER DISTRIBUTION PIPING

1. UNDERGROUND WATER PIPING:

   2–1/2" AND LARGER:
   PVC AWWA 900 CLASS 100 WITH SOLVENT CEMENTED JOINTS, OR PB PLASTIC PIPE ASTM D3309 SDR 11 WITH HEAT FUSION JOINTS.
2. NO TYPE "M" OR "DWV" COPPER IS TO BE USED IN THIS PROJECT.
3. ALL ABOVE GROUND HOT AND COLD WATER PIPING:
   ASTM B 88 TYPE "L" COPPER, WITH WROUGHT COPPER FITTINGS AND SOLDERED WITH 95–5 TIN–ANTIMONY SOLDER.
4. INSTALL PIPE HANGERS WITH THE FOLLOWING MINIMUM ROD SIZES AND MAXIMUM SPACING. UPON COMPLETION OF HANGER INSTALLATION, ALL ADJUSTMENTS HAVING THE POSSIBILITY OF TURNING SHALL BE LOCKED SECURELY IN PLACE BY DOUBLE NUTTING AT THE HANGER ROD ATTACHMENT TO THE STRUCTURE, AND AT THE PIPE HANGER.

NOM. PIPE SIZE–INCHES	MAX SPAN–FT.	MIN. ROD SIZE–INCHES
1	7	3/8
1–1/2	9	3/8
2	10	3/8
3	12	1/2
4	14	5/8
6	17	3/4

5. ALL PIPE HANGERS AND EQUIPMENT SUPPORTS SHALL BE LOCATED A MINIMUM DISTANCE OF 2" FROM ANY REFRIGERANT PIPE.
6. ALL PLUMBING FIXTURES CONNECTED TO A POTABLE WATER SYSTEM WITH HOSE CONNECTIONS ON THE OUTLET SIDE AND OWNER FURNISHED EQUIPMENT WITH DIRECT CONNECTIONS, SHALL BE PROVIDED WITH BACKFLOW PREVENTION.

15484 – COMPRESSED AIR SYSTEMS

1. PROVIDE SCHEDULE 40 SEAMLESS ASTM A120 BLACK STEEL PIPE BETWEEN AIR COMPRESSOR AND AIR OUTLETS THREADED FOR 2" AND SMALLER. WELDED FOR 2–1/2" AND LARGER.
2. PROVIDE ASTM A216 CLASS 300 GATE VALVES FOR LINE SHUTOFF.
3. PROVIDE MILTON 1/2" G–STYLE (OR OTHER TYPE, AS SELECTED BY USER) QUICK CONNECT COUPLINGS AT AIR OUTLETS.
4. INSTALL SHUTOFF COCK IN UPSTREAM LINE WITHIN 6" OF AIR OUTLET.

PLUMBING SPECIFICATIONS

15420 – DRAINAGE AND VENT SYSTEMS

1. UNDERGROUND BUILDING DRAIN PIPE AND FITTINGS:
   A. NO HUB ABS OR PVC PLASTIC PIPE AND FITTINGS PER ASTM D2661 WITH ASTM D2235 SOLVENT
   OR
   B. ASTM A74 SERVICE WEIGHT, HUB AND SPIGOT CAST IRON SOIL PIPE, OR ASTM A888 (OR CISPI 301) HUBLESS CAST IRON SOIL PIPE WITH ASTM C564 HEAVY DUTY SHIELDED STAINLESS STEEL COUPLINGS.
   C. NO ASTM D2729 PIPE SHALL USED UNDERGROUND.
2. ALL SANITARY DRAINAGE AND VENT PIPING SHALL BE NO HUB SERVICE WEIGHT CAST IRON COUPLED PIPE AND FITTINGS WITH COMPRESSION TYPE NEOPRENE GASKETS AND STAINLESS STEEL BANDS. ASTM B306 COPPER PIPE MAY BE USED WITH SOLDERED JOINTS FOR PIPE 3" AND SMALLER.
3. INSTALL SANITARY DRAIN LINES 2–1/2" AND LESS WITH A SLOPE OF 2%. INSTALL SANITARY DRAIN LINES 3"–6" WITH A SLOPE OF NOT LESS THAN 1%.
4. CLEANOUTS:
   A. FINISHED WALL CLEANOUTS: SMITH FIGURE 4472 COMPLETE WITH CAST BRONZE TAPER THREADED PLUG, STAINLESS STEEL COVER AND SCREW.
   B. FLOOR CLEANOUTS (UNFINISHED AREAS): SMITH FIGURE 4223 DUCO CAST IRON CLEANOUT WITH ROUND ADJUSTABLE SCORIATED SECURED CAST IRON TOP, TAPER THREADED BRONZE PLUG AND SPIGOT OUTLET.
   C. FINISHED FLOOR CLEANOUTS (CONCRETE FLOORS): SMITH FIGURE 4023 DUCO CAST IRON CLEANOUT WITH ADJUSTABLE SCORIATED SECURED NICKEL BRONZE TOP, TAPER THREADED CAST BRONZE PLUG AND SPIGOT OUTLET.
   D. FINISHED FLOOR CLEANOUTS (CARPETED FLOORS): SMITH FIGURE 4023–Y SAME AS CONCRETE FLOORS WITH CARPET MARKER.
   E. FINISHED FLOOR CLEANOUTS (TILE FLOORS): SMITH FIGURE 4163 DUCO CAST IRON CLEANOUT WITH SQUARE ADJUSTABLE SECURED NICKEL BRONZE TOP WITH 1/8" RECESS, TAPER THREADED BRONZE PLUG AND SPIGOT OUTLET.
   F. EXTERIOR CLEANOUTS (CLEANOUT TO GRADE): SMITH FIGURE 4253 DUCO CAST IRON CLEANOUT AND DOUBLE FLANGED HOUSING WITH HEAVY DUTY SECURED SCORIATED CAST IRON COVER WITH LIFTING DEVICE, TAPER THREADED BRONZE PLUG AND SPIGOT OUTLET.
5. FLOOR DRAINS:

   D–1 FLOOR DRAIN: SMITH FIGURE 2010–BP CAST IRON BODY AND FLASHING COLLAR WITH PROTECTIVE CAP AND SQUARE NICKEL BRONZE ADJUSTABLE STRAINER HEAD WITH SECURED SQUARE HOLE GRATE, AND ASSE 1072 CERTIFIED TRAP SEALER, BASIS OF DESIGN: SURE SEAL.

   D–2 MECHANICAL ROOM DRAIN: SMITH FIGURE 2110–NB MEDIUM DUTY FLOOR DRAIN. CAST IRON BODY AND FLASHING COLLAR WITH NICKEL BRONZE BAR GRATE. PROVIDE ASSE 1072 CERTIFIED TRAP SEALER, BASIS OF DESIGN: SURE SEAL.

   FS–1 FLOOR SINK: CAST IRON FLANGED RECEPTOR WITH RESISTANT COATED INTERIOR, 1/2 GRATE OF NICKEL BRONZE MATERIAL, ALUMINUM DOME BOTTOM STRAINER. 2" W, 1–1/2" V. JR SMITH MODEL 3140–12.

   TD–1 TRENCH DRAIN: SMITH FIGURE 9828 PRECAST POLYMER CONCRETE SYSTEM WITH 12" WIDE SLOPED CHANNEL. PROVIDE PRECAST POLYMER CONCRETE CATCH BASIN (SMITH FIGURE 9828) WITH CAST IN METAL RAILS. PROVIDE SLOTTED, EXTRA HEAVY DUTY, DUCTILE IRON GRATE AND DEEP SEAL, CAST IRON P–TRAP.
6. ALL ROOF DRAIN LINES SHALL BE SERVICE WEIGHT CAST IRON PIPE TO CISPI STANDARD 301.
7. ALL ROOF DRAIN LINES AND UNDERSIDE OF ROOF DRAIN BODIES SHALL BE FULLY INSULATED.
8. OVERFLOW ROOF DRAINS SHALL DAYLIGHT 18" ABOVE THE SURROUNDING HORIZONTAL AREA.
9. ROOF DRAINS

   RD–1 ROOF DRAIN: SMITH FIGURE 1010–ERC CAST IRON BODY WITH COMBINED FLASHING CLAMP AND CAST IRON GRAVEL STOP, CAST IRON DOME, EXTENSION, SUMP RECEIVER AND UNDERDECK CLAMP.

   RD–2 OVERFLOW ROOF DRAIN: SMITH FIGURE 1080–ERC CAST IRON BODY WITH FLASHING CLAMP, GRAVEL STOP, CAST IRON DOME, 2" HIGH CAST IRON WATER COLLAR, EXTENSION, SUMP RECEIVER AND UNDERDECK CLAMP.

   RD–3 DOWNSPOUT NOZZLE: SMITH FIGURE 1770 DOWNSPOUT NOZZLE. CAST BRONZE BODY AND FLANGE. PROVIDE BRONZE BOLTS TO SECURE NOZZLE TO WALL.

15460 – WATER HEATERS

1. INSTALL UNITS PLUMB AND LEVEL AND FIRMLY ANCHORED PER SEISMIC REQUIREMENTS. MAINTAIN MANUFACTURER'S RECOMMENDED CLEARANCES. ORIENT SO CONTROLS AND DEVICES NEEDING SERVICING ARE ACCESSIBLE.
2. CONNECT HOT AND COLD WATER PIPING TO UNITS WITH SHUT–OFF VALVES AND UNIONS. CONNECT HOT WATER CIRCULATING PIPING TO UNIT WITH SHUT–OFF VALVE, CHECK VALVE AND UNION.
3. USE DIELECTRIC FITTINGS AND UNIONS WHERE PIPING CONNECTIONS ARE DISSIMILAR METALS.

PLUMBING SPECIFICATIONS

15460 – WATER HEATERS

4. INSTALL VACUUM RELIEF VALVE IN COLD WATER INLET PIPING. EXTEND RELIEF VALVE DISCHARGE TO CLOSEST FLOOR DRAIN. INSTALL DRAIN AS INDIRECT WASTE TO SPILL INTO OPEN DRAIN OR OVER FLOOR DRAIN.
5. PROVIDE AND INSTALL EXPANSION TANK:
   DIAPHRAGM TYPE, PRE– PRESSURIZED STEEL TANK WITH RELIEF VALVE SETTING @ 120 PSI MAXIMUM PRESSURE.
6. CONNECT GAS SUPPLY PIPING TO BURNER WITH DRIP LEG, TEE, GAS COCK, AND UNION, MINIMUM SIZE SAME AS INLET CONNECTION. INSTALL GAS PRESSURE REGULATORS WHERE INDICATED.
7. ELECTRICAL CONNECTIONS: POWER WIRING AND DISCONNECT SWITCHES ARE SPECIFIED IN DIVISION 16. CONNECT UNIT COMPONENTS TO GROUND IN ACCORDANCE WITH THE NATIONAL ELECTRICAL CODE.
8. VENT CONNECTIONS: CONNECT GAS FIRED WATER HEATER DRAFT HOOD TO VENT SYSTEM. UNLESS OTHERWISE INDICATED, PROVIDE VENT SAME SIZE AS OUTLET ON HEATER. COMPLY WITH GAS UTILITY REQUIREMENTS.
9. PROVIDE CONCENTRIC VENT TERMINATION KIT FOR ROOF OR WALL APPLICATIONS.
10. PROVIDE PVC COMBUSTION AIR AND VENT PIPING FROM WATER HEATER TO TERMINATION KIT.
11. PROVIDE CONDENSATE DRAIN FROM WATER HEATER OR VENT AS REQUIRED.
12. MANUFACTURERS:
    A. LOCHINVAR
    B. PVI INDUSTRIES
    C. RUUD
    D. RHEEM
    E. A.O. SMITH
    F. LAARS

15440 – PLUMBING FIXTURES

1. PROVIDE AND INSTALL CARRIERS AS REQUIRED FOR FLOOR OR WALL MOUNTED PLUMBING FIXTURES. INSTALL ALL FIXTURES WITH ACCESSORIES AS REQUIRED TO PROVIDE A COMPLETE, WORKABLE INSTALLATION.
2. PLUMBING FIXTURES SHALL INCLUDE COMPRESSION STOPS ABOVE FLOOR IN SUPPLIES TO ALL FIXTURES AND A MINIMUM 17 GAUGE P–TRAP.
3. ALL LAVATORIES AND HAND SINKS WILL HAVE A COMBINATION FAUCET OR PREMIXING FAUCET CAPABLE OF SUPPLYING WARM WATER FOR A MINIMUM OF 10 SECONDS.
4. ALL JANITORIAL SINK FAUCETS MUST BE PROVIDED WITH AN APPROVED BACKFLOW PREVENTION DEVICE.
5. FLOOR DRAINS AND FLOOR SINKS ARE SHOWN IN THE APPROXIMATE LOCATION. COORDINATE FINAL LOCATION WITH EQUIPMENT AND DRAINAGE REQUIREMENTS. PROVIDE BLOCKOUTS AS NECESSARY.
6. FIXTURE SCHEDULE:

SS–1 MOP SINK: KOHLER K–6710 WHITBY ENAMELED CAST IRON CORNER SERVICE SINK; K–8940 COATED WIRE RIM GUARD; K–9146 STRAINER; 3" CAST IRON "P" TRAP; CHICAGO NO. 897 COMBINATION SERVICE SINK FITTING WITH VACUUM BREAKER, 3/4" HOSE THREAD AND PAIL HOOK ON SPOUT, NO. 369 HANDLES, WALL BRACE AND NO. R 1/2" FLANGED FEMALE ADJUSTABLE ARMS WITH INTEGRAL STOPS. POLISHED CHROME PLATED FINISH. PROVIDE 5'–0" OF 3/8" DIAMETER WHITE RUBBER HOSE ON SPOUT OUTLET AND CHROME PLATED WALL HOOK.

L–1 ACCESSIBLE LAVATORY: KOHLER K–2006 KINGSTON 21" X 18" VITREOUS CHINA, WALL HUNG LAVATORY WITH 8" FAUCET CENTERS, DRILLING FOR FLOOR MOUNTED CARRIERS WITH CONCEALED ARM BRACKETS; K–7715 OPEN GRID STRAINER; CHICAGO NO. 785–E3 HI–LITE QUATURN FITTING WITH NO. 317 4" WRIST BLADE HANDLES AND NO. GN–1A–E3 RIGID GOOSENECK SPOUT WITH E–3 AERATOR. WASTE 2" TRAP 1½" VENT 2" HW ¾" CW ¾". PROVIDE POWERS SERIES 480 THERMOSTATIC MIXING VALVE MEETING ASSE 1016 ON THE HOT WATER SUPPLY TO THE FIXTURE. SET THE HOT WATER TEMPERATURE AT 110°F.

U–1 URINAL: KOHLER K–4972–T STANWELL WATER–GUARD VITREOUS CHINA BLOWOUT ACTION URINAL WITH 1–1/4" TOP SPUD INLET AND 2" I.P.S. OUTLET. SLOAN 180 FLUSH VALVE. WASTE 3" VENT 2" CW ¾"

WC–1 ACCESSIBLE WATER CLOSET: KOHLER K–4368 HIGHCLIFF LITE VITREOUS CHINA FLOOR MOUNTED SIPHON JET ELONGATED TOILET WITH 2–1/4" PASSAGEWAY, 1–1/2" TOP SPUD, (2) 52048 BOLT CAPS; SLOAN 111 FLUSH VALVE; 1.6 GALLON FLUSH. ACTUATOR SHALL BE ON WIDE SIDE OF STALL. WASTE 3" VENT 3" CW 1½".

SH–1 BEST BATH ALL–IN–ONE–MOBILITY MODEL LSS3838A5T SMOOTH WALL ACCESSIBLE SHOWER. 38" WIDE x 38" DEEP WITH 0.5" BULL–NOSED THRESHOLD AND WITH THE FOLLOWING FACTORY–INSTALLED ACCESSORIES: CURTAIN, GRAB–BARS, FOLDING SEAT, PRESSURE–BALANCED MIXING VALVE WITH LEVER HANDLE, VACUUM BREAKER AND SOAP DISH. PROVIDE MATCHING SHOWER HEAD AND INSTALL ON SUPPLY ELBOW. INSTALL SHOWER AND FLOOR DRAIN D–1.

EEW–1 EMERGENCY EYE WASH: WALL MOUNTED, ANSI Z358.1–2004, BRADLEY S19–240 WITH SPEAKMAN SE–370 MIXING VALVE ASSEMBLY.

EWC–1 WATER COOLER: OASIS MODEL P8AMSL WALL MOUNTED BARRIER FREE SPLIT LEVEL WATER COOLER. STAINLESS STEEL TOP, GALVANIZED STEEL FRAME AND PANELS WITH POWDER COATED PAINT; COOLER SHALL DELIVER 8.0 GPH OF 50°F DRINKING WATER WITH 80°F INLET TEMPERATURE AND 90°F ROOM TEMPERATURE. WASTE 2" TRAP 1½" VENT 2" CW ¾"

GENERAL PLUMBING NOTES (CONT)

23. LOCATE ALL PLUMBING VENTS AT LEAST 3 FEET ABOVE OR 10 FEET AWAY FROM ALL OUTSIDE AIR INTAKES INTO THE BUILDING.
24. SEE "PLUMBING FIXTURE SCHEDULE" FOR FIXTURE MAKE AND TYPE, AND SIZE OF INDIVIDUAL WASTE, VENT, AND DOMESTIC WATER PIPING TO FIXTURES.
25. ALL PLUMBING EQUIPMENT SHALL BE LISTED AND LABELED BY AN APPROVED TESTING AGENCY.
26. EQUIPMENT AND INSTALLATION SHALL MEET NATIONAL SANITATION FOUNDATION (NSF) STANDARDS, OR EQUIVALENT.
27. PROVIDE PROPER PROVISIONS FOR EXPANSION OR MOVEMENT OF ALL PIPING.
28. ALL PIPE SHALL BE SECURED BY DOUBLE NUTTING AT THE HANGER ROD ATTACHMENT TO THE STRUCTURE, AND AT THE PIPE HANGER.
29. PROVIDE WATER HAMMER ARRESTORS (SHOCK ABSORBERS) AT ALL PIPE LOCATIONS WHERE VALVE CLOSURES (SUCH AS FLUSH VALVES) MAY CAUSE WATER HAMMER OR RESULT IN EXCESSIVE PIPE VIBRATION OR MOVEMENT.
30. PROPERLY LUBRICATE ALL PIECES OF EQUIPMENT BEFORE TURNING THE SYSTEM OVER TO THE OWNER.
31. PREPARE 6 COPIES OF SUBMITTALS IN AN INDEXED, LABELED FOLDER CONTAINING FULL PERFORMANCE, MATERIAL AND INSTALLATION INFORMATION ABOUT ALL EQUIPMENT, PIPING, COMPONENTS AND ACCESSORIES TO BE USED. SUBMITTALS WILL BE CHECKED AT MOST TWICE. TIME SPENT ON SUBSEQUENT SUBMITTALS WILL BE BILLED TO THE CONTRACTOR BY THE ENGINEER AT ITS CURRENT HOURLY RATES.
32. TWO OPERATING AND MAINTENANCE MANUALS SHALL BE PROVIDED IN HARD BACK LOOSE LEAF BINDERS. MANUALS SHALL CONTAIN PRODUCT CUT SHEETS AND OPERATING AND MAINTENANCE INSTRUCTIONS IN ALL EQUIPMENT, ACCESSORIES, FIXTURES, VALVES, ETC., PROVIDED FOR THE PROJECT.
33. UPON COMPLETION OF THE WORK, REMOVE ALL SURPLUS MATERIALS AND RUBBISH. MAKE ALL REQUIRED PATCHING AND REPAIRS OF OTHER TRADES' WORK DAMAGED BY THE PLUMBING CONTRACTOR, AND LEAVE THE PREMISES IN A CLEAN, ORDERLY CONDITION.
34. THE PLUMBING CONTRACTOR SHALL OPERATE THE SYSTEM AND DEMONSTRATE ALL ASPECTS TO THE ENGINEER AND/OR OWNER, TO PROVE IT'S OPERATION.
35. THE PLUMBING CONTRACTOR SHALL GUARANTEE THE PLUMBING SYSTEM FOR A PERIOD OF ONE YEAR FROM THE DATE OF SUBSTANTIAL COMPLETION.
36. THE PLUMBING CONTRACTOR SHALL, DURING CONSTRUCTION, MAINTAIN A SET OF AS–BUILT REDLINED RECORD DRAWINGS AT THE PROJECT SITE. ALL CHANGES IN LAYOUT, ROUTING, EQUIPMENT, COMPONENTS, AND ACCESSORIES SHALL BE RECORDED. THESE REDLINES SHALL BE GIVEN TO THE ARCHITECT/ENGINEER AFTER THE FINAL INSPECTION.

PLUMBING SPECIFICATIONS

15440 – PLUMBING FIXTURES (CONT.)

7. IN ADDITION TO THE ABOVE LISTED MANUFACTURERS, ALTERNATIVE APPROVED MANUFACTURERS ARE:
   A. WATER CLOSETS AND URINALS:
      I. BRIGGS
      II. AMERICAN STANDARD
      III. CRANE
      IV. ELJER
      V. GERBER
   B. FLUSH VALVES:
      I. DELANY 401–2 OR EQUAL
      II. ZURN
   C. LAVATORIES:
      I. BRIGGS
      II. AMERICAN STANDARD
      III. CRANE
      IV. ELJER
      V. GERBER
   D. EMERGENCY SHOWER
      I. SPEAKMAN
      II. BRADLEY
      III. HAWS

15488 – PROPANE GAS SYSTEMS

1. PROPANE GAS PIPING ABOVE GROUND OR INSIDE BUILDINGS: SCHEDULE 40 BLACK STEEL WITH WELDED OR MALLEABLE IRON FITTINGS.
2. GAS MAINS INSIDE BUILDINGS ARE SIZED FOR 2 PSIG PRESSURE. LOCATE PRESSURE REGULATORS AS SHOWN ON THE DRAWINGS TO REDUCE PRESSURE FROM 2 PSIG TO 7" W.C. PROVIDE FULL SIZE VENT LINES FROM GAS PRESSURE REGULATORS AND EXTEND TO OUTSIDE OR THROUGH ROOF. FLASH PENETRATIONS AND MAKE WATER TIGHT.
3. PROVIDE GAS SHUT OFF VALVE AT EACH PIECE OF GAS UTILIZING EQUIPMENT.
4. THE EQUIPMENT INSTALLER SHALL APPLY AND SIGN A CERTIFICATION LABEL TO EACH GAS–FIRED APPLIANCE, STATING THE APPLIANCE HAS BEEN ADJUSTED OR MODIFIED PER MANUFACTURER'S REQUIREMENTS FOR OPERATION AT THE PROJECT ALTITUDE AND WITH THE BTU–CONTENT OF THE AVAILABLE FUEL–GAS.

PLUMBING SHEET INDEX

SHEET NO	SHEET TITLE
PE001	PLUMBING SPECIFICATIONS, GENERAL NOTES & SHEET INDEX
PE501	PLUMBING DETAILS AND SCHEDULES
PL101	MAIN FLOOR PLUMBING PLAN
PL102	ROOF PLUMBING PLAN
PL401	ENLARGED PLUMBING PLAN

GENERAL PLUMBING NOTES

1. PROVIDE ALL LABOR, MATERIALS, AND EQUIPMENT NECESSARY TO CONSTRUCT A COMPLETE, OPERATIONAL PLUMBING SYSTEM FOR THE ENTIRE PROJECT AS SHOWN ON THESE DRAWINGS, INCLUDING ALL NECESSARY FEES AND PERMITS.
2. THE ENTIRE INSTALLATION SHALL CONFORM TO THE REQUIREMENTS OF THE MOST RECENTLY ADOPTED BUILDING CODE, MECHANICAL CODE, PLUMBING CODE, ELECTRICAL CODE, AND ALL OTHER APPLICABLE CITY, COUNTY, STATE, AND FEDERAL CODES AND REGULATIONS IN EFFECT AT THE DATE OF THE BID. CONFORM TO ANY CODES, RULES, REGULATIONS AND REQUIREMENTS THAT THE PROJECT OWNER HAS.
3. PRIOR TO FABRICATION AND INSTALLATION, THE CONTRACTOR SHALL COORDINATE THE INSTALLATION OF ALL PLUMBING WORK WITH ALL OTHER TRADES, INCLUDING BUT NOT LIMITED TO: THE MECHANICAL CONTRACTOR, ELECTRICAL CONTRACTOR, GENERAL CONTRACTOR, AND ANY CONTRACTOR HIRED DIRECTLY BY THE OWNER. WHERE CONFLICTS MAY OCCUR, THEY SHALL BE RESOLVED PRIOR TO INSTALLATION.
4. THE DRAWINGS SHOW THE GENERAL DESIGN, ARRANGEMENTS AND THE EXTENT OF THE SYSTEM. IT SHALL BE THE WORK OF THE CONTRACTOR TO MAKE SUCH SLIGHT ALTERATIONS AS MAY BE NECESSARY TO MAKE THE SYSTEM COMPLETE AND OPERATIONAL IN ACCORDANCE WITH THE DESIGN INTENT. MAJOR DEVIATIONS SUCH AS CHANGES IN COMPONENT SIZES, WEIGHTS, QUANTITIES, OR MATERIAL REQUIRE PRIOR APPROVAL BY THE CONSULTING ENGINEER.
5. ALL PLUMBING INFORMATION IS NOT SHOWN ON THE PLUMBING DRAWINGS. THE CONTRACTOR SHALL BE RESPONSIBLE FOR COORDINATING INFORMATION ON ALL OTHER CONSTRUCTION DOCUMENTS INCLUDING ARCHITECTURAL, STRUCTURAL, MECHANICAL AND ELECTRICAL DRAWINGS.
6. THE WORKING DRAWINGS ARE DIAGRAMMATIC. BECAUSE OF THE SMALL SCALE OF THE DRAWINGS, THEY DO NOT SHOW EVERY OFFSET, BEND OR ELBOW NECESSARY FOR THE COMPLETE INSTALLATION IN THE SPACE PROVIDED. ALL LOCATIONS FOR PLUMBING EQUIPMENT AND PIPING SHALL BE CHECKED AND COORDINATED WITH THE ARCHITECTURAL, MECHANICAL, STRUCTURAL AND ELECTRICAL DRAWINGS.
7. EXACT ROUTING OF WASTE, GAS, AND WATER SERVICE IS DEPENDENT ON LOCAL SITE CONDITIONS AND MODIFICATIONS IN EQUIPMENT CONNECTIONS. EXACT LOCATION OF EQUIPMENT MAY VARY DEPENDING ON LOCAL CODE, HEALTH DEPARTMENT AND CITY REQUIREMENTS.
8. DETAILS: THE CONTRACTOR IS RESPONSIBLE TO REVIEW AND USE WHERE APPROPRIATE ALL OF THE PLUMBING DETAILS SHOWN ON THE DRAWINGS. DETAILS MAY OR MAY NOT BE CALLED OUT ON THE DRAWINGS WITH SYMBOLS OR KEYED NOTES. ANY CHANGES RESULTING FROM FAILURE TO INSTALL THE PLUMBING SYSTEM WITHOUT USING THE INCLUDED DETAILS IS THE RESPONSIBILITY OF THE CONTRACTOR.
9. PIPING SCHEMATICS: THE CONTRACTOR IS RESPONSIBLE TO REVIEW THE PIPING SCHEMATICS INCLUDED WITH THE DRAWINGS FOR PIPING CONNECTIONS TO ALL PLUMBING EQUIPMENT. THE PIPING SCHEMATICS SHOW DETAILED CONNECTIONS INCLUDING NECESSARY VALVES, FITTINGS, PRESSURE AND TEMPERATURE GAUGES, ETC., THAT ARE NOT SHOWN ON THE PIPING PLANS. ANY CHANGES RESULTING FROM FAILURE TO INSTALL THE PLUMBING SYSTEM WITHOUT USING THE INCLUDED PIPING SCHEMATICS IS THE RESPONSIBILITY OF THE CONTRACTOR.
10. THE DRAWINGS AND SPECIFICATIONS HAVE BEEN PREPARED TO SUPPLEMENT EACH OTHER AND THEY SHALL BE INTERPRETED AS AN INTEGRAL UNIT WITH THE ITEMS SHOWN ON ONE AND NOT THE OTHER BEING FURNISHED AND INSTALLED AS THOUGH SHOWN AND CALLED OUT IN BOTH.
11. THE STRUCTURE SHOWN ON ALL DETAILS MAY OR MAY NOT PERTAIN TO A PORTION OR ANY PORTION OF THE BUILDING. COORDINATE MOUNTING REQUIREMENTS WITH ARCHITECTURAL AND STRUCTURAL DRAWINGS.
12. ANY PART OF THIS INSTALLATION THAT FAILS, IS UNFIT, OR BECOMES DAMAGED DURING CONSTRUCTION SHALL BE REPAIRED OR REPLACED BY THE CONTRACTOR AT NO ADDITIONAL COST TO THE OWNER.
13. EQUIPMENT MODEL NUMBERS IN SCHEDULES ARE SHOWN TO ESTABLISH THE TYPE OF PRODUCT THAT HAS TO BE USED. THE SELECTED PRODUCT MUST MEET THE SCHEDULED PERFORMANCE DATA. THIS MAY REQUIRE A DIFFERENT MODEL NUMBER TO THAT SCHEDULED.
14. ALL EQUIPMENT SHALL BE INSTALLED IN STRICT ACCORDANCE WITH THE EQUIPMENT MANUFACTURER'S RECOMMENDATIONS. PROVIDE ALL FITTINGS, TRANSITIONS, VALVES, AND OTHER DEVICES AND ACCESSORIES REQUIRED FOR A COMPLETE, WORKABLE INSTALLATION.
15. THE DIVISION 15 CONTRACTOR SHALL PROVIDE ALL REQUIRED MOTORS. ALL MOTOR STARTING EQUIPMENT, WHEN NOT A PART OF THE PLUMBING EQUIPMENT, WILL BE PROVIDED BY THE ELECTRICAL CONTRACTOR.
16. THE CONTRACTOR SHALL PERFORM THE WORK IN A MANNER THAT WILL CAUSE A MINIMUM DISRUPTION TO BUILDING TENANT USE AND SHALL COORDINATE THE WORK WITH THE BUILDING OWNER'S REPRESENTATIVE.
17. THE PLUMBING CONTRACTOR IS RESPONSIBLE FOR PLUMBING EQUIPMENT CHECK–IN, SAFEKEEPING, AND DAMAGE.
18. INVERTS SHOWN ON PLUMBING DRAWINGS MAY BE REFERENCED FROM THE FINISHED FLOOR ELEVATION. COORDINATE ALL INVERTS WITH BOTH CIVIL AND ARCHITECTURAL DRAWINGS PRIOR TO INSTALLATION.
19. PROVIDE WALL CLEANOUTS IN ALL VENTS FOR COMBINATION WASTE AND VENT SYSTEMS AS REQUIRED BY LOCAL AND NATIONAL CODES.
20. ALL VENT FITTINGS FOR WASTE SYSTEMS BELOW OVERFLOWS OF FIXTURES SHALL BE DRAINAGE TYPE.
21. CONTRACTOR TO COMPLY WITH THE LATEST ADOPTED PLUMBING CODES WHEN SIZING TRAP ARMS ON COMBINATION WASTE AND VENT SYSTEMS. THE DRAWINGS INDICATE THE WASTE LINE SIZE AND THE SIZE OF THE TRAP REQUIRED.
22. PROVIDE CLEANOUTS IN ACCORDANCE WITH THE REQUIREMENTS OF APPLICABLE CODES. FLOOR CLEANOUTS SHALL BE LOCATED OUT OF TRAFFIC AREAS.

MHTN
ARCHITECTS
MHTN Architects, Inc.
420 East South Temple
Suite 100
Salt Lake City, Utah 84111
TEL 801.595.6700
FAX 801.595.6717
www.mhtn.com

JAMES T. DRESSLAR
ARCHITECT, L.L.C.
387 PARK LANE
MOAB, UTAH 84532
435.259.1155 Phone / Fax

GREAT SALT LAKE
MARINA MAINTENANCE BUILDING
DFCM # 10029510

13312 WEST 1075 SOUTH
MAGNA, UTAH 84044

SEAL

LICENSED PROFESSIONAL ENGINEER
No. 181527
ROBERT L. PAUL
STATE OF UTAH
9/22/10

MHTN PROJECT NO. 2010546

DRAWN BY: CHECKED BY:

ISSUED:

NO.	DATE	DESCRIPTION

REVISION DATE:

NO.	DATE	DESCRIPTION
1	9-NOV-2010	ADD RESTROOM

SHEET NAME

PLUMBING
COVER SHEET
CONSTRUCTION DOCUMENTS
SEPTEMBER 2, 2010

SHEET NUMBER

PE001

File Name: P:\2010\20100339\1Drawings\3Sheet\39PE001.dwg Last Plotted: 2010/12/07 @ 1:43 PM By: irb

SEWAGE EJECTOR SCHEDULE

SYMBOL	MANUFACTURER	MODEL NO.	PUMP TYPE	H.P.	VOLTS/PHASE/ CYCLE	GPM	RPM	HEAD (FT.)	NO. PUMPS	COMMENTS
SE–1	LITTLE GIANT	10S–CIA–SFS	SUBMERSIBLE	1/2	208/1/60	85	–	10	2	1,2,3

1. PROVIDE WITH WALL–MOUNTED CONTROLS AND MERCURY–FLOAT SWITCHES AND HIGH WATER ALARMS AS SHOWN IN DETAIL 4 / PE501.
2. 3" VENT AND 3" DISCHARGE CONNECTIONS AND STEEL COVER. VENT AS REQUIRED BY THE INTERNATIONAL PLUMBING CODE.
3. COORDINATE EXACT LOCATION WITH CIVIL AND ARCHITECTURAL. POSITION UNIT FOR EASY ACCESS AND NO TRAFFIC LOAD.

PLUMBING FIXTURE SCHEDULE

SYMBOL	FIXTURE	TRAP	WASTE	INDIRECT WASTE	VENT	COLD WATER	HOT WATER	NAT. GAS	REMARKS	MANUFACTURER MAKE AND MODEL
SH–1	ACCESSIBLE SHOWER	–	–	–	–	½"	½"	–	FIBERGLASS SELF–CONTAINED	BEST BATH LSS3838A5T
A–1	AIR OUTLET	–	–	–	–	–	–	–	½" IPS FEMALE INLET, 2 OUTLET, WALL MOUNT.	MILTON
EEW–1	EMERGENCY EYE WASH	–	–	–	–	¾"	¾"	–	WALL MOUNTED WITH MIXING VALVE	BRADLEY S19–240
D–1	FLOOR DRAIN	2"	2"	–	1½"	–	–	–		JR SMITH 2010BP
D–2	MECH. ROOM DRAIN	2"	2"	–	1½"	–	–	–		JR SMITH 2110NB
FS–1	FLOOR SINK	2"	2"	–	1½"	–	–	–		JR SMITH 3140–12
WB–1	WASHER BOX	–	2"	–	–	½"	½"	–		SYMMONS W–602
U–1	URINAL	–	3"	–	2"	¾"	–	–		KOHLER K4972
WC–1	WATER CLOSET	INT.	4"	–	2"	1"	–	–	FLOOR MOUNTED – FLUSH VALVE TYPE (ADA COMPLIANT)	KOHLER K–4368
L–1	LAVATORY	1½"	1½"	–	1½"	½"	½"	–	WALL MOUNTED (ADA COMPLIANT)	KOHLER K–2006
SS–1	SERVICE SINK	3"	3"	–	1½"	¾"	¾"	–	CORNER FLOOR TYPE	KOHLER K–6710
EWC–1	ELECTRIC WATER COOLER	1½"	1½"	–	1½"	½"	–	–	ELECTRIC BI–LEVEL (ADA APPROVED)	OASIS P8AMSL
ICE–1	ICE MACHINE SUPPLY BOX	–	–	–	–	½"	–	–		WATER–TITE 82088
WH–1	WATER HEATER	–	–	–	–	1"	1"	¾"	SEE SCHEDULE	
RD–1	ROOF DRAIN								CAST IRON BODY WITH COMBINED FLASHING CLAMP AND CAST IRON GRAVEL STOP, CAST IRON DOME, EXTENSION, SUMP RECEIVER AND UNDERDECK CLAMP.	SMITH FIGURE 1010–ERC
RD–2	SECONDARY ROOF DRAIN								CAST IRON BODY WITH FLASHING CLAMP, GRAVEL STOP, CAST IRON DOME, 2" HIGH CAST IRON WATER COLLAR, EXTENSION, SUMP RECEIVER AND UNDERDECK CLAMP.	SMITH FIGURE 1080–ERC
RD–3	DOWNSPOUT NOZZLE								CAST BRONZE BODY AND FLANGE. PROVIDE BRONZE BOLTS TO SECURE NOZZLE TO WALL. INSTALL 12" ABOVE FOUNDATION UNLESS NOTED OTHERWISE.	SMITH FIGURE 1770
TD–1	TRENCH DRAIN	4"	4"	–	3"	–	–	–	PRECAST POLYMER CONCRETE SYSTEM, 12" WIDE SLOPED CHANNEL WITH PRECAST POLYMER CONCRETE CATCH BASIN AND CAST IN METAL RAILS.	SMITH FIGURE 9828 SMITH FIGURE 9828–CB

SUPPLIED BY OWNER, TO BE INSTALLED BY CONTRACTOR

SHOP AIR COMPRESSOR SCHEDULE

SYMBOL	MANUFACTURER AND MODEL NO.	LOCATION	TYPE	CAPACITY (SCFM)	PRESSURE (PSIG)	RECEIVER (GALLON)	SEAL WATER (GPM)	CHILLED WATER (GPM)	ELECTRICAL H.P	ELECTRICAL VOLT	ELECTRICAL ø	OPERATING WEIGHT (LBS.)	ACCESSORIES AND REMARKS
AIRCOMP	QUINCY QT7.5 120D	OUTSIDE	DUPLEX TWO STAGE TANK MOUNT	22.3	175	128	–	–	7½	460	3	1078	PROVIDE REFRIGERATED DRYER

GAS FIRED DOMESTIC HOT WATER HEATER

SYMBOL	MANUFACTURER	MODEL NO.	TANK CAPACITY GALLONS	FUEL TYPE	INPUT BTUH (1)	HP	VOLTS PHASE CYCLE	RECOVERY RATE GPH	WATER TEMP IN/OUT	STACK SIZE	COMMENTS
WH–1	AO SMITH	CYCLONE BTH–120	60	PROPANE	125000	N/A	N/A	158	40/130	4	

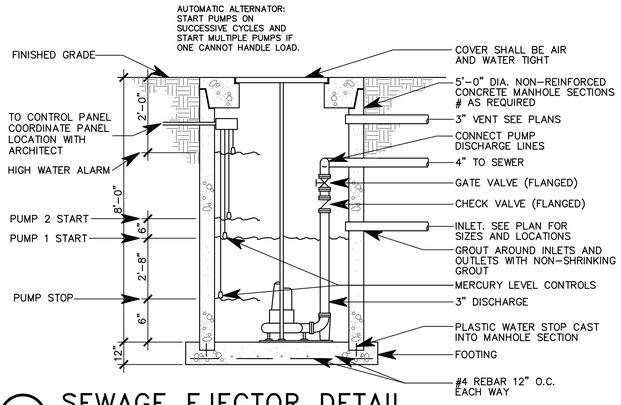

4 SEWAGE EJECTOR DETAIL
SCALE: NOT TO SCALE

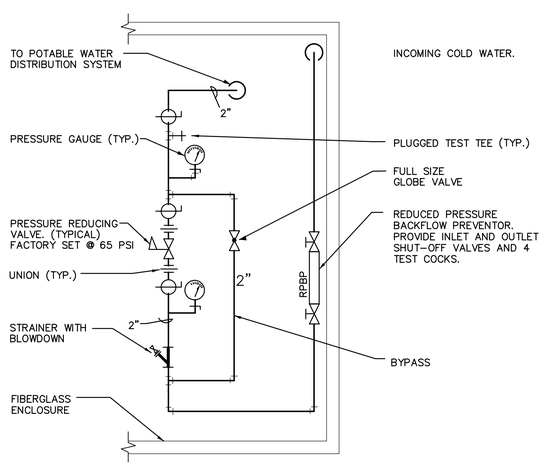

3 WATER PRESSURE REDUCING VALVE STATION
SCALE: NOT TO SCALE

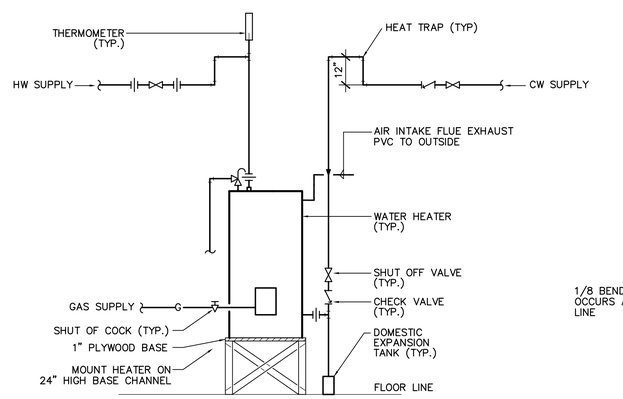

2 WATER HEATER DETAIL
SCALE: NOT TO SCALE

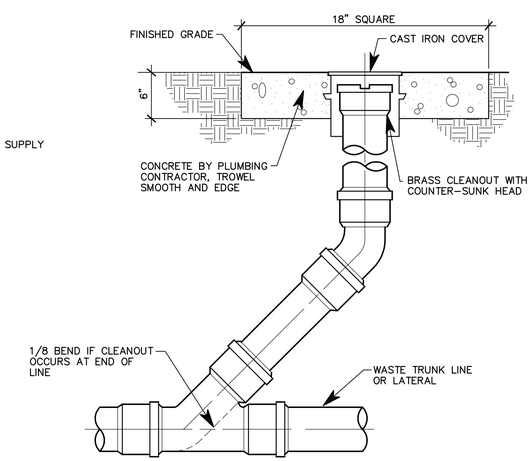

1 CLEANOUT TO GRADE DETAIL
SCALE: NO SCALE

MHTN ARCHITECTS
MHTN Architects, Inc.
420 East South Temple
Suite 100
Salt Lake City, Utah 84111
TEL 801.595.6700
FAX 801.595.6717
www.mhtn.com

JAMES T. DRESSLAR ARCHITECT, L.L.C.
387 PARK LANE
MOAB, UTAH 84532
435.259.1155 Phone / Fax

GREAT SALT LAKE MARINA MAINTENANCE BUILDING
DFCM # 10029510
13312 WEST 1075 SOUTH
MAGNA, UTAH 84044

SEAL

MHTN PROJECT NO: 2010546
DRAWN BY:
CHECKED BY:

ISSUED:

NO.	DATE	DESCRIPTION

REVISION DATE:

NO.	DATE	DESCRIPTION
1	9-NOV-2010	ADD RESTROOM

SHEET NAME
PLUMBING DETAILS AND SCHEDULES
CONSTRUCTION DOCUMENTS
SEPTEMBER 2, 2010

SHEET NUMBER
PE501

File Name: P:\2010\20100339\1Drawings\3Sheet\39PE501.dwg Last Plotted: 2010/12/07 @ 1:43 PM By: lrb

SIZED AT 2 PSIG WITH A 1 PSIG PRESSURE LOSS.
TOTAL LENGTH = 350'
BASIS OF DESIGN: 2009 INTERNATIONAL FUEL GAS CODE.
¾" CAN SUPPORT 817 MBH
1" CAN SUPPORT 1,540 MBH

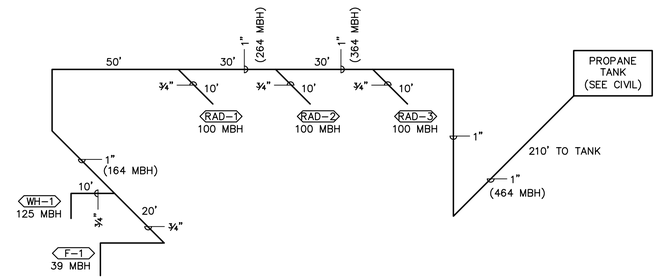

3 GAS PIPING ISOMETRIC

SCALE: NOT TO SCALE

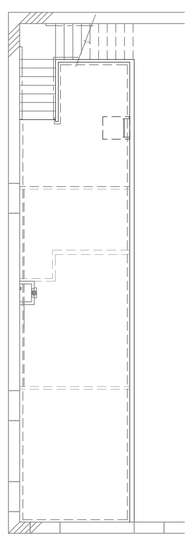

2 MEZZANINE PLUMBING PLAN

SCALE: 1/8" = 1'-0"

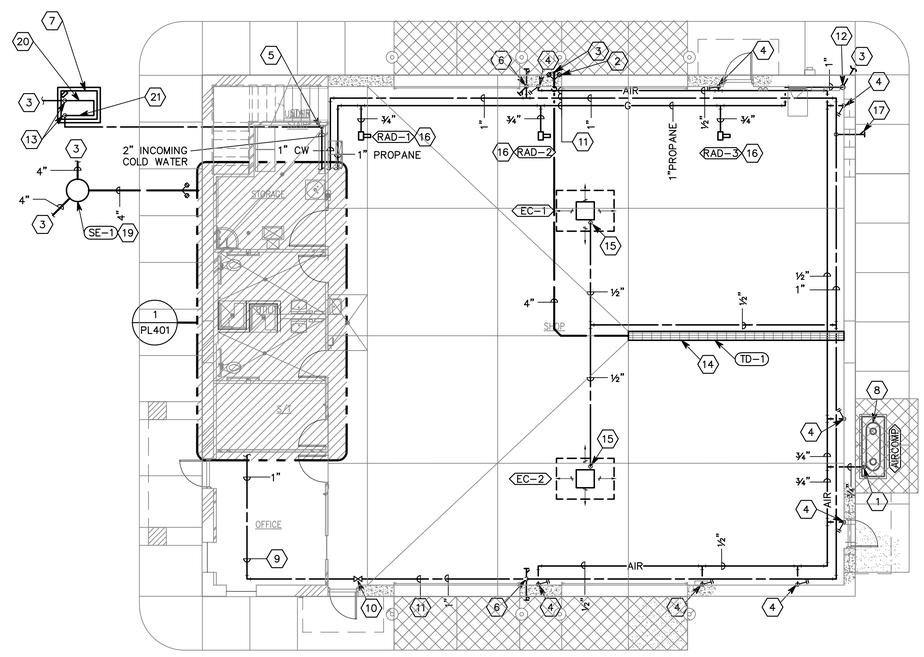

1 PLUMBING PLAN

SCALE: 1/8" = 1'-0"

SHEET KEYNOTES

1. RISE ¾" AIR FROM COMPRESSOR, THROUGH WALL. RISE UP AND RUN HIGH AROUND BAYS, ABOVE HEIGHT OF ROLL-UP DOORS. PROVIDE SHUT OFF VALVE AT EXIT FROM DRYER.
2. DOUBLE CLEANOUT TO GRADE.
3. SEE CIVIL SITE PLAN FOR CONTINUATION.
4. DROP ½" AIR LINE DOWN WALL AND PROVIDE AIR OUTLET. SEE SPECIFICATIONS.
5. INCOMING WATER. RISE UP WALL AND RUN OVERHEAD TO UTILITY ROOM.
6. DROP ¾" WATER DOWN WALL AND PROVIDE ¾" HOSE BIBBS ON INSIDE AND OUTSIDE OF WALL. PROVIDE WITH VACUUM BREAKER.
7. FIBERGLASS ENCLOSURE WITH 1½" INSULATION AND HINGED LID WITH LOCKABLE HASP. THERMOSTATICALLY CONTROLLED 1000 WATT 120 VOLT, SINGLE PHASE ELECTRIC HEATER. MINIMUM INTERIOR DIMENSIONS 35" X 45". MOUNT ON CONCRETE SLAB MINIMUM 57" LONG X 47" WIDE AND 4" THICK. CONTRACTOR TO VERIFY APPROPRIATE SIZE OF ENCLOSURE TO FIT RPBP ASSEMBLY AND PRV ASSEMBLY PRIOR TO BEGINNING ANY NEW WORK. BASIS OF DESIGN: HOT BOX HB3000.
8. AIR COMPRESSOR AND DRYER (SUPPLIED BY OWNER). SEE SCHEDULE. INSTALL BOTH PER MANUFACTURER'S INSTRUCTIONS. MOUNT ON 4" C.I.P. CONCRETE PAD.
9. BACKFEED WATER TO COMPLETE THE COLD WATER LOOP.
10. ISOLATION VALVE (TYPICAL).
11. RUN ALL PIPE IN BAYS HIGH ABOVE ROLL-UP DOORS.
12. RISE 1" PROPANE UP INSIDE BUILDING. RUN HIGH TO FURNACE, WATER HEATER AND GAS FIRED RADIANT SYSTEM.
13. WATER LINE RISES INSIDE ENCLOSURE TO ATTACHMENT TO RPBP AND PRV ASSEMBLIES.
14. TRENCH DRAIN. CAST-IN-PLACE DRAIN WITH GRATING. SEE SPECIFICATIONS AND PLUMBING FIXTURE SCHEDULE FOR DETAILED REQUIREMENTS.
15. RISE AND CONNECT WATER TO EVAPORATIVE COOLERS PER DETAILS AND MANUFACTURER'S REQUIREMENTS.
16. RUN AND CONNECT PROPANE TO UNIT HEATERS WITH GAS COCK, PER MANUFACTURER'S REQUIREMENTS.
17. RUN 3/4" WATER DOWN INSIDE WALL AND PROVIDE 3/4" EXTERIOR HOSE BIBB WITH VACUUM BREAKER.
18. RUN 3" VENT LINE UP WALL AND THROUGH ROOF TO VENT TRENCH DRAIN.
19. SEWAGE EJECTOR PUMP AND WET WELL. CONTRACTOR TO COORDINATE EXACT LOCATION WITH CIVIL AND ARCHITECTURAL. POSITION IN AREA WITH NO TRAFFIC AND WITH READY ACCESS. VENT PER INTERNATIONAL PLUMBING CODE.
20. RPBP ASSEMBLY. SEE DETAIL 3/PE501.
21. PRV ASSEMBLY. SEE DETAIL 3/PE501.

MHTN ARCHITECTS
MHTN Architects, Inc.
420 East South Temple
Suite 100
Salt Lake City, Utah 84111
TEL 801.595.6700
FAX 801.595.6717
www.mhtn.com

JAMES T. DRESSLAR
ARCHITECT, L.L.C.
387 PARK LANE
HOAB, UTAH 84532
435.259.1155 PHONE / FAX

GREAT SALT LAKE MARINA MAINTENANCE BUILDING

DFCM # 10029510

13312 WEST 1075 SOUTH
MAGNA, UTAH 84044

SEAL

LICENSED PROFESSIONAL ENGINEER
No. 181527
ROBERT L. PAUL
STATE OF UTAH
9/22/10

MHTN PROJECT NO. 2010546

DRAWN BY: CHECKED BY:

ISSUED:

NO.	DATE	DESCRIPTION

REVISION DATE:

NO.	DATE	DESCRIPTION
1	9-NOV-2010	ADD RESTROOM

SHEET NAME

PLUMBING PLANS

CONSTRUCTION DOCUMENTS
SEPTEMBER 2, 2010

SHEET NUMBER

PL101

File Name: P:\2010\20100339\1Drawings\3Sheet\39PL101.dwg Last Plotted: 2010/12/07 @ 1:43 PM By: lrb

SHEET KEYNOTES

1. LOCATE MAIN ROOF DRAIN OUTLET AT 12" ABOVE GRADE.
2. LOCATE OVERFLOW ROOF DRAIN OUTLET AT 18" ABOVE GRADE.
3. RUN AT 1% SLOPE (OR STEEPER).
4. RUN AT 2% SLOPE (OR STEEPER).

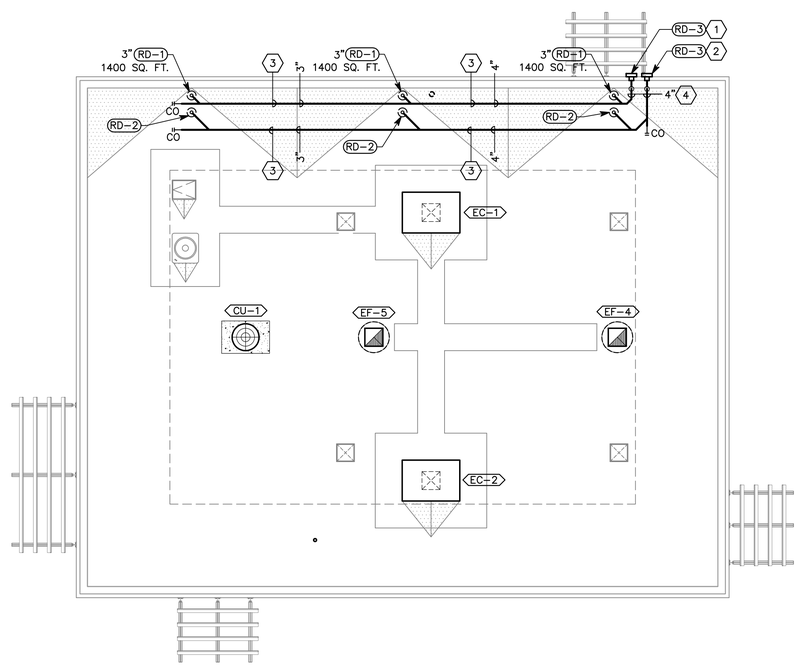

1 PLUMBING ROOF PLAN

SCALE: 1/8" = 1'-0"

MHTN ARCHITECTS

MHTN Architects, Inc.
420 East South Temple
Suite 100
Salt Lake City, Utah 84111
TEL 801.595.6700
FAX 801.595.6717
www.mhtn.com

JAMES T. DRESSLAR
ARCHITECT, L.L.C.
387 PARK LANE
MOAB, UTAH 84532
435.259.1155 PHONE / FAX

GREAT SALT LAKE MARINA MAINTENANCE BUILDING

DFCM # 10029510

13312 WEST 1075 SOUTH
MAGNA, UTAH 84044

SEAL

LICENSED PROFESSIONAL ENGINEER
No. 181527
ROBERT L. PAUL
STATE OF UTAH
9/22/10

MHTN PROJECT NO: 2010546

DRAWN BY: CHECKED BY:

ISSUED:

NO.	DATE	DESCRIPTION

REVISION DATE:

NO.	DATE	DESCRIPTION
1	9-NOV-2010	ADD RESTROOM

SHEET NAME

PLUMBING ROOF PLAN

CONSTRUCTION DOCUMENTS
SEPTEMBER 2, 2010

SHEET NUMBER

PL102

File Name: P:\2010\20100339\1Drawings\3Sheet\39PL102.dwg Last Plotted: 2010/12/07 @ 1:42 PM By: lrb

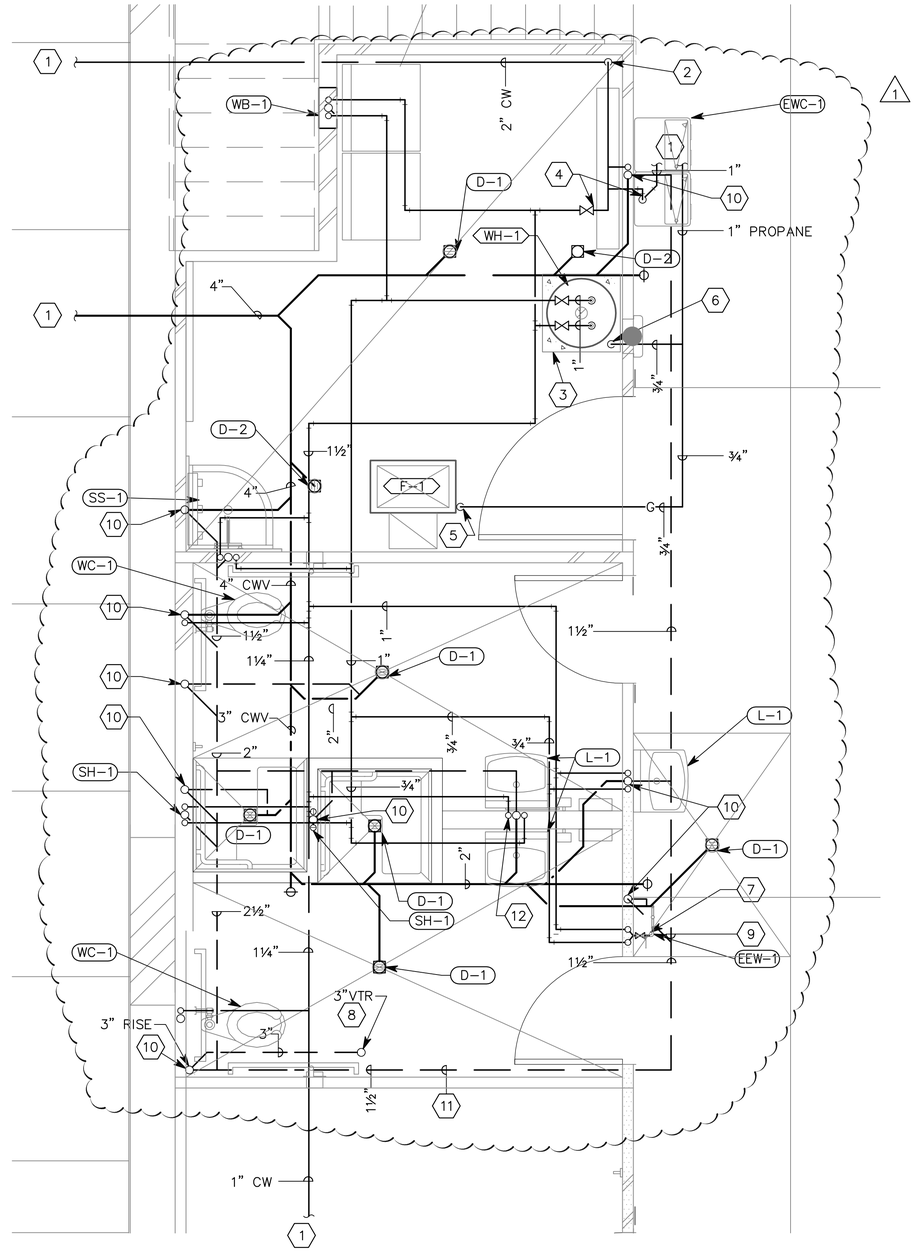

1 ENLARGED PLUMBING PLAN

SCALE: 1/2" = 1'-0"

SHEET KEYNOTES

1. SEE SHEET PL101 FOR CONTINUATION.
2. 2" DOMESTIC COLD WATER RISES UP.
3. WATER HEATER ON 24" HIGH FLOOR STAND. CONSTRUCT FLOOR STAND OF CHANNEL FRAMING WITH ¾" PLYWOOD BASE UNDER UNIT. MOUNT ENTIRE ASSEMBLY ON A 4" C.I.P. HOUSEKEEPING PAD.
4. ISOLATION VALVE (TYPICAL).
5. RUN AND DROP ¾" PROPANE GAS TO FURNACE. CONNECT PER MANUFACTURER'S INSTRUCTIONS. PROVIDE 4 OZ. PRESSURE REGULATOR AND VENT PER SPECIFICATIONS.
6. RUN AND DROP ¾" PROPANE GAS TO WATER HEATER. CONNECT PER DETAILS. PROVIDE 4 OZ. PRESSURE REGULATOR AND VENT PER SPECIFICATIONS.
7. TEMPERING MIXING VALVE UNDERNEATH EYEWASH.
8. RISE 3" VTR IN WALL UP THROUGH MEZZANINE, AND THROUGH ROOF.
9. RUN VENT LINES AS HIGH AS POSSIBLE IN UTILITY ROOM AND ABOVE SHOWER ROOM CEILING.
10. RISE VENT IN WALL TO NEAR CEILING IN UTILITY ROOM.
11. RUN VENT ABOVE SHOWER ROOM CEILING.
12. PPP 'BAC-2-BAC' PLUMBING FITTING.

GEN. SHEET NOTES

1. RUN ALL PIPING TIGHT TO STRUCTURE.

MHTN ARCHITECTS
MHTN Architects, Inc.
420 East South Temple
Suite 100
Salt Lake City, Utah 84111
TEL 801.595.6700
FAX 801.595.6717
www.mhtn.com

JAMES T. DRESSLAR ARCHITECT, L.L.C.
387 PARK LANE
MOAB, UTAH 84532
435.259.1155 PHONE / FAX

GREAT SALT LAKE MARINA MAINTENANCE BUILDING

DFCM # 10029510

13312 WEST 1075 SOUTH
MAGNA, UTAH 84044

SEAL

LICENSED PROFESSIONAL ENGINEER
No. 181527
ROBERT L. PAUL
STATE OF UTAH
9/22/10

MHTN PROJECT NO: 2010546

DRAWN BY: CHECKED BY:

ISSUED:

NO.	DATE	DESCRIPTION

REVISION DATE:

NO.	DATE	DESCRIPTION
1	9-NOV-2010	ADD RESTROOM

SHEET NAME

LARGE SCALE PLUMBING PLANS

CONSTRUCTION DOCUMENTS
SEPTEMBER 2, 2010

SHEET NUMBER

PL401

File Name: P:\2010\20100339\1Drawings\3Sheet\39PL401.dwg Last Plotted: 2010/12/07 @ 1:45 PM By: lrb

MECHANICAL SPECIFICATIONS

15010 – BASIC MECHANICAL REQUIREMENTS

1. THE EQUIPMENT INSTALLER SHALL APPLY AND SIGN A CERTIFICATION LABEL TO EACH GAS–FIRED APPLIANCE, STATING THE APPLIANCE HAS BEEN ADJUSTED OR MODIFIED PER MANUFACTURER'S REQUIREMENTS FOR OPERATION AT THE PROJECT ALTITUDE AND WITH THE BTU–CONTENT OF THE AVAILABLE FUEL–GAS.

15055 – BASIC MATERIALS AND METHODS

1. CORE CUT ALL PIPE PENETRATION OF EXISTING MASONRY OR CONCRETE WALLS AND FLOORS. SLEEVE ALL PENETRATIONS THROUGH NEW WALLS AND FLOORS. SEAL ALL PENETRATIONS WATER TIGHT WITH SILICONE SEALANT. USE FIRE RATED SEALANT (3M "FIRE BARRIER" OR EQUAL) FOR 1 HOUR OR 2 HOUR PENETRATIONS.
2. CAULK AROUND ALL PIPING AND DUCTS THAT PASS THROUGH FIRE–RATED PARTITIONS WITH A NON–HARDENING CAULKING SIMILAR TO 3M "FIRE BARRIER".
3. SEAL ALL PIPING AND DUCTS THROUGH WALLS AIR TIGHT.

15100 – VALVES

1. PROVIDE VALVES OF THE TYPE AND QUANTITY SHOWN ON THE DRAWINGS. VALVES OF THE SAME TYPE TO BE BY ONE MANUFACTURER.

15190 – MECHANICAL IDENTIFICATION

1. PIPE MARKERS:
   PLASTIC TAPE: PROVIDE MANUFACTURER'S STANDARD COLOR–CODED PRESSURE–SENSITIVE (SELF ADHESIVE) VINYL TAPE, NOT LESS THAN 3 MILS THICK. 1–1/2" WIDE TAPE MARKERS ON PIPES WITH OUTSIDE DIAMETERS LESS THAN 6" (INCLUDING INSULATION, IF ANY); 2–1/2" WIDE TAPE FOR LARGER PIPES.
2. DUCT MARKERS:
   PROVIDE MANUFACTURER'S STANDARD LAMINATED PLASTIC; COLOR CODED DUCT MARKERS.
3. COLOR:
   COMPLY WITH ANSI A13.1
4. LETTERING:
   MANUFACTURER'S STANDARD PRE–PRINTED NOMENCLATURE WHICH BEST DESCRIBES PIPING OR DUCT SYSTEM IN EACH INSTANCE OR AS SELECTED BY ARCHITECT OR ENGINEER IN CASES OF VARIANCE WITH NAMES AS SHOWN.
5. ARROWS:
   PRINT EACH MARKER WITH ARROWS INDICATING DIRECTION OF FLOW.
6. VALVE TAGS:
   PROVIDE PLASTIC LAMINATE VALVE TAGS: MANUFACTURER'S STANDARD 3/32" THICK ENGRAVED TAGS WITH PIPING SYSTEM ABBREVIATION IN 1/4" HIGH LETTERS AND SEQUENCED VALVE NUMBERS 1/2" HIGH, WITH 5/32" HOLE FOR FASTENER. PROVIDE 1–1/2" SQUARE BLACK TAGS WITH WHITE LETTERING.
7. VALVE TAG FASTENERS:
   PROVIDE MANUFACTURER'S STANDARD SOLID BRASS CHAIN (WIRE LINK OR BEADED TYPE), OR SOLID BRASS S–HOOKS OF THE SIZED REQUIRED FOR PROPER ATTACHMENT OF TAGS TO VALVES, AND MANUFACTURED SPECIFICALLY FOR THAT PURPOSE.

15242 – VIBRATION ISOLATION, SOUND ISOLATION & SEISMIC BRACING

1. ALL MECHANICAL EQUIPMENT, DUCTWORK, AND PIPING MUST BE VIBRATION ISOLATED AND SEISMICALLY BRACED FOR THE SITE SPECIFIC SEISMIC DESIGN CATEGORY AND SEISMIC USE GROUP, IN ACCORDANCE WITH THE LATEST ADOPTED EDITIONS OF THE BUILDING CODES, ASHRAE, AND SMACNA. PROVIDE SEISMIC PRODUCTS BY AMBER–BOOTH, MASON INDUSTRIES, VIBRATION MOUNTING AND CONTROL, KINETICS, OR BRAMEC.
2. IN GENERAL, PROVIDE SPRING MOUNTS TO ATTENUATE LOW FREQUENCY SOUND AND VIBRATION AND NEOPRENE PADS TO ATTENUATE HIGH FREQUENCY SOUND AND VIBRATION. SEISMIC BRACING/MOUNTING CAN BE COMBINED WITH VIBRATION ISOLATION AS APPLICABLE.
3. CONTRACTOR MANUFACTURED SEISMIC BRACING/RESTRAINT METHODS ARE NOT ACCEPTABLE. PROVIDE A SIGNED AND STAMPED LETTER FROM A PROFESSIONAL ENGINEER CERTIFYING THAT THE SUPPLIED PRODUCTS ARE CORRECT FOR THE APPLICATION AND THAT THE INSTALLATION IS IN COMPLIANCE WITH ALL APPLICABLE CODES.

MECHANICAL SPECIFICATIONS

15530 – REFRIGERANT PIPING

1. INSTALL MANUFACTURER'S PRE–CHARGED REFRIGERANT LINE–SETS FROM THE CONDENSING UNIT TO THE DX–COIL AND CONNECT AS REQUIRED. ALL PIPING PENETRATIONS SHALL BE SEALED WATERTIGHT WITH SILICONE SEALANT AND PROVIDED WITH ESCUTCHEON PLATES WHERE VISIBLE. SUPPORT REFRIGERANT LINES AT 5 FT ON CENTER. SUPPORT EXTERIOR PIPING ON UNISTRUT. NEST GROUPS OF PIPE TOGETHER WHENEVER POSSIBLE. SIZE OF LINES TO BE AS RECOMMENDED BY THE MANUFACTURER OF THE EQUIPMENT, FOR THE REFRIGERATION CAPACITY, DISTANCE AND VERTICAL RISES INVOLVED. PROVIDE DOUBLE SUCTION RISERS WHEN CONDENSING UNIT IS MORE THAN MANUFACTURERS RECOMMENDED HEIGHT ABOVE THE EVAPORATOR COIL.
2. PROVIDE COPPER REFRIGERANT PIPING SIZED AS RECOMMENDED BY THE EQUIPMENT MANUFACTURER. BRAISE ALL JOINTS AND FITTINGS. PROVIDE 1/2" THICK INSULATION ON ENTIRE LENGTH OF REFRIGERANT SUCTION PIPING EQUAL TO 'ARMSTRONG ARMAFLEX'. COAT ALL INSULATION JOINTS WITH TWO (2) COATS OF GRAY 'ARMAFLEX NO.22' FINISH OR EQUAL. PROVIDE EXTERIOR INSULATION WITH A UV PROTECTION SLEEVE.

15575 – VENTS, BREACHING, CHIMNEYS, AND STACKS

1. FLUES SHALL BE CLASS "B" METALBESTOS ALUMINUM CONSTRUCTION WITH CLEANOUT PLUG. A WIND PROOF RAIN CAP SHALL BE PROVIDED AND INSTALLED. LOCATE ALL VENTS AND FLUES AT LEAST 3 FT ABOVE OR 10 FT AWAY FROM ALL OUTSIDE AIR INTAKES OR OPENINGS INTO THE BUILDING. FOR HEALTH CARE APPLICATIONS, VENTS AND FLUES SHALL BE 25 FEET AWAY FROM AIR INTAKES OR OPENINGS.

15610 – FORCED AIR FURNACES

1. FACTORY ASSEMBLED CONDENSING GAS FURNACE WITH 100% OUTDOOR COMBUSTION AIR, SEALED COMBUSTION MINIMUM 90% AFUE. FURNACE SHALL CONSIST OF CASING, HEAT EXCHANGERS, BLOWER, AIR FILTER, REDUNDANT GAS VALVE, HOT SURFACE IGNITOR, AND CONTROLS. UNITS TO HAVE 20 YEAR HEAT EXCHANGER WARRANTY. UNITS TO BE CARRIER, LENNOX, TRANE, OR YORK.

   PIPING FOR FURNACE VENT/INTAKE AIR AND FOR CONDENSATE DRAINS, SHALL BE PVC SCHEDULE 40, SECURELY SUPPORTED AT NO MORE THAN 5 FT CENTERS AND PAINTED WHITE. INSULATE ALL VENTS AND AIR INTAKES LOCATED IN TRUSS SPACES AND IN ATTICS.
2. PROVIDE FURNACE MANUFACTURER'S STANDARD A–FRAME OR N–FRAME DX COOLING COIL. COIL TO BE COMPLETE WITH GALVANIZED DRAIN PAN WITH DRAIN CONNECTION, DX EXPANSION VALVE, LIQUID SOLENOID VALVE, AND LIQUID LINE SIGHT GLASS/MOISTURE INDICATOR. MOUNT COOLING COIL IN FURNACE SUPPLY PLENUM IN LOCATION SHOWN ON DRAWINGS.
3. INSTALL 3/4" COPPER CONDENSATE DRAIN LINE FROM COOLING COIL DRAIN PAN AT INDOOR UNIT OF SPLIT SYSTEMS AND EXTEND TO OUTSIDE, TIE TO TAILPIECE OF NEAREST SINK, RUN TO NEAREST FAN ROOM FLOOR DRAIN OR RUN TO NEAREST SERVICE SINK.
4. PROVIDE CONCENTRIC VENT TERMINATION KIT FOR ROOF OR WALL APPLICATIONS.
5. MANUFACTURERS:
   A. CARRIER
   B. TRANE
   C. YORK
   D. BRYANT
   E. LENNOX
   F. PAYNE
   G. DAY & NIGHT
   H. RHEEM

15620 – FUEL FIRED HEATERS

1. FACTORY ASSEMBLED AND TESTED GAS–FIRED BURNER ASSEMBLY WITH HEAVY–DUTY CAST–IRON BURNER HEADS, PRE–WIRED GAS CONTROLS WITH ELECTRONIC, 3–TRY DIRECT SPARK IGNITION AND COMBUSTION AIR FILTER. ACOUSTICALLY ISOLATED PUMP MATCHING THE CAPACITY OF THE SYSTEM WITH FLEXIBLE CONNECTOR WITH TEMPERATURE RATING OF 350 DEG F MINIMUM. PUMP MOTOR TO HAVE RUBBER MOUNTS FOR ISOLATION. RADIANT TUBING TO BE 4" O.D. HEAT TREATED ALUMINIZED STEEL. INSTALL UNITS PER MANUFACTURERS REQUIREMENTS, MAINTAINING ALL CLEARANCES. UNITS TO BE CORAYVAC OR ENGINEER APPROVED EQUAL.

15670 – CONDENSING UNITS

1. FACTORY ASSEMBLED AND TESTED AIR COOLED CONDENSING UNITS, CONSISTING OF CASING, COMPRESSOR, CONDENSER COIL, CONDENSER FAN AND MOTOR, REFRIGERANT RESERVOIR, AND OPERATING CONTROLS. UNITS TO BE COMPLETE WITH HIGH AND LOW PRESSURE CUTOUTS, SERVICE SHUTOFF VALVES, AND HAVE 5 YEAR COMPRESSOR WARRANTY. UNITS TO BE CARRIER, LENNOX, TRANE, OR YORK.
2. MOUNT UNIT ON ROOF CURB AND VIBRATION ISOLATORS.

MECHANICAL SPECIFICATIONS

15730 – EVAPORATIVE COOLERS

1 DIRECT EVAPORATIVE COOLER SHALL BE A MANUFACTURED UNIT COMPLETE WITH FORWARD CURVED FAN, BELT DRIVE, SINGLE SPEED MOTOR, CIRCULATING PUMP, WATER DISTRIBUTION SYSTEM, EVAPORATIVE MEDIA, WATER RESERVOIR, AUTOMATIC DRAIN DOWN / BLEED OFF SYSTEM AND CABINET. THE CABINET, BLOWER HOUSING, BLOWER WHEEL AND WATER RESERVOIR SHALL BE PROTECTED AGAINST RUST OUT FOR A PERIOD OF 5 YEARS. COOLER SHALL BE ARVIN, ARCTIC CIRCLE, CHAMPION, ESSICK OR APPROVED EQUAL.

15850 – FANS AND ROOF HOODS

1. ROOF MOUNTED EXHAUST FANS SHALL BE COMPLETE WITH BACKDRAFT DAMPERS. A DISCONNECT SWITCH SHALL BE PROVIDED AT THE FAN. THE FAN SHALL BE COMPLETE WITH INSECT SCREEN AND PREFABRICATED ROOF CURB MATCHING THE FAN SIZE.
2. CEILING MOUNTED EXHAUST FANS SHALL BE COMPLETE WITH LOUVERED GRILLE, BACKDRAFT DAMPER, AND WALL CAP OR ROOF CAP, SEE PLANS.
3. MANUFACTURERS:
   A. COOK
   B. ILG
   C. PENN
   D. GREENHECK
   E. BROAN
   F. ACME
   G. NEW YORK BLOWER
   H. TRANE CO.
   I. TWIN CITY
   J. CARNES
   K. JENN
   L. BREIDERT

15890 – METAL DUCTWORK

1. ALL DUCTWORK SHALL BE CONSTRUCTED, ERECTED, AND TESTED IN ACCORDANCE WITH THE MOST RESTRICTIVE OF LOCAL REGULATIONS AND PROCEDURES DETAILED IN THE ASHRAE HANDBOOK OF FUNDAMENTALS, OR THE APPLICABLE STANDARDS ADOPTED BY THE SHEET METAL AND AIR CONDITIONING CONTRACTOR'S NATIONAL ASSOCIATION, (SMACNA).
2. TRANSITION ALL NEW DUCTWORK TO CONNECT TO OTHER DUCTWORK AND EQUIPMENT, AS REQUIRED.
3. DUCTWORK SHALL BE GALVANIZED STEEL THROUGHOUT, FABRICATED AND INSTALLED SO THAT NO VIBRATION OR NOISE RESULTS. IT SHALL BE MADE FROM THE BEST GRADE OF GALVANIZED MILLED STEEL SHEETS OF U.S. STANDARD GAUGE AND BE FREE FROM BLISTERS, SLIVERS, AND PITS. ALL SEAMS SHALL BE AIRTIGHT, THE CONSTRUCTION OF ALL DUCTWORK, INCLUDING GAUGES OF METAL, BRACING LAYOUT, ETC., SHALL BE IN ACCORDANCE WITH SMACNA. SLEEVES FOR FIRE DAMPERS AND DUCT SECTIONS FORMING AN EXTENSION OF THE FIRE WALL SHALL BE 10 GAUGE STEEL.
4. SEAL DUCTWORK ACCORDING TO THE FOLLOWING SMACNA DUCT SEALING CLASS:

DUCT LOCATION	DUCT TYPE			
	SUPPLY		EXHAUST	RETURN
	<2in. Wg.	>2in. Wg.		
OUTDOORS	A	A	A	A
UNCONDITIONED SPACES	B	A	B	B
CONDITIONED SPACES	C	B	B	B
(CONCEALED DUCTWORK) CONDITIONED SPACES (EXPOSED DUCTWORK)	A	A	B	B

5. HANGERS FOR DUCTS UP TO 18" IN WIDTH OR DIAMETER SHALL BE PLACED ON NOT MORE THAN 8 FOOT CENTERS. DUCTS 19" AND OVER IN WIDTH OR DIAMETER SHALL BE SUPPORTED ON NOT MORE THAN 4 FOOT CENTERS. DUCT HANGERS SHALL BE CONSTRUCTED OF GALVANIZED BAND IRON 1–1/8" FOR DUCTS UP TO 36" IN WIDTH OR DIAMETER. HANGERS SHALL EXTEND DOWN SIDES AND A MINIMUM OF 1" UNDER RECTANGULAR DUCTS, AND WRAP COMPLETELY AROUND ROUND DUCTS. ALL DUCTS SHALL BE RIGIDLY SUPPORTED.
6. ALL DUCTWORK SHALL BE CLEANED PRIOR TO THE INSTALLATION OF CEILING, DIFFUSERS AND GRILLES. OPERATE FANS TO BLOW OUT DUCTWORK.
7. RECTANGULAR LOW–PRESSURE SUPPLY AND RETURN AIR DUCTWORK SHALL BE LINED WITH 1" FACED FIBERGLASS INSULATION SECURELY BUTTONED OR LAPPED AND SEALED. INSULATION SHALL BE 1–1/2 POUND DENSITY.
   INSULATION MANUFACTURERS:
   A. JOHNS MANVILLE INSULATIONS.
   B. CERTAINTEED
   C. KNAUF
   D. OWENS–CORNING
   E. SHULLER INTERNATIONAL
   F. ARMSTRONG AP ARMAFLEX
   G. ADA COMPLIANT FIXTURES:
      I. TRUEBRO
      II. PLUMBEREX PRO–2000
      III. MCGUIRE PROWRAP
8. DUCT DIMENSIONS SHOWN ON DRAWINGS ARE INSIDE CLEAR AREA AND SHALL BE INCREASED TO ACCOMMODATE INSULATION. DUCT LINER TO BE BY KNAUF GmbH, JOHNS–MANVILLE OR SCHULLER INTERNATIONAL.
9. DUCTWORK FOR EVAPORATIVE COOLERS AND EVAPORATIVELY COOLED MAKE–UP AIR UNITS SHALL BE FABRICATED FROM ALUMINUM SHEETS. ALL SEAMS SHALL BE AIRTIGHT. THE CONSTRUCTION OF ALL DUCTWORK, INCLUDING GAUGES OF METAL, BRACING, LAYOUT, ETC. SHALL BE IN ACCORDANCE WITH SMACNA.

MECHANICAL SPECIFICATIONS

15891 – DUCTWORK ACCESSORIES

1. FLEXIBLE DUCTWORK:
   THE FINAL 5 FOOT CONNECTION TO GRILLES AND DIFFUSERS IN LAY–IN CEILINGS, OR TO FLOOR MOUNTED GRILLES, MAY BE MADE WITH FLEXIBLE DUCT, FLEXMASTER TYPE 5M ONLY. ENDS SHALL BE SEALED.
2. SQUARE/RECTANGULAR ELBOWS SHALL BE PROVIDED WITH TURNING VANES.
3. ALL DUCT BRANCHES AND TAKE–OFFS SHALL BE HIGH–EFFICIENCY TYPES, WITH DUCT MOUNTED BALANCING DAMPERS.
4. PROVIDE FLEXIBLE CONNECTIONS NOT LESS THAN 4" WIDE CONSTRUCTED OF HEAVY, WATERPROOF, WOVEN PLASTIC COATED GLASS FABRIC AT SUPPLY AND RETURN CONNECTIONS TO FURNACES, AIR HANDLING, ROOFTOP, MAKE–UP AIR OR FAN–COIL UNITS. CORNERS SHALL BE SEWN TIGHT. CONNECTIONS SHALL BE 20 OUNCE VENTFABRICS OR EQUAL.
5. DUCT MOUNTED BALANCING DAMPERS SHALL BE USED TO CONTROL SUPPLY, RETURN OR EXHAUST AIR TO EACH DIFFUSER AND GRILLE. AN OPERATING HEAD SHALL BE PLACED ON THE SIDE OF THE DUCT WITH A POSITIVE LOCKING QUADRANT. DAMPERS SHALL BE PROVIDED IN RETURN AND SUPPLY AIR DUCTS WHERE SHOWN ON DRAWINGS. COORDINATE THE LOCATION OF CEILING ACCESS PANELS.
6. PROVIDE CEILING ACCESS DOORS AT ALL LOCATIONS OF BALANCING DAMPERS, VALVES, ETC., WHERE THERE IS NOT A LIFT–OUT TYPE CEILING. ACCESS DOORS SHALL BE HINGED OF METAL CONSTRUCTION WITH SCREWDRIVER LATCHES.

15932 – GRILLES, DIFFUSER AND LOUVERS

1. ALL GRILLES, DIFFUSERS, AND REGISTERS SHALL BE COMPLETE WITH FRAMES AND RUBBER GASKETS. FINISH FOR ALL REGISTERS, DIFFUSERS, AND GRILLES SHALL BE WHITE.
2. MANUFACTURERS:
   A. KRUEGER
   B. TITUS
   C. PRICE
   D. NAILOR
   E. ANEMOSTAT
   F. CARNES
   G. TUTTLE & BAILEY
   H. PRECISION AIR PRODUCTS
   I. METAL–AIRE
   J. J & L
   K. AIROLITE
   L. AMERICAN WARMING & VENTILATION
   M. ARROW UNITED
   N. INDUSTRIAL LOUVERS
   O. LOUVERS & DAMPERS
   P. RUSKIN
   Q. GREENHECK
   R. CESCO
   S. UNITED
   T. C & S
   U. DANIEL
   V. DOWCO
3. COORDINATE THE LOCATIONS OF ALL CEILING DIFFUSERS, REGISTERS, AND GRILLES WITH THE ARCHITECTURAL REFLECTED CEILING PLAN, ELECTRICAL LIGHTING LAYOUT, AND ARCHITECTURAL ELEVATIONS.
4. LOUVERS SHALL HAVE MINIMUM FREE AREA AND MAXIMUM PRESSURE DROP AS LISTED IN THE SCHEDULES. LOUVER SHALL HAVE FRAME AND SILLS COMPATIBLE WITH ADJACENT SUBSTRATE AND FIT ACCURATELY FOR WEATHERPROOF INSTALLATION. LOUVERS SHALL BE COMPLETE WITH ½" MESH ANODIZED ALUMINUM BIRD SCREEN. MANUFACTURER: AIROLITE K6776.

DEFINITIONS

NOTE: ALL DEFINITIONS MAY NOT BE USED.

INDICATED: THE TERM "INDICATED" REFERS TO GRAPHIC REPRESENTATIONS, NOTES, OR SCHEDULES ON THE DRAWINGS, OTHER PARAGRAPHS OR SCHEDULES IN THE SPECIFICATIONS, AND SIMILAR REQUIREMENTS IN THE CONTRACT DOCUMENTS. WHERE TERMS SUCH AS "SHOWN", "NOTED", "SCHEDULED", AND "SPECIFIED" ARE USED, IT IS TO HELP THE READER LOCATE THE REFERENCE, NO LIMITATION ON LOCATION IS INTENDED.

DIRECTED: TERMS SUCH AS "DIRECTED", "REQUESTED", AUTHORIZED", "SELECTED", "APPROVED", "REQUIRED", AND "PERMITTED" MEAN "DIRECTED BY THE ENGINEER", "REQUESTED BY THE ENGINEER", AND SIMILAR PHRASES.

APPROVE: THE TERM "APPROVED", WHERE USED IN CONJUNCTION WITH THE ENGINEER'S ACTION ON THE CONTRACTOR'S SUBMITTALS, APPLICATIONS, AND REQUESTS, IS LIMITED TO THE ENGINEER'S DUTIES AND RESPONSIBILITIES AS STATED IN GENERAL AND SUPPLEMENTARY CONDITIONS.

FURNISH: THE TERM "FURNISH" IS USED TO MEAN "SUPPLY AND DELIVER TO THE PROJECT SITE, READY FOR UNLOADING, UNPACKING, ASSEMBLY, INSTALLATION, AND SIMILAR OPERATIONS."

INSTALL: THE TERM "INSTALL" IS USED TO DESCRIBE OPERATIONS AT PROJECT SITE INCLUDING THE ACTUAL "UNLOADING, UNPACKING, ASSEMBLY, ERECTION, PLACING, ANCHORING, APPLYING, WORKING TO DIMENSION, FINISHING, CURING, PROTECTING, CLEANING, AND SIMILAR OPERATIONS TO MAKE THE ITEM FULLY OPERATIONAL."

PROVIDE: THE TERM "PROVIDE" MEANS "TO FURNISH AND INSTALL, COMPLETE AND READY FOR THE INTENDED USE."

INSTALLER: AN "INSTALLER" IS THE CONTRACTOR OR AN ENTITY ENGAGED BY THE CONTRACTOR, EITHER AS AN EMPLOYEE, SUBCONTRACTOR, OR SUB–SUBCONTRACTOR, FOR PERFORMANCE OF A PARTICULAR CONSTRUCTION ACTIVITY, INCLUDING INSTALLATION, ERECTION, APPLICATION, AND SIMILAR OPERATIONS. INSTALLERS ARE REQUIRED TO BE EXPERIENCED IN THE OPERATIONS THEY ARE ENGAGED TO PERFORM.

MECHANICAL SPECIFICATIONS

15970 – AUTOMATIC TEMPERATURE CONTROL SYSTEM

FURNISH AND INSTALL A COMPLETE ELECTRONIC AUTOMATIC TEMPERATURE CONTROL SYSTEM. CONTROL SYSTEM TO BE BY JOHNSON CONTROLS, SIEMENS, UTAH CONTROLS (TSI), ATKINSON ELECTRONICS (STAEFA). CARRIER AND TEKMAR CONTROLS ARE ALSO ACCEPTABLE, PROVIDED THAT THEIR STANDARD PRODUCTS CAN DO THE CONTROL SEQUENCES. PROVIDE THE FOLLOWING FUNCTIONS:

1. BUILDING HVAC CONTROL SYSTEM:
   A. FURNACE/CONDENSING UNIT SYSTEM:
      PROVIDE WALL MOUNTED THERMOSTATS WITH 2–STAGE HEATING, 1–STAGE COOLING AND NIGHT SETBACK.
   B. UNIT HEATERS:
      MOUNT 24 VOLT TRANSFORMER AT UNIT HEATER AND LOCATE 24 VOLT HEATING THERMOSTAT BELOW UNIT HEATER AT 5 FT ABOVE FLOOR. ON A CALL FOR HEATING, UNIT HEATER FAN TO START UP AND PROVIDE GAS, HOT WATER, OR ELECTRIC HEAT AUTOMATCALLY, UNTIL THE THERMOSTAT SETPOINT HAS BEEN REACHED.
   C. EVAPORATIVE COOLER CONTROL:
      THE EVAPORATIVE COOLER SHALL BE PROVIDED WITH ALL CONTROLS. A MANUAL WALL MOUNTED SWITCH SHALL START THE EVAPORATIVE COOLER AND ASSOCIATED WATER SUPPLY. THE SWITCH SHALL BE INTERLOCKED WITH THE RELIEF AIR DAMPER SO THAT THE DAMPER WILL OPEN WHEN THE EVAPORATIVE COOLER RUNS. PROVIDE TWO WALL MOUNTED SWITCHES, LABELED FOR "EVAPORATIVE COOLER DRAIN" AND " EVAPORATIVE COOLER FILL", AND WIRE TO ELECTRIC SOLENOID VALVES AT EVAPORATIVE COOLER (BELOW ROOF).
   D. TOILET EXHAUST FANS:
      SHALL BE ACTIVATED BY THE TOILET ROOM LIGHT SWITCH, OR MOTION SENSOR (BY ELECTRICAL, DIV. 16). SEE FAN SCHEDULE.
2. VEHICLE BAY EXHAUST FANS:

   EXHAUST FANS SHALL BE CONTROLLED BY CARBON MONOXIDE SENSORS MOUNTED ON THE WALL OR COLUMNAT 5' A.F.F. AS SHOWN ON THE PLANS. PROVIDE AN ELECTRONIC SENSOR WHICH IS VIBRATION AND CORROSION RESISTANT BY MACURCO, INC., SIERRA MONITOR CORP., SENSIDYNE, OR APPROVED EQUAL.

   PROVIDE A MANUFACTURER BUILT SYSTEM CONTROL PANEL INCLUDING DOOR MOUNTED CO SENSOR READOUT, 0–60 MINUTE CRANK TIMER, AND "MANUAL–AUTOMATIC" SWITCH.

   EXHAUST FAN SHALL BE ENERGIZED BY EITHER THE CRANK TIMER OR THE CO SENSOR. IF THE CO CONCENTRATION RISES ABOVE 100 PPM, THE FAN WILL REMAIN ON UNTIL THE CONCENTRATION DROPS BELOW 100 PPM (SET POINT TO BE FIELD ADJUSTABLE TO MEET CONDITIONS).

15990 – TESTING, ADJUSTING, AND BALANCING

1. OBTAIN THE SERVICES OF AN INDEPENDENT TEST AND BALANCE COMPANY TO FULLY BALANCE AND ADJUST AND SET UP THE OPERATION OF THE SYSTEM, IN ACCORDANCE WITH AABC OR NEBB STANDARDS. RECORD ALL DATA AND PROVIDE A WRITTEN REPORT. TEST, ADJUST, BALANCE, AND VERIFY CORRECT OPERATION OF THE FOLLOWING MECHANICAL SYSTEMS:
   SUPPLY AIR SYSTEMS
   RETURN AIR SYSTEMS
   EXHAUST AIR SYSTEMS
   EVAPORATIVE COOLERS
   CO EXHAUST SYSTEMS
   GAS FIRED RADIANT HEATERS
2. TEST & BALANCE COMPANIES:
   A. BTC CO. SALT LAKE CITY, UTAH. (801) 974–5911. BOB CHERRINGTON.
   B. RS ANALYSIS, SALT LAKE CITY, UTAH. (801) 255–5015. DEREK SHUPE.
   C. PAYSON SHEETMETAL, PAYSON, UTAH. (801) 465–3018. DALE BARNETT.
   D. TEST & BALANCE, INC., WEST JORDAN, UTAH. (801) 288–0889. LYLE CAZIER.
   E. DIAMOND TEST & BALANCING. SALT LAKE CITY, UTAH. (801) 282–3480. JIM HALCOMB.
   F. CERTIFIED TEST & BALANCING. SALT LAKE CITY, UTAH. (801) 446–8031. RAY COLEMAN.
   G. DANIS TEST & BALANCE, NEW HARMONY, UTAH. (435) 867–0158. JOE DANIS.
   H. TEMP–CO SERVICES, ST. GEORGE, UTAH. (435) 559–7904. ALLEN WASHBURN.

MECHANICAL SHEET INDEX

SHEET NO	SHEET TITLE
ME001	MECHANICAL SPECIFICATIONS AND SHEET INDEX
ME501	MECHANICAL DETAILS AND GENERAL NOTES
ME502	MECHANICAL DETAILS
ME601	MECHANICAL SCHEDULES
MH101	MAIN FLOOR MECHANICAL PLAN

MHTN ARCHITECTS
MHTN Architects, Inc.
420 East South Temple
Suite 100
Salt Lake City, Utah 84111
TEL 801.595.6700
FAX 801.595.6717
www.mhtn.com

JAMES T. DRESSLAR
ARCHITECT, L.L.C.
387 PARK LANE
MOAB, UTAH 84532
435.259.1155 Phone / Fax

GREAT SALT LAKE MARINA MAINTENANCE BUILDING
DFCM # 10029510
13312 WEST 1075 SOUTH
MAGNA, UTAH 84044

SEAL

LICENSED PROFESSIONAL ENGINEER No. 181527 ROBERT L. PAUL STATE OF UTAH 9/22/10

MHTN PROJECT NO. 2010546
DRAWN BY: CHECKED BY:

ISSUED:

NO.	DATE	DESCRIPTION

REVISION DATE:

NO.	DATE	DESCRIPTION
1	9-NOV-2010	ADD RESTROOM

SHEET NAME
MECHANICAL COVER SHEET
CONSTRUCTION DOCUMENTS
SEPTEMBER 2, 2010

SHEET NUMBER
ME001

File Name: P:\2010\20100339\1Drawings\3Sheet\39ME001.dwg Last Plotted: 2010/12/07 @ 1:44 PM By: lrb

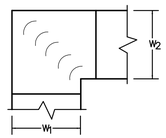

1. ALL VANED ELBOWS SHALL BE CONSTRUCTED AND INSTALLED AS DETAILED BY SMACNA.
2. WHEN W_1 DOES NOT EQUAL W_2 VANE SHALL BE SINGLE VANE TYPE REGARDLESS OF W DIMENSION.
3. ALL SINGLE VANES SHALL HAVE A 2 INCH RADIUS, 1½ INCH MAXIMUM SPACE BETWEEN VANES AND A ¾INCH TRAILING EDGE.
4. WHEN W_1 EQUALS W_2 AND W_1 IS GREATER THAN 20 INCHES VANES SHALL BE DOUBLE VANE TYPE.

13 SQUARE VANED ELBOWS

SCALE: NOT TO SCALE

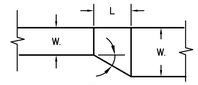

ECCENTRIC TRANSITION:
MAX. 30° ANGLE
EXCEPT 45° IS PERMITTED AT ROUND TO FLAT OVAL
L (MIN.) = (W.

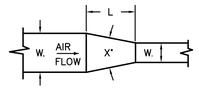

CONVERGING CONCENTRIC TRANSITION:
X° = 60° MAX.
L (MIN.) = (W.

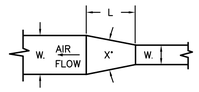

DIVERGING CONCENTRIC TRANSITION:
X° = 45° MAX.
L (MIN.) = (W.

NOTE: UNLESS OTHERWISE INDICATED ON PLANS, MAXIMUM ANGLES SHOWN SHALL APPLY.

9 DUCT TRANSITIONS

SCALE: NOT TO SCALE

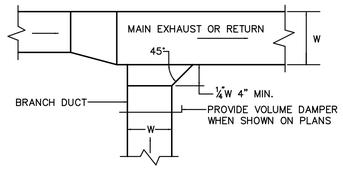

6 EXHAUST AND/OR RETURN BRANCH DUCT

SCALE: NOT TO SCALE

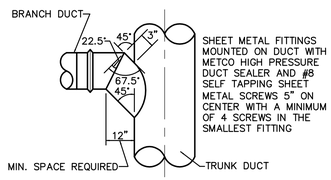

5 45°–90° TEE FITTING

SCALE: NOT TO SCALE

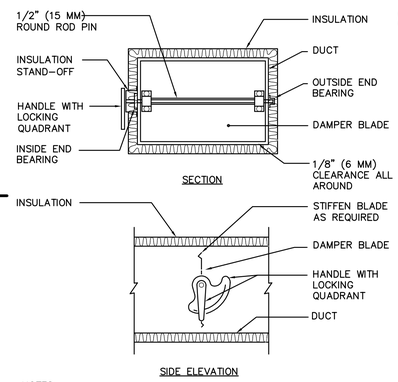

NOTES:

1. DELETE INSULATION STAND–OFF ON DUCTWORK WITHOUT EXTERIOR INSULATION.
2. DETAIL SHOWS SINGLE BLADE DAMPER. DAMPER INSTALLATION SHALL BE SIMILAR FOR MULTI–BLADE DAMPERS & ROUND DAMPERS.

4 VOLUME DAMPER

SCALE: NOT TO SCALE

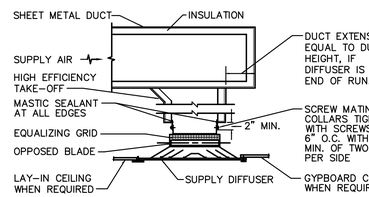

12 CEILING DIFFUSER

SCALE: NOT TO SCALE

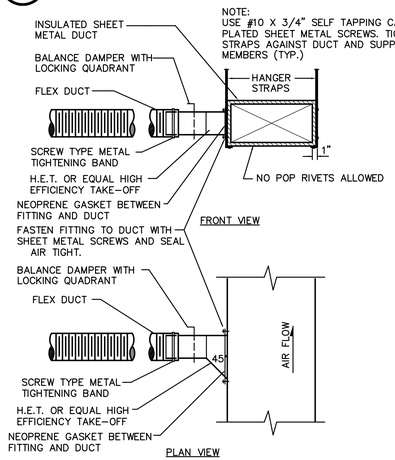

11 FLEX DUCT WITH HIGH EFFICIENCY TAKE OFF

SCALE: NOT TO SCALE

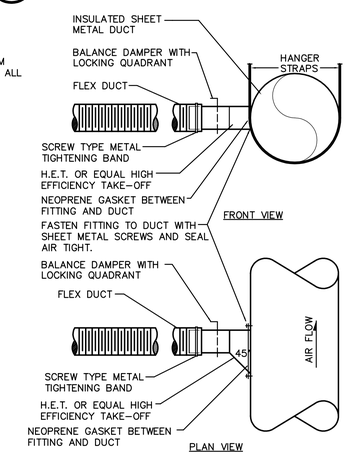

NOTE:
USE #10 X 3/4" SELF TAPPING CADMIUM PLATED SHEET METAL SCREWS. TIGHTEN ALL STRAPS AGAINST DUCT AND SUPPORT MEMBERS (TYP.)

8 FLEX DUCT WITH HIGH EFFICIENCY TAKE OFF

SCALE: NOT TO SCALE

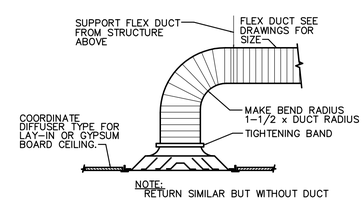

10 DIFFUSER CONNECTION

SCALE: NOT TO SCALE

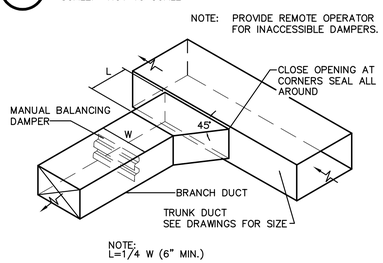

7 BRANCH DUCT TAKE–OFF

SCALE: NOT TO SCALE

GENERAL MECHANICAL NOTES (CONT.)

22. PREPARE 6 COPIES OF SUBMITTALS IN AN INDEXED, LABELED FOLDER CONTAINING FULL PERFORMANCE, MATERIAL AND INSTALLATION INFORMATION ABOUT ALL EQUIPMENT, PIPING, COMPONENTS AND ACCESSORIES TO BE USED. SUBMITTALS WILL BE CHECKED AT MOST TWICE. TIME SPENT ON SUBSEQUENT SUBMITTALS WILL BE BILLED TO THE CONTRACTOR BY THE ENGINEER AT ITS CURRENT HOURLY RATES.
23. TWO OPERATING AND MAINTENANCE MANUALS SHALL BE PROVIDED IN HARD BACK LOOSE LEAF BINDERS. MANUALS SHALL CONTAIN PRODUCT CUT SHEETS AND OPERATING AND MAINTENANCE INSTRUCTIONS ON ALL EQUIPMENT, ACCESSORIES, FIXTURES, VALVES, ETC., PROVIDED FOR THE PROJECT.
24. UPON COMPLETION OF THE WORK, REMOVE ALL SURPLUS MATERIALS AND RUBBISH. MAKE ALL REQUIRED PATCHING AND REPAIRS OF OTHER TRADES' WORK DAMAGED BY THE DIVISION 15 CONTRACTOR, AND LEAVE THE PREMISES IN A CLEAN, ORDERLY CONDITION.
25. THE DIVISION 15 CONTRACTOR SHALL OPERATE THE SYSTEM AND DEMONSTRATE ALL ASPECTS TO THE ENGINEER AND/OR OWNER, TO PROVE ITS OPERATION. ALL FILTERS USED DURING CONSTRUCTION SHALL BE REPLACED PRIOR TO THE TEST RUN PERIOD.
26. THE DIVISION 15 CONTRACTOR SHALL GUARANTEE THE HVAC SYSTEM FOR A PERIOD OF ONE YEAR FROM THE DATE OF SUBSTANTIAL COMPLETION.
27. THE DIVISION 15 CONTRACTOR SHALL, DURING CONSTRUCTION, MAINTAIN A SET OF AS–BUILT REDLINED RECORD DRAWINGS AT THE PROJECT SITE. ALL CHANGES IN LAYOUT, ROUTING, EQUIPMENT, COMPONENTS, AND ACCESSORIES SHALL BE RECORDED. THESE REDLINES SHALL BE GIVEN TO THE ARCHITECT/ENGINEER AFTER THE FINAL INSPECTION.

METAL FASTENERS :
OMARK INSUL–PINS, DURA DYNE FASTENERS OR GRIP NAILS. GRIP NAILS SHALL BE INSTALLED BY "GRIP NAIL AIR HAMMER" OR BY AUTOMATIC FASTENER EQUIP.

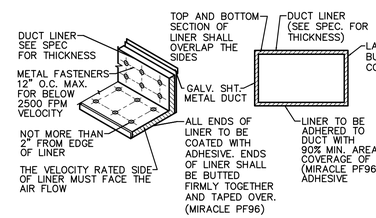

3 DUCT LINER

SCALE: NOT TO SCALE

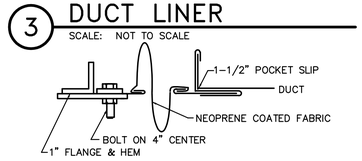

2 FLEX CONNECTION

SCALE: NOT TO SCALE

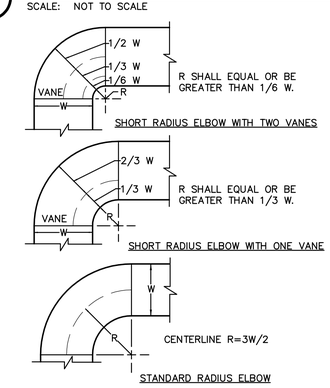

1. THE INTERIOR SURFACE OF ALL RADIUS ELBOWS SHALL BE MADE ROUND.
2. ALL STANDARD RADIUS ELBOWS SHOWN ON DRAWINGS MAY BE MADE SHORT RADIUS ELBOWS. ALL SHORT RADIUS ELBOWS SHALL HAVE VANES. VANES SHALL BE CONSTRUCTED, SUPPORTED AND FASTENED AS RECOMMENDED BY SMACNA.

1 RADIUS ELBOWS

SCALE: NOT TO SCALE

GENERAL MECHANICAL NOTES

1. PROVIDE ALL LABOR, MATERIALS, AND EQUIPMENT NECESSARY TO CONSTRUCT A COMPLETE, OPERATIONAL HVAC SYSTEM FOR THE ENTIRE PROJECT AS SHOWN ON THESE DRAWINGS, INCLUDING ALL NECESSARY FEES AND PERMITS.
2. THE ENTIRE INSTALLATION SHALL CONFORM TO THE REQUIREMENTS OF THE MOST RECENTLY ADOPTED BUILDING CODE, MECHANICAL CODE, PLUMBING CODE, ELECTRICAL CODE, AND ALL OTHER APPLICABLE CITY, COUNTY, STATE, AND FEDERAL CODES AND REGULATIONS IN EFFECT AT THE DATE OF THE BID. CONFORM TO ANY CODES, RULES, REGULATIONS AND REQUIREMENTS THAT THE PROJECT OWNER HAS.
3. PRIOR TO FABRICATION AND INSTALLATION, COORDINATE THE INSTALLATION OF ALL HVAC PIPING, DUCTWORK, AND EQUIPMENT WITH PLUMBING PIPING, PLUMBING EQUIPMENT, REFRIGERATION TRENCHES AND PIPING, FIRE PROTECTION PIPING AND ALL OTHER TRADES INCLUDING BUT NOT LIMITED TO: THE MECHANICAL CONTRACTOR, REFRIGERATION CONTRACTOR, ELECTRICAL CONTRACTOR, FIRE PROTECTION CONTRACTOR, GENERAL CONTRACTOR, AND ANY CONTRACTOR HIRED DIRECTLY BY THE OWNER. WHERE CONFLICTS MAY OCCUR, THEY SHALL BE RESOLVED PRIOR TO INSTALLATION.
4. THE DRAWINGS SHOW THE GENERAL DESIGN, ARRANGEMENTS AND THE EXTENT OF THE SYSTEM. IT SHALL BE THE WORK OF THE CONTRACTOR TO MAKE SUCH SLIGHT ALTERATIONS AS MAY BE NECESSARY TO MAKE THE SYSTEM COMPLETE AND OPERATIONAL IN ACCORDANCE WITH THE DESIGN INTENT. MAJOR DEVIATIONS SUCH AS CHANGES IN COMPONENT SIZES, WEIGHTS, QUANTITIES, OR MATERIAL REQUIRE PRIOR APPROVAL BY THE CONSULTING ENGINEER.
5. ALL HVAC INFORMATION IS NOT SHOWN ON THE HVAC DRAWINGS. THE CONTRACTOR SHALL BE RESPONSIBLE FOR COORDINATING INFORMATION ON ALL OTHER CONSTRUCTION DOCUMENTS INCLUDING ARCHITECTURAL, STRUCTURAL, MECHANICAL, ELECTRICAL AND REFRIGERATION DRAWINGS.
6. THE WORKING DRAWINGS ARE DIAGRAMMATIC. BECAUSE OF THE SMALL SCALE OF THE DRAWINGS, THEY DO NOT SHOW EVERY OFFSET, BEND OR ELBOW NECESSARY FOR THE COMPLETE INSTALLATION IN THE SPACE PROVIDED. ALL LOCATIONS FOR HVAC EQUIPMENT AND PIPING SHALL BE CHECKED AND COORDINATED WITH THE ARCHITECTURAL, MECHANICAL, STRUCTURAL AND ELECTRICAL DRAWINGS.
7. SPACE ABOVE ALL CEILINGS IS LIMITED. CAREFUL COORDINATION IS REQUIRED WITH ALL TRADES BEFORE ANY PIPE, DUCT, OR EQUIPMENT IS ORDERED AND/OR INSTALLED. ANY CONFLICTS AND/OR CHANGES FOUND DURING INSTALLATION THAT RESULT FROM LACK OF COORDINATION BY THE CONTRACTORS DURING THE SHOP DRAWING PROCESS ARE THE RESPONSIBILITY OF THE CONTRACTOR.
8. THE DRAWINGS AND SPECIFICATIONS HAVE BEEN PREPARED TO SUPPLEMENT EACH OTHER AND THEY SHALL BE INTERPRETED AS AN INTEGRAL UNIT WITH THE ITEMS SHOWN ON ONE AND NOT THE OTHER BEING FURNISHED AND INSTALLED AS THOUGH SHOWN AND CALLED OUT IN BOTH.
9. DETAILS: THE CONTRACTOR IS RESPONSIBLE TO REVIEW AND USE WHERE APPROPRIATE ALL OF THE MECHANICAL DETAILS SHOWN ON THE DRAWINGS. DETAILS MAY OR MAY NOT BE CALLED OUT ON THE DRAWINGS WITH SYMBOLS OR KEYED NOTES. ANY CHANGES RESULTING FROM FAILURE TO INSTALL THE MECHANICAL SYSTEM WITHOUT USING THE INCLUDED DETAILS IS THE RESPONSIBILITY OF THE CONTRACTOR.
10. PIPING SCHEMATICS: THE CONTRACTOR IS RESPONSIBLE TO REVIEW THE PIPING SCHEMATICS INCLUDED WITH THE DRAWINGS FOR PIPING CONNECTIONS TO ALL MECHANICAL EQUIPMENT. THE PIPING SCHEMATICS SHOW DETAILED CONNECTIONS INCLUDING NECESSARY VALVES, FITTINGS, PRESSURE AND TEMPERATURE GAUGES, ETC., THAT ARE NOT SHOWN ON THE PIPING PLANS. ANY CHANGES RESULTING FROM FAILURE TO INSTALL THE MECHANICAL SYSTEM WITHOUT USING THE INCLUDED PIPING SCHEMATICS IS THE RESPONSIBILITY OF THE CONTRACTOR.
11. THE STRUCTURE SHOWN ON ALL DETAILS MAY OR MAY NOT PERTAIN TO A PORTION OR ANY PORTION OF THE BUILDING. COORDINATE MOUNTING REQUIREMENTS WITH ARCHITECTURAL AND STRUCTURAL DRAWINGS.
12. ANY PART OF THIS INSTALLATION THAT FAILS, IS UNFIT, OR BECOMES DAMAGED DURING CONSTRUCTION SHALL BE REPAIRED OR REPLACED BY THE CONTRACTOR AT NO ADDITIONAL COST TO THE OWNER.
13. ALL EQUIPMENT SHALL PROVIDE THE SCHEDULED PERFORMANCE AT THE SITE ALTITUDE.
14. EQUIPMENT MODEL NUMBERS IN SCHEDULES ARE SHOWN TO ESTABLISH THE TYPE OF PRODUCT THAT HAS TO BE USED. THE SELECTED PRODUCT MUST MEET THE SCHEDULED PERFORMANCE DATA. THIS MAY REQUIRE A DIFFERENT MODEL NUMBER TO THAT SCHEDULED.
15. ALL EQUIPMENT SHALL BE INSTALLED IN STRICT ACCORDANCE WITH THE EQUIPMENT MANUFACTURER'S RECOMMENDATIONS. PROVIDE ALL FITTINGS, TRANSITIONS, VALVES, DAMPERS, AND OTHER DEVICES AND ACCESSORIES REQUIRED FOR A COMPLETE, WORKABLE INSTALLATION.
16. THE DIVISION 15 CONTRACTOR SHALL FURNISH ALL REQUIRED MOTORS. ALL MOTOR STARTING EQUIPMENT, WHEN NOT A PART OF THE EQUIPMENT, WILL BE FURNISHED BY THE ELECTRICAL CONTRACTOR.
17. THE CONTRACTOR IS RESPONSIBLE FOR HVAC EQUIPMENT CHECK–IN, SAFEKEEPING, AND DAMAGE.
18. DO NOT ROUTE DUCTS AND PIPES ABOVE ELECTRICAL PANELS. ALL ELECTRICAL PANELS MUST HAVE CLEAR ACCESS SPACE IN FRONT OF PANEL 4'–0" DEEP AND 6'–6" HIGH.
19. COORDINATE EXACT LOCATIONS OF CEILING DIFFUSERS AND GRILLES WITH ARCHITECTURAL REFLECTED CEILING PLAN.
20. DO NOT USE STEEL ROOF DECK TO SUPPORT LOADS FROM PIPING, DUCTWORK OR EQUIPMENT. HANGER LOADS LESS THAN 50 LBS. MAY BE HUNG FROM THE STEEL ROOF DECK IN CASES WHERE HANGING FROM THE STEEL ROOF DECK CANNOT BE AVOIDED. THE ATTACHMENT METHOD MUST DISTRIBUTE THE LOAD ACROSS THE DECK AS APPROVED BY THE STRUCTURAL ENGINEER.
21. PROPERLY LUBRICATE ALL PIECES OF EQUIPMENT BEFORE TURNING THE SYSTEM OVER TO THE OWNER.

MHTN ARCHITECTS
MHTN Architects, Inc.
420 East South Temple
Suite 100
Salt Lake City, Utah 84111
TEL 801.595.6700
FAX 801.595.6717
www.mhtn.com

JAMES T. DRESSLAR
ARCHITECT, L.L.C.
387 PARK LANE
MOAB, UTAH 84532
435.259.1155 PHONE / FAX

GREAT SALT LAKE MARINA MAINTENANCE BUILDING

DFCM # 10029510

13312 WEST 1075 SOUTH
MAGNA, UTAH 84044

SEAL

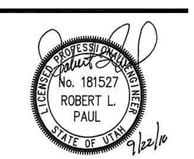

MHTN PROJECT NO. 2010546

DRAWN BY: CHECKED BY:

ISSUED:

NO.	DATE	DESCRIPTION

REVISION DATE:

NO.	DATE	DESCRIPTION
1	9-NOV-2010	ADD RESTROOM

SHEET NAME

MECHANICAL DETAIL SHEET

CONSTRUCTION DOCUMENTS
SEPTEMBER 2, 2010

SHEET NUMBER

ME501

File Name: P:\2010\20100339\1Drawings\3Sheet\39ME501.dwg Last Plotted: 2010/12/07 @ 1:44 PM By: lrb

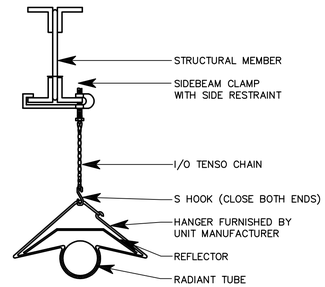

INFRARED HEATER SUPPORT
SCALE: NTS

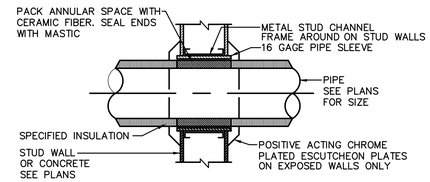

7 PIPE THROUGH WALL
SCALE: NOT TO SCALE

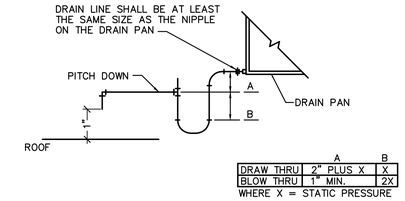

	A	B
DRAW THRU	2" PLUS X	X
BLOW THRU	1" MIN.	2X

WHERE X = STATIC PRESSURE

3 AIR CONDITIONING UNIT DRAIN TRAP
SCALE: NOT TO SCALE

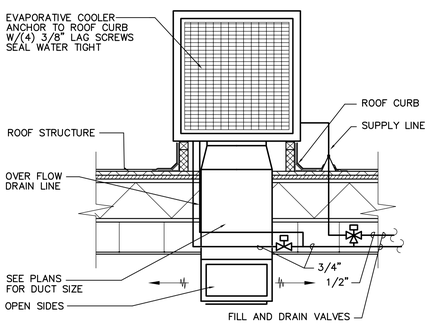

12 EVAPORATIVE COOLER DETAIL
SCALE: NOT TO SCALE

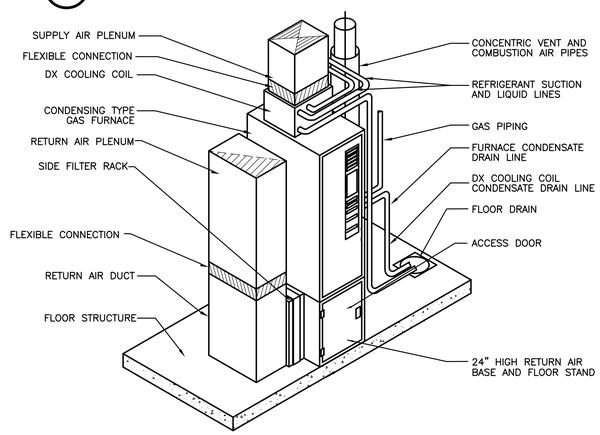

9 UP FLOW FURNACE DETAIL
SCALE: NOT TO SCALE

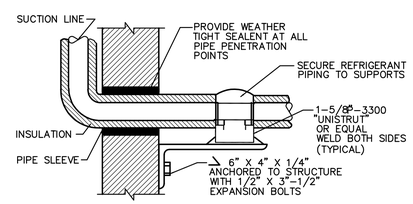

6 REFRIGERANT PIPE SUPPORT AND PENETRATION AT WALL
SCALE: NOT TO SCALE

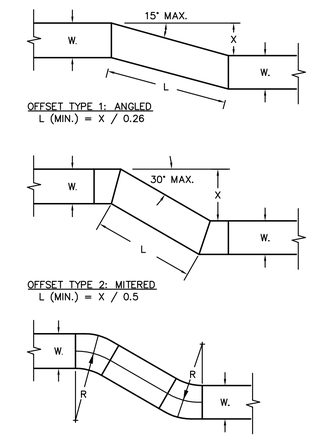

NOTES:
1. UNLESS OTHERWISE INDICATED ON PLANS, MAXIMUM ANGLES SHOWN SHALL APPLY.
2. ALL OFFSETS SHOWN ON DRAWINGS MADE BE MADE WITH ANY OF THE 3 OFFSET TYPES ABOVE.

2 DUCT OFFSETS
SCALE: NOT TO SCALE

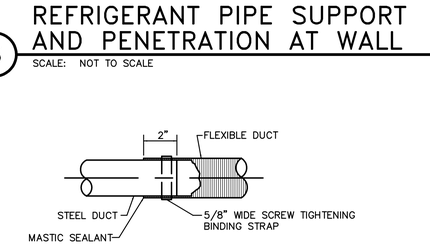

5 FLEXIBLE DUCT CONNECTION
SCALE: NOT TO SCALE

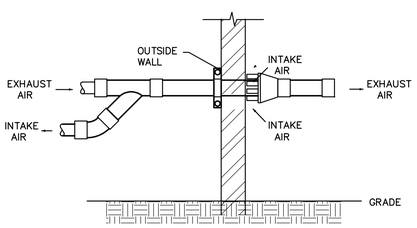

CONCENTRIC WALL TERMINATION FOR CONDENSING FURNACES
11
SCALE: NOT TO SCALE

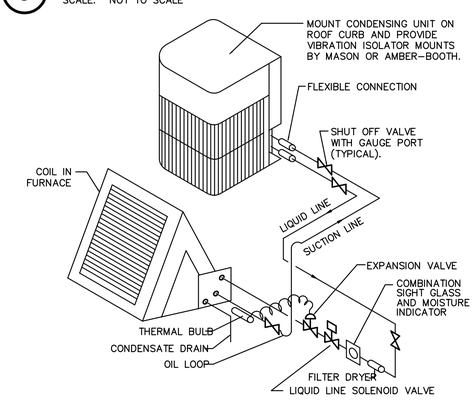

8 TYPICAL REFRIGERANT SCHEMATIC
SCALE: NOT TO SCALE

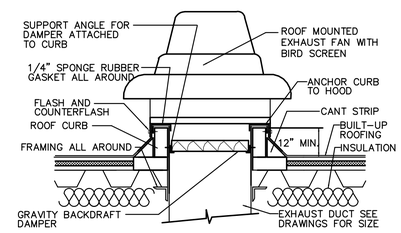

4 ROOF MOUNTED EXHAUST FAN
SCALE: NOT TO SCALE

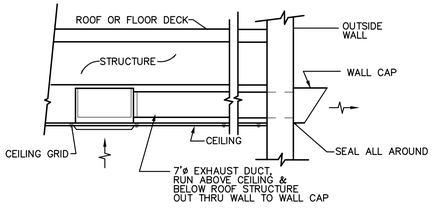

1 CEILING EXHAUST FAN
SCALE: NOT TO SCALE

MHTN ARCHITECTS
MHTN Architects, Inc.
420 East South Temple
Suite 100
Salt Lake City, Utah 84111
TEL 801.595.6700
FAX 801.595.6717
www.mhtn.com

JAMES T. DRESSLAR ARCHITECT, L.L.C.
387 PARK LANE
MOAB, UTAH 84532
435.259.1155 Phone / Fax

GREAT SALT LAKE MARINA MAINTENANCE BUILDING
DFCM # 10029510

13312 WEST 1075 SOUTH
MAGNA, UTAH 84044

SEAL

MHTN PROJECT NO: 2010546

DRAWN BY: CHECKED BY:

ISSUED:

NO.	DATE	DESCRIPTION

REVISION DATE:

NO.	DATE	DESCRIPTION
1	9-NOV-2010	ADD RESTROOM

SHEET NAME

MECHANICAL DETAIL SHEET
CONSTRUCTION DOCUMENTS
SEPTEMBER 2, 2010

SHEET NUMBER

ME502

File Name: P:\2010\20100339\1Drawings\3Sheet\39ME502.dwg Last Plotted: 2010/12/07 @ 1:43 PM By: lrb

GRILLES AND DIFFUSERS

SYM	DESCRIPTION	SIZE	MAX CFM	MAX NC
CD-1	LOUVERED FACE 4-CONE 4 WAY CEILING DIFFUSERS. FRAME SHALL BE FOR SURFACE OR LAY-IN MOUNTING AS REQUIRED BY CEILING TYPE. LAY-IN FRAMES SHALL BE 24" x 24", 24" x 12" OR 12" x 12" AS REQUIRED TO FIT CEILING TILE SPACE AVAILABLE. PROVIDE ROUND NECK ADAPTER.	6 x 6 8 x 8 9 x 9	125 220 250	30
RG-1	PERFORATED FACE RETURN AIR UNIT, REMOVABLE FACE & CORE. FRAME SHALL BE FOR SURFACE OR LAY-IN MOUNTING AS REQUIRED BY CEILING TYPE. LAY-IN FRAMES SHALL BE 24" x 24", 24" x 12" OR 12" x 12" AS REQUIRED TO FIT CEILING TILE SPACE AVAILABLE. AIR QUANTITY SHALL MATCH ROOM SUPPLY OR EXHAUST AIR QUANTITY.	10 x 10	350	30
L-1	WALL LOUVER. AIROLITE MODEL K6776. 500 FPM THROUGH FREE AREA.	18" X 12"	600	N/A
L-2	WALL LOUVER. AIROLITE MODEL K6776. 500 FPM THROUGH FREE AREA.	48" X 48"	3400	N/A
SWG-1	SIDEWALL SUPPLY GRILLE. DOUBLE DEFLECTION WITH HORIZONTAL FRONT BLADES. 3/4" BLADE SPACING.	8" X 6"	100	N/A

EVAPORATIVE COOLER SCHEDULE

SYMBOL	MANUFACTURER	MODEL NO.	LOCATION	AIR SUPPLY FAN CAPACITY		ELECTRICAL					OPERATING WEIGHT (LBS)	COMMENTS
						MOTOR						
				CFM	ESP (WG)	HP	RPM	VOLT	PHASE	HZ		
EC-1	CHAMPION	75/85 DD	SERVICE BAYS	6,500	0.05	1.0	–	208	3	60	450	(1) (2)
EC-2	CHAMPION	75/85 DD	SERVICE BAYS	6,500	0.05	1.0	–	208	3	60	450	(1) (2)

1. OPERATING CONDITIONS AT SEA LEVEL
2. MODEL 110467-1 WATER PUMP, 115 V., 1 PH., 80 WATTS.

GAS FIRED FURNACE SCHEDULE

SYMBOL	MANUFACTURER AND MODEL NO.	TYPE	OUTPUT BTU/HR. AT JOBSITE ALTITUDE	INPUT BTU/HR.	CFM	FLUE SIZE	GAS CONN.	EXT. S.P. DROP	ELECTRICAL				% AFUE	ACCESSORIES AND REMARKS
									AMPACITY	VOLT	PHASE	Hz.		
F-1	CARRIER 58MTB 060-12	VERTICAL	37,000	39,000	920	1-1/2"	1/2"	0.6	12	120	1	60	93.0%	WITH EVAPORATOR COIL AND CONCENTRIC VENT

EXHAUST FAN SCHEDULE

SYMBOL	MANUFACTURER AND MODEL NO.	TYPE	FAN			ELECTRICAL					OPERATING WEIGHT (LBS.)	CONTROL METHOD	ACCESSORIES AND REMARKS
						MOTOR							
			CFM	RPM	SP "WG	H.P.	RPM	VOLT	PHASE	Hz.			
EF-1	BROAN L200	CEILING	200	–	0.25	127 W	740	120	1	60	25	ALWAYS ON	WALL CAP
EF-2	BROAN L100	CEILING	100	–	0.25	76 W	780	120	1	60	15	LIGHT SWITCH	WALL CAP
EF-2A	BROAN L100	CEILING	100	–	0.25	76 W	780	120	1	60	15	LIGHT SWITCH	WALL CAP
EF-3	BROAN L100	CEILING	100	–	0.25	76 W	780	120	1	60	15	ALWAYS ON	WALL CAP
EF-4	COOK 210ACW7B	ROOF	5100	935	0.25	1 HP	1450	208	3	60	236	WALL SWITCH	ROOF DOWN DISCHARGE BELT DRIVE INTERLOCK WITH EVAP. COOLER
EF-5	COOK 210ACW5B	ROOF	3400	800	0.25	1/2 HP	1450	120	1	60	123	C.O. CONTROL	ROOF DOWN DISCHARGE BELT DRIVE INTERLOCK WITH LOUVER AND C.O. SENSOR

1

CONDENSING UNIT SCHEDULE

SYMBOL	MANUFACTURER AND MODEL NO.	REFRIGERANT	CAPACITY @ JOBSITE CONDITIONS BTUH TOTAL COOLING	VOLTS/ PHASE	COMPRESSOR RATED LOAD AMPS (RLA)	MINIMUM CIRCUIT AMPACITY (MCA)	LIQUID LINE CONN. (INCHES)	SUCTION LINE CONN. (INCHES)	EVAP. COIL SYMBOL	OPERATING WEIGHT (LBS.)	ACCESSORIES AND REMARKS
CU-1	CARRIER 24APA5-42	R410A	37,000	120/1	18	24	3/8	7/8	F-1	320	

1. MOUNT CONDENSING UNIT ON 12" HIGH ROOF CURB.

GAS FIRED RADIANT HEATER SCHEDULE

SYMBOL	MANUFACTURER	MODEL	FUEL	INPUT MBH	LENGTH (FT.)	FLUE SIZE	GAS PRESSURE	CLEARANCE REQUIRMENTS BELOW (IN.)	VOLTS/ PHASE/ CYCLE	COMMENTS
RAD-1	CORAYVAC	B-10	PROPANE	100	60	4"	11 INCHES	48	115/1/60	114 LBS.
RAD-2	CORAYVAC	B-10	PROPANE	100	50	4"	11 INCHES	48	115/1/60	114 LBS.
RAD-3	CORAYVAC	B-10	PROPANE	100	60	4"	11 INCHES	48	115/1/60	114 LBS.

(1) CONDITIONS AT SITE ALTITUDE.
(2) PROVIDE SYSTEM WITH EP201 VACUUM PUMP: 120 V/1 PH/60 HZ, 6.6 FLA. WEIGHT 115 LBS. ONE PUMP SERVES ALL THREE RADIANT BURNERS.
(3) PROVIDE RAD-2 WITH DAMPER COUPLING AS REQUIRED BY MANUFACTURER'S REQUIREMENTS.

MHTN ARCHITECTS
MHTN Architects, Inc.
420 East South Temple
Suite 100
Salt Lake City, Utah 84111
TEL 801.595.6700
FAX 801.595.6717
www.mhtn.com

JAMES T. DRESSLAR
ARCHITECT, L.L.C.
387 PARK LANE
HOAB, UTAH 84532
435.259.1155 PHONE / FAX

GREAT SALT LAKE
MARINA MAINTENANCE BUILDING
DFCM # 10029510

13312 WEST 1075 SOUTH
MAGNA, UTAH 84044

SEAL

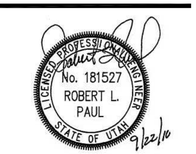

MHTN PROJECT NO. 2010546

DRAWN BY: CHECKED BY:

ISSUED:

NO.	DATE	DESCRIPTION

REVISION DATE:

NO.	DATE	DESCRIPTION
1	9-NOV-2010	ADD RESTROOM

SHEET NAME

MECHANICAL SCHEDULES

CONSTRUCTION DOCUMENTS
SEPTEMBER 2, 2010

SHEET NUMBER

ME601

File Name: P:\2010\20100339\1Drawings\3Sheet\39ME601.dwg Last Plotted: 2010/12/07 @ 1:43 PM By: lrb

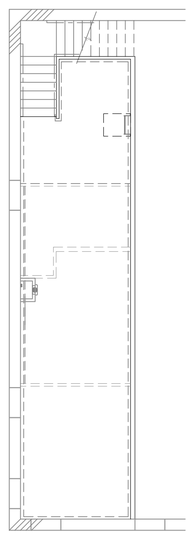

2 MEZZANINE MECHANICAL PLAN
SCALE: 1/8" = 1'-0"

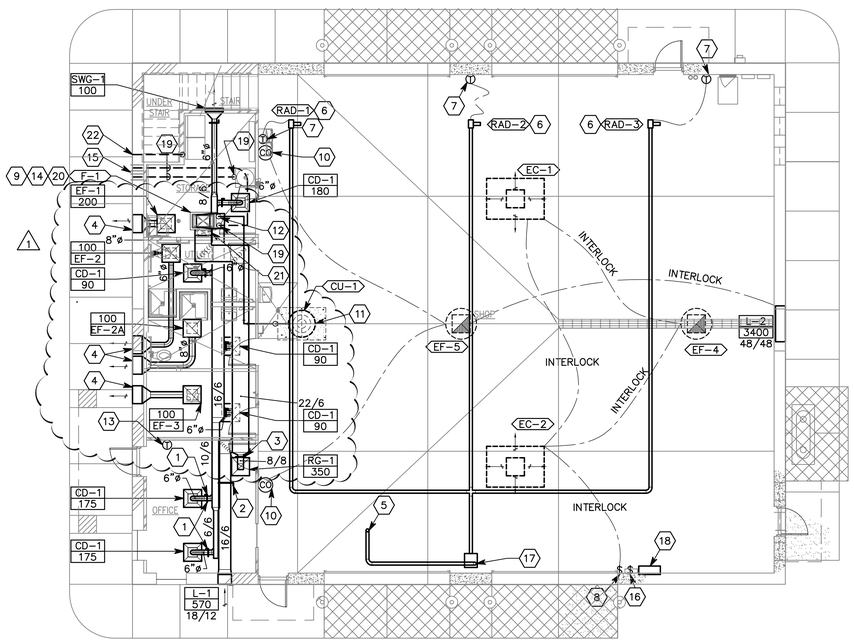

1 MECHANICAL PLAN
SCALE: 1/8" = 1'-0"

SHEET KEYNOTES

1. BALANCING DAMPER (TYPICAL). SET TO OBTAIN CFM SHOWN.
2. SET OUTSIDE AIR DAMPER TO 570 CFM.
3. SET RETURN AIR DAMPER TO 350 CFM.
4. PROVIDE MANUFACTURER'S STANDARD WALL EXHAUST CAP WITH BIRD SCREEN.
5. RUN TYPE-B GAS VENT THROUGH ROOF PER SPECIFICATIONS AND DETAILS. OFFSET VENT TO BE 5 FT. FROM PARAPET WELL. VENT TO BE A MINIMUM OF 10' FROM OUTSIDE AIR INTAKES.
6. MOUNT BOTTOM OF UNIT 6" ABOVE TOP OF OPEN DOOR.
7. LOCATE HEATING THERMOSTAT AT 5 FT. ABOVE FLOOR.
8. LOCATE WALL SWITCH AT 5 FT. ABOVE FLOOR. SWITCH TO ACTIVATE EVAPORATIVE COOLER AND EXHAUST FAN EF-4.
9. TRANSITION FROM 16/18 SUPPLY CONNECTION TO COOLING COIL AND FROM COOLING COIL TO 20/6 DUCT. PROVIDE TURNING VANES IN ELBOW ABOVE COOLING COIL.
10. MOUNT CO SENSOR ON WALL AND CONNECT TO EXHAUST FAN EF-5 AND TO LOUVER L-2.
11. LOCATE CONDENSING UNIT ON ROOF WITH 12" HIGH ROOF CURB AND RUN REFRIGERANT LINES ON UNISTRUT UP THROUGH MEZZANINE THROUGH ROOF. RUN PER SPECIFICATIONS AND DETAIL 8 ON DRAWING ME502. CONNECT TO FURNACE COOLING COIL PER DETAIL 8 AND PER MANUFACTURER'S REQUIREMENTS.
12. RUN REFRIGERANT LINES UP AND COORDINATE WITH DUCTING IN THIS AREA.
13. LOCATE THERMOSTAT ON WALL AND CONNECT TO FURNACE F-1.
14. MOUNT FURNACE ON 24" HIGH RETURN AIR FLOOR STAND. CONSTRUCT FLOOR STAND OF CHANNEL FRAMING WITH ACCESS DOOR. MOUNT ASSEMBLY ON A 4" CONCRETE C.I.P. HOUSEKEEPING PAD.
15. CONCENTRIC VENTS INLET/EXHAUST. LOCATE HIGH ON SIDEWALL.
16. EVAPORATIVE COOLER FILL/DRAIN SWITCH.
17. RADIANT HEAT VACUUM PUMP. INSTALL PER MANUFACTURER'S REQUIREMENTS.
18. C.O. SENSOR CONTROL PANEL.
19. RUN CONCENTRIC VENT LINES TO WATER HEATER AND FURNACE AND CONNECT VENTS AND DRAINS PER MANUFACTURER'S REQUIRMENTS. SEE PLUMBING PLANS FOR FLOOR DRAINS AND COORDINATE FINAL DRAIN LOCATIONS WITH PLUMBER FOR NEATEST LOCATION.
20. MAKE DUCT, PIPE, VENT CONNECTIONS PER DETAILS AND MANUFACTURER'S REQUIREMENTS.
21. DROP 22/6 DUCT DOWN SIDE OF FURNACE AND MAKE SIDE CONNECTION INTO 24" HIGH RETURN AIR BASE AND SIDE CONNECTION INTO UNIT, AS REQUIRED BY UNIT MANUFACTURER.
22. ROUTE 4" DIAMETER DRYER EXHAUST UP AND HOLD TIGHT TO UNDERSIDE OF STAIRS AND CONTINUE OUTSIDE. PROVIDE WITH WALLCAP WITH INTEGRAL BACKDRAFT DAMPER.

MHTN
ARCHITECTS
MHTN Architects, Inc.
420 East South Temple
Suite 100
Salt Lake City, Utah 84111
TEL 801.595.6700
FAX 801.595.6717
www.mhtn.com

JAMES T. DRESSLAR
ARCHITECT, L.L.C.
387 PARK LANE
MOAB, UTAH 84532
435.259.1155 PHONE / FAX

GREAT SALT LAKE MARINA MAINTENANCE BUILDING

DFCM # 10029510

13312 WEST 1075 SOUTH
MAGNA, UTAH 84044

SEAL

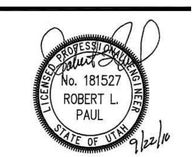

MHTN PROJECT NO: 2010546

DRAWN BY: CHECKED BY:

ISSUED:

NO.	DATE	DESCRIPTION

REVISION DATE:

NO.	DATE	DESCRIPTION
1	9-NOV-2010	ADD RESTROOM

SHEET NAME

MECHANICAL PLANS

CONSTRUCTION DOCUMENTS
SEPTEMBER 2, 2010

SHEET NUMBER

MH101

File Name: P:\2010\20100339\1Drawings\3Sheet\39MH101.dwg Last Plotted: 2010/12/07 @ 1:43 PM By: lrb

SYMBOL LEGEND

SYMBOL	DESCRIPTION
REFERENCE AND LINE SYMBOLS	
1	KEYNOTE INDICATOR.
1	REVISION INDICATOR.
CU-1	EQUIPMENT INDICATOR.
WIRING METHODS	
	WIRING.
A-1,3,5	BRANCH CIRCUIT HOME RUN TO PANELBOARD: NUMBER OF ARROWS INDICATES NUMBER OF CIRCUITS. LETTER AND NUMBER NOTATIONS IDENTIFY PANEL AND CIRCUIT NUMBERS. USE #12 CONDUCTORS, EXCEPT #10 CONDUCTORS SHALL BE INSTALLED IF DISTANCES EXCEED THOSE SPECIFIED IN SECTION 16120. MINIMUM CONDUIT SIZE IS .75".
1 A-1,3,5	BRANCH CIRCUIT HOME RUN TO PANELBOARD: NUMBER OF ARROWS INDICATES NUMBER OF CIRCUITS. LETTER AND NUMBER NOTATIONS IDENTIFY PANEL AND CIRCUIT NUMBERS. NUMBER IN BOX REFERS TO THE CONDUCTOR AND CONDUIT SCHEDULE. FOR BRANCH WIRING USE #12 CONDUCTORS, EXCEPT #10 CONDUCTORS SHALL BE INSTALLED IF DISTANCES EXCEED THOSE SPECIFIED IN SECTION 16120.
	CONDUIT STUB. DIMENSION RECORD DRAWINGS AND MARK.
1	CONDUCTOR & CONDUIT ("CC") SCHEDULE INDICATOR. REFER TO ONE-LINE DIAGRAM.
J	JUNCTION BOX.
WIRING DEVICES	
	RECEPTACLE, DUPLEX: NEMA 5-20R.
A	RECEPTACLE, DUPLEX, ABOVE COUNTER: NEMA 5-20R.
DF	RECEPTACLE, DUPLEX, DRINKING FOUNTAIN: CONCEAL WATER COOLER RECEPTACLE BEHIND WATER COOLER. SEE DIVISION 15 SHOP DRAWINGS FOR INSTALLATION REQUIREMENTS.
WP	RECEPTACLE, DUPLEX, WEATHERPROOF: NEMA 5-20R.
	RECEPTACLE, DUPLEX WITH GROUND FAULT CIRCUIT INTERRUPTER: NEMA 5-20R.
	RECEPTACLE, QUADRAPLEX: NEMA 5-20R.
D	RECEPTACLE, DRYER: NEMA 10-30R.
	RECEPTACLE, SPECIAL PURPOSE. PROVIDE RECEPTACLE TO MATCH EQUIPMENT PLUG.
FB#	FLUSH FLOOR BOX. "#" SHOWN ON DRAWINGS. REFER TO WIRING DEVICE SCHEDULE IN SECTION 16140 FOR CONFIGURATION AND DEVICES.
	SWITCH, DIMMER.
X $	SWITCH, SINGLE POLE ("x" INDICATES FIXTURES CONTROLLED).
X $3	SWITCH, THREE-WAY ("x" INDICATES FIXTURES CONTROLLED).
ELECTRICAL POWER AND DISTRIBUTION	
	CIRCUIT BREAKER, MOLDED CASE (ONE-LINE DIAGRAM).
225/3 "1H" 225/3 "1H"	PANELBOARD WITH SUB FEED LUGS (ONE-LINE DIAGRAM).
DMM	DIGITAL MULTIMETER (ONE-LINE DIAGRAM).
	DISCONNECT SWITCH, FUSED.
	DISCONNECT SWITCH, UNFUSED.
	STARTER, COMBINATION WITH DISCONNECT SWITCH.
	PUSHBUTTON.
	PANELBOARD CABINET, SURFACE MOUNTED, 1 SECTION.
	PANELBOARD CABINET, SURFACE MOUNTED, 2 SECTION.

SYMBOL LEGEND

SYMBOL	DESCRIPTION
LIGHTING (REFER TO FIXTURE SCHEDULE FOR SYMBOLS)	
(W-3)	FIXTURE IDENTIFICATION: (W-3) INDICATES FIXTURE TYPE AS SCHEDULED.
LIGHTING CONTROL	
*	OCCUPANCY SENSOR, DUAL TECHNOLOGY, CEILING.
P	PHOTOCELL.
STRUCTURED CABLING	
X	TELEPHONE, WALL MOUNTED ("X" INDICATES QUANTITY OF CABLES).
W	TELEPHONE, WALL MOUNTED: WALL PHONE.
	OUTLET, BUILDING STANDARD COMBINATION TELEPHONE/ DATA COMMUNICATION.
	TELEPHONE TERMINAL BOARD, FIRE TREATED PLYWOOD PAINTED.
TV DISTRIBUTION	
	TV OUTLET.
FIRE ALARM	
FSA	FIRE SYSTEM ANNUNCIATOR.
CM	CONTROL MODULE.
P	FIRE ALARM MANUAL PULL STATION.
	DETECTOR, SMOKE.
	DETECTOR, SMOKE, DUCT WITH HOUSING AND SAMPLING TUBE.
	STROBE.
WP	ALARM, HORN/SPEAKER, WEATHERPROOF.
	DETECTOR, HEAT.
	ALARM, HORN/STROBE, ONE ASSEMBLY.
FSD	FIRE AND SMOKE DAMPER.

ABBREVIATIONS

NOTE: ALL ABBREVIATIONS MAY NOT BE USED.

1P	SINGLE POLE	KV	KILOVOLT
1PH	SINGLE-PHASE	KVA	KILOVOLT AMPERE
1WAY	ONE-WAY	kVAR	KILOVOLT AMPERE REACTIVE
2/C	TWO-CONDUCTOR	kW	KILOWATT
2WAY	TWO-WAY	kWh	KILOWATT HOUR
3/C	THREE-CONDUCTOR	LED	LIGHT EMITTING DIODE
3PH	THREE-PHASE	LFMC	LIQUID TIGHT FLEXIBLE METAL CONDUIT
3WAY	THREE-WAY	LFNC	LIQUID TIGHT FLEXIBLE NONMETALLIC CONDUIT
4OUT	QUADRUPLE RECEPTACLE OUTLET	LPS	LOW PRESSURE SODIUM
4PDT	FOUR-POLE DOUBLE THROW	LRA	LOCKED ROTOR AMPS
4PST	FOUR-POLE SINGLE THROW	LTG	LIGHTING
4W	FOUR-WIRE	LV	LOW VOLTAGE
4WAY	FOUR-WAY	MATV	MASTER ANTENNA TELEVISION SYSTEM
A	ABOVE COUNTER	MAX	MAXIMUM
AC	ARMORED CABLE	MC	METAL CLAD
ADA	AMERICANS WITH DISABILITIES ACT	MCA	MINIMUM CIRCUIT AMPS
ADJ	ADJACENT	MCB	MAIN CIRCUIT BREAKER
AFF	ABOVE FINISHED FLOOR	MCC	MOTOR CONTROL CENTER
AFG	ABOVE FINISHED GRADE	MCP	MOTOR CIRCUIT PROTECTION
AIC	AMPERE INTERRUPTING CAPACITY	MDP	MAIN DISTRIBUTION PANEL
ALUM	ALUMINUM	MG	MOTOR GENERATOR
AMP	AMPERE	MH	MANHOLE
ANN	ANNUNCIATOR	MIN	MINIMUM
AP	ACCESS POINT (WIRELESS DATA)	MLO	MAIN LUGS ONLY
AR	AS REQUIRED	MOCP	MAXIMUM OVERCURRENT PROTECTION
ASC	AMPS SHORT CIRCUIT	NA	NOT APPLICABLE
ATS	AUTOMATIC TRANSFER SWITCH	NC	NORMALLY CLOSED
AV	AUDIO VISUAL	NEC	NATIONAL ELECTRICAL CODE
AWG	AMERICAN WIRE GAGE	NEMA	NATIONAL ELECTRICAL MANUFACTURERS ASSOCIATION
BB XFMR	BUCK-BOOST TRANSFORMER	NFC	NATIONAL FIRE CODE
C	CEILING MOUNTED	NFPA	NATIONAL FIRE PROTECTION ASSOCIATION
CATV	COMMUNITY ANTENNA TELEVISION	NIC	NOT IN CONTRACT
CB	CIRCUIT BREAKER	NL	NIGHT LIGHT
CCBA	CUSTOM COLOR AS SELECTED BY ARCHITECT	NO	NORMALLY OPEN
CCTV	CLOSED CIRCUIT TELEVISION	NTS	NOT TO SCALE
CFBA	CUSTOM FINISH AS SELECTED BY ARCHITECT	OC	ON CENTER
CF/CI	CONTRACTOR FURNISHED/ CONTRACTOR INSTALLED	OCP	OVER CURRENT PROTECTION
CF/OI	CONTRACTOR FURNISHED/ OWNER INSTALLED	OF/CI	OWNER FURNISHED/ CONTRACTOR INSTALLED
CKT	CIRCUIT	OF/OI	OWNER FURNISHED/ OWNER INSTALLED
CM	CONSTRUCTION MANAGER	OFP	OBTAIN FROM PLANS
CND	CONDUIT	OH DR	OVERHEAD (COILING) DOOR
CO	CONVENIENCE OUTLET	OL	OVERLOAD
COR	CONTRACTING OFFICER'S REPRESENTATIVE	PB	PUSHBUTTON
CP	CONTROL PANEL	PF	POWER FACTOR
CT	CURRENT TRANSFORMER	PH	PHASE
CTV	CABLE TELEVISION	PNL	PANEL
CU	COPPER	PT	POTENTIAL TRANSFORMER
dBA	UNIT OF SOUND LEVEL	PTZ	PAN/TILT/ZOOM
DPDT	DOUBLE POLE DOUBLE THROW	QTY	QUANTITY
DS	DISCONNECT SWITCH	R	REMOVE
EA	EACH	RCP	REFLECTED CEILING PLAN
EM	EMERGENCY	RMC	RIGID METAL CONDUIT
EMT	ELECTRICAL METALLIC TUBING	RNC	RIGID NONMETALLIC CONDUIT
ENT	ELECTRICAL NONMETALLIC TUBING	RPM	REVOLUTIONS PER MINUTE
EPO	EMERGENCY POWER OFF	RR	REMOVE AND RELOCATE
EQUIP	EQUIPMENT	SCA	SHORT CIRCUIT AMPS
EX	EXISTING	SCBA	STANDARD COLOR AS SELECTED BY ARCHITECT
F	FURNITURE MOUNTED	SF	SQUARE FOOT (FEET)
FA	FIRE ALARM	SFBA	STANDARD FINISH AS SELECTED BY ARCHITECT
FCP	FIRE ALARM CONTROL PANEL	SPDT	SINGLE POLE, DOUBLE THROW
FLA	FULL LOAD AMPS	SPEC	SPECIFICATION
FMC	FLEXIBLE METALCONDUIT	SPST	SINGLE POLE, SINGLE THROW
FOB	FREIGHT ON BOARD	S/S	START/STOP
FVNR	FULL VOLTAGE NON-REVERSING	ST	SINGLE THROW
FVR	FULL VOLTAGE REVERSING	SWBD	SWITCHBOARD
G	GROUND	SWGR	SWITCHGEAR
GEN	GENERATOR	TL	TWIST LOCK
GFCI	GROUND FAULT CIRCUIT INTERRUPTER	TP	TELEPHONE POLE
GFP	GROUND FAULT PROTECTION	TP	TWISTED PAIR
HD	HEAVY DUTY	TTB	TELEPHONE TERMINAL BOARD
HID	HIGH INTENSITY DISCHARGE	TV	TELEVISION
HOA	HAND-OFF-AUTOMATIC	TVSS	TRANSIENT VOLTAGE SURGE SUPPRESSER
HP	HORSE POWER	TYP	TYPICAL
HPF	HIGH POWER FACTOR	UF	UNDERFLOOR
HPS	HIGH PRESSURE SODIUM	UGND	UNDERGROUND
HV	HIGH VOLTAGE	UPS	UNINTERRUPTIBLE POWER SUPPLY
HZ	HERTZ	V	VOLTS
IG	ISOLATED GROUND	VA	VOLT AMPERE
IMC	INTERMEDIATE METAL CONDUIT	VFC/VFD	VARIABLE FREQUENCY MOTOR CONTROLLER
IN/IS	INSULATED/ISOLATED	W/	WITH
I/O	INPUT/OUTPUT	W/O	WITHOUT
IR	INFRARED	WP	WEATHERPROOF
J-BOX	JUNCTION BOX	XFMR	TRANSFORMER

DEFINITIONS

NOTE: ALL DEFINITIONS MAY NOT BE USED.

INDICATED: THE TERM "INDICATED" REFERS TO GRAPHIC REPRESENTATIONS, NOTES, OR SCHEDULES ON THE DRAWINGS, OTHER PARAGRAPHS OR SCHEDULES IN THE SPECIFICATIONS, AND SIMILAR REQUIREMENTS IN THE CONTRACT DOCUMENTS. WHERE TERMS SUCH AS "SHOWN", "NOTED", "SCHEDULED", AND "SPECIFIED" ARE USED, IT IS TO HELP THE READER LOCATE THE REFERENCE, NO LIMITATION ON LOCATION IS INTENDED.

DIRECTED: TERMS SUCH AS "DIRECTED", "REQUESTED", AUTHORIZED", "SELECTED", "APPROVED", "REQUIRED", AND "PERMITTED" MEAN "DIRECTED BY THE ENGINEER", "REQUESTED BY THE ENGINEER", AND SIMILAR PHRASES.

APPROVED: THE TERM "APPROVED", WHERE USED IN CONJUNCTION WITH THE ENGINEER'S ACTION ON THE CONTRACTOR'S SUBMITTALS, APPLICATIONS, AND REQUESTS, IS LIMITED TO THE ENGINEER'S DUTIES AND RESPONSIBILITIES AS STATED IN GENERAL AND SUPPLEMENTARY CONDITIONS.

FURNISH: THE TERM "FURNISH" IS USED TO MEAN "SUPPLY AND DELIVER TO THE PROJECT SITE, READY FOR UNLOADING, UNPACKING, ASSEMBLY, INSTALLATION, AND SIMILAR OPERATIONS."

INSTALL: THE TERM "INSTALL" IS USED TO DESCRIBE OPERATIONS AT PROJECT SITE INCLUDING THE ACTUAL "UNLOADING, UNPACKING, ASSEMBLY, ERECTION, PLACING, ANCHORING, APPLYING, WORKING TO DIMENSION, FINISHING, CURING, PROTECTING, CLEANING, AND SIMILAR OPERATIONS."

PROVIDE: THE TERM "PROVIDE" MEANS "TO FURNISH AND INSTALL, COMPLETE AND READY FOR THE INTENDED USE."

INSTALLER: AN "INSTALLER" IS THE CONTRACTOR OR AN ENTITY ENGAGED BY THE CONTRACTOR, EITHER AS AN EMPLOYEE, SUBCONTRACTOR, OR SUB-SUBCONTRACTOR, FOR PERFORMANCE OF A PARTICULAR CONSTRUCTION ACTIVITY, INCLUDING INSTALLATION, ERECTION, APPLICATION, AND SIMILAR OPERATIONS. INSTALLERS ARE REQUIRED TO BE EXPERIENCED IN THE OPERATIONS THEY ARE ENGAGED TO PERFORM.

TECHNOLOGY SYSTEMS: THE TERM "TECHNOLOGY SYSTEMS" IS USED TO DESCRIBE ALL LOW VOLTAGE SYSTEMS GENERALLY REFERRED TO AS "SPECIAL SYSTEMS". THESE SYSTEMS INCLUDE BUT ARE NOT NECESSARILY LIMITED TO ALL SYSTEMS WHICH UTILIZE VOLTAGES OF LESS THAN 71 VOLTS SUCH AS SOUND SYSTEMS, VIDEO SYSTEMS, TV SYSTEMS, SECURITY SYSTEMS, VOICE AND DATA CABLING SYSTEMS, ETC...

GENERAL ELECTRICAL NOTES

1. CLARIFICATION METHODS: AT THE TIME OF BIDDING, BIDDERS SHALL FAMILIARIZE THEMSELVES WITH THE DRAWINGS AND SPECIFICATIONS. ANY QUESTIONS, MISUNDERSTANDINGS, CONFLICTS, DELETIONS, DISCONTINUED PRODUCTS, CATALOG NUMBER DISCREPANCIES, DISCREPANCIES BETWEEN THE EQUIPMENT SUPPLIED AND THE INTENT OR FUNCTION OF THE EQUIPMENT, ETC, SHALL BE SUBMITTED TO THE ARCHITECT/ENGINEER IN WRITING FOR CLARIFICATION PRIOR TO ISSUANCE OF THE FINAL ADDENDUM AND BIDDING OF THE PROJECT. WHERE DISCREPANCIES OR MULTIPLE INTERPRETATIONS OCCUR, THE MOST STRINGENT (WHICH IS GENERALLY RECOGNIZED AS THE MOST COSTLY) THAT MEETS THE INTENT OF THE DOCUMENTS SHALL BE ENFORCED.

2. OWNER FURNISHED ITEMS: THE OWNER WILL FURNISH MATERIAL AND EQUIPMENT AS INDICATED IN THE CONTRACT DOCUMENTS TO BE INCORPORATED INTO THE WORK. THESE ITEMS ARE ASSIGNED TO THE INSTALLER AND COSTS FOR RECEIVING, HANDLING, STORAGE, IF REQUIRED, AND INSTALLATION ARE INCLUDED IN THE CONTRACT SUM.

   A. THE INSTALLER'S RESPONSIBILITIES ARE THE SAME AS IF THE INSTALLER FURNISHED THE MATERIALS OR EQUIPMENT.

   B. THE OWNER WILL ARRANGE AND PAY FOR DELIVERY OF OWNER FURNISHED ITEMS FREIGHT ON BOARD JOB SITE AND THE INSTALLER WILL INSPECT DELIVERIES FOR DAMAGE. IF OWNER FURNISHED ITEMS ARE DAMAGED, DEFECTIVE OR MISSING, DOCUMENT DAMAGED ITEMS WITH THE TRANSPORT COMPANY AND THE OWNER WILL ARRANGE FOR REPLACEMENT. THE OWNER WILL ALSO ARRANGE FOR MANUFACTURER'S FIELD SERVICES, AND THE DELIVERY OF MANUFACTURER'S WARRANTIES AND BONDS TO THE INSTALLER.

   C. THE INSTALLER IS RESPONSIBLE FOR DESIGNATING THE DELIVERY DATES OF OWNER FURNISHED ITEMS AND FOR RECEIVING, UNLOADING AND HANDLING OWNER FURNISHED ITEMS AT THE SITE. THE INSTALLER IS RESPONSIBLE FOR PROTECTING OWNER FURNISHED ITEMS FROM DAMAGE, INCLUDING DAMAGE FROM EXPOSURE TO THE ELEMENTS, AND TO REPAIR OR REPLACE ITEMS DAMAGED AS A RESULT OF HIS OPERATIONS.

3. EXPOSED STRUCTURE AREAS (EXCLUDING MECHANICAL, ELECTRICAL, AND COMMUNICATION SPACES): INSTALL RACEWAYS BETWEEN DECK AND STRUCTURE WHEREVER POSSIBLE IN EXPOSED STRUCTURE CEILING AREAS. ROUTE RACEWAYS IN CONCEALED AREAS WHEREVER POSSIBLE. REFER ALL CONDITIONS WHERE RACEWAYS MUST BE INSTALLED WHICH CANNOT COMPLY WITH THESE REQUIREMENTS TO THE ARCHITECT.

4. SUBMITTALS: PROVIDE SUBMITTALS IN THREE RING BINDERS WITH JOB NAME, SUBCONTRACTOR, AND VOLUME ON THE BINDING. PREPARE TABS FOR EACH SPECIFICATION SECTION REQUIRING SUBMITTALS. PREPARE INDEX OF EQUIPMENT SUBMITTED IN EACH TAB.

5. REFLECTED CEILING PLANS: COORDINATE THE LOCATION OF LIGHT FIXTURES WITH THE ARCHITECTURAL REFLECTED CEILING PLANS. REFER ALL DISCREPANCIES TO THE ARCHITECT AND ENGINEER.

ELECTRICAL SHEET INDEX

SHEET NO	SHEET TITLE
EE001	SYMBOL SCHEDULE, SHEET INDEX
EE601	ELECTRICAL SCHEDULES
ES101	ELECTRICAL SITE PLAN
EP101	POWER AND FIRE ALARM PLANS
EP501	DETAILS
EP601	ONE LINE DIAGRAM, FIRE ALARM SCHEMATIC
EL101	LIGHTING PLANS
EL601	LIGHTING FIXTURE SCHEDULE

MHTN ARCHITECTS
MHTN Architects, Inc.
420 East South Temple
Suite 100
Salt Lake City, Utah 84111
TEL 801.595.6700
FAX 801.595.6717
www.mhtn.com

JAMES T. DRESSLAR
ARCHITECT, L.L.C.
387 PARK LANE
HOAB, UTAH 84532
435.259.1155 PHONE / FAX

GREAT SALT LAKE MARINA MAINTENANCE BUILDING
DFCM # 10029510
13312 WEST 1075 SOUTH
MAGNA, UTAH 84044

SEAL

LICENSED PROFESSIONAL ENGINEER No. 185978 PETER E. JOHANSEN STATE OF UTAH

MHTN PROJECT NO. 2010546

DRAWN BY: CHECKED BY:

ISSUED:

NO.	DATE	DESCRIPTION

REVISION DATE:

NO.	DATE	DESCRIPTION
1	9-NOV-2010	ADD RESTROOM

SHEET NAME

SYMBOL SCHEDULE, SHEET INDEX

CONSTRUCTION DOCUMENTS
SEPTEMBER 2, 2010

SHEET NUMBER

EE001

File Name: P:\2010\20100339\1Drawings\3Sheet\39EE001.dwg Last Plotted: 2010/12/07 @ 1:45 PM By: irb

EQUIPMENT SCHEDULE

MARK	QTY	ITEM DESCRIPTION	LOAD DATA							WIRE AND CONDUIT SIZE	OVERCURRENT PROTECTION			DISCONNECT			STARTER DATA													NOTES	MARK
			HP	kW	MCA	FLA	VOLT	PH	Hz		FURN BY	DEVICE	LOCATION	FURN BY	DEVICE	LOCATION	FURN BY	DEVICE	LOCATION	SIZE	SPEED	CTRL VOLT	SELECTOR SWITCH	PUSH BUTTON	PILOT LAMP	NORMALLY OPEN CONTACTS	NORMALLY CLOSED CONTACTS	PHASE FAILURE RELAY	SCHEMATIC REFERENCE	REMOTE CTRL		
CU-1	1	CONDENSING UNIT			24		120	1	60	CC#4	E	30/1 CB	PANEL	E	30/2 FRN 25	ADJ TO UNIT	Q															CU-1
AIR CMP	1	AIR COMPRESSOR	7.5			11	480	3	60	CC#2	E	20/3 CB	PANEL H1	E	30/3 FRS 15	ADJ TO UNIT	E	FVNR	ADJ TO UNIT	1	1	*	HOA		R	2	2	YES		**		AIR CMP
EC-1	1	EVAP COOLER	1			4.6	208	3	60	CC #2	E	20/3 CB	PANEL	E	30/3 FRN 7	ADJ TO UNIT	Q															EC-1
EC-1	1	EVAP COOLER PUMP	1				115	1	60	CC #1	E	20/1 CB	PANEL	E	SWITCH	ADJ TO UNIT	Q															EC-1
EC-2	1	EVAP COOLER	1			4.6	208	3	60	CC #2	E	20/3 CB	PANEL	E	30/3 FRN 7	ADJ TO UNIT	E	FVNR	ADJ TO UNIT	0	1	*	HOA		R	2	2	YES		**		EC-2
EC-2	1	EVAP COOLER PUMP	1				115	1	60	CC #1	E	20/1 CB	PANEL	E	SWITCH	ADJ TO UNIT	Q															EC-2
EF-1	2	EXHAUST FAN		.127			115	1	60	CC #1	E	20/1 CB	PANEL	E	THRML SWITCH	ADJ TO UNIT	Q															EF-1
EF-2	1	EXHAUST FAN		.08			115	1	60	CC #1	E	20/1 CB	PANEL	E	THRML SWITCH	ADJ TO UNIT	Q															EF-2
EF-3	1	EXHAUST FAN		.127			115	1	60	CC #1	E	20/1 CB	PANEL	E	THRML SWITCH	ADJ TO UNIT	Q															EF-3
EF-4	1	EXHAUST FAN	1			4.6	208	3	60	CC#2	E	20/3 CB	PANEL	E	30/3 FRN 7	ADJ TO UNIT	E	FVNR	ADJ TO UNIT	00	1	*	HOA		R	2	2	YES		**		EF-4
EF-5	1	EXHAUST FAN	1/2				115	1	60	CC #1	E	20/1 CB	PANEL	E	30/1 FRN 15	ADJ TO UNIT	E	FVNR	ADJ TO UNIT	0	1	*	HOA		R	2	2	YES		**		EF-5
F-1	1	FURNACE				12	120	1	60	CC#11	E	20/1 CB	PANEL	E	THRML SWITCH	ADJ TO UNIT	Q															F-1
SP	2	SEWAGE PUMP	.5			4.9	208	1	60	CC #2	E	20/2 CB	PANEL	Q			Q															SP
RAD-1,2,3,4	1	RADIENT HEATER PUMP	3/4			6.6	115	1	60	CC #1	E	20/1 CB	PANEL	E	30/1 FRN 15	ADJ TO UNIT	Q															RAD-1,2,3,4
RAD-1,2,3,4	3	RADIENT HEATER CONTROLS					115	1	60	CC #1	E	20/1 CB	PANEL	E	THRML SWITCH	ADJ TO UNIT	Q															RAD-1,2,3,4

EQUIPMENT SCHEDULE KEY

E	DIVISION 16
Q	FURNISHED WITH THE EQUIPMENT
*	COORDINATE WITH THE DIVISION 15 TEMPERATURE CONTROL INSTALLER
**	AUTOMATIC CONTROL WIRING BY DIVISION 15
Emg	equipment will be on emergency power
***	Duplicatee pumps feeder will be sized for one pump. Pumps will not operate simultaneously.

PANEL "MDP"

VOLTS/PHASE/WIRE:	PANEL SIZE & TYPE:	MAIN SIZE & TYPE:	LOCATION:	CABINET:	NOTES:
120/208 V, 3 PH 4 WIRE	22" W x 6" D, BOLT-ON	400 AMPERE MAIN CB		Surface	

ACCESSORIES: PANEL DIRECTORY, IDENTIFICATION, GROUNDING BAR, INSULATED GROUND BAR, SUBFEED LUGS

CKT NO	OCP AMP	OCP POLE	LOAD (kVA) LTG	LOAD (kVA) CO	LOAD (kVA) PWR	DESCRIPTION	LCL kVA	PHASE LOAD A	PHASE LOAD B	PHASE LOAD C	LCL kVA	DESCRIPTION	LOAD (kVA) LTG	LOAD (kVA) CO	LOAD (kVA) PWR	OCP AMP	OCP POLE	CKT NO
1	200	3	2.4	5.6	6.1	L1	14.6	24.0			10.0	WELDER			10.0	100	2	2
3	–	–	2.5	3.2	7.9	–	14.2		23.6		10.0	–			10.0	–	–	4
5	–	–	2.1	5.6	4.9	–	13.1			12.6	0.0	SPARE				125	–	6
7	50	3				SPACE	0.0	0.0			0.0	–				–	–	8
9	–	–				–	0.0		0.0		0.0	–				–	–	10
11	–	–				–	0.0			0.0	0.0	SPACE				100	3	12
13	50	3				SPACE	0.0	0.0			0.0	–				–	–	14
15	–	–				–	0.0		0.0		0.0	–				–	–	16
17	–	–				–	0.0			0.0	0.0	TVSS				50	3	18
19	20	2				SPARE	0.0	0.0			0.0	–				–	–	20
21	–	–				–	0.0		0.0		0.0	–				–	–	22

TOTALS: CONNECTED kVA PER PHASE **24 24 13** CONNECTED TOTAL kVA **60**
CONNECTED AMPS PER PHASE **200 197 105** CONNECTED AVERAGE AMPS PER PHASE **167**

NEC DIVERSIFIED LOAD CALCULATIONS

LIGHTING 7kVA @125% =	**9** kVA	ALL OTHER LOADS @100% =	**39** kVA	DIVERSIFIED TOTAL kVA =	**60**
RECEPTACLES 10kVA @100% =	**10** kVA	25% OF LARGEST MOTOR =	**0** kVA	AVERAGE AMPS PER PHASE =	**166**
REMAINDER 4kVA @ 50% =	**2** kVA				

IF NOTES ARE NOT USED, DO NOT INCLUDE ON DRAWINGS.

NOTES LEGEND:
1. Provide a breaker tie for all circuits that share a neutral
2. Provide lockable breaker

PANEL "L1"

VOLTS/PHASE/WIRE:	PANEL SIZE & TYPE:	MAIN SIZE & TYPE:	LOCATION:	CABINET:	NOTES:
120/208 V, 3 PH 4 WIRE	22" W x 6" D, BOLT-ON	150 MAIN BREAKER		Surface	

ACCESSORIES: PANEL DIRECTORY, IDENTIFICATION, GROUNDING BAR

CKT NO	OCP AMP	OCP POLE	LOAD (kVA) LTG	LOAD (kVA) CO	LOAD (kVA) PWR	DESCRIPTION	LCL kVA	PHASE LOAD A	PHASE LOAD B	PHASE LOAD C	LCL kVA	DESCRIPTION	LOAD (kVA) LTG	LOAD (kVA) CO	LOAD (kVA) PWR	OCP AMP	OCP POLE	CKT NO
1	20	2			1.2	SEWEGE PUMPS	1.2	9.2			8.0	WELDER			8.0	70	2	2
3	–[	–			1.2	–	1.2		9.2		8.0	–			8.0	–	–	4
5	20	3			0.5	N GARAGE DOORS	0.5			0.9	0.4	EAST RECEPT		0.4		20	1	6
7		–			0.5	–	0.5	0.9			0.4	EAST RECEPT		0.4		20	1	8
9		–			0.5	–	0.5		0.9		0.4	EAST RECEPT		0.4		20	2	10
11	20	1	0.5			EMG LIGHTS	0.6			1.3	0.8	NRTH PLGS		0.8		20	–	12
13	20	1		1.2		MEZZ S. PLGS	1.2	3.2			2.0	DRYER			2.0	40	2	14
15	20	1		0.8		ROOF TOP PLGS	0.8		2.8		2.0	–			2.0	–	–	16
17	20	1		0.4		PHONE BOARD	0.4			1.4	1.0	WASHER		1.0		20	1	18
19	20	1		1.0		FIRE ALARM PANEL	1.0	1.8			0.8	MECH RM PLGS		0.8		20	1	20
21	20	1			0.2	F-1	0.2		1.2		1.0	HEAT TRACE		1.0		20	1	22
23	20	3			0.3	EC-1	0.3			0.3	0.0	SPARE				20	1	24
25	–	–			0.3	–	0.3	1.3			1.0	DRNK FNTN PWER		1.0		20	1	26
27	–	–			0.3	–	0.3		1.3		1.0	WST PLGS		1.0		20	1	28
29	20	3			0.3	EC-2	0.3			1.3	1.0	STH PLGS		1.0		20	1	30
31	–	–			0.3	–	0.3	1.3			1.0	STH PLGS		1.0		20	1	32
33	–	–			0.3	–	0.3		1.1		0.8	S. OFFC PLGS		0.8		20	1	34
35	20	3			0.4	EF-4	0.4			1.2	0.8	N. OFFC PLGS		0.8		20	1	36
37	–	–			0.4	–	0.4	1.2			0.8	REST & MECH RM PLGS		0.8		20	1	38
39	–	–			0.4	–	0.4		0.7		0.3	RADIANT HEATER CNGTRL			0.3	20	1	40
41	20	1			0.5	EF-5	0.5			1.5	1.0	RADIANT HEATER PUMP			1.0	20	1	42
43	20	1					0.0	2.0			2.0	CU-1			2.0	30	1	44
45	20	1			0.4	EF-1, EF-2, EF-3	0.4		0.4		0.0	HEAT TRACE				20	1	46
47	20	1			0.2	EC-1 PUMP	0.2			0.2	0.0	SPARE				20	1	48
49	20	1			0.2	EC-2 PUMP	0.2	0.2			0.0	SPARE				20	1	50
51	20	3			0.5	N GARAGE DOORS	0.5		0.5		0.0	SPARE				20	1	52
53		–			0.5	–	0.5			0.5	0.0	SPARE				20	1	54
55		–			0.5	–	0.5	0.5			0.0	SPARE				20	1	56
57	20	1				SPARE	0.0		0.0		0.0	SPARE				20	1	58
59	20	1				SPARE	0.0			0.0	0.0	SPARE				20	1	60
61	20	1				SPARE	0.0	0.0			0.0	SPARE				20	1	62
63	20	1				SPARE	0.0		0.0		0.0	SPARE				20	1	64
65	20	1				SPARE	0.0			0.0	0.0	SPARE				20	1	66
67	20	1				SPARE	0.0	0.0			0.0	SPARE				20	1	68
69	20	1				SPARE	0.0		0.0		0.0	SPARE				20	1	70
71	20	1				SPARE	0.0			0.0	0.0	SPARE				20	1	72
73	20	1				SPARE	0.0	0.0			0.0	SPARE				20	1	74
75	20	1				SPARE	0.0		0.0		0.0	SPARE				20	1	76
77	20	1				SPARE	0.0			0.0	0.0	SPARE				20	1	78
79	20	1				SPARE	0.0	0.0			0.0	TVSS				50	3	80
81	20	1				SPARE	0.0		0.0		0.0	–				–	–	82
83	20	1				SPARE	0.0			0.0	0.0	–				–	–	84

TOTALS: CONNECTED kVA PER PHASE **22 18 9** CONNECTED TOTAL kVA **48**
CONNECTED AMPS PER PHASE **181 151 72** CONNECTED AVERAGE AMPS PER PHASE **135**

NEC DIVERSIFIED LOAD CALCULATIONS

LIGHTING 1kVA @125% =	**1** kVA	ALL OTHER LOADS @100% =	**33** kVA	DIVERSIFIED TOTAL kVA =	**46**
RECEPTACLES 10kVA @100% =	**10** kVA	25% OF LARGEST MOTOR =	**0** kVA	AVERAGE AMPS PER PHASE =	**129**
REMAINDER 5kVA @ 50% =	**2** kVA				

IF NOTES ARE NOT USED, DO NOT INCLUDE ON DRAWINGS.

NOTES LEGEND:
1. Provide a breaker tie for all circuits that share a neutral
2. Provide lockable breaker

MHTN ARCHITECTS
MHTN Architects, Inc.
420 East South Temple
Suite 100
Salt Lake City, Utah 84111
TEL 801.595.6700
FAX 801.595.6717
www.mhtn.com

JAMES T. DRESSLAR
ARCHITECT, L.L.C.
387 PARK LANE
MOAB, UTAH 84532
435.259.1155 PHONE / FAX

GREAT SALT LAKE MARINA MAINTENANCE BUILDING
DFCM # 10029510
13312 WEST 1075 SOUTH
MAGNA, UTAH 84044

SEAL

LICENSED PROFESSIONAL ENGINEER
No. 185978
PETER E. JOHANSEN
STATE OF UTAH

MHTN PROJECT NO. 2010546

DRAWN BY: CHECKED BY:

ISSUED:

NO.	DATE	DESCRIPTION

REVISION DATE:

NO.	DATE	DESCRIPTION
1	9-NOV-2010	ADD RESTROOM

SHEET NAME

ELECTRICAL SCHEDULES

CONSTRUCTION DOCUMENTS
SEPTEMBER 2, 2010

SHEET NUMBER

EE601

File Name: P:\2010\20100339\1Drawings\3Sheet\39EE601.dwg Last Plotted: 2010/12/07 @ 1:45 PM By: sts

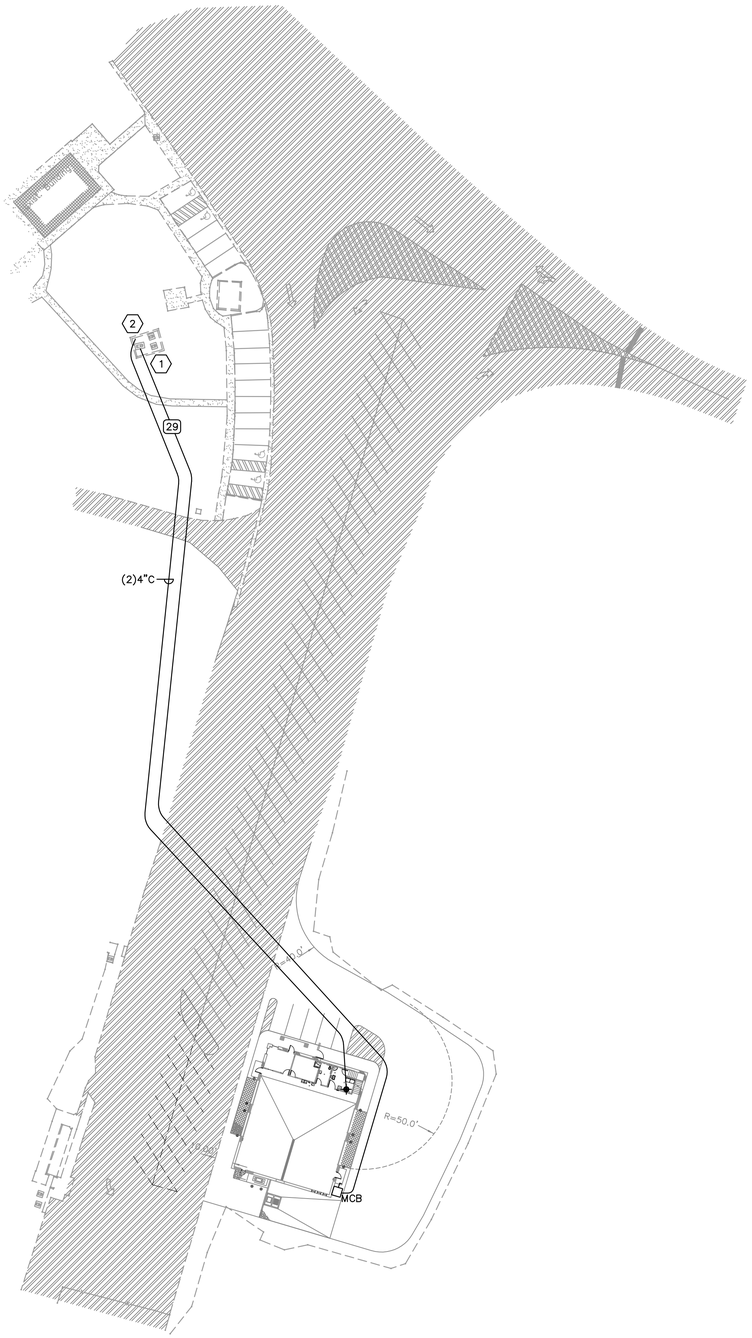

1 ELECTRICAL SITE PLAN
SCALE: 1" = 40'-0"

NORTH

GENERAL SHEET NOTES

1. PAINT ALL TRANSFORMERS, SECTIONALIZERS AND METERS PER DFCM STANDARDS.
2. IDENTIFY EACH CONDUIT AT BOTH ENDS.
3. PROVIDE PULL STRINGS IN ALL SPARE CONDUITS.
4. ALL GROUNDING CONNECTIONS TO GROUND RINGS AND GROUND RODS ARE TO BE EXOTHERMIC WELDS.
5. ALL CONTRACTORS DOING PRIMARY VOLTAGE WORK MUST HAVE 5 YEARS MINIMUM EXPERIENCE IN MEDIUM VOLTAGE ELECTRICAL WORK. ALL CONTRACTORS WORKING WITH THE DFCM HIGH VOLTAGE SYSTEMS MUST COMPLY WITH OSHA STANDARD 1910.269(A)(1)(III), 1910.269(I)(1), AND MUST SUBMIT WRITTEN PROOF THAT THE EMPLOYEES HAVE BEEN TRAINED TO WORK AROUND HIGH VOLTAGE LINES OR EQUIPMENT. CONTRACTORS ARE REQUIRED TO SUBMIT CURRENT CERTIFICATIONS FOR EVERY INDIVIDUAL INVOLVED WITH PREPARING HIGH VOLTAGE SPLICES AND ELBOWS.
6. LABEL ALL CABLES, WHERE THEY COME FROM, WHAT PHASE AND WHERE THEY GO, WITH NON-CONDUCTIVE EMBOSSED TAGS.
7. ANY WORK ON OR NEAR ENERGIZED DISTRIBUTION LINES OR EQUIPMENT REQUIRES A LOCKOUT/TAGOUT AND HOT LINE HOLD BEFORE ANY WORK BEGINS.
8. BEFORE ANY CIRCUITS ARE ENERGIZED, CHECK PHASING TO ENSURE IT MATCHES EXISTING CIRCUITS.

⬡SHEET KEYNOTES

1. CONNECT TO EXISTING 75 VA, 12,470 480/277 VOLT TRANSFORMER. PROVIDE BUSHINGS. REPAIR ANY DAMAGE TO RAILROAD TIES SURROUNDING TRANSFORMER DUE TO CONSTRUCTION.
2. RUN TWO 4" CONDUITS FROM PHONE PEDESTAL TO PHONE BOARD. COORDINATE WITH QWEST COMMUNICATIONS.

MHTN
ARCHITECTS
MHTN Architects, Inc.
420 East South Temple
Suite 100
Salt Lake City, Utah 84111
TEL 801.595.6700
FAX 801.595.6717
www.mhtn.com

JAMES T. DRESSLAR
ARCHITECT, L.L.C.
387 PARK LANE
MOAB, UTAH 84532
435.259.1155 PHONE / FAX

GREAT SALT LAKE MARINA MAINTENANCE BUILDING

DFCM # 10029510

13312 WEST 1075 SOUTH
MAGNA, UTAH 84044

SEAL

LICENSED PROFESSIONAL ENGINEER
No. 185978
PETER E. JOHANSEN
STATE OF UTAH

MHTN PROJECT NO: 2010546

DRAWN BY: CHECKED BY:

ISSUED:

NO.	DATE	DESCRIPTION

REVISION DATE:

NO.	DATE	DESCRIPTION
1	9-NOV-2010	ADD RESTROOM

SHEET NAME

ELECTRICAL SITE PLAN

CONSTRUCTION DOCUMENTS
SEPTEMBER 2, 2010

SHEET NUMBER

ES101

File Name: P:\2010\20100339\1Drawings\3Sheet\39ES101.dwg Last Plotted: 2010/12/07 @ 1:44 PM By: sts

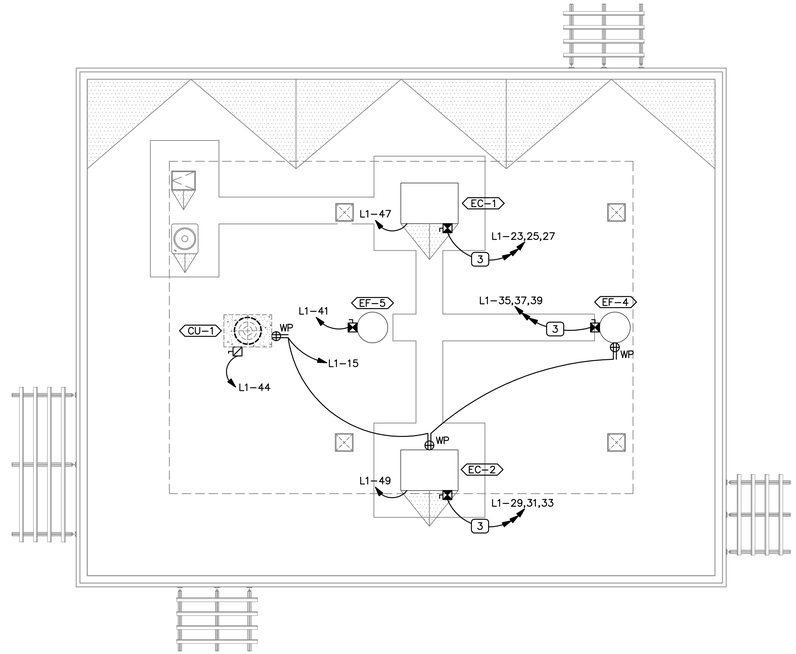

3 ROOF POWER PLAN
SCALE: 1/8" = 1'-0"

GENERAL SHEET NOTES

1. RUN 1" CONDUIT FROM ALL VOICE/DATA BACK TO PHONE BOARD. PROVIDE PULL STRING.
2. PROVIDE DEDICATED NEUTRAL FOR ALL CIRCUITS.

SHEET KEYNOTES

1. 4' X 4' BACK BOARD FOR PHONE. RUN ONE 4" CONDUIT TO TELECOMMUNICATIONS PROVIDERS PEDESTAL.
2. POWER FOR GARAGE DOORS. DIVISION 26 IS RESPONSIBLE FOR ALL LINE AND LOW VOLTAGE CONNECTIONS. PROVIDE A 30/3 AMP DISCONNECT.
3. LIGHTING CONTROL PANEL.
4. POWER TO CO2 SENSOR PANEL. SEE MH101.
5. CONTROL FAN VIA ROOM OCCUPANCY DETECTOR.
6. RUN .75" CONDUIT FROM ALL VOICE/DATA BACK TO PHONE BOARD.
7. PROVIDE CO2 SENSOR AND TIE IN WITH EXHAUST FAN CONTROLS.
8. INTERLOCK WITH EVAP COOLERS.
9. SEWER PUMP CONTROL PANEL.
10. PUMPS LOCATED IN VAULT. COORDINATE LOW VOLTAGE WIRING REQUIREMENTS WITH PUMP SUPPLIER.
11. RUN 2" CONDUIT FROM RADIO ANTENNA STUBBING UP INTO MECHANICAL ROOM. COORDINATE LOCATION OF ANTENNA WITH MARINA STATE EMPLOYEES.
12. PROVIDE 120 VOLT TO HEATER IN BACK FLOW PREVENTER VAULT.
13. PROVIDE 120 VOLT POWER TO AUTO DOOR FOR ADA. 1

MHTN ARCHITECTS
MHTN Architects, Inc.
420 East South Temple
Suite 100
Salt Lake City, Utah 84111
TEL 801.595.6700
FAX 801.595.6717
www.mhtn.com

JAMES T. DRESSLAR
ARCHITECT, L.L.C.
387 PARK LANE
MOAB, UTAH 84532
435.259.1155 PHONE / FAX

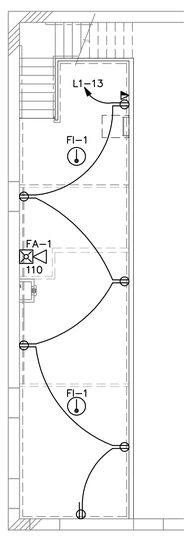

2 MEZZANINE POWER AND FIRE ALARM PLAN
SCALE: 1/8" = 1'-0"

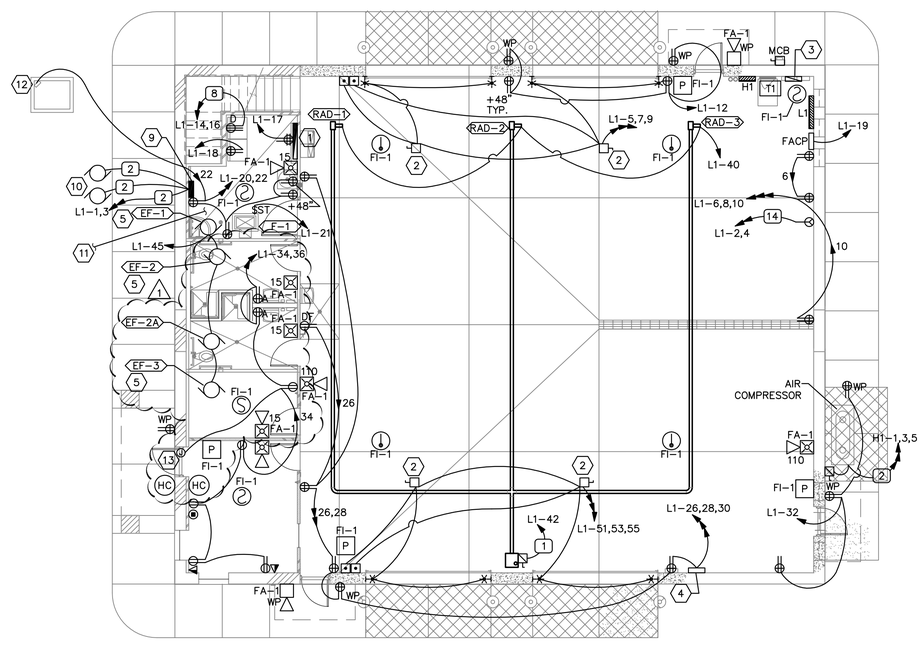

1 POWER AND FIRE ALARM PLAN
SCALE: 1/8" = 1'-0"

GREAT SALT LAKE MARINA MAINTENANCE BUILDING

DFCM # 10029510

13312 WEST 1075 SOUTH
MAGNA, UTAH 84044

SEAL

LICENSED PROFESSIONAL ENGINEER
No. 185978
PETER E. JOHANSEN
STATE OF UTAH

MHTN PROJECT NO. 2010546

DRAWN BY: CHECKED BY:

ISSUED:

NO.	DATE	DESCRIPTION

REVISION DATE:

NO.	DATE	DESCRIPTION
1	9-NOV-2010	ADD RESTROOM

SHEET NAME

POWER AND FIRE ALARM PLANS

CONSTRUCTION DOCUMENTS
SEPTEMBER 2, 2010

SHEET NUMBER

EP101

File Name: P:\2010\20100339\1Drawings\3Sheet\39EP101.dwg Last Plotted: 2010/12/07 @ 1:44 PM By: sts

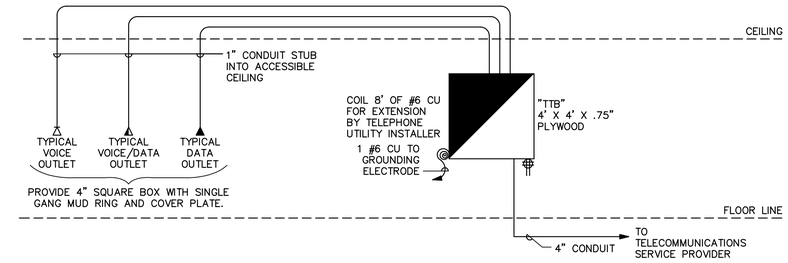

3 VOICE/DATA RISER

NTS

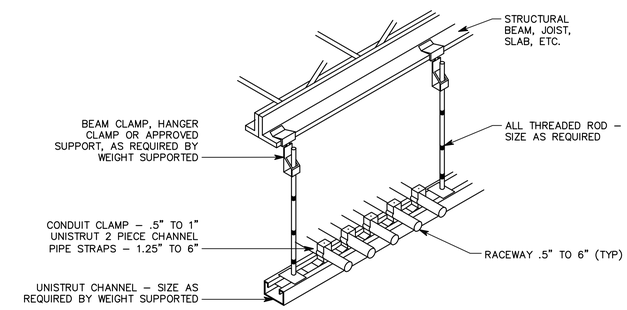

2 TYPICAL CONDUIT RACK DETAIL

NTS

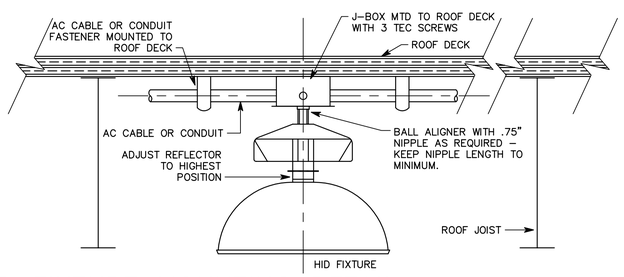

5 HID FIXTURE MOUNTING DETAIL

NTS

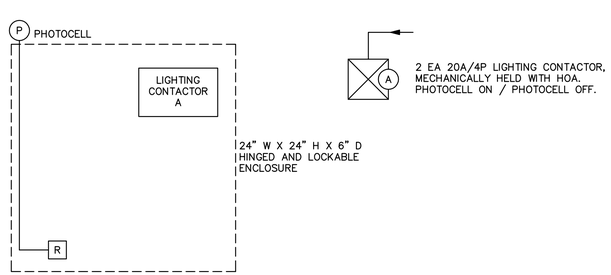

4 LIGHTING CONTROL DIAGRAM

NO SCALE

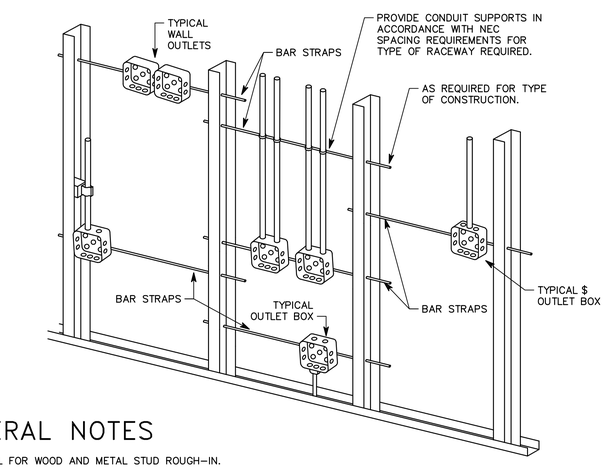

GENERAL NOTES

1. TYPICAL FOR WOOD AND METAL STUD ROUGH–IN.
2. PLASTER RINGS NOT SHOWN.
3. LOCATE ALL OUTLET BOXES IN ACCORDANCE WITH ARCHITECTURAL AND MECHANICAL DRAWINGS AND WITH ALL APPLICABLE SHOP DRAWINGS.
4. IN ACCORDANCE WITH IBC 711.3.2 EXCEPTION 1, OUTLETS ON OPPOSITE SIDES OF WALLS OR PARTITIONS IN THE SAME STUD SPACE IN A RATED FIRE SEPARATION WALL MUST BE SEPARATED BY A MINIMUM OF 24" HORIZONTAL DISTANCE.
5. IN NON–RATED WALLS, OUTLETS ON OPPOSITE SIDES OF WALLS OR PARTITIONS MUST BE SEPARATED BY 16" FOR SOUND ATTENUATION.

1 TYPICAL ROUGH–IN REQUIREMENTS DETAIL

NTS

MHTN ARCHITECTS

MHTN Architects, Inc.
420 East South Temple
Suite 100
Salt Lake City, Utah 84111
TEL 801.595.6700
FAX 801.595.6717
www.mhtn.com

JAMES T. DRESSLAR ARCHITECT, L.L.C.
387 PARK LANE
MOAB, UTAH 84532
435.259.1155 PHONE / FAX

GREAT SALT LAKE MARINA MAINTENANCE BUILDING

DFCM # 10029510

13312 WEST 1075 SOUTH
MAGNA, UTAH 84044

SEAL

MHTN PROJECT NO. 2010546

DRAWN BY: CHECKED BY:

ISSUED:

NO.	DATE	DESCRIPTION

REVISION DATE:

NO.	DATE	DESCRIPTION
1	9-NOV-2010	ADD RESTROOM

SHEET NAME

DETAILS

CONSTRUCTION DOCUMENTS
SEPTEMBER 2, 2010

SHEET NUMBER

EP501

File Name: P:\2010\20100339\1Drawings\3Sheet\39EP501.dwg Last Plotted: 2010/12/07 @ 1:44 PM By: sts

CONDUCTOR AND CONDUIT SCHEDULE

(**) SCHEDULE NUMBER
SUBSCRIPT (NOTE 5)
(E.G.) (5) IG

SYM	AMP	CONDUIT SIZE	CONDUCTOR(NOTE 1) QTY	SIZE	G	IG	SE	NOTES
1	20	.75	2	12	12	12	8	2
2	20	.75	3	12	12	12	8	2,3
3	20	.75	4	12	12	12	8	2,3
4	30	.75	2	10	10	10	8	2
5	30	.75	3	10	10	10	8	2
6	30	.75	4	10	10	10	8	2
7	40	1	2	8	10	8	6	2
8	40	1	3	8	10	8	6	2
9	40	1	4	8	10	8	6	2
14	70	1.25	3	4	8	4	2	2
19	95	1.25	3	2	8	2	2	2
21	130	1.50	3	1	6	2	2	2
26	175	2	4	2/0	6	2	2/0	2
29	230	2.50	3	4/0	4	2	2/0	2
30	230	2.50	4	4/0	4	2	2/0	2
38	400	2 EA 2.50	4	3/0	3	3/0	3/0	2
41	620	2 EA 3	3	350	1/0	4/0	3/0	2,4
42	620	2 EA 3	4	350	1/0	4/0	3/0	2,4

CONDUCTOR AND CONDUIT SCHEDULE NOTES

1. CONDUCTORS SHOWN ARE SHOWN FOR EACH CONDUIT WITH MODIFICATIONS AS NOTED IN NOTE 5. ALL CONDUCTORS SHOWN ARE THWN UNLESS OTHERWISE NOTED.
2. PROVIDE EQUIPMENT GROUND CONDUCTORS PER TABLE 250–122 WHEN CIRCUIT BREAKERS ARE SIZED GREATER THAN AMPERE RATING SHOWN IN TABLE.
3. PROVIDE #10 NEUTRALS FOR MULTIWIRE BRANCH CIRCUITS SERVING COMPUTERS.
4. GROUND (G) CONDUCTOR MAY BE DELETED ON SERVICE ENTRANCE CONDUCTORS.
5. WHEN SYMBOL SUBSCRIPT INDICATES "IG", INCLUDE "IG" OR INSULATED GROUND CONDUCTOR SCHEDULED ALONG WITH GROUND OR EQUIPMENT GROUND CONDUCTOR. WHEN SYMBOL SUBSCRIPT INDICATES "SE", SUBSTITUTE "SE" CONDUCTOR FOR "G" CONDUCTOR SHOWN WHICH IS SIZED FOR THE GROUNDING OF THE SECONDARY OF THE SEPARATELY DERIVED SYSTEMS.
6. RACEWAY ONLY. CONDUCTORS PROVIDED BY UTILITY.

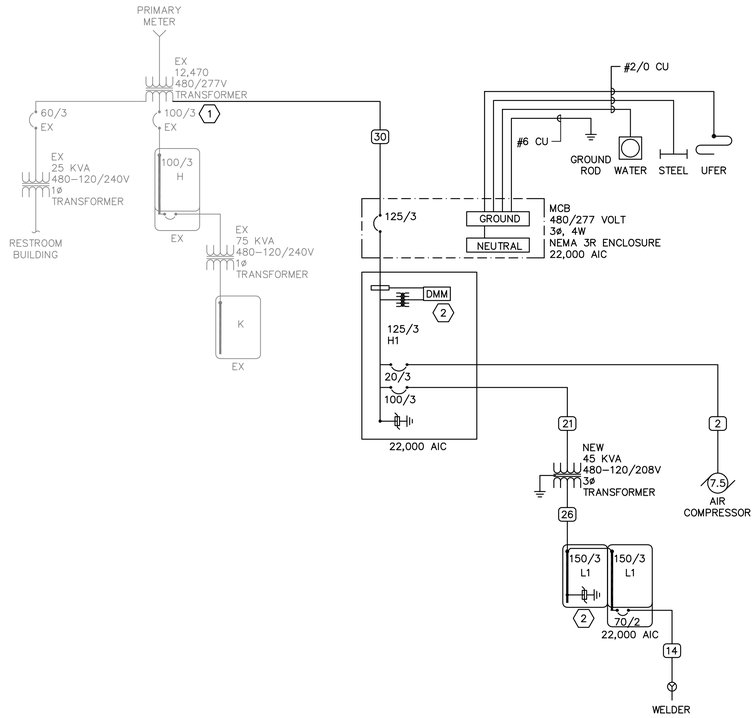

1 ONE–LINE DIAGRAM
NO SCALE

SHEET KEYNOTES

1. PROVIDE LUGS TO CONNECT TO EXISTING TRANSFORMER. CONTRACTOR MAY HAVE TO REARRANGE EXISTING CONNECTIONS. SCHEDULE OUTAGE WITH OWNER TWO WEEKS IN ADVANCE.
2. SEE PANEL SCHEDULES FOR BREAKER REQUIREMENTS.

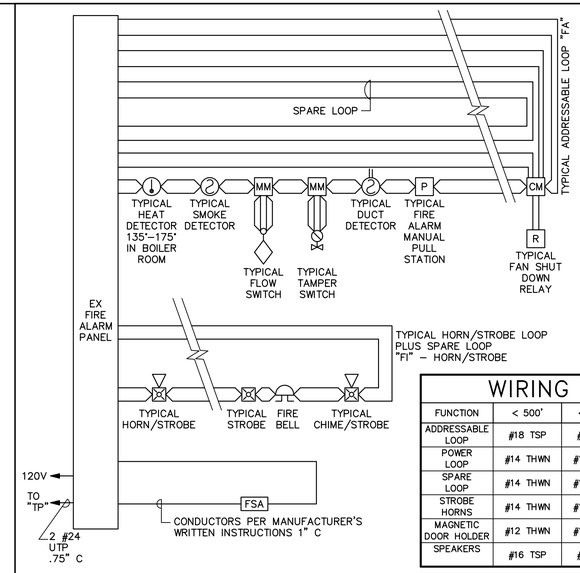

2 FIRE ALARM RISER
NO SCALE

WIRING SCHEDULE

FUNCTION	< 500'	< 1000'	1000'–3000'	> 3000'
ADDRESSABLE LOOP	#18 TSP	#18 TSP	#16 TSP	#14 TSP
POWER LOOP	#14 THWN	#14 THWN	#12 THWN	#10 THWN
SPARE LOOP	#14 THWN	#14 THWN	#12 THWN	#10 THWN
STROBE HORNS	#14 THWN	#14 THWN	#12 THWN	#10 THWN
MAGNETIC DOOR HOLDER	#12 THWN	#10 THWN		
SPEAKERS	#16 TSP	#16 TSP	#14 TSP	#14 TSP

NOTIFICATION SCHEDULE

SYMBOL	STROBE SIZE	COVERAGE	AVERAGE CURRENT	MAXIMUM PER CIRCUIT ALONE
15	15 CD	20'x20'	.085A	17
30	30 CD	30'x30'	.135A	11
75	75 CD	40'x40'	.200A	7
110	110 CD	50'x50'	.225A	6

GENERAL NOTES

1. PLANS ARE BASED UPON 99 MONITOR AND CONTROL DEVICES PER ADDRESSABLE LOOP. OTHER CONFIGURATIONS ARE ACCEPTABLE SUBJECT TO CONTRACTOR ALLOWING FOR INCREASED WIRING REQUIREMENTS AND SUBMITTAL DRAWINGS SHOWING NEW WIRING CONFIGURATION. MAXIMUM INITIAL DEVICES PER LOOP SHALL NOT EXCEED 75% MAXIMUM ALLOWABLE.
2. PLANS ARE BASED UPON THE WIRING SCHEDULE SHOWN. WHERE MANUFACTURER'S REQUIREMENTS EXCEED REQUIREMENTS SHOWN, INCLUDE ADDITIONAL ASSOCIATED COSTS AND SUBMITTAL DRAWINGS INDICATING NEW WIRING CONFIGURATION.
3. PLANS ARE BASED UPON 2 AMPS AT 24 VDC, NOT TO EXCEED 75% (1.50 AMPS AVAILABLE), POWER SUPPLY CAPACITY PER NOTIFICATION CIRCUIT. NOTIFICATION DEVICE LOADS ARE BASED UPON NOTIFICATION DEVICE SCHEDULE SHOWN. INCLUDE ADDITIONAL ASSOCIATED COSTS FOR INCREASED WIRING AND POWER SUPPLY CAPACITY IF LOADS OF ACTUAL DEVICES PROVIDED EXCEED CIRCUIT CAPACITY, OR IF LOAD OUTPUT OF ACTUAL POWER SUPPLIES PROVIDED IS SIZED DIFFERENTLY. PROVIDE SUBMITTAL DRAWINGS SHOWING NEW WIRING CONFIGURATION.
4. FLOW AND TAMPER CONFIGURATION BASED UPON FIRE SPRINKLER DESIGN CONCEPT. FIELD VERIFY ACTUAL REQUIREMENTS. INCLUDE ANY ADDITIONAL MONITOR MODULES REQUIRED BY ACTUAL DESIGN REQUIREMENTS.
5. ALL OUTPUT DEVICES ARE DESIGNED ON SYSTEMS WITH 2 AMP POWER SUPPLY.
6. HORN/STROBE BASED ON 120 MILLIAMPS, DOOR HOLDERS BASED ON 70 MILLIAMPS.
7. BATTERY CAPACITY TO BE ADEQUATE TO OPERATE 15 MINUTES AFTER 60 HOURS PLUS 25% SPARE CAPACITY.
8. RUN SPARE LOOPS IN SAME CONDUIT.

   PROVIDE MANUAL PULL STATIONS IN BOILER ROOMS AND KITCHENS.
9. PROVIDE ONE YEAR OFF SITE MONITORING INCLUDING ALL INTERFACE DEVICES AND MONITORING CHARGES. COORDINATE WITH BUILDING OWNER'S OFF SITE MONITORING COMPANY.
10. LOCATE SMOKE DETECTORS MINIMUM 3' FROM AIR SUPPLY LOUVERS.
11. PROVIDE SYNCHRONIZED STROBES THROUGHOUT FACILITY. PROVIDE SYNCHRONIZATION MODULES PER MANUFACTURER'S REQUIREMENTS. INCLUDE ADDITIONAL WIRING, IF REQUIRED.
12. INSTALL FIRE ALARM IN .75" CONDUIT.

MHTN ARCHITECTS
MHTN Architects, Inc.
420 East South Temple
Suite 100
Salt Lake City, Utah 84111
TEL 801.595.6700
FAX 801.595.6717
www.mhtn.com

JAMES T. DRESSLAR
ARCHITECT, L.L.C.
387 PARK LANE
MOAB, UTAH 84532
435.259.1155 PHONE / FAX

GREAT SALT LAKE MARINA MAINTENANCE BUILDING
DFCM # 10029510
13312 WEST 1075 SOUTH
MAGNA, UTAH 84044

SEAL

MHTN PROJECT NO. 2010546
DRAWN BY:
CHECKED BY:

ISSUED:

NO.	DATE	DESCRIPTION

REVISION DATE:

NO.	DATE	DESCRIPTION
1	9-NOV-2010	ADD RESTROOM

SHEET NAME
ONE LINE DIAGRAM, FIRE ALARM
CONSTRUCTION DOCUMENTS
SEPTEMBER 2010

SHEET NUMBER
EP601

File Name: P:\2010\20100339\1Drawings\3Sheet\39EP601.dwg Last Plotted: 2010/12/07 @ 1:44 PM By: sts

GENERAL SHEET NOTES

1. DO NOT SWITCH EMERGENCY EGRESS FIXTURES OR EXIT SIGNS.

SHEET KEYNOTES

1. LIGHTING CONTACTOR PANEL.
2. ROUTE THROUGH PHOTOCELL ON/OFF LIGHTING CONTACTOR PANEL.

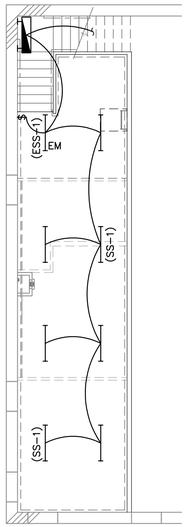

2 MEZZANINE LIGHTING PLAN
SCALE: 1/8" = 1'-0"

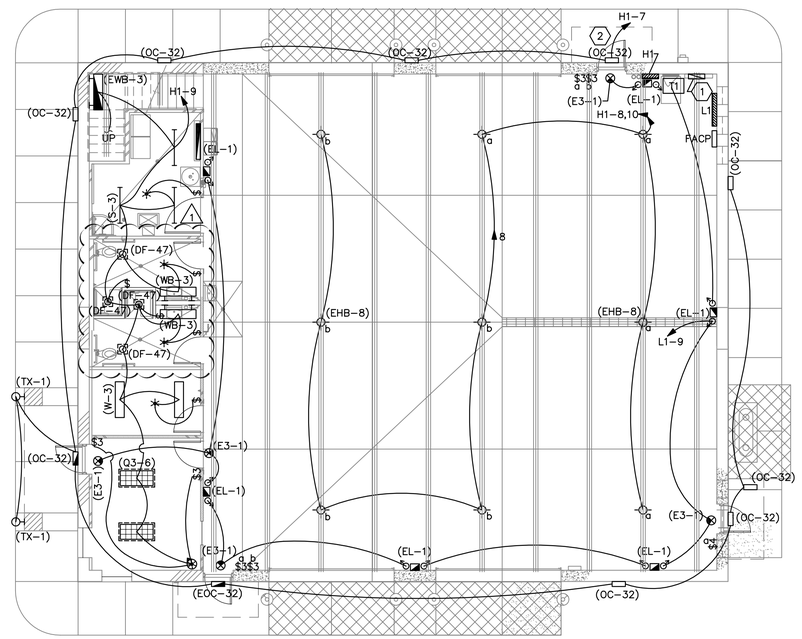

1 LIGHTING PLAN
SCALE: 1/8" = 1'-0"

MHTN ARCHITECTS
MHTN Architects, Inc.
420 East South Temple
Suite 100
Salt Lake City, Utah 84111
TEL 801.595.6700
FAX 801.595.6717
www.mhtn.com

JAMES T. DRESSLAR
ARCHITECT, L.L.C.
387 PARK LANE
MOAB, UTAH 84532
435.259.1155 PHONE / FAX

GREAT SALT LAKE MARINA MAINTENANCE BUILDING

DFCM # 10029510

13312 WEST 1075 SOUTH
MAGNA, UTAH 84044

SEAL

MHTN PROJECT NO. 2010546

DRAWN BY: CHECKED BY:

ISSUED:

NO.	DATE	DESCRIPTION

REVISION DATE:

NO.	DATE	DESCRIPTION
1	9-NOV-2010	ADD RESTROOM

SHEET NAME

LIGHTING PLANS

CONSTRUCTION DOCUMENTS
SEPTEMBER 2, 2010

SHEET NUMBER

EL101

File Name: P:\2010\20100339\1Drawings\3Sheet\39EL101.dwg Last Plotted: 2010/12/07 @ 1:45 PM By: sts

LIGHTING FIXTURE SCHEDULE

NOTE TO BIDDERS: COMPLY WITH SECTIONS 16511, 16521, AND 16570 OF THE SPECIFICATIONS.
REFER TO SPECIFICATIONS FOR IMPORTANT TECHNICAL REQUIREMENTS FOR LIGHTING FIXTURES, BALLASTS, AND LAMPS. THE CATALOG NUMBERS LISTED BELOW HAVE BEEN CAREFULLY PREPARED TO ASSIST BIDDERS IN SELECTING PRODUCTS TO ACHIEVE THE DESIGN CONCEPT, HOWEVER, PRIOR TO BIDDING, EACH MANUFACTURER SHALL COMPARE THE CATALOG NUMBERS SHOWN WITH THE DESCRIPTION AND REQUIREMENTS ON THE DRAWINGS, AND SHALL NOTIFY THE ARCHITECT/ENGINEER OF ANY DISCREPANCIES. SPECIFICALLY INCLUDED IN THIS EVALUATION SHALL BE THE VERIFYING OF PROPER MOUNTING KITS OR ACCESSORIES TO FACILITATE INSTALLATION AS SHOWN AT EACH LOCATION ON THE DRAWINGS. NO ALLOWANCE OR REDRESS WILL BE ALLOWED FOR DISCREPANCIES THAT WERE NOT REPORTED TO THE ARCHITECT/ENGINEER IN TIME FOR CORRECTION OR CLARIFICATION BEFORE THE BID. THE REPORTING OF ANY AMBIGUITY IS THE RESPONSIBILITY OF THE BIDDER. PROVIDE UNIT PRICES AND FIXTURE BRAND SELECTED FOR ADD/DELETE CHANGES FOR EACH FIXTURE TYPES SHOWN WITHIN 48 BUSINESS HOURS OF THE BID DATE. FAILURE TO COMPLY WITH THIS REQUIREMENT MAY DISQUALIFY THE PRODUCTS AND EMPOWER THE ENGINEER TO DETERMINE FAIR VALUE FOR FIXTURE AND INSTALLATION CHANGES, WITHOUT FURTHER INPUT FROM THE CONTRACTOR OR INSTALLER. SUBMITTAL PACKAGE SHALL INCLUDE LAMP MANUFACTURER AND CATALOG NUMBER ON EACH FIXTURE SHEET. ON ALL PENDANT MOUNTED FIXTURES, PROVIDE A SECOND SET OF PENDANTS, OF A DIFFERENT LENGTH, AS DIRECTED BY THE ARCHITECT/ENGINEER, PROVIDED AND INSTALLED AT NO ADDITIONAL CHARGE. ALL FIXTURES SHALL BE APPROVED BY UL OR ANOTHER ACCEPTABLE TESTING LAB FOR THE PURPOSE INTENDED AND WITH THE LAMP AND BALLAST PROPOSED. CONTRACTOR ALLOWANCE PRICES ARE ACCURATE WHEN THIS JOB WAS SPECIFIED, CONTRACTOR AND ELECTRICAL DISTRIBUTOR SHALL VERIFY THIS ALLOWANCE AND REPORT ANY PROBLEMS TO THE ENGINEER BEFORE THE BID. ALLOWANCE PRICE MAY OR MAY NOT INCLUDE LAMP(S) OR FREIGHT AS NOTED, AND DO NOT INCLUDE ANY TAXES. UNIVERSAL VOLTAGE (120/277) BALLASTS REQUIRED UNLESS NOTED OTHERWISE.

SYMBOL MARK	FIXTURE CHARACTERISTICS BODY / AIR / MOUNTING / DOOR LENS/LOUVER/REFLECTOR/OTHER	LAMP	WATTS	VOLTS	MANUFACTURER	CATALOG NUMBER	NOTES
DF	FLUORESCENT DOWNLIGHT; THERMALLY PROTECTED HOUSING: TO ACCOMMODATE MULTIPLE TRIMS AND REFLECTOR ASSEMBLIES FOR LAMPS AS LISTED BELOW; ELECTRONIC BALLASTS; LOW IRIDESCENT REFLECTOR FINISH (EVEN IF NOT SHOWN IN CATALOG #); SELF FLANGING TRIM UNLESS NOTED.						
DF-47	RECESSED DOWNLIGHT; SHOWER LIGHT TRIM, 9" APERTURE, HORIZONTAL, 32W CF-AMALGAM LAMP. GASKET.	1-CF-A32 RE835	50W	277/120V	OMEGA	OM61H32PLTSRD-SWR (24-13/16 X 14-1/2 X 6-3/16)	
					INFINITY	PVSL68 132T-EB (GX24Q-3) 277 BH (16-1/4 X 14-7/16 X 7-7/8)	
					LIGHTOLIER	8097CWHW/7132BU (15 X 12-3/4 X 6-1/2)	
					HALO	C7132-1E-7180LI-120 (14 X 13-5/16 X 8)	
					PRESCOLITE	CFT832HEB-WTT2F (16-1/4 X 14-7/16 X 7-1/8)	
					LITHONIA	LGF-132TRT9 RW DOLGSGT MVOLT (17-3/4 X 17-1/4 X 8-5/8)	
E3	EXIT SIGN: CAST ALUMINIUM HOUSING; UNIVERSAL MOUNTING; UNIVERSAL ARROWS PER PLANS; EMERGENCY BATTERY PACK WITH 10 YEAR PRO-RATA WARRANTY; LED, DIFFUSE LENS PANEL; GREEN LETTERS ON WHITE BACKGROUND. MUST MEET NFPA ILLUMINATION STANDARDS.						
E3-1	SINGLE FACE:	LED	1W	120/277V	DUAL-LITE	LCSGWE	
					EELP	CA 1G WW EM	
					LITHONIA	LES W 1 G 120/277 ELN	
					SURE-LITES	CX7170GW	
					MCPHILBEN	ER55L-1-12/27-WG	
					CHLORIDE	CXLN1GW	
					LIGHTOLIER	LDN1GW	
EL	LOW PROFILE SELF-CONTAINED EMERGENCY LIGHT; FULLY ADJUSTABLE HEADS; FIXED TEST SWITCH, CHARGE RATE INDICATOR; 90 MINUTE OPERATION; LOW VOLTAGE DISCONNECT; 5 YEAR PRO-RATA WARRANTY.						
EL-1	TWO-HEADED UNIT, SURFACE MOUNTED.	LAMPS INC?D	15W	120/277V	DUAL-LITE	EZ-2	
					EELP	EM-1	
					LITHONIA	ELM2	
					SURE-LITES	CC-3	
					MCPHILBEN	CT6	
					LIGHTOLIER	E112LT6W	
HB	HIGH BAY INDUSTRIAL HID FIXTURES: CAST ALUMINUM BALLAST HOUSING; HIGH POWER FACTOR BALLAST; ADJUSTABLE SPUN ALUMINUM REFLECTOR; MANUFACTURER SHALL RECOMMEND SETTINGS FOR EACH SPACE AND/OR REFLECTOR SIZE WHERE MORE THAN ONE IS OFFERED TO ACHIEVE ACTUAL S/MH REQUIREMENTS; FUSED. PROVIDE MULTI-TAP BALLASTS (120,208,240,277 VOLT) UNLESS SPECIFIED OTHERWISE. USE LAMP APPROVED FOR USE IN OPEN FIXTURES IF FIXTURE USED IS OPEN, OTHERWISE USE ENCLOSED FIXTURE. PROVIDE CAST POWER HOOK WITH RECEPTACLE, POWER CORD WITH PLUG, AND SAFETY CABLE FOR SUSPENDING FIXTURES FLUSH WITH THE BOTTOM OF THE TRUSSES, UNLESS OTHERWISE INDICTED. RATED FOR 55 DEGREES C. PROVIDE WIREGUARDS FOR OPEN FIXTURES, AND HINGED LENSES/COVERS FOR ENCLOSED FIXTURES.						
EHB-8	450W PSMH, OPEN WITH WIREGUARD. USE OPEN FIXTURE RATED LAMP. QUARTZ RESTRIKE.	450MH Q250	510W	MTB	LITHONIA	THS 450MP A16 TB WGA16-QRS/PPH/LCPP/SCK SF SCWA	
					LUMARK	MPHB-SA18-M-450-F1-MT-WG18-SCF-Q-TPPH-F/PHC /FL-1	
					DAYBRITE	HBO-450P-MT-A17-WGN17-SF-Q(250)-PBCH-BSC3	
					HUBBELL	BL-450W8-BI/BL-SOF/BL-TLRX/PHEXXX/RG14/QSS	
					G.E.	GHBB45P0A520V6FJQ-RHBTF-H2000NE-SFC5-B	
					EXCELINE	BYH14450PMA-WG-K717BX-8-F-723CP	
OC	WALL PACK: ADJUSTABLE CUT OFF; FULL PERIMETER GASKETING: WET LOCATION; STAINLESS STEEL HINGES AND LATCHES; PROJECTING LENS; HPF BALLAST; SEE ELEVATION FOR MOUNTING HEIGHT, COLOR AS SPECIFIED BY ARCHITECT.						
OC-32	CF42, RECESSED J BOX. MEDIUM THROW, SQUARE, DECORATIVE	CF42 RE835	50W	277/120V	MCPHILBEN	101MT-42TRF-CBA-DT	
					LSI	GBWS-FTM-42CFL-F-120/277-XX-NO	
					LITHONIA	WST 42TRT MD MVOLT	
					LUMARK	PLIP-T-42-MT-XX	
					LSI	GBWS FTM 42CFL F UE XXX W/LAMP	
Q3	PARABOLIC LOUVER FIXTURES WITH 3" LOUVERS IN PLASTIC PROTECTORS AND FULL DEPTH REFLECTOR; SIZE AS NOTED; PROGRAM START ELECTRONIC BALLASTS PER SPECS; T8 LAMPS; ONE BALLAST PER FIXTURE UNLESS NOTED FOR SWITCHING; STATIC OR AIR RETURN AND HEAT REMOVAL; EARTHQUAKE CLIPS INSTALLED ON GRID FIXTURES; HINGED AND LATCHED DOOR; LOW IRIDESCENT LOUVER FINISH, VERTICAL GRAIN DIE STAMPED LOUVERS; TWO FORMED BALLAST COVERS; MAX 1300 CD/M2 ABOVE 45 DEGREES.						
Q3-6	2X4, 18 CELL FLANGE; SEMI-SPECULAR SILVER. STATIC.	3-F32T8 RE835	95W	277/120V	LITHONIA	2PM3NFB-332-18LD-MVOLT-1/3TUBRHP-2R	
					DAYBRITE	2P3FS332-36SL-UNV-1/3-EB-SPEC	
					METALUX	2EP3FX-332S36I-UNV-PROGRAM START-2BC	
					COLUMBIA	P4D24-332G-LD36-S-3EB8LHPRUNV-FK24	
					LIGHTOLIER	DPS2F18LP332-U-03P	
					LSI	N2PF18 332 FD SS010PS 2BC UE	
S	FLUORESCENT STRIP LIGHT: STEEL CONSTRUCTION; WHITE PAINTED FINISH; SUITABLE FOR MOUNTING ON LOW DENSITY CEILINGS; PROGRAM START ELECTRONIC BALLASTS; T8 LAMPS; ONE BALLAST PER FIXTURE WHERE POSSIBLE, UNLESS TWO LEVEL SWITCHING IS SHOWN ON THE PLANS.						
S-3	4', 2-LAMP.	2-F32T8 RE835	65W	277/120V	LITHONIA	C232-MVOLT-TUBRHP	
					LIGHTOLIER	SW232-U-SOP	
					METALUX	SS-232-UNV-PROGRAM START	
					DAYBRITE	T232-UNV-1/2-EB-SPEC	
					HUBBELL	C232UPS	
					COLUMBIA	CS4-232-EB8120/277 PROG	
SA	GENERAL PURPOSE INDUSTRIAL: WHITE ENAMEL, APERTURED REFLECTOR; PROGRAM START ELECTRONIC BALLASTS; T8 LAMPS; ONE BALLAST PER FIXTURE WHERE POSSIBLE; UNLESS TWO LEVEL SWITCHING IS SHOWN ON THE PLANS; CHAIN MOUNTED WITH TONG HANGERS.						
SA-1	4', 2-LAMP.	2-F32T8 RE835	65W	277/120V	LITHONIA	EJA232-MVOLT-TUBRHP-THUN	
					LIGHTOLIER	KWA232-U-SOP	
					METALUX	IA-232-UNV-PROGRAM START	
					HUBBELL	IG142R-PP10-UPS	
					COLUMBIA	CSR4-232U-EB8120/277 PROG-CSTH	
					DAYBRITE	IA232-UNV-1/2-EB-SPEC	
TX	SPECIAL FIXTURES AS INDICATED. MEET ALL REQUIREMENTS OF SPECIFICATIONS AND FIXTURE SCHEDULE. VISUAL AND FINISH APPROVAL REQUIRED.						
TX-1	ENTER DESCRIPTION 13 " WALL MOUNT/SURFACE ADA COMPLIENT	LAMPS 26 Q	WATTS	VOLTS DV	MANUF	CATALOG NUMBER	
					KENELL	MR13EL PIA LG 26Q 2 DV SILVER PAINT	
					LUMINAIR	YRV13 2PLC26 DUAL VOLT OP CC SILVER	
					FAILSAFE	TRE 11 O 1/42CT DT SILVER	
					EXCELINE	PR3SW142 HF L SILVER DV E O SILVER	

W	LOW PROFILE WRAPAROUND: SURFACE MOUNTED SUITABLE FOR MOUNTING ON LOW DENSITY CEILINGS WRAPAROUND ACRYLIC PRISMATIC DIFFUSER; WHITE ENAMEL ENDPLATES; MINIMUM CU OF 70 @ 80/50/20 AND RCR=1; PROGRAM START ELECTRONIC BALLASTS; T8 LAMPS; ONE BALLAST PER FIXTURE WHERE POSSIBLE, UNLESS TWO LEVEL SWITCHING IS SHOWN ON THE PLANS.					
W-3	NARROW BODY WRAPAROUND; 2-LAMP, APPROX; 3" X 10" X 48".	2-F32T8 RE835	65W	277/120V	LITHONIA	LB232-MVOLT-TUBPHP
					DAYBRITE	CAN232-UNV-1/2-EB-SPEC
					METALUX	WS-232A-UNV-PROGRAM START
					LIGHTOLIER	WA232-U-SOP
					LSI	PR 232 SS010PRS UE
					COLUMBIA	WC4-232-EBPS120/277
WB	WALL MOUNTED FLUORESCENT LOCATED ABOVE WALL ELEMENT (MIRROR/WHITEBOARD, ETC.): AS INDICATED ON DRAWINGS; WITH ACRYLIC INJECTION MOLDED; PROGRAM START ELECTRONIC BALLASTS; T8 LAMPS; ONE BALLAST PER FIXTURE WHERE POSSIBLE, UNLESS TWO LEVEL SWITCHING IS SHOWN ON THE PLANS.					
WB-3	2-LAMP, WALL MOUNT 48", STEEL ENCLOSURE, DOWNLIGHT ONLY; ACRYLIC INJECTION MOLDED PRISMATIC DIFFUSER.	2-F32T8 RE835	65W	277/120V	DAYBRITE	CD232W-UNV-1/2-EB-SPEC
					LIGHTOLIER	CWB232-WB-U-SOP
					METALUX	BI-232-UNV-PROGRAM START
					L.A.L.	BSQ100-2-4R-INJ-WHT-T8EB-120/277-UPS
					COLUMBIA	WAL4-232-EBPS120/277
					LITHONIA	WP 232 DO MVOLT-TUBPHP
					LSI	WB 232 SS010PRS UE

MHTN ARCHITECTS
MHTN Architects, Inc.
420 East South Temple
Suite 100
Salt Lake City, Utah 84111
TEL 801.595.6700
FAX 801.595.6717
www.mhtn.com

JAMES T. DRESSLAR
ARCHITECT, L.L.C.
387 PARK LANE
MOAB, UTAH 84532
435.259.1155 PHONE / FAX

GREAT SALT LAKE
MARINA MAINTENANCE BUILDING
DFCM # 10029510

13312 WEST 1075 SOUTH
MAGNA, UTAH 84044

SEAL

LICENSED PROFESSIONAL ENGINEER
No. 185978
PETER E. JOHANSEN
STATE OF UTAH

MHTN PROJECT NO. 2010546

DRAWN BY: CHECKED BY:

ISSUED:

NO.	DATE	DESCRIPTION

REVISION DATE:

NO.	DATE	DESCRIPTION
1	8-NOV-2010	ADD RESTROOM

SHEET NAME

LIGHTING FIXTURE SCHEDULE

CONSTRUCTION DOCUMENTS
SEPTEMBER 2, 2010

SHEET NUMBER

EL601

File Name: P:\2010\20100339\1Drawings\3Sheet\39EL601.dwg Last Plotted: 2010/12/07 @ 1:44 PM By: sts