MULTI-STEP BIDDING PROCESS
FOR
GENERAL CONTRACTORS

Single Project---Short-Listing

Request for Submittals

February 22, 2011

NEW MAINTENANCE FACILITY
GREAT SALT LAKE STATE MARINA

DIVISION OF PARKS AND RECREATION
MAGNA, UTAH

DFCM Project Number 10029510

MHTN
420 East South Temple, Suite 100
Salt Lake City, Utah 84111

TABLE OF CONTENTS

	Page #
Title Sheet	1
Table of Contents	2
Notice to Contractors	3
Description of Work	4
Multi-Step Bidding Process	5
Multi-Step Project Schedule	12
Bid Form	13
Bid Bond	15
Instructions and Subcontractors List Form	16
Contractor's Agreement	19
Performance Bond	24
Payment Bond	25

Current copies of the following documents are hereby made part of these contract documents by reference. These documents are available on the DFCM web site at http://dfcm.utah.gov/StdDocs/index.html "Standard Documents" – "Reference Documents I" – "Item 7. Supplemental General Conditions" or are available upon request from DFCM:

DFCM Supplemental General Conditions dated July 1, 2010 *
DFCM Supplemental General Conditions revised May 11, 2010
DFCM Supplemental General Conditions dated July 1, 2009
DFCM Supplemental General Conditions dated July 15, 2008
DFCM General Conditions dated May 25, 2005

*** NOTE: THE NEW SUPPLEMENTAL GENERAL CONDITIONS EFFECTIVE JULY 1, 2010 ADDRESSING DRUG AND ALCOHOL TESTING ARE REFERENCED AT THE LINK ABOVE.**

The Agreement and General Conditions dated May 25, 2005 have been updated from versions that were formally adopted and in use prior to this date. The changes made to the General Conditions are identified in a document entitled Revisions to General Conditions that is available on DFCM's web site at http://dfcm.utah.gov

NOTICE TO CONTRACTORS

The State of Utah - Division of Facilities Construction and Management (DFCM) is requesting submissions for the following project:

Project Name: **Maintenance Building – Great Salt Lake State Marina**
Division of Parks and Recreation – Magna, Utah

Project No. **10029510**

Project Description: **Construction of a new maintenance facility, including associated site improvements as described within the contract documents.**

Cost Estimate: **$650,000.00**

DFCM is entering into a Multi-Step Bidding Process for Construction services. A short-listing of contractors will be based on the selection criteria outlined in the bidding documents contained herein. Short-listed contractors will be invited to submit bids on the project described above. **The only contractors allowed to bid on this project will be contractors short-listed by the selection committee.**

All contractors responding to this procurement must comply with and require all of their subcontractors to comply with the license laws as required by the State of Utah.

The bidding documents including plans and specification, short-listing requirements and schedule will be available at 12:00 Noon on Tuesday, February 22, 2011 on the DFCM web page at http://dfcm.utah.gov and from DFCM, 4110 State Office Building, Salt Lake City, Utah 84114, telephone 801-538-3018. For questions regarding this solicitation, please contact Bob Anderson, DFCM, at 801-652-6754. No others are to be contacted regarding this solicitation.

A **mandatory** pre-submittal meeting to discuss the multi-step bidding process will be held at 10:00 AM on Tuesday, March 1, 2011 at the Bonneville Building, Utah State Fair Park, 155 North 1000 West, Salt Lake City, Utah.

When bidding on this project, short-listed contractors will be required to submit a Bid Bond in the amount of five percent (5%) of the bid amount, made payable to the Division of Facilities Construction and Management on DFCM's Bid Bond Form. A Bid Bond must accompany each bid.

The Division of Facilities Construction & Management reserves the right to reject any or all submittals/bids or to waive any formality or technicality in any submittal/bid in the interest of the State.

DIVISION OF FACILITIES CONSTRUCTION AND MANAGEMENT
MARLA WORKMAN, CONTRACT COORDINATOR
4110 State Office Bldg., Salt Lake City, Utah 84114

DESCRIPTION OF WORK

The only contractors allowed to bid on this project will be contractors short-listed by the selection committee.

Conduct construction of a new maintenance facility, including associated site improvements, as described within the Contract Documents.

Individual contractors or alliances between two or more contractors are allowed in this process to form a team. However, one contractor or firm MUST be declared as the lead firm representing the team. If the team is short-listed through this multi-step process, the state will only enter into contracts with the lead contractor or firm. The lead contractor or firm must be licensed by the State of Utah and comply with and require all of its subcontractors to comply with the license laws as required by the State of Utah.

MULTI-STEP BIDDING PROCESS
SHORT-LISTING OF GENERAL CONTRACTORS

The short-listing of contractors will be based on the selection criteria outlined in this document.

1. Multi-Step Bidding Documents

The Multi-Step bidding documents consist of all of the information contained in this solicitation and all documents listed in the Table of Contents. All said documents are incorporated in this document by reference.

2. Availability of Documents

Bidding documents are available free of charge at the locations stated on the Schedule. The bidding documents are also available at DFCM's internet web site at http://dfcm.utah.gov.

3. Drawings and Specifications and Interpretations

Drawings, specifications and other contract documents may be obtained as stated in the Notice to Contractors. If any firm is in doubt as to the meaning or interpretation of any part of the drawings, specifications, scope of work or contract documents, they shall submit, in writing, a request for interpretation to the authorized DFCM representative by the deadline identified in the schedule. Answers to questions and interpretations will be made via addenda issued by DFCM. Neither DFCM nor the designer shall be responsible for incorrect information obtained by contractors from sources other than the official drawings/specifications and addenda issued by DFCM.

4. Contact Information

Except as authorized by the DFCM Representative or as otherwise stated in the bidding documents or the pre-submittal meeting, communication during the multi-step bidding process shall be directed to the specified DFCM's Representative. In order to maintain the fair and equitable treatment of everyone, contractors shall not unduly contact or offer gifts or gratuities to owners, users or selection committee members in an effort to influence the selection process or in a manner that gives the appearance of influencing the selection process. This prohibition applies before the bidding documents are issued as the project is developed, and extends through the award of a contract. Failure to comply with this requirement may result in a disqualification from the multi-step bidding process. Contractors should be aware that selection committee members will be required to certify that they have not been contacted by any of the contractors in an attempt to influence the selection process.

5. Requests for Information

All requests for information shall be in writing and directed to:

Project Manager: Bob Anderson
Division of Facilities Construction and Management
4110 State Office Building
Salt Lake City, Utah 84114
E-mail: bobanderson@utah.gov
Phone: 801-652-6754
Facsimile: 801-538-3267

6. Schedule

The Schedule lists the important events, dates, times and locations of meetings and submittals that must be met by the contractor.

7. Pre-Submittal Meeting

A **mandatory** pre-submittal meeting will be held on the date and time and at the location listed on the Schedule. During the meeting, questions will be answered about the multi-step bidding process. Questions about the project, plans and specifications will also be addressed. Attendance at this meeting is mandatory for General Contractors.

8. Submittal Due Dates and Times

All required submittals must be delivered to, and received by, the Division of Facilities Construction and Management by the time deadline established in the Schedule. Submittals received after the specified time deadline will not be accepted. Please allow adequate time for delivery. If using a courier service, the contractor is responsible for ensuring that delivery will be made directly to the required location prior to the deadline.

9. Last Day to Submit Questions

Questions must be submitted in writing to the DFCM project manager by the deadline listed on the Schedule.

10. Addendum

All clarifications will be in writing and issued as addenda to the RFS. Addenda will be posted on DFCM's web site at http://dfcm.utah.gov. **Contractors are responsible for obtaining information contained in the addenda from the web site. Any addenda issued prior to the submittal deadline shall become part of the multi-step bidding process and any information required must be included in the contractor's submittal.** Addenda issued prior to the submittal deadline shall become part of the bidding process and must be acknowledged on the bid form. Failure to acknowledge addenda may result in disqualification from bidding. DFCM shall not be responsible for incorrect information obtained by contractors from sources other than official addenda issued by DFCM.

11. Bid Bond Requirements

A bid bond properly signed by a qualified surety, as indicated on the DFCM Bid Bond form provided along with this Instruction to Bidders, in the amount of 5% of the bid, shall accompany the bid submission to DFCM. THIS BID BOND MUST BE ON THE DFCM BID BOND FORM PROVIDED WITH THIS INSTRUCTION TO BIDDERS IN ORDER TO BE CONSIDERED AN ACCEPTABLE BID unless only one bid is received by DFCM, or the failure to comply with the bid bond requirements is determined by the Director of DFCM to be nonsubstantial based on the following:

(a) the bid bond is submitted on a form other than DFCM's required Bid Bond form and the bid bond meets all other requirements including being issued by a surety firm authorized to do business in the State of Utah and be listed in the U.S. Department of the Treasury Circular 570, Companies Holding Certificates of Authority as Acceptable Securities on Federal Bonds and as Acceptable Reinsuring Companies for an amount not less than the amount of the bond to be issued. A co-surety may be utilized to satisfy this requirement; and

(b) the contractor provides a bid bond properly signed by a qualified surety and on the required DFCM Bid Bond form by the close of business of the next succeeding business day after the DFCM notifies the bidder of the defective bid bond.

12. Performance and References

DFCM will rate each firm's performance on every project worked on (rating scale: 1 = low; 5 = high). The rating may include comments from agencies. The firm will have an opportunity to review and comment on their ratings. Ratings on DFCM projects over the previous five years will be provided to the selection committee for their consideration in evaluating and scoring the past performance of each firm. If a firm has not completed at least three DFCM projects in the last five years, they shall provide by the time indicated on the Schedule, a list of references on additional projects for a total of five projects. References should include: (a) name and address of the project; (b) name and phone number of the person able to answer questions about the project; (c) date of when the work was completed; (d) the cost of the project and the type of project (school, office, warehouse, etc).

13. Statement of Qualifications

The Contractor (firm) shall provide five copies of a statement of qualifications by the time indicated on the Schedule. The statement should describe: (a) the financial viability of your firm; (b) the experience, skill level and qualifications of your firm - identify the specific project manager and site superintendent that will be assigned to this project; (c) provide examples of similar projects completed by your firm and the specific project manager and site superintendent that will be assigned to this project; (d) describe your firm's areas of expertise and other special qualifications as they pertain to this project; (e) document your firm's track record of completing projects on time and within budget; (f) explain your firm's reputation and commitment to high-quality workmanship; and (g) document your firm's ability to comply with the bonding requirements outlined earlier in this document. The statement of qualifications should be concise **(limit three pages)** yet contain sufficient information for evaluation by the selection committee. Note: If multiple firms combine to form a team, only the lead contractor or firm will be allowed to bid on projects. In addition, if any member of the team (contractor or firm) withdraws from the team, the entire team is disqualified and will not be allowed to bid.

14. Termination or Debarment Certification

Each firm must submit a certification that neither it nor its principals are presently debarred, suspended, proposed for debarment, declared ineligible, or voluntarily excluded from soliciting work by any governmental department or agency. The firm must also certify that neither the firm nor its principals have been terminated during the performance of a contract or withdrew from a contract to avoid termination. If the firm cannot certify to these statements, the firm shall submit a written explanation. Firms are to submit the certifications with their Statement of Qualifications.

15. Project Management Plan

Each Contractor (firm) shall provide five copies of a document describing their management plan by the time indicated on the Schedule. The document should include: (a) the process used for selecting and managing subcontractors; (b) a description of how the your firm is organized - pertaining to this project, document who will be in charge with decision making authority; (c) a project schedule detailing your firm's plan to ensure that the project will be completed on time (include timeline for ordering long lead materials and equipment); (d) a description of the process (action plan) your firm will take to bring the project back on schedule if it falls behind; (e) the procedures your firm has in place to minimize change

orders; (f) the methodology used to ensure the accuracy of your bid; (g) your firm's approach to site security and project safety; (h) your firm's understanding of DFCM's construction general conditions and contract requirements; and (i) any other information that will assist the selection committee in evaluating your firm's approach to project management.

Include an organization chart of key personnel and a description of their duties. The management plan document should be concise **(limit three pages)** yet contain sufficient information for evaluation by the selection committee. The organization chart is a separate document and is not counted as one of the three pages.

16. Selection Committee

The selection committee will evaluate and score each firm/team. Committee members may include individuals from DFCM, User Agency/Institution, and a representative from the design or construction disciplines.

17. Interviews.

If interviews are required, firms will be notified of the date and time of their interview. Otherwise, the selection committee reserves the right to short-list firms/teams based on their submitted past performance ratings/references, statement of qualifications and project management plan.

If necessary, interviews will be conducted with all responsive and responsible contractors. Firms that are late or do not appear for the interview may be disqualified by the committee. The evaluation will be made using the selection criteria contained in this document. Information provided by the past performance/references, statement of qualifications, project management plan and the interview will be evaluated using the selection criteria as the basis for the selection. The purpose of the interview is to allow contractors an opportunity to present their qualifications, discuss past performance/references and describe their project management plan. It will also provide an opportunity for the selection committee to ask questions about these items. Firms may elect to have management personnel, project managers and superintendents in attendance. Attendance of subcontractors is at the discretion of the contractor. The method of presentation is at the discretion of the contractor.

18. Selection Criteria

The following criteria and weighting will be used in evaluating each firm/team. The selection committee will consider all criteria in performing a comprehensive evaluation of each firm/team. Each firm/team will be scored by each selection committee member in the categories listed below.

A. Performance Rating/References. The committee will receive a past performance rating and/or reference score for each firm/team. DFCM will compute the score for each firm/team based upon the information outlined earlier in this document. **Possible Points: 35**

B. Statement of Qualifications. The committee will evaluate and score each firm's/team's qualifications in accordance with the information outlined earlier in this document as well as additional information about the firm's/team's qualifications presented during the interview. **Possible Points: 35**

C. Project Management Plan. The committee will evaluate and score each firm's/team's project management approach in accordance with the information outlined earlier in this document as well as additional information about the firm's/team's project management approach presented during the interview. **Possible Points: 30**

TOTAL POINTS = 100 POINTS

19. Short-Listing

DFCM will **short-list all firms** receiving a score of 85 points or above from the selection committee. No firms receiving fewer than 85 points will be short-listed. Only short-listed firms will be invited to bid on this project. During the bidding process, the final contractor selection will be based on the lowest responsive and responsible bidder.

20. Product Approvals

Where reference is made to one or more proprietary products in the contract documents, but restrictive descriptive materials of one or more manufacturer(s) is referred to in the contract documents, the products of other manufacturers will be accepted, provided they equal or exceed the standards set forth in the drawings and specifications and are compatible with the intent and purpose of the design, subject to the written approval of the Designer. Such written approval must occur prior to the deadline established for the last scheduled addendum to be issued. The Designer's written approval will be included as part of the addendum issued by DFCM. If the descriptive material is not restrictive, the products of other manufacturers specified will be accepted without prior approval provided they are compatible with the intent and purpose of the design as determined by the Designer.

21. Trade Secrets or Confidential Matters

Any submitter may designate those portions of the submittals which contain trade secrets or other confidential matters that the Governmental Records and Access Management Act (GRAMA) would allow to be a protected record. Any disclosure of submittals or portions thereof shall be in accordance with GRAMA and State law.

22. Financial Responsibility of Contractors, Subcontractors and Sub-subcontractors

Contractors shall respond promptly to any inquiry in writing by DFCM to any concern of financial responsibility of the Contractor, Subcontractor or Sub-subcontractor. Failure to respond may result in the Contractor (firm) receiving a poor performance rating on this project.

23. Licensure

The Contractor shall comply with and require all of its Subcontractors to comply with the license laws as required by the State of Utah.

24. Permits

In concurrence with the requirements for permitting in the General Conditions, it is the responsibility of the Contractor to obtain the fugitive dust plan requirements from the Utah Division of Air Quality and the SWPPP requirements from the Utah Department of Environmental Quality and submit the

completed forms and pay any permit fee that may be required for this specific project. Failure to obtain the required permit may result in work stoppage and/or fines from the regulating authority that will be the sole responsibility of the Contractor. Any delay to the project as a result of any such failure to obtain the permit or noncompliance with the permit shall not be eligible for any extension in the Contract Time.

25. Time is of the Essence

Time is of the essence in regard to all the requirements of the contract documents.

26. Bids

Before submitting a bid, each bidder shall carefully examine the contract documents; shall visit the site of the work; shall fully inform themselves as to all existing conditions and limitations; and shall include in the bid the cost of all items required by the contract documents including those added via addenda. If the bidder observes that portions of the contract documents are at variance with applicable laws, building codes, rules, regulations or contain obvious erroneous or uncoordinated information, the bidder shall promptly notify the DFCM Project Manager. Changes necessary to correct these issues will be made via addenda issued by DFCM.

The bid, bearing original signatures, must be typed or handwritten in ink on the Bid Form provided in the procurement documents and submitted in a sealed envelope at the location specified by the Notice to Contractor's prior to the published deadline for the submission of bids.

Bid bond security, in the amount of five percent (5%) of the bid, made payable to the Division of Facilities Construction and Management, shall accompany bid. THE BID BOND MUST BE ON THE BID BOND FORM PROVIDED IN THE PROCUREMENT DOCUMENTS IN ORDER TO BE CONSIDERED AN ACCEPTABLE BID.

If the bid bond security is submitted on a form other than the Owner's required bid bond form, and the bid security meets all other legal requirements, the bidder will be allowed to provide an acceptable bid bond by the close of business on the next business day following notification by DFCM of submission of a defective bid bond security. **A cashier's check cannot be used as a substitute for a bid bond.**

27. Listing of Subcontractors

Listing of Subcontractors shall be as summarized in the "Instructions and Subcontractors List Form", included as part of the contract documents. The Subcontractors List shall be delivered to DFCM or faxed to DFCM at 801-538-3677 within 24 hours of the bid opening. Requirements for listing additional subcontractors will be listed in the contract documents.

DFCM retains the right to audit or take other steps necessary to confirm compliance with requirements for the listing and changing of subcontractors. Any contractor who is found to not be in compliance with these requirements may receive a poor performance rating on this project.

28. Contract and Bond

The Contractor's Agreement will be in the form provided in this document. The contract time will be as indicated in the bid. The successful bidder, simultaneously with the execution of the Contract Agreement, will be required to furnish a performance bond and a payment bond, both bearing original signatures, upon the forms provided in the procurement documents. The performance and payment bonds shall be for an amount equal to one hundred percent (100%) of the Contract Sum and secured from a company that meets the requirements specified in the requisite forms. Any bonding requirements for Subcontractors will be specified in the Supplementary General Conditions.

29. Award of Contract

The Contract will be awarded as soon as possible to the lowest, responsive and responsible bidder, based on the lowest combination of base bid and acceptable prioritized alternates, provided the bid is reasonable, is in the interests of DFCM to accept and after applying the Utah Preference Laws in U.C.A. Title 63, Chapter 56. DFCM reserves the right to waive any technicalities or formalities in any bid or in the bidding. Alternates will be accepted on a prioritized basis with Alternate 1 being highest priority, Alternate 2 having second priority, etc.

30. Right to Reject Bids

DFCM reserves the right to reject any or all Bids.

31. Withdrawal of Bids

Bids may be withdrawn on written request received from bidders within 24 hours after the bid opening if the contractor has made an error in preparing the bid.

MULTI-STEP PROJECT SCHEDULE

PROJECT NAME: **NEW MAINTENANCE FACILITY - GREAT SALT LAKE STATE MARINA DIVISION OF PARKS AND RECREATION – MAGNA, UTAH**

DFCM PROJECT NO. : **10029510**

Event	Day	Date	Time	Place
Document Available, including Plans and Specifications	Tuesday	February 22, 2011	12:00 NOON	DFCM 4110 State Office Building SLC, UT and DFCM web site*
Mandatory Pre-Submittal Meeting	Tuesday	March 1, 2011	10:00 AM	Bonneville Building Utah State Fair Park 155 North 1000 West SLC, UT
Last Day to Submit Questions on Shortlisting (In Writing)	Monday	March 7, 2011	4:00 PM	Bob Anderson- DFCM E-mail bobanderson@utah.gov
Addendum on Shortlisting	Wednesday	March 9, 2011	4:00 PM	DFCM web site*
List of References, Statement of Qualifications, Project Management Plan, and Termination/Debarment Certification Due	Monday	March 14, 2011	12:00 NOON	DFCM 4110 State Office Building SLC, UT
Interviews by Selection Committee (if necessary)	Monday	March 21, 2011	To Be Announced	To Be Announced
Short-List Announced	Tuesday	March 22, 2011	12:00 NOON	DFCM web site*
Notice: Only Short-Listed Firms Will Be Allowed To Bid On This Project				
Mandatory Site Visit	Thursday	March 24, 2011	10:00 AM	Great Salt Lake State Marina 13312 West 1075 South Magna, UT
Last Day to Submit Questions (In Writing)	Monday	March 28 , 2011	4:00 PM	Bob Anderson – DFCM E-mail bobanderson@utah.gov
Final Addendum (exception for bid delays)	Wednesday	March 30, 2011	12:00 NOON	DFCM web site*
Prime Contractors Turn in Bid and Bid Bond/Bid Opening in DFCM Conference Room	Monday	April 4, 2011	2:30 PM	DFCM 4110 State Office Building SLC, UT
Subcontractors List Due	Tuesday	April 5, 2011	2:30 PM	DFCM 4110 State Office Building SLC, UT Fax 801-538-3677
Project Completion Date	Friday	August 19, 2011	4:00 PM	

*** DFCM's web site address is http://dfcm.utah.gov**

BID FORM

NAME OF BIDDER _____ DATE _____

To the Division of Facilities Construction and Management
4110 State Office Building
Salt Lake City, Utah 84114

The undersigned, responsive to the "Notice to Contractors" and in accordance with the "Instructions to Bidders", in compliance with your invitation for bids for the **NEW MAINTENANCE FACILITY - GREAT SALT LAKE STATE MARINA – DIVISION OF PARKS AND RECREATION – MAGNA, UTAH - DFCM PROJECT NO. 10029510** and having examined the Contract Documents and the site of the proposed Work and being familiar with all of the conditions surrounding the construction of the proposed Project, including the availability of labor, hereby proposes to furnish all labor, materials and supplies as required for the Work in accordance with the Contract Documents as specified and within the time set forth and at the price stated below. This price is to cover all expenses incurred in performing the Work required under the Contract Documents of which this bid is a part:

I/We acknowledge receipt of the following Addenda: _____

For all work shown on the Drawings and described in the Specifications and Contract Documents, I/we agree to perform for the sum of:

_____ DOLLARS ($_____)
(In case of discrepancy, written amount shall govern)

I/We guarantee that the Work will be Substantially Complete by **August 19, 2011** should I/we be the successful bidder, and agree to pay liquidated damages in the amount of **$250.00** per day for each day after expiration of the Contract Time as stated in Article 3 of the Contractor's Agreement.

This bid shall be good for 45 days after bid opening.

Enclosed is a 5% bid bond, as required, in the sum of _____

The undersigned Contractor's License Number for Utah is _____.

Upon receipt of notice of award of this bid, the undersigned agrees to execute the contract within ten (10) days, unless a shorter time is specified in the Contract Documents, and deliver acceptable Performance and Payment bonds in the prescribed form in the amount of 100% of the Contract Sum for faithful performance of the contract.

The Bid Bond attached, in the amount not less than five percent (5%) of the above bid sum, shall become the property of the Division of Facilities Construction and Management as liquidated damages for delay and additional expense caused thereby in the event that the contract is not executed and/or acceptable l00% Performance and Payment bonds are not delivered within the time set forth.

Type of Organization:

_____
(Corporation, Partnership, Individual, etc.)

Any request and information related to Utah Preference Laws:

_____

Respectfully submitted,

_____
Name of Bidder

ADDRESS:

_____

_____

_____
Authorized Signature

BID BOND

(Title 63, Chapter 56, U. C. A. l953, as Amended)

KNOW ALL PERSONS BY THESE PRESENTS:

That _____ hereinafter referred to as the "Principal," and_____, a corporation organized and existing under the laws of the State of _____, with its principal office in the City of _____ and authorized to transact business in this State and U. S. Department of the Treasury Listed, (Circular 570, Companies Holding Certificates of Authority as Acceptable Securities on Federal Bonds and as Acceptable Reinsuring Companies); hereinafter referred to as the "Surety," are held and firmly bound unto the STATE OF UTAH, hereinafter referred to as the "Obligee," in the amount of $_____(5% of the accompanying bid), being the sum of this Bond to which payment the Principal and Surety bind themselves, their heirs, executors, administrators, successors and assigns, jointly and severally, firmly by these presents.

THE CONDITION OF THIS OBLIGATION IS SUCH that whereas the Principal has submitted to Obligee the accompanying bid incorporated by reference herein, dated as shown, to enter into a contract in writing for the _____Project.

NOW, THEREFORE, THE CONDITION OF THE ABOVE OBLIGATION IS SUCH, that if the said principal does not execute a contract and give bond to be approved by the Obligee for the faithful performance thereof within ten (10) days after being notified in writing of such contract to the principal, then the sum of the amount stated above will be forfeited to the State of Utah as liquidated damages and not as a penalty; if the said principal shall execute a contract and give bond to be approved by the Obligee for the faithful performance thereof within ten (10) days after being notified in writing of such contract to the Principal, then this obligation shall be null and void. It is expressly understood and agreed that the liability of the Surety for any and all defaults of the Principal hereunder shall be the full penal sum of this Bond. The Surety, for value received, hereby stipulates and agrees that obligations of the Surety under this Bond shall be for a term of sixty (60) days from actual date of the bid opening.

PROVIDED, HOWEVER, that this Bond is executed pursuant to provisions of Title 63, Chapter 56, Utah Code Annotated, 1953, as amended, and all liabilities on this Bond shall be determined in accordance with said provisions to same extent as if it were copied at length herein.

IN WITNESS WHEREOF, the above bounden parties have executed this instrument under their several seals on the date indicated below, the name and corporate seal of each corporate party being hereto affixed and these presents duly signed by its undersigned representative, pursuant to authority of its governing body.

DATED this _____ day of _____, 20_____ .

Principal's name and address (if other than a corporation):

_____

By:_____

Title: _____

Principal's name and address (if a corporation):

_____

By _____

Title: _____

(Affix Corporate Seal)

Surety's name and address:

_____

_____

By:_____

Attorney-in-Fact (Affix Corporate Seal)

STATE OF _____)
) ss.
COUNTY OF _____)

On this ____ day of _____, 20_____, personally appeared before me _____, whose identity is personally known to me or proved to me on the basis of satisfactory evidence, and who, being by me duly sworn, did say that he/she is the Attorney-in-fact of the above-named Surety Company, and that he/she is duly authorized to execute the same and has complied in all respects with the laws of Utah in reference to becoming sole surety upon bonds, undertakings and obligations, and that he/she acknowledged to me that as Attorney-in-fact executed the same.

Subscribed and sworn to before me this _____ day of _____, 20_____.
My Commission Expires: _____
Resides at: _____

_____

NOTARY PUBLIC

Agency: _____
Agent: _____
Address: _____
Phone: _____

Approved As To Form: May 25, 2005
By Alan S. Bachman, Asst Attorney General

INSTRUCTIONS AND SUBCONTRACTORS LIST FORM

The three low bidders, as well as all other bidders that desire to be considered, are required by law to submit to DFCM within 24 hours of bid opening a list of **ALL** first-tier subcontractors, including the subcontractor's name, bid amount and other information required by Building Board Rule and as stated in these Contract Documents, based on the following:

DOLLAR AMOUNTS FOR LISTING

PROJECTS UNDER $500,000: ALL FIRST-TIER SUBS $20,000 OR OVER MUST BE LISTED
PROJECTS $500,000 OR MORE: ALL FIRST-TIER SUBS $35,000 OR OVER MUST BE LISTED

- Any additional subcontractors identified in the bid documents shall also be listed.
- The DFCM Director may not consider any bid submitted by a bidder if the bidder fails to submit a subcontractor list meeting the requirements of State law.
- List subcontractors for base bid as well as the impact on the list that the selection of any alternate may have.
- Bidder may not list more than one subcontractor to perform the same work.
- If there are no subcontractors for the job that are required to be reported by State law (either because there are no subcontractors that will be used on the project or because there are no first-tier subcontractors over the dollar amounts referred to above), then you do not need to submit a sublist. If you do not submit a sublist, it will be deemed to be a representation by you that there are no subcontractors on the job that are required to be reported under State law. At any time, DFCM reserves the right to inquire, for security purposes, as to the identification of the subcontractors at any tier that will be on the worksite.

LICENSURE:

The subcontractor's name, the type of work, the subcontractor's bid amount, and the subcontractor's license number as issued by DOPL, if such license is required under Utah Law, shall be listed. Bidder shall certify that all subcontractors, required to be licensed, are licensed as required by State law. A subcontractor includes a trade contractor or specialty contractor and does not include suppliers who provide only materials, equipment, or supplies to a contractor or subcontractor.

'SPECIAL EXCEPTION':

A bidder may list 'Special Exception' in place of a subcontractor when the bidder intends to obtain a subcontractor to perform the work at a later date because the bidder was unable to obtain a qualified or reasonable bid under the provisions of U.C.A.Section 63A-5-208(4). The bidder shall insert the term 'Special Exception' for that category of work, and shall provide documentation with the subcontractor list describing the bidder's efforts to obtain a bid of a qualified subcontractor at a reasonable cost and why the bidder was unable to obtain a qualified subcontractor bid. The Director must find that the bidder complied in good faith with State law requirements for any 'Special Exception' designation, in order for the bid to be considered. If awarded the contract, the Director shall supervise the bidder's efforts to obtain a qualified subcontractor bid. The amount of the awarded contract may not be adjusted to reflect the actual amount of the subcontractor's bid. Any listing of 'Special Exception' on the sublist form shall also include amount allocated for that work.

GROUNDS FOR DISQUALIFICATION:

The Director may not consider any bid submitted by a bidder if the bidder fails to submit a subcontractor list meeting the requirements of State law. Director may withhold awarding the contract to a particular bidder if one or more of the proposed subcontractors are considered by the Director to be unqualified to do the Work or for

such other reason in the best interest of the State of Utah. Notwithstanding any other provision in these instructions, if there is a good faith error on the sublist form, at the sole discretion of the Director, the Director may provide notice to the contractor and the contractor shall have 24 hours to submit the correction to the Director. If such correction is submitted timely, then the sublist requirements shall be considered met.

CHANGES OF SUBCONTRACTORS SPECIFICALLY IDENTIFIED ON SUBLIST FORM:

Subsequent to twenty-four hours after the bid opening, the contractor may change its listed subcontractors only after receiving written permission from the Director based on complying with all of the following criteria.

(1) The contractor has established in writing that the change is in the best interest of the State and that the contractor establishes an appropriate reason for the change, which may include, but not is not limited to, the following reasons: the original subcontractor has failed to perform, or is not qualified or capable of performing, and/or the subcontractor has requested in writing to be released.
(2) The circumstances related to the request for the change do not indicate any bad faith in the original listing of the subcontractors.
(3) Any requirement set forth by the Director to ensure that the process used to select a new subcontractor does not give rise to bid shopping.
(4) Any increase in the cost of the subject subcontractor work is borne by the contractor.
(5) Any decrease in the cost of the subject subcontractor work shall result in a deductive change order being issued for the contract for such decreased amount.
(6) The Director will give substantial weight to whether the subcontractor has consented in writing to being removed unless the Contractor establishes that the subcontractor is not qualified for the work.

EXAMPLE:

Example of a list where there are only four subcontractors:

TYPE OF WORK	SUBCONTRACTOR, "SELF" OR "SPECIAL EXCEPTION"	SUBCONTRACTOR BID AMOUNT	CONTRACTOR LICENSE #
ELECTRICAL	ABCD Electric Inc.	$350,000.00	123456789000
LANDSCAPING	"Self" *	$300,000.00	123456789000
CONCRETE (ALTERNATE #1)	XYZ Concrete Inc	$298,000.00	987654321000
MECHANICAL	"Special Exception" (attach documentation)	Fixed at: $350,000.00	(TO BE PROVIDED AFTER OBTAINING SUBCONTRACTOR)

* Bidders may list "self", but it is not required.

PURSUANT TO STATE LAW - SUBCONTRACTOR BID AMOUNTS CONTAINED IN THIS SUBCONTRACTOR LIST SHALL NOT BE DISCLOSED UNTIL THE CONTRACT HAS BEEN AWARDED.

STATE OF UTAH - DEPARTMENT OF ADMINISTRATIVE SERVICES

Division of Facilities Construction and Management

DFCM

SUBCONTRACTORS LIST

FAX TO 801-538-3677

PROJECT TITLE: _____

Caution: You must read and comply fully with instructions.

TYPE OF WORK	SUBCONTRACTOR, "SELF" OR "SPECIAL EXCEPTION"	SUBCONTRACTOR BID AMOUNT	CONT. LICENSE #

We certify that:

1. This list includes all subcontractors as required by the instructions, including those related to the base bid as well as any alternates.
2. We have listed "Self" or "Special Exception" in accordance with the instructions.
3. All subcontractors are appropriately licensed as required by State law.

FIRM: _____

DATE: _____ SIGNED BY: _____

NOTICE: FAILURE TO SUBMIT THIS FORM, PROPERLY COMPLETED AND SIGNED, AS REQUIRED IN THESE CONTRACT DOCUMENTS, SHALL BE GROUNDS FOR OWNER'S REFUSAL TO ENTER INTO A WRITTEN CONTRACT WITH BIDDER. ACTION MAY BE TAKEN AGAINST BIDDERS BID BOND AS DEEMED APPROPRIATE BY OWNER. ATTACH A SECOND PAGE IF NECESSARY.

300/300/____/FVA/____/_____/__/_
Project No. _____

CONTRACTOR'S AGREEMENT

FOR:

_____
_____
_____

THIS CONTRACTOR'S AGREEMENT, made and entered into this __ day of _____, 2006, by and between the DIVISION OF FACILITIES CONSTRUCTION AND MANAGEMENT, hereinafter referred to as "DFCM", and _____, incorporated in the State of Utah and authorized to do business in the State of Utah, hereinafter referred to as "Contractor", whose address is _____Utah _____.

WITNESSETH: WHEREAS, DFCM intends to have _____ Work performed at _____
_____

WHEREAS, Contractor agrees to perform the Work for the sum stated herein.

NOW, THEREFORE, DFCM and Contractor for the consideration provided in this Contractor's Agreement, agree as follows:

ARTICLE 1. SCOPE OF WORK. The Work to be performed shall be in accordance with the Contract Documents prepared by _____ and entitled "_____."

The DFCM General Conditions ("General Conditions") dated May 25, 2005 and all Supplemental General Conditions ("also referred to as General Conditions") on file at the office of DFCM and available on the DFCM website (http://dfcm.utah.gov/StdDocs/index.html), are hereby incorporated by reference as part of this Agreement and are included in the specifications for this Project. All terms used in this Contractor's Agreement shall be as defined in the Contract Documents, and in particular, the General Conditions.

The Contractor Agrees to furnish labor, materials and equipment to complete the Work as required in the Contract Documents which are hereby incorporated by reference. It is understood and agreed by the parties hereto that all Work shall be performed as required in the Contract Documents and shall be subject to inspection and approval of DFCM or its authorized representative. The relationship of the Contractor to the DFCM hereunder is that of an independent Contractor.

ARTICLE 2. CONTRACT SUM. The DFCM agrees to pay and the Contractor agrees to accept in full performance of this Contractor's Agreement, the sum of _____**DOLLARS AND NO CENTS ($_____**), which is the base bid, and includes the cost of a 100%

Performance Bond and a 100% Payment Bond as well as all insurance requirements of the Contractor. Said bonds have already been posted by the Contractor pursuant to State law. The required proof of insurance certificates have been delivered to DFCM in accordance with the General Conditions before the execution of this Contractor's Agreement.

ARTICLE 3. TIME OF COMPLETION AND DELAY REMEDY. The Work shall be Substantially Complete by _____ after the date of the Notice to Proceed. Contractor agrees to pay liquidated damages in the amount of _____ per day for each day after expiration of the Contract Time until the Contractor achieves Substantial Completion in accordance with the Contract Documents, if Contractor's delay makes the damages applicable. The provision for liquidated damages is: (a) to compensate the DFCM for delay only; (b) is provided for herein because actual damages can not be readily ascertained at the time of execution of this Contractor's Agreement; (c) is not a penalty; and (d) shall not prevent the DFCM from maintaining Claims for other non-delay damages, such as costs to complete or remedy defective Work.

No action shall be maintained by the Contractor, including its or Subcontractor or suppliers at any tier, against the DFCM or State of Utah for damages or other claims due to losses attributable to hindrances or delays from any cause whatsoever, including acts and omissions of the DFCM or its officers, employees or agents, except as expressly provided in the General Conditions. The Contractor may receive a written extension of time, signed by the DFCM, in which to complete the Work under this Contractor's Agreement in accordance with the General Conditions.

ARTICLE 4. CONTRACT DOCUMENTS. The Contract Documents consist of this Contractor's Agreement, the Conditions of the Contract (DFCM General Conditions, Supplementary and other Conditions), the Drawings, Specifications, Addenda and Modifications. The Contract Documents shall also include the bidding documents, including the Notice to Contractors, Instructions to Bidders/Proposers and the Bid/Proposal, to the extent not in conflict therewith and other documents and oral presentations that are documented as an attachment to the contract.

All such documents are hereby incorporated by reference herein. Any reference in this Contractor's Agreement to certain provisions of the Contract Documents shall in no way be construed as to lessen the importance or applicability of any other provisions of the Contract Documents.

ARTICLE 5. PAYMENT. The DFCM agrees to pay the Contractor from time to time as the Work progresses, but not more than once each month after the date of Notice to Proceed, and only upon Certificate of the A/E for Work performed during the preceding calendar month, ninety-five percent (95%) of the value of the labor performed and ninety-five percent (95%) of the value of materials furnished in place or on the site. The Contractor agrees to furnish to the DFCM invoices for materials purchased and on the site but not installed, for which the

Contractor requests payment and agrees to safeguard and protect such equipment or materials and is responsible for safekeeping thereof and if such be stolen, lost or destroyed, to replace same.

Such evidence of labor performed and materials furnished as the DFCM may reasonably require shall be supplied by the Contractor at the time of request for Certificate of Payment on account. Materials for which payment has been made cannot be removed from the job site without DFCM's written approval. Five percent (5%) of the earned amount shall be retained from each monthly payment. The retainage, including any additional retainage imposed and the release of any retainage, shall be in accordance with UCA 13-8-5 as amended. Contractor shall also comply with the requirements of UCA 13-8-5, including restrictions of retainage regarding subcontractors and the distribution of interest earned on the retention proceeds. The DFCM shall not be responsible for enforcing the Contractor’s obligations under State law in fulfilling the retention law requirements with subcontractors at any tier.

ARTICLE 6. INDEBTEDNESS. Before final payment is made, the Contractor must submit evidence satisfactory to the DFCM that all payrolls, materials bills, subcontracts at any tier and outstanding indebtedness in connection with the Work have been properly paid. Final Payment will be made after receipt of said evidence, final acceptance of the Work by the DFCM as well as compliance with the applicable provisions of the General Conditions.

Contractor shall respond immediately to any inquiry in writing by DFCM as to any concern of financial responsibility and DFCM reserves the right to request any waivers, releases or bonds from Contractor in regard to any rights of Subcontractors (including suppliers) at any tier or any third parties prior to any payment by DFCM to Contractor.

ARTICLE 7. ADDITIONAL WORK. It is understood and agreed by the parties hereto that no money will be paid to the Contractor for additional labor or materials furnished unless a new contract in writing or a Modification hereof in accordance with the General Conditions and the Contract Documents for such additional labor or materials has been executed. The DFCM specifically reserves the right to modify or amend this Contractor's Agreement and the total sum due hereunder either by enlarging or restricting the scope of the Work.

ARTICLE 8. INSPECTIONS. The Work shall be inspected for acceptance in accordance with the General Conditions.

ARTICLE 9. DISPUTES. Any dispute, PRE or Claim between the parties shall be subject to the provisions of Article 7 of the General Conditions. DFCM reserves all rights to pursue its rights and remedies as provided in the General Conditions.

ARTICLE 10. TERMINATION, SUSPENSION OR ABANDONMENT. This Contractor’s Agreement may be terminated, suspended or abandoned in accordance with the General Conditions.

ARTICLE 11. DFCM'S RIGHT TO WITHHOLD CERTAIN AMOUNT AND MAKE USE THEREOF. The DFCM may withhold from payment to the Contractor such amount as, in DFCM's judgment, may be necessary to pay just claims against the Contractor or Subcontractor at any tier for labor and services rendered and materials furnished in and about the Work. The DFCM may apply such withheld amounts for the payment of such claims in DFCM's discretion. In so doing, the DFCM shall be deemed the agent of Contractor and payment so made by the DFCM shall be considered as payment made under this Contractor's Agreement by the DFCM to the Contractor. DFCM shall not be liable to the Contractor for any such payment made in good faith. Such withholdings and payments may be made without prior approval of the Contractor and may be also be prior to any determination as a result of any dispute, PRE, Claim or litigation.

ARTICLE 12. INDEMNIFICATION. The Contractor shall comply with the indemnification provisions of the General Conditions.

ARTICLE 13. SUCCESSORS AND ASSIGNMENT OF CONTRACT. The DFCM and Contractor, respectively bind themselves, their partners, successors, assigns and legal representatives to the other party to this Agreement, and to partners, successors, assigns and legal representatives of such other party with respect to all covenants, provisions, rights and responsibilities of this Contractor’s Agreement. The Contractor shall not assign this Contractor’s Agreement without the prior written consent of the DFCM, nor shall the Contractor assign any moneys due or to become due as well as any rights under this Contractor’s Agreement, without prior written consent of the DFCM.

ARTICLE 14. RELATIONSHIP OF THE PARTIES. The Contractor accepts the relationship of trust and confidence established by this Contractor's Agreement and covenants with the DFCM to cooperate with the DFCM and A/E and use the Contractor's best skill, efforts and judgment in furthering the interest of the DFCM; to furnish efficient business administration and supervision; to make best efforts to furnish at all times an adequate supply of workers and materials; and to perform the Work in the best and most expeditious and economic manner consistent with the interests of the DFCM.

ARTICLE 15. AUTHORITY TO EXECUTE AND PERFORM AGREEMENT. Contractor and DFCM each represent that the execution of this Contractor's Agreement and the performance thereunder is within their respective duly authorized powers.

ARTICLE 16. ATTORNEY FEES AND COSTS. Except as otherwise provided in the dispute resolution provisions of the General Conditions, the prevailing party shall be entitled to reasonable attorney fees and costs incurred in any action in the District Court and/or appellate body to enforce this Contractor's Agreement or recover damages or any other action as a result of a breach thereof.

IN WITNESS WHEREOF, the parties hereto have executed this Contractor's Agreement on the day and year stated hereinabove.

CONTRACTOR:

_____
Signature Date

Title: _____

_____
Please type/print name clearly

State of _____)
)
County of _____)

On this ____ day of _____, 20____, personally appeared before me, _____, whose identity is personally known to me (or proved to me on the basis of satisfactory evidence) and who by me duly sworn (or affirmed), did say that he (she) is the _____ (title or office) of the firm and that said document was signed by him (her) in behalf of said firm.

_____
Notary Public

(SEAL)

My Commission Expires _____

APPROVED AS TO AVAILABILITY OF FUNDS:

_____
David D. Williams, Jr. Date
DFCM Administrative Services Director

DIVISION OF FACILITIES CONSTRUCTION AND MANAGEMENT

_____
Lynn A. Hinrichs Date
Assistant Director Construction Management

APPROVED AS TO FORM:
ATTORNEY GENERAL
July 1, 2010
By: Alan S. Bachman
Asst Attorney General

APPROVED FOR EXPENDITURE:

_____
Division of Finance Date

PERFORMANCE BOND

(Title 63, Chapter 56, U. C. A. 1953, as Amended)

That _____ hereinafter referred to as the "Principal" and _____, a corporation organized and existing under the laws of the State of _____, with its principal office in the City of _____ and authorized to transact business in this State and U. S. Department of the Treasury Listed (Circular 570, Companies Holding Certificates of Authority as Acceptable Securities on Federal Bonds and as Acceptable Reinsuring Companies); hereinafter referred to as the "Surety," are held and firmly bound unto the State of Utah, hereinafter referred to as the "Obligee, " in the amount of _____ DOLLARS ($_____) for the payment whereof, the said Principal and Surety bind themselves and their heirs, administrators, executors, successors and assigns, jointly and severally, firmly by these presents.

WHEREAS, the Principal has entered into a certain written Contract with the Obligee, dated the _____ day of _____, 20____, to construct _____ in the County of _____, State of Utah, Project No. _____, for the approximate sum of _____ _____ Dollars ($_____), which Contract is hereby incorporated by reference herein.

NOW, THEREFORE, the condition of this obligation is such that if the said Principal shall faithfully perform the Contract in accordance with the Contract Documents including, but not limited to, the Plans, Specifications and conditions thereof, the one year performance warranty, and the terms of the Contract as said Contract may be subject to Modifications or changes, then this obligation shall be void; otherwise it shall remain in full force and effect.

No right of action shall accrue on this bond to or for the use of any person or corporation other than the state named herein or the heirs, executors, administrators or successors of the Owner.

The parties agree that the dispute provisions provided in the Contract Documents apply and shall constitute the sole dispute procedures of the parties.

PROVIDED, HOWEVER, that this Bond is executed pursuant to the Provisions of Title 63, Chapter 56, Utah Code Annotated, 1953, as amended, and all liabilities on this Bond shall be determined in accordance with said provisions to the same extent as if it were copied at length herein.

IN WITNESS WHEREOF, the said Principal and Surety have signed and sealed this instrument this _____ day of _____, 20_____.

WITNESS OR ATTESTATION:

_____

PRINCIPAL:

_____

By: _____

(Seal)

Title: _____

WITNESS OR ATTESTATION:

_____

SURETY:

_____

By: _____
Attorney-in-Fact

(Seal)

STATE OF _____)
) ss.
COUNTY OF _____)

On this _____ day of _____, 20___, personally appeared before me _____, whose identity is personally known to me or proved to me on the basis of satisfactory evidence, and who, being by me duly sworn, did say that he/she is the Attorney in-fact of the above-named Surety Company and that he/she is duly authorized to execute the same and has complied in all respects with the laws of Utah inreference to becoming sole surety upon bonds, undertakings and obligations, and that he/she acknowledged to me that as Attorney-in-fact executed the same.

Subscribed and sworn to before me this _____ day of _____, 20_____.
My commission expires: _____
Resides at: _____

_____
NOTARY PUBLIC

Agency: _____
Agent: _____
Address: _____
Phone: _____

Approved As To Form: May 25, 2005
By Alan S. Bachman, Asst Attorney General

PAYMENT BOND

(Title 63, Chapter 56, U. C. A. l953, as Amended)

KNOW ALL PERSONS BY THESE PRESENTS:

That _____ hereinafter referred to as the "Principal," and _____ _____, a corporation organized and existing under the laws of the State of _____authorized to do business in this State and U. S. Department of the Treasury Listed (Circular 570, Companies Holding Certificates of Authority as Acceptable Securities on Federal Bonds and as Acceptable Reinsuring Companies); with its principal office in the City of _____, hereinafter referred to as the "Surety," are held and firmly bound unto the State of Utah hereinafter referred to as the "Obligee," in the amount of _____ _____ Dollars ($_____) for the payment whereof, the said Principal and Surety bind themselves and their heirs, administrators, executors, successors and assigns, jointly and severally, firmly by these presents.

WHEREAS, the Principal has entered into a certain written Contract with the Obligee, dated the _____ day of _____, 20____, to construct _____ in the County of _____, State of Utah, Project No. _____ for the approximate sum of _____ _____ Dollars ($_____), which contract is hereby incorporated by reference herein.

NOW, THEREFORE, the condition of this obligation is such that if the said Principal shall pay all claimants supplying labor or materials to Principal or Principal's Subcontractors in compliance with the provisions of Title 63, Chapter 56, of Utah Code Annotated, l953, as amended, and in the prosecution of the Work provided for in said Contract, then, this obligation shall be void; otherwise it shall remain in full force and effect.

That said Surety to this Bond, for value received, hereby stipulates and agrees that no changes, extensions of time, alterations or additions to the terms of the Contract or to the Work to be performed thereunder, or the specifications or drawings accompanying same shall in any way affect its obligation on this Bond, and does hereby waive notice of any such changes, extensions of time, alterations or additions to the terms of the Contract or to the Work or to the specifications or drawings and agrees that they shall become part of the Contract Documents.

PROVIDED, HOWEVER, that this Bond is executed pursuant to the provisions of Title 63, Chapter 56, Utah Code Annotated, 1953, as amended, and all liabilities on this Bond shall be determined in accordance with said provisions to the same extent as if it were copied at length herein.

IN WITNESS WHEREOF, the said Principal and Surety have signed and sealed this instrument this _____ day of _____, 20____.

WITNESS OR ATTESTATION:

_____

(Seal)

PRINCIPAL:

_____

By: _____

Title: _____

WITNESS OR ATTESTATION:

_____

SURETY:

_____

By: _____

Attorney-in-Fact (Seal)

STATE OF _____)
) ss.
COUNTY OF _____)

On this _____ day of _____, 20_____, personally appeared before me _____ _____, whose identity is personally known to me or proved to me on the basis of satisfactory evidence, and who, being by me duly sworn, did say that he/she is the Attorney-in-fact of the above-named Surety Company, and that he/she is duly authorized to execute the same and has complied in all respects with the laws of Utah in reference to becoming sole surety upon bonds, undertakings and obligations, and that he/she acknowledged to me that as Attorney-in-fact executed the same.

Subscribed and sworn to before me this _____ day of _____, 20_____.
My commission expires: _____
Resides at: _____

_____
NOTARY PUBLIC

Agency: _____
Agent: _____
Address: _____
Phone:

Approved As To Form: May 25, 2005
By Alan S. Bachman, Asst Attorney General

Great Salt Lake Marina Maintenance Building

DFCM PROJECT NO 10029510

MHTN PROJECT NO. 20105456.00

01 DECEMBER 2010

MHTN
ARCHITECTS

vision made **real**

420 East South Temple, Suite 100 . Salt Lake City . Utah . 84111 . 801.595.6700 . Fax 801.595.6717 . www.mhtn.com

11/30/10 - 10:48 AM S:\spx2010546.00 GSLMarina\1-cover_colorR.doc

© 2008 MHTN Architects, Inc.. All rights reserved

SECTION 000107 – SEALS

Architectural, Civil and Electrical seals are included herewith. See drawings for mechanical and structural specifications and seals.

ARCHITECTURAL SEAL:

CIVIL SEAL:

ELECTRICAL:

END OF SECTION 000107

GREAT SALT LAKE MARINA MAINTENANCE BUILDING

MHTN PROJECT NO 2010546.00
DFCM PROJECT NO 10029510

Table of Contents

12/01/2010

Division	Section Title	Pages
	SPECIFICATIONS GROUP	
	General Requirements Subgroup	
DIVISION 01 - GENERAL REQUIREMENTS		
011000	SUMMARY	2
014000	QUALITY REQUIREMENTS	2
014200	REFERENCES	8
014329	CODE REQUIRED SPECIAL INSPECTIONS	3
015000	TEMPORARY FACILITIES AND CONTROLS	2
016000	PRODUCT REQUIREMENTS	2
	Facility Construction Subgroup	
DIVISION 03 - CONCRETE		
031119	INSULATED CONCRETE FORMING	4
033000	CAST-IN-PLACE CONCRETE	4
DIVISION 04 - MASONRY		
DIVISION 05 - METALS		
051200	STRUCTURAL STEEL	2
052100	STEEL JOIST FRAMING	2
053100	STEEL DECKING	2
054000	COLD-FORMED METAL FRAMING	3
055000	METAL FABRICATIONS	2
055100	METAL STAIRS	2
DIVISION 06 – WOOD, PLASTICS AND COMPOSITES		
061000	ROUGH CARPENTRY	4
DIVISION 07 - THERMAL AND MOISTURE PROTECTION		
072100	BUILDING INSULATION	1
072400	EXTERIOR INSULATION AND FINISH SYSTEM (EIFS)	3
074113	MANUFACTURED ROOF PANELS	5
075400	MECHANICALLY ATTACHED THERMOPLASTIC MEMBRANE ROOFING	4
	CONTRACTOR ROOFING WARRANTY	3
	WARRANTY FOR SINGLE PLY ROOFING	3

077113	MANUFACTURED WALL COPINGS	2
077200	ROOF ACCESSORIES	2
079200	JOINT SEALANTS	1

DIVISION 08 - OPENINGS

081113	STEEL DOORS AND FRAMES	2
083113	ACCESS DOORS AND PANELS	1
083613	SECTIONAL OVERHEAD DOORS	2
084113	ALUMINUM-FRAMED STOREFRONTS	2
085113	ALUMINUM WINDOWS	2
086200	UNIT SKYLIGHTS	2
087100	DOOR HARDWARE	2
088000	GLAZING	2

DIVISION 09 - FINISHES

092900	GYPSUM BOARD ASSEMBLIES	2
093000	CERAMIC TILE	2
096513	RESILIENT BASE AND ACCESSORIES	2
097700	FIBERGLASS REINFORCED PLASTIC PANELS	2
099100	PAINTING	3
099600	HIGH PERFORMANCE COATINGS – EXTERIOR	4

DIVISION 10 - SPECIALTIES

101400	SIGNAGE	2
102600	WALL AND DOOR PROTECTION	1
10520	FIRE- PROTECTION SPECIALTIES	1
102800	TOILET AND BATH ACCESSORIES	3
104400	FIRE PROTECTION SPECIALTIES	1

Facility Services Subgroup

DIVISION 22 – PLUMBING – See Drawings

DIVISION 23 – HEATING VENTILATING AND AIR CONDITIONING – See Drawings

DIVISION 26 – ELECTRICAL

260500	COMMON WORK RESULTS FOR ELECTRICAL	8
260519	LOW VOLTAGE ELECTRICAL POWER CONDUCTORS AND CABLES	5
260526	GROUNDING AND BONDING FOR ELECTRICAL SYSTEMS	6
260533	RACEWAYS AND BOXES FOR ELECTRICAL SYSTEMS	8
260553	IDENTIFICATION FOR ELECTRICAL SYSTEMS	7
260943	LIGHTING CONTROLS	5
262200	DRY TYPE TRANSFORMERS	5
262416	PANEL BOARDS	13
262726	WIRING DEVICES	7
262813	FUSES	3
262816	ENCLOSED SWITCHES AND CIRCUIT BREAKERS	6
262913	ENCLOSED CONTROLLERS	6
264313	TRANSIENT VOLTAGE SUPPRESSION FOR LOW VOLTAGE ELECTRICAL POWER CIRCUITS	4

265100 INTERIOR LIGHTING 8

DIVISION 28 – SECURITY AND FIRE ALARM SYSTEMS
283100 FIRE-ALARM SYSTEM 12

Site and Infrastructure Subgroup

DIVISION 31 - EARTHWORK
310700 GENERAL SITE CONSTRUCTION REQUIREMENTS 2
311000 SITE CLEARING 6
312000 EARTH MOVING 16
315000 EXCAVATION SUPPORT AND PROTECTION 6

DIVISION 32 - EXTERIOR IMPROVEMENTS
321216 ASPHALT PAVING 12
321313 CONCRETE PAVING 20
321373 CONCRETE PAVING JOINT SEALANTS 7
323113 CHAIN LINL FENCES AND GATES 4

DIVISION 33 – UTILITIES
330500 COMMON WORK RESULTS FOR UTILITIES 11
331100 WATER UTILITY PIPING 10
333000 SANITARY SEWERAGE PIPING 13

APPENDIX
COMCHECK ENVELOPE COMPLIANCE CERTIFICATE 8
COMCHECK INTERIOR LIGHTING COMPLIANCE CERTIFICATE 4
PSI GEOTECHNICAL INVESTIGATION JULY 16, 2010
ICC Reports
Dryvit ESR-1232
El Rey 3559
Sto – ESR 1232

SECTION 011000 - SUMMARY

PART 1 - GENERAL

1.1 SUMMARY OF WORK

A. Project Identification: As follows:
   Project: Great Salt Lake Marina Maintenance Building

   1. Owner: State of Utah
      Department of Natural Resources
      1594 West North Temple
      PO Box 146001
      Salt Lake City, Utah 84114-6001
      Daniel Clark – Facilities and Construction Manager

B. Contract Documents, dated September 2, 2010 were prepared by MHTN Architects, 420 East south Temple , Salt Lake City, UY 84111 and James T. Dresslar Architect, LLC, 387 Park Lane, Moab, Utah 84532 (435) 259-1155.

C. The Work consists of a new maintenance facility, including associated site improvements, as described within the Contract Documents.

D. Work not included: The following will be either furnished or provided by others, as indicated, under separate contract with the Owner (Owner's Workforce):
   1. Air Compressor: To be furnished by Owner, installed by Contractor.
   2. Propane Tank: To be provided by Owner. Piping from building to tank to be provided by Contractor.
   3. Laundry Equipment: To be provided by Owner.
   4. Toilet Accessories: To be provided by Owner or Contractor, as scheduled.
   5. Furnishings: To be provided by Owner.

E. Coordination of Work with Owner's Workforce: The Contractor shall review Contract Documents and shop drawings furnished by the Owner's Workforce for Work to be provided by the Contractor.

1.2 DEFINITIONS

A. Furnish: Furnish materials for installation by parties indicated.

B. Install: Install materials furnished by parties indicated.

C. Provide: Furnish and install materials.

1.3 WORK RESTRICTIONS

A. Contractor's Use of Premises: During construction, Contractor shall have full use of site area indicated.

PART 2 - PRODUCTS (Not Applicable)

PART 3 - EXECUTION (Not Applicable)

END OF SECTION 011000

SECTION 014000 - QUALITY REQUIREMENTS

PART 1 - GENERAL

1.1 RELATED SECTIONS

A. 014329 Code Required Special Inspections

1.2 SECTION REQUIREMENTS

A. Testing and inspecting services are required to verify compliance with requirements specified or indicated. Unless otherwise noted, the Owner will provide these services. These services do not relieve Contractor of responsibility for compliance with the Contract Document requirements.

1. Testing and inspecting services are specified in other Sections of these Specifications or are required by authorities having jurisdiction and shall be performed by independent testing agencies.
2. Where quality-control services are indicated as Contractor's responsibility, engage a qualified testing agency to perform these services.
3. Contractor is responsible for scheduling times for tests, inspections, and obtaining samples and notifying testing agency.
4. Retesting and Reinspecting: Contractor shall pay for additional testing and inspecting required as a result of tests and inspections indicating noncompliance with requirements.

B. Submittals: Testing agency shall submit a certified written report of each test and inspection to Contractor, Owner, Architect, and to authorities having jurisdiction when they so direct. Reports of each inspection, test, or similar service shall include the following:

1. Name, address, and telephone number of testing agency.
2. Project title and number.
3. Date of issue.
4. Dates and locations of samples and tests or inspections.
5. Record of temperature and weather conditions at time of sample taking and testing and inspecting.
6. Names of individuals making tests and inspections.
7. Description of the Work and test and inspection method.
8. Complete test or inspection data, test and inspection results, an interpretation of test results, and comments or professional opinion on whether tested or inspected Work complies with the Contract Document requirements.
9. Recommendations on retesting and reinspecting.
10. Name and signature of laboratory inspector.

C. Testing Agency Qualifications: An independent agency with the experience and capability to conduct testing and inspecting indicated; and where required by authorities having jurisdiction, that is acceptable to authorities.

D. Testing Agency Responsibilities: Testing agency shall cooperate with Architect and Contractor in performing its duties and shall provide qualified personnel to perform inspections and tests.

1. Agency shall promptly notify Architect and Contractor of irregularities or deficiencies in the Work observed during performance of its services.
2. Agency shall not release, revoke, alter, or increase requirements of the Contract Documents nor approve or accept any portion of the Work.
3. Agency shall not perform any duties of Contractor.

E. Auxiliary Services: Cooperate with testing agencies and provide auxiliary services as requested, including the following:

1. Access to the Work.
2. Incidental labor and facilities necessary to facilitate tests and inspections.
3. Adequate quantities of materials for testing, and assistance in obtaining samples.
4. Facilities for storage and field curing of test samples.
5. Security and protection for samples and for testing and inspecting equipment.

F. Special Tests and Inspections: Conducted by a qualified testing agency as required by authorities having jurisdiction, as indicated in individual Specification Sections.

G. Minimum Quantity or Quality Levels: The quantity or quality level shown or specified shall be the minimum provided or performed. The actual installation may comply exactly with the minimum quantity or quality specified, or it may exceed the minimum within reasonable limits.

PART 2 - PRODUCTS (Not Applicable)

PART 3 - EXECUTION (Not Applicable)

END OF SECTION 014000

SECTION 014200 - REFERENCES

PART 1 - GENERAL

1.1 GENRAL REQUIREMENTS

A. Publication Dates: Comply with standards in effect as of date of the Contract Documents, unless otherwise indicated.

B. Abbreviations and Acronyms: Where abbreviations and acronyms are used in Specifications or other Contract Documents, they shall mean the recognized name of the entities in the following list. Names, telephone numbers, and Web site addresses are subject to change and are believed to be accurate and up-to-date as of the date of the Contract Documents.

AA	Aluminum Association, Inc. (The) www.aluminum.org	(202) 862-5100
AABC	Associated Air Balance Council www.aabchq.com	(202) 737-0202
AAMA	American Architectural Manufacturers Association www.aamanet.org	(847) 303-5664
AASHTO	American Association of State Highway and Transportation Officials www.aashto.org	(202) 624-5800
ACI	American Concrete Institute/ACI International www.aci-int.org	(248) 848-3700
AFPA	American Forest & Paper Association (See AF&PA)	
AF&PA	American Forest & Paper Association www.afandpa.org	(800) 878-8878 (202) 463-2700
AGA	American Gas Association www.aga.org	(202) 824-7000
AHA	American Hardboard Association www.hardboard.org	(847) 934-8800
AI	Asphalt Institute www.asphaltinstitute.org	(859) 288-4960
AIA	American Institute of Architects (The) www.aia.org	(202) 626-7300

AISC	American Institute of Steel Construction, Inc. www.aisc.org	(800) 644-2400 (312) 670-2400
AISI	American Iron and Steel Institute www.steel.org	(202) 452-7100
AITC	American Institute of Timber Construction www.aitc-glulam.org	(303) 792-9559
ALSC	American Lumber Standard Committee www.alsc.org	(301) 972-1700
AMCA	Air Movement and Control Association International, Inc. www.amca.org	(847) 394-0150
ANSI	American National Standards Institute www.ansi.org	(202) 293-8020
APA	APA-The Engineered Wood Association www.apawood.org	(253) 565-6600
APA	Architectural Precast Association www.archprecast.org	(239) 454-6989
ARI	Air-Conditioning & Refrigeration Institute www.ari.org	(703) 524-8800
ASCE	American Society of Civil Engineers www.asce.org	(800) 548-2723 (703) 295-6300
ASHRAE	American Society of Heating, Refrigerating and Air-Conditioning Engineers www.ashrae.org	(800) 527-4723 (404) 636-8400
ASME	ASME International (The American Society of Mechanical Engineers International) www.asme.org	(800) 843-2763 (212) 591-7722
ASSE	American Society of Sanitary Engineering www.asse-plumbing.org	(440) 835-3040
ASTM	ASTM International www.astm.org	(610) 832-9585
AWCI	AWCI International (Association of the Wall and Ceiling Industries International) www.awci.org	(703) 534-8300
AWI	Architectural Woodwork Institute	(800) 449-8811

	www.awinet.org	(703) 733-0600
AWPA	American Wood-Preservers' Association www.awpa.com	(817) 326-6300
AWS	American Welding Society www.aws.org	(800) 443-9353 (305) 443-9353
AWWA	American Water Works Association www.awwa.org	(800) 926-7337 (303) 794-7711
BHMA	Builders Hardware Manufacturers Association www.buildershardware.com	(212) 297-2122
BOCA	BOCA International, Inc. www.bocai.org	(708) 799-2300
CABO	Council of American Building Officials (See ICC)	
CCC	Carpet Cushion Council www.carpetcushion.org	(203) 637-1312
CDA	Copper Development Association Inc. www.copper.org	(800) 232-3282 (212) 251-7200
CFFA	Chemical Fabrics & Film Association, Inc. www.chemicalfabricsandfilm.com	(216) 241-7333
CFR	Code of Federal Regulations www.access.gpo.gov/nara/cfr	(888) 293-6498 (202) 512-1530
CISCA	Ceilings & Interior Systems Construction Association www.cisca.org	(630) 584-1919
CISPI	Cast Iron Soil Pipe Institute www.cispi.org	(423) 892-0137
CRD	Army Corps of Engineers Handbook for Concrete and Cement www.wes.army.mil	(601) 634-2355
CRI	Carpet and Rug Institute (The) www.carpet-rug.com	(800) 882-8846 (706) 278-3176
CRSI	Concrete Reinforcing Steel Institute www.crsi.org	(847) 517-1200
CSA	CSA International (Formerly: IAS - International Approval Services) www.csa-international.org	(800) 463-6727 (416) 747-4000

CSSB	Cedar Shake & Shingle Bureau www.cedarbureau.org	(604) 820-7700
DHI	Door and Hardware Institute www.dhi.org	(703) 222-2010
DOC	Department of Commerce www.doc.gov	(202) 482-2000
DOD	Department of Defense Military Specifications and Standards www.dodssp.daps.mil	(215) 697-6257
EIMA	EIFS Industry Members Association www.eima.com	(800) 294-3462 (770) 968-7945
EPA	Environmental Protection Agency www.epa.gov	(202) 260-2090
FDA	Food and Drug Administration www.fda.gov	(888) 463-6332
FMG	FM Global (Formerly: FM - Factory Mutual System) www.fmglobal.com	(401) 275-3000
FS	Federal Specification Available from Department of Defense Single Stock Point www.dodssp.daps.dla.mil	(215) 697-6257
	Available from General Services Administration www.gsa.gov	(202) 619-8925
	Available from National Institute of Building Sciences www.nibs.org	(202) 289-7800
GA	Gypsum Association www.gypsum.org	(202) 289-5440
GANA	Glass Association of North America (Formerly: FGMA - Flat Glass Marketing Association) www.glasswebsite.com	(785) 271-0208
HI	Hydraulic Institute www.pumps.org	(888) 786-7744 (973) 267-9700
HPVA	Hardwood Plywood & Veneer Association www.hpva.org	(703) 435-2900
HUD	Department of Housing and Urban Development	(202) 708-1112

	www.hud.gov	
IAS	International Approval Services (See CSA International)	
ICC	International Code Council (Formerly: CABO - Council of American Building Officials) www.intlcode.org	(703) 931-4533
ICBO	International Conference of Building Officials www.icbo.org	(800) 284-4406 (562) 699-0541
ICEA	Insulated Cable Engineers Association, Inc. www.icea.net	(770) 830-0369
IEEE	Institute of Electrical and Electronics Engineers, Inc. (The) www.ieee.org	(212) 419-7900
IESNA	Illuminating Engineering Society of North America (The) www.iesna.org	(212) 248-5000
IGCC	Insulating Glass Certification Council www.igcc.org	(315) 646-2234
IGMA	Insulating Glass Manufacturers Alliance (The) (Formerly: SIGMA - Sealed Insulating Manufacturers Association) www.igmaonline.org	(613) 233-1510
ITS	Intertek Testing Services www.itsglobal.com	(800) 345-3851 (607) 753-6711
KCMA	Kitchen Cabinet Manufacturers Association www.kcma.org	(703) 264-1690
LMA	Laminating Materials Association (Formerly: ALA - American Laminators Association) www.lma.org	(201) 664-2700
LPI	Lightning Protection Institute www.lightning.org	(800) 488-6864 (847) 577-7200
MBMA	Metal Building Manufacturers Association www.mbma.com	(216) 241-7333
MFMA	Maple Flooring Manufacturers Association www.maplefloor.org	(847) 480-9138
MSS	Manufacturers Standardization Society of The Valve and Fittings Industry, Inc. www.mss-hq.com	(703) 281-6613

NEBB	National Environmental Balancing Bureau www.nebb.org	(301) 977-3698
NECA	National Electrical Contractors Association www.necanet.org	(301) 657-3110
NeLMA	Northeastern Lumber Manufacturers' Association www.nelma.org	(207) 829-6901
NEMA	National Electrical Manufacturers Association www.nema.org	(703) 841-3200
NETA	InterNational Electrical Testing Association www.netaworld.org	(303) 697-8441
NFPA	NFPA International www.nfpa.org	(800) 344-3555 (617) 770-3000
NFRC	National Fenestration Rating Council www.nfrc.org	(301) 589-1776
NLGA	National Lumber Grades Authority www.nlga.org	(604) 524-2393
NOFMA	National Oak Flooring Manufacturers Association www.nofma.org	(901) 526-5016
NRCA	National Roofing Contractors Association www.nrca.net	(800) 323-9545 (847) 299-9070
NSF	NSF International (National Sanitation Foundation International) www.nsf.org	(800) 673-6275 (734) 769-8010
NWWDA	National Wood Window and Door Association (See WDMA)	
PCI	Precast/Prestressed Concrete Institute www.pci.org	(312) 786-0300
PDCA	Painting and Decorating Contractors of America www.pdca.com	(800) 332-7322 (703) 383-0800
RCSC	Research Council on Structural Connections c/o AISC www.boltcouncil.org	
SDI	Steel Deck Institute www.sdi.org	(847) 462-1930

SDI	Steel Door Institute www.steeldoor.org	(440) 899-0010
SIGMA	Sealed Insulating Glass Manufacturers Association (See IGMA)	
SJI	Steel Joist Institute www.steeljoist.org	(843) 626-1995
SMACNA	Sheet Metal and Air Conditioning Contractors' National Association www.smacna.org	(703) 803-2980
SPIB	Southern Pine Inspection Bureau (The) www.spib.org	(850) 434-2611
SPRI	SPRI (Single Ply Roofing Institute) www.spri.org	(781) 647-7026
SBCCI	Southern Building Code Congress International, Inc. www.sbcci.org	(205) 591-1853
SSPC	SSPC: The Society for Protective Coatings www.sspc.org	(412) 281-2331 (877) 281-7772
STI	Steel Tank Institute www.steeltank.com	(847) 438-8265
TCA	Tile Council of America, Inc. www.tileusa.com	(864) 646-8453
TFS	Texas Forest Service www.txforestservice.tamu.edu	(936) 639-8180
TIA/EIA	Telecommunications Industry Association/ Electronic Industries Alliance www.tiaonline.org	(703) 907-7700
TPI	Truss Plate Institute, Inc. www.tpinst.org	(608) 833-5900
UL	Underwriters Laboratories Inc. www.ul.com	(800) 704-4050 (847) 272-8800
WCLIB	West Coast Lumber Inspection Bureau www.wclib.org	(800) 283-1486 (503) 639-0651
WCMA	Window Covering Manufacturers Association (See WCSC)	(212) 661-4261

WCSC	Window Covering Safety Council www.windowcoverings.org	(800) 506-4636 (212) 661-4261
WDMA	Window & Door Manufacturers Association (Formerly: NWWDA - National Wood Window and Door Association) www.wdma.com	(800) 223-2301 (847) 299-5200
WIC	Woodwork Institute of California www.wicnet.org	(916) 372-9943
WMMPA	Wood Moulding & Millwork Producers Association www.wmmpa.com	(800) 550-7889 (530) 661-9591
WWPA	Western Wood Products Association www.wwpa.org	(503) 224-3930

PART 2 - PRODUCTS (Not Applicable)

PART 3 - EXECUTION (Not Applicable)

END OF SECTION 014200

SECTION 014329 – CODE REQUIRED SPECIAL INSPECTIONS

PART 1 - GENERAL

1.1 RELATED SECTIONS

A. 014000 Quality Requirements

1.2 SECTION REQUIREMENTS

A. Basic Seismic Force Resisting System: Ordinary reinforced insulated concrete form and cast in place concrete shear walls, footings and the north cold formed metal framed wall under the mezzanine.

B. Submittals: Each contractor responsible for the construction of a main wind or seismic force resisting system, designated seismic system or a wind or seismic resisting component listed in this section shall submit a written statement of responsibility to the building official and the owner prior to the commencement of work on the system or component. The contractor's statement of responsibility shall contain the following:

1. Acknowledgement of awareness of the special requirements contained in the statement o special inspections;
2. Acknowledgment that control will be exercised to obtain conformance with the construction documents approved by the building official;
3. Procedures of r exercising control within the contractor's organization, the method and frequency of reporting and the distribution of the reports; and
4. Identification and qualifications of the person(s) exercising such control and their positions(s) in the organization.

C. Special Inspection services are required to verify compliance with requirements specified or indicated. Unless otherwise noted, the Owner will provide these services. These services do not relieve Contractor of responsibility for compliance with the Contract Document requirements.

1. Special inspection services are specified in this section and are required by authorities having jurisdiction and shall be performed by independent testing agencies.
2. Contractor is responsible for scheduling times for tests, inspections, and obtaining samples and notifying testing agency.
3. Retesting and Reinspecting: Contractor shall pay for additional testing and inspecting required as a result of tests and inspections indicating noncompliance with requirements.

B. Special inspectors shall keep records of inspections. The special inspector shall fumish inspection reports to the building official, and to the registered design professional in responsible charge. Reports shall indicate that work inspected was done in conformance to approved construction documents. Discrepancies shall be brought to the immediate attention of the contractor for correction. **If** the discrepancies are not corrected, the discrepancies shall be brought to the attention of the building official and to the registered design professional in responsible charge prior to the completion of that phase of the work. A final report documenting

required special inspections and correction of any discrepancies noted in the inspections shall be submitted at a point in time agreed upon by the permit applicant and the building official prior to the start of work.

C. Inspection of fabricators: Where fabrication of structural load-bearing members and assemblies is being performed on the premises of a fabricator's shop, special inspection of the fabricated items shall be required by this section.

1. Fabrication and implementation procedures. The special inspector shall verify that the fabricator maintains detailed fabrication and quality control procedures that provide a basis for inspection control of the workmanship and the fabricator's ability to conform to approved construction documents and referenced standards. The special inspector shall review the procedures for completeness and adequacy relative to the code requirements for the fabricator's scope of work.

   A. Exception: Special inspections required by this section are not required where the work is done on the premises of a fabricator registered and approved to perform such work without special inspection. Approval shall be based upon review of the fabricator's written procedural and quality control manuals and periodic auditing of fabrication practices by an approved special inspection agency. At completion of fabrication, the approved fabricator shall submit a certificate of compliance to the building official stating that the work was performed in accordance with the approved construction documents.

D. Steel Construction:

1. Welding: Welding inspection shall be in compliance with AWS D1.1. The basis for welding inspector qualification shall be A WS D 1.1.
2. Details: The special inspector shall perform an inspection of the steel frame to verify compliance with the details shown on the approved construction documents, such as bracing, stiffening, member locations and proper application of joint details at each connection.
3. Material verification of structural steel.
   A. Identification markings to conform to AWS specification in the approved construction documents per ASTM A 6 or ASTM A 568.
   B. Manufacturer’s certified mill test reports.
4. Material verification of weld filler materials.
   A. Identification markings to conform to AWS specification in the approved construction documents per AISC 360, Section A3.5.
   B. Manufacturer’s certificate of compliance required.
5. Periodic inspection of floor and deck welds and single fillet welds < 5/16 inch.
6. Periodic inspection of steel stairs and railing systems and a visual inspection of wall welds is made prior to completion or prior to shipment of shop welding.
7. Periodic inspection of steel frame joint details for compliance with approved construction documents.

E. Insulated Concrete Form, Footing and Mezzanine Slab Concrete:

1. Periodic inspection of reinforcing steel per ACI 318: 3.5, 7.1-7.7.
2. Periodic inspection verifying use of required design mix per ACI 318: Ch. 4, 5.2-5.4.
3. Continuous inspection that at the time fresh concrete is sampled to fabricate specimens for strength tests, perform slump and air content tests, and determine the temperature of the concrete.
4. Continuous inspection of concrete placement for proper application techniques.
5. Periodic inspection for maintenance of specified curing temperature and techniques.
6. Periodic inspection of formwork for shape, location and dimensions of the concrete

member being formed.

7. In the absence of sufficient data or documentation providing evidence of conformance to quality standards for materials in Chapter 3 of ACI 318, the building official shall require testing of materials in accordance with the appropriate standards and criteria for the material in Chapter 3 of ACI 318.

F. Soils:

1. During fill placement, the special inspector shall determine that proper materials and procedures are used in accordance with the provisions of the approved soils report.
2. Periodically verify materials below footings are adequate to achieve the design bearing capacity.
3. Periodically verify excavations are extended to proper depth and have reached proper material.
4. Periodically perform classification and testing of controlled fill materials.
5. Continuously verify use of proper materials, densities and lift thicknesses during placement and compaction of controlled fill.
6. Prior to placement of controlled fill periodically observe subgrade and verify that site has been prepared properly

G. Cold Formed Steel Framing:

1. Periodic special inspection is required during welding operation of elements of the seismic force resisting system. Periodic special inspection is required for screw attachment, bolting, anchoring and other fastening of components within the seismic force resisting system, including struts, braces, and hold-downs.

H. Mechanical and Electrical Systems:

1. Periodic special inspection is required during installation of piping systems intended to carry flammable, combustible or high toxic contents and their associated mechanical units.

END OF SECTION 014329

SECTION 015000 - TEMPORARY FACILITIES AND CONTROLS

PART 1 - GENERAL

1.1 SECTION REQUIREMENTS

A. Use Charges: Cost or use charges for temporary power and water will be paid for by the Owner. Other cost or use charges for temporary facilities, including connection fees for temporary power and water shall be included in the Contract Sum.

B. Electrical Service: Contractor shall install temporary electric service in accordance with NEMA, NECA, NFPA 70 and UL standards and regulations.

PART 2 - PRODUCTS

2.1 EQUIPMENT

A. Heating Equipment: Unless Owner authorizes use of permanent heating system, provide vented, self-contained heaters with thermostatic control.

1. Use of gasoline-burning space heaters or open-flame heaters is prohibited.
2. Heating Units: Listed and labeled, by a testing agency acceptable to authorities having jurisdiction, and marked for intended use.

PART 3 - EXECUTION

3.1 TEMPORARY UTILITIES

A. General: Arrange with utility company, Owner, and existing users for time when service can be interrupted, if necessary, to make connections for temporary services.

B. Sanitary Facilities: Provide temporary toilets, wash facilities, and drinking-water fixtures. Comply with regulations and health codes for type, number, location, operation, and maintenance of fixtures and facilities.

C. Heating and Cooling: Provide temporary heating and cooling required for curing or drying of completed installations or for protecting installed construction from adverse effects of low temperatures or high humidity. Select equipment that will not have a harmful effect on completed installations or elements being installed.

D. Provide temporary lighting with local switching that provides adequate illumination for construction operations, observations, inspections, and traffic conditions.

3.2 TEMPORARY SUPPORT FACILITIES

A. Provide field offices, storage and fabrication sheds, and other support facilities as necessary for construction operations.

B. Provide waste-collection containers in sizes adequate to handle waste from construction operations. Collect waste daily and, when containers are full, legally dispose of waste off-site. Comply with requirements of authorities having jurisdiction.

C. Install a project identification sign near entrance point through temporary construction fencing to inform the public and persons seeking entrance to Project.

3.3 TEMPORARY SECURITY AND PROTECTION FACILITIES

A. Provide temporary environmental protection, operate temporary facilities, and conduct construction in ways and by methods that comply with environmental regulations and that minimize possible air, waterway, and subsoil contamination or pollution or other undesirable effects.

B. Provide measures to prevent soil erosion and discharge of soil-bearing water runoff and airborne dust to adjacent properties and walkways, according to requirements of authorities having jurisdiction.

C. Provide temporary enclosures for protection of construction and workers from inclement weather and for containment of heat.

D. Comply with requirements of authorities having jurisdiction for erecting structurally adequate barricades, including warning signs and lighting.

E. Provide site enclosure fence in a manner that will prevent people and animals from easily entering site except by entrance gates.

F. Install and maintain temporary fire-protection facilities. Comply with NFPA 241.

3.4 TERMINATION AND REMOVAL

A. Temporary Utilities: At earliest feasible time, when acceptable to Owner, change over from use of temporary service to use of permanent service.

B. Remove temporary facilities and controls no later than Substantial Completion. Personnel remaining after Substantial Completion will be permitted to use permanent facilities, under conditions acceptable to Owner.

END OF SECTION 015000

SECTION 016000 - PRODUCT REQUIREMENTS

PART 1 - GENERAL

1.1 SECTION REQUIREMENTS

A. The term "product" includes the terms "material," "equipment," "system," and terms of similar intent.

B. Product Substitutions: Substitutions include changes in products, materials, equipment, and methods of construction from those required by the Contract Documents and proposed by Contractor after award of the Contract.

1. Submit five copies of each request for product substitution.
2. Submit requests within twenty one days after the Notice of Award.
3. Do not submit unapproved substitutions on Shop Drawings or other submittals.
4. Identify product to be replaced and show compliance with requirements for substitutions. Include a detailed comparison of significant qualities of proposed substitution with those of the Work specified, a list of changes needed to other parts of the Work required to accommodate proposed substitution, and any proposed changes in the Contract Sum or the Contract Time should the substitution be accepted.
5. Architect will review the proposed substitution and notify Contractor of its acceptance or rejection. If product substitution is accepted, it will be identified by Change Order.

C. Comparable Product Requests:

1. Submit five copies of each request for comparable product. Do not submit unapproved products on Shop Drawings or other submittals.
2. Identify product to be replaced and show compliance with requirements for comparable product requests. Include a detailed comparison of significant qualities of proposed substitution with those of the Work specified.
3. Architect will review the proposed product and notify Contractor of its acceptance or rejection.

D. Deliver, store, and handle products using means and methods that will prevent damage, deterioration, and loss, including theft. Comply with manufacturer's written instructions.

1. Schedule delivery to minimize long-term storage at Project site and to prevent overcrowding of construction spaces.
2. Deliver products to Project site in manufacturer's original sealed container or packaging, complete with labels and instructions for handling, storing, unpacking, protecting, and installing.
3. Inspect products on delivery to ensure compliance with the Contract Documents and to ensure that products are undamaged and properly protected.
4. Store materials in a manner that will not endanger Project structure.
5. Store products that are subject to damage by the elements, under cover in a weathertight enclosure above ground, with ventilation adequate to prevent condensation.

E. Warranties specified in other Sections shall be in addition to, and run concurrent with, other warranties required by the Contract Documents. Manufacturer's disclaimers and limitations on product warranties do not relieve Contractor of obligations under requirements of the Contract Documents.

PART 2 - PRODUCTS

2.1 PRODUCT OPTIONS

A. Provide products that comply with the Contract Documents, are undamaged, and are new at the time of installation.

1. Provide products complete with accessories, trim, finish, and other devices and components needed for a complete installation and the intended use and effect.
2. Descriptive, performance, and reference standard requirements in the Specifications establish "salient characteristics" of products.

B. Product Selection Procedures:

1. Where Specifications name a single product or manufacturer, provide the item indicated that complies with requirements.
2. Where Specifications include a list of names of products or manufacturers, provide one of the items indicated that complies with requirements.
3. Where Specifications include a list of names of products or manufacturers, accompanied by the term "available products" or "available manufacturers," provide one of the named items that complies with requirements. Comply with provisions for "comparable product requests" for consideration of an unnamed product.
4. Where Specifications name a product as the "basis-of-design" and include a list of manufacturers, provide the named product. Comply with provisions for "comparable product requests" for consideration of an unnamed product by the other named manufacturers.
5. Where Specifications name a single product as the "basis-of-design" and no other manufacturers are named, provide the named product. Comply with provisions for "comparable product requests" for consideration of an unnamed product by another manufacturer.

C. Unless otherwise indicated, Architect will select color, pattern, and texture of each product from manufacturer's full range of options that includes both standard and premium items.

PART 3 - EXECUTION (Not Applicable)

END OF SECTION 016000

SECTION 031119 – INSULATED CONCRETE FORMING

PART 1 - GENERAL

1.1 RELATED SECTIONS

A. 033000 Cast in Place Concrete

B. 051200 Structural Steel Framing

C. 055000 Metal Fabrications

D. 074200 Exterior Insulation and Finish System

E. 092900 Gypsum Board

1.2 SECTION REQUIREMENTS

A. Submittals:

1. Product Data model code evaluation report at notice of Consideration of Contract Award.
2. Material Certificates: For each type of product indicated. Include statements of material properties indicating compliance with requirements.
3. Certificate from ICF manufacturer indicating approval of product installer.

B. References:

1. ACI 318 Building Code Requirements for Reinforced Concrete.
2. ASTM C236 Steady State Thermal Performance of Building Assemblies.
3. ASTM C473 Physical Testing of Gypsum Board Products and Gypsum Lath.
4. ASTM D1761 Mechanical Fasteners in Wood.
5. ASTM E84 Surface Burning Characteristics of Building Materials.
6. UBC 26-3 Uniform Building Code Standard Room Fire Test.

C. System Description / Performance Requirements:

1. Insulated concrete wall form system shall consist of two flame resistant panels of expanded polystyrene (EPS) connected by high density polypropylene webs. Where forms are to receive exterior EIFS, provide manufacturer's purpose designed form unit with web members concealed on side to receive EIFS.
2. Wall system to provide minimum 10" and 6" concrete wall sections as indicated, at all respective locations throughout the wall area.
3. Wall system webs to provide minimum 1" wide fastening strips at 8" on center, flush with wall face for full wall height to facilitate finish fastening at interior and exterior.
4. Wall system to provide accurate postioning of steel within form cavity to conform to reinforcing requirements of ACI 318.
5. EPS foam panels with concrete to provide minimum insulation as follows:
   a. 6" Cavity Form Unit: R22.1

b. 10” Cavity Form Unit: R21.8
6. EPS foam to provide maximum vapor permeation of 3.5 Perm-in.
7. Finished wall assembly to provide minimum Sound Transmission Class rating of STC 50.

D. Quality Assurance:

1. ICF wall system shall be installed by a contractor authorized by the ICF manufacturer prior to bidding.

E. Delivery, Storage and Handling:
1. Deliver products in original factory packaging, bearing identification of product, manufacturer and batch/lot number.
2. Handle and store products in location to prevent damaging and soiling.
3. Ensure that UV protection is provided for material, should on-site storage extend beyond 30 days.

PART 2 - PRODUCTS

2.1 ICF UNITS

A. Manufacturers:

1. Arxx Building Products, Cobourg, Ontario Canada, (800) 293-3210.
2. Amvic Building Systems, Toronto, Canada (416) 410-5674.
3. American Polysteel, Albuquerque, NM, (505) 345-8153.

B. Components: Provide forms as listed below, in nominal sizes indicated, and as may be required for proper execution of the work:

1. 6” Core: 48” L x 11 ½” W x 16 ¾” H.

2. 8 Core: 48” L x 13 1/2” W x 16 ¾” H.
3. 10” Core: 48” L x 14 7/8” W x 16 ¾” H.
4. Left and right 90 degree corners.
5. End caps.
6. Height adjusters.

2.2 PARGING

A. ICF manufacturer’s recommended acrylic based stucco finish coat parging shall be provided at all ICF formwork exposed at grade, where transition to stucco system exterior wall finish occurs. Parging color to match adjacent stucco system finish color and texture.

2.3 MISCELLANEOUS

A. ICF manufacturer’s standard pre-formed opening buck form stop, cut and joined to 5/8” plywood.

2.4 WALL ALIGNMENT SYSTEM

A. To aid in the construction of the wall system, and to provide and adjustable device for ensuring plumbness of the wall during construction, where appropriate, the ICF manufacturer's wall alignment system shall be used.

PART 3 - EXECUTION

3.1 INSTALLATION, GENERAL

A. Verify footings are installed within +/- ¼" of level.

B. Ensure that reinforcing dowels are in place at specified centers, either centered or offset along length of footings to match indicated vertical reinforcing of ICF wall.

C. Clean top of footings prior to commencing Work.

D. Installation of forms shall be in strict accordance with ICF manufacturer's product manual.

E. The Installation Contractor shall ensure conformance with ICF manufaturer's procedures for, but not limited to, the following:
   1. First course placement.
   2. Horizontal and vertical reinforcement placement.
   3. Successive course placement.
   4. Door and window openings.
   5. Form alignment and scaffolding installation.
   6. Pre-construction placement inspection.
   7. Concrete placement.
   8. Alignment assembly removal.

3.2 OPENINGS

A. Provide pre-formed opening buck form stop around openings to contain concrete within forms. Brace opening buck as required to maintain square profile at opening edges.

3.3 SERVICE PENETRATIONS

A. Service penetrations (e.g., electrical service conduits, water service pipes, air supply and exhaust ducts, etc.) shall be installed at the required locations as indicated.

B. Service penetrations exceeding 16" x 16" in area shall be reinforced.

C. Prior to concrete placement, install service penetration sleeves at designated locations to create voids where services can be installed.

3.4 CLEANUP

A. Clean up and properly dispose of all debris remaining on job site related to the installation of insulated concrete forms.

3.5 PROTECTION

A. Provide temporary coverage of installation to reduce exposure to ultraviolet light should finish application be delayed longer than 60 days.

END OF SECTION 031300

SECTION 033000 - CAST-IN-PLACE CONCRETE

PART 1 - GENERAL

1.1 RELATED SECTIONS

A. 014000 Quality Requirements

B. 031119 Insulated Concrete Forms

C. 312000 Earth Moving

D. 321600 Site Concrete for Minor Structures

1.2 SECTION REQUIREMENTS

A. Submittals: Product Data.

B. Warranty: Contractor shall provide a two year warranty, effective from the date of Substantial Completion, to promptly remove and/or repair defective concrete (pitting, spalling, cracking, honeycombing, etc.).

C. Ready-Mixed Concrete Producer Qualifications: ASTM C 94/C 94M.

D. Comply with ASTM C 94; ACI 301, "Specification for Structural Concrete"; ACI 117, "Specifications for Tolerances for Concrete Construction and Materials"; and CRSI's "Manual of Standard Practice."

1.3 QUALITY ASSURANCE:

A. Owner’s testing agency to provide the following test reports:

1. Field density of base course at areas as follows:
   a. Foundations: One test per one foot on center at spot footings; one test per 50 foot on center at continuous footings.
   b. Interior concrete slabs: No less than four dispersed locations.
2. Concrete testing will be performed in accordance with the specifications of ACI 301 as modified as follows:
   a. ACI 301: 16.3.4.2 At foundations, walls, interior slabs on grade, ICF walls and overhead door aprons, mold and cure three (3) specimens from each sample.
   b. ACI 301: 16.3.4.4 Compressive strength tests: One set of specimens for each 50 cubic yards or fraction thereof of each concrete class placed in any one day; one specimen tested at seven (7) days, two specimens tested at 28 days.
   c. ACI 301: 16.3.8 Concrete Temperature: Test hourly when air temperature is below 40 degrees F. and each time a set of specimens is made.

B. Comply with ACI 305 during hot weather; ACI 306 during cold weather.

PART 2 - PRODUCTS

2.1 MATERIALS

A. Fiber Reinforcement: ASTM C 1116, Type III, synthetic fibers, ½ inch to 1 inch.

B. Deformed Reinforcing Bars: ASTM A 615/A 615M, Grade 60.

C. Plain-Steel Welded Wire Reinforcement: ASTM A 185, fabricated from as-drawn steel wire into flat sheets, 6 x 6 x W1.4 x W1.4.

D. Plain Steel Wire: ASTM A 82, as drawn.

E. Portland Cement: ASTM C 150, Type I or II. Use Type II cement where concrete is to be in direct contact with native soil. Use low alkali cement for concrete in contact with earth.

F. Fly Ash: ASTM C 618, Type C or F.

G. Aggregates: ASTM C 33, uniformly graded.

H. Air-Entraining Admixture: ASTM C 260.

I. Joint-Filler Strips: ASTM D 1751, cellulosic fiber, or ASTM D 1752, cork.

J. Repair Underlayment: Factory-packaged, portland or blended hydraulic cement-based, polymer-modified, self-leveling underlayment with minimum 28-day compressive strength of 4100 psi.

K. Repair Topping: Factory-packaged, portland or blended hydraulic cement-based, polymer-modified, self-leveling traffic-bearing topping with minimum 28-day compressive strength of 5700 psi.

L. Self Adhering Sheet Flashing Membrane: Minimum 40-mil- thick, 36-inches wide, self-adhering, po lymer-modified, bituminous sheet membrane; complying with ASTM D 1970.

M. Clear, Waterborne, Membrane-Forming Curing Compound: ASTM C 309, Type 1, Class B.

2.2 MIXES

A. Proportion normal-weight concrete mixes to provide the following properties:

1. Compressive Strength at 28 Days: 2,500 psi insulated concrete form walls and footings; 4,000 psi foundation walls, slab on metal deck and interior slabs on grade.

2. Slump Limit: 5 – 6 inches, +\- 1 inch for ICF walls, 4 inches, +\- 1 inch elsewhere, at point of placement.

3. Air Content: For concrete exposed to freezing and thawing, provide 6-1/2%+ 1-1/2% for ¾” maximum aggregate size; 6%+ 1-1/2%; for 1” maximum aggregate size; 5-1/2”+1% for maximum 1-1/2” aggregate size. Provide 2 to 4 percent elsewhere.

4. Limit water to cement ratio to no more than 50%.

5. Fly Ash: A maximum of 10% by weight of the cement may be replaced with fly ash at the ratio of one pound of fly ash for every one pound of cement removed.

B. Do not re-temper mix by adding water in the field.

C. Measure, batch, mix, and deliver concrete according to ASTM C 94/C 94M and ASTM C 1116.

1. When air temperature is above 90 deg F, reduce mixing and delivery time to 60 minutes.

2. Maximum Aggregate Size at ICF Walls: 3/8” for 6 inch core ICF walls, ¾” for 10 inch core ICF walls

PART 3 - EXECUTION

3.1 CONCRETING

A. Interior Concrete Slabs on Grade: Provide concrete slabs in 6 inch thickness over 6 inches of compacted drainage fill unless otherwise indicated. Reinforce slabs with #4 at 24 inches on center each way.

B. Provide fiber reinforcement in interior concrete slabs and in exterior building concrete walks, landings and slabs.

C. Construct formwork and maintain tolerances and surface irregularities within ACI 117 limits of Class A for concrete exposed to view and Class C for other concrete surfaces.

D. Accurately position, support, and secure reinforcement.

E. Install construction, isolation, and contraction joints where indicated. Install full-depth joint-filler strips at un-sealed isolation joints. Install joint filler strips in depth equal to pour thickness.

F. Place concrete in a continuous operation and consolidate using mechanical vibrating equipment.

G. Protect concrete from physical damage, premature drying, and reduced strength due to hot or cold weather during mixing, placing, and curing.

H. Formed Surface Finish: Smooth-formed finish for concrete exposed to view, coated, or covered by wa terproofing or other direct-applied material; rough-formed finish elsewhere.

I. Slab Finishes: Troweled finish for floor surfaces and floors to receive floor coverings, paint, or other thin film-finish coatings Nonslip, light broom finish to exterior concrete slabs, walks, and landings. Provide roughened surface finish in base slabs receiving housekeeping pads.

J. Cure formed surfaces by moist curing for at least seven days.

K. Begin curing concrete slabs after finishing. Apply membrane-forming curing compound to concrete.

L. Protect concrete from damage. Repair surface defects in formed concrete and slabs.

M. Repair slabs not meeting surface tolerances by grinding high areas and by applying a repair underlay ment to low areas receiving floor coverings and a repair topping to low areas to remain exposed.

N. Thoroughly vibrate exposed formed surfaces to consolidate aggregate. Honeycomb face at exposed formed surfaces will not be accepted.

O. Remove and replace concrete that is broken, damaged, or defective. Exclude traffic from gutter and drive approaches for at least 14 days.

END OF SECTION 033000

SECTION 051200 - STRUCTURAL STEEL

PART 1 - GENERAL

1.1 SECTION REQUIREMENTS

A. Submittals: Product Data Shop Drawings.

B. Comply with AISC's "Specification for Structural Steel Buildings-Allowable Stress Design and Plastic Design," RCSC's "Specification for Structural Joints Using ASTM A 325 or A 490 Bolts," and AWS D1.1, "Structural Welding Code--Steel."

PART 2 - PRODUCTS

2.1 STRUCTURAL STEEL AND ACCESSORIES

A. Structural-Steel Shapes, Plates, and Bars: ASTM A 36/A 36M, carbon steel.

B. Cold-Formed Structural-Steel Tubing: ASTM A 500, Grade B.

C. Anchor Rods, Bolts, Nuts: ASTM A 36/A 36M, unheaded rods ASTM A 325, headed bolts, Type 1, heavy hex steel structural bolts and heavy hex carbon-steel nuts.

D. Bolts, Nuts, and Washers: ASTM A 307, Grade A; nonhigh-strength carbon-steel, hex-head bolts; carbon-steel nuts; and flat, unhardened steel washers, uncoated.

E. Primer: Fast-curing, lead- and chromate-free, universal modified-alkyd, rust-inhibiting primer.

F. Grout: ASTM C 1107, nonmetallic, shrinkage resistant, premixed.

2.2 FABRICATION

A. Fabricate structural steel according to AISC specifications and tolerance limits of AISC's "Code of Standard Practice for Steel Buildings and Bridges" for structural steel.

B. Shop Priming: Prepare surfaces according to SSPC-SP 2, "Hand Tool Cleaning" or SSPC-SP 3, "Power Tool Cleaning." Shop prime steel to a dry film thickness of at least 1.5 mils. Do not prime surfaces to be embedded in concrete or mortar or to be field welded.

PART 3 - EXECUTION

3.1 ERECTION

A. Erect structural steel according to AISC specifications and within erection tolerances of AISC's "Code of Standard Practice for Steel Buildings and Bridges."

B. Set base and bearing plates on wedges, shims, or setting nuts. Tighten anchor bolts, cut off wedges or shims flush with edge of plate, and pack grout solidly between bearing surfaces and plates.

C. Bolted Connections: Install and tighten nonhigh-strength bolts, unless high-strength bolts are indicated. Snug tighten high-strength bolts according to RCSC's "Specification for Structural Joints Using ASTM A 325 or A 490 Bolts."

D. Weld Connections: Comply with AWS D1.1.

END OF SECTION 051200

SECTION 052100 - STEEL JOIST FRAMING

PART 1 - GENERAL

1.1 SECTION REQUIREMENTS

A. Submittals: Product Data Shop Drawings and manufacturer certificates certifying that joists comply with requirements.

B. Manufacturer Qualifications: A manufacturer certified by SJI to manufacture joists complying with applicable standard specifications and load tables of SJI "Specifications."

C. Comply with standard specifications in SJI's "Specifications" that are applicable to types of joists indicated.

D. Welding: Qualify procedures and personnel according to AWS D1.1/D1.1M, "Structural Welding Code - Steel."

PART 2 - PRODUCTS

2.1 JOISTS AND ACCESSORIES

A. Steel: Comply with SJI's "Specifications" for web and steel-angle chord members.

B. Steel Bearing Plates: ASTM A 36/A 36M.

C. Bolts, Nuts, and Washers: ASTM A 307, Grade A; carbon-steel, hex-head bolts; carbon-steel nuts; and flat, unhardened steel washers.

D. Primer: Comply with performance requirements in SSPC-Paint 15.

E. Manufacture steel joists of type indicated according to "Standard Specifications for Open Web Steel Joists, K-Series" in SJI's "Specifications," with steel-angle top- and bottom-chord members.

F. Bridging: Provide bridging anchors and horizontal or diagonal bridging of material, size, and type required by SJI's "Specifications" for type of joist, chord size, spacing, and span. Furnish additional erection bridging if required for stability.

G. Fabricate steel bearing plates with integral anchorages of sizes and thicknesses indicated.

H. Shop Priming: Prepare surfaces according to SSPC-SP 2 or SSPC-SP 3. Apply 1 coat of shop primer to joists and joist accessories to provide a dry film thickness at least 1 mil.

PART 3 - EXECUTION

3.1 INSTALLATION

A. Install joists and accessories plumb, square, and true to line; securely fasten to supporting construction according to SJI's "Specifications" and joist manufacturer's written recommendations.

1. Delay rigidly connecting bottom-chord extensions to columns or supports until dead loads have been applied.

B. Field weld joists to supporting steel bearing plates.

C. Install and connect bridging concurrently with joist erection, before construction loads are applied. Anchor ends of bridging lines at top and bottom chords if terminating at walls or beams.

END OF SECTION 052100

SECTION 053100 - STEEL DECKING

PART 1 - GENERAL

1.1 SECTION REQUIREMENTS

A. Submittals: Product Data Shop Drawings and product certificates.

B. Comply with SDI Publication No. 30.

C. Comply with AWS D1.3, "Structural Welding Code - Sheet Steel."

PART 2 - PRODUCTS

2.1 MATERIALS

A. Prime-Painted Steel Sheet: ASTM A 1008/A 1008M, Structural Steel (SS), Grade 33 minimum; shop primed.

2.2 DECKING

A. Roof Deck: Fabricate panels from prime-painted steel sheet, without top-flange stiffening grooves, to comply with the following:

1. Deck Profile: Type B.
2. Profile Depth: 1-1/2 inches.
3. Design Uncoated-Steel Thickness: 0.0358 inch (20 gauge).

B. Composite Steel Floor Deck: Fabricate panels from prime-painted steel sheet with integrally embossed or raised pattern ribs and interlocking side laps, to comply with the following:

1. Profile Depth: 3 inches.
2. Design Uncoated-Steel Thickness: 0.0474 inch (18 gauge).

2.3 MISCELLANEOUS

A. Accessories: Manufacturer's recommended roof deck accessory materials and floor deck pour stops and closures. Sheet metal accessories of same material and finish as deck.

PART 3 - EXECUTION

3.1 DECK INSTALLATION

A. Place, adjust, align, and bear deck panels on structure. Do not stretch or contract side-lap interlocks.

B. Place deck panels flat and square and weld to structure without warp or deflection.

C. Cut, reinforce, and fit deck panels and accessories around openings and projections.

D. Roof Deck Accessories: Install sump pans, sump plates, ridge and valley plates, finish strips, cover plates, end closures, and reinforcing channels. Weld to substrate.

E. Floor Pour Stops and Girder Fillers: Weld pour stops and girder fillers to structure.

F. Floor Deck Closures: Weld steel sheet closures to deck to provide tight-fitting closures at open ends of ribs and sides of decking. Weld cover plates at changes in direction of floor deck panels.

G. Prepare and repair damaged galvanized coatings on both surfaces with galvanized repair paint according to ASTM A 780.

H. Wire brush, clean, and paint scarred areas, welds, and rust spots on both surfaces of painted deck panels.

END OF SECTION 053100

SECTION 054000 - COLD-FORMED METAL FRAMING

PART 1 - GENERAL

1.1 RELATED SECTIONS

A. 092900: Gypsum Board

1.2 SECTION REQUIREMENTS

A. Submittals: Product Data and material certificates.

B. Comply with AISI's "Specification for the Design of Cold-Formed Steel Structural Members" for calculating structural characteristics of cold-formed metal framing.

C. Comply with AWS D1.3, "Structural Welding Code--Sheet Steel."

D. Protect cold-formed metal framing from corrosion, deformation, and other damage during delivery, storage, and handling.

PART 2 - PRODUCTS

2.1 MATERIALS

A. Galvanized Steel Sheet: ASTM A 653/A 653M, G60 zinc coated; Structural Steel (SS); Grade 33.

B. Load Bearing Steel Studs: C-shaped, with flange width of not less than 1-3/8 inches, minimum uncoated metal thickness of 0.0329 inch (20 gauge), and of depths indicated.

C. Load Bearing Steel Stud Track: U-shaped, minimum uncoated metal thickness same as studs used with track, with flange widths of 1-1/4 inches, of web depths indicated.

D. Guard Wall Load Bearing Stud: C-shaped, with flange width of not less than 2 inches, minimum uncoated metal thickness of .0566 inch (16 gauge), 6 inches deep.

E. Guard Wall Load Bearing Steel Stud Track: U-shaped, minimum uncoated metal thickness same as studs used with track, with flange widths of 2 inches, of web depths indicated.

F. Roof Deck Ledger: C-shaped, with flange width of not less than 2-1/2 inches, minimum uncoated metal thickness of .0566 inch (16 gauge), 6 inches deep.

G. Corner Angle: L-shaped, with leg dimensions indicated, minimum uncoated steel thickness to match associated framing members.

H. Joists: C-shaped, with flange width of not less than 1-5/8 inches, minimum uncoated metal thickness of 0.0478 inch (18 gauge), 3-1/2 inches deep.

I. Joist Track: U-shaped, minimum uncoated metal thickness same as joists used with track, with flange widths of 1-1/4 inches, of web depths indicated.

J. Box Headers: C-shaped, with flange widths of not less than 1-3/8 inches for 6 inch member and 1-5/8” for 10 inch member, minimum uncoated metal thickness of not less than 0.0329 inch (20 gauge) for 6 inch member, 0.0451 inch for 10” member, of web depths indicatd.

K. Box Header Track: U-shaped, minimum uncoated metal thickness of 0.0329 inch (20 gauge), with flange widths of 1-1/2 inches, of web depths indicated.

L. Coping Nailer (Track): U-shaped, minimum uncoated metal thickness of 0.0329 inch (20 gauge), with flange widths of 1-1/2 inches, 12 inches deep.

2.2 ACCESSORIES

A. Accessories: Fabricate from the same material and finish used for framing members, of manufacturer's standard thickness and configuration, unless otherwise indicated.

B. Cast-in-Place Anchor Bolts: ASTM F 1554, Grade 36, threaded carbon-steel hex-headed bolts and carbon-steel nuts; and flat, hardened-steel washers; zinc coated by hot-dip process according to ASTM A 153/A 153M, Class C.

C. Mechanical Fasteners: Corrosion-resistant coated, self-drilling, self-threading steel drill screws.

D. Galvanizing Repair Paint: SSPC-Paint 20 or DOD-P-21035.

PART 3 - EXECUTION

3.1 FRAMING

A. Install framing and accessories level, plumb, square, and true to line, and securely fastened, according to ASTM C 1007. Temporarily brace framing until entire integrated supporting structure has been completed and permanent connections are secured.

1. Cut framing members by sawing or shearing; do not torch cut.
2. Fasten framing members by welding or screw fastening.
3. Install insulation in built-up exterior framing members.
4. Fasten reinforcement plates over web penetrations larger than standard punched openings.

B. Erection Tolerances: Install cold-formed metal framing with a maximum variation of 1/8 inch in 10 feet and with individual framing members no more than plus or minus 1/8 inch from plan location. Cumulative error shall not exceed minimum fastening requirements of sheathing or other finishing materials.

C. Studs: Install continuous top and bottom tracks securely anchored at corners and ends. Squarely seat studs against webs of top and bottom tracks. Space studs as indicated, set plumb, align, and fasten both flanges of studs to top and bottom tracks.

1. Install and fasten horizontal bridging in stud system, spaced in rows not more than 48 inches apart, unless otherwise indicated.
2. Install miscellaneous framing and connections to provide a complete and stable wall-framing system.

D. Joists: Install and securely anchor perimeter joist track sized to match joists. Install joists bearing on supporting framing, brace and reinforce, and fasten to both flanges of joist track.

1. Install bridging and fasten bridging at each joist intersection.
2. Install miscellaneous joist framing and connections, including web stiffeners, closure pieces, clip angles, continuous angles, hold-down angles, anchors, and fasteners.

END OF SECTION 054000

SECTION 055000 - METAL FABRICATIONS

PART 1 - GENERAL

1.1 Section Includes:

1. Miscellaneous steel framing and supports.
2. Structural-steel door frames.
3. Miscellaneous steel trim.
4. Metal bollards.
5. Loose bearing and leveling plates.

1.2 RELATED SECTIONS

A. 055100 Metal Stairs

1.3 SECTION REQUIREMENTS

A. Submittals: Shop Drawings showing details of fabrication and installation.

PART 2 - PRODUCTS

2.1 METALS

A. Steel Plates, Shapes, and Bars: ASTM A 36/A 36M.

B. Rolled Steel Floor Plate: ASTM A 786/A 786M.

C. Steel Tubing: Cold-formed steel tubing complying with ASTM A 500.

D. Steel Pipe: ASTM A 53, standard weight (Schedule 40), black finish.

2.2 GROUT

A. Nonshrink, Nonmetallic Grout: ASTM C 1107; recommended by manufacturer for exterior applications.

2.3 FABRICATION

A. General: Shear and punch metals cleanly and accurately. Remove burrs and ease exposed edges. Form bent-metal corners to smallest radius possible without impairing work.

B. Welding: Weld corners and seams continuously. Use materials and methods that minimize distortion and develop strength and corrosion resistance of base metals. At exposed

connections, finish welds and surfaces smooth with contour of welded surface matching those adjacent.

C. Fabricate ladders for locations shown, complying with ANSI A14.3, welded steel construction.

D. Fabricate door and entry canopies from tube steel and plate, complying with ANSI A14.3, welded steel construction. Provide welded plate closure at all exposed ends of members.

E. Steel Pipe Handrail:

1. Fabricate railings with welded connections. Cope components at connections to provide close fit, or use fittings designed for this purpose.
2. Form changes in direction of railings by bending or by inserting prefabricated fittings.
3. Provide wall brackets, end closures, flanges, miscellaneous fittings, and anchors for interconnecting components and for attaching to other work.

2.4 STRUCTURAL-STEEL DOOR FRAMES

A. Fabricate structural-steel door frames from steel shapes fully welded together, with 5/8-by-1-1/2-inch (16-by-38-mm) steel channel stops. Plug-weld built-up members and continuously weld exposed joints. Reinforce frames and drill and tap as necessary to accept finish hardware.

1. Provide with integrally welded steel strap anchors for securing door frames into adjoining concrete or masonry.

B. Galvanize steel frames.

C. Prime steel frames with **primer specified in Division 09 Section "High-Performance Coatings."**

2.5 METAL BOLLARDS

A. Fabricate metal bollards from **Schedule 40 steel pipe**.

B. Prime bollards with **primer specified in Division 09 Section "High-Performance Coatings."**

C. Provide reflective adhesive strips – 2 per bollard of red/white microprism reflective material

2.6 STEEL AND IRON FINISHES

A. Prepare uncoated ferrous metal surfaces to comply with SSPC-SP 3, "Power Tool Cleaning," and paint with a fast-curing, lead- and chromate-free, universal modified-alkyd primer complying with MPI#79.

PART 3 - EXECUTION

3.1 INSTALLATION

A. Perform cutting, drilling, and fitting required for installing miscellaneous metal fabrications. Set metal fabrication accurately in location, alignment, and elevation; with edges and surfaces level, plumb, true, and free of rack.

B. Fit exposed connections accurately together to form hairline joints.

C. Coat concealed surfaces of aluminum that will come into contact with grout, concrete, masonry, wood, or dissimilar metals with a heavy coat of bituminous paint.

D. Anchor bollards in concrete to a depth equal to the exposed dimension above grade and fill solidly with concrete, mounding top surface.

E. Attach handrails to wall with wall brackets. Use type of bracket with predrilled hole for exposed bolt anchorage.

END OF SECTION 055000

SECTION 055100 - METAL STAIRS

PART 1 - GENERAL

1.1 RELATED SECTIONS

A. 055000 Metal Fabrications

1.2 SECTION REQUIREMENTS

A. Structural Performance of Stairs, Handrails and Railing Systems:
   1. Provide railings capable of withstanding structural loads required by ASCE 7.
   2. Design, engineer, fabricate and install stairs, handrails and railing systems to comply with requirements of ASTM E 985 for structural performance based on testing performed in accordance with ASTM E 894 and E 935.
   3. Structural Performance: Design, engineer, fabricate and install to withstand structural loads specified in the governing building codes, including anchors and connections
   4. General configuration of stairs and handrails is indicated.

1.3 SUBMITTALS: Shop Drawings.

PART 2 - PRODUCTS

2.1 METALS

A. Steel Plates, Shapes, and Bars: ASTM A 36/A 36M.

B. Steel Tubing: ASTM A 500 (cold formed) or ASTM A 513, Type 5 (mandrel drawn).

C. Rolled Steel Floor Plate: ASTM A 786/A 786M.

D. Iron Castings: Either gray iron, ASTM A 48/A 48M, Class 30, or malleable iron, ASTM A 47/A 47M, unless otherwise indicated.

E. Uncoated, Hot-Rolled Steel Sheet: ASTM A 1011/A 1011M, either commercial steel, Type B, or structural steel, Grade 30.

F. Expanded Metal, Carbon Steel: ASTM F 1267, Class 1 (uncoated).

G. Aluminum Extrusions: ASTM B 221, Alloy 6063-T6.

2.2 MISCELLANEOUS MATERIALS

A. Concrete: Comply with Division 03 Section "Cast-in-Place Concrete" for normal-weight, air-entrained concrete with a minimum 28-day compressive strength of 3000 psi.

B. Welded Wire Fabric: ASTM A 185, 6 by 6 inches - W1.4 by W1.4.

2.3 FABRICATION

A. General: Shear and punch metals cleanly and accurately. Remove burrs and ease exposed edges. Form bent-metal corners to smallest radius possible without impairing work.

B. Welding: Use materials and methods that minimize distortion and develop strength of base metals. At exposed connections, finish welds and surfaces smooth.

C. Stair Framing: Fabricate stringers of steel channels. Construct platforms of steel plate or channel headers and miscellaneous framing members.

D. Metal-Pan Stairs: Form risers, subtread pans, and subplatforms to configurations shown from steel sheet of thickness needed to comply with performance requirements but not less than 0.0677 inch thick.

2.4 FINISHES

A. Comply with NAAMM's "Metal Finishes Manual for Architectural and Metal Products" for recommendations for applying and designating finishes. Finish metal stairs after assembly.

B. Prepare uncoated ferrous metal surfaces to comply with SSPC-SP 3, "Power Tool Cleaning," and paint with a fast-curing, lead- and chromate-free, universal modified-alkyd primer complying with MPI#79.

PART 3 - EXECUTION

3.1 INSTALLATION

A. Perform cutting, drilling, and fitting required for installing metal stairs. Set units accurately in location, alignment, and elevation, measured from established lines and levels and free of rack.

B. Fit exposed connections accurately together to form hairline joints. Weld connections that are not to be left as exposed joints. Do not weld, cut, or abrade surfaces of exterior units that have been hot-dip galvanized after fabrication and are for bolted or screwed field connections.

C. Place and finish concrete fill for treads and platforms to comply with Division 03 Section "Cast-in-Place Concrete."

END OF SECTION 055100

SECTION 061000 - ROUGH CARPENTRY

PART 1 - GENERAL

1.1 SUMMARY

A. This Section includes the following:
   1. Rooftop equipment bases and support curbs.
   2. Wood blocking and nailers.
   3. Plywood backing panels.

1.2 DELIVERY, STORAGE, AND HANDLING

A. Stack lumber flat with spacers between each bundle to provide air circulation. Provide for air circulation around stacks and under coverings.

PART 2 - PRODUCTS

2.1 WOOD PRODUCTS, GENERAL

A. Lumber: DOC PS 20 and applicable rules of grading agencies indicated. If no grading agency is indicated, provide lumber that complies with the applicable rules of any rules-writing agency certified by the ALSC Board of Review. Provide lumber graded by an agency certified by the ALSC Board of Review to inspect and grade lumber under the rules indicated.

   1. Factory mark each piece of lumber with grade stamp of grading agency.
   2. Provide dressed lumber, S4S, unless otherwise indicated.

2.2 WOOD-PRESERVATIVE-TREATED LUMBER

A. Preservative Treatment by Pressure Process: AWPA C2.

   1. Preservative Chemicals: **containing no arsenic or chromium**.

B. Kiln-dry lumber after treatment to a maximum moisture content of 19 percent. Do not use material that is warped or does not comply with requirements for untreated material.

C. Application: Treat [**all rough carpentry, unless otherwise indicated.**] [**items indicated on Drawings, and the following:**]

   1. Wood cants, nailers, curbs, equipment support bases, blocking, stripping, and similar members in connection with roofing, flashing, vapor barriers, and waterproofing.
   2. Wood sills, sleepers, blocking and similar concealed members in contact with masonry or concrete.

2.3 LUMBER

A. General: Provide miscellaneous lumber indicated and lumber for support or attachment of other construction, including the following:

1. Blocking.
2. Nailers.
3. Rooftop equipment bases and support curbs.

B. For items of dimension lumber size, provide **Construction or No. 2** lumber with **15** percent maximum moisture content of any species.

C. For blocking not used for attachment of other construction, Utility, Stud, or No. 3 grade lumber of any species may be used provided that it is cut and selected to eliminate defects that will interfere with its attachment and purpose.

D. For blocking and nailers used for attachment of other construction, select and cut lumber to eliminate knots and other defects that will interfere with attachment of other work.

2.4 PLYWOOD BACKING PANELS

A. Telephone and Electrical Equipment Backing Panels: DOC PS 1, **Exterior, AC fire-retardant treated,** in thickness indicated or, not less than **3/4-inch (19-mm)** nominal thickness.

2.5 FASTENERS

A. General: Provide fasteners of size and type indicated that comply with requirements specified in this Article for material and manufacture.

1. Where rough carpentry is exposed to weather, in ground contact, pressure-preservative treated, or in area of high relative humidity, provide fasteners[**with hot-dip zinc coating complying with ASTM A 153/A 153M**] [**of Type 304 stainless steel**].

B. Nails, Brads, and Staples: ASTM F 1667.

C. Power-Driven Fasteners: NES NER-272.

D. Wood Screws: ASME B18.6.1.

E. Lag Bolts: ASME B18.2.1 (ASME B18.2.3.8M).

F. Bolts: Steel bolts complying with ASTM A 307, Grade A (ASTM F 568M, Property Class 4.6); with ASTM A 563 (ASTM A 563M) hex nuts and, where indicated, flat washers.

PART 3 - EXECUTION

3.1 INSTALLATION, GENERAL

A. Set rough carpentry to required levels and lines, with members plumb, true to line, cut, and fitted. Fit rough carpentry to other construction; scribe and cope as needed for accurate fit. Locate nailers, blocking, and similar supports to comply with requirements for attaching other construction.

B. Provide blocking and framing as indicated and as required to support facing materials, fixtures, specialty items, and trim.

1. Provide metal clips for fastening gypsum board or lath at corners and intersections where framing or blocking does not provide a surface for fastening edges of panels. Space clips not more than 16 inches (406 mm) o.c.

C. Sort and select lumber so that natural characteristics will not interfere with installation or with fastening other materials to lumber. Do not use materials with defects that interfere with function of member or pieces that are too small to use with minimum number of joints or optimum joint arrangement.

D. Securely attach rough carpentry work to substrate by anchoring and fastening as indicated, complying with the following:

1. NES NER-272 for power-driven fasteners.
2. Table 2304.9.1, "Fastening Schedule," in ICC's International Building Code.

E. Use common wire nails, unless otherwise indicated. Select fasteners of size that will not fully penetrate members where opposite side will be exposed to view or will receive finish materials. Make tight connections between members. Install fasteners without splitting wood; do not countersink nail heads, unless otherwise indicated.

3.2 WOOD BLOCKING, AND NAILER INSTALLATION

A. Install where indicated and where required for attaching other work. Form to shapes indicated and cut as required for true line and level of attached work. Coordinate locations with other work involved.

B. Attach items to substrates to support applied loading. Recess bolts and nuts flush with surfaces, unless otherwise indicated.

C. Where wood-preservative-treated lumber is installed adjacent to metal decking, install continuous flexible flashing separator between wood and metal decking.

3.3 PROTECTION

A. Protect wood that has been treated with inorganic boron (SBX) from weather. If, despite protection, inorganic boron-treated wood becomes wet, apply EPA-registered borate treatment. Apply borate solution by spraying to comply with EPA-registered label.

B. Protect rough carpentry from weather. If, despite protection, rough carpentry becomes wet, apply EPA-registered borate treatment. Apply borate solution by spraying to comply with EPA-registered label.

END OF SECTION 061000

SECTION 072100 - THERMAL INSULATION

PART 1 - GENERAL

1.1 RELATED SECTIONS

A. 075400 – Thermoplastic Membrane Roofing

1.2 SECTION REQUIREMENTS

A. Submittals: Product Data for each type of insulation product specified.

B. Surface-Burning Characteristics: ASTM E 84, flame-spread ratings of 75 or less and smoke-developed ratings of 450 or less where insulation is concealed within construction assemblies; ASTM E 84, flame spread ratings of 25 or less and smoke-developed ratings of 25 or less where insulation is exposed.

PART 2 - PRODUCTS

2.1 INSULATION PRODUCTS

A. Extruded-Polystyrene Board Insulation at Foundations: ASTM C 578, Type IV, 1 ½" thick, R7.5 at 75 degree mean temperature.

B. Mineral-Fiber-Blanket Insulation, ASTM C 665:

1. Sound Attenuation Walls: Type I, unfaced with fibers manufactured from glass, thickness to equal full depth of wall framing.

2.2 ACCESSORIES

A. Kraft paper or foil tape to match insulation facing for tear repair.

PART 3 - EXECUTION

3.1 INSTALLATION

A. Install insulation in areas and in thickness indicated or required to produce R-values indicated. Cut and fit tightly around obstructions and fill voids with insulation.

B. Extend vapor retarder to extremities of areas to be protected from vapor transmission. Secure in place with adhesives or other anchorage.

END OF SECTION 072100

SECTION 072400 - EXTERIOR INSULATION AND FINISH SYSTEM (EIFS)

PART 1 - GENERAL

1.1 RELATED SECTIONS

A. 031119 Insulated Concrete Forming

1.2 SECTION REQUIREMENTS

A. System is acceptable to authorities having jurisdiction based on evaluation per ICC-ES AC219, "Acceptance Criteria for Exterior Insulation and Finish Systems."

B. Impact Classification: High Impact Resistance per EIMA 101.86.

C. Submittals: Product Data model code evaluation report at notice of Consideration of Contract Award and Samples of finishes.

D. Installer Qualifications: Certified in writing by system manufacturer.

PART 2 - PRODUCTS

2.1 MANUFACTURERS

A. El Rey Stucco Company, Grand Junction, Colorado, (970) 242-5491, “Insul-Flex”

B. Dryvit Systems Inc., West Warwick, RI, 800-556-7752. “Outsulation”.

C. Sto Corporation, Atlanta, GA (404) 346-3666, “Stotherm”.

2.2 MATERIALS

A. Molded-Polystyrene Board Insulation: ASTM C 578, Type I, complying with EIMA's "EIMA Guideline Specification for Expanded Polystyrene (EPS) Insulation Board." Shaped to profile indicated.

B. Reinforcing Mesh:

1. Standard Reinforcing Mesh: Balanced, alkali-resistant, open-weave glass-fiber mesh treated for compatibility with other system materials, complying with ASTM D 578, and with minimum weight not less than 4.5 oz./sq. yd..
2. Heavy-Duty Reinforcing Mesh: Not less than 20 oz./sq. yd. Installed in first layer base coat from bottom of wall to +8’.
3. Corner Mesh: Reinforcing mesh used as corner reinforcement in conjunction with Heavy Duty Reinforcing Mesh.

C. Adhesives: Copolymer based, factory blend of Portland cement, dry polymer and proprietary ingredients.

D. Base-Coat Materials: EIFS manufacturer's standard mixture of portland cement complying with ASTM C 150, Type I, and copolymer-emulsion adhesive designed for use indicated.

E. Finish-Coat Materials: EIFS manufacturer's standard acrylic-based coating, consisting of polymer-emulsion binder, colorfast mineral pigments, sound stone particles, and fillers.

F. Trim Accessories: Type as designated or required to suit conditions indicated and to comply with EIFS manufacturer's written requirements; manufactured from UV-stabilized PVC.

G. Sealants: ASTM C 920, Grade Non Sag, low modulus, minimum 50% elongation and 25% minimum compression.

H. Sealant Backer Rod: Closed cell polyethylene foam.

PART 3 - EXECUTION

3.1 INSTALLATION

A. Comply with EIFS manufacturer's written instructions for installation of EIFS as applicable to each type of substrate indicated.

1. Install tracks, back-wrap mesh, or edge wrap mesh at system terminations at base of walls. Install mesh wrap at all other system terminations. Coordinate with installation of insulation.
2. Adhesively attach insulation to substrate in compliance with ASTM C 1397 and with EIFS manufacturer's written requirements, using notched trowel. Install insulation board without gaps, in running bond pattern and interlocked at corners.
3. Rasp irregularities off insulation board and insulated concrete forms, after adhesive has dried.
4. From grade to +8’, install base coat with a minimum total thickness at least 1/8 inch, and completely covering Heavy Duty Reinforcing Mesh so reinforcing-mesh color and pattern are not visible. Include diagonal mesh patches at corners of openings and reinforcing mesh patched at joints of track sections.
5. Apply base coat and Standard Reinforcing Mesh over lower initial base coat and insulated concrete form and shaped rigid insulation substrate above. Do not apply until lower initial base coat has cured.
6. Apply finish coat over dry base coat, in thickness required by EIFS manufacturer to produce a uniform color and texture, free of variations. Finish coat color and texture to match existing entrance station.

B. Prepare joints and apply sealants to comply with applicable requirements in Division 07 Section "Joint Sealants" and with ASTM C 1481.

C. Protection / Clean-up:

1. Protect surrounding material surfaces and areas during installation of EIFS.

2. Protect EIFS material against freezing in cold weather. Provide temporary heated enclosures as required by ambient air temperature to prevent material from freezing during installation and during curing.
3. Remove excess and waste materials from job site and dispose of legally.
4. Clean stucco material from surfaces and work area of foreign materials resulting from EIFS operations.

END OF SECTION 072400

SECTION 074113 - MANUFACTURED ROOF PANELS

PART 1 - GENERAL

1.1 RELATED DOCUMENTS

A. Drawings and general provisions of the Contract, including General and Supplementary Conditions and Division 1 Specification Sections, apply to this Section.

1.2 SUMMARY

A. This Section includes the following:

1. Standing-seam roof panels for canopy structures

1.3 PERFORMANCE REQUIREMENTS

A. Structural Performance: Provide manufactured roof panel assemblies capable of safely supporting design loads indicated under in-service conditions with vertical deflection no greater than the following, based on testing manufacturer's standard units according to ASTM E 1592 by a qualified independent testing and inspecting agency.

1. Maximum Deflection: 1/180 of the span.

1.4 SUBMITTALS

A. Product Data: Include manufacturer's product specifications, standard details, certified product test results, and general recommendations, as applicable to materials and finishes for each component and for total panel assemblies.

B. Shop Drawings: Show layouts of panels on roofs, details of edge conditions, joints, panel Profiles, supports, anchorages, trim, flashings, underlayment, closures, snow guards, and special details. Distinguish between factory- and field-assembled work.

1. For installed products indicated to comply with certain design loadings, include structural analysis data signed and sealed by the qualified professional engineer responsible for their preparation.

C. Samples for Initial Selection: Manufacturer's color charts or chips showing the full range of colors, textures, and patterns available for roof panels with factory-applied finishes matching Architects selections..

1.5 QUALITY ASSURANCE

A. Installer Qualifications: Engage an experienced installer who has completed metal roof panel projects similar in material, design, and extent to that indicated for this Project and with a record of successful in-service performance.

1.6 DELIVERY, STORAGE, AND HANDLING

A. Deliver panels and other components so they will not be damaged or deformed. Package panels for protection against damage during transportation or handling.

B. Stack materials on platforms or pallets, covered with tarpaulins or other suitable weathertight and ventilated covering. Store panels to ensure dryness. Do not store panels in contact with other materials that might cause staining, denting, or other surface damage.

1.7 WARRANTY

A. General Warranty: Special warranties specified in this Article shall not deprive the Owner of other rights the Owner may have under other provisions of the Contract Documents and shall be in addition to, and run concurrent with, other warranties made by the Contractor under requirements of the Contract Documents.

B. Special Finish Warranty: Submit a written warranty, signed by manufacturer, covering failure of the factory-applied exterior finish on metal roof panels within the specified warranty period and agreeing to repair finish or replace roof panels that show evidence of finish deterioration. Deterioration of finish includes, but is not limited to, color fade, chalking, cracking, peeling, and loss of film integrity.

C. Finish Warranty Period: 20 years from date of Substantial Completion.

PART 2 - PRODUCTS

2.1 MANUFACTURERS

A. Available Manufacturers: Subject to compliance with requirements, manufacturers offering metal panels that may be incorporated into the Work include, but are not limited to, the following:

1. Steel Roof Panels – Concealed Fasteners:
   a. AEP-Span
   b. Berridge Manufacturing Co.
   c. Copper sales
   d. Fabral

2.2 METALS AND FINISHES

A. Metallic-Coated Steel Sheet Prepainted with Coil Coating: Steel sheet metallic coated by the hot-dip process and prepainted by the coil-coating process to comply with ASTM A 755 (ASTM A 755M) and the following requirements:

1. Galvanized Steel Sheet: ASTM A 653, G90 (ASTM A 653M, Z275); structural quality.
2. Thickness: 0.028 inch 24 gauge unless otherwise indicated.
3. Finish: Apply the following organic coating in thickness indicated. Furnish appropriate air-drying spray finish in matching color for touchup.

a. Fluoropolymer 2-Coat Coating System: Manufacturer's standard 2-coat, thermocured system composed of specially formulated inhibitive primer and fluoropolymer color topcoat containing not less than 70 percent polyvinylidene fluoride resin by weight with a total minimum dry film thickness of 0.9 mil (0.023 mm) and 30 percent reflective gloss when tested according to ASTM D 523.

1) Durability: Provide coating field tested under normal range of weather conditions for a minimum of 20 years without significant peel, blister, flake, chip, crack, or check in finish; without chalking in excess of a chalk rating of 8 according to ASTM D 4214; and without fading in excess of 5 Hunter units.
2) Color: Provide color as selected by Architect Color selected may be custom with some manufacturers.

2.3 ROOF PANEL ASSEMBLIES

A. Standing-Seam Roof Panels: Manufacturer's standard factory-formed, standing-seam roof panel assembly designed for concealed mechanical attachment of panels to roof purlins or deck.

1. Clips: Provide minimum 0.0625-inch- (1.6-mm-) thick, stainless-steel panel clips designed to meet negative-load requirements.
2. Cleats: Mechanically seamed cleats formed from minimum 0.0250-inch- (0.65-mm-) thick, stainless-steel or nylon-coated aluminum sheets.

2.4 MISCELLANEOUS METAL FRAMING

A. Miscellaneous Metal Framing, General: ASTM C 645, cold-formed metallic-coated steel sheet, **ASTM A 653/A 653M, G40 (Z120) hot-dip galvanized** or coating with equivalent corrosion resistance unless otherwise indicated.

B. Cold-Rolled Furring Channels: Minimum 1/2-inch- (13-mm-) wide flange.

1. Nominal Thickness: **As required to meet performance requirements**
2. Depth: **As indicated**.
3. Furring Brackets: Adjustable, corrugated-edge type of steel sheet with nominal thickness of 0.040 inch (1.02 mm).
4. Tie Wire: ASTM A 641/A 641M, Class 1 zinc coating, soft temper, 0.062-inch- (1.57-mm-) diameter wire, or double strand of 0.048-inch- (1.22-mm-) diameter wire.

C. Fasteners for Miscellaneous Metal Framing: Of type, material, size, corrosion resistance, holding power, and other properties required to fasten miscellaneous metal framing members to substrates.

2.5 MISCELLANEOUS MATERIALS

A. General: Provide materials and accessories required for a complete roof panel assembly and as recommended by panel manufacturer, unless otherwise indicated.

B. Fasteners: Self-tapping screws, bolts, nuts, self-locking rivets and bolts, end-welded studs, and other suitable fasteners designed to withstand design loads.

1. Use stainless-steel fasteners for exterior applications.
2. Where exposed fasteners are required, patterns must be evenly spaced, true to line into supporting framing members below.
3. Provide metal-backed neoprene washers under heads of exposed fasteners bearing on weather side of panels.
4. Locate and space exposed fasteners in true vertical and horizontal alignment. Use proper tools to obtain controlled uniform compression for positive seal without rupture of neoprene washer.

C. Accessories: Unless otherwise specified, provide components required for a complete roof panel assembly including trim, copings, fasciae, mullions, sills, corner units, ridge closures, clips, seam covers, battens, flashings, gutters, sealants, gaskets, fillers, closure strips, and similar items. Provide uniform colors for materials and finishes of panels as indicated.

1. Closure Strips: Closed-cell, self-extinguishing, expanded, cellular, rubber or cross-linked, polyolefin-foam flexible closure strips. Cut or premold to match configuration of panels. Provide closure strips where indicated or necessary to ensure weathertight construction.
2. Sealing Tape: Pressure-sensitive, 100 percent solids, polyisobutylene compound sealing tape with release paper backing. Provide permanently elastic, nonsag, nontoxic, nonstaining tape.
3. Elastomeric Joint Sealant: ASTM C 920, of base polymer, type, grade, class, and use classifications required to seal joints in panel roofing and remain weathertight. Provide sealant recommended by panel manufacturer.

D. Primer: Rust-inhibitive primer recommended by panel manufacturer for finish coat.

PART 3 - EXECUTION

3.1 PREPARATION

A. Coordinate metal panel roofing with construction of decks, walls, and other adjoining work to provide a leakproof, secure, and noncorrosive installation.

B. Promptly remove protective film, if any, from exposed surfaces of metal panels. Strip with care to avoid damage to finish.

C. Miscellaneous Framing: Install subpurlins, eave angles, furring, and other miscellaneous roof panel support members and anchorage according to metal roof panel manufacturer's written instructions.

3.2 PANEL INSTALLATION

A. General: Comply with panel manufacturer's written instructions and recommendations for installation, as applicable to project conditions and supporting substrates. Anchor panels and other components of the Work securely in place, with provisions for thermal and structural movement.

1. Field cutting exterior panels by torch is not permitted.
2. Install standing seam panels with concealed fasteners. Where fasteners are required to be exposed, match panel finishes at terminations of panels only. Fasteners in the panel field are not permitted.

B. Accessories: Install components required for a complete roof panel assembly including closures, clips, flashings, sealants, gaskets, fillers, closure strips, and similar items.

C. Separate dissimilar metals by painting each metal surface in area of contact with a bituminous coating, by applying rubberized-asphalt underlayment to each metal surface, or by other permanent separation as recommended by manufacturers of dissimilar metals.

D. Standing-Seam Roof Panel Assembly: Fasten panels to supports with concealed clip according to panel manufacturer's written instructions.

1. Install clips at each support with self-drilling/self-tapping fasteners.
2. At end laps of panels, install tape calk between panels.
3. Install factory-calked cleats at standing-seam joints.
4. Seaming: Complete seaming of panel joints by operating portable power-driven equipment of type recommended by panel manufacturer to provide a weathertight joint.

E. Installation Tolerances: Shim and align panel units within installed tolerance of 1/4 inch in 20 feet (6 mm in 6 m) on slope and location lines as indicated and within 1/8-inch (3-mm) offset of adjoining faces and of alignment of matching profiles.

3.3 CLEANING AND PROTECTING

A. Damaged Units: Replace panels and other components of the Work that have been damaged or have deteriorated beyond successful repair by finish touchup or similar minor repair procedures.

B. Cleaning: Remove temporary protective coverings and strippable films, if any, as soon as each panel is installed. On completion of panel installation, clean finished surfaces as recommended by panel manufacturer and maintain in a clean condition during construction.

END OF SECTION 074113

SECTION 075400 – MECHANICALLY ATTACHED THERMOPLASTIC MEMBRANE ROOFING (REV 1)

PART 1 - GENERAL

1.1 SECTION REQUIREMENTS

A. Scope: Material and installation of a mechanically attached, reinforced, single ply roofing membrane with insulation, flashings and other components to comprise a complete roofing system. Any portion of this specification that does not meet manufacturer's requirements shall be installed per manufacturer's requirements at no additional cost. Any portion of this specification that exceeds the manufacturer's minimum requirements shall be installed according to this specification, not manufacturer's minimum requirements.

B. Submittals:
1. Shop Drawings.
2. Product Data.
3. Evidence that the proposed roof system meets the requirements of Factory Mutual Class 1-120 , Perimeter Requirements FM1-195, Corner Requirements FM 1-295, and Underwriter's Laboratories Class A assembly.
4. Certificate from roofing system manufacturer indicating approval of product installer.
5. Pre-installation notice from the manufacturer prior to start of any work. This will include confirmation that the membrane and all accessories being used meet requirements of specification. This will also include confirmation that the scope of work is in accordance with published technical data as per manufacturer. This also includes confirmation that a warranty has been requested and will be issued on the Owner Agency's warranty form at the completion of roofing.
6. Documented proof of how they plan to meet warranty obligations.

C. Exterior Fire-Test Exposure: ASTM E 108, Class A.

D. Warranties: Provide Owner Agency's 20 year manufacturer's and 5 year applicator's full written warranties, without monetary limitation, signed by roofing system manufacturer and applicator, agreeing to promptly repair leaks resulting from defects in materials or workmanship for the periods indicated. Material and workmanship coverage to include all components provided by the roofing system manufacturer and applicator, i.e., insulation, fasteners, membrane, flashings, terminations, etc. Copies of the referenced warranties are included herewith.

E. Applicator:
1. Roofing system shall be applied by a Roofing Contractor authorized by the roof membrane manufacturer prior to bidding.
2. Must have five years experience as a roofing contractor, installing the specified product.
3. Must document continuing education for the foreman that will daily oversee the Work. A minimum of twelve hours of continuing education per year is required.
4. The on-site foreman must be able to clearly communicate with the Owner's representative.
5. Must provide a 24 hour emergency phone number to the Owner's representative.

6. Must be legally licensed to perform roofing work in the State of Utah and carry liability insurance as required by the State of Utah law.
7. Must be willing to sign and agree to the terms of the DFCM 5 year Contractor Roofing Warranty.

F. Manufacturer:
1. Must be listed in NRCA's low slope roofing materials guide.
2. Must have 10 year successful history as a roofing manufacturer.
3. Must agree to and be willing to sign the appropriate State of Utah (Owner Agency's) Manufacturer's Roofing Warranty for the roof system. This warranty, not the manufacturer's standard warranty, will be required as part of Project Closeout Documents.
4. Will provide, at no additional cost, Pre-installation Meeting, progress inspections and a final warranty inspection at project completion by a full tim technical representative. All inspections will be scheduled by the Owner's Representative.
5. Must have a certified applicator's program. This program must include continuing education for the applicator.
6. Must have a history of meeting warranty obligations.
7. Shall release all inspection reports concerning warranted roof system to the Owner's Representative.

G. Pre-Installation Meeting: Prior to the beginning roof system installation, the Owner's Representative shall schedule a meeting to be attended by the Owner, Architect, Contractor, Roofing Contractor and any other associated trade contractors to discuss and coordinate issues pertaining to the installation of the roof system.

H. Project Closeout Requirements: Contractor shall submit Manufacturer and Applicator Warranties and Roof History Record. A copy of the Roof History Record is included herewith.

PART 2 - PRODUCTS

2.1 ROOFING MATERIALS

A. Fabric-Reinforced PVC Sheet: Uniform, flexible sheet reinforced internally and as follows:

Manufacturers:
Carlisle SureFlex
Johns Manville
Sarnafil, Inc PVC
Versico Versiflex

Thickness: 80 **mils**, nominal thickness

Exposed Face Color: **White**. "

B. Auxiliary Materials: Recommended by roofing system manufacturer for intended use and as follows:

1. Air Retarder: 6 Mil reinforced polypropylene. Installed between roof deck and rigid insulation.
2. Sheet Flashing: Roofing system manufacturer's standard reinforced single ply membrane compatible with indicated substrates.
3. Walkway: Roofing system manufacturer's standard reinforced single ply membrane, nominal, 36 inches wide. Walkway to extend from roof scuttle to and around roof top mechanical units as indicated.
4. Sealants, Fasteners, Adhesives, Separators: Manufacturer's standard products, compatible with substrates indicated, as required to provide a complete roofing system.

2.2 ROOFING INSULATION

A. Rigid Insulation: Roofing system manufacturer's approved closed cell HCFC blown isocyanurate foam with heavy felt facers fiberglass reinforced. Provide above deck roof insulation in 2 inch layers for a total thickness of 4 inches; R7.3 per inch (R29.2 total).

B. Fabricate tapered insulation with slope of 1/2 inch per 12 inches, unless otherwise indicated. Provide pre-formed transition from tapered insulation to deck insulation.

PART 3 - EXECUTION

3.1 INSTALLATION

A. Insulation:

1. Insulation shall be installed according to insulation manufacturer's instructions and shall be neatly cut to fit around penetrations and projections.
2. Install tapered insulation at drainage crickets and around roof drains, creating a sump.
3. Install deck insulation in two layers. Offset joints in first insulation course from roof deck joints by a minimum of 6 inches. Offset joints in successive insulation courses by ½ panel in both directions to provide a thermal barrier between joints of layered insulation.
4. Do not install more insulation board than can be covered with roof membrane by the end of the day or the onset of inclement weather.
5. Mechanical Attachment:
   a. Insulation shall be mechanically fastened to the deck with approved fasteners and plates at a rate according to the insulation manufacturer's, Factory Mutual's and roof membrane manufacturer's recommendations for fastening rates and patterns. The quantity and locations of fasteners and plates shall also cause the insulation boards to rest evenly on the roof deck so that there are no significant and avoidable air spaces between the boards and the roof deck. Each insulation board shall be installed tight to adjacent boards on all sides.
   b. Fasteners are to be installed with a tool using a depth locator and torque limiting attachment, with minimum penetration into the structural deck as recommended by the fastener and roof membrane manufacturers.

B. Roof Membrane:

1. The surface of the insulation shall be inspected prior to installation of the roof membrane. Surface shall be clean, dry, free from debris and smooth, with no surface roughness or contamination. Broken, delaminated, wet or damaged insulation boards shall be removed and replaced.
2. Roof membrane is to be attached with fasteners and discs according to roof membrane manufacture's and Factory Mutual's requirements.
3. Membrane overlaps shall be shingled with the flow of water where possible.
4. Membrane shall be attached with fasteners and seam welding at the rate and method recommended by the roof membrane manufacturer at all unique roof areas: perimeter and corners; interior; curbs and flashings; penetrations.
5. All seams shall be hot air welded. Seam overlaps shall be 3 inches wide when automatic machine welding and 4 inches wide when hand welding typically.

C. Membrane Flashings:

1. All flashings shall be installed concurrently with the roof membrane as the job progresses. No temporary flashings are allowed. Flashing shall be adhered to compatible, dry, smooth and solvent-resistant surfaces. The bonded sheet shall be pressed firmly into place with a hand roller.
2. Install all fasteners and discs at the base of parapets, walls and curbs, etc. as recommended by the roof membrane manufacturer.
3. All flashings shall extend a minimum of 8 inches above the roofing level unless otherwise indicated. Flashings shall terminate with copings, termination bar, band clamps or counterflashings as indicated and as required by roof membrane manufacturer.

D. Walkway: Place chalk lines on clean, dry deck sheet to indicate location of walkway. Hot air weld walkway to the roof deck membrane per manufacturer's written instruction.

3.2 COMPLETION:

A. Prior to demobilization from the site, the work shall be reviewed by the Owner's Representative and the Applicator. Any defects noted and non-compliances with the Contract Documents and/or roof membrane manufacturer's recommendations shall be itemized on a punch list, with any items noted being corrected prior to demobilization.

END OF SECTION 075400

CONTRACTOR ROOFING WARRANTY

WHEREAS: _____

Of (Address): _____ (Phone): _____

Herein called the "Roofing Contractor," has performed roofing and associated ("Work") on the following project:

Owner: State of Utah

Agency: _____

Name of Building: _____

DFCM Project Number: _____

Address: _____

Description of Work: _____

Date of Acceptance: _____

Warranty Period: 5 Years

Date of Expiration: _____

AND WHEREAS Roofing Contractor has contracted (either directly with Owner or indirectly as a subcontractor) to warrant said Work against leaks and faulty or defective materials and workmanship for said designated Warranty Period.

NOW THEREFORE Roofing Contractor hereby warrants, subject to terms and conditions herein set forth, that during Warranty Period, Roofing Contractor will at his own cost and expense, promptly make or cause to be made such repairs to or replacements of said Work as are necessary to correct faulty and defective Work, and as are necessary to maintain said Work in watertight condition. In addition to making the Work watertight, the Roofing Contractor shall promptly remove and/or repair blisters, ridges, flashings, splits and other irregularities which in the opinion of the Roofing Manufacture's technical representative do not conform to acceptable roofing practices and conditions. These repairs shall be made promptly and to the satisfaction of the Roofing Manufacturer's technical representative. Upon notice of Owner to Roofing Contractor, Contractor agrees to make the necessary leak repairs according to manufacturer's specifications within five business days from written notice given by DFCM.

This Warranty is made subject to the following terms and conditions:

1. Specifically excluded from this Warranty are damages to Work and other parts of the building, and to building contents, not caused by the act or negligence of Contractor and caused by: a) lightning, windstorm in excess of manufacturer's specifications; b) fire; c) failure of roofing system substrate including cracking settlement, excessive deflection, deterioration, and decomposition; d) faulty construction of parapet walls, copings, chimneys, skylights, vents, and equipment supports, not part of contractors work and e) activity on roofing by others including construction contractors, maintenance personnel, other persons, and animals whether authorized or unauthorized by Owner, but only to the extent any of the above exclusions are not due to the failure of the Roofing Contractor to meet all required specifications and the customary practices of the performing the work. When Work has been damaged by any of the foregoing causes, Warranty shall be suspended until such damage has been repaired by Roofing Contractor, and until cost and expense thereof has been paid by DFCM or by another responsible party so designated.

2. The Roofing Contractor is responsible for damage to Work covered by this Warranty, and is liable for consequential damages to building or building contents, resulting from leaks or faults or defects of Work that are related to Roofing Contractor's failure to meet.

3. During Warranty Period, if Owner allows alteration of Work by anyone other than Roofing Contractor or anyone not authorized by Roofing Contractor, including cutting, patching and maintenance in connection with penetrations, attachment of other work, and positioning of anything on roof, this Warranty shall become null and void upon date of said alterations, but only to extent said alterations affect Work covered by this Warranty. If Owner engages Roofing Contractor to perform said alterations, Warranty shall not become null and void, unless Roofing Contractor, prior to proceeding with said Work, shall reasonably claim that said alterations would damage or deteriorate Work, thereby reasonably justifying a limitation or termination of this Warranty.

4. During Warranty Period, if original use of roof is changed and it becomes used for, but was not originally specified for, a promenade, work deck, spray cooled surface, flooded basin, or other use or service more severe than originally specified, this Warranty shall become null and void upon date of said change, but only to extent said change affects Work covered by this Warranty.

5. The DFCM shall notify Roofing Contractor of observed, known or suspected leaks, defect or deterioration, and shall afford reasonable opportunity for Roofing Contractor to inspect Work, and to examine evidence of such leaks, defects or deterioration.

This Warranty is recognized to be the only Warranty of Roofing Contractor on said Work, and is in addition to the Roofing Warranty furnished by the Roofing Manufacturer, and shall not operate to restrict or cut off Owner from other remedies and resources lawfully available to it in cases of roofing failure. Specifically, this Warranty shall not operate to relieve Roofing Contractor of responsibility for performance of original Work in accordance with requirements of the Contract Documents, regardless of whether Contract was a contract directly with DFCM or a subcontract with DFCM's General Contractor.

Any modification to the terms and conditions of this document will be submitted to the Attorney General's Office for investigation/prosecution.

IN WITNESS THEREOF, this instrument has been dully executed this

Day of , 20

Signed by Roofing Contractor by:

Roofing Contractor

Business Address

Signature & Printed Name

Title

Cosigned by General Contractor by:

General Contractor

Business Address

Signature & Printed Name

Title

WARRANTY FOR SINGLE PLY ROOFING

WHERE AS,_____(manufacture name), a corporation whose address is, _____ hereinafter called the Manufacturer, has manufactured and sold and caused to have applied, pursuant to the specifications and inspection, the necessary roofing materials to construct a PVC, TPO, EPDM or other single ply roof of approximately _____square feet and associated roof flashing of approximately _____ linear feet on the building described below:

OWNER: STATE OF UTAH

Owner:State of Utah

DFCM Project Number:_____

Building Name:_____

Location:_____

Date of Acceptance of Roofing:_____

Manufacturer Address:_____

Manufacturer's Warranty No:_____

Phone Number for Warranty Services:_____

Roofing Contractor Name:_____

Roofing Contractor Address:_____

AND WHEREAS, by careful examination of said roof by the Manufacturer's representative, it has been determined that roofing materials have been applied in conformance with Manufacturer's specifications.

AND WHEREAS, Manufacturer represents and wishes to warranty, subject to the limits stated herein, that its roofing when so applied is effectively watertight for a period of twenty (20) years despite normal wear and tear by the elements, as well as guaranteeing it against defects in workmanship or materials.

NOT withstanding any other provision herein, this warranty shall not cover damages related to winds in excess of _____ miles per hour

NOW THEREFORE, said Manufacturer warranties to the said Owner that, as set forth below, during a period of twenty (20) years from the date of acceptance of said single-ply roofing described above, Manufacturer will at its own expense, make or cause to be made, any repairs that may be necessary, as a result of defects in workmanship or materials supplied by the Manufacturer which results in leaks or of normal wear and tear by the elements which results in leaks, and will maintain said roof in water tight condition free from all leaks arising from such causes. For purposes of this warranty, damage to the roof caused by any unusual natural phenomena shall not be deemed to be "normal wear and tear by the elements".

INCLUSIONS: This Warranty does cover, and Manufacturer shall be liable for the following:

1. Roofing membrane, membrane flashings, metal flashings, mechanical fastening system, anchors, adhesives, seaming materials, slip sheets, fabrics, insulations, under payments, and accessories furnished by the Manufacturer as incorporated into the roof membrane system.

2. Vapor barriers, insulations and / or materials furnished by the Manufacturer or approved to be incorporated into the roof membrane assembly and such damage as may result from failure of these materials.

3. Repair of splits, breaks, cracks, and seam failures in membrane system.

4. Leaks from failure in material or workmanship.

EXCLUSIONS: This Warranty does not cover, and Manufacturer shall not be liable for the following:

1. Metal work, including metal counter flashings, not a part of the roof membrane system and such damage as may result from application of these materials;

2. Any damage to the roof caused by structural defect in, or failure of, the building or defects in, or failure of, any structural roof deck, or other sheathing materials, used as the base over which the roof and roof insulation is applied;

3. Roof damage from special chemical conditions not disclosed to Manufacturer;

4. Any damage to the building or contents thereof, except replacement of damaged roof insulation and vapor barrier as noted under "INCLUSION" above;

5. Damage due to unauthorized alterations to roofing system.

6. Damage to the roof due to mechanical abrasion or abuse not caused by the Manufacturer.

7. Damage or failure directly caused by the re-use of existing material. (re-roof)

8. Reasonable care and maintenance will be the responsibility of the owner.

INSPECTION AND REPAIR: During the term of this Warranty, Manufacturer, its agents or employees, shall have free access to the roof during regular business hours. Upon verbal notice by Owner to Manufacturer within four days of the discovery of any leaks in the roofing system, or need of repair of roof, the Manufacturer shall have ten (10) days to inspect the roof. Following such inspection:

1. Manufacturer, at its own expense shall make such repairs as are required by this warranty.

2. In case owner or his agent has verbally notified Manufacturer that repairs are required and such repairs are not covered by the Warranty (including repairs required by owner's alteration, extension or addition to the roof) Manufacture, after having obtained Owner's consent thereto, in writing, shall make or cause to be made, such repairs at Owner's expense in accordance with specifications and procedures as established by Manufacturer and this warranty shall thereupon remain in effect for the un-expired portion of its original term. If Owner fails to so consent or if repairs are made by one other than the Manufacturer's authorized designee, this Warranty with respect to such area shall be automatically terminated.

3. In the event the (1) Owner notifies Manufacturer and has confirmed the need of repair of roof and (2) Manufacturer is unable to promptly inspect and repair same, and (3) an emergency condition exists which requires prompt repair in order to avoid substantial damage to owner, then owner may make such temporary repairs as may be essential and any such action shall not be a breach of the provision of this Warranty. Owner will bear emergency repair expenses.

INSPECTION SERVICE: Manufacturer agrees to re-inspect the completed roof not earlier than 18 nor later than 24 months after completion of the roofing, and if it is determined that there are defects in the roofing, then Manufacturer shall make, or cause to be made at its own expense, such repairs as are necessary to remedy said defects within the scope of its responsibility under the terms of this Warranty.

IN WITNESS WHEREOF, Manufacturer has caused this instrument to be signed and sealed by its duly authorized officer this day of _____.

BY: _____

TITLE: _____

CORPORATION: _____

SEAL:

Project Manager Approval _____
Division of Facilities Construction and Management
Risk I.D. _____

SECTION 077113 – MANUFACTURED WALL COPINGS

PART 1 - GENERAL

1.1 SECTION REQUIREMENTS

A. Submittals: Product Data, Shop Drawings, Installation Guide.

1.2 QUALITY ASSURANCE:

A. Product shall be listed in current Factory Mutual Research Corporation Approval Guide ap proved for Class FM 1-90.

PART 2 - PRODUCTS

2.1 PARAPET COPING SYSTEM

A. Metal coping cap with extruded anchor bar and galvanized steel anchor / support cleats for capping any parapet wall. The system shall not require exposed fasteners. Joints shall be butt type with concealed splice plates.

B. Performance Characteristics:

1. Coping sections shall expand and contract freely while locked in place on anchor cleats.
2. Coping sections shall lock to extruded aluminum anchor bar and anchor cleats by mechanical pressure from hardened stainless steel springs factory attached to anchor cleats.
3. All splice plates shall be sealed watertight.

C. Coping Cap:

1. Length: 12’ Sections.
2. Vertical Outside Face Dimension: 4 ½”.
3. Vertical Inside Face Dimension: 3 ½”
4. Fluoropolymer 2-Coat System: Manufacturer's standard system with topcoat containing not less than 70 percent polyvinylidene fluoride resin by weight; complying with AAMA 2604. Color to match Metal Era Roof Edge Systems “Dark Bronze”.
5. Concealed Splice Plates: 8” Wide. Finish to match Coping Cap. Seal with factory applied dual non-curing sealant strips.
6. Extruded Anchor Bar: .100” Mill extruded aluminum, pre-punched, 12” wide and installed 4’ on center, integrated with anchor/support cleat.
7. Anchor/Support Cleat: 20 Gauge pre-punched galvanized cleat with stainless steel spring mechanically locked to cleat normally 12” wide at 4’ on center. Mechanically fastened per manufacturer’s Instruction Guide.
8. Fasteners: Manufacturer’s standard stainless steel.

D. Accessories:

1. Corners, caps, etc. shall be fabricated by the coping manufacturer. Welded assemblies shall be used to maintain watertight integrity.
2. Asphalt Mastic: SSPC-Paint 12, asbestos free, solvent type.

PART 3 - EXECUTION

3.1 INSTALLATION

A. Comply with SMACNA's "Architectural Sheet Metal Manual." Allow for thermal expansion; set true to line and level. Install Work with laps, joints, and seams permanently watertight and weatherproof; conceal fasteners where possible.

B. Sealed Joints: Form nonexpansion, but movable, joints in metal to accommodate elastomeric sealant to comply with SMACNA standards.

C. Separations: Separate noncompatible metals or corrosive substrates with a coating of asphalt mastic or other permanent separation.

END OF SECTION 077113

SECTION 077200 - ROOF ACCESSORIES

PART 1 - GENERAL

1.1 RELATED SECTIONS

A. 075400: Mechanically Attached Thermoplastic Membrane Roofing

1.2 SECTION REQUIREMENTS

A. Submittals: Product Data, shop drawings.

PART 2 - PRODUCTS

2.1 MATERIALS

A. Galvanized Steel Sheet: ASTM A 653/A 653M, G90.

2.2 ROOF ACCESSORIES

A. Roof Curbs and Equipment Supports: Fabricate from 18 gauge, galvanized structural steel; factory primed and painted with welded or sealed mechanical corner joints.

1. Provide units with base profile coordinated with roof insulation thickness and roof deck slope.
2. Provide preservative-treated wood nailers at tops of curbs.
3. Provide manufacturer's standard rigid or semirigid insulation.

B. Roof Scuttle: Fabricate from galvanized structural steel sheet with 12 inch high, integral-curb, double-wall construction with 1-1/2-inch insulation, formed cants and cap flashing, with welded or sealed mechanical corner joints and metal curb liner. Provide double-wall cover (lid) construction with 1- inch- thick insulation core. Provide gasketing and corrosion-resistant hardware including pintle hinges, hold-open devices, interior padlock hasps, and both interior and exterior latch handles.

1. Fabricate units to withstand 40-lbf/sq. ft. external and 20-lbf/sq. ft. internal loading pressure.
2. Finish: Baked enamel.
3. Size: 30 inches (hinge side) x 36 inches, single leaf.

PART 3 - EXECUTION

3.1 INSTALLATION

A. Installation: Unless otherwise indicated, install roof accessory items according to construction details of NRCA's "Roofing and Waterproofing Manual." Coordinate with installation of roof deck, vapor barriers, roof insulation, roofing, and flashing to ensure combined elements are secure, waterproof, and weathertight.

END OF SECTION 077200

SECTION 079200 - JOINT SEALANTS

PART 1 - GENERAL

A. Not Applicable.

PART 2 - PRODUCTS

2.1 JOINT SEALANTS

A. Compatibility: Provide joint sealants, joint fillers, and other related materials that are compatible with one another and with joint substrates under service and application conditions.

B. Elastomeric Sealants: Comply with ASTM C 920.
   1. Single-component, neutral-curing silicone sealant, Type S; Grade NS; Class 25; Uses T, NT, M, G, A, and O. For general exterior use.
   2. Single-component, nonsag urethane sealant, Type S; Grade NS; Class 25; and Uses NT, M, A, and O. For use at aluminum storefront.
   3. Single-component, pourable urethane sealant, Type S; Grade P; Class 25; Uses T, M, G, A, and O. Use for exposed interior concrete control joints.
   4. Single-component, mildew-resistant silicone sealant, Type S; Grade NS; Class 25; Uses NT, G, A, and O; formulated with fungicide. Use for interior sealant joints in ceramic tile, and other hard surfaces in toilet rooms and around plumbing fixtures.

C. Latex Sealant: Single-component, nonsag, mildew-resistant, paintable, acrylic-emulsion sealant complying with ASTM C 834. For interior use only at perimeters of door and window frames.

D. Acoustical Sealant for Exposed Joints: Nonsag, paintable, nonstaining, latex sealant complying with ASTM C 834. For interior use only at acoustical assemblies.

E. Acoustical Sealant for Concealed Joints: Nondrying, nonhardening, nonskinning, nonstaining, gunnable, synthetic-rubber sealant recommended for sealing interior concealed joints to reduce transmission of airborne sound. For interior use only at acoustical assemblies.

PART 3 - EXECUTION

3.1 INSTALLATION

A. Comply with ASTM C 1193.

B. Comply with ASTM C 919 for use of joint sealants in acoustical applications.

END OF SECTION 079200

SECTION 081113 – HOLLOW METAL DOORS AND FRAMES

PART 1 - GENERAL

1.1 WORK INCLUDED

A. Work under this section shall include:
   1. Steel doors.
   2. Steel door frames.
   3. Steel window frames.

1.2 SECTION REQUIREMENTS

A. Submittals: Product Data and door schedule.

B. Comply with ANSI 115 and SDI 100.

C. Fire-Rated Doors and Frames: Labeled by a testing and inspecting agency acceptable to authorities having jurisdiction based on testing per NFPA 252 UL 10C at positive pressure.

PART 2 - PRODUCTS

2.1 MATERIALS

A. Hot-Rolled Steel Sheets: ASTM A 569/A 569M.

B. Cold-Rolled Steel Sheets: ASTM A 366/A 366M or ASTM A 620/A 620M.

C. Galvanized Steel Sheets: ASTM A 653/A 653M, commercial steel, or ASTM A 642/A 642M, drawing quality, with A60 or G60 coating designation, mill phosphatized.

2.2 STEEL DOORS AND FRAMES

A. Steel Doors: 1-3/4-inch- thick of materials and ANSI/SDI 100 grades and models specified below.

   1. Interior Doors: Grade II, heavy-duty, Model 2, full flush design, minimum 0.0478-inch-thick, cold-rolled steel sheet faces.
   2. Exterior Doors: Grade III, extra heavy-duty, Model 2, full flush design, minimum 0.0635-inch- thick, galvanized steel sheet faces.

      a. Thermal-Rated (Insulated) Doors: Where indicated, provide doors with thermal-resistance value (R-value) of not less than 4.0 deg F x h x sq. ft./Btu when tested according to ASTM C 1363.

B. Door Silencers: Three on strike jambs of single-door frames and two on heads of double-door frames when weather-stripping is not indicated.

C. Plaster Guards: Provide where mortar might obstruct hardware operation and to close off interior of openings.

D. Fabricate steel frames to be rigid, neat in appearance, and free from defects, warp, or buckle.

1. Interior Frames: Fabricate with mitered or coped and continuously welded corners, formed from 0.0478-inch- thick, cold-rolled steel for openings 48 inches or less in width and from 0.0598-inch- thick steel for openings more than 48 inches in width.
2. Exterior Frames: Fabricate with mitered or coped and continuously welded corners, formed from 0.0635-inch- thick, galvanized steel sheet.

E. Prepare doors and frames to receive mortised and concealed hardware according to SDI 107.

F. Prime Coat: Uncoated steel, ANSI A224.1 shop primer.

PART 3 - EXECUTION

3.1 INSTALLATION

A. Place steel frames to comply with SDI 105.

B. Install steel doors accurately in frames, within clearances specified in ANSI/SDI 100.

C. Prime Coat Repair: Immediately after erection, sand smooth any rusted or damaged areas of prime coat and repair finish with compatible air-drying primer.

D. Caulk perimeter of frames to adjacent jamb and head surfaces.

END OF SECTION 081113

SECTION 083113 - ACCESS DOORS AND FRAMES

PART 1 - GENERAL

1.1 SECTION REQUIREMENTS

A. Locations: Locations requiring access doors for items such as plumbing valve or air balance damper locations, etc., shall be as required by the Work. Provide access doors where necessary, in minimum sizes, to provide access and function to concealed items requiring operation.

PART 2 - PRODUCTS

2.1 ACCESS DOORS AND PANELS

A. Flush Access Doors with Exposed Trim: Steel units with 14 gauge door and 16 gauge frames, factory primed finish, in size(s) indicated.

B. Locks: Flush to finished surface, screwdriver operated.

PART 3 - EXECUTION

3.1 INSTALLATION

A. Install access doors and panels accurately in position. Adjust hardware and door and panels for proper operation.

END OF SECTION 083113

SECTION 083613 - SECTIONAL OVERHEAD DOORS

PART 1 - GENERAL

1.1 RELATED SECTIONS

A. 088000 Glazing

1.2 SECTION REQUIREMENTS

A. Submittals: Product Data and Shop Drawings.

B. Structural Performance: Design and reinforce sectional overhead doors to withstand a 20-lbf/sq. ft. wind-loading pressure.

PART 2 - PRODUCTS

2.1 SECTIONAL OVERHEAD DOORS

A. Products:

1. Overhead Door Corporation, Dallas, TX, (800) 887-3667, 591 Series “Thermacore”.
2. Wayne Dalton Corporation, Salt Lake City, UT, (801) 975-0889 “Thermospan”.
3. Raynor Worldwide, Dixson, IL, (800) 4- RAYNOR, “Thermaseal Basic”.

B. Sectional Door Assembly: Metal / foam / metal sandwich panel construction with EPDM thermal break and ship-lap design:

1. Panel Thickness: 1 5/8”
2. Exterior Surface: Ribbed, textured.
3. Exterior Steel: Galvanized, .015” thick.
4. End Stiles: 16 Gauge.
5. Standard Springs: 10,000 cycles (High cycles).
6. Insulation: CFC free and HCFC free polyurethane, with maximum flame-spread and smoke-developed indices of 75 and 450, respectively, according to ASTM E 84; fully encapsulated, with galvanized steel inside face.
7. Thermal Value: R14 minimum.
8. Air Infiltration: .08 CFM at 15 MPH; .08 CFM at 25 MPH.
9. Full Glazing Requiring Aluminum Sash Panels: Insulated, tinted, tempered glass.

C. Finish: Two coats baked on powder coating with exterior color as selected by Architect, and white interior colors.

D. Hardware: Galvanized steel hinges and fixtures. Ball bearing rollers with hardened steel races.

E. Lock: Interior mounted slide lock.

F. Weather-stripping: EPDM rubber bulb-type strip at bottom with header seal and jamb weather-stripping.

G. Track: Provide track as recommended by manufacturer to suit loading required and clearances available.

H. Electric Motor Operation: Provide UL listed electric operator size and type as recommended by manufacturer to move door in either direction at not less than 2/3 foot nor more than 1 foot per second.
   1. Entrapment Protection: Photoelectric sensors.
   2. Operator Controls: Push button operated control stations with open, close and stop buttons for surface mounting for interior location.
   3. Special Operation: Vehicle detector operation.

PART 3 - EXECUTION

3.1 INSTALLATION

A. Install door, track, and operating equipment complete with necessary hardware, jamb and head mold strips, anchors, inserts, hangers, and equipment supports.

B. Fasten vertical track assembly to framing at not less than 24 inches o.c. Hang horizontal track from structural overhead framing with angle or channel hangers. Provide bracing and reinforcement as required for rigid installation of track and door.

C. Lubricate bearings and sliding parts; adjust doors to operate easily, free from warp, twist, or distortion and fitting weathertight for entire perimeter.

D. Test and adjust controls and safeties.

END OF SECTION 083613

SECTION 084113 - ALUMINUM-FRAMED ENTRANCES AND STOREFRONTS

PART 1 - GENERAL

1.1 RELATED SECTIONS

A. 079200: Joint Sealants

B. 085113: Aluminum Windows

C. 088000: Glazing

1.2 SECTION REQUIREMENTS

A. Structural Performance: Provide systems, including anchorage, capable of withstanding loads indicated.

1. Main-Framing-Member Deflection: Limited to 1/175 of clear span or 3/4 inch, whichever is smaller.
2. Structural Testing: Systems tested according to ASTM E 330 at 150 percent of inward and outward wind-load design pressures do not evidence material failures, structural distress, deflection failures, or permanent deformation of main framing members exceeding 0.2 percent of clear span.

B. Air Infiltration: Limited to 0.06 cfm/sq. ft. of system surface area when tested according to ASTM E 283 at a static-air-pressure difference of 6.24 p.s.f. for single doors and 1.567 p.s.f. for pairs of doors.

C. Water Resistance: The test specimen shall be tested in accordance with ASTM E 331. There shall be no leakage at a minimum static air pressure differential of 8 p.s.f. as defined in AAMA 501.

D. Thermal Trasmittance (U- value): When tested to AAMA Specification 1503, the average thermal transmittace (U-value) shall not be more than: .44

E. Submittals: Product Data, Shop Drawings.

1. For entrance systems, include hardware schedule and locations.

PART 2 - PRODUCTS

2.1 ALUMINUM-FRAMED STOREFRONTS

A. Glazed To The Center Storefront Glazing:

1. Vistawall, Terrell, TX (303) 807-5542 “Series 3000”.

2. Kawneer, (801) 201-1080 “Trifab VG 451”
3. Arcadia, Inc., Vernon, CA (323 269-7300, “AR 450+”.

B. Aluminum: ASTM B 209 sheet; ASTM B 221 extrusions.

C. Fasteners and Accessories: Compatible with adjacent materials, corrosion-resistant, non-staining, and non-bleeding. Use concealed fasteners except for application of door hardware.

D. Fabrication: Fabricate framing in profiles indicated for flush glazing (without projecting stops). Provide sub frames and reinforcing of types indicated or, if not indicated, as required for a complete system. Factory assemble components to greatest extent possible. Disassemble components only as necessary for shipment and installation.

E. Aluminum Finish: Comply with NAAMMs "Metal Finishes Manual for Architectural and Metal Products." Color anodic, Architectural Class I: AA-M12C22A42/A44.

1. Color: Medium Bronze Anodized.

H. Sill Flashing at Exterior Window Units: .03” Aluminum to match frames.

PART 3 - EXECUTION

3.1 INSTALLATION

A. Isolate metal surfaces in contact with incompatible metal or corrosive substrates, including wood, by painting contact surfaces with bituminous coating or primer, or by applying sealant or tape recommended by manufacturer.

B. Install components to provide a weatherproof system.

C. Install framing components true in alignment with established lines and grades to the following tolerances:

1. Variation from Plane: Limit to 1/8 inch in 12 feet; 1/4 inch over total length.
2. Alignment: For surfaces abutting in line, limit offset to 1/16 inch. For surfaces meeting at corners, limit offset to 1/32 inch.
3. Diagonal Measurements: Limit difference between diagonal measurements to 1/8 inch.

D. Install exterior window units with through wall sill flashing.

END OF SECTION 084113

SECTION 085113 - ALUMINUM WINDOWS

PART 1 - GENERAL

1.1 RELATED SECTIONS

A. 084113: Aluminum Framed Storefronts

1.2 SECTION REQUIREMENTS

A. Submittals: Product Data, Shop Drawings,.

B. Quality Standard: Comply with AAMA/NWWDA 101/I.S.2/NAFS.

1. Provide AAMA- or WDMA-certified aluminum windows with an attached label.

PART 2 - PRODUCTS

2.1 ALUMINUM WINDOWS

A. Products:

1. Vistawall, Terrell, TX, (303) 807-5542, “ZS-2750” Series.
2. Kawneer, Norcross, GA, (801) 201-1080, “6200T Isolock”.
3. Arcadia, Inc., Vernon, CA (323 269-7300, “CV200”.,

B. Window Types: The following types, as indicated on Drawings:

1. Hopper.

C. Performance Class: LC.

D. Performance Grade: 25.

E. Condensation-Resistance Factor: 52 per AAMA 1503.

F. Thermal Transmittance: Whole-window U-factor not more than 0.59 Btu/sq. ft. x h x deg F at 15-mph wind velocity and winter temperatures per AAMA 1503.

G. Cam Locks, Handles or Operators: White bronze with white bronze strike for awning windows.

H. Ventilator Hinges: Four bar with friction device. 300 Series stainless steel with nylon friction block encased in sliding brass shoe.

I. Ventilator Limited Opening Device Attachment: Fasteners used t attaché limit devices shall be tamper resistant or concealed to prevent removal.

1. Mount each device to permit ventilator to open approximately 6” before stopping.
2. Operation beyond limiting point shall be by custodial access only.

J. Equip units with vinyl-coated, glass-fiber mesh insect screens at operable sashes.

K. Weather-stripping: Dual durometer Santoprenet around perimeter of the exterior of all vents, and a foam-filled bulb vinyl perimeter of the interior face of all vents.

L. Glaze units with tinted, low-e coated, sealed insulating glass, complying with Division 08 Section "Glazing."

M. Finish: Class I, color anodic finish; AA-M12C22A44; complying with AAMA 611: Medium bronze to match storefront framing

PART 3 - EXECUTION

3.1 INSTALLATION

A. Set units level, plumb, and true to line, without warp or rack of frames and panels. Provide proper support and anchor securely in place.

B. Set sill members in bed of sealant or with gaskets, as indicated, to provide weathertight construction.

C. Adjust operating panels, screens, and hardware to provide a tight fit at contact points and weather stripping for smooth operation and weathertight closure. Lubricate hardware and moving parts.

D. Clean aluminum surfaces and glass immediately after installing windows. Remove nonpermanent labels from glass surfaces.

END OF SECTION 085113

SECTION 086200 - UNIT SKYLIGHTS

PART 1 - GENERAL

1.1 SECTION REQUIREMENTS

A. Submittals: Product Data, Shop Drawings, and finish Samples.

B. Fire-Test-Response Characteristics of Plastic Glazing: Labeled by a testing and inspecting agency acceptable to authorities having jurisdiction based on testing indicated below:

1. Self-Ignition Temperature: 650 deg F or greater when tested per ASTM D 1929.
2. Smoke-Developed Index or Smoke Density: 450 or less when tested per ASTM E 84 or 75 or less when tested per ASTM D 2843.
3. Relative-Burning Characteristics: Class CC1 or Class CC2 when tested per ASTM D 635.

PART 2 - PRODUCTS

2.1 SKYLIGHTS

A. Products:

1. Major Industries, Wausau, WI, (888) 759-2678, “Auburn Standard”.
2. Bristolite Skylights, Santa Ana, CA, (800) 854-8618.
3. O’Keeffes Inc, San Francisco, CA (888) 653-3333

B. Type: Self-flashing with integral curb.

C. Aluminum: ASTM B 209 sheet; ASTM B 221 extrusions.

D. Acrylic Glazing: ASTM D 4802, thermoformable, monolithic sheet, category as standard with manufacturer, Type UVA (formulated with UV absorber), Finish 1 (smooth or polished).
1. Double-Glazing Profile: Pyramid or dome.
2. Double-Glazing Color:

a. Outer Glazing Color: White, translucent.
b. Inner Glazing Color: White, translucent.

E. Fabrication: Factory assemble unit with an extruded-aluminum glazing retainer, gasketing, self-contained flashing, and integral gutters with weeps for condensation control.

F. Curb: Fabricate units with separate formed or extruded-aluminum curb with cants or flashing flange to receive roof flashing and counterflashing.

G. Liner: Provide units with aluminum curb liner at interior of curbs.

H. Thermal Break: Fabricate unit skylights with thermal barrier separating interior metal framing from materials exposed to outside temperature.

I. Aluminum Finish: Clear anodic, Architectural Class I: AA-C22A41, complying with AAMA 611.

PART 3 - EXECUTION

3.1 INSTALLATION

A. Comply with NRCA's "Roofing and Waterproofing Manual." Coordinate with installation of vapor barriers, roof insulation, roofing, and flashing as required to ensure combined elements are waterproof and weathertight.

B. Isolate metal surfaces in contact with incompatible metal or corrosive substrates, including wood, with bituminous coating on concealed metal surfaces.

END OF SECTION 086200

SECTION 087100 - DOOR HARDWARE

PART 1 - GENERAL

1.1 SECTION REQUIREMENTS

A. Submittals: Hardware Schedule.

B. Provide Owner with construction keys for access during construction.

PART 2 - PRODUCTS

2.1 PRODUCTS: Manufacturer's listed within the Hardware Schedule indicate a quality standard for basis-of-design. Provide products from listed manufacturers, or comply with provisions for "comparable product requests" in Division 1.

2.2 HARDWARE

A. Hinges: Provide the following:
1. Nonremovable hinge pins for exterior and public interior exposure.
2. Three hinges for 1-3/4-inch- thick doors 90 inches or less in height; four hinges for doors more than 90 inches in height.

B. Locksets and latchsets as follows:

1. BHMA A156.2, Series 4000, Grade 2 for bored locks and latches.
2. BHMA A156.3, Grade 1 for exit devices.
3. Lever handles on locksets and latchsets, Schlage series scheduled.
4. Provide trim on exit devices matching locksets.

C. Provide construction keying. Owner will key locks to Owner's new master-key system, when owner is ready to take occupancy.

1. Cylinders with six-pin tumblers.

D. Closers: Provide the following:

1. Mount closers on interior side (room side) of door opening. Provide regular-arm, parallel-arm, or top-jamb-mounted closers as necessary.
2. Adjustable delayed opening (accessible to the disabled) feature on closers.
3. Provide hold open feature on closers indicated.

E. Provide wall stops or floor stops at all doors.

F. Provide hardware finishes as follows:

1. Hinges: Matching finish of lockset/latchset.
2. Locksets, Latchsets, and Exit Devices: Satin chrome plated

3. Closers: Matching finish of lockset/latchset.
4. Other Hardware: Matching finish of lockset/latchset.

2.3 DOOR OPERATORS / ADA SPECIAL CLOSERS

A. Where low kinetic energy, as defined by ANSI Standard A156.19, Surface Door Operators shall be electrically powered closers complying with the 1990 ADA requirements for opening force and time to close standards. Full closing force controlled by the hydraulic sweep and latch valves shall be provided when the power or assist cycle ends.

B. Door Operators shall be rack and pinion action with one-piece forged steel pistons.

C. Separate adjusting valves shall be provided for closing speed, latching speed and back-check.

D. Adjusting valves shall be made of a metal material, regulating the fluid through a “V-SLOT” valve, concealed, adjustable only with special wrench, and shall be seated with “O” type rings.

E. Door Operators and supporting equipment shall carry a manufacturers two (2) year warranty.

F. Door Operator shall have built in the following features:

1. Opening Speed adjustment.
2. Opening Force adjustment (15 lb. Maximum).
3. Time Delay.
4. On-board Diagnostics.
5. On-board power supply.
6. Factory default memory.
7. On/off switch.
8. Hold open switch.
9. On-board capabilities to be either wired for simultaneous or sequential operation at vestibules.
10. Out-put triggers for electric strikes or electric latch retraction.

G. Auto Operator Manufacturers: Subject to compliance with requirements, provide auto operators of the following approved manufacturers:

1. LCN Closers - 4640 Series
2. Horton 4000LE

H. Actuator Equal to LCN 8310-853 Wall mount 2 required

PART 3 - EXECUTION

3.1 INSTALLATION

A. Mount hardware in locations recommended by the Door and Hardware Institute, unless otherwise indicated.

END OF SECTION 087100

SECTION 088000 - GLAZING

PART 1 - GENERAL

1.1 SECTION REQUIREMENTS

A. Submittals: Product Data and 12” square sample of tinted glass.

B. Safety Glass: Category II materials complying with testing requirements in 16 CFR 1201 and ANSI Z97.1.

C. Comply with written instructions of glass product manufacturers; GANA's "Glazing Manual;" and publications of GANA, AAMA, and SIGMA as applicable to products indicated, unless more stringent requirements are indicated.

D. Insulating-Glass Units: Permanently mark with appropriate certification label of one of the inspecting and testing agencies indicated below:

1. Insulating Glass Certification Council.
2. Associated Laboratories, Inc..
3. National Accreditation and Management Institute.

PART 2 - PRODUCTS

2.1 GLASS

A. Float Glass: Glass Type 1: ASTM C 1036, Type I, Class 2 (tinted, heat absorbing, and light reducing), PPG “Solarcool (2) Bronze With Sungate 500 Low E (3)” and Quality Q3, basis of design.

B. Heat-Treated Float Glass: Glass Type 2: ASTM C 1048, Condition A (uncoated), Type I, Class 2 (tinted) PPG “Solarcool (2) Bronze With Sungate 500 Low E (3)”, Quality Q3, Kind FT (fully tempered), basis of design.

C. Heat-Treated Float Glass Glass Type 4: ASTM C 1048, Condition A (uncoated), Type I, Class 1 (clear), Quality Q3, Kind FT (fully tempered).

D. Insulated, Tinted Glass with Low-E Coating Characteristics:

1. Visible Light Transmittance: 18%.
2. Solar Heat Gain Coefficient: .29
3. Light to Solar Gain Ratio: 0.62

2.2 FABRICATED GLASS PRODUCTS

A. Sealed Insulating-Glass Units Glass Type 1 and 2: Factory-assembled units complying with ASTM E 774 for Class CBA units, with two 6.0-mm- thick sheets of glass separated by a 1/2-inch dehydrated space filled with air.

1. Inboard Lite: Float or heat treated float glass as indicated.
2. Outboard Lite: Float or heat treated float glass as indicated.
3. Low-Emissivity Coating: Second surface.

PART 3 - EXECUTION

3.1 INSTALLATION

A. Comply with combined recommendations of manufacturers of glass, sealants, gaskets, and other glazing materials, unless more stringent requirements are contained in GANA's "Glazing Manual."

B. Set glass lites in each series with uniform pattern, draw, bow, and similar characteristics.

END OF SECTION 088000

SECTION 092900 - GYPSUM BOARD

PART 1 - GENERAL

1.1 SECTION REQUIREMENTS

A. Submittals: Product Data.

PART 2 - PRODUCTS

2.1 GYPSUM BOARD

A. Gypsum board products in maximum lengths available to minimize end-to-end butt joints.

1. Gypsum Panels, Regular: ASTM C 36, 5/8” thick unless otherwise indicated, with manufacturer's standard edges. Regular type, unless otherwise indicated. Type X where required by fire resistance rated assemblies. Sag-resistant type for ceiling surfaces.
2. Water-Resistant Gypsum Panels (at Toilet / Shower area walls and south and west walls of Utility): ASTM C 630, 5/8” unless otherwise indicated.

2.2 ACCESSORIES

A. Trim Accessories:

1. Edge trim, and control joints complying with ASTM C 1047, formed from steel sheet zinc coated by hot-dip process or rolled zinc or plastic.
2. Cornerbead: Metal, ¾” radius unless 90 degree type indicated.

B. Aluminum Accessories: Extruded-aluminum accessories indicated with manufacturer's standard corrosion-resistant primer.

C. Gypsum Board Joint Treatment Materials: Comply with ASTM C 475. Paper reinforcing tape and drying-type, ready-mixed, all-purpose compounds.

D. Acoustical Sealant for Exposed and Concealed Joints: Nonsag, paintable, nonstaining latex sealant complying with ASTM C 834.

E. Miscellaneous Materials: Auxiliary materials for gypsum board construction that comply with referenced standards.

PART 3 - EXECUTION

3.1 INSTALLATION

A. Install and finish gypsum panels to comply with ASTM C 840 and GA-216.

1. Isolate the perimeter of non-load-bearing gypsum board partitions where they abut structural elements, except floors, by providing a 1/4- to 1/2-inch- wide space between gypsum board and the structure. Trim edges with USG “Series 400” metal U-bead edge trim where edges of gypsum panels are exposed. Seal joints between edges and abutting structural surfaces with acoustical sealant.
2. Single-Layer Fastening Methods: Fasten gypsum panels to supports with screws.
3. Multilayer Fastening Methods: Fasten base layers and face layer separately to supports with screws.

B. Finishing Gypsum Board Assemblies:
1. Unless otherwise indicated, provide Level 4 finish: Embed tape and apply separate first, fill, and finish coats of joint compound to tape, fasteners, and trim flanges.

END OF SECTION 092900

SECTION 093000 - TILING

PART 1 - GENERAL

1.1 SECTION REQUIREMENTS

A. Submittals: Product Data and Samples.

PART 2 - PRODUCTS

2.1 PRODUCTS: Manufacturer's indicated define a quality standard for design intent. Provide products from available manufacturers.

2.2 CERAMIC TILE

A. Ceramic tile that complies with standard grade requirements of ANSI A137.1, "Specifications for Ceramic Tile."

B. **Unglazed** ceramic mosaic tile.
   1. Size: **2 by 2 inches (50.8 by 50.8 mm)**.
   2. Trim Shapes: **Base cove, Coved internal corner**.

C. Glazed Wall Tile (toilet walls and Service Sink Surround): Cushion-edged, flat tile.
   1. Module Size: 4 x 4 inches at walls.
   2. Color: Indicated.

D. **Paver** tile. Offices
   1. Size: 12 by **12 inches nominal**.-

2.3 INSTALLATION MATERIALS

A. Setting and Grouting Materials: Comply with material standards in ANSI's "Specifications for the Installation of Ceramic Tile" that apply to materials and methods indicated.

   1. Setting (Bonding) Materials: Custom Building Products "MasterBlend" Thin Set Mortar.
   2. Grout:
      A. Joints up to 1/8" wide: Custom Building Products "Polyblend" Unsanded Tile Grout.
      B. Grout Color: Indicated.

B Setting-Bed Accessories: Comply with ANSI A108.1A.

   1. Setting Material Admixture: Custom Building Products "Acrylic Mortar Admix".

C. Cementitious Backer Units: Complying with ANSI A118.9, ½" thick unless otherwise indicted.

PART 3 - EXECUTION

3.1 INSTALLATION

A. Comply with tile installation standards in Tile Council of America's "Handbook for Ceramic Tile Installation" that apply to materials and methods indicated:

1. Slabs on grade F113-09
2. Large Dimension Paver Tile: F 125A-09
3. Framed Walls (Service Sink Surround): W244C-09

B. Lay tile in grid pattern, unless otherwise indicated. Align joints where adjoining tiles on floor, base, walls, and trim are the same size.

C. Perform cutting and drilling of tile without marring visible surfaces. Carefully grind cut edges of tile abutting trim, finish, or built-in items for straight aligned joints. Fit tile closely to electrical outlets, piping, fixtures, and other penetrations so plates, collars, or covers overlap tile.

END OF SECTION 093000

SECTION 096513 - RESILIENT BASE AND ACCESSORIES

PART 1 - GENERAL

1.1 SECTION REQUIREMENTS

A. Submittals: Product Data and Samples.

B. Extra Materials: Deliver to Owner at least six linear feet, of each type and color of resilient wall base installed.

PART 2 - PRODUCTS

2.1 WALL BASE BC-1

A. Products:

1. Johnsonite Inc., Chagrin Falls, OH (800) 889-8916, “Traditional Wall Base”.
2. Armstrong World Industries Inc., Lancaster, PA., (800) 233-3823.
3. Roppe Corporation, Fostoria, OH, (800) 537-9527, “Pinnacle”.

B. Color and Pattern: as selected by Architect.

C. ASTM F 1861, Type TP (rubber, thermoplastic).

D. Group (Manufacturing Method): I (solid).

E. Style: Cove (with top-set toe).

F. Minimum Thickness: 0.125 inch.

G. Height: 4 inches.

H. Lengths: Cut lengths 48 inches long or coils in manufacturer's standard lengths.

I. Outside Corners: premolded.

J. Inside Corners: premolded.

2.2 INSTALLATION ACCESSORIES

A. Trowelable Leveling and Patching Compounds: Latex-modified, portland cement- or blended hydraulic cement-based formulation provided or approved by flooring manufacturer for applications indicated.

B. Adhesives: Water-resistant type recommended by manufacturer to suit products and substrate conditions.

PART 3 - EXECUTION

3.1 INSTALLATION

A. Adhesively install resilient wall base and accessories.

B. Install wall base in maximum lengths possible. Apply to walls, columns, pilasters, casework, and other permanent fixtures in rooms or areas where base is required.

END OF SECTION 096513

SECTION 096516 - RESILIENT SHEET FLOORING

PART 1 - GENERAL

1.1 SECTION REQUIREMENTS

A. Submittals: Product Data and Samples.

B. Extra Materials: Deliver to Owner at least six linear feet, in roll form and in full roll width, for each type and color of resilient sheet flooring installed.

PART 2 - PRODUCTS

2.1 SHEET VINYL FLOOR COVERING:

A. Products:

1. Armstrong World Industries Inc., Lancaster, PA., (800) 233-3823, “Safeguard Spa”.
2. Mannington, Salem, NJ, (856) 935-3000, “Assurance II”.
3. Congoleum Corporation, Mercerville, NJ, (800) 274-3266, “Specifcations”.

B. Color and Pattern: SVC-1: Armstrong Safeguard Spa “Corn” (39508).

C. Sheet Vinyl Floor Covering With Backing: ASTM F 1303, , Grade 1.

1. Overall Thickness: .080 inch.

D. Wearing Surface: Embossed with embedded abrasives.

E. Sheet Width: As standard with manufacturer.

F. Seaming Method: Heat welded.

2.2 WALL BASE MATERIALS

A. For integral flash cove base: Provide integral flash cove wall base by extending sheet flooring 4 inches up the wall using adhesive, welding rod, and accessories recommended and approved by the flooring manufacturer.

2.3 INSTALLATION ACCESSORIES

G. Trowelable Leveling and Patching Compounds: Latex-modified, portland cement- or blended hydraulic cement-based formulation provided or approved by flooring manufacturer for applications indicated.

H. Adhesives: Water-resistant type recommended by manufacturer to suit sheet vinyl floor covering and substrate conditions indicated.

I. Heat-Welding Bead: Solid-strand product of floor covering manufacturer.

1. Color: Match floor covering.

J. Integral-Flash-Cove-Base Accessories: 1-inch- radius cove strip and square vinyl, or rubber cap, both provided and approved by floor covering manufacturer.

K. Vinyl or Rubber Reducer Strips: Manufacturer's standard trim accessories for finishing and transitioning exposed edges of sheet material at doorways and other exposed conditions.

PART 3 - EXECUTION

3.1 INSTALLATION

A. Prepare concrete substrates according to ASTM F 710. Verify that substrates are dry and free of curing compounds, sealers, and hardeners.

B. Unroll sheet floor coverings and allow them to stabilize before cutting and fitting.

C. Maintain uniformity of resilient sheet flooring direction, and match edges for color shading at seams.

D. Minimize number of seams; place seams in inconspicuous and low-traffic areas, at least 6 inches away from parallel joints in substrates.

E. Install reducer strips at edges of floor coverings that would otherwise be exposed.

F. Integral Flash Cove Base: Cove floor coverings dimension indicated up vertical surfaces. Support on cove strip and butt against cap strip.

1. Install metal corners and end stops.

END OF SECTION 096516

SECTION 096519 - RESILIENT TILE FLOORING

PART 1 - GENERAL

1.1 SECTION REQUIREMENTS

A. Submittals: Product Data and Samples.

B. Fire Test Response: Resilient tile has critical radiant flux classification of Class I, not less than 0.45 W/sq. cm per ASTM E 648.

C. Extra Materials: Deliver to Owner 1 box for every 50 boxes or fraction thereof, of each type and color of resilient floor tile installed.

PART 2 - PRODUCTS

2.1 VINYL COMPOSITION FLOOR TILE

A. Products:

1. Armstrong World Industries Inc., Lancaster, PA., (800) 233-3823, Excelon “Imperial Texture”.
2. Mannington, Salem, NJ, (856) 935-3000, “Essentials”.
3. Congoleum Corporation, Mercerville, NJ, (800) 274-3266, “Selections”.

B. Color and Pattern:

1. VCT 1: Armstrong “Cinnamon Brown (51948)”.

C. ASTM F 1066, Class 2 (through-pattern tile).

D. Wearing Surface: Smooth.

E. Thickness: 0.125 inch.

F. Size: 12 by 12 inches.

2.2 INSTALLATION ACCESSORIES

A. Trowelable Leveling and Patching Compounds: Latex-modified, portland cement- or blended hydraulic cement-based formulation provided or approved by flooring manufacturer for applications indicated.

B. Adhesives: Water-resistant type recommended by manufacturer to suit resilient products and substrate conditions indicated.

C. Vinyl or Rubber Reducer Strips: Manufacturer's standard trim accessories for finishing and transitioning exposed edges of sheet material at doorways and other exposed conditions.

PART 3 - EXECUTION

3.1 INSTALLATION

A. Prepare concrete substrates according to ASTM F 710. Verify that substrates are dry and free of curing compounds, sealers, and hardeners.

B. Lay out tiles so tile widths at opposite edges of room are equal and are at least one-half of a tile.

C. Match tiles for color and pattern by selecting tiles from cartons in same sequence as manufactured and packaged. Lay tiles with grain running in two directions.

D. Provide reducer strip at exposed terminations of floor tile.

E. Fill concrete slab control joints with patching and leveling compound, providing a smooth, continuous substrate for floor tile.

END OF SECTION 096519

SECTION 097700 - FIBERGLASS-REINFORCED PLASTIC PANELS

PART 1 - GENERAL

1.1 SECTION REQUIREMENTS

A. Submittals: Product Data.

B. Surface-Burning Characteristics: ASTM E 84, flame-spread index of 200 or less and smoke-developed index of 450 or less.

PART 2 - PRODUCTS

2.1 FIBERGLASS REINFORCED PLASTIC PANELS

A. Products:
1. Crane Composites, Inc. / Kemlite, Joilet, IL, (800) 435-0080, “Glasbord P”.
2. Marlite, Dover Ohio, (330) 343-6621, “Marlite FRP”.

B. Color: Kemlite “Ivory”

C. Finish: Embossed.

D. Comply with ASTM D2583 and ASTM D5420.

2.2 FABRICATION

A. Panels: Fabricate units as large as possible to minimize joints, with embossed finished surfaces. Panel size to be 4’ x 8’ x .09” thick.

B. Moldings: Provide harmonizing PVC moldings to match panel color. Installation to include all cap, inside corner, outside corner, battens, etc., as required by the Work to provide a complete, finished appearance.

C. Adhesives: Provide panel adhesive as recommended by panel manufacturer, specifically formulated for adhering panels to substrates indicated.

PART 3 - EXECUTION

3.1 INSTALLATION

A. Panels:
1. Cut and drill panels with carbide tipped saw blades or drill bits, or cut with snips.
2. Install panels with manufacturer’s recommended gap for panel field and corner joints.

3. Install fiberglass reinforced plastic panels level, true, and aligned with adjacent materials.
4. Adhere panels to wall substrate. Trowel adhesive to substrate at rate and method defined by adhesive manufacturer. Roll wall panel with laminate roller starting from the top molding, working down and away from molding, removing any trapped air.
5. Install moldings with continuous bead of silicone sealant applied within channels prior to placing over panels.

B. Install units to the following tolerances:

1. Plane Alignment (Panel to Panel): 1/16 inch.
2. Variation from Plumb: Plus or minus 1/8 inch per 10 feet.
3. Variation from Straightness: Plus or minus 1/4 inch per 25 feet.

C. Cleaning: Remove and adhesive or excessive sealant from panel face and moldings using solvent or cleaner recommended by panel manufacturer.

END OF SECTION 097700

SECTION 099100 - PAINTING

PART 1 - GENERAL

1.1 SECTION REQUIREMENTS

A. Summary: Paint all exposed surfaces, unless otherwise indicated.

1. Do not paint pre-finished items, finished metal surfaces, operating parts, labels, and materials obviously intended to be left exposed
2. Unless otherwise indicated do not paint concealed surfaces.
3. Paint exposed exterior, vent lines and wall mounted electrical equipment color to match adjacent wall surfaces. Paint exposed propane lines black.

B. Submittals: Product Data. Samples of paint colors.

C. Obtain, primers, and undercoat materials for each coating system from the same manufacturer as the finish coats.

D. Extra Materials: Deliver to Owner a 1-gallon container, properly labeled and sealed, of each color and type of finish coat paint used on Project, excluding epoxy products.

E. Related Sections:

1. Section 099600 High Performance Coatings - Exterior

PART 2 - PRODUCTS

2.1 PAINT AND COATING PRODUCTS

A. Paint Colors: Indicated at Finish Schedule / Color Summary.

B. Manufacturers:

1. Paint:
   a. Sherwin Williams,
   b. Benjamin Moore,
   c. Kwal Paints
   d. Porter Paints,

C. Material Quality: The use of a Design Standard establishes a level of quality for the work and is not to be construed as a limit of competition or a restraint of trade.

1. Interior Concrete Water Based Epoxy Paint: Sherwin Williams “Waterbased Tile Clad”.
2. Interior Concrete Waterproofing Floor Sealer: Sherwin Williams “Concrete and Terrazo Sealer”.
3. Interior Concrete Solvent Borne Epoxy Floor Sealer: Sherwin Williams “ArmorSeal 1000 HS”.

4. Interior / Exterior Ferrous and Galvanized Metal Acrylic Primer: Sherwin Williams “Pro Cryl Universal Acrylic Primer”.
5. Interior Gypsum Board: Sherwin Williams “Prep Rite 200”
6. Interior Concrete Acrylic Primer: Sherwin Williams “Loxon Block Surfacer”.
7. Interior / Exterior Ferrous and Galvanized Metal Paint: Sherwin Williams “DTM Acrylic Latex”.
8. Interior Drywall: Sherwin Williams “ProMar 200 Interior Acrylic Latex”.
9. Interior Ferrous Steel Roof Joists and Roof Deck: Sherwin Williams B42W2 “Waterborne Acrylic Dry Fall”.

D. Material Compatibility: Complete system of compatible components that is recommended by manufacturer for application indicated.

PART 3 - EXECUTION

3.1 APPLICATION

A. Comply with paint manufacturer’s written instructions for surface preparation, environmental and substrate conditions, product mixing, and application.

3.2 EXTERIOR PAINT APPLICATION SCHEDULE

A. Ferrous Metal: other than doors and frames, overhead doors or bollards

1. Semigloss Acrylic Enamel Paint: Two coats over rust-inhibitive primer.

B. Galvanized Metal:

1. Semigloss Acrylic Enamel Paint: Two coats over galvanized metal primer.

3.3 INTERIOR PAINT APPLICATION SCHEDULE

A Sealed Concrete Slabs (Storage, Utility and Mezzanine areas):

1. Solvent based, low gloss sealer: One coat roll or spray applied.

B. Sealed Concrete Slabs (Shop area):

1. Solvent based, two part epoxy floor sealer: Two coats roll applied.

B. Water Based Epoxy Painted Concrete Walls:

1. Water based epoxy paint: Two coats over primer.

C. Acrylic Painted Gypsum Board Walls and Ceilings:

1. Low lustre acrylic paint: Two coats over primer.

D. Ferrous Metal Roof Joists and Roof Deck:

1. Waterborne Acrylic Dry Fall: Two coats over shop applied primer.

E. Ferrous Metal:
   1. Semigloss Acrylic Latex Paint: Two coats over primer.

F. Galvanized Metal:

   1. Semigloss Acrylic Latex Paint: Two coats over primer.

END OF SECTION 099100

SECTION 099600 - HIGH-PERFORMANCE COATINGS - EXTERIOR

PART 1 - GENERAL

1.1 SUMMARY

A. This Section includes surface preparation and field application of high-performance coating systems to exterior steel Canopy structures, exterior hollow metal doors, overhead door frames and bollards.

B. Compatible primer is a requirement for steel to be coated as work of this Section.

C. Apply coatings only when temperature of surfaces to be coated and surrounding air temperatures are between 45 and 95 deg F (7 and 35 deg C).

D. Do not apply coatings in snow, rain, fog, or mist; when relative humidity exceeds 85 percent; at temperatures less than 5 deg F (3 deg C) above the dew point; or to damp or wet surfaces.

1. Allow wet surfaces to dry thoroughly and attain temperature and conditions specified before proceeding with or continuing coating operation.
2. Work may continue during inclement weather only if areas and surfaces to be coated are enclosed and temperature within the area can be maintained within limits specified by manufacturer during application and drying periods.

1.2 EXTRA MATERIALS

A. Furnish extra high-performance coating materials from the same production run as materials applied and in quantities described below. Package coating materials in unopened, factory-sealed containers for storage and identify with labels describing contents.

1. Quantity: Furnish extra coating materials in quantities indicated below:

a. High-Gloss, Aliphatic Polyurethane Enamel: Five gallons of each color applied.

PART 2 - PRODUCTS

2.1 MANUFACTURERS

A. Products: Subject to compliance with requirements, provide one of the products indicated in the coating system descriptions.

B. Manufacturers' Names: The following manufacturers are referred to in the coating system descriptions by shortened versions of their names shown in parenthesis:
1. Sherwin Williams; Industrial and Marine Coatings (S-W).
2. Tnemec Company, Inc. (Tnemec).

C. Colors: Match Architect's samples.

2.2 EXTERIOR HIGH-PERFORMANCE COATING SYSTEMS

A. Ferrous Metal: Provide the following finish systems over exterior ferrous-metal surfaces:

1. Moderate Environment (High-Gloss Finish): One finish coat over an intermediate coat and a primer.

   a. Primer: Epoxy primer applied at spreading rate recommended by manufacturer.
      1) S-W: Recoatable Epoxy Primer B67 Series/B67V5.
      2) Tnemec: Series 90-97 Tneme Zinc.

   b. Intermediate Coat: Epoxy applied at spreading rate recommended by manufacturer to achieve a dry film thickness of 3.0 to 5.0 mils (0.076 to 0.127 mm).

      1) S-W: Heavy Duty Epoxy B67W300 Series.
      2) Tnemec: Series 27 F. C. Typoxy Polyamide Epoxy.

   c. Topcoat: Aliphatic polyurethane enamel applied at spreading rate recommended by manufacturer to achieve a dry film thickness of 1.5 to 4.0 mils (0.038 to 0.102 mm).
      1) S-W: Corothane II Gloss B65W400 Series.
      2) Tnemec: Series 1075u-- Endura-Shield.

PART 3 - EXECUTION

3.1 EXAMINATION

A. Coordination of Work: Review other Sections in which primers or other coatings are provided to ensure compatibility of total systems for various substrates. On request, furnish information on characteristics of specified finish materials to ensure compatible primers.

1. If a potential incompatibility of primers applied by others exists, obtain the following from the primer Applicator before proceeding:

   a. Confirmation of primer's suitability for expected service conditions.
   b. Confirmation of primer's ability to be top coated with materials specified.

2. Notify Architect about anticipated problems before using the coatings specified over substrates primed by others.

3.2 PREPARATION

A. Cleaning: Before applying high-performance coatings, clean substrates of substances that could impair bond of coatings. Remove oil and grease before cleaning.

1. Schedule cleaning and coating application so dust and other contaminates from cleaning process will not fall on wet, newly coated surfaces.

B. Surface Preparation: Clean and prepare surfaces to be coated according to manufacturer's written instructions for each substrate condition and as specified.

1. Provide barrier coats over incompatible primers or remove primers and reprime substrate.
2. Ferrous-Metal Substrates: Clean ungalvanized ferrous-metal surfaces that have not been shop coated; remove oil, grease, dirt, loose mill scale, and other foreign substances. Use solvent or mechanical cleaning methods that comply with SSPC recommendations.

a. Blast-clean steel surfaces as recommended by coating manufacturer and according to SSPC-SP 10/NACE No. 2.
b. Treat bare and sandblasted or pickled clean metal with a metal treatment wash coat before priming.
c. Touch up bare areas and shop-applied prime coats that have been damaged. Wire brush, solvent clean, and touch up with same primer as the shop coat.

3.3 APPLICATION

A. General: Apply high-performance coatings according to manufacturer's written instructions.

1. Use applicators and techniques best suited for the material being applied.
2. Do not apply high-performance coatings over dirt, rust, scale, grease, moisture, scuffed surfaces, or conditions detrimental to forming a durable coating film.
3. Coating colors, surface treatments, and finishes are indicated in the coating system descriptions.
4. Provide finish coats compatible with primers used.

B. Minimum Coating Thickness: Apply each material no thinner than manufacturer's recommended spreading rate. Provide total dry film thickness of the entire system as recommended by manufacturer.

C. Prime Coats: Before applying finish coats, apply a prime coat of material, as recommended by manufacturer, to material required to be coated or finished that has not been prime coated by others.

1. Recoat primed and sealed substrates if there is evidence of suction spots or unsealed areas in first coat, to ensure a finish coat with no burn-through or other defects caused by insufficient sealing.

D. Completed Work: Match approved Samples for color, texture, and coverage. Remove, refinish, or recoat work that does not comply with specified requirements.

3.4 PROTECTION

A. Protect work of other trades, whether being coated or not, against damage from coating operation. Correct damage by cleaning, repairing, replacing, and recoating, as approved by Architect, and leave in an undamaged condition.

1. Provide "Wet Paint" signs to protect newly coated finishes. After completing coating operations, remove temporary protective wrappings provided by others to protect their work.
2. At completion of construction activities of other trades, touch up and restore damaged or defaced coated surfaces. Comply with procedures specified in PDCA P1.

END OF SECTION 099600

SECTION 101400 - SIGNAGE

PART 1 - GENERAL

1.1 SECTION REQUIREMENTS

A. Submittals: Product Data, Shop Drawings.

PART 2 - PRODUCTS

2.1 MATERIALS

A. Plastic Laminate: High-pressure, melamine plastic laminate engraving stock with dark bronze core and white face.

B. Aluminum Sheet: Alloy and temper recommended by the sign manufacturer, with not less than the strength and durability of 5005-H15.
   1. .08 Inches thick for traffic signs.

C. Aluminum Extrusions: Alloy and temper recommended by the sign manufacturer, with not less than the strength and durability of 6063-T5.

D. U-Channel Posts: Sign manufacturer's standard, galvanized steel, 8' long, using standard mounting hardware of galvanized steel carriage bolts.

2.2 SIGNS

A. Traffic Signs: Aluminum, with white baked enamel surface and screen print copy, symbols and border. Corners shall have 1 inch radius.
   1. Provide signs for locations indicated.

B. Unframed Panel Signs: Matte-finished opaque acrylic with adhesively applied vinyl film characters with square-cut or beveled edges and square or rounded corners.
   1. Provide signs for locations indicated.
   2. Provide text in sizes indicated. Font to be raised, sans serif, upper case, in contrasting color to background.
   3. Color: Indicated.
   4. Provide pictograms at signs indicated. Graphics to be raised, in contrasting color to background.

PART 3 - EXECUTION

3.1 INSTALLATION

A. Locate signs where indicated or directed by Architect. Use mounting methods of the type indicated and per manufacturer's written instructions. Install level, plumb, and at height indicated, with sign surfaces free from distortion or other defects in appearance.

B. Mount panel signs to wall surfaces as indicated.

C. Mount traffic signs on building wall with tamper resistant fasteners or on "U" channel posts as indicated.

END OF SECTION 101400

SECTION 102600 – WALL AND DOOR PROTECTION

PART 1 - GENERAL

1.1 SECTION REQUIREMENTS

A. Submittals: Product Data and material Samples.

B. Provide impact-resistant finishes with flame-spread and smoke-developed indexes of 25 or less and 450 or less, respectively, when tested according to ASTM E 84.

C. Provide components with a minimum impact resistance of 25.4 ft-lbf/in. of width when tested according to ASTM D 256, Test Method A.

PART 2 - PRODUCTS

2.1 MATERIALS

A. Stainless steel: To be type 304 alloy with #4 satin finish.

B. Adhesive: Recommended by manufacturer for use with material on the substrate indicated.

2.2 WALL PROTECTION

A. Wall Protection System: Corner guard.

1. Size and Profile: 3 ½ x 3 ½ x 16 gauge x 4’ high or x height indicated.

PART 3 - EXECUTION

3.1 INSTALLATION

A. Surface preparation: Prior to installation, clean substrate to remove dirt, debris and loose particles. Perform additional preparation procedures as required by manufacturer’s instructions.

B. Protection: Take all necessary steps to prevent damage to material during installation as required in manufacturer’s installation instructions.

C. Install components level, plumb, and true to line without distortions.

D. Apply impact resistant wall covering with adhesive as recommended by manufacturer.

END OF SECTION 102600

SECTION 102800 – TOILET ACCESSORIES

PART 1 - GENERAL

1.1 SECTION REQUIREMENTS

A. Submittals: Product Data.

PART 2 - PRODUCTS

2.1 PRODUCTS:

A. Manufacturers:
1. General Accessory Manufacturing Company (GAMCO), Durant, OK. Phone (800) 451-5766.
2. Bradley Corporation, Menomonee Falls, WI. Phone (800) BRADLEY.
3. Bobrick, Bluffdale, Utah, (801) 446-4383
4. American Accessories

2.2 MATERIALS

A. Stainless Steel: ASTM A 666, Type 304, No. 4 finish (satin), 0.0312-inch minimum nominal thickness, unless otherwise indicated.

B. Brass: ASTM B 19, ASTM B 16, or ASTM B 30 castings.

C. Sheet Steel: ASTM A 366/A 366M, 0.0359-inch minimum nominal thickness.

D. Galvanized Steel Sheet: ASTM A 653/A 653M, G60.

E. Chromium Plating: ASTM B 456, Service Condition Number SC 2 (moderate service).

F. Baked-Enamel Finish: Factory-applied, gloss-white, baked-acrylic-enamel coating.

G. Mirror Glass: ASTM C 1036, Type I, Class 1, Quality q2, nominal 6.0 mm thick, with silvering, electro-plated copper coating, and protective organic coating complying with FS DD-M-411.

H. Galvanized Steel Mounting Devices: ASTM A 153/A 153M, hot-dip galvanized after fabrication.

I. Fasteners: Screws, bolts, and other devices of same material as accessory unit, tamper and theft resistant when exposed, and of galvanized steel when concealed.

J. Keys: Provide universal keys for internal access to accessories for servicing and re-supplying. Provide minimum of six keys to Owner's representative.

2.2 TOILET AND BATH ACCESSORIES

A. Mirror Unit (Accessory 1):
1. Custom, size indicated.
2. Frame: Heavy gauge stainless-steel channel, ¾ x ¾ x 7/16.
3. Mounting: Surface mounted with concealed wall hanger.

B. Accessible Paper Towel Dispenser (Accessory 2):
1. Provided by Owner.

C. Liquid-Soap Dispenser (Accessory 3):
1. Provided by Owner.

D. Grab Bars (Accessories 4, 5 & 7):
1. Bradley 832
2. Material: .05” Thick stainless steel.
3. Mounting: Concealed.
4. Gripping Surfaces: Smooth, satin finish.
5. Outside Diameter: 1-1/4 inches for medium-duty applications

E. Toilet Tissue Dispenser (Accessory 6):
1. Provided by Owner.

F. Shower Curtain Rod (Accessory 8):
1. Bradley 9532
2. Chrome Plated Brass, 20 Gauge.
3. Outside Diameter: 1-inche for light-duty applications.
4. Mounting: Surface.

G. 24” Mop Rack (Accessory 9):
1. Bradley 9953
2. Frame: Stainless steel, 22 gauge.
3. Mounting: Surface.

H. Hat and Coat Hook (Accessory 10):
1. Bradley 9134
2. Material: Brushed stainless steel
3. Mounting: Surface

I. Folding Shower Seat: Provide heavy-duty hinged seat designed to fold up against wall when not in use with stainless-steel support braces, hinges, frame, and fasteners; of all-welded construction; and complying with the following:

1. Products: Bobrick B-5181
2. Configuration: L-shaped seat, designed for wheelchair access
4. Seat Material: **Phenolic or polymeric composite of slat-type or one-piece construction. Color as selected by Architect from mfr's full range**

PART 3 - EXECUTION

3.1 INSTALLATION

A. Install accessories using fasteners appropriate to substrate indicated and recommended by unit manufacturer. Install units level, plumb, and firmly anchored in locations and at heights indicated.

1. Install grab bars to withstand a downward load of at least 250 lbf, when tested according to method in ASTM F 446.

B. Adjust accessories for unencumbered, smooth operation and verify that mechanisms function properly. Replace damaged or defective items. Remove temporary labels and protective coatings.

END OF SECTION 102800

SECTION 104400 - FIRE- PROTECTION SPECIALTIES

PART 1 - GENERAL

1.1 SECTION REQUIREMENTS

A. Submittals: Product Data.

B. Fire Extinguishers: NFPA 10, listed and labeled for the type, rating, and classification of extinguisher.

PART 2 - PRODUCTS

2.1 FIRE EXTINGUISHERS AND CABINETS

A. Fire Protection Cabinets: Aluminum, semi-recessed cabinets for fire extinguisher.
   1. Trim Style: 2 ½" Aluminum rolled trim, white.
   2. Door Style: Contemporary tempered vision glass with safety lock.
   3. Accessories: Mounting brackets; Identification lettering; 10 pound, U.L. rated 4-A, chemical filled fire extinguisher rated for Class A, B or C fires.

PART 3 - EXECUTION

3.1 INSTALLATION

A. Install cabinets and brackets at heights indicated or, if not indicated, at heights to comply with applicable regulations of authorities having jurisdiction.

END OF SECTION 104400

SECTION 260500 – COMMON WORK RESULTS FOR ELECTRICAL

PART 1 - GENERAL

1.1 RELATED DOCUMENTS

A. Drawings and general provisions of the Contract, including General and Supplementary Conditions and Division 1 Specification Sections, apply to this Section.

1.2 SUMMARY

A. This Section includes the following:
   1. Supporting devices for electrical components.
   2. Electricity-metering components.
   3. Access Panels
   4. Concrete equipment bases.
   5. Earthwork.
   6. Touchup painting.
   7. Temporary Power and Communication
   8. Permits and Fees

1.3 SUBMITTALS

A. Product Data: For electricity-metering equipment.

B. Shop Drawings: Dimensioned plans and sections or elevation layouts of electricity-metering equipment.

C. Submittal Procedures: Submittal procedures are specified in Division 1.
   1. Prepare submittals in three-ring “hard cover” binders with project name and volume on the binding. Include tabs identified by the specification section and in numerical order. Include plastic sleeves to hold drawings that exceed 8-1/2” x 11”.
   2. Include cover sheet with the following information: date, project name, address, and title; Installer’s name, address and phone number; Project manager, and Engineering firm names and phone numbers.

D. Digital Operation and Maintenance Manual on CD-ROM
   1. Intuitive CD-ROM instructional manual for information to care, adjust, maintain and operate equipment. Include contract documents, shop drawings, product data.
      a. Software: Adobe Acrobat.
      b. Format: PDF.
      c. Index: Hypertext alphabetical index.
      d. Auto Starting: Windows 9X with any directions to continue observable on the screen.

1.4 QUALITY ASSURANCE

A. Electrical Components, Devices, and Accessories: Listed and labeled as defined in NFPA 70, Article 100, by a testing agency acceptable to authorities having jurisdiction, and marked for intended use.

B. Comply with NFPA 70, and NFPA 99.

C. Installer Qualifications: All workmen doing electrical work shall be duly licensed with the required supervision in the State or Locality as legally required.
   1. Site Review: All electricians must carry their electrician's license with them and show it upon request.

1.5 COORDINATION

A. Coordinate chases, slots, inserts, sleeves, and openings with general construction work and arrange in building structure during progress of construction to facilitate the electrical installations that follow.
   1. Set inserts and sleeves in poured-in-place concrete, masonry work, and other structural components as they are constructed.

B. Sequence, coordinate, and integrate installing electrical materials and equipment for efficient flow of the Work. Coordinate installing large equipment requiring positioning before closing in the building.

C. Coordinate electrical equipment installation with other building components.
   1. Verify all dimensions be field measurements.
   2. Minimize costs to resolve equipment and other conflicts by successfully concluding preinstallation conferences. Include the following:
      a. Review Divisions 21, 22 and 23 shop drawings. Compare equipment electrical specifications with equipment schedule. Prevent Div 21, 22 and 23 equipment encroaching on clearances required by NEC. Request clarification of conflicts prior to installation.
      b. Determine whether lighting fixtures and other electrical items conflict with the location of structural members and mechanical or other equipment.
      c. Coordinate connecting electrical service to components furnished in other sections of the specification or by the User. Verify electrical requirements including voltage, full load amps, and minimum wire ampacity prior to installing or purchasing the associated electrical equipment and wiring.
      d. Review systems furniture electrical specifications and compare with wiring indicated. Request dimensional layout from furniture installer including electrical connection locations. Request clarification of conflicts prior to installation.

D. Coordinate electrical service connections to components furnished by electric utility companies.
   1. Coordinate installation and connection of exterior underground and overhead utilities and services.
   2. Comply with requirements of authorities having jurisdiction and of utility company providing electrical power and other services.
   3. Notify Architect a minimum of seven days in advance of any proposed utility interruption and obtain approval prior to proceeding. Comply with requirements of the Owner, User, and Utility.
   4. Include all costs, including Owner, municipal or utility costs that will need to be paid to obtain electric service.

E. Coordinate communication service connections to components furnished by communication utility companies.
   1. Coordinate installation and connection of exterior underground and overhead utilities and services.
   2. Comply with requirements of authorities having jurisdiction.
   3. Notify Architect a minimum of seven days in advance of any proposed utility interruption and obtain approval prior to proceeding. Comply with requirements of the Owner, User, and Utility.
   4. Include all costs, including Owner, municipal or utility costs that will need to be paid to obtain communication services.

F. Temporary Power and Communication are specified in Division 1 Section “Construction Facilities and Temporary Controls”.
   1. Comply with requirements for temporary electric and communication services with the proper utility. If power is required before the service can be run to the construction site, provide a mobile generator and temporary power for construction.
   2. Comply with Article 305 of the NEC.

G. Coordinate location of access panels and doors for electrical items that are concealed by finished surfaces. Access doors and panels are specified in Division 8 Section "Access Doors."

H. Coordinate with Authorities Having Jurisdiction including: city, county, state, university, federal and other governmental authorities.
   1. Obtain all permits (including excavation permits) prior to beginning construction.
   2. Pay all fees.
   3. Request inspections required by Authorities Having Jurisdiction in a timely manner and in order to comply with sequencing requirements.

PART 2 - PRODUCTS

2.1 SUPPORTING DEVICES

A. Material: Cold-formed steel, with corrosion-resistant coating acceptable to authorities having jurisdiction.

B. Metal Items for Use Outdoors or in Damp Locations: Hot-dip galvanized steel.

C. Slotted-Steel Channel Supports: Flange edges turned toward web, and 9/16-inch- (14-mm-) diameter slotted holes at a maximum of 2 inches (50 mm) o.c., in webs.
   1. Channel Thickness: Selected to suit structural loading.
   2. Fittings and Accessories: Products of the same manufacturer as channel supports.

D. Raceway and Cable Supports: Manufactured clevis hangers, riser clamps, straps, threaded C-clamps with retainers, ceiling trapeze hangers, wall brackets, and spring-steel clamps or click-type hangers.

E. Pipe Sleeves: ASTM A 53, Type E, Grade A, Schedule 40, galvanized steel, plain ends.

F. Cable Supports for Vertical Conduit: Factory-fabricated assembly consisting of threaded body and insulating wedging plug for nonarmored electrical cables in riser conduits. Plugs have number and size of conductor gripping holes as required to suit individual risers. Body constructed of malleable-iron casting with hot-dip galvanized finish.

G. Expansion Anchors: Carbon-steel wedge or sleeve type.

H. Toggle Bolts: All-steel springhead type.

I. Powder-Driven Threaded Studs: Heat-treated steel.

2.2 EQUIPMENT FOR ELECTRICITY METERING BY OWNER

A. Meter: Electronic kilowatt-hour/demand measuring to record electricity used and highest peak demand over a time period according to electric utility. Meter is designed for use on the type and rating of circuit indicated for its application.
   1. Kilowatt-Hour Display: Digital liquid crystal.
   2. Kilowatt-Demand Display: Digital, liquid-crystal type to register highest peak demand.

3. Enclosure: NEMA 250, Type 1, minimum, with hasp for padlocking or sealing.
4. Memory Backup: Self-contained to maintain memory throughout power outages of 72 hours, minimum.
5. Sensors: Current-sensing type, with current or voltage output, selected for optimum range and accuracy for the ratings of the circuits indicated for this application.
   a. Type: Split core.
6. Accuracy: Nationally recognized testing laboratory certified to meet ANSI C12.1 specifications.
7. Demand Signal Communication Interface: Match signal to building automation system input that conveys data on instantaneous/integrated demand level measured by meter used for load switching to control demand.

B. Current-Transformer Cabinets: Listed or recommended by metering equipment manufacturer for use with sensors indicated.

C. Metering Equipment Manufacturers: Subject to compliance with requirements, provide products by one of the following:
1. E-MON Corporation.
2. Osaki Meter Sales, Inc.
3. Schlumberger.
4. Advanced Metering Solutions.

2.3 CONCRETE BASES

A. Concrete Forms and Reinforcement Materials: As specified in Division 3 Section "Cast-in-Place Concrete."

2.4 TOUCHUP PAINT

A. For Equipment: Equipment manufacturer's paint selected to match installed equipment finish.

B. For Nonequipment Surfaces: Matching type and color of undamaged, existing adjacent finish.

C. Galvanized Surfaces: Zinc-rich paint recommended by item manufacturer.

PART 3 - EXECUTION

3.1 ELECTRICAL EQUIPMENT INSTALLATION

A. Headroom Maintenance: If mounting heights or other location criteria are not indicated, arrange and install components and equipment to provide the maximum possible headroom.

B. Materials and Components: Install level, plumb, and parallel and perpendicular to other building systems and components, unless otherwise indicated.

C. Equipment: Install to facilitate service, maintenance, and repair or replacement of components. Connect for ease of disconnecting, with minimum interference with other installations.

D. Right of Way: Give to raceways and piping systems installed at a required slope.

E. Existing Utilities: Locate and identify existing underground utilities in excavation areas or in demolition areas. Maintain services to areas outside demolition limits or excavated areas. When services must be interrupted, install temporary services for affected areas.

F. Manufacturer's Instructions: Comply with manufacturer's installation instructions and recommendations, to the extent that those instructions and recommendations are more explicit or stringent than requirements indicated in the Contract Documents.

G. Record drawings and Shop Drawings: Mark up drawings daily during construction with changes or deletions in the scope of the project.

3.2 ELECTRICAL SUPPORTING DEVICE APPLICATION

A. Damp Locations and Outdoors: Hot-dip galvanized materials or nonmetallic, U-channel system components.

B. Dry Locations: Steel materials.

C. Support Clamps for PVC Raceways: Click-type clamp system.

D. Selection of Supports: Comply with manufacturer's written instructions.

E. Strength of Supports: Adequate to carry present and future loads, times a safety factor of at least four; minimum of 200-lb (90-kg) design load.

3.3 SUPPORT INSTALLATION

A. Install support devices to securely and permanently fasten and support electrical components.
   1. Comply with NFPA 70. In addition, install supports within 12" of couplings, fittings, and boxes, with a minimum of two supports per 10 foot length of raceway. Install supports at each change of direction. Similarly support cables in cable trays or raceways as indicated; except, provide J-hooks to support cables.
   2. Support suspended conduit and cables independently from all other electrical or mechanical systems by attaching directly from building structure, unless prior approval in writing has been obtained from the Architect after engineering calculations have been submitted.
   3. Coordinate installation of supports so as not to interfere with the removal of ceiling tiles, the service of mechanical equipment, etc.
   4. Install bracing parallel to trusses, beams, joists, bridging, etc.

B. Install individual and multiple raceway hangers and riser clamps to support raceways. Provide U-bolts, clamps, attachments, and other hardware necessary for hanger assemblies and for securing hanger rods and conduits.

C. Support parallel runs of horizontal raceways together on trapeze- or bracket-type hangers.

D. Support parallel runs of cables together on trapeze or bracket type hangers, either vertically or horizontally.

E. Size supports for multiple raceway and cable installations so capacity can be increased by a 25 percent minimum in the future.

F. Support individual horizontal raceways with separate, malleable-iron pipe hangers or clamps.

G. Install 1/4-inch- (6-mm-) diameter or larger threaded steel hanger rods, unless otherwise indicated.

H. Spring-steel fasteners specifically designed for supporting single conduits or tubing may be used instead of malleable-iron hangers for 1-1/2-inch (38-mm) and smaller raceways serving

lighting and receptacle branch circuits above suspended ceilings and for fastening raceways to slotted channel and angle supports.

I. Arrange supports in vertical runs so the weight of raceways and enclosed conductors is carried entirely by raceway supports, with no weight load on raceway terminals.

J. Simultaneously install vertical conductor supports with conductors.

K. Separately support cast boxes that are threaded to raceways and used for fixture support. Support sheet-metal boxes directly from the building structure or by bar hangers. If supported directly from the building structure, attach box to framing on opposite sides of the box. If bar hangers are used, attach bar to raceways on opposite sides of the box and support the raceway with an approved fastener not more than 24 inches (610 mm) from the box.

L. Install metal channel racks for mounting cabinets, panelboards, disconnect switches, control enclosures, pull and junction boxes, transformers, and other devices unless components are mounted directly to structural elements of adequate strength.

M. Install sleeves for cable and raceway penetrations of concrete slabs and walls unless core-drilled holes are used. Install sleeves for cable and raceway penetrations of masonry and fire-rated gypsum walls and of all other fire-rated floor and wall assemblies. Install sleeves during erection of concrete and masonry walls.
   1. Install wrapped or coated RMC sleeves with 3 feet extending on each side through penetrations of foundations or concrete walls by RNC.

N. Securely fasten electrical items and their supports to the building structure, unless otherwise indicated. Perform fastening according to the following unless other fastening methods are indicated:
   1. Wood: Fasten with wood screws or screw-type nails.
   2. Masonry: Toggle bolts on hollow masonry units and expansion bolts on solid masonry units.
   3. New Concrete: Concrete inserts with machine screws and bolts.
   4. Existing Concrete: Expansion bolts. Drill holes in concrete so holes do not cut main reinforcing bars. Fill and seal holes drilled in concrete and not used.
      a. Obtain prior approval from project structural engineer prior to drilling prestressed or post-tension concrete slabs and beams.
   5. Instead of expansion bolts, threaded studs driven by a powder charge and provided with lock washers may be used in existing concrete.
   6. Steel: Welded threaded studs or spring-tension clamps on steel.
      a. Field Welding: Comply with AWS D1.1.
   7. Welding to steel structure may be used only for threaded studs, not for conduits, pipe straps, or other items.
   8. Light Steel: Sheet-metal screws.
   9. Fasteners: Select so the load applied to each fastener does not exceed 25 percent of its proof-test load. Do not support electrical equipment or conduits with toggle bolts, moly-bolts, or screws in sheetrock or plaster. Do not support electrical equipment or conduit from tie wires.
   10. Do not use wooden plugs in concrete or masonry units for fastening conduits, tubing, boxes, cabinets, etc.

3.4 OWNER SUPPLIED ELECTRICITY-METERING EQUIPMENT

A. Install equipment according to manufacturer's written requirements. Provide grounding and empty conduits as required by manufacturer's written instructions.

B. Permanently mark multiplying factor on meter face where current transformers are used.

3.5 ACCESS DOORS

A. Install access panels where required by accessibility requirements of NEC for electrical installations such as junction boxes, ballasts, and other electrical equipment requiring access.

3.6 FIRESTOPPING

A. Apply firestopping to cable and raceway penetrations of fire-rated floor and wall assemblies to achieve fire-resistance rating of the assembly. Firestopping materials and installation requirements are specified in Division 7 Section "Firestopping."

B. Gypsum Board Tenting: Apply to lighting fixture or electrical equipment penetrations of fire rated floor, ceiling and wall assemblies, unless product is UL listed with integral fire rating Perform tenting as specified in appropriate Division 9 section to reestablish the original fire-resistance rating of the assembly at the penetration.

3.7 CONCRETE BASES

A. Construct concrete bases of dimensions indicated for all floor mounted electrical equipment, but not less than 4 inches (100 mm) larger, in both directions, than supported unit and 3” above floor, unless indicated otherwise. Follow supported equipment manufacturer's anchorage recommendations and setting templates for anchor-bolt and tie locations, unless otherwise indicated. Use 3000-psi (20.7-MPa), 28-day compressive-strength concrete and reinforcement as specified in Division 3 Section "Cast-in-Place Concrete."
   1. For equipment containing hazardous liquids, such as generators, oil-filled transformers, and similar equipment, include containment curb sized for quantity of liquid.

3.8 EARTHWORK

A. Excavating, filling, and grading: As specified in Division 31 Section “Earthwork.”

B. Fill: Backfill for underground raceways (not concrete encased) in roadways or parking lots with concrete encased slurry (1 bag mix). Backfill underground raceway (not concrete encased with sand 6” above and below in other than roadways or parking lots.

C. Remove rubbish, waste, and excess soils.

3.9 FIELD QUALITY CONTROL

A. Inspect installed components for damage and faulty work, including the following:
   1. Supporting devices for electrical components.
   2. Electricity-metering components.
   3. Concrete bases.
   4. Electrical demolition.
   5. Cutting and patching for electrical construction.
   6. Touchup painting.

B. Test Owner's electricity-metering installation for proper operation, accuracy, and usability of output data.
   1. Connect a load of known kW rating, 1.5 kW minimum, to a circuit supplied by the metered feeder.
   2. Turn off circuits supplied by the metered feeder and secure them in the "off" condition.

3. Run the test load continuously for eight hours, minimum, or longer to obtain a measurable meter indication. Use a test load placement and setting that ensure continuous, safe operation.
4. Check and record meter reading at end of test period and compare with actual electricity used based on test load rating, duration of test, and sample measurements of supply voltage at the test load connection. Record test results.
5. Repair or replace malfunctioning metering equipment or correct test setup; then retest. Repeat for each meter in installation until proper operation of entire system is verified.

C. Test all electrical work to ensure that they test free of mechanical and electrical defects.
   1. Comply with testing requirements of authorities having jurisdiction.
   2. Comply with Owner's standards for testing in documents listed in "Quality Assurance".

3.10 REFINISHING AND TOUCHUP PAINTING

A. Refinish and touch up paint. Paint materials and application requirements are specified in Division 9 Section "Painting."
   1. Clean damaged and disturbed areas and apply primer, intermediate, and finish coats to suit the degree of damage at each location.
   2. Follow paint manufacturer's written instructions for surface preparation and for timing and application of successive coats.
   3. Repair damage to galvanized finishes with zinc-rich paint recommended by manufacturer.
   4. Repair damage to PVC or paint finishes with matching touchup coating recommended by manufacturer.

3.11 CLEANING AND PROTECTION

A. On completion of installation, including outlets, fittings, and devices, inspect exposed finish. Remove burrs, dirt, paint spots, and construction debris.
   1. Remove labels that are not permanent labels.
   2. Wipe surfaces of electrical equipment. Remove excess lubrication and other substances.
   3. Clean exposed exterior and interior hard-surface finishes to a dust-free condition, free of stains, films and similar foreign substances.

B. Protect equipment and installations and maintain conditions to ensure that coatings, finishes, and cabinets are without damage or deterioration at time of Substantial Completion.

END OF SECTION 260500

SECTION 260519

LOW-VOLTAGE ELECTRICAL POWER CONDUCTORS AND CABLES

PART 1 - GENERAL

1.1 RELATED DOCUMENTS

A. Drawings and general provisions of the Contract, including General and Supplementary Conditions and Division 1 Specification Sections, apply to this Section.

1.2 SUMMARY

A. This Section includes building wires and cables and associated connectors, splices, and terminations for wiring systems rated 600 V and less.

B. Related Sections include the following:
1. Division 26 Section "Medium-Voltage Cables" for single-conductor and multiconductor cables, cable splices, and terminations for electrical distribution systems with 2001 to 35,000 V.

1.3 SUBMITTALS

A. Product Data: For each type of product indicated.

B. Field Quality-Control Test Reports: From Contractor.

1.4 QUALITY ASSURANCE

A. Agency Qualifications: Testing agency as defined by OSHA in 29 CFR 1910.7 or a member company of the InterNational Electrical Testing Association and that is acceptable to authorities having jurisdiction.

B. Electrical Components, Devices, and Accessories: Listed and labeled as defined in NFPA 70, Article 100, by a testing agency acceptable to authorities having jurisdiction, and marked for intended use.

C. Comply with NFPA 70.

PART 2 - PRODUCTS

2.1 MANUFACTURERS

A. In other Part 2 articles where subparagraph titles below introduce lists, the following requirements apply for product selection:
1. Subject to compliance with requirements, provide products by the manufacturers specified.

2.2 CONDUCTORS AND CABLES

A. Manufacturers:
1. Copper Wire and Cables:
a. Alcan Aluminum Corporation; Alcan Cable Div.
b. American Insulated Wire Corp.; a Leviton Company.

c. General Cable Corporation.
d. Senator Wire & Cable Company.
e. Southwire Company.

B. Refer to Part 3 "Conductor and Insulation Applications" Article for insulation type, cable construction, and ratings.

C. Conductor Material: Copper, minimum size #12 for phase conductors and #14 for control conductors complying with NEMA WC 7; solid conductor for No. 10 AWG and smaller, stranded for No. 8 AWG and larger.

D. Conductor Insulation Types: Type THWN-2, XHHW-2 and SO complying with NEMA WC7.

E. Multiconductor Cable: Armored cable (Type AC} and Type SO with ground wire.

F. Multi conductor Cable, Healthcare applications: Armored cable: 90 degree Celsius dry rated armored cable, Type ACTHH manufactured in compliance with U.L. Standard 4 under File Number E7330 and installed in accordance with Article 333 of the NEC. Conductors are 600 volt rated Type THHN, copper, individually wrapped with a moisture and fungi resistant paper, with green insulated grounding conductor and a steel armor overall.
1. Applications and features:
a. Approved for normal and equipment system power wiring for Health Care Facilities where an insulated grounding conductor is required per sections 517.13 and 517.61(c) of the 2002 NEC.
1) Factory applied green or other approved color to identify compliance with specification requirements and to distinguish compliant cable from non-compliant cable.
b. Reference Standards:
1) U.L. 4, Armored Cable
2) U.L. 83, Thermoplastic Insulated Wires and Cables
3) Federal Specification J-C-30B, Wire and Cable, Electrical
a) National Electrical Code, 2002, Articles 333 and 517
c. General Construction:
1) Copper conductors.
2) THHN insulation.
3) Fibrous covering
4) Bonding strip.
5) Galvanized steel armor, color coded, positive interlock in compliance with section 7 of U.L.4.

2.3 CONNECTORS AND SPLICES

A. Manufacturers:
1. AFC Cable Systems, Inc.
2. AMP Incorporated/Tyco International.
3. Burndy.
4. Hubbell/Anderson.
5. Ilsco.
6. O-Z/Gedney; EGS Electrical Group LLC.
7. 3M Company; Electrical Products Division.

B. Description: Factory-fabricated connectors and splices of size, ampacity rating, material, type, and class for application and service indicated.

PART 3 - EXECUTION

3.1 CONDUCTOR AND INSULATION APPLICATIONS

A. Service Entrance: Type THWN-2, single conductors in raceway.

B. Exposed Feeders: Type THWN-2, single conductors in raceway.

C. Feeders Concealed in Ceilings, Walls, and Partitions: Type THWN-2, single conductors in raceway.

D. Feeders Concealed in Concrete, below Slabs-on-Grade, and in Crawlspaces: Type THWN-2, single conductors in raceway. Exposed Branch Circuits: Type THWN-2, single conductors in raceway.

E. Branch Circuits Concealed in Concrete and below Slabs-on-Grade: Type THWN-2, single conductors in raceway.

F. Underground Feeders and Branch Circuits: Type THWN-2, single conductors in raceway.

G. Cord Drops and Portable Appliance Connections: Type SO, hard service cord.

H. Fire Alarm Circuits:
   1. THWN-2 conductors in raceway for fire alarm power and horn/strobe indicating circuits.
   2. Power limited signaling circuit cable in raceway for initiating loops

I. Emergency circuits: Install in separate raceways from all other wiring, except where they connect to the same equipment for two-source operation.

J. Class 1 Control Circuits: Type THWN-2, in raceway.

K. Class 2 Control Circuits: Type THWN-2, in raceway.

L. Fixture Conductors: Install conductors in lighting fixtures with insulation ratings as recommended by the manufacturer's written instructions or a minimum 90 degrees C., whichever is higher.

M. Communication Conductors: Install communication conductors in raceway.

3.2 INSTALLATION

A. Conceal cables in finished walls, ceilings, and floors, unless otherwise indicated.

B. Multi-wire branch circuits: install no more than three circuits in a raceway, unless specifically shown otherwise. Install #10 conductors for branch circuits for which the distance from panelboard to furthest outlet is more than 100' for 120 volt or more than 140' for 277 volt circuits.

C. GFI circuit breakers or feed-thru outlets to outlets served: provide separate neutrals.

D. Panelboards, switchboards, MCCs, switchgear: Do not route conductors through a section which terminate in another section, except for interconnecting control conductors.

E. Remove existing conductors from raceway before pulling in new wires and cables.

F. Parallel conductors: Where parallel conductors are installed in parallel raceways, install in each raceway conductors of phase, neutral and/or ground as specified. Carefully cut parallel conductors to identical length for each phase leg. Do not parallel conductors less than #1/0.

G. Use manufacturer-approved pulling compound or lubricant where necessary; compound used must not deteriorate conductor or insulation. Do not exceed manufacturer's recommended maximum pulling tensions and sidewall pressure values.

H. Use pulling means, including fish tape, cable, rope, and basket-weave wire/cable grips, that will not damage cables or raceway.

I. Install exposed cables parallel and perpendicular to surfaces of exposed structural members, and follow surface contours where possible.

J. Do not install wiring through any part of a transformer vault or elevator equipment room and shaft that is does not serve equipment in the respective room. Also, coordinate that piping or other items foreign to the transformer vault, elevator equipment room or shaft is not installed in these spaces.

K. Support cables according to Division 26 Section "Common Work Results for Electrical."

L. Seal around cables penetrating fire-rated elements according to Division 7 Section "Through-Penetration Firestop Systems."

M. Identify and color-code conductors and cables according to Division 26 Section "Identification for Electrical Systems."

3.3 CONNECTIONS

A. Tighten electrical connectors and terminals according to manufacturer's published torque-tightening values. If manufacturer's torque values are not indicated, use those specified in UL 486A and UL 486B.

B. Conductor splices: Minimize conductor splices. Do not install in conduit bodies.

C. Make splices and taps that are compatible with conductor material and that possess equivalent or better mechanical strength and insulation ratings than unspliced conductors.
   1. Use oxide inhibitor in each splice and tap conductor for aluminum conductors. Install compression type connectors for aluminum conductors or copper pigtail adapters for installation in mechanical lugs.

D. Wiring at Outlets: Install conductor at each outlet, with at least 12 inches (300 mm) of slack.

E. Furniture connections: connect systems furniture to power supply circuits per manufacturer’s written instructions.

F. Panelboard connections: do not splice conductors in panelboards.

3.4 FIELD QUALITY CONTROL

A. Testing: Perform the following field quality-control testing:
   1. After installing conductors and cables and before electrical circuitry has been energized, test for compliance with requirements.
   2. Perform each electrical test and visual and mechanical inspection stated in NETA ATS, Section 7.3.1. Certify compliance with test parameters.

B. Test Reports: Prepare a written report to record the following:
   1. Test procedures used.
   2. Test results that comply with requirements.
   3. Test results that do not comply with requirements and corrective action taken to achieve compliance with requirements.

END OF SECTION 260519

SECTION 260526 - GROUNDING AND BONDING FOR ELECTRICAL SYSTEMS

PART 1 - GENERAL

1.1 RELATED DOCUMENTS

A. Drawings and general provisions of the Contract, including General and Supplementary Conditions and Division 01 Specification Sections, apply to this Section.

1.2 SUMMARY

A. This Section includes methods and materials for grounding systems and equipment, plus the following special applications:

1. Common ground bonding with lightning protection system.

1.3 SUBMITTALS

A. Product Data: For each type of product indicated.

B. Other Informational Submittals: Plans showing dimensioned as-built locations of grounding features specified in Part 3 "Field Quality Control" Article, including the following:

1. Test wells.
2. Ground rods.
3. Ground rings.
4. Grounding arrangements and connections for separately derived systems.
5. Grounding for sensitive electronic equipment.

C. Qualification Data: For testing agency and testing agency's field supervisor.

D. Field quality-control test reports.

E. Operation and Maintenance Data: For grounding to include the following in emergency, operation, and maintenance manuals:

1. Instructions for periodic testing and inspection of grounding features at test wells, ground rings, and grounding connections for separately derived systems based on NETA MTS .

a. Tests shall be to determine if ground resistance or impedance values remain within specified maximums, and instructions shall recommend corrective action if they do not.
b. Include recommended testing intervals.

1.4 QUALITY ASSURANCE

A. Electrical Components, Devices, and Accessories: Listed and labeled as defined in NFPA 70, Article 100, by a testing agency acceptable to authorities having jurisdiction, and marked for intended use.

©2006 Spectrum Engineers, Inc.

B. Comply with UL 467 for grounding and bonding materials and equipment.

PART 2 - PRODUCTS

2.1 CONDUCTORS

A. Insulated Conductors: Copper wire or cable insulated for 600 V unless otherwise required by applicable Code or authorities having jurisdiction.

B. Bare Copper Conductors:

1. Solid Conductors: ASTM B 3.
2. Stranded Conductors: ASTM B 8.
3. Tinned Conductors: ASTM B 33.
4. Bonding Cable: 28 kcmil, 14 strands of No. 17 AWG conductor, 1/4 inch (6 mm) in diameter.
5. Bonding Conductor: No. 4 or No. 6 AWG, stranded conductor.
6. Bonding Jumper: Copper tape, braided conductors, terminated with copper ferrules; 1-5/8 inches (41 mm) wide and 1/16 inch (1.6 mm) thick.
7. Tinned Bonding Jumper: Tinned-copper tape, braided conductors, terminated with copper ferrules; 1-5/8 inches (41 mm) wide and 1/16 inch (1.6 mm) thick.

C. Bare Grounding Conductor and Conductor Protector for Wood Poles:

1. No. 4 AWG minimum, soft-drawn copper.
2. Conductor Protector: Half-round PVC or wood molding. If wood, use pressure-treated fir or cypress or cedar.

D. Grounding Bus: Rectangular bars of annealed copper, 1/4 by 2 inches (6 by 50 mm) in cross section, unless otherwise indicated; with insulators.

2.2 CONNECTORS

A. Listed and labeled by a nationally recognized testing laboratory acceptable to authorities having jurisdiction for applications in which used, and for specific types, sizes, and combinations of conductors and other items connected.

B. Bolted Connectors for Conductors and Pipes: Copper or copper alloy, bolted pressure-type, with at least two bolts.

1. Pipe Connectors: Clamp type, sized for pipe.

C. Welded Connectors: Exothermic-welding kits of types recommended by kit manufacturer for materials being joined and installation conditions.

2.3 GROUNDING ELECTRODES

A. Ground Rods: Zinc-coated Stainless steel, sectional type; 3/4 inch by10 feet (19 mm by 3 m) in diameter.

©2006 Spectrum Engineers, Inc.

PART 3 - EXECUTION

3.1 APPLICATIONS

A. Conductors: Install solid conductor for No. 8 AWG and smaller, and stranded conductors for No. 6 AWG and larger, unless otherwise indicated.

B. Underground Grounding Conductors: Install bare tinned-copper conductor, No. 4/0 AWG minimum.

1. Bury at least 24 inches (600 mm) below grade.
2. Duct-Bank Grounding Conductor: Bury 12 inches (300 mm) above duct bank when indicated as part of duct-bank installation.

C. Isolated Grounding Conductors: Green-colored insulation with continuous yellow stripe. On feeders with isolated ground, identify grounding conductor where visible to normal inspection, with alternating bands of green and yellow tape, with at least three bands of green and two bands of yellow.

D. Grounding Bus: Install in electrical and telephone equipment rooms, in rooms housing service equipment, and elsewhere as indicated.

1. Install bus on insulated spacers 1 inch (25 mm), minimum, from wall 6 inches (150 mm) above finished floor, unless otherwise indicated.
2. Where indicated on both sides of doorways, route bus up to top of door frame, across top of doorway, down to specified height above floor, and connect to horizontal bus.

E. Conductor Terminations and Connections:

1. Pipe and Equipment Grounding Conductor Terminations: Bolted connectors.
2. Underground Connections: Welded connectors, except at test wells and as otherwise indicated.
3. Connections to Ground Rods at Test Wells: Bolted connectors.
4. Connections to Structural Steel: Welded connectors.

3.2 EQUIPMENT GROUNDING

A. Install insulated equipment grounding conductors with all feeders and branch circuits.

B. Install insulated equipment grounding conductors with the following items, in addition to those required by NFPA 70:

1. Feeders and branch circuits.
2. Lighting circuits.
3. Receptacle circuits.
4. Single-phase motor and appliance branch circuits.
5. Three-phase motor and appliance branch circuits.
6. Flexible raceway runs.
7. Armored and metal-clad cable runs.
8. Busway Supply Circuits: Install insulated equipment grounding conductor from grounding bus in the switchgear, switchboard, or distribution panel to equipment grounding bar terminal on busway.

©2006 Spectrum Engineers, Inc.

9. Computer and Rack-Mounted Electronic Equipment Circuits: Install insulated equipment grounding conductor in branch-circuit runs from equipment-area power panels and power-distribution units.
10. X-Ray Equipment Circuits: Install insulated equipment grounding conductor in circuits supplying x-ray equipment.

C. Air-Duct Equipment Circuits: Install insulated equipment grounding conductor to duct-mounted electrical devices operating at 120 V and more, including air cleaners, heaters, dampers, humidifiers, and other duct electrical equipment. Bond conductor to each unit and to air duct and connected metallic piping.

D. Water Heater, Heat-Tracing, and Antifrost Heating Cables: Install a separate insulated equipment grounding conductor to each electric water heater and heat-tracing cable. Bond conductor to heater units, piping, connected equipment, and components.

E. Signal and Communication Equipment: For telephone, alarm, voice and data, and other communication equipment, provide No. 4 AWG minimum insulated grounding conductor in raceway from grounding electrode system to each service location, terminal cabinet, wiring closet, and central equipment location.

1. Service and Central Equipment Locations and Wiring Closets: Terminate grounding conductor on a 1/4-by-2-by-12-inch (6-by-50-by-300-mm) grounding bus.
2. Terminal Cabinets: Terminate grounding conductor on cabinet grounding terminal.

F. Metal Poles Supporting Outdoor Lighting Fixtures: Install grounding electrode and a separate insulated equipment grounding conductor in addition to grounding conductor installed with branch-circuit conductors.

3.3 INSTALLATION

A. Grounding Conductors: Route along shortest and straightest paths possible, unless otherwise indicated or required by Code. Avoid obstructing access or placing conductors where they may be subjected to strain, impact, or damage.

B. Common Ground Bonding with Lightning Protection System: Comply with NFPA 780 and UL 96 when interconnecting with lightning protection system. Bond electrical power system ground directly to lightning protection system grounding conductor at closest point to electrical service grounding electrode. Use bonding conductor sized same as system grounding electrode conductor, and install in conduit.

C. Ground Rods: Drive rods until tops are 2 inches (50 mm) below finished floor or final grade, unless otherwise indicated.

1. Interconnect ground rods with grounding electrode conductor below grade and as otherwise indicated. Make connections without exposing steel or damaging coating, if any.
2. For grounding electrode system, install at least three rods spaced at least one-rod length from each other and located at least the same distance from other grounding electrodes, and connect to the service grounding electrode conductor.

D. Test Wells: Ground rod driven through drilled hole in bottom of handhole. Handholes are specified in Division 26 Section "Underground Ducts and Raceways for Electrical Systems," and shall be at least 12 inches (300 mm) deep, with cover.

©2006 Spectrum Engineers, Inc.

1. Test Wells: Install at least one test well for each service, unless otherwise indicated. Install at the ground rod electrically closest to service entrance. Set top of test well flush with finished grade or floor.

E. Bonding Straps and Jumpers: Install in locations accessible for inspection and maintenance, except where routed through short lengths of conduit.

1. Bonding to Structure: Bond straps directly to basic structure, taking care not to penetrate any adjacent parts.
2. Bonding to Equipment Mounted on Vibration Isolation Hangers and Supports: Install so vibration is not transmitted to rigidly mounted equipment.
3. Use exothermic-welded connectors for outdoor locations, but if a disconnect-type connection is required, use a bolted clamp.

F. Grounding and Bonding for Piping:

1. Metal Water Service Pipe: Install insulated copper grounding conductors, in conduit, from building's main service equipment, or grounding bus, to main metal water service entrances to building. Connect grounding conductors to main metal water service pipes, using a bolted clamp connector or by bolting a lug-type connector to a pipe flange, using one of the lug bolts of the flange. Where a dielectric main water fitting is installed, connect grounding conductor on street side of fitting. Bond metal grounding conductor conduit or sleeve to conductor at each end.
2. Water Meter Piping: Use braided-type bonding jumpers to electrically bypass water meters. Connect to pipe with a bolted connector.
3. Bond each aboveground portion of gas piping system downstream from equipment shutoff valve.

G. Bonding Interior Metal Ducts: Bond metal air ducts to equipment grounding conductors of associated fans, blowers, electric heaters, and air cleaners. Install bonding jumper to bond across flexible duct connections to achieve continuity.

H. Grounding for Steel Building Structure: Install a driven ground rod at base of each corner column and at intermediate exterior columns at distances not more than 60 feet (18 m) apart.

I. Ground Ring: Install a grounding conductor, electrically connected to each building structure ground rod and to each steel columns at no more than 60 feet on center, extending around the perimeter of building and to interior columns at not more than 60 feet on center.

1. Install tinned-copper conductor not less than No. 4/0 AWG for ground ring and for taps to building steel.
2. Bury ground ring not less than 24 inches (600 mm) from building foundation.

J. Ufer Ground (Concrete-Encased Grounding Electrode): Fabricate according to NFPA 70, using a minimum of **20 feet (6 m)** of bare copper conductor not smaller than No. 4/0 AWG.

1. If concrete foundation is less than 20 feet (6 m) long, coil excess conductor within base of foundation.
2. Bond grounding conductor to reinforcing steel in at least four locations and to anchor bolts. Extend grounding conductor below grade and connect to building grounding grid or to grounding electrode external to concrete.

©2006 Spectrum Engineers, Inc.

3.4 FIELD QUALITY CONTROL

A. Perform the following tests and inspections and prepare test reports:

1. After installing grounding system but before permanent electrical circuits have been energized, test for compliance with requirements.
2. Test completed grounding system at each location where a maximum ground-resistance level is specified, at service disconnect enclosure grounding terminal, at ground test wells. Make tests at ground rods before any conductors are connected.

   a. Measure ground resistance not less than two full days after last trace of precipitation and without soil being moistened by any means other than natural drainage or seepage and without chemical treatment or other artificial means of reducing natural ground resistance.

END OF SECTION 260526

©2006 Spectrum Engineers, Inc.

SECTION 260533

RACEWAYS AND BOXES FOR ELECTRICAL SYSTEMS

PART 1 - GENERAL

1.1 RELATED DOCUMENTS

A. Drawings and general provisions of the Contract, including General and Supplementary Conditions and Division 1 Specification Sections, apply to this Section.

1.2 SUMMARY

A. This Section includes raceways, fittings, boxes, enclosures, and cabinets for electrical wiring.

B. Related Sections include the following:
   1. Division 7 Section "Through-Penetration Firestop Systems" for firestopping materials and installation at penetrations through walls, ceilings, and other fire-rated elements.
   2. Division 26 Section "Common Work Results for Electrical" for supports, anchors, and identification products.
   3. Division 26 Section "Seismic Controls for Electrical Systems" for seismic restraints and bracing of raceways, boxes, enclosures, and cabinets.
   4. Division 26 Section "Wiring Devices" for devices installed in boxes and for floor-box service fittings.

1.3 DEFINITIONS

A. EMT: Electrical metallic tubing.

B. FMC: Flexible metal conduit.

C. HDPE : High Density Polyethylene.

D. IMC: Intermediate metal conduit.

E. LFMC: Liquidtight flexible metal conduit.

F. LFNC: Liquidtight flexible nonmetallic conduit.

G. RNC: Rigid nonmetallic conduit.

1.4 SUBMITTALS

A. Product Data: For surface raceways, wireways and fittings, floor boxes, hinged-cover enclosures, and cabinets.

B. Shop Drawings: Show fabrication and installation details of components for raceways, fittings, boxes, enclosures, and cabinets.

C. Manufacturer Seismic Qualification Certification: Submit certification that enclosures, cabinets, accessories, and components will withstand seismic forces defined in Division 26 Section "Seismic Controls for Electrical Systems." Include the following:
   1. Basis for Certification: Indicate whether withstand certification is based on actual test of assembled components or on calculation.

a. The term "withstand" means "the unit will remain in place without separation of any parts from the device when subjected to the seismic forces specified and the unit will be fully operational after the seismic event."

2. Dimensioned Outline Drawings of Equipment Unit: Identify center of gravity and locate and describe mounting and anchorage provisions.
3. Detailed description of equipment anchorage devices on which the certification is based and their installation requirements.

1.5 QUALITY ASSURANCE

A. Electrical Components, Devices, and Accessories: Listed and labeled as defined in NFPA 70, Article 100, by a testing agency acceptable to authorities having jurisdiction, and marked for intended use.

B. Comply with NFPA 70.

1.6 COORDINATION

A. Coordinate layout and installation of raceways, boxes, enclosures, cabinets, and suspension system with other construction that penetrates ceilings or is supported by them, including light fixtures, HVAC equipment, fire-suppression system, and partition assemblies.

PART 2 - PRODUCTS

2.1 MANUFACTURERS

A. In other Part 2 articles where subparagraph titles below introduce lists, the following requirements apply for product selection:
1. Manufacturers: Subject to compliance with requirements, provide products by the manufacturers specified.

2.2 METAL CONDUIT AND TUBING

A. Manufacturer:
1. AFC Cable Systems, Inc.
2. Alflex Inc.
3. Anamet Electrical, Inc.; Anaconda Metal Hose.
4. Electri-Flex Co.
5. Grinnell Co./Tyco International; Allied Tube and Conduit Div.
6. LTV Steel Tubular Products Company.
7. Manhattan/CDT/Cole-Flex.
8. O-Z Gedney; Unit of General Signal.
9. Wheatland Tube Co.

B. Rigid Steel Conduit: ANSI C80.1.

C. EMT and Fittings: ANSI C80.3.
1. Fittings: Steel Set-screw or compression type. Do not use die-cast fittings.

D. FMC: Zinc-coated steel.

E. LFMC: Flexible steel conduit with PVC jacket.

F. Fittings: NEMA FB 1; compatible with conduit and tubing materials. Do not use die-cast fittings.

2.3 NONMETALLIC CONDUIT AND TUBING

A. Manufacturer:
1. American International.
2. Anamet Electrical, Inc.; Anaconda Metal Hose.
3. Arnco Corp.
4. Cantex Inc.
5. Certainteed Corp.; Pipe & Plastics Group.
6. Condux International.
7. ElecSYS, Inc.
8. Electri-Flex Co.
9. Lamson & Sessions; Carlon Electrical Products.
10. Manhattan/CDT/Cole-Flex.
11. RACO; Division of Hubbell, Inc.
12. Spiralduct, Inc./AFC Cable Systems, Inc.
13. Thomas & Betts Corporation.

B. RNC: NEMA TC 2, Schedule 40 and Schedule 80 PVC.

C. RNC Fittings: NEMA TC 3; match to conduit or tubing type and material.

D. LFNC: UL 1660.

E. HDPE: NEMA TC-7 Smoothwall Coilable PE Electrical Plastic Conduit. UL Listed HDPE is compliant with the 2002 NEC Articles 300 and 352, and meets the requirements of UL 651B. EPEC 40 (Schedule 40).

2.4 METAL WIREWAYS

A. Manufacturer:
1. Hoffman.
2. Square D.

B. Material and Construction: Sheet metal sized and shaped as indicated, NEMA 1 and 3R.

C. Fittings and Accessories: Include couplings, offsets, elbows, expansion joints, adapters, hold-down straps, end caps, and other fittings to match and mate with wireways as required for complete system.

D. Select features, unless otherwise indicated, as required to complete wiring system and to comply with NFPA 70.

E. Wireway Covers: Screw-cover type.

F. Finish: Manufacturer's standard enamel finish.

2.5 SURFACE RACEWAYS

A. Surface Metal Raceways: Galvanized steel with snap-on covers. Finish with manufacturer's standard prime coating. Single channel unless otherwise noted. Designed for field installation of receptacles that meet the requirements of Section 16140. Precut outlet covers.

1. Manufacturer:
   a. Thomas & Betts Corporation.
   b. Monosystems.
   c. Wiremold Company (The); Electrical Sales Division.

B. Types, sizes, and channels as indicated and required for each application, with fittings that match and mate with raceways.

2.6 BOXES, ENCLOSURES, AND CABINETS

A. Manufacturer:
1. Cooper Crouse-Hinds; Div. of Cooper Industries, Inc.
2. Emerson/General Signal; Appleton Electric Company.
3. Erickson Electrical Equipment Co.
4. Hoffman.
5. Hubbell, Inc.; Killark Electric Manufacturing Co.
6. O-Z/Gedney; Unit of General Signal.
7. RACO; Division of Hubbell, Inc.
8. Robroy Industries, Inc.; Enclosure Division.
9. Scott Fetzer Co.; Adalet-PLM Division.
10. Spring City Electrical Manufacturing Co.
11. Thomas & Betts Corporation.
12. Walker Systems, Inc.; Wiremold Company (The).
13. Woodhead, Daniel Company; Woodhead Industries, Inc. Subsidiary.

B. Sheet Metal Outlet and Device Boxes: NEMA OS 1.

C. Cast-Metal Outlet and Device Boxes: NEMA FB 1, Type FD, with gasketed cover.

D. Floor Boxes: Cast metal (on grade) and Sheet metal (above grade), fully adjustable, rectangular.

E. Small Sheet Metal Pull and Junction Boxes: NEMA OS 1.

F. Hinged-Cover Enclosures: NEMA 250, Type 1, with continuous hinge cover and flush latch.
1. Metal Enclosures: Steel, finished inside and out with manufacturer's standard enamel.

G. Cabinets: NEMA 250, Type 1, galvanized steel box with removable interior panel and removable front, finished inside and out with manufacturer's standard enamel. Hinged door in front cover with flush latch and concealed hinge. Key latch to match panelboards. Include metal barriers to separate wiring of different systems and voltage and include accessory feet where required for freestanding equipment.

2.7 EXPANSION FITTINGS:

A. Manufacturer:
1. O-Z Gedney; Unit of General Signal.

B. Expansion Fittings: Malleable Iron, hot dipped galvanized, weatherproof suitable for raceway and applications
1. Coordinate expansion requirements with Architect.

2.8 FACTORY FINISHES

A. Finish: provide manufacturer's standard paint applied before shipping to factory-assembled products for:
   1. Surface raceways: To be selected by Architect from manufacturer's standard colors.
   2. Enclosures: Standard Grey in electrical rooms, White in finished areas.
   3. Cabinets: Standard Grey in electrical rooms, White in finished areas.

PART 3 - EXECUTION

3.1 RACEWAY APPLICATION

A. Outdoors:
   1. Exposed: Rigid steel or IMC.
   2. Concealed: Rigid steel or IMC.
   3. Underground: RNC (except coated or wrapped rigid steel for bends greater than 22 degrees, coated or wrapped rigid steel.
      a. Conduits that are a part of the emergency power system, includes life safety and critical branches and feeders to standby power distribution system, must be encased in not less than 2" thick concrete.
      b. Conduits supplying patient care areas must be rigid steel or IMC, coated or wrapped.
   4. Connection to Vibrating Equipment (Including Transformers and Hydraulic, Pneumatic, Electric Solenoid, or Motor-Driven Equipment): LFMC.
   5. Boxes and Enclosures: NEMA 250, Type 3R.

B. Indoors:
   1. Fire alarm cabling: EMT
   2. Normal power circuits concealed: Hospital Grade MC (maximum length 30 feet).
   3. Exposed:
      a. Above 6' from finished floor: EMT, IMC or Rigid Steel.
      b. Below 6' from finished floor, or subject to mechanical damage: IMC or Rigid Steel.
   4. Underground: refer to underground installation selections in outdoor paragraph above.
   5. Concealed: EMT or Rigid Steel.
      a. Patient Care Applications: EMT or Rigid Steel.
   6. Connection to Vibrating Equipment (Including Transformers and Hydraulic, Pneumatic, Electric Solenoid, Engine-Driven or Motor-Driven Equipment): LFMC.
   7. Connection to systems furniture: LFMC
   8. Damp or Wet Locations: Rigid steel conduit.
   9. Boxes and Enclosures: NEMA 250, Type 1, except as follows:
      a. Damp or Wet Locations: NEMA 250, Type 4, stainless steel.

C. Minimum Raceway Size:
   1. Metallic Conduits: 3/4-inch trade size (DN 16).
   2. Nonmetallic Conduits: 3/4-inch trade size (DN 21).

D. Raceway Fittings: Compatible with raceways and suitable for use and location.
   1. Rigid Metal Conduit: Use threaded rigid steel conduit fittings, unless otherwise indicated. Engage a minimum of five full threads.
   2. Intermediate Metal Conduit: Use threaded rigid steel conduit fittings, unless otherwise indicated. Engage a minimum of five full threads.
   3. PVC Externally Coated or wrapped Rigid Steel Conduits: Use only fittings approved for use with that material. Patch all nicks and scrapes in PVC coating after installing conduits.

4. EMT: set screw or compression for dry interior locations; compression for damp or wet locations; compression with tape for installations in concrete slabs above grade.
5. Building Expansion joints: use expansion fittings with 36” of wrapped metal raceways on either side of joint.

E. Do not install aluminum conduits embedded in or in contact with concrete.

3.2 INSTALLATION

A. Layout of electrical boxes: Do not scale electrical drawings. Refer to mounting height detail sheet.
   1. Coordinate with architectural elevations. Where outlets are not identified on the elevations, refer mounting height decisions to the Architect. If counters or work surfaces are shown refer mounting height decisions, whether above or below counter, to the Architect. Coordinate location of switches with actual door swings.
   2. Verify final locations with field measurements and with the requirements of the actual equipment to be connected as determined from shop drawings.

B. Outlet Boxes:
   1. Frame construction: 4”X4”X1-1/2” with suitable plaster-ring, except:
      a. 2-1/8” deep for boxes with 3 conduit entrances and for communication outlets
      b. 4-11/16” boxes for boxes with 4 or more conduits.
   2. Masonry or concrete construction: 1g or multiple gang by 3-1/2” deep.
   3. Fixture Outlets: minimum 4” outlet box with 3/8” fixture stud supported adequately for minimum of 200 lbs.
   4. Do not use gangable boxes.

C. Keep raceways at least 12 inches (300 mm) away from parallel runs of flues and steam or hot-water pipes. Install horizontal raceway runs above water and steam piping.

D. Complete raceway installation before starting conductor installation.

E. Support raceways as specified in Division 26 Section "Common Work Results for Electrical."

F. Install temporary closures to prevent foreign matter from entering raceways.

G. Stub-ups: Embed coupling flush with finished floor. If to remain a spare, the flush plug is to remain in the coupling.

H. Make bends and offsets so ID is not reduced. Keep legs of bends in the same plane and keep straight legs of offsets parallel, unless otherwise indicated. Make bends in parallel or banked runs from same centerline to make bends parallel.
   1. Nonmetallic Conduits: Use rigid elbows for all bends 22 degrees or greater.
   2. Communication Systems Raceways: comply with long sweep radius elbows minimum dimensions in Table 5.2-1 of ANSI/TIA/EIA-569A for all bends or offsets for backbone cables.

I. Raceways below grade: Install RNC or wrapped/coated Rigid Steel minimum 24” below grade, unless specifically noted otherwise. Where noted encase in concrete.

J. Conceal conduit and EMT within finished walls, ceilings, and floors, except at surface mounted panels and apparatus or unless otherwise indicated. Install surface raceways only where indicated or where directed by Architect.
   1. Install concealed raceways with a minimum of bends in the shortest practical distance, considering type of building construction and obstructions, unless otherwise indicated.

2. Install surface raceways in rooms where surface mounted panels are indicated or for exposed equipment in mechanical, electrical, or communication rooms.

K. Raceways Penetrating foundation walls: Install rigid conduit through the foundation wall or 3' each side.

L. Install exposed raceways parallel or at right angles to nearby surfaces or structural members and follow surface contours as much as possible.
   1. Run parallel or banked raceways together on common supports.
   2. Make parallel bends in parallel or banked runs. Use factory elbows only where elbows can be installed parallel; otherwise, provide field bends for parallel raceways.

M. Raceway coordination: Do not install raceways in or through (including above ceilings) the following areas that do not serve equipment in those areas:
   1. Elevator equipment rooms.
   2. Imaging Rooms.
   3. Stairwells.
   4. Vestibules.

N. Join raceways with fittings designed and approved for that purpose and make joints tight.
   1. Use insulating bushings to protect conductors.

O. Tighten set screws of threadless fittings with suitable tools.

P. Cap open ends of empty conduit to keep out debris until the project is completed.

Q. Terminations:
   1. Where raceways are terminated with locknuts and bushings, align raceways to enter squarely and install locknuts with dished part against box. For RMC and IMC, use two locknuts, one inside and one outside box and a bushing. For EMT, use insulated throats or plastic bushings (except for grounding bushings where required).
   2. Where raceways are terminated with threaded hubs, screw raceways or fittings tightly into hub so end bears against wire protection shoulder. Where chase nipples are used, align raceways so coupling is square to box; tighten chase nipple so no threads are exposed.
   3. Service Conduits or conduits installed in concentric/eccentric knock-outs or reducing washers: terminate raceway with grounding bushings.

R. Install pull wires in empty raceways. Use polypropylene or monofilament plastic line with not less than 200-lb (90-kg) tensile strength. Leave at least 12 inches (300 mm) of slack at each end of pull wire. Plug empty raceways at both ends.

S. Low Voltage, Telephone, and Signal System Raceways, 2-Inch Trade Size (DN 53) and Smaller: In addition to above requirements, install raceways in maximum lengths of 150 feet (45 m) and with a maximum of two 90-degree bends or equivalent. Separate lengths with pull or junction boxes where necessary to comply with these requirements.

T. Install seals for conduit penetrations of slabs on grade and exterior walls below grade. Tighten sleeve seal screws until sealing grommets have expanded to form watertight seal.

U. Roof Penetrations: Install flashings for conduit penetrations of roofs under the direct supervision of the roofing installer.

V. Install raceway sealing fittings at suitable, approved, and accessible locations and fill them with UL-listed sealing compound. For concealed raceways, install each fitting in a flush steel box

with a blank cover plate having a finish similar to that of adjacent plates or surfaces. Install raceway sealing fittings at the following points:

1. Where conduits pass from warm to cold locations, such as boundaries of refrigerated spaces.
2. Where conduits pass through airtight spaces or plenums to prevent air leakage.
3. Where conduits pass from hazardous areas to nonhazardous.
4. Where otherwise required by NFPA 70.

W. Stub-up Connections: Extend conduits through concrete floor for connection to freestanding equipment. Install with an adjustable top or coupling threaded inside for plugs set flush with finished floor. Extend conductors to equipment with rigid steel conduit; FMC may be used 6 inches (150 mm) above the floor. Install screwdriver-operated, threaded plugs flush with floor for future equipment connections.

X. Raceway Cleaning: Prevent accumulation of water, dirt or concrete in raceways. Where water or foreign matter have entered raceways, thoroughly clean or replace conduits where such accumulation cannot be removed by methods approved by this Engineer.

Y. Flexible Connections: Use maximum of 72 inches (1830 mm) of flexible conduit for recessed and semi-recessed lighting fixtures; for equipment subject to vibration, noise transmission, or movement; and for all motors. Use LFMC in damp or wet locations. Install separate ground conductor across flexible connections.

Z. Surface Raceways: Install a separate, green, ground conductor in raceways from junction box supplying raceways to receptacle or fixture ground terminals.

AA. Set floor boxes level and flush with finished floor surface.

BB. Install hinged-cover enclosures and cabinets plumb. Support at each corner.

CC. Spare conduits:

1. Provide 300’ of ¾” C as directed by Architect/Engineer, where not required, credit unused portion.

3.3 PROTECTION

A. Provide final protection and maintain conditions that ensure coatings, finishes, and cabinets are without damage or deterioration at time of Substantial Completion.

1. Repair damage to galvanized finishes with zinc-rich paint recommended by manufacturer.
2. Repair damage to PVC or paint finishes with matching touchup coating recommended by manufacturer.

3.4 CLEANING

A. After completing installation of exposed, factory-finished raceways and boxes, inspect exposed finishes and repair damaged finishes.

END OF SECTION 260533

SECTION 260553 - IDENTIFICATION FOR ELECTRICAL SYSTEMS

PART 1 - GENERAL

1.1 RELATED DOCUMENTS

A. Drawings and general provisions of the Contract, including General and Supplementary Conditions and Division 01 Specification Sections, apply to this Section.

1.2 SUMMARY

A. This Section includes the following:
   1. Identification for raceways.
   2. Identification for conductors and communication and control cable.
   3. Warning labels and signs.
   4. Instruction signs.
   5. Equipment identification labels.
   6. Miscellaneous identification products.

1.3 SUBMITTALS

A. Product Data: For each electrical identification product indicated.

B. Identification Schedule: An index of nomenclature of electrical equipment and system components used in identification signs and labels.

C. Samples: For each type of label and sign to illustrate size, colors, lettering style, mounting provisions, and graphic features of identification products.

1.4 QUALITY ASSURANCE

A. Comply with ANSI A13.1 and ANSI C2.

B. Comply with NFPA 70.

C. Comply with 29 CFR 1910.145.

1.5 COORDINATION

A. Coordinate identification names, abbreviations, colors, and other features with requirements in the Contract Documents, Shop Drawings, manufacturer's wiring diagrams, and the Operation and Maintenance Manual, and with those required by codes, standards, and 29 CFR 1910.145. Use consistent designations throughout Project.

B. Coordinate installation of identifying devices with completion of covering and painting of surfaces where devices are to be applied.

C. Coordinate installation of identifying devices with location of access panels and doors.

©2006 Spectrum Engineers, Inc.

D. Install identifying devices before installing acoustical ceilings and similar concealment.

PART 2 - PRODUCTS

2.1 RACEWAY MATERIALS

A. Comply with ANSI A13.1 for minimum size of letters for legend and for minimum length of color field for each raceway and cable size.

B. Color for Printed Legend:
   1. Power Circuits: Black letters on an orange field.
   2. Legend: Indicate system or service and voltage, if applicable.

C. Self-Adhesive Vinyl Labels: Preprinted, flexible label laminated with a clear, weather- and chemical-resistant coating and matching wraparound adhesive tape for securing ends of legend label.

D. Snap-Around Labels: Slit, pretensioned, flexible, preprinted, color-coded acrylic sleeves, with diameter sized to suit diameter of raceway or cable it identifies and to stay in place by gripping action.

E. Snap-Around, Color-Coding Bands: Slit, pretensioned, flexible, solid-colored acrylic sleeves, 2 inches (50 mm) long, with diameter sized to suit diameter of raceway or cable it identifies and to stay in place by gripping action.

F. Self-Adhesive Vinyl Tape: Colored, heavy duty, waterproof, fade resistant; 2 inches (50 mm) wide; compounded for outdoor use.

2.2 CONDUCTOR AND COMMUNICATION- AND CONTROL-CABLE IDENTIFICATION MATERIALS

A. Color-Coding Conductor Tape: Colored, self-adhesive vinyl tape not less than 3 mils (0.08 mm) thick by 1 to 2 inches (25 to 50 mm) wide.

B. Marker Tapes: Vinyl or vinyl-cloth, self-adhesive wraparound type, with circuit identification legend machine printed by thermal transfer or equivalent process.

C. Aluminum Wraparound Marker Labels: Cut from 0.014-inch- (0.35-mm-) thick aluminum sheet, with stamped, embossed, or scribed legend, and fitted with tabs and matching slots for permanently securing around wire or cable jacket or around groups of conductors.

D. Metal Tags: Brass or aluminum, 2 by 2 by 0.05 inch (50 by 50 by 1.3 mm), with stamped legend, punched for use with self-locking nylon tie fastener.

E. Write-On Tags: Polyester tag, 0.015 inch (0.38 mm) thick, with corrosion-resistant grommet and polyester or nylon tie for attachment to conductor or cable.
   1. Marker for Tags: Permanent, waterproof, black ink marker recommended by tag manufacturer.

©2006 Spectrum Engineers, Inc.

2.3 WARNING LABELS AND SIGNS

A. Comply with NFPA 70 and 29 CFR 1910.145.

B. Self-Adhesive Warning Labels: Factory printed, multicolor, pressure-sensitive adhesive labels, configured for display on front cover, door, or other access to equipment, unless otherwise indicated.

C. Baked-Enamel Warning Signs: Preprinted aluminum signs, punched or drilled for fasteners, with colors, legend, and size required for application. 1/4-inch (6.4-mm) grommets in corners for mounting. Nominal size, 7 by 10 inches (180 by 250 mm).

D. Metal-Backed, Butyrate Warning Signs: Weather-resistant, nonfading, preprinted, cellulose-acetate butyrate signs with 0.0396-inch (1-mm) galvanized-steel backing; and with colors, legend, and size required for application. 1/4-inch (6.4-mm) grommets in corners for mounting. Nominal size, 10 by 14 inches (250 by 360 mm).

E. Warning label and sign shall include, but are not limited to, the following legends:
   1. Multiple Power Source Warning: "DANGER - ELECTRICAL SHOCK HAZARD - EQUIPMENT HAS MULTIPLE POWER SOURCES."
   2. Workspace Clearance Warning: "WARNING - OSHA REGULATION - AREA IN FRONT OF ELECTRICAL EQUIPMENT MUST BE KEPT CLEAR FOR 36 INCHES (915 MM)."

2.4 INSTRUCTION SIGNS

A. Engraved, laminated acrylic or melamine plastic, minimum 1/16 inch (1.6 mm) thick for signs up to 20 sq. in. (129 sq. cm) and 1/8 inch (3.2 mm) thick for larger sizes.
   1. Engraved legend with black letters on white face.
   2. Punched or drilled for mechanical fasteners.
   3. Framed with mitered acrylic molding and arranged for attachment at applicable equipment.

2.5 EQUIPMENT IDENTIFICATION LABELS

A. Self-Adhesive, Engraved, Laminated Acrylic or Melamine Label: Adhesive backed, with color code as inicated. Minimum letter height shall be 3/8 inch (10 mm).
   1. Normal Power: Black with white letters.
   2. Essential Power: Red with yellow letters.

2.6 MISCELLANEOUS IDENTIFICATION PRODUCTS

A. Cable Ties: Fungus-inert, self-extinguishing, 1-piece, self-locking, Type 6/6 nylon cable ties.
   1. Minimum Width: 3/16 inch (5 mm).
   2. Tensile Strength: 50 lb (22.6 kg), minimum.
   3. Temperature Range: Minus 40 to plus 185 deg F (Minus 40 to plus 85 deg C).
   4. Color: Black, except where used for color-coding.

B. Fasteners for Labels and Signs: Self-tapping, stainless-steel screws or stainless-steel machine screws with nuts and flat and lock washers.

©2006 Spectrum Engineers, Inc.

PART 3 - EXECUTION

3.1 APPLICATION

A. Raceways and Duct Banks More Than 600 V Concealed within Buildings: 4-inch- (100-mm-) wide black stripes on 10-inch (250-mm) centers over orange background that extends full length of raceway or duct and is 12 inches (300 mm) wide. Stencil legend "DANGER CONCEALED HIGH VOLTAGE WIRING" with 3-inch- (75-mm-) high black letters on 20-inch (500-mm) centers. Stop stripes at legends. Apply to the following finished surfaces:
   1. Floor surface directly above conduits running beneath and within 36 inches (300 mm) of a floor that is in contact with earth or is framed above unexcavated space.
   2. Wall surfaces directly external to raceways concealed within wall.
   3. Accessible surfaces of concrete envelope around raceways in vertical shafts, exposed in the building, or concealed above suspended ceilings.

B. Accessible Raceways More Than 600 V: Paine red and Identify with "DANGER-HIGH VOLTAGE" in white letters at least 2 inches (50 mm) high, with self-adhesive vinyl labels. Repeat legend at 10-foot (3-m) maximum intervals.

C. Accessible Raceways, 600 V or Less, for Service, Feeder, and Branch Circuits More Than 30 A: Identify with orange snap-around label.

D. Accessible Raceways and Cables of Auxiliary Systems: Identify the following systems with color-coded, snap-around, color-coding bands:
   1. Fire Alarm System: Red.
   2. Fire-Suppression Supervisory and Control System: Red and yellow.
   3. Combined Fire Alarm and Security System: Red and blue.
   4. Security System: Blue and yellow.
   5. Mechanical and Electrical Supervisory System: Green and blue.
   6. Telecommunication System: Green and yellow.
   7. Control Wiring: Green and red.

E. Power-Circuit Conductor Identification: For secondary conductors No. 1/0 AWG and larger in vaults, pull and junction boxes, manholes, and handholes use color-coding conductor tape metal tags write-on tags. Identify source and circuit number of each set of conductors. For single conductor cables, identify phase in addition to the above.

F. Branch-Circuit Conductor Identification: Where there are conductors for more than three branch circuits in same junction or pull box, use color-coding conductor tape metal tags. Identify each ungrounded conductor according to source and circuit number.

G. Conductors to Be Extended in the Future: Attach write-on tags to conductors and list source and circuit number.

H. Auxiliary Electrical Systems Conductor Identification: Identify field-installed alarm, control, signal, sound, intercommunications, voice, and data connections.
   1. Identify conductors, cables, and terminals in enclosures and at junctions, terminals, and pull points. Identify by system and circuit designation.
   2. Use system of marker tape designations that is uniform and consistent with system used by manufacturer for factory-installed connections.
   3. Coordinate identification with Project Drawings, manufacturer's wiring diagrams, and Operation and Maintenance Manual.

©2006 Spectrum Engineers, Inc.

I. Warning Labels for Indoor Cabinets, Boxes, and Enclosures for Power and Lighting: Comply with 29 CFR 1910.145 and apply metal-backed, butyrate warning signs. Identify system voltage with black letters on an orange background. Apply to exterior of door, cover, or other access.
   1. Equipment with Multiple Power or Control Sources: Apply to door or cover of equipment including, but not limited to, the following:
      a. Power transfer switches.
      b. Controls with external control power connections.
   2. Equipment Requiring Workspace Clearance According to NFPA 70: Unless otherwise indicated, apply to door or cover of equipment but not on flush panelboards and similar equipment in finished spaces.

J. Instruction Signs:
   1. Operating Instructions: Install instruction signs to facilitate proper operation and maintenance of electrical systems and items to which they connect. Install instruction signs with approved legend where instructions are needed for system or equipment operation.
   2. Emergency Operating Instructions: Install instruction signs with white legend on a red background with minimum 3/8-inch- (10-mm-) high letters for emergency instructions at equipment used for power transfer load shedding.

K. Equipment Identification Labels: On each unit of equipment, install unique designation label that is consistent with wiring diagrams, schedules, and Operation and Maintenance Manual. Apply labels to disconnect switches and protection equipment, central or master units, control panels, control stations, terminal cabinets, and racks of each system. Systems include power, lighting, control, communication, signal, monitoring, and alarm systems unless equipment is provided with its own identification.
   1. Labeling Instructions:
      a. Indoor Equipment: Adhesive film label with clear protective overlay. Unless otherwise indicated, provide a single line of text with 1/2-inch- (13-mm-) high letters on 1-1/2-inch- (38-mm-) high label; where 2 lines of text are required, use labels 2 inches (50 mm) high.
      b. Outdoor Equipment: Engraved, laminated acrylic or melamine label.
      c. Elevated Components: Increase sizes of labels and letters to those appropriate for viewing from the floor.
   2. Equipment to Be Labeled:
      a. Panelboards, electrical cabinets, and enclosures.
      b. Access doors and panels for concealed electrical items.
      c. Electrical switchgear and switchboards.
      d. Transformers.
      e. Electrical substations.
      f. Emergency system boxes and enclosures.
      g. Motor-control centers.
      h. Disconnect switches.
      i. Enclosed circuit breakers.
      j. Standard receptacles
      k. Motor starters.
      l. Push-button stations.
      m. Power transfer equipment.
      n. Contactors.
      o. Remote-controlled switches, dimmer modules, and control devices.
      p. Battery inverter units.
      q. Battery racks.
      r. Power-generating units.
      s. Voice and data cable terminal equipment.
      t. Master clock and program equipment.
      u. Intercommunication and call system master and staff stations.

©2006 Spectrum Engineers, Inc.

v. Television/audio components, racks, and controls.
w. Fire-alarm control panel and annunciators.
x. Security and intrusion-detection control stations, control panels, terminal cabinets, and racks.
y. Monitoring and control equipment.
z. Terminals, racks, and patch panels for voice and data communication and for signal and control functions.

3.2 INSTALLATION

A. Verify identity of each item before installing identification products.

B. Location: Install identification materials and devices at locations for most convenient viewing without interference with operation and maintenance of equipment.

C. Apply identification devices to surfaces that require finish after completing finish work.

D. Self-Adhesive Identification Products: Clean surfaces before application, using materials and methods recommended by manufacturer of identification device.

E. Attach nonadhesive signs and plastic labels with screws and auxiliary hardware appropriate to the location and substrate.

F. System Identification Color Banding for Raceways and Cables: Each color band shall completely encircle cable or conduit. Place adjacent bands of two-color markings in contact, side by side. Locate bands at changes in direction, at penetrations of walls and floors, at 50-foot (15-m) maximum intervals in straight runs, and at 25-foot (7.6-m) maximum intervals in congested areas.

G. Color-Coding for Phase and Voltage Level Identification, 600 V and Less: Use the colors listed below for ungrounded feeder branch-circuit service, feeder, and branch-circuit conductors.
1. Color shall be factory applied.
2. Colors for 208/120-V Circuits:
   a. Phase A: Black.
   b. Phase B: Red.
   c. Phase C: Blue.
3. Colors for 480/277-V Circuits:
   a. Phase A: Brown.
   b. Phase B: Orange.
   c. Phase C: Yellow.
4. Field-Applied, Color-Coding Conductor Tape: Apply in half-lapped turns for a minimum distance of 6 inches (150 mm) from terminal points and in boxes where splices or taps are made. Apply last two turns of tape with no tension to prevent possible unwinding. Locate bands to avoid obscuring factory cable markings.

H. Aluminum Wraparound Marker Labels and Metal Tags: Secure tight to surface of conductor or cable at a location with high visibility and accessibility.

I. Underground-Line Warning Tape: During backfilling of trenches install continuous underground-line warning tape directly above line at 6 to 8 inches (150 to 200 mm) below finished grade. Use multiple tapes where width of multiple lines installed in a common trenchexceeds 16 inches (400 mm) overall.

©2006 Spectrum Engineers, Inc.

J. Painted Identification: Prepare surface and apply paint according to Division 09 painting Sections.

END OF SECTION 260553

©2006 Spectrum Engineers, Inc.

SECTION 260943 - LIGHTING CONTROLS

PART 1 - GENERAL

1.1 RELATED DOCUMENTS

A. Drawings and general provisions of the Contract, including General and Supplementary Conditions and Division 1 Specification Sections, apply to this Section.

1.2 SUMMARY

A. This Section includes the following lighting controls:
   1. Hardwired, low-voltage control.
   2. Outdoor and indoor photoelectric switches.
   3. Indoor occupancy sensors.
   4. Indoor occupancy sensor/daylight sensor w/ dimming control

B. Related Sections include the following:
   1. Division 26 Section "Wiring Devices" for wall-box dimmers and manual light switches.
   2. Division 26 Section "Lighting Control Devices" for time switches, photoelectric switches, occupancy sensors, and multipole contactors.

1.3 DEFINITIONS

A. Monitoring: Acquisition, processing, communication, and display of equipment status data, metered electrical parameter values, power quality evaluation data, event and alarm signals, tabulated reports, and event logs.

B. PC: Personal computer; sometimes plural as "PCs."

C. RS-485: A serial network protocol, similar to RS-232, complying with TIA/EIA-485-A.

D. LED: Light-emitting diode.

E. PIR: Passive infrared.

F. US: Ultrasonic.

G. DT: Dual Technology

1.4 SUBMITTALS

A. Product Data: For each type of product indicated.

B. Shop Drawings: Detail assemblies of standard components, custom assembled for specific application on this Project.

C. Shop Drawings: Show installation details for occupancy and light-level sensors.
   1. Lighting plan showing location, orientation, and coverage area of each sensor.
   2. Interconnection diagrams showing field-installed wiring.
   3. Outline Drawings: Indicate dimensions, weights, arrangement of components, and clearance and access requirements.
   4.

5. Block Diagram: Show interconnections between components specified in this Section and devices furnished with power distribution system components. Indicate data communication paths and identify networks, data buses, data gateways, concentrators, and other devices to be used. Describe characteristics of network and other data communication lines.
6. Wiring Diagrams: Power, signal, and control wiring. Coordinate nomenclature and presentation with a block diagram.

D. Field quality-control test reports.

E. Operation and Maintenance Data: For lighting controls to include in emergency, operation, and maintenance manuals.

1.5 QUALITY ASSURANCE

A. Source Limitations: Obtain lighting control module and power distribution components through one source from a single manufacturer.

B. Electrical Components, Devices, and Accessories: Listed and labeled as defined in NFPA 70, Article 100, by a testing agency acceptable to authorities having jurisdiction, and marked for intended use.

C. Comply with 47 CFR, Subparts A and B, for Class A digital devices.

D. Comply with NFPA 70.

1.6 COORDINATION

A. Coordinate lighting control components to form an integrated interconnection of compatible components.
1. Match components and interconnections for optimum performance of lighting control functions.

1.7 WARRANTY

A. Special Warranty: Manufacturer's standard form in which manufacturer agrees to repair or replace components of lighting controls that fail in materials or workmanship within specified warranty period.

B.
1. Failures include, but are not limited to, the following:
   a. Software: Failure of input/output to execute switching or dimming commands.
   b. Failure of modular relays to operate under manual or software commands.
   c. Damage of electronic components due to transient voltage surges.
2. Warranty Period: Cost to repair or replace malfunctioning parts for two years from date of Substantial Completion.
3. Extended Warranty Period: Cost of replacement parts that failed in service due to transient voltage surges (materials only, f.o.b. the nearest shipping point to Project site) for eight years.
4. Extended Warranty Period: Cost to repair or replace electrically held relays for 10 years from date of Substantial Completion.

PART 2 - PRODUCTS

2.1 INDOOR OCCUPANCY SENSORS AND COMBINATION ON/OFF DIMMING CONTROL SENSORS

A. Manufacturers:
1. Hubbell Lighting Inc.
2. Watt Stopper (The).
3. SENSOR SWITCH

B. General Description: Wall- or ceiling-mounting, solid-state units with a separate relay unit.
1. Operation: Unless otherwise indicated, turn lights on when covered area is occupied and off when unoccupied; with a time delay for turning lights off, adjustable over a minimum range of 1 to 15 minutes.
2. Sensor Output: Contacts rated to operate the connected relay, complying with UL 773A. Sensor shall be powered from the relay unit.
3. Relay Unit: Dry contacts rated for 20-A ballast load at 120- and 277-V ac, for 13-A tungsten at 120-V ac, and for 1 hp at 120-V ac. Power supply to sensor shall be 24-V dc, 150-mA, Class 2 power source as defined by NFPA 70.
4. Mounting:
   a. Sensor: Suitable for mounting in any position on a standard outlet box.
   b. Relay: Externally mounted though a 1/2-inch (13-mm) knockout in a standard electrical enclosure.
   c. Time-Delay and Sensitivity Adjustments: Recessed and concealed behind hinged door.
5. Indicator: LED, to show when motion is being detected during testing and normal operation of the sensor.
6. Bypass Switch: Override the on function in case of sensor failure.

C. Dual-Technology Type: Ceiling mounting; detect occupancy by using a combination of PIR and ultrasonic detection methods in area of coverage. Particular technology or combination of technologies that controls on and off functions shall be selectable in the field by operating controls on unit.
1. Sensitivity Adjustment: Separate for each sensing technology.
2. Detector Sensitivity: Detect occurrences of 6-inch (150-mm) minimum movement of any portion of a human body that presents a target of at least 36 sq. in. (232 sq. cm), and detect a person of average size and weight moving at least 12 inches (305 mm) in either a horizontal or a vertical manner at an approximate speed of 12 inches/s (305 mm/s).
3.
4. Detection Coverage (Standard Room): Detect occupancy anywhere within a circular area of 1000 sq. ft. (93 sq. m) when mounted on a 96-inch- (2440-mm-) high ceiling.

5. Provide auxiliary contact for HVAC controls

D. Combination Dual Technology On/Off and Dimming Control: Ceiling mounting; detect occupancy by using combination of PIR and ultrasound detection, and control dimmable ballasts with daylight control units.
1. Sensitivity Adjustment: Separate for each sensing technology.
2. Detector Sensitivity: Detect occurrences of 6-inch (150-mm) minimum movement of any portion of a human body that presents a target of at least 36 sq. in. (232 sq. cm), and detect a person of average size and weight moving at least 12 inches (305 mm) in either a horizontal or a vertical manner at an approximate speed of 12 inches/s (305 mm/s).
3. Detection Coverage (Standard Room): Detect occupancy anywhere within a circular area of 1000 sq. ft. (93 sq. m) when mounted on a 96-inch- (2440-mm-) high ceiling.
4. Day light sensor dims ballasts to lowest level, but does not shut light off Use Sensor switch –PC-ADC or equivalent)

2.2 CONDUCTORS AND CABLES

A. Power Wiring to Supply Side of Class 2 Power Source: Not smaller than No. 12 AWG, complying with Division 26 Section "Low-Voltage Electrical Power Conductors and Cables."

B. Classes 2 and 3 Control Cable: Multiconductor cable with copper conductors not smaller than No. 18 AWG, complying with Division 26 Section "Low-Voltage Electrical Power Conductors and Cables."

C. Class 1 Control Cable: Multiconductor cable with copper conductors not smaller than No. 14 AWG, complying with Division 26 Section "Low-Voltage Electrical Power Conductors and Cables."

D. Digital and Multiplexed Signal Wire: Shielded, twisted-pair cable complying with Division 27 Section "Voice and Data Communication Cabling."

PART 3 - EXECUTION

3.1 SENSOR INSTALLATION

A. Install and aim sensors in locations to achieve at least 90 percent coverage of areas indicated. Do not exceed coverage limits specified in manufacturer's written instructions.

3.2 WIRING INSTALLATION

A. Wiring Method: Install wiring in raceways. Comply with Division 26 Section "Low-Voltage Electrical Power Conductors and Cables." Minimum conduit size shall be 3/4 inch (19 mm).

B. Wiring within Enclosures: Bundle, lace, and train conductors to terminal points. Separate power-limited and non-power-limited conductors according to conductor manufacturer's written instructions.

C. Install field-mounting transient voltage suppressors for lighting control devices in Category A locations that do not have integral line-voltage surge protection.

D. Size conductors according to lighting control device manufacturer's written instructions, unless otherwise indicated.

E. Splices, Taps, and Terminations: Make connections only on numbered terminal strips in terminal cabinets, equipment enclosures, and in junction, pull, and outlet boxes.

F. Tighten electrical connectors and terminals according to manufacturer's published torque-tightening values. If manufacturer's torque values are not indicated, use those specified in UL 486A and UL 486B.

3.3 IDENTIFICATION

A. Identify components and power and control wiring according to Division 26 Section "Identification for Electrical Systems."

3.4 FIELD QUALITY CONTROL

A. Perform the following field tests and inspections and prepare test reports:
   1. After installing time switches and sensors, and after electrical circuitry has been energized, adjust and test for compliance with requirements.
   2. Operational Test: Verify actuation of each sensor and adjust time delays.

B. Remove and replace lighting control devices where test results indicate that they do not comply with specified requirements.

C. Additional testing and inspecting, at Contractor's expense, will be performed to determine compliance of replaced or additional work with specified requirements.

D. Manufacturer's Field Service: Engage a factory-authorized service representative to inspect, test, and adjust field-assembled components and equipment installation, including connections, and assist in field testing. Report results in writing.

E. Perform the following field tests and inspections and prepare test reports:
   1. Test for circuit continuity.
   2. Verify that the control module features are operational.
   3. Check operation of local override controls.
   4. Test system diagnostics by simulating improper operation of several components selected by Architect.

3.5 COMMISSIONING

A. Manufacturer Commissioning: obtain the services of the manufacturer of the occupancy sensors to test and adjust each sensor for the application to eliminate false operation.

B. Relocate sensors as required to eliminate false operation.

C. Replace defective or inappropriate sensors with sensors suitable for the function intended.

3.6 ADJUSTING

A. Occupancy Adjustments: When requested within 12 months of date of Substantial Completion, provide on-site assistance in adjusting sensors to suit actual occupied conditions. Provide up to two visits to site outside normal occupancy hours for this purpose.

END OF SECTION 260943

SECTION 262200

DRY-TYPE TRANSFORMERS (600 V AND LESS)

PART 1 - GENERAL

1.1 RELATED DOCUMENTS

A. Drawings and general provisions of the Contract, including General and Supplementary Conditions and Division 1 Specification Sections, apply to this Section.

1.2 SUMMARY

A. This Section includes the following types of dry-type transformers rated 600 V and less, with capacities up to 1000 kVA:
   1. Distribution transformers.
   2. Harmonics Mitigating transformers.

1.3 SUBMITTALS

A. Product Data Include rated nameplate data, capacities, weights, dimensions, minimum clearances, installed devices and features, and performance for each type and size of transformer indicated.

B. Shop Drawings: Wiring and connection diagrams.

C. Manufacturer Seismic Qualification Certification: Submit certification that transformer assembly and components will withstand seismic forces defined in Division 26 Section "Seismic Controls for Electrical Systems." Include the following:
   1. Basis for Certification: Indicate whether withstand certification is based on actual test of assembled components or on calculation.
      a. The term "withstand" means "the unit will remain in place without separation of any parts from the device when subjected to the seismic forces specified and the unit will be fully operational after the seismic event."
   2. Dimensioned Outline Drawings of Equipment Unit: Identify center of gravity and locate and describe mounting and anchorage provisions.
   3. Detailed description of equipment anchorage devices on which the certification is based and their installation requirements.

D. Linear Load Testing: Certified type test results for linear load efficiency from 35 to 65% load for each size of harmonics mitigating transformer specified.

E. Non-linear Load Testing: Certified type test results for non-linear load testing up to the lesser of either full load or 225 kVA for each harmonic mitigating transformer specified.

F. Output Settings Reports: Record of tap adjustments specified in Part 3.

1.4 QUALITY ASSURANCE

A. Electrical Components, Devices, and Accessories: Listed and labeled as defined in NFPA 70, Article 100, by a testing agency acceptable to authorities having jurisdiction, and marked for intended use.

B. Comply with IEEE C 57.12.91.

C. Energy-Efficient Transformers Rated 15 kVA and Larger: Certified as meeting NEMA TP 1, Class 1 efficiency levels when tested according to NEMA TP 2.

1.5 DELIVERY, STORAGE, AND HANDLING

A. Temporary Heating: Apply temporary heat according to manufacturer's written instructions within the enclosure of each ventilated-type unit, throughout periods during which equipment is not energized and when transformer is not in a space that is continuously under normal control of temperature and humidity.

1.6 COORDINATION

A. Coordinate size and location of concrete bases. Cast anchor-bolt inserts into bases. Concrete, reinforcement, and formwork requirements are specified in Division 3.

B. Coordinate installation of wall-mounting and structure-hanging supports.

PART 2 - PRODUCTS

2.1 MANUFACTURERS

A. Manufacturers of distribution transformers: Subject to compliance with requirements, provide products by one of the following:
1. Cutler-Hammer.
2. GE Electrical Distribution & Control.
3. Siemens Energy & Automation, Inc.
4. Square D/Groupe Schneider NA.

B. Manufacturers of harmonics mitigating transformers: Subject to compliance with requirements, provide products by one of the following:
1. Powersmiths
2. Mirus Inc.
3. Harmonics Ltd.
4. General Electric Distribution & Control.
5. Siemens Energy & Automation
6. Cutler-Hammer

2.2 MATERIALS

A. Description: Factory-assembled and -tested, air-cooled units for 60-Hz service.

B. Cores: Grain-oriented, non-aging silicon steel.

C. Coils: Continuous windings without splices, except for taps.
1. Internal Coil Connections: Brazed or pressure type.
2. Coil Material: Copper.

2.3 DISTRIBUTION TRANSFORMERS

A. Comply with NEMA ST 20, and list and label as complying with UL 1561.

B. Provide transformers that are internally braced to withstand seismic forces specified in Division 26 Section "Seismic Controls for Electrical Systems."

C. Cores: One leg per phase.

Two paragraphs below are for indoor transformers. Spectrum Practice is to specify ventilated dripproof enclosures for indoor transformers.

D. Enclosure: Ventilated, dripproof, NEMA 250, Type 2.
   1. Core and coil shall be encapsulated within resin compound, sealing out moisture and air.

E. Indoor Transformer Enclosure Finish: Comply with NEMA 250 for "Indoor Corrosion Protection."
   1. Finish Color: Gray.

F. Insulation Class: 220 deg C, UL-component-recognized insulation system with a maximum of 150 deg C rise above 40 deg C ambient temperature.

G. Taps for Transformers Smaller Than 3 kVA: None.

H. Taps for Transformers 7.5 to 24 kVA: One 5 percent tap above and one 5 percent tap below normal full capacity.

I. Taps for Transformers 25 kVA and Larger: Two 2.5 percent taps above and two 2.5 percent taps below normal full capacity.

J. K-Factor Rating: Transformers indicated to be K-factor rated shall comply with UL 1561 requirements for nonsinusoidal load current-handling capability to the degree defined by designated K-factor.
   1. Unit shall not overheat when carrying full-load current with harmonic distortion corresponding to designated K-factor.
   2. Indicate value of K-factor on transformer nameplate.

K. Electrostatic Shielding: Each winding shall have an independent, single, full-width copper electrostatic shield arranged to minimize interwinding capacitance.
   1. Arrange coil leads and terminal strips to minimize capacitive coupling between input and output terminals.
   2. Include special terminal for grounding the shield.
   3. Shield Effectiveness:
      a. Capacitance between Primary and Secondary Windings: Not to exceed 33 picofarads over a frequency range of 20 Hz to 1 MHz.
      b. Common-Mode Noise Attenuation: Minus 120 dBA minimum at 0.5 to 1.5 kHz; minus 65 dBA minimum at 1.5 to 100 kHz.
      c. Normal-Mode Noise Attenuation: Minus 52 dBA minimum at 1.5 to 10 kHz.

L. Wall Brackets: Manufacturer's standard brackets.

M. Low-Sound-Level Requirements: Minimum of 3 dBA less than NEMA ST 20 standard sound levels when factory tested according to IEEE C57.12.91.

2.4 HARMONICS MITIGATING TRANSFORMERS

A. Basic requirements as specified for distribution transformers.

B. General Description:
   1. Harmonic Mitigating transformer efficiency complying with Energy Star requirements over the operating range from 35% to 65% load.
   2. Treatment of triplen (third, ninth and fifteenth) harmonic load currents: Secondary winding configuration must cancel fluxes due to zero sequence harmonic currents without coupling them to the primary winding.

3. Harmonic mitigating by electromagnetic means only. Capacitors or electronics are not allowed.

C. Characteristics
1. Positive and Negative sequence impedance at 60 Hz:
   a. 2.8% to 3.5% (up to 75 kVA)
   b. 3.2% to 4.5 % (112.5 t0 300 kVA)
   c. 5.0% to 6.0 % (500 kVA)
   d. 6.0% to 6.75% (750 kVA)
2. Zero Sequence Impedance and Reactance at 60 Hz less than or equal to:
   a. 0.95% and 0.3% for up to 150 kVA
   b. 1.0% and 0.5% for 225 kVA
   c. 1.5% and 1.0% for 500 kVA
   d. 2.0% and 1.5% for 750 kVA
3. Load Compatibility: K-factor 20, Crest factor 4.5.
4. Secondary Neutral connection rated at 200% of the rated secondary phase current.
5. Linear Load Efficiency: Comply to Energy Star and NEMA standard TP-1 requirement for efficiency at 35% load and for the operating range from 35% to 65% linear load:
   a. 97% at 15 kVA
   b. 97.5% at 30 kVA
   c. 97.7% at 45 kVA
   d. 98% at 45 kVA
   e. 98.2% at 112.5 kVA
   f. 98.3% at 150 kVA
   g. 98.5% at 225 kVA
   h. 98.5% at 300 kVA
   i. 98.7% at 500 kVA
   j. 98.8% at 750 kVA

2.5 SOURCE QUALITY CONTROL

A. Test and inspect transformers according to IEEE C57.12.91.

B. Factory Sound-Level Tests: Conduct sound-level tests on equipment for this Project.

PART 3 - EXECUTION

3.1 EXAMINATION

A. Examine conditions for compliance with enclosure- and ambient-temperature requirements for each transformer.

B. Verify that field measurements are as needed to maintain working clearances required by NFPA 70 and manufacturer's written instructions.

C. Examine walls and floors for suitable mounting conditions where transformers will be installed.

D. Proceed with installation only after unsatisfactory conditions have been corrected.

3.2 INSTALLATION

A. Install wall-mounting transformers level and plumb with wall brackets fabricated by transformer manufacturer.
1. Brace wall-mounting transformers as specified in Division 26 Section "Seismic Controls for Electrical Systems."

B. Install floor-mounting transformers level on concrete bases. Construct concrete bases of dimensions indicated, but not less than 4 inches (100 mm) larger in both directions than supported unit and 4 inches (100 mm) high.
   1. Anchor transformers to concrete bases according to manufacturer's written instructions, seismic codes at Project, and requirements in Division 26 Section "Seismic Controls for Electrical Systems."

3.3 CONNECTIONS

A. Ground equipment according to Division 26 Section "Grounding and Bonding for Electrical Systems."

B. Connect wiring according to Division 26 Section "Low-Voltage Electrical Power Conductors and Cables."

C. Tighten electrical connectors and terminals according to manufacturer's published torque-tightening values. If manufacturer's torque values are not indicated, use those specified in UL 486A and UL 486B.

3.4 ADJUSTING

A. Record transformer secondary voltage at each unit for at least 48 hours of typical occupancy period. Adjust transformer taps to provide optimum voltage conditions at secondary terminals. Optimum is defined as not exceeding nameplate voltage plus 10 percent and not being lower than nameplate voltage minus 5 percent. Submit recording and tap settings as test results.

B. Adjust buck-boost transformers to provide nameplate voltage of equipment being served, plus or minus 5 percent, at secondary terminals.

C. Output Settings Report: Prepare a written report recording output voltages and tap settings.

END OF SECTION 262200

SECTION 262416 - PANELBOARDS

PART 1 - GENERAL

1.1 RELATED DOCUMENTS

A. Drawings and general provisions of the Contract, including General and Supplementary Conditions and Division 01 Specification Sections, apply to this Section.

1.2 SUMMARY

A. Section Includes:
1. Distribution panelboards.
2. Lighting and appliance branch-circuit panelboards.
3. Electronic-grade panelboards.

1.3 DEFINITIONS

A. SVR: Suppressed voltage rating.

B. TVSS: Transient voltage surge suppressor.

1.4 PERFORMANCE REQUIREMENTS

A. Seismic Performance: Panelboards shall withstand the effects of earthquake motions determined according to SEI/ASCE 7.
1. The term "withstand" means "the unit will remain in place without separation of any parts from the device when subjected to the seismic forces specified and the unit will be fully operational after the seismic event."

1.5 SUBMITTALS

A. Product Data: For each type of panelboard, switching and overcurrent protective device, transient voltage suppression device, accessory, and component indicated. Include dimensions and manufacturers' technical data on features, performance, electrical characteristics, ratings, and finishes.

B. Shop Drawings: For each panelboard and related equipment.
1. Include dimensioned plans, elevations, sections, and details. Show tabulations of installed devices, equipment features, and ratings.
2. Detail enclosure types and details for types other than NEMA 250, Type 1.
3. Detail bus configuration, current, and voltage ratings.
4. Short-circuit current rating of panelboards and overcurrent protective devices.
5. Include evidence of NRTL listing for series rating of installed devices.
6. Detail features, characteristics, ratings, and factory settings of individual overcurrent protective devices and auxiliary components.
7. Include wiring diagrams for power, signal, and control wiring.

©2006 Spectrum Engineers, Inc.

8. Include time-current coordination curves for each type and rating of overcurrent protective device included in panelboards. Submit on translucent log-log graft paper; include selectable ranges for each type of overcurrent protective device.

C. Qualification Data: For qualified testing agency.

D. Seismic Qualification Certificates: Submit certification that panelboards, overcurrent protective devices, accessories, and components will withstand seismic forces defined in Division 26 Section "Vibration and Seismic Controls for Electrical Systems." Include the following:
   1. Basis for Certification: Indicate whether withstand certification is based on actual test of assembled components or on calculation.
   2. Dimensioned Outline Drawings of Equipment Unit: Identify center of gravity and locate and describe mounting and anchorage provisions.
   3. Detailed description of equipment anchorage devices on which the certification is based and their installation requirements.

E. Field Quality-Control Reports:
   1. Test procedures used.
   2. Test results that comply with requirements.
   3. Results of failed tests and corrective action taken to achieve test results that comply with requirements.

F. Panelboard Schedules: For installation in panelboards.

G. Operation and Maintenance Data: For panelboards and components to include in emergency, operation, and maintenance manuals. In addition to items specified in Division 01 Section "Operation and Maintenance Data," include the following:
   1. Manufacturer's written instructions for testing and adjusting overcurrent protective devices.
   2. Time-current curves, including selectable ranges for each type of overcurrent protective device that allows adjustments.

1.6 QUALITY ASSURANCE

A. Testing Agency Qualifications: Member company of NETA or an NRTL.
   1. Testing Agency's Field Supervisor: Currently certified by NETA to supervise on-site testing.

B. Source Limitations: Obtain panelboards, overcurrent protective devices, components, and accessories from single source from single manufacturer.

C. Product Selection for Restricted Space: Drawings indicate maximum dimensions for panelboards including clearances between panelboards and adjacent surfaces and other items. Comply with indicated maximum dimensions.

D. Electrical Components, Devices, and Accessories: Listed and labeled as defined in NFPA 70, by a qualified testing agency, and marked for intended location and application.

E. Comply with NEMA PB 1.

F. Comply with NFPA 70.

©2006 Spectrum Engineers, Inc.

1.7 DELIVERY, STORAGE, AND HANDLING

A. Remove loose packing and flammable materials from inside panelboards; install temporary electric heating (250 W per panelboard) to prevent condensation.

B. Handle and prepare panelboards for installation according to NEMA PB 1.

1.8 PROJECT CONDITIONS

A. Environmental Limitations:
   1. Do not deliver or install panelboards until spaces are enclosed and weathertight, wet work in spaces is complete and dry, work above panelboards is complete, and temporary HVAC system is operating and maintaining ambient temperature and humidity conditions at occupancy levels during the remainder of the construction period.
   2. Rate equipment for continuous operation under the following conditions unless otherwise indicated:
      a. Ambient Temperature: Not exceeding 23 deg F (minus 5 deg C) to plus 104 deg F (plus 40 deg C).
      b. Altitude: Not exceeding 6600 feet (2000 m).

B. Service Conditions: NEMA PB 1, usual service conditions, as follows:
   1. Ambient temperatures within limits specified.
   2. Altitude not exceeding 6600 feet (2000 m).

C. Interruption of Existing Electric Service: Do not interrupt electric service to facilities occupied by Owner or others unless permitted under the following conditions and then only after arranging to provide temporary electric service according to requirements indicated:
   1. Notify Architect Construction Manager Owner no fewer than two weeks in advance of proposed interruption of electric service.
   2. Do not proceed with interruption of electric service without Construction Manager's Owner's written permission.
   3. Comply with NFPA 70E.

1.9 COORDINATION

A. Coordinate layout and installation of panelboards and components with other construction that penetrates walls or is supported by them, including electrical and other types of equipment, raceways, piping, encumbrances to workspace clearance requirements, and adjacent surfaces. Maintain required workspace clearances and required clearances for equipment access doors and panels.

B. Coordinate sizes and locations of concrete bases with actual equipment provided. Cast anchor-bolt inserts into bases. Concrete, reinforcement, and formwork requirements are specified in Division 03.

1.10 WARRANTY

A. Special Warranty: Manufacturer's standard form in which manufacturer agrees to repair or replace transient voltage suppression devices that fail in materials or workmanship within specified warranty period.
   1. Warranty Period: Five years from date of Substantial Completion.

©2006 Spectrum Engineers, Inc.

1.11 EXTRA MATERIALS

A. Furnish extra materials that match products installed and that are packaged with protective covering for storage and identified with labels describing contents.
   1. Keys: Two spares for each type of panelboard cabinet lock.
   2. Circuit Breakers Including GFCI and Ground Fault Equipment Protection (GFEP) Types: Two spares for each panelboard.
   3. Fuses for Fused Switches: Equal to 10 percent of quantity installed for each size and type, but no fewer than three of each size and type.
   4. Fuses for Fused Power-Circuit Devices: Equal to 10 percent of quantity installed for each size and type, but no fewer than three of each size and type.

PART 2 - PRODUCTS

2.1 GENERAL REQUIREMENTS FOR PANELBOARDS

A. Fabricate and test panelboards according to IEEE 344 to withstand seismic forces defined in Division 26 Section "Vibration and Seismic Controls for Electrical Systems."

B. Enclosures: Surface-mounted cabinets.
   1. Rated for environmental conditions at installed location.
      a. Indoor Dry and Clean Locations: NEMA 250, Type 1.
      b. Outdoor Locations: NEMA 250, Type 3R.
      c. Indoor Locations Subject to Dust, Falling Dirt, and Dripping Noncorrosive Liquids: NEMA 250, Type 5.
   2. Hinged Front Cover: Entire front trim hinged to box and with standard door within hinged trim cover.
   3. Skirt for Surface-Mounted Panelboards: Same gage and finish as panelboard front with flanges for attachment to panelboard, wall, and ceiling or floor.
   4. Gutter Extension and Barrier: Same gage and finish as panelboard enclosure; integral with enclosure body. Arrange to isolate individual panel sections.
   5. Finishes:
      a. Panels and Trim: Steel and galvanized steel, factory finished immediately after cleaning and pretreating with manufacturer's standard two-coat, baked-on finish consisting of prime coat and thermosetting topcoat.
      b. Back Boxes: Same finish as panels and trim.
      c. Fungus Proofing: Permanent fungicidal treatment for overcurrent protective devices and other components.
   6. Directory Card: Inside panelboard door, mounted in metal frame with transparent protective cover.

C. Incoming Mains Location: Top and bottom.

D. Phase, Neutral, and Ground Buses:
   1. Material: Hard-drawn copper, 98 percent conductivity.
   2. Equipment Ground Bus: Adequate for feeder and branch-circuit equipment grounding conductors; bonded to box.
   3. Isolated Ground Bus: Adequate for branch-circuit isolated ground conductors; insulated from box.
   4. Extra-Capacity Neutral Bus: Neutral bus rated 200 percent of phase bus and UL listed as suitable for nonlinear loads.
   5. Split Bus: Vertical buses divided into individual vertical sections.

©2006 Spectrum Engineers, Inc.

E. Conductor Connectors: Suitable for use with conductor material and sizes.
   1. Material: Hard-drawn copper, 98 percent conductivity.
   2. Main and Neutral Lugs: Mechanical type.
   3. Ground Lugs and Bus-Configured Terminators: Mechanical type.
   4. Feed-Through Lugs: Mechanical type, suitable for use with conductor material. Locate at opposite end of bus from incoming lugs or main device.
   5. Subfeed (Double) Lugs: Mechanical type suitable for use with conductor material. Locate at same end of bus as incoming lugs or main device.
   6. Gutter-Tap Lugs: Mechanical type suitable for use with conductor material. Locate at same end of bus as incoming lugs or main device.
   7. Extra-Capacity Neutral Lugs: Rated 200 percent of phase lugs mounted on extra-capacity neutral bus.

F. Service Equipment Label: NRTL labeled for use as service equipment for panelboards or load centers with one or more main service disconnecting and overcurrent protective devices.

G. Future Devices: Mounting brackets, bus connections, filler plates, and necessary appurtenances required for future installation of devices.

H. Panelboard Short-Circuit Current Rating: Rated for series-connected system with integral or remote upstream overcurrent protective devices and labeled by an NRTL. Include size and type of allowable upstream and branch devices, listed and labeled for series-connected short-circuit rating by an NRTL.

2.2 DISTRIBUTION PANELBOARDS

A. Manufacturers: Subject to compliance with requirements, provide products by one of the following:
   1. Eaton Electrical Inc.; Cutler-Hammer Business Unit.
   2. General Electric Company; GE Consumer & Industrial - Electrical Distribution.
   3. Siemens Energy & Automation, Inc.
   4. Square D; a brand of Schneider Electric.

B. Panelboards: NEMA PB 1, power and feeder distribution type.

C. Mains: Circuit breaker.

D. Branch Overcurrent Protective Devices for Circuit-Breaker Frame Sizes 125 A and Smaller: Bolt-on circuit breakers.

E. Branch Overcurrent Protective Devices for Circuit-Breaker Frame Sizes Larger Than 125 A: Bolt-on circuit breakers; plug-in circuit breakers where individual positive-locking device requires mechanical release for removal.

F. Branch Overcurrent Protective Devices: Fused switches.

G. Contactors in Main Bus: NEMA ICS 2, Class A, mechanically held, general-purpose controller, with same short-circuit interrupting rating as panelboard.
   1. Internal Control-Power Source: Control-power transformer, with fused primary and secondary terminals, connected to main bus ahead of contactor connection.

©2006 Spectrum Engineers, Inc.

2.3 LIGHTING AND APPLIANCE BRANCH-CIRCUIT PANELBOARDS

A. Manufacturers: Subject to compliance with requirements, provide products by one of the following:
   1. Eaton Electrical Inc.; Cutler-Hammer Business Unit.
   2. General Electric Company; GE Consumer & Industrial - Electrical Distribution.
   3. Siemens Energy & Automation, Inc.
   4. Square D; a brand of Schneider Electric.

B. Panelboards: NEMA PB 1, lighting and appliance branch-circuit type.

C. Branch Overcurrent Protective Devices: Bolt-on circuit breakers, replaceable without disturbing adjacent units.

D. Contactors in Main Bus: NEMA ICS 2, Class A, mechanically held, general-purpose controller, with same short-circuit interrupting rating as panelboard.
   1. Internal Control-Power Source: Control-power transformer, with fused primary and secondary terminals, connected to main bus ahead of contactor connection.
   2. External Control-Power Source: 24-V control circuit.

E. Doors: Concealed hinges; secured with flush latch with tumbler lock; keyed alike.

F. Column-Type Panelboards: Narrow gutter extension, with cover, to overhead junction box equipped with ground and neutral terminal buses.

2.4 ELECTRONIC-GRADE PANELBOARDS

A. Manufacturers: Subject to compliance with requirements, provide products by one of the following
   1. Current Technology; a subsidiary of Danahar Corporation.
   2. Eaton Electrical Inc.; Cutler-Hammer Business Unit.
   3. General Electric Company; GE Consumer & Industrial - Electrical Distribution.
   4. Liebert Corporation.
   5. Siemens Energy & Automation, Inc.
   6. Square D; a brand of Schneider Electric.

B. Panelboards: NEMA PB 1; with factory-installed, integral TVSS; labeled by an NRTL for compliance with UL 67 after installing TVSS.

C. Doors: Secured with vault-type latch with tumbler lock; keyed alike.

D. Main Overcurrent Protective Devices: Bolt-on thermal-magnetic circuit breakers.

E. Branch Overcurrent Protective Devices: Bolt-on thermal-magnetic circuit breakers.

F. Buses:
   1. Copper phase and neutral buses; 200 percent capacity neutral bus and lugs.
   2. Copper equipment and isolated ground buses.

G. Surge Protection Device: IEEE C62.41-compliant, integrally mounted, bolt-on, solid-state, parallel-connected, non-modular type, with sine-wave tracking suppression and filtering modules, short-circuit current rating complying with UL 1449, second edition, and matching or exceeding the panelboard short-circuit rating, redundant suppression circuits, with individually fused metal-oxide varistors.

©2006 Spectrum Engineers, Inc.

1. Accessories:
   a. Fuses rated at 200-kA interrupting capacity.
   b. Fabrication using bolted compression lugs for internal wiring.
   c. Integral disconnect switch.
   d. Redundant suppression circuits.
   e. Redundant replaceable modules.
   f. Arrangement with wire connections to phase buses, neutral bus, and ground bus.
   g. LED indicator lights for power and protection status.
   h. Audible alarm, with silencing switch, to indicate when protection has failed.
   i. Form-C contacts rated at 5 A and 250-V ac, one normally open and one normally closed, for remote monitoring of system operation. Contacts shall reverse position on failure of any surge diversion module or on opening of any current-limiting device. Coordinate with building power monitoring and control system.
   j. Four-digit, transient-event counter set to totalize transient surges.
2. Peak Single-Impulse Surge Current Rating: 160 kA per mode/320 kA per phase.
3. Minimum single-impulse current ratings, using 8-by-20-mic.sec. waveform described in IEEE C62.41.2.
   a. Line to Neutral: 70,000 A.
   b. Line to Ground: 70,000 A.
   c. Neutral to Ground: 50,000 A.
4. Withstand Capabilities: 12,000 IEEE C62.41, Category C3 (10 kA), 8-by-20-mic.sec. surges with less than 5 percent change in clamping voltage.
5. Protection modes and UL 1449 SVR for grounded wye circuits with 480Y/277 208Y/120-V, three-phase, four-wire circuits shall be as follows:
   a. Line to Neutral: 800 V for 480Y/277 400 V for 208Y/120.
   b. Line to Ground: 800 V for 480Y/277 400 V for 208Y/120.
   c. Neutral to Ground: 800 V for 480Y/277 400 V for 208Y/120.
6. Protection modes and UL 1449 SVR for 240/120-V, single-phase, three-wire circuits shall be as follows:
   a. Line to Neutral: 400 V.
   b. Line to Ground: 400 V.
   c. Neutral to Ground: 400 V.
7. Protection modes and UL 1449 SVR for 240/120-V, three-phase, four-wire circuits with high leg shall be as follows:
   a. Line to Neutral: 400 V, 800 V from high leg.
   b. Line to Ground: 400 V.
   c. Neutral to Ground: 400 V.
8. Protection modes and UL 1449 SVR for 240-, 480-, or 600-V, three-phase, three-wire, delta circuits shall be as follows:
   a. Line to Line: 2000 V for 480 V.
   b. Line to Ground: 1500 V for 480 V.

2.5 DISCONNECTING AND OVERCURRENT PROTECTIVE DEVICES

A. Manufacturers: Subject to compliance with requirements, provide products by one of the following:
   1. Eaton Electrical Inc.; Cutler-Hammer Business Unit.
   2. General Electric Company; GE Consumer & Industrial - Electrical Distribution.
   3. Siemens Energy & Automation, Inc.
   4. Square D; a brand of Schneider Electric.

B. Molded-Case Circuit Breaker (MCCB): Comply with UL 489, with series-connected rating to meet available fault currents.

©2006 Spectrum Engineers, Inc.

1. Thermal-Magnetic Circuit Breakers: Inverse time-current element for low-level overloads, and instantaneous magnetic trip element for short circuits. Adjustable magnetic trip setting for circuit-breaker frame sizes 250 A and larger.
2. Adjustable Instantaneous-Trip Circuit Breakers: Magnetic trip element with front-mounted, field-adjustable trip setting.
3. Electronic trip circuit breakers with rms sensing; field-replaceable rating plug or field-replicable electronic trip; and the following field-adjustable settings:
   a. Instantaneous trip.
   b. Long- and short-time pickup levels.
   c. Long- and short-time time adjustments.
   d. Ground-fault pickup level, time delay, and I^2t response.
4. Current-Limiting Circuit Breakers: Frame sizes 400 A and smaller; let-through ratings less than NEMA FU 1, RK-5.
5. GFCI Circuit Breakers: Single- and two-pole configurations with Class A ground-fault protection (6-mA trip).
6. Ground-Fault Equipment Protection (GFEP) Circuit Breakers: Class B ground-fault protection (30-mA trip).
7. Arc-Fault Circuit Interrupter (AFCI) Circuit Breakers: Comply with UL 1699; 120/240-V, single-pole configuration.
8. Molded-Case Circuit-Breaker (MCCB) Features and Accessories:
   a. Standard frame sizes, trip ratings, and number of poles.
   b. Lugs: Mechanical style, suitable for number, size, trip ratings, and conductor materials.
   c. Application Listing: Appropriate for application; Type SWD for switching fluorescent lighting loads; Type HID for feeding fluorescent and high-intensity discharge (HID) lighting circuits.
   d. Ground-Fault Protection: Integrally mounted relay and trip unit with adjustable pickup and time-delay settings, push-to-test feature, and ground-fault indicator.
   e. Communication Capability: Circuit-breaker-mounted communication module with functions and features compatible with power monitoring and control system specified in Division 26 Section "Electrical Power Monitoring and Control."
   f. Shunt Trip: 120-V trip coil energized from separate circuit, set to trip at 55 percent of rated voltage.
   g. Undervoltage Trip: Set to operate at 35 to 75 percent of rated voltage with field-adjustable 0.1- to 0.6-second time delay.
   h. Auxiliary Contacts: Two SPDT switches with "a" and "b" contacts; "a" contacts mimic circuit-breaker contacts and "b" contacts operate in reverse of circuit-breaker contacts.
   i. Alarm Switch: Single-pole, normally open contact that actuates only when circuit breaker trips.
   j. Key Interlock Kit: Externally mounted to prohibit circuit-breaker operation; key shall be removable only when circuit breaker is in off position.
   k. Zone-Selective Interlocking: Integral with electronic trip unit; for interlocking ground-fault protection function with other upstream or downstream devices.
   l. Multipole units enclosed in a single housing or factory assembled to operate as a single unit.
   m. Handle Padlocking Device: Fixed attachment, for locking circuit-breaker handle in on or off position.
   n. Handle Clamp: Loose attachment, for holding circuit-breaker handle in on position.

C. Fused Switch: NEMA KS 1, Type HD; clips to accommodate specified fuses; lockable handle.
   1. Fuses, and Spare-Fuse Cabinet: Comply with requirements specified in Division 26 Section "Fuses."
   2. Fused Switch Features and Accessories: Standard ampere ratings and number of poles.
   3. Auxiliary Contacts: Two normally open and normally closed contact(s) that operate with switch handle operation.

©2006 Spectrum Engineers, Inc.

2.6 PANELBOARD SUPPRESSORS

A. Manufacturers: Subject to compliance with requirements, provide products by one of the following:
   1. Current Technology; a subsidiary of Danahar Corporation.
   2. Eaton Electrical Inc.; Cutler-Hammer Business Unit.
   3. General Electric Company; GE Consumer & Industrial - Electrical Distribution.
   4. Liebert Corporation.
   5. Siemens Energy & Automation, Inc.
   6. Square D; a brand of Schneider Electric.

B. Surge Protection Device: IEEE C62.41-compliant, integrally mounted, solid-state, parallel-connected, non-modular type, with sine-wave tracking suppression and filtering modules, UL 1449, second edition, short-circuit current rating matching or exceeding the panelboard short-circuit rating, and with the following features and accessories:
   1. Accessories:
      a. LED indicator lights for power and protection status.
      b. Audible alarm, with silencing switch, to indicate when protection has failed.
      c. One set of dry contacts rated at 5 A and 250-V ac, for remote monitoring of protection status.

C. Surge Protection Device: IEEE C62.41-compliant, integrally mounted, bolt-on, solid-state, parallel-connected, modular (with field-replaceable modules) type, with sine-wave tracking suppression and filtering modules, UL 1449, second edition, short-circuit current rating matching or exceeding the panelboard short-circuit rating, and with the following features and accessories:
   1. Accessories:
      a. Fuses rated at 200-kA interrupting capacity.
      b. Fabrication using bolted compression lugs for internal wiring.
      c. Integral disconnect switch.
      d. Redundant suppression circuits.
      e. Redundant replaceable modules.
      f. Arrangement with wire connections to phase buses, neutral bus, and ground bus.
      g. LED indicator lights for power and protection status.
      h. Audible alarm, with silencing switch, to indicate when protection has failed.
      i. Form-C contacts rated at 5 A and 250-V ac, one normally open and one normally closed, for remote monitoring of system operation. Contacts shall reverse position on failure of any surge diversion module or on opening of any current-limiting device. Coordinate with building power monitoring and control system.
      j. Four-digit, transient-event counter set to totalize transient surges.
   2. Peak Single-Impulse Surge Current Rating: 120 kA per mode/240 kA per phase.
   3. Minimum single-impulse current ratings, using 8-by-20-mic.sec. waveform described in IEEE C62.41.2.
      a. Line to Neutral: 70,000 A.
      b. Line to Ground: 70,000 A.
      c. Neutral to Ground: 50,000 A.
   4. Withstand Capabilities: 12,000 IEEE C62.41, Category C3 (10 kA), 8-by-20-mic.sec. surges with less than 5 percent change in clamping voltage.
   5. Protection modes and UL 1449 SVR for grounded wye circuits with 480Y/277 208Y/120-V, three-phase, four-wire circuits shall be as follows:
      a. Line to Neutral: 800 V for 480Y/277 400 V for 208Y/120.
      b. Line to Ground: 800 V for 480Y/277 400 V for 208Y/120.
      c. Neutral to Ground: 800 V for 480Y/277 400 V for 208Y/120.
   6. Protection modes and UL 1449 SVR for 240/120-V, single-phase, three-wire circuits shall be as follows:
      a. Line to Neutral: 400 V.

©2006 Spectrum Engineers, Inc.

b. Line to Ground: 400 V.
c. Neutral to Ground: 400 V.

7. Protection modes and UL 1449 SVR for 240/120-V, three-phase, four-wire circuits with high leg shall be as follows:
   a. Line to Neutral: 400 V, 800 V from high leg.
   b. Line to Ground: 400 V.
   c. Neutral to Ground: 400 V.
8. Protection modes and UL 1449 SVR for 240-, 480-, or 600-V, three-phase, three-wire, delta circuits shall be as follows:
   a. Line to Line: 2000 V for 480 V.
   b. Line to Ground: 1500 V for 480 V.

2.7 ACCESSORY COMPONENTS AND FEATURES

A. Accessory Set: Include tools and miscellaneous items required for overcurrent protective device test, inspection, maintenance, and operation.

B. Portable Test Set: For testing functions of solid-state trip devices without removing from panelboard. Include relay and meter test plugs suitable for testing panelboard meters and switchboard class relays.

PART 3 - EXECUTION

3.1 EXAMINATION

A. Receive, inspect, handle, and store panelboards according to NECA 407 NEMA PB 1.1.

B. Examine panelboards before installation. Reject panelboards that are damaged or rusted or have been subjected to water saturation.

C. Examine elements and surfaces to receive panelboards for compliance with installation tolerances and other conditions affecting performance of the Work.

D. Proceed with installation only after unsatisfactory conditions have been corrected.

3.2 INSTALLATION

A. Install panelboards and accessories according to NECA 407 NEMA PB 1.1.

B. Equipment Mounting: Install panelboards on concrete bases, 4-inch (100-mm) nominal thickness. Comply with requirements for concrete base specified in Division 03 Section "Cast-in-Place Concrete."
   1. Install dowel rods to connect concrete base to concrete floor. Unless otherwise indicated, install dowel rods on 18-inch (450-mm) centers around full perimeter of base.
   2. For panelboards, install epoxy-coated anchor bolts that extend through concrete base and anchor into structural concrete floor.
   3. Place and secure anchorage devices. Use setting drawings, templates, diagrams, instructions, and directions furnished with items to be embedded.
   4. Install anchor bolts to elevations required for proper attachment to panelboards.
   5. Attach panelboard to the vertical finished or structural surface behind the panelboard.

©2006 Spectrum Engineers, Inc.

C. Temporary Lifting Provisions: Remove temporary lifting eyes, channels, and brackets and temporary blocking of moving parts from panelboards.

D. Comply with mounting and anchoring requirements specified in Division 26 Section "Vibration and Seismic Controls for Electrical Systems."

E. Mount top of trim 90 inches (2286 mm) above finished floor unless otherwise indicated.

F. Mount panelboard cabinet plumb and rigid without distortion of box. Mount recessed panelboards with fronts uniformly flush with wall finish and mating with back box.

G. Install overcurrent protective devices and controllers not already factory installed.
   1. Set field-adjustable, circuit-breaker trip ranges.

H. Install filler plates in unused spaces.

I. Stub four 1-inch (27-GRC) empty conduits from panelboard into accessible ceiling space or space designated to be ceiling space in the future. Stub four 1-inch (27-GRC) empty conduits into raised floor space or below slab not on grade.

J. Arrange conductors in gutters into groups and bundle and wrap with wire ties.

K. Comply with NECA 1.

3.3 IDENTIFICATION

A. Identify field-installed conductors, interconnecting wiring, and components; provide warning signs complying with Division 26 Section "Identification for Electrical Systems."

B. Create a directory to indicate installed circuit loads; incorporate Owner's final room designations. Obtain approval before installing. Use a computer or typewriter to create directory; handwritten directories are not acceptable.

C. Panelboard Nameplates: Label each panelboard with a nameplate complying with requirements for identification specified in Division 26 Section "Identification for Electrical Systems."

D. Device Nameplates: Label each branch circuit device in distribution panelboards with a nameplate complying with requirements for identification specified in Division 26 Section "Identification for Electrical Systems."

3.4 FIELD QUALITY CONTROL

A. Testing Agency: Engage a qualified testing agency to perform tests and inspections.

B. Manufacturer's Field Service: Engage a factory-authorized service representative to inspect, test, and adjust components, assemblies, and equipment installations, including connections.

C. Perform tests and inspections.
   1. Manufacturer's Field Service: Engage a factory-authorized service representative to inspect components, assemblies, and equipment installations, including connections, and to assist in testing.

©2006 Spectrum Engineers, Inc.

D. Acceptance Testing Preparation:
   1. Test insulation resistance for each panelboard bus, component, connecting supply, feeder, and control circuit.
   2. Test continuity of each circuit.

E. Tests and Inspections:
   1. Perform each visual and mechanical inspection and electrical test stated in NETA Acceptance Testing Specification. Certify compliance with test parameters.
   2. Correct malfunctioning units on-site, where possible, and retest to demonstrate compliance; otherwise, replace with new units and retest.
   3. Perform the following infrared scan tests and inspections and prepare reports:
      a. Initial Infrared Scanning: After Substantial Completion, but not more than 60 days after Final Acceptance, perform an infrared scan of each panelboard. Remove front panels so joints and connections are accessible to portable scanner.
      b. Follow-up Infrared Scanning: Perform an additional follow-up infrared scan of each panelboard 11 months after date of Substantial Completion.
      c. Instruments and Equipment:
         1) Use an infrared scanning device designed to measure temperature or to detect significant deviations from normal values. Provide calibration record for device.

F. Panelboards will be considered defective if they do not pass tests and inspections.

G. Prepare test and inspection reports, including a certified report that identifies panelboards included and that describes scanning results. Include notation of deficiencies detected, remedial action taken, and observations after remedial action.

3.5 ADJUSTING

A. Adjust moving parts and operable component to function smoothly, and lubricate as recommended by manufacturer.

B. Set field-adjustable circuit-breaker trip ranges as specified in Division 26 Section "Overcurrent Protective Device Coordination Study."

C. Load Balancing: After Substantial Completion, but not more than 60 days after Final Acceptance, measure load balancing and make circuit changes.
   1. Measure as directed during period of normal system loading.
   2. Perform load-balancing circuit changes outside normal occupancy/working schedule of the facility and at time directed. Avoid disrupting critical 24-hour services such as fax machines and on-line data processing, computing, transmitting, and receiving equipment.
   3. After circuit changes, recheck loads during normal load period. Record all load readings before and after changes and submit test records.
   4. Tolerance: Difference exceeding 20 percent between phase loads, within a panelboard, is not acceptable. Rebalance and recheck as necessary to meet this minimum requirement.

3.6 PROTECTION

A. Temporary Heating: Apply temporary heat to maintain temperature according to manufacturer's written instructions.

©2006 Spectrum Engineers, Inc.

END OF SECTION 262416

©2006 Spectrum Engineers, Inc.

SECTION 262726

WIRING DEVICES

PART 1 - GENERAL

1.1 RELATED DOCUMENTS

A. Drawings and general provisions of the Contract, including General and Supplementary Conditions and Division 1 Specification Sections, apply to this Section.

1.2 SUMMARY

A. This Section includes the following:
   1. Single and duplex receptacles, ground-fault circuit interrupters, and isolated-ground receptacles.
   2. Single- and double-pole snap switches and dimmer switches.
   3. Device wall plates.
   4. Special purpose receptacles.
   5. Floor service outlets, poke-through assemblies, and multioutlet assemblies.

1.3 DEFINITIONS

A. EMI: Electromagnetic interference.

B. GFCI: Ground-fault circuit interrupter.

C. PVC: Polyvinyl chloride.

D. RFI: Radio-frequency interference.

E. TVSS: Transient voltage surge suppressor.

1.4 SUBMITTALS

A. Product Data: For each type of product indicated.

B. Shop Drawings: List of legends and description of materials and process used for premarking wall plates.

C. Field quality-control test reports.

1.5 QUALITY ASSURANCE

A. Source Limitations: Obtain each type of wiring device through one source from a single manufacturer.

B. Electrical Components, Devices, and Accessories: Listed and labeled as defined in NFPA 70, Article 100, by a testing agency acceptable to authorities having jurisdiction, and marked for intended use.

C. Comply with NFPA 70.

1.6 COORDINATION

A. Receptacles for Owner-Furnished Equipment: Match plug configurations.
   1. Cord and Plug Sets: Match equipment requirements.

PART 2 - PRODUCTS

2.1 MANUFACTURERS

A. Manufacturers: Subject to compliance with requirements, provide products by one of the following:
   1. Wiring Devices:
      a. Bryant Electric, Inc./Hubbell Subsidiary.
      b. Eagle Electric Manufacturing Co., Inc.
      c. Hubbell Incorporated; Wiring Device-Kellems.
      d. Leviton Mfg. Company Inc.
      e. Pass & Seymour/Legrand; Wiring Devices Div.

2.2 RECEPTACLES

A. Straight-Blade-Type Receptacles: Comply with NEMA WD 1, NEMA WD 6, DSCC W-C-596G, and UL 498.
   1. Thermoplastic face.
   2. Thermoset base.
   3. Back and side wired.
   4. Rating: 20 A minimum

B. Straight-Blade (30 A thru 50A) and Locking Receptacles: Heavy -Duty grade.

C. Hospital Grade Straight-Blade Receptacles: Comply with NEMA WD 1, NEMA WD 6, DSCC W-C-596G, and UL 498.
   1. Thermoplastic face.
   2. Thermoset base.
   3. Back and side wired.
   4. Rating: 20 A minimum.

D. GFCI Receptacles: Straight blade, feed-through type, Heavy-Duty grade, with integral NEMA WD 6, Configuration 5-20R duplex receptacle; complying with UL 498 and UL 943. Design units for installation in a 2-3/4-inch- (70-mm-) deep outlet box without an adapter.

E. Hospital GFCI Receptacles: Straight blade, feed -through type, Hospital grade, with integral NEMA WD 6, Configuration 5-20R duplex receptacle; complying with UL 498 and UL 943. Design units for installation in a 2-3/4-inch- (70-mm-) deep outlet box without an adapter.

F. Isolated-Ground Straight-Blade Receptacles: Comply with NEMA WD 1, NEMA WD 6, DSCC W-C-596G, and UL 498; configure with equipment grounding contacts connected only to the green grounding screw terminal of the device and with inherent electrical isolation from mounting strap.
   1. Devices: Listed and labeled as isolated-ground receptacles.
   2. Isolation Method: Integral to receptacle construction and not dependent on removable parts.
   3. Thermoplastic face.
   4. Thermoset base.
   5. Back and side wired.
   6. Rating: 20 A minimum

G. Isolated-Ground Receptacles: Straight blade or locking to match equipment, Heavy-Duty grade, single receptacle, with equipment grounding contacts connected only to the green grounding screw terminal of the device and with inherent electrical isolation from mounting strap.
   1. Devices: Listed and labeled as isolated-ground receptacles.
   2. Isolation Method: Integral to receptacle construction and not dependent on removable parts.

2.3 PENDANT CORD/CONNECTOR DEVICES

A. Description: Matching, locking-type plug and receptacle mounted at ceiling with external cable grip and spring tension device attached to SO Cord with duplex receptacle in nylon body as indicated in referenced detail.
   1. Matching, locking-type plug and receptacle body connector, NEMA WD 6, Configurations L5-20P and L5-20R, Heavy-Duty.
   2. Straight-Blade Duplex receptacle (refer to previous specification) in Nylon body.
   3. Body: Nylon with screw-open cable-gripping jaws and provision for attaching external cable grip.
   4. External Cable Grip: Woven wire-mesh type made of high-strength galvanized-steel wire strand, matched to cable diameter, and with attachment provision designed for corresponding connector.

2.4 CORD AND PLUG SETS

A. Description: Match voltage and current ratings and number of conductors to requirements of equipment being connected.
   1. Cord: Rubber-insulated, stranded-copper conductors, with Type SOW-A jacket; with green-insulated grounding conductor and equipment-rating ampacity plus a minimum of 30 percent.
   2. Plug: Nylon body and integral cable-clamping jaws. Match cord and receptacle type for connection.

2.5 SWITCHES

A. Single- and Double-Pole Switches: Comply with DSCC W-C-896F and UL 20.
   1. Rating: Minimum 20A.
   2. Thermoplastic face.
   3. Thermoset base.
   4. Back and side wired.
   5. Locking type as referenced on the drawings
   6. Lighted handle as referenced on the drawings.
   7. Pilot Light as referenced on the drawings.

2.6 WALL PLATES

A. Single and combination types to match corresponding wiring devices.
   1. Plate-Securing Screws: Metal with head color to match plate finish, except screwless devices for locations where only dimmers are shown.
   2. Material for Finished Spaces: Smooth, high-impact thermoplastic
   3. Material for Operating Rooms and Kitchens: 0.035-inch- (1-mm-) thick, satin-finished stainless steel.
   4. Material for Unfinished Spaces: Galvanized steel.
   5. Material for Wet Locations: Cast aluminum with spring-loaded lift cover, and listed and labeled for use in "wet locations."

2.7 MULTIOUTLET ASSEMBLIES

A. Components of Assemblies: Products from a single manufacturer designed for use as a complete, matching assembly of raceways and receptacles.

B. Raceway Material: PVC.

C. Wire: No. 12 AWG.

2.8 FINISHES

A. Color:
   1. Wiring Devices: Grey with Stainless Steel cover plates

PART 3 - EXECUTION

3.1 INSTALLATION

A. Install devices and assemblies level, plumb, and square with building lines.

B. Arrangement of Devices: Unless otherwise indicated, mount flush, with long dimension vertical, and with grounding terminal of receptacles on top. Group adjacent switches under single, multigang wall plates.

C. Wallplates and coverplates: install wallplates and coverplates for all outlets, including blank outlets.

D. GFI Devices: Install separate GFCI devices, except where installed under the same multi-gang plate.

E. Remove wall plates and protect devices and assemblies during painting.

F. Adjust locations of floor service outlets and service poles to suit arrangement of partitions and furnishings.

G. Install cord and plug sets for appliances, mechanical equipment, and other equipment per manufacturer’s written instructions.

3.2 IDENTIFICATION

A. Comply with Division 26 Section "Identification for Electrical Systems."
   1. Receptacles: Identify panelboard and circuit number from which served. Use hot, stamped or engraved machine printing with color-filled lettering on face of plate, and durable wire markers or tags inside outlet boxes.
      a. Black letters on light colored plates.
      b. White on dark colored plates.

3.3 CONNECTIONS

A. Ground equipment according to Division 26 Section "Grounding and Bonding for Electrical Systems."

B. Connect wiring according to Division 26 Section "Low-Voltage Electrical Power Conductors and Cables."

C. Tighten electrical connectors and terminals according to manufacturer's published torque-tightening values. If manufacturer's torque values are not indicated, use those specified in UL 486A and UL 486B.

3.4 FIELD QUALITY CONTROL

A. Perform the following field tests and inspections and prepare written test reports:
   1. After installing wiring devices and after electrical circuitry has been energized, test for proper polarity, ground continuity, and compliance with requirements.
   2. Test GFCI operation with both local and remote fault simulations according to manufacturer's written instructions.

B. Remove malfunctioning units, replace with new units, and retest as specified above.

Standard Wiring Device Schedule Note to Bidders: Comply with Section 16140 of the specifications. The catalog numbers listed below have been carefully prepared with the assistance of the manufacturer's representatives with the objective of assisting the bidders in determining the quality and ratings of the wiring device specified; however, the catalog numbers may not be complete or accurate. In addition, the color of the wiring device is not intended to be determined by the catalog numbers listed below, but shall be selected by the Architect as indicated in the specification. Each manufacturer prior to bidding shall compare catalog numbers shown with the description and shall notify the Architect/Engineer of any discrepancies.		
NEMA	DESCRIPTION	CATALOG NUMBERS
NEMA 5-20R	20A, 125V 2 pole 3 wire simplex grounding receptacles. Nylon or Lexan Faces. Back and side wired. Comply with FS W-C-596 and UL 498.	Bryant 5361 Hubbell HBL5361 Leviton 5351 P&S 5351
NEMA 5-20R	20A, 125V 2 pole 3 wire duplex grounding receptacles. Nylon or Lexan Faces. Back and side wired. Comply with FS W-C-596 and UL 498.	Bryant 5352 Hubbell CR5352 Leviton 5352 P&S 5352
NEMA 5-20R GFCI	20A, 125V 2 pole 3 wire duplex feed thru GFCI receptacles with indicator light. Nylon or Lexan decorator faces. Back and side wired. Internal components shall comply with FS W-C-596 where applicable. Comply with UL 498 and UL 493.	Bryant GFR53FT Hubbell GF5352 Leviton 6898 P&S 2094 S
NEMA 5-20R Waterproof (Weatherproof in use)	20A, 125V 2 pole 3 wire duplex grounding receptacles. Nylon or Lexan Faces. Back and side wired. Comply with FS W-C-596 and UL 498. Fully gasketed weatherproof while in use enclosure.	Hubbell CR5352/5051-0
NEMA 5-20R Weatherproof	20A, 125V 2 pole 3 wire duplex grounding receptacles. Nylon or Lexan Faces. Back and side wired. Comply with FS W-C-596 and UL 498. Cast aluminum and UL listed for wet locations.	Hubbell HBL5206WO
20A Single Pole	20A single pole 125V-277V standard toggle switch labeled as complying UL standard 20 and with Federal Specification W-S-896. Provide Nylon or Lexan face, back and side wired. Rated 1 HP 120V.	Hubbell CS1221 Leviton 1221 P & S 521 Bryant 4901
20A Three-way	20A three-way 125V-277V standard toggle switch labeled as complying UL standard 20 and with Federal Specification W-S-896. Provide Nylon or Lexan face, back and side wired. Rated 1 HP 120V.	Hubbell CS1223 Leviton 1223 P & S 523 Bryant 4903
20A Four-way	20A four-way 125V-277V standard toggle switch labeled as complying UL standard 20 and with Federal Specification W-S-896. Provide Nylon or Lexan face, back and side wired. Rated 1 HP 120V.	Hubbell CS1224 Leviton 1224 P & S 524 Bryant 4904
20A Double Pole	20A double pole 125V-277V standard toggle switch labeled as complying UL standard 20 and with Federal Specification W-S-896. Provide Nylon or Lexan face, back	Hubbell CS1222 Leviton 1222 P & S 522 Bryant 4902

	and side wired. Rated 2 HP 240V. Double pole.	

END OF SECTION 262726

SECTION 262813

FUSES

PART 1 - GENERAL

1.1 RELATED DOCUMENTS

A. Drawings and general provisions of the Contract, including General and Supplementary Conditions and Division 1 Specification Sections, apply to this Section.

1.2 SUMMARY

A. This Section includes cartridge fuses, rated 600 V and less, for use in switches, panelboards, switchboards, controllers, and motor-control centers; and spare fuse cabinets.

1.3 DEFINITIONS

A. RK1-TD: Class RK1, Time Delay

B. RK5-TD: Class RK5, Time Delay

1.4 SUBMITTALS

A. Product Data: Include dimensions and manufacturer's technical data on features, performance, electrical characteristics, and ratings for each fuse type indicated.

B. Product Data: Include the following for each fuse type indicated:
1. Dimensions and manufacturer's technical data on features, performance, electrical characteristics, and ratings.
2. Let-through current curves for fuses with current-limiting characteristics.
3. Time-current curves, coordination charts and tables, and related data.
4. Fuse size for elevator feeders and elevator disconnect switches.

C. Maintenance Data: For tripping devices to include in maintenance manuals specified in Division 1.

1.5 QUALITY ASSURANCE

A. Source Limitations: Provide fuses from a single manufacturer.

B. Electrical Components, Devices, and Accessories: Listed and labeled as defined in NFPA 70, Article 100, by a testing agency acceptable to authorities having jurisdiction, and marked for intended use.

C. Comply with NEMA FU 1.

D. Comply with NFPA 70.

1.6 PROJECT CONDITIONS

A. Where ambient temperature to which fuses are directly exposed is less than 40 deg F (4.4 deg C) or more than 100 deg F (38 deg C), apply manufacturer's ambient temperature adjustment factors to fuse ratings.

1.7 COORDINATION

A. Coordinate fuse ratings with HVAC and refrigeration equipment nameplate limitations of maximum fuse size.

1.8 EXTRA MATERIALS

A. Furnish extra materials described below that match products installed and that are packaged in original cartons or containers and identified with labels describing contents.
   1. Fuses: Quantity equal to 10 percent of each fuse type and size, but not fewer than 3 of each type and size.

PART 2 - PRODUCTS

2.1 MANUFACTURERS

A. Manufacturers: Subject to compliance with requirements, provide products by one of the following:
   1. Cooper Industries, Inc.; Bussmann Div.
   2. Gould Shawmut.
   3. Tracor, Inc.; Littelfuse, Inc. Subsidiary.

2.2 CARTRIDGE FUSES

A. Characteristics: NEMA FU 1, nonrenewable cartridge fuse; class and current rating indicated; voltage rating consistent with circuit voltage.

2.3 SPARE FUSE CABINET

A. Cabinet: Wall-mounted, 0.05-inch- (1.27-mm-) thick steel unit with full-length, recessed piano-hinged door and key-coded cam lock and pull.
   1. Size: Adequate for storage of spare fuses specified with 15 percent spare capacity minimum.
   2. Finish: Gray, baked enamel.
   3. Identification: "SPARE FUSES" in 1-1/2-inch- (40-mm-) high letters on exterior of door.
   4. Fuse Pullers: For each size fuse.

PART 3 - EXECUTION

3.1 EXAMINATION

A. Examine utilization equipment nameplates and installation instructions. Install fuses of sizes and with characteristics appropriate for each piece of equipment.

B. Evaluate ambient temperatures to determine if fuse rating adjustment factors must be applied to fuse ratings.

C. Proceed with installation only after unsatisfactory conditions have been corrected.

3.2 FUSE APPLICATIONS

A. Refer to drawings for fuse types and sizes.
   1. Motor fuse sizes: Field select motor fuse sizes using the class of fuse shown on the drawings and sizing the fuse based upon the motor nameplate information and by multiplying by 1.25 (except for special service motors).

3.3 INSTALLATION

A. Install fuses in fusible devices. Arrange fuses so rating information is readable without removing fuse.

B. Install spare fuse cabinets.

3.4 IDENTIFICATION

A. Install labels indicating fuse replacement information on inside door of each fused switch.

END OF SECTION 262813

SECTION 262816

ENCLOSED SWITCHES AND CIRCUIT BREAKERS

PART 1 - GENERAL

1.1 RELATED DOCUMENTS

A. Drawings and general provisions of the Contract, including General and Supplementary Conditions and Division 1 Specification Sections, apply to this Section.

1.2 SUMMARY

A. This Section includes individually mounted enclosed switches and circuit breakers used for the following:
   1. Feeder and branch-circuit protection.
   2. Motor and equipment disconnecting means.

B. Related Sections include the following:
   1. Division 26 Section "Wiring Devices" for attachment plugs, receptacles, and toggle switches used for disconnecting means.
   2. Division 26 Section "Switchboards" for individually enclosed, fusible switches used as feeder protection.
   3. Division 26 Section "Fuses" for fusible devices.

1.3 DEFINITIONS

A. GFCI: Ground-fault circuit interrupter.

B. RMS: Root mean square.

C. SPDT: Single pole, double throw.

D. MCP: Motor Circuit Protectors (Adjustable instantaneous trip circuit breakers).

1.4 SUBMITTALS

A. Product Data: For each type of switch, circuit breaker, accessory, and component indicated. Include dimensions and manufacturers' technical data on features, performance, electrical characteristics, ratings, and finishes.

B. Shop Drawings: For each switch and circuit breaker.
   1. Dimensioned plans, elevations, sections, and details, including required clearances and service space around equipment. Show tabulations and layout of installed devices, equipment features, and ratings. Include the following:
      a. Enclosure types and details for types other than NEMA 250, Type 1.
      b. Current and voltage ratings.
      c. Short-circuit current rating.
      d. UL listing for series rating of installed devices.
      e. Features, characteristics, ratings, and factory settings of individual overcurrent protective devices and auxiliary components.
   2. Wiring Diagrams: Power, signal, and control wiring. Differentiate between manufacturer-installed and field-installed wiring.

3. Maintenance Data: For RV Power Centers and components to include in maintenance manuals specified in Division 1.

C. Manufacturer Seismic Qualification Certification: Submit certification that enclosed switches and circuit breakers, accessories, and components will withstand seismic forces defined in Division 26 Section "Seismic Controls for Electrical Systems." Include the following:
1. Basis of Certification: Indicate whether withstand certification is based on actual test of assembled components or on calculation.
   a. The term "withstand" means "the unit will remain in place without separation of any parts from the device when subjected to the seismic forces specified and the unit will be fully operational after the seismic event."
2. Dimensioned Outline Drawings of Equipment Unit: Identify center of gravity and locate and describe mounting and anchorage provisions.
3. Detailed description of equipment anchorage devices on which the certification is based and their installation requirements.

D. Qualification Data: Submit data for testing agencies indicating that they comply with qualifications specified in "Quality Assurance" Article.

E. Field Test Reports: Submit written test reports and include the following:
1. Test procedures used.
2. Test results that comply with requirements.
3. Results of failed tests and corrective action taken to achieve test results that comply with requirements.

F. Manufacturer's field service report.

G. Maintenance Data: For enclosed switches and circuit breakers and for components to include in maintenance manuals specified in Division 1. In addition to requirements specified in Division 1 Section "Closeout Procedures," include the following:
1. Routine maintenance requirements for components.
2. Manufacturer's written instructions for testing and adjusting switches and circuit breakers.
3. Time-current curves, including selectable ranges for each type of circuit breaker.

1.5 QUALITY ASSURANCE

A. Electrical Components, Devices, and Accessories: Listed and labeled as defined in NFPA 70, Article 100, by a testing agency acceptable to authorities having jurisdiction, and marked for intended use.

B. Comply with NEMA AB 1 and NEMA KS 1.

C. Comply with NFPA 70.

D. Product Selection for Restricted Space: Drawings indicate maximum dimensions for enclosed switches and circuit breakers, including clearances between enclosures, and adjacent surfaces and other items. Comply with indicated maximum dimensions.

1.6 PROJECT CONDITIONS

A. Environmental Limitations: Rate equipment for continuous operation under the following conditions, unless otherwise indicated:
1. Ambient Temperature: Not less than minus 22 deg F (minus 30 deg C) and not exceeding 104 deg F (40 deg C).
2. Altitude: Not exceeding 6600 feet (2000 m).

1.7 COORDINATION

A. Coordinate layout and installation of switches, circuit breakers, and components with other construction, including conduit, piping, equipment, and adjacent surfaces. Maintain required workspace clearances and required clearances for equipment access doors and panels.

1.8 EXTRA MATERIALS

A. Furnish extra materials described below that match products installed and that are packaged with protective covering for storage and identified with labels describing contents.
   1. Spares: For the following:
      a. Fuses for Fused Switches: refer to Division 26 section “Fuses”.
   2. Spare Indicating Lights: Six of each type installed.

PART 2 - PRODUCTS

2.1 MANUFACTURERS

A. Manufacturers: Subject to compliance with requirements, provide products by one of the following:
   1. Fusible Switches:
      a. Eaton Corp.; Cutler-Hammer Products.
      b. General Electric Co.; Electrical Distribution & Control Division.
      c. Siemens Energy & Automation, Inc.
      d. Square D Co.
   2. Molded-Case Circuit Breakers:
      a. Eaton Corp.; Cutler-Hammer Products.
      b. General Electric Co.; Electrical Distribution & Control Division.
      c. Siemens Energy & Automation, Inc.
      d. Square D Co.
   3. Combination Circuit Breaker and Ground-Fault Trip:
      a. Eaton Corp.; Cutler-Hammer Products.
      b. General Electric Co.; Electrical Distribution & Control Division.
      c. Siemens Energy & Automation, Inc.
      d. Square D Co.

B. RV Power Centers: Subject to compliance with requirements, provide products by one of the following:
   1. Midwest Electric Products, Inc

2.2 RV Power Centers

A. Metering: Unmetered.

B. Mounting: Pedestal – earth burial.

C. Feed: Underground.

D. Heads: One

E. Receptacles: one 14-50R and one 5-20R2

F. Breakers:
   1. One 50 amp, 2 pole
   2. One 20 amp, single pole, GFI.

G. Amps: 100

H. Volts: 120/208, single phase.

I. U.L. Listed.

2.3 ENCLOSED SWITCHES

A. Enclosed, Nonfusible Switch: NEMA KS 1, Type HD, with lockable handle.

B. Enclosed, Fusible Switch, 800 A and Smaller: NEMA KS 1, Type HD, with clips to accommodate specified fuses, built-in fuse pullers arranged to facilitate fuse removal, lockable handle with two padlocks, and interlocked with cover in closed position.
   1. Rejection clips where rejection fuses are specified.

2.4 ENCLOSED CIRCUIT BREAKERS

A. Molded-Case Circuit Breaker: NEMA AB 1, with interrupting capacity to meet available fault currents.
   1. Thermal-Magnetic Circuit Breakers: Inverse time-current element for low-level overloads, and instantaneous magnetic trip element for short circuits. Adjustable magnetic trip setting for circuit-breaker frame sizes 250 A and larger.
   2. Adjustable Instantaneous-Trip Circuit Breakers: Magnetic trip element with front-mounted, field-adjustable trip setting.
   3. Electronic Trip Unit Circuit Breakers: RMS sensing; field-replaceable rating plug; with the following field-adjustable settings:
      a. Instantaneous trip.
      b. Long- and short-time pickup levels.
      c. Long- and short-time time adjustments.
      d. Ground-fault pickup level, time delay, and I2t response.
   4. GFCI Circuit Breakers: Single- and two-pole configurations with 5 -mA trip sensitivity, unless noted otherwise on the drawings.

2.5 ENCLOSURES

A. NEMA AB 1 and NEMA KS 1 to meet environmental conditions of installed location.
   1. Outdoor Locations: NEMA 250, Type 3R.
   2. Kitchen Areas: NEMA 250, Type 4X, stainless steel.
   3.
   4. Other Wet or Damp Indoor Locations: NEMA 250, Type 4.
   5. Hazardous Areas Indicated on Drawings: NEMA 250, Type 7C.

2.6 FACTORY FINISHES

A. Finish: Manufacturer's standard gray paint applied to factory-assembled and -tested enclosures before shipping.

PART 3 - EXECUTION

3.1 EXAMINATION

A. Examine elements and surfaces to receive enclosed switches and circuit breakers for compliance with installation tolerances and other conditions affecting performance.
   1. Proceed with installation only after unsatisfactory conditions have been corrected.

3.2 INSTALLATION

A. Comply with mounting and anchoring requirements specified in Division 26 Section "Seismic Controls for Electrical Systems."

B. Temporary Lifting Provisions: Remove temporary lifting eyes, channels, and brackets and temporary blocking of moving parts from enclosures and components.

C. Equipment Disconnects
   1. Maximum elevation: 48”.
   2. Locate lockable disconnect near each motor complying with clearance requirements.
   3. Multiple speed motors: provide switch in all motor leads.

D. RF Power Centers: Install according to manufacturers written instructions. Provide concrete base below ground to prevent tilting and settling.

3.3 IDENTIFICATION

A. Identify field-installed conductors, interconnecting wiring, and components; provide warning signs as specified in Division 26 Section "Identification for Electrical Systems."

B. Enclosure Nameplates: Label each enclosure with engraved metal or laminated-plastic nameplate mounted with corrosion-resistant screws.

C. Fusible Switch Labels: Label each enclosure with “REPLACE WITH CURRENT LIMITING FUSES ONLY. CATALOG NUMBER: (FUSE CAT. NO.).”

3.4 CONNECTIONS

A. Install equipment grounding connections for switches and circuit breakers with ground continuity to main electrical ground bus.

B. Install power wiring. Install wiring between switches and circuit breakers, and control and indication devices.

C. Tighten electrical connectors and terminals according to manufacturer's published torque-tightening values. If manufacturer's torque values are not indicated, use those specified in UL 486A and UL 486B.

3.5 FIELD QUALITY CONTROL

A. Prepare for acceptance tests as follows:
   1. Test insulation resistance for each enclosed switch, circuit breaker, component, and control circuit.
   2. Test continuity of each line- and load-side circuit.

B. Testing: After installing enclosed switches and circuit breakers and after electrical circuitry has been energized, demonstrate product capability and compliance with requirements.
   1. Procedures: Perform each visual and mechanical inspection and electrical test indicated in NETA ATS, Section 7.5 for switches and Section 7.6 for molded-case circuit breakers. Certify compliance with test parameters.
   2. Correct malfunctioning units on-site, where possible, and retest to demonstrate compliance; otherwise, replace with new units and retest.

3.6 ADJUSTING

A. Set field-adjustable switches and circuit-breaker trip ranges.

3.7 CLEANING

A. On completion of installation, inspect interior and exterior of enclosures. Remove paint splatters and other spots. Vacuum dirt and debris; do not use compressed air to assist in cleaning. Repair exposed surfaces to match original finish.

END OF SECTION 262816

SECTION 262913

ENCLOSED CONTROLLERS

PART 1 - GENERAL

1.1 RELATED DOCUMENTS

A. Drawings and general provisions of the Contract, including General and Supplementary Conditions and Division 1 Specification Sections, apply to this Section.

1.2 SUMMARY

A. This Section includes ac general-purpose controllers rated 600 V and less that are supplied as enclosed units.

B. Related Sections include the following:
1. Division 26 Section "Transient Voltage Suppression for Low-Voltage Electrical Power Circuits" for low-voltage power, control, and communication surge suppressors.
2. Division 26 Section "Fuses" for fuses in fusible switches.
3. Division 26 Section “Variable Frequency Motor Controllers” for enclosed Variable Frequency Controllers.

1.3 SUBMITTALS

A. Product Data: For each type of enclosed controller. Include dimensions and manufacturer's technical data on features, performance, electrical characteristics, ratings, and finishes.

B. Shop Drawings: For each enclosed controller.
1. Dimensioned plans, elevations, sections, and details, including required clearances and service space around equipment. Show tabulations of installed devices, equipment features, and ratings. Include the following:
a. Enclosure types and details.
b. Nameplate legends.
c. Short-circuit current rating of integrated unit.
d. UL listing for series rating of overcurrent protective devices in combination controllers.
e. Features, characteristics, ratings, and factory settings of individual overcurrent protective devices in combination controllers.
2. Wiring Diagrams: Power, signal, and control wiring. Differentiate between manufacturer-installed and field-installed wiring.

C. Manufacturer Seismic Qualification Certification: Submit certification that enclosed controllers, accessories, and components will withstand seismic forces defined in Division 26 Section "Seismic Controls for Electrical Systems." Include the following:
1. Basis for Certification: Indicate whether withstand certification is based on actual test of assembled components or on calculation.
a. The term "withstand" means "the unit will remain in place without separation of any parts from the device when subjected to the seismic forces specified and the unit will be fully operational after the seismic event."
2. Dimensioned Outline Drawings of Equipment Unit: Identify center of gravity and locate and describe mounting and anchorage provisions.
3. Detailed description of equipment anchorage devices on which the certification is based and their installation requirements.

D. Field Test Reports: Written reports specified in Part 3.

E. Manufacturer's field service report.

F. Maintenance Data: For enclosed controllers and components to include in maintenance manuals specified in Division 1. In addition to requirements specified in Division 1 Section "Closeout Procedures," include the following:
   1. Routine maintenance requirements for enclosed controllers and all installed components.
   2. Manufacturer's written instructions for testing and adjusting overcurrent protective devices.

G. Load-Current and List of Settings of Adjustable Overload Relays: Compile after motors have been installed and arrange to demonstrate that dip switch settings for motor running overload protection suit actual motor to be protected.

1.4 QUALITY ASSURANCE

A. Source Limitations: Obtain enclosed controllers of a single type through one source from a single manufacturer.

B. Electrical Components, Devices, and Accessories: Listed and labeled as defined in NFPA 70, Article 100, by a testing agency acceptable to authorities having jurisdiction, and marked for intended use.

C. Comply with NFPA 70.

D. Product Selection for Restricted Space: Drawings indicate maximum dimensions for enclosed controllers, including clearances between enclosed controllers, and for adjacent surfaces and other items. Comply with indicated maximum dimensions.

1.5 DELIVERY, STORAGE, AND HANDLING

A. Store enclosed controllers indoors in clean, dry space with uniform temperature to prevent condensation. Protect enclosed controllers from exposure to dirt, fumes, water, corrosive substances, and physical damage.

B. If stored in areas subjected to weather, cover enclosed controllers to protect from weather, dirt, dust, corrosive substances, and physical damage. Remove loose packing and flammable materials from inside controllers; install electric heating of sufficient wattage to prevent condensation.

1.6 PROJECT CONDITIONS

1.7 COORDINATION

A. Coordinate layout and installation of enclosed controllers with other construction including conduit, piping, equipment, and adjacent surfaces. Maintain required workspace clearances and required clearances for equipment access doors and panels.

B. Coordinate size and location of concrete bases. Cast anchor-bolt inserts into bases. Concrete, reinforcement, and formwork requirements are specified in Division 3 Section "Cast-in-Place Concrete."

C. Coordinate installation of roof curbs, equipment supports, and roof penetrations. These items are specified in Division 7 Section "Roof Accessories."

D. Coordinate features of enclosed controllers and accessory devices with pilot devices and control circuits to which they connect.

E. Coordinate features, accessories, and functions of each enclosed controller with ratings and characteristics of supply circuit, motor, required control sequence, and duty cycle of motor and load.

1.8 EXTRA MATERIALS

A. Furnish extra materials described below that match products installed and that are packaged with protective covering for storage and identified with labels describing contents.
   1. Spare Fuses: Furnish one spare for every five installed, but not less than one set of three of each type and rating.
   2. Indicating Lights: Two of each type installed.

PART 2 - PRODUCTS

2.1 MANUFACTURERS

A. Manufacturers: Subject to compliance with requirements, provide products by one of the following:
   1. Manual and Magnetic Enclosed Controllers:
      a. ABB Power Distribution, Inc.; ABB Control, Inc. Subsidiary.
      b. Eaton Corp.; Cutler-Hammer Products.
      c. General Electrical Distribution & Control.
      d. Rockwell Automation Allen-Bradley Co.; Industrial Control Group.
      e. Siemens/Furnas Controls.
      f. Square D Co.

2.2 MAGNETIC ENCLOSED CONTROLLERS

A. Description: NEMA ICS 2, Class A, full voltage, nonreversing, across the line, unless otherwise indicated.

B. Control Circuit: 120 V; obtained from integral control power transformer with a control power transformer of sufficient capacity to operate connected pilot, indicating and control devices, plus 100 percent spare capacity.

C. Combination Controller: Factory-assembled combination controller and disconnect switch with safety interlock to prevent the door from opening when the unit is in operation.
   1. Circuit-Breaker Disconnecting Means: NEMA AB 1, motor-circuit protector with field-adjustable, short-circuit trip coordinated with motor locked-rotor amperes.

D. Adjustable Overload Relay: Dip switch selectable for motor running overload protection with NEMA ICS 2, Class 20 tripping characteristic, and selected to protect motor against voltage and current unbalance and single phasing. Provide relay with Class II ground-fault protection, with start and run delays to prevent nuisance trip on starting.

E. Multispeed Enclosed Controller: Match controller to motor type, application, and number of speeds; include the following accessories:

   1. Compelling relay to ensure motor will start only at low speed.
   2. Accelerating relay to ensure properly timed acceleration through speeds lower than that selected.

3. Decelerating relay to ensure automatically timed deceleration through each speed.

2.3 ENCLOSURES

A. Description: Flush- or surface-mounted cabinets as indicated. NEMA 250, Type 1, unless otherwise indicated to comply with environmental conditions at installed location.
   1. Outdoor Locations: NEMA 250, Type 3R.
   2. Kitchen Areas: NEMA 250, Type 4X, stainless steel.
   3. Other Wet or Damp Indoor Locations: NEMA 250, Type 4.
   4. Hazardous Areas Indicated on Drawings: NEMA 250, Type 7C.

2.4 ACCESSORIES

A. Devices shall be factory installed in controller enclosure, unless otherwise indicated.

B. Push-Button Stations, Pilot Lights, and Selector Switches: NEMA ICS 2, heavy-duty type.
   1. Pilot Lights: off indicating red lamp; on indicating green lamp; overload light: either separate light or both red and green lights illuminated. LED, 50,000 hours.

C. Auxiliary Contacts: Equip controllers with 2 N/O, 2 N/C auxiliary contacts.

D. Control Relays: Auxiliary and adjustable time-delay relays.

E. Phase-Failure and Undervoltage Relays: Solid-state sensing circuit with isolated output contacts for hard-wired connection. Provide adjustable undervoltage setting.

2.5 FACTORY FINISHES

A. Finish: Manufacturer's standard Grey paint applied to factory-assembled and -tested enclosed controllers before shipping.

PART 3 - EXECUTION

3.1 EXAMINATION

A. Examine areas and surfaces to receive enclosed controllers for compliance with requirements, installation tolerances, and other conditions affecting performance.

B. Proceed with installation only after unsatisfactory conditions have been corrected.

C. Location: Locate controllers within sight of motors controlled, unless otherwise indicated.

3.2 APPLICATIONS

A. Select features of each enclosed controller to coordinate with ratings and characteristics of supply circuit and motor; required control sequence; duty cycle of motor, drive, and load; and configuration of pilot device and control circuit affecting controller functions.

B. Select horsepower rating of controllers to suit motor controlled.

3.3 INSTALLATION

A. See Division 26 Section "Common Work Results for Electrical" for general installation requirements.

B. For control equipment at walls, bolt units to wall or mount on lightweight structural-steel channels bolted to wall. For controllers not at walls, provide freestanding racks complying with Division 26 Section "Common Work Results for Electrical."

C. Install freestanding equipment on concrete bases complying with Division 3 Section "Cast-in-Place Concrete."

D. Comply with mounting and anchoring requirements specified in Division 26 Section "Seismic Controls for Electrical Systems."

3.4 IDENTIFICATION

A. Identify enclosed controller components and control wiring according to Division 26 Section "Identification for Electrical Systems."

3.5 CONTROL WIRING INSTALLATION

A. Install wiring between enclosed controllers according to Division 26 Section "Low-Voltage Electrical Power Conductors and Cables."

B. Bundle, train, and support wiring in enclosures.

C. Connect hand-off-automatic switch and other automatic-control devices where applicable.
   1. Connect selector switches to bypass only manual- and automatic-control devices that have no safety functions when switch is in hand position.
   2. Connect selector switches with enclosed controller circuit in both hand and automatic positions for safety-type control devices such as low- and high-pressure cutouts, high-temperature cutouts, and motor overload protectors.

3.6 Provide relays and associated wiring required for sequence of operation.

3.7 CONNECTIONS

A. Conduit installation requirements are specified in other Division 26 Sections. Drawings indicate general arrangement of conduit, fittings, and specialties.

B. Ground equipment.

C. Tighten electrical connectors and terminals according to manufacturer's published torque-tightening values. If manufacturer's torque values are not indicated, use those specified in UL 486A and UL 486B.

3.8 FIELD QUALITY CONTROL

A. Prepare for acceptance tests as follows:
   1. Test insulation resistance for each enclosed controller bus, component, connecting supply, feeder, and control circuit.
   2. Test continuity of each circuit.
   3. Document that overload sizes or settings have been determined based upon actual motor nameplate information.

B. Testing: Perform the following field quality-control testing:

1. Perform each electrical test and visual and mechanical inspection indicated in NETA ATS, Sections 7.5, 7.6, and 7.16.
2. Certify compliance with test parameters.
3. Correct malfunctioning units on-site, where possible, and retest to demonstrate compliance; otherwise, replace with new units and retest.

C. Test Reports: Prepare a written report to record the following:
1. Test procedures used.
2. Test results that comply with requirements.
3. Test results that do not comply with requirements and corrective action taken to achieve compliance with requirements.

3.9 ADJUSTING

A. Set field-adjustable switches and circuit-breaker trip ranges.

3.10 CLEANING

A. Clean enclosed controllers internally, on completion of installation, according to manufacturer's written instructions. Vacuum dirt and debris; do not use compressed air to assist in cleaning.

END OF SECTION 262913

SECTION 264313

TRANSIENT VOLTAGE SUPPRESSION FOR LOW-VOLTAGE ELECTRICAL POWER CIRCUITS

PART 1 - GENERAL

1.1 RELATED DOCUMENTS

A. Drawings and general provisions of the Contract, including General and Supplementary Conditions and Division 1 Specification Sections, apply to this Section.

1.2 SUMMARY

A. This Section includes transient voltage surge suppressors for low-voltage power, control, and communication equipment.

B. Related Sections include the following:
1. Division 26 Section "Panelboards" for factory-installed transient voltage surge suppressors.
2. Division 26 Section "Switchboards" for factory-installed transient voltage surge suppressors.

1.3 SUBMITTALS

A. Product Data: For each type of product indicated. Include rated capacities; shipping, installed, and operating weights; furnished specialties; and accessories.

B. Product Certificates: Signed by manufacturers of transient voltage suppression devices, certifying that products furnished comply with the following testing and labeling requirements:
1. UL 1283 certification.
2. UL 1449 listing and classification.

C. Maintenance Data: For transient voltage suppression devices to include in maintenance manuals specified in Division 1.

D. Warranties: Special warranties specified in this Section.

1.4 QUALITY ASSURANCE

A. Source Limitations: Obtain suppression devices and accessories through one source from a single manufacturer.

B. Product Options: Drawings indicate size, dimensional requirements, and electrical performance of suppressors and are based on the specific system indicated. Other manufacturers' products complying with requirements may be considered. Refer to Division 1 Section "Substitutions."

C. Electrical Components, Devices, and Accessories: Listed and labeled as defined in NFPA 70, Article 100, by a testing agency acceptable to authorities having jurisdiction, and marked for intended use.

D. IEEE Compliance: Comply with IEEE C62.41, "IEEE Guide for Surge Voltages in Low Voltage AC Power Circuits," and test devices according to IEEE C62.45, "IEEE Guide for Surge Suppressor Testing."

E. NEMA Compliance: Comply with NEMA LS 1, "Low Voltage Surge Protective Devices."

F. UL Compliance: Comply with UL 1283, "Electromagnetic Interference Filters," and UL 1449 2nd Edition, "Transient Voltage Surge Suppressors."

1.5 PROJECT CONDITIONS

A. Placing into Service: Do not energize or connect service entrance equipment, panelboards, control terminals, data terminals to their sources until the surge protective devices are installed and connected.

B. Service Conditions: Rate surge protective devices for continuous operation under the following conditions, unless otherwise indicated:
   1. Maximum Continuous Operating Voltage: Not less than 115 percent of nominal system operating voltage.
   2. Operating Temperature: 30 to 120 deg F (0 to 50 deg C).
   3. Humidity: 0 to 85 percent, noncondensing.
   4. Altitude: Not less than 20,000 feet (6000 m) above sea level.

1.6 WARRANTY

A. General Warranty: Special warranties specified in this Article shall not deprive Owner of other rights Owner may have under other provisions of the Contract Documents and shall be in addition to, and run concurrent with, other warranties made by Contractor under requirements of the Contract Documents.

B. Special Warranty: Written warranty, executed by manufacturer agreeing to repair or replace components of surge suppressors that fail in materials or workmanship within five years from date of Substantial Completion.

PART 2 - PRODUCTS

2.1 MANUFACTURERS

A. Manufacturers: Subject to compliance with requirements, provide products by one of the following:
   1. Manufacturers of a Broad Line of Suppressors:
      a. Advanced Protection Technologies, Inc.
      b. Current Technology, Inc.
      c. Cutler-Hammer, Inc.
      d. EFI Electronics Corp.
      e. Innovative Technology, Inc.
      f. Liebert Corp.
      g. Siemens Energy & Automation.
      h. Square D Co.
      i. Tycor International, Inc.

2.2 SERVICE ENTRANCE SUPPRESSORS

A. Surge Protective Device Description: Modular design with field-replaceable modules and the following features and accessories:
   1. Fuses, rated at 200-kA interrupting capacity.
   2. Disconnect switch for switchboard applications.
   3. Switchboards: Arrangement with copper busbars and for bolted connections to phase buses, neutral bus, and ground bus.

4. Panelboards: Arrangement with wire connections to phase buses, neutral bus, and ground bus.
5. Red and green LED indicator lights for power and protection status.
6. Audible alarm, with silencing switch, to indicate when protection has failed.
7. One set of dry contacts rated at 5 a and 250V ac, for remote monitoring of protection status. Coordinate with building power monitoring and control system.
8. Surge-event operations counter.

B. Peak Single-Impulse Surge Current Rating: 320 kA per phase.
1. Line-Neutral mode: 160kA.
2. Line-Ground mode: 160kA.
3. Neutral–Ground mode: 160kA.

C. Connection Means: Permanently wired.

2.3 LIGHTING AND BRANCH PANELBOARD SUPPRESSORS

A. Surge Protective Device Description: Modular design with field-replaceable modules and the following features and accessories:
1. Fuses, rated at 200-kA interrupting capacity.
2. Fabrication using bolted compression lugs for internal wiring.
3. Red and green LED indicator lights for power and protection status.
4. Audible alarm, with silencing switch, to indicate when protection has failed.
5. One set of dry contacts rated at 5 A, 250-V, ac, for remote monitoring of protection status. Coordinate with building power monitoring and control system.
6. Surge-event operations counter.

B. Peak Single-Impulse Surge Current Rating: 160 kA per phase.
1. Line-Neutral mode: 80kA.
2. Line-Ground mode: 80 kA.
3. Neutral –Ground mode: 80kA.

C. Protection modes and UL 1449 clamping voltage for grounded wye circuits with voltages of 208Y/120; 3-phase, 4-wire circuits, shall be as follows:
1. Line to Neutral: 800 V for 480Y/277 and 400 V for 208Y/120.
2. Line to Ground: 800 V for 480Y/277 and 400 V for 208Y/120.
3. Neutral to Ground: 800 V for 480Y/277 and 400 V for 208Y/120.

2.4 CONTROL AND DATA TERMINALS

A. Protectors for copper control, data, antenna and telephone conductors entering the building from the outside shall be as recommended by the manufacturer for the type of line being protected.

2.5 ENCLOSURES

A. NEMA 250, with type matching the enclosure of panel or device being protected.

PART 3 - EXECUTION

3.1 INSTALLATION OF SURGE PROTECTIVE DEVICES

A. Install devices at service entrance on load side, with ground lead bonded to service entrance ground.

B. Install devices for panelboard and auxiliary panels with conductors between suppressor and points of attachment as short and straight as possible. Do not exceed manufacturer's recommended lead length or 2' whichever is less. Do not bond neutral and ground.
   1. Provide multipole, 60-A circuit breaker as a dedicated disconnect for the suppressor, unless otherwise indicated.

3.2 CONNECTIONS

A. Tighten electrical connectors and terminals according to manufacturer's published torque-tightening values. If manufacturer's torque values are not indicated, use those specified in UL 486A and UL 486B.

3.3 FIELD QUALITY CONTROL

A. Testing: Perform the following field quality-control testing:
   1. After installing surge protective devices, but before electrical circuitry has been energized, test for compliance with requirements.
   2. Complete startup checks according to manufacturer's written instructions.
   3. Perform each visual and mechanical inspection and electrical test stated in NETA ATS, Section 7.19. Certify compliance with test parameters.

B. Repair or replace malfunctioning units. Retest after repairs or replacements are made.

3.4 DEMONSTRATION

A. Engage a factory-authorized service representative to train Owner's maintenance personnel to adjust, operate, and maintain surge protective devices.
   1. Train Owner's maintenance personnel on procedures and schedules for maintaining suppressors.
   2. Review data in maintenance manuals. Refer to Division 1 Section "Contract Closeout."
   3. Schedule training with Owner, through Architect, with at least seven days' advance notice.

END OF SECTION 264313

SECTION 265100

INTERIOR LIGHTING

PART 1 - GENERAL

1.1 RELATED DOCUMENTS

A. Drawings and general provisions of the Contract, including General and Supplementary Conditions and Division 1 Specification Sections, apply to this Section.

1.2 SUMMARY

A. This Section includes the following:
   1. Interior lighting fixtures with lamps and ballasts.
   2. Lighting fixtures mounted on exterior building surfaces.
   3. Landscape lighting.
   4. Emergency lighting units.
   5. Exit signs.

B. Related Sections include the following:
   1. Division 26 Section "Lighting Control Devices" for manual or programmable control systems employing low-voltage control wiring or data communication circuits.
   2. Division 26 Section "Wiring Devices" for manual wall-box dimmers for incandescent lamps.
   3. Division 26 Section "Lighting Control Devices" for automatic control of lighting, including time switches, photoelectric relays, occupancy sensors, and multipole lighting relays and contactors.

1.3 DEFINITIONS

A. BF: Ballast factor. Ratio of light output of a given lamp(s) operated by the subject ballast to the light output of the same lamp(s) when operated on an ANSI reference circuit.

B. CRI: Color rendering index.

C. CU: Coefficient of utilization.

D. LER: Luminaire efficiency rating, which is calculated according to NEMA LE 5. This value can be estimated from photometric data using the following formula:
   1. LER is equal to the product of total rated lamp lumens times BF times luminaire efficiency, divided by input watts.

E. RCR: Room cavity ratio.

1.4 SUBMITTALS

A. Product Data: For each type of lighting fixture scheduled, arranged in order of fixture designation. Include data on features, accessories, finishes, and the following:
   1. Physical description of fixture, including dimensions and verification of indicated parameters.
   2. Emergency lighting unit battery and charger.
   3. Fluorescent and high-intensity-discharge ballasts.
   4. Lamps.

B. Shop Drawings: Show details of nonstandard or custom fixtures. Indicate dimensions, weights, methods of field assembly, components, features, and accessories.

C. Wiring Diagrams: Power, signal, and control wiring.

D. Product Certificates: For each type of ballast for dimmer-controlled fixtures, signed by product manufacturer.

E. Operation and Maintenance Data: For lighting equipment and fixtures to include in emergency, operation, and maintenance manuals. In addition to items specified in Division 1 Section "Closeout Procedures," include the following:
   1. Catalog data for each fixture. Include the diffuser, ballast, and lamps installed in that fixture.

F. Warranties: Special warranties specified in this Section.

G. Spare Parts: include spare parts materials and quantity.

1.5 QUALITY ASSURANCE

A. Electrical Components, Devices, and Accessories: Listed and labeled as defined in NFPA 70, Article 100, by a testing agency acceptable to authorities having jurisdiction, and marked for intended use.
   1. Test products to UL standards by nationally recognized testing laboratory, where an appropriate standard exists.

B. Comply with NFPA 70.

C. FMG Compliance: Fixtures for hazardous locations shall be listed and labeled for indicated class and division of hazard by FMG.

D. NFPA 101 Compliance: Comply with visibility and luminance requirements for exit signs.

E. Mockups: Provide lighting fixtures for room or module mockups. Install fixtures for mockups with power and control connections.
   1. Obtain Architect's approval of fixtures for mockups before starting installations.
   2. Maintain mockups during construction in an undisturbed condition as a standard for judging the completed Work.
   3. Approved fixtures in mockups may become part of the completed Work if undisturbed at time of Substantial Completion.

1.6 COORDINATION

A. Coordinate layout and installation of lighting fixtures and suspension system with other construction that penetrates ceilings or is supported by them, including HVAC equipment, fire-suppression system, and partition assemblies.

1.7 WARRANTY

A. Special Warranty for Emergency Lighting Unit Batteries: Manufacturer's standard form in which manufacturer of battery-powered emergency lighting unit agrees to repair or replace components of rechargeable batteries that fail in materials or workmanship within specified warranty period.
   1. Warranty Period: 10 years from date of Substantial Completion. Full warranty shall apply for first year, and prorated warranty for the remaining nine years.

B. Special Warranty for Fluorescent Ballasts: Manufacturer's standard form in which ballast manufacturer agrees to repair or replace ballasts that fail in materials or workmanship within specified warranty period.
   1. Warranty Period for Electronic Ballasts: Five years from date of Substantial Completion.
   2. Warranty Period for Electromagnetic Ballasts: Three years from date of Substantial Completion.

1.8 EXTRA MATERIALS

A. Furnish extra materials described below that match products installed and that are packaged with protective covering for storage and identified with labels describing contents.
   1. Lamps: 10 for every 100 of each type and rating installed. Furnish at least one of each type.
   2. Plastic Diffusers and Lenses: 1 for every 100 of each type and rating installed. Furnish at least one of each type.
   3. Battery and Charger Data: One for each emergency lighting unit.
   4. Ballasts: 1 for every 100 of each type and rating installed. Furnish at least one of each type.
   5. Globes and Guards: 1 for every 20 of each type and rating installed. Furnish at least one of each type.

PART 2 - PRODUCTS

2.1 MANUFACTURERS

A. In other Part 2 articles where titles below introduce lists, the following requirements apply to product selection:
   1. Products: Subject to compliance with requirements, provide one of the products specified.

B. Interior Transformers for Low Voltage Lighting.
   1. Q-Tran

2.2 FIXTURES AND COMPONENTS, GENERAL

A. Recessed Fixtures: Comply with NEMA LE 4 for ceiling compatibility for recessed fixtures.
   1. Equip recessed fixtures with six foot flexible conduit whips for connection to external j-boxes, except that junction boxes may integral for prewired framing kits for incandescent and PL fluorescent downlights.

B. Incandescent Fixtures: Comply with UL 1598. Where LER is specified, test according to NEMA LE 5A.

C. Fluorescent Fixtures: Comply with UL 1598. Where LER is specified, test according to NEMA LE 5 and NEMA LE 5A as applicable.

D. HID Fixtures: Comply with UL 1598. Where LER is specified, test according to NEMA LE 5B.

E. Metal Parts: Free of burrs and sharp corners and edges.

F. Sheet Metal Components: Steel, unless otherwise indicated. Form and support to prevent warping and sagging.

G. Doors, Frames, and Other Internal Access: Smooth operating, free of light leakage under operating conditions, and designed to permit relamping without use of tools. Designed to

prevent doors, frames, lenses, diffusers, and other components from falling accidentally during relamping and when secured in operating position.

H. Reflecting surfaces shall have minimum reflectance as follows, unless otherwise indicated:
   1. White Surfaces: 92 percent.
   2. Specular Surfaces: 83 percent.
   3. Diffusing Specular Surfaces: 75 percent.
   4. Laminated Silver Metallized Film: 90 percent.

I. Plastic Diffusers, Covers, and Globes:
   1. Acrylic Lighting Diffusers: 100 percent virgin acrylic plastic. High resistance to yellowing and other changes due to aging, exposure to heat, and UV radiation.
      a. Lens Thickness: At least 0.125 inch (3.175 mm) minimum unless different thickness is scheduled.
      b. UV stabilized.
   2. Glass: Annealed crystal glass, unless otherwise indicated.

J. Electromagnetic-Interference Filters: A component of fixture assembly. Suppress conducted electromagnetic-interference as required by MIL-STD-461D. Fabricate lighting fixtures with one filter on each ballast indicated to require a filter.

K. Air-Handling Fluorescent Fixtures: For use with plenum ceiling forheat extraction**.**
   1. Heat Removal Units: Air path leads through lamp cavity.

2.3 LIGHTING FIXTURES

A. Fixtures: Refer to Lighting Fixture Schedule on the drawings.

2.4 FLUORESCENT LAMP BALLASTS

A. Description: Include the following features, unless otherwise indicated:
   1. Designed for type and quantity of lamps indicated at full light output, unless 1.2 BF is specified except for emergency lamps powered by in-fixture battery-packs.
      a. Linear Electronic Ballasts: full light output is defined as .7 BF.
      b. Linear Magnetic Ballasts: full light output is defined as .95 BF.
      c. Compact Fluorescent Ballasts: full light output is defined as 1.0 BF.
   2. Interference: Comply with 47 CFR, Chapter 1, Part 18, Subpart C, for limitations on electromagnetic and radio-frequency interference for nonconsumer equipment.

B. Electronic ballasts (nondimming) for linear lamps shall include the following features, unless otherwise indicated:
   1. Comply with NEMA C82.11.
   2. Ballast Type: Programmed start with two-step lamp starting to extend life of frequently started lamps; if not available from any manufacturer, provide rapid start.
   3. Energy Efficient w/ at least .7 BF
   4. Sound Rating: A.
   5. Total harmonic distortion rating of less than 20 percent according to NEMA C82.11.
   6. Transient Voltage Protection: IEEE C62.41, Category A.
   7. Operating Frequency: 20 kHz or higher.
   8. Lamp Current Crest Factor: Less than 1.7.
   9. Parallel Lamp Circuits: Multiple lamp ballasts connected to maintain full light output on surviving lamps if one or more lamps fail.
   10. Provide lamp end-of-life detection and shutdown circuit for T5 diameter lamps.]

C. Ballasts for compact fluorescent lamps in recessed fixtures shall have the following features, unless otherwise indicated:
   1. Type: Electronic.
   2. Power Factor: 90 percent, minimum.
   3. Flicker: Less than 5 percent.
   4. Lamp Current Crest Factor: Less than 1.7.
   5. Electronic Ballast Operating Frequency: 20 kHz or higher.
   6. Lamp end-of-life detection and shutdown circuit.
   7. Transient Protection: Comply with IEEE C62.41 for Category A1 locations.

D. Ballasts for compact lamps in nonrecessed fixtures shall include the following features, unless otherwise indicated:
   1. Power Factor: 90 percent, minimum.
   2. Ballast Coil Temperature: 65 deg C, maximum.
   3. Transient Protection: Comply with IEEE C62.41 for Category A1 locations.

E. Ballasts for dimmer-controlled fixtures shall comply with general and fixture-related requirements above for electronic ballasts and the following features:
   1. Dimming Range: 100 to 5 percent of rated lamp lumens, unless specifically indicated otherwise.
   2. Ballast Input Watts: Can be reduced from 100 to 20 percent of normal as it dims.
   3. Compatibility: Certified by manufacturer for use with specific dimming system indicated.

F. Ballasts for Low-Temperature Environments:
   1. Temperatures 0 deg F (Minus 17 deg C) and Higher: Electronic or electromagnetic type rated for 0 deg F (Minus 17 deg C) starting temperature.
   2. Temperatures Minus 20 deg F (Minus 29 deg C) and Higher: Electromagnetic type designed for use with high-output lamps.

2.5 HIGH-INTENSITY-DISCHARGE LAMP BALLASTS

A. General: Comply with NEMA C82.4 and UL 1029. Shall include the following features, unless otherwise indicated.
   1. Type: Constant-wattage autotransformer, pulse start, or regulating high-power-factor type.
   2. Minimum Starting Temperature: Minus 22 deg F (Minus 30 deg C) for single-lamp ballasts.
   3. Normal Ambient Operating Temperature: 104 deg F40 deg C.
   4. Open-circuit operation that will not reduce average life.

2.6 EXIT SIGNS

A. General: Comply with UL 924; for sign colors and lettering size, comply with authorities having jurisdiction.

B. Internally Lighted Signs:
   1. Lamps for AC Operation: Light-emitting diodes, 70,000 hours minimum of rated lamp life.

C. Self-Powered Exit Signs (Battery Type): Integral automatic charger in a self-contained power pack.
   1. Self-diagnostic circuit: fully automatic testing and diagnostic circuit to cycle battery and test battery and lamps including reporting failures.

2.7 FLUORESCENT EMERGENCY LIGHTING FIXTURES

A. Internal Type: Self-contained, modular, battery-inverter unit factory mounted within fixture body. Comply with UL 924.
   1. Emergency Connection: Operate one fluorescent lamp continuously to 1100 lumens minimum. Connect unswitched circuit to battery-inverter unit and switched circuit to fixture ballast.
   2. Night Light Connection: Operate one fluorescent lamp continuously.
   3. Test Switch and Light-Emitting-Diode Indicator Light: Visible and accessible without opening fixture or entering ceiling space.
   4. Battery: Sealed, maintenance-free, with minimum seven-year nominal life.
   5. Charger: Fully automatic, solid-state, constant-current type.

2.8 FLUORESCENT LAMPS

A. Low-Mercury Lamps: Comply with Federal toxic characteristic leaching procedure (TCLP) test, and yield less than 0.2 mg of mercury per liter, when tested according to NEMA LL 1.

B. Premium T8 rapid-start low-mercury lamps, CRI of 82 (minimum), color temperature of 4100 K, and average rated life of 20,000 hours, unless otherwise indicated.

C. T5 programmed-start low-mercury lamps, CRI of 85 (minimum), color temperature of 4100 K, and average rated life of 20,000 hours, unless otherwise indicated.

D. Compact Fluorescent Lamps: CRI 80 (minimum), color temperature 4100, average rated life of 10,000 hours at 3 hours operation per start, unless otherwise indicated.

2.9 HIGH-INTENSITY-DISCHARGE LAMPS

A. Metal-Halide Lamps: ANSI C78.1372, wattage and burning position as scheduled, CRI 65 (minimum), and color temperature 4000.

2.10 FIXTURE SUPPORT COMPONENTS

A. Comply with Division 26 Section "Common Work Results for Electrical" for channel- and angle-iron supports and nonmetallic channel and angle supports.

B. Single-Stem Hangers: 1/2-inch (13-mm) steel tubing with swivel ball fittings and ceiling canopy. Finish same as fixture.

C. Twin-Stem Hangers: Two, 1/2-inch (13-mm) steel tubes with single canopy designed to mount a single fixture. Finish same as fixture.

D. Wires: ASTM A 641/A 641M, Class 3, soft temper, zinc-coated, 12 gage (2.68 mm).

E. Rod Hangers: 3/16-inch- (5-mm-) minimum diameter, cadmium-plated, threaded steel rod.

F. Aircraft Cable Support: Use cable, anchorages, and intermediate supports recommended by fixture manufacturer.

2.11 FINISHES

A. Fixtures: Manufacturers' standard, unless otherwise indicated.
   1. Paint Finish: Applied over corrosion-resistant treatment or primer, free of defects.
   2. Metallic Finish: Corrosion resistant.

2.12 SOURCE QUALITY CONTROL

A. Provide services of a qualified, independent testing and inspecting agency to factory test fixtures with ballasts and lamps; certify results for electrical ratings and photometric data.

B. Factory test fixtures with ballasts and lamps; certify results for electrical ratings and photometric data.

PART 3 - EXECUTION

3.1 INSTALLATION

A. Fixtures: Set level, plumb, and square with ceilings and walls. Adjust trims for recessed fixtures to eliminate light leaks. Install lamps in each fixture.
   1. Install fixtures with the separation from combustible material as required by lighting fixture rating, per manufacturer's written instructions; in no case, install recessed fixture within ½" of combustible material.

B. Support for Fixtures in or on Grid-Type Suspended Ceilings: Use grid for support.
   1. Install a minimum of four ceiling support system rods or wires for each fixture. Locate not more than 6 inches (150 mm) from fixture corners.
   2. Support Clips: Fasten to fixtures and to ceiling grid members at or near each fixture corner with clips that are UL listed for the application.
   3. Fixtures of Sizes Less Than Ceiling Grid: Install as indicated on reflected ceiling plans or center in acoustical panel or at the intersection of four tiles, and support fixtures independently with at least two 3/4-inch (20-mm) metal channels spanning and secured to ceiling tees.
   4. Install at least one independent support rod or wire from structure to a tab on lighting fixture. Wire or rod shall have breaking strength of the weight of fixture at a safety factor of 3.

C. Suspended Fixture Support: As follows:
   1. Pendants and Rods: Where longer than 48 inches (1200 mm), brace to limit swinging.
   2. Stem-Mounted, Single-Unit Fixtures: Suspend with twin-stem hangers.
   3. Industrial Fixtures, Continuous Rows: Use tubing or stem for wiring at one point and tubing or rod for suspension for each unit length of fixture chassis, including one at each end.
   4. Extruded fixtures, Continuous Rows: Suspend from cable.

D. Air-Handling Fixtures: Install with dampers closed and ready for adjustment.

E. Adjust aimable fixtures to provide required light intensities.

3.2 CONNECTIONS

A. Tighten electrical connectors and terminals according to manufacturer's published torque-tightening values. If manufacturer's torque values are not indicated, use those specified in UL 486A and UL 486B.

3.3 FIELD QUALITY CONTROL

A. Inspect each installed fixture for damage. Replace damaged fixtures and components.
   1. Clean transparent materials. Replace chipped or broken lenses and other damaged transparent materials.
   2. Restore reflective surfaces to their reflective conditions.

3. Clean light fixtures and lamps.

B. Verify normal operation of each fixture after installation.

C. Test for Emergency Lighting: Interrupt power supply to demonstrate proper operation. Verify normal transfer to battery power source and retransfer to normal.

D. Prepare a written report of tests, inspections, observations, and verifications indicating and interpreting results. If adjustments are made to lighting system, retest to demonstrate compliance with standards.

E. Corroded Fixtures: During warranty period, replace fixtures that show any signs of corrosion.

END OF SECTION 265100

SECTION 283100 - FIRE ALARM

PART 1 - GENERAL

1.1 RELATED DOCUMENTS

A. Drawings and general provisions of the Contract, including General and Supplementary Conditions and Division 1 Specification Sections, apply to this Section.

1.2 SUMMARY

A. This Section includes expansion of existing fire alarm systems with manual stations, detectors, signal equipment, controls, and devices.

B. Related Sections include the following:

1. Division 8 Section "Hardware" for door closers/holders/smoke detectors, electric door locks, and release devices that interface with fire alarm systems.

1.3 DEFINITIONS

A. FACP: Fire alarm control panel.

B. LED: Light-emitting diode.

C. Definitions in NFPA 72 apply to fire alarm terms used in this Section.

1.4 SYSTEM DESCRIPTION

A. General: Noncoded, addressable-analog system with manual and automatic alarm initiation; automatic sensitivity control of certain smoke detectors; and multiplexed signal transmission dedicated to fire alarm service only.

1.5 SUBMITTALS

A. Product Data: For each type of product indicated.

B. Shop Drawings:
1. Wiring Diagrams: Detail wiring and differentiate between manufacturer-installed and field-installed wiring. Include diagrams for equipment and for system with all terminals and interconnections identified.
2. Battery: Sizing calculations.
3. Floor Plans: Indicate final outlet locations and routings of raceway connections.
4. Device Address List: Coordinate with final system programming.
5. System Operation Description: Detailed description for this Project, including method of operation and supervision of each type of circuit and sequence of operations for manually and automatically initiated system inputs and outputs. Manufacturer's standard descriptions for generic systems are not acceptable.

C. Operating Instructions: For mounting at the FACP.

D. Product Certificates: Signed by manufacturers of system components certifying that products furnished comply with requirements.

E. Installer Certificates: Signed by manufacturer certifying that installers comply with requirements.

F. Field Test Reports: Indicate and interpret test results for compliance with performance requirements. Comply with NFPA 72.

G. Maintenance Data: For fire alarm systems to include in maintenance manuals specified in Division 1. Comply with NFPA 72.

H. Submissions to Authorities Having Jurisdiction: In addition to distribution requirements for Submittals specified in Division 1 Section "Submittals," make an identical submission to authorities having jurisdiction. Include copies of annotated Contract Drawings as needed to depict component locations to facilitate review. Resubmit if required to make clarifications or revisions to obtain approval. On receipt of comments from authorities having jurisdiction, submit them to Architect for review.

I. Certificate of Completion: Comply with NFPA 72.

1.6 QUALITY ASSURANCE

A. Installer Qualifications: An experienced installer who is an authorized representative of the FACP manufacturer for both installation and maintenance of units required for this Project.

B. Manufacturer Qualifications: A firm experienced in manufacturing systems similar to those indicated for this Project and with a record of successful in-service performance.

C. Source Limitations: Obtain fire alarm system components through one source from a single manufacturer.

D. Compliance with Local Requirements: Comply with applicable building code, local ordinances and regulations, and requirements of authorities having jurisdiction.

E. Comply with NFPA 72.

1.7 EXTRA MATERIALS

A. Furnish extra materials described below that match products installed and that are packaged with protective covering for storage and identified with labels describing contents.

1. Horn/Strobe and Strobe Units: Quantity equal to 10 percent of amount installed, but not less than one unit.
2. Smoke Detectors, Fire Detectors, and Flame Detectors: Quantity equal to 10 percent of amount of each type installed, but not less than one unit of each type.
3. Detector Bases: Quantity equal to 2 percent of amount of each type installed, but not less than one unit of each type.
4. Printer Ribbons: Six spares.
5. Keys and Tools: One extra set for access to locked and tamperproofed components.

PART 2 - PRODUCTS

2.1 MANUFACTURERS

A. Manufacturers: Subject to compliance with requirements, provide products by one of the following:

1. Siemens (to match exising).

2.2 FUNCTIONAL DESCRIPTION OF SYSTEM

A. Control of System: By the FACP.

B. System Supervision: Automatically detect and report open circuits, shorts, and grounds of wiring for initiating device, signaling line, and notification-appliance circuits.

C. Priority of Signals: Automatic alarm response functions resulting from an alarm signal from one zone or device are not altered by subsequent alarm, supervisory, or trouble signals. An alarm signal is the highest priority. Supervisory and trouble signals have second- and third-level priority. Higher-priority signals take precedence over signals of lower priority, even when the lower-priority condition occurs first. Annunciate and display all alarm, supervisory, and trouble signals regardless of priority or order received.

D. Noninterference: A signal on one zone shall not prevent the receipt of signals from other zones.

E. System Reset: All zones are manually resettable from the FACP after initiating devices are restored to normal.

F. Transmission to Remote Alarm Receiving Station: Automatically route alarm, supervisory, and trouble signals to a remote alarm station by means of a digital alarm communicator transmitter and telephone lines.

G. System Alarm Capability during Circuit Fault Conditions: System wiring and circuit arrangement prevent alarm capability reduction when a single ground or open circuit occurs in an initiating device circuit, signal line circuit, or notification-appliance circuit.

H. Loss of primary power at the FACP initiates a trouble signal at the FACP and the annunciator. An emergency power light is illuminated at both locations when the system is operating on the secondary power supply.

I. Basic Alarm Performance Requirements: Unless otherwise indicated, operation of initiating device initiates the sequence of operation as indicated in the fire alarm matrix.

J. Alarm Silencing, System Reset and Indication: Controlled by switches in the FACP and the remote annunciator.

1. Silencing-switch operation halts alarm operation of notification appliances and activates an "alarm silence" light. Display of identity of the alarm zone or device is retained.
2. Subsequent alarm signals from other devices or zones reactivate notification appliances until silencing switch is operated again.
3. When alarm-initiating devices return to normal and system reset switch is operated, notification appliances operate again until alarm silence switch is reset.

K. Water-flow alarm switch operation initiates the following:
1. Notification-appliance operation.

2. Flashing of the device location-indicating light for the device that has operated.

L. Operating a heat detector in the elevator shaft shuts down elevator power by operating a shunt trip in a circuit breaker feeding the elevator.
1. A field-mounted relay actuated by the fire detector or the FACP closes the shunt trip circuit and operates building notification appliances and annunciator.

M. Sprinkler valve-tamper switch operation initiates the following:
1. A supervisory, audible, and visible "valve-tamper" signal indication at the FACP and the annunciator.
2. Flashing of the device location-indicating light for the device that has operated.
3. Recording of the event by the system printer.
4. Transmission of supervisory signal to remote alarm receiving station.

N. Low-air-pressure switch operation on a dry-pipe or preaction sprinkler system initiates the following:
1. A supervisory, audible, and visible "sprinkler trouble" signal indication at the FACP and the annunciator.
2. Flashing of the device location-indicating light for the device that has operated.
3. Recording of the event by the system printer.
4. Transmission of trouble signal to remote central station.

O. Remote Detector Sensitivity Adjustment: Manipulation of controls at the FACP causes the selection of specific addressable smoke detectors for adjustment, display of their current status and sensitivity settings, and control of changes in those settings. Same controls can be used to program repetitive, scheduled, automated changes in sensitivity of specific detectors. Sensitivity adjustments and sensitivity-adjustment schedule changes are recorded in system memory and are printed out by the system printer.

P. Removal of an alarm-initiating device or a notification appliance initiates the following:
1. A "trouble" signal indication at the FACP and the annunciator for the device or zone involved.
2. Recording of the event by the system printer.
3. Transmission of trouble signal to remote alarm receiving station.

Q. Printout of Events: On receipt of the signal, print alarm, supervisory, and trouble events. Identify zone, device, and function. Include type of signal (alarm, supervisory, or trouble), and date and time of occurrence. Differentiate alarm signals from all other printed indications. Also print system reset event, including the same information for device, location, date, and time. Commands initiate the printout of a list of existing alarm, supervisory, and trouble conditions in the system and a historical log of events.

R. FACP Alphanumeric Display: Plain-English-language descriptions of alarm, supervisory, and trouble events; and addresses and locations of alarm-initiating or supervisory devices originating the report. Display monitoring actions, system and component status, system commands, programming information, and data from the system's historical memory.

2.3 MANUAL PULL STATIONS

A. Description: Fabricated of metal or plastic, and finished in red with molded, raised-letter operating instructions of contrasting color.

1. Double-action mechanism requires two actions, such as a push and a pull, to initiate an alarm.
2. Station Reset: Key or wrench operated; double pole, double throw; switch rated for the voltage and current at which it operates.
3. Integral Addressable Module: Arranged to communicate manual-station status (normal, alarm, or trouble) to the FACP.

2.4 SMOKE DETECTORS

A. General: Include the following features:
1. Operating Voltage: 24-V dc, nominal.
2. Self-Restoring: Detectors do not require resetting or readjustment after actuation to restore them to normal operation.
3. Plug-in Arrangement: Detector and associated electronic components are mounted in a module that connects in a tamper-resistant manner to a fixed base with a twist-locking plug connection. Terminals in the fixed base accept building wiring.
4. Integral Visual-Indicating Light: LED type. Indicates detector has operated.
5. Sensitivity: Can be tested and adjusted in-place after installation.
6. Integral Addressable Module: Arranged to communicate detector status (normal, alarm, or trouble) to the FACP.
7. Remote Controllability: Unless otherwise indicated, detectors are analog-addressable type, individually monitored at the FACP for calibration, sensitivity, and alarm condition, and individually adjustable for sensitivity from the FACP.

B. Photoelectric Smoke Detectors: Include the following features:
1. Sensor: LED or infrared light source with matching silicon-cell receiver.
2. Detector Sensitivity: Between 2.5 and 3.5 percent/foot (0.008 and 0.011 percent/mm) smoke obscuration when tested according to UL 268A.

C. Duct Smoke Detector: Photoelectric type.
1. Sampling Tube: Design and dimensions as recommended by the manufacturer for the specific duct size, air velocity, and installation conditions where applied.

2.5 OTHER DETECTORS

A. Heat Detector, Combination Type: Actuated by either a fixed temperature of 135 deg F (57 deg C) or rate of rise of temperature that exceeds 15 deg F (8.3 deg C) per minute, unless otherwise indicated.
1. Mounting: Plug-in base, interchangeable with smoke detector bases.
2. Integral Addressable Module: Arranged to communicate detector status (normal, alarm, or trouble) to the FACP.

B. Heat Detector, Fixed-Temperature Type: Actuated by temperature that exceeds a fixed temperature of 190 deg F (88 deg C).
1. Mounting: Plug-in base, interchangeable with smoke detector bases.
2. Integral Addressable Module: Arranged to communicate detector status (normal, alarm, or trouble) to the FACP.

2.6 NOTIFICATION APPLIANCES

A. Description: Equip for mounting as indicated and have screw terminals for system connections.

1. Combination Devices: Factory-integrated audible and visible devices in a single-mounting assembly.

B. Selectable-Tone Horns: Electronic-vibrating type, field selectable tone (temporal pattern, chime, high/low/silent), 24 VDC, Horns produce a sound-pressure level of 90dBA, measured 10 feet (3m) from the horn. Built-in provisions for reducing the output to 87dBA and 84dBA.

C. Weather-Proof Horns (outdoors only): Electronic-vibrating-polarized type, 24-V dc; with provision for housing the operating mechanism behind a grille. Horns produce a sound-pressure level of 90 dB, measured 10 feet (3 m) from the horn.

D. Visible Alarm Devices: Xenon strobe lights listed under UL 1971 with clear polycarbonate lens. Mount lens on an aluminum faceplate. The word "FIRE" is engraved in minimum 1-inch- (25-mm-) high letters on the lens.
   1. Rated Light Output: as shown on drawings, field selectable outputs of 15CD, 30CD, 75CD, and 110CD.
   2. Sleeping Room Rated Light Output: 177CD.
   3. Synchronization.
   4. Strobe Leads: Factory connected to screw terminals.

2.7 MAGNETIC DOOR HOLDERS

A. Description: Units are equipped for wall or floor mounting as indicated and are complete with matching door plate.
   1. Electromagnet: Requires no more than 3 W to develop 25-lbf (111-N) holding force.
   2. Wall-Mounted Units: Flush mounted, unless otherwise indicated.
   3. Rating: 24-V ac or dc.
   4. Furnished by Div. 8.

2.8 CENTRAL FACP

A. Cabinet: Lockable steel enclosure. Arrange interior components so operations required for testing or for normal maintenance of the system are performed from the front of the enclosure. If more than one unit is required to form a complete control panel, fabricate with matching modular unit enclosure to accommodate components and to allow ample gutter space for field wiring and interconnecting panels.

   1. Identify each enclosure with an engraved, red, laminated, phenolic-resin nameplate with lettering not less than 1 inch (25 mm) high. Identify individual components and modules within cabinets with permanent labels.
   2. Mounting: Surface.

B. Alarm and Supervisory Systems: Separate and independent in the FACP. Alarm-initiating zone boards consist of plug-in cards. Construction requiring removal of field wiring for module replacement is unacceptable.

C. Control Modules: Include types and capacities required to perform all functions of fire alarm systems.

D. Indications: Local, visible, and audible signals announce alarm, supervisory, and trouble conditions. Each type of audible alarm has a different sound.

E. Resetting Controls: Prevent the resetting of alarm, supervisory, or trouble signals while the alarm or trouble condition still exists.

F. Alphanumeric Display and System Controls: Arranged for interface between human operator at the FACP and addressable system components, including annunciation, supervision, and control.
   1. Display: A minimum of 80 characters; alarm, supervisory, and component status messages; and indicate control commands to be entered into the system for control of smoke detector sensitivity and other parameters.
   2. Keypad: Arranged to permit entry and execution of programming, display, and control commands.

2.9 REMOTE ANNUNCIATOR

A. Description: Duplicate annunciator functions of the FACP for alarm, supervisory, and trouble indications. Also duplicate manual switching functions of the FACP, including acknowledging, silencing, reset, and test.

   1. Mounting: Flush cabinet, NEMA 250, Class 1.

B. Display Type and Functional Performance: Alphanumeric display same as the FACP. Controls with associated LEDs permit acknowledging, silencing, resetting, and testing functions for alarm, supervisory, and trouble signals identical to those in the FACP.

2.10 EMERGENCY POWER SUPPLY

A. General: Components include valve-regulated, recombinant lead acid battery; charger; and an automatic transfer switch.

   1. Battery Nominal Life Expectancy: 10 years, minimum.

B. Battery Capacity:

   1. Comply with NFPA 72.
   2. Magnetic door holders are not served by emergency power. Magnetic door holders are released when normal power fails.
   3. Minimum Capacity: 24 hour operation of complete system (except where specifically noted otherwise) plus 15 minutes with all indicating devices. In addition, include 25% spare capacity.

C. Battery Charger: Solid-state, fully automatic, variable-charging-rate type. Provide capacity for 150 percent of the connected system load while maintaining batteries at full charge. If batteries are fully discharged, the charger recharges them completely within four hours. Charger output is supervised as part of system power supply supervision.

D. Integral Automatic Transfer Switch: Transfers the load to the battery without loss of signals or status indications when normal power fails.

2.11 ADDRESSABLE INTERFACE DEVICE

A. Description: Microelectronic monitor module listed for use in providing a multiplex system address for listed fire and sprinkler alarm-initiating devices with normally open contacts.

B. Integral Relay: Capable of providing a direct signal to the elevator controller to initiate elevator recall or to a circuit-breaker shunt trip for power shutdown.

2.12 DIGITAL ALARM COMMUNICATOR TRANSMITTER

A. Listed and labeled under UL 864 and NFPA 72.

B. Functional Performance: Unit receives an alarm, supervisory, or trouble signal from the FACP panel, and automatically captures one or two telephone lines and dials a preset number for a remote central station. When contact is made with the central station(s), the signal is transmitted. The unit supervises up to two telephone lines. Where supervising two lines, if service on either line is interrupted for longer than 45 seconds, the unit initiates a local trouble signal and transmits a signal indicating loss of telephone line to the remote alarm receiving station over the remaining line. When telephone service is restored, unit automatically reports that event to the central station. If service is lost on both telephone lines, the local trouble signal is initiated.

C. Secondary Power: Integral rechargeable battery and automatic charger. Battery capacity is adequate to comply with NFPA 72 requirements.

D. Self Test: Conducted automatically every 24 hours with report transmitted to central station.

2.13 SYSTEM PRINTER

A. Description: Listed and labeled as an integral part of the fire alarm system.

2.14 WIRE

A. Non-Power-Limited Circuits: Solid-copper conductors with 600-V rated, 75 deg C, color-coded insulation.
   1. Low-Voltage Circuits: No. 16 AWG, minimum.
   2. Line-Voltage Circuits: No. 12 AWG, minimum.

B. Power-Limited Circuits: NFPA 70, Types FPL, FPLR, or FPLP, as recommended by manufacturer.

PART 3 - EXECUTION

3.1 EQUIPMENT INSTALLATION

A. Connect the FACP with a disconnect switch with lockable handle or cover.

B. Manual Pull Stations: Mount semiflush in recessed back boxes.

C. Water-Flow Detectors and Valve Supervisory Switches: Connect for each sprinkler valve station required to be supervised.

D. Ceiling-Mounted Smoke Detectors: Not less than 4 inches (100 mm) from a side wall to the near edge. For exposed solid-joist construction, mount detectors on the bottom of joists. On smooth ceilings, install not more than 30 feet (9 m) apart in any direction.

E. Wall-Mounted Smoke Detectors: At least 4 inches (100 mm), but not more than 12 inches (300 mm), below the ceiling.

F. Smoke Detectors near Air Registers: Install no closer than 60 inches (1520 mm).

G. Duct Smoke Detectors: Comply with manufacturer's written instructions.
   1. Verify that each unit is listed for the complete range of air velocity, temperature, and humidity possible when air-handling system is operating.
   2. Install sampling tubes so they extend the full width of the duct.

H. Heat Detectors in Elevator Shafts: Coordinate temperature rating and location with sprinkler rating and location.

I. Audible Alarm-Indicating Devices: Install not less than 6 inches (150 mm) below the ceiling. Install bells and horns on flush-mounted back boxes with the device-operating mechanism concealed behind a grille. Combine audible and visible alarms at the same location into a single unit.

J. Visible Alarm-Indicating Devices: Install adjacent to each alarm bell or alarm horn and at least 6 inches (150 mm) below the ceiling.
   1. Synchronization: synchronize any two strobes located such that they are visible from the same location.

K. FACP: Surface mount with tops of cabinets not more than 72 inches (1830 mm) above the finished floor.

L. Annunciator: Install with the top of the panel not more than 60 inches (1830 mm) above the finished floor.

3.2 WIRING INSTALLATION

A. Wiring Method: Install wiring in metal raceway according to Division 16 Section "Raceways and Boxes." Conceal raceway except in unfinished spaces and as indicated.

B. Wiring within Enclosures: Separate power-limited and non-power-limited conductors as recommended by the manufacturer. Install conductors parallel with or at right angles to sides and back of the enclosure. Bundle, lace, and train conductors to terminal points with no excess. Connect conductors that are terminated, spliced, or interrupted in any enclosure associated with the fire alarm system to terminal blocks. Mark each terminal according to the system's wiring diagrams. Make all connections with approved crimp-on terminal spade lugs, pressure-type terminal blocks, or plug connectors.

C. Cable Taps: Use numbered terminal strips in junction, pull and outlet boxes, cabinets, or equipment enclosures where circuit connections are made.

D. Color-Coding: Color-code fire alarm conductors differently from the normal building power wiring. Use one color-code for alarm circuit wiring and a different color-code for supervisory circuits. Color-code audible alarm-indicating circuits differently from alarm-initiating circuits. Use different colors for visible alarm-indicating devices. Paint fire alarm system junction boxes and covers red.

E. Risers: Install at least two vertical cable risers to serve the fire alarm system. Separate risers in close proximity to each other with a minimum one-hour-rated wall, so the loss of one riser does not prevent the receipt or transmission of signal from other floors or zones.

F. Wiring to Remote Alarm Transmitting Device: 1-inch (25-mm) conduit between the FACP and the transmitter. Install number of conductors and electrical supervision for connecting wiring as needed to suit monitoring function.

3.3 IDENTIFICATION

A. Identify system components, wiring, cabling, and terminals according to Division 16 Section "Electrical Identification."
   1. Paint all fire alarm system junction boxes, device boxes, and pull boxes with red paint.

B. Install instructions frame in a location visible from the FACP.

C. Prepare laminated drawings showing each device and identifying the device address or zone

D. Paint power-supply disconnect switch red and label "FIRE ALARM."

3.4 GROUNDING

A. Signal Ground Terminal: Locate at main equipment rack or cabinet. Isolate from power system and equipment grounding.

B. Install grounding electrodes of type, size, location, and quantity as indicated. Comply with installation requirements in Division 16 Section "Grounding."

C. Ground equipment and conductor and cable shields. For audio circuits, minimize, to the greatest extent possible, ground loops, common-mode returns, noise pickup, cross talk, and other impairments. Provide 5-ohm ground at main equipment location. Measure, record, and report ground resistance.

3.5 FIELD QUALITY CONTROL

A. Manufacturer's Field Service: Engage a factory-authorized service representative to inspect field-assembled components and connections and to supervise pretesting, testing, and adjustment of the system. Report results in writing.

B. Pretesting: After installation, align, adjust, and balance the system and perform complete pretesting. Determine, through pretesting, the compliance of the system with requirements of Drawings and Specifications. Correct deficiencies observed in pretesting. Replace malfunctioning or damaged items with new ones, and retest until satisfactory performance and conditions are achieved. Prepare forms for systematic recording of acceptance test results.

C. Report of Pretesting: After pretesting is complete, provide a letter certifying the installation is complete and fully operable, including the names and titles of witnesses to preliminary tests.

D. Final Test Notice: Provide a minimum of 10 days' notice in writing when the system is ready for final acceptance testing.

E. Minimum System Tests: Test the system according to procedures outlined in NFPA 72. Minimum required tests are as follows:
   1. Verify the absence of unwanted voltages between circuit conductors and ground.

2. Test all conductors for short circuits using an insulation-testing device.
3. With each circuit pair, short circuit at the far end of the circuit and measure the circuit resistance with an ohmmeter. Record the circuit resistance of each circuit on record drawings.
4. Verify that the control unit is in the normal condition as detailed in the manufacturer's operation and maintenance manual.
5. Test initiating and indicating circuits for proper signal transmission under open circuit and ground fault conditions. One connection each should be opened at not less than 10 percent of initiating and indicating devices. Observe proper signal transmission according to class of wiring used.
6. Test each initiating and indicating device for alarm operation and proper response at the control unit.
   a. Test smoke detectors with actual products of combustion.
   b. Test each heat detector with hair dryer or other means approved by the manufacturer.
   c. Test fan shut down, sprinkler flow and tamper switches, door closers, magnetic door holders, and elevator return.
7. Test the system for all specified functions according to the approved operation and maintenance manual. Systematically initiate specified functional performance items at each station, including making all possible alarm and monitoring initiations and using all communications options. For each item, observe related performance at all devices required to be affected by the item under all system sequences. Observe indicating lights, displays, signal tones, and annunciator indications.
8. Test Both Primary and Secondary Power: Verify by test that the secondary power system is capable of operating the system for the period and in the manner specified.
   a. Disconnect fire alarm from primary power source 24 hours prior to test, or longer as specified. Test all indicating devices to determine whether audio and visual devices comply with testing requirements for a 15 minute test.

F. Retesting: Correct deficiencies indicated by tests and completely retest work affected by such deficiencies. Verify by the system test that the total system meets Specifications and complies with applicable standards.

G. Report of Tests and Inspections: Provide a written record of inspections, tests, and detailed test results in the form of a test log. Submit log on the satisfactory completion of tests.

H. Tag all equipment, stations, and other components at which tests have been satisfactorily completed.

3.6 CLEANING AND ADJUSTING

A. Cleaning: Remove paint splatters and other spots, dirt, and debris. Touch up scratches and marred finish to match original finish. Clean unit internally using methods and materials recommended by manufacturer.

3.7 DEMONSTRATION

A. Engage a factory-authorized service representative to train Owner's maintenance personnel as specified below:
   1. Train Owner's maintenance personnel on procedures and schedules for starting and stopping, troubleshooting, servicing, adjusting, and maintaining equipment and schedules. Provide a minimum of 8 hours' training.

2. Training Aid: Use the approved final version of the operation and maintenance manual as a training aid.
3. Schedule training with Owner, through Architect, with at least seven days' advance notice.

3.8 ON-SITE ASSISTANCE

A. Occupancy Adjustments: When requested within one year of date of Substantial Completion, provide on-site assistance in adjusting sound levels, controls, and sensitivities to suit actual occupied conditions. Provide up to three requested visits to Project site for this purpose.

END OF SECTION 283100

SECTION 310700 GENERAL SITE CONSTRUCTION REQUIREMENTS

PART 1 GENERAL

1.1 SUMMARY

A. Includes But Not Limited to
1. General procedures and requirements for Site Work.

PART 2 PRODUCTS - Not Used

PART 3 EXECUTION

3.1 PREPARATION

A. Site Verification Of Conditions
1. 48 hours minimum prior to performing any work on site, contact Blue Stakes to arrange for utility location services.
2. Perform minor, investigative excavations to verify location of various existing underground facilities at sufficient locations to assure that no conflict with the proposed work exists and sufficient clearance is available to avoid damage to existing facilities.
3. Perform investigative excavating 5 days minimum in advance of performing any excavation or underground work.
4. Upon discovery of conflicts or problems with existing facilities, notify Architect by phone or fax within 24 hours. Follow telephone or fax notification with letter and diagrams indicating conflict or problem and sufficient measurements and details to evaluate problem.
5. Notify Owner of utilities a minimum of 48 hours prior to an work taking place.

3.2 PREPARATION

A. Protection
1. Spillage -
a. Avoid spillage by covering and securing loads when hauling on or adjacent to public streets or highways.
b. Remove spillage and sweep, wash, or otherwise clean project, streets, and highways.
2. Dust Control -
a. Take precautions necessary to prevent dust nuisance, both on-site and adjacent to public and private properties.
b. Correct or repair damage caused by dust.
3. Erosion Control -
a. Take precautions necessary to prevent erosion and transportation of soil downstream, to adjacent properties, and into on-site or off-site drainage

systems.

b. Develop, install, and maintain an erosion control plan if required by law.

c. Repair and correct damage caused by erosion.

4. Existing Plants And Features - Do not damage tops, trunks, and roots of existing trees and shrubs on site which are intended to remain. Do not use heavy equipment within branch spread. Interfering branches may be removed only with permission of Architect. Do not damage other plants and features which are to remain.

5. Protect site from fire caused by welding, cutting, smoking, or other sources of ignition.

B. If specified precautions are not taken or corrections and repairs made promptly, Owner may take such steps as may be deemed necessary and deduct costs of such from monies due to Contractor. Such action or lack of action on Owner's part does not relieve Contractor from responsibility for proper protection of the Work.

C. Fees

1. Contractor shall be responsible for all off site street cut fees, encroachment permit fees, and bonding associated with the construction of the proposed facility.

3.3 REPAIR / RESTORATION

A. Adjust existing covers, boxes, and vaults to grade.

B. Replace broken or damaged covers, boxes, and vaults.

C. Independently confirm size, location, and number of covers, boxes, and vaults which require adjustment.

3.4 FIELD QUALITY CONTROL

A. Notify Architect 48 hours prior to performing excavation or fill work.

B. If work has been interrupted by weather, scheduling, or other reason, notify Architect 24 hours minimum prior to intended resumption of grading or compacting.

C. Owner reserves right to require additional testing to re-affirm suitability of completed work including compacted soils which have been exposed to adverse weather conditions.

END OF SECTION 310700

SECTION 311000 - SITE CLEARING

PART 1 - GENERAL

1.1 RELATED DOCUMENTS

A. Drawings and general provisions of the Contract, including General and Supplementary Conditions and Division 01 Specification Sections, apply to this Section.

1.2 SUMMARY

A. This Section includes the following:
   1. Removing existing trees, shrubs, groundcovers, plants, and grass as indicated on demolition plan.
   2. Clearing and grubbing.
   3. Stripping and stockpiling topsoil.
   4. Removing above- and below-grade site improvements.
   5. Disconnecting, capping or sealing, abandoning site utilities in place, and removing site utilities.
   6. Temporary erosion and sedimentation control measures.

B. Related Sections include the following:
   1. Division 01 Section "Temporary Facilities and Controls" for temporary utilities, temporary construction and support facilities, temporary security, protection facilities, and temporary erosion and sedimentation control procedures.
   2. Division 01 Section "Temporary Tree and Plant Protection" for protecting trees remaining on-site that are affected by site operations.
   3. Division 02 Section "Structure Demolition" for demolition of buildings, structures, and site improvements.
   4. Division 31 Section "Earth Moving" for soil materials, excavating, backfilling, and site grading.
   5. Division 23 Section "Turf, Grasses, and Plants" for finish grading including preparing and placing planting soil mixes and testing of topsoil material.

1.3 DEFINITIONS

A. Topsoil: Natural or cultivated surface-soil layer containing organic matter and sand, silt, and clay particles; friable, pervious, and black or a darker shade of brown, gray, or red than underlying subsoil; reasonably free of subsoil, clay lumps, gravel, and other objects more than 2 inches in diameter; and free of subsoil and weeds, roots, toxic materials, or other non-soil materials.

B. Tree Protection Zone: Area surrounding individual trees or groups of trees to be protected during construction, and defined by the drip line of individual trees or the perimeter drip line of groups of trees, unless otherwise indicated.

1.4 MATERIAL OWNERSHIP

A. Except for stripped topsoil or other materials indicated to remain Owner's property, cleared materials shall become Contractor's property and shall be removed from Project site.

1.5 SUBMITTALS

A. Photographs or videotape, sufficiently detailed, of existing conditions of trees and plantings, adjoining construction, and site improvements that might be misconstrued as damage caused by site clearing.

B. Record drawings, according to Division 01 Section "Project Record Documents," identifying and accurately locating capped utilities and other subsurface structural, electrical, and mechanical conditions.

1.6 QUALITY ASSURANCE

A. Pre-installation Conference: Conduct conference at Project site to comply with requirements in Division 01 Section "Project Management and Coordination."

1.7 PROJECT CONDITIONS

A. Traffic: Minimize interference with adjoining roads, streets, walks, and other adjacent occupied or used facilities during site-clearing operations.

1. Do not close or obstruct streets, walks, or other adjacent occupied or used facilities without permission from Owner and authorities having jurisdiction.
2. Provide alternate routes around closed or obstructed traffic ways if required by authorities having jurisdiction.

B. Improvements on Adjoining Property: Authority for performing site clearing indicated on property adjoining Owner's property will be obtained by Owner before award of Contract.

1. Do not proceed with work on adjoining property until directed by Architect.

C. Salvable Improvements: Carefully remove items indicated to be salvaged and store on Owner's premises where indicated.

D. Utility Locator Service: Notify utility locator service for area where Project is located before site clearing.

E. Do not commence site clearing operations until temporary erosion and sedimentation control measures are in place.

PART 2 - PRODUCTS

2.1 SOIL MATERIALS

A. Satisfactory Soil Materials: Requirements for satisfactory soil materials are specified in Division 31 Section "Earth Moving."

1. Obtain approved borrow soil materials off-site when satisfactory soil materials are not available on-site.

PART 3 - EXECUTION

3.1 PREPARATION

A. Protect and maintain benchmarks and survey control points from disturbance during construction.

B. Locate and clearly flag trees and vegetation to remain or to be relocated.

C. Protect existing site improvements to remain from damage during construction.

1. Restore damaged improvements to their original condition, as acceptable to Owner.

3.2 TEMPORARY EROSION AND SEDIMENTATION CONTROL

A. Provide temporary erosion and sedimentation control measures to prevent soil erosion and discharge of soil-bearing water runoff or airborne dust to adjacent properties and walkways, according to requirements of authorities having jurisdiction, sediment and erosion control Drawings, a sediment and erosion control plan, specific to the site, that complies with EPA 832/R-92-005 or requirements of authorities having jurisdiction, whichever is more stringent.

B. Inspect, repair, and maintain erosion and sedimentation control measures during construction until permanent vegetation has been established.

C. Remove erosion and sedimentation controls and restore and stabilize areas disturbed during removal.

3.3 TREE PROTECTION

A. Erect and maintain temporary fencing around tree protection zones before starting site clearing. Remove fence when construction is complete.

1. Do not store construction materials, debris, or excavated material within fenced area.
2. Do not permit vehicles, equipment, or foot traffic within fenced area.
3. Maintain fenced area free of weeds and trash.

B. Do not excavate within tree protection zones, unless otherwise indicated.

C. Where excavation for new construction is required within tree protection zones, hand clear and excavate to minimize damage to root systems. Use narrow-tine spading forks, comb soil to expose roots, and cleanly cut roots as close to excavation as possible.

1. Cover exposed roots with burlap and water regularly.
2. Temporarily support and protect roots from damage until they are permanently redirected and covered with soil.
3. Coat cut faces of roots more than 1-1/2 inches in diameter with emulsified asphalt or other approved coating formulated for use on damaged plant tissues.
4. Backfill with soil as soon as possible.

D. Repair or replace trees and vegetation indicated to remain that are damaged by construction operations, in a manner approved by Architect.

1. Employ an arborist, licensed in jurisdiction where Project is located, to submit details of proposed repairs and to repair damage to trees and shrubs.
2. Replace trees that cannot be repaired and restored to full-growth status, as determined by Architect.

3.4 UTILITIES

A. Owner will arrange for disconnecting and sealing indicated utilities that serve existing structures before site clearing, when requested by Contractor.

1. Verify that utilities have been disconnected and capped before proceeding with site clearing.

B. Locate, identify, disconnect, and seal or cap off utilities indicated to be removed.

1. Arrange with utility companies to shut off indicated utilities.
2. Owner will arrange to shut off indicated utilities when requested by Contractor.

C. Existing Utilities: Do not interrupt utilities serving facilities occupied by Owner or others unless permitted under the following conditions and then only after arranging to provide temporary utility services according to requirements indicated:

1. Notify Architect not less than two days in advance of proposed utility interruptions.
2. Do not proceed with utility interruptions without Architect's written permission.

D. Excavate for and remove underground utilities indicated to be removed.

E. Removal of underground utilities is included in Division 21, Division 22, Division 26, Division 27, and Division 28 Sections covering site utilities.

3.5 CLEARING AND GRUBBING

A. Remove obstructions, trees, shrubs, grass, and other vegetation to permit installation of new construction.

1. Do not remove trees, shrubs, and other vegetation indicated to remain or to be relocated.
2. Cut minor roots and branches of trees indicated to remain in a clean and careful manner where such roots and branches obstruct installation of new construction.
3. Grind stumps and remove roots, obstructions, and debris extending to a depth of 18 inches below exposed subgrade.
4. Use only hand methods for grubbing within tree protection zone.
5. Remove tree branches and dispose of off-site.

B. Fill depressions caused by clearing and grubbing operations with satisfactory soil material unless further excavation or earthwork is indicated.

1. Place fill material in horizontal layers not exceeding a loose depth of 8 inches and compact each layer to a density equal to adjacent original ground.

3.6 TOPSOIL STRIPPING

A. Remove sod and grass before stripping topsoil.

B. Strip topsoil to whatever depths are encountered in a manner to prevent intermingling with underlying subsoil or other waste materials.

1. Remove subsoil and non-soil materials from topsoil, including trash, debris, weeds, roots, and other waste materials.

C. Stockpile topsoil materials away from edge of excavations without intermixing with subsoil. Grade and shape stockpiles to drain surface water. Cover to prevent windblown dust.

1. Limit height of topsoil stockpiles to 120 inches.
2. Dispose of excess topsoil as specified for waste material disposal.
3. Stockpile surplus topsoil to allow for re-spreading deeper topsoil.

3.7 SITE IMPROVEMENTS

A. Remove existing above-grade and below-grade improvements as indicated and as necessary to facilitate new construction. Refer to project plans for improvements to be abandoned in place.

B. Remove slabs, paving, curbs, gutters, and aggregate base as indicated.

1. Unless existing full-depth joints coincide with line of demolition, neatly saw-cut length of existing pavement to remain before removing existing pavement. Saw-cut faces vertically.
2. Paint cut ends of steel reinforcement in concrete to remain to prevent corrosion.

3.8 DISPOSAL

A. Disposal: Remove surplus soil material, unsuitable topsoil, obstructions, demolished materials, and waste materials including trash and debris, and legally dispose of them off Owner's property.

1. Separate recyclable materials produced during site clearing from other non-recyclable materials. Store or stockpile without intermixing with other materials and transport them to recycling facilities.

END OF SECTION 311000

SECTION 312000 - EARTH MOVING

PART 1 - GENERAL

1.1 RELATED DOCUMENTS

A. Drawings and general provisions of the Contract, including General and Supplementary Conditions and Division 01 Specification Sections, apply to this Section.

B. Refer to the Geotechnical Report titled “Geotechnical Study, High Ed Kenley Ford Addition, Layton, Utah” prepared by Earthtec Testing and Engineering, P.C. dated June 23, 2008 for additional grading requirements.

1.2 SUMMARY

A. This Section includes the following:

1. Preparing sub-grades for slabs on grade, walks, pavements, lawns and grasses, and exterior plants.
2. Excavating and backfilling for buildings and structures.
3. Drainage course for slabs-on-grade.
4. Subbase course for concrete walks and pavements.
5. Subbase and base course for asphalt paving.
6. Subsurface drainage backfill for walls and trenches.
7. Excavating and backfilling for utility trenches.
8. Excavating and backfilling trenches for buried mechanical and electrical utilities and pits for buried utility structures.

B. Related Sections include the following:

1. Division 01 Section Construction Progress Documentation and Photographic Documentation for recording pre-excavation and earthwork progress.
2. Division 01 Section “Temporary Facilities and Controls" for temporary controls, utilities, and support facilities.
3. Divisions 21, 22, 23, 26, 27, and 28 Sections for installing underground mechanical and electrical utilities and buried mechanical and electrical structures.
4. Division 31 Section "Site Clearing" for temporary erosion and sedimentation control measures, site stripping, grubbing, stripping and stockpiling topsoil, and removal of above-grade and below-grade improvements and utilities.
5. Division 32 Section "Turf and Grasses" for finish grading, including preparing and placing topsoil and planting soil for lawns.
6. Division 32 Section "Plants" for planting bed establishment and tree and shrub pit excavation and planting.
7. Division 33 Section "Sub-drainage" for drainage of foundations, slabs on grade, walls, and landscaped areas.

1.3 UNIT PRICES

A. Unit prices for earthwork are included in Division 01 Section "Unit Prices."

B. Quantity allowances for earthwork are included in Division 01 Section "Allowances."

C. Rock Measurement: Volume of rock actually removed, measured in original position, but not to exceed the following. Unit prices for rock excavation include replacement with approved materials.

1. 24-inches outside of concrete forms other than at footings.
2. 12-inches outside of concrete forms at footings.
3. 6-inches outside of minimum required dimensions of concrete cast against grade.
4. Outside dimensions of concrete walls indicated to be cast against rock without forms or exterior waterproofing treatments.
5. 6-inches beneath bottom of concrete slabs-on-grade.
6. 6-inches beneath pipe in trenches, and the greater of 24-inches wider than pipe or 42-inches wide.

1.4 DEFINITIONS

A. Backfill: Soil material or controlled low-strength material used to fill an excavation.

1. Initial Backfill: Backfill placed beside and over pipe in a trench, including haunches to support sides of pipe.
2. Final Backfill: Backfill placed over initial backfill to fill a trench.

B. Base Course: Course placed between the subbase course and hot-mix asphalt paving.

C. Bedding Course: Course placed over the excavated subgrade in a trench before laying pipe.

D. Borrow Soil: Satisfactory soil imported from off-site for use as fill or backfill.

E. Drainage Course: Course supporting the slab-on-grade that also minimizes upward capillary flow of pore water.

F. Excavation: Removal of material encountered above subgrade elevations and to lines and dimensions indicated.

1. Authorized Additional Excavation: Excavation below subgrade elevations or beyond indicated lines and dimensions as directed by Architect. Authorized additional excavation and replacement material will be paid for according to Contract provisions for unit prices and changes in the work.
2. Bulk Excavation: Excavation more than 10-feet in width and more than 30-feet in length.
3. Unauthorized Excavation: Excavation below subgrade elevations or beyond indicated lines and dimensions without direction by Architect. Unauthorized excavation, as well as remedial work directed by Architect, shall be without additional compensation.

G. Fill: Soil materials used to raise existing grades.

H. Rock: Rock material in beds, ledges, un-stratified masses, conglomerate deposits, and boulders of rock material that exceed 1 cubic yard for bulk excavation or 3/4 cubic yard for footing, trench, and pit excavation that cannot be removed by rock excavating equipment equivalent to the following in size and performance ratings, without systematic drilling, ram hammering, ripping, or blasting, when permitted:

1. Excavation of Footings, Trenches, and Pits: Late-model, track-mounted hydraulic excavator; equipped with a 42-inch wide, maximum, short-tip-radius rock bucket; rated at not less than 138-hp flywheel power with bucket-curling force of not less than 28,090-lbf and stick-crowd force of not less than 18,650-lbf; measured according to SAE J-1179.
2. Bulk Excavation: Late-model, track-mounted loader; rated at not less than 210-hp flywheel power and developing a minimum of 48,510-lbf breakout force with a general-purpose bare bucket; measured according to SAE J-732.

I. Structures: Buildings, footings, foundations, retaining walls, slabs, tanks, curbs, mechanical and electrical appurtenances, or other man-made stationary features constructed above or below the ground surface.

J. Subbase Course: Course placed between the subgrade and base course for hot-mix asphalt pavement, or course placed between the subgrade and a cement concrete pavement or a cement concrete or hot-mix asphalt walk.

K. Subgrade: Surface or elevation remaining after completing excavation, or top surface of a fill or backfill immediately below subbase, drainage fill, or topsoil materials.

L. Utilities: On-site underground pipes, conduits, ducts, and cables, as well as underground services within buildings.

1.5 SUBMITTALS

A. Product Data: For the following:

1. Each type of plastic warning tape.
2. Geotextile.
3. Controlled low-strength material, including design mixture.

B. Samples: 12-by-12-inch Sample of sub-drainage and other geotextiles used.

C. Material Test Reports: From a qualified testing agency indicating and interpreting test results for compliance of the following with requirements indicated:

1. Classification according to ASTM D 2487 of each on-site and borrow soil material proposed for fill and backfill.
2. Laboratory compaction curve according to ASTM D698 or ASTM D1557 for each on-site and borrow soil material proposed for fill and backfill.

D. Blasting Plan: For record purposes and for approval of authorities having jurisdiction.

E. Seismic Survey Report: For record purposes; from seismic survey agency.

F. Pre-excavation Photographs or Videotape: Show existing conditions of adjoining construction and site improvements, including finish surfaces, that might be misconstrued as damage caused by earthwork operations. Submit before earthwork begins.

1.6 QUALITY ASSURANCE

A. Blasting: Comply with applicable requirements in NFPA 495, "Explosive Materials Code," and prepare a blasting plan reporting the following:

1. Types of explosive and sizes of charge to be used in each area of rock removal, types of blasting mats, sequence of blasting operations, and procedures that will prevent damage to site improvements and structures on Project site and adjacent properties.
2. Seismographic monitoring during blasting operations.

B. Seismic Survey Agency: An independent testing agency, acceptable to authorities having jurisdiction, experienced in seismic surveys and blasting procedures to perform the following services:

1. Report types of explosive and sizes of charge to be used in each area of rock removal, types of blasting mats, sequence of blasting operations, and procedures that will prevent damage to site improvements and structures on Project site and adjacent properties.
2. Seismographic monitoring during blasting operations.

C. Geotechnical Testing Agency Qualifications: An independent testing agency qualified according to ASTM E 329 to conduct soil materials and rock-definition testing, as documented according to ASTM D 3740 and ASTM E 548.

D. Pre-excavation Conference: Conduct conference at Project site to comply with requirements in Division 01 Section "Project Management and Coordination."

1.7 PROJECT CONDITIONS

A. Existing Utilities: Do not interrupt utilities serving facilities occupied by Owner or others unless permitted in writing by Architect and then only after arranging to provide temporary utility services according to requirements indicated.

1. Notify Architect not less than two days in advance of proposed utility interruptions.
2. Do not proceed with utility interruptions without Architect's written permission.
3. Contact utility-locator service for area where Project is located before excavating.

B. Demolish and completely remove from site existing underground utilities indicated to be removed. Coordinate with utility companies to shut off services if lines are active.

PART 2 - PRODUCTS

2.1 SOIL MATERIALS

A. General: Provide borrow soil materials when sufficient satisfactory soil materials are not available from excavations.

B. Satisfactory Soils: ASTM D 2487 Soil Classification Groups GW, GP, GM, SW, SP, and SM or AASHTO M 145 Soil Classification Groups A-1, A-2-4, A-2-5, and A-3, or a combination of these groups; free of rock or gravel larger than 3-inches in any dimension, debris, waste, frozen materials, vegetation, and other deleterious matter. Native rock crushed to meet the above requirements and free from significant porosity may also be used as satisfactory soils.

C. Unsatisfactory Soils: Soil Classification Groups GC, SC, CL, ML, OL, CH, MH, OH, and PT according to ASTM D 2487 or A-2-6, A-2-7, A-4, A-5, A-6, and A-7 according to AASHTO M 145, or a combination of these groups.

1. Unsatisfactory soils also include satisfactory soils not maintained within 2 percent of optimum moisture content at time of compaction.

D. Subbase Material: Naturally or artificially graded mixture of natural or crushed gravel, crushed stone, and natural or crushed sand; ASTM D 2940; with at least 90 percent passing a 1-1/2-inch sieve and not more than 12 percent passing a No. 200 sieve.

E. Base Course: Naturally or artificially graded mixture of natural or crushed gravel, crushed stone, and natural or crushed sand; ASTM D 2940; with at least 95 percent passing a 1-inch sieve and not more than 8 percent passing a No. 200 sieve. Sand Equivalent of no less than 35.

F. Engineered Fill: Naturally or artificially graded mixture of natural or crushed gravel, crushed stone, and natural or crushed sand; ASTM D 2940; with at least 90 percent passing a 1-1/2-inch sieve and not more than 8 percent passing a No. 200 sieve.

G. Bedding Course: Naturally or artificially graded mixture of natural or crushed gravel, crushed stone, and natural or crushed sand; ASTM D 2940; except with 100 percent passing a 3/4-inch sieve and not more than 8 percent passing a No. 200 sieve.

H. Drainage Course: Narrowly graded mixture of washed or crushed stone, or crushed or uncrushed gravel; ASTM D 448; coarse-aggregate grading Size 57; with 100 percent passing a 1-1/2-inch sieve and 0 to 5 percent passing a No. 8 sieve.

I. Filter Material: Narrowly graded mixture of natural or crushed gravel, or crushed stone and natural sand; ASTM D 448; coarse-aggregate grading Size 67; with 100 percent passing a 1-inch sieve and 0 to 5 percent passing a No. 4 sieve.

J. Sand: ASTM C 33; fine aggregate, natural, or manufactured sand.

K. Impervious Fill: Clayey gravel and sand mixture capable of compacting to a dense state.

2.2 GEOTEXTILES

A. Subsurface Drainage Geotextile: Non-woven needle-punched geotextile, manufactured for subsurface drainage applications, made from polyolefins or polyesters; with elongation greater than 50 percent; complying with AASHTO M 288 and the following, measured per test methods referenced:

1. Survivability: Class 2; AASHTO M 288.
2. Grab Tensile Strength: 157 lbf; ASTM D 4632.
3. Sewn Seam Strength: 142 lbf; ASTM D 4632.
4. Tear Strength: 56 lbf; ASTM D 4533.
5. Puncture Strength: 56 lbf; ASTM D 4833.
6. Apparent Opening Size: **No. 60** sieve, maximum; ASTM D 4751.
7. Permittivity: 0.2 per second, minimum; ASTM D 4491.
8. UV Stability: 50 percent after 500 hours' exposure; ASTM D 4355.

B. Separation Geotextile: Woven geotextile fabric, manufactured for separation applications, made from polyolefins or polyesters; with elongation less than 50 percent; complying with AASHTO M 288 and the following, measured per test methods referenced:

1. Survivability: Class 2; AASHTO M 288.
2. Grab Tensile Strength: 247 lbf; ASTM D 4632.
3. Sewn Seam Strength: 222 lbf; ASTM D 4632.
4. Tear Strength: 90 lbf; ASTM D 4533.
5. Puncture Strength: 90 lbf; ASTM D 4833.
6. Apparent Opening Size: No. 60 sieve, maximum; ASTM D 4751.
7. Permittivity: 0.02 per second, minimum; ASTM D 4491.
8. UV Stability: 50 percent after 500 hours' exposure; ASTM D 4355.

2.3 CONTROLLED LOW-STRENGTH MATERIAL

A. Controlled Low-Strength Material: Low-density, self-compacting, flowable concrete material as follows:

1. Portland Cement: ASTM C 150, Type II.
2. Fly Ash: ASTM C 618, Class C or F.
3. Normal-Weight Aggregate: ASTM C 33, 3/4-inch to 3/8-inch nominal maximum aggregate size.
4. Foaming Agent: ASTM C 869.
5. Water: ASTM C 94/C 94M.
6. Air-Entraining Admixture: ASTM C 260.

B. Produce low-density, controlled low-strength material with the following physical properties:

1. As-Cast Unit Weight: 30 to 36 lb/cu. ft. at point of placement, when tested according to ASTM C 138/C 138M.
2. Compressive Strength: 80 psi , when tested according to ASTM C 495.

2.4 ACCESSORIES

A. Warning Tape: Acid- and alkali-resistant polyethylene film warning tape manufactured for marking and identifying underground utilities, 6 inches wide and 4 mils thick, continuously inscribed with a description of the utility; colored as follows:

B. Detectable Warning Tape: Acid- and alkali-resistant polyethylene film warning tape manufactured for marking and identifying underground utilities, a minimum of 6 inches wide and 4 mils thick, continuously inscribed with a description of the utility, with metallic core encased in a protective jacket for corrosion protection, detectable by metal detector when tape is buried up to 30 inches deep; colored as follows when required by utility purveyor:

1. Red: Electric.
2. Yellow: Gas, oil, steam, and dangerous materials.
3. Orange: Telephone and other communications.
4. Blue: Water systems.
5. Green: Sewer systems.

PART 3 - EXECUTION

3.1 PREPARATION

A. Protect structures, utilities, sidewalks, pavements, and other facilities from damage caused by settlement, lateral movement, undermining, washout, and other hazards created by earthwork operations.

B. Preparation of subgrade for earthwork operations including removal of vegetation, topsoil, debris, obstructions, and deleterious materials from ground surface is specified in Division 31 Section "Site Clearing."

C. Protect and maintain erosion and sedimentation controls, which are specified in Division 31 Section "Site Clearing," during earthwork operations.

D. Provide protective insulating materials to protect subgrades and foundation soils against freezing temperatures or frost.

3.2 DEWATERING

A. Prevent surface water and ground water from entering excavations, from ponding on prepared subgrades, and from flooding Project site and surrounding area.

B. Protect subgrades from softening, undermining, washout, and damage by rain or water accumulation.

1. Reroute surface water runoff away from excavated areas. Do not allow water to accumulate in excavations. Do not use excavated trenches as temporary drainage ditches.

2. Install a dewatering system to keep subgrades dry and convey ground water away from excavations. Maintain until dewatering is no longer required.

3.3 EXPLOSIVES

A. Explosives: Obtain written permission from authorities having jurisdiction and from architect and owner before bringing explosives to Project site or using explosives on Project site.

1. Perform blasting without damaging adjacent structures, property, or site improvements.
2. Perform blasting without weakening the bearing capacity of rock subgrade and with the least-practicable disturbance to rock to remain.

3.4 EXCAVATION, GENERAL

A. Unclassified Excavation: Excavate to subgrade elevations regardless of the character of surface and subsurface conditions encountered. Unclassified excavated materials may include rock, soil materials, and obstructions. No changes in the Contract Sum or the Contract Time will be authorized for rock excavation or removal of obstructions.

1. If excavated materials intended for fill and backfill include unsatisfactory soil materials and rock, replace with satisfactory soil materials.
2. Remove rock to lines and grades indicated to permit installation of permanent construction without exceeding the following dimensions:

   a. 24 inches outside of concrete forms other than at footings.
   b. 12 inches outside of concrete forms at footings.
   c. 6 inches outside of minimum required dimensions of concrete cast against grade.
   d. Outside dimensions of concrete walls indicated to be cast against rock without forms or exterior waterproofing treatments.
   e. 6 inches beneath bottom of concrete slabs on grade.
   f. 6 inches beneath pipe in trenches, and the greater of 24 inches wider than pipe or 42 inches wide.

3.5 EXCAVATION FOR STRUCTURES

A. Excavate to indicated elevations and dimensions within a tolerance of plus or minus 1 inch (25 mm). If applicable, extend excavations a sufficient distance from structures for placing and removing concrete formwork, for installing services and other construction, and for inspections.

1. Excavations for Footings and Foundations: Do not disturb bottom of excavation. Excavate by hand to final grade just before placing concrete reinforcement. Trim bottoms to required lines and grades to leave solid base to receive other work.
2. Pile Foundations: Stop excavations 6 to 12 inches above bottom of pile cap before piles are placed. After piles have been driven, remove loose and displaced material. Excavate to final grade, leaving solid base to receive concrete pile caps.

3. Excavation for Underground Tanks, Basins, and Mechanical or Electrical Utility Structures: Excavate to elevations and dimensions indicated within a tolerance of plus or minus 1 inch. Do not disturb bottom of excavations intended as bearing surfaces.

3.6 EXCAVATION FOR WALKS AND PAVEMENTS

A. Excavate surfaces under walks and pavements to indicated lines, cross sections, elevations, and subgrades.

3.7 EXCAVATION FOR UTILITY TRENCHES

A. Excavate trenches to indicated gradients, lines, depths, and elevations.

1. Beyond building perimeter, excavate trenches to allow installation of top of pipe below frost line.

B. Excavate trenches to uniform widths to provide the following clearance on each side of pipe or conduit. Excavate trench walls vertically from trench bottom to 12 inches higher than top of pipe or conduit, unless otherwise indicated.

1. Clearance: 12 inches each side of pipe or conduit.

C. Trench Bottoms: Excavate and shape trench bottoms to provide uniform bearing and support of pipes and conduit. Shape subgrade to provide continuous support for bells, joints, and barrels of pipes and for joints, fittings, and bodies of conduits. Remove projecting stones and sharp objects along trench subgrade.

1. For pipes and conduit less than 6 inches in nominal diameter and flat-bottomed, multiple-duct conduit units, hand-excavate trench bottoms and support pipe and conduit on an undisturbed subgrade.
2. For pipes and conduit 6 inches or larger in nominal diameter, shape bottom of trench to support bottom 90 degrees of pipe circumference. Fill depressions with tamped sand backfill.
3. Excavate trenches 6 inches deeper than elevation required in rock or other unyielding bearing material to allow for bedding course.

3.8 SUBGRADE INSPECTION

A. Notify Architect when excavations have reached required subgrade.

B. If Architect determines that unsatisfactory soil is present, continue excavation and replace with compacted backfill or fill material as directed.

C. Proof-roll subgrade below the building slabs and pavements with heavy pneumatic-tired equipment to identify soft pockets and areas of excess yielding. Do not proof-roll wet or saturated subgrades.

1. Completely proof-roll subgrade in one direction, repeating proof-rolling in direction perpendicular to first direction. Limit vehicle speed to 3 mph.
2. Proof-roll with a loaded 10-wheel, tandem-axle dump truck weighing not less than 15 tons or vehicle with similar unit axel weight.
3. Excavate soft spots, unsatisfactory soils, and areas of excessive pumping or rutting, as determined by Architect, and replace with compacted backfill or fill as directed.

D. Authorized additional excavation and replacement material will be paid for according to Contract provisions for unit prices and changes in the Work.

E. Reconstruct subgrades damaged by freezing temperatures, frost, rain, accumulated water, or construction activities, as directed by Architect, without additional compensation.

3.9 UNAUTHORIZED EXCAVATION

A. Fill unauthorized excavation under foundations or wall footings by extending bottom elevation of concrete foundation or footing to excavation bottom, without altering top elevation. Lean concrete fill, with 28-day compressive strength of 2500 psi, may be used when approved by Architect.

1. Fill unauthorized excavations under other construction or utility pipe as directed by Architect.

3.10 STORAGE OF SOIL MATERIALS

A. Stockpile borrow soil materials and excavated satisfactory soil materials without intermixing. Place, grade, and shape stockpiles to drain surface water. Cover to prevent windblown dust.

1. Stockpile soil materials away from edge of excavations.

3.11 BACKFILL

A. Place and compact backfill in excavations promptly, but not before completing the following:

1. Construction below finish grade including, where applicable, subdrainage, dampproofing, waterproofing, and perimeter insulation.
2. Surveying locations of underground utilities for Record Documents.
3. Testing and inspecting underground utilities.
4. Removing concrete formwork.
5. Removing trash and debris.
6. Removing temporary shoring and bracing, and sheeting.
7. Installing permanent or temporary horizontal bracing on horizontally supported walls.

B. Place backfill on subgrades free of mud, frost, snow, or ice.

3.12 UTILITY TRENCH BACKFILL

A. Place backfill on subgrades free of mud, frost, snow, or ice.

B. Place and compact bedding course on trench bottoms and where indicated. Shape bedding course to provide continuous support for bells, joints, and barrels of pipes and for joints, fittings, and bodies of conduits.

C. Backfill trenches excavated under footings and within 18 inches of bottom of footings with satisfactory soil; fill with concrete to elevation of bottom of footings. Concrete is specified in Division 03 Section "Cast-in-Place Concrete."

D. Provide 4-inch- thick, concrete-base slab support for piping or conduit less than 12 inches below surface of roadways. After installing and testing, completely encase piping or conduit in a minimum of 4 inches of concrete before backfilling or placing roadway subbase.

E. Place and compact initial backfill of subbase material or satisfactory soil, free of particles larger than 1 inch in any dimension, to a height of 12 inches over the utility pipe or conduit.

   1. Carefully compact initial backfill under pipe haunches and compact evenly up on both sides and along the full length of utility piping or conduit to avoid damage or displacement of piping or conduit. Coordinate backfilling with utilities testing.

F. Controlled Low-Strength Material: Place initial backfill of controlled low-strength material to a height of 12 inches over the utility pipe or conduit.

G. Backfill voids with satisfactory soil while installing and removing shoring and bracing.

H. Place and compact final backfill of satisfactory soil to final subgrade elevation.

I. Controlled Low-Strength Material: Place final backfill of controlled low-strength material to final subgrade elevation.

J. Install warning tape directly above utilities, 12 inches below finished grade, except 6 inches below subgrade under pavements and slabs.

3.13 SOIL FILL

A. Plow, scarify, bench, or break up sloped surfaces steeper than 1 vertical to 4 horizontal so fill material will bond with existing material.

B. Place and compact fill material in layers to required elevations as follows:

   1. Under grass and planted areas, use satisfactory soil material.
   2. Under walks and pavements, use satisfactory soil material.
   3. Under steps and ramps, use engineered fill.
   4. Under building slabs, use engineered fill.
   5. Under footings and foundations, use engineered fill.

C. Place soil fill on subgrades free of mud, frost, snow, or ice.

3.14 SOIL MOISTURE CONTROL

A. Uniformly moisten or aerate subgrade and each subsequent fill or backfill soil layer before compaction to within 2 percent of optimum moisture content.

1. Do not place backfill or fill soil material on surfaces that are muddy, frozen, or contain frost or ice.
2. Remove and replace, or scarify and air dry otherwise satisfactory soil material that exceeds optimum moisture content by 2 percent and is too wet to compact to specified dry unit weight.

3.15 COMPACTION OF SOIL BACKFILLS AND FILLS

A. Place backfill and fill soil materials in layers not more than 12-inches in loose depth for material compacted by heavy compaction equipment, and not more than 4 inches in loose depth for material compacted by hand-operated tampers. Reduce loose depths as needed to achieve required compactions.

B. Place backfill and fill soil materials evenly on all sides of structures to required elevations, and uniformly along the full length of each structure.

C. Compact soil materials to not less than the following percentages of maximum dry unit weight according to ASTM D 698 or ASTM D 1557:

1. Under structures, building slabs, steps, and pavements, scarify and recompact top 12 inches of existing subgrade and each layer of backfill or fill soil material at 95 percent.
2. Under walkways, scarify and recompact top 6 inches below subgrade and compact each layer of backfill or fill soil material at 95 percent.
3. Under lawn or unpaved areas, scarify and recompact top 6 inches below subgrade and compact each layer of backfill or fill soil material at 85 percent.
4. For utility trenches, compact each layer of initial and final backfill soil material at 85 percent if in landscaping areas or 95 percent if under structures, pavements, or walks.

3.16 GRADING

A. General: Uniformly grade areas to a smooth surface, free of irregular surface changes. Comply with compaction requirements and grade to cross sections, lines, and elevations indicated.

1. Provide a smooth transition between adjacent existing grades and new grades.
2. Cut out soft spots, fill low spots, and trim high spots to comply with required surface tolerances.

B. Site Grading: Slope grades to direct water away from buildings and to prevent ponding. Finish subgrades to required elevations within the following tolerances:

1. Lawn or Unpaved Areas: Plus or minus 1 inch.
2. Walks: Plus or minus 1 inch
3. Pavements: Plus or minus 1/2 inch

C. Grading inside Building Lines: Finish subgrade to a tolerance of 1/2 inch when tested with a 10-foot straightedge.

3.17 SUBSURFACE DRAINAGE

A. Subdrainage Pipe: Specified in Division 33 Section "Subdrainage."

B. Subsurface Drain: Place subsurface drainage geotextile around perimeter of subdrainage trench. Place a 6-inch course of filter material on subsurface drainage geotextile to support subdrainage pipe. Encase subdrainage pipe in a minimum of 12 inches of filter material, placed in compacted layers 6 inches thick, and wrap in subsurface drainage geotextile, overlapping sides and ends at least 6 inches.

1. Compact each filter material layer to 85 percent of maximum dry unit weight according to ASTM D 698 with a minimum of two passes of a plate-type vibratory compactor.

C. Drainage Backfill: Place and compact filter material over subsurface drain, in width indicated, to within 12 inches of final subgrade, in compacted layers 6 inches thick. Overlay drainage backfill with 1 layer of subsurface drainage geotextile, overlapping sides and ends at least 6 inches.

1. Compact each filter material layer to 85 percent of maximum dry unit weight according to ASTM D 698 with a minimum of two passes of a plate-type vibratory compactor].
2. Place and compact impervious fill over drainage backfill in 6-inch- thick compacted layers to final subgrade.

3.18 SUBBASE AND BASE COURSES

A. Place subbase and base course on subgrades free of mud, frost, snow, or ice.

B. On prepared subgrade, place subbase and base course under pavements and walks as follows:

1. Install separation geotextile on prepared subgrade according to manufacturer's written instructions, overlapping sides and ends where called for on details and on plans.
2. Place base course material over subbase course under hot-mix asphalt pavement.
3. Shape subbase and base course to required crown elevations and cross-slope grades.
4. Place subbase and base course 6 inches or less in compacted thickness in a single layer.
5. Place subbase and base course that exceeds 6 inches in compacted thickness in layers of equal thickness, with no compacted layer more than 6 inches thick or less than 3 inches thick.
6. Compact subbase and base course at optimum moisture content to required grades, lines, cross sections, and thickness to not less than 95 percent of maximum dry unit weight according to ASTM D 698 or ASTM D 1557.

C. Pavement Shoulders: Place shoulders along edges of subbase and base course to prevent lateral movement. Construct shoulders, at least 12 inches wide, of satisfactory soil materials and compact simultaneously with each subbase and base layer to not less than 95 percent of maximum dry unit weight according to ASTM D 698 or ASTM D 1557 where called for on project plans.

3.19 DRAINAGE COURSE

A. Place drainage course on subgrades free of mud, frost, snow, or ice.

B. On prepared subgrade, place and compact drainage course under cast-in-place concrete slabs-on-grade as follows:

1. Install subdrainage geotextile on prepared subgrade according to manufacturer's written instructions, overlapping sides and ends.
2. Place drainage course 6 inches or less in compacted thickness in a single layer.
3. Place drainage course that exceeds 6 inches in compacted thickness in layers of equal thickness, with no compacted layer more than 6 inches thick or less than 3 inches thick.
4. Compact each layer of drainage course to required cross sections and thicknesses to not less than 95 percent of maximum dry unit weight according to ASTM D 698.

3.20 FIELD QUALITY CONTROL

A. Testing Agency: Owner will engage a qualified independent geotechnical engineering testing agency to perform field quality-control testing.

B. Allow testing agency to inspect and test subgrades and each fill or backfill layer. Proceed with subsequent earthwork only after test results for previously completed work comply with requirements.

C. Footing Subgrade: At footing subgrades, at least one test of each soil stratum will be performed to verify design bearing capacities. Subsequent verification and approval of other footing subgrades may be based on a visual comparison of subgrade with tested subgrade when approved by Architect.

D. Testing agency will test compaction of soils in place according to ASTM D 1556, ASTM D 2167, ASTM D 2922, and ASTM D 2937, as applicable. Tests will be performed at the following locations and frequencies:

1. Paved and Building Slab Areas: At subgrade and at each compacted fill and backfill layer, at least 1 test for every 2000 sq. ft. or less of paved area or building slab, but in no case fewer than 3 tests.
2. Foundation Wall Backfill: At each compacted backfill layer, at least 1 test for each 100 feet or less of wall length, but no fewer than 2 tests.
3. Trench Backfill: At each compacted initial and final backfill layer, at least 1 test for each 150 feet or less of trench length, but no fewer than 2 tests.

E. When testing agency reports that subgrades, fills, or backfills have not achieved degree of compaction specified, scarify and moisten or aerate, or remove and replace soil to depth required; recompact and retest until specified compaction is obtained.

3.21 PROTECTION

A. Protecting Graded Areas: Protect newly graded areas from traffic, freezing, and erosion. Keep free of trash and debris.

B. Repair and reestablish grades to specified tolerances where completed or partially completed surfaces become eroded, rutted, settled, or where they lose compaction due to subsequent construction operations or weather conditions.

1. Scarify or remove and replace soil material to depth as directed by Architect; reshape and recompact.

C. Where settling occurs before Project correction period elapses, remove finished surfacing, backfill with additional soil material, compact, and reconstruct surfacing.

1. Restore appearance, quality, and condition of finished surfacing to match adjacent work, and eliminate evidence of restoration to greatest extent possible.

3.22 DISPOSAL OF SURPLUS AND WASTE MATERIALS

A. Disposal: Remove surplus satisfactory soil and waste material, including unsatisfactory soil, trash, and debris, and legally dispose of it off Owner's property.

B. Disposal: Transport surplus satisfactory soil to designated storage areas on Owner's property. Stockpile or spread soil as directed by Architect.

1. Remove waste material, including unsatisfactory soil, trash, and debris, and legally dispose of it off Owner's property.

END OF SECTION 312000

THIS PAGE LEFT INTENTIONALLY BLANK

SECTION 315000 - EXCAVATION SUPPORT AND PROTECTION

PART 1 - GENERAL

1.1 RELATED DOCUMENTS

A. Drawings and general provisions of the Contract, including General and Supplementary Conditions and Division 01 Specification Sections, apply to this Section.

1.2 SUMMARY

A. Section includes temporary excavation support and protection systems.

B. Related Sections:

1. Division 01 Section "Construction Progress Documentation and Photographic Documentation" for recording preexisting conditions and excavation support and protection system progress.
2. Division 01 Section "Temporary Facilities and Controls" for temporary utilities and support facilities.
3. Division 31 Section "Dewatering" for dewatering system for excavations.

1.3 PERFORMANCE REQUIREMENTS

A. Design, furnish, install, monitor, and maintain excavation support and protection system capable of supporting excavation sidewalls and of resisting soil and hydrostatic pressure and superimposed and construction loads.

1. Delegated Design: Design excavation support and protection system, including comprehensive engineering analysis by a qualified professional engineer, using performance requirements and design criteria indicated.
2. Prevent surface water from entering excavations by grading, dikes, or other means.
3. Install excavation support and protection systems without damaging existing buildings, structures, and site improvements adjacent to excavation.
4. Monitor vibrations, settlements, and movements.

1.4 SUBMITTALS

A. Shop Drawings: For excavation support and protection system.

B. Delegated-Design Submittal: For excavation support and protection system indicated to comply with performance requirements and design criteria, including analysis data signed and sealed by the qualified professional engineer responsible for their preparation.

C. Coordinate first paragraph below with qualification requirements in Division 01 Section "Quality Requirements."Qualification Data: For qualified professional engineer.

D. Other Informational Submittals:

1. Photographs or Videotape: Show existing conditions of adjacent construction and site improvements that might be misconstrued as damage caused by the absence of, the installation of, or the performance of excavation support and protection systems. Submit before Work begins.
2. Record Drawings: Identifying and locating capped utilities and other subsurface structural, electrical, or mechanical conditions.

a. Note locations and capping depth of wells and well points.

1.5 QUALITY ASSURANCE

A. Preinstallation Conference: Conduct conference at Project site.

1. Review methods and procedures related to excavation support and protection system including, but not limited to, the following:

a. Geotechnical report.
b. Existing utilities and subsurface conditions.
c. Proposed excavations.
d. Proposed equipment.
e. Monitoring of excavation support and protection system.
f. Working area location and stability.
g. Coordination with waterproofing.
h. Abandonment or removal of excavation support and protection system.

1.6 PROJECT CONDITIONS

A. Interruption of Existing Utilities: Do not interrupt any utility serving facilities occupied by Owner or others unless permitted under the following conditions and then only after arranging to provide temporary utility according to requirements indicated:

1. Notify Architect no fewer than two days in advance of proposed interruption of utility.
2. Do not proceed with interruption of utility without Architect's, Construction Manager's, and Owner's written permission.

B. Project-Site Information: A geotechnical report has been prepared for this Project and is available for information only. The opinions expressed in this report are those of geotechnical engineer and represent interpretations of subsoil conditions, tests, and results of analyses conducted by geotechnical engineer. Owner will not be responsible for interpretations or conclusions drawn from the data.

1. Make additional test borings and conduct other exploratory operations necessary for excavation support and protection.

2. The geotechnical report is referenced elsewhere in the Project Manual.

C. Survey Work: Engage a qualified land surveyor or professional engineer to survey adjacent existing buildings, structures, and site improvements; establish exact elevations at fixed points to act as benchmarks. Clearly identify benchmarks and record existing elevations.

1. During installation of excavation support and protection systems, regularly resurvey benchmarks, maintaining an accurate log of surveyed elevations and positions for comparison with original elevations and positions. Promptly notify Architect if changes in elevations or positions occur or if cracks, sags, or other damage is evident in adjacent construction.

PART 2 - PRODUCTS

2.1 MATERIALS

A. General: Provide materials that are either new or in serviceable condition.

B. Structural Steel: ASTM A 36/A 36M, ASTM A 690/A 690M, or ASTM A 992/A 992M.

C. Steel Sheet Piling: ASTM A 328/A 328M, ASTM A 572/A 572M, or ASTM A 690/A 690M; with continuous interlocks.

1. Corners: Site-fabricated mechanical interlock or Roll-formed corner shape with continuous interlock.

D. Wood Lagging: Lumber, mixed hardwood, nominal rough thickness of size and strength required for application.

E. Shotcrete: Comply with Division 03 Section "Shotcrete" for shotcrete materials and mixes, reinforcement, and shotcrete application.

F. Cast-in-Place Concrete: ACI 301, of compressive strength required for application.

G. Reinforcing Bars: ASTM A 615/A 615M, Grade 60, deformed.

H. Tiebacks: Steel bars, ASTM A 722/A 722M.

I. Tiebacks: Steel strand, ASTM A 416/A 416M.

PART 3 - EXECUTION

3.1 PREPARATION

A. Protect structures, utilities, sidewalks, pavements, and other facilities from damage caused by settlement, lateral movement, undermining, washout, and other hazards that could develop during excavation support and protection system operations.

1. Shore, support, and protect utilities encountered.

B. Install excavation support and protection systems to ensure minimum interference with roads, streets, walks, and other adjacent occupied and used facilities.

1. Do not close or obstruct streets, walks, or other adjacent occupied or used facilities without permission from Owner and authorities having jurisdiction. Provide alternate routes around closed or obstructed traffic ways if required by authorities having jurisdiction.

C. Locate excavation support and protection systems clear of permanent construction so that forming and finishing of concrete surfaces are not impeded.

D. Monitor excavation support and protection systems daily during excavation progress and for as long as excavation remains open. Promptly correct bulges, breakage, or other evidence of movement to ensure that excavation support and protection systems remain stable.

E. Promptly repair damages to adjacent facilities caused by installing excavation support and protection systems.

3.2 SOLDIER PILES AND LAGGING

A. Install steel soldier piles before starting excavation. Extend soldier piles below excavation grade level to depths adequate to prevent lateral movement. Space soldier piles at regular intervals not to exceed allowable flexural strength of wood lagging. Accurately align exposed faces of flanges to vary not more than 2 inches from a horizontal line and not more than 1:120 out of vertical alignment.

B. Install wood lagging within flanges of soldier piles as excavation proceeds. Trim excavation as required to install lagging. Fill voids behind lagging with soil, and compact.

C. Install wales horizontally at locations indicated on Drawings and secure to soldier piles.

3.3 SHEET PILING

A. Before starting excavation, install one-piece sheet piling lengths and tightly interlock to form a continuous barrier. Accurately place the piling, using templates and guide frames unless otherwise recommended in writing by the sheet piling manufacturer. Limit vertical offset of adjacent sheet piling to 60 inches. Accurately align exposed faces of sheet piling to vary not

more than 2 inches from a horizontal line and not more than 1:120 out of vertical alignment. Cut tops of sheet piling to uniform elevation at top of excavation.

3.4 TIEBACKS

A. Tiebacks: Drill, install, grout, and tension tiebacks. Test load-carrying capacity of each tieback and replace and retest deficient tiebacks.

1. Test loading shall be observed by a qualified professional engineer responsible for design of excavation support and protection system.
2. Maintain tiebacks in place until permanent construction is able to withstand lateral soil and hydrostatic pressures.

3.5 BRACING

A. Bracing: Locate bracing to clear columns, floor framing construction, and other permanent work. If necessary to move brace, install new bracing before removing original brace.

1. Do not place bracing where it will be cast into or included in permanent concrete work unless otherwise approved by Architect.
2. Install internal bracing, if required, to prevent spreading or distortion of braced frames.
3. Maintain bracing until structural elements are supported by other bracing or until permanent construction is able to withstand lateral earth and hydrostatic pressures.

3.6 REMOVAL AND REPAIRS

A. Remove excavation support and protection systems when construction has progressed sufficiently to support excavation and bear soil and hydrostatic pressures. Remove in stages to avoid disturbing underlying soils or damaging structures, pavements, facilities, and utilities.

1. Remove excavation support and protection systems to a minimum depth of 48 inches (1200 mm) below overlaying construction and abandon remainder.
2. Fill voids immediately with approved backfill compacted to density specified in Division 31 Section "Earth Moving."
3. Repair or replace, as approved by Architect, adjacent work damaged or displaced by removing excavation support and protection systems.

B. Leave excavation support and protection systems permanently in place.

END OF SECTION 315000

THIS PAGE LEFT INTENTIONALLY BLANK

SECTION 321216 - ASPHALT PAVING

PART 1 - GENERAL

1.1 RELATED DOCUMENTS

A. Drawings and general provisions of the Contract, including General and Supplementary Conditions and Division 01 Specification Sections, apply to this Section.

1.2 SUMMARY

A. Section Includes:

1. Cold milling of existing hot-mix asphalt pavement.
2. Hot-mix asphalt patching.
3. Hot-mix asphalt paving.
4. Hot-mix asphalt paving overlay.
5. Asphalt surface treatments.
6. Pavement-marking paint.
7. Traffic-calming devices.
8. Imprinted asphalt.

B. Related Sections:

1. Division 02 Section "Structure Demolition" for demolition, removal, and recycling of existing asphalt pavements, and for geotextiles that are not embedded within courses of asphalt paving.
2. Division 31 Section "Earth Moving" for aggregate subbase and base courses and for aggregate pavement shoulders.
3. Division 32 Sections for other paving installed as part of crosswalks in asphalt pavement areas.
4. Division 32 Section "Concrete Paving Joint Sealants" for joint sealants and fillers at paving terminations.
5. Division 32 Section "Unit Paving" for bituminous setting bed for pavers.

1.3 UNIT PRICES

A. Work of this Section is affected by unit prices and as defined in Division 1.

1.4 DEFINITION

A. Hot-Mix Asphalt Paving Terminology: Refer to ASTM D 8 for definitions of terms.

1.5 SUBMITTALS

A. Product Data: For each type of product indicated. Include technical data and tested physical and performance properties.

1. Job-Mix Designs: Certification, by authorities having jurisdiction, of approval of each job mix proposed for the Work.
2. Job-Mix Designs: For each job mix proposed for the Work.

B. Shop Drawings: Indicate pavement markings, lane separations, and defined parking spaces. Indicate, with international symbol of accessibility, spaces allocated for people with disabilities.

C. Samples: For each paving fabric, 12 by 12 inches minimum if used.

D. Samples for Verification: For the following products, in manufacturer's standard sizes unless otherwise indicated:

1. Each paving fabric, 12 by 12 inches minimum.
2. Each type and color of preformed traffic-calming device.
3. Each pattern and color of imprinted asphalt and precut marking material.

E. Qualification Data: For qualified manufacturer and Installer.

F. Material Certificates: For each paving material, from manufacturer.

G. Material Test Reports: For each paving material.

H. Fire Marshal Approval: For the striping plan as it relates to fire lanes and the marking therof.

1.6 QUALITY ASSURANCE

A. Manufacturer Qualifications: Provide copy of manufactures experience for verification of qualifications.

B. Installer Qualifications: Imprinted-asphalt manufacturer's authorized installer who is trained and approved for installation of imprinted asphalt required for this Project.

C. Testing Agency Qualifications: Qualified according to ASTM D 3666 for testing indicated.

D. Regulatory Requirements: Comply with materials, workmanship, and other applicable requirements of city and DOT for asphalt paving work.

1. Measurement and payment provisions and safety program submittals included in standard specifications do not apply to this Section.

E. Preinstallation Conference: Conduct conference at Project site

1. Review methods and procedures related to hot-mix asphalt paving including, but not limited to, the following:

a. Review proposed sources of paving materials, including capabilities and location of plant that will manufacture hot-mix asphalt.
b. Review condition of subgrade and preparatory work.
c. Review requirements for protecting paving work, including restriction of traffic during installation period and for remainder of construction period.
d. Review and finalize construction schedule and verify availability of materials, Installer's personnel, equipment, and facilities needed to make progress and avoid delays.

1.7 DELIVERY, STORAGE, AND HANDLING

A. Deliver pavement-marking materials to Project site in original packages with seals unbroken and bearing manufacturer's labels containing brand name and type of material, date of manufacture, and directions for storage.

B. Store pavement-marking materials in a clean, dry, protected location within temperature range required by manufacturer. Protect stored materials from direct sunlight.

1.8 PROJECT CONDITIONS

A. Environmental Limitations: Do not apply asphalt materials if subgrade is wet or excessively damp, if rain is imminent or expected before time required for adequate cure, or if the following conditions are not met:

1. Prime Coat: Minimum surface temperature of 60 deg F. Not used if paving takes place within 48 hours of final grading and final compaction of road base.
2. Tack Coat: Minimum surface temperature of 60 deg F.
3. Slurry Coat: Comply with weather limitations in ASTM D 3910.
4. Asphalt Base Course: Minimum surface temperature of 40 deg F and rising at time of placement.
5. Asphalt Surface Course: Minimum surface temperature of 60 deg F at time of placement.

B. Pavement-Marking Paint: Proceed with pavement marking only on clean, dry surfaces and at a minimum ambient or surface temperature of 40 deg F for oil-based materials 55 deg F for water-based materials, and not exceeding 95 deg F.

C. Imprinted Asphalt Paving: Proceed with coating imprinted pavement only when air temperature is at least 50 deg F and rising and will not drop below 50 deg F within 8 hours of coating application. Proceed only if no precipitation is expected within two hours after applying the final layer of coating.

PART 2 - PRODUCTS

2.1 AGGREGATES

A. General: Use materials and gradations that have performed satisfactorily in previous installations.

B. Coarse Aggregate: ASTM D 692, sound; angular crushed stone, crushed gravel, or cured, crushed blast-furnace slag.

C. Fine Aggregate: ASTM D 1073 or AASHTO M 29, sharp-edged natural sand or sand prepared from stone, gravel, cured blast-furnace slag, or combinations thereof.

1. For hot-mix asphalt, limit natural sand to a maximum of 20 percent by weight of the total aggregate mass.

D. Mineral Filler: ASTM D 242 or AASHTO M 17, rock or slag dust, hydraulic cement, or other inert material.

2.2 ASPHALT MATERIALS

A. Asphalt Cement: AC 20 per ASTM D 3381 for viscosity-graded material except use ductility at 39.2 deg. F., >5 for AC 20 and delete the loss on heating requirement on residue from “Thin-Film Oven Test”.

B. Prime Coat: Not required if paving is done within 48 hours of final compaction.

C. Tack Coat: ASTM D 977 or AASHTO M 140 emulsified asphalt, or ASTM D 2397 or AASHTO M 208 cationic emulsified asphalt, slow setting, diluted in water, of suitable grade and consistency for application.

D. Fog Seal: ASTM D 977 or AASHTO M 140 emulsified asphalt, or ASTM D 2397 or AASHTO M 208 cationic emulsified asphalt, slow setting, factory diluted in water, of suitable grade and consistency for application.

E. Water: Potable.

F. Undersealing Asphalt: ASTM D 3141, pumping consistency.

2.3 AUXILIARY MATERIALS

A. Herbicide: Commercial chemical for weed control, registered by the EPA. Provide in granular, liquid, or wettable powder form.

B. Sand: ASTM D 1073 or AASHTO M 29, Grade Nos. 2 or 3.

C. Paving Geotextile: AASHTO M 288, nonwoven polypropylene; resistant to chemical attack, rot, and mildew; and specifically designed for paving applications.

D. Joint Sealant: ASTM D 6690 or AASHTO M 324, Type I Type II or III Type IV, hot-applied, single-component, polymer-modified bituminous sealant.

E. Pavement-Marking Paint: Alkyd-resin type, lead and chromate free, ready mixed, complying with AASHTO M 248, Type N, Type F, and Type S; colors complying with FS TT-P-1952.

1. Color: White, Yellow, Blue, and As indicated.

F. Pavement-Marking Paint: MPI #32 Alkyd Traffic Marking Paint.

1. Color: White, Yellow, Blue, and As indicated.

G. Pavement-Marking Paint: Latex, waterborne emulsion, lead and chromate free, ready mixed, complying with FS TT-P-1952, Type II, with drying time of less than 45 minutes.

1. Color: White, Yellow, Blue, and As indicated.

H. Pavement-Marking Paint: MPI #97 Latex Traffic Marking Paint.

1. Color: White, Yellow, Blue, and As indicated.

I. Glass Beads: AASHTO M 247, Type 1.

J. Wheel Stops: Precast, air-entrained concrete, 2500-psi minimum compressive strength, 4-1/2 inches high by 9 inches wide by 72 inches. Provide chamfered corners, drainage slots on underside, and holes for anchoring to substrate.

1. Dowels: Galvanized steel, 3/4-inch diameter, 20-inch minimum length.

2.4 MIXES

A. Hot-Mix Asphalt: Dense, hot-laid, hot-mix asphalt plant mixes approved by authorities having jurisdiction**;** designed according to procedures in AI MS-2, "Mix Design Methods for Asphalt Concrete and Other Hot-Mix Types"; and complying with the following requirements:

1. Provide mixes with a history of satisfactory performance in geographical area where Project is located. Provide mix with the following characteristics:
   a. Number of compaction blows each end of specimen: 50.
   b. Satiability based on ASTM D5581: 1200 minimum.
   c. Flow in 0.01-inch units per ASTM D5581: 10-18.
   d. Voids in mineral aggregate VMA: 14.
   e. The percentage of bituminous material by weight added to aggregate will be between 4% and 7% of the weight of the bituminous mixture.
2. Surface Course: 3-inch minimum compacted thickness and as indicated on the drawings with aggregate meeting the following gradation table
   ¾ inch 100

½ inch	74-99
3/8 inch	69-91
No. 4	49-65
No. 8	33-47
No. 16	21-35
No. 50	6-18
No. 200	2-6

B. Emulsified-Asphalt Slurry: ASTM D 3910, Type 1.

PART 3 - EXECUTION

3.1 EXAMINATION

A. Verify that subgrade is dry and in suitable condition to begin paving.

B. Verify that the road base has been properly compacted and is at the correct line, grade, and slope.

C. Verify that the road base thickness is as indicated on the project plans.

D. Verify that sufficient depth at curbs, walks, lips and other vertical edges is available to place the required thickness of compacted ashalt.

E. Proof-roll subgrade below pavements with heavy pneumatic-tired equipment to identify soft pockets and areas of excess yielding. Do not proof-roll wet or saturated subgrades.

1. Completely proof-roll subgrade in one direction. Limit vehicle speed to 3 mph.
2. Proof roll with a loaded 10-wheel, tandem-axle dump truck weighing not less than 15 tons or other vehicle with similar axel weight.
3. Excavate soft spots, unsatisfactory soils, and areas of excessive pumping or rutting, as determined by Architect, and replace with compacted backfill or fill as directed.

F. Proceed with paving only after unsatisfactory conditions have been corrected.

G. Verify that utilities, traffic loop detectors, and other items requiring a cut and installation beneath the asphalt surface have been completed and that asphalt surface has been repaired flush with adjacent asphalt prior to beginning installation of imprinted asphalt.

3.2 PATCHING

A. Hot-Mix Asphalt Pavement: Saw cut perimeter of patch and excavate existing pavement section to sound base. Excavate rectangular or trapezoidal patches, extending 12 inches into adjacent sound pavement, unless otherwise indicated. Cut excavation faces vertically. Remove excavated material. Recompact existing unbound-aggregate base course to form new subgrade.

B. Portland Cement Concrete Pavement: Break cracked slabs and roll as required to reseat concrete pieces firmly.

1. Pump hot undersealing asphalt under rocking slab until slab is stabilized or, if necessary, crack slab into pieces and roll to reseat pieces firmly.
2. Remove disintegrated or badly cracked pavement. Excavate rectangular or trapezoidal patches, extending into adjacent sound pavement, unless otherwise indicated. Cut excavation faces vertically. Recompact existing unbound-aggregate base course to form new subgrade.

C. Tack Coat: Apply uniformly to vertical surfaces abutting or projecting into new, hot-mix asphalt paving at a rate of 0.05 to 0.15 gal./sq. yd.

1. Allow tack coat to cure undisturbed before applying hot-mix asphalt paving.
2. Avoid smearing or staining adjoining surfaces, appurtenances, and surroundings. Remove spillages and clean affected surfaces.

D. Patching: Fill excavated pavements with hot-mix asphalt base mix for full thickness of patch and, while still hot, compact flush with adjacent surface.

E. Patching: Partially fill excavated pavements with hot-mix asphalt base mix and, while still hot, compact. Cover asphalt base course with compacted, hot-mix surface layer finished flush with adjacent surfaces.

3.3 REPAIRS

A. Leveling Course: Install and compact leveling course consisting of hot-mix asphalt surface course to level sags and fill depressions deeper than 1 inch in existing pavements.

1. Install leveling wedges in compacted lifts not exceeding 3 inches thick.

B. Crack and Joint Filling: Remove existing joint filler material from cracks or joints to a depth of 1/4 inch.

1. Clean cracks and joints in existing hot-mix asphalt pavement.
2. Use emulsified-asphalt slurry to seal cracks and joints less than 1/4 inch wide. Fill flush with surface of existing pavement and remove excess.
3. Use hot-applied joint sealant to seal cracks and joints more than 1/4 inch wide. Fill flush with surface of existing pavement and remove excess.

3.4 SURFACE PREPARATION

A. General: Immediately before placing asphalt materials, remove loose and deleterious material from substrate surfaces. Ensure that prepared subgrade is ready to receive paving.

B. Herbicide Treatment: Not used.

C. Prime Coat: Do not use if paving takes place not more than 48 hours after final compaction and grading of road bases. If paving must be delayed significantly, re-grade and re-compact road base or apply Prime Coat. Apply uniformly over surface of compacted unbound-aggregate base course at a rate of 0.15 to 0.50 gal./sq. yd. Apply enough material to penetrate and seal but not flood surface. Allow prime coat to cure.

1. If prime coat is not entirely absorbed within 24 hours after application, spread sand over surface to blot excess asphalt. Use enough sand to prevent pickup under traffic. Remove loose sand by sweeping before pavement is placed and after volatiles have evaporated.
2. Protect primed substrate from damage until ready to receive paving.

D. Tack Coat: Apply uniformly to surfaces of existing pavement at a rate of 0.05 to 0.15 gal./sq. yd.

1. Allow tack coat to cure undisturbed before applying hot-mix asphalt paving.
2. Avoid smearing or staining adjoining surfaces, appurtenances, and surroundings.
3. Remove and replace items damaged by overspray or clean affected surfaces as directed by architect at no additional cost to owner.

3.5 HOT-MIX ASPHALT PLACING

A. Machine place hot-mix asphalt on prepared surface, spread uniformly, and strike off. Place asphalt mix by hand to areas inaccessible to equipment in a manner that prevents segregation of mix. Place each course to required grade, cross section, and thickness when compacted.
1. Place hot-mix asphalt surface course in single lift if design thickness is less than 3-inches. If design thickness is more than 3-inches, place in multiple lifts with a minimum thickness of 1.5-inches and a maximum thickness of 3-inches.
2. Spread mix at minimum temperature of 250 deg F.
3. Begin applying mix along centerline of crown for crowned sections and on high side of one-way slopes unless otherwise indicated.
4. Regulate paver machine speed to obtain smooth, continuous surface free of pulls and tears in asphalt-paving mat.

B. Place paving in consecutive strips not less than 10 feet wide unless infill edge strips of a lesser width are required.

1. After first strip has been placed and rolled, place succeeding strips and extend rolling to overlap previous strips. Complete a section of asphalt base course before placing asphalt surface course.

C. Promptly correct surface irregularities in paving course behind paver. Use suitable hand tools to remove excess material forming high spots. Fill depressions with hot-mix asphalt to prevent segregation of mix; use suitable hand tools to smooth surface.

3.6 JOINTS

A. Construct joints to ensure a continuous bond between adjoining paving sections. Construct joints free of depressions, with same texture and smoothness as other sections of hot-mix asphalt course.

1. Clean contact surfaces and apply tack coat to joints.
2. Offset longitudinal joints, in successive courses, a minimum of 6 inches.
3. Offset transverse joints, in successive courses, a minimum of 24 inches.
4. Construct transverse joints at each point where paver ends a day's work and resumes work at a subsequent time. Construct these joints using either "bulkhead" or "papered" method according to AI MS-22, for both "Ending a Lane" and "Resumption of Paving Operations."**.**
5. Compact joints as soon as hot-mix asphalt will bear roller weight without excessive displacement.
6. Compact asphalt at joints to a density within 2 percent of specified course density.

3.7 COMPACTION

A. General: Begin compaction as soon as placed hot-mix paving will bear roller weight without excessive displacement. Compact hot-mix paving with hot, hand tampers or with vibratory-plate compactors in areas inaccessible to rollers.

1. Complete compaction before mix temperature cools to 185 deg F.

B. Breakdown Rolling: Complete breakdown or initial rolling immediately after rolling joints and outside edge. Examine surface immediately after breakdown rolling for indicated crown, grade, and smoothness. Correct laydown and rolling operations to comply with requirements.

C. Intermediate Rolling: Begin intermediate rolling immediately after breakdown rolling while hot-mix asphalt is still hot enough to achieve specified density. Continue rolling until hot-mix asphalt course has been uniformly compacted to the following density:

1. Average Density: 96 percent of reference laboratory density according to ASTM D 6927 or AASHTO T 245, but not less than 94 percent nor greater than 100 percent.

D. Finish Rolling: Finish roll paved surfaces to remove roller marks while hot-mix asphalt is still warm.

E. Edge Shaping: While surface is being compacted and finished, trim edges of pavement to proper alignment. Bevel edges while asphalt is still hot; compact thoroughly.

F. Place asphalt so that final compacted asphalt is even with lip of gutter on curbs that drain away from the curb and gutter (open face or depressed curb and gutter). Place asphalt so that final compacted asphalt is 1/4-inch above lip of gutter on curbs that carry water (slope of parking lot is towards the curb). In transition areas, use extra care to make sure that no ponds, bird baths, or depressions are left after paving.

G. Repairs: Remove paved areas that are defective or contaminated with foreign materials and replace with fresh, hot-mix asphalt. Compact by rolling to specified density and surface smoothness.

H. Protection: After final rolling, do not permit vehicular traffic on pavement until it has cooled and hardened.

I. Erect barricades to protect paving from traffic until mixture has cooled enough not to become marked.

3.8 INSTALLATION TOLERANCES

A. Pavement Thickness: Compact each course to produce the thickness indicated within the following tolerances:
   1. Surface Course: Plus 1/4 inch, no minus.

B. Pavement Surface Smoothness: Compact each course to produce a surface smoothness within the following tolerances as determined by using a 10-foot straightedge applied transversely or longitudinally to paved areas:
   1. Surface Course: 1/8 inch.
   2. Crowned Surfaces: Test with crowned template centered and at right angle to crown. Maximum allowable variance from template is 1/4 inch.

C. After paving is complete, pour water on paved areas and identify ponds, bird baths, and depressions. Identify the same at open face and transition sections of curb and gutter. Remove and replace asphalt, curb and gutter, road base, and or sub-base as necessary to fix ponds, bird baths, or depressions at no additional cost to owner.

3.9 SURFACE TREATMENTS

A. Fog Seals: Apply fog seal at a rate of 0.10 to 0.15 gal./sq. yd. to existing asphalt pavement and allow to cure. With fine sand, lightly dust areas receiving excess fog seal.

B. Slurry Seals: Apply slurry coat in a uniform thickness according to ASTM D 3910 and allow curing.

   1. Roll slurry seal to remove ridges and provide a uniform, smooth surface.

3.10 PAVEMENT MARKING

A. Do not apply pavement-marking paint until layout, colors, and placement have been verified with Architect and approved by the local jurisdictional fire marshal.

B. Allow paving to age for 7 days minimum days before starting pavement marking.

C. Sweep and clean surface to eliminate loose material and dust.

D. Apply paint with mechanical equipment to produce pavement markings, of dimensions indicated, with uniform, straight edges. Apply at manufacturer's recommended rates to provide a minimum wet film thickness of 15 mils.

1. Broadcast glass beads uniformly into wet pavement markings at a rate of 6 lb/gal.

E. Color
1. Yellow: Parking stalls and pedestrian crossings.
2. Blue: Handicap insignia at appropriate stalls.
3. Red: Fire lanes and no parking areas.
4. White: Directional arrows.

3.11 WHEEL STOPS

A. Securely attach wheel stops to pavement with not less than two galvanized-steel dowels embedded at one-quarter to one-third points. Securely install dowels into pavement and bond to wheel stop. Recess head of dowel beneath top of wheel stop.

3.12 FIELD QUALITY CONTROL

A. Testing Agency: Owner will engage a qualified testing agency to perform tests and inspections.

B. Thickness: In-place compacted thickness of hot-mix asphalt courses will be determined according to ASTM D 3549.

C. Surface Smoothness: Finished surface of each hot-mix asphalt course will be tested for compliance with smoothness tolerances.

D. In-Place Density: Testing agency will take samples of uncompacted paving mixtures and compacted pavement according to ASTM D 979 or AASHTO T 168.

1. Reference maximum theoretical density will be determined by averaging results from four samples of hot-mix asphalt-paving mixture delivered daily to site, prepared according to ASTM D 2041, and compacted according to job-mix specifications.
2. In-place density of compacted pavement will be determined by testing core samples according to ASTM D 1188 or ASTM D 2726. Cores will also be measured for compacted thickness. The owner and architect may also direct additional cores to be taken at locations of their choosing to verify final pavement thickness.

a. One core sample will be taken for every 1000 sq. yd. or less of installed pavement, with no fewer than 3 cores taken.
b. Field density of in-place compacted pavement may also be determined by nuclear method according to ASTM D 2950 and correlated with ASTM D 1188 or ASTM D 2726.
c. Coordinate the time and locations of all holes so that cores may be filled.

E. The contractor will replace and compact hot-mix asphalt where core tests were taken.

F. Remove and replace or install additional hot-mix asphalt where test results or measurements indicate that it does not comply with specified requirements.

3.13 DISPOSAL

A. Except for material indicated to be recycled, remove excavated materials from Project site and legally dispose of them in an EPA-approved landfill.

1. Do not allow milled materials to accumulate on-site.

END OF SECTION 321216

THIS PAGE LEFT INTENTIONALLY BLANK

SECTION 321313 CONCRETE PAVING

PART 1 - GENERAL

1.1 RELATED DOCUMENTS

A. Drawings and general provisions of the Contract, including General and Supplementary Conditions and Division 01 Specification Sections, apply to this Section.

1.2 SUMMARY

A. This Section includes exterior cement concrete pavement for the following:

1. Driveways and roadways.
2. Parking lots.
3. Curbs and gutters.
4. Walkways.
5. Unit paver base.

B. Related Sections include the following:

1. Division 03 Section "Cast-in-Place Concrete" for general building applications of concrete.
2. Division 31 Section "Earth Moving" for subgrade preparation, grading, and subbase course.
3. Division 32 Section "Decorative Concrete Paving" for surface-imprinted, stamped finished concrete pavement.
4. Division 32 Section "Concrete Paving Joint Sealants" for joint sealants of joints in concrete pavement and at isolation joints of concrete pavement with adjacent construction.

1.3 DEFINITIONS

A. Cementitious Materials: Portland cement alone or in combination with one or more of blended hydraulic cement, fly ash and other pozzolans, and ground granulated blast-furnace slag.

1.4 SUBMITTALS

A. Product Data: For each type of manufactured material and product indicated.

B. Design Mixtures: For each concrete pavement mixture. Include alternate mixture designs when characteristics of materials, Project conditions, weather, test results, or other circumstances warrant adjustments.

C. Samples: 10-lb sample of exposed aggregate.

D. Qualification Data: For manufacturer and testing agency.

E. Material Test Reports: From a qualified testing agency indicating and interpreting test results for compliance of the following with requirements indicated, based on comprehensive testing of current materials:

1. Aggregates. Include service record data indicating absence of deleterious expansion of concrete due to alkali-aggregate reactivity.

F. Material Certificates: Signed by manufacturers certifying that each of the following materials complies with requirements:

1. Cementitious materials.
2. Steel reinforcement and reinforcement accessories.
3. Fiber reinforcement.
4. Admixtures.
5. Curing compounds.
6. Applied finish materials.
7. Bonding agent or epoxy adhesive.
8. Joint fillers.

G. Field quality-control test reports.

H. Minutes of preinstallation conference.

1.5 QUALITY ASSURANCE

A. Manufacturer Qualifications: Manufacturer of ready-mixed concrete products who complies with ASTM C 94/C 94M requirements for production facilities and equipment.

1. Manufacturer certified according to NRMCA's "Certification of Ready Mixed Concrete Production Facilities."

B. Testing Agency Qualifications: An independent agency qualified according to ASTM C 1077 and ASTM E 329 for testing indicated, as documented according to ASTM E 548.

1. Personnel conducting field tests shall be qualified as ACI Concrete Field Testing Technician, Grade 1, according to ACI CP-01 or an equivalent certification program.

C. ACI Publications: Comply with ACI 301, "Specification for Structural Concrete," unless modified by requirements in the Contract Documents.

D. Concrete Testing Service: Engage a qualified independent testing agency to perform material evaluation tests and to design concrete mixtures.

E. Mockups: Cast mockups of full-size sections of concrete pavement to demonstrate typical joints, surface finish, texture, color, and standard of workmanship.

1. Build mockups in the location and of the size indicated or, if not indicated, as directed by Architect.
2. Notify Architect seven days in advance of dates and times when mockups will be constructed.
3. Obtain Architect's approval of mockups before starting construction.
4. Maintain approved mockups during construction in an undisturbed condition as a standard for judging the completed pavement.
5. Demolish and remove approved mockups from the site when directed by Architect.
6. Approved mockups may become part of the completed Work if undisturbed at time of Substantial Completion.

F. Preinstallation Conference: Conduct conference at Project site to comply with requirements in Division 01 Section "Project Management and Coordination."

1. Before submitting design mixtures, review concrete pavement mixture design and examine procedures for ensuring quality of concrete materials and concrete pavement construction practices. Require representatives, including the following, of each entity directly concerned with concrete pavement, to attend conference:

a. Contractor's superintendent.
b. Independent testing agency responsible for concrete design mixtures.
c. Ready-mix concrete producer.
d. Concrete pavement subcontractor.

1.6 PROJECT CONDITIONS

A. Traffic Control: Maintain access for vehicular and pedestrian traffic as required for other construction activities.

PART 2 - PRODUCTS

2.1 MANUFACTURERS

A. In other Part 2 articles where titles below introduce lists, the following requirements apply to product selection:

1. Available Products: Subject to compliance with requirements, products that may be incorporated into the Work include, but are not limited to, products specified.
2. Products: Subject to compliance with requirements, provide one of the products specified.

3. Available Manufacturers: Subject to compliance with requirements, manufacturers offering products that may be incorporated into the Work include, but are not limited to, manufacturers specified.
4. Manufacturers: Subject to compliance with requirements, provide products by one of the manufacturers specified.

2.2 FORMS

A. Form Materials: Plywood, metal, metal-framed plywood, or other approved panel-type materials to provide full-depth, continuous, straight, smooth exposed surfaces.

1. Use flexible or curved forms for curves with a radius 100 feet or less.

B. Form-Release Agent: Commercially formulated form-release agent that will not bond with, stain, or adversely affect concrete surfaces and will not impair subsequent treatments of concrete surfaces.

2.3 STEEL REINFORCEMENT (NO REINFORCEMENT USED FOR FLATWORK)

A. Plain-Steel Welded Wire Reinforcement: ASTM A 185, fabricated from as-drawn steel wire into flat sheets.

B. Deformed-Steel Welded Wire Reinforcement: ASTM A 497, flat sheet.

C. Reinforcing Bars: ASTM A 615/A 615M, Grade 60; deformed.

D. Steel Bar Mats: ASTM A 184/A 184M; with ASTM A 615/A 615M, Grade 60, deformed bars; assembled with clips.

E. Plain Steel Wire: ASTM A 82.

F. Deformed-Steel Wire: ASTM A 496.

G. Joint Dowel Bars: Plain steel bars, ASTM A 615/A 615M, Grade 60. Cut bars true to length with ends square and free of burrs.

H. Tie Bars: ASTM A 615/A 615M, Grade 60, deformed.

I. Hook Bolts: ASTM A 307, Grade A, internally and externally threaded. Design hook-bolt joint assembly to hold coupling against pavement form and in position during concreting operations, and to permit removal without damage to concrete or hook bolt.

J. Bar Supports: Bolsters, chairs, spacers, and other devices for spacing, supporting, and fastening reinforcing bars, welded wire reinforcement, and dowels in place. Manufacture bar supports according to CRSI's "Manual of Standard Practice" from steel wire, plastic, or precast concrete of greater compressive strength than concrete, and as follows:

1. Equip wire bar supports with sand plates or horizontal runners where base material will not support chair legs.
2. For epoxy-coated reinforcement, use epoxy-coated or other dielectric-polymer-coated wire bar supports.

2.4 CONCRETE MATERIALS

A. Cementitious Material: Use the following cementitious materials, of the same type, brand, and source throughout the Project:

1. Portland Cement and as specified in Division 3 except that for exterior concrete, the minimum compressive strength is 4000 psi at 28 days.

B. Normal-Weight Aggregates: ASTM C 33, coarse aggregate, uniformly graded. Provide aggregates from a single source with documented service record data of at least 10 years' satisfactory service in similar pavement applications and service conditions using similar aggregates and cementitious materials.

1. Maximum Coarse-Aggregate Size: 1 inch nominal.
2. Fine Aggregate: Free of materials with deleterious reactivity to alkali in cement.

C. Exposed Aggregate: Selected, hard, and durable; washed; free of materials with deleterious reactivity to cement or that cause staining; from a single source, with gap-graded coarse aggregate as follows:

1. Aggregate Sizes: 3/4 to 1 inch nominal.
2. Aggregate Source, Shape, and Color and as required by the architect.

D. Water: ASTM C 94/C 94M.

E. Air-Entraining Admixture: ASTM C 260.

F. Chemical Admixtures: Provide admixtures certified by manufacturer to be compatible with other admixtures and to contain not more than 0.1 percent water-soluble chloride ions by mass of cementitious material.

1. Water-Reducing Admixture: ASTM C 494/C 494M, Type A.
2. Retarding Admixture: ASTM C 494/C 494M, Type B.
3. Water-Reducing and Retarding Admixture: ASTM C 494/C 494M, Type D.
4. High-Range, Water-Reducing Admixture: ASTM C 494/C 494M, Type F.
5. High-Range, Water-Reducing and Retarding Admixture: ASTM C 494/C 494M, Type G.
6. Plasticizing and Retarding Admixture: ASTM C 1017/C 1017M, Type II.

2.5 FIBER REINFORCEMENT

A. Synthetic Fiber: Monofilament or fibrillated polypropylene fibers engineered and designed for use in concrete pavement, complying with ASTM C 1116, Type III, 1/2 to 1-1/2 inches long.

1. Products:

a. Monofilament Fibers:

1) Axim Concrete Technologies; Fibrasol IIP.
2) Euclid Chemical Company (The); Fiberstrand 100.
3) FORTA Corporation; Forta Mono.
4) Grace, W. R. & Co.--Conn.; Grace MicroFiber.
5) Metalcrete Industries; Polystrand 1000.
6) SI Concrete Systems; Fibermix Stealth.

b. Fibrillated Fibers:

1) Axim Concrete Technologies; Fibrasol F.
2) FORTA Corporation; Forta.
3) Euclid Chemical Company (The); Fiberstrand F.
4) Grace, W. R. & Co.--Conn.; Grace Fibers.
5) SI Concrete Systems; Fibermesh.

2.6 CURING MATERIALS

A. Absorptive Cover: AASHTO M 182, Class 2, burlap cloth made from jute or kenaf, weighing approximately 9 oz./sq. yd. dry.

B. Moisture-Retaining Cover: ASTM C 171, polyethylene film or white burlap-polyethylene sheet.

C. Water: Potable.

D. Evaporation Retarder: Waterborne, monomolecular film forming; manufactured for application to fresh concrete.

1. Products:

a. Axim Concrete Technologies; Cimfilm.
b. Burke by Edeco; BurkeFilm.
c. ChemMasters; Spray-Film.
d. Conspec Marketing & Manufacturing Co., Inc.; Aquafilm.
e. Dayton Superior Corporation; Sure Film.
f. Euclid Chemical Company (The); Eucobar.
g. Kaufman Products, Inc.; Vapor Aid.
h. Lambert Corporation; Lambco Skin.
i. L&M Construction Chemicals, Inc.; E-Con.

j. MBT Protection and Repair, ChemRex Inc.; Confilm.
k. Meadows, W. R., Inc.; Sealtight Evapre.
l. Metalcrete Industries; Waterhold.
m. Nox-Crete Products Group, Kinsman Corporation; Monofilm.
n. Sika Corporation, Inc.; SikaFilm.
o. Symons Corporation; Finishing Aid.
p. Vexcon Chemicals, Inc.; Certi-Vex EnvioAssist.

E. Clear Waterborne Membrane-Forming Curing Compound: ASTM C 309, Type 1, Class B.

1. Products:

a. Anti-Hydro International, Inc.; AH Curing Compound #2 DR WB.
b. Burke by Edoko; Aqua Resin Cure.
c. ChemMasters; Safe-Cure Clear.
d. Conspec Marketing & Manufacturing Co., Inc.; W.B. Resin Cure.
e. Dayton Superior Corporation; Day Chem Rez Cure (J-11-W).
f. Euclid Chemical Company (The); Kurez DR VOX.
g. Kaufman Products, Inc.; Thinfilm 420.
h. Lambert Corporation; Aqua Kure-Clear.
i. L&M Construction Chemicals, Inc.; L&M Cure R.
j. Meadows, W. R., Inc.; 1100 Clear.
k. Nox-Crete Products Group, Kinsman Corporation; Resin Cure E.
l. Symons Corporation; Resi-Chem Clear.
m. Tamms Industries Inc.; Horncure WB 30.
n. Unitex; Hydro Cure 309.
o. Vexcon Chemicals, Inc.; Certi-Vex Enviocure 100.

F. White Waterborne Membrane-Forming Curing Compound: ASTM C 309, Type 2, Class B.

1. Products:

a. Anti-Hydro International, Inc.; AH Curing Compound #2 WP WB.
b. Burke by Edoco; Resin Emulsion White.
c. ChemMasters; Safe-Cure 2000.
d. Conspec Marketing & Manufacturing Co., Inc.; W.B. Resin Cure.
e. Dayton Superior Corporation; Day-Chem White Pigmented Cure (J-10-W).
f. Euclid Chemical Company (The); Kurez VOX White Pigmented.
g. Kaufman Products, Inc.; Thinfilm 450.
h. Lambert Corporation; Aqua Kure-White.
i. L&M Construction Chemicals, Inc.; L&M Cure R-2.
j. Meadows, W. R., Inc.; 1200-White.
k. Symons Corporation; Resi-Chem White.
l. Tamms Industries, Inc.; Horncure 200-W.
m. Unitex; Hydro White.

n. Vexcon Chemicals, Inc.; Certi-Vex Enviocure White 100.

2.7 RELATED MATERIALS

A. Expansion- and Isolation-Joint-Filler Strips: ASTM D 1751, asphalt-saturated cellulosic fiber or ASTM D 1752, cork or self-expanding cork.

B. Color stain: Match Architect's sample or as selected by Architect from manufacturer's full range of stains.

C. Slip-Resistive Aggregate Finish: Factory-graded, packaged, rustproof, nonglazing, abrasive aggregate of fused aluminum-oxide granules or crushed emery with emery aggregate containing not less than 50 percent aluminum oxide and not less than 20 percent ferric oxide; unaffected by freezing, moisture, and cleaning materials.

D. Bonding Agent: ASTM C 1059, Type II, non-redispersible, acrylic emulsion or styrene butadiene.

E. Epoxy Bonding Adhesive: ASTM C 881, two-component epoxy resin, capable of humid curing and bonding to damp surfaces, of class suitable for application temperature and of grade to requirements, and as follows:

1. Types I and II, non-load bearing and types IV and V, load bearing, for bonding hardened or freshly mixed concrete to hardened concrete.

F. Chemical Surface Retarder: Water-soluble, liquid-set retarder with color dye, for horizontal concrete surface application, capable of temporarily delaying final hardening of concrete to a depth of 1/8 to 1/4 inch.

1. Products:

a. Burke by Edeco; True Etch Surface Retarder.
b. ChemMasters; Exposee.
c. Conspec Marketing & Manufacturing Co., Inc.; Delay S.
d. Euclid Chemical Company (The); Surface Retarder S.
e. Kaufman Products, Inc.; Expose.
f. Metalcrete Industries; Surftard.
g. Nox-Crete Products Group, Kinsman Corporation; Crete-Nox TA.
h. Scofield, L. M. Company; Lithotex.
i. Sika Corporation, Inc.; Rugasol-S.
j. Vexcon Chemicals, Inc.; Certi-Vex Envioset.

G. Pigmented Mineral Dry-Shake Hardener: Factory-packaged dry combination of portland cement, graded quartz aggregate, color pigments, and plasticizing admixture. Use color pigments that are finely ground, nonfading mineral oxides interground with cement.

1. Products:

a. Conspec Marketing & Manufacturing Co., Inc.; Conshake 600 Colortone.

b. Dayton Superior Corporation; Quartz Tuff.
c. Euclid Chemical Company (The); Surflex.
d. Lambert Corporation; Colorhard.
e. L&M Construction Chemicals, Inc.; Quartz Plate FF.
f. MBT Protection and Repair, ChemRex Inc.; Mastercron.
g. Metalcrete Industries; Floor Quartz.
h. Scofield, L. M. Company; Lithochrome Color Hardener.
i. Symons Corporation; Hard Top.

2. Color: Match Architect's sample or as selected by Architect from manufacturer's full range.

H. Rock Salt: Sodium chloride crystals, kiln dried, coarse gradation with 100 percent passing 3/8-inch sieve and 85 percent retained on a No. 8 sieve.

2.8 PAVEMENT MARKINGS

A. Pavement-Marking Paint: Alkyd-resin type, lead and chromate free, ready mixed, complying with FS TT-P-115, Type I or II or AASHTO M 248, Type N or F.

1. Color: White, Yellow, Blue. See Section 321216 for color locations.

B. Pavement-Marking Paint: Latex, waterborne emulsion, lead and chromate free, ready mixed, complying with FS TT-P-1952, with drying time of less than 45 minutes.

1. Color: White, Yellow, Blue. See Section 321216 for color locations.

C. Glass Beads: AASHTO M 247, Type 1.

2.9 CONCRETE MIXTURES

A. Prepare design mixtures, proportioned according to ACI 301, for each type and strength of normal-weight concrete determined by either laboratory trial mixes or field experience.

1. Use a qualified independent testing agency for preparing and reporting proposed concrete mixture designs for the trial batch method.

B. Proportion mixtures to provide normal-weight concrete with the following properties:

1. Compressive Strength (28 Days): 4000 psi
2. Maximum Water-Cementitious Materials Ratio at Point of Placement: 0.45
3. Select slump limit from options in subparagraph below or revise to suit Project.
4. Slump Limit: 4 inches, plus or minus 1 inch.

C. Add air-entraining admixture at manufacturer's prescribed rate to result in normal-weight concrete at point of placement having an air content as follows:

1. Air Content: 5-8 percent nominal maximum aggregate size.

D. Limit water-soluble, chloride-ion content in hardened concrete to 0.15 percent by weight of cement.

E. Chemical Admixtures: Use admixtures according to manufacturer's written instructions.

1. Use water-reducing admixture, high-range, water-reducing admixture, high-range, water-reducing and retarding admixture, plasticizing, and retarding admixture in concrete, as required, for placement and workability.

2. Specify admixtures as part of submittal. Verify that admixtures proposed do not adversely effect stained concrete and will not modify colors of stain.

3. Coordinate acceptability of admixtures with architect.

F. Cementitious Materials: Limit percentage, by weight, of cementitious materials other than portland cement according to ACI 301 requirements as follows:

1. Fly Ash or Pozzolan: 25 percent.
2. Ground Granulated Blast-Furnace Slag: 50 percent.
3. Combined Fly Ash or Pozzolan, and Ground Granulated Blast-Furnace Slag: 50 percent, with fly ash or pozzolan not exceeding 25 percent.

G. Synthetic Fiber: Uniformly disperse in concrete mix at manufacturer's recommended rate, but not less than 1.0 lb/cu. yd. where specified and approved in mix submittal.

H. Color Stain: Add stain to concrete per manufacturers recommendations and to meet color required by architect and owner on areas of stained concrete.

2.10 CONCRETE MIXING

A. Ready-Mixed Concrete: Measure, batch, and mix concrete materials and concrete according to ASTM C 94/C 94M. Furnish batch certificates for each batch discharged and used in the Work.

1. When air temperature is between 85 deg F and 90 deg F, reduce mixing and delivery time from 1-1/2 hours to 75 minutes; when air temperature is above 90 deg F, reduce mixing and delivery time to 60 minutes.

B. Project-Site Mixing: Measure, batch, and mix concrete materials and concrete according to ASTM C 94/C 94M. Mix concrete materials in appropriate drum-type batch machine mixer.

1. For concrete mixes of 1 cu. yd. or smaller, continue mixing at least 1-1/2 minutes, but not more than 5 minutes after ingredients are in mixer, before any part of batch is released.
2. For concrete mixes larger than 1 cu. yd., increase mixing time by 15 seconds for each additional 1 cu. yd.

3. Provide batch ticket for each batch discharged and used in the Work, indicating Project identification name and number, date, mixture type, mixing time, quantity, and amount of water added.

PART 3 - EXECUTION

3.1 EXAMINATION

A. Examine exposed subgrades and subbase surfaces for compliance with requirements for dimensional, grading, and elevation tolerances.

B. Proof-roll prepared subbase surface below concrete pavements with heavy pneumatic-tired equipment to identify soft pockets and areas of excess yielding.

1. Completely proof-roll subbase in one direction. Limit vehicle speed to 3 mph.
2. Proof-roll with a loaded 10-wheel tandem-axle dump truck weighing not less than 15 tons or similar axel weight vehicle.
3. Subbase with soft spots and areas of pumping or rutting exceeding depth of 1/2 inch require correction according to requirements in Division 31 Section "Earth Moving."

C. Proceed with concrete pavement operations only after nonconforming conditions have been corrected and subgrade is ready to receive pavement.

3.2 PREPARATION

A. Remove loose material from compacted subbase surface immediately before placing concrete.

3.3 EDGE FORMS AND SCREED CONSTRUCTION

A. Set, brace, and secure edge forms, bulkheads, and intermediate screed guides for pavement to required lines, grades, and elevations. Install forms to allow continuous progress of work and so forms can remain in place at least 24 hours after concrete placement.

B. Clean forms after each use and coat with form-release agent to ensure separation from concrete without damage.

3.4 STEEL REINFORCEMENT

A. General: Comply with CRSI's "Manual of Standard Practice" for fabricating, placing, and supporting reinforcement.

B. Clean reinforcement of loose rust and mill scale, earth, ice, or other bond-reducing materials.

C. Arrange, space, and securely tie bars and bar supports to hold reinforcement in position during concrete placement. Maintain minimum cover to reinforcement.

D. Install welded wire reinforcement in lengths as long as practicable. Lap adjoining pieces at least one full mesh, and lace splices with wire. Offset laps of adjoining widths to prevent continuous laps in either direction.

E. Install fabricated bar mats in lengths as long as practicable. Handle units to keep them flat and free of distortions. Straighten bends, kinks, and other irregularities, or replace units as required before placement. Set mats for a minimum 2-inch overlap of adjacent mats.

3.5 JOINTS

A. General: Form construction, isolation, and contraction joints and tool edgings true to line with faces perpendicular to surface plane of concrete. Construct transverse joints at right angles to centerline, unless otherwise indicated.

1. When joining existing pavement, place transverse joints to align with previously placed joints, unless otherwise indicated.

B. Construction Joints: Set construction joints at side and end terminations of pavement and at locations where pavement operations are stopped for more than one-half hour unless pavement terminates at isolation joints.

1. Continue steel reinforcement across construction joints, unless otherwise indicated. Do not continue reinforcement through sides of pavement strips, unless otherwise indicated.
2. Provide tie bars at sides of pavement strips where indicated.
3. Butt Joints: Use bonding agent at joint locations where fresh concrete is placed against hardened or partially hardened concrete surfaces.
4. Keyed Joints: Provide preformed keyway-section forms or bulkhead forms with keys, unless otherwise indicated. Embed keys at least 1-1/2 inches into concrete.
5. Doweled Joints: Install dowel bars and support assemblies at joints where indicated. Lubricate or asphalt-coat one-half of dowel length to prevent concrete bonding to one side of joint.

C. Isolation Joints: Form isolation joints of preformed joint-filler strips abutting concrete curbs, catch basins, manholes, inlets, structures, walks, other fixed objects, and where indicated.

1. Locate expansion joints at intervals of 50 feet, unless otherwise indicated.
2. Extend joint fillers full width and depth of joint.
3. Terminate joint filler not less than 1/2 inch or more than 1 inch below finished surface if joint sealant is indicated.

4. Place top of joint filler flush with finished concrete surface if joint sealant is not indicated.
5. Furnish joint fillers in one-piece lengths. Where more than one length is required, lace or clip joint-filler sections together.
6. Protect top edge of joint filler during concrete placement with metal, plastic, or other temporary preformed cap. Remove protective cap after concrete has been placed on both sides of joint.

D. Contraction Joints: Form weakened-plane contraction joints, sectioning concrete into areas as indicated. Construct contraction joints for a depth equal to at least one-fourth of the concrete thickness, as follows:

1. Grooved Joints: Form contraction joints after initial floating by grooving and finishing each edge of joint with grooving tool to a 1/4-inch radius. Repeat grooving of contraction joints after applying surface finishes. Eliminate groover marks on concrete surfaces.
2. Sawed Joints: Form contraction joints with power saws equipped with shatterproof abrasive or diamond-rimmed blades. Cut 1/8-inch-wide joints into concrete when cutting action will not tear, abrade, or otherwise damage surface and before developing random contraction cracks.
3. Doweled Contraction Joints: Install dowel bars and support assemblies at joints where indicated. Lubricate or asphalt coat one-half of dowel length to prevent concrete bonding to one side of joint.

E. Edging: Tool edges of pavement, gutters, curbs, and joints in concrete after initial floating with an edging tool to a 1/4-inch radius. Repeat tooling of edges after applying surface finishes. Eliminate tool marks on concrete surfaces.

3.6 CONCRETE PLACEMENT

A. Inspection: Before placing concrete, inspect and complete formwork installation, steel reinforcement, and items to be embedded or cast in. Notify other trades to permit installation of their work.

B. Remove snow, ice, or frost from subbase surface and reinforcement before placing concrete. Do not place concrete on frozen surfaces.

C. Moisten subbase to provide a uniform dampened condition at time concrete is placed. Do not place concrete around manholes or other structures until they are at required finish elevation and alignment.

D. Comply with ACI 301 requirements for measuring, mixing, transporting, and placing concrete.

E. Do not add water to concrete during delivery or at Project site.

F. Do not add water to fresh concrete after testing.

G. Deposit and spread concrete in a continuous operation between transverse joints. Do not push or drag concrete into place or use vibrators to move concrete into place.

H. Consolidate concrete according to ACI 301 by mechanical vibrating equipment supplemented by hand spading, rodding, or tamping.

1. Consolidate concrete along face of forms and adjacent to transverse joints with an internal vibrator. Keep vibrator away from joint assemblies, reinforcement, or side forms. Use only square-faced shovels for hand spreading and consolidation. Consolidate with care to prevent dislocating reinforcement, dowels, and joint devices.

I. Place concrete in two operations; strike off initial pour for entire width of placement and to the required depth below finish surface. Lay welded wire fabric or fabricated bar mats immediately in final position. Place top layer of concrete, strike off, and screed.

1. Remove and replace concrete that has been placed for more than 15 minutes without being covered by top layer, or use bonding agent if approved by Architect.

J. Screed pavement surfaces with a straightedge and strike off.

K. Commence initial floating using bull floats or darbies to impart an open textured and uniform surface plane before excess moisture or bleed water appears on the surface. Do not further disturb concrete surfaces before beginning finishing operations or spreading surface treatments.

L. Curbs and Gutters: When automatic machine placement is used for curb and gutter placement, submit revised mix design and laboratory test results that meet or exceed requirements. Produce curbs and gutters to required cross section, lines, grades, finish, and jointing as specified for formed concrete. If results are not approved, remove and replace with formed concrete.

M. Slip-Form Pavers: When automatic machine placement is used for pavement, submit revised mix design and laboratory test results that meet or exceed requirements. Produce pavement to required thickness, lines, grades, finish, and jointing as required for formed pavement.

1. Compact subbase and prepare subgrade of sufficient width to prevent displacement of paver machine during operations.

N. When adjoining pavement lanes are placed in separate pours, do not operate equipment on concrete until pavement has attained 85 percent of its 28-day compressive strength.

O. Cold-Weather Placement: Comply with ACI 306.1 and as follows. Protect concrete work from physical damage or reduced strength that could be caused by frost, freezing actions, or low temperatures.

1. When air temperature has fallen to or is expected to fall below 40 deg F, uniformly heat water and aggregates before mixing to obtain a concrete mixture

temperature of not less than 50 deg F and not more than 80 deg F at point of placement.

2. Do not use frozen materials or materials containing ice or snow.
3. Do not use calcium chloride, salt, or other materials containing antifreeze agents or chemical accelerators unless otherwise specified and approved in mix designs.

P. Hot-Weather Placement: Comply with ACI 301 and as follows when hot-weather conditions exist:

1. Cool ingredients before mixing to maintain concrete temperature below 90 deg F at time of placement. Chilled mixing water or chopped ice may be used to control temperature, provided water equivalent of ice is calculated to total amount of mixing water. Using liquid nitrogen to cool concrete is Contractor's option.
2. Cover steel reinforcement with water-soaked burlap so steel temperature will not exceed ambient air temperature immediately before embedding in concrete.
3. Fog-spray forms, steel reinforcement, and subgrade just before placing concrete. Keep subgrade moisture uniform without standing water, soft spots, or dry areas.

3.7 FLOAT FINISHING

A. General: Do not add water to concrete surfaces during finishing operations.

B. Float Finish: Begin the second floating operation when bleed-water sheen has disappeared and concrete surface has stiffened sufficiently to permit operations. Float surface with power-driven floats, or by hand floating if area is small or inaccessible to power units. Finish surfaces to true planes. Cut down high spots and fill low spots. Refloat surface immediately to uniform granular texture.

1. Burlap Finish: Drag a seamless strip of damp burlap across float-finished concrete, perpendicular to line of traffic, to provide a uniform, gritty texture.
2. Medium-to-Fine-Textured Broom Finish: Draw a soft bristle broom across float-finished concrete surface perpendicular to line of traffic to provide a uniform, fine-line texture.
3. Medium-to-Coarse-Textured Broom Finish: Provide a coarse finish by striating float-finished concrete surface 1/16 to 1/8 inch deep with a stiff-bristled broom, perpendicular to line of traffic.
4. Coordinate with architect the locations of each type of finish.

3.8 SPECIAL FINISHES

A. Monolithic Exposed-Aggregate Finish: Expose coarse aggregate in pavement surfaces as follows:

1. Immediately after float finishing, spray-apply chemical surface retarder to pavement according to manufacturer's written instructions.
2. Cover pavement surface with plastic sheeting, sealing laps with tape, and remove when ready to continue finishing operations.
3. Without dislodging aggregate, remove excess mortar by lightly brushing surface with a stiff, nylon-bristle broom.
4. Fine-spray surface with water and brush. Repeat water flushing and brushing cycle until cement film is removed from aggregate surfaces to depth required.

B. Seeded Exposed-Aggregate Finish: Immediately after initial floating, spread a single layer of aggregate uniformly on pavement surface. Tamp aggregate into plastic concrete, and float finish to entirely embed aggregate with mortar cover of 1/16 inch.

1. Spray-apply chemical surface retarder to pavement according to manufacturer's written instructions.
2. Cover pavement surface with plastic sheeting, sealing laps with tape, and remove sheeting when ready to continue finishing operations.
3. Without dislodging aggregate, remove excess mortar by lightly brushing surface with a stiff, nylon-bristle broom.
4. Fine-spray surface with water and brush. Repeat water flushing and brushing cycle until cement film is removed from aggregate surfaces to depth required.

C. Slip-Resistive Aggregate Finish: Before final floating, spread slip-resistive aggregate finish on pavement surface according to manufacturer's written instructions and as follows:

1. Uniformly spread 25 lb/100 sq. ft. dampened slip-resistive aggregate over pavement surface in 2 applications. Tamp aggregate flush with surface using a steel trowel, but do not force below surface.
2. Uniformly distribute approximately two-thirds of slip-resistive aggregate over pavement surface with mechanical spreader, allow to absorb moisture, and embed by power floating. Follow power floating with a second slip-resistive aggregate application, uniformly distributing remainder of material at right angles to first application to ensure uniform coverage, and embed by power floating.
3. Cure concrete with curing compound recommended by slip-resistive aggregate manufacturer. Apply curing compound immediately after final finishing.
4. After curing, lightly work surface with a steel wire brush or abrasive stone and water to expose nonslip aggregate.

D. Rock-Salt Finish: After initial floating, uniformly spread 5 lb/100 sq. ft. rock salt over pavement surface.

1. Cover pavement surface with 1-mil-thick polyethylene sheet and remove sheet when concrete has hardened and 7-day curing period has elapsed.
2. Embed rock salt into plastic concrete, power float concrete, and trowel finish.
3. After 7-day curing period, saturate concrete with water and broom-sweep surface to dissolve remaining rock salt.

E. Pigmented Mineral Dry-Shake Hardener Finish: After initial floating, apply dry-shake materials to pavement surface according to manufacturer's written instructions and as follows:

1. Uniformly spread dry-shake hardener at a rate of 100 lb/100 sq. ft. unless greater amount is recommended by manufacturer to match pavement color required.
2. Uniformly distribute approximately two-thirds of dry-shake hardener over pavement surface with mechanical spreader, allow to absorb moisture, and embed by power floating. Follow power floating with a second dry-shake hardener application, uniformly distributing remainder of material at right angles to first application to ensure uniform color, and embed by power floating.
3. After final floating, apply a hand-trowel finish followed by a broom finish to concrete.
4. Cure concrete with curing compound recommended by dry-shake hardener manufacturer. Apply curing compound immediately after final finishing.

F. Coordinate the locations of finishes with the architect and owner prior to placing concrete.

3.9 CONCRETE PROTECTION AND CURING

A. General: Protect freshly placed concrete from premature drying and excessive cold or hot temperatures.

B. Comply with ACI 306.1 for cold-weather protection.

C. Evaporation Retarder: Apply evaporation retarder to concrete surfaces if hot, dry, or windy conditions cause moisture loss approaching 0.2 lb/sq. ft. x h before and during finishing operations. Apply according to manufacturer's written instructions after placing, screeding, and bull floating or darbying concrete, but before float finishing.

D. Begin curing after finishing concrete but not before free water has disappeared from concrete surface.

E. Curing Methods: Cure concrete by moisture curing, moisture-retaining-cover curing, curing compound, or a combination of these as follows:

1. Moist Curing: Keep surfaces continuously moist for not less than seven days with the following materials:

a. Water.
b. Continuous water-fog spray.
c. Absorptive cover, water saturated and kept continuously wet. Cover concrete surfaces and edges with 12-inch lap over adjacent absorptive covers.

2. Moisture-Retaining-Cover Curing: Cover concrete surfaces with moisture-retaining cover for curing concrete, placed in widest practicable width, with sides and ends lapped at least 12 inches, and sealed by waterproof tape or adhesive.

Immediately repair any holes or tears during curing period using cover material and waterproof tape.

3. Curing Compound: Apply uniformly in continuous operation by power spray or roller according to manufacturer's written instructions. Recoat areas subjected to heavy rainfall within three hours after initial application. Maintain continuity of coating and repair damage during curing period.

3.10 PAVEMENT TOLERANCES

A. Comply with tolerances of ACI 117 and as follows:

1. Elevation: 1/4 inch.
2. Thickness: Plus 3/8 inch, minus 1/4 inch.
3. Surface: Gap below 10-foot-long, unleveled straightedge not to exceed 1/4 inch.
4. Lateral Alignment and Spacing of Tie Bars and Dowels: 1 inch.
5. Vertical Alignment of Tie Bars and Dowels: 1/4 inch.
6. Alignment of Tie-Bar End Relative to Line Perpendicular to Pavement Edge: 1/2 inch.
7. Alignment of Dowel-Bar End Relative to Line Perpendicular to Pavement Edge: Length of dowel 1/4 inch per 12 inches.
8. Joint Spacing: 3 inches.
9. Contraction Joint Depth: Plus 1/4 inch, no minus.
10. Joint Width: Plus 1/8 inch, no minus.

3.11 PAVEMENT MARKING

A. Do not apply pavement-marking paint until layout, colors, and placement have been verified with Architect.

B. Allow concrete pavement to cure for 14 days and be dry before starting pavement marking.

C. Sweep and clean surface to eliminate loose material and dust.

D. Apply paint with mechanical equipment to produce pavement markings of dimensions indicated with uniform, straight edges. Apply at manufacturer's recommended rates to provide a minimum wet film thickness of 15 mils.

1. Spread glass beads uniformly into wet pavement markings at a rate of 6 lb/gal.

3.12 FIELD QUALITY CONTROL

A. Testing Agency: Owner will engage a qualified independent testing and inspecting agency to perform field tests and inspections and prepare test reports.

B. Testing Services: Testing of composite samples of fresh concrete obtained according to ASTM C 172 shall be performed according to the following requirements:

1. Testing Frequency: Obtain at least 1 composite sample for each 100 cu. yd. or 5000 sq. ft. or fraction thereof of each concrete mix placed each day.

a. When frequency of testing will provide fewer than five compressive-strength tests for each concrete mixture, testing shall be conducted from at least five randomly selected batches or from each batch if fewer than five are used.

2. Slump: ASTM C 143/C 143M; one test at point of placement for each composite sample, but not less than one test for each day's pour of each concrete mix. Perform additional tests when concrete consistency appears to change.
3. Air Content: ASTM C 231, pressure method; one test for each composite sample, but not less than one test for each day's pour of each concrete mix.
4. Concrete Temperature: ASTM C 1064; one test hourly when air temperature is 40 deg F and below and when 80 deg F and above, and one test for each composite sample.
5. Compression Test Specimens: ASTM C 31/C 31M; cast and laboratory cure one set of three standard cylinder specimens for each composite sample.
6. Compressive-Strength Tests: ASTM C 39/C 39M; test 1 specimen at 7 days and 2 specimens at 28 days.

a. A compressive-strength test shall be the average compressive strength from 2 specimens obtained from same composite sample and tested at 28 days.

C. Strength of each concrete mix will be satisfactory if average of any 3 consecutive compressive-strength tests equals or exceeds specified compressive strength and no compressive-strength test value falls below specified compressive strength by more than 500 psi.

D. Test results shall be reported in writing to Architect, concrete manufacturer, and Contractor within 48 hours of testing. Reports of compressive-strength tests shall contain Project identification name and number, date of concrete placement, name of concrete testing and inspecting agency, location of concrete batch in Work, design compressive strength at 28 days, concrete mixture proportions and materials, compressive breaking strength, and type of break for both 7- and 28-day tests.

E. Nondestructive Testing: Impact hammer, sonoscope, or other nondestructive device may be permitted by Architect but will not be used as sole basis for approval or rejection of concrete.

F. Additional Tests: Testing and inspecting agency shall make additional tests of concrete when test results indicate that slump, air entrainment, compressive strengths, or other requirements have not been met, as directed by Architect.

G. Remove and replace concrete pavement where test results indicate that it does not comply with specified requirements.

H. Additional testing and inspecting, at Contractor's expense, will be performed to determine compliance of replaced or additional work with specified requirements.

3.13 REPAIRS AND PROTECTION

A. Remove and replace concrete pavement that is broken, damaged, or defective or that does not comply with requirements in this Section.

B. Drill test cores, where directed by Architect, when necessary to determine magnitude of cracks or defective areas. Fill drilled core holes in satisfactory pavement areas with portland cement concrete bonded to pavement with epoxy adhesive.

C. Protect concrete from damage. Exclude traffic from pavement for at least 14 days after placement. When construction traffic is permitted, maintain pavement as clean as possible by removing surface stains and spillage of materials as they occur.

D. Maintain concrete pavement free of stains, discoloration, dirt, and other foreign material. Sweep concrete pavement not more than two days before date scheduled for Substantial Completion inspections.

END OF SECTION 321313

SECTION 321373 CONCRETE PAVING JOINT SEALANTS

PART 1 - GENERAL

1.1 RELATED DOCUMENTS

A. Drawings and general provisions of the Contract, including General and Supplementary Conditions and Division 01 Specification Sections, apply to this Section.

1.2 SUMMARY

A. This Section includes the following:

1. Expansion and contraction joints within cement concrete pavement.
2. Joints between cement concrete and asphalt pavement.

B. Related Sections include the following:

1. Division 07 Section "Joint Sealants" for sealing nontraffic and traffic joints in locations not specified in this Section.
2. Division 32 Section "Asphalt Paving" for constructing joints between concrete and asphalt pavement.
3. Division 32 Section "Concrete Paving" for constructing joints in concrete pavement.

1.3 SUBMITTALS

A. Product Data: For each joint-sealant product indicated.

B. Samples for Verification: For each type and color of joint sealant required. Install joint-sealant samples in 1/2-inch wide joints formed between two 6-inch long strips of material matching the appearance of exposed surfaces adjacent to joint sealants.

C. Product Certificates: For each type of joint sealant and accessory, signed by product manufacturer.

D. Qualification Data: For installer and testing agency.

E. Compatibility and Adhesion Test Reports: From sealant manufacturer, indicating the following:

1. Materials forming joint substrates and joint-sealant backings have been tested for compatibility and adhesion with joint sealants.
2. Interpretation of test results and written recommendations for primers and substrate preparation needed for adhesion.

F. Product Test Reports: Based on evaluation of comprehensive tests performed by a qualified testing agency, for sealants.

1.4 QUALITY ASSURANCE

A. Installer Qualifications: An employer of workers trained and approved by manufacturer.

B. Source Limitations: Obtain each type of joint sealant through one source from a single manufacturer.

C. Preconstruction Compatibility and Adhesion Testing: Submit to joint-sealant manufacturers, for testing indicated below, samples of materials that will contact or affect joint sealants.

1. Use ASTM C 1087 to determine whether priming and other specific joint preparation techniques are required to obtain rapid, optimum adhesion of joint sealants to joint substrates.
2. Submit not fewer than six (6) pieces of each type of material, including joint substrates, shims, joint-sealant backings, secondary seals, and miscellaneous materials.
3. Schedule sufficient time for testing and analyzing results to prevent delaying the Work.
4. For materials failing tests, obtain joint-sealant manufacturer's written instructions for corrective measures including use of specially formulated primers.
5. Testing will not be required if joint-sealant manufacturers submit joint preparation data that are based on previous testing of current sealant products for adhesion to, and compatibility with, joint substrates and other materials matching those submitted.

D. Product Testing: Obtain test results for "Product Test Reports" Paragraph in "Submittals" Article from a qualified testing agency based on testing of current sealant products within a 36-month period preceding the commencement of the Work.

1. Testing Agency Qualifications: An independent testing agency qualified according to ASTM C 1021 for testing indicated, as documented according to ASTM E 548.

1.5 DELIVERY, STORAGE, AND HANDLING

A. Deliver materials to Project site in original unopened containers or bundles with labels indicating manufacturer, product name and designation, color, expiration date, pot life, curing time, and mixing instructions for multi-component materials.

B. Store and handle materials to comply with manufacturer's written instructions to prevent their deterioration or damage due to moisture, high or low temperatures, contaminants, or other causes.

1.6 PROJECT CONDITIONS

A. Do not proceed with installation of joint sealants under the following conditions:

1. When ambient and substrate temperature conditions are outside limits permitted by joint-sealant manufacturer.
2. When ambient and substrate temperature conditions are outside limits permitted by joint-sealant manufacturer or are below 40 deg F.
3. When joint substrates are wet or covered with frost.
4. Where joint widths are less than those allowed by joint-sealant manufacturer for applications indicated.
5. Where contaminants capable of interfering with adhesion have not yet been removed from joint substrates.

PART 2 - PRODUCTS

2.1 MANUFACTURERS

A. Available Products: Subject to compliance with requirements, products that may be incorporated into the Work include, but are not limited to, products listed in other Part 2 articles.

B. Products: Subject to compliance with requirements, provide one of the products listed in other Part 2 articles.

2.2 MATERIALS, GENERAL

A. Compatibility: Provide joint sealants, backing materials, and other related materials that are compatible with one another and with joint substrates under conditions of service and application, as demonstrated by joint-sealant manufacturer based on testing and field experience.

B. Colors of Exposed Joint Sealants: As selected by Architect from manufacturer's full range.

2.3 COLD-APPLIED JOINT SEALANTS

A. Multi-component Jet-Fuel-Resistant Sealant for Concrete: Pourable, chemically curing elastomeric formulation complying with the following requirements for formulation and with ASTM C 920 for type, grade, class, and uses indicated:

1. Urethane Formulation: Type M; Grade P; Class 12-1/2; Uses T, M, and, as applicable to joint substrates indicated, O.

   a. Available Products:

      1) Pecora Corporation; Urexpan NR-300.
      2) Engineer approved equal.

2. Coal-Tar-Modified Polymer Formulation: Type M; Grade P; Class 25; Uses T and, as applicable to joint substrates indicated, O.

   a. Available Products:

      1) Meadows, W. R., Inc.; Sealtight Gardox.
      2) Engineer Approved Equal.

3. Bitumen-Modified Urethane Formulation: Type M; Grade P; Class 25; Uses T, M, and, as applicable to joint substrates indicated, O.

   a. Available Products:

      1) Tremco Sealant/Waterproofing Division; Vulkem 202.
      2) Engineer approved Equal.

B. Single-Component Jet-Fuel-Resistant Urethane Sealant for Concrete: Single-component, pourable, coal-tar-modified, urethane formulation complying with ASTM C 920 for Type S; Grade P; Class 25; Uses T, M, and, as applicable to joint substrates indicated, O.

1. Available Products:

   a. Sonneborn, Div. of ChemRex, Inc.; Sonomeric 1.
   b. Engineer Approved Equal.

C. Type NS Silicone Sealant for Concrete: Single-component, low-modulus, neutral-curing, nonsag silicone sealant complying with ASTM D 5893 for Type NS.

1. Available Products:

   a. Crafco Inc.; RoadSaver Silicone.
   b. Dow Corning Corporation; 888.
   c. Engineer Approved Equal.

D. Type SL Silicone Sealant for Concrete and Asphalt: Single-component, low-modulus, neutral-curing, self-leveling silicone sealant complying with ASTM D 5893 for Type SL.

1. Available Products:

   a. Crafco Inc.; RoadSaver Silicone SL.
   b. Dow Corning Corporation; 890-SL.
   c. Engineer Approved Equal.

E. Multi-component Low-Modulus Sealant for Concrete and Asphalt: Proprietary formulation consisting of reactive petropolymer and activator components producing a pourable, self-leveling sealant.

1. Available Products:

   a. Meadows, W. R., Inc.; Sof-Seal.
   b. Engineer Approved Equal.

2.4 HOT-APPLIED JOINT SEALANTS

A. Jet-Fuel-Resistant Elastomeric Sealant for Concrete: Single-component formulation complying with ASTM D 3569.

1. Available Products:

   a. Crafco Inc.; Superseal 444/777.
   b. Meadows, W. R., Inc.; Poly-Jet 3569.
   c. Engineer Approved Equal.

B. Jet-Fuel-Resistant Sealant for Concrete and Tar Concrete: Single-component formulation complying with ASTM D 3581.

1. Available Products:

   a. Crafco Inc.; Superseal 1614A.
   b. Meadows, W. R., Inc.; Poly-Jet 1614.
   c. Meadows, W. R., Inc.; Poly-Jet 3406.
   d. Meadows, W. R., Inc.; Poly-Jet 3569.
   e. Engineer Approved Equal.

C. Elastomeric Sealant for Concrete: Single-component formulation complying with ASTM D 3406.

1. Available Products:

a. Crafco Inc.; Superseal 444/777.
b. Meadows, W. R., Inc.; Poly-Jet 3406.
c. Engineer Approved Equal.

D. Sealant for Concrete and Asphalt: Single-component formulation complying with ASTM D 3405.

1. Available Products:

a. Koch Materials Company; Product No. 9005.
b. Koch Materials Company; Product No. 9030.
c. Meadows, W. R., Inc.; Sealtight Hi-Spec.
d. Engineer Approved Equal.

2.5 JOINT-SEALANT BACKER MATERIALS

A. General: Provide joint-sealant backer materials that are nonstaining; are compatible with joint substrates, sealants, primers, and other joint fillers; and are approved for applications indicated by joint-sealant manufacturer based on field experience and laboratory testing.

B. Round Backer Rods for Cold- and Hot-Applied Sealants: ASTM D 5249, Type 1, of diameter and density required to control sealant depth and prevent bottom-side adhesion of sealant.

C. Backer Strips for Cold- and Hot-Applied Sealants: ASTM D 5249; Type 2; of thickness and width required to control sealant depth, prevent bottom-side adhesion of sealant, and fill remainder of joint opening under sealant.

D. Round Backer Rods for Cold-Applied Sealants: ASTM D 5249, Type 3, of diameter and density required to control sealant depth and prevent bottom-side adhesion of sealant.

2.6 PRIMERS

A. Primers: Product recommended by joint-sealant manufacturer where required for adhesion of sealant to joint substrates indicated, as determined from preconstruction joint-sealant-substrate tests and field tests.

PART 3 - EXECUTION

3.1 EXAMINATION

A. Examine joints indicated to receive joint sealants, with Installer present, for compliance with requirements for joint configuration, installation tolerances, and other conditions affecting joint-sealant performance.

1. Proceed with installation only after unsatisfactory conditions have been corrected.

3.2 PREPARATION

A. Surface Cleaning of Joints: Clean out joints immediately before installing joint sealants to comply with joint-sealant manufacturer's written instructions.

B. Joint Priming: Prime joint substrates where indicated or where recommended in writing by joint-sealant manufacturer, based on preconstruction joint-sealant-substrate tests or prior experience. Apply primer to comply with joint-sealant manufacturer's written instructions. Confine primers to areas of joint-sealant bond; do not allow spillage or migration onto adjoining surfaces.

3.3 INSTALLATION OF JOINT SEALANTS

A. General: Comply with joint-sealant manufacturer's written installation instructions for products and applications indicated, unless more stringent requirements apply.

B. Sealant Installation Standard: Comply with recommendations in ASTM C 1193 for use of joint sealants as applicable to materials, applications, and conditions indicated.

C. Install backer materials of type indicated to support sealants during application and at position required to produce cross-sectional shapes and depths of installed sealants relative to joint widths that allow optimum sealant movement capability.

1. Do not leave gaps between ends of backer materials.
2. Do not stretch, twist, puncture, or tear backer materials.
3. Remove absorbent backer materials that have become wet before sealant application and replace them with dry materials.

D. Install sealants using proven techniques that comply with the following and at the same time backings are installed:

1. Place sealants so they directly contact and fully wet joint substrates.
2. Completely fill recesses provided for each joint configuration.
3. Produce uniform, cross-sectional shapes and depths relative to joint widths that allow optimum sealant movement capability.

E. Tooling of Nonsag Sealants: Immediately after sealant application and before skinning or curing begins, tool sealants according to requirements specified below to form smooth, uniform beads of configuration indicated; to eliminate air pockets; and to ensure contact and adhesion of sealant with sides of joint.

1. Remove excess sealants from surfaces adjacent to joint.
2. Use tooling agents that are approved in writing by joint-sealant manufacturer and that do not discolor sealants or adjacent surfaces.

F. Provide joint configuration to comply with joint-sealant manufacturer's written instructions, unless otherwise indicated.

G. Provide recessed joint configuration for silicone sealants of recess depth and at locations indicated.

3.4 CLEANING

A. Clean off excess sealants or sealant smears adjacent to joints as the Work progresses by methods and with cleaning materials approved by manufacturers of joint sealants and of products in which joints occur.

3.5 PROTECTION

A. Protect joint sealants during and after curing period from contact with contaminating substances and from damage resulting from construction operations or other causes so sealants are without deterioration or damage at time of Substantial Completion. If, despite such protection, damage or deterioration occurs, cut out and remove damaged or deteriorated joint sealants immediately and replace with joint sealant so installations with repaired areas are indistinguishable from the original work.

END OF SECTION 321373

THIS PAGE LEFT INTENTIONALLY BLANK

SECTION 323113 - CHAIN LINK FENCES AND GATES

PART 1 - GENERAL

1.1 SUMMARY

A. Section includes chain-link fences and swing gates.

1.2 PERFORMANCE REQUIREMENTS

A. Structural Performance: Chain-link fence and gate framework shall withstand the effects of gravity loads and the following loads and stresses within limits and under conditions indicated according to **ASCE/SEI 7**:

1. Minimum Post Size: Determine according to ASTM F 1043 for framework up to 12 feet (3.66 m) high, and post spacing not to exceed 10 feet (3 m) .
2. Minimum Post Size and Maximum Spacing: Determine according to CLFMI WLG 2445, based on mesh size and pattern specified and on the following:

   a. Wind Loads: <**Insert loads**>.
   b. Exposure Category: [**B**] [**C**] [**D**].
   c. Fence Height: [**10 feet (3 m)**] <**Insert dimension**>.
   d. Material Group: [**IA, ASTM F 1043, Schedule 40 steel pipe**] [**IC, electric-resistance-welded round steel pipe**] <**Insert group**>.

1.3 SUBMITTALS

A. Product Data: For each type of product indicated

B. Shop Drawings: Include plans, elevations, sections, details, and attachments to other work.

C. Samples: For each polymer-coated product and for each color and texture specified, in 6-inch (150-mm) lengths for components and on full-sized units for accessories.

D. Delegated-Design Submittal: For chain-link fences and gate framework indicated to comply with performance requirements and design criteria, including analysis data signed and sealed by the qualified professional engineer responsible for their preparation.

E. Product Certificates: For each type of chain-link fence and gate, from manufacturer.

F. Product Test Reports: For framing strength according to ASTM F 1043.

G. Operation and maintenance data.

H. Sample of special warranty.

1.4 WARRANTY

A. Special Warranty: Manufacturer's standard form in which [**manufacturer**] [**Installer**] agrees to repair or replace components of chain-link fences and gates that fail in materials or workmanship within specified warranty period.

1. Failures include, but are not limited to, deterioration of metals, metal finishes, and other materials beyond normal weathering.
2. Warranty Period: [**Five**] [**15**] <**Insert number**> years from date of Substantial Completion.

PART 2 - PRODUCTS

2.1 CHAIN-LINK FENCE FABRIC

A. General: Provide fabric in one-piece heights measured between top and bottom of outer edge of selvage knuckle or twist. Comply with CLFMI Product Manual and with requirements indicated below:

1. Fabric Height: <**Insert dimension**> [**As indicated on Drawings**].
2. Steel Wire Fabric: Wire with a diameter of [**0.192 inch (4.88 mm)**] [**0.148 inch (3.76 mm)**] [**0.120 inch (3.05 mm)**] [**0.113 inch (2.87 mm)**] <**Insert dimension**>.

   a. Mesh Size: **2 inches (50 mm)**.
   b. Zinc-Coated Fabric: ASTM A 392, Type II, **Class 1, 1.2 oz./sq. ft. (366 g/sq. m)** .

3. Selvage: **Knuckled at both selvages**

2.2 FENCE FRAMING

A. Posts and Rails: Comply with ASTM F 1043 for framing, including rails, braces, and line; terminal; and corner posts. Provide members with minimum dimensions and wall thickness according to ASTM F 1043 **or ASTM F 1083** based on the following:

1. Fence Height: **As indicated on Drawings**.

2. Heavy Industrial Strength: Material **Group IA, round steel pipe, Schedule 40**
   a. End, Corner and Pull Post: **2.875 inches (73 mm) in diameter**

3. Horizontal Framework Members: **Intermediate top and bottom** rails complying with ASTM F 1043.
4. Brace Rails: Comply with ASTM F 1043.
5. Metallic Coating for Steel Framing:

   a. Type A zinc coating.

2.3 SWING GATES

A. General: Comply with ASTM F 900 for gate posts and [**single**] [**double**] swing gate types.

1. Gate Leaf Width: **As indicated**.
2. Gate Fabric Height: **As indicated**.

B. Pipe and Tubing:

1. Zinc-Coated Steel: Comply with ASTM F 1043 and ASTM F 1083; **protective coating and finish to match fence framing**
2. Gate Frames and Bracing: **Round tubular steel**

C. Frame Corner Construction: **Welded**.

D. Hardware:

1. Hinges
2. Latches permitting operation from both sides of gate **with provision for padlocking accessible from both sides of gate**.

2.4 GROUT AND ANCHORING CEMENT

A. Nonshrink, Nonmetallic Grout: Premixed, factory-packaged, nonstaining, noncorrosive, nongaseous grout complying with ASTM C 1107. Provide grout, recommended in writing by manufacturer, for exterior applications.

PART 3 - EXECUTION

3.1 INSTALLATION

A. Install chain-link fencing to comply with ASTM F 567 and more stringent requirements indicated.

B. Post Setting: Set posts at indicated spacing into firm, undisturbed soil.

1. Verify that posts are set plumb, aligned, and at correct height and spacing, and hold in position during setting with concrete or mechanical devices.
   a. Posts Set into Voids in Concrete: Form or core drill holes not less than 5 inches (125 mm) deep and 3/4 inch (20 mm) larger than OD of post. Clean holes of loose material, insert posts, and fill annular space between post and concrete with **nonshrink, nonmetallic grout** mixed and placed to comply with anchoring material manufacturer's written instructions, and finished sloped to drain water away from post.

C. Terminal Posts: Locate terminal end, corner, and gate posts per ASTM F 567 .

D. Line Posts: Space line posts uniformly as indicated but not more than **96 inches (2440 mm)** o.c.

E. Chain-Link Fabric: Apply fabric to **outside** of enclosing framework. Leave **1 inch (25.4 mm)** between finish grade or surface and bottom selvage unless otherwise indicated.

F. Install gates according to manufacturer's written instructions, level, plumb, and secure for full opening without interference. Attach fabric as for fencing. Attach hardware using tamper-resistant or concealed means. Install ground-set items in concrete for anchorage. Adjust hardware for smooth operation and lubricate where necessary.

G. Gates: Adjust gates to operate smoothly, easily, and quietly, free of binding, warp, excessive deflection, distortion, nonalignment, misplacement, disruption, or malfunction, throughout entire operational range. Confirm that latches and locks engage accurately and securely without forcing or binding.

END OF SECTION 323113

SECTION 330500 - COMMON WORK RESULTS FOR UTILITIES

PART 1 - GENERAL

1.1 RELATED DOCUMENTS

A. Drawings and general provisions of the Contract, including General and Supplementary Conditions and Division 01 Specification Sections, apply to this Section.

1.2 SUMMARY

A. This Section includes the following:

1. Piping joining materials.
2. Transition fittings.
3. Dielectric fittings.
4. Sleeves.
5. Identification devices.
6. Grout.
7. Flowable fill.
8. Piped utility demolition.
9. Piping system common requirements.
10. Equipment installation common requirements.
11. Painting.
12. Concrete bases.
13. Metal supports and anchorages.

1.3 DEFINITIONS

A. Exposed Installations: Exposed to view outdoors or subject to outdoor ambient temperatures and weather conditions.

B. Concealed Installations: Concealed from view and protected from weather conditions and physical contact by building occupants but subject to outdoor ambient temperatures. Examples include installations within unheated shelters.

C. PVC: Polyvinyl chloride plastic.

D. DI: Ductile Iron pipe

1.4 SUBMITTALS

A. Product Data: For the following:

1. Dielectric fittings.
2. Identification devices.

B. Welding certificates.

1.5 QUALITY ASSURANCE

A. Comply with ASME A13.1 for lettering size, length of color field, colors, and viewing angles of identification devices.

1.6 DELIVERY, STORAGE, AND HANDLING

A. Deliver pipes and tubes with factory-applied end caps. Maintain end caps through shipping, storage, and handling to prevent pipe end damage and to prevent entrance of dirt, debris, and moisture.

B. Store plastic pipes protected from direct sunlight. Support to prevent sagging and bending.

1.7 COORDINATION

A. Coordinate installation of required supporting devices and set sleeves in poured-in-place concrete and other structural components as they are constructed.

B. Coordinate installation of identifying devices after completing covering and painting if devices are applied to surfaces.

C. Coordinate size and location of concrete bases. Formwork, reinforcement, and concrete requirements are specified in Division 03.

PART 2 - PRODUCTS

2.1 PIPING JOINING MATERIALS

A. Pipe-Flange Gasket Materials: Suitable for chemical and thermal conditions of piping system contents.

1. ASME B16.21, nonmetallic, flat, asbestos free, 1/8-inch maximum thickness, unless otherwise indicated.

a. Full-Face Type: For flat-face, Class 125, cast-iron and cast-bronze flanges.
b. Narrow-Face Type: For raised-face, Class 250, cast-iron and steel flanges.

2. AWWA C110, rubber, flat face, 1/8 inch thick, unless otherwise indicated; and full-face or ring type, unless otherwise indicated.

B. Flange Bolts and Nuts: ASME B18.2.1, carbon steel, unless otherwise indicated.

C. Plastic, Pipe-Flange Gasket, Bolts, and Nuts: Type and material recommended by piping system manufacturer, unless otherwise indicated.

D. Welding Filler Metals: Comply with AWS D10.12/D10.12M for welding materials appropriate for wall thickness and chemical analysis of steel pipe being welded.

E. Solvent Cements for Joining Plastic Piping:
   1. PVC Piping: ASTM D 2564. Include primer according to ASTM F 656.

F. Fiberglass Pipe Adhesive: As furnished or recommended by pipe manufacturer.

2.2 TRANSITION FITTINGS

A. Transition Fittings, General: Same size as, and with pressure rating at least equal to and with ends compatible with, piping to be joined.

B. Transition Couplings NPS 1-1/2 and Smaller:

   1. Underground Piping: Manufactured piping coupling or specified piping system fitting.
   2. Aboveground Piping: Specified piping system fitting.

C. AWWA Transition Couplings NPS 2 and Larger:

   1. Available Manufacturers: Subject to compliance with requirements, manufacturers offering products that may be incorporated into the Work include, but are not limited to, the following:
   2. Manufacturers: Subject to compliance with requirements, provide products by one of the following:

      a. Cascade Waterworks Mfg. Co.
      b. Dresser, Inc.; DMD Div.
      c. Ford Meter Box Company, Inc. (The); Pipe Products Div.
      d. JCM Industries.
      e. Smith-Blair, Inc.
      f. Viking Johnson.

   3. Description: AWWA C219, metal sleeve-type coupling for underground pressure piping.

D. Plastic-to-Metal Transition Fittings:

   1. Available Manufacturers: Subject to compliance with requirements, manufacturers offering products that may be incorporated into the Work include, but are not limited to, the following:
   2. Manufacturers: Subject to compliance with requirements, provide products by one of the following:

      a. Spears Manufacturing Co.

3. Description: PVC one-piece fitting with manufacturer's Schedule 80 equivalent dimensions.

E. Plastic-to-Metal Transition Unions:

1. Available Manufacturers: Subject to compliance with requirements, manufacturers offering products that may be incorporated into the Work include, but are not limited to, the following:
2. Manufacturers: Subject to compliance with requirements, provide products by one of the following:

   a. Colonial Engineering, Inc.
   b. NIBCO INC.
   c. Spears Manufacturing Co.

F. Flexible Transition Couplings for Underground Nonpressure Drainage Piping:

1. Available Manufacturers: Subject to compliance with requirements, manufacturers offering products that may be incorporated into the Work include, but are not limited to, the following:
2. Manufacturers: Subject to compliance with requirements, provide products by one of the following:

   a. Cascade Waterworks Mfg. Co.
   b. Fernco, Inc.
   c. Mission Rubber Company.
   d. Plastic Oddities.

G. Description: ASTM C 1173 with elastomeric sleeve, ends same size as piping to be joined, and corrosion-resistant metal band on each end.

2.3 DIELECTRIC FITTINGS

A. Dielectric Fittings, General: Assembly of copper alloy and ferrous materials or ferrous material body with separating nonconductive insulating material suitable for system fluid, pressure, and temperature.

B. Dielectric Unions:

1. Available Manufacturers: Subject to compliance with requirements, manufacturers offering products that may be incorporated into the Work include, but are not limited to, the following:
2. Manufacturers: Subject to compliance with requirements, provide products by one of the following:

   a. Capitol Manufacturing Co.
   b. Central Plastics Company.
   c. Epco Sales, Inc.
   d. Hart Industries, International, Inc.

e. Watts Water Technologies, Inc.
f. Zurn Plumbing Products Group; Wilkins Div.

3. Description: Factory fabricated, union, NPS 2 and smaller.

a. Pressure Rating: 150 psig minimum.

C. Dielectric Flanges:

1. Available Manufacturers: Subject to compliance with requirements, manufacturers offering products that may be incorporated into the Work include, but are not limited to, the following:
2. Manufacturers: Subject to compliance with requirements, provide products by one of the following:

a. Capitol Manufacturing Co.
b. Central Plastics Company.
c. Epco Sales, Inc.
d. Watts Water Technologies, Inc.

3. Description: Factory-fabricated, bolted, companion-flange assembly, NPS 2-1/2 to NPS 4 and larger.

a. Pressure Rating: 175 psig minimum.

D. Dielectric-Flange Kits:

1. Available Manufacturers: Subject to compliance with requirements, manufacturers offering products that may be incorporated into the Work include, but are not limited to, the following:
2. Manufacturers: Subject to compliance with requirements, provide products by one of the following:

a. Advance Products & Systems, Inc.
b. Calpico, Inc.
c. Central Plastics Company.
d. Pipeline Seal and Insulator, Inc.

3. Description: Nonconducting materials for field assembly of companion flanges, NPS 2-1/2 and larger.

a. Pressure Rating: 150 psig minimum.
b. Gasket: Neoprene or phenolic.
c. Bolt Sleeves: Phenolic or polyethylene.
d. Washers: Phenolic with steel backing washers.

E. Dielectric Couplings:

1. Available Manufacturers: Subject to compliance with requirements, manufacturers offering products that may be incorporated into the Work include, but are not limited to, the following:
2. Manufacturers: Subject to compliance with requirements, provide products by one of the following:

    a. Calpico, Inc.
    b. Lochinvar Corporation.

3. Description: Galvanized-steel coupling with inert and noncorrosive, thermoplastic lining, NPS 3 and smaller.

    a. Pressure Rating: 300 psig at 225 deg F
    b. End Connections: Threaded.

F. Dielectric Nipples:

1. Available Manufacturers: Subject to compliance with requirements, manufacturers offering products that may be incorporated into the Work include, but are not limited to, the following:
2. Manufacturers: Subject to compliance with requirements, provide products by one of the following:

    a. Perfection Corporation.
    b. Precision Plumbing Products, Inc.
    c. Victaulic Company.

3. Description: Electroplated steel nipple with inert and noncorrosive, thermoplastic lining.

    a. Pressure Rating: 300 psig at 225 deg F.
    b. End Connections: Threaded or grooved.

2.4 SLEEVES

A. Mechanical sleeve seals for pipe penetrations are specified in Division 22 Section "Common Work Results for Plumbing."

B. Galvanized-Steel Sheet Sleeves: 0.0239-inch minimum thickness; round tube closed with welded longitudinal joint.

C. Steel Pipe Sleeves: ASTM A 53/A 53M, Type E, Grade B, Schedule 40, galvanized, plain ends.

D. Cast-Iron Sleeves: Cast or fabricated "wall pipe" equivalent to ductile-iron pressure pipe, with plain ends and integral waterstop, unless otherwise indicated.

E. Molded PVC Sleeves: Permanent, with nailing flange for attaching to wooden forms.

F. PVC Pipe Sleeves: ASTM D 1785, Schedule 40.

G. Molded PE Sleeves: Reusable, PE, tapered-cup shaped, and smooth outer surface with nailing flange for attaching to wooden forms.

2.5 IDENTIFICATION DEVICES

A. General: Products specified are for applications referenced in other Division 33 Sections. If more than single type is specified for listed applications, selection is Installer's option.

B. Equipment Nameplates: Metal permanently fastened to equipment with data engraved or stamped.

1. Data: Manufacturer, product name, model number, serial number, capacity, operating and power characteristics, labels of tested compliances, and essential data.
2. Location: Accessible and visible.

2.6 GROUT

A. Description: ASTM C 1107, Grade B, nonshrink and nonmetallic, dry hydraulic-cement grout.

1. Characteristics: Post hardening, volume adjusting, nonstaining, noncorrosive, nongaseous, and recommended for interior and exterior applications.
2. Design Mix: 5000-psi, 28-day compressive strength.
3. Packaging: Premixed and factory packaged.

2.7 FLOWABLE FILL

A. Description: Low-strength-concrete, flowable-slurry mix.

1. Cement: ASTM C 150, Type I, portland.
2. Density: 115- to 145-lb/cu. ft.
3. Aggregates: ASTM C 33, natural sand, fine and crushed gravel or stone, coarse.
4. Aggregates: ASTM C 33, natural sand, fine.
5. Admixture: ASTM C 618, fly-ash mineral.
6. Water: Comply with ASTM C 94/C 94M.
7. Strength: 100 to 200 psig at 28 days.

PART 3 - EXECUTION

3.1 PIPED UTILITY DEMOLITION

A. Refer to Division 01 Section "Cutting and Patching" and Division 02 Section "Selective Structure Demolition" for general demolition requirements and procedures.

B. Disconnect, demolish, and remove piped utility systems, equipment, and components indicated to be removed.

1. Piping to Be Removed: Remove portion of piping indicated to be removed and cap or plug remaining piping with same or compatible piping material.
2. Piping to Be Abandoned in Place: Drain piping. Fill abandoned piping with flowable fill, and cap or plug piping with same or compatible piping material.
3. Equipment to Be Removed: Disconnect and cap services and remove equipment.
4. Equipment to Be Removed and Reinstalled: Disconnect and cap services and remove, clean, and store equipment; when appropriate, reinstall, reconnect, and make operational.
5. Equipment to Be Removed and Salvaged: Disconnect and cap services and remove equipment and deliver to Owner.

C. If pipe, insulation, or equipment to remain is damaged in appearance or is unserviceable, remove damaged or unserviceable portions and replace with new products of equal capacity and quality.

3.2 DIELECTRIC FITTING APPLICATIONS

A. Dry Piping Systems: Connect piping of dissimilar metals with the following:

1. NPS 2 and Smaller: Dielectric unions.
2. NPS 2-1/2 to NPS 12: Dielectric flanges or dielectric flange kits.

B. Wet Piping Systems: Connect piping of dissimilar metals with the following:

1. NPS 2 and Smaller: Dielectric couplings or dielectric nipples or nipples.
2. NPS 2-1/2 to NPS 4 : Dielectric nipples.
3. NPS 2-1/2 to NPS 8: Dielectric nipples or dielectric flange kits.
4. NPS 10 and NPS 12: Dielectric flange kits.

3.3 PIPING INSTALLATION

A. Install piping according to the following requirements and Division 33 Sections specifying piping systems.

B. Drawing plans, schematics, and diagrams indicate general location and arrangement of piping systems. Indicated locations and arrangements were used to size pipe and calculate friction loss, expansion, pump sizing, and other design considerations. Install piping as indicated unless deviations to layout are approved on the Coordination Drawings.

C. Install piping indicated to be exposed and piping in equipment rooms and service areas at right angles or parallel to building walls. Diagonal runs are prohibited unless specifically indicated otherwise.

D. Install piping to permit valve servicing.

E. Install piping at indicated slopes.

F. Install piping free of sags and bends.

G. Install fittings for changes in direction and branch connections.

H. Select system components with pressure rating equal to or greater than system operating pressure.

I. Sleeves are not required for core-drilled holes.

J. Permanent sleeves are not required for holes formed by removable PE sleeves.

K. Install sleeves for pipes passing through concrete and masonry walls and concrete floor and roof slabs.

1. Cut sleeves to length for mounting flush with both surfaces.

2. Install sleeves in new walls and slabs as new walls and slabs are constructed.

a. PVC or Steel Pipe Sleeves: For pipes smaller than NPS 6.

L. Verify final equipment locations for roughing-in.

M. Refer to equipment specifications in other Sections for roughing-in requirements.

3.4 PIPING JOINT CONSTRUCTION

A. Join pipe and fittings according to the following requirements and Division 33 Sections specifying piping systems.

B. Ream ends of pipes and tubes and remove burrs. Bevel plain ends of steel pipe.

C. Remove scale, slag, dirt, and debris from inside and outside of pipe and fittings before assembly.

D. Threaded Joints: Thread pipe with tapered pipe threads according to ASME B1.20.1. Cut threads full and clean using sharp dies. Ream threaded pipe ends to remove burrs and restore full ID. Join pipe fittings and valves as follows:

1. Apply appropriate tape or thread compound to external pipe threads unless dry seal threading is specified.
2. Damaged Threads: Do not use pipe or pipe fittings with threads that are corroded or damaged. Do not use pipe sections that have cracked or open welds.

E. Welded Joints: Construct joints according to AWS D10.12/D10.12M, using qualified processes and welding operators according to Part 1 "Quality Assurance" Article.

F. Flanged Joints: Select appropriate gasket material, size, type, and thickness for service application. Install gasket concentrically positioned. Use suitable lubricants on bolt threads.

G. Grooved Joints: Assemble joints with grooved-end pipe coupling with coupling housing, gasket, lubricant, and bolts according to coupling and fitting manufacturer's written instructions.

H. Soldered Joints: Apply ASTM B 813 water-flushable flux, unless otherwise indicated, to tube end. Construct joints according to ASTM B 828 or CDA's "Copper Tube Handbook," using lead-free solder alloy (0.20 percent maximum lead content) complying with ASTM B 32.

I. Brazed Joints: Construct joints according to AWS's "Brazing Handbook," "Pipe and Tube" Chapter, using copper-phosphorus brazing filler metal complying with AWS A5.8.

J. Pressure-Sealed Joints: Assemble joints for plain-end copper tube and mechanical pressure seal fitting with proprietary crimping tool to according to fitting manufacturer's written instructions.

K. Plastic Piping Solvent-Cemented Joints: Clean and dry joining surfaces. Join pipe and fittings according to the following:

1. Comply with ASTM F 402 for safe-handling practice of cleaners, primers, and solvent cements.
2. ABS Piping: Join according to ASTM D 2235 and ASTM D 2661 appendixes.
3. CPVC Piping: Join according to ASTM D 2846/D 2846M Appendix.
4. PVC Pressure Piping: Join schedule number ASTM D 1785, PVC pipe and PVC socket fittings according to ASTM D 2672. Join other-than-schedule-number PVC pipe and socket fittings according to ASTM D 2855.
5. PVC Nonpressure Piping: Join according to ASTM D 2855.
6. PVC to ABS Nonpressure Transition Fittings: Join according to ASTM D 3138 Appendix.

L. Plastic Pressure Piping Gasketed Joints: Join according to ASTM D 3139.

M. Plastic Nonpressure Piping Gasketed Joints: Join according to ASTM D 3212.

N. Plastic Piping Heat-Fusion Joints: Clean and dry joining surfaces by wiping with clean cloth or paper towels. Join according to ASTM D 2657.

1. Plain-End PE Pipe and Fittings: Use butt fusion.
2. Plain-End PE Pipe and Socket Fittings: Use socket fusion.

O. Bonded Joints: Prepare pipe ends and fittings, apply adhesive, and join according to pipe manufacturer's written instructions.

3.5 PIPING CONNECTIONS

A. Make connections according to the following, unless otherwise indicated:

1. Install unions, in piping NPS 2 and smaller, adjacent to each valve and at final connection to each piece of equipment.
2. Install flanges, in piping NPS 2-1/2 and larger, adjacent to flanged valves and at final connection to each piece of equipment.
3. Install dielectric fittings at connections of dissimilar metal pipes.

3.6 EQUIPMENT INSTALLATION

A. Install equipment level and plumb, unless otherwise indicated.

B. Install equipment to facilitate service, maintenance, and repair or replacement of components. Connect equipment for ease of disconnecting, with minimum interference with other installations. Extend grease fittings to an accessible location.

C. Install equipment to allow right of way to piping systems installed at required slope.

3.7 PAINTING

A. Painting of piped utility systems, equipment, and components is specified in Division 09 painting Sections.

B. Damage and Touchup: Repair marred and damaged factory-painted finishes with materials and procedures to match original factory finish.

3.8 IDENTIFICATION

A. Piping Systems: Install pipe markers on each system. Include arrows showing normal direction of flow.
   1. Plastic markers, with application systems. Install on insulation segment if required for hot noninsulated piping. Place direct bury marker 12-18 inches above top of pipe but not less than 12-inches below finish grade.

3.9 GROUTING

A. Mix and install grout for equipment base bearing surfaces, pump and other equipment base plates, and anchors.

B. Clean surfaces that will come into contact with grout.

C. Provide forms as required for placement of grout.

D. Avoid air entrapment during placement of grout.

E. Place grout, completely filling equipment bases.

F. Place grout on concrete bases and provide smooth bearing surface for equipment.

G. Place grout around anchors.

H. Cure placed grout.

END OF SECTION 330500

THIS PAGE LEFT INTENTIONALLY BLANK

SECTION 331100 – WATER UTILITY PIPING

PART 1 - GENERAL

1.1 RELATED DOCUMENTS

A. Drawings and general provisions of the Contract, including General and Supplementary Conditions and Division 01 Specification Sections, apply to this Section.

B. Codes and Standards:
   1. Plumbing Code Compliance: Comply with applicable portions of National Standard Plumbing Code pertaining to selection and installation of potable water system materials and products.
   2. Water Purveyor Compliance: Comply with requirements of Purveyor supplying water to project, obtain required permits and inspections.
   3. NFPA Compliance: Install fire water systems in accordance with NFPA 24 "Standard for Installation of Private Fire Service Mains and Their Appurtenances".
   4. Local Fire Department/Marshall Regulations: Comply with governing regulations pertaining to hydrants, including hose unit threading and similar matching of connections.
   5. UL Compliance: Provide fire hydrants that comply with UL 246 "Hydrants for Fire-Protection Service", and are listed by UL.

1.2 SUMMARY

A. This Section includes pressure water pipes and fire systems outside the building, with the following components:

   1. Special fittings for expansion and deflection.
   2. Pipes and valves.
   3. Fire Hydrants.

1.3 DEFINITIONS

A. PVC: Polyvinyl chloride plastic.

B. DI: Ductile Iron pressure pipe.

1.4 PERFORMANCE REQUIREMENTS

A. Pressure Rating: 175 psi static water pressure for all pipes and fittings. Pipe joints shall be water tight.

1.5 SUBMITTALS

A. Product Data: For the following:

1. Special pipe fittings.
2. Fire hydrants
3. Valves.
4. Valve boxes and appurtenances.
5. Pipes.
6. Disinfection reports and practices
7. Product Data: Submit manufacturer's technical product data and installation instructions for fire water system materials and products.
8. Maintenance Data: Submit maintenance data and parts lists for fire water system materials and products. Include this data, product data, shop drawings, and record drawings in maintenance manual.

B. Shop Drawings: For the following:

1. Thrust Blocks: Include plans, elevations, sections, details, and forces for thrust blocks for each size of pipe and type of bend.

C. Coordination Drawings: Show pipe sizes, locations, and elevations. Show other piping in same trench and clearances from storm drainage system piping and sewer system piping. Indicate interface and spatial relationship between piping and proximate structures.

D. Profile Drawings: Show system piping in elevation. Draw profiles at horizontal scale of not less than 1 inch equals 50 feet and vertical scale of not less than 1 inch equals 5 feet. Indicate manholes and piping. Show types, sizes, materials, and elevations of other utilities crossing system piping.

E. Field quality-control test reports.

1.6 DELIVERY, STORAGE, AND HANDLING

A. Do not store plastic pipe, and fittings in direct sunlight.

B. Protect pipe, pipe fittings, and seals from dirt and damage.

1.7 PROJECT CONDITIONS

A. Interruption of Water Service: Do not interrupt service to facilities occupied by Owner or others unless permitted under the following conditions and then only after arranging to provide temporary service according to requirements indicated:

1. Notify Architect, Construction Manager, and Owner no fewer than two days in advance of proposed interruption of service. Coordinate interruptions during weekly meetings and at pre-construction meeting.

2. Do not proceed with interruption of service without Architect's, Construction Manager's, and Owner's written permission.

PART 2 - PRODUCTS

2.1 MANUFACTURERS

A. In other Part 2 articles where titles below introduce lists, the following requirements apply to product selection:

1. Available Manufacturers: Subject to compliance with requirements, manufacturers offering products that may be incorporated into the Work.

2. Line Markers:
   a. Allen Systems Inc.
   b. Seton Name Plate Corp.
   c. Engineer Approved Equal.
3. Pipe Strainers:
   a. "Automatic" Sprinkler Corp. of America; Div. A-T-O Inc.
   b. Cleveland Gear Co.; Sub of Vesper Corp.
   c. Grinnell Fire Protection Systems Co., Inc.
   d. Hersey Products Inc.; Hersey Div.
   e. Mueller Steam Specialty; Div. of Core Industries Inc.
   f. Neptune Water Meter Co.
   g. Rockwell International Corp.; Municipal & Utility Div.
   h. Rockwood Systems Corp.
   i. Zurn Industries Inc.; Fluid Handling Div.
4. Detector Meter: Not Required
5. Gate Valves:
   a. American Valve Mfg. Corp.
   b. American-Darling Valve; Div. of American Cast Iron Pipe Co.
   c. Clow Corp.; Valve Div.
   d. Dresser Mfg. Div. of ITT Grinnell Valve Co. Inc.
   e. Fairbanks Co.
   f. Kennedy Valve; Div. of ITT Grinnell Valve Co., Inc.
   g. Stockham Valves & Fittings Inc.
   h. United Brass Works Inc.
   i. United States Pipe and Foundry Co.
   j. Waterous Co.
6. Check Valves:
   a. American-Darling Valve; Div. of American Cast Iron Pipe Co.
   b. Clow Corp.; Valve Corp.
   c. Fairbanks Co.
   d. Kennedy Valve; Div. of ITT Grinnell Valve Co., Inc.
   e. Mueller Co.
   f. Nibbco Inc.
   g. Stockham Valves & Fittings Inc.

h. Walworth Co.
i. Waterous Co.

7. Yard Hydrants
   a. Josam Mfg. Co.
   b. Smith (Jay R.) Mfg. Co.
   c. Zern Industries, Inc.; Hydromechanics Div.
8. Fire Hydrants: Approved by authority having jurisdiction.
9. Backflow Preventors: Approved by authority having jurisdiction.

2.2 IDENTIFICATION

A. Underground –Type Plastic Line Markers: Manufacturer's standard permanent, bright-colored, continuous-printed plastic tape, intended for direct-burial service; not less than 6" wide x 4 mils thick. Provide blue tape with black printing reading "CAUTION WATER LINE BURIED BELOW".

B. Nonmetallic Piping Label: If nonmetallic piping is used for water service, provide engraved plastic laminate, label permanently affixed to main electrical meter panel stating "THIS STRUCTURE HAS A NONMETALLIC WATER SERVICE".

2.3 PIPING MATERIALS

A. Refer to Part 3 "Piping Applications" Article for applications of pipe, fitting, and joining materials.

B. Provide piping materials and factory-fabricated piping products of sizes, types, pressure ratings, and capacities indicated. Where not indicated, provide proper selection as determined by Installer to comply with installation requirements. Provide sizes and types matching piping and equipment connections; provide fittings of materials which match pipe materials used in potable water systems. Where more than one type of materials or products are indicated, selection is Installer's option.

C. Piping: Provide pipe fittings and accessories of same material and weight/class as pipes, with joining method as indicated.

D. Ductile Iron Pipe: Polyethylene wrapped Ductile Iron Class 350, with cement mortar lining complying with AWWA C104.
   1. Fitting: Ductile iron AWWA C110; cement lined AWWA C104; and rubber-gasket joints, AWWA C111.

E. Copper Tube: ASTM B 88; type K, soft-annealed temper (for 3/4" to 2" diameter pipe).

F. PVC Pipe: AWWA C900 Class 200 Pipe for gasketed joints and using ASTM F 477, elastomeric seals.

   1. Fittings NPS 4 to NPS 8: PVC pressure fittings complying with AWWA C907, for gasketed joints and using ASTM F 477, elastomeric seals.

2. Fittings NPS 10 and Larger: Ductile-iron, compact fittings complying with AWWA C153, for push-on joints and using AWWA C111, rubber gaskets.

2.4 WATER METER

A. Water Meter, Meter Set and lid will be provided by water purveyor after payment of connection fees.

B. Contractor to supply concrete meter box and accessories needed to make installation of water meter.

2.5 VALVES

A. Gate Valves: UL-listed, 175 psi working pressure for 12" and smaller, 150 psi for sizes larger than 12". Threaded, flanged, hub, or other end configurations to suit size of valve and piping connection. Inside screw type for use with indicator post, iron body bronze mounted, non-rising stem, solid wedge disc.

B. Check Valves: UL-listed, 175 psi working pressure for 2" through 12", 150 psi for sizes larger than 12". Swing type, iron body bronze mounted with metal-to-metal or rubber-faced checks. Threaded, flanged, or hub end, to suit size and piping connections.

2.6 FIRE HYDRANT

A. Provide cast-iron body fire hydrants, compression type, opening against pressure and closing with pressure, base valve design, 200 psi working pressure, with 1/4" gage tapping and bronze plug in standpipe, conforming to the latest edition of AWWA C-502, "Dry Barrel Fire Hydrants."

B. Features: Provide the following features:
1. Size: 5" valve opening.
2. Direction to Open Hydrant: Left.
3. Size and Shape of Operating and Cap Nuts: Pentagon 1-1/2" point to flat.
4. Hose Nozzles: 2-1/2" National Standard Thread cap and chain.
5. Pumper Nozzles: 5" National Standard Thread cap and chain.
6. Depth of Trench: 4'-6".
7. Connnection to Main: 6" mechanical joint.

2.7 ACCESSORIES

A. Anchorages: Provide anchorages for tees, wyes, crosses, plugs, caps, bends, valves, and hydrants. After installation, apply full coat of asphalt or other acceptable corrosion-retarding material to surfaces of ferrous anchorages.

B. Clamps, Straps, and Washers: Steel, ASTM A 506.

C. Rods: Steel, ASTM A 575.

D. Rod Couplings: Malleable-iron, ASTM A 197.

E. Bolts: Steel, ASTM A 307.

F. Cast-Iron Washers: Gray-iron, ASTM A 126.

G. Thrust Blocks: Concrete, 3,000 psi.

2.8 CONCRETE

A. General: Cast-in-place concrete according to ACI 318/318R, ACI 350R, and the following:

1. Cement: ASTM C 150, Type II.
2. Fine Aggregate: ASTM C 33, sand.
3. Coarse Aggregate: ASTM C 33, crushed gravel.
4. Water: Potable.

B. Thrust Blocks, Hydrant Supports, and Pipe Supports: Portland cement design mix, 3000 psi minimum, with 0.58 maximum water-cementitious materials ratio.

PART 3 - EXECUTION

3.1 Examination: Examine areas and conditions under which potable water system's materials and products are to be installed. Do not proceed with work until unsatisfactory conditions have been corrected in manner acceptable to Installer.

3.2 EARTHWORK

A. Excavation trenching, and backfilling are specified in Division 31 Section "Earth Moving."

3.3 INSTALLATION

A. Identification: During back-filling/top-soiling of underground fire water piping systems, install continuous underground-type plastic line marker, located directly over buried line at 6" to 8" below finished grade. If pvc pipe is used, install a tracer wire along the top of the pipe, secured with tape, and extending to fire hydrants and valves.

B. Pipe and pipe fittings:
1. Pipe: Install in accordance with AWWA C600 "Standard for Installation of Ductile-Iron Water Mains and Their Appurtenances".
2. Depth of Cover: Provide minimum depth of cover over underground piping in accordance with NFPA 24, Figure A-8-11 "Recommended Depth of Cover Above Top of Underground Yard Mains" or 60" below finish grade, whichever is greater.

C. Piping Specialties:
   1. Pipe Line Strainers: Install as indicated, with valved blowoff piped to drain.

D. Meters: Install as indicated with shutoff valve on either side of meter and valved bypass full line size.

E. Valves: Provide post indicator for control valves.
   1. Shutoff Valves: Install shutoff valve ahead of each hydrant.

F. Hydrants: Install fire hydrants in accordance with AWWA M17 "Installation, Operation, and Maintenance of Fire Hydrants".
   1. Location: Install fire hydrants minimum of 40'-0" from building outside wall, as indicated, or if not shown.
   2. Face hydrants towards drive.
   3. Place hydrants so that base of hydrant is even to 6-inches above adjacent top back of curb.

3.4 PIPING APPLICATIONS

A. Pipe:
   1. Ductile Iron Pipe: Install in accordance with AWWA C600 "standard for installation of ductile-iron water mains and their appurtenances" and in accordance with instructions from water purveyor.
   2. Copper Tube: Install in accordance with CDA "Copper Tube Handbook".
   3. PVC Pressure pipe, PVC pressure fittings, gaskets, and gasketed joints.

B. Depth of Cover: Provide minimum cover over piping of 12" below average local frost depth or 42" below finished grade, whichever is greater.

C. Water Main Connection: Arrange and pay for tap in water main, of size and in location as indicated, from water Purveyor.

D. Water Service Termination: Terminate potable water piping 5'-0" from building foundation in location and invert as indicated. Provide temporary pipe plug for piping extension into building.
   1. Mark location with surface marker.

3.5 PIPING INSTALLATION

A. General Locations and Arrangements: Drawing plans and details indicate general location and arrangement of underground water pipes. Location and arrangement of piping layout take design considerations into account. Install piping as indicated, to extent practical. Where specific installation is not indicated, follow piping manufacturer's written instructions.

B. Install proper size increasers, reducers, and couplings where different sizes or materials of pipes and fittings are connected. Reducing size of piping in direction of flow is prohibited.

C. Tunneling: Install pipe under streets or other obstructions that cannot be disturbed by tunneling, jacking, or a combination of both.

D. Install piping according to the following:

1. Install piping with restrained joints at tee fittings and at horizontal and vertical changes in direction. Use corrosion-resistant rods, pipe or fitting manufacturer's proprietary restraint system, or cast-in-place concrete supports or anchors.
2. Install piping with line and grade as indicated or below frost line if not inidcated.
3. Install ductile-iron pressure piping according to AWWA C600 or AWWA M41.
4. Install ductile-iron special fittings according to AWWA C600.
5. Install PVC pressure piping according to AWWA M23 or ASTM D 2774 and ASTM F 1668.
6. Install PVC water-service piping according to ASTM D 2774 and ASTM F 1668.

3.6 INSTALLATION OF VALVES

A. Install valves with stems pointing up. Provide valve box over underground valves.

3.7 INSTALLATION OF WATER METER AND VAULT

A. Install Water Meter and Vault to comply with City Water Department Standards.

3.8 PIPE JOINT CONSTRUCTION

A. Basic pipe joint construction is specified in Division 33 Section "Common Work Results for Utilities." Where specific joint construction is not indicated, follow piping manufacturer's written instructions.

B. Join pressure piping according to the following:

1. Join ductile-iron pressure piping according to AWWA C660 or AWWA M41 for push-on joints.
2. Join ductile-iron special fittings according to AWWA C660 or AWWA M41 for push-on joints.
3. Join PVC pressure piping according to AWWA M23 for gasketed joints.
4. Join PVC water-service piping according to ASTM D 2855 for solvent-cemented joints.

C. Join dissimilar pipe materials with pressure-type couplings.

3.9 FIELD QUALITY CONTROL

A. Piping Tests: Conduct piping tests before joints are covered, and after thrust blocks have sufficiently hardened. Fill pipeline with water 24-hrs prior to testing, and apply test pressure to stabilize system.

B. Hydrostatic Tests: Test at not less than 200 psi for 2-hrs, or at 50 psi above maximum static pressure if it is greater than 150 psi.
   1. Test fails if leakage exceeds 2-qts per hour per 100 gaskets or joints irrespective of pipe diameter.
   2. Increase pressure in 50 psi increments and inspect each joint between increments. Hold at test pressure for one hour, decrease to 0 psi. Slowly increase again to test pressure and hold for one more hour.

C. Operating Tests: Open and close all valves and hydrants under system water pressure. Check dry barrel hydrants for proper drainage.
   1. For systems with fire pumps, run pumps during operating tests.

3.10 ADJUSTING AND CLEANING

A. Disinfection of Potable Water System: Flush pipe system with clean potable water until no dirty water appears at point of outlet. Fill system with water-chlorine solution containing at least 50 ppm of chlorine. Valve off system and let stand for 24- hrs minimum. Flush with clean potable water until no chlorine remains in water coming from system.
   1. Repeat procedure if contamination is present in bacteriological examination.

B. Disinfection of Water Mains: Flush and disinfect in accordance with AWWA C651 "Standard for Disinfecting Water Mains".
   1. Contractor shall submit written verification to Project Manager stating, Disinfection has been completed in strict compliance with specification for this project and with jurisdiction having authority over water system.

3.11 ADJUSTING AND CLEANING

A. Flushing: Flush underground mains and lead-in connections to sprinkler risers before connection is made to sprinklers, standpipes, or other fire protection system piping.
   1. Flush at flow rate not less than that indicated in NFPA 24, or at hydraulically calculated water demand rate of the system, whichever is greater.

B. Adjusting: adjust fire hydrants to face street and be have base 2-6 inches above adjacent curb and gutter.

3.12 CLOSING ABANDONED WATER SYSTEMS

A. Abandoned Piping: Close open ends of abandoned underground piping indicated to remain in place. Include closures strong enough to withstand hydrostatic and earth pressures that may result after ends of abandoned piping have been closed. Use either procedure below:

   1. Close open ends of piping with at least 8-inch-thick, brick masonry bulkheads.
   2. Close open ends of piping with threaded metal caps, plastic plugs, or other acceptable methods suitable for size and type of material being closed. Do not use wood plugs.

B. Backfill to grade according to Division 31 Section "Earth Moving."

END OF SECTION 331100

THIS PAGE LEFT INTENTIONALLY BLANK

SECTION 33300 –SANITARY SEWERAGE PIPING

PART 1 - GENERAL

1.1 RELATED DOCUMENTS

A. Drawings and general provisions of the Contract, including General and Supplementary Conditions and Division 01 Specification Sections, apply to this Section.

1.2 SUMMARY

A. This Section includes gravity-flow, nonpressure sanitary sewerage outside the building, with the following components:

1. Special fittings for expansion and deflection.
2. Cleanouts.
3. Drains.
4. Precast concrete manholes.
5. Cast in place manhole bases over existing pipes.
6. Sewerage Pipes.

1.3 DEFINITIONS

A. PVC: Polyvinyl chloride plastic.

1.4 PERFORMANCE REQUIREMENTS

A. Gravity-Flow, Nonpressure, Sewer-Piping Pressure Rating: 10-foot head of water. Pipe joints shall be at least water tight under specified head, unless otherwise indicated.

1.5 SUBMITTALS

A. Product Data: For the following:

1. Special pipe fittings.
2. Cleanout materials.
3. Pipes.

B. Shop Drawings: For the following:

1. Manholes: Include plans, elevations, sections, details, and frames and covers. Include design calculations, and concrete design-mix report for cast-in-place manholes.

C. Coordination Drawings: Show pipe sizes, locations, and elevations. Show other piping in same trench and clearances from storm drainage system piping. Indicate interface and spatial relationship between manholes, piping, and proximate structures.

D. Profile Drawings: Show system piping in elevation. Draw profiles at horizontal scale of not less than 1 inch equals 60 feet and vertical scale of not less than 1 inch equals 8 feet. Indicate manholes and piping. Show types, sizes, materials, and elevations of other utilities crossing system piping.

E. Field quality-control test reports.

1.6 DELIVERY, STORAGE, AND HANDLING

A. Do not store plastic pipe and fittings in direct sunlight.

B. Protect pipe, pipe fittings, and seals from dirt and damage.

C. Handle manholes according to manufacturer's written rigging instructions.

1.7 PROJECT CONDITIONS

A. Interruption of Existing Sanitary Sewerage Service: Do not interrupt service to facilities occupied by Owner or others unless permitted under the following conditions and then only after arranging to provide temporary service according to requirements indicated:

1. Notify Architect, Construction Manager and Owner no fewer than two days in advance of proposed interruption of service. Coordinate interruptions during weekly meetings and at pre-construction meeting.
2. Do not proceed with interruption of service without Architect's, Construction Manager's, and Owner's written permission.
3. If shutdown will affect city streets, other city utilities, or city sewer line, do not proceed without approval from city.

PART 2 - PRODUCTS

2.1 MANUFACTURERS

A. In other Part 2 articles where titles below introduce lists, the following requirements apply to product selection:

1. Available Manufacturers: Subject to compliance with requirements, manufacturers offering products that may be incorporated into the Work include local pre-cast manufacturers but are subject to approval of the engineer and architect.

2.2 PIPING MATERIALS

A. Refer to Part 3 "Piping Applications" Article for applications of pipe, fitting, and joining materials.

2.3 HUB-AND-SPIGOT, CAST-IRON SOIL PIPE AND FITTINGS

A. Pipe and Fittings: ASTM A 74, Service class.

B. Gaskets: ASTM C 564, rubber.

C. Calking Materials: ASTM B 29, pure lead and oakum or hemp fiber.

2.4 DUCTILE-IRON PRESSURE PIPE AND FITTINGS

A. Pipe: AWWA C151, for push-on joints.

B. Standard Fittings: AWWA C110, ductile or gray iron, for push-on joints.

C. Compact Fittings: AWWA C153, for push-on joints.

D. Gaskets: AWWA C111, rubber.

2.5 PVC PIPE AND FITTINGS

A. PVC Pressure Pipe: AWWA C900, Class 150 for gasketed joints and using ASTM F 477, elastomeric seals.

1. Fittings NPS 4 to NPS 8: PVC pressure fittings complying with AWWA C907, for gasketed joints and using ASTM F 477, elastomeric seals.
2. Fittings NPS 10 and Larger: Ductile-iron, compact fittings complying with AWWA C153, for push-on joints and using AWWA C111, rubber gaskets.

B. PVC Water-Service Pipe and Fittings: ASTM D 1785, Schedule 80 pipe, with plain ends for solvent-cemented joints with ASTM D 2467, Schedule 80, socket-type fittings.

C. PVC Sewer Pipe and Fittings, NPS 15 and Smaller: ASTM D 3034, SDR 35, with bell-and-spigot ends for gasketed joints with ASTM F 477, elastomeric seals.

D. PVC Sewer Pipe and Fittings, NPS 18 and Larger: ASTM F 679, T 2 wall thickness, with bell-and-spigot ends for gasketed joints with ASTM F 477, elastomeric seals.

E. PVC Profile Gravity Sewer Pipe and Fittings: ASTM F 794 pipe, with bell-and-spigot ends; ASTM D 3034 fittings, with bell ends; and ASTM F 477, elastomeric seals.

2.6 NONPRESSURE-TYPE PIPE COUPLINGS

A. Use non-pressure type couplings only when pipes can not be connected together with standard fittings and typical pipe connections such as bell and spigot. If possible, file the end on existing pipes to create spigot type connections to match existing pipe ends for connection to a new bell for an extension of the pipe.

B. Comply with ASTM C 1173, elastomeric, sleeve-type, reducing or transition coupling, for joining underground nonpressure piping. Include ends of same sizes as piping to be joined, and corrosion-resistant-metal tension band and tightening mechanism on each end.

C. Sleeve Materials:

1. For Concrete Pipes: ASTM C 443, rubber.
2. For Cast-Iron Soil Pipes: ASTM C 564, rubber.
3. For Plastic Pipes: ASTM F 477, elastomeric seal or ASTM D 5926, PVC.
4. For Dissimilar Pipes: ASTM D 5926, PVC or other material compatible with pipe materials being joined.

D. Unshielded Flexible Couplings: Elastomeric sleeve with stainless-steel shear ring and corrosion-resistant-metal tension band and tightening mechanism on each end.

1. Manufacturers:

a. Dallas Specialty & Mfg. Co.
b. Fernco Inc.
c. Logan Clay Products Company (The).
d. Mission Rubber Company; a division of MCP Industries, Inc.
e. NDS Inc.
f. Plastic Oddities, Inc.

E. Shielded Flexible Couplings: ASTM C 1460, elastomeric or rubber sleeve with full-length, corrosion-resistant outer shield and corrosion-resistant-metal tension band and tightening mechanism on each end.

1. Manufacturers:

a. Cascade Waterworks Mfg.
b. Dallas Specialty & Mfg. Co.
c. Mission Rubber Company; a division of MCP Industries, Inc.

F. Ring-Type Flexible Couplings: Elastomeric compression seal with dimensions to fit inside bell of larger pipe and for spigot of smaller pipe to fit inside ring.

1. Manufacturers:

a. Fernco Inc.
b. Logan Clay Products Company (The).
c. Mission Rubber Company; a division of MCP Industries, Inc.

2.7 PRESSURE-TYPE PIPE COUPLINGS **(Not Used)**

A. Reducing or transition, metal, bolted, sleeve-type, reducing or transition coupling, for joining underground pressure piping. Include 150-psig minimum pressure rating and ends of same sizes as piping to be joined. For pressure pipe, use these couplers when pipes can not be extended using existing pipe connections such as bell and spigots.

B. Tubular-Sleeve Couplings: AWWA C219, with center sleeve, gaskets, end rings, and bolt fasteners.

1. Manufacturers:

a. Cascade Waterworks Mfg.
b. Dresser, Inc.; DMD Div.
c. Ford Meter Box Company, Inc. (The); Pipe Products Div.
d. JCM Industries.
e. Romac Industries, Inc.
f. Smith-Blair, Inc.
g. Viking Johnson.

2. Center-Sleeve Material: Manufacturer's standard.
3. Gasket Material: Natural or synthetic rubber.
4. Metal Component Finish: Corrosion-resistant coating or material.

C. Split-Sleeve Couplings: With split sleeve with sealing pad and closure plates, O-ring gaskets, and bolt fasteners.

1. Manufacturers:

a. Brico Industries.

2. Sleeve Material: Manufacturer's standard.
3. Sleeve Dimensions: Of thickness and width required to provide pressure rating.
4. Gasket Material: O-rings made of EPDM rubber, unless otherwise indicated.
5. Metal Component Finish: Corrosion-resistant coating or material.

2.8 SPECIAL PIPE FITTINGS

A. Ductile-Iron Flexible Expansion Joints: Compound fitting with combination of flanged and mechanical-joint ends complying with AWWA C110 or AWWA C153. Include 2 gasketed ball-joint sections and 1 or more gasketed sleeve sections, rated for 250-psig minimum working pressure and for offset and expansion indicated.

1. Manufacturers:

a. EBAA Iron Sales, Inc.
b. Romac Industries, Inc.
c. Star Pipe Products.

B. Ductile-Iron Deflection Fittings: Compound coupling fitting with ball joint, flexing section, gaskets, and restrained-joint ends complying with AWWA C110 or AWWA C153. Include rating for 250-psig minimum working pressure and for up to 15 degrees of deflection.

1. Manufacturers:

a. EBAA Iron Sales, Inc.

C. Ductile-Iron Expansion Joints: Three-piece assembly of telescoping sleeve with gaskets and restrained-type, ductile-iron, bell-and-spigot end sections complying with AWWA C110 or AWWA C153. Include rating for 250-psig minimum working pressure and for expansion indicated.

1. Manufacturers:

a. Dresser, Inc.; DMD Div.
b. EBAA Iron Sales, Inc.
c. JCM Industries.
d. Smith-Blair, Inc.

2.9 CLEANOUTS

A. Gray-Iron Cleanouts: ASME A112.36.2M, round, gray-iron housing with clamping device and round, secured, scoriated, gray-iron cover. Include gray-iron ferrule with inside calk or spigot connection and countersunk, tapered-thread, brass closure plug.

1. Manufacturers:

a. Josam Company.
b. MIFAB Manufacturing, Inc.
c. Smith, Jay R. Mfg. Co.
d. Wade Div.; Tyler Pipe.
e. Watts Industries, Inc.
f. Watts Industries, Inc.; Enpoco, Inc. Div.
g. Zurn Industries, Inc.; Zurn Specification Drainage Operation.

2. Top-Loading Classification(s): Light, Medium, Heavy, and Extra-heavy duty depending on location and expected driving load on cleanout.
3. Sewer Pipe Fitting and Riser to Cleanout: ASTM A 74, Service class, cast-iron soil pipe and fittings.

B. PVC Cleanouts: PVC body with PVC threaded plug. Include PVC sewer pipe fitting and riser to cleanout of same material as sewer piping. Place in grey iron housing with clamping device and round, secured, scoriated, gray-iron cover.

1. Manufacturers:
a. Canplas Inc.
b. Josam Company
c. MIFAB Manufacturing, Inc.

d. Wad Div.; Tyler Pipe
e. Watts Industries, Inc.
f. Zern Industries, Inc; Zern Specification Drainage Operation
g. IPS Corporation.
h. NDS Inc.
i. Plastic Oddities, Inc.
j. Sioux Chief Manufacturing Company, Inc.
k. Zurn Industries, Inc.; Zurn Light Commercial Specialty Plumbing Products.

2.10 MANHOLES

A. Standard Precast Concrete Manholes: ASTM C 478, precast, reinforced concrete, of depth indicated, with provision for sealant joints.

1. Diameter: 48 inches minimum, unless otherwise indicated and as needed for pipe sizes.
2. Ballast: Increase thickness of precast concrete sections or add concrete to base section, as required to prevent flotation.
3. Base Section: 9-inch minimum thickness for floor slab and 4-inch minimum thickness for walls and base riser section, and having separate base slab or base section with integral floor.
4. Riser Sections: 4-inch minimum thickness, and lengths to provide depth indicated.
5. Top Section: Eccentric-cone type unless concentric-cone or flat-slab-top type is indicated. Top of cone of size that matches grade rings.
6. Joint Sealant: ASTM C 990, bitumen or butyl rubber.
7. Resilient Pipe Connectors: ASTM C 923, cast or fitted into manhole walls, for each pipe connection.
8. Steps: Not used.
9. Adjusting Rings: Interlocking rings with level or sloped edge in thickness and diameter matching manhole frame and cover. Include sealant recommended by ring manufacturer.
10. Grade Rings: Reinforced-concrete rings, 6- to 9-inch total thickness, to match diameter of manhole frame and cover.
11. Manhole Frames and Covers: Ferrous; 24-inch ID by 7- to 9-inch riser with 4-inch-minimum width flange and 26-inch- diameter cover. Include indented top design with lettering cast into cover, using wording equivalent to "SANITARY SEWER."

    a. Material: ASTM A 536, Grade 60-40-18 ductile or ASTM A 48, Class 35 gray iron, unless otherwise indicated and to match existing manhole frames and covers.
    b. Protective Coating: Foundry-applied, SSPC-Paint 16, coal-tar, epoxy-polyamide paint; 15-mil minimum thickness applied to all surfaces, unless otherwise indicated.

B. Cast-in-Place Concrete Manholes Base: Construct of reinforced-concrete bottom according to ASTM C 890 for A-16 (ASSHTO HS20-44), heavy-traffic, structural loading; of depth, shape, dimensions, and appurtenances indicated.
1. Ballast: Increase thickness of concrete, as required to prevent flotation.
2. Excavate around existing pipe where manhole is to be placed.
3. Place new pipe stub at line and grade and stubbed into new manhole location with pipe extending towards existing pipes.

4. Place CMU blocks or other approved support adjacent to pipes to support new barrel section.
5. Set first barrel section on CMU blocks and verify that barrel section is level in all directions and is not sitting on pipes.
6. Make sure that hole is deep enough that the depth of concrete will be 9-inches below existing and new pipes.
7. Place concrete around barrel section and inside barrel section so that the existing and new pipes are at least 50% covered with concrete.
8. Hand form trough as needed.
9. Let concrete cure and break out of pipes for trough. Grout all troughs smooth and even with pipes.
10. Stack remaining barrel sections and add cone, ring and cover etc. as indicated for precast manhole.

2.11 CONCRETE

A. General: Cast-in-place concrete according to ACI 318/318R, ACI 350R, and the following:

1. Cement: ASTM C 150, Type II.
2. Fine Aggregate: ASTM C 33, sand.
3. Coarse Aggregate: ASTM C 33, crushed gravel.
4. Water: Potable.

B. Portland Cement Design Mix: 4000 psi minimum, with 0.45 maximum water-cementitious materials ratio.

1. Reinforcement Fabric: ASTM A 185, steel, welded wire fabric, plain.
2. Reinforcement Bars: ASTM A 615/A 615M, Grade 60, deformed steel.

C. Ballast and Pipe Supports: Portland cement design mix, 3000 psi minimum, with 0.58 maximum water-cementitious materials ratio.

1. Reinforcement Fabric: ASTM A 185, steel, welded wire fabric, plain.
2. Reinforcement Bars: ASTM A 615/A 615M, Grade 60, deformed steel.

PART 3 - EXECUTION

3.1 EARTHWORK

A. Excavation, trenching, and backfilling are specified in Division 31 Section "Earth Moving."

3.2 PIPING APPLICATIONS

A. Pipe couplings and special pipe fittings with pressure ratings at least equal to piping rating may be used in applications below, unless otherwise indicated.

1. Use nonpressure-type flexible couplings where required to join gravity-flow, nonpressure sewer piping, unless otherwise indicated.

    a. Flexible or rigid couplings for same or minor difference OD pipes.
    b. Unshielded, increaser/reducer-pattern, flexible or rigid couplings for pipes with different OD.
    c. Ring-type flexible couplings for piping of different sizes where annular space between smaller piping's OD and larger piping's ID permits installation.

B. Special Pipe Fittings: Use for pipe expansion and deflection. Pipe couplings and special pipe fittings with pressure ratings at least equal to piping rating may be used in applications below, unless otherwise indicated.

C. Gravity-Flow, Nonpressure Sewer Piping: Use any of the following pipe materials for each size range:
    1. PVC sewer pipe and fittings; gaskets; and gasketed joints.
    2. Ductile-iron pressure pipe, ductile-iron standard or compact fittings, gaskets, and gasketed joints.
    3. PVC pressure, PVC pressure fittings, gaskets, and gasketed joints.

3.3 PIPING INSTALLATION

A. General Locations and Arrangements: Drawing plans and details indicate general location and arrangement of underground sanitary sewerage piping. Location and arrangement of piping layout take design considerations into account. Install piping as indicated, to extent practical.

B. Install piping beginning at low point, true to grades and alignment indicated with unbroken continuity of invert. Place bell ends of piping facing upstream. Install gaskets, seals, sleeves, and couplings according to manufacturer's written instructions for use of lubricants, cements, and other installation requirements.

C. Install manholes for changes in direction unless fittings are indicated. Use fittings for branch connections unless direct tap into existing sewer is indicated.

D. Install proper size increasers, reducers, and couplings where different sizes or materials of pipes and fittings are connected. Reducing size of piping in direction of flow is prohibited.

E. Tunneling: Install pipe under streets or other obstructions that cannot be disturbed by tunneling, jacking, or a combination of both.

F. Install gravity-flow, nonpressure drainage piping according to the following:

    1. Install piping pitched down in direction of flow, at slope indicated.
    2. Install piping with restrained joints at tee fittings and at changes in direction for pressure pipe. Use corrosion-resistant rods, pipe or fitting manufacturer's proprietary restraint system, or cast-in-place concrete supports or anchors.
    3. Install piping with cover indicated.
    4. Notify engineer of clearance problems that would result in changes to grade and alignment.

5. Install ductile-iron culvert piping according to ASTM A 716.
6. Install ductile-iron and special fittings according to AWWA C600 or AWWA M41.
7. Install PVC sewer piping according to ASTM D 2321 and ASTM F 1668.
8. Install PVC profile gravity sewer piping according to ASTM D 2321 and ASTM F 1668.

3.4 PIPE JOINT CONSTRUCTION

A. Basic pipe joint construction is specified in Division 33 Section "Common Work Results for Utilities." Where specific joint construction is not indicated, follow piping manufacturer's written instructions.

B. Join gravity-flow, nonpressure drainage piping according to the following:
1. Join ductile-iron culvert piping according to AWWA C600 for push-on joints.
2. Join ductile-iron and special fittings according to AWWA C600 or AWWA M41.
3. Join PVC cellular-core piping according to ASTM D 2321 and ASTM F 891 for solvent-cement joints.
4. Join PVC sewer piping according to ASTM D 2321 and ASTM D 3034 for elastomeric-seal joints or ASTM D 3034 for elastomeric gasket joints.
5. Join PVC profile gravity sewer piping according to ASTM D 2321 for elastomeric-seal joints or ASTM F 794 for gasketed joints.
6. Join dissimilar pipe materials with nonpressure-type flexible or rigid couplings.

C. Join dissimilar pipe materials with pressure-type couplings.

3.5 CLEANOUT INSTALLATION

A. Install cleanouts and riser extension from sewer pipe to cleanout at grade. Use same pipe type as sewer line that the cleanout is connected to. Install piping so cleanouts open in direction of flow in sewer pipe.

1. Use light-duty, top-loading classification cleanouts in earth or unpaved foot-traffic areas.
2. Use medium-duty, top-loading classification cleanouts in paved foot-traffic areas.
3. Use heavy-duty, top-loading classification cleanouts in vehicle-traffic service areas.
4. Use extra-heavy-duty, top-loading classification cleanouts in roads areas.

B. Set cleanout frames and covers in earth in cast-in-place concrete block, 12 inches around outside of cover. At contractors option, a square block can be used that is at least 12-inches wider that the cover. Set with tops 1 inch above surrounding earth grade.

C. Set cleanout frames and covers in concrete pavement with tops flush with pavement surface.

3.6 MANHOLE INSTALLATION

A. General: Install manholes, complete with appurtenances and accessories indicated.

B. Install precast concrete manhole sections according to ASTM C 891.

C. Construct cast-in-place manhole bases as indicated.

D. Set tops of frames and covers flush with finished surface of manholes that occur in pavements. Set tops 3 inches above finished surface elsewhere, unless otherwise indicated.

3.7 CONCRETE PLACEMENT

A. Place cast-in-place concrete according to ACI 318/318R.

3.8 CONNECTIONS

A. Connect nonpressure, gravity-flow drainage piping to building's sanitary sewer system.

1. Use commercially manufactured wye fittings for piping branch connections. Remove section of existing pipe; install wye fitting into existing piping; and encase entire wye fitting, plus 6-inch overlap, with not less than 6 inches of concrete with 28-day compressive strength of 3000 psi.

2. Protect existing piping, manholes, and structures to prevent concrete or debris from entering while making tap connections. Remove debris or other extraneous material that may accumulate.

3.9 CLOSING ABANDONED SEWER DRAINAGE SYSTEMS

A. Abandoned Piping: Close open ends of abandoned underground piping indicated to remain in place. Include closures strong enough to withstand hydrostatic and earth pressures that may result after ends of abandoned piping have been closed. Use either procedure below:

1. Close open ends of piping with at least 8-inch-thick, brick masonry bulkheads.
2. Close open ends of piping with threaded metal caps, plastic plugs, or other acceptable methods suitable for size and type of material being closed. Do not use wood plugs.

B. Abandoned Manholes and Structures: Excavate around manholes and structures as required and use one procedure below:

1. Remove manhole or structure and close open ends of remaining piping.
2. Remove top of manhole or structure down to at least 36 inches below final grade. Fill to within 12 inches of top with stone, rubble, gravel, or compacted dirt. Fill to top with concrete.

C. Backfill to grade according to Division 31 Section "Earth Moving."

3.10 IDENTIFICATION

A. Materials and their installation are specified in Division 31 Section "Earth Moving." Arrange for installation of green warning tape directly over piping and at outside edge of underground structures.

1. Use warning tape or detectable warning tape over ferrous piping.
2. Use detectable warning tape over nonferrous piping and over edges of underground structures.

3.11 FIELD QUALITY CONTROL

A. Inspect interior of piping to determine whether line displacement or other damage has occurred. Inspect after approximately 24 inches of backfill is in place, and again at completion of Project.

1. Submit separate reports for each system inspection.
2. Defects requiring correction include the following:

a. Alignment: Less than full diameter of inside of pipe is visible between structures.
b. Deflection: Flexible piping with deflection that prevents passage of ball or cylinder of size not less than 92.5 percent of piping diameter.
c. Crushed, broken, cracked, or otherwise damaged piping.
d. Infiltration: Water leakage into piping.
e. Exfiltration: Water leakage from or around piping.
f. Test for infiltration or exfiltration between manholes as follows:
1) Clean section of sewer line of dirt. Debris, gravel, rocks and other items.
2) Fill section between manholes with water. Allow water to sit in pipe for not less than 3-hours to acclimate to surrounding earth temperature.
3) Use a water pump to pressurize the sewer pipe section to not less than 5 psi and not more than 10 psi. Record starting pressure.
4) Turn off water pressure and wait 20 minutes.
5) Refill pipe to same pressure as in step 3 and measure volume required to fill pipe to same pressure.
6) Pipe section passes test if volume required to refill pipe is less than ½-gallon per 400 feet of 8-inch pipe. Prorate the allowable seepage larger or smaller pipes and for shorter or longer distances.
7) Find and fix leaks in any section that fails to pass test. Fix any visible leaks found even if section of pipe passes test.

3. Replace defective piping using new materials, and repeat inspections until defects are within allowances specified.
4. Reinspect and repeat procedure until results are satisfactory.

B. Test new piping systems, and parts of existing systems that have been altered, extended, or repaired, for leaks and defects.

1. Do not enclose, cover, or put into service before inspection and approval.
2. Test completed piping systems according to authorities having jurisdiction.

3. Schedule tests and inspections by authorities having jurisdiction with at least 24 hours' advance notice.
4. Submit separate report for each test.

3.12 CLEANING

A. Clean interior of piping of dirt and superfluous materials.

END OF SECTION 333100

THIS PAGE LEFT INTENTIONALLY BLANK

APPENDIX

Geotechnical Information: Data on the indicated subsurface conditions are not intended as representations or warranties of accuracy or continuity between soil borings and is made available solely for the convenience of the Contractor. It is expressly understood that the Owner will not be responsible for interpretations or conclusions drawn therefrom by the Contractor.

Additional test borings and exploratory tests may be made by the Contractor as desired, at no cost to the owner.

COM*check* Software Version 3.8.0

Interior Lighting Compliance Certificate

2006 IECC

Section 1: Project Information

Project Type: **New Construction**
Project Title : Great Salt Lake Marina Maintenance Building

Construction Site:
13312 West 1075 South
Magna, UT 84044

Owner/Agent:

Designer/Contractor:
Peter Johansen
324 S. State Street, Suite 400
SLC, UT 84117

Section 2: Interior Lighting and Power Calculation

A Area Category	B Floor Area (ft2)	C Allowed Watts / ft2	D Allowed Watts (B x C)
Automotive Facility	3250	0.9	2925
Office	750	1	750
Warehouse	700	0.8	560
		Total Allowed Watts =	4235

Section 3: Interior Lighting Fixture Schedule

A Fixture ID : Description / Lamp / Wattage Per Lamp / Ballast	B Lamps/ Fixture	C # of Fixtures	D Fixture Watt.	E (C X D)
Automotive Facility (3250 sq.ft.)				
HID 1: Metal Halide 400W / Pulse start	1	9	275	2475
Office (750 sq.ft.)				
Linear Fluorescent 1 copy 1: S3: 48" T8 32W (Super T8) / Electronic	2	3	63	189
Linear Fluorescent 3 copy 1: WB3: 48" T8 32W (Super T8) / Electronic	2	1	63	63
Linear Fluorescent 1 copy 2: W3: 48" T8 32W (Super T8) / Electronic	2	3	63	189
Linear Fluorescent 6: Q36: 48" T8 32W (Super T8) / Electronic	3	2	91	182
Compact Fluorescent 1: DF47: Triple 4-pin 32W / Electronic	1	2	36	72
Warehouse (700 sq.ft.)				
Linear Fluorescent 1: SS1: Strip light / 48" T8 32W (Super T8) / Electronic	2	6	63	378
Linear Fluorescent 3: WB3: 48" T8 32W (Super T8) / Electronic	2	1	63	63
			Total Proposed Watts =	3611

Section 4: Requirements Checklist

Lighting Wattage:

☑ 1. Total proposed watts must be less than or equal to total allowed watts.

Allowed Watts	Proposed Watts	Complies
4235	3611	YES

Controls, Switching, and Wiring:

☑ 2. Independent controls for each space (switch/occupancy sensor).

Exceptions:

- ☑ Areas designated as security or emergency areas that must be continuously illuminated.
- ☑ Lighting in stairways or corridors that are elements of the means of egress.

N/A ☐ 3. Master switch at entry to hotel/motel guest room.

N/A ☐ 4. Individual dwelling units separately metered.

☑ 5. Each space required to have a manual control also allows for reducing the connected lighting load by at least 50 percent by either controlling all luminaires, dual switching of alternate rows of luminaires, alternate luminaires, or alternate lamps, switching the middle lamp luminaires independently of other lamps, or switching each luminaire or each lamp.

Exceptions:

- ☐ Only one luminaire in space.
- ☐ An occupant-sensing device controls the area.
- ☐ The area is a corridor, storeroom, restroom, public lobby or sleeping unit.
- ☐ Areas that use less than 0.6 Watts/sq.ft.

N/A ☐ 6. Automatic lighting shutoff control in buildings larger than 5,000 sq.ft.

Exceptions:

- ☐ Sleeping units, patient care areas; and spaces where automatic shutoff would endanger safety or security.

☑ 7. Photocell/astronomical time switch on exterior lights.

Exceptions:

- ☐ Lighting intended for 24 hour use.

☑ 8. Tandem wired one-lamp and three-lamp ballasted luminaires (No single-lamp ballasts).

Exceptions:

- ☐ Electronic high-frequency ballasts; Luminaires on emergency circuits or with no available pair.

Interior Lighting PASSES: Design 15% better than code.

Section 5: Compliance Statement

Compliance Statement: The proposed lighting design represented in this document is consistent with the building plans, specifications and other calculations submitted with this permit application. The proposed lighting system has been designed to meet the 2006 IECC requirements in COM*check* Version 3.8.0 and to comply with the mandatory requirements in the Requirements Checklist.

William Felt, PE	William M. Felt	09/02/2010
Name - Title	Signature	Date

COM*check* Software Version 3.8.0

Exterior Lighting Compliance Certificate

2006 IECC

Section 1: Project Information

Project Type: **New Construction**
Project Title : Great Salt Lake Marina Maintenance Building

Construction Site:
13312 West 1075 South
Magna, UT 84044

Owner/Agent:

Designer/Contractor:
Peter Johansen
324 S. State Street, Suite 400
SLC, UT 84117

Section 2: Exterior Lighting Area/Surface Power Calculation

A Exterior Area/Surface	B Quantity	C Allowed Watts / Unit	D Tradable Wattage	E Allowed Watts (B x C)	F Proposed Watts
Illuminated length of wall or surface	264 ft	5	No	1320	394
			Total Tradable Watts* =	0	0
			Total Allowed Watts =	1320	
			Total Allowed Supplemental Watts** =	66	

* Wattage tradeoffs are only allowed between tradable areas/surfaces.

** A supplemental allowance equal to 5% of total allowed wattage may be applied toward compliance of both non-tradable and tradable areas/surfaces.

Section 3: Exterior Lighting Fixture Schedule

A Fixture ID : Description / Lamp / Wattage Per Lamp / Ballast	B Lamps/ Fixture	C # of Fixtures	D Fixture Watt.	E (C X D)
Illuminated length of wall or surface (264 ft): Non-tradable Wattage				
Compact Fluorescent 1: OC32: Triple 4-pin 42W / Electronic	1	8	46	368
Halogen 1: TX1: Other	1	1	26	26
			Total Tradable Proposed Watts =	0

Section 4: Requirements Checklist

Lighting Wattage:

☑ 1. Within each non-tradable area/surface, total proposed watts must be less than or equal to total allowed watts. Across all tradable areas/surfaces, total proposed watts must be less than or equal to total allowed watts.

Compliance: Passes.

Controls, Switching, and Wiring:

☑ 2. All exemption claims are associated with fixtures that have a control device independent of the control of the nonexempt lighting.

☑ 3. All lighting fixtures are controlled by a photosensor or astronomical time switch that is capable of automatically turning off the fixture when sufficient daylight is available or the lighting is not required.

Exceptions:

☐ Covered vehicle entrance/exit areas requiring lighting for safety, security and eye adaptation.

Exterior Lighting Efficacy:

☑ 4. All exterior building grounds luminaires that operate at greater than 100W have minimum efficacy of 60 lumen/watt.

Exceptions:

☐ Controlled by motion sensor or exempt from consideration under the provisions of Section 505.6.2.

Exterior Lighting PASSES: Design 0.0% better than code.

Section 5: Compliance Statement

Compliance Statement: The proposed exterior lighting design represented in this document is consistent with the building plans, specifications and other calculations submitted with this permit application. The proposed lighting system has been designed to meet the 2006 IECC requirements in COM*check* Version 3.8.0 and to comply with the mandatory requirements in the Requirements Checklist.

William Felt, PE		09/02/2010
Name - Title	Signature	Date

COM*check* Software Version 3.8.0
Envelope Compliance Certificate

2009 IECC

Section 1: Project Information

Project Type: **New Construction**
Project Title : Great Salt Lake Marina Maintenance Building

Construction Site:
13312 West 1075 South
Magna, UT 84044

Owner/Agent:
Dan Clark
Division of Facilities Construction and Management
801.538.7311
danclark@utah.gov

Designer/Contractor:
Robert Paul
Spectrum Engineers
324 S State Street
Suite 400
Salt Lake City, UT 84111
801.328.5151
rob@spectrum-engineers.com

Section 2: General Information

Building Location (for weather data):	**Magna, Utah**
Climate Zone:	**5b**
Vertical Glazing / Wall Area Pct.:	**0%**
Skylight Glazing / Roof Area Pct.:	**1%**

Activity Type(s)	Floor Area
Garage Bays (Automotive Facility)	3250
Office Space (Office)	750

Section 3: Requirements Checklist

Envelope PASSES: Design 2% better than code

Climate-Specific Requirements:

Component Name/Description	Gross Area or Perimeter	Cavity R-Value	Cont. R-Value	Proposed U-Factor	Budget U-Factor(a)
Roof 1: Insulation Entirely Above Deck	4000	---	21.0	0.046	0.048
Skylight 1: Metal Frame with Thermal Break:Double Pane, Clear, SHGC 0.49	20	---	---	0.600	0.600
Exterior Wall 1: Other Mass Wall, Heat capacity 1.0 (b)	6200	---	---	0.043	0.064
Window 1: Metal Frame with Thermal Break:Double Pane, Clear, SHGC 0.49	30	---	---	0.550	0.550
Door 1: Insulated Metal, Swinging	85	---	---	0.700	0.700
Door 2: Insulated Metal, Non-Swinging	900	---	---	0.500	0.500
Floor 1: Slab-On-Grade:Unheated	265	---	---	---	---

(a) Budget U-factors are used for software baseline calculations ONLY, and are not code requirements.
(b) 'Other' components require supporting documentation for proposed U-factors.

Air Leakage, Component Certification, and Vapor Retarder Requirements:

- ☐ 1. All joints and penetrations are caulked, gasketed or covered with a moisture vapor-permeable wrapping material installed in accordance with the manufacturer's installation instructions.
- ☐ 2. Windows, doors, and skylights certified as meeting leakage requirements.
- ☐ 3. Component R-values & U-factors labeled as certified.
- ☐ 4. No roof insulation is installed on a suspended ceiling with removable ceiling panels.

- ☐ 5. 'Other' components have supporting documentation for proposed U-Factors.
- ☐ 6. Insulation installed according to manufacturer's instructions, in substantial contact with the surface being insulated, and in a manner that achieves the rated R-value without compressing the insulation.
- ☐ 7. Stair, elevator shaft vents, and other outdoor air intake and exhaust openings in the building envelope are equipped with motorized dampers.
- ☐ 8. Cargo doors and loading dock doors are weather sealed.
- ☐ 9. Recessed lighting fixtures installed in the building envelope are Type IC rated as meeting ASTM E283, are sealed with gasket or caulk.
- ☐ 10. Building entrance doors have a vestibule equipped with closing devices.
  Exceptions:
  - ☐ Building entrances with revolving doors.
  - ☐ Doors that open directly from a space less than 3000 sq. ft. in area.

Section 4: Compliance Statement

Compliance Statement: The proposed envelope design represented in this document is consistent with the building plans, specifications and other calculations submitted with this permit application. The proposed envelope system has been designed to meet the 2009 IECC requirements in COM*check* Version 3.8.0 and to comply with the mandatory requirements in the Requirements Checklist.

Robert L. Paul - Principal		9/2/2010
Name - Title	Signature	Date

Project Notes:

DFCM # 10029519

COM*check* Software Version 3.8.0

Mechanical Compliance Certificate

2009 IECC

Section 1: Project Information

Project Type: **New Construction**
Project Title : Great Salt Lake Marina Maintenance Building

Construction Site:
13312 West 1075 South
Magna, UT 84044

Owner/Agent:
Dan Clark
Division of Facilities Construction and Management
801.538.7311
danclark@utah.gov

Designer/Contractor:
Robert Paul
Spectrum Engineers
324 S State Street
Suite 400
Salt Lake City, UT 84111
801.328.5151
rob@spectrum-engineers.com

Section 2: General Information

Building Location (for weather data):	**Magna, Utah**
Climate Zone:	**5b**

Section 3: Mechanical Systems List

Quantity	System Type & Description
1	HVAC System 1: Heating: Heating equipment (Central Furnace), Gas, Capacity 40 kBtu/h, Efficiency: 93.00% Et / Cooling: Cooling equipment (Split System), Capacity 37 kBtu/h, Efficiency: 15.00 SEER, Air-Cooled Condenser / Single Zone
1	Garage Heaters: Heating: Heating equipment (Radiant Heater), Gas, Capacity 100 kBtu/h / Single Zone
1	Garage Evaporative Coolers: Cooling: Cooling equipment (Other), Capacity 0 kBtu/h, Air-Cooled Condenser / Single Zone
1	Water Heater 1: Gas Storage Water Heater, Capacity: 60 gallons, Input Rating: 125 Btu/h, Efficiency: 95.00 % Et

Section 4: Requirements Checklist

Requirements Specific To: HVAC System 1 :

- ☐ 1. Equipment minimum efficiency: Central Furnace (Gas): 80.0 % Et (or 78% AFUE)
- ☐ 2. Equipment minimum efficiency: Split System: 13.0 SEER

Requirements Specific To: Garage Heaters :

None

Requirements Specific To: Garage Evaporative Coolers :

- ☐ 1. Hot gas bypass limited to 50% of total cooling capacity

Requirements Specific To: Water Heater 1 :

- ☐ 1. Gas Storage Water Heater efficiency: 80.0 % Et (170 SL, kBtu/h)
- ☐ 2. First 8 ft of outlet piping is insulated
- ☐ 3. Hot water storage temperature adjustable down to 120°F or lower
- ☐ 4. Heat traps provided on inlet and outlet of storage tanks

Generic Requirements: Must be met by all systems to which the requirement is applicable:

- ☐ 1. Plant equipment and system capacity no greater than needed to meet loads
  - ☐ Exception: Standby equipment automatically off when primary system is operating
  - ☐ Exception: Multiple units controlled to sequence operation as a function of load
- ☐ 2. Minimum one temperature control device per system

- ☐ 3. Minimum one humidity control device per installed humidification/dehumidification system
- ☐ 4. Load calculations per ASHRAE/ACCA Standard 183
- ☐ 5. Automatic Controls: Setback to 55°F (heat) and 85°F (cool); 7-day clock, 2-hour occupant override, 10-hour backup
  - ☐ Exception: Continuously operating zones
  - ☐ Exception: 2 kW demand or less, submit calculations
- ☐ 6. Outside-air source for ventilation; system capable of reducing OSA to required minimum
- ☐ 7. R-5 supply and return air duct insulation in unconditioned spaces
  R-8 supply and return air duct insulation outside the building
  R-8 insulation between ducts and the building exterior when ducts are part of a building assembly
  - ☐ Exception: Ducts located within equipment
  - ☐ Exception: Ducts with interior and exterior temperature difference not exceeding 15°F.
- ☐ 8. Mechanical fasteners and sealants used to connect ducts and air distribution equipment
- ☐ 9. Ducts sealed - longitudinal seams on rigid ducts; transverse seams on all ducts; UL 181A or 181B tapes and mastics
- ☐ 10. Hot water pipe insulation: 1 in. for pipes <=1.5 in. and 2 in. for pipes >1.5 in.
  Chilled water/refrigerant/brine pipe insulation: 1 in. for pipes <=1.5 in. and 1.5 in. for pipes >1.5 in.
  Steam pipe insulation: 1.5 in. for pipes <=1.5 in. and 3 in. for pipes >1.5 in.
  - ☐ Exception: Piping within HVAC equipment.
  - ☐ Exception: Fluid temperatures between 55 and 105°F.
  - ☐ Exception: Fluid not heated or cooled with renewable energy.
  - ☐ Exception: Piping within room fan-coil (with AHRI440 rating) and unit ventilators (with AHRI840 rating).
  - ☐ Exception: Runouts <4 ft in length.
- ☐ 11. Operation and maintenance manual provided to building owner
- ☐ 12. Piping, insulated to 1/2 in. if nominal diameter of pipe is <1.5 in.; Larger pipe insulated to 1 in. thickness
- ☐ 13. Lavatory faucet outlet temperatures in public restrooms limited to 110°F (43°C)
- ☐ 14. Thermostatic controls have 5°F deadband
  - ☐ Exception: Thermostats requiring manual changeover between heating and cooling
  - ☐ Exception: Special occupancy or special applications where wide temperature ranges are not acceptable and are approved by the authority having jurisdiction.
- ☐ 15. Balancing devices provided in accordance with IMC (2006) 603.17
- ☐ 16. Demand control ventilation (DCV) present for high design occupancy areas (>40 person/1000 ft2 in spaces >500 ft2) and served by systems with any one of 1) an air-side economizer, 2) automatic modulating control of the outdoor air damper, or 3) a design outdoor airflow greater than 3000 cfm.
  - ☐ Exception: Systems with heat recovery.
  - ☐ Exception: Multiple-zone systems without DDC of individual zones communicating with a central control panel.
  - ☐ Exception: Systems with a design outdoor airflow less than 1200 cfm.
  - ☐ Exception: Spaces where the supply airflow rate minus any makeup or outgoing transfer air requirement is less than 1200 cfm.
- ☐ 17. Motorized, automatic shutoff dampers required on exhaust and outdoor air supply openings
  - ☐ Exception: Gravity dampers acceptable in buildings <3 stories
  - ☐ Exception: Gravity dampers acceptable in systems with outside or exhaust air flow rates less than 300 cfm where dampers are interlocked with fan
- ☐ 18. Automatic controls for freeze protection systems present
- ☐ 19. Exhaust air heat recovery included for systems 5,000 cfm or greater with more than 70% outside air fraction or specifically exempted
  - ☐ Exception: Hazardous exhaust systems, commercial kitchen and clothes dryer exhaust systems that the International Mechanical Code prohibits the use of energy recovery systems.
  - ☐ Exception: Systems serving spaces that are heated and not cooled to less than 60°F.
  - ☐ Exception: Where more than 60 percent of the outdoor heating energy is provided from site-recovered or site solar energy.
  - ☐ Exception: Heating systems in climates with less than 3600 HDD.
  - ☐ Exception: Cooling systems in climates with a 1 percent cooling design wet-bulb temperature less than 64°F.
  - ☐ Exception: Systems requiring dehumidification that employ energy recovery in series with the cooling coil.
  - ☐ Exception: Laboratory fume hood exhaust systems that have either a variable air volume system capable of reducing exhaust and makeup air volume to 50 percent or less of design values or, a separate make up air supply meeting the following makeup air requirements: a) at least 75 percent of exhaust flow rate, b) heated to no more than 2°F below room setpoint temperature, c) cooled to no lower than 3°F above room setpoint temperature, d) no humidification added, e) no simultaneous heating and cooling.

Section 5: Compliance Statement

Compliance Statement: The proposed mechanical design represented in this document is consistent with the building plans, specifications and other calculations submitted with this permit application. The proposed mechanical systems have been designed to meet the 2009 IECC requirements in COM*check* Version 3.8.0 and to comply with the mandatory requirements in the Requirements Checklist.

Robert L. Paul - Principal		9/2/2010
Name - Title	Signature	Date

COM*check* Software Version 3.8.0
Mechanical Requirements Description

2009 IECC

The following list provides more detailed descriptions of the requirements in Section 4 of the Mechanical Compliance Certificate.

Requirements Specific To: HVAC System 1 :

1. The specified heating and/or cooling equipment is covered by the ASHRAE 90.1 Code and must meet the following minimum efficiency:
   Central Furnace (Gas): 80.0 % Et (or 78% AFUE)
2. The specified heating and/or cooling equipment is covered by the ASHRAE 90.1 Code and must meet the following minimum efficiency:
   Split System: 13.0 SEER Split System: 13.0 SEER

Requirements Specific To: Garage Heaters :

None

Requirements Specific To: Garage Evaporative Coolers :

1. For cooling systems <= 240 kBtu/h, maximum hot gas bypass capacity must be no more than 50% total cooling capacity.

Requirements Specific To: Water Heater 1 :

1. Service water heating equipment used solely for heating potable water, pool heaters, and hot water storage tanks must meet the following miniumum efficiency: Gas Storage Water Heater efficiency: 80.0 % Et (170 SL, kBtu/h)
2. Insulation must be provided for the first 8 ft of outlet piping for a constant temperature nonrecirculating storage system and for the inlet pipe between the storage tank and a heat trap in a storage system.
3. Temperature controls must be provided that allow for storage temperature adjustment from 120°F or lower to a maximum temperature compatible with the intended use except when the manufacturer's installation instructions specify a higher minimum thermostat setting to minimize condensation and resulting corrosion. Documentation of the installation instructions must be provided to be exempted from this requirement.
4. Heat traps must be provided on inlet and outlet vertical pipe risers serving storage water heaters and storage tanks not having integral heat traps and serving a nonrecirculating system.
   Heat traps must be installed as close as practical to the storage tank. Acceptable heat traps are either
   a) a device specifically designed for the purpose or
   b) an arrangement of tubing that forms a loop of 360°F, or
   c) piping that from the point of connection to the water heater (inlet or outlet) includes a length of piping directed downwards before connection to the vertical piping of the supply water or hot water distribution system.

Generic Requirements: Must be met by all systems to which the requirement is applicable:

1. All equipment and systems must be sized to be no greater than needed to meet calculated loads. A single piece of equipment providing both heating and cooling must satisfy this provision for one function with the capacity for the other function as small as possible, within available equipment options.
   - Exception: The equipment and/or system capacity may be greater than calculated loads for standby purposes. Standby equipment must be automatically controlled to be off when the primary equipment and/or system is operating.
   - Exception: Multiple units of the same equipment type whose combined capacities exceed the calculated load are allowed if they are provided with controls to sequence operation of the units as the load increases or decreases.
2. Each heating or cooling system serving a single zone must have its own temperature control device.
3. Each humidification system must have its own humidity control device.
4. Design heating and cooling loads for the building must be determined using procedures in the ASHRAE Handbook of Fundamentals or an approved equivalent calculation procedure.
5. The system or zone control must be a programmable thermostat or other automatic control meeting the following criteria:
   a) capable of setting back temperature to 55°F during heating and setting up to 85°F during cooling,
   b) capable of automatically setting back or shutting down systems during unoccupied hours using 7 different day schedules,
   c) have an accessible 2-hour occupant override,
   d) have a battery back-up capable of maintaining programmed settings for at least 10 hours without power.
   - Exception: A setback or shutoff control is not required on thermostats that control systems serving areas that operate continuously.
   - Exception: A setback or shutoff control is not required on systems with total energy demand of 2 kW (6,826 Btu/h) or less.
6. The system must supply outside ventilation air as required by Chapter 4 of the International Mechanical Code. If the ventilation system is designed to supply outdoor-air quantities exceeding minimum required levels, the system must be capable of reducing outdoor-air flow to the minimum required levels.
7. Air ducts must be insulated to the following levels:

a) Supply and return air ducts for conditioned air located in unconditioned spaces (spaces neither heated nor cooled) must be insulated with a minimum of R-5. Unconditioned spaces include attics, crawl spaces, unheated basements, and unheated garages.
b) Supply and return air ducts and plenums must be insulated to a minimum of R-8 when located outside the building.
c) When ducts are located within exterior components (e.g., floors or roofs), minimum R-8 insulation is required only between the duct and the building exterior.

- Exception: Duct insulation is not required on ducts located within equipment.
- Exception: Duct insulation is not required when the design temperature difference between the interior and exterior of the duct or plenum does not exceed 15°F.

8. Mechanical fasteners and seals, mastics, or gaskets must be used when connecting ducts to fans and other air distribution equipment, including multiple-zone terminal units.
9. All joints, longitudinal and transverse seams, and connections in ductwork must be securely sealed using weldments; mechanical fasteners with seals, gaskets, or mastics; mesh and mastic sealing systems; or tapes. Tapes and mastics must be listed and labeled in accordance with UL 181A and shall be marked '181A-P' for pressure sensitive tape, '181A-M' for mastic or '181A-H' for heat-sensitive tape. Tapes and mastics used to seal flexible air ducts and flexible air connectors shall comply with UL 181B and shall be marked '181B-FX' for pressure-sensitive tape or '181B-M' for mastic. Unlisted duct tape is not permitted as a sealant on any metal ducts.
10. All pipes serving space-conditioning systems must be insulated as follows:
    Hot water piping for heating systems:
    1 1/2 in. for pipes <=1 1/2-in. nominal diameter,
    2 in. for pipes >1 1/2-in. nominal diameter.
    Chilled water, refrigerant, and brine piping systems:
    1 1/2 in. insulation for pipes <=1 1/2-in. nominal diameter,
    1 1/2 in. insulation for pipes >1 1/2-in. nominal diameter.
    Steam piping:
    1 1/2 in. insulation for pipes <=1 1/2-in. nominal diameter,
    3 in. insulation for pipes >1 1/2-in. nominal diameter.

- Exception: Pipe insulation is not required for factory-installed piping within HVAC equipment.
- Exception: Pipe insulation is not required for piping that conveys fluids having a design operating temperature range between 55°F and 105°F.
- Exception: Pipe insulation is not required for piping that conveys fluids that have not been heated or cooled through the use of fossil fuels or electric power.
- Exception: Piping within room fan-coil (with AHRI440 rating) and unit ventilators (with AHRI840 rating).
- Exception: Pipe insulation is not required for runout piping not exceeding 4 ft in length and 1 in. in diameter between the control valve and HVAC coil.

11. Operation and maintenance documentation must be provided to the owner that includes at least the following information:
    a) equipment capacity (input and output) and required maintenance actions
    b) equipment operation and maintenance manuals
    c) HVAC system control maintenance and calibration information, including wiring diagrams, schematics, and control sequence descriptions; desired or field-determined set points must be permanently recorded on control drawings, at control devices, or, for digital control systems, in programming comments
    d) complete narrative of how each system is intended to operate.
12. Service hot water piping, where required, must be insulated to 1/2 in. if pipe less than 1.5 in. nominal diameter. Larger pipe must be insulated to 1 in.. Pipe insulation will have a conductivity of less than 0.28 Btu.in/(h-ft2-°F).
13. Temperature controlling means must be provided to limit the maximum temperature of water delivered from lavatory faucets in public facility restrooms to 110°F.
14. Thermostats controlling both heating and cooling must be capable of maintaining a 5°F deadband (a range of temperature where no heating or cooling is provided).

- Exception: Deadband capability is not required if the thermostat does not have automatic changeover capability between heating and cooling.
- Exception: Special occupancy or special applications where wide temperature ranges are not acceptable and are approved by the authority having jurisdiction.

15. Balancing devices provided in accordance with IMC (2006) 603.17.
16. Demand control ventilation (DCV) required for high design occupancy areas (>40 person/1000 ft2 in spaces >500 ft2) and served by systems with any one of 1) an air-side economizer, 2) automatic modulating control of the outdoor air damper, or 3) a design outdoor airflow greater than 3000 cfm.

- Exception: Systems with heat recovery.
- Exception: Multiple-zone systems without DDC of individual zones communicating with a central control panel.
- Exception: Systems with a design outdoor airflow less than 1200 cfm.
- Exception: Spaces where the supply airflow rate minus any makeup or outgoing transfer air requirement is less than 1200 cfm.

17. Outdoor air supply and exhaust systems must have motorized dampers that automatically shut when the systems or spaces served are not in use. Dampers must be capable of automatically shutting off during preoccupancy building warm-up, cool-down, and setback, except when ventilation reduces energy costs (e.g., night purge) or when ventilation must be supplied to meet code requirements. Both outdoor air supply and exhaust air dampers must have a maximum leakage rate of 3 cfm/ft2 at 1.0 in w.g. when tested in accordance with AMCA Standard 500.
    - Exception: Gravity (non-motorized) dampers are acceptable in buildings less than three stories in height.
    - Exception: Systems with a design outside air intake or exhaust capacity of 300 cfm (140 L/s) or less that are equipped with motor operated dampers that open and close when the unit is energized and de-energized, respectively.
18. All freeze protection systems, including self-regulating heat tracing, must include automatic controls capable of shutting off the systems when outside air temperatures are above 40°F or when the conditions of the protected fluid will prevent freezing. Snow- and ice-melting systems must include automatic controls capable of shutting off the systems when the pavement temperature is above 50°F and no precipitation is falling, and an automatic or manual control that will allow shutoff when the outdoor temperature is above 40°F.
19. Individual fan systems with a design supply air capacity of 5000 cfm or greater and minimum outside air supply of 70 percent or greater of the supply air capacity must have an energy recovery system with at least a 50 percent effectiveness. Where cooling with outdoor air is required there is a means to bypass or control the energy recovery system to permit cooling with outdoor air.
    - Exception: Hazardous exhaust systems, commercial kitchen and clothes dryer exhaust systems that the International Mechanical Code prohibits the use of energy recovery systems.
    - Exception: Systems serving spaces that are heated and not cooled to less than 60°F.
    - Exception: Where more than 60 percent of the outdoor heating energy is provided from site-recovered or site solar energy.
    - Exception: Heating systems in climates with less than 3600 HDD.
    - Exception: Cooling systems in climates with a 1 percent cooling design wet-bulb temperature less than 64°F.
    - Exception: Systems requiring dehumidification that employ energy recovery in series with the cooling coil.
    - Exception: Laboratory fume hood exhaust systems that have either a variable air volume system capable of reducing exhaust and makeup air volume to 50 percent or less of design values or, a separate make up air supply meeting the following makeup air requirements: a) at least 75 percent of exhaust flow rate, b) heated to no more than 2°F below room setpoint temperature, c) cooled to no lower than 3°F above room setpoint temperature, d) no humidification added, e) no simultaneous heating and cooling.

Information To Build On

Engineering • Consulting • Testing

GEOTECHNICAL INVESTIGATION
PROPOSED SALT LAKE MARINA BOAT STORAGE
13312 WEST 1075 SOUTH
MAGNA, UTAH

PSI PROJECT No.: 0710163

July 16, 2010

Prepared For:
MHTN Architects
420 East South Temple, #100
Salt Lake City, Utah

Attention: Mr. Bruce Barnes

Prepared by:

PROFESSIONAL SERVICE INDUSTRIES, INC.
2779 South 600 West
Salt Lake City, Utah
(801) 484 - 8827

Information To Build On
Engineering • Consulting • Testing

July 16, 2010

Mr. Bruce Barnes
MHTN Architects
420 East South Temple, #100
Salt Lake City, Utah 84111

SUBJECT: Geotechnical Investigation
Proposed Salt Lake Marina Boat Storage
13312 West 1075 South
Magna, Utah
PSI Project No. 0710163

Dear Mr. Barnes:

Professional Service Industries, Inc. (PSI) is pleased to submit this geotechnical investigation for the proposed Salt Lake Marina Boat Storage to be located at 13312 West 1075 South in Magna, Utah. This report summarizes the work accomplished and presents our findings and recommendations for design and construction of the project.

Based on the results of our field investigation, laboratory testing, and engineering analysis, the proposed site is suitable for the proposed construction, from a geotechnical standpoint, provided the recommendations of this report are followed. Recommendations regarding the geotechnical aspects of project design and construction are presented in the attached report.

PSI is committed to providing quality services to its clients, commensurate with their wants, needs, and desires. PSI appreciates the opportunity to provide its services on this project. If you have questions pertaining to this project or if we may be of further assistance, please call the undersigned. We appreciate your business and look forward to our next project with you.

Respectfully Submitted,
PROFESSIONAL SERVICE INDUSTRIES, INC.

LICENSED PROFESSIONAL ENGINEER
7-16-10
NO. 301324
SHAWN L. TURPIN
STATE OF UTAH

MANUEL E. ZEA, PEI	**SHAWN TURPIN, PE**	**CHRIS T. GARRIS, PE**
Staff Engineer	Geotechnical Department Manager	Principal Consultant

MEZ/ST/CTG
P:\710\Reports\2010\0710163 Salt Lake Marina Boat Storage\0710163 Salt Lake Marina Boat Storage.doc

TABLE OF CONTENTS

1.0 INTRODUCTION **1**

2.0 PROJECT DESCRIPTION **1**

3.0 SITE DESCRIPTION **1**

3.1 Site Conditions and Topography 1
3.2 Regional Geology 2

4.0 FIELD EXPLORATIONS **2**

4.1 Borings and Sampling 2

5.0 LABORATORY TESTING **3**

5.1 Consolidation Test 3

6.0 SUBSURFACE CONDITIONS **4**

6.1 Soils 4
6.2 Free Water Level 4

7.0 CONCLUSIONS AND RECOMMENDATIONS **5**

7.1 Geotechnical Discussion 5
7.2 Site Preparation and Earthwork 5
7.2.1 Subgrade Stabilization 6
7.3 Excavations 6
7.4 Structural Fill 6
7.5 Compaction 7
7.6 Foundations 7
7.7 Foundation Settlements 8
7.8 Concrete Slab-on-Grade 8
7.9 Seismic Design Parameters 9
7.9.1 Liquefaction Potential 9
7.10 Pavement 10
7.10.1 Pavement Drainage and Maintenance 12
7.11 Utility Trenches 12
7.11.1 Utility Trench Backfill 12
7.12 Surface Drainage 13

8.0 DESIGN REVIEW AND CONSTRUCTION SERVICES **13**

9.0 GEOTECHNICAL RISK **13**

10.0 LIMITATIONS **14**

TABLE OF CONTENTS

APPENDIX A

Vicinity Map	Figure A-1
Site Map with Boring Locations	Figure A-2

APPENDIX B

Logs of Borings	Figures B-1 and B-2

APPENDIX C

Consolidation Test Results	Figure C-1
Gradation Test Results	Figures C-2
Summary of Laboratory Test Results	Table C-1

1.0 INTRODUCTION

This report presents the results of a geotechnical investigation for the proposed Salt Lake Marina Boat Storage to be located at 13312 West 1075 South in Magna, Utah, as shown on Figure A-1. The services for this project were performed in general accordance with Professional Service Industries, Inc (PSI) Proposal No. 23175 dated June 9, 2010 and authorized by Mr. Bruce Barnes on June 29, 2010.

The purpose of this investigation was to explore subsurface materials and conditions at the site and to develop recommendations for earthwork and design and construction of foundations, floor slabs and pavements. This report describes the work accomplished and presents our findings and recommendations for the design and construction of the project.

2.0 PROJECT DESCRIPTION

Based on the information provided by MHTN Architects, PSI understands that DFCM plans to construct a boat storage structure to the south and east of the existing marina storage building. The building is proposed to be single-story structure with a mezzanine and approximately 4,000 square feet in size. The walls are proposed to be constructed with eight (8) inch thick insulated concrete forms. We anticipate maximum cut and fill depths will not exceed three (3) feet. PSI also understands that the Great Salt Lake Marina was constructed approximately 25 years ago.

Based on the information provided by the structural engineer on July 14, 2010 via an electronic mail (e-mail) communication, PSI understands maximum column and wall loads will not exceed 12 kips and 5 kips per linear foot, respectively.

The geotechnical recommendations presented in this report are based on the available project information, location and subsurface conditions observed. If loads or any of the noted information is different than described in this report, please inform PSI in writing so that we may review and amend the recommendations presented in this report where appropriate.

3.0 SITE DESCRIPTION

3.1 Site Conditions and Topography

At the time of PSI's field investigation, the project site was graded fairly level and used to store boats. Based on available topographic information, the ground surface at the project site generally slopes downward to the south at an approximate two (2) percent grade. The project site is bound by the Great Salt Lake to the north and west and by Interstate I-80 to the south and east. Photograph 1 shows the project site and its surroundings at the time of our field investigation.

Photograph 1: View of the site looking north.

3.2 Regional Geology

According to available geologic maps of the area, the project site is mantled with lacustrine deposits. These deposits typically consist of interbedded layers of sand, silt and clay. The project site is located approximately 3.5 miles northeast of the Oquirrh Fault. Faults are not mapped on the project site.

4.0 FIELD EXPLORATIONS

4.1 Borings and Sampling

Subsurface conditions at the project site were investigated by drilling two (2) borings, designated as B-1 and B-2, at the approximate locations indicated on Figure A-2. The borings were drilled in the proposed building area to depths of approximately 21½ and 51½ feet below existing site grade.

The boring locations were determined by pacing approximate distances from known site landmarks. The borings were drilled to observe the subsurface conditions and obtain samples for laboratory testing. The soils observed were logged and classified in general accordance with the Unified Soil Classification System (USCS). The boring logs include method of drilling, date of boring, and depth of various soil layers. A complete description of each soil layer including color, consistency and visual grain-size classification, water level information, laboratory test

data, stratifications, and classifications are included on the logs. The investigation was performed under the supervision of a geotechnical engineer from PSI.

The borings were drilled using a truck-mounted CME-55 drill rig equipped with 3¼-inch inside diameter continuous-flight, hollow-stem augers. Samples were obtained at approximate 2½ to five (5) foot intervals. Both disturbed and relatively undisturbed samples of the subsurface soils were obtained for laboratory testing and examination. Relatively undisturbed samples were obtained using 3-inch outside diameter (OD) Shelby tubes. Disturbed samples were obtained by driving a standard 2-inch OD split-spoon sampler into the soil a distance of 18 inches using a 140-lb hammer dropped from a height of 30 inches. The number of blows required to drive the sampler the last 12 inches is known as the standard penetration resistance, or N-value. The N-values provide a measure of the relative density of granular soils, such as sand, and the relative consistency, or stiffness, of cohesive soils, such as clay or silt.

Samples were examined in the field and representative portions were stored in sealable plastic bags. The samples were transported to our laboratory for further examination and testing. The boring was backfilled with auger cuttings.

The ground surface elevations shown on the boring logs were measured by PSI with a hand level. The elevations were measured relative to the bottom of a fire hydrant located west of the site. An assumed elevation of 100 was selected for this benchmark.

5.0 LABORATORY TESTING

Representative samples of soil were tested to evaluate physical and engineering properties. The laboratory testing program included measurements of natural water content, Atterberg Limits, grain size analysis, and a consolidation test. The laboratory test results are presented on the Boring Logs (Figures B-1 and B-2), Figures C-1 and C-2 and the Summary of Laboratory Test Results, Table C-1.

5.1 Consolidation Test

A one-dimensional consolidation test was performed on a sample of the fat clay in accordance with ASTM D 2435. The sample was obtained from a depth of approximately 30 feet below the ground surface using a Shelby tube sampler. The purpose of the test was to evaluate the compressibility of the clay in the presence of free water. Consolidation test results are presented on Figure C-1 in Appendix C. The consolidation test results indicate that the fat clay is highly compressible under moderate loads.

6.0 SUBSURFACE CONDITIONS

6.1 Soils

The subsurface profile observed in the borings generally consists of approximately 10 feet of granular fill underlain by silty sand, fat clay, lean clay and lean clay with sand. The fill appears to extend to a depth of approximately 10 feet below the existing grade. PSI understands the fill was placed as part of the original marina construction; however, documentation of the fill placement or compaction is not available. Laboratory testing indicates the fill may be suitable for reuse as structural fill at the site.

Standard penetration resistance N-values (uncorrected) ranged from six (6) blows per foot to more than 50 blows per foot within native granular soils and from zero (0) to 12 blows per foot within native fine-grained soils. The fill material consisted of poorly graded sand with silt and gravel and N-values ranged from 31 to more than 50 blows per foot. Due to the presence of gravel, measured N-values are not considered a reliable indicator of the suitability of the fill in its current condition to support the proposed construction. For detailed descriptions of the materials and conditions observed in the borings, please refer to Figures B-1 and B-2 in Appendix B.

The subsurface profile described above is a generalized interpretation provided to highlight the major subsurface stratification features and material characteristics. The boring logs included in Appendix B should be reviewed for more specific information. The stratification shown on the boring logs represents the conditions only at the boring location for this study. The stratification indicated on the boring logs represents the approximate boundary between subsurface materials. The actual transitions may be gradual. Subsurface materials and conditions may vary across relatively short distances at the site and may become apparent with additional explorations or excavation. If soil conditions are found to be different than described herein, we should be allowed to reevaluate our recommendations if necessary.

6.2 Free Water Level

Free water was encountered in the borings at the time of drilling at a depth of approximately 15 feet below existing grade. It should be noted that it is possible for the stabilized free water level to be higher than observed. It should be noted that it is possible for the groundwater levels to fluctuate during the year depending upon climatic, local irrigation practices and other factors. Additionally, discontinuous zones of perched water may exist at varying locations and depths beneath the ground surface. As a result, groundwater conditions during or after construction may be different than those observed during the field investigation.

7.0 CONCLUSIONS AND RECOMMENDATIONS

7.1 Geotechnical Discussion

Undocumented fill (no records of fill placement with in-place moisture/density tests at time of placement) was encountered within the proposed project area to a depth of approximately 10 feet below existing grade. The presence of undocumented fill potentially presents a construction risk due to the potential for excessive and/or non-uniform fill densification and subsequent settlement of the structure. Due to the unknown manner in which this fill was moisture conditioned, placed and compacted, there is also the potential for pockets of loose fill and/or deleterious materials to exist within the fill.

The following geotechnical-related recommendations have been developed based on the subsurface conditions encountered in the borings and PSI's understanding of the proposed construction.

7.2 Site Preparation and Earthwork

PSI recommends that the ground surface within the proposed construction and all other areas to receive structural fill be cleared of undocumented fill and other unsuitable materials. Removal of undocumented fill and other unsuitable materials should extend at least five (5) feet beyond the building footprint. A portion or the full depth of undocumented fill in pavement areas should also be removed and replaced. If records of fill placement become available, PSI may review such data to consider leaving all or a portion of the fill material beneath the building area.

PSI can, if requested, conduct in-place moisture density testing of the previously placed fill to further evaluate its in-situ condition and to aid in the assessment of the potential risk of densification beneath the structure.. The in-place density testing would be by using a nuclear moisture density and regular depth materials throughout the fill material. PSI can provide a scope of work and cost estimate for evaluation of the existing fill upon request.

The foundation subgrade should be evaluated by a representative of the Geotechnical Engineer. If the subgrade is disturbed during construction, loose, disturbed soils should be over-excavated to firm, undisturbed soil and backfilled with compacted fill as specified in section 7.4 of this report.

Excavations should be made using an excavator equipped with a smooth edge bucket from outside the excavation. PSI recommends that site preparation and earthwork be accomplished during warmer, drier months, typically extending from mid-May to mid-October. Modifications to the grading plans should be reviewed by the Geotechnical Engineer.

7.2.1 Subgrade Stabilization

PSI anticipates that the native subgrade soils beneath the fill may require stabilization prior to placement and compaction of structural fill. Stabilization may consist of placement of a non-woven filter fabric between TX-140 geogrid, and the subgrade. Select granular fill (structural fill or crushed aggregate) should be placed over the geogrid in properly compacted lifts. A representative of the Geotechnical Engineer should observe and document subgrade stabilization activity prior to reinforcement and fill placement. Fill materials should be placed from outside the excavation. The use of construction equipment on the soft subgrade will likely result in disturbance and the need for additional excavation. A representative of the geotechnical engineer should be onsite during stabilization.

7.3 Excavations

Excavations should be performed in accordance with OSHA regulations as stated in 29 CFR Part 1926. The contractor is solely responsible for designing and constructing stable, temporary excavations and should shore, slope, or bench the sides of the excavations as required to maintain stability of both the excavation sides and bottom. The contractor should evaluate the soil exposed in the excavations as part of the required safety procedures. In no case should slope height, slope inclination, or excavation depth, including utility trench excavation depth, exceed those specified by local, state, and federal safety regulations. PSI is providing this information solely as a service to our client. PSI does not assume responsibility for construction site safety or the contractor's or other parties' compliance with local, state, and federal safety or other regulations.

During wet weather, earthen berms or other methods should be used to prevent runoff water from entering the excavations. The bottom of the excavations should be sloped to a collection point. Collected water within the foundation and utility trench excavations should be discharged to a suitable location outside the construction limits.

7.4 Structural Fill

Based on laboratory test results, the undocumented fill is generally suitable for reuse as structural fill, site grading fill and utility trench backfill. Particles larger than 3 inches should be screened or crushed. Imported structural fill should consist of well-graded granular material that is free of organic and other deleterious materials. Imported fill material should be approved by the Geotechnical Engineer prior to its delivery to the project site. Structural and site grading fill should meet the specifications presented in the following table.

Table 1: Structural and Site Grading Fill Gradation Recommendations

Sieve Size	Structural Fill	Site Grading Fill
	Percent Passing by Weight	
3 inch	100	100
¾ inch	85 – 100	-
No. 4	40 - 80	-
No. 40	10 - 40	-
No. 200	5 – 15	30
Liquid Limit (LL)	≤ 35	≤ 35
Plasticity Index (PI)	≤ 15	≤ 15

7.5 Compaction

Fill should be moisture conditioned to within two (2) percentage points of the optimum moisture content prior to placement. Fill should be placed in loose lifts not exceeding the capability of the compaction equipment. Loose lift thicknesses of six (6) to eight (8) inches are typically appropriate. Lift thickness should be reduced to four (4) inches where hand compaction equipment is used. Structural fill should be compacted to at least 95 percent of the maximum dry density as determined by the ASTM D 1557 Test Method. Site grading fill and backfill placed beneath floor slabs and flat work should be compacted to at least 90 percent of the maximum dry density as determined using ASTM D 1557.

Placement and compaction of fill materials should be observed, tested, and documented by a representative of the Geotechnical Engineer. Tested fill materials that do not achieve either the required dry density or moisture content requirements should be recorded, the location noted, and reported to the contractor and owner. A re-test of that area should be performed after the contractor has performed all necessary remedial measures including moisture conditioning (wetting or drying) and reworking the fill.

7.6 Foundations

The proposed structure may be supported on conventional spread footings bearing on properly placed and compacted granular structural fill underlain by a properly prepared subgrade. The following design parameters are recommended for foundation design and construction:

- Footings bearing on properly placed, granular structural fill and embedded a minimum of 30 inches below the lowest adjacent grade may be designed using a maximum allowable bearing pressure of 3,000 psf. Footings embedded 18 inches below the lowest adjacent grade may be designed for a maximum allowable pressure of 2,500 psf.

- The recommended allowable bearing pressure refers to the total dead load and can be increased by 1/3 to include temporary loading conditions such as wind and seismic loads.

- Footings subjected to freezing temperatures after foundation construction should bear at a minimum depth of 30 inches below final grade for frost protection. Interior footings or footings not subjected to freezing temperatures may be constructed at a minimum embedment depth of 18 inches.

- Foundations should have minimum lateral dimensions of 18 inches for continuous footings and 24 inches for isolated column footings.

- Structural fill, where required, should extend a minimum of ½ the depth of the fill laterally beyond the outside edge of the footings.

- Footings should be designed in accordance with the International Building Code (IBC), 2006 edition.

- Horizontal shear forces can be resisted partially or completely by frictional forces developed between the base of footings and the underlying soil. The total frictional resistance between the footing and the soil is the summation of vertical forces times the coefficient of friction between the soil and the base of the footing. We recommend a value of 0.45 for the coefficient of friction for concrete placed on structural fill.

We recommend that footing excavations be observed and documented by PSI's designated technical representative prior to placement of structural fill, concrete or reinforcing steel to verify their suitability for foundation support.

7.7 Foundation Settlements

Total settlement of an individual foundation will vary depending on the plan dimensions of the foundations and the actual load supported. We estimate that total settlement under static loads will not exceed one (1) inch for footings designed according to the recommendations described in Section 7.6 above. Differential settlement is estimated to be ½ of an inch or less under static conditions.

7.8 Concrete Slab-on-Grade

Concrete slabs may be supported on a properly prepared subgrade. We recommend that a minimum of six (6) inches of free-draining gravel or base course be placed immediately below the floor slab and/or exterior flatwork to enhance drainage, promote curing, and aid in the distribution of floor loads. Installation of a vapor barrier beneath the floor may also be considered if moisture sensitive floor coverings and contents are anticipated inside the building. The vapor barrier should be installed in accordance with the manufacturer's recommendations. The floor slab should have adequate number of joints to reduce cracking resulting from any differential movement and shrinkage.

7.9 Seismic Design Parameters

A search of the U.S. Geological Survey National Earthquake Hazard Reduction Program (NEHRP) database resulted in the following probabilistic ground motion values at the bedrock elevation for the project site located at 40.7325 degrees North Latitude and 112.2102 degrees West Longitude as shown in Table 2.

Table 2: Earthquake Design Factors Using the NEHRP Database (IBC-2006)

Intensity Measure Type	Intensity Measure Level 2% in 50 Years
Peak Ground Acceleration - PGA (g)	0.482
0.2 Sec. Spectral Acceleration - S_s (g)	1.156
1.0 Sec. Spectral Acceleration - S_1 (g)	0.433

The 2006 Edition International Building Code (IBC) requires the assignment of Site Class for the calculations of earthquake design forces. Site Class is a function of soil profile i.e., depth of soil and strata type. Based on subsurface conditions, the soil profile at the project site can be best characterized as Site Class E. Accordingly, Site Coefficient values Fa = 0.9 and Fv = 2.4 can be used for short and long period seismic design of structures. These parameters are based on subsurface information obtained from relatively shallow explorations and our experience in the area.

The International Building Code (IBC) 2006 Site Class is based on top 100 feet of subsurface profile, which may require deeper test boring extended to depth of at-least 100 feet below existing site grades. Other methods such as Refraction Microtremor (ReMi®) survey may also be used to further evaluate and refine the IBC-2006 Site Class designation. Evaluation of the site class using ReMi® survey was not included in our scope of work. PSI would be pleased to perform such an evaluation upon request.

7.9.1 Liquefaction Potential

The project site is located in an area designated as "moderate" in liquefaction potential. In general, liquefaction is a condition where soils lose intergranular strength due to abrupt increases in pore water pressure. Pore water pressure increases typically occur during dynamic loading such as ground shaking during a seismic event. Liquefaction, should it occur on a site, can induce ground settlement and lateral spreading, which can result in damage to structures. For liquefaction to occur, the following conditions must be present:

- The soil sediments must be in saturated or near-saturated conditions. At least 80-85 percent saturation is generally considered necessary for the liquefaction to occur.
- The soil must be predominately composed of non-plastic material such as sand or silt.

- The soil must be in a loose state.
- The soil must be subjected to dynamic loading, such as an earthquake.

The probabilistic ground acceleration (PGA) values presented in the tables above were used to evaluate liquefaction potential at the site in accordance with procedures outlined in the National Center for Earthquake Engineering and Research Technical Report NCEER-97-0022, dated December 31, 1997. Based on the limited SPT data collected at approximate 5-foot increments, the subsurface soils encountered at the site between the approximate depths of 10 to 25 feet below existing site grade in boring B-1 consisted of non-plastic silty sand. Our analysis indicates that, for a maximum considered seismic event associated with a 2 percent probability of exceedance in 50 years and an earthquake magnitude M_w = 7.2 the subsurface soils encountered in the upper 50 feet of subsurface profile, present a "very low" potential for liquefaction.

7.10 Pavement

PSI anticipates that flexible pavement will be used for the new drive and parking areas. PSI's scope of services did not include extensive sampling and CBR testing of existing subgrade or potential sources of imported fill for the specific purpose of detailed pavement section analysis. PSI prepared a pavement design section based on the soil characteristics similar to those encountered in the borings drilled at the site and relatively light traffic loads. For design purposes, PSI has based our pavement design on subgrade conditions consisting of unyielding, non-organic native soils or granular fill.

Pavement sections were evaluated using AASHTO design methods; a reliability of 80%, and a 20-year 18-kip single axle load (ESAL) of 30,000. Flexible pavement was evaluated based on initial and terminal serviceability values of 4.2 and 2.5, respectively. It is important to recognize that the 80 percent reliability suggests that 20 percent of the pavement surface is anticipated to be replaced during the design life of the pavement. Proper and frequent pavement maintenance, including crack maintenance and slurry coat surface treatments, is necessary to achieve the intended pavement design life.

PSI has estimated the subgrade soils will be prepared to achieve a CBR of at least 10. Based on this assumption and the stated assumed traffic loading, the recommended pavement sections consist of the following:

Table 3: Flexible Pavement Design Parameters

Pavement Materials	Recommended Minimum Thickness (inches)
Asphaltic Surface Course	1
Asphaltic Binder Concrete	2
Granular Base Course	6

PSI understands that given budgetary considerations, it may be desirable to place a thinner pavement section than that presented, such as omission of the Asphaltic Surface Course. However, the client, the owner, and the project principals should be aware that thinner pavement sections might result in increased maintenance costs and lower than anticipated pavement life.

To reduce the potential for thermal cracking in this region, asphalt binder grade of PG 64-28 is recommended

Pavement materials and workmanship should conform to the Utah Department of Transportation (UDOT) Standard Specifications for road construction.

Base course materials should be compacted to at least 95 percent of the maximum dry density as determined by ASTM D-1557. Base course material used to support pavement section should meet the gradation criteria presented in Table 4.

Table 4: Base Course Gradation Requirements

Sieve Size	**Percent Passing of Total Aggregate (Dry Weight)**		
	1½ inch Size	1 inch Size	¾ inch Size
1½ inch	100	--	--
1 inch	--	100	--
¾ inch	81-91	--	100
½ inch	67-77	79-91	--
3/8 inch	--	--	78-92
No. 4	43-53	49-61	55-67
No. 16	23-29	27-35	28-38
No. 200	6-10	7-11	7-11

PSI anticipates that typical rigid concrete pavement may be used in the approach apron areas and areas where trash dumpsters are to be located. PSI recommends that concrete pavement be designed for a modulus of subgrade reaction of 200 pci for the recommended rigid pavement section presented in Table 5.

Table 5: Rigid Pavement Design Parameters

Pavement Material	**Recommended Minimum Thickness (inches)**
Concrete (4,000 psi)	5
Granular Base Course	4

Portland Cement Concrete used for the pavement rigid pavement section should be air entrained with approximately five (5) percent air, and the maximum allowable slump should not exceed four (4) inches. Joints for the rigid concrete pavement should be laid in a rectangular or square pattern. Joint spacing should not exceed thirty (30) times the thickness of the slab and should accommodate the contraction and expansion of concrete. Depth of joints should be approximately ¼ times the slab thickness.

7.10.1 Pavement Drainage and Maintenance

Pavement should be sloped to provide rapid surface drainage during and after construction. Water allowed to pond on or adjacent to pavement areas could infiltrate the pavement section and cause premature deterioration of pavement, which could result in the need for removal and replacement. Periodic maintenance of the pavement should be anticipated. This should include sealing of cracks and joints and by maintaining proper surface drainage to avoid ponding of water on or near the pavement area.

7.11 Utility Trenches

Surface water should be prevented from entering utility trenches. If unstable soils are encountered, it may be necessary to over-excavate and replace the unstable soils with free draining gravel backfill. The depth of over-excavation, if necessary, should be determined by field observation.

7.11.1 Utility Trench Backfill

The backfill placed in utility trench excavations within the limits of the building should consist of granular soil with a maximum size of 1½ inches and maximum of 15 percent passing the No. 200 sieve. This backfill should be uniformly moisture conditioned, placed in appropriate lift thicknesses and compacted using vibratory compaction equipment or tamping units to at least 95 percent of the maximum dry density as determined by ASTM D 1557. Flooding or jetting the backfilled trenches with water to attempt to achieve compaction should not be permitted.

Utility trench excavations which extend below the groundwater level should be backfilled with clean, free-draining gravel which meets the recommendations in the following table:

Table 6: Backfill recommendations in utility trenches below groundwater table

Sieve Size	Percent Passing by Weight
1 inch	100
No. 200	≤ 5

Even when placed and compacted under optimum conditions, trench backfill may settle over time. Therefore, all improvements such as floor slabs, footings, and pavements placed over trench backfill should be designed to span over localized irregularities or be designed to allow some differential movement.

7.12 Surface Drainage

Drainage of surface water away from foundations should be provided and maintained throughout the life of the structure. Water should not be allowed to collect near the foundations or floor slab areas of the building either during or after construction. Excavated areas should be sloped towards one corner to facilitate removal of any collected rainwater, groundwater seepage, or surface runoff. Water from roof downspouts of the proposed building should be conveyed in pipes that discharge in areas a suitable distance away from the building. A minimum five (5) percent slope should be maintained for a distance of at least 10 feet away from the building. Site perimeters should be prepared with silt fences and/or other erosion control devices to keep storm water properly contained and controlled within the site boundaries.

8.0 DESIGN REVIEW AND CONSTRUCTION SERVICES

PSI should be retained to review all geotechnical related portions of the plans and specifications to evaluate whether they are in conformance with the recommendations provided in our report. Additionally, it is our opinion that all construction operations dealing with earthwork and foundations should be observed by a PSI representative to observe compliance with the intent of our recommendations, design concepts, and the plans and specifications. PSI's construction services will allow for timely design changes if site conditions are encountered that are different from those described in this report. If site conditions are different than described in this report, PSI should be notified so that we can re-evaluate our recommendations if necessary.

9.0 GEOTECHNICAL RISK

The concept of risk is an important aspect of the geotechnical evaluation. The analytical methods used to develop geotechnical recommendations do not comprise an exact science. The analytical tools which Geotechnical Engineer uses are generally empirical and must be used in conjunction with engineering judgment and experience. Therefore, the solutions and recommendations presented in the geotechnical evaluation should not be considered risk-free and, more importantly, are not a guarantee that the interaction between the soils and the proposed structure will perform as planned. The engineering recommendations presented in the preceding sections constitute PSI's professional estimate of those measures that are necessary for the proposed structure to perform according to the proposed design based on the information generated and referenced during this evaluation, and PSI's experience in working with these conditions.

10.0 LIMITATIONS

The recommendations submitted are based on the available subsurface information obtained by PSI, and information provided by DFCM and MHTN Architects. If there are any revisions to the plans for this project or if deviations from the subsurface conditions noted in this report are encountered during construction, PSI should be notified immediately to determine if changes in the foundation and/or other recommendations are required. If PSI is not retained to perform these functions, PSI cannot be responsible for the impact of those conditions on the performance of the project. The Geotechnical Engineer warrants that the findings, recommendations, specifications, or professional advice contained herein have been made in accordance with generally accepted professional geotechnical engineering practices in the local area. No other warranties are implied or expressed. The Geotechnical Engineer should be retained and provided the opportunity to review the final design plans and specifications to check that our engineering recommendations have been properly incorporated into the design documents. At that time, it may be necessary to submit supplementary recommendations. This report has been prepared for the exclusive use of MHTN Architects and their respective successors and assigns for the specific application to the proposed Marina Boat Storage to be located at 13312 West 1075 South in Magna, Utah.

APPENDIX A

Vicinity Map
Site Plan with Boring Locations

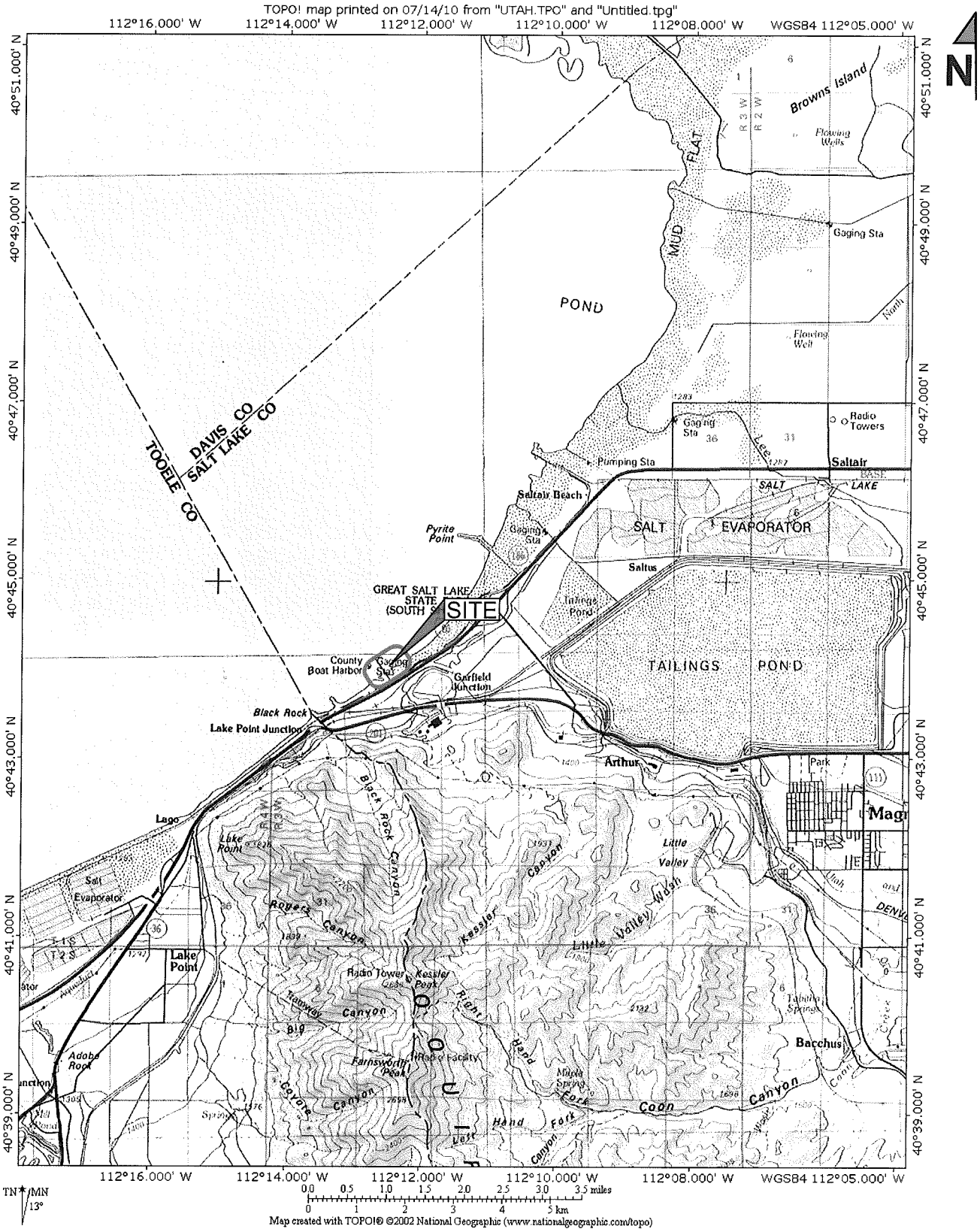

psi Information To Build On
Engineering • Consulting • Testing

Project:
Proposed Marina Boat Storage
13312 West 1075 South
Magna, Utah

Project No: 0710163

VICINITY MAP

Drawn By: MEZ
Reviewed By: CTG
Date: July, 2010

Scale: As Shown
Figure: A-1

N

⊕APPROXIMATE BORING LOCATION

psi Information To Build On Engineering • Consulting • Testing	Project: Proposed Marina Boat Storage 13312 West 1075 South Magna, Utah Project No: 0710163	Drawn By: MEZ Reviewed By: ST Date: 7/14/2010	SITE MAP WITH BORING LOCATIONS Approximate Scale: 1" = 80' Figure: A-2

APPENDIX B

Logs of Borings

PSI
2779 S 600 W
Salt Lake City, Utah, 84020
Telephone: 801-484-8827
Fax: 801-487-3312

LOG OF BORING B-1

PSI Job No.:	0710163	Drilling Method:	Hollow Stem Auger
Project:	Proposed Marina Boat Storage	Sampling Method:	Split Spoon/Shelby Tube
Location:	13312 West 1075 South Magna, Utah	Hammer Type:	CME Automatic
		Boring Location:	South East Corner

WATER LEVELS

While Drilling	15 Feet
Upon Completion	14 Feet
Delay	N/A

Station: N/A
Offset: N/A

Surface Elev.: 101 ft

Elevation (feet)	Depth, (feet)	Sample No.	Recovery (inches)	MATERIAL DESCRIPTION	USCS Classification	SPT Blows per 6-inch (SS)	Moisture, %	Additional Remarks
100	0			**Fill:** -- Poorly-graded sand with silt and gravel, moist, medium grained, dark brown.				
		1	18		SP-SM	23-18-13 N=31	7	Gravel=40% Sand=52% Fines=8.2%
95	5	2	18			14-22-33 N=55	7	>>
		3	18	-- light brown		14-13-10 N=23	10	Fines=10.4%
90	10	4	3	**Silty sand:** -- dense to very dense, moist to wet, fine to medium grained, brown to gray.		50/4	15	>> Fines=17.3%
85	15	5	10	-- moderately cemented below 15 feet	SM	1-42-50/3	29	>> Fines=11.5%
80	20	6	18			15-16-20 N=36	23	Fines=27.2%
75	25	7	18	**Fat clay:** -- soft, wet, very plastic, gray.		1-1-2 N=3	44	
70	30	8	24		CH		53	>> DD = 65 pcf LL = 66 PL = 21 Fines=96.6%
65	35	9	18	-- interbedded sand lenses		2-1-2 N=3	50	
60	40	10	18	**Lean clay with sand:** -- very soft to stiff, medium plastic, very moist to moist, gray.		0-0-0 N=0	46	LL = 38 PL = 20
55	45	11	18		CL	1-5-7 N=12	23	Fines=79.2%
50	50	12	18	**Silty sand:** -- loose, wet, medium grained, gray. -- Boring terminated @ 51½ feet	SM	1-5-4 N=9	31	

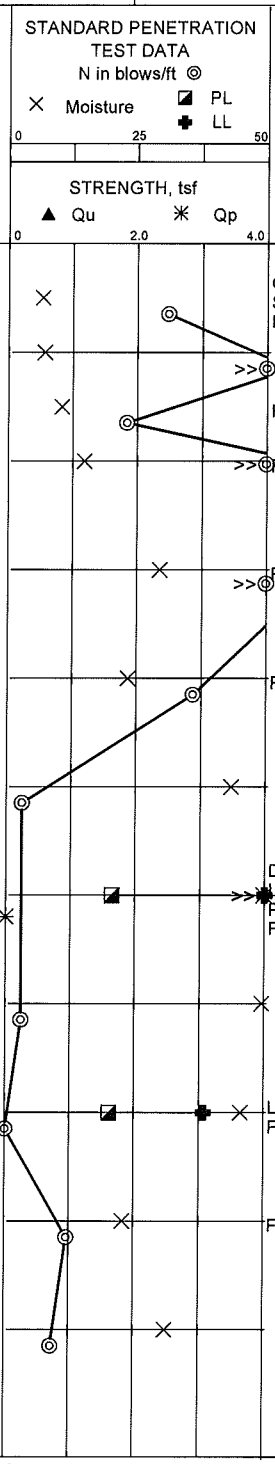

Completion Depth:	51.5 ft	Sample Types:	Latitude:
Date Boring Started:	7/8/10	Auger Cutting / Shelby Tube	Longitude:
Date Boring Completed:	7/8/10	Split-Spoon / Hand Auger	Drill Rig: CME-55
Logged By:	MEZ	Rock Core / Texas Cone	Remarks: Figure B-1
Drilling Contractor:	GB Drilling		

The stratification lines represent approximate boundaries. The transition may be gradual.

PSI
2779 S 600 W
Salt Lake City, Utah, 84020
Telephone: 801-484-8827
Fax: 801-487-3312

LOG OF BORING B-2

PSI Job No.:	0710163	Drilling Method:	Hollow Stem Auger
Project:	Proposed Marina Boat Storage	Sampling Method:	Split Spoon
Location:	13312 West 1075 South Magna, Utah	Hammer Type:	CME Automatic
		Boring Location:	North West Corner

WATER LEVELS

While Drilling	15 Feet
Upon Completion	N/A
Delay	N/A

Station: N/A
Offset: N/A

Surface Elev.: 101 ft

Elevation (feet)	Depth, (feet)	Sample No.	Recovery (inches)	MATERIAL DESCRIPTION	USCS Classification	SPT Blows per 6-inch (SS)	Moisture, %	Additional Remarks
	0			**Fill:** -- Poorly-graded sand with silt and gravel, moist, dark brown.				
100		1	18			17-23-22 N=45		
	5				SP-SM			
95		2	18			15-24-30 N=54		
		3	18			18-15-16 N=31		
	10			**Silty sand:** -- loose to medium dense, moist to wet, medium grained, gray				
90		4	18			9-11-7 N=18		
	15							
85		5	18		SM	1-4-2 N=6		
	20							
80		6	18			4-9-14 N=23		
				-- Boring terminated @ 21½ feet				

STANDARD PENETRATION TEST DATA
N in blows/ft ◎
× Moisture ◪ PL ✚ LL
0 25 50

STRENGTH, tsf
▲ Qu ✳ Qp
0 2.0 4.0

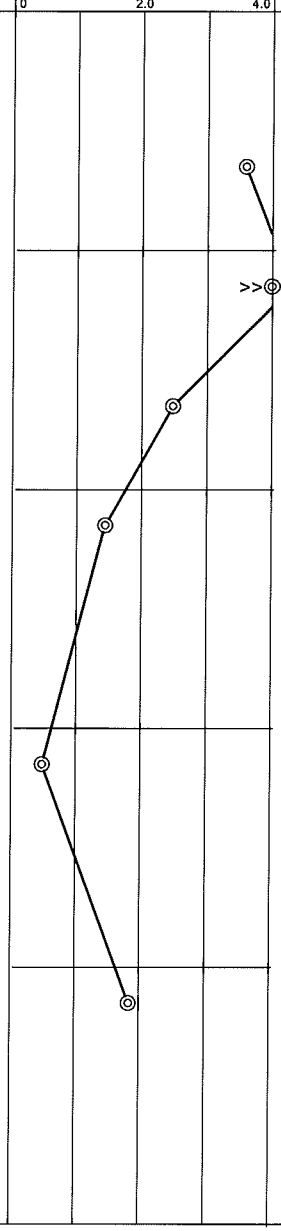

Completion Depth:	21.5 ft
Date Boring Started:	7/8/10
Date Boring Completed:	7/8/10
Logged By:	MEZ
Drilling Contractor:	GB Drilling

Sample Types:
Auger Cutting, Split-Spoon, Rock Core, Shelby Tube, Hand Auger, Texas Cone

Latitude:
Longitude:
Drill Rig: CME-55
Remarks: Figure B-2

The stratification lines represent approximate boundaries. The transition may be gradual.

APPENDIX C

Consolidation Test Results
Gradation Test Results
Summary of Laboratory Test Results

Swell/1-D Consolidation Test

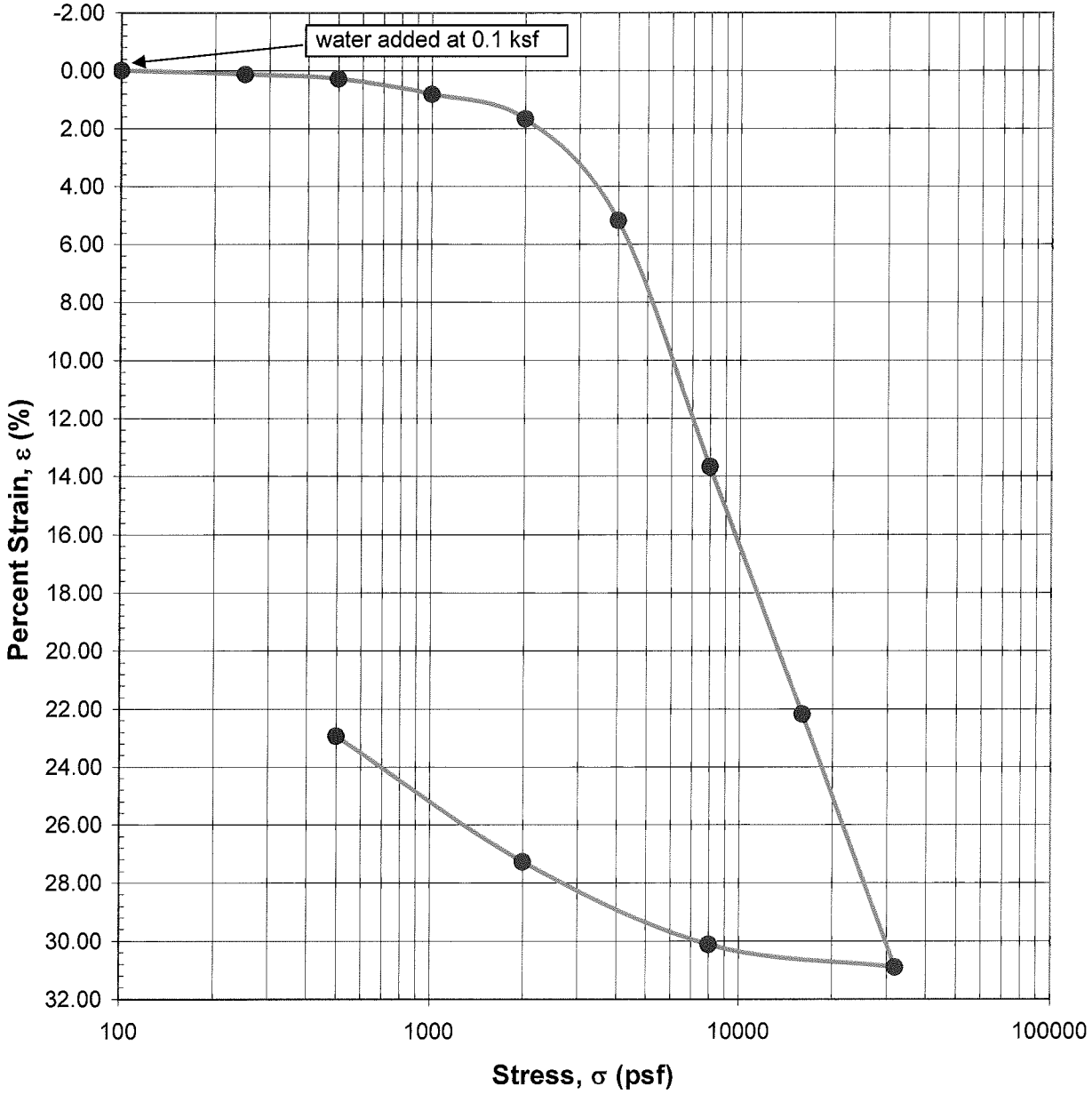

Sample Location	B-1	**Dry Density**	65	pcf
Sample Depth (ft)	30	**Initial Moisture Content**	52.9	%
Sample Description	Fat Clay	**Collapse**	N/M	%
USCS Classification	CH	**Swell**	N/M	%

psi Information To Build On Engineering • Consulting • Testing	**Proposed Marina Boat Storage**	Job No.	710163
	1-D Consolidation Test	Figure No.	C-1

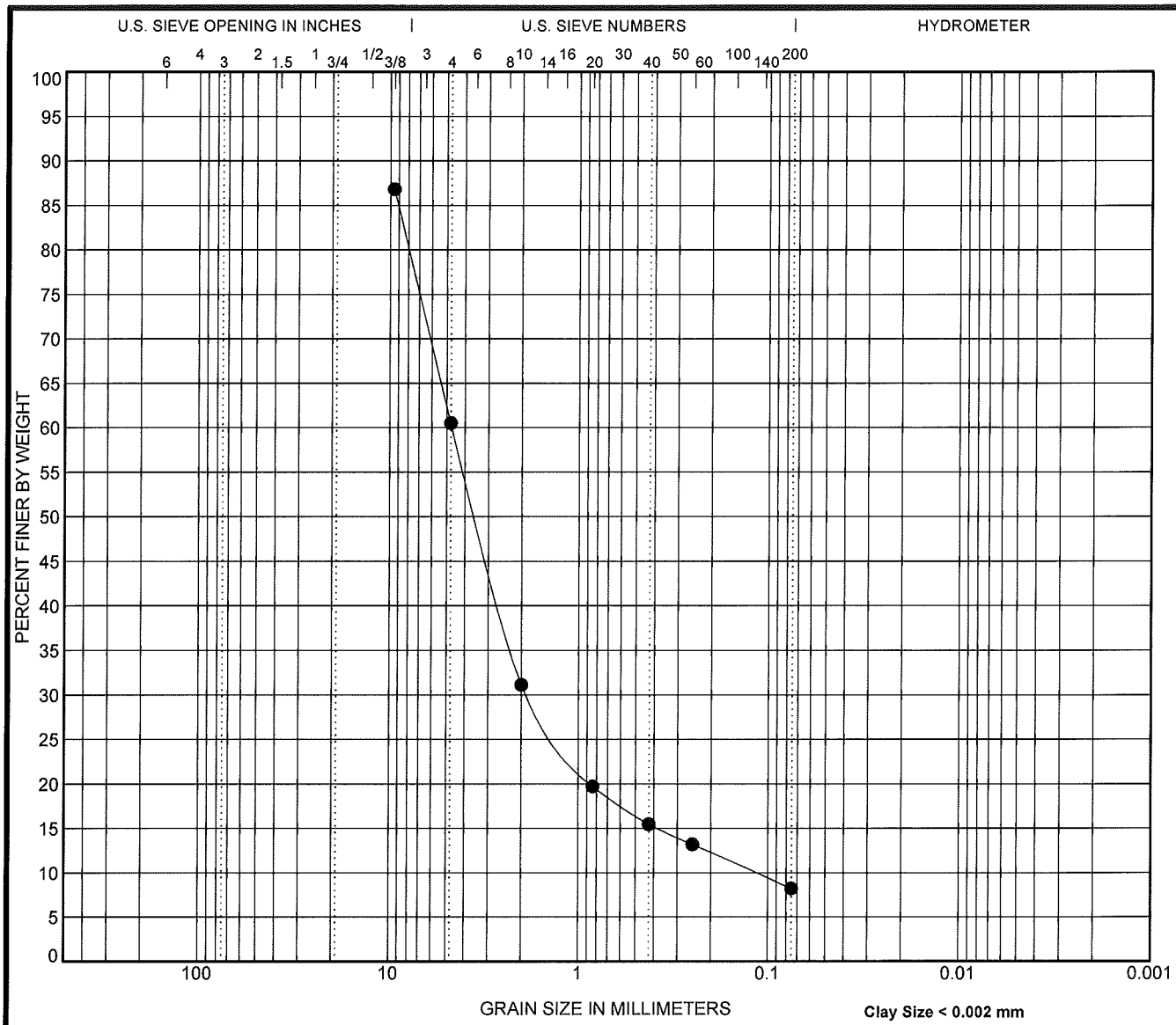

COBBLES	GRAVEL		SAND			SILT OR CLAY
	coarse	fine	coarse	medium	fine	

	Specimen Identification		Classification	LL	PL	PI	Cc	Cu
●	**B-1**	**2.5**					**6.23**	**40.54**

	Specimen Identification		D100	D60	D30	D10	%Gravel	%Sand	%Silt	%Clay
●	**B-1**	**2.5**	**9.525**	**4.683**	**1.836**	**0.116**	**40**	**52**	**8**	

Professional Services Industries
2779 South 600 West
Salt Lake City, Utah 84115
801-484-8827
Fax: 801-487-3312

GRAIN SIZE DISTRIBUTION

Project: Proposed Marina Boat Storage
PSI Job No.: 0710163
Location: 13312 West 1075 South
Magna, Utah

Figure C-2

Table C-1: Summary of Laboratory Test Results

Boring No.	Depth (feet)	Water Content (%)	Dry Density (pcf)	Gradation			Atterberg Limits		Sample Classification
				Gravel (%)	Sand (%)	Silt / Clay (%)	Liquid Limit (%)	Plastcity Index (%)	
B-1	2½	7		40	52	8			Fill; poorly graded sand with silt and gravel (SP-SM)
B-1	5	7							Fill; poorly graded sand with silt and gravel (SP-SM)
B-1	7½	10				10			Fill; poorly graded sand with silt and gravel (SP-SM)
B-1	10	15				17			Silty sand (SM)
B-1	15	29				12			Silty sand (SM)
B-1	20	23				27			Silty sand (SM)
B-1	25	44							Fat clay (CH)
B-1	30	53	65			97	66	46	Fat clay (CH)
B-1	35	50							Fat clay (CH)
B-1	40	46					38	18	Lean clay with sand (CL)
B-1	45	23				79			Lean clay with sand (CL)
B-1	50	31							Silty sand (SM)

ICC Evaluation Service, Inc.
www.icc-es.org

Business/Regional Office ■ 5360 Workman Mill Road, Whittier, California 90601 ■ (562) 699-0543
Regional Office ■ 900 Montclair Road, Suite A, Birmingham, Alabama 35213 ■ (205) 599-9800
Regional Office ■ 4051 West Flossmoor Road, Country Club Hills, Illinois 60478 ■ (708) 799-2305

DIVISION: 07—THERMAL AND MOISTURE PROTECTION
Section: 07240—Exterior Insulation and Finish Systems

REPORT HOLDER:

STO CORP.
3800 CAMP CREEK PARKWAY
BUILDING 1400, SUITE 120
ATLANTA, GEORGIA 30331
(404) 346-3666
www.stocorp.com

EVALUATION SUBJECT:

STOTHERM ESSENCE EIFS, STOTHERM CLASSIC EIFS, STOTHERM PREMIER EIFS

1.0 EVALUATION SCOPE

Compliance with the following codes:

- 2006 *International Building Code*® (IBC)
- BOCA® *National Building Code*/1999 (BNBC)
- 1999 *Standard Building Code*© (SBC)
- 1997 *Uniform Building Code*™ (UBC)

Properties evaluated:

- Noncombustible construction
- Ignition resistance
- Surface burning characteristics
- Structural—transverse wind load resistance
- Weather resistance
- Fire-resistance-rated construction

2.0 USES

The StoTherm Essence, StoTherm Classic and StoTherm Premier EIFS are used as insulation and exterior wall finishes for combustible and noncombustible construction.

3.0 DESCRIPTION

3.1 StoTherm Essence EIFS:

3.1.1 General: StoTherm Essence EIFS is an exterior insulation and finish system (EIFS) clad wall assembly applied to wood or steel-framed exterior walls covered with gypsum sheathing or wood-based panel sheathing and concrete and masonry substrates. System components include an adhesive, a rigid expanded polystyrene (EPS) insulation board, a base coat, reinforcing mesh and a synthetic plaster finish. Specific materials used in StoTherm Essence EIFS are listed in Table 1 and described in Section 3.1.2.

The StoTherm Essence EIFS is permitted to be used on (1) buildings classified under the IBC with walls that are required to be of combustible or Type I, II, III, or IV (noncombustible) construction other than framed walls in a Group R1, R2, R3 or R4 Occupancy Group; (2) buildings classified under the BNBC with walls that are required to be of combustible or Type I, II, III, or IV (noncombustible) construction other than framed walls in Use Groups R-1, R-2, R-3 or R-4; (3) buildings classified under the SBC with walls that are required to be of combustible or Type I, II, III, or IV (noncombustible) construction other than framed walls in a R1, R2, or R3 Occupancy Group; and (4) buildings with walls that are required to be of combustible or noncombustible construction under the UBC other than framed walls in a Group R, Division 1 or Division 3, Occupancy Group.

3.1.2 Materials:

3.1.2.1 Substrates:

3.1.2.1.1 Gypsum Sheathing: Gypsum sheathing must be minimum $^1/_2$-inch-thick (12.7 mm), water-resistant core sheathing complying with ASTM C 79 or ASTM C 1396. Sheathing may also be Dens-Glass Gold® or Dens-Glass Gold® Fireguard Type X, minimum $^1/_2$-inch-thick (12.7 mm), water-resistant core gypsum sheathing products manufactured by G-P Gypsum Corporation and recognized in an ICC-ES evaluation report.

3.1.2.1.2 Wood-based Panel Sheathing: Wood-based panel sheathing must be minimum $^3/_8$-inch-thick (9.5 mm) exterior-grade plywood or Exposure 1 oriented strand board (OSB) complying with U.S. DOC PS-1 or PS-2.

3.1.2.1.3 Concrete and Masonry: Concrete and masonry substrates must comply with the applicable code.

3.1.2.2 Insulation Board: Sto Insulation Board is rigid expanded polystyrene (EPS) insulation board with a nominal density of 1.0 lb/ft^3 (16 kg/m^3), complying with ASTM C 578 as Type I, and having a flame-spread index not greater than 25 and a smoke-developed index not greater than 450 when tested in accordance with ASTM E 84 (UBC Standard 8-1). The boards are 24 inches (610 mm) wide by 48 inches (1219 mm) long and have thicknesses ranging from $^3/_4$ inch to 4 inches (19.1 mm to 102 mm).

A maximum thickness of 12 inches (305 mm) is permitted for noncombustible construction assemblies described in Section 4.0.

As an alternative to Sto Insulation Board, AFM Corporation's insulation board, evaluated in ICC-ES evaluation report ESR-1006, may be used.

3.1.2.3 Adhesives:

3.1.2.3.1 Sto Primer/Adhesive-B: StoTherm Primer/Adhesive-B is a factory-blended, polymer-modified, cement-based adhesive that is also used as a base coat.

ESR Reports™ *are not to be construed as representing aesthetics or any other attributes not specifically addressed, nor are they to be construed as an endorsement of the subject of the report or a recommendation for its use. There is no warranty by ICC Evaluation Service, Inc., express or implied, as to any finding or other matter in this report, or as to any product covered by the report.*

ANSI Accredited Program PRODUCT CERTIFICATION

Copyright © 2008

Packaged in 60-pound (27.2 kg) bags, the product has a one-year shelf life when stored at temperatures between 40°F and 90°F (4°C and 32°C). As an adhesive for insulation board attachment, StoTherm Primer/Adhesive-B is permitted for use on gypsum sheathing, Dens-Glass Gold® type sheathings, and concrete and masonry surfaces.

3.1.2.3.2 Sto Primer/Adhesive: Sto Primer/Adhesive is used as an alternate to Sto Primer/Adhesive-B. Sto Primer/Adhesive is an acrylic-based adhesive, also used as a base coat, that is field-mixed with Type I portland cement. Packaged in 50-pound (22.7 kg) pails, the product has a one-year shelf life when stored at temperatures between 40°F and 90°F (4°C and 32°C). As an adhesive for insulation board attachment, Sto Primer/Adhesive is used on gypsum sheathing, Dens-Glass Gold® sheathings, and concrete and masonry surfaces.

3.1.2.3.3 Sto Dispersion Adhesive: Sto Dispersion Adhesive is a ready-mixed copolymer adhesive used for attachment of EPS insulation boards to wood-based and gypsum sheathing. Packaged in 5-gallon (19L) pails, the product has a one-year shelf life when stored at temperatures between 40°F and 90°F (4°C and 32°C).

3.1.2.4 Base Coat: Sto Primer/Adhesive-B and Sto Primer/Adhesive, as described in Section 3.1.2.3, are also permitted for use as base-coat materials in StoTherm Essence EIFS assemblies.

3.1.2.5 Sto Mesh: Sto Mesh is a flexible, interlaced glass-fiber fabric mesh, treated for compatibility with the other Sto materials. Sto Mesh is supplied in 38-inch-by-150-foot (965 mm by 45.7 m) rolls, weighs a nominal 4.5 ounces per square yard (153 g/m^2), and has a 6-by-5 thread count per inch-width (6-by-5 thread count per 25 mm width). It has minimum 165- and 150-pound-per-lineal-inch (28.9 and 26.2 N/mm) tensile strengths in the weft and warp directions, respectively. When protected from moisture, Sto Mesh has a one-year shelf life.

3.1.2.5.1 Optional Reinforcing Mesh: Additional glass-fiber reinforcing mesh products may be used to enhance the impact resistance of the Sto EIFS and to install system terminations and details. The optional mesh products are listed in Table 2.

3.1.2.6 Sto Primer: Sto Primer is an optional latex-based primer that may be used over Sto Corp. base coats prior to finish applications. Sto Primer is packaged in 60-pound (27.3 kg) pails and has a one-year shelf life when stored at temperatures between 40°F and 90°F (4°C and 32°C).

3.1.2.7 Sto Essence Finish: The Sto Essence Finish is an acrylic latex finish material containing quartz sand and marble aggregate. Packaged in 70-pound (31.8 kg) pails, the product has a one-year shelf life when stored at temperatures between 40°F and 90°F (4°C and 32°C).

3.1.2.8 Sealants: Evidence must be submitted to the code official showing that the manufacturer-recommended sealant complies with ASTM C 920, Type M, Grade NS, minimum Class 25, and that it is compatible with the EIFS components. The sealant must have a movement capability of ±25% or greater, and must be tested in accordance with ASTM C 1382.

3.2 StoTherm Classic EIFS:

3.2.1 General: StoTherm Classic EIFS is an EIFS applied to wood or steel-framed exterior walls covered with gypsum sheathing or wood-based panel sheathing, or to exterior walls constructed of concrete or masonry. System components include an adhesive, a rigid EPS insulation board, a base coat, reinforcing mesh and a synthetic plaster finish. Specific materials used in StoTherm Classic EIFS are listed in Table 1 and described in Section 3.2.2.

The StoTherm Classic EIFS is permitted to be used on (1) buildings classified under the IBC with walls that are required to be of combustible or Type I, II, III, or IV (noncombustible) construction other than framed walls in a Group R1, R2, R3 or R4 Occupancy Group; (2) buildings classified under the BNBC with walls that are required to be of combustible or Type I, II, III, or IV (noncombustible) construction other than framed walls in Use Groups R-1, R-2, R-3 or R-4; (3) buildings classified under the SBC with walls that are required to be of combustible or Type I, II, III, or IV (noncombustible) construction other than framed walls in a R1, R2, or R3 Occupancy Group; and (4) buildings with walls that are required to be of combustible or noncombustible construction under the UBC other than framed walls in a Group R, Division 1 or Division 3, Occupancy Group.

3.2.2 Materials:

3.2.2.1 Substrates: Substrates are described in Section 3.1.2.1.

3.2.2.2 Insulation Board: Insulation board is described in Section 3.1.2.2.

3.2.2.3 Adhesives:

3.2.2.3.1 Sto BTS Plus: Sto BTS Plus is a factory-blended, polymer-modified, cement-based adhesive that is also permitted for use as a base coat. Packaged in 60-pound (27.2 kg) bags, the product has a one-year shelf life when stored at temperatures between 40˚F and 90˚F (4˚C and 32˚C). As an adhesive for insulation board attachment, Sto BTS Plus is used on gypsum sheathing, Dens-Glass Gold® sheathings, and concrete and masonry surfaces.

3.2.2.3.2 Sto BTS Silo: Sto BTS Silo is used as an alternative to Sto BTS Plus. Sto BTS Silo is a factory-blended, polymer-modified, cement-based adhesive that is also used as a base coat. Packaged in 60-pound (27.2 kg) bags, the product has a one-year shelf life when stored at temperatures between 40°F and 90°F (4°C and 32°C). As an adhesive for insulation board attachment, Sto BTS Silo is used on gypsum sheathing, Dens-Glass Gold® sheathings and concrete and masonry surfaces.

3.2.2.3.3 Sto Dispersion Adhesive: This adhesive is described in Section 3.1.2.3.3.

3.2.2.4 Base Coat:

3.2.2.4.1 Sto BTS Plus and Sto BTS Silo: Sto BTS Plus and Sto BTS Silo, as described in Sections 3.2.2.3.1 and 3.2.2.3.2 of this report, respectively, are also used as base-coat materials in Sto Classic EIFS.

3.2.2.4.2 Sto RFP: Sto RFP is a premixed synthetic-resin base coat. Packaged in 60-pound (27.3 kg) pails, it has a shelf life of one year when stored at temperatures between 40°F and 90°F (4°C and 32°C).

3.2.2.5 Sto Mesh: Sto Mesh is described in Section 3.1.2.5.

3.2.2.6 Sto Primer: Sto Primer is described in Section 3.1.2.6.

3.2.2.7 Stolit® Finish: The Stolit® finish is an acrylic latex finish material containing marble aggregate. Packaged in 70-pound (31.8 kg) pails, the product has a one-year shelf life when stored at temperatures between 40°F and 90°F (4°C and 32°C).

3.2.2.8 Sealants: Sealants are described in Section 3.1.2.8.

3.3 StoTherm Premier EIFS:

3.3.1 General: StoTherm Premier EIFS is applied to wood or steel-framed exterior walls covered with gypsum sheathing

or wood-based panel sheathing, or to exterior walls constructed of concrete or masonry. System components include an adhesive, a rigid EPS insulation board, a base coat, reinforcing mesh and a synthetic plaster finish. Specific materials used in StoTherm Premier EIFS are presented in Table 1 and described in Section 3.3.2. StoTherm Premier EIFS is identical to StoTherm Classic EIFS except that StoSilco® Lit is used instead of Stolit® as the finish coat.

The StoTherm Classic EIFS is permitted to be used on (1) buildings classified under the IBC with walls that are required to be of combustible or Type I, II, III, or IV (noncombustible) construction other than framed walls in a Group R1, R2, R3 or R4 Occupancy Group; (2) buildings classified under the BNBC with walls that are required to be of combustible or Type I, II, III, or IV (noncombustible) construction other than framed walls in Use Groups R-1, R-2, R-3 or R-4; (3) buildings classified under the SBC with walls that are required to be of combustible or Type I, II, III, or IV (noncombustible) construction other than framed walls in a R1, R2, or R3 Occupancy Group; and (4) buildings with walls that are required to be of combustible or noncombustible construction under the UBC other than framed walls in a Group R, Division 1 or Division 3, Occupancy Group.

3.3.2 Materials:

3.3.2.1 Substrates: The substrates are described in Section 3.1.2.1.

3.3.2.2 Insulation Board: Sto Insulation Board is described in Section 3.1.2.2.

3.3.2.3 Adhesives: The adhesives are described in Section 3.2.2.3.

3.3.2.4 Base Coat: The base coats are described in Section 3.2.2.4.

3.3.2.5 Sto Mesh: Sto Mesh is described in Section 3.1.2.5.

3.3.2.6 Sto Primer: Sto Primer is described in Section 3.1.2.6.

3.3.2.7 StoSilco® Lit Finish: StoSilco® Lit finish is a silicone-enhanced, acrylic latex finish material containing marble aggregate. Packaged in 70-pound (31.8 kg) pails, the product has a one-year shelf life when stored at temperatures between 40°F and 90°F (4°C and 32°C).

3.3.2.8 Sealants: Sealants are described in Section 3.1.2.8.

4.0 INSTALLATION

Installation of StoTherm Essence EIFS, StoTherm Classic EIFS and StoTherm Premier EIFS must comply with this report and the manufacturer's published installation instructions. The manufacturer's published installation instructions must be available at the jobsite at all times during installation.

4.1 StoTherm Essence EIFS:

Steel framing members must be minimum No. 18 gage [0.0478 inch (1.214 mm) base-metal thickness], spaced a maximum of 16 inches (406 mm) on center. Wood framing members must be a minimum of nominally 2-by-4 studs spaced a maximum of 16 inches (406 mm) on center. Gypsum sheathing must be attached to steel studs using corrosion-resistant, minimum No. 6 drywall screws spaced at a maximum of 6 inches (152 mm) on center at board edges and 8 inches (203 mm) on center in the field at all studs. Wood-based panel sheathing must be attached to steel studs with minimum No. 6, flathead, corrosion-resistant screws [minimum 0.292-inch (7.4 mm) head diameter] at a maximum of 6 inches (152 mm) on center at board edges and 8 inches (203 mm) on center in the field. The screws must have sufficient length to penetrate at least $^1/_4$ inch (6.4 mm) through the steel studs. Wood-based sheathing is attached to wood studs in accordance with the applicable code. All substrate surfaces must be structurally sound, clean, dry and smooth, with no dust or other deleterious material, prior to any adhesive application. Surface irregularities are limited to a maximum of $^1/_4$ inch (6.4 mm) for every 10 feet (3048 mm) of surface. During adhesive applications and for a 24-hour period thereafter, ambient air and substrate surface temperatures must be 40°F (4°C) or higher. Protection of the coating from moisture is also required for at least 24 hours after application.

Over gypsum sheathing, Dens-Glass Gold®, concrete or masonry substrates, the Sto Primer/Adhesive-B or Sto Primer/Adhesive must be applied uniformly to the mating surface of the insulation board with a stainless steel, notched trowel, having notches $^1/_2$ inch wide by $^1/_2$ inch deep (12.7 by 12.7 mm), spaced $2^1/_2$ inches (63.5 mm) on center. Over gypsum or wood-based sheathing, the Sto Dispersion adhesive must be applied uniformly to the surface of the insulation board with a stainless steel notched trowel having notches $^3/_{16}$ inch wide by $^3/_8$ inch deep (4.8 by 9.5 mm), spaced $1^3/_4$ inches (44.5 mm) on center.

The adhesive must be applied parallel to the long dimension of the insulation board to achieve horizontal ribbons when the insulation board is applied to the substrate. The insulation board must be installed over the substrate with uniform pressure in horizontal rows beginning at the base of the wall. All joints must be tightly butted and vertical joints staggered. After the adhesive has dried a minimum of twelve hours, the exterior surface of the EPS insulation board must be rasped to smooth surface irregularities.

The Sto Primer/Adhesive-B or Sto Primer/Adhesive, when used as the base coat, must be trowel-applied to the entire outer surface of the insulation board to a uniform thickness of $^1/_{16}$ inch (1.6 mm).

The Sto Mesh must be immediately troweled into the wet base coat, proceeding from the center toward the edges until the mesh is completely embedded in the coating. The mesh must be continued around corners at least $2^1/_2$ inches (64 mm) and overlap a minimum of $2^1/_2$ inches (64 mm) at all mesh edges. All corners must have two continuous layers of mesh.

After a minimum of eight hours drying time, the Sto Essence Finish coat must be applied after being mixed to a uniform consistency using a drill and paddle. The finish must be applied over the reinforced base coat with a stainless steel trowel, with the placement and leveling done concurrently. The finish thickness may not exceed the diameter of the largest aggregate, approximately $^1/_{16}$ inch (1.6 mm). This application yields a total combined base coat and finish coating thickness of approximately $^1/_8$ inch (3.2 mm).

Only Sto Corp. recommended joint sealant materials are permitted to be used in joints. Sealant joints are required at system terminations, building expansion joints, floor lines of wood-framed construction, changes in building shape or roof line, and substrate changes. Sealant joints are installed as specified by the architect, designer, builder or exterior coating manufacturer, in that order. Typical installation details are shown in Figures 1 through 25.

4.1.1 Wind Resistance: Wood framing members must be designed to resist all positive and negative transverse loads, and must comply with and be designed in accordance with the applicable code, with a deflection limitation of $^1/_{240}$ of the span. The StoTherm Essence EIFS, when applied in accordance with this report, can resist the following uniform transverse pressures:

- Over minimum $^1/_2$-inch-thick (12.7 mm), gypsum-sheathed, steel-framed walls: 35 psf (1676 Pa) positive and 20 psf (958 Pa) negative.
- Over minimum $^5/_8$-inch-thick (15.9 mm) gypsum-sheathed or minimum $^3/_8$-inch-thick (9.5 mm) wood-based sheathed, steel-framed walls: 60 psf (2873 Pa) positive and 38 psf (1819 Pa) negative.
- Over minimum $^3/_8$-inch-thick (9.5 mm) wood-based sheathing attached to wood studs: 60 psf (2873 Pa) positive and 38 psf (1819 Pa) negative.

4.1.2 Noncombustible Construction: The StoTherm Essence EIFS may be applied where noncombustible construction [Type I, II, III or IV (IBC and UBC); Type 1, 2, 3 or 4 (BNBC); Type I, II, III, IV or V (SBC)] is required, provided the construction is as follows:

4.1.2.1 Interior Finish: One layer of minimum $^1/_2$-inch-thick (12.7 mm), Type X gypsum wallboard, complying with ASTM C 36 or ASTM C 1396, must be applied to minimum No. 18 gage, $3^1/_2$-inch-deep (89 mm), C-shaped steel studs spaced at 16 inches (406 mm) on center. The gypsum wallboard must be fastened to the studs with No. 8, Type S steel screws spaced 8 inches (203 mm) on center to studs at board joints and runners, and 12 inches (305 mm) on center to studs at intermediate locations. Screws must have sufficient length to penetrate into studs at least $^3/_8$ inch (9.5 mm). All board joints must be backed by framing. At floor levels, stud cavities are blocked with Thermafiber insulation, 4 lb/ft^3 (64 kg/m^3) density, 4 inches (102 mm) thick and 2 feet (610 mm) wide.

4.1.2.2 Exterior Finish: One layer of minimum $^1/_2$-inch-thick (12.7 mm), Type X gypsum sheathing, complying with ASTM C 79 or ASTM C 1396, must be fastened to the studs in accordance with Section 4.1 of this report. Openings must be framed with minimum No. 18 gage [0.0478 inch (1.214 mm) base-metal thickness] steel studs and tracks. The balance of construction, including the use of a Sto adhesive recognized in this report to attach maximum 12-inch-thick (305 mm) Sto insulation board to the sheathing, and the use of a Sto base coat and finish recognized in this report, is as set forth in Section 4.1 of this report.

In accordance with the UBC, the Sto Corp. insulation board is limited to maximum thickness of 4 inches (102 mm).

4.1.3 One-hour-rated, Nonbearing, Fire-resistance-rated Assembly: The StoTherm Essence EIFS may be used as part of a one-hour fire-resistance-rated assembly, provided the construction is as follows:

4.1.3.1 Interior Finish: One layer of minimum $^5/_8$-inch-thick (15.9 mm), Type X gypsum wallboard, complying with ASTM C 36 or ASTM C 1396, must be fastened vertically to minimum No. 18 gage, [0.0478 inch (1.214 mm)] steel studs with No. 6, $1^1/_4$-inch-long (32 mm), self-tapping, corrosion-resistant, bugle head screws spaced 8 inches (203 mm) on center at board perimeters, 12 inches (305 mm) on center at intermediate framing. All board joints must be blocked. Stud spacing must be a maximum of 16 inches (406 mm) on center. Wallboard joints must be covered with tape and joint compound, and fastener heads are covered with joint compound in accordance with ASTM C 840 or GA 216.

4.1.3.2 Exterior Finish: One layer of minimum $^5/_8$-inch-thick (15.9 mm), Type X, water-resistant core gypsum sheathing, complying with ASTM C 79 or ASTM C 1396, must be applied vertically in accordance with Section 4.1. All board joints must be blocked. The balance of construction, including the use of a Sto Corp. adhesive recognized in this report to attach maximum 4-inch-thick (102 mm) Sto Corp. insulation board to the sheathing, and the use of a Sto Corp. base coat and finish recognized in this report, must be as set forth in Section 4.1.

4.1.4 Two-hour-rated, Nonbearing, Fire-resistance-rated Assembly: The StoTherm Essence EIFS may be used as part of a two-hour fire-resistance-rated assembly, provided the construction is as follows:

4.1.4.1 Interior Finish: Two layers of $^5/_8$-inch-thick (15.9 mm), Type X gypsum wallboard, complying with ASTM C 36 or ASTM C 1396, must be fastened vertically to minimum No. 18 gage, [0.0478 inch (1.214 mm)] steel studs. The base ply of gypsum wallboard must be fastened with No. 6, $1^1/_4$-inch-long (32 mm), self-tapping, corrosion-resistant, bugle head screws spaced 24 inches (610 mm) on center to all framing. All board joints must be blocked. The face ply of gypsum wallboard must be fastened with $1^7/_8$-inch-long (32 mm), self-tapping, corrosion-resistant, bugle head screws spaced 8 inches (203 mm) on center to all framing. Face-ply wallboard joints are covered with tape and joint compound, and fastener heads must be covered with joint compound in accordance with ASTM C 840 or GA 216.

4.1.4.2 Exterior Finish: Two layers of $^5/_8$-inch-thick (15.9 mm), Type X, water-resistant core gypsum sheathing, complying with ASTM C 79 or ASTM C 1396, must be applied in accordance with Section 4.1.4.1. The balance of construction, including the use of a Sto Corp. adhesive recognized in this report to attach maximum 4-inch-thick (102 mm) Sto Corp. insulation board to the sheathing, and the use of a Sto Corp. base coat and finish recognized in this report, must be as set forth in Section 4.1.

4.2 StoTherm Classic EIFS:

Application of Sto Classic EIFS is identical to application of Sto Essence EIFS, as described in Section 4.1 of this report, except that Sto BTS-Plus, Sto BTS Silo, or Sto RFP is used in place of Sto Primer/Adhesive-B or Sto Primer/Adhesive, and Stolit® Finish is used instead of Sto Essence Finish.

4.2.1 Wind Resistance: Wood framing members must be designed to resist all positive and negative transverse loads, and must comply with and be designed in accordance with the applicable code, with a deflection limitation of $^1/_{240}$ of the span.

The StoTherm Classic EIFS, when adhesively applied in accordance with this report, can resist the following uniform transverse pressures:

- Over minimum $^1/_2$-inch-thick (12.7 mm), gypsum sheathed or Dens-Glass Gold®-sheathed, steel-framed walls: 36 psf (1724 Pa) positive and 20 psf (958 Pa) negative.
- Over minimum $^3/_8$-inch-thick (9.5 mm), wood-based sheathing attached to wood studs: 36 psf (1724 Pa) positive and 20 psf (958 Pa) negative, or allowable sheathing stress values set forth in the applicable code, whichever is less.
- Over concrete or masonry substrates: 54 psf (2586 Pa) positive or negitive.

4.2.2 Noncombustible Construction: The StoTherm Classic EIFS may be applied where noncombustible construction (Types I, II, III or IV) is required, provided the construction is as follows:

4.2.2.1 Interior Finish: One layer of minimum $^1/_2$-inch-thick (12.7 mm), Type X gypsum wallboard, complying with ASTM C 36 or ASTM C 1396, must be applied to minimum No. 18 gage [0.0478 inch (1.21 mm)) base-metal thickness], $3^5/_8$-inch-deep (92 mm), C-shaped steel studs spaced at a maximum of 16 inches (406 mm) on center. The gypsum wallboard must be fastened to the studs with No. 6 by $1^1/_4$-inch-long (31.7 mm) buglehead drywall screws spaced at a maximum of 6 inches (152 mm) on center. The stud cavity must be filled with unfaced R-11 fiberglass insulation. Openings must be framed with steel having a minimum base-metal thickness of 0.0478 inch (1.21 mm).

4.2.2.2 Exterior Finish: One layer of minimum $^5/_8$-inch-thick (15.9 mm), Type X gypsum sheathing, complying with ASTM C 79 or ASTM C 1396, must be fastened to the studs in accordance with Section 4.1. Openings must be framed with minimum No. 18 gage [0.0478 inch (1.214 mm) base-metal thickness] steel studs and tracks. The balance of construction, including the use of a Sto Corp. adhesive recognized in this report to attach maximum 12-inch-thick (305 mm) Sto Corp. insulation board to the sheathing, and the use of a Sto Corp. base coat and finish recognized in this report, must be as set forth in Section 4.2 of this report.

In accordance with the UBC the Sto Corp. insulation board is limited to maximum thickness of 4 inches (102 mm).

4.2.3 One-hour-rated, Nonbearing, Fire-resistance-rated Assembly: The StoTherm Classic EIFS may be used as part of a one-hour fire-resistance-rated assembly, provided the construction is as follows:

4.2.3.1 Interior Finish: One layer of minimum $^5/_8$-inch-thick (15.9 mm), Type X gypsum wallboard, complying with ASTM C 36 or ASTM C 1396, must be fastened vertically to minimum No. 18 gage [0.0478 inch (1.214 mm)] steel studs with No. 6, $1^1/_4$-inch-long (32 mm), self-tapping, corrosion-resistant, bugle head screws spaced 8 inches (203 mm) on center at board perimeters and 12 inches (305 mm) on center at intermediate framing. All board joints must be blocked. Stud spacing must be a maximum of 16 inches (406 mm) on center. Wallboard joints must be covered with tape and joint compound, and fastener heads are covered with joint compound in accordance with ASTM C 840 or GA 216.

4.2.3.2 Exterior Finish: One layer of minimum $^5/_8$-inch-thick (15.9 mm), Type X, water-resistant core gypsum sheathing, complying with ASTM C 79 or ASTM C 1396, must be applied vertically in accordance with Section 4.1. All board joints must be blocked. The balance of construction, including the use of a Sto Corp. adhesive recognized in this report to attach maximum 4-inch-thick (102 mm) Sto Corp. insulation board to the sheathing, and the use of a Sto Corp. base coat and finish recognized in this report, must be as set forth in Section 4.2.

4.2.4 Two-hour-rated, Nonbearing, Fire-resistance-rated Assembly: The StoTherm Classic EIFS may be used as part of a two-hour fire-resistance-rated assembly, provided the construction is as follows:

4.2.4.1 Interior Finish: Two layers of $^5/_8$-inch-thick (15.9 mm), Type X gypsum wallboard, complying with ASTM C 36 or ASTM C 1396, must be fastened vertically to minimum No. 18 gage [0.0478 inch (1.214 mm)] steel studs. The base ply of gypsum wallboard must be fastened with No. 6, $1^1/_4$-inch-long (32 mm), self-tapping, corrosion-resistant, bugle head screws spaced 24 inches (610 mm) on center to all framing. All board joints must be blocked. The face ply of the gypsum wallboard must be fastened with $1^7/_8$-inch-long (32 mm), self-tapping, corrosion-resistant, bugle head screws spaced 8 inches (203 mm) on center to all framing. Face-ply wallboard joints must be covered with tape and joint compound, and fastener heads are covered with joint compound in accordance with ASTM C 840 or GA 216.

4.2.4.2 Exterior Finish: Two layers of $^5/_8$-inch-thick (15.9 mm), Type X, water-resistant core gypsum sheathing, complying with ASTM C 79 or ASTM C 1396, must be applied in accordance with Section 4.2.4.1. The balance of construction, including the use of a Sto Corp. adhesive recognized in this report to attach maximum 4-inch-thick (102 mm) Sto Corp. insulation board to the sheathing, and the use of a Sto Corp. base coat and finish recognized in this report, must be as set forth in Section 4.1.

4.3 Sto Premier EIFS:

Application of StoTherm Premier EIFS is identical to application of Sto ClassicTherm EIFS, as described in Section 4.2, except that StoSilco® Lit finish is used.

4.3.1 Wind Resistance: Wind design for StoTherm Premier EIFS is the same as described in Section 4.2.1, except that StoSilco Lit finish is used.

4.3.2 Noncombustible Construction: The StoTherm Premier EIFS may be applied where noncombustible construction (Types I, II, III or IV) is required, provided the construction is as described in this report. Noncombustible construction of StoTherm Premier EIFS is identical to that described in Section 4.2.2, except that StoSilco® Lit finish is used.

4.3.3 One-hour-rated, Nonbearing, Fire-resistance-rated Assembly: The StoTherm Premier EIFS one-hour-rated, nonbearing, fire-resistance-rated assembly is identical to that described in Section 4.2.3, except that StoSilco® Lit finish is used.

4.3.4 Two-hour-rated, Nonbearing, Fire-resistance-rated Assembly: The StoTherm Premier EIFS two-hour-rated, nonbearing, fire-resistance-rated assembly is identical to that described in Section 4.2.4, except that StoSilco® Lit finish is used.

5.0 CONDITIONS OF USE

The StoTherm Essence EIFS, StoTherm Classic EIFS and StoTherm Premier EIFS described in this report comply with, or are suitable alternatives to what is specified in, those codes listed in Section 1.0 of this report, subject to the following conditions:

5.1 Installation must comply with this report, the manufacturer's published installation instructions and the applicable code. In the event of a conflict between the manufacturer's published installation instructions and this report, this report shall govern.

5.2 Installation must be by applicators approved by Sto Corp.

5.3 The insulation board must be separated from the building interior with a 15- minute thermal barrier of an approved material or a minimum of 1-inch (25.4 mm) thickness of masonry or concrete.

5.4 The design wind load pressures must not exceed the capacities indicated in Sections 4.1.1 and 4.2.1.

5.5 The finish systems must not be used as exterior stud wall bracing. Wall bracing must be provided in accordance with IBC Section 2308.9.3, BNBC Section 2305.8.1, UBC Section 2308.11.3 and SBC Section 2308.2.2.

5.6 Termination of the systems must not be less than 6 inches (152 mm) above finished grade, in accordance with IBC Section 2603.8 and SBC Section 2304.1.4.

5.7 The systems are permitted to be installed on exterior walls of buildings of noncombustible construction (Type I, II, III or IV) and on nonbearing fire-resistance-rated wall assemblies without affecting the rating of the assembly, provided they are installed in accordance with this report.

5.8 Except where installed over concrete or masonry substrates, the finish systems are limited to use with the specific penetrating items and termination details of the systems which are tested for wind-driven rain resistance

in accordance with Section 1404.3, Exception, of the BNBC, or which are shown in Figures 6 through 25. Reports of testing of the specific penetrations representative of those intended for use must be submitted to the code official for approval with the application for permit. The evaluation of this system with penetrations (i.e., doors, windows, utility penetrations), other than those shown, for compliance with the exception to Section 1404.3 of the BNBC, is outside the scope of this report.

5.9 Except where installation is over concrete and masonry substrates, all installations of these systems are subject to special inspections, in accordance with Section 1704.12 of the IBC and Sections 1406.8 and 1705.13 of the BNBC.

5.10 For applications in accordance with the SBC, foam plastic insulation must be installed in accordance with Section 2304.1.4 of the SBC.

5.11 Installation cards similar to those shown in Figures 26 and 27 must be completed by the applicators and presented to the code official at the completion of each project.

6.0 EVIDENCE SUBMITTED

Data in accordance with the ICC-ES Acceptance Criteria for Exterior Insulation and Finish Systems (AC219), dated October 2003 (editorally revised April 2008).

7.0 IDENTIFICATION

Each container or package of material used as part of the StoTherm Essence EIFS, StoTherm Classic EIFS and StoTherm Premier EIFS assemblies must be labeled with the manufacturer's name (Sto Corp.); the product name; the batch number; shelf life, as applicable; and the evaluation report number (ESR-1720). Sto must be contacted for information on the manufacturing date.

Sto Insulation Boards must be identified by stamp or label on the edge of each board bearing the manufacturer's name (Sto Corp.); the plant identification number; the product name; the name of the inspection agency (RADCO); and the evaluation report number.

AFM Corporation's insulation board must be identified in accordance with ICC-ES report ESR-1006.

TABLE 1—EIFS RECOGNIZED COMPONENTS[1,2]

COMPONENT	SYSTEM NAME		
	StoTherm Essence EIFS	StoTherm Classic EIFS	StoTherm Premier EIFS
Adhesive	Sto Primer/Adhesive-B Sto Primer/Adhesive Sto Dispersion Adhesive[3]	Sto BTS Plus Sto BTS Silo Sto Dispersion Adhesive[3]	Sto BTS Plus Sto BTS Silo Sto Dispersion Adhesive [3]
Insulation	Sto EPS Insulation Board	Sto EPS Insulation Board	Sto EPS Insulation Board
Base coat	Sto Primer/Adhesive-B Sto Primer/Adhesive Sto BTS Silo	Sto BTS Plus Sto BTS Silo Sto RFP	Sto BTS Plus Sto BTS Silo Sto RFP
Finish	Sto Essence Finish	Stolit®	StoSilco® Lit

[1]All base coats reinforced with appropriate Sto Mesh product as listed in Table 2.
[2]Sto Primer is an optional component of all three systems listed above.
[3]Sto Dispersion Adhesive is required for wood-based substrates.

TABLE 2—REINFORCING MESH PRODUCTS

PRODUCT NO.	PRODUCT NAME[1]	NOMINAL WEIGHT, oz/yd^2 (g/m^2)	ROLL WIDTH, inches (cm)	ROLL LENGTH, feet (m)
920 E	Sto Mesh	4.5 (153)	38 (97), 48 (122)	150 (45.7)
919	Sto Detail Mesh	4.2 (142)	9.5 (24)	150 (45.7)
985	Sto 6-oz. (170 g) Mesh	6.0 (204)	38 (97)	150 (45.7)
918	Sto Intermediate Mesh	11.0 (373)	38 (97)	75 (22.9)
921	Sto Armor Mat	15.0 (509)	38 (97)	75 (22.9)
922	Sto Armor Mat XX	20.0 (678)	38 (97)	75 (22.9)
921A	Sto Corner Mat	7.6 (258)	9.5 (24)	150 (45.7)

[1]Other listed mesh products may be used for detail construction or to supplement impact resistance of the EIFS.

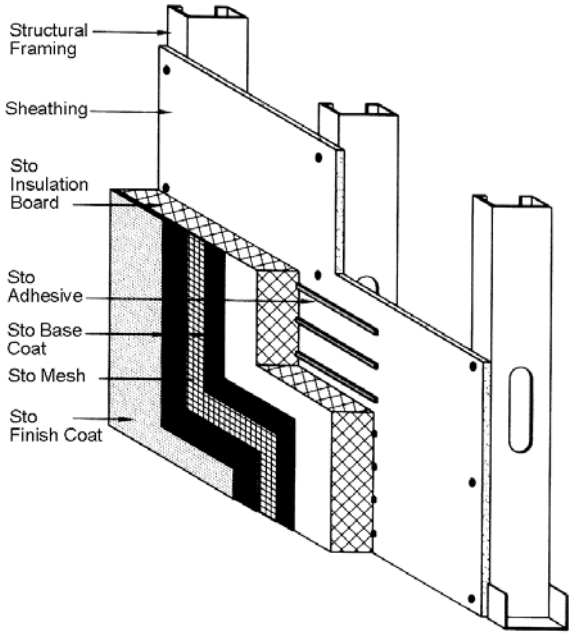

FIGURE 1—SYSTEM COMPONENTS

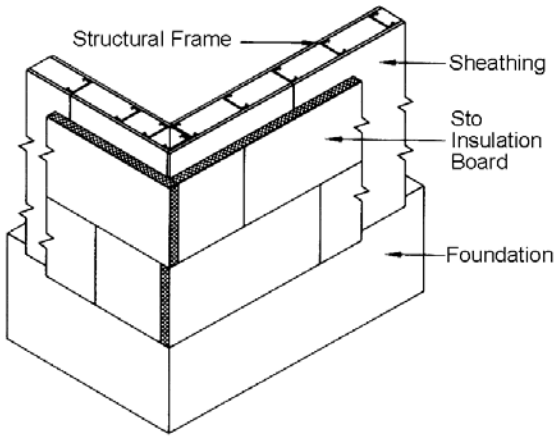

FIGURE 2—EPS BOARD LAYOUT

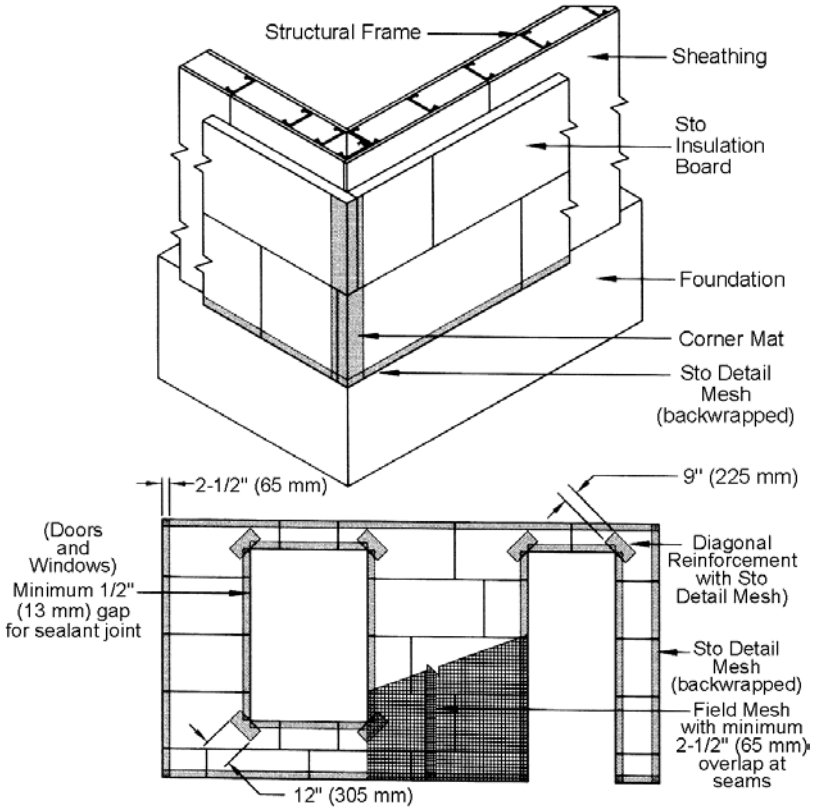

FIGURE 3—REINFORCING MESH APPLICATION

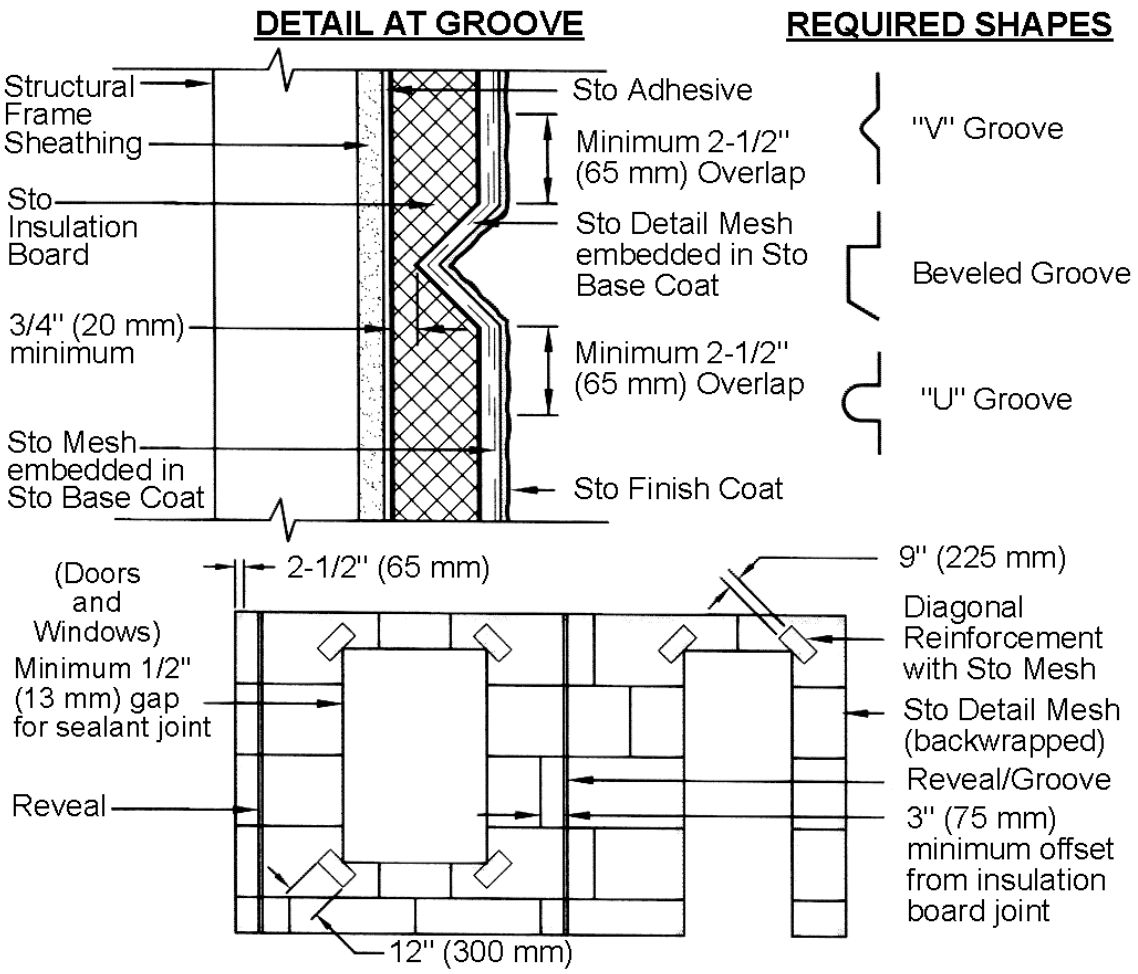

FIGURE 4—REVEALS AESTHETIC GROOVES

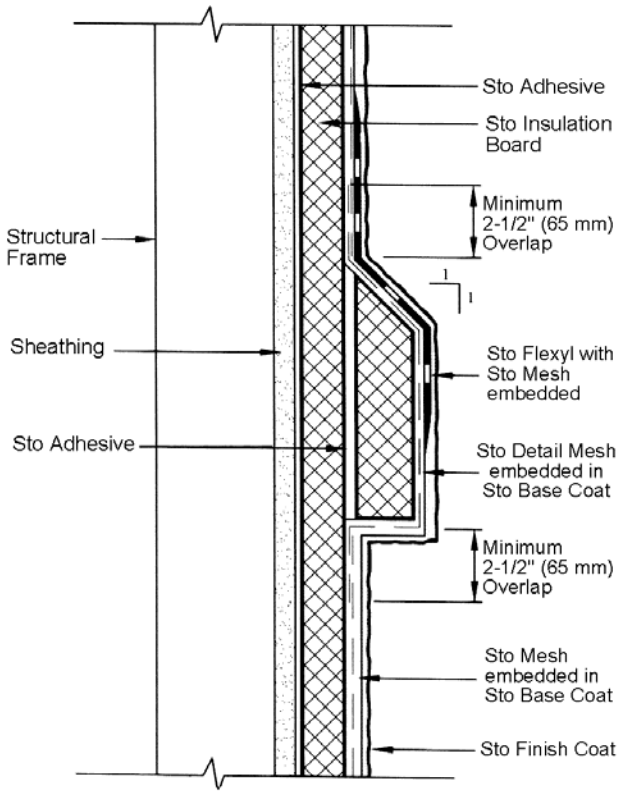

FIGURE 5—AESTHETIC BAND / PROTECTION

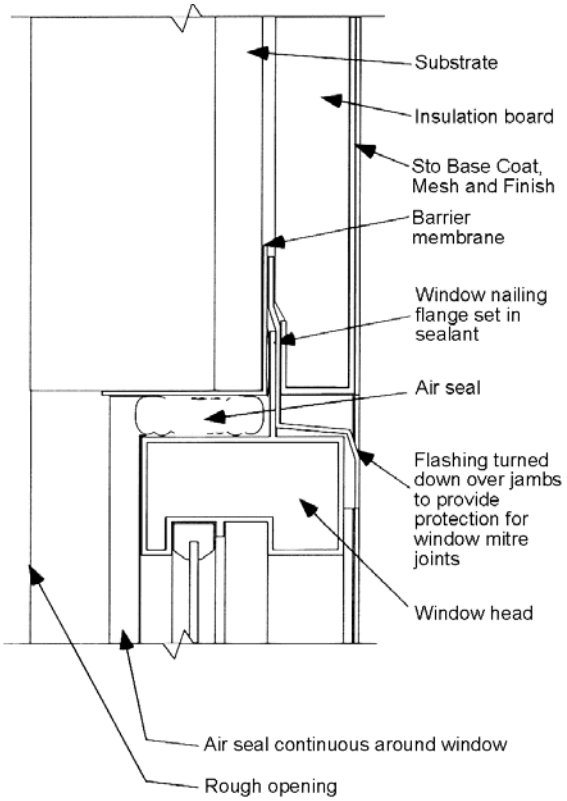

FIGURE 6—PANEL HEAD FLASHING

SEALANT TYPE	CONDITION
Dow Corning 790	EIFS to EIFS Joints
Dow Corning 795	EIFS to Metal Joints
Dow Corning 795 with 1200 Primer	EIFS to Vinyl Joints

Notes to Figure 6: Detail shows vinyl window head.

INSTALLATION:

1. Wrap the rough opening with barrier membrane lapping onto the sheathing a minimum 3 inches (75 mm).
2. Install window with a continuous bead of sealant between the nailing flange and the flexible membrane.
3. Install head flashing over window. The head flashing should be turned down over the jambs 1-inch (25 mm) min. to provide protection for the window head/jamb interface.
4. Install urethane foam air seal between window frame and barrier membrane. Ensure that the air seal is continuous around the window.

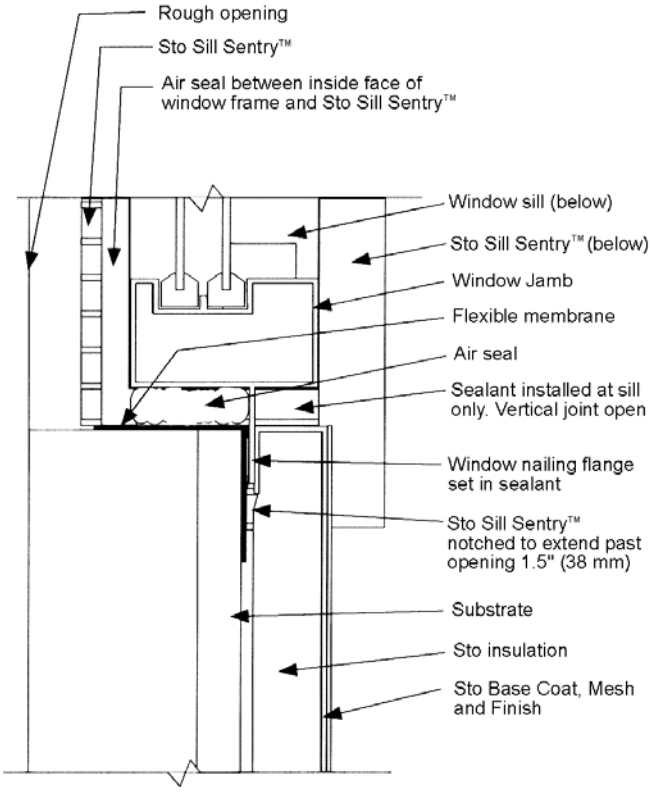

FIGURE 7—PANEL 5 JAMB FLASHING

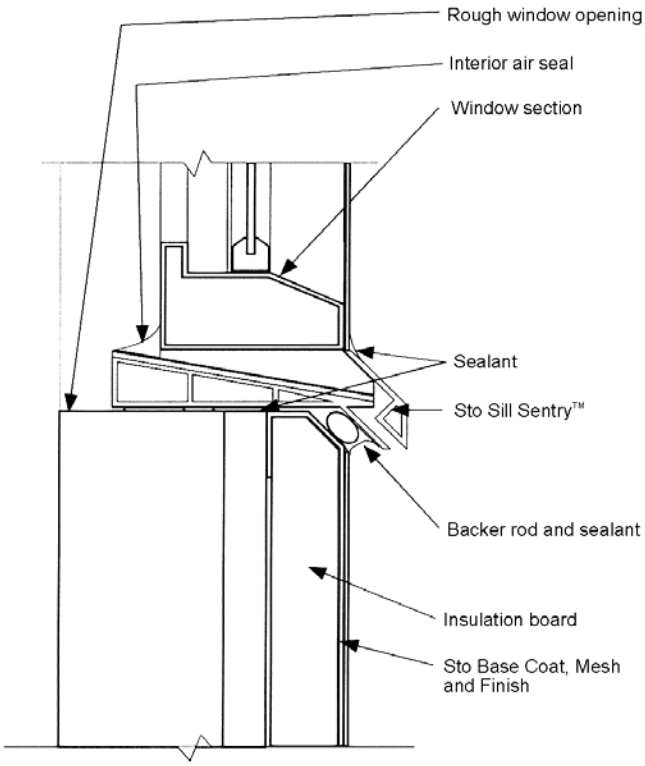

FIGURE 8—PANEL 5 SILL FLASHING

SEALANT TYPE	CONDITION
Dow Corning 790	EIFS to EIFS Joints
Dow Corning 795	EIFS to Metal Joints
Dow Corning 795 with 1200 Primer	EIFS to Vinyl Joints

Notes to Figure 7: Detail shows vinyl window jamb with Sto Sill Sentry™

INSTALLATION:

1. Wrap jamb rough opening with bituminous barrier membrane lapping it onto Sto Sill Sentry™ at the bottom and 3 inches (75 mm) onto the face of the substrate.
2. Install window with a bead of compatible sealant complying ASTM C920 between nailing flange and flexible membrane.
3. Install urethane foam air seal between window jamb and barrier membrane. Ensure that the air seal is continuous around the window.

Notes to Figure 8: Detail shows the installation of a vinyl window with Sto Sill Sentry™

1. Measure the rough window opening width and cut the Sto Sill Sentry™ as per installation instructions.
2. Install Sto Sill Sentry ™ in a bed of compatible sealant complying with ASTM C920.
3. Wrap the jambs and head with a bituminous barrier membrane. The jamb membrane laps into the Sill Sentry.
4. Prepare the window by removing the sill nailing flange. Place compatible sealant complying with ASTM C920 on the inbound side of the remaining nailing flanges. Install the window so the sealant makes complete contact with the flexible membrane.
5. Seal inside face of window sill to Sto Sill Sentry™ to provide complete air seal.

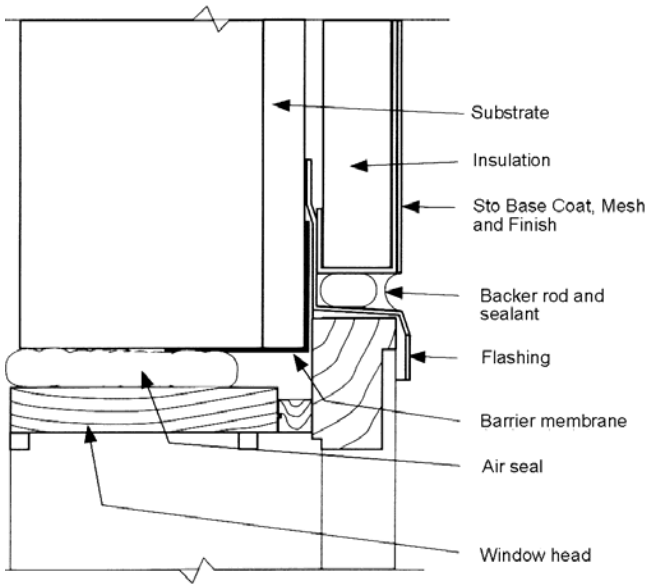

FIGURE 9—PANEL 6 HEAD FLASHING

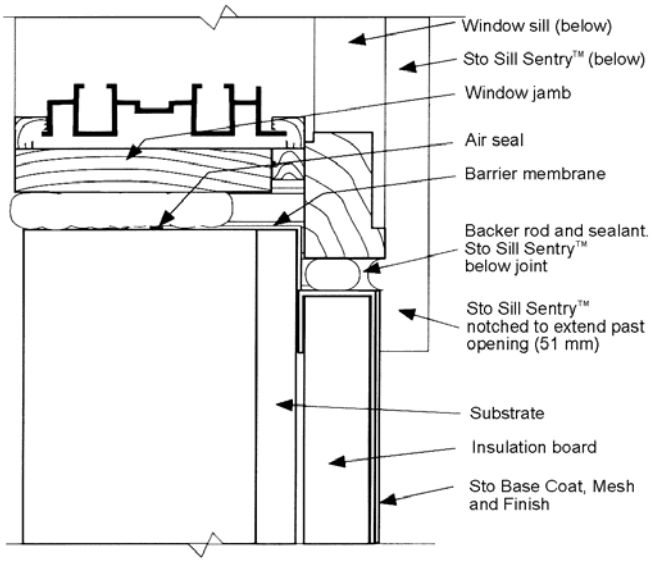

FIGURE 10—PANEL 6 JAMB FLASHING

SEALANT TYPE	CONDITION
Dow Corning 790	EIFS to EIFS Joints
Dow Corning 795	EIFS to Metal Joints
Dow Corning 795 with 1200 Primer	EIFS to Vinyl Joints

Notes to Figure 9: Detail shows wood window jamb with Sto Sill Sentry™

INSTALLATION:

1. Wrap head rough opening with bituminous barrier membrane lapping it 3 inches (75 mm) onto the face of the sheathing.
2. Install window as per manufacturer's instructions.
3. Install air seal between window head and barrier membrane. Ensure that the air seal is continuous around the window.
4. Instal head flashing over window. The head flashing should be turned down over the jambs 1-inch (25 mm) min. to provide protection for the window head/jamb interface.
5. Terminate EIFS $^1/_2$-inch (13 mm) from edge of brick mold. Install closed cell backer rod and sealant.

Notes to Figure 10: Detail shows wood window jamb with Sto Sill Sentry™

INSTALLATION:

1. Wrap jamb rough opening with barrier membrane lapping it onto Sto Sill Sentry™ at the bottom and 3 inches (75 mm) onto the face of the sheathing.
2. Install window as per manufacturer's instructions.
3. Install air seal between window jamb and barrier membrane. Ensure that the air seal is continuous around the window.
4. Terminate EIFS $^1/_2$-inch (13 mm) from edge of brick mold. Install closed cell backer rod and sealant.

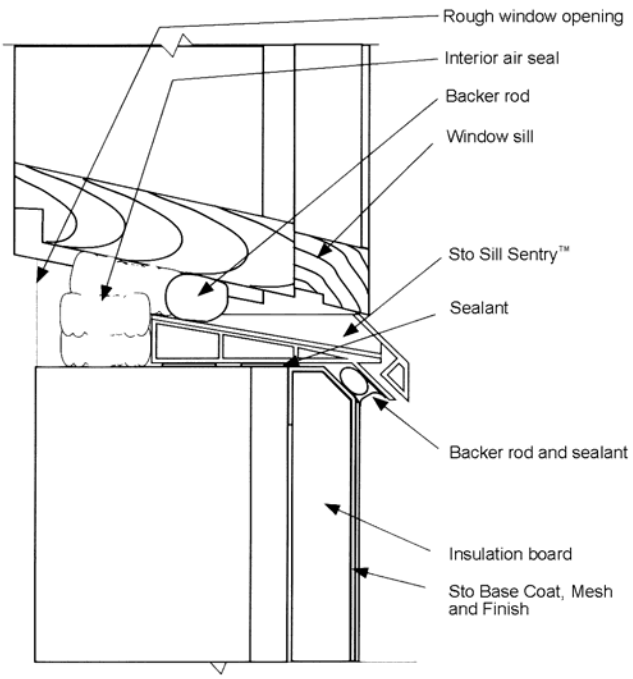

FIGURE 11—PANEL 6 SILL FLASHING

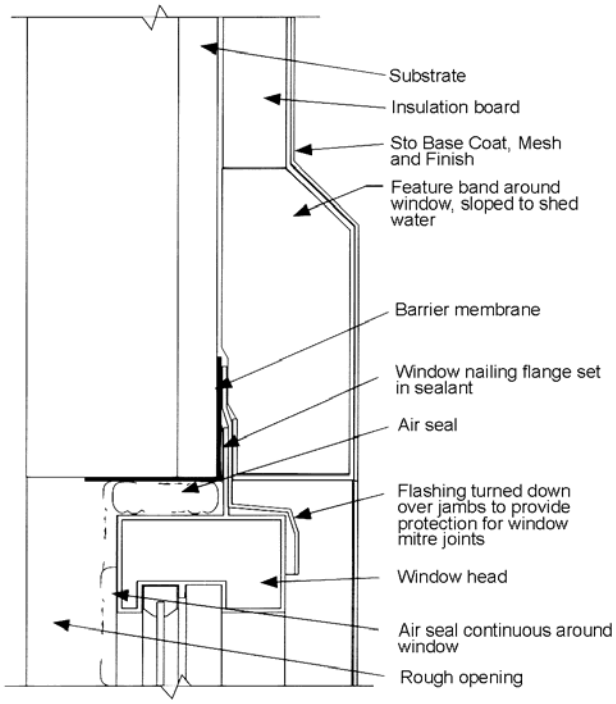

FIGURE 12—PANEL 9 HEAD FLASHING

SEALANT TYPE	CONDITION
Dow Corning 790	EIFS to EIFS Joints
Dow Corning 795	EIFS to Metal Joints
Dow Corning 795 with 1200 Primer	EIFS to Vinyl Joints

Notes to Figure 11: Detail shows the installation of a wood window with Sto Sill Sentry™

INSTALLATION:

1. Measure the rough window opening width and cut the Sto Sill Sentry™ as per installation instructions.
2. Install Sto Sill Sentry™ in a bed of sealant.
3. Wrap the jambs and head with a bituminous barrier membrane. The jamb membrane laps into the Sill Sentry.
4. Install window as per window manufacturer's instructions.
5. Install backer rod sized to fit between underside of window sill and Sto Sill Sentry™.
6. Seal inside face of window sill to Sto Sill Sentry™ to provide complete air seal.

Notes to Figure 12: Detail shows vinyl window head with feature band.

INSTALLATION:

1. Wrap the rough opening with a bituminous barrier membrane lapping onto the sheathing a minimum 3 inches (75 mm).
2. Install window with a continuous bead of compatible sealant complying with ASTM C920 between the nailing flange and the barrier membrane.
3. Install head flashing over window. The head flashing should be turned down over the jambs 1-inch (25 mm) min. to provide protection for the window head/jamb interface.
4. Install air seal between window frame and barrier membrane. Ensure that the air seal is continuous around the window.
5. Install EIFS as per Sto A100 specification.

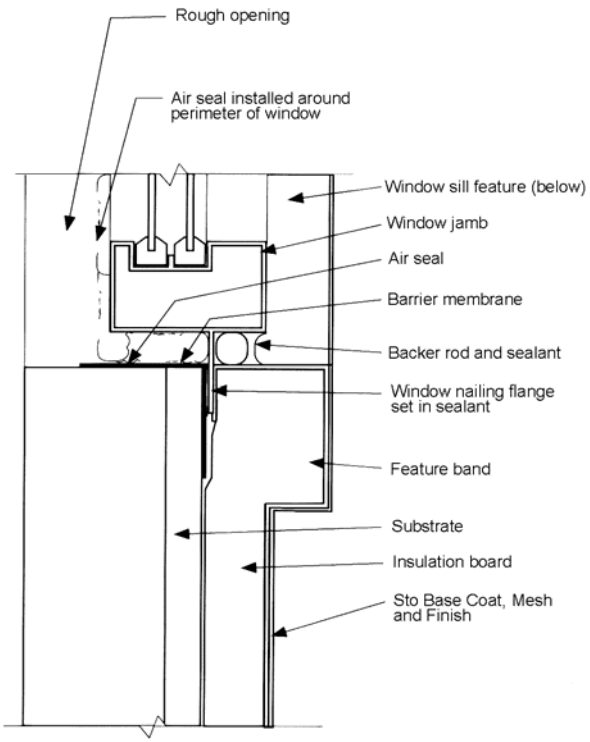

FIGURE 13—PANEL 9 JAMB FLASHING

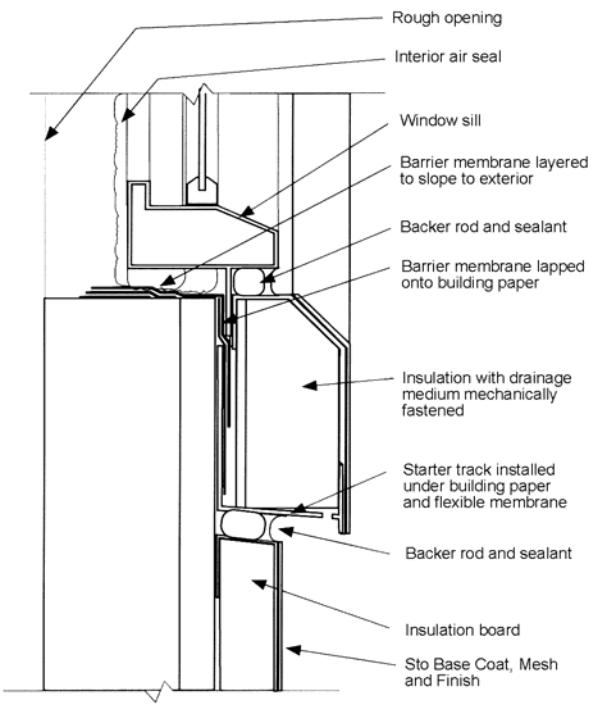

FIGURE 14—PANEL 9 SILL FLASHING

SEALANT TYPE	CONDITION
Dow Corning 790	EIFS to EIFS Joints
Dow Corning 795	EIFS to Metal Joints
Dow Corning 795 with 1200 Primer	EIFS to Vinyl Joints

Notes to Figure 13: Detail shows vinyl window jamb with feature band.

INSTALLATION:

1. Wrap jamb rough opening with a bituminous barrier membrane lapping 3 inches (75 mm) onto the face of the sheathing.
2. Install window with a bead of compatible sealant complying with ASTM C920 between nailing flange and barrier membrane.
3. Install air seal between window jamb and barrier membrane. Ensure that the air seal is continuous around the window.
4. Install Sto EIFS as per Sto A100 specification.
5. Install closed-cell backer rod and sealant, between window and EIFS base coat. Install sealant as per manufacturer's instructions.

Notes to Figure 14: Detail shows the installation of a vinyl window with a feature band around the window. Drainage is through the sill feature.

INSTALLATION:

1. Install a strip of building paper below the window opening to act as a separator sheet for the barrier membrane.
2. Wrap the opening with a bituminous barrier membrane. Build up the sill with three or four strips to provide a slope to the outside. Lap the final sill piece onto the building paper.
3. Install the window as per manufacturer's instructions. Place compatible sealant between the nailing flange and the barrier membrane at the head and jambs. **Do not place sealant at the sill.**
4. Install air seal around the interior perimeter of the window.
5. Slit the building paper, slide in the starter track behind the paper and fasten it in place.
6. Install insulation with drainage medium in the starter track and mechanically fasten in place.
7. Complete the rest of the EIFS installation as per standard Sto A100 specification.

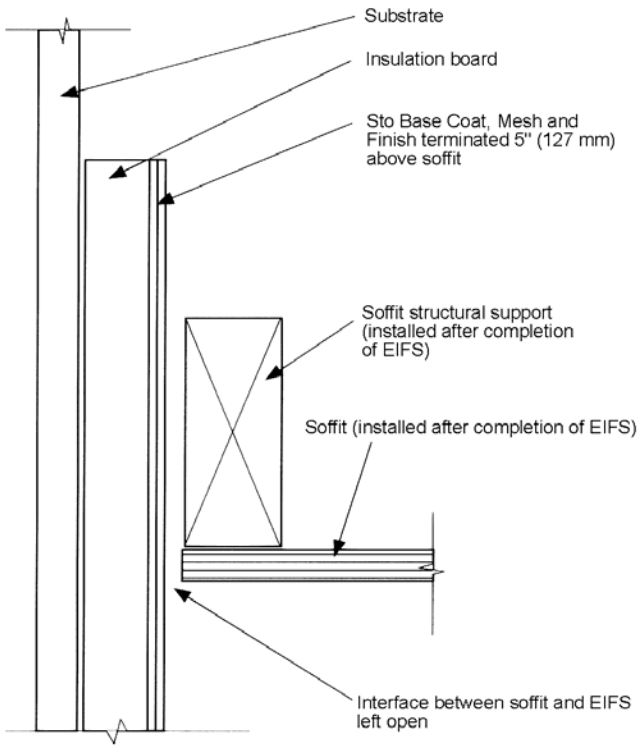

FIGURE 15—PANEL 8 SOFFIT PENETRATION

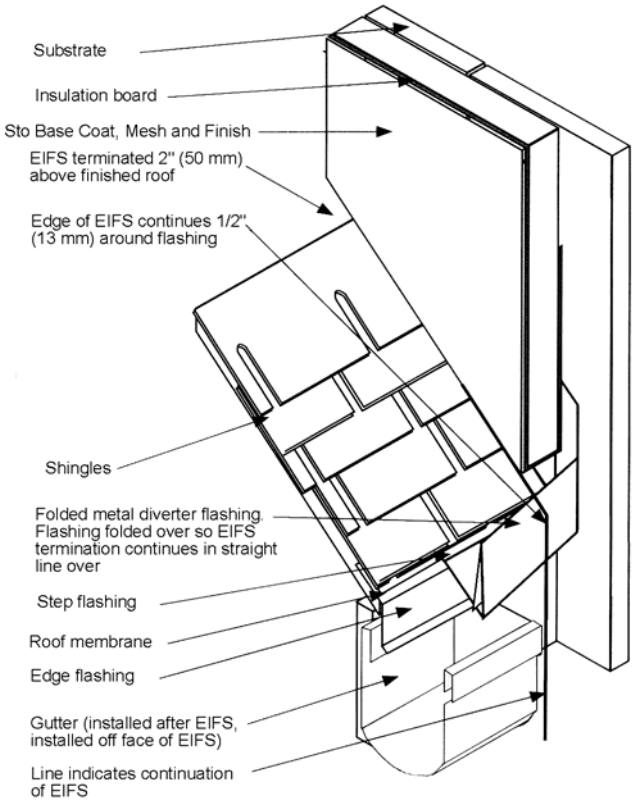

FIGURE 16—DIVERTER FLASHING

SEALANT TYPE	CONDITION
Dow Corning 790	EIFS to EIFS Joints
Dow Corning 795	EIFS to Metal Joints
Dow Corning 795 with 1200 Primer	EIFS to Vinyl Joints

Notes to Figure 15: Detail section of termination of EIFS above a soffit

INSTALLATION:

1. Install EIFS as per Sto A100 specification.
2. Terminate EIFS 5 inches (127 mm) above the postion of the finished soffit.
3. Soffit and supporting structure are installed after the completion of the EIFS.

Notes to Figure 16: Detail section of roof edge and the installation of a folded metal diverter or “kick-out” flashing.

INSTALLATION:

1. Install roof assembly and step flashing as per good roofing practice.
2. Slide folded metal flashing behind step flashing and over roofing membrane.
3. Install Sto EIFS as per Sto A100 Specification.
4. Terminate EIFS by standard “back-wrap” detail a minimum of 2 inches (50 mm) above the finished roof.
5. Terminate EIFS $^1/_2$-inch (13 mm) around the diverter flashing.
6. Install closed-cell backer rod and sealant between the flashing and the EIFS.

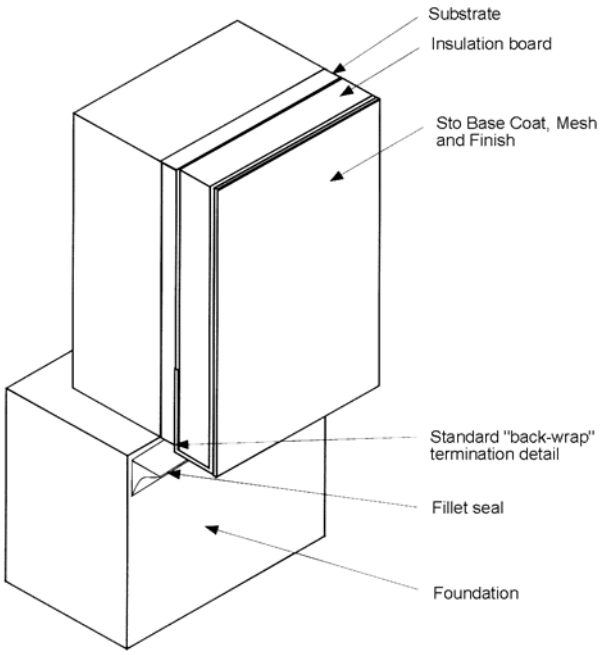

FIGURE 17—TERMINATION FOUNDATION

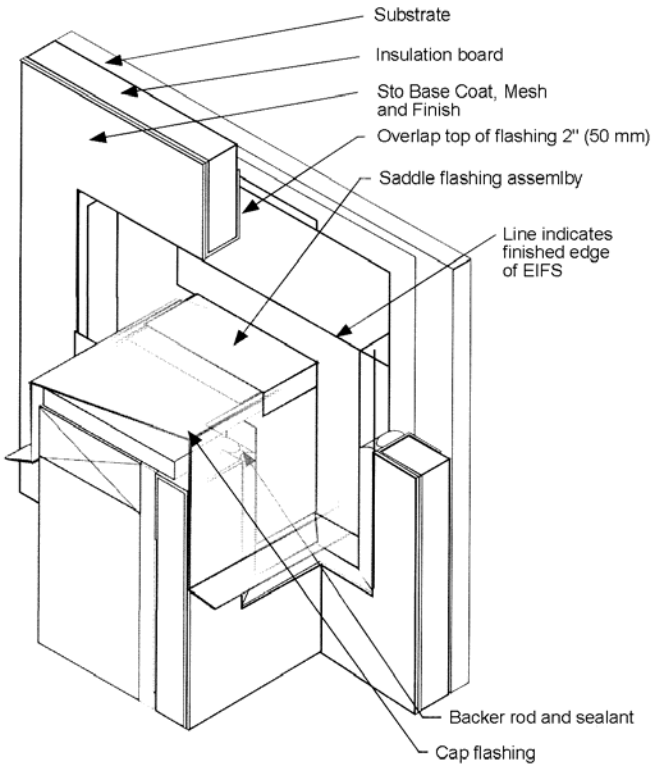

FIGURE 18—PANEL 7 SADDLE FLASHING

SEALANT TYPE	CONDITION
Dow Corning 790	EIFS to EIFS Joints
Dow Corning 795	EIFS to Metal Joints
Dow Corning 795 with 1200 Primer	EIFS to Vinyl Joints

Notes to Figure 17: Detail section of termination of EIFS at foundation.

INSTALLATION:

1. Install the EIFS as per Sto A100 specification.
2. Terminate the EIFS approximately $^1/_2$-inch (13 mm) below the substrate using the standard “back-wrap” termination detail.
3. Install a fillet seal complying with ASTM C920 as per manufacturer’s instructions.

Notes to Figure 18: Detail section of saddle flashing where a shorter wall meets a wall at right angles.

INSTALLATION:

1. Install a bituminous barrier membrane over the surfaces to be covered with the saddle flashing.
2. Set the saddle flashing into a bed of compatible sealant complying with ASTM C920 so that the intersection of the flashing components are sealed.
3. Install the EIFS as per Sto A100 specification.
4. Terminate the EIFS using standard “back-wrap” techniques $^1/_2$-inch (13 mm) from the flanges of the flashing (sides and bottom). Overlap the flashing 2 inches (50 mm) at the top of the flashing.
5. Install a closed cell backer rod and sealant at termination locations at sides and bottom.

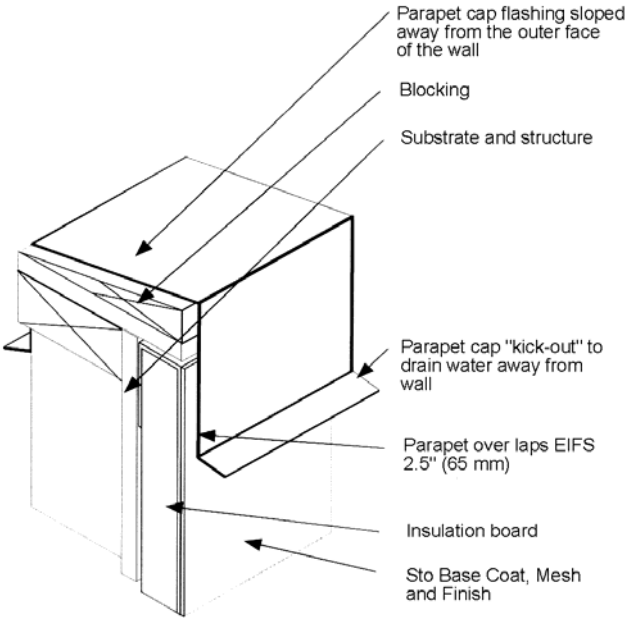

FIGURE 19—PANEL 7 CAP FLASHING

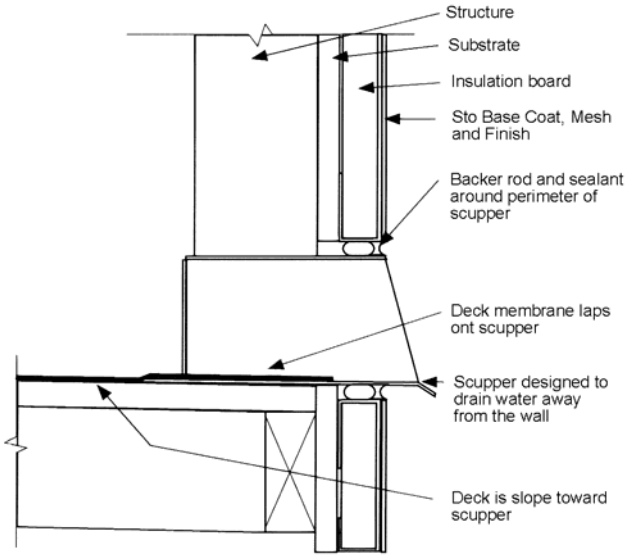

FIGURE 20—PANEL 7 SCUPPER

SEALANT TYPE	CONDITION
Dow Corning 790	EIFS to EIFS Joints
Dow Corning 795	EIFS to Metal Joints
Dow Corning 795 with 1200 Primer	EIFS to Vinyl Joints

Notes to Figure 19: Detail section of parapet cap flashing. The cap flashing should be installed as soon after the EIFS as possible to protect the wall from water entry and staining of the finish.

INSTALLATION:

1. Install the Sto EIFS as per Sto A100 specification.
2. Terminate the EIFS as per standard “back-wrap” details.
3. Install sloped blocking and cap flashing so that the flashing overlaps the EIFS by a minimum of 2.5 inches (63 mm).

Notes to Figure 20: Detail section of scupper.

INSTALLATION:

1. Construct the deck so that it drains to the scupper.
2. Install the scupper so that extends beyond the position of the finish EIFS so water will drain away from the wall surface.
3. Install at the deck waterproofing so that it laps into the scupper.
4. Install Sto EIFS as per Sto A100 specification.
5. Terminate EIFS $^1/_2$-inch (13 mm) from the edge of the scupper using standard “back-wrap” detail.
6. Install closed-cell backer rod and sealant between the scupper and EIFS.

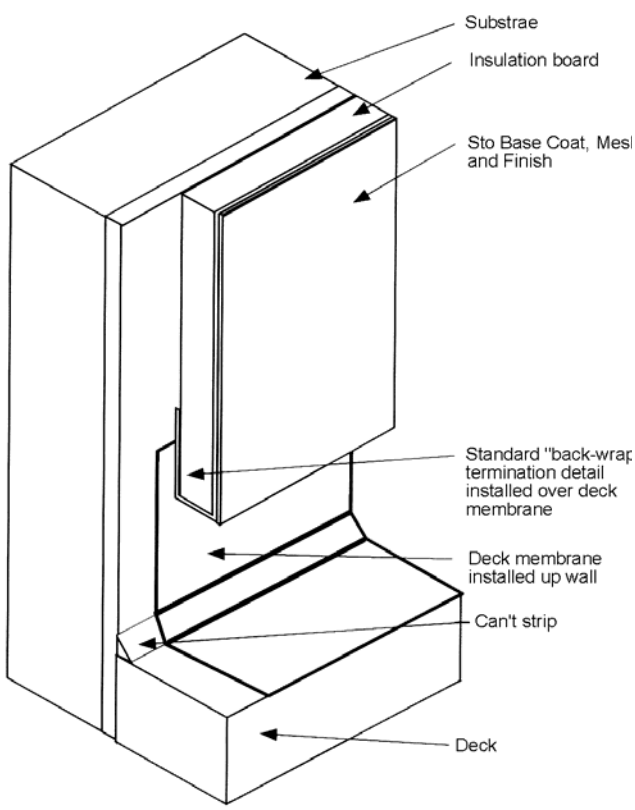

FIGURE 21—TERMINATION AT BALCONY

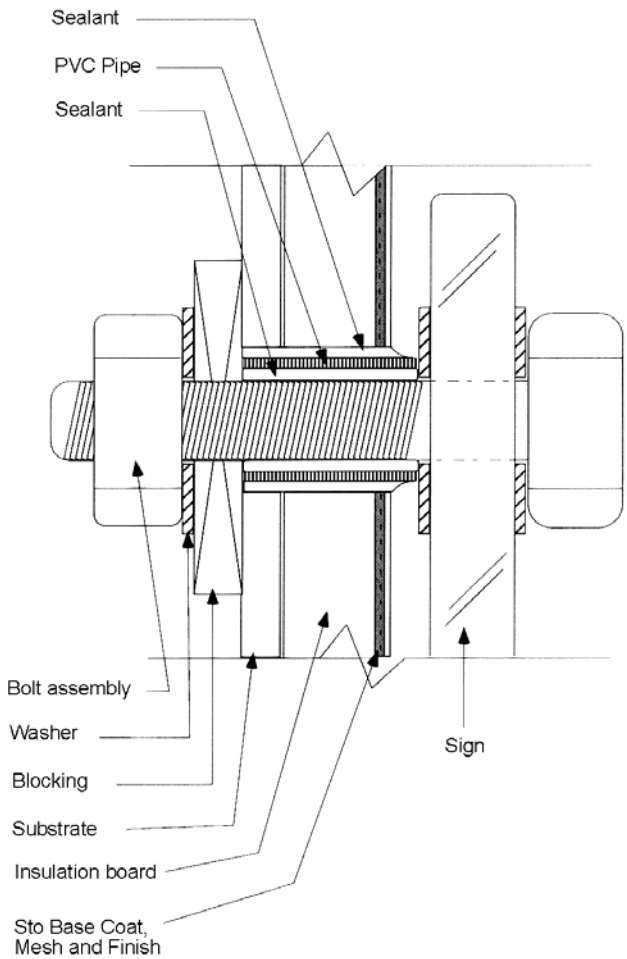

FIGURE 22—ATTACHMENT THROUGH EIFS

SEALANT TYPE	CONDITION
Dow Corning 790	EIFS to EIFS Joints
Dow Corning 795	EIFS to Metal Joints
Dow Corning 795 with 1200 Primer	EIFS to Vinyl Joints

Notes to Figure 21: Detail section of termination of EIFS at foundation.

INSTALLATION:

1. Install deck membrane as per manufacturers's instructions. Return membrane up wall approximately $^1/_2$-inch (305 mm) or as require based on local conditions.
2. Install the EIFS as per Sto A100 specification.
3. Terminate the EIFS, using standard "back-wrap" detail, approximately 6 inches (150 mm) above deck overlapping the deck membrane installed on the wall.

Notes to Figure 22: Detail covers installation of a sign installed following the installation of the EIFS. The bolt connections should be suitable for the weight of the sign.

INSTALLATION:

1. Secure suitable blocking to the interior structure.
2. Drill hole through system to blocking. Line hole with single component, neutral cure silicone sealant.
3. Insert PVC pipe through sealant to blocking. Pipe should be cut $^1/_4$-inch (5 mm) longer than the thickness of the EIFS and sheathing. Tool the extra sealant on the surface around the PVC pipe to ensure a seal.
4. Line the PVC pipe with sealant as noted above and install the bolt and washer assembly through the sealant.

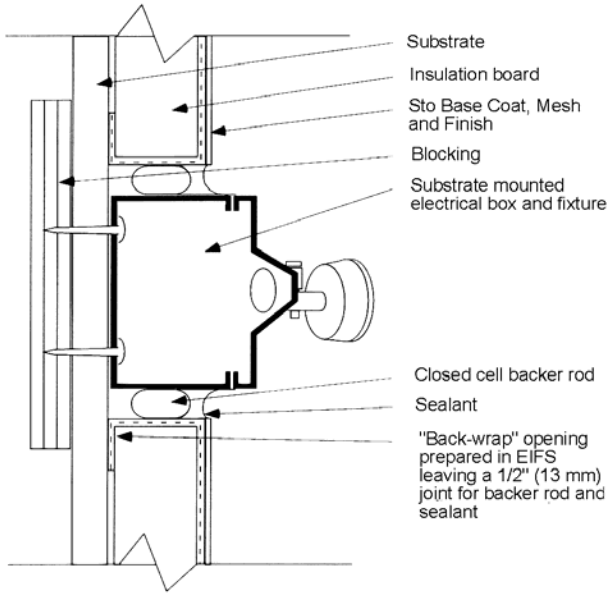

FIGURE 23—EIFS TERMINATION AT PENETRATION

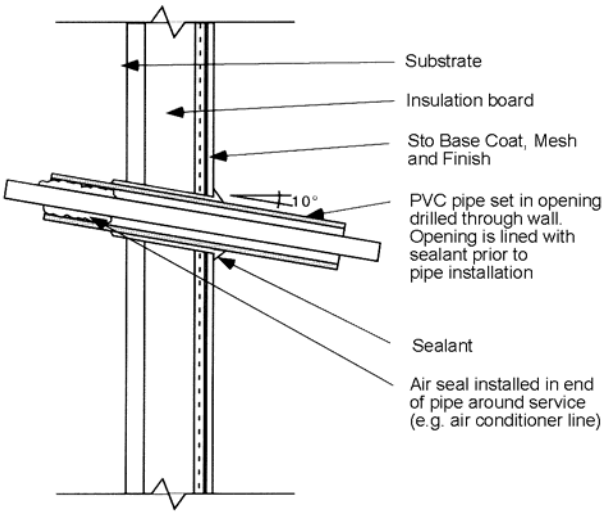

FIGURE 24—PENETRATION THROUGH EIFS

SEALANT TYPE	CONDITION
Dow Corning 790	EIFS to EIFS Joints
Dow Corning 795	EIFS to Metal Joints
Dow Corning 795 with 1200 Primer	EIFS to Vinyl Joints

Notes to Figure 23: Detail section of surface mounted electrical box installed prior to the EIFS.

INSTALLATION:

1. Install Sto Eifs as per Sto A100 specification.
2. Terminate EIFS around electrical box using standard “back-wrap” methods. Leave a $^1/_2$-inch (13 mm) joint around perimeter of box.
3. Install a closed-cell backer rod and sealant into the joint.

Notes to Figure 24: Detail illustrates the use of a PVC pipe as a prepared opening for service connections through EIF system. The PVC pipe is installed after the EIFS installation is complete.

INSTALLATION:

1. Drill opening on a 10-inch upward incline through wall assembly.
2. Line opening with sealant complying with ASTM C920.
3. Insert PVC pipe through opening and tool sealant tightly around PVC pipe.
4. Install services (A.C. lines, phone, cable etc.) through the PVC pipe and seal with an air seal.

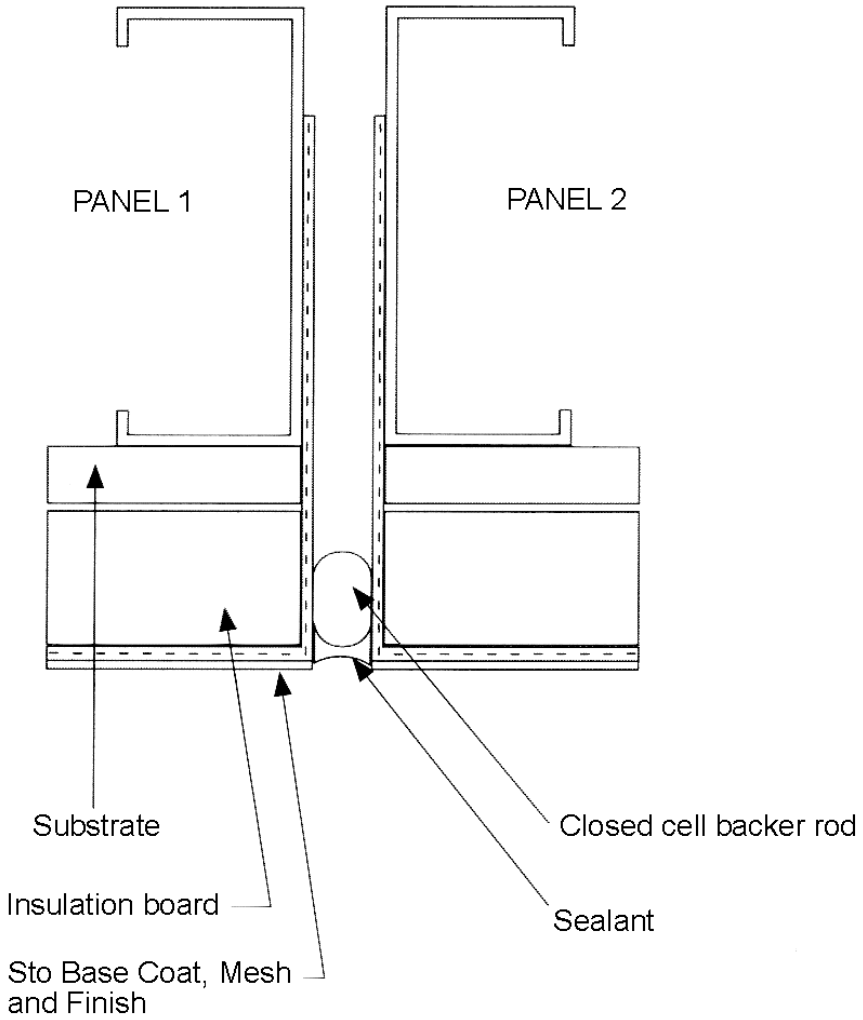

FIGURE 25—SEALANT JOINT

SEALANT TYPE	CONDITION
Dow Corning 790	EIFS to EIFS Joints
Dow Corning 795	EIFS to Metal Joints
Dow Corning 795 with 1200 Primer	EIFS to Vinyl Joints

Notes to Figure 25: Details illustrates a vertical barrier type or single stage joint.
INSTALLATION:
1. Install Sto EIFS as per Sto A100 specification.
2. Use standard edgewrap termination detail using Sto base coat and mesh. Sto primer is optional. The finish is not returned into the joint.
3. Install close-cell backer rod and sealant.

(EIFS CONTRACTOR NAME)

Completion Date:_____

THE EXTERIOR INSULATION AND FINISH SYSTEM (EIFS) INSTALLED ON THE STRUCTURE LOCATED AT THE ADDRESS INDICATED BELOW:

_____ CONFORMS

TO (EIFS MANUFACTURER'S NAME) RECOMMENDED INSTALLATION PRACTICES AND SECTION(S) _____ _____ OF ICC-ES, INC., EVALUATION REPORT ESR-_____.

Address of Structure:

_____
_____
_____
_____

Product Component Names:

Adhesive(s)_____
Fasteners (mech)_____
Base Coat_____
Reinforcing Mesh_____
Finish Coat(s)_____

INSTALLATION		CONFORMS
A.	Substrate Type and Tolerance	_____
B.	Weather-resistive Barrier	_____
C.	EIFS	
	1. Adhesive and/or Fasteners	_____
	2. Insulation	_____
	3. Reinforcing Mesh	_____
	4. Base Coat	_____
	5. Finish	_____

D. The information entered above is offered in testimony that the EIFS installation conforms with the EIFS manufacturer's installation methods and procedures, and the EIFS manufacturer's ES report.

NOTE: An installation card must be received from the Sealant Installer indicating that the sealant installation conforms with the EIFS evaluation report and sealant manufacturer's installation methods and procedures must accompany this declaration.

EIFS Contractor Company Name and Address:

_____
_____
_____
_____

Signature of responsible Officer:_____
Typed Name and Title of Officer:_____
Telephone Number: (____)_____

cc: Original: Building Department (Must be submitted with sealant installer declaration.)
Copy: EIFS Manufacturer

FIGURE 26

(SEALANT INSTALLER NAME)

Completion Date:_____

THE SEALANT INSTALLED IN CONJUNCTION WITH AN EXTERIOR INSULATION AND FINISH SYSTEM (EIFS) INSTALLED ON THE STRUCTURE LOCATED AT THE ADDRESS INDICATED BELOW:

_____ CONFORMS

TO (EIFS MANUFACTURER NAME) AND (SEALANT MANUFACTURER'S NAME) RECOMMENDED INSTALLATION PRACTICES AND SECTION(S) _____ OF ICC-ES, INC., EVALUATION REPORT ESR-_____.

Address of Structure:	Product Component Names:
_____	Primer(s)_____
_____	Sealers_____
_____	Bond Breakers_____
_____	Sealant Materials_____

INSTALLATION	CONFORMS
A. Designer's requirements, details and instructions	_____
B. Sealant manufacturer's details and requirements	_____
C. Exterior insulation manufacturer's requirements	_____

D. The information entered above is offered in testimony that the Sealant installation conforms with the sealant manufacturer's installation methods and procedures, and the EIFS manufacturer's evaluation report.

Sealant Installer Company Name and Address:

_____
_____
_____
_____

Signature of Responsible Officer:_____
Typed Name and Title of Officer:_____
Telephone Number: (_____)_____

cc: Original: Building Department
Copies: EIFS Manufacturer
EIFS Contractor
Sealant Manufacturer

(Must be submitted with EIFS contractor declaration.)

FIGURE 27

ICC Evaluation Service, Inc.
www.icc-es.org

Business/Regional Office ■ 5360 Workman Mill Road, Whittier, California 90601 ■ (562) 699-0543
Regional Office ■ 900 Montclair Road, Suite A, Birmingham, Alabama 35213 ■ (205) 599-9800
Regional Office ■ 4051 West Flossmoor Road, Country Club Hills, Illinois 60478 ■ (708) 799-2305

DIVISION: 07—THERMAL AND MOISTURE PROTECTION
Section: 07240—Exterior Insulation and Finish Systems

REPORT HOLDER:

DRYVIT SYSTEMS, INC.
ONE ENERGY WAY
WEST WARWICK, RHODE ISLAND 02893
www.dryvit.com

EVALUATION SUBJECT:

DRYVIT OUTSULATION EXTERIOR INSULATION AND FINISH SYSTEM

1.0 EVALUATION SCOPE

Compliance with the following codes:

- 2006 *International Building Code*® (IBC)
- 2006 *International Residential Code*® (IRC)
- BOCA® *National Building Code*/1999 (BNBC)
- 1999 *Standard Building Code*© (SBC)
- 1997 *Uniform Building Code*™ (UBC)

Properties evaluated:

- Weather resistance
- Structural—Transverse wind load resistance
- Noncombustible construction
- Fire-resistance-rated construction

2.0 USES

The Dryvit Outsulation system is an exterior wall covering as required by Chapter 14 of the IBC, BNBC, SBC, or UBC, and Section R703.9 of the IRC. The system is recognized for application to building construction *other* than framed walls of Type V, Group R1, R2, R3 or R4, Occupancies under the IBC; other than framed walls of Type V, Group R-1, R-2, R-3 or R-4, Occupancies under the BNBC; other than framed walls of Type VI, Group R1 and R2, Occupancies under the SBC; and other than framed walls of Type V, Group R1 or R3, Occupancies under the UBC. Under the IRC, the system is limited to use on concrete or masonry walls.

3.0 DESCRIPTION

3.1 General:

The Dryvit Outsulation system is a five-component system that may be applied to vertical substrates of masonry; concrete; exterior plaster; unpainted, exterior or Exposure 1 wood structural panels complying with DOC PS-1 or PS-2 (UBC Standard 23-2 or 23-3); water-resistant core gypsum sheathing complying with ASTM C 79; Dens-Glass Gold (ER-4305); or GLASROC™ sheathing (NER-674). The five components include an adhesive, a molded expanded polystyrene insulation board, a woven glass fiber fabric, a base coat, and a synthetic plaster finish. See Figure 1 for typical installation details.

3.2 Materials:

3.2.1 Dryvit Adhesives: The Dryvit adhesives consist of one of the following materials applied to the inside surface of the insulation board:

1. Dryvit ADEPS adhesive: Dryvit ADEPS adhesive is a premixed, fully formulated, water-based acrylic copolymer. Shelf life of the product is two years when the product is stored in a cool, dry location.
2. Dryvit Primus/adhesive: The Dryvit Primus/adhesive is a copolymer dispersion with a quartz sand aggregate that is mixed with Type I or II portland cement complying with ASTM C 150. Shelf life of the product is two years when the product is stored in a cool, dry location.
3. Dryvit Genesis adhesive: The Dryvit Genesis adhesive is a fiber-reinforced, 100 percent acrylic–based product that is mixed with Type I or II portland cement complying with ASTM C 150. Shelf life of the product is two years when the product is stored at 40°F (4.5°C) or above in tightly sealed containers out of direct sunlight.
4. Dryvit Genesis DM: A fiber-reinforced dry blend packaged in 50-pound (22.66 kg) bags and mixed with clean potable water. Shelf life of the product is one year when the product is stored in a cool, dry location.

3.2.2 Insulation Board: Insulation board must be molded, rigid expanded polystyrene insulation board having a nominal density of 1 pound per cubic foot (16 kg/m^3), and a flame-spread index not exceeding 25 and smoke-density index not exceeding 450 when tested in accordance with ASTM E 84. The boards must have a thickness ranging from $^3/_4$ inch (19.1 mm) to 4 inches (102 mm), a maximum width of 24 inches (610 mm) and maximum length of 4 feet (1219 mm). Sources include:

1. Dryvit Insulation, a Type I product complying with ASTM C 578.
2. Type I R-Control Guard EPS, by AFM (ESR-1006).
3. Type EWG, by Falcon Foam(ESR-1962).

In jurisdictions enforcing the IBC, the following dimensional limitations for the foam plastic formed shapes must be observed:

1. Percentage of wall area covered by the foam plastic formed shape must not be greater than 15 percent.
2. Combustible content of the foam plastic in any 20-square-foot area must not exceed an average potential heat content of 6,000 Btu/ft^2 (68.2 MJ/m^2) of wall surface area.
3. Total foam plastic thickness must not exceed 12 inches (305 mm) at any point, including the thickness of the wall insulation.

***Corrected September 2009**

ES REPORTS™ *are not to be construed as representing aesthetics or any other attributes not specifically addressed, nor are they to be construed as an endorsement of the subject of the report or a recommendation for its use. There is no warranty by ICC Evaluation Service, Inc., express or implied, as to any finding or other matter in this report, or as to any product covered by the report.*

ANSI Accredited Program PRODUCT CERTIFICATION

Copyright © 2008

4. Vertical bands must not exceed 8 feet (2438 mm) in height or 2 feet (610 mm) in width.
5. In shapes containing more than one segment of foam plastic, each segment must be limited to a maximum length of 4 feet (1219 mm) and a maximum width of 2 feet (610 mm).

3.2.3 Dryvit Base Coat: The Dryvit base coat consists of one of the following base materials applied to the outside surface of the insulation board:

1. Primus/adhesive mixture, which consists of Primus/adhesive mixed at a ratio of 1:1 by weight with Type I or II portland cement complying with ASTM C 150. Up to 8 fluid ounces (0.24 L) of water may be added to 5 gallons (18.9 L) of base coat to enhance the workability.
2. NCB base coat, which is a fully formulated, water-based product applied without the addition of portland cement. Shelf life of the product is two years when the product is stored in a cool, dry location.
3. Genesis base coat applied after mixing with Type I or Type II portland cement complying with ASTM C 150 at a ratio of 1:1 by weight. Up to 8 fluid ounces (0.24 L) of water may be added to 5 gallons (18.9 L) of base coat to enhance the workability.
4. A 50-pound (23 kg) bag of Genesis DM is mixed with 6 to 7 quarts of water. Additional water may be added to enhance the workability.

3.2.4 Dryvit Reinforcing Fabric: The Dryvit reinforcing fabric is a balanced open-weave glass fiber, made from twisted multiend strands and treated for compatibility with the other materials. The mesh weighs a minimum of 4.3 ounces per square yard (51 g/m^2), with a 12-by-6 thread count. The mesh must be installed vertically or horizontally.

3.2.5 Dryvit Finish: The Dryvit finish is composed of natural mineral aggregates and fillers, colored pigments and an acrylic latex emulsion. Shelf life of the product is two years when the product is stored at 40˚F (4.4˚C) or above.

3.2.6 Sealants: Sealants must be compatible with the EIFS components and be recommended by Dryvit Systems, Inc. Evidence must be submitted to the building official showing that the Dryvit–recommended sealant is a Type S or M, minimum Grade NS, minimum Class 25 and Use O sealant complying with ASTM C 920. Under the Use O classification, the sealant must be qualified for each material to which the sealant is applied. The details for sealant installation, including the width and thickness of the sealant, must be designed by the registered design professional, designer, builder or Dryvit Systems, Inc., in that order, to the satisfaction of the building official.

3.2.7 Dryvit Flashing Tape: Dryvit Flashing Tape is a self-adhering sheet-type membrane complying with the ICC-ES Acceptance Criteria for Flexible Flashing Materials (AC148) for use as flashing on window and door penetrations. The flashing membrane is 0.027 inch (0.68 mm) thick and is available in 75-foot-long (22 860 mm) rolls with widths of 4, 6, and 9 inches (102, 152, and 229 mm). The membrane must not be left permanently exposed to sunlight.

3.2.8 Dryvit AquaFlash: Dryvit AquaFlash is a waterproof, water-based polymer material used in conjunction with AquaFlash Mesh to seal substrates around windows, doors, and other openings. AquaFlash Mesh is a spunbonded polyester nonwoven fabric reinforced with a 5 × 5 polyester scrim available in 4-, 6-, and 9-inch (102, 152, and 229 mm) widths. The Dryvit AquaFlash system is a liquid-applied flashing material that complies with the ICC-ES Acceptance Criteria for Flexible Flashing Materials (AC148).

4.0 INSTALLATION

4.1 General:

All exposed edges of insulation board must be wrapped with the reinforcing mesh fully embedded in the base coat. Sealants must be installed as described in Section 3.2.6 of this report.

For jurisdictions enforcing the IBC or BNBC, the following requirements must be met:

1. Flashing must be installed in accordance with IBC Section 1405.3 or BNBC Section 1406.3.10 and Figure 1 of this report.
2. Protection against condensation in the exterior wall assembly must be provided in accordance with Section 402.5 or 502.5 of the 2006 *International Energy Conservation Code*®.

4.2 Substrates:

The substrates must be structurally sound, clean, dry and smooth, with all dust and deleterious materials removed. There are to be no planar irregularities exceeding $^1/_4$ inch (6.4 mm) in a 4-foot (1219 mm) radius. See Section 4.8 of this report for substrate attachment.

4.3 Adhesives:

The Dryvit ADEPS adhesive must be applied directly to the entire back surface of the insulation board using a U-notched trowel having $^3/_8$-inch-wide-by-$^1/_2$-inch-deep (9.5 mm by 12.7 mm) notches every $1^1/_2$ inches (38 mm) on center.

The Dryvit Primus/adhesive must be mixed with Type I or II portland cement complying with ASTM C 150 at a ratio of 1:1 by weight and applied to the entire back surface of the insulation board, using a rounded U-notched trowel having a minimum $^3/_8$-inch-wide-by-$^1/_2$-inch-deep (9.5 mm by 12.7 mm) notch every $1^1/_2$ inches (38 mm) on center. The Dryvit Primus/adhesive mixture must not be used for adhering foam plastic to wood-based sheathing.

The Dryvit Genesis adhesive is mixed with Type I or II portland cement complying with ASTM C 150 at a ratio of 1:1 by weight, and must be applied to the back surface of the insulation board with a rounded, U-notched trowel having minimum $^3/_8$-inch-wide-by-$^1/_2$-inch-deep (9.5 mm by 12.7 mm) notches spaced $1^1/_2$ inches (38 mm) on center. The Dryvit Genesis adhesive must not be used to adhere foam plastic to wood-based sheathing.

The Genesis DM is mixed with clean potable water and must be applied to the back surface of the insulation board with a rounded, U-notched trowel having minimum $^3/_8$-inch-wide-by-$^1/_2$-inch-deep (9.5 mm by 12.7 mm) notches spaced $1^1/_2$ inches (38 mm) on center. The Genesis DM adhesive must not be used to adhere foam plastic to wood-based sheathing.

4.4 Attachment:

After application of the adhesive, the coated insulation board must be immediately placed horizontally in a running bond pattern on the substrate, and slid into place. Firm pressure must be applied to the entire surface to ensure complete contact between the insulation board and the substrate. Board edges must be abutted tightly. No adhesive must be permitted between the boards. Temporary fasteners may be used, especially where contours exist, to ensure adequate contact between the insulation board and the substrate during the adhesive drying period (care should be taken when removing the fasteners to avoid damage to the insulation board). Once the insulation board has been installed, a minimum of 24 hours must elapse prior to additional work on the surface.

4.5 Coating and Reinforcing Fabric:

4.5.1 Base Coat: Using a stainless steel trowel or spray equipment, the Dryvit Primus/adhesive mixture, the NCB base coat, the Dryvit Genesis or Genesis DM base coat must be applied to the entire exposed surface of the insulation board to a uniform thickness of approximately $^1/_{16}$ inch (1.6 mm). The reinforcing fabric must be placed against the wet base coat and, by troweling from the center to the edges, the fabric must be completely embedded. The fabric must be continuous over corners and lapped not less than $2^1/_2$ inches (63.5 mm) at fabric edges.

4.5.2 Finish Coat: After the base coat has dried a minimum of 24 hours, the Dryvit finish material must be applied. The material must be mixed with a high-speed mixer until a uniform workable consistency is achieved. Clean water may be added to adjust workability in accordance with the manufacturer's instructions. The coating is spray- or trowel-applied directly to the reinforced base coat and is leveled in the same operation. When the finish has gelled, the desired texture is achieved using a variety of motions with trowels or floats. The final nominal thickness is approximately $^1/_{16}$ inch (1.6 mm).

4.6 Control Joints:

Horizontal control joints are required at each floor line in wood-framed construction. Control joints must be installed as specified by the registered design professional, designer, builder or exterior coating manufacturer, in that order.

4.7 Penetrations:

Penetrations must be prepared in a manner consistent with Figure 1 in this report and with the Dryvit installation instructions. Sill pan flashing must be minimum No. 26 gage metal having a minimum galvanized coating of G60 (or equivalent), and must be sloped toward the exterior.

When used, Dryvit Flashing Tape must be applied over a clean and dry surface. Dust, dirt, surface protrusions and loose nails, if any, must be removed. Surfaces must have no voids, damage or unsupported areas; if such conditions exist they must be repaired before application of the membrane. Substrate surfaces must be primed with Perm-A-Barrier WB Primer, manufactured by W. R. Grace & Co.—Conn., applied at a rate of 250 to 350 ft^2/gallon (6 to 8 m^2/L), except priming is not required for plywood surfaces; however, the primer described in this section may be optionally applied.

Dryvit AquaFlash may be used as an alternate to Dryvit Flashing Tape. The surface to receive the AquaFlash must be clean and dry. Dust, dirt, surface protrusions, and loose nails (if any) must be removed. Surfaces must have no voids, damage or unsupported areas; if such conditions exist they must be repaired before application of the AquaFlash material. Using a brush or $^3/_4$-inch (19.1 mm) nap roller, a liberal coat of AquaFlash material is applied to the substrate surface, and the AquaFlash Mesh is immediately embedded into the wet material. Additional AquaFlash material is applied and smoothed out to remove any wrinkles and to fully embed the mesh. A minimum of 15 minutes is allowed for setting, then a second coat of AquaFlash material is added and smoothed out to ensure a uniform continuous film that is free of voids, pinholes or other discontinuities. The AquaFlash system is limited to use on wood-based sheathing and PVC (polyvinyl chloride) substrates.

4.8 Wind Design:

Allowable transverse wind pressures based on systems installed in accordance with this report are set forth in this section. Adequacy of the framing system to resist the applied loads must be investigated. Maximum allowable deflection of structural wall components is $^1/_{240}$ of span. Fasteners must be long enough to provide a minimum $1^1/_8$-inch (28.5 mm) penetration into framing.

1. The allowable wind loads are 55 psf (2.6 kN/m^2) positive and 40 psf (1.9 kN/m^2) negative, for the systems applied to minimum $^1/_2$-inch-thick (12.7 mm), water-resistant core gypsum sheathing or minimum $^1/_2$-inch-thick (12.7 mm) wood structural panels fastened to minimum $3^5/_8$-inch-deep (92 mm), minimum No. 18 gage steel studs or nominal 2-by wood studs, spaced a maximum of 16 inches (406 mm) on center, using minimum No. 6, self-drilling, buglehead drywall screws spaced a maximum of 6 inches (152 mm) on center.
2. The allowable wind loads are 55 psf (2.6 kN/m^2) positive and 70 psf (3.4 kN/m^2) negative where the system is applied to the substrate described in Item 1 of this section fastened to minimum 6-inch-deep, minimum No. 16 gage steel studs or nominal 2-by-4 wood studs, spaced a maximum of 16 inches (406 mm) on center, using minimum No. 6, self-drilling, buglehead drywall screws spaced a maximum of 4 inches (102 mm) on center.
3. The allowable wind loads are 60 psf (2.9 kN/m^2) positive or negative where the system is applied to minimum 2.5-pound-per square-yard (0.95 kg/m^2), diamond mesh metal lath that is fastened through minimum $^1/_2$-inch-thick (12.7 mm), water-resistant core gypsum sheathing to minimum 6-inch-deep (152 mm), minimum No. 16 gage steel studs spaced a maximum of 16 inches (406 mm) on center, using minimum No. 6, self-drilling, buglehead drywall screws with $^3/_{16}$-inch-diameter (4.8 mm) metal washers, spaced a maximum of 6 inches (152 mm) on center around the perimeter and a maximum of 10 inches (254 mm) on center in the field of the sheathing board.
4. The allowable wind loads are 50 psf (2.4 kN/m^2) positive or negative if, in the system described in Item 3 of this section, 3.4-pound-per-square-yard (1.3 kg/m^2) metal lath, minimum No. 18 gage steel studs and minimum 0.16-inch-diameter (4 mm), self-tapping panhead screws at a maximum of 6 inches (152 mm) on center are substituted.
5. The allowable wind loads are 70 psf (3.4 kN/m^2) positive or negative when the system is applied to masonry, concrete or exterior plaster substrate.
6. The allowable wind loads are 55 psf (2.6 kN/m^2) positive and 40 psf (1.9 kN/m^2) negative for Dryvit Genesis adhesive and base coat applied to minimum $^1/_2$-inch-thick (12.7 mm), water-resistant core gypsum sheathing complying with ASTM C 79 fastened to minimum $3^5/_8$-inch-deep (92 mm), minimum No. 18 gage [0.0478 inch (1.21 mm)] steel studs spaced a maximum of 16 inches (406 mm) on center, using minimum No. 6, self-drilling, S-12 drywall screws spaced a maximum of 6 inches (152 mm) on center.

4.9 Noncombustible Construction:

This section applies to Types I, II, III and IV construction under the IBC; Types 1, 2, 3 and 4 construction under the BNBC; Types I, II, III, IV and V construction under the SBC; and Types I, II, III and IV construction under the UBC. Noncombustible exterior walls are permitted to be constructed with the Dryvit Outsulation system, provided the walls are constructed in accordance with Section 4.9.1, 4.9.2, 4.9.3 or 4.9.4. The assemblies described in those sections comply with IBC Section 1406.2.1.1 and BNBC Section 1407.2.1.3, when those codes are applicable.

4.9.1 Primus/adhesive Mixture as Adhesive and Base Coat: Application requires minimum $3^5/_8$-inch-deep (92 mm), minimum No. 18 gage steel studs at a maximum of 16 inches (406 mm) on center. One layer of minimum $^1/_2$-inch-thick (12.7 mm) regular gypsum wallboard must be installed vertically to interior stud flanges; minimum $^1/_2$-inch-thick (12.7 mm) water-resistant core gypsum sheathing complying with ASTM C 79 must be applied to the exterior stud flanges horizontally in a similar manner, except that joints are staggered from those of the interior wallboard. The sheathing and wallboard must be fastened to studs using minimum No. 6 drywall screws spaced a maximum of 12 inches (305 mm) on center. Openings between floors and walls must be blocked with safing insulation. Openings in walls must be framed with minimum No. 18 gage [0.0478 inch (1.21 mm)] steel. Spaces between studs must be blocked at floor levels with minimum 4 pcf (64 kg/m^3) Thermafiber safing insulation (ER-2331) measuring $^1/_2$ inch (12.7 mm) thicker than stud depth and the same depth as the floor, but no less than 8 inches (203 mm). All interior gypsum wallboard joints are taped and, along with screw heads, are treated with joint compound in accordance with ASTM C 840 or GA 216. The rest of the construction is as described in Section 4.0 of this report, using Dryvit Primus/adhesive as an adhesive and base coat. The insulation board is limited to a maximum thickness of 4 inches (102 mm) except as described in Section 3.2.2 of this report.

4.9.2 ADEPS Adhesive and NCB Base Coat: When ADEPS adhesive and NCB base coat are used, one layer of minimum $^5/_8$-inch-thick (15.9 mm), Type X gypsum wallboard must be installed with the long dimension parallel to studs on the interior face of minimum No. 18 gage steel studs spaced a maximum of 16 inches (406 mm) on center. One layer of minimum $^1/_2$-inch-thick (12.7 mm), water-resistant core gypsum sheathing complying with ASTM C 79 must be applied with the long dimension perpendicular to studs on the exterior face. The gypsum wallboard and sheathing must be attached to the studs with minimum No. 6, Type S drywall screws spaced a maximum of 8 inches (203 mm) on center along the perimeter and a maximum of 12 inches (305 mm) on center in the field. Openings in walls must be framed with minimum No. 18 gage [0.0478 inch (1.21 mm)] steel. Spaces between studs must be blocked at floor levels with minimum 4 pcf (64 kg/m3) Thermafiber safing insulation (ER-2331) measuring $^1/_2$ inch (12.7 mm) thicker than stud depth and the same depth as the floor, but no less than 8 inches (203 mm). All interior gypsum wallboard joints must be taped and, along with screw heads, are treated with joint compound. The rest of the construction is as described in Section 4.0 of this report, using ADEPS adhesive and NCB base coat. The insulation board is limited to a maximum thickness of 4 inches (102 mm) except as noted in Section 3.2.2 of this report.

4.9.3 Genesis Adhesive and Base Coat: When Genesis adhesive and base coat are used, one layer of minimum $^5/_8$-inch-thick (15.9 mm), Type X gypsum wallboard complying with ASTM C 36 must be installed with the long dimension perpendicular to studs on the interior face of minimum No. 18 gage [0.0478 inch (1.21 mm)] steel studs spaced a maximum of 16 inches (406 mm) on center. One layer of minimum $^1/_2$-inch-thick (12.7 mm), water-resistant core gypsum sheathing complying with ASTM C 79 must be applied with the long dimension perpendicular to the studs on the exterior face. The gypsum wallboard and sheathing must be attached to the studs with minimum No. 6 by $1^5/_8$-inch-long (41.3 mm), S-12 drywall screws spaced a maximum of 8 inches (203 mm) on center. The interior wallboard joints must be taped and, both wallboard joints and screw heads are treated with joint compound in accordance with ASTM C 840 or GA 216. Openings in walls must be framed with minimum No. 18 gage [0.0478 inch (1.21 mm)] steel. Spaces between studs must be blocked at floor levels with minimum 4 pcf (64 kg/m^3) Thermafiber safing insulation (ER-2331) measuring $^1/_2$ inch (12.7 mm) thicker than stud depth and the same depth as the floor, but no less than 8 inches (203 mm). The rest of the construction is as described in Section 4.0 of this report using Genesis adhesive and base coat. The EPS insulation board is limited to a maximum thickness of 4 inches (102 mm) except as noted in Section 3.2.2 of this report.

4.9.4 Genesis DM Adhesive and Base Coat: When Genesis DM adhesive and base coat are used, one layer of minimum $^1/_2$-inch-thick (12.7 mm), Type X gypsum board complying with ASTM C 36 is installed with the long dimension parallel to the studs on the interior face of minimum No. 20 gage [0.0359 inch (0.91 mm)] steel studs spaced a maximum of 16 inches (406 mm) on center. One layer of minimum $^1/_2$-inch-thick (12.7 mm), water-resistant core gypsum sheathing complying with ASTM C 79, is applied with the long dimension perpendicular to the studs on the exterior face. The gypsum board and sheathing are attached to the studs with minimum No. 6 by $1^1/_4$-inch-long (31.7 mm), Type S screws spaced a maximum of 8 inches (203 mm) on center. The interior gypsum board joints must be taped, and both gypsum board joints and screw heads must be treated with joint compound in accordance with ASTM C 840 or GA 216. Openings in walls are framed with minimum No. 20 gage [0.0359 inch (0.91 mm)] steel track. Spaces between studs must be blocked at floor levels with minimum 4 pcf (64 kg/m^3) Thermafiber Safing insulation (ER-2331) measuring $^1/_2$ inch (12.7 mm) thicker than stud depth and the same depth as the floor, but no less than 8 inches (203 mm). The rest of the construction is as described in Section 4.0 of this report, with Genesis DM used as the adhesive and base coat. The EPS insulation board is limited to a maximum thickness of 4 inches (102 mm) except as noted in Section 3.2.2 of this report.

4.10 Fire-resistance-rated Construction:

In jurisdictions enforcing the BNBC, SBC and UBC, the Dryvit Outsulation System, with the exclusion of the Genesis DM adhesive/basecoat, may be applied over exterior fire-resistance-rated walls required to be of combustible construction without affecting the hourly rating. Under the UBC, the system ,with exclusions as noted above, may also be applied over exterior, noncombustible, nonload-bearing, steel-framed gypsum wallboard wall assemblies of up to one-hour fire-resistance rating for systems using Genesis adhesive and base coat, and up to two-hour fire-resistance rating for the system using other adhesives and base coats described in this report, and over any concrete or concrete masonry walls, without affecting the hourly rating. In jurisdictions enforcing the IBC, the fire-resistance-rating of walls is beyond the scope of this report; substantiating data must be submitted to the satisfaction of the building official.

4.11 Special Inspections:

In jurisdictions enforcing the IBC or BNBC, special inspections in accordance with IBC Sections 1704.1 and 1704.12 or BNBC Section 2705.13 are required for the Dryvit Outsulation system applied over framed walls. Duties of the special inspector include verifying field preparation of materials, expiration dates, installation of components, curing of components, preparation of penetrations, and installation of joints and sealants. The criteria for the special inspections must be based on the items contained in the manufacturer's document entitled "Third Party Inspection Guidelines for Owners and General Contractors/Construction Managers," DS150, dated January 2003.

5.0 CONDITIONS OF USE

The Dryvit Outsulation System described in this report complies with, or is a suitable alternative to what is specified

in, those codes listed in Section 1.0 of this report, subject to the following conditions:

5.1 Construction must be as set forth in this report and the manufacturer's instructions.

5.2 The insulation boards must be separated from the building interior with a thermal barrier complying with IBC Section 2603.4, IRC Section R314.1, UBC Section 2602.4, BNBC Section 2603.4 or SBC Section 2603.5.

5.3 The insulation boards are identified as described in Section 7.0.

5.4 The system may be installed on walls required to be of noncombustible construction (defined in Section 4.9), provided installation complies with Section 4.9 of this report.

5.5 Installation must be by a contractor recognized by Dryvit Systems, Inc., as being trained to perform installation of the Outsulation system.

5.6 All plans must be accompanied by drawings, consistent with the illustrations in this report, that include the following:

1. Installation at all openings, corners and insulation board terminations.
2. Location, configuration and method of sealing of joints between boards and at corners.
3. Typical cross section, showing all components of the wall.
4. Typical wall pipe and window penetrations.
5. Sealants complying with Section 3.2.6 of this report.
6. Flashing details.

5.7 Installation cards, such as those shown in Figures 2 and 3, must be completed by the EIFS applicator and the sealant installer, respectively, and presented to the building official at the completion of each project.

5.8 Termination of the system must not be less than 6 inches (152 mm) above finished grade in accordance with Section 2304.1.4 of the SBC and Section R320.4 of the IRC.

5.9 The systems must not be installed on framed walls of Type V, Group R1, R2, R3 or R4, Occupancies under the IBC; framed walls of Type V, Group R-1, R-2, R-3 or R-4, Occupancies under the BNBC; framed walls of Type VI, Group R1 and R2, Occupancies under the SBC; framed walls of Type V, Group R1 or R3, Occupancies under the UBC or for use under the IRC, except on concrete or masonry walls.

6.0 EVIDENCE SUBMITTED

6.1 Data in accordance with the ICC-ES Acceptance Criteria for Exterior Insulation and Finish Systems (AC219), dated October 2003 (editorially revised April 2008), including reports of tests in accordance with ASTM E 119, ASTM E 84, UBC Standards 26-4 and 26-9, and NFPA 268.

6.2 Data in accordance with the ICC-ES Acceptance Criteria for Foam Plastic Insulation (AC12), dated February 2007 (editorially revised April 2008).

6.3 Data in accordance with the ICC-ES Acceptance Criteria for Flexible Flashing Materials (AC148), dated June 2006 (editorially revised December 2007).

7.0 IDENTIFICATION

Material containers are labeled with the manufacturer's name (Dryvit Systems, Inc.) and address, the product name, the expiration date and the evaluation report number (ESR-1232).

Dryvit insulation boards are delivered in sealed polyethylene bags bearing the word "Dryvit." Additionally, one edge of each board bears the wording "Dryvit [listing number and plant identification number of block molder], ICC-ES Evaluation Report ESR-1232—RADCO." Other insulation boards are marked as required for Type I R-Control Guard EPS under ESR-1006 and EWG board in ESR-1962. One board in each bag also bears the same wording on each face. When used on walls required to be noncombustible construction, each R-Control and EWG board must also include the name "Dryvit Outsulation."

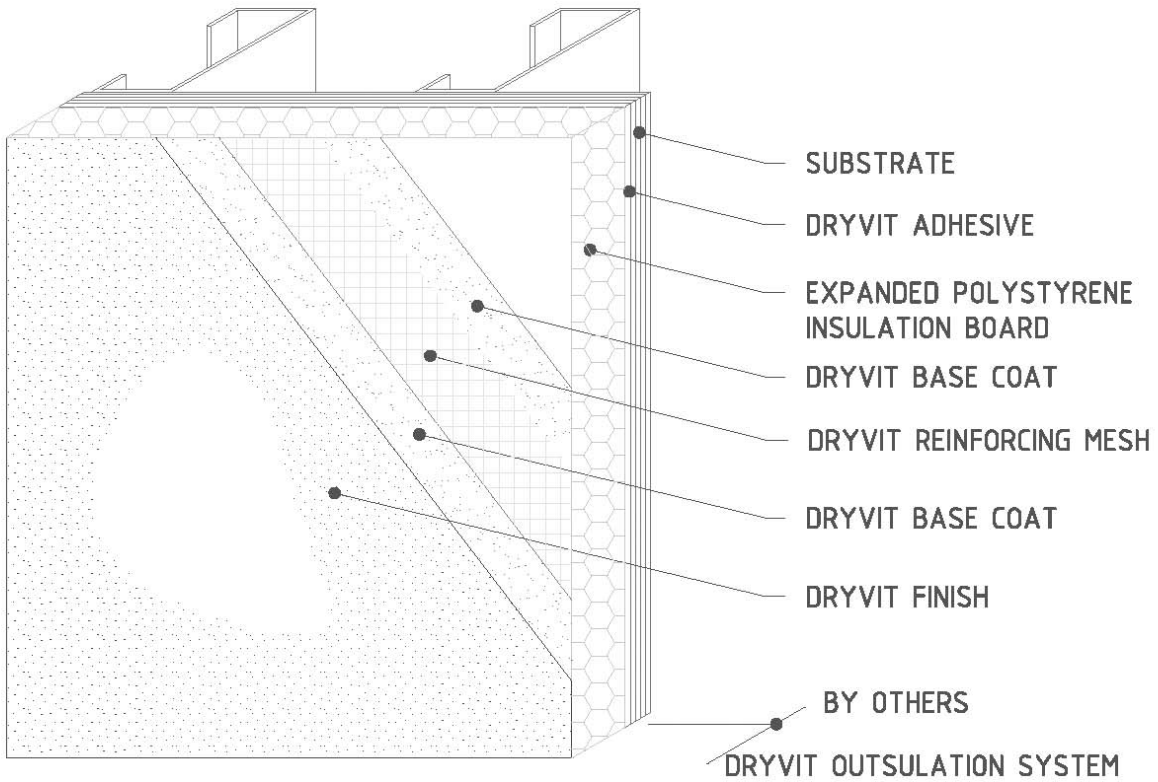

System Layout

FIGURE 1—TYPICAL INSTALLATION DETAILS

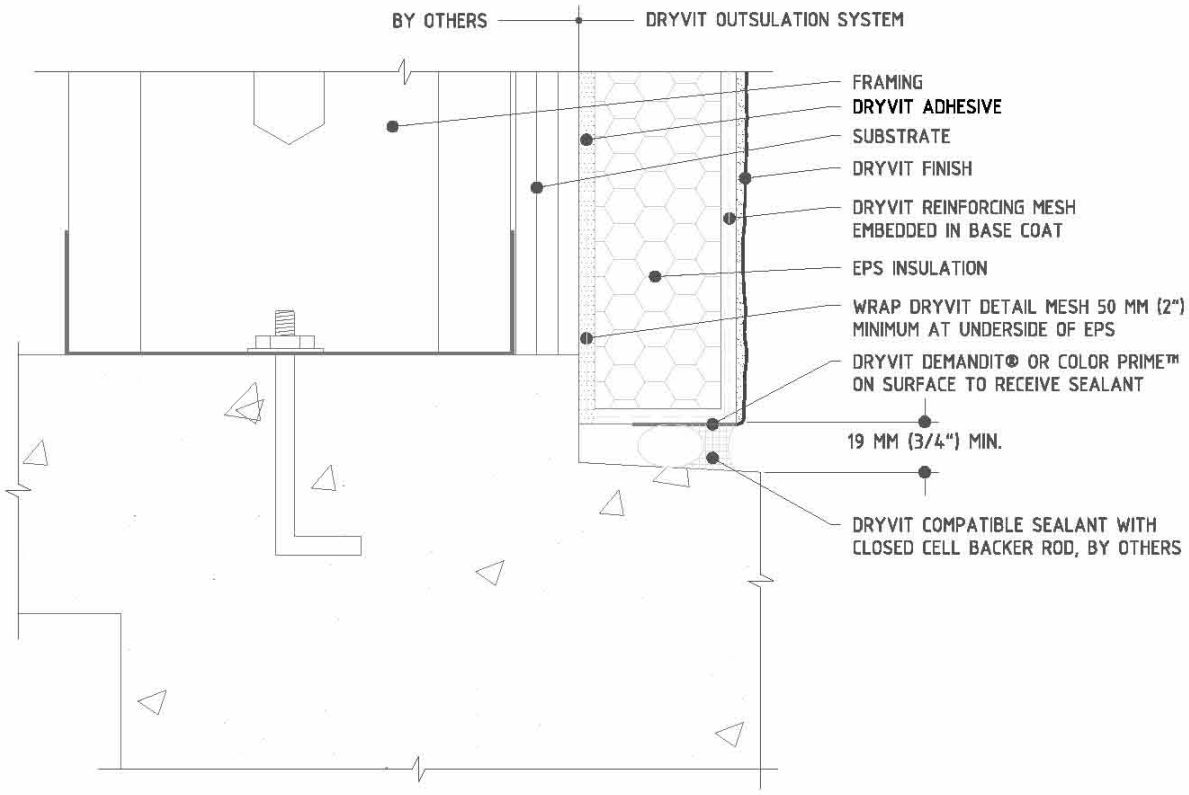

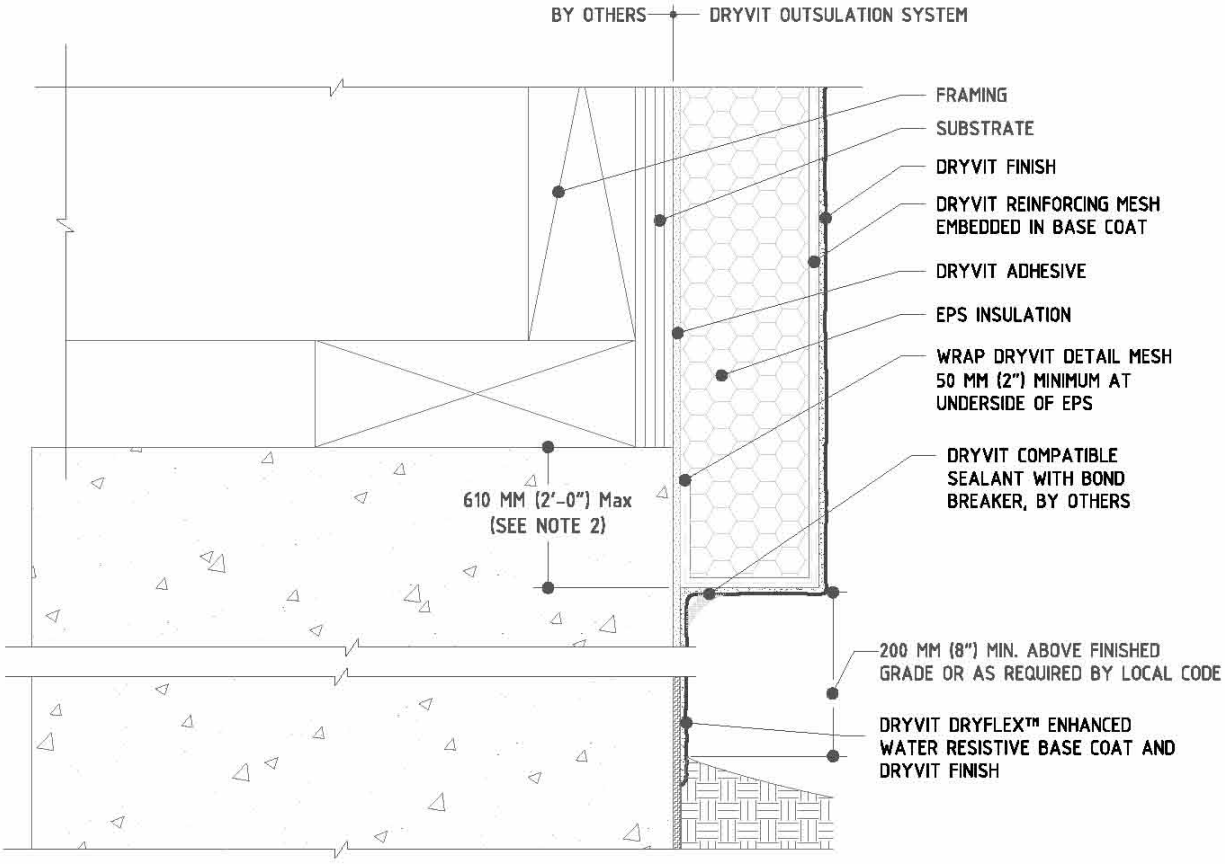

System Termination

FIGURE 1 (Continued)

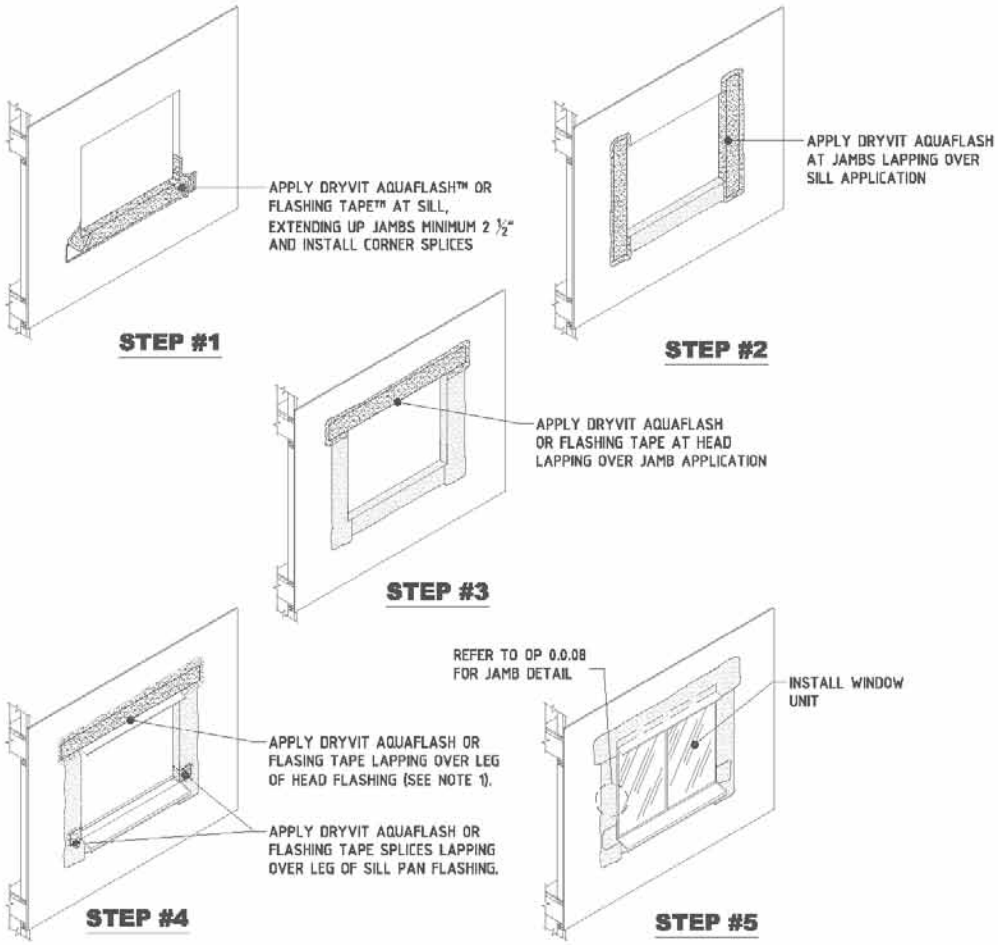

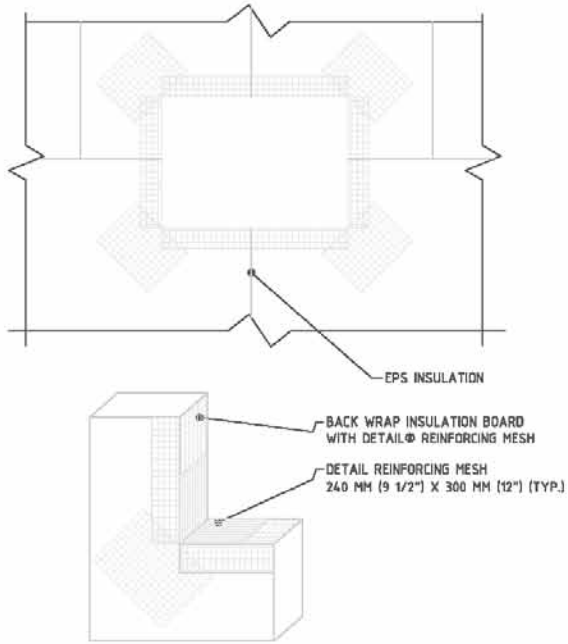

Opening Preparation

FIGURE 1 (Continued)

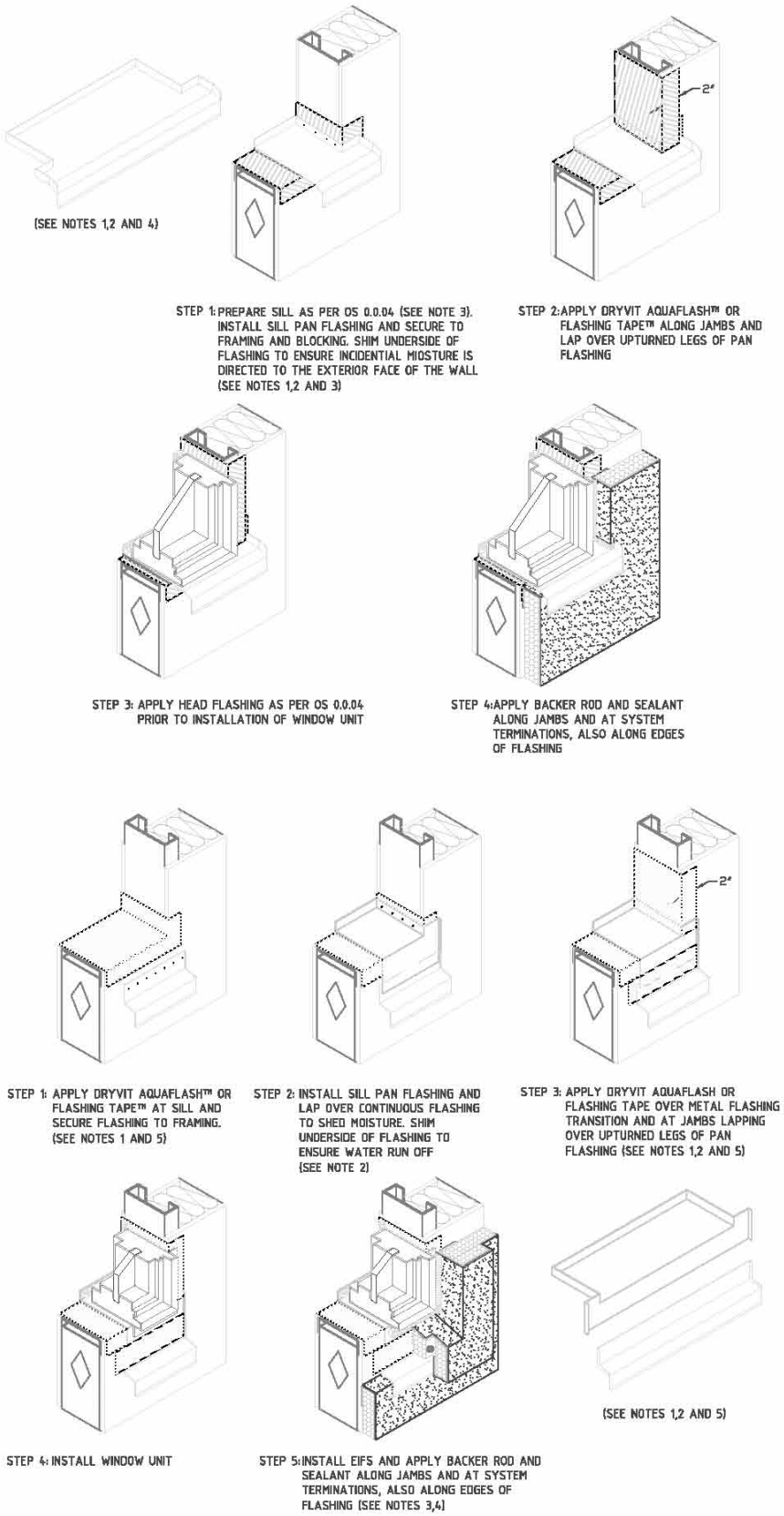

FIGURE 1 (Continued)

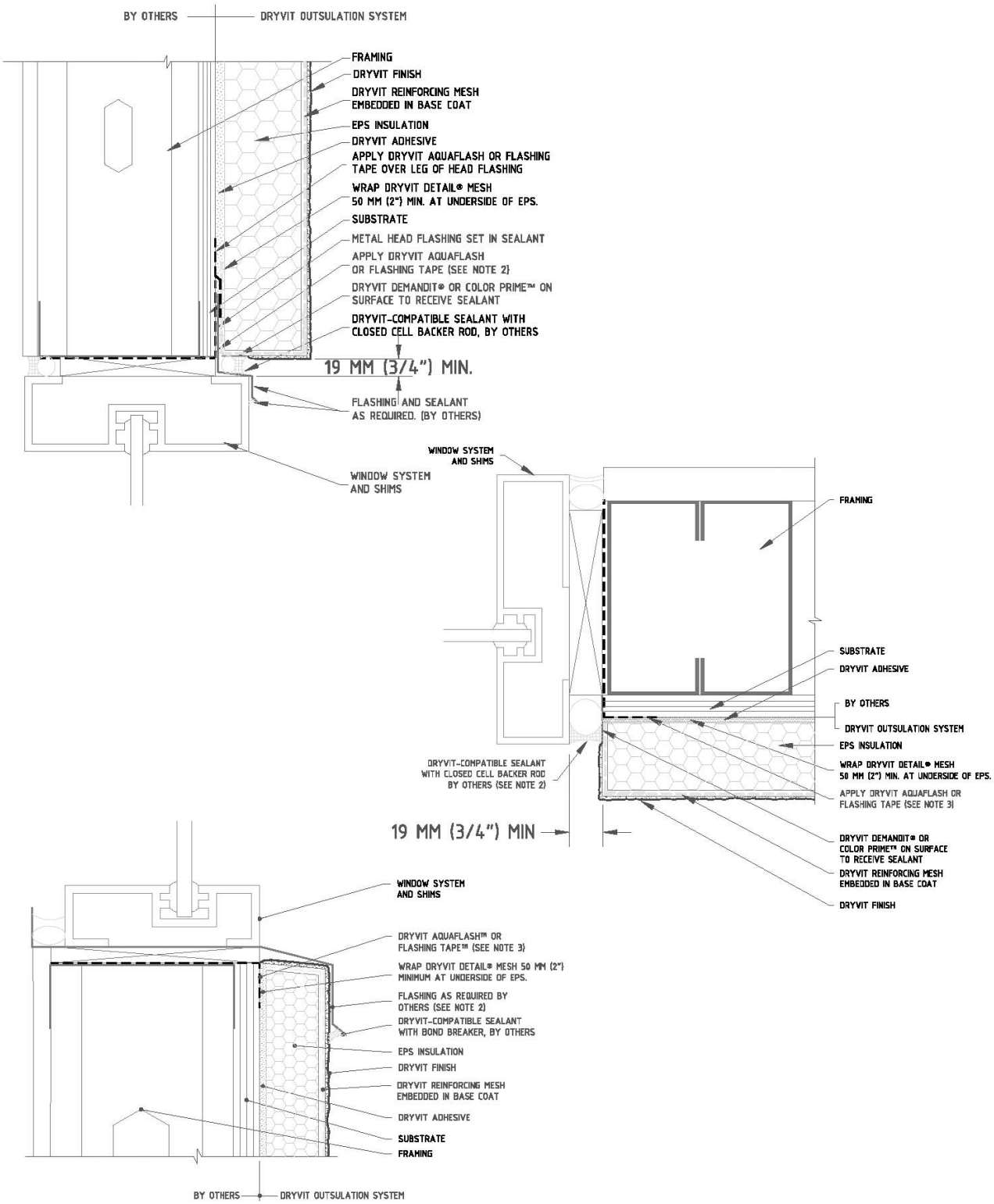

Termination at Window

FIGURE 1 (Continued)

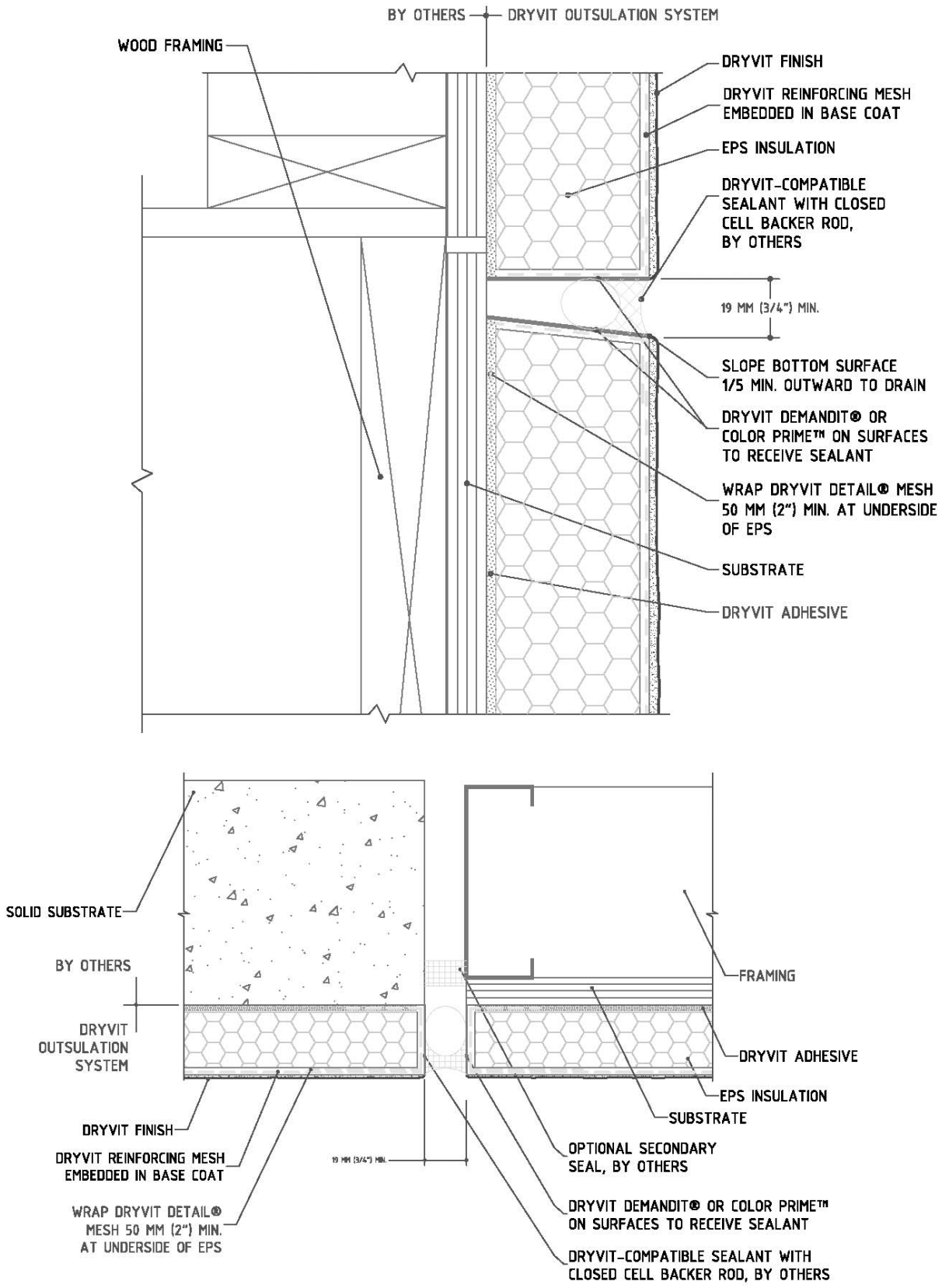

Expansion Joints

FIGURE 1 (Continued)

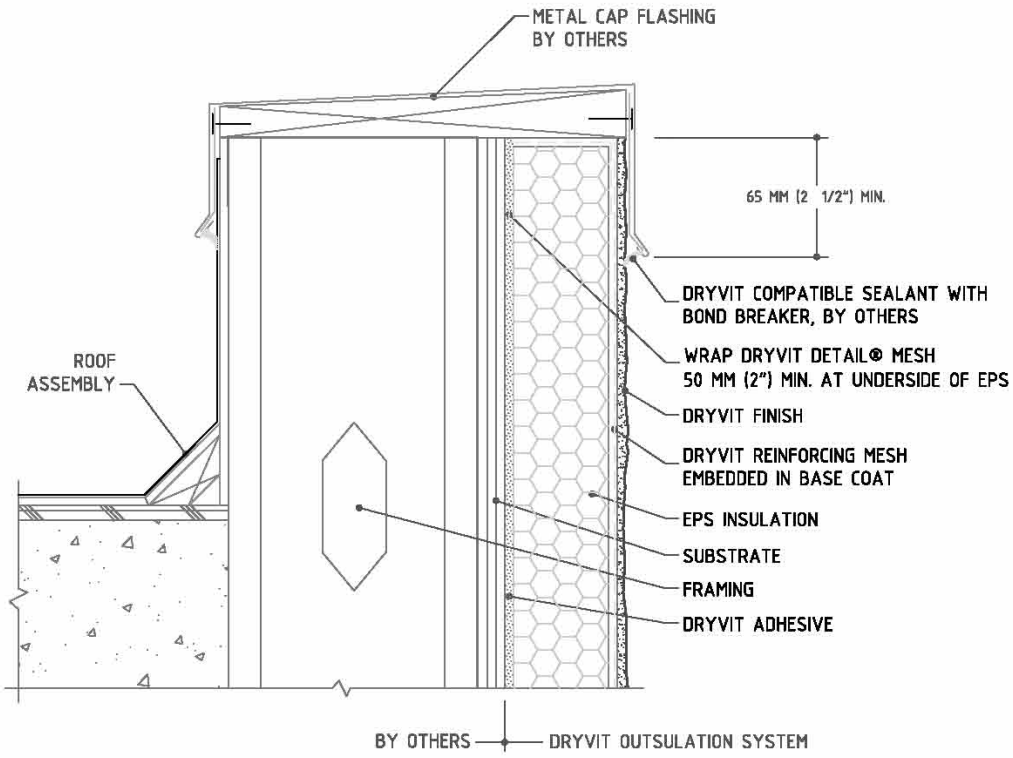

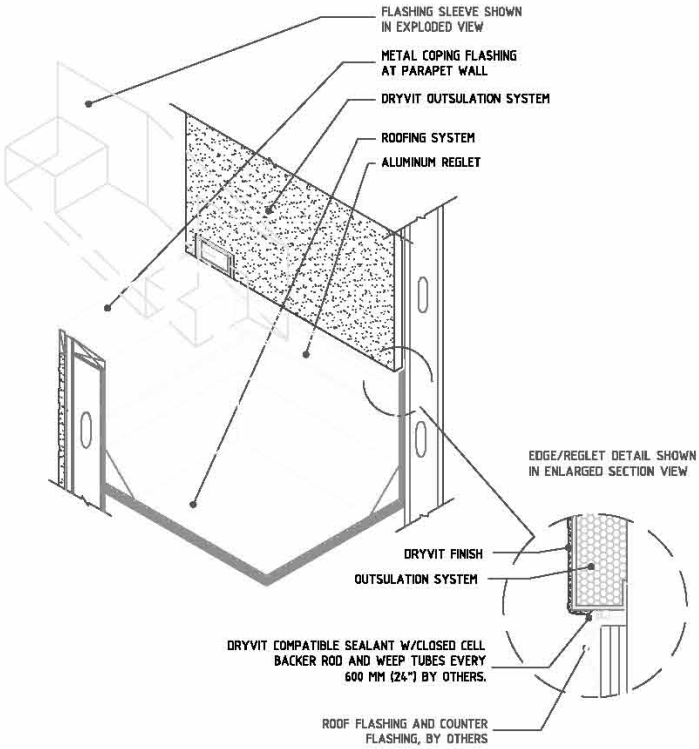

Termination at Parapet

FIGURE 1 (Continued)

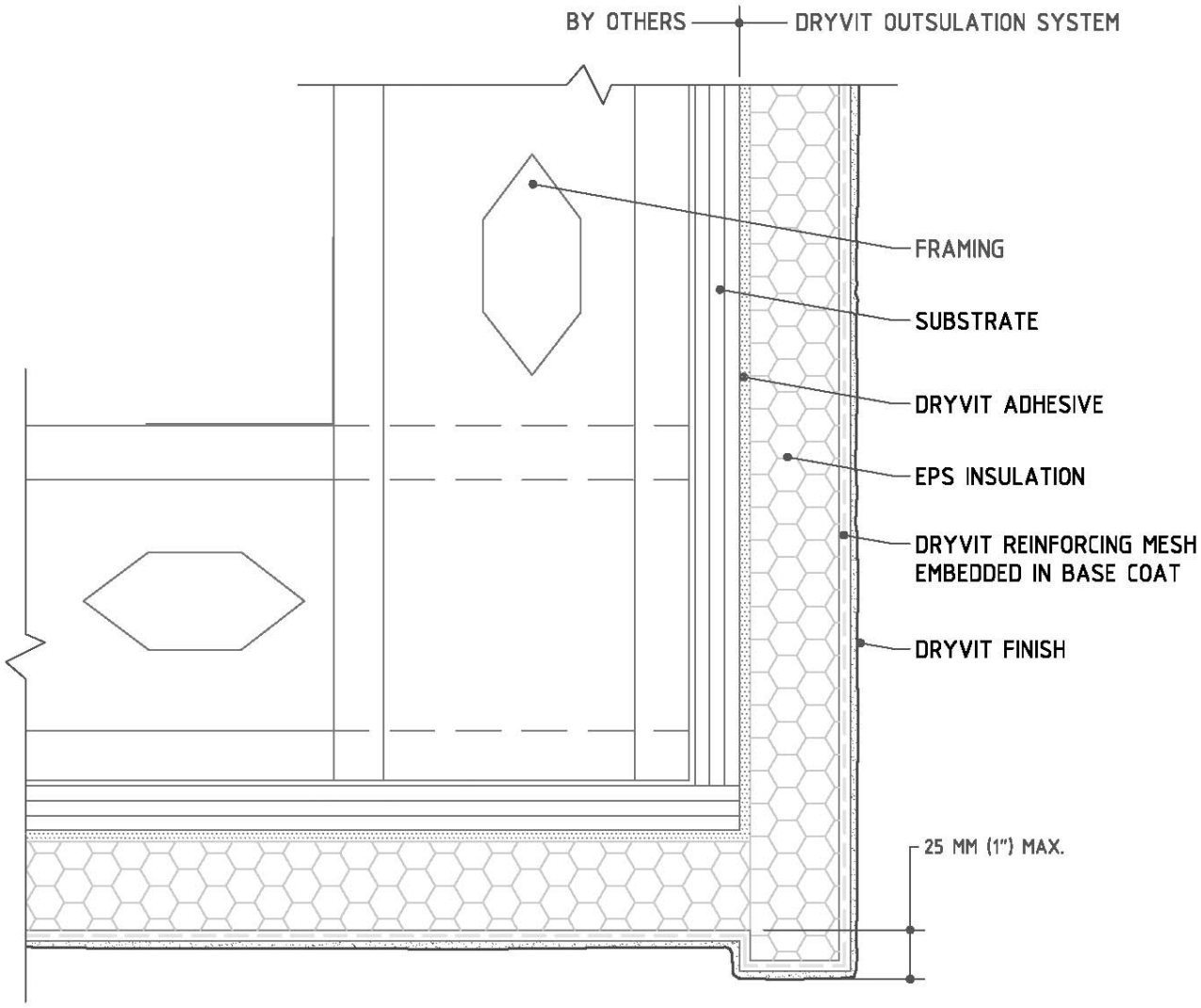

Soffit Layout

FIGURE 1 (Continued)

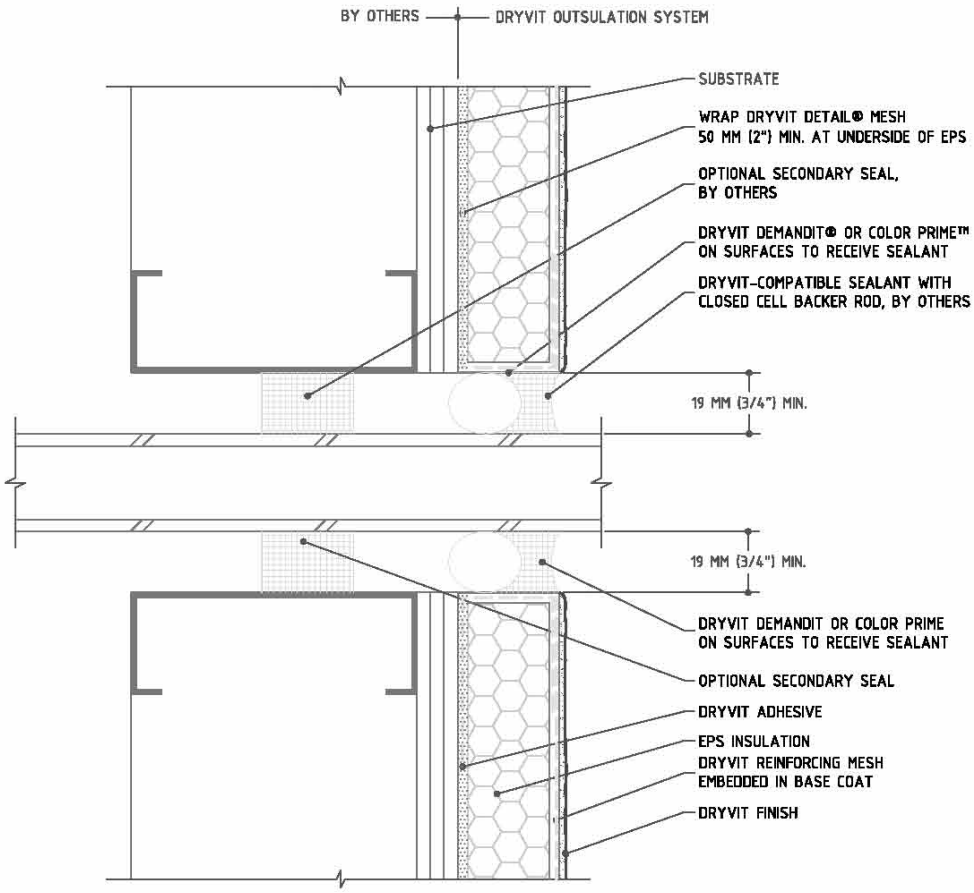

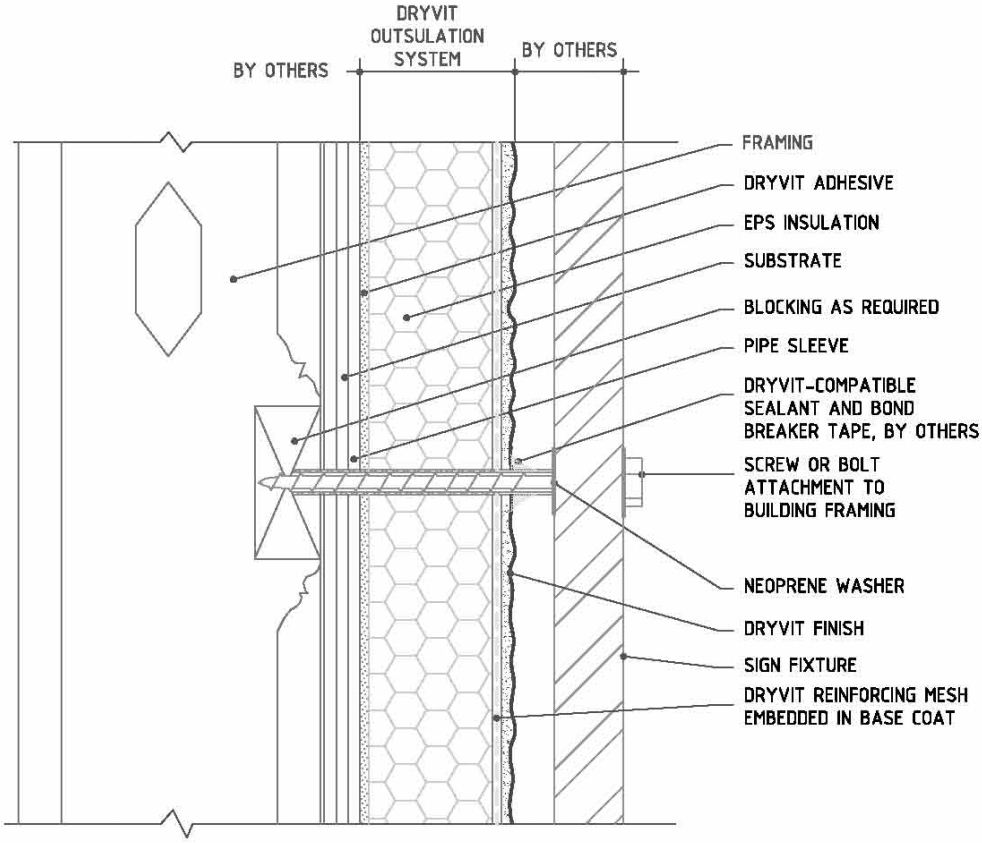

Penetrations

FIGURE 1 (Continued)

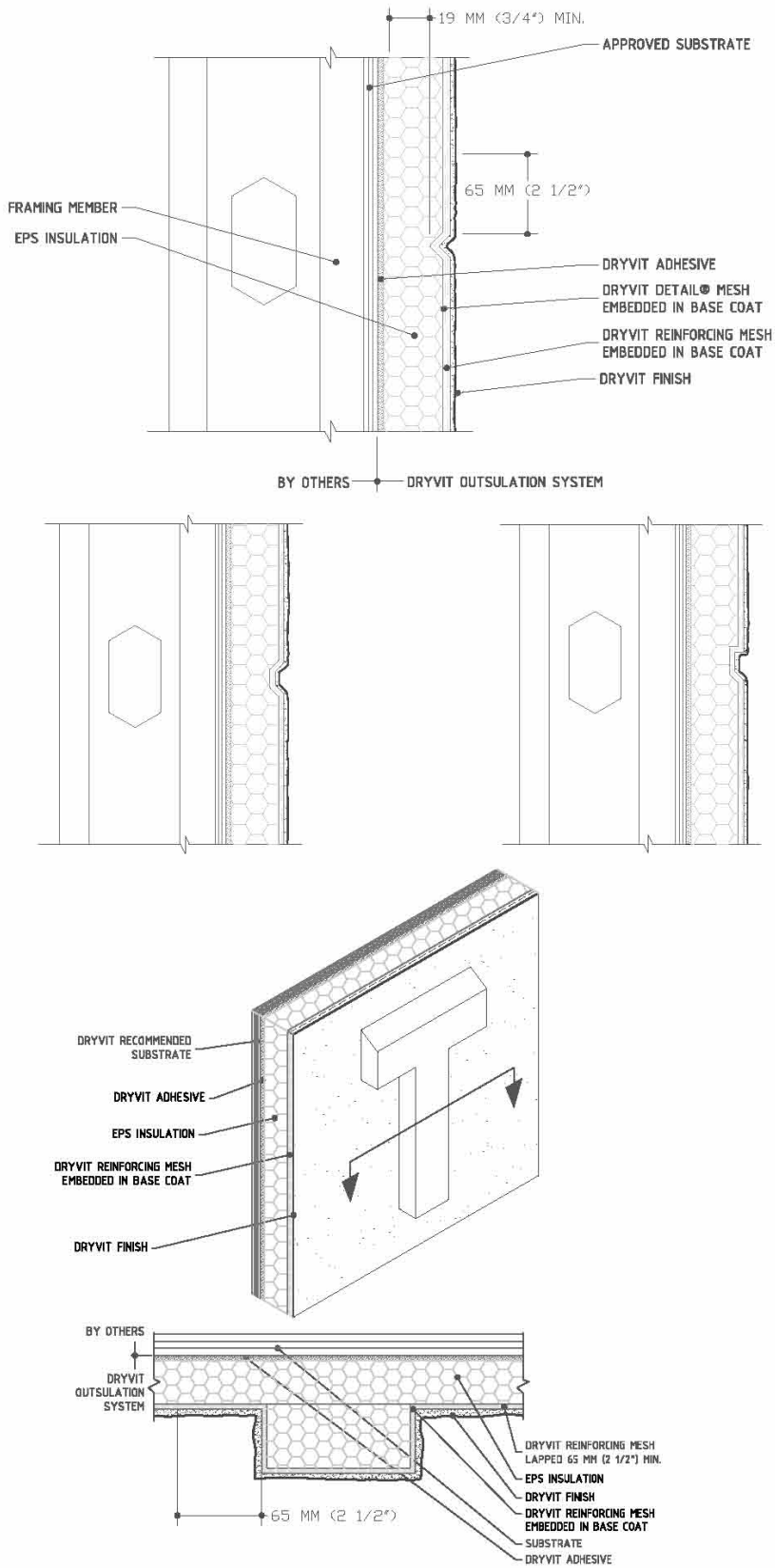

Accents

FIGURE 1 (Continued)

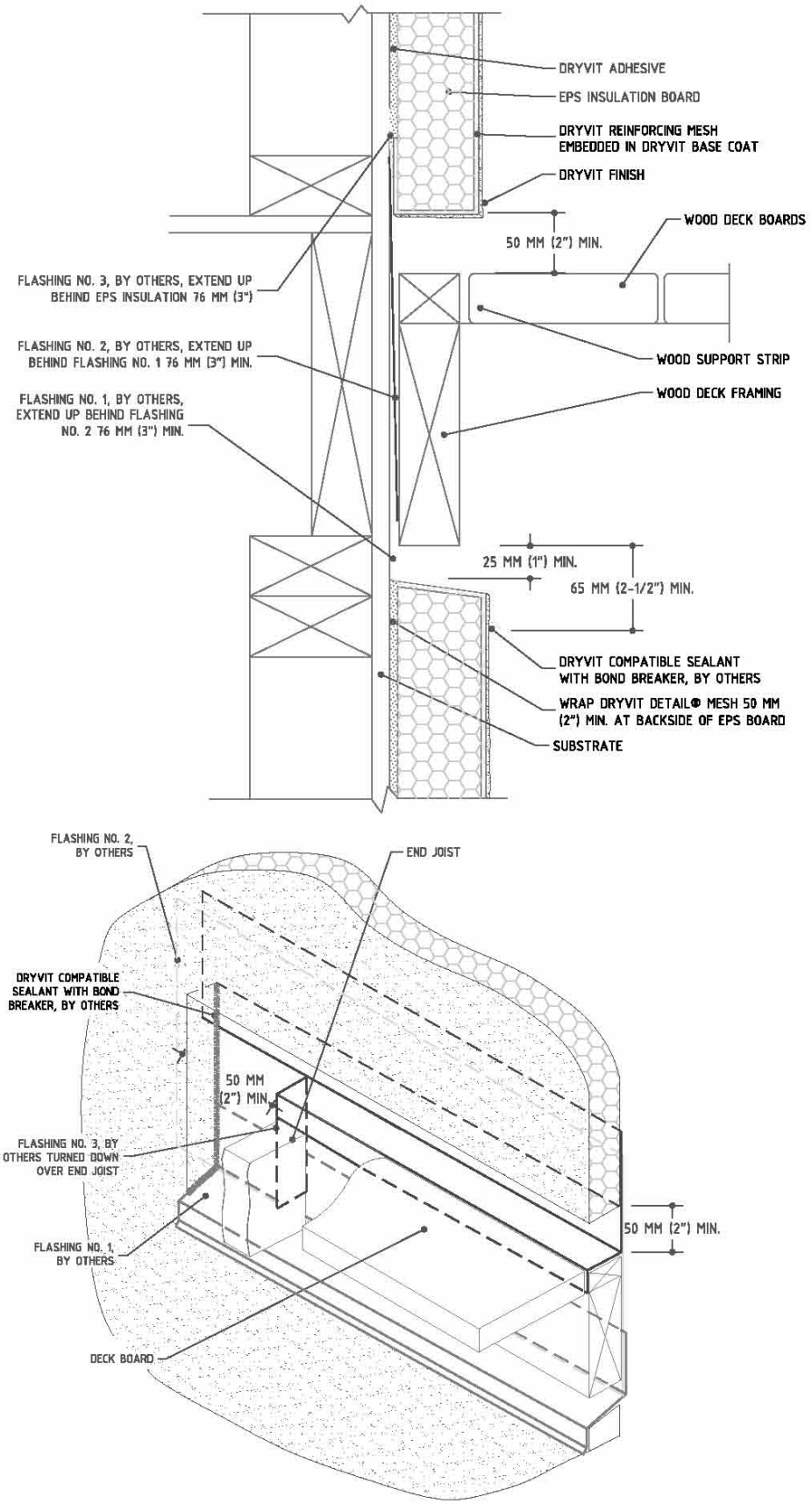

Deck Flashing

FIGURE 1 (Continued)

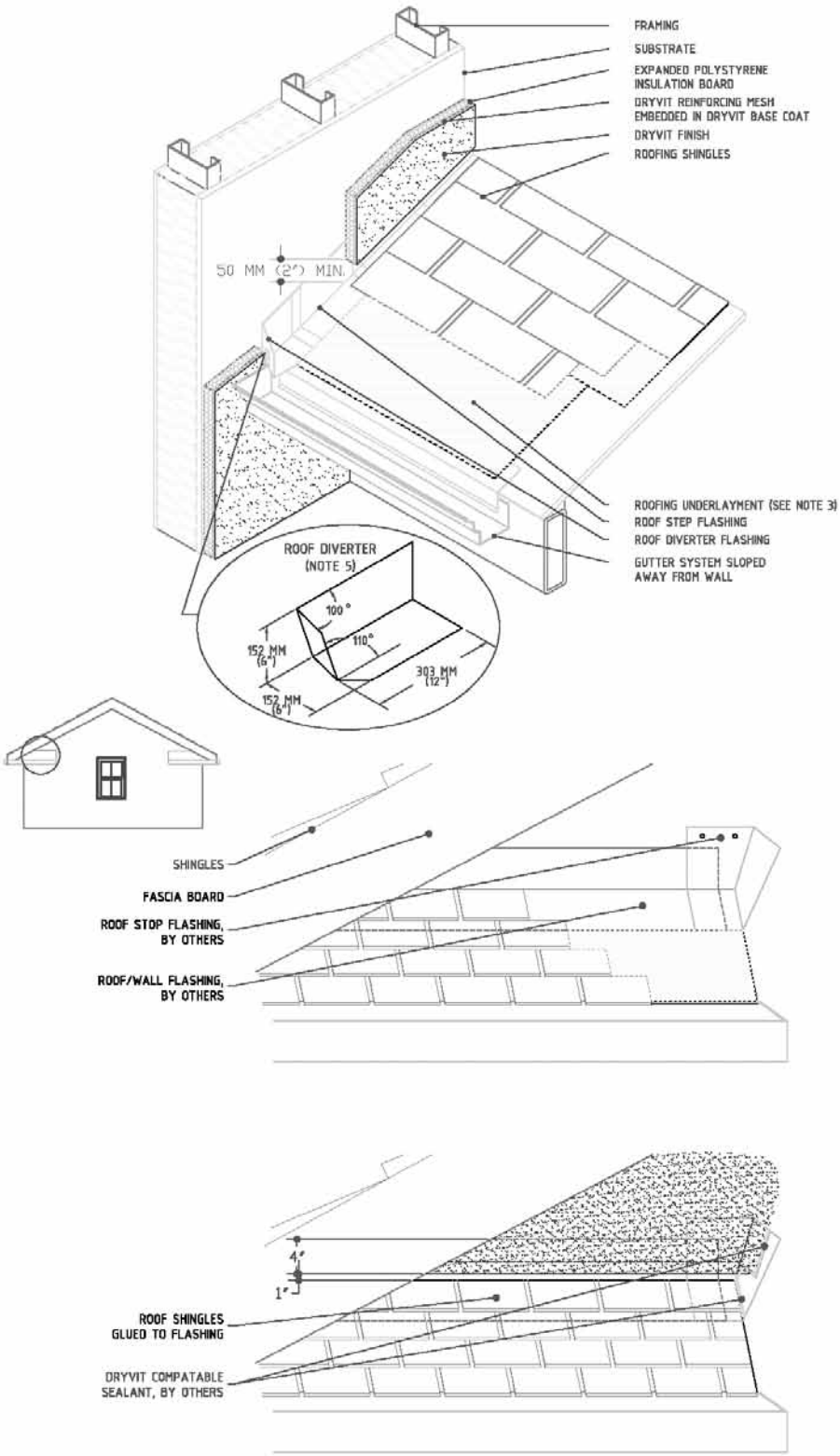

Roof Flashing

FIGURE 1 (Continued)

EXHIBIT A

(EIFS CONTRACTOR NAME)

Completion Date: _____

THE EXTERIOR INSULATION AND FINISH SYSTEM (EIFS) INSTALLED ON THE STRUCTURE LOCATED AT THE ADDRESS BELOW CONFORMS:

TO (EIFS MANUFACTURER NAME) RECOMMENDED INSTALLATION PRACTICES AND SECTION(S) _____ OF ICC-ES, INC., REPORT NO._____.

Address of Structure:

_____

_____

_____

_____

Product Component Names:

Adhesive(s) _____

Fasteners (mech) _____

Base Coat _____

Reinforcing Fabric _____

Finish Coat(s) _____

INSTALLATION	CONFORMS
A.Substrate Type and Tolerance	_____
B.EIFS	
1.Adhesive and/or Fasteners	_____
2.Insulation	_____
3.Reinforcing Fabric	_____
4.Base Coat	_____
5.Finish	_____

C.The information entered above is offered in testimony that the EIFS installation conforms with the EIFS manufacturer's installation methods and procedures, and the EIFS manufacturer's ES report.

NOTE: An installation card shall be received from the Sealant Installer indicating that the sealant installation conforms with the EIFS evaluation report and sealant manufacturer's installation methods and procedures must accompany this declaration.

EIFS Contractor Company Name and Address:

_____

_____

_____

_____

Signature of Responsible Officer: _____

Typed Name and Title of Officer: _____

Telephone Number: (_____) _____

cc:	Original:	Building Department	(Must be submitted with sealant installation declaration.)
	Copy:	EIFS Manufacturer	

FIGURE 2

EXHIBIT B

(SEALANT INSTALLER NAME)

Completion Date: _____

THE SEALANT INSTALLED IN CONJUNCTION WITH AN EXTERIOR INSULATION AND FINISH SYSTEM (EIFS) INSTALLED ON THE STRUCTURE LOCATED AT THE ADDRESS INDICATED BELOW CONFORMS:

TO (EIFS MANUFACTURER NAME) AND (SEALANT MANUFACTURER'S NAME) RECOMMENDED INSTALLATION PRACTICES AND SECTION(S) _____ OF ICC-ES, INC., REPORT NO._____ .

Address of Structure:

_____

_____

_____

_____

Product Component Names:

Primer(s) _____

Sealers _____

Bond Breakers _____

Sealant Materials _____

INSTALLATION	CONFORMS
A.Designer's requirements, details and instructions.	_____
B.Sealant manufacturer's details and requirements.	_____
C.Exterior insulation manufacturer's requirements	_____

D.The information entered above is offered in testimony that the Sealant installation conforms with the sealant manufacturer's installation methods and procedures, and the EIFS manufacturer's evaluation report.

Sealant Installer Company Name and Address:

_____

_____

_____

_____

Signature of Responsible Officer: _____

Typed Name and Title of Officer: _____

Telephone Number: (_____)_____

cc:	Original:	Building Department	(Must be submitted with sealant installation declaration.)
	Copy:	EIFS Manufacturer	
		EIFS Contractor	
		Sealant Manufacturer	

FIGURE 3

LEGACY REPORT

ER-3559

Reissued March 1, 2004

ICC Evaluation Service, Inc.
www.icc-es.org

Business/Regional Office ■ 5360 Workman Mill Road, Whittier, California 90601 ■ (562) 699-0543
Regional Office ■ 900 Montclair Road, Suite A, Birmingham, Alabama 35213 ■ (205) 599-9800
Regional Office ■ 4051 West Flossmoor Road, Country Club Hills, Illinois 60478 ■ (708) 799-2305

Legacy report on the 1997 *Uniform Building Code*™

DIVISION: 07—THERMAL AND MOISTURE PROTECTION
Section: 07240—Exterior Insulation and Finish Systems

INSUL-FLEX EXTERIOR WALL FINISH AND INSULATING SYSTEMS

EL REY STUCCO COMPANY, INC.
4100 BROADWAY SOUTHEAST
ALBUQUERQUE, NEW MEXICO 87105

1.0 SUBJECT

Insul-Flex Adhered and Insul-Flex Water Management Exterior Insulation and Finish System.

2.0 DESCRIPTION

2.1 General:

The exterior wall finish and insulation system consists of four components that are applied to exterior concrete or concrete masonry walls, and framed walls with sheathing attached to framing. These components are expanded polystyrene (EPS) insulation board, woven glass fabric, adhesive, and acrylic-based or acrylic-modified cement stucco finish. The lamina, comprised of fabric, adhesive and finishes, has a flame-spread rating of 25 or less and a maximum smoke-developed rating of 450 when tested in accordance with UBC Standard 8-1.

For EIFS system installations in Type V construction utilizing wood or steel stud framing, mechanically attached systems described in Section 2.3.4, with a paper or felt weather-protection barrier complying with Section 1402 of the code, are required. Compliance with Section 1402.2, Section 2506.4, and the third paragraph of Section 2506.5 of the code shall be established for the required weather protection.

For EIFS installations utilizing steel stud framing in other than Type V construction Group R, Division 1 and Division 3, Occupancies, the exterior wall finish and insulation system may be adhered or mechanically-fastened, with or without a paper or felt weather-protection barrier, to vertical substrates.

Regardless of construction type, for masonry or concrete substrates, the exterior wall finish and installation system may be adhered or mechanically fastened, with or without a paper or felt weather-protection barrier.

2.2 Materials:

2.2.1 Ground/Adhesive Coat: The following four types of ground/adhesive coat are available:

1. INSUL-BOND; combines portland cement and additives, preblended and packaged in 50-pound (22.68 kg) bags, with 1.5 gallons (5.67 L) of acrylic admixture, added during mixing. The admixture has a one-year shelf life.
2. INSUL-BOND P; combines portland cement, aggregate, powdered polymer and additives, packaged in 50-pound (22.68 kg) bags, with approximately 1.5 gallons (5.67 L) of water, added during mixing.
3. INSUL-BOND L; combines liquid polymers, aggregates and additives, packaged in 60-pound (27.22 kg) pails, with equal volumes of portland cement, added in the field. Mixtures have a 45-minute pot life. Small amounts of water may be added to improve workability. The liquid has a shelf life of one year.
4. INSUL-BOND Sanded; combines portland cement, aggregate and additives in 50-pound (22.68 kg) bags. One gallon (3.8 L) of acrylic admixture and approximately $^1/_2$ gallon (1.89 L) of water are blended with the bag's contents. The admixture has a one-year shelf life.

2.2.2 Insulation Board:

2.2.2.1 Type WSG Rigid Expanded Polystyrene: Type WSG rigid EPS is recognized in evaluation report ESR-1006 in thicknesses from $^3/_4$ inch to 4 inches (19.1 mm to 102 mm). For routed EPS water management systems, the minimum 1-inch-thick (25 mm) EPS is grooved (routed) with $^1/_4$-inch (6.4 mm) square grooves spaced 3 inches (76 mm) apart vertically with both horizontal edges chamfered $^1/_4$ inch (6.4 mm).

2.2.2.2 Type EWG-90 Rigid Expanded Polystyrene: Type EWG-90 rigid EPS is recognized in evaluation report ER-4059 in thicknesses from $^3/_4$ inch to 4 inches (19.1 mm to 102 mm). For routed EPS water management systems, the minimum 1-inch-thick (25 mm) EPS is grooved (routed) with $^1/_4$-inch (6.4 mm) square grooves spaced 3 inches (76 mm) apart vertically with both horizontal edges chamfered $^1/_4$ inch (6.4 mm).

2.2.3 Reinforcing Fabric:

2.2.3.1 Standard Fabric: Glass fiber mesh rolls are approximately 38 inches (965 mm) wide by 100 to 150 feet (30 480 to 45 720 mm) long, and weigh a nominal 4.5 ounces per square yard (152 g/m^2).

2.2.3.2 Intermediate Fabric: The intermediate fabric is a glass fiber mesh of a proprietary nature, treated for alkaline resistance. Rolls are approximately 38 inches (965 mm) wide by 200 feet (60 960 mm) long, and weigh a nominal 9 ounces per square yard (304 g/m^2).

ICC-ES legacy reports are not to be construed as representing aesthetics or any other attributes not specifically addressed, nor are they to be construed as an endorsement of the subject of the report or a recommendation for its use. There is no warranty by ICC Evaluation Service, Inc., express or implied, as to any finding or other matter in this report, or as to any product covered by the report.

Copyright © 2004

2.2.3.3 Heavy-duty Fabric: The heavy-duty fabric is a glass fiber mesh of a proprietary nature, treated for alkaline resistance. Rolls are approximately 38 inches (965 mm) wide by 75 feet (22 860 mm) long, and weigh a minimum of 15 ounces per square yard (509 g/m^2). Thread count is four per inch (6.4 mm on center).

2.2.4 Weep-Master Mesh: The polypropylene mesh is $^1/_8$ inch (3.2 mm) thick. The mesh comes in rolls 39 inches (991 mm) wide by 250 feet (76 200 mm) long, and weighs 1.7 ounces per square yard (60 g/m^2).

2.2.5 Finish Coat:

2.2.5.1 Super-Flex: Super-Flex finish is a modified cement stucco manufactured by El Rey Stucco. Finish coat batches consist of 94 pounds (42.6 kg) of Super-Flex, approximately 2 gallons (75 L) of clean, potable water, and 1 gallon (3.8 L) of El Rey Super-Flex acrylic additive. The additive has a one-year shelf life. The components are mixed at the jobsite before application.

2.2.5.2 Perma-Flex: Perma-Flex is an acrylic-based, factory-mixed coating. The Perma-Flex finish contains various sizes of aggregates, which control the thickness of the finish. The Perma-Flex comes packaged ready to use, in 60-pound (27.22 kg) containers. Small amounts of water may be added for desired consistency. The materials have a one-year shelf life.

2.2.6 Gypsum Sheathing: The sheathing shall be water-resistant core gypsum sheathing board complying with ASTM C 79, and has a minimum thickness of $^1/_2$ inch (12.7 mm) unless otherwise noted in this report.

2.2.7 Plywood: The plywood shall be exterior grade plywood complying with UBC Standard 23-2, and shall have a minimum thickness of $^7/_{16}$ inch (11.1 mm).

2.2.8 Oriented Strand Board (OSB): OSB shall comply with specifications for Exposure 1, performance-rated panels in UBC Standard 23-3, and shall have a minimum thickness of $^7/_{16}$ inch (11.1 mm).

2.2.9 Dens Glass Gold™: Dens-Glass Gold shall comply with ER-4305.

2.2.10 Fiber Cement Board: Fiber cement panels shall comply with NER-405 and ER-5139.

2.2.11 Durock Cement Board: Durock cement board shall comply with NER-259.

2.2.12 Mechanical Fasteners:

2.2.12.1 General: Mechanical fasteners attach the insulation to the substrate or framing. Washers are required with all nails, screws and anchors, and must be approved by El Rey Stucco Company. The approved washers are Wind Devil plastic washers, manufactured by Wind-Lock Corporation, and Plasti-Grip III and IV washers, manufactured by Rodenhouse Inc., all measuring 1$^3/_4$ inches (44.5 mm) in diameter; and the Wind Devil 2 plastic washer, manufactured by Wind-Lock Corporation, measuring 2 inches (51 mm) in diameter. Staples can be used to mechanically attach EPS foam to wood substrates. The galvanized steel staples are No. 16 gage by 1-inch-crown (25 mm), and are installed over the reinforcing mesh as described in Section 2.3.4.3.1. Staples legs shall be long enough to penetrate through wood sheathing.

2.2.12.2 Wood-based Sheathing and Framing Substrates: Wood screws are minimum No. 6 steel, with a corrosion-resistant coating, and must have sufficient length to penetrate through the wood-based sheathing. When required to penetrate into framing, the minimum penetration is 1 inch (25 mm).

2.2.12.3 Light-gage Steel Framing: Screws are minimum No. 8 steel, self-drilling screws with a corrosion-resistant coating, and must have sufficient length to penetrate a minimum of $^3/_8$ inch (9.5 mm) into the framing.

2.2.13 Sealants: The sealants must be compatible with the EIFS components and be recommended by El Rey Stucco Company, Inc. Evidence must be submitted to the building official showing that the EIFS manufacturer–recommended sealant is a Type S, minimum Grade NS, minimum Class 25, and Use O sealant complying with ASTM C 920. Under the Use O classification, the sealant shall be qualified for each material to which the sealant will be applied. The details for sealant installation, including the width and thickness of the sealant, shall be designed by the registered design professional, designer, builder or El Rey Stucco Company, Inc., in that order, to the satisfaction of the building official.

2.2.14 Weep Screed: The weep screed used with the Water Management System described in Section 2.3.4 is manufactured by Vinyl Corp, Model CBS100-332WB.

2.3 Application:

2.3.1 Standard Adhered System: The insulation board is installed horizontally in running bond on structurally sound, clean, dry and smooth concrete, masonry, portland cement plaster or gypsum sheathing substrates, with all dust and deleterious materials removed. The Insul-Flex System must not be applied if the ambient air temperature is expected to fall below 40˚F (4˚C) within 48 hours following application. Surface irregularities must be held to approximately $^1/_4$ inch (6.4 mm), maximum. The ground/adhesive coat is applied over the entire sheathing surface with a stainless steel trowel having $^1/_4$-inch-by-$^1/_4$-inch (6.4 mm by 6.4 mm) notches. The EPS board is applied with even pressure over the entire surface, compressing the ground/adhesive coat to an approximate $^1/_8$-inch (3.2 mm) thickness. All board joints are staggered and tightly butted. A $^1/_{16}$-inch (1.6 mm) coating of ground/adhesive coat is then troweled, with a smooth edge trowel, over the board surface, and fiberglass mesh is rolled horizontally and pressed against the EPS board until the coating extrudes through the mesh. The mesh is overlapped a minimum of 2 inches (51 mm) along the edges, and must be continuous at board corners. The Super-Flex or Perma-Flex finish coat is trowel- or spray-applied after the base coat is thoroughly dry, which ordinarily requires 8 to 10 hours at normal temperatures. Minimum total thickness is $^1/_8$ inch (3.2 mm) for Super-Flex. For Perma-Flex, the minimum total thickness is based on the largest aggregate size, but no less than $^1/_8$ inch (3.2 mm). All exposed joints must be primed and caulked with sealant described in Section 2.2.1.3. All sealants must comply with ASTM C 920. The sheathing is minimum $^1/_2$-inch-thick (12.7 mm), water-resistant core gypsum sheathing, and is applied to minimum No. 18 gage [0.0478-inch (1.21 mm) base metal] steel studs spaced at 24 inches (610 mm) on center with No. 8, buglehead, S12, self-tapping, 1$^1/_4$-inch-long (31.7 mm) screws spaced at 6 inches (152 mm) on center. Issues concerning the adequacy of the steel framing system to resist the applied load must be investigated.

Given these conditions of installation, the system is recognized for maximum positive or negative wind pressures of 48 pounds per square foot (2298 Pa). The wall system deflection is limited to a maximum $^1/_{180}$ of the steel framing span. See Figure 1 for typical details.

2.3.2 Hard Guard System: The Hard Guard system is similar to the standard system, except that a $^1/_4$-inch-thick (6.4 mm) layer of INSUL-BOND Sanded is troweled over the insulation board surface. After this layer has cured, a $^1/_{16}$-inch-thick (1.6 mm) layer of INSUL-BOND is troweled over the first layer. The standard fabric is pressed into the wet coat until the material extrudes through the fabric.

2.3.3 Hi-Impact System: The Hi-Impact system is similar to the standard system, except the intermediate or heavy-duty fabric is used, for additional impact resistance.

2.3.4 Mechanically Fastened System Over Framing with Water Management: El Rey Stucco Water Management System may be applied using one of two different methods, as shown in Figure 1 and described in Sections 2.3.4.1 and 2.3.4.2.

2.3.4.1 Weep-Master® Mesh Drainage System Method: This method uses Weep-Master spacing mesh over the weather-resistive barrier. The EPS is installed over the Weep-Master spacing mesh and mechanically fastened with Wind-Lock fasteners, Rodenhouse fasteners or zinc-coated staples. The EPS foam plastic thickness is from $^3/_4$ inch to 4 inches (19 mm to 102 mm).

2.3.4.2 Routed EPS Drainage System Method: This second method uses the specifically routed and chamfered foam plastic described in Section 2.2.2 over the weather-resistive barrier. The thickness of the EPS foam is from 1 inch to 4 inches (25.4 to 102 mm).

2.3.4.3 Installation: Mechanically fastened systems are used on wood or steel studs. Sheathing includes plywood, OSB, water-resistant core gypsum sheathing, and cement-based sheathing applied in accordance with the code or applicable ICC-ES evaluation report. A weather-resistive barrier complying with Section 1402.1 of the code is applied over the substrates. A weather-resistive barrier consisting of two layers of Grade D building paper is placed over wood sheathing substrates. For the system described in Section 2.3.4.1, the Weep-Master mesh is placed over the weather-resistive barrier. For both systems, the insulation board is placed over the mesh (when used), weather-resistive barrier and substrate, and mechanically fastened as described in Section 2.3.4.3.1 or 2.3.4.3.2. The base coat, reinforcing mesh and finish coat are then applied in a manner similar to the application described in Section 2.3.1, 2.3.2 or 2.3.3. The allowable wind load is shown in Table 1. Studs must be designed to resist imposed loads.

2.3.4.3.1 Wood-based Sheathing: EPS is mechanically attached directly to the wood substrates, using plastic washers and wood screws described in Section 2.2.12. The fastening pattern follows either Pattern A or Pattern B shown in Figure 2.

Sixteen gage by 1-inch-crown (25 mm) staples may be used to mechanically attach EPS foam to wood-based sheathing. The staples are installed over the fiberglass reinforcing mesh. The staple legs shall be long enough to penetrate through the sheathing thickness, and under no circumstances shall be less than $1^1/_4$ inches (31.7 mm). The fastening pattern follows Pattern D shown in Figure 2.

2.3.4.3.2 Gypsum-based and Cement-based Sheathing: For water-resistant gypsum sheathing, Dens-Glass Gold sheathing, United States Gypsum Durock and fiber cement boards, the EPS foam plastic is mechanically attached to wood or steel studs using plastic washers and wood or steel screws described in Section 2.2.12. The fastening pattern follows Pattern C shown in Figure 2.

2.3.5 Mechanically Attached System Without Water Management: Installation is similar to that described in Section 2.3.4, except water management components are not used.

2.3.6 Mechanically Fastened System Over Concrete/Masonry Substrates: The insulation board is applied horizontally to the substrates in a running bond pattern, and is temporarily attached with two fasteners placed through washers. Fasteners are corrosion-resistant-steel masonry screws, with a minimum $^1/_4$-inch (6.4 mm) diameter and a minimum head diameter of $^3/_8$ inch (9.5 mm). Washers described in Section 2.2.12 must be used with the screws.

Adequacy of fasteners in cementitious substrates must be determined by a proof load test program involving fastener withdrawal from the substrate in question. Testing must be conducted by an independent testing laboratory. Based on a 12-inch-by-16-inch (305 mm by 406 mm) spacing and an allowable wind pressure of 32 psf (1132 Pa), proof load tests must indicate a minimum 256-pound (1139 N) ultimate load for each fastener. A minimum of five tests per program are required, with results varying from the average by no more than 15 percent. If any one of the results vary from the average by more than 15 percent, a minimum of 10 tests per program are required. For masonry substrates, 40 percent of the tests must be run in masonry joints.

The applicator must provide to the building official a certificate of compliance for test results relating to load requirements in this report. The base coat, reinforcing mesh and finish coat are then applied in a fashion similar to the application described in Section 2.3.1, 2.3.2 or 2.3.3.

2.4 Noncombustible Construction:

For installation on walls required to be of noncombustible construction, framing shall be No. 18 gage [0.0478 inch (1.21 mm)] galvanized steel studs spaced 16 to 24 inches (406 to 610 mm) on center. Minimum $^5/_8$-inch-thick (15.9 mm), Type X, gypsum wallboard interior sheathing is placed horizontally and fastened to studs and track with No. 6 by $1^1/_4$-inch-long (31.7 mm) self-tapping screws spaced 6 inches (152 mm) on center. The exterior sheathing is minimum $^1/_2$-inch-thick (12.7 mm) water-resistant core gypsum sheathing, and is placed horizontally and fastened with No. 6 by $1^1/_2$-inch-long (38 mm) self-tapping screws spaced 6 inches (152 mm) on center. The foam plastic, fabric, adhesive and finish (Perma Flex only) are applied in accordance with Section 2.3.1. The foam plastic is limited to a maximum thickness of 4 inches (102 mm). Openings in the wall system must be framed with minimum No. 18 gage [0.0478-inch (21 mm) base metal] steel or equivalent. Firestops, consisting of minimum 4-inch-thick (102 mm), 4-pcf-density (64 kg/m^3), Thermafiber mineral wool insulation (ER-2331), are fitted between studs at each story level.

2.5 Identification:

All containers bear labels noting the name of the product, the expiration date and the El Rey Stucco name and address. The EPS boards are identified in accordance with their respective evaluation reports. When used on walls required to be of noncombustible construction, EPS boards are also identified along the edge of each piece, and on both faces of at least one board from each packaged bundle, with the following information:

1. The Insul-Flex name and the evaluation report number ER-3559.
2. The name and evaluation report number of the insulation board molder.
3. The name of the quality control agency, as indicated in the evaluation report for the foam plastic.

Wind Devil fasteners are identified by fastener name (Wind Devil or Wind Devil 2), and are packaged in paper cartons containing 1,000 pieces.

Plasti-Grip fasteners are identified by fastener name (Plasti-Grip III or Plasti-Grip IV), and are packaged in paper cartons containing 1,000 pieces.

3.0 EVIDENCE SUBMITTED

Data in accordance with the ICC-ES Acceptance Criteria for Exterior Insulation and Finish Systems (AC24), dated June 2003, and a quality control manual.

4.0 FINDINGS

That the Insul-Flex Exterior Wall Finish and Insulating Systems described in this report comply with the 1997 *Uniform Building Code*™, subject to the following conditions:

4.1 Construction is as set forth in this report and the manufacturer's instructions.

4.2 The insulation board is separated from the building interior with a thermal barrier complying with Section 2602.4 of the code.

4.3 The system may be installed on noncombustible exterior walls in accordance with Section 2.4 of this report.

4.4 Installation is by applicators approved by El Rey Stucco Company, Inc. Installation cards, such as those shown in Figures 3 and 4, must be completed by the applicators and presented to the building official at the completion of each project.

4.5 The system may be attached to the surface of a combustible, exterior fire-resistive assembly without changing the assembly's assigned hourly rating.

4.6 For installation on Type V construction in Group R, Division 1 and Division 3, Occupancies, Section 2.3.4, 2.3.5 or 2.3.6 must be observed.

4.7 The system may be applied directly to noncombustible substrates such as concrete and concrete masonry walls.

This report is subject to re-examination in two years.

TABLE 1

FASTENER SYSTEM (Figure 2)	EPS THICKNESS (inches)	SUBSTRATES	FRAMING	WASHER	FASTENER[5]	WIND DESIGN (psf)
Pattern A (fasten to plywood)	1 to 2	See Note 1	See Note 4	Wind Devil, Plasti-Grip III or Plasti-Grip IV	W-1, S-1 W-2, S-2 W-3, S-3	W-1 or S-1 = 21 W-2 or S-2 = 31 W-3 or S-3 = 31
Pattern B (fasten to plywood)	1 to 2	See Note 1	See Note 4	Wind Devil 2	W-1, S-1 W-2, S-2 W-3, S-3	W-1 or S-1 = 40 W-2 or S-2 = 43 W-3 or S-3 = 43
Pattern C (fasten to stud)	1 to 2	See Note 2	See Note 4	Wind Devil 2	W-2, S-2 W-3, S-3	W-2 or S-2 = 29 W-3 or S-3 = 38
Staple (fasten to plywood and OSB)	$^3/_4$ to $1^1/_2$	See Notes 1 and 3	See Note 4	None	No. 16 gage by 1-inch crown; leg length is minimum $1^1/_4$ inches for $^3/_4$-inch EPS, and minimum 2 inches for $1^1/_2$-inch EPS	$^{15}/_{32}$-inch plywood = 53 $^7/_{16}$-inch OSB = 50

For **SI:** 1 inch = 25.4 mm, 1 psf = 47.88 Pa.

Notes:
1. Plywood.
2. Gypsum Sheathing, Dens-Glass Gold, Durock Cement Board or Fiber Cement Sheathing.
3. OSB.
4. Wood with a specific gravity of 0.50 or greater, and minimum 20 gage (0.0359-inch base-metal thickness) steel studs spaced 16 inches on center.
5. W-1 or S-1 for EPS foam a maximum of 1 inch thick, W-2 or S-2 for EPS foam a maximum of $1^1/_2$ inches thick, W-3 or S-3 for EPS foam a maximum of 2 inches thick.

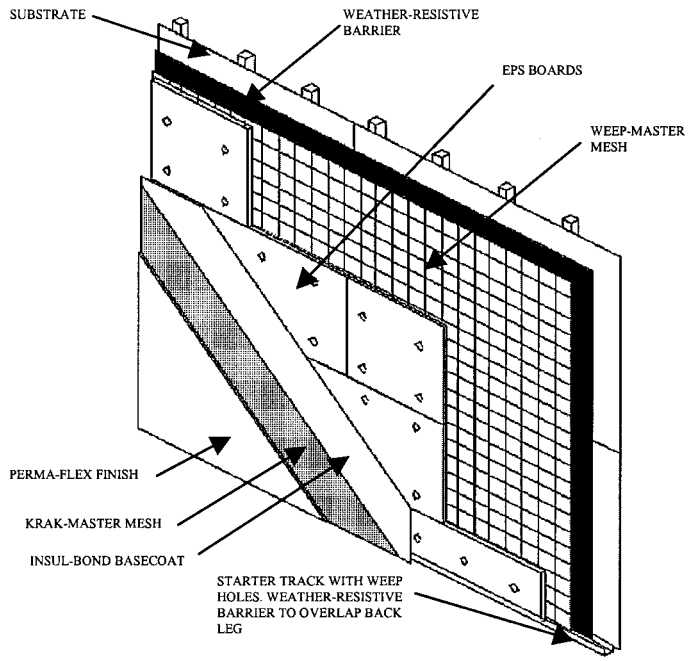

INSUL-FLEX WEEP-MASTER SYSTEM

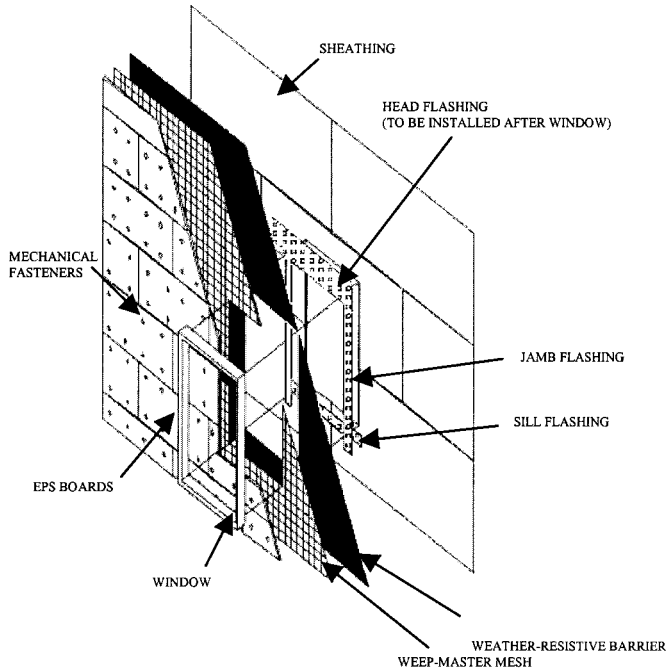

WEEP-MASTER SYSTEM: EXPLODED VIEW

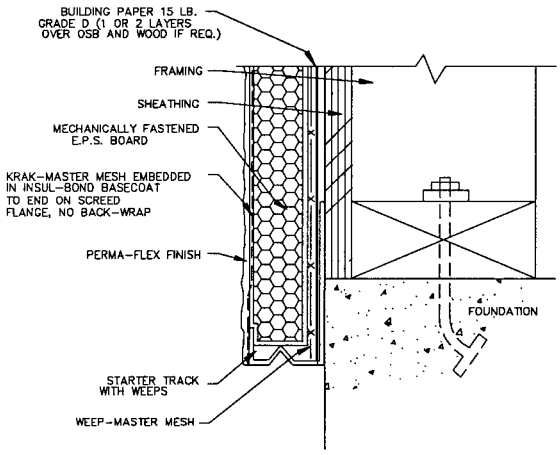

TERMINATION: FOUNDATION

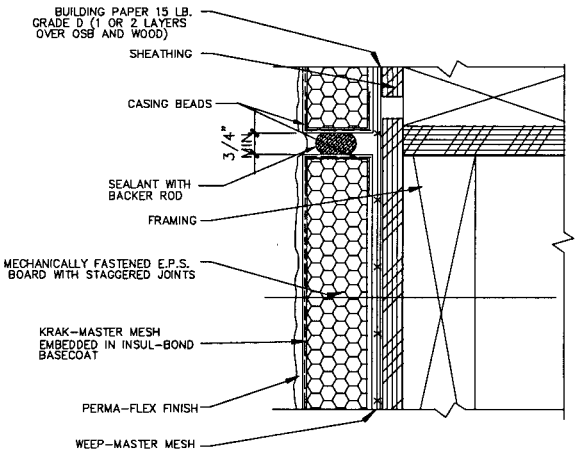

EXPANSION JOINT: FLOORLINE

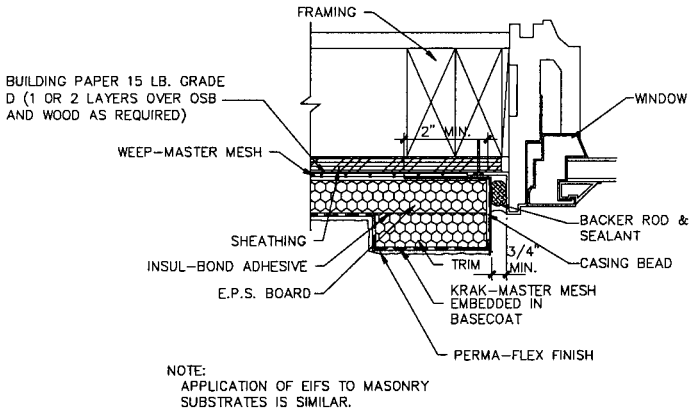

TERMINATION: WINDOW JAMB

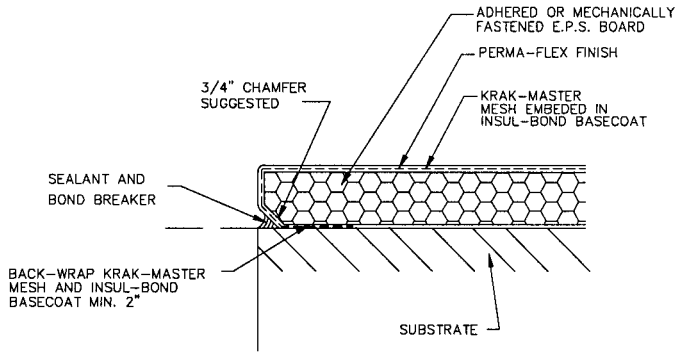

TERMINATION: EDGE

FIGURE 1—TYPICAL DETAILS

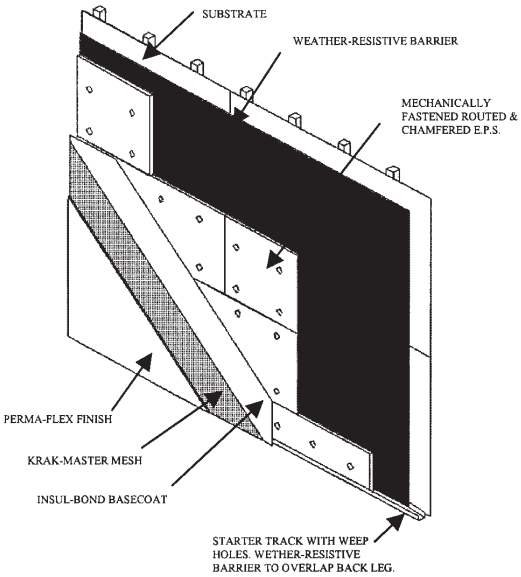

INSUL-FLEX ROUTED EPS SYSTEM

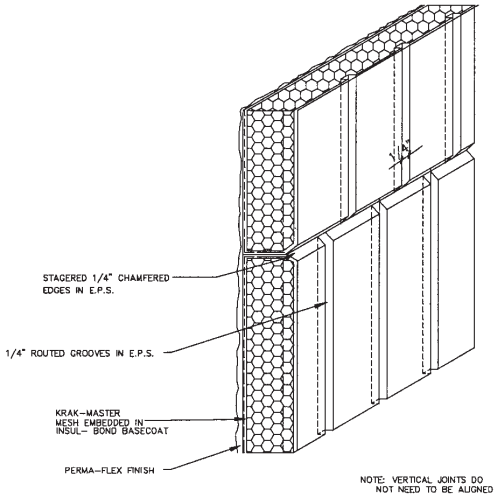

ROUTED EPS JOINT

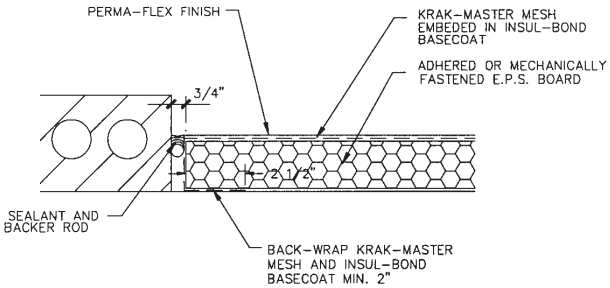

TERMINATION: DISSIMILAR SUBSTRATES

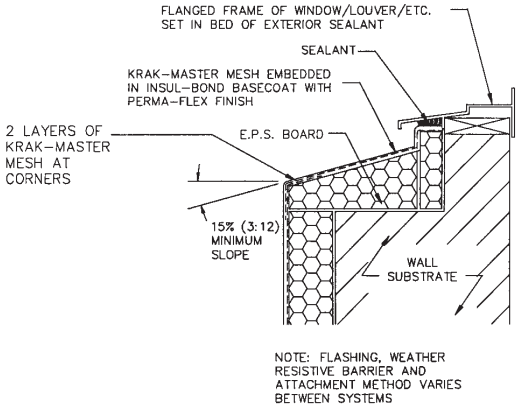

TERMINATION: WINDOW SILL 1

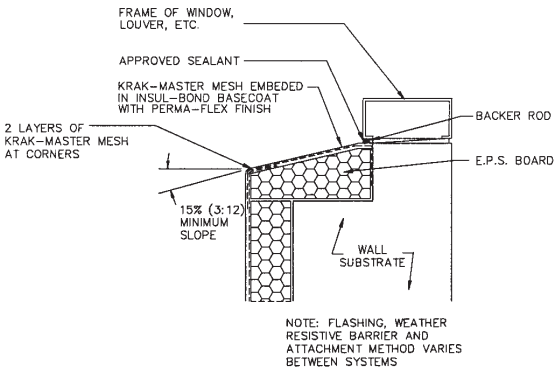

TERMINATION: WINDOW SILL 2

FIGURE 1—TYPICAL DETAILS—(Continued)

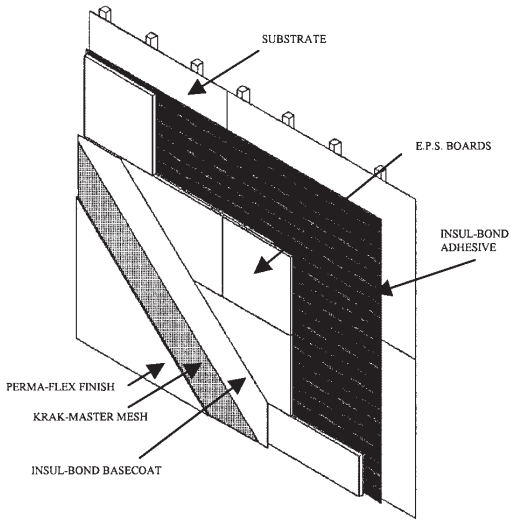

INSUL-FLEX ADHESIVELY ATTACHED SYSTEM

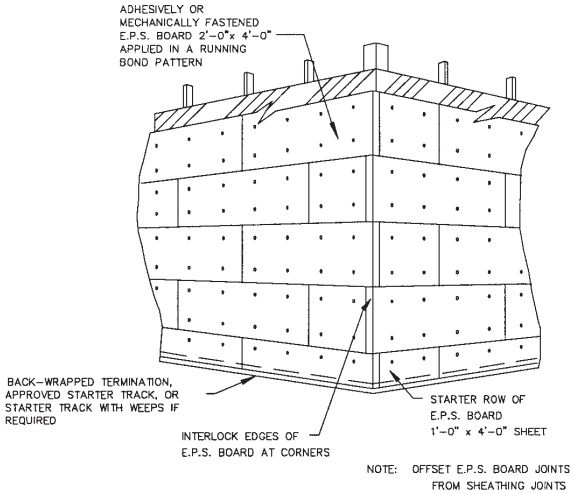

TYPICAL EPS LAYOUT

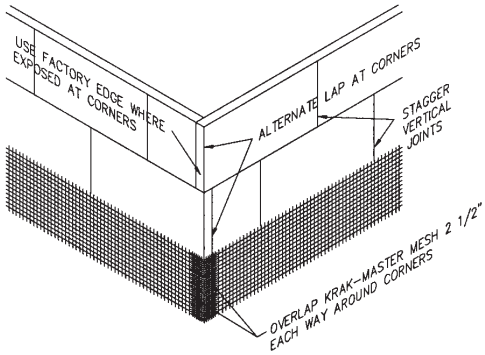

KRAK-MASTER APPLICATION AT CORNER

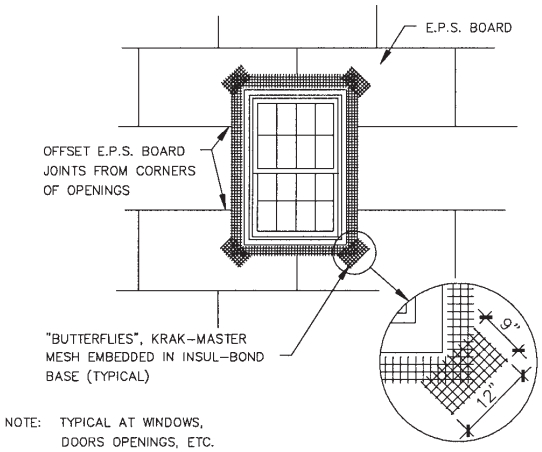

KRAK-MASTER APPLICATION AT OPENING

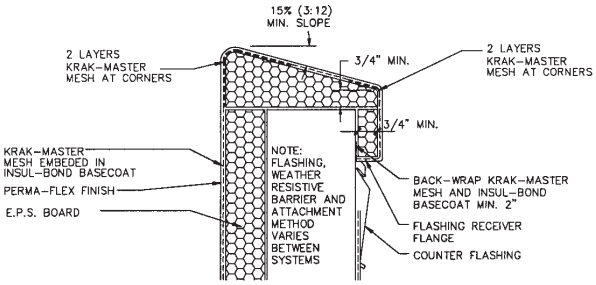

PARAPET CAP 1

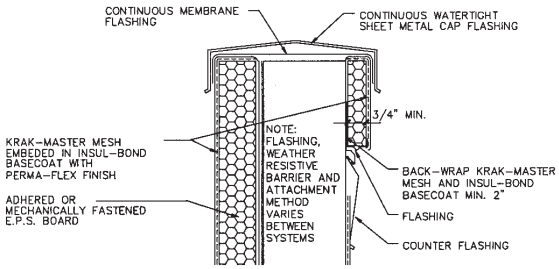

PARAPET CAP 2

FIGURE 1—TYPICAL DETAILS—(Continued)

TYPICAL MECHANICAL FASTENER PATTERNS

FOR EXPANDED POLYSTYRENE (EPS)

A)

Pattern For Attaching Over Wood Substrates

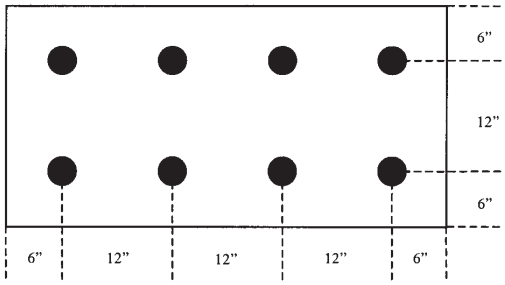

B)

Alternate Pattern For Attaching Over Wood Substrates

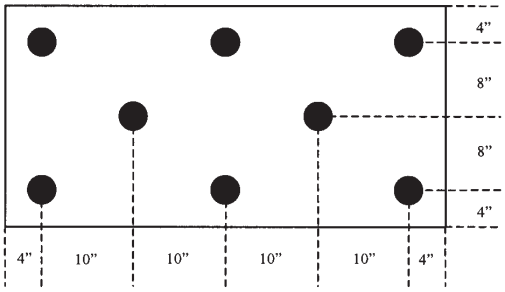

C)

Pattern For Attaching To 16” O.C. Wood or Steel Studs

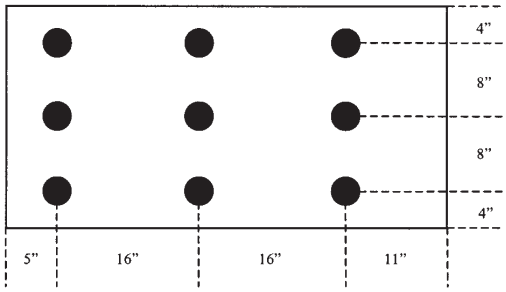

FIGURE 2

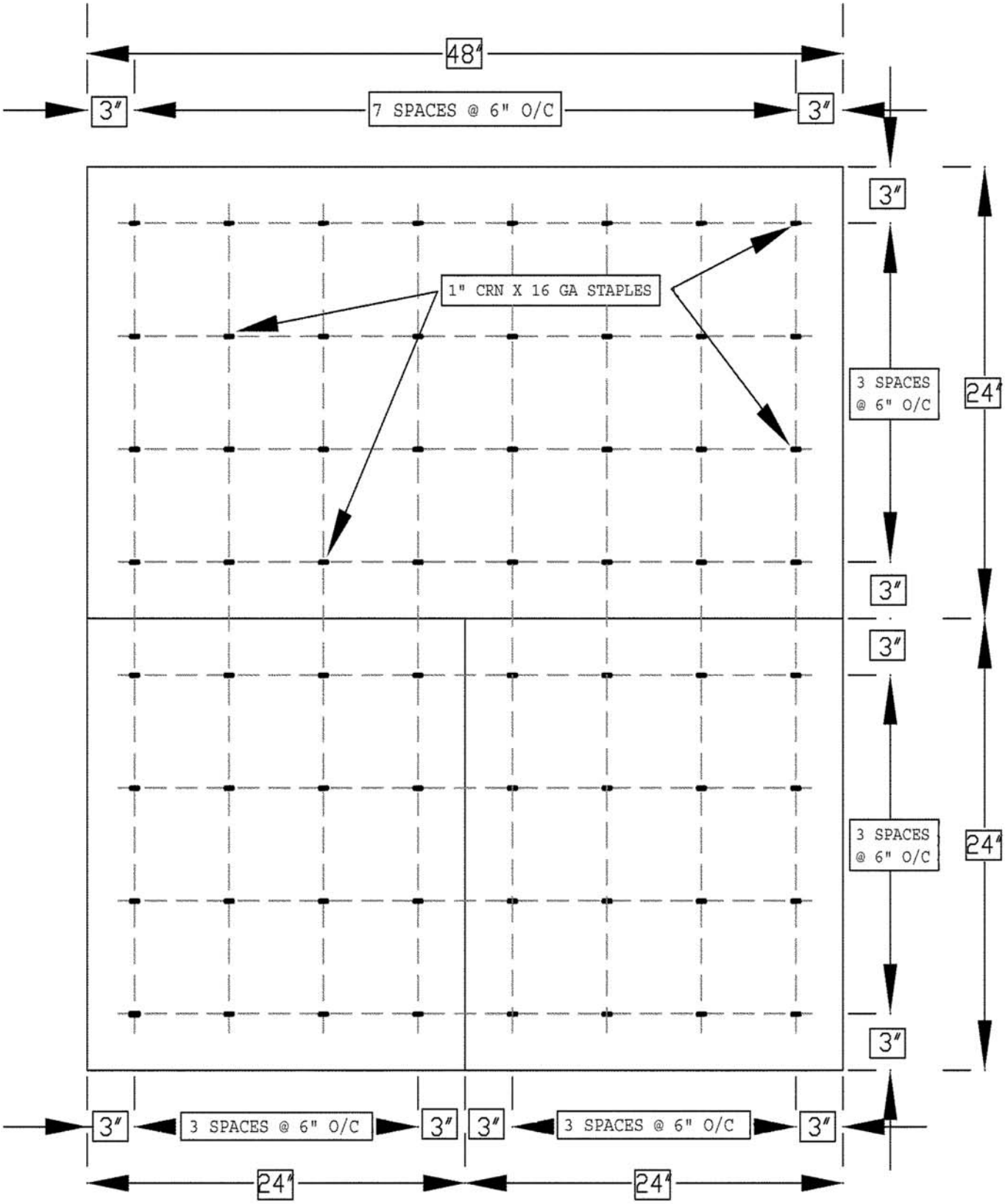

STAPLE PATTERN ON 2' X 4' AND 2' X 2' EPS FOAM.
STAPLE = 1" CROWN X 16 GAGE X MINIMUM 1-1/4" LEG.

Pattern D

FIGURE 2—(Continued)

(EIFS CONTRACTOR NAME)

Completion Date: _____

THE EXTERIOR INSULATION AND FINISH SYSTEM (EIFS) INSTALLED ON THE STRUCTURE LOCATED AT THE ADDRESS INDICATED BELOW:

_____ CONFORMS

TO EL REY STUCCO CO. RECOMMENDED INSTALLATION PRACTICES AND SECTION 2 OF EVALUATION REPORT ER-3559.

Address of Structure:	Product Component Names:
_____	Adhesive(s) _____
_____	Fasteners (mech) _____
_____	Base Coat _____
_____	Reinforcing Fabric _____
	Finish Coat(s) _____

	INSTALLATION	CONFORMS
A.	Substrate Type and Tolerance	_____
B.	EIFS	
	1. Adhesive and/or Fasteners	_____
	2. Insulation	_____
	3. Reinforcing Fabric	_____
	4. Base Coat	_____
	5. Finish	_____
	6. Weather-resistive Barrier	_____

C. The information entered above is offered in testimony that the EIFS installation conforms with the EIFS manufacturer's installation methods and procedures, and the EIFS manufacturer's ES report.

NOTE: An installation card shall be received from the Sealant Installer indicating that the sealant installation conforms with the EIFS evaluation report and sealant manufacturer's installation methods and procedures must accompany this declaration.

EIFS Contractor Company Name and Address:

_____
_____
_____
_____

Signature of Responsible Officer: _____
Name and Title of Officer (typed): _____
Telephone Number: (___) _____

cc:	Original:	Building Department	(Must be submitted with sealant
	Copy:	El Rey Stucco Co.	installer declaration.)

FIGURE 3

(SEALANT INSTALLER NAME)

Completion Date: _____

THE SEALANT INSTALLED IN CONJUNCTION WITH AN EXTERIOR INSULATION AND FINISH SYSTEM (EIFS) INSTALLED ON THE STRUCTURE LOCATED AT THE ADDRESS INDICATED BELOW:

_____ CONFORMS

TO EL REY STUCCO CO. RECOMMENDED INSTALLATION PRACTICES AND SECTION 2 OF EVALUATION REPORT ER-3559.

Address of Structure:	Product Component Names:
_____	Primer(s) _____
_____	Sealers _____
_____	Bond Breakers _____
_____	Sealant Materials _____

	INSTALLATION	CONFORMS
A.	Designer's requirements, details and instructions	_____
B.	Sealant manufacturer's details and requirements	_____
C.	Exterior insulation manufacturer's requirements	_____

D. The information entered above is offered in testimony that the sealant installation conforms with the sealant manufacturer's installation methods and procedures, and the EIFS manufacturer's evaluation report.

Sealant Installer Company Name and Address:

_____
_____
_____
_____

Signature of Responsible Officer: _____
Name and Title of Officer (typed): _____
Telephone Number: (____) _____

cc: Original:	Building Department	(Must be submitted with EIFS contractor declaration.)
Copies:	El Rey Stucco Co.	
	EIFS Contractor	
	Sealant Manufacturer	

FIGURE 4