GOVERNOR'S CARRIAGE HOUSE STABILIZATION

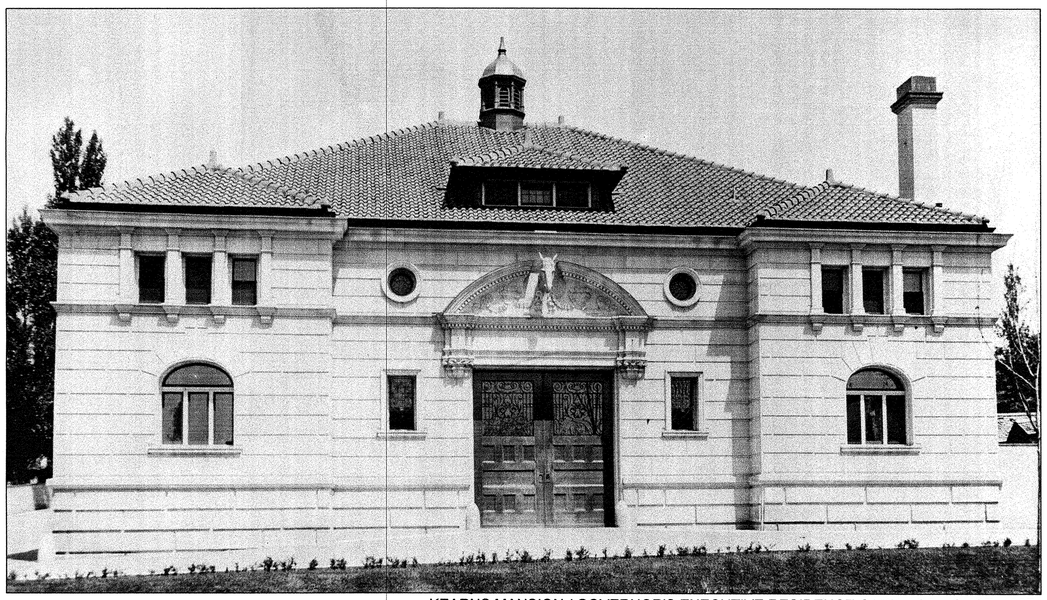

KEARNS MANSION / GOVERNOR'S EXECUTIVE RESIDENCE CARRIAGE HOUSE, 1907

DFCM PROJECT NO. 10032310

603 EAST SOUTH TEMPLE STREET
SALT LAKE CITY, UTAH 84103

BID SET

APRIL 12, 2010

THE GREAT SEAL OF THE STATE OF UTAH
INDUSTRY 1847
1896

State of Utah—Department of Administrative Services

DIVISION OF FACILITIES CONSTRUCTION AND MANAGEMENT

4110 State Office Building/Salt Lake City, Utah 84114/801-538-3018

APPROVALS:

PRIME AGENCY DATE

DFCM DATE

INDEX OF DRAWINGS

GENERAL

AG0-00 COVER SHEET
AG0-01 GENERAL INFORMATION & DESIGN DATA

CIVIL

CE1-01 STORM DRAIN PLAN
CE1-02 PAVING ALTERNATE
CE1-03 PAVING ALTERNATE
CE5-01 PAVING DETAILS

ARCHITECTURAL

AS1-01 SITE PLAN - WEST PHASE
AS1-02 SITE PLAN - EAST PHASE & WEST DRIVE THROUGH

AD2-01 BUILDING DEMOLITION ELEVATIONS

AE1-01 MAIN LEVEL FLOOR PLAN
AE1-02 UPPER LEVEL FLOOR PLAN
AE1-11 ROOF PLAN

AE2-01 EXTERIOR BUILDING ELEVATION - SOUTH
AE2-02 EXTERIOR BUILDING ELEVATION - NORTH
AE2-03 EXTERIOR BUILDING ELEVATION - WEST
AE2-04 EXTERIOR BUILDING ELEVATION - EAST
AE2-05 PARTIAL BUILDING ELEVATIONS

AE3-01 BUILDING SECTIONS
AE3-11 WALL SECTIONS

ARCHITECTURAL (CONT.)

AE5-01 DETAILS
AE5-02 DETAILS

AE6-01 DOOR AND WINDOW SCHEDULES AND ELEVATIONS
AE6-02 DOOR AND WINDOW DETAILS

STRUCTURAL

SG1-00 GENERAL STRUCTURAL NOTES
SE3-01 ROOF FRAMING PLAN
SE5-01 DETAILS
SE5-02 DETAILS

ELECTRICAL

EE0-01 GENERAL NOTES AND SYMBOLS
ES1-01 DEMOLITION SITE PLAN
ES1-02 SITE PLAN
ES1-03 ROOF PLAN
EE1-01 FIRST FLOOR PLAN
EE1-02 SECOND FLOOR PLAN
EE1-03 FRONT ELEVATION PLAN
EE1-04 REAR ELEVATION PLAN
EE1-05 LEFT ELEVATION PLAN
EE1-06 RIGHT ELEVATION PLAN

DEFERRED SUBMITTALS

THE CONTRACTOR IS TO SUBMIT THE FOLLOWING TO THE DFCM BUILDING OFFICIAL FOR REVIEW WITH AN ACCOMPANIED LETTER FROM THE ARCHITECT STATING THE CONTENTS OF THE SUBMITTAL ARE IN CONFORMANCE WITH THE DESIGN. WORK RELATED TO THE DEFERRED SUBMITTAL IS NOT TO COMMENCE UNTIL THE BUILDING OFFICIAL HAS APPROVED THE SUBMITTAL. NOTED DATES ARE SUBJECT TO CHANGE TO ACCOMMODATE THE CONSTRUCTION SCHEDULE.

- PARKING LOT STRIPING LAYOUT INCLUDING ACCESSIBLE STALL AND RELATED SIGNAGE. (APPROX. SUBMITTAL DATE: JUNE 15, 2010)

VICINITY MAP

N

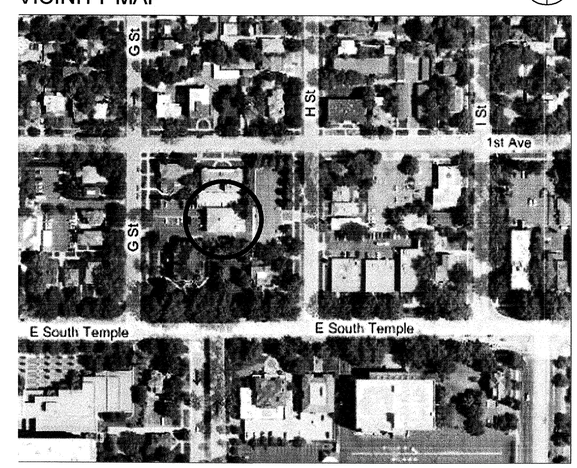

Architect
MJSA ARCHITECTS
357 West Pierpont Avenue
Salt Lake City, Utah 84101
(801) 364-5161
(801) 364-5167 (FAX)

STATE OF UTAH ROBERT N. PETT #1142 LICENSED ARCHITECT 4/19/2010

Civil Engineer Storm Water
STANTEC CONSULTING
3995 South 700 East Suite 300
Salt Lake City, Utah 84107
(801) 261-0090
(801) 266-1671 (FAX)

LICENSED PROFESSIONAL ENGINEER No. 155810 KENNETH A. ENGSTROM STATE OF UTAH 4/19/2010

Civil Engineer Paving
KING ENGINEERING
2824 East Cottonwood Pkwy. Suite 500
Salt Lake City, Utah 84121
(801) 990-3170
(801) 990-3293 (FAX)

LICENSED PROFESSIONAL ENGINEER No. 155755 JOHN E. KING STATE OF UTAH 4/19/10

Structural Engineer
WILLMORE COLE & ASSOCIATES
442 N Main Street
Bountiful, UT 84010
(801) 298-1118

LICENSED CERTIFIED STRUCTURAL ENGINEER # 160916 KENNETH PAUL WILLMORE UTAH 4/19/10

Electrical Engineer
ECE Consulting Engineers
939 S. West Temple
Salt Lake City, UT 84101
(801) 521-8007

LICENSED PROFESSIONAL ENGINEER AKBAR MATINKHAH #172577 STATE OF UTAH 4-19-10

REVISIONS:

BID SET

GOVERNOR'S CARRIAGE HOUSE STABILIZATION
DFCM PROJECT NO. 10032310
603 EAST SOUTH TEMPLE
SALT LAKE CITY, UTAH 84103

MJSA
357 West Pierpont Avenue □ Salt Lake City, Utah 84101
Telephone 801 364 5161 □ Facsimile 801 364 5167
ARCHITECTURE INTERIOR DESIGN

THESE DRAWINGS ARE INSTRUMENTS OF SERVICE AND SHALL REMAIN THE PROPERTY OF THE ARCHITECT. NO USE OR RE-USE OF THESE DOCUMENTS SHALL BE PERMITTED UNLESS AUTHORIZED IN WRITING BY MJSA ARCHITECTS WITH APPROPRIATE COMPENSATION.

PROJECT NO.: 10014

DATE: 4/12/10

SHEET: AG0-00

S:\10014 - Governor's Mansion Carriage House Restoration\CADD_CD\AG-00 Cover.dwg - Fri, 16 Apr 2010 - 11:20am

CODE ANALYSIS

PROJECT SUMMARY

EXISTING BUILDING
- HISTORIC CARRIAGE HOUSE IS NOW USED AS INCIDENTAL STORAGE AND GOVERNOR'S SECURITY OFFICE. NO CHANGE OF USE PROPOSED.
- EXTERIOR WALLS ARE SOLID BRICK AND LIMESTONE, 1'-7" THICK. INTERIOR WALLS ARE TYPICALLY SOLID MASONRY; LIMITED PLASTER ON WOOD FRAMING.

PROPOSED WORK
- RE-ROOFING INCLUDES REMOVAL OF EXISTING ROOFING; REMOVAL OF NON-HISTORIC 'OUTRIGGER' RAFTER EXTENSIONS; SEISMIC UPGRADE OF ROOF STRUCTURE AND CONNECTIONS; INSTALLATION OF NEW PLYWOOD OVERLAY DECK, ICE & WATER SHIELD, FLASHING AND ASPHALT SHINGLES.
- CORNICE WITH INTEGRAL GUTTER TO BE REPLICATED WITH LIMESTONE CLADDING ON STEEL FRAMES.
- LIMESTONE EXTERIOR TO BE RESTORED, WITH LIMITED STONE REPLACEMENT.
- WINDOWS TO BE REPAIRED WITH LIMITED RE-GLAZING TO MATCH.
- HISTORIC DOORS TO BE RE-CREATED OR INTERPRETED (SOUTH DOORS); SECOND FLOOR DOOR TO BE FIXED IN PLACE.
- INTERIOR WORK LIMITED TO SEISMIC UPGRADES WITHIN ROOF STRUCTURE OR ATTIC AND INCIDENTAL ELECTRICAL/CCTV CABLE AND CONDUIT INSTALLATION.
- SITE WORK INCLUDES UNDERGROUND ROUTING OF ROOF DRAINAGE AND WATERPROOFING/PROTECTION OF NORTH FOUNDATION WALL PLUS PAVING OVERLAY OR REPLACEMENT.

APPLICABLE CODES

	Year		Year
International Building Code	2006	National Electrical Code	2008
International Mechanical Code	2006	International Existing Building Code	2006
International Plumbing Code	2006	ADA Accessibility Guildelines	ICC/ANSI A117.1 - 2003
International Fire Code	2006		
International Energy Conservation Code	2006		

A. Occupancy and Group: B S-1

Change in Use: Yes ____ No X Mixed Occupancy: Yes X No ____
Special Use and Occupancy (e.g. High Rise, Covered Mall): ____

B. Seismic Design Category: D Design Wind Speed: N/A mph

C. Type of Construction (circle one):

I/A I/B II/A II/B III/A (III/B) IV/HT V/A V/B

D. Fire Resistance Rating Requirements for the Exterior Walls based on the fire separation distance (in hours):
North: 0 South: 1 East: 0 West: 0

E. Mixed Occupancies: X Nonseparated Uses: ____

F: Sprinklers:
Required: N/A Provided: NO Type of Sprinkler System: N/A

G: Number of Stories: 2 Building Height: 29'-2"

H: Actual Area per Floor (square feet): First: 3372 SF; Second: 3000 SF; Total: 6372 SF

I: Tabular Area: 17,600 SF

J: Area Modifications: NOT REQ'D

a) $A_a = A_t + \left[\frac{A_t I_f}{100}\right] + \left[\frac{A_t I_s}{100}\right]$ $\quad I_f = 100\left[\frac{F}{P} - 0.25\right]\frac{W}{30}$

b) Sum of the Ratio Calculations for Mixed Occupancies:

$\frac{\text{Actual Area}}{\text{Allowable Area}} \leq 1 \quad \frac{(B: 731\ SF + S\text{-}1: 5641\ SF)}{35{,}000\ SF} = 0.18 \leq 1$

c) Total Allowable Area for:
1) One Story: 17,500 SF
2) Two Story: A_a (2) 35,000 SF
3) Three Story: A_a (3) 52,500 SF

d) Unlimited Area Building: Yes ____ No X Code Section: 503

K. Fire Resistance Rating Requirements for Building Elements (hours).

Element	Hours	Assembly Listing	Element	Hours	Assembly Listing
Exterior Bearing Walls	2	EXG	Floors - Ceiling Floors	0	
Interior Bearing Walls	0		Roofs - Ceiling Roofs	1	EXG STR
Exterior Non-Bearing Walls		EXG	Exterior Doors and Windows	0	
Structural Frame	0		Shaft Enclosures	1	
Partitions - Permanent	0		Fire Walls	N/A	
Fire Barriers	N/A		Fire Partitions	N/A	
			Smoke Partitions	N/A	

L. Design Occupant Load: B: 100 SF/OCC = 8; S-1: 300 SF/OCC = 19; TOTAL = 27
Exit Width Required: 32" MIN Exit Width Provided: 4'-0"

M. Exits Req'd: 2 Exits Provided: 1 (NO CHANGE FROM EXISTING; DIRECTION OF SWING CORRECTED & DOOR WIDTH INCREASED)

N. Minimum Number of Required Plumbing Facilities:
a) Water Closets - Required (m) 1 (f) 1 Provided (m) 1 (f) 1
b) Lavatories - Required (m) 1 (f) 1 Provided (m) 1 (f) 1
c) Bath Tubs or Showers: 1
d) Drinking Fountains: 1 Service Sinks: 1

FOOTNOTES:
1) In case of conflict with the U.S. Department of Justice Federal Registers Parts I through V - ADA Guidelines and specific reference to the International Building Code Accessibility Chapters, the more restrictive requirement shall govern.

2) Additional Code Information shall be provided at the discretion of the Building Official for Complex Buildings. Including, but not limited to:
a) High Rise Requirements.
b) Atriums.
c) Performance Based Criteria.
d) Means or Egress Analysis.
e) Fire Assembly Locator Sheet.
f) Exterior and Interior Accessibility Route.
g) Fire Stopping, Including Tested Design Number.

ABBREVIATIONS

ADA	AMERICANS WITH DISABILITIES ACT	LTG.	LIGHTING
A.F.F.	ABOVE FINISH FLOOR	MANUF.	MANUFACTURER
ANSI	AMERICAN NATIONAL STANDARDS INSTITUTE	MECH.	MECHANICAL
B.O.	BOTTOM OF	MEZZ.	MEZZANINE
C.L.	CENTER LINE	MFR.	MANUFACTURER
CLNG.	CEILING	MIN.	MINIMUM
CONC.	CONCRETE	MTL.	METAL
CONST.	CONSTRUCTION	(N)	NEW
CONT.	CONTINUOUS	N.I.C.	NOT IN CONTRACT
COORD.	COORDINATE	O.C.	ON CENTER
CORRUG.	CORRUGATED	OPP.	OPPOSITE
DEMO.	DEMOLISH	PWR.	POWER
DN.	DOWN	RCP	REFLECTED CEILING PLAN
DTL.	DETAIL	REINF.	REINFORCED
EA.	EACH	REQ'D.	REQUIRED
ELEC.	ELECTRICAL	SCHED.	SCHEDULE
ELECT.	ELECTRICAL	SIM.	SIMILAR
ELEV.	ELEVATION	S.S.	STAINLESS STEEL
(E)	EXISTING	STL.	STEEL
EXIST.	EXISTING	STOR.	STORAGE
F.F.	FINISH FLOOR	STRUCT.	STRUCTURE
FIN.	FINISH	T.O.	TOP OF
FP	FLOOR PLAN	TYP.	TYPICAL
F.R.P.	FIBER REINFORCED PLASTIC	U.N.O.	UNLESS NOTED OTHERWISE
FT.	FEET	UL	UNDERWRITERS LABORATORIES
GYP. BD.	GYPSUM BOARD	UTIL.	UTILITY / UTILITIES
IBC	INTERNATIONAL BUILDING CODE	V.I.F.	VERIFY IN FIELD
ICC	INTERNATIONAL CODE COUNCIL		
INCL.	INCLUDED		

PROJECT GENERAL NOTES FOR ALL DRAWINGS

1. ANY CONTRACTOR, SUBCONTRACTOR, VENDOR OR ANY OTHER PERSON PARTICIPATING IN OR BIDDING ON ANY PORTION OF THIS PROJECT SHALL BE RESPONSIBLE FOR THE INFORMATION CONTAINED IN ANY AND ALL DRAWINGS AND SPECIFICATIONS, INCLUDING, BUT NOT LIMITED TO ANY SUBSEQUENT ADDENDA OR CLARIFICATIONS THAT MAY BE ISSUED.

2. THESE CONSTRUCTION DRAWINGS INDICATE THE GENERAL SCOPE OF THE PROJECT IN TERMS OF ARCHITECTURAL DESIGN CONCEPTS, DIMENSIONS OF THE BUILDING, MAJOR ARCHITECTURAL ELEMENTS, AND TYPE OF STRUCTURAL, MECHANICAL, AND ELECTRICAL SYSTEMS. THE DRAWINGS DO NOT NECESSARILY INDICATE OR DESCRIBE ALL WORK REQUIRED FOR FULL PERFORMANCE AND COMPLETION OF THE REQUIREMENTS OF THE CONTRACT DOCUMENTS. ON THE BASIS OF THE GENERAL SCOPE INDICATED OR DESCRIBED, THE CONTRACTOR SHALL FURNISH ALL ITEMS REQUIRED FOR PROPER EXECUTION AND COMPLETION OF THE WORK.

3. DRAWINGS AND SPECIFICATIONS REPRESENT FINISHED CONSTRUCTION UNLESS NOTED OTHERWISE. CONTRACTOR SHALL BE RESPONSIBLE FOR ALL MEANS AND METHODS OF CONSTRUCTION.

4. THE INTENT OF ANY REFERENCED SPECIFICATION SECTION ON THE DRAWINGS OR REFERENCE NOTES IS TO FACILITATE THE CROSS REFERENCING OF THE DRAWINGS AND DESCRIPTIVE INFORMATION PROVIDED IN THE SPECIFICATIONS. THIS IS FOR THE SOLE CONVENIENCE OF THE CONTRACTOR. NO OTHER INTERPRETATIONS ARE INTENDED OR IMPLIED NOR SHALL THE CONTRACTOR ASSIGN ANY OTHER INTERPRETATIONS TO THESE NOTES OR DRAWINGS THAN THAT STATED HEREIN.

5. ANY CONFLICT AMONG VARIOUS ELEMENTS OF THE NOTES, DRAWINGS, SPECIFICATIONS, AND DETAILS SHALL BE BROUGHT TO THE ATTENTION OF THE ARCHITECT AND RESOLVED BEFORE PROCEEDING WITH THE WORK.

6. LARGER SCALE DRAWINGS GOVERN IN CASE OF CONFLICT WITH SMALLER SCALE DRAWINGS.

7. DO NOT SCALE THE DRAWINGS. USE WRITTEN DIMENSIONS. WHERE NO DIMENSION IS PROVIDED, CONSULT THE ARCHITECT FOR CLARIFICATION BEFORE PROCEEDING WITH THE WORK. THE CONTRACTOR IS RESPONSIBLE FOR ALL DIMENSIONS. CEILING HEIGHT DIMENSIONS ARE FROM FINISH FLOOR TO FINISH FACE OF CEILING.

8. DETAILS AND NOTES APPEARING ON ONE DRAWING SHALL APPLY TO ALL OTHER DRAWINGS WHERE SIMILAR CONDITIONS EXIST, WHETHER OR NOT NOTED OR DETAILED.

9. ALL DIMENSIONS, ELEVATIONS, AND EXISTING CONDITIONS SHALL BE CHECKED AND VERIFIED ON THE PROJECT SITE BY THE CONTRACTOR AND EACH TRADE BEFORE WORK BEGINS. DISCREPANCIES WITH THE CONDITIONS SHOWN IN THE CONTRACT DOCUMENTS SHALL BE BROUGHT TO THE ARCHITECT'S ATTENTION BEFORE CONSTRUCTION BEGINS.

10. ALL WORK SHALL MEET OR EXCEED THE REQUIREMENTS OF ALL APPLICABLE LOCAL, STATE, AND FEDERAL CODES AND ORDINANCES, INCLUDING BUT NOT LIMITED TO, BUILDING, ELECTRICAL, PLUMBING, MECHANICAL, ENERGY, FIRE, SAFETY, DISABLED ACCESS, AND HEALTH CODES.

11. THE CONTRACTOR SHALL COORDINATE LAYOUT DIMENSIONS INDICATED ON THE STRUCTURAL, ELECTRICAL, PLUMBING AND MECHANICAL DRAWINGS WITH THOSE INDICATED ON THE ARCHITECTURAL DRAWINGS. ALL DISCREPANCIES SHALL BE REPORTED TO THE ARCHITECT BEFORE PROCEEDING WITH THE WORK.

12. PROTECTION OF EXISTING AREAS TO REMAIN SHALL BE THE CONTRACTOR'S RESPONSIBILITY.

13. THE CONTRACTOR SHALL VERIFY ON SITE THE LOCATION AND DEPTH (ELEVATION) OF ALL EXISTING UTILITIES AND SERVICES BEFORE PERFORMING ANY EXCAVATION WORK.

14. THE CONTRACTOR SHALL BE RESPONSIBLE FOR ALL CUTTING AND PATCHING REGARDING PROPER INSTALLATION OF MATERIALS AND EQUIPMENT, AND FOR PROTECTION OF ADJACENT CONSTRUCTION. CUTTING OR WEAKENING OF EXISTING STRUCTURAL WALL, FLOOR, OR ROOF MEMBERS IS PROHIBITED UNLESS FULLY DETAILED ON THE PLAN.

15. THE DESIGN, ADEQUACY, AND SAFETY OF ERECTION BRACING, SHORING, TEMPORARY SUPPORTS, PEDESTRIAN PROTECTION, ETC. IS THE SOLE RESPONSIBILITY OF THE CONTRACTOR, AND HAS NOT BEEN CONSIDERED BY THE ARCHITECT OR STRUCTURAL ENGINEER. THE CONTRACTOR IS RESPONSIBLE FOR STABILITY AND SAFETY OF THE STRUCTURE DURING CONSTRUCTION.

16. ALL ITEMS ARE NEW UNLESS SPECIFICALLY INDICATED OR NOTED AS EXISTING OR REINSTALLED.

17. ALL WALL, FLOOR AND CEILING PENETRATIONS ARE TO BE SEALED WHETHER OR NOT SPECIFICALLY SHOWN OR DETAILED.

18. BASE BID & ALTERNATES
WORK SHOWN ON THESE DRAWINGS IS PARTIALLY DIFFERENTIATED BETWEEN BASE BID AND ADDITIVE ALTERNATES. REVIEW SCHEDULE OF ALTERNATES IN SPECIFICATION SECTION 01230 TO DETERMINE BASE BID AND EACH ADDITIVE ALTERNATE.

MATERIAL LEGEND

PLYWOOD
FINISHED WOOD
ROUGH WOOD (BLOCKING)
ROUGH WOOD (CONTINUOUS)
BATT INSULATION
RIGID INSULATION
EARTH
CONCRETE
AGGREGATE BASE
LIMESTONE
SANDSTONE
STEEL
ALUMINUM

WALL LEGEND

EXISTING TO REMAIN
REMOVE WALL
METAL STUDS
STRUCTURAL METAL STUDS
WOOD STUDS
MASONRY
CONCRETE

SYMBOL LEGEND

NORTH ARROW

GRID LINE

SECTION
DETAIL NUMBER
SHEET WHERE SECTION IS SHOWN

EXTERIOR ELEVATION
DETAIL NUMBER
SHEET WHERE ELEVATION IS SHOWN

INTERIOR ELEVATION(S)
ELEVATION NUMBER
ELEVATION IDENTIFICATION
SHEET WHERE ELEVATION IS SHOWN

DETAIL REFERENCE
DETAIL NUMBER
SHEET WHERE DETAIL IS SHOWN

DETAIL NUMBER
SHEET WHERE DETAIL IS SHOWN

DETAIL NUMBER
SHEET WHERE DETAIL IS SHOWN

ROOM IDENTIFICATION
ROOM NAME
ROOM NUMBER

DOOR MARK
(SEE DOOR SCHEDULE)

WINDOW MARK
(SEE WINDOW SCHEDULE)

WALL TYPE INDICATOR
(SEE WALL TYPE SCHEDULE)

KEY NOTE

CEILING HEIGHT
ROOM NAME AND NUMBER
DIMENSION ABOVE FINISH FLOOR

REVISION IDENTIFICATION

DATUM POINT

MATCH LINE
SHT. REFERENCE FOR CONTINUATION

DEMOLITION

REFERENCE NOTES

REVISIONS:

BID SET

GOVERNOR'S CARRIAGE HOUSE STABILIZATION
DFCM PROJECT NO. 10032310
603 EAST SOUTH TEMPLE
SALT LAKE CITY, UTAH 84103

MJSA
357 West Pierpont Avenue □ Salt Lake City, Utah 84101
Telephone 801 364 5161 □ Facsimile 801 364 5167
ARCHITECTURE INTERIOR DESIGN

STAMP

STATE OF UTAH
ROBERT J. PETERSON
#1142
LICENSED ARCHITECT

THESE DRAWINGS ARE INSTRUMENTS OF SERVICE AND SHALL REMAIN THE PROPERTY OF THE ARCHITECT. NO USE OR RE-USE OF THESE DOCUMENTS SHALL BE PERMITTED UNLESS AUTHORIZED IN WRITING BY MJSA ARCHITECTS WITH APPROPRIATE COMPENSATION.

PROJECT NO.: 10014

DATE: 4/12/10

GENERAL INFORMATION & DESIGN DATA
SCALE: AS SHOWN

SHEET: AG0-01

S:\10014 - Governor's Mansion Carriage House Restoration\CADD\3_CD\AG-01 General Information.dwg - Mon, 26 Apr 2010 - 10:27am

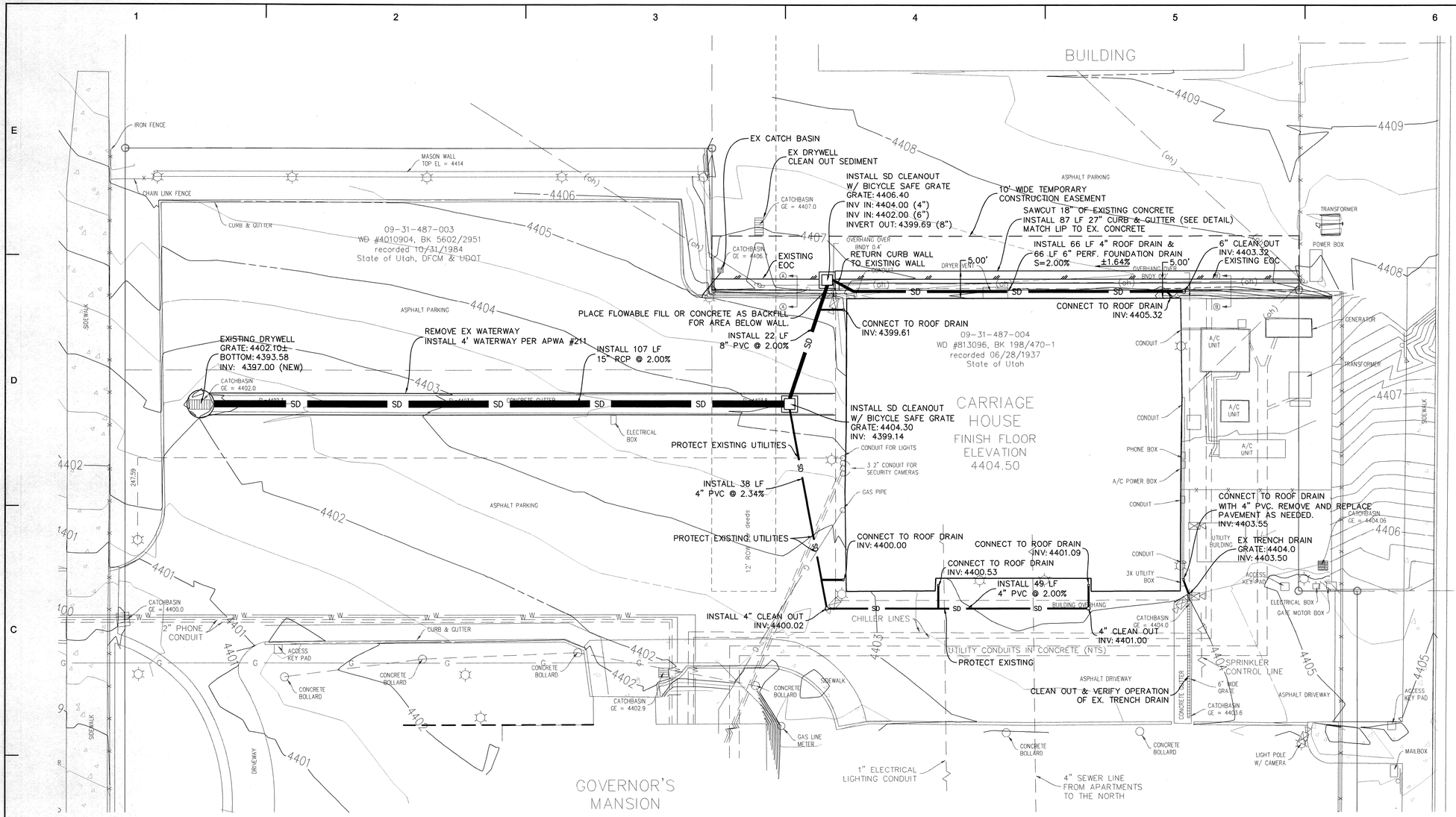

UTILITY NOTES

ALL CONSTRUCTION AND MATERIALS SHALL BE IN ACCORDANCE WITH THESE CONTRACT DOCUMENTS AND THE MOST RECENT EDITIONS OF THE FOLLOWING, THE INTERNATIONAL PLUMBING CODE, UTAH DRINKING WATER REGULATIONS, APWA MANUAL OF STANDARD PLANS AND SPECIFICATIONS, SLC PUBLIC UTILITIES MODIFICATIONS TO APWA STANDARD PLANS AND APPROVED MATERIALS AND SLC PUBLIC UTILITIES APWA SPECIFICATION MODIFICATIONS. THE CONTRACTOR IS REQUIRED TO ADHERE TO ALL OF THE ABOVE-MENTIONED DOCUMENTS UNLESS OTHERWISE NOTED AND APPROVED IN WRITING BY THE SALT LAKE CITY DIRECTOR OF PUBLIC WORKS.

COORDINATION:
THE CONTRACTOR IS RESPONSIBLE TO NOTIFY ALL APPROPRIATE GOVERNMENT AND PRIVATE ENTITIES WITH THE PROJECT. THE FOLLOWING MUST BE CONTACTED 48-HOURS PRIOR TO CONSTRUCTION AS APPLICABLE TO THE PROJECT:
PUBLIC UTILITIES:
INSPECTIONS, PERMITS, CONTRACTS & AGREEMENTS – 483-6727
ENGINEERING – 483-6781
DEVELOPMENT REVIEW – 483-6733
SLC DEPARTMENTS:
PERMITTING AND LICENSING (BLDG SERVICES) – 535-7645
APPLICABLE SEWER, WATER, AND DRAINAGE DISTRICTS

SCHEDULE:
PRIOR TO CONSTRUCTION, THE CONTRACTOR WILL PROVIDE, AND WILL UPDATE AS CHANGES OCCUR, A CONSTRUCTION SCHEDULE IN ACCORDANCE WITH THE SPECIFICATIONS OF SALT LAKE CITY ENGINEERING OR SALT LAKE COUNTY REGULATIONS AS APPLICABLE FOR WORKING WITHIN THE PUBLIC WAY.

PERMITS, FEES AND AGREEMENTS:
THE CONTRACTOR MUST OBTAIN ALL THE NECESSARY PERMITS AND AGREEMENTS AND PAY ALL APPLICATION FEES PRIOR TO ANY CONSTRUCTION ACTIVITIES. CONTACT SALT LAKE CITY ENGINEERING (535-7995) FOR PERMITS AND INSPECTIONS REQUIRED FOR ANY WORK CONDUCTED WITHIN SALT LAKE CITY'S PUBLIC RIGHT OF WAY. APPLICABLE UTILITY PERMITS MAY INCLUDE MAINLINE EXTENSION AGREEMENTS AND SERVICE CONNECTION PERMITS. ALL UTILITY WORK MUST BE BONDED. ALL CONTRACTORS MUST BE LICENSED TO WORK ON CITY UTILITY MAINS.
CONSTRUCTION SITES MUST BE IN COMPLIANCE WITH THE UTAH POLLUTION DISCHARGE ELIMINATION SYSTEM (UPDES) STORM WATER PERMIT FOR CONSTRUCTION ACTIVITIES (538-6923). PREPARE AN EROSION CONTROL PLAN AND SWPPP AS REQUIRED BY CITY AND STATE REGULATIONS. A COPY OF THE PERMIT'S STORM WATER POLLUTION PREVENTION PLAN (SWPPP) MUST BE SUBMITTED TO PUBLIC UTILITIES FOR REVIEW AND APPROVAL. ADDITIONAL WATER QUALITY AND EROSION CONTROL MEASURES MAY BE REQUIRED. THE CONTRACTOR MUST ALSO COMPLY WITH SALT LAKE CITY'S CLEAN WHEEL ORDINANCE.

SOIL TESTING:
THE CONTRACTOR IS TO PROVIDE COMPACTION AND DENSITY TESTING AS REQUIRED BY SALT LAKE CITY ENGINEERING, UDOT, SALT LAKE COUNTY OR OTHER GOVERNING ENTITY. TRENCH BACK FILL MATERIAL AND COMPACTION TESTS ARE TO BE TAKEN PER APWA STANDARD SPECIFICATIONS SECTION 02320 – BACK FILLING TRENCHES, OR AS REQUIRED BY THE SLC PROJECT ENGINEER IF NATIVE MATERIALS ARE USED. NO NATIVE

MATERIALS ARE ALLOWED WITHIN THE PIPE ZONE. THE MAXIMUM LIFTS FOR BACK FILLING EXCAVATION IS 8-INCHES. ALL MATERIAL AND COMPACTION TESTING IS TO BE PERFORMED BY A LAB RECOGNIZED AND ACCEPTED BY SALT LAKE COUNTY PUBLIC WORKS AND/OR SALT LAKE CITY ENGINEERING.

SAFETY:
THE CONTRACTOR IS RESPONSIBLE FOR ALL ASPECTS OF SAFETY OF THE PROJECT AND SHALL MEET ALL OSHA, STATE, COUNTY AND OTHER GOVERNING ENTITY REQUIREMENTS.
THE CONTRACTOR IS SOLELY RESPONSIBLE FOR CONFORMING TO LOCAL AND FEDERAL CODES GOVERNING SHORING AND BRACING OF EXCAVATION AND TRENCHES, AND FOR THE PROTECTION OF WORKERS.

PROJECT LIMITS:
THE CONTRACTOR IS REQUIRED TO KEEP ALL CONSTRUCTION ACTIVITIES WITHIN THE APPROVED PROJECT LIMITS. THIS INCLUDES, BUT IS NOT LIMITED TO, VEHICLE AND EQUIPMENT STAGING, MATERIAL STORAGE AND LIMITS OF TRENCH EXCAVATION. IT IS THE CONTRACTOR'S RESPONSIBILITY TO OBTAIN PERMISSION AND/OR EASEMENTS FROM THE APPROPRIATE GOVERNING ENTITY FOR WORK OR STAGING OUTSIDE OF THE PROJECT LIMITS.

WATER, FIRE, SANITARY SEWER AND STORM DRAINAGE UTILITIES

1. IT IS THE CONTRACTOR'S RESPONSIBILITY TO SCHEDULE ANY WATER, SEWER, BACKFLOW AND DRAINAGE INSPECTION 48-HOURS IN ADVANCE TO WHEN NEEDED. CONTACT 483-6727 TO SCHEDULE INSPECTIONS.
2. THE CONTRACTOR IS RESPONSIBLE FOR REPAIRING ANY DAMAGE, CAUSED BY ANY CONDITION INCLUDING SETTLEMENT, TO EXISTING UTILITIES FROM WORK PERFORMED AT OR NEAR EXISTING UTILITIES. THE CONTRACTOR SHALL TAKE ALL MEASURES NECESSARY TO PROTECT ALL EXISTING PUBLIC AND PRIVATE ROADWAY AND UTILITY FACILITIES. DAMAGE TO EXISTING FACILITIES CAUSED BY THE CONTRACTOR, MUST BE REPAIRED BY THE CONTRACTOR AT HIS/HER EXPENSE, TO THE SATISFACTION OF THE OWNER OF SAID FACILITIES.
3. THE CONTRACTOR WILL BE RESPONSIBLE FOR LOCATING AND AVOIDING ALL UTILITIES AND SERVICE LATERALS, AND FOR REPAIRING ALL DAMAGE THAT OCCURS TO THE UTILITIES DUE TO THE CONTRACTOR'S ACTIVITIES. THE CONTRACTOR IS TO VERIFY LOCATION, DEPTH, SIZE, MATERIAL AND OUTSIDE DIAMETERS OF UTILITIES IN THE FIELD BY POTHOLING A MINIMUM OF 300-FEET AHEAD OF SCHEDULED CONSTRUCTION IN ORDER TO IDENTIFY POTENTIAL CONFLICTS AND PROBLEMS WITH FUTURE CONSTRUCTION ACTIVITIES. EXISTING UTILITY INFORMATION OBTAINED FROM SLC PUBLIC UTILITIES' MAPS MUST BE ASSUMED AS APPROXIMATE AND REQUIRING FIELD VERIFICATION. CONTACT BLUE STAKES OR APPROPRIATE OWNER FOR COMMUNICATION LINE LOCATIONS.
4. FOR APPROVED PROJECTS THE CONTRACTOR IS RESPONSIBLE TO PROVIDE AND DISTRIBUTE WRITTEN NOTICE TO ALL RESIDENTS LOCATED WITHIN THE PROJECT AREA AT LEAST 72-HOURS PRIOR TO CONSTRUCTION. WORK TO BE CONDUCTED WITHIN COMMERCIAL OR INDUSTRIAL AREAS MAY REQUIRE A LONGER NOTIFICATION PERIOD AND ADDITIONAL CONTRACTOR COORDINATION WITH PROPERTY OWNERS. THE WRITTEN NOTICE IS TO BE APPROVED BY THE SLC PUBLIC UTILITY PROJECT ENGINEER.
5. THROUGH THE SLC PUBLIC UTILITIES INSPECTOR AND WITH THE PUBLIC UTILITIES PROJECT ENGINEER APPROVAL, SLC PUBLIC UTILITIES MUST BE CONTACTED AND APPROVE ALL WATER MAIN SHUTDOWNS. ONCE APPROVED, THE CONTRACTOR MUST NOTIFY ALL EFFECTED USERS BY WRITTEN NOTICE A MINIMUM OF 48-HOURS (RESIDENTIAL) AND 72-HOURS (COMMERCIAL/INDUSTRIAL) PRIOR TO THE WATER MAIN SHUT DOWN. PUBLIC UTILITIES MAY REQUIRE LONGER NOTICE PERIODS.
6. ALL MANHOLES, HYDRANTS, VALVES, CLEAN-OUT BOXES, CATCH BASINS, METERS, ETC. MUST BE RAISED OR LOWERED TO FINAL GRADE PER PUBLIC UTILITIES STANDARDS AND INSPECTOR REQUIREMENTS. CONCRETE COLLARS MUST BE CONSTRUCTED ON ALL MANHOLES, CLEANOUT BOXES, CATCH BASINS AND VALVES PER PUBLIC UTILITY STANDARDS. ALL MANHOLE, CATCH BASIN, OR CLEANOUT BOX CONNECTIONS MUST BE MADE WITH THE PIPE CUT FLUSH WITH THE INSIDE OF THE BOX AND GROUTED OR SEALED AS REQUIRED BY THE PUBLIC UTILITIES INSPECTOR. ALL MANHOLE, CLEANOUT BOX OR CATCH BASIN DISCONNECTIONS MUST BE REPAIRED AND GROUTED AS REQUIRED BY THE ON-SITE PUBLIC UTILITIES INSPECTOR.
7. THE CONTRACTOR SHALL NOT ALLOW ANY GROUNDWATER OR DEBRIS TO ENTER THE NEW OR EXISTING PIPE DURING CONSTRUCTION. UTILITY TRENCHING, BACKFILL, AND PIPE ZONE AS PER SLC PUBLIC UTILITIES, "UTILITY INSTALLATION DETAIL."
8. INSTALL ALL PIPING IN ACCORDANCE WITH APWA PLAN NO'S 381 AND 382 TYPE B.

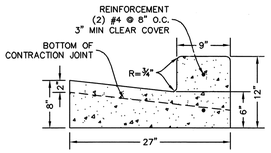

CURB & GUTTER DETAIL
NTS

Stantec Consulting Inc.
Suite 300, 3995 South 700 East
Salt Lake City UT U.S.A.
84107
Tel. 801.743.0696
Fax. 801.743.0697
www.stantec.com

REFERENCE NOTES

LEGEND

EXISTING GRADE CONTOURS
RCP CL III STORM DRAIN (SIZE PER PLANS)
SD CLEANOUT

REVISIONS:

PERMIT SET

GOVERNOR'S CARRIAGE HOUSE STABILIZATION
DFCM PROJECT NO. 10032310
603 EAST SOUTH TEMPLE
SALT LAKE CITY, UTAH 84103

MJSA
357 West Pierpont Avenue □ Salt Lake City, Utah 84101
Telephone 801 364 5161 □ Facsimile 801 364 5167
ARCHITECTURE INTERIOR DESIGN

STAMP

LICENSED PROFESSIONAL ENGINEER
4/19/2010
No. 260810
KENNETH A. ENGSTROM
STATE OF UTAH
STAMP NOT VALID UNLESS SIGNED.

THESE DRAWINGS ARE INSTRUMENTS OF SERVICE AND SHALL REMAIN THE PROPERTY OF THE ARCHITECT. NO USE OR REUSE OF THESE DOCUMENTS SHALL BE PERMITTED UNLESS AUTHORIZED IN WRITING BY MJSA ARCHITECTS WITH APPROPRIATE COMPENSATION.

PROJECT NO.: 10014

DATE: 4/12/10

STORM DRAIN PLAN

SCALE: 1" = 10'

SHEET: C-101

BID NOTES:

1. BASE BID WORK SHALL BE THE CONTRACTOR FURNISHING AND INSTALLING A COMPACTED 1 ½" ASPHALT OVERLAY (MAX. ½" AGGREGATE) WITH CRACK INHIBITING GEOTEXTILE FABRIC AND RESTRIPING THE EXISTING PAINT STRIPES WITH A 2 COAT APPLIATION.

2. ALTERNATE 1 WORK IS REMOVING THE EXISTING ASPHALT PAVEMENT AND BASE AT THE PARKING AREA AND EAST AND WEST DRIVE ENTRANCES TO DESIGN SUBGRADE AND DISPOSING OFF SITE AND AND REPLACING WITH CONCRETE.

3. ALTERNATE 2 WORK IS REMOVING THE EXISTING ASPHALT PAVEMENT AND BASE AT THE WEST DRIVE THROUGH TO DESIGN SUBGRADE AND DISPOSING OFF SITE AND AND REPLACING WITH CONCRETE.

CONCRETE NOTES:

1. THE CONTRACTOR SHALL FORM AROUND AND/OR ADJUST TO GRADE ALL POWER BOXES, CLEANOUT BOXES, UTILITIES, ETC. THAT FALL WITHIN THE FOOTPRINT OF THE NEW CONCRETE.

2. THE JOINT PATTERNS SHOWN ARE APPROXIMATE. THE CONTRACTOR MAY MAKE MINOR ADJUSTMENTS TO THE JOINT PATTERNS AS FIELD CONDITIONS WARRANT. SIGNIFICANT CHANGES SHALL BE APPROVED BY THE ENGINEER PRIOR TO POURING THE CONCRETE.

3. THE NEW CONCRETE SHALL BE INSTALLED AT GRADE UNLESS OTHERWISE SHOWN (AT SWALE). TOP OF NEW CONCRETE = TOP OF EXISTING SIDEWALK, TOP EDGE OF EXISTING WATERWAY, ETC.

CONCRETE NOTES (CONT.):

4. THE CONTRACTOR SHALL PROVIDE FOR EXPANSION JOINTS WHERE NEW CONCRETE ABUTS EXISTING CONCRETE (WATERWAY, CURB, S/W).

5. THE CONTRACTOR SHALL UTILIZE DETAIL C SHEET CE5-01 WHERE ALL NEW CONCRETE ABUTS EXISTING SIDEWALK (PHASE I AND II)

REMOVAL NOTES:

1. IN THOSE AREAS WHERE CONCRETE IS TO BE INSTALLED THE CONTRACTOR SHALL REMOVE ALL EXISTING ASPHALT, BASE, AND, IF NECESSARY, NATIVE MATERIAL TO DESIGN SUBGRADE AND DISPOSE OF OFF SITE. THE LIMITS OF ALL ASPHALT REMOVALS SHALL BE SAW CUT. PHASE I ASPHALT REMOVALS SHALL PRECEDE PHASE I CONCRETE INSTALLATION WHERE PHASE II ASPHALT SHALL REMAIN UNTIL PHASE I CONCRETE HAS CURED AND IS READY FOR USE.

2. THE CONTRACTOR SHALL RELOCATE THE MAGNAIL CONTROL SUCH THAT GRADE CONTROL IS MAINTAINED FOR THE PROJECT.

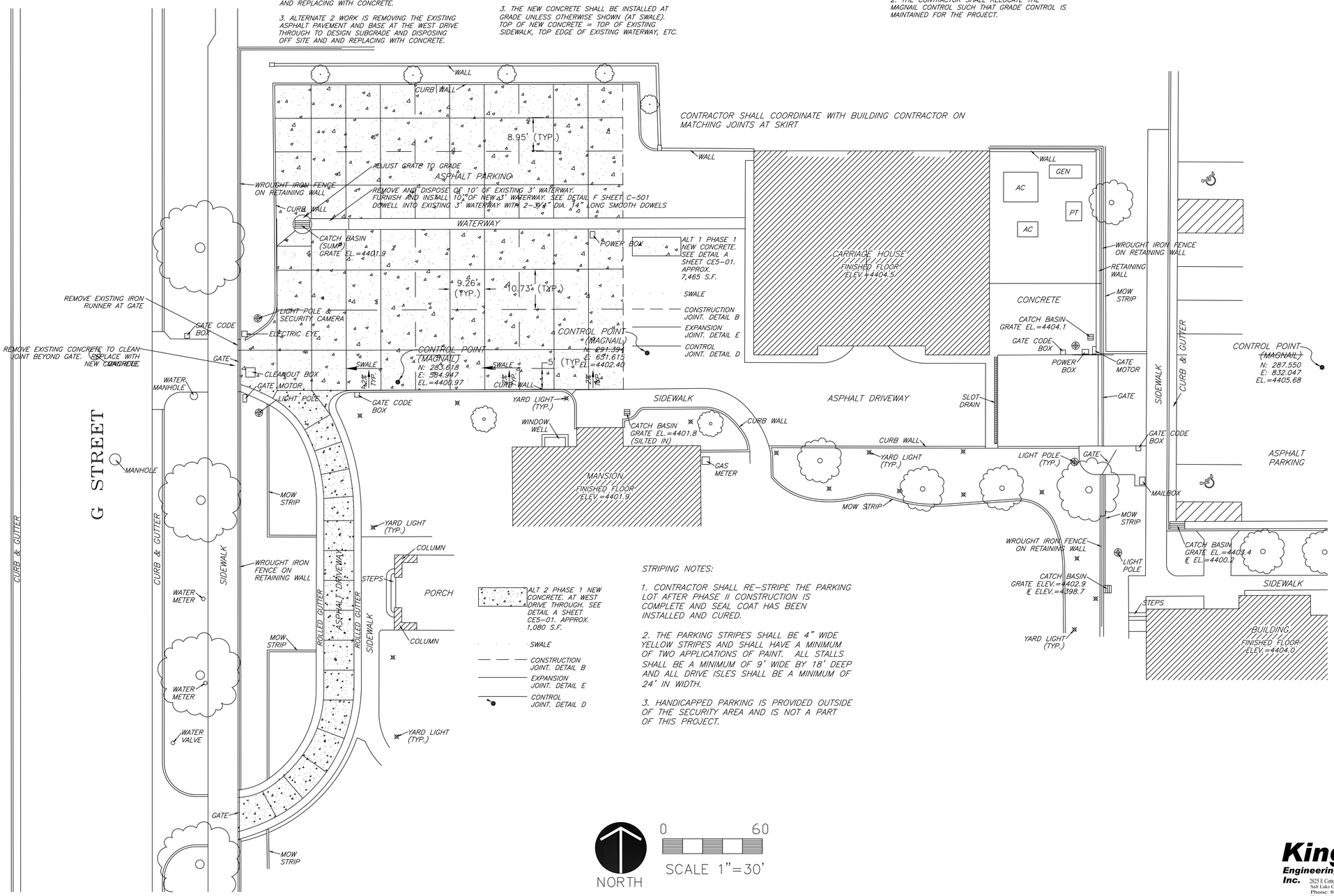

STRIPING NOTES:

1. CONTRACTOR SHALL RE-STRIPE THE PARKING LOT AFTER PHASE II CONSTRUCTION IS COMPLETE AND SEAL COAT HAS BEEN INSTALLED AND CURED.

2. THE PARKING STRIPES SHALL BE 4" WIDE YELLOW STRIPES AND SHALL HAVE A MINIMUM OF TWO APPLICATIONS OF PAINT. ALL STALLS SHALL BE A MINIMUM OF 9' WIDE BY 18' DEEP AND ALL DRIVE ISLES SHALL BE A MINIMUM OF 24' IN WIDTH.

3. HANDICAPPED PARKING IS PROVIDED OUTSIDE OF THE SECURITY AREA AND IS NOT A PART OF THIS PROJECT.

King Engineering, Inc.
2825 E Cottonwood Parkway
Salt Lake City, Utah 84121
Phone: 801.990.3170
Fax: 801.990.3293
Internet: www.pavementmanagement.com

GENERAL NOTES

1. ALL WORK SHALL COMPLY WITH THE PROJECT DRAWINGS AND PROJECT SPECIFICATIONS. IF CONFLICTS ARE NOTED, CONTRACTOR SHALL CONTACT ENGINEER PRIOR TO START OF CONSTRUCTION.

2. ANY KNOWN SEWER MAINS, WATER MAINS, GAS MAINS, STORM MAINS, IRRIGATION LINES, TELEPHONE CONDUITS ELECTRIC CABLES, ANOTHER UNDERGROUND STRUCTURES ARE SHOWN ON THE DRAWINGS ONLY TO THE EXTENT SUCH INFORMATION HAS BEEN MADE AVAILABLE TO OR DISCOVERED BY THE ENGINEER. IT IS EXPECTED THAT THERE MAY BE DISCREPANCIES AND OMISSIONS IN THE LOCATION AND QUANTITIES OF UTILITIES AND STRUCTURES SHOWN, THIS INFORMATION IS SHOWN FOR THE CONVENIENCE OF THE CONTRACTOR BUT IS NOT GUARANTEED TO BE EITHER CORRECT OR COMPLETE, AND ALL RESPONSIBILITY FOR THE ACCURACY AND COMPLETENESS THEREOF IS EXPRESSLY DISCLAIMED. THE CONTRACTOR SHALL MAKE SUCH INVESTIGATION AS HE THINKS NECESSARY TO VERIFY ITS CORRECTNESS AND COMPLETENESS. THE CONTRACTOR SHALL, AHEAD OF EXCAVATOR, LOCATE UNDERGROUND UTILITIES AND STRUCTURES SO THAT THEY WILL NOT BE ACCIDENTALLY CUT OR DAMAGED BY HIS CONSTRUCTION OPERATION, AND SO THAT THE GRADE OF THE PIPE CAN BE ADJUSTED AS REQUIRED.

3. CONTRACTOR IS RESPONSIBLE FOR ALL PROJECT SAFETY, INCLUDING, BUT NOT LIMITED TO BARRICADES, SIGNING, TRAFFIC CONTROL AND SECURITY.

4. CONTRACTOR SHALL BE RESPONSIBLE TO MAINTAIN UP-TO-DATE "AS-BUILT" DRAWINGS THROUGHOUT THE PROJECT. THESE DRAWINGS SHALL BE PROVIDED TO THE OWNER UPON COMPLETION OF THE PROJECT.

5. CONTRACTOR SHALL TAKE THE NECESSARY MEASURES TO PROTECT ALL FACILITIES (I.E. LIGHT POLES, TRASH CANS, FENCES, GATES, MISC. FEATURES OUTSIDE OF THE WORK AREAS ETC.) DURING CONSTRUCTION.

6. CONTRACTOR SHALL BE RESPONSIBLE FOR ALL TEMPORARY TRAFFIC CONTROL FOR MATERIALS REMOVAL AND DELIVERIES DURING THE CONSTRUCTION OF THE PROJECT.

7. ALL TRAFFIC CONTROL (I.E. SIGNAGE, CONES, BARRICADES) SHALL CONFORM TO THE MOST CURRENT EDITION OF THE MANUAL OF UNIFORM TRAFFIC CONTROL DEVICES FOR REMOVALS AND DELIVERIES.

8. THE CONTRACTOR IS RESPONSIBLE FOR ALL CONSTRUCTION LAYOUT AND STAKING.

9. THE CONTRACTOR SHALL NOTIFY GOVERNORS MANSION AND DFCM STAFF 48 HOURS PRIOR TO MOBILIZING TO PROJECT AND BEGINNING DEMOLITION AND REMOVALS.

10. THE CONTRACTOR SHALL PROVIDE AND ON-SITE TOILET FOR THE DURATION OF THE PROJECT.

11. THE CONTRACTOR SHALL BARRICADE AND SIGN ALL WORK AREAS DENYING ACCESS TO ALL BUT THE CONTRACTORS EMPLOYEES AND SUBCONTRACTORS.

12. THE CONTRACTOR SHALL PROTECT THE ROADWAY FROM DAMAGES AT ENTRANCES AND EXITS. THE CONTRACTOR SHALL REPAIR ALL DAMAGE TO EXISTING ASPHALT, ETC. DUE TO CONSTRUCTION ACTIVITIES AT NO COST TO THE OWNER. THE CONTRACTOR SHALL KEEP ALL ACCESS ROADS CLEAN AND SWEPT.

STAMP

REGISTERED PROFESSIONAL ENGINEER
NO. 179735
JONATHAN E. KING
STATE OF UTAH

SCALE: 1"=30'

REVISIONS:

PERMIT SET

GOVERNOR'S CARRIAGE HOUSE IMPROVEMENTS
DFCM PROJECT NO. 10032310
603 EAST SOUTH TEMPLE
SALT LAKE CITY, UTAH 84103

MJSA
357 West Pierpont Avenue □ Salt Lake City, Utah 84101
Telephone 801.364.5161 □ Facsimile 801.364.5167
ARCHITECTURE INTERIOR DESIGN

THESE DRAWINGS ARE INSTRUMENTS OF SERVICE AND SHALL REMAIN THE PROPERTY OF THE ARCHITECT. NO USE OR RE-USE OF THESE DOCUMENTS SHALL BE PERMITTED UNLESS AUTHORIZED IN WRITING BY MJSA ARCHITECTS WITH APPROPRIATE COMPENSATION.

PROJECT NO.: 10014

DATE: 4/12/10

SHEET: CE 1-02

CONCRETE NOTES:

1. THE CONTRACTOR SHALL FORM AROUND AND/OR ADJUST TO GRADE ALL POWER BOXES, CLEANOUT BOXES, UTILITIES, ETC. THAT FALL WITHIN THE FOOTPRINT OF THE NEW CONCRETE.

2. THE JOINT PATTERNS SHOWN ARE APPROXIMATE. THE CONTRACTOR MAY MAKE MINOR ADJUSTMENTS TO THE JOINT PATTERNS AS FIELD CONDITIONS WARRANT. SIGNIFICANT CHANGES SHALL BE APPROVED BY THE ENGINEER PRIOR TO POURING THE CONCRETE.

3. THE NEW CONCRETE SHALL BE INSTALLED AT GRADE UNLESS OTHERWISE SHOWN (AT SWALE). TOP OF NEW CONCRETE = TOP OF EXISTING SIDEWALK, TOP EDGE OF EXISTING WATERWAY, ETC.

CONCRETE NOTES (CONT.):

4. THE CONTRACTOR SHALL PROVIDE FOR EXPANSION JOINTS WHERE NEW CONCRETE ABUTS EXISTING CONCRETE (WATERWAY, CURB, S/W, GATE, SLOT DRAIN, ETC.)

5. THE CONTRACTOR SHALL UTILIZE DETAIL C SHEET CE5-01 WHERE ALL NEW CONCRETE ABUTS EXISTING SIDEWALK (PHASE I AND II)

6. THE CONTRACTOR SHALL DOWELL INTO THE CARRIAGE HOUSE FOUNDATION WITH $\frac{3}{4}$" DIA. 14" SMOOTH DOWELS AT 12" O.C. SPACING WHERE NEW CONCRETE ABUTS THE FOUNDATION (OR EXIST. CONCRETE SURROUNDING CARRIAGE HOUSE)

7. SEE SHEET AS1-03 FOR JOINT DIMENSIONS.

REMOVAL NOTES:

1. IN THOSE AREAS WHERE CONCRETE IS TO BE INSTALLED THE CONTRACTOR SHALL REMOVE ALL EXISTING ASPHALT, BASE, AND, IF NECESSARY, NATIVE MATERIAL TO DESIGN SUBGRADE AND DISPOSE OF OFF SITE. THE LIMITS OF ALL ASPHALT REMOVALS SHALL BE SAW CUT. PHASE I ASPHALT REMOVALS SHALL PRECEDE PHASE I CONCRETE INSTALLATION WHERE PHASE II ASPHALT SHALL REMAIN UNTIL PHASE I CONCRETE HAS CURED AND IS READY FOR USE.

2. THE CONTRACTOR SHALL RELOCATE THE MAGNAIL CONTROL SUCH THAT GRADE CONTROL IS MAINTAINED FOR THE PROJECT.

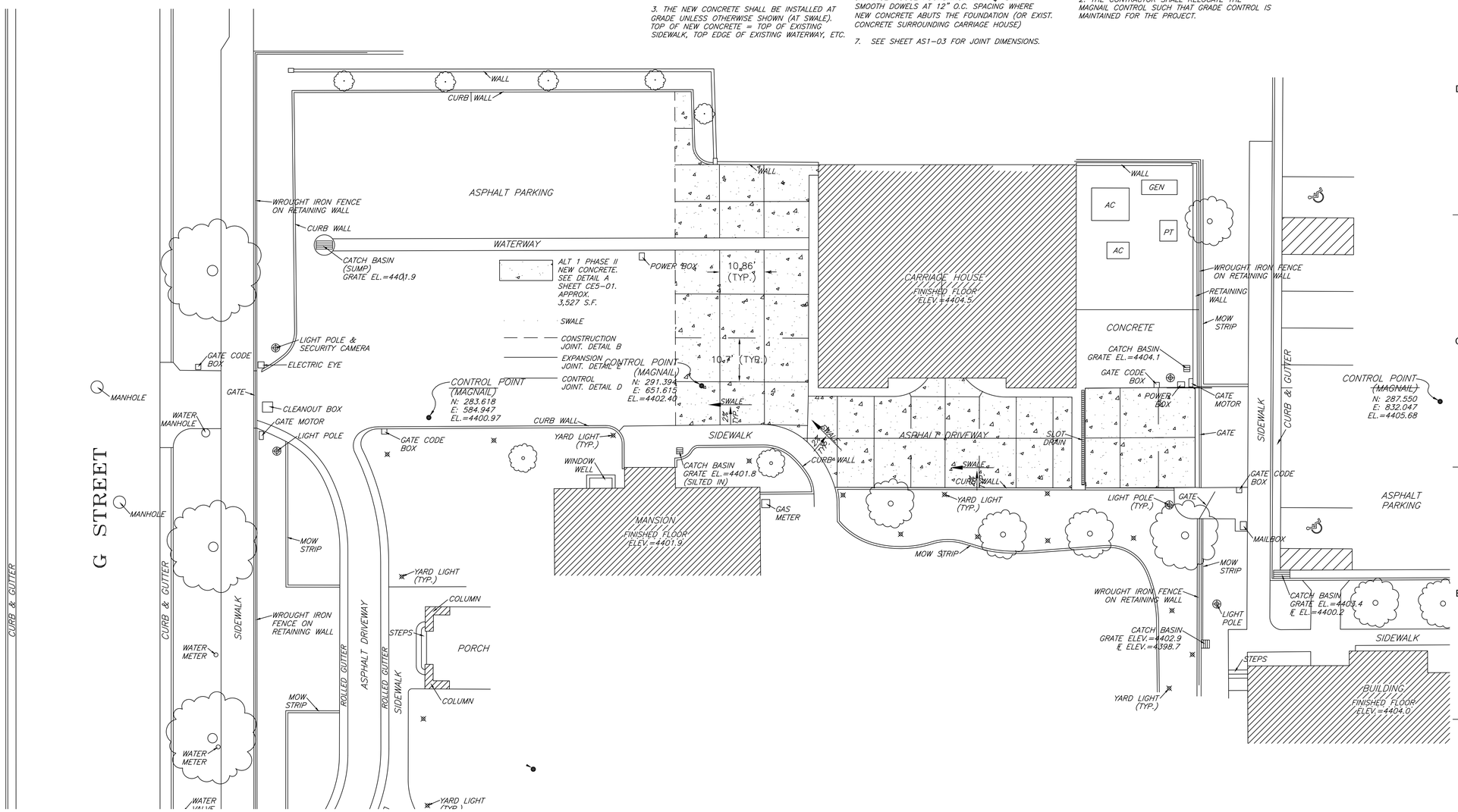

NORTH

0 60

SCALE 1"=30'

King Engineering, Inc.
2825 E Cottonwood Parkway
Salt Lake City, Utah 84121
Phone: 801.990.3170
Fax: 801.990.3293
Internet: www.pavementmanagement.com

REFERENCE NOTES

REVISIONS:

PERMIT SET

GOVERNOR'S CARRIAGE HOUSE IMPROVEMENTS
DFCM PROJECT NO. 10032310
603 EAST SOUTH TEMPLE
SALT LAKE CITY, UTAH 84103

MJSA
357 West Pierpont Avenue □ Salt Lake City, Utah 84101
Telephone 801.364.5161 □ Facsimile 801.364.5167
ARCHITECTURE INTERIOR DESIGN

STAMP

REGISTERED PROFESSIONAL ENGINEER
NO. 170735
JONATHAN W. KING
STATE OF UTAH

THESE DRAWINGS ARE INSTRUMENTS OF SERVICE AND SHALL REMAIN THE PROPERTY OF THE ARCHITECT. NO USE OR RE-USE OF THESE DOCUMENTS SHALL BE PERMITTED UNLESS AUTHORIZED IN WRITING BY MJSA ARCHITECTS WITH APPROPRIATE COMPENSATION.

PROJECT NO.: 10014

DATE: 4/12/10

SHEET: CE 1-03

SCALE: 1"=30'

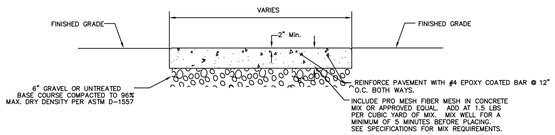

CONCRETE NOTE:

CONCRETE SHALL HAVE AN MINIMUM 28 DAY UNCONFINED COMPRESSIVE STRENGTH OF 4,000 POUNDS PER SQUARE INCH AND CONTAIN 5 PERCENT +/- 1PERCENT AIR ENTRAINMENT.

ALL SAW CUTS MUST BE COMPLETED WITHIN 24 HOURS OF THE "INITIAL SET" OF THE CONCRETE AND SHOULD BE PERFORMED UNDER THE DIRECTION OF THE CONCRETE PAVING CONTRACTOR.

A CONCRETE PAVEMENT

SCALE: NTS

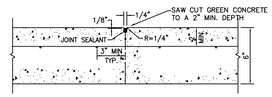

D CONTROL JOINT

SCALE: NTS

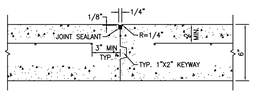

B CONSTRUCTION JOINT

SCALE: NTS

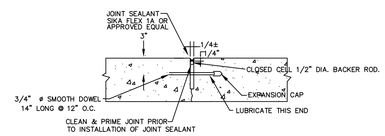

E EXPANSION JOINT

SCALE: NTS

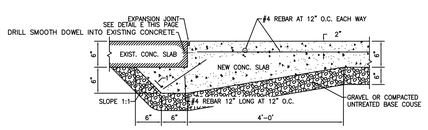

C JOINT BETWEEN NEW AND EXIST. CONCRETE

SCALE: NTS

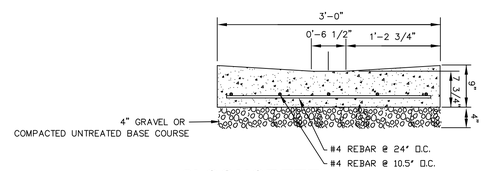

F 3' CONCRETE WATERWAY

SCALE: NTS

King Engineering, Inc.
2825 E Cottonwood Parkway
Salt Lake City, Utah 84121
Phone: 801.990.3170
Fax: 801.990.3293
Internet: www.pavementmanagement.com

REFERENCE NOTES

REVISIONS:

PERMIT SET

GOVERNOR'S CARRIAGE HOUSE IMPROVEMENTS
DFCM PROJECT NO. 10032310
603 EAST SOUTH TEMPLE
SALT LAKE CITY, UTAH 84103

MJSA
357 West Pierpont Avenue □ Salt Lake City, Utah 84101
Telephone 801.364.5161 □ Facsimile 801.364.5167
ARCHITECTURE INTERIOR DESIGN

STAMP

THESE DRAWINGS ARE INSTRUMENTS OF SERVICE AND SHALL REMAIN THE PROPERTY OF THE ARCHITECT. NO USE OR REUSE OF THESE DOCUMENTS SHALL BE PERMITTED UNLESS AUTHORIZED IN WRITING BY MJSA ARCHITECTS WITH APPROPRIATE COMPENSATION.

PROJECT NO.: 10014

DATE: 4/12/10

SHEET: CE 5-01

SCALE: NTS

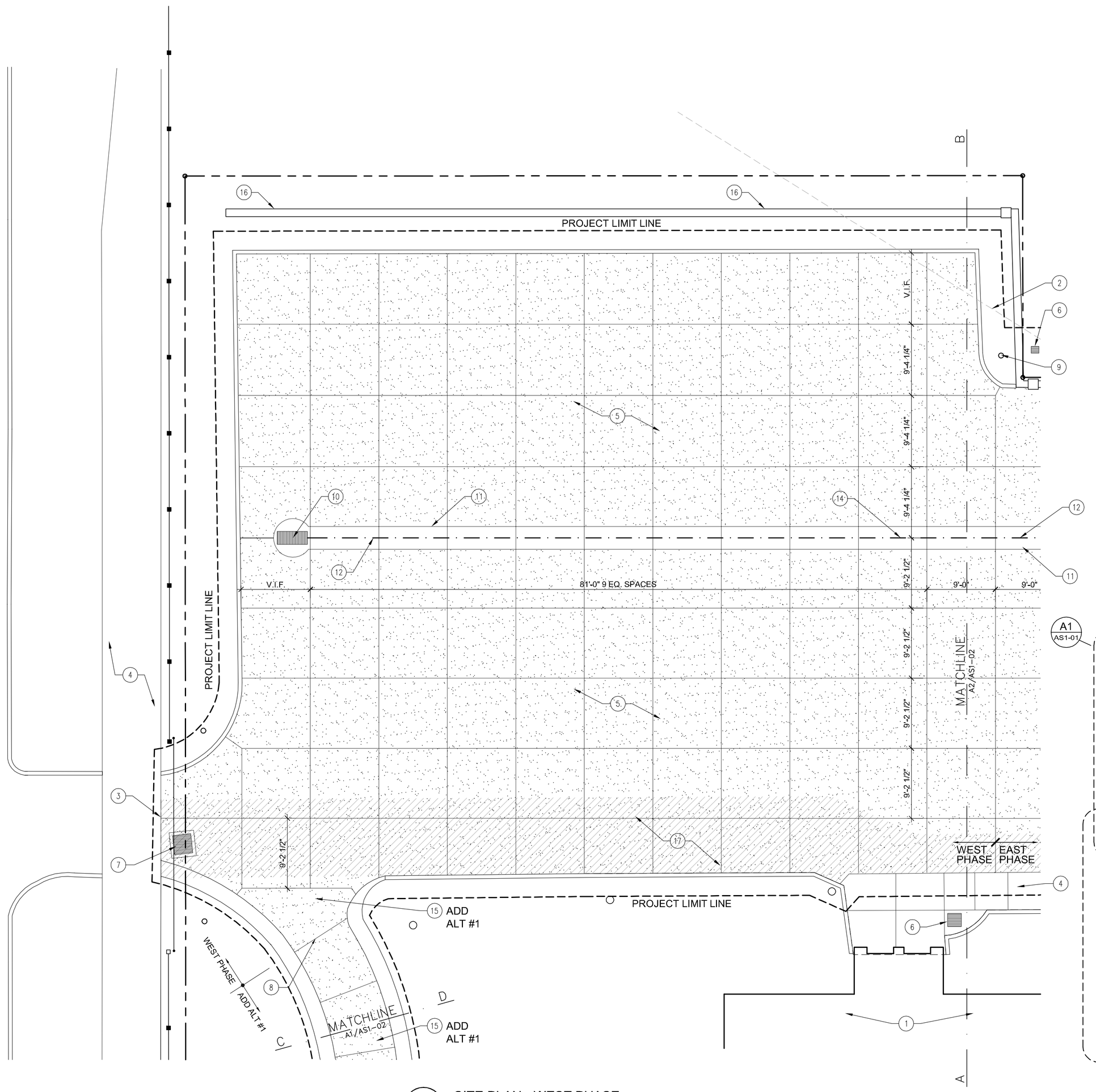

A1 AS1-01 SITE PLAN - WEST PHASE
SCALE: 1/8"=1'-0"

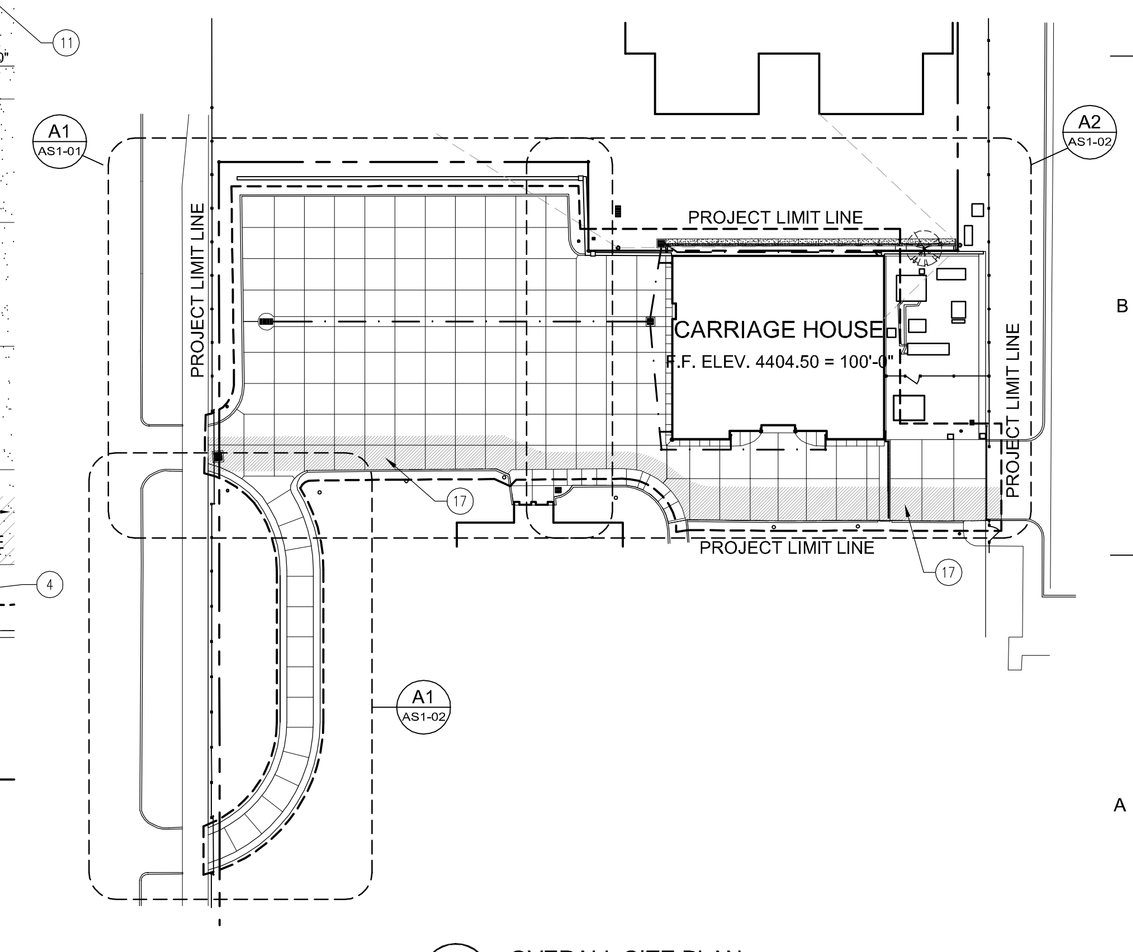

A5 AS1-01 OVERALL SITE PLAN
SCALE: 1/32"=1'-0"

REFERENCE NOTES

1. ADJACENT EXIST. BUILDING TO REMAIN UNDISTURBED.
2. EXIST. OVERHEAD POWER LINE TO REMAIN UNDISTURBED.
3. EXTEND NEW CONC. DRIVE TO EXIST. SIDEWALK
4. EXIST. SIDEWALK OR TO REMAIN
5. CONC. PAVING RE: CIVIL
6. EXIST. STORM DRAIN- CLEAN AND VERIFY FUNCTION.
7. EXIST. CATCH BASIN - REFURBISH/REPLACE RE:CIVIL
8. EXIST. JOINT - MATCH CLEANLY
9. RELOCATE CAMERA TO NEW POLE RE: ELECTRICAL. ADJACENT LANDSCAPING TO REMAIN UNDISTURBED.
10. EXIST. CATCHBASIN / DRY WELL - REFURBISH & NEW PIPING TIE- IN RE: CIVIL.
11. CONCRETE WATERWAY TO REPLACE EXIST. RE: CIVIL.
12. UNDERGROUND STORM DRAIN. REMOVE AND REPLACE EXIST. WATERWAY AND/OR ASPHALT. RE: CIVIL.
13. EXIST. SITE WALL TO REMAIN UNDISTURBED, EXCEPT WHERE NOTED.
14. CENTERLINE OF CONC. WATERWAY
15. EXIST. DRIVEWAY - NEW CONCRETE PAVING. RE:CIVIL. (ADD ALT. #1)
16. EXIST. SITE WALL TO REMAIN UNDISTURBED, EXCEPT WHERE NOTED.
17. MAINTAIN PROTECTED DRIVEWAY & PEDESTRIAN ACCESS - COORDINATE WITH OWNER

LEGEND

MAINTAIN PROTECTED DRIVEWAY & PEDESTRIAN ACCESS - COORDINATE WITH OWNER

GENERAL NOTES -SITE

A. IT IS BEYOND THE SCOPE OF THIS DRAWING TO SHOW EACH AND EVERY DETAIL AND/OR ASPECT OF EXISTING CONDITIONS. IT IS THE CONTRACTOR'S RESPONSIBILITY TO FIELD VERIFY EXISTING CONDITIONS AND DETERMINE THE EXACT AMOUNT OF DEMOLITION, PREPARATION, MATERIALS, ETC. NECESSARY FOR IMPLEMENTING THE WORK AS SHOWN ON THE CONSTRUCTION DOCUMENTS.

STAMP

STATE OF UTAH
ROBERT J. MJSA
#1142
LICENSED ARCHITECT

REVISIONS:

BID SET

GOVERNOR'S CARRIAGE HOUSE STABILIZATION

DFCM PROJECT NO. 10032310
603 EAST SOUTH TEMPLE
SALT LAKE CITY, UTAH 84103

MJSA
357 West Pierpont Avenue □ Salt Lake City, Utah 84101
Telephone 801 364 5161 □ Facsimile 801 364 5167
ARCHITECTURE INTERIOR DESIGN

THESE DRAWINGS ARE INSTRUMENTS OF SERVICE AND SHALL REMAIN THE PROPERTY OF THE ARCHITECT. NO USE OR REUSE OF THESE DOCUMENTS SHALL BE PERMITTED UNLESS AUTHORIZED IN WRITING BY MJSA ARCHITECTS WITH APPROPRIATE COMPENSATION.

PROJECT NO.: 10014

DATE: 4/12/10

SITE PLAN - WEST PHASE

SCALE: AS NOTED

SHEET: AS1-01

S:\10014 - Governor's Mansion Carriage House Restoration\CADD3_CD\AS1-01.dwg - Mon, 26 Apr 2010 - 10:07am

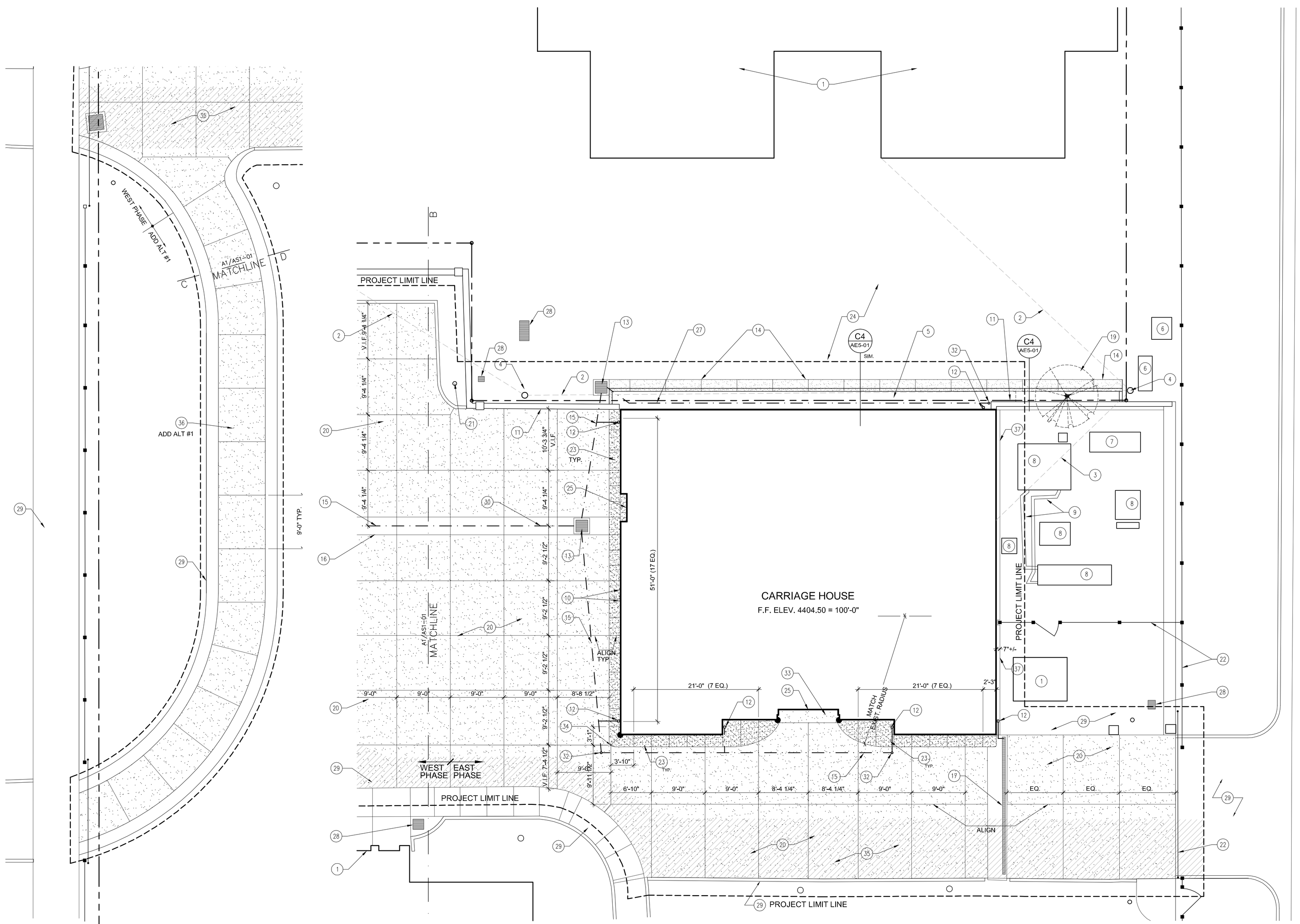

A1 AS1-02 SITE PLAN - WEST DRIVETHROUGH ALT. #1
SCALE: 1/8" = 1'-0"

A2 AS1-02 SITE PLAN - EAST PHASE
SCALE: 1/8" = 1'-0"

REFERENCE NOTES

1. ADJACENT EXIST. BUILDING TO REMAIN UNDISTURBED.
2. EXIST. OVERHEAD POWER LINE TO REMAIN UNDISTURBED.
3. EXIST. OVERHEAD TELEPHONE & DATA LINES RE: ELEC.
4. EXIST. UTILITY POLE TO REMAIN UNDISTURBED.
5. GRAVEL FILL AS SPECIFIED.
6. EXIST. TRANSFORMER TO REMAIN UNDISTURBED.
7. EXIST. GENERATOR TO REMAIN UNDISTURBED.
8. EXIST. MECH. EQUIPMENT TO REMAIN UNDISTURBED.
9. EXIST. MECH. PIPING TO REMAIN UNDISTURBED.
10. EXIST. CONDUIT @ BUILDING BASE TO REMAIN UNDISTURBED.
11. EXIST. SITE WALL TO REMAIN UNDISTURBED, EXCEPT WHERE NOTED.
12. DOWNSPOUT RECEPTOR AT GRADE, SEE BUILDING PLANS AND ELEVATIONS FOR EXACT LOCATIONS. TIE-IN TO UNDERGROUND STORM DRAIN LINE. COORDINATE W/ UTILITIES RE: CIVIL.
13. STORM DRAIN/ CLEANOUT RE: CIVIL.
14. CURB & GUTTER - SAW CUT (E) CONC SLAB RE:CIVIL.
15. UNDERGROUND STORM DRAIN. REMOVE AND REPLACE EXIST. WATERWAY AND/OR ASPHALT. RE: CIVIL.
16. CONCRETE WATERWAY TO REPLACE EXIST. RE: CIVIL.
17. EXIST. TRENCH DRAIN- MODIFY TO RECEIVE NEW STORM DRAIN RE: CIVIL. CLEAN AND VERIFY FUNCTION.
18. NOT USED.
19. REMOVE (E) TREE @ ADJACENT PROPERTY.
20. CONC. PAVING RE:CIVIL.
21. RELOCATE CAMERA TO NEW POLE RE: ELECTRICAL. ADJACENT LANDSCAPING TO REMAIN UNDISTURBED.
22. EXIST. FENCE & GATE TO REMAIN UNDISTURBED.
23. REPLACE CONCRETE. MATCH HISTORIC CONCRETE SKIRT FORM EXPOSED AGGREGATE & TEXTURE.
24. COORDINATE ACCESS ON ADJACENT PROPERTY W/ DFCM. REPAIR ALL DAMAGE CAUSED BY THIS PROJECT LEAVE CATCH BASINS, PARKING LOT, AND DRIVE CLEAN AND READY FOR REUSE.
25. MAINTAIN MIN. ONE PROTECTED ENTRANCE ACCESS TO BUILDING AT ALL TIMES. COORDINATE WITH OWNER.
26. EXIST. JOINT
27. UNDERGROUND STORM DRAIN RE: CIVIL
28. EXIST. STORM DRAIN- CLEAN AND VERIFY FUNCTION.
29. EXIST. SIDEWALK GUTTER OR PAVING TO REMAIN
30. CENTERLINE OF CONC. WATERWAY
31. ALIGN
32. CLEANOUT RE: CIVIL
33. EXIST. CONC. TO REMAIN.
34. START PAVEMENT LAYOUT FROM THIS POINT.
35. MAINTAIN PROTECTED DRIVEWAY & PEDESTRIAN ACCESS - COORDINATE WITH OWNER
36. EXIST. DRIVEWAY - NEW CONC. PAVING RE: CIVIL (ADD ALT# 1)
37. SAW-CUT EXIST. CONC SLAB FOR STONE RESTORATION

LEGEND

MAINTAIN PROTECTED DRIVEWAY & PEDESTRIAN ACCESS - COORDINATE WITH OWNER

GENERAL NOTES -SITE

A. IT IS BEYOND THE SCOPE OF THIS DRAWING TO SHOW EACH AND EVERY DETAIL AND/OR ASPECT OF EXISTING CONDITIONS. IT IS THE CONTRACTOR'S RESPONSIBILITY TO FIELD VERIFY EXISTING CONDITIONS AND DETERMINE THE EXACT AMOUNT OF DEMOLITION, PREPARATION, MATERIALS, ETC. NECESSARY FOR IMPLEMENTING THE WORK AS SHOWN ON THE CONSTRUCTION DOCUMENTS.

STAMP

STATE OF UTAH
ROBERT M. PETERSON
#1142
LICENSED ARCHITECT

SITE PLAN - EAST PHASE & WEST DRIVETHROUGH
SCALE: 1/8" = 1'-0"

REVISIONS:

BID SET

GOVERNOR'S CARRIAGE HOUSE STABILIZATION
DFCM PROJECT NO. 10032310
603 EAST SOUTH TEMPLE
SALT LAKE CITY, UTAH 84103

MJSA
357 West Pierpont Avenue □ Salt Lake City, Utah 84101
Telephone 801 364 5161 □ Facsimile 801 364 5167
ARCHITECTURE INTERIOR DESIGN

THESE DRAWINGS ARE INSTRUMENTS OF SERVICE AND SHALL REMAIN THE PROPERTY OF THE ARCHITECT. NO USE OR REUSE OF THESE DOCUMENTS SHALL BE PERMITTED UNLESS AUTHORIZED IN WRITING BY MJSA ARCHITECTS WITH APPROPRIATE COMPENSATION.

PROJECT NO.: 10014

DATE: 4/12/10

SHEET: AS1-02

S:\10014 - Governor's Mansion Carriage House Restoration\CAD\03_CD\AS1-02.dwg - Mon, 26 Apr 2010 - 10:08am

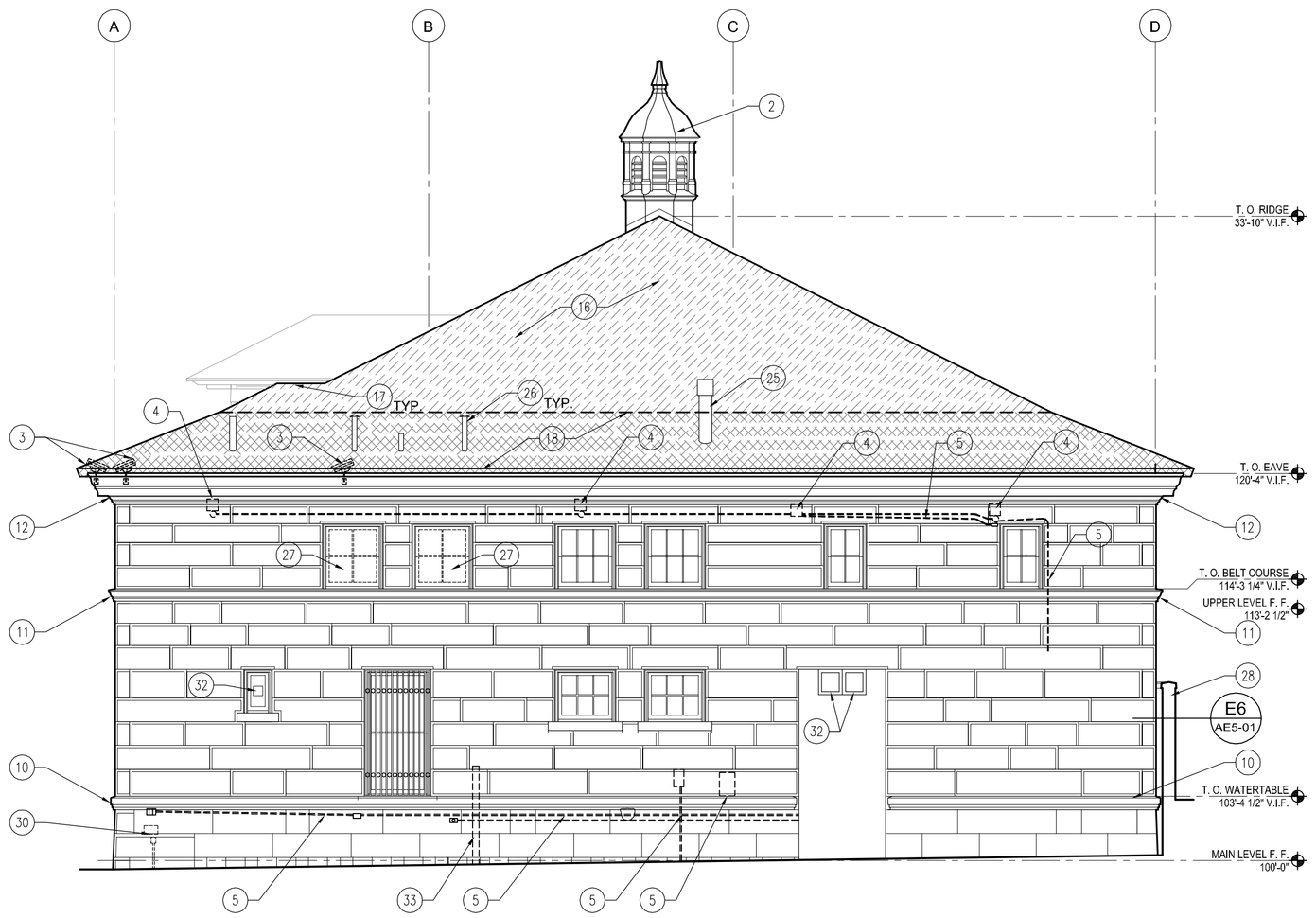

C1 AD2-01 EAST DEMOLITION ELEVATION

SCALE: 3/16" = 1'-0"

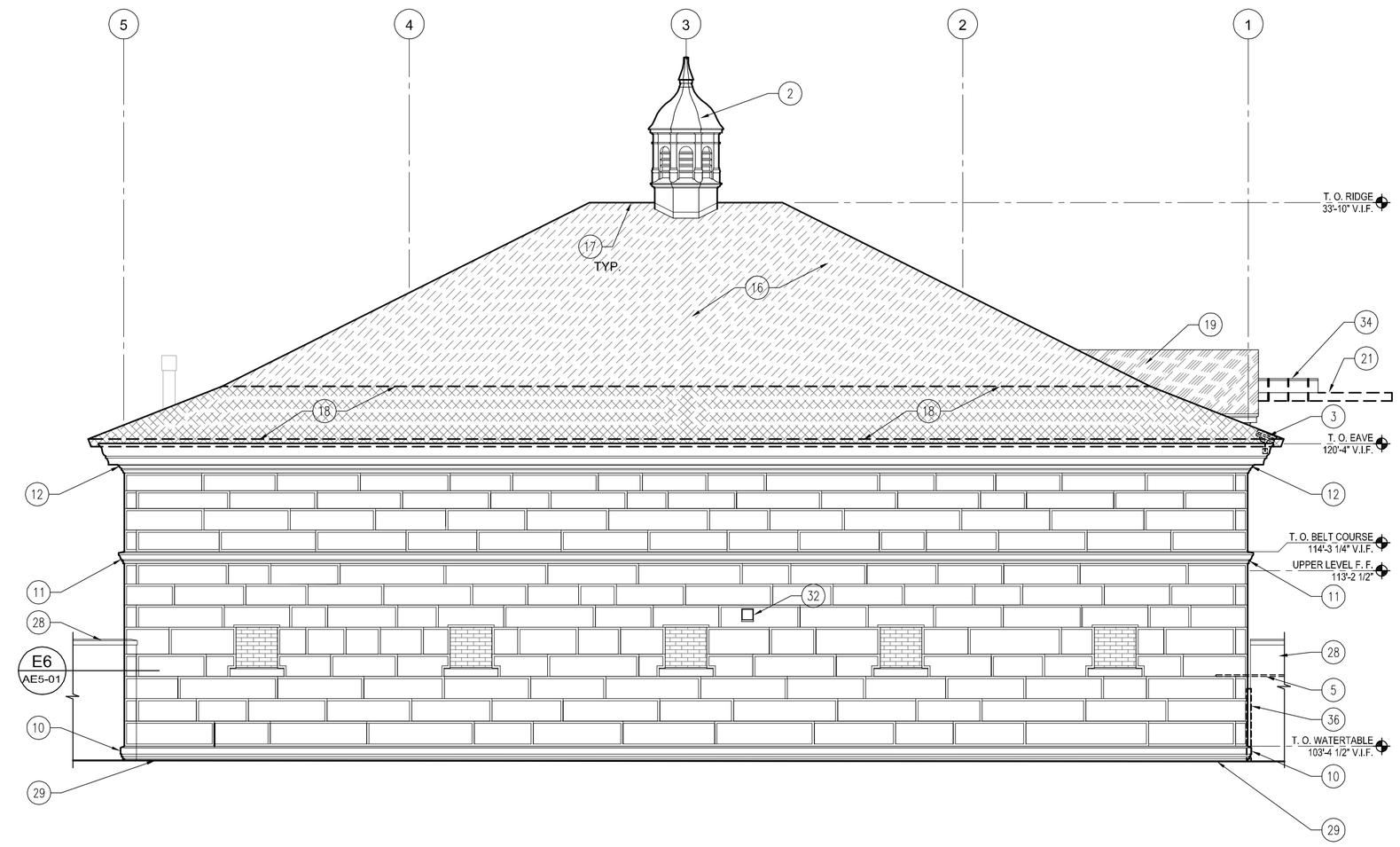

C4 AD2-01 NORTH DEMOLITION ELEVATION

SCALE: 3/16" = 1'-0"

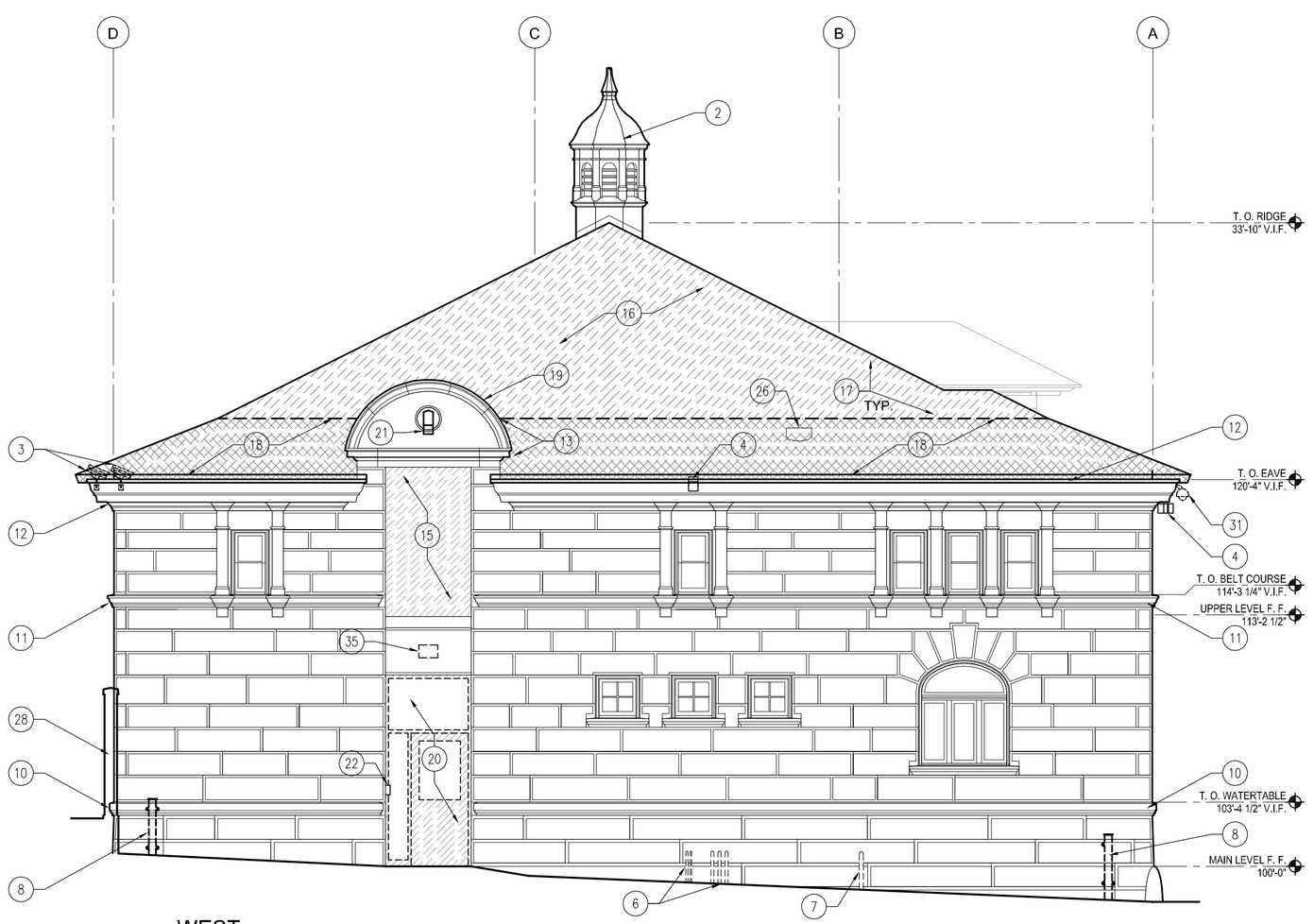

A1 AD2-01 WEST DEMOLITION ELEVATION

SCALE: 3/16" = 1'-0"

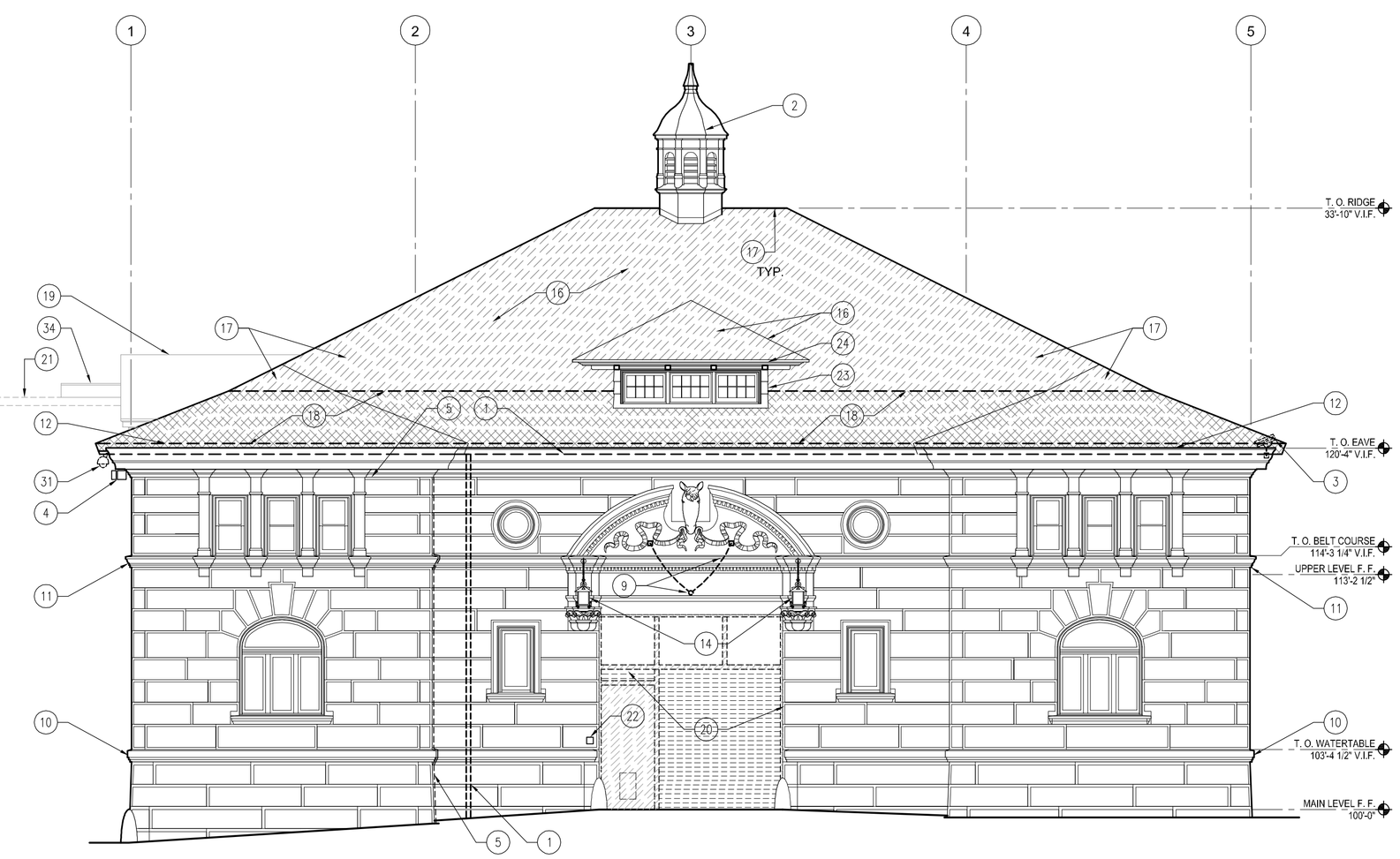

A4 AD2-01 SOUTH DEMOLITION ELEVATION

SCALE: 3/16" = 1'-0"

REFERENCE NOTES

1. REMOVE (E) GUTTER AND DOWNSPOUT.
2. CAREFULLY REMOVE ENTIRE (E) CUPOLA ASSEMBLY AND SAVE FOR RESTORATION AND RE-INSTALLATION RE: ROOF PLAN, ELEVATIONS.
3. REMOVE (E) CAMERA AND ASSOCIATED CONDUIT & WIRING RE: ELEC. RETURN CAMERA TO OWNER.
4. REMOVE (E) LIGHTING AND ASSOCIATED CONDUIT RE: ELEC. RETURN LIGHTS TO OWNER.
5. REMOVE (E) CONDUIT RE: ELEC.
6. (E) CONDUIT TO REMAIN UNDISTURBED.
7. (E) PIPING TO REMAIN UNDISTURBED.
8. REMOVE (E) DISCONNECTED HISTORIC DOWNSPOUT. SAVE TO MATCH SIZE AND PROFILE @ NEW DOWNSPOUTS.
9. REMOVE (E) POLE OUTRIGGER, INCLUDING SUPPORT CHAINS & ESCUTCHEONS.
10. FACE OF (E) LIMESTONE WATERTABLE TO BE REMOVED BY STONE MASON RE: BUILDING ELEVATIONS.
11. FACE OF (E) LIMESTONE BELT COURSE TO BE REMOVED BY STONE MASON RE: BUILDING ELEVATIONS.
12. (E) LIMESTONE CORNICE TO BE REMOVED BY STONE MASON RE: BUILDING ELEVATIONS.
13. (E) LIMESTONE CORNICE AT DORMER TO BE REMOVED BY STONE MASON RE: BUILDING ELEVATIONS.
14. (E) LIGHTING FIXTURE. REMOVE FOR RESTORATION.
15. REMOVE (E) CMU/STUCCO DOOR INFILL.
16. REMOVE (E) ASPHALT SHINGLE ROOFING SYSTEM TO SHEATHING.
17. REMOVE SELECTED SHEATHING AS REQUIRED FOR STRUCTURAL UPGRADES RE: STRUCTURAL.
18. REMOVE (E) OUTRIGGER CONSTRUCTION, INCLUDING SHEATHING, SISTERED 2X RAFTERS AND FASCIA (APPROX. EXTENT).
19. REMOVE (E) STANDING SEAM COPPER ROOFING SYSTEM TO SHEATHING.
20. REMOVE (E) DOOR & FRAME, OVERHEAD EQUIPMENT, ETC.
21. REMOVE (E) SECONDARY WOOD HAYLOFT BEAM, INCLUDING CLAMPS. (E) PRIMARY BEAM WITH COPPER FLASHING TO REMAIN.
22. REMOVE (E) ELECTRICAL BOX RE: ELEC.
23. REMOVE (E) WOOD SIDING @ DORMER. SAVE FRAGMENT(S) TO MATCH AT (N) CONSTRUCTION.
24. (E) COPPER FASCIA AND SOFFIT TO REMAIN UNDISTURBED.
25. (E) FLUE TO REMAIN UNDISTURBED.
26. REMOVE (E) INACTIVE VENT(S). CAP IN ATTIC SPACE.
27. REMOVE (E) WINDOW SASHES.
28. (E) SITE WALL TO REMAIN UNDISTURBED, EXCEPT WHERE NOTED.
29. SAWCUT & REMOVE (E) CONC. SLAB RE: CIVIL.
30. COORDINATE REMOVAL / RELOCATION OF ELECTRONIC DOG 'FENCE' CONTROLS W/ OWNER RE: ELECTRICAL.
31. RELOCATE (E) CAMERA RE: ELECTRICAL & A1/AE2-01.
32. REMOVE (E) VENT COVER. PROTECT OPENING UNTIL INSTALLATION OF NEW VENT COVER RE: BUILDING ELEVATIONS.
33. (E) METAL FENCE TO REMAIN UNDISTURBED.
34. (E) WOOD HAYLOFT BEAM WITH COPPER FLASHING TO REMAIN. SEE BUILDING ELEVATIONS FOR RESTORATION NOTES.
35. REMOVE (E) LIGHT FIXTURE ONLY.
36. REMOVE (E) METAL POST.

REVISIONS:

BID SET

GOVERNOR'S CARRIAGE HOUSE STABILIZATION
DFCM PROJECT NO. 10032310
603 EAST SOUTH TEMPLE
SALT LAKE CITY, UTAH 84103

MJSA
357 West Pierpont Avenue □ Salt Lake City, Utah 84101
Telephone 801 364 5161 □ Facsimile 801 364 5167
ARCHITECTURE INTERIOR DESIGN

STAMP

STATE OF UTAH
ROBERT J. PETERSON
#1142
LICENSED ARCHITECT

THESE DRAWINGS ARE INSTRUMENTS OF SERVICE AND SHALL REMAIN THE PROPERTY OF THE ARCHITECT. NO USE OR RE-USE OF THESE DOCUMENTS SHALL BE PERMITTED UNLESS AUTHORIZED IN WRITING BY MJSA ARCHITECTS WITH APPROPRIATE COMPENSATION.

PROJECT NO.: 10014

DATE: 4/12/10

DEMOLITION
BUILDING ELEVATIONS
SCALE: 3/16" = 1'-0"

SHEET: AD2-01

S:\10014 - Governor's Mansion Carriage House Restoration\CAD\03_CD\AD2-01 Elevation-Demo.dwg - Mon, 26 Apr 2010 - 9:53am

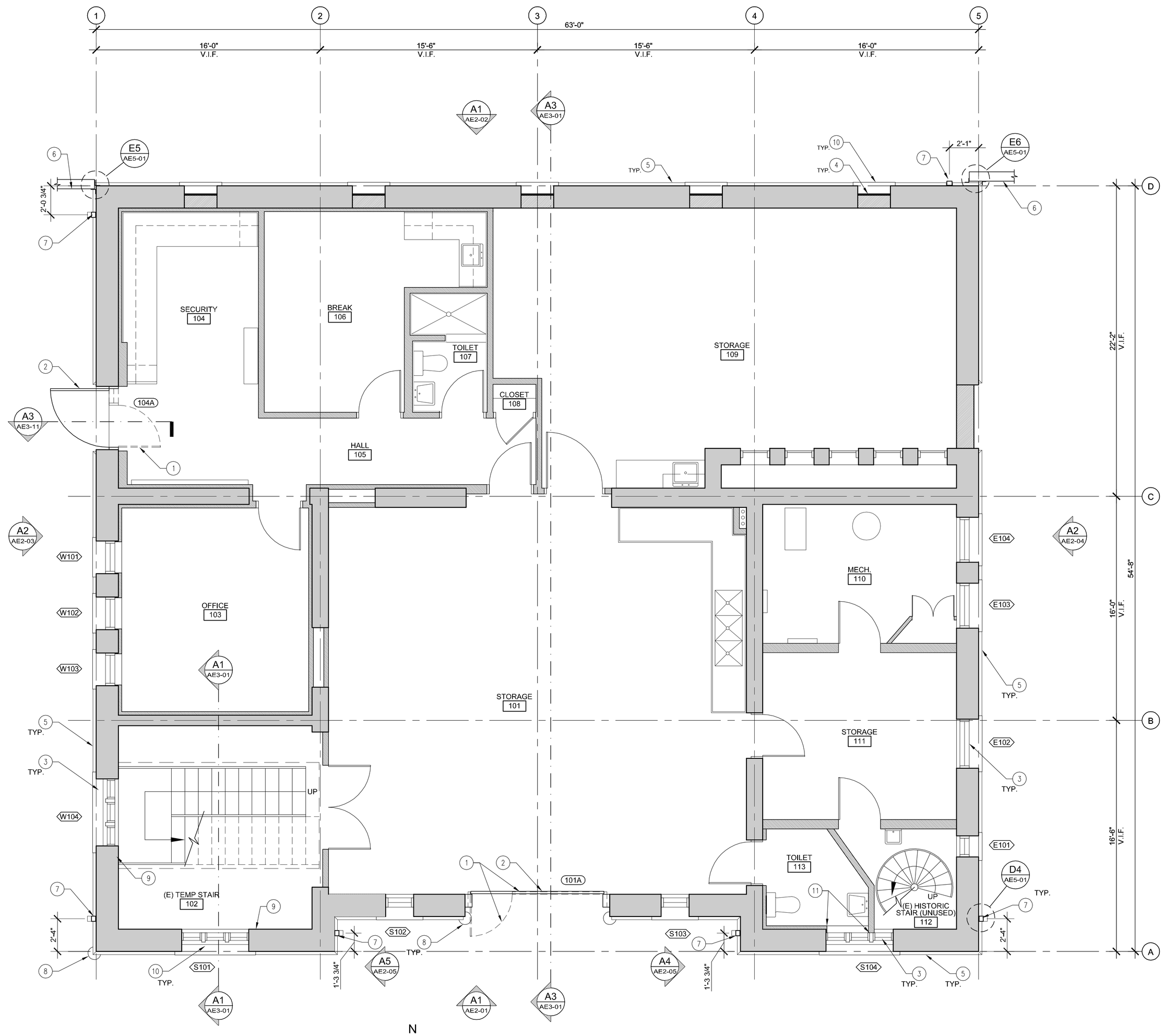

A3 AE1-01 MAIN LEVEL FLOOR PLAN

SCALE: 1/4" = 1'-0"

REFERENCE NOTES

1. REMOVE (E) DOOR AND FRAME, OVERHEAD EQUIPMENT, ETC.
2. DOOR AS SCHEDULED.
3. WINDOW AS SCHEDULED.
4. STUCCO SYSTEM @ (E) BRICK INFILL.
5. (N) LIMESTONE WATERTABLE TO REPLACE (E) RE: BUILDING ELEVATIONS.
6. (E) SITE WALL RE: SITE PLAN, CIVIL.
7. DOWNSPOUT RE: BLDG. ELEVATIONS.
8. (E) STONE BOLLARD RE: SITE PLAN, ELEVATIONS.
9. (E) MASONRY INFILL @ (E) WALL VOID.
10. (E) LIMESTONE SILL REPAIR & FLASHING RE: ELEVATIONS.
11. (E) PARTITION CONSTRUCTION AND INTERIOR FINISHES ADJACENT TO WINDOW UNIT TO REMAIN UNDISTURBED.

GENERAL NOTES - PLAN

A. IT IS BEYOND THE SCOPE OF THIS DRAWING TO SHOW EACH AND EVERY DETAIL AND/OR ASPECT OF EXISTING CONDITIONS. IT IS THE CONTRACTOR'S RESPONSIBILITY TO FIELD VERIFY EXISTING CONDITIONS AND DETERMINE THE EXACT AMOUNT OF DEMOLITION, PREPARATION, MATERIALS, ETC. NECESSARY FOR IMPLEMENTING THE WORK AS SHOWN ON THE CONSTRUCTION DOCUMENTS.

B. BUILDING INTERIOR TO REMAIN OCCUPIED BY OWNER DURING CONSTRUCTION; PROVIDE ACCESS AT MIN. ONE (1) DOOR AT ALL TIMES.

C. INTERIOR LAYOUT PROVIDED FOR REFERENCE ONLY - VERIFY IN FIELD.

STAMP

STATE OF UTAH
ROBERT H. PETTY
#1142
LICENSED ARCHITECT

MAIN LEVEL FLOOR PLAN

SCALE: 1/4" = 1'-0"

REVISIONS:

BID SET

GOVERNOR'S CARRIAGE HOUSE STABILIZATION
DFCM PROJECT NO. 10032310
603 EAST SOUTH TEMPLE
SALT LAKE CITY, UTAH 84103

MJSA
357 West Pierpont Avenue □ Salt Lake City, Utah 84101
Telephone 801 364 5161 □ Facsimile 801 364 5167
ARCHITECTURE INTERIOR DESIGN

THESE DRAWINGS ARE INSTRUMENTS OF SERVICE AND SHALL REMAIN THE PROPERTY OF THE ARCHITECT. NO USE OR REUSE OF THESE DOCUMENTS SHALL BE PERMITTED UNLESS AUTHORIZED IN WRITING BY MJSA ARCHITECTS WITH APPROPRIATE COMPENSATION.

PROJECT NO.: 10014

DATE: 4/12/10

SHEET: AE1-01

S:\10014 - Governor's Mansion Carriage House Restoration\CAD\03_CD\AE1-01 Floor Plan- Main Level.dwg - Mon, 26 Apr 2010 - 9:54am

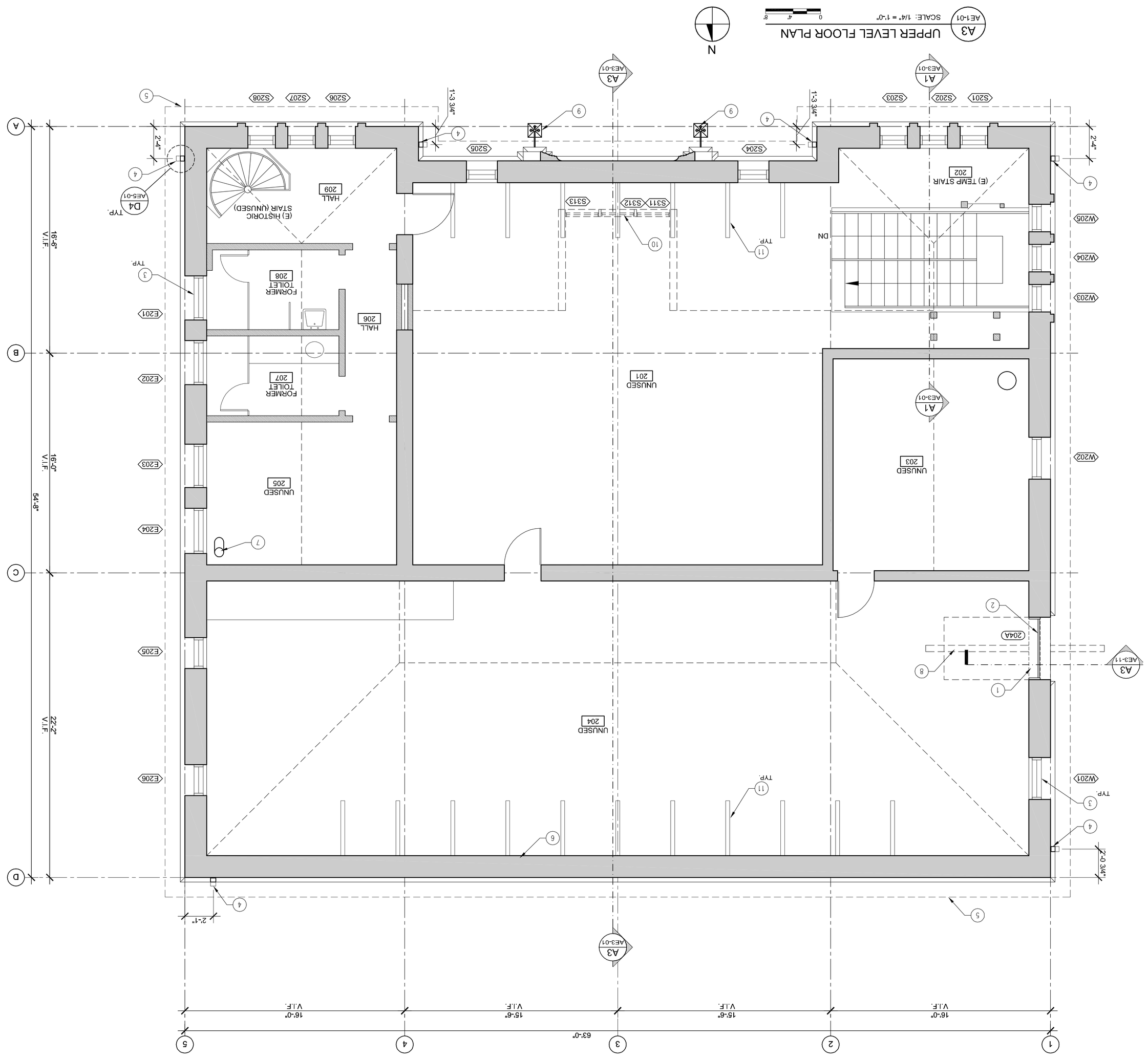

REFERENCE NOTES

1. REMOVE (E) CMU INFILL AT MASONRY OPENING.
2. (N) FIXED DOOR, AS SCHEDULED.
3. (E) WINDOW- RESTORE AS SCHEDULED.
4. DOWNSPOUT RE: BLDG. ELEVATIONS.
5. LINE OF CORNICE ABOVE.
6. MASONRY INFILL @ (E) WALL VOID.
7. (E) MECHANICAL FLUE TO REMAIN UNDISTURBED.
8. (E) WOOD BEAM ABOVE WITH SUPPORT UPGRADE RE: STRUCTURAL.
9. RESTORE (E) HISTORIC EXTERIOR LIGHTING FIXTURE.
10. (E) CLERESTORY WINDOW @ DORMER ABOVE- RESTORE AS SCHEDULED.
11. (E) WOOD SUPPORTS TO REMAIN UNDISTURBED.

REVISIONS:

GENERAL NOTES - PLAN

A. IT IS BEYOND THE SCOPE OF THIS DRAWING TO SHOW EACH AND EVERY DETAIL AND/OR ASPECT OF EXISTING CONDITIONS. IT IS THE CONTRACTOR'S RESPONSIBILITY TO FIELD VERIFY EXISTING CONDITIONS AND DETERMINE THE EXACT AMOUNT OF DEMOLITION, PREPARATION, MATERIALS, ETC. NECESSARY FOR IMPLEMENTING THE WORK AS SHOWN ON THE CONSTRUCTION DOCUMENTS.

B. BUILDING INTERIOR TO REMAIN OCCUPIED BY OWNER DURING CONSTRUCTION; PROVIDE ACCESS AT MIN. ONE (1) DOOR AT ALL TIMES.

C. INTERIOR LAYOUT PROVIDED FOR REFERENCE ONLY - VERIFY IN FIELD.

STAMP

THESE DRAWINGS ARE INSTRUMENTS OF SERVICE AND SHALL REMAIN THE PROPERTY OF THE ARCHITECT. NO USE OR REUSE OF THESE DOCUMENTS SHALL BE PERMITTED UNLESS AUTHORIZED IN WRITING BY MJSA ARCHITECTS WITH APPROPRIATE COMPENSATION.

STATE OF UTAH
ROBERT M. PETER
#1142
LICENSED ARCHITECT

PROJECT NO.: 10014

DATE: 4/12/10

SHEET: AE1-02

UPPER LEVEL FLOOR PLAN

SCALE: 1/4" = 1'-0"

MJSA
357 West Pierpont Avenue □ Salt Lake City, Utah 84101
Telephone 801 364 5161 □ Facsimile 801 364 5167
ARCHITECTURE INTERIOR DESIGN

GOVERNOR'S CARRIAGE HOUSE STABILIZATION

DFCM PROJECT NO. 10032310
603 EAST SOUTH TEMPLE
SALT LAKE CITY, UTAH 84103

BID SET

S:\10014 - Governor's Mansion Carriage House Restoration\CADD_CD\AE1-02 Floor Plan- Upper Level.dwg - Mon, 26 Apr 2010 - 9:55am

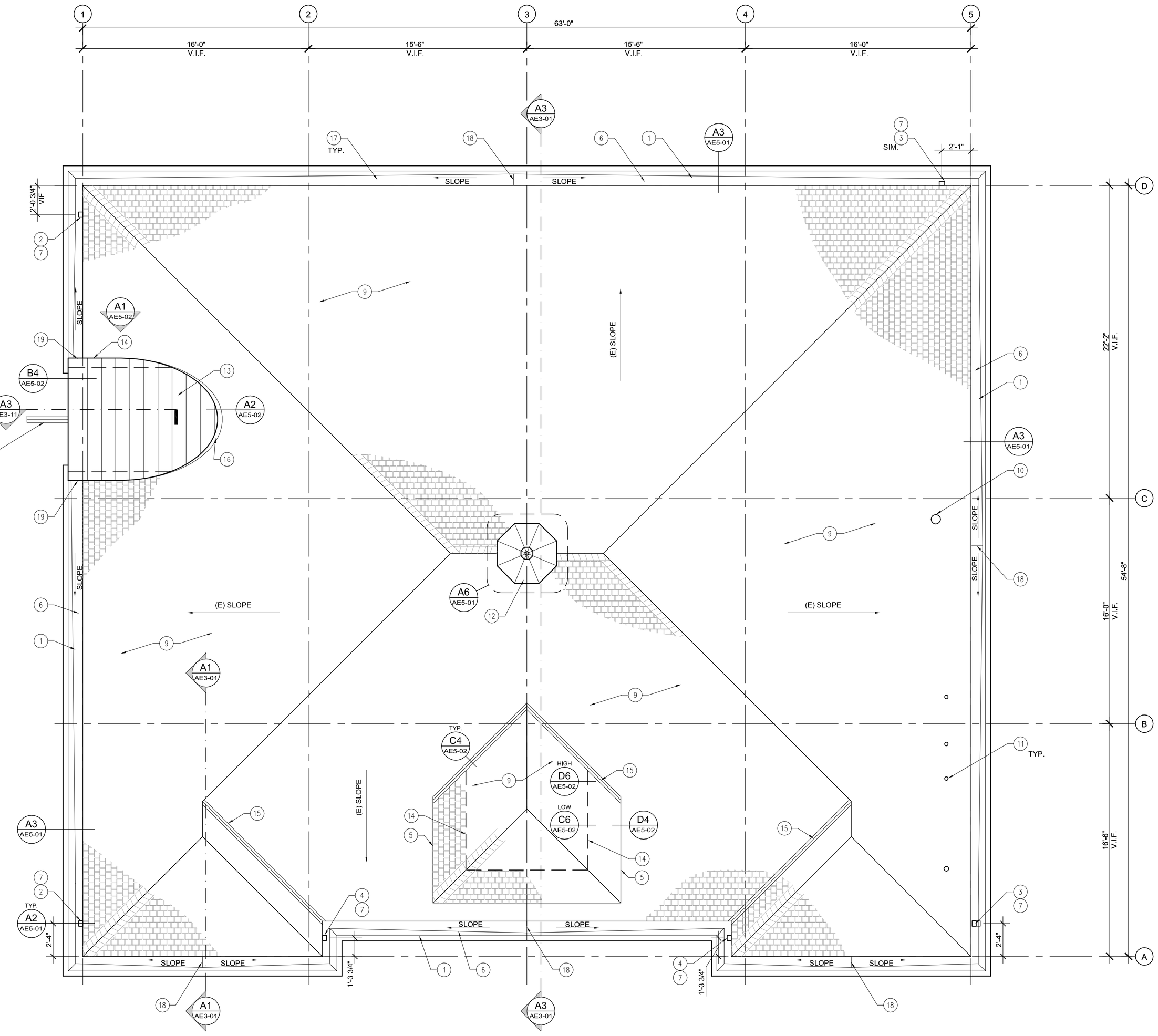

A3 AE1-11 ROOF PLAN
SCALE: 1/4" = 1'-0"

REFERENCE NOTES

1. INTEGRAL GUTTER CONTRUCTION WITH STONE VENEER TO REPLACE (E). RE: STRUCTURAL.
2. DOWNSPOUT OPENING @ INTEGRAL GUTTER. ALIGN WITH (E) HISTORIC DOWNSPOUT LOCATION.
3. DOWNSPOUT OPENING @ INTEGRAL GUTTER OR AS DIMENSIONED.
4. DOWNSPOUT OPENING @ INTEGRAL GUTTER. CENTER ON WALL RE: BUILDING ELEVATIONS.
5. (E) COPPER SOFFIT AND FASCIA TO REMAIN UNDISTURBED.
6. CONT. SNOWMELT @ INTEGRAL GUTTER RE: ELEC.
7. CONT. SNOWMELT IN DOWNSPOUT TO GRADE RE: ELEC.
8. not used
9. ASPHALT SHINGLE ROOFING AS SPECIFIED.
10. FLASHING AT (E) FLUE TO REMAIN UPGRADE IF NEEDED.
11. TYPICAL (E) VENT. FIELD VERIFY AND REMOVE DISABLED VENT. FLASH (E) ACTIVE VENT TO REMAIN.
12. (E) CUPOLA. REMOVE, RESTORE AND RE-INSTALL.
13. 16 OZ. COPPER STANDING SEAM ROOFING.
14. 16 OZ. COPPER STEP FLASHING BETWEEN SHINGLE COURSES.
15. 16 OZ. COPPER VALLEY FLASHING WITH DIVERTER.
16. OVERLAPPING SEGMENTED 16 OZ. COPPER VALLEY FLASHING.
17. SLOPE GUTTER TO DOWNSPOUT 1/4" IN / FT.
18. HIGH POINT @ GUTTER SLOPE- CENTER BETWEEN DOWNSPOUTS.
19. HIGH POINT AT GUTTER SLOPE.

GENERAL NOTES

A. IT IS BEYOND THE SCOPE OF THIS DRAWING TO SHOW EACH AND EVERY DETAIL AND/OR ASPECT OF EXISTING CONDITIONS. IT IS THE CONTRACTOR'S RESPONSIBILITY TO FIELD VERIFY EXISTING CONDITIONS AND DETERMINE THE EXACT AMOUNT OF DEMOLITION, PREPARATION, MATERIALS, ETC. NECESSARY FOR IMPLEMENTING THE WORK AS SHOWN ON THE CONSTRUCTION DOCUMENTS.

STAMP

STATE OF UTAH
ROBERT H. PETERSON
#1142
LICENSED ARCHITECT

ROOF PLAN

SCALE: 1/4" = 1'-0"

REVISIONS:

BID SET

GOVERNOR'S CARRIAGE HOUSE STABILIZATION
DFCM PROJECT NO. 10032310
603 EAST SOUTH TEMPLE
SALT LAKE CITY, UTAH 84103

MJSA
357 West Pierpont Avenue □ Salt Lake City, Utah 84101
Telephone 801 364 5161 □ Facsimile 801 364 5167
ARCHITECTURE INTERIOR DESIGN

THESE DRAWINGS ARE INSTRUMENTS OF SERVICE AND SHALL REMAIN THE PROPERTY OF THE ARCHITECT. NO USE OR REUSE OF THESE DOCUMENTS SHALL BE PERMITTED UNLESS AUTHORIZED IN WRITING BY MJSA ARCHITECTS WITH APPROPRIATE COMPENSATION.

PROJECT NO.: 10014

DATE: 4/12/10

SHEET: AE1-11

S:\10014 - Governor's Mansion Carriage House Restoration\CAD\03_CD\AE1-11 Roof Plan.dwg - Mon, 26 Apr 2010 - 9:55am

STONE RESTORATION NOTES

1. ALL LIMESTONE AND SANDSTONE UNITS ARE CLASSIFIED AS LIGHT SURFACE EROSION (SEE SPECIFICATIONS) UNLESS NOTED OTHERWISE (i.e., S1, S2...).
2. FOR REPOINTING OF STONE, REFER TO THE POINTING SCHEDULE IN THE STONE REPAIR SPECIFICATION AND/OR STONE LEGEND.
3. WHERE OUTSIDE CORNERS OF STONE UNITS ARE NOT NOTED TO BE REPAIRED WITH DUTCHMAN, LIGHTLY HAND TOOL THE CORNERS TO HAVE A SIMILAR RADIUS OVER THE LENGTH OF THE UNIT. BLEND OR TRANSITION WITH ADJACENT STONE UNITS. RE-CREATE APPROPRIATE TOOLING TEXTURE.
4. REMOVE ALL EXPOSED UNUSED OR REDUNDANT ANCHORS, CONDUIT, BOLTS, ETC. FROM STONE AND PATCH HOLES. PATCH ALL EXISTING HOLES UNLESS OTHERWISE NOTED.
5. PATCH ALL HOLES RESULTING FROM STRUCTURAL PINNING, ANCHOR REMOVAL, ETC.
6. EXTENT OF CONDITIONS SHOWN ON THE DRAWINGS IS APROXIMATE; FIELD VERIFY. NOTIFY THE ARCHITECT OF ANY DISCOVERED DAMAGE, ADDITIONAL CONDITIONS, ETC. THAT MAY REQUIRE REPAIR.
7. ALL STONE TO BE CLEANED, REPAIRED, PATCHED AND CONSOLIDATED PER SPECIFICATION.
8. NEW LIMESTONE AND GRANITE TO MATCH BEST HISTORIC TEXTURE OF EXISTING STONE.
9. REFER TO PROJECT SPECIFICATIONS FOR ADDITIONAL INFORMATION FOR THE RESTORATION OF LIMESTONE, GRANITE AND SANDSTONE.
10. CLEAN ALL PAINT FROM LIMESTONE, GRANITE AND SANDSTONE AS PER SPECIFICATIONS.

STONE LEGEND

SYMBOL: S#

- S1 MODERATE DETERIORATION WITH 60% MORTAR RE-POINTING - SEE SPEC.
- S2 HEAVY DETERIORATION WITH 95% MORTAR RE-POINTING - SEE SPEC.
- S3 PAINT OR STAIN (i.e., CARBON, RUST, COPPER, ETC.) TO BE CLEANED - SEE SPEC. & GEN. NOTES.
- S4 REPLACE EXISTING STONE WITH NEW MATCHING STONE DUTCHMAN - SEE SPEC.
- S5 REPLACE EXISTING STONE DUTCHMAN/PATCH WITH NEW MATCHING STONE DUTCHMAN - SEE SPEC.
- S6 REPLACE EXISTING STONE WITH NEW MATCHING STONE - SEE SPEC.
- S7 NEW MATCHING STONE PIECE - SEE SPEC.
- S8 PATCH STONE - SEE SPEC.

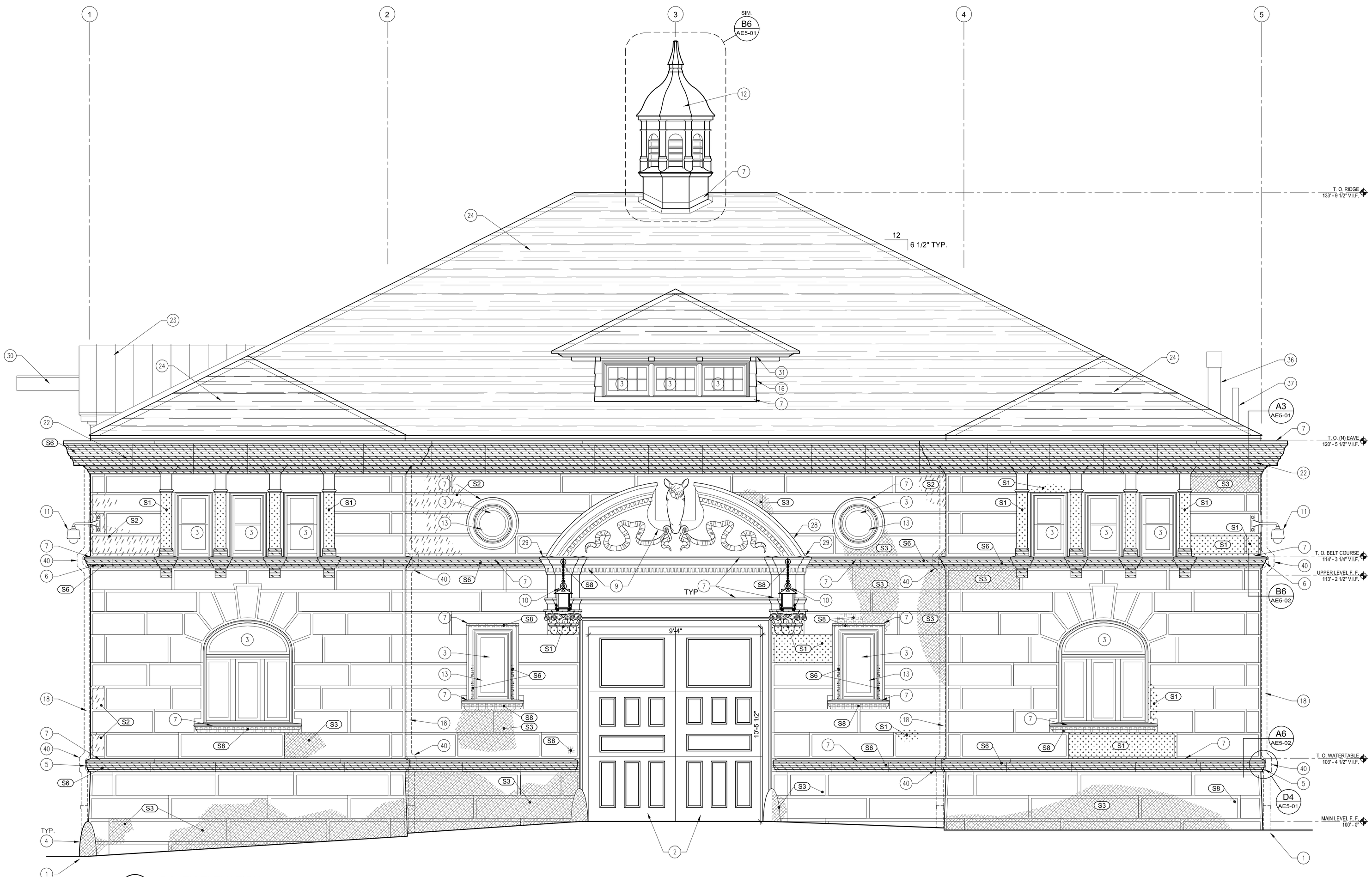

A1 AE2-01 SOUTH ELEVATION

SCALE: 3/8" = 1'-0"

0 1'-4" 2'-8"

REFERENCE NOTES

1. FINISHED GRADE RE: CIVIL.
2. (N) DOOR TO REPLACE (E), AS SCHEDULED.
3. WINDOW AS SCHEDULED.
4. (E) GRANITE STONE UNIT WITH INTEGRAL BOLLARD. RESTORE AS PER STONE LEGEND.
5. (N) LIMESTONE WATERTABLE TO REPLACE (E).
6. (N) LIMESTONE BELT COURSE TO REPLACE (E).
7. CONT. 16 OZ. COPPER FLASHING.
9. (E) PORTICO AND SCULPTURE TO REMAIN UNDISTURBED EXCEPT WHERE NOTED. PROTECT AS REQUIRED.
10. REFURBISH (E) HISTORIC EXTERIOR LIGHTING FIXTURE RE: ELEC.
11. SECURITY CAMERA W/ CUSTOM CORNER MOUNT BRACKET - COORDINATE W/ ELEC.
12. REMOVE (E) METAL CUPOLA, RESTORE AND RE-INSTALL.
13. ORNAMENTAL GRILLE @ WINDOW OPENING- MATCH HISTORIC DESIGN RE: AE6-01.
14. ORNAMENTAL GRILLE @ DOOR LITE- MATCH HISTORIC DESIGN RE: AE6-01.
16. (N) SIDING TO MACH (E) WOOD SIDING, PAINT.
18. COPPER DOWNSPOUT- MATCH (E) PROFILE.
22. STONE FASCIA AND SOFFIT WITH INTEGRAL GUTTER TO REPLACE (E).
23. STANDING SEAM 16 OZ. COPPER ROOFING TO REPLACE (E) ROOFING.
24. ASPHALT SHINGLE ROOFING SYSTEM.
28. (E) FLASHING TO REMAIN UNDISTURBED. PROTECT AS REQUIRED.
29. SOLDERED JOINT AT (E) AND (N) FLASHING.
30. REPAIR (E) COPPER FLASHING AT (E) WOOD BEAM TO REMAIN.
31. RESTORE (E) COPPER FASCIA AND SOFFIT WITH BRACKETS.
36. (E) FLUE TO REMAIN UNDISTURBED.
37. (E) VENT STACK. FIELD VERIFY VENT OPERATION- REMOVE NON-FUNCTIONAL VENTS.
40. DOWNSPOUT EXTENSION AT PROTRUDING STONEWORK.

GENERAL NOTES

A. IT IS BEYOND THE SCOPE OF THIS DRAWING TO SHOW EACH AND EVERY DETAIL AND/OR ASPECT OF EXISTING CONDITIONS. IT IS THE CONTRACTOR'S RESPONSIBILITY TO FIELD VERIFY EXISTING CONDITIONS AND DETERMINE THE EXACT AMOUNT OF DEMOLITION, PREPARATION, MATERIALS, ETC. NECESSARY FOR IMPLEMENTING THE WORK AS SHOWN ON THE CONSTRUCTION DOCUMENTS.

STAMP

STATE OF UTAH
ROBERT D. JOHNSON
#1142
LICENSED ARCHITECT

EXTERIOR BUILDING ELEVATION SOUTH

SCALE: 3/8" = 1'-0"

REVISIONS:

BID SET

GOVERNOR'S CARRIAGE HOUSE STABILIZATION
DFCM PROJECT NO. 10032310
603 EAST SOUTH TEMPLE
SALT LAKE CITY, UTAH 84103

MJSA
357 West Pierpont Avenue □ Salt Lake City, Utah 84101
Telephone 801 364 5161 □ Facsimile 801 364 5167
ARCHITECTURE INTERIOR DESIGN

THESE DRAWINGS ARE INSTRUMENTS OF SERVICE AND SHALL REMAIN THE PROPERTY OF THE ARCHITECT. NO USE OR RE-USE OF THESE DOCUMENTS SHALL BE PERMITTED UNLESS AUTHORIZED IN WRITING BY MJSA ARCHITECTS WITH APPROPRIATE COMPENSATION.

PROJECT NO.: 10014

DATE: 4/12/10

SHEET: AE2-01

S:\10014 - Governor's Mansion Carriage House Rescoration\CAD\D_CD\AE2-01 Elevation- South.dwg - Mon, 26 Apr 2010 - 9:55am

STONE RESTORATION NOTES

1. ALL LIMESTONE AND SANDSTONE UNITS ARE CLASSIFIED AS LIGHT SURFACE EROSION (SEE SPECIFICATIONS) UNLESS NOTED OTHERWISE (i.e., S1, S2...).
2. FOR REPOINTING OF STONE, REFER TO THE POINTING SCHEDULE IN THE STONE REPAIR SPECIFICATION AND/OR STONE LEGEND.
3. WHERE OUTSIDE CORNERS OF STONE UNITS ARE NOT NOTED TO BE REPAIRED WITH DUTCHMAN, LIGHTLY HAND TOOL THE CORNERS TO HAVE A SIMILAR RADIUS OVER THE LENGTH OF THE UNIT. BLEND OR TRANSITION WITH ADJACENT STONE UNITS. RE-CREATE APPROPRIATE TOOLING TEXTURE.
4. REMOVE ALL EXPOSED UNUSED OR REDUNDANT ANCHORS, CONDUIT, BOLTS, ETC. FROM STONE AND PATCH HOLES. PATCH ALL EXISTING HOLES UNLESS OTHERWISE NOTED.
5. PATCH ALL HOLES RESULTING FROM STRUCTURAL PINNING, ANCHOR REMOVAL, ETC.
6. EXTENT OF CONDITIONS SHOWN ON THE DRAWINGS IS APROXIMATE; FIELD VERIFY. NOTIFY THE ARCHITECT OF ANY DISCOVERED DAMAGE, ADDITIONAL CONDITIONS, ETC. THAT MAY REQUIRE REPAIR.
7. ALL STONE TO BE CLEANED, REPAIRED, PATCHED AND CONSOLIDATED PER SPECIFICATION.
8. NEW LIMESTONE AND GRANITE TO MATCH BEST HISTORIC TEXTURE OF EXISTING STONE.
9. REFER TO PROJECT SPECIFICATIONS FOR ADDITIONAL INFORMATION FOR THE RESTORATION OF LIMESTONE, GRANITE AND SANDSTONE.
10. CLEAN ALL PAINT FROM LIMESTONE, GRANITE AND SANDSTONE AS PER SPECIFICATIONS.

STONE LEGEND

SYMBOL: S#

- S1 MODERATE DETERIORATION WITH 60% MORTAR RE-POINTING - SEE SPEC.
- S2 HEAVY DETERIORATION WITH 95% MORTAR RE-POINTING - SEE SPEC.
- S3 PAINT OR STAIN (i.e., CARBON, RUST, COPPER, ETC.) TO BE CLEANED - SEE SPEC. & GEN. NOTES.
- S4 REPLACE EXISTING STONE WITH NEW MATCHING STONE DUTCHMAN - SEE SPEC.
- S5 REPLACE EXISTING STONE DUTCHMAN/PATCH WITH NEW MATCHING STONE DUTCHMAN - SEE SPEC.
- S6 REPLACE EXISTING STONE WITH NEW MATCHING STONE - SEE SPEC.
- S7 NEW MATCHING STONE PIECE - SEE SPEC.
- S8 PATCH STONE - SEE SPEC.

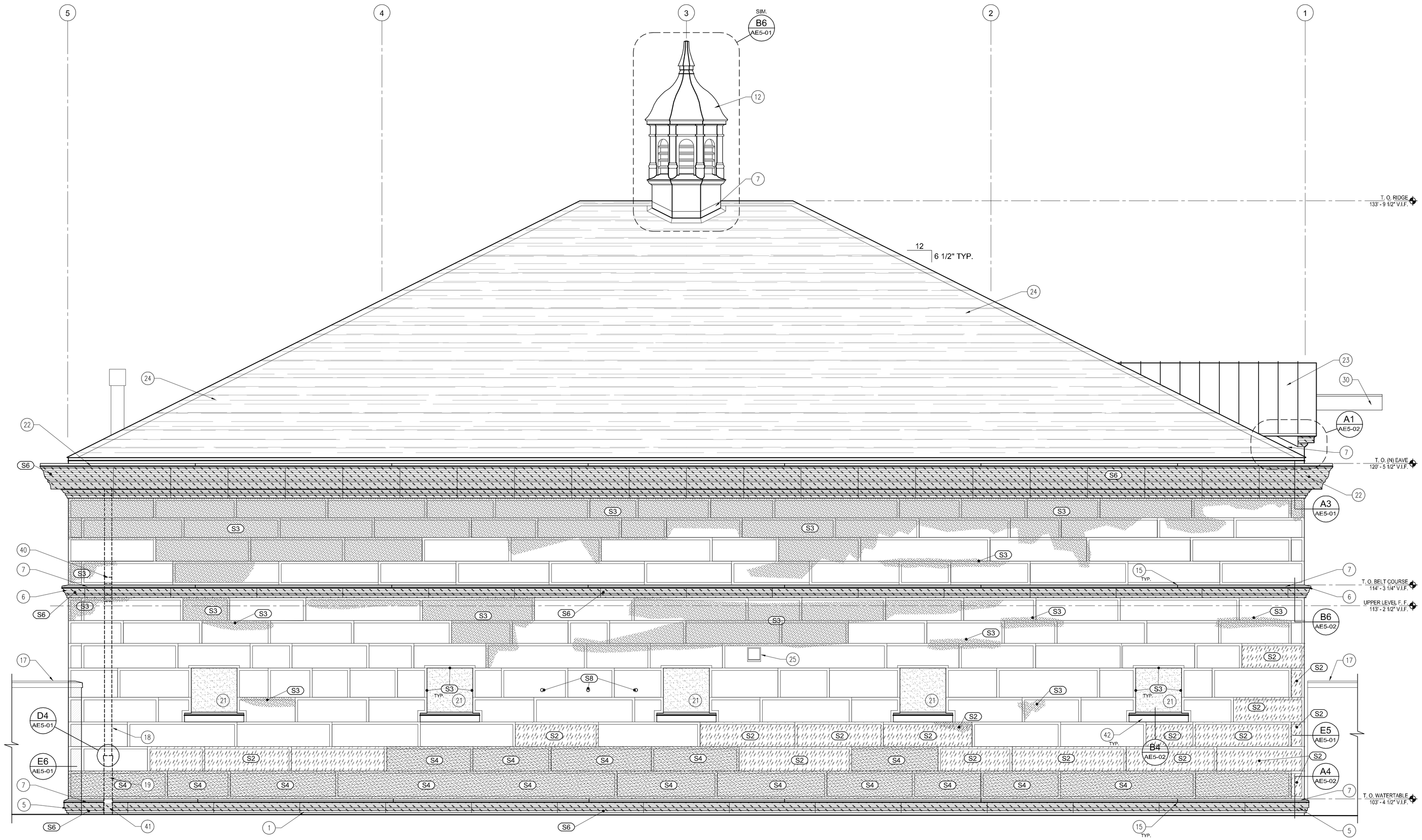

A1 AE2-02 NORTH ELEVATION

SCALE: 3/8" = 1'-0"

0 1'-4" 2'-8"

REFERENCE NOTES

1. FINISHED GRADE RE: CIVIL.
5. (N) LIMESTONE WATERTABLE TO REPLACE (E).
6. (N) LIMESTONE BELT COURSE TO REPLACE (E).
7. CONT. 16 OZ. COPPER FLASHING.
12. REMOVE (E) METAL CUPOLA, RESTORE AND RE-INSTALL.
15. TYP. DRIVE CLEAT @ 10'-0" O.C. MAX., OR AS SHOWN.
17. (E) SITE WALL.
18. COPPER DOWNSPOUT- MATCH (E) SIZE AND PROFILE.
19. DOWNSPOUT RECEPTOR TO BELOW-GRADE SITE DRAINAGE RE: CIVIL.
21. STUCCO FINISH @ (E) BRICK WINDOW INFILL. MATCH (E) STUCCO.
22. STONE FASCIA AND SOFFIT WITH INTEGRAL GUTTER TO REPLACE (E).
23. STANDING SEAM 16 OZ. COPPER ROOFING TO REPLACE (E) ROOFING.
24. ASPHALT SHINGLE ROOFING.
25. (N) 16 OZ. COPPER EXHAUST VENT TO REPLACE (E). MATCH (E) SIZE AND PROFILE.
30. REPAIR (E) COPPER FLASHING AT (E) WOOD BEAM TO REMAIN.
40. DOWNSPOUT EXTENSIONS AT PROTRUDING STONEWORK.
41. NOTCH STONE WAINSCOT AT DOWNSPOUT SHOE.
42. RESHAPE TOP OF LIMESTONE SILLS TO CONSTANT, UNIFORM SLOPE ; PATCH HOLES & EDGES AS NEEDED PRIOR TO FLASHING.

GENERAL NOTES

A. IT IS BEYOND THE SCOPE OF THIS DRAWING TO SHOW EACH AND EVERY DETAIL AND/OR ASPECT OF EXISTING CONDITIONS. IT IS THE CONTRACTOR'S RESPONSIBILITY TO FIELD VERIFY EXISTING CONDITIONS AND DETERMINE THE EXACT AMOUNT OF DEMOLITION, PREPARATION, MATERIALS, ETC. NECESSARY FOR IMPLEMENTING THE WORK AS SHOWN ON THE CONSTRUCTION DOCUMENTS.

STAMP

STATE OF UTAH
ROBERT J. PETERSON
#1142
LICENSED ARCHITECT

REVISIONS:

BID SET

GOVERNOR'S CARRIAGE HOUSE STABILIZATION

DFCM PROJECT NO. 10032310
603 EAST SOUTH TEMPLE
SALT LAKE CITY, UTAH 84103

MJSA
357 West Pierpont Avenue ☐ Salt Lake City, Utah 84101
Telephone 801 364 5161 ☐ Facsimile 801 364 5167
ARCHITECTURE INTERIOR DESIGN

THESE DRAWINGS ARE INSTRUMENTS OF SERVICE AND SHALL REMAIN THE PROPERTY OF THE ARCHITECT. NO USE OR RE-USE OF THESE DOCUMENTS SHALL BE PERMITTED UNLESS AUTHORIZED IN WRITING BY MJSA ARCHITECTS WITH APPROPRIATE COMPENSATION.

PROJECT NO.: 10014

DATE: 4/12/10

EXTERIOR BUILDING ELEVATION NORTH

SCALE: 3/8" = 1'-0"

SHEET: AE2-02

S:\10014 - Governor's Mansion Carriage House Restoration\CADD_CD\AE2-02 Elevation- North.dwg - Mon, 26 Apr 2010 - 9:58am

STONE RESTORATION NOTES

1. ALL LIMESTONE AND SANDSTONE UNITS ARE CLASSIFIED AS LIGHT SURFACE EROSION (SEE SPECIFICATIONS) UNLESS NOTED OTHERWISE (i.e., S1, S2...).
2. FOR REPOINTING OF STONE, REFER TO THE POINTING SCHEDULE IN THE STONE REPAIR SPECIFICATION AND/OR STONE LEGEND.
3. WHERE OUTSIDE CORNERS OF STONE UNITS ARE NOT NOTED TO BE REPAIRED WITH DUTCHMAN, LIGHTLY HAND TOOL THE CORNERS TO HAVE A SIMILAR RADIUS OVER THE LENGTH OF THE UNIT. BLEND OR TRANSITION WITH ADJACENT STONE UNITS. RE-CREATE APPROPRIATE TOOLING TEXTURE.
4. REMOVE ALL EXPOSED UNUSED OR REDUNDANT ANCHORS, CONDUIT, BOLTS, ETC. FROM STONE AND PATCH HOLES. PATCH ALL EXISTING HOLES UNLESS OTHERWISE NOTED.
5. PATCH ALL HOLES RESULTING FROM STRUCTURAL PINNING, ANCHOR REMOVAL, ETC.
6. EXTENT OF CONDITIONS SHOWN ON THE DRAWINGS IS APROXIMATE; FIELD VERIFY. NOTIFY THE ARCHITECT OF ANY DISCOVERED DAMAGE, ADDITIONAL CONDITIONS, ETC. THAT MAY REQUIRE REPAIR.
7. ALL STONE TO BE CLEANED, REPAIRED, PATCHED AND CONSOLIDATED PER SPECIFICATION.
8. NEW LIMESTONE AND GRANITE TO MATCH BEST HISTORIC TEXTURE OF EXISTING STONE.
9. REFER TO PROJECT SPECIFICATIONS FOR ADDITIONAL INFORMATION FOR THE RESTORATION OF LIMESTONE, GRANITE AND SANDSTONE.
10. CLEAN ALL PAINT FROM LIMESTONE, GRANITE AND SANDSTONE AS PER SPECIFICATIONS.

STONE LEGEND

SYMBOL: S#

- S1 MODERATE DETERIORATION WITH 60% MORTAR RE-POINTING - SEE SPEC.
- S2 HEAVY DETERIORATION WITH 95% MORTAR RE-POINTING - SEE SPEC.
- S3 PAINT OR STAIN (i.e., CARBON, RUST, COPPER, ETC.) TO BE CLEANED - SEE SPEC. & GEN. NOTES.
- S4 REPLACE EXISTING STONE WITH NEW MATCHING STONE DUTCHMAN - SEE SPEC.
- S5 REPLACE EXISTING STONE DUTCHMAN/PATCH WITH NEW MATCHING STONE DUTCHMAN - SEE SPEC.
- S6 REPLACE EXISTING STONE WITH NEW MATCHING STONE - SEE SPEC.
- S7 NEW MATCHING STONE PIECE - SEE SPEC.
- S8 PATCH STONE - SEE SPEC.

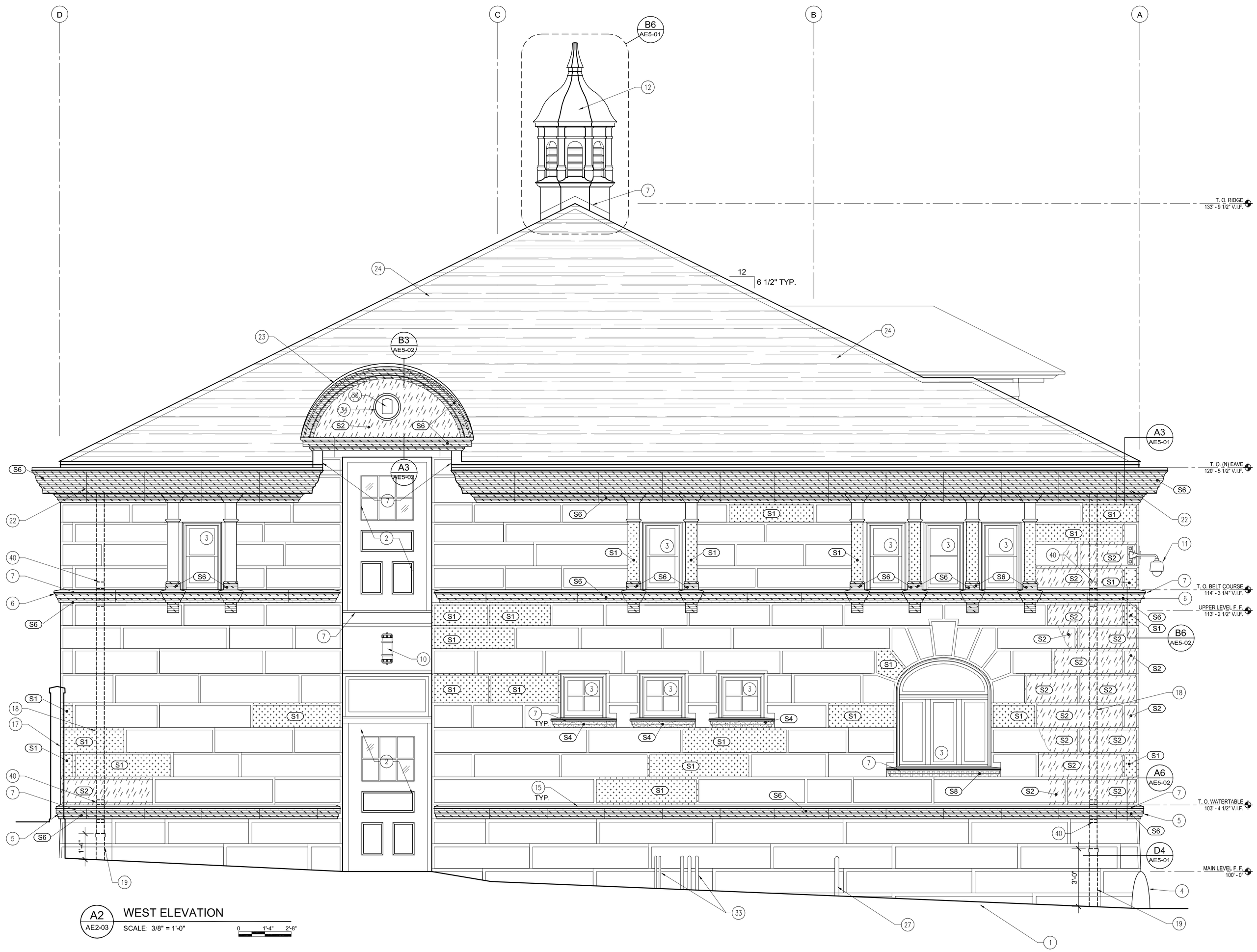

WEST ELEVATION
SCALE: 3/8" = 1'-0"

REFERENCE NOTES

1. FINISHED GRADE RE: CIVIL.
2. (N) DOOR TO REPLACE (E), AS SCHEDULED.
3. WINDOW AS SCHEDULED.
4. (E) GRANITE STONE UNIT WITH INTEGRAL BOLLARD. RESTORE AS PER STONE LEGEND.
5. (N) LIMESTONE WATERTABLE TO REPLACE (E).
6. (N) LIMESTONE BELT COURSE TO REPLACE (E).
7. CONT. 16 OZ. COPPER FLASHING.
10. (N) EXTERIOR LIGHTING FIXTURE TO REPLACE (E) RE: ELEC.- WINONA LIGHTING FIXTURE # 4923-WL OR SIM.
11. SECURITY CAMERA W/ CUSTOM CORNER BRACKET- COORDINATE W/ ELEC.
12. REMOVE (E) METAL CUPOLA, RESTORE AND RE-INSTALL.
15. TYP. DRIVE CLEAT @ 10'-0" O.C. MAX., OR AS SHOWN.
17. (E) SITE WALL.
18. COPPER DOWNSPOUT- MATCH (E) PROFILE.
19. DOWNSPOUT RECEPTOR TO BELOW-GRADE SITE DRAINAGE RE: CIVIL.
22. STONE FASCIA AND SOFFIT WITH INTEGRAL GUTTER TO REPLACE (E).
23. STANDING SEAM 16 OZ. COPPER ROOFING TO REPLACE (E) ROOFING.
24. ASPHALT SHINGLE ROOFING.
27. (E) PIPING TO REMAIN UNDISTURBED.
30. REPAIR (E) COPPER FLASHING AT (E) WOOD BEAM TO REMAIN.
33. (E) CONDUIT TO REMAIN UNDISTURBED RE: ELEC.
34. RESTORE (E) COPPER INFILL AT MASONRY OPENING W/ BEAM.
40. DOWNSPOUT EXTENSIONS AT PROTRUDING STONEWORK.

GENERAL NOTES -ELEVATIONS

A. IT IS BEYOND THE SCOPE OF THIS DRAWING TO SHOW EACH AND EVERY DETAIL AND/OR ASPECT OF EXISTING CONDITIONS. IT IS THE CONTRACTOR'S RESPONSIBILITY TO FIELD VERIFY EXISTING CONDITIONS AND DETERMINE THE EXACT AMOUNT OF DEMOLITION, PREPARATION, MATERIALS, ETC. NECESSARY FOR IMPLEMENTING THE WORK AS SHOWN ON THE CONSTRUCTION DOCUMENTS.

STAMP

STATE OF UTAH
ROBERT J. MOSER
#1142
LICENSED ARCHITECT

EXTERIOR BUILDING ELEVATION WEST
SCALE: 3/8" = 1'-0"

REVISIONS:

BID SET

GOVERNOR'S CARRIAGE HOUSE STABILIZATION
DFCM PROJECT NO. 10032310
603 EAST SOUTH TEMPLE
SALT LAKE CITY, UTAH 84103

MJSA
357 West Pierpont Avenue □ Salt Lake City, Utah 84101
Telephone 801 364 5161 □ Facsimile 801 364 5167
ARCHITECTURE INTERIOR DESIGN

THESE DRAWINGS ARE INSTRUMENTS OF SERVICE AND SHALL REMAIN THE PROPERTY OF THE ARCHITECT. NO USE OR RE-USE OF THESE DOCUMENTS SHALL BE PERMITTED UNLESS AUTHORIZED IN WRITING BY MJSA ARCHITECTS WITH APPROPRIATE COMPENSATION.

PROJECT NO.: 10014

DATE: 4/12/10

SHEET: AE2-03

S:\10014 - Governor's Mansion Carriage House Restoration\CADD_CD\AE2-03 Elevation- West.dwg - Mon, 26 Apr 2010 - 9:59am

STONE RESTORATION NOTES

1. ALL LIMESTONE AND SANDSTONE UNITS ARE CLASSIFIED AS LIGHT SURFACE EROSION (SEE SPECIFICATIONS) UNLESS NOTED OTHERWISE (i.e., S1, S2...).
2. FOR REPOINTING OF STONE, REFER TO THE POINTING SCHEDULE IN THE STONE REPAIR SPECIFICATION AND/OR STONE LEGEND.
3. WHERE OUTSIDE CORNERS OF STONE UNITS ARE NOT NOTED TO BE REPAIRED WITH DUTCHMAN, LIGHTLY HAND TOOL THE CORNERS TO HAVE A SIMILAR RADIUS OVER THE LENGTH OF THE UNIT. BLEND OR TRANSITION WITH ADJACENT STONE UNITS. RE-CREATE APPROPRIATE TOOLING TEXTURE.
4. REMOVE ALL EXPOSED UNUSED OR REDUNDANT ANCHORS, CONDUIT, BOLTS, ETC. FROM STONE AND PATCH HOLES. PATCH ALL EXISTING HOLES UNLESS OTHERWISE NOTED.
5. PATCH ALL HOLES RESULTING FROM STRUCTURAL PINNING, ANCHOR REMOVAL, ETC.
6. EXTENT OF CONDITIONS SHOWN ON THE DRAWINGS IS APROXIMATE; FIELD VERIFY. NOTIFY THE ARCHITECT OF ANY DISCOVERED DAMAGE, ADDITIONAL CONDITIONS, ETC. THAT MAY REQUIRE REPAIR.
7. ALL STONE TO BE CLEANED, REPAIRED, PATCHED AND CONSOLIDATED PER SPECIFICATION.
8. NEW LIMESTONE AND GRANITE TO MATCH BEST HISTORIC TEXTURE OF EXISTING STONE.
9. REFER TO PROJECT SPECIFICATIONS FOR ADDITIONAL INFORMATION FOR THE RESTORATION OF LIMESTONE, GRANITE AND SANDSTONE.
10. CLEAN ALL PAINT FROM LIMESTONE, GRANITE AND SANDSTONE AS PER SPECIFICATIONS.

STONE LEGEND

SYMBOL: S#

- S1 MODERATE DETERIORATION WITH 60% MORTAR RE-POINTING - SEE SPEC.
- S2 HEAVY DETERIORATION WITH 95% MORTAR RE-POINTING - SEE SPEC.
- S3 PAINT OR STAIN (i.e., CARBON, RUST, COPPER, ETC.) TO BE CLEANED - SEE SPEC. & GEN. NOTES.
- S4 REPLACE EXISTING STONE WITH NEW MATCHING STONE DUTCHMAN - SEE SPEC.
- S5 REPLACE EXISTING STONE DUTCHMAN/PATCH WITH NEW MATCHING STONE DUTCHMAN - SEE SPEC.
- S6 REPLACE EXISTING STONE WITH NEW MATCHING STONE - SEE SPEC.
- S7 NEW MATCHING STONE PIECE - SEE SPEC.
- S8 PATCH STONE - SEE SPEC.

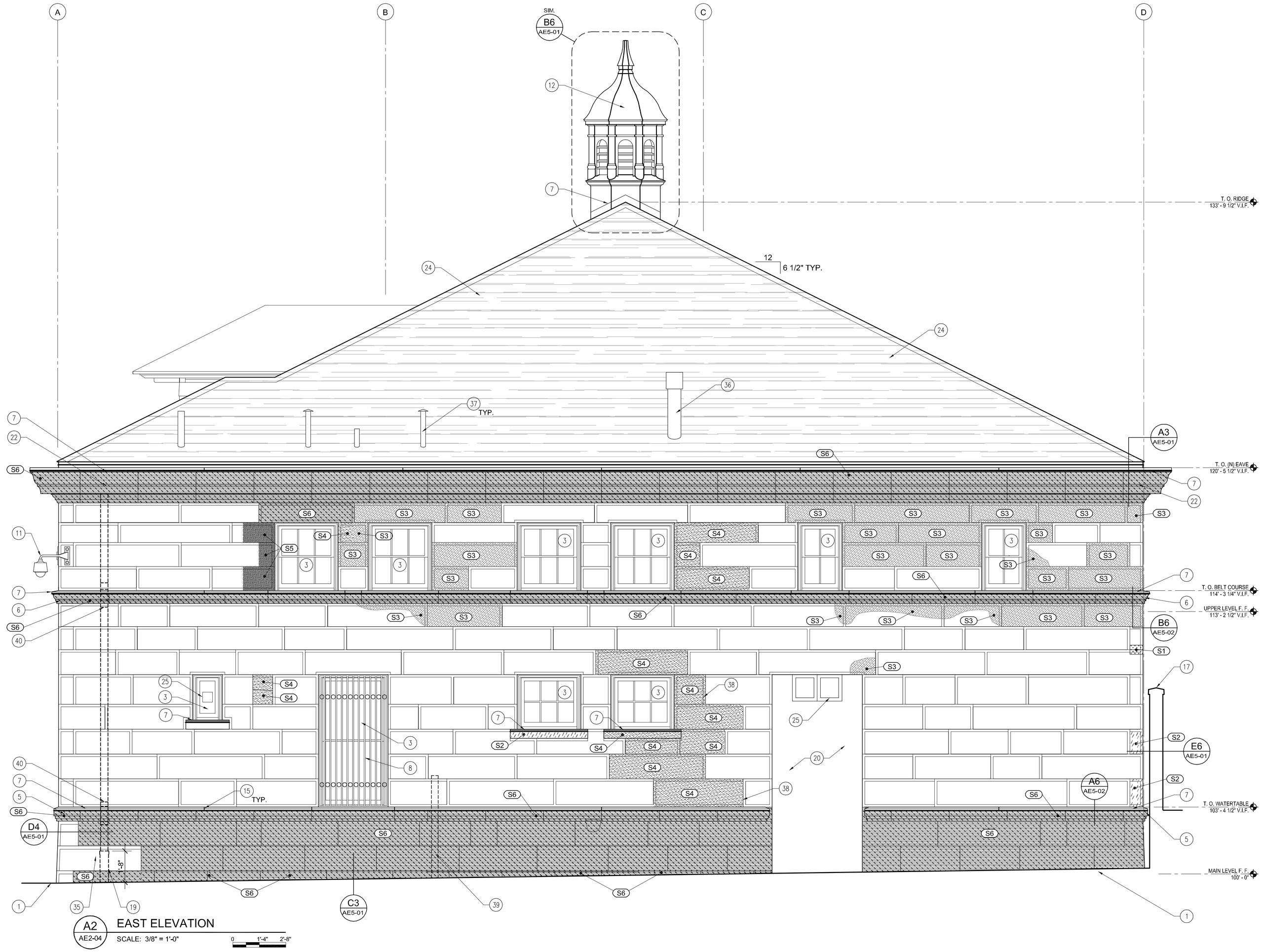

A2 AE2-04 EAST ELEVATION

SCALE: 3/8" = 1'-0"

0 1'-4" 2'-8"

REFERENCE NOTES

1. FINISHED GRADE RE: CIVIL.
3. WINDOW AS SCHEDULED.
5. (N) LIMESTONE WATERTABLE TO REPLACE (E).
6. (N) LIMESTONE BELT COURSE TO REPLACE (E).
7. CONT. 16 OZ. COPPER FLASHING.
8. (E) WINDOW GRILLE- REMOVE, RESTORE AND RE-INSTALL.
11. CUSTOM DECORATIVE SECURITY CAMERA HOUSING- COORDINATE W/ ELEC.. SIMILAR TO WINONA LIGHTING FIXTURE # 4923-WL.
12. REMOVE (E) METAL CUPOLA, RESTORE AND RE-INSTALL.
15. TYP. DRIVE CLEAT @ 10'-0" O.C. MAX., OR AS SHOWN.
17. (E) SITE WALL.
19. DOWNSPOUT RECEPTOR TO BELOW-GRADE SITE DRAINAGE RE: CIVIL.
20. (E) STUCCO TO REMAIN UNDISTURBED- PROTECT AS REQUIRED @ ADJACENT STONEWORK.
22. STONE FASCIA AND SOFFIT WITH INTEGRAL GUTTER TO REPLACE (E).
24. ASPHALT SHINGLE ROOFING.
25. (E) EXHAUST VENT TO REMAIN UNDISTURBED.
35. (E) 'INVISIBLE FENCE' SYSTEM TO REMAIN UNDISTURBED RE: ELEC.
36. (E) FLUE TO REMAIN UNDISTURBED.
37. (E) VENT STACK. FIELD VERIFY VENT OPERATION- REMOVE NON-FUNCTIONAL VENTS.
38. NEW JOINT AND REVEAL- MATCH (E) JOINT PROFILE, TOOLING, ETC.
39. (E) FENCE TO REMAIN UNDISTURBED.
40. DOWNSPOUT EXTENSIONS AT PROTRUDING STONEWORK.

GENERAL NOTES -ELEVATIONS

A. IT IS BEYOND THE SCOPE OF THIS DRAWING TO SHOW EACH AND EVERY DETAIL AND/OR ASPECT OF EXISTING CONDITIONS. IT IS THE CONTRACTOR'S RESPONSIBILITY TO FIELD VERIFY EXISTING CONDITIONS AND DETERMINE THE EXACT AMOUNT OF DEMOLITION, PREPARATION, MATERIALS, ETC. NECESSARY FOR IMPLEMENTING THE WORK AS SHOWN ON THE CONSTRUCTION DOCUMENTS.

STAMP

STATE OF UTAH ROBERT J. PETERSON #1142 LICENSED ARCHITECT

EXTERIOR BUILDING ELEVATION EAST

SCALE: 3/8" = 1'-0"

REVISIONS:

BID SET

GOVERNOR'S CARRIAGE HOUSE STABILIZATION
DFCM PROJECT NO. 10032310
603 EAST SOUTH TEMPLE
SALT LAKE CITY, UTAH 84103

MJSA
357 West Pierpont Avenue □ Salt Lake City, Utah 84101
Telephone 801 364 5161 □ Facsimile 801 364 5167
ARCHITECTURE INTERIOR DESIGN

THESE DRAWINGS ARE INSTRUMENTS OF SERVICE AND SHALL REMAIN THE PROPERTY OF THE ARCHITECT. NO USE OR REUSE OF THESE DOCUMENTS SHALL BE PERMITTED UNLESS AUTHORIZED IN WRITING BY MJSA ARCHITECTS WITH APPROPRIATE COMPENSATION.

PROJECT NO.: 10014

DATE: 4/12/10

SHEET: AE2-04

S:\10014 - Governor's Mansion Carriage House Restoration\CAD\3_CD\AE2-04 Elevation- East.dwg - Mon, 26 Apr 2010 - 10:20am

STONE RESTORATION NOTES

1. ALL LIMESTONE AND SANDSTONE UNITS ARE CLASSIFIED AS LIGHT SURFACE EROSION (SEE SPECIFICATIONS) UNLESS NOTED OTHERWISE (i.e., S1, S2...).
2. FOR REPOINTING OF STONE, REFER TO THE POINTING SCHEDULE IN THE STONE REPAIR SPECIFICATION AND/OR STONE LEGEND.
3. WHERE OUTSIDE CORNERS OF STONE UNITS ARE NOT NOTED TO BE REPAIRED WITH DUTCHMAN, LIGHTLY HAND TOOL THE CORNERS TO HAVE A SIMILAR RADIUS OVER THE LENGTH OF THE UNIT. BLEND OR TRANSITION WITH ADJACENT STONE UNITS. RE-CREATE APPROPRIATE TOOLING TEXTURE.
4. REMOVE ALL EXPOSED UNUSED OR REDUNDANT ANCHORS, CONDUIT, BOLTS, ETC. FROM STONE AND PATCH HOLES. PATCH ALL EXISTING HOLES UNLESS OTHERWISE NOTED.
5. PATCH ALL HOLES RESULTING FROM STRUCTURAL PINNING, ANCHOR REMOVAL, ETC.
6. EXTENT OF CONDITIONS SHOWN ON THE DRAWINGS IS APROXIMATE; FIELD VERIFY. NOTIFY THE ARCHITECT OF ANY DISCOVERED DAMAGE, ADDITIONAL CONDITIONS, ETC. THAT MAY REQUIRE REPAIR.
7. ALL STONE TO BE CLEANED, REPAIRED, PATCHED AND CONSOLIDATED PER SPECIFICATION.
8. NEW LIMESTONE AND GRANITE TO MATCH BEST HISTORIC TEXTURE OF EXISTING STONE.
9. REFER TO PROJECT SPECIFICATIONS FOR ADDITIONAL INFORMATION FOR THE RESTORATION OF LIMESTONE, GRANITE AND SANDSTONE.
10. CLEAN ALL PAINT FROM LIMESTONE, GRANITE AND SANDSTONE AS PER SPECIFICATIONS.

STONE LEGEND

SYMBOL: S#

- S1 MODERATE DETERIORATION WITH 60% MORTAR RE-POINTING - SEE SPEC.
- S2 HEAVY DETERIORATION WITH 95% MORTAR RE-POINTING - SEE SPEC.
- S3 PAINT OR STAIN (i.e., CARBON, RUST, COPPER, ETC.) TO BE CLEANED - SEE SPEC. & GEN. NOTES.
- S4 REPLACE EXISTING STONE WITH NEW MATCHING STONE DUTCHMAN - SEE SPEC.
- S5 REPLACE EXISTING STONE DUTCHMAN/PATCH WITH NEW MATCHING STONE DUTCHMAN - SEE SPEC.
- S6 REPLACE EXISTING STONE WITH NEW MATCHING STONE - SEE SPEC.
- S7 NEW MATCHING STONE PIECE - SEE SPEC.
- S8 PATCH STONE - SEE SPEC.

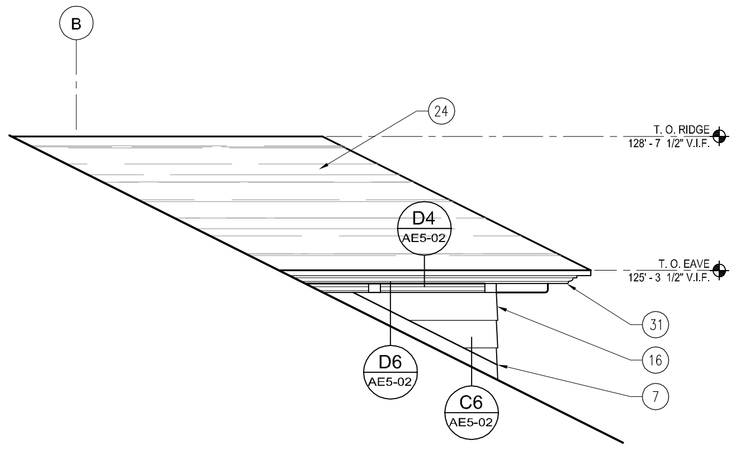

D4 AE2-05 PARTIAL ELEVATION
SCALE: 3/8" = 1'-0"

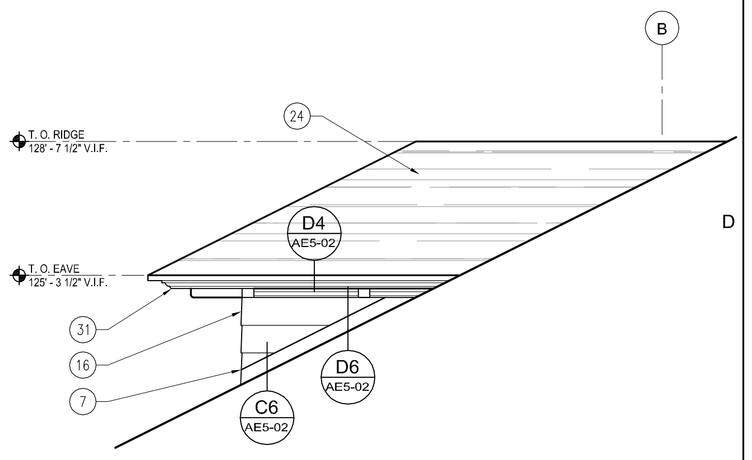

D5 AE2-05 PARTIAL ELEVATION
SCALE: 3/8" = 1'-0"

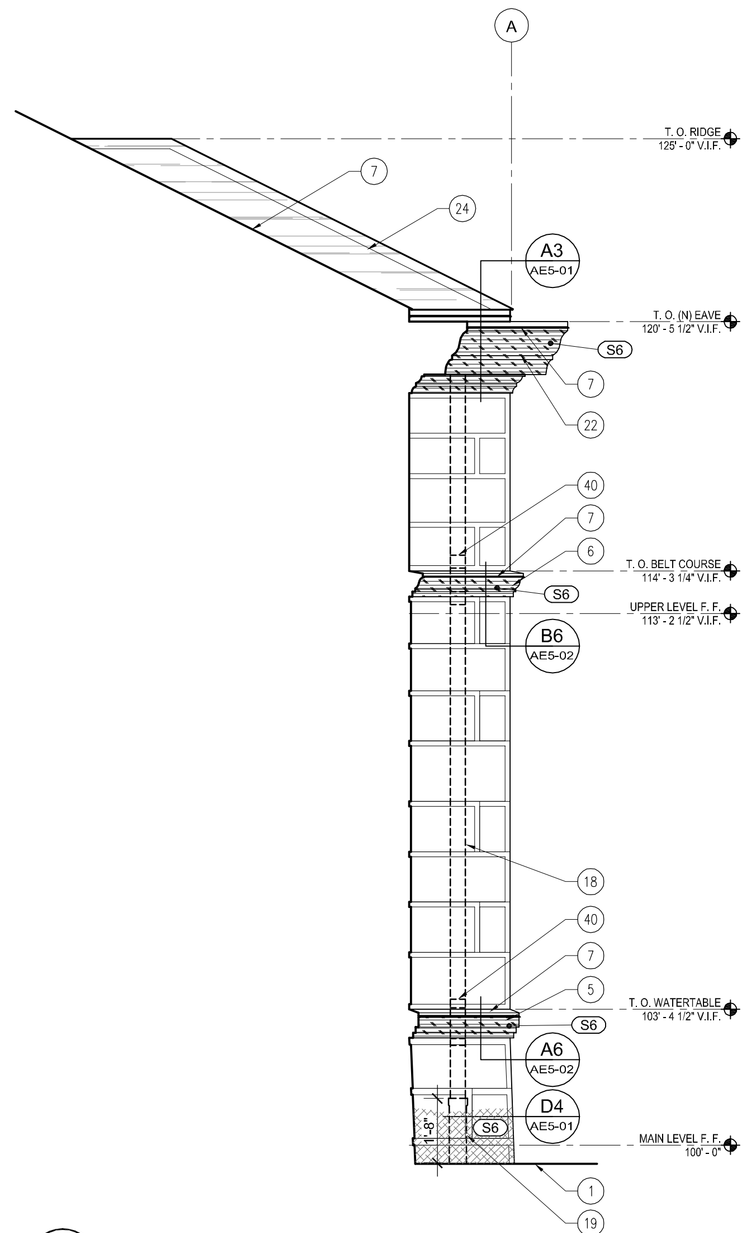

A4 AE2-05 PARTIAL ELEVATION
SCALE: 3/8" = 1'-0"

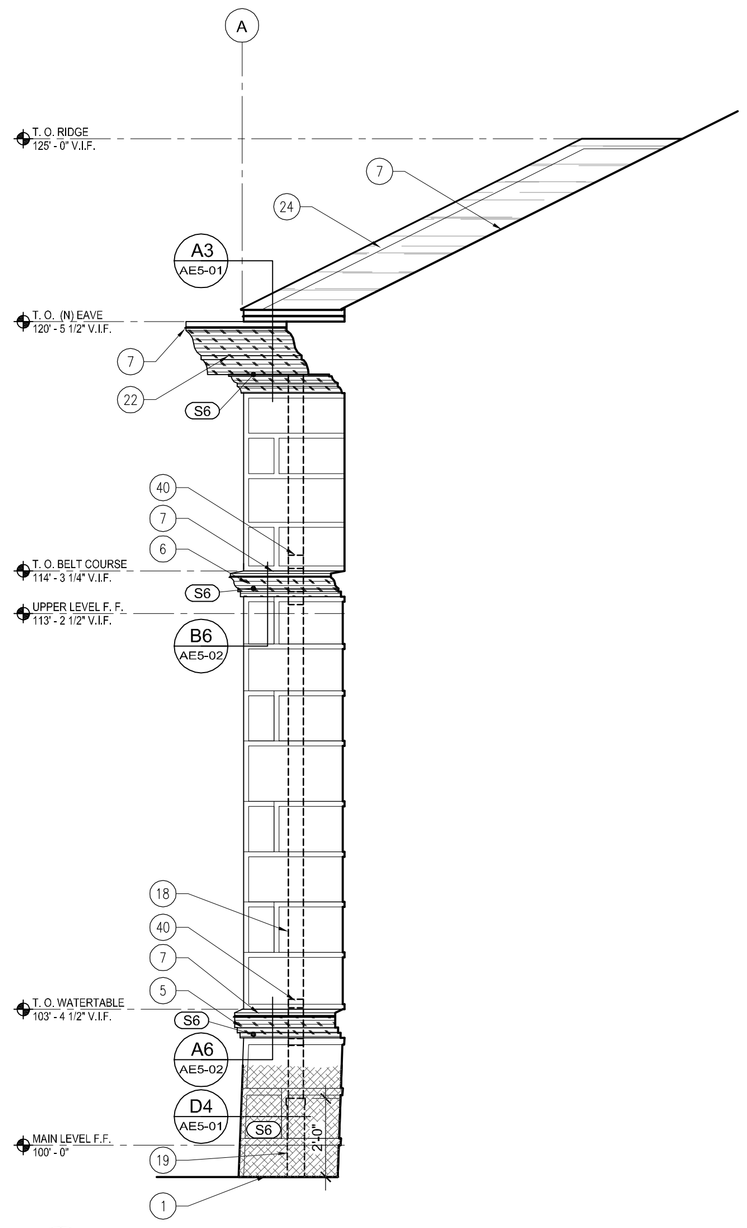

A5 AE2-05 PARTIAL ELEVATION
SCALE: 3/8" = 1'-0"

REFERENCE NOTES

1. FINISHED GRADE RE: CIVIL.
5. (N) LIMESTONE WATERTABLE TO REPLACE (E).
6. (N) LIMESTONE BELT COURSE TO REPLACE (E).
7. CONT. 16 OZ. COPPER FLASHING..
15. TYP. DRIVE CLEAT @ 10'-0" O.C. MAX., OR AS SHOWN.
16. (N) WOOD SIDING TO REPLACE (E)- MATCH (E) SIZE, PROFILE AND FINISH.
18. COPPER DOWNSPOUT- MATCH (E) PROFILE.
19. DOWNSPOUT RECEPTOR TO BELOW-GRADE SITE DRAINAGE RE: CIVIL.
22. STONE FASCIA AND SOFFIT WITH INTEGRAL GUTTER TO REPLACE (E).
24. ASPHALT SHINGLE ROOFING.
31. RESTORE (E) COPPER FASCIA AND SOFFIT WITH BRACKETS.
40. DOWNSPOUT EXTENSIONS AT PROTRUDING STONEWORK.

GENERAL NOTES -ELEVATIONS

A. IT IS BEYOND THE SCOPE OF THIS DRAWING TO SHOW EACH AND EVERY DETAIL AND/OR ASPECT OF EXISTING CONDITIONS. IT IS THE CONTRACTOR'S RESPONSIBILITY TO FIELD VERIFY EXISTING CONDITIONS AND DETERMINE THE EXACT AMOUNT OF DEMOLITION, PREPARATION, MATERIALS, ETC., NECESSARY FOR IMPLEMENTING THE WORK AS SHOWN ON THE CONSTRUCTION DOCUMENTS.

STAMP

STATE OF UTAH
ROBERT A. JETTON
#1142
LICENSED ARCHITECT

PARTIAL EXTERIOR BUILDING ELEVATIONS
SCALE: 3/8" = 1'-0"

REVISIONS:

BID SET

GOVERNOR'S CARRIAGE HOUSE STABILIZATION
DFCM PROJECT NO. 10032310
603 EAST SOUTH TEMPLE
SALT LAKE CITY, UTAH 84103

MJSA
357 West Pierpont Avenue ☐ Salt Lake City, Utah 84101
Telephone 801 364 5161 ☐ Facsimile 801 364 5167
ARCHITECTURE INTERIOR DESIGN

THESE DRAWINGS ARE INSTRUMENTS OF SERVICE AND SHALL REMAIN THE PROPERTY OF THE ARCHITECT. NO USE OR RE-USE OF THESE DOCUMENTS SHALL BE PERMITTED UNLESS AUTHORIZED IN WRITING BY MJSA ARCHITECTS WITH APPROPRIATE COMPENSATION.

PROJECT NO.: 10014

DATE: 4/12/10

SHEET: AE2-05

S:\10014 - Governor's Mansion Carriage House Restoration\CADD_CD\AE2-05 Elevation- Partial.dwg - Mars, 30 Apr 2010 - 10:00am

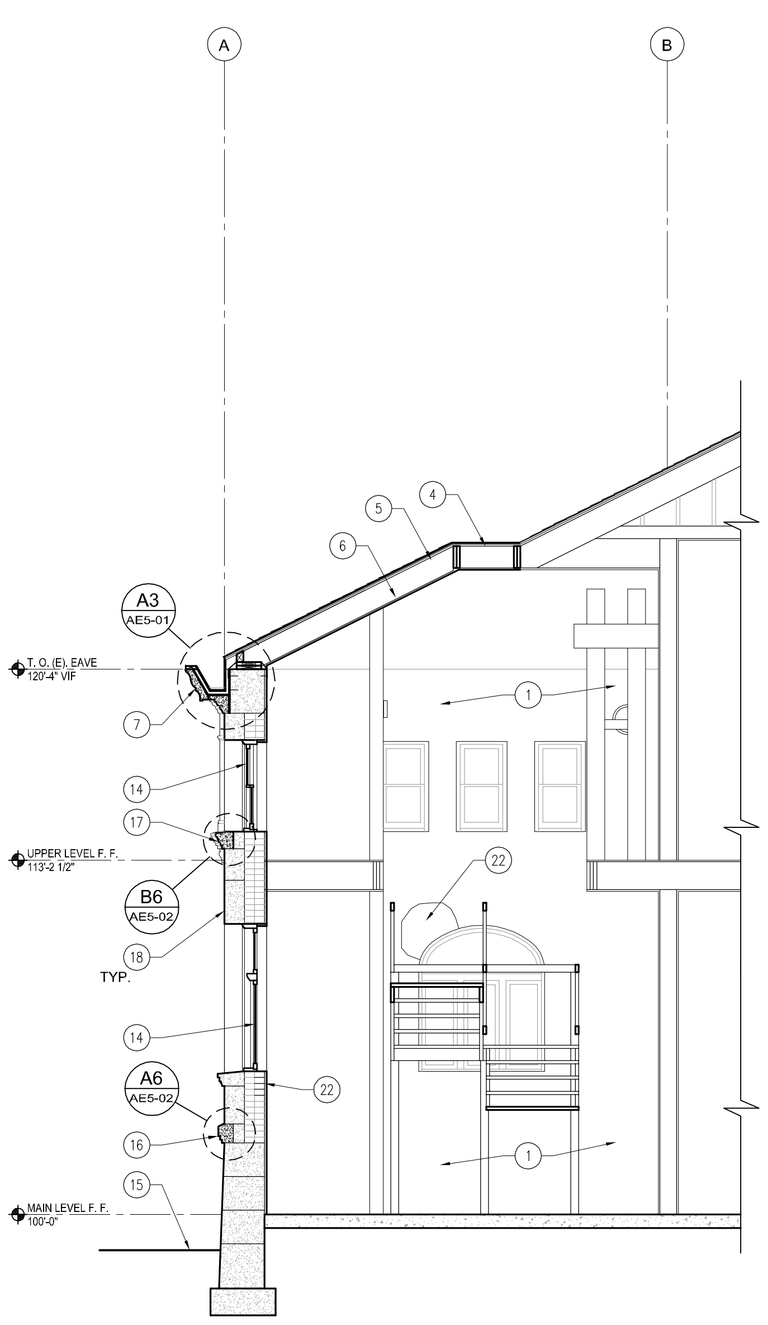

A1 AE3-01 PARTIAL BUILDING SECTION

SCALE: 1/4" = 1'-0"

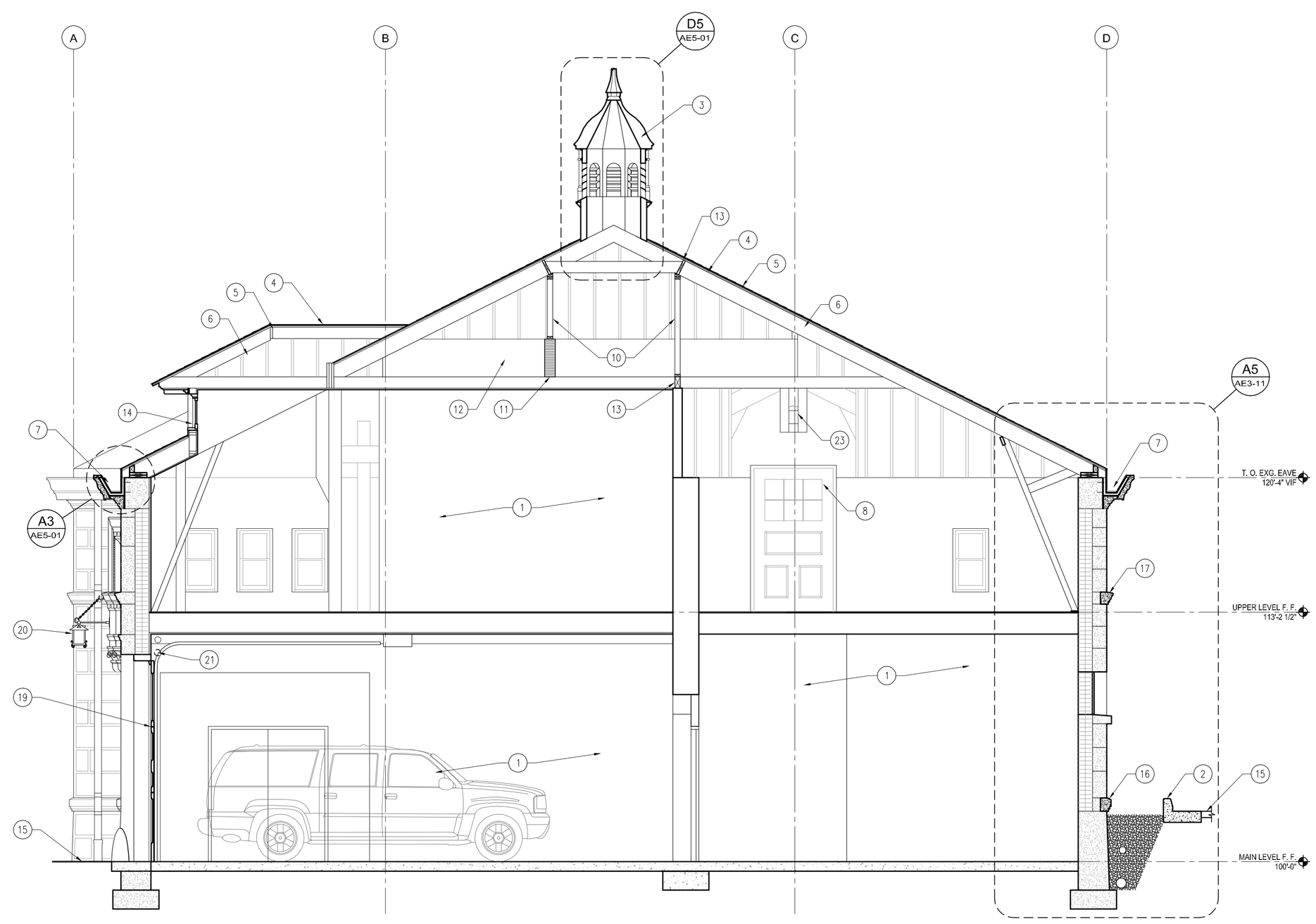

A3 AE3-01 BUILDING SECTION

SCALE: 1/4" = 1'-0"

REFERENCE NOTES

1. (E) INTERIOR CONSTRUCTION, FEATURES AND FINISHES TO REMAIN UNDISTURBED EXCEPT WHERE NOTED.
2. CURB & GUTTER RE: CIVIL.
3. REMOVE (E) CUPOLA. RESTORE AND RE-INSTALL.
4. ASPHALT SHINGLE ROOFING.
5. PLYWOOD ROOF SHEATHING RE: STRUCTURAL.
6. ROOF STRUCTURE UPGRADE RE: STRUCTURAL.
7. INTEGRAL GUTTER SYSTEM WITH STONE VENEER TO REPLACE (E) STONE CORNICE.
8. DOOR AND FRAME AS SCHEDULED TO REPLACE (E) CMU INFILL.
9. COLLAR TIE RE: STRUCTURAL.
10. 2x4 PONY WALL RE: STRUCTURAL.
11. WOOD BEAM RE: STRUCTURAL.
12. WOOD BEAM BEYOND RE: STRUCTURAL.
13. CONT. BLOCKING RE: STRUCTURAL.
14. (E) WINDOW- RESTORE AS SCHEDULED.
15. (E) PAVING TO REMAIN UNDISTURBED EXCEPT AS NOTED. FINISHED GRADE RE: CIVIL.
16. LIMESTONE WATERTABLE TO REPLACE (E).
17. LIMESTONE BELT COURSE TO REPLACE (E).
18. RESTORE (E) LIMESTONE VENEER RE: BLDG. ELEVATIONS.
19. DOOR AND FRAME AS SCHEDULED TO REPLACE (E) DOOR ASSEMBLY.
20. RESTORE (E) HISTORIC EXTERIOR LIGHTING FIXTURE.
21. (E) PIPING – RELOCATE AS REQUIRED.
22. MASONRY INFILL @ (E) WALL VOID.
23. STRUCTURAL UPGRADE @ (E) HAYLOFT BEAM RE: STRUCTURAL.

GENERAL NOTES SECTIONS

A. IT IS BEYOND THE SCOPE OF THIS DRAWING TO SHOW EACH AND EVERY DETAIL AND/OR ASPECT OF EXISTING CONDITIONS. IT IS THE CONTRACTOR'S RESPONSIBILITY TO FIELD VERIFY EXISTING CONDITIONS AND DETERMINE THE EXACT AMOUNT OF DEMOLITION, PREPARATION, MATERIALS, ETC. NECESSARY FOR IMPLEMENTING THE WORK AS SHOWN ON THE CONSTRUCTION DOCUMENTS.

STAMP

STATE OF UTAH
ROBERT J. JETTON
#1142
LICENSED ARCHITECT

BUILDING SECTIONS

SCALE: 3/8" = 1'-0"

REVISIONS:

BID SET

GOVERNOR'S CARRIAGE HOUSE STABILIZATION
DFCM PROJECT NO. 10032310
603 EAST SOUTH TEMPLE
SALT LAKE CITY, UTAH 84103

MJSA
357 West Pierpont Avenue □ Salt Lake City, Utah 84101
Telephone 801 364 5161 □ Facsimile 801 364 5167
ARCHITECTURE INTERIOR DESIGN

THESE DRAWINGS ARE INSTRUMENTS OF SERVICE AND SHALL REMAIN THE PROPERTY OF THE ARCHITECT. NO USE OR RE-USE OF THESE DOCUMENTS SHALL BE PERMITTED UNLESS AUTHORIZED IN WRITING BY MJSA ARCHITECTS WITH APPROPRIATE COMPENSATION.

PROJECT NO.: 10014

DATE: 4/12/10

SHEET: AE3-01

S:\10014 - Governor's Mansion Carriage House Restoration\CAD\03_CD\AE5-01 Building Section.dwg - Mon, 26 Apr 2010 - 10:02am

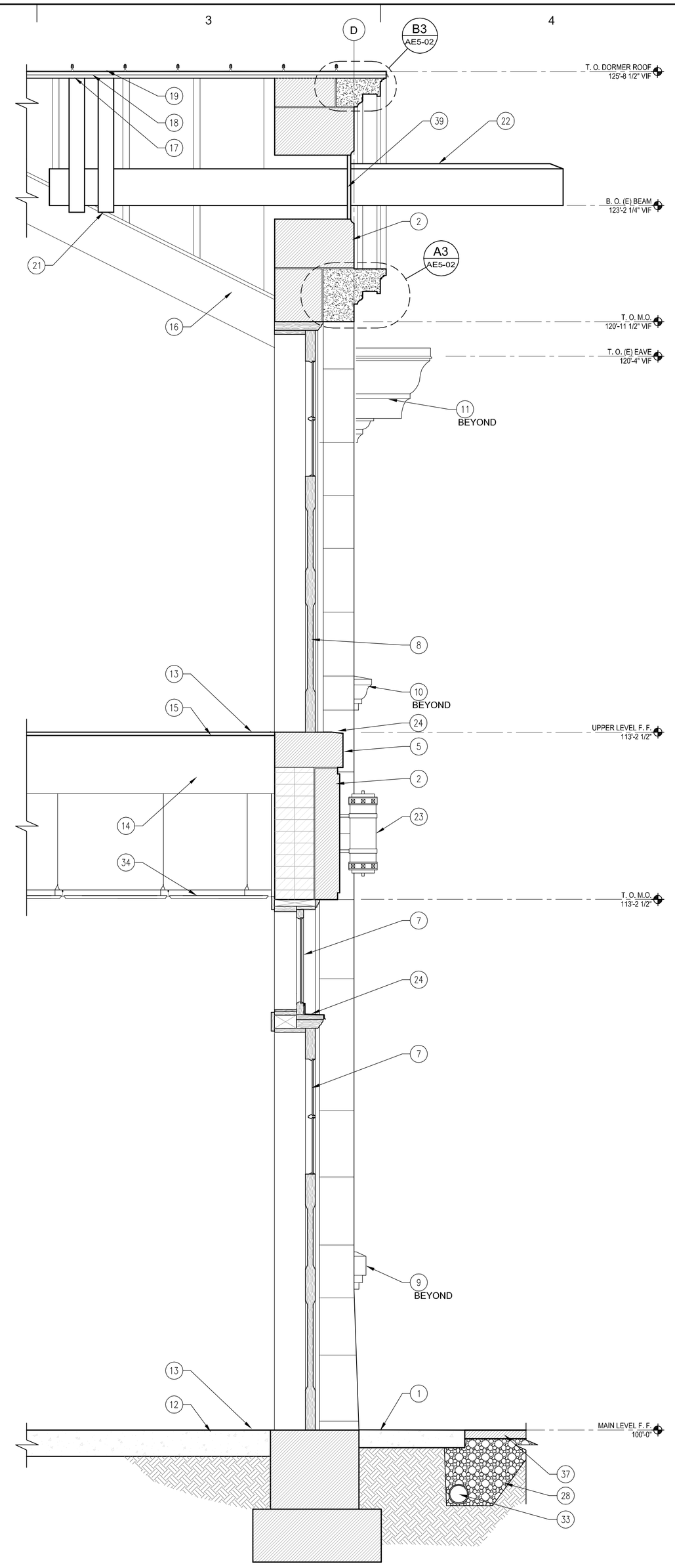

A3 AE3-11 WALL SECTION - WEST
SCALE: 3/4" = 1'-0"

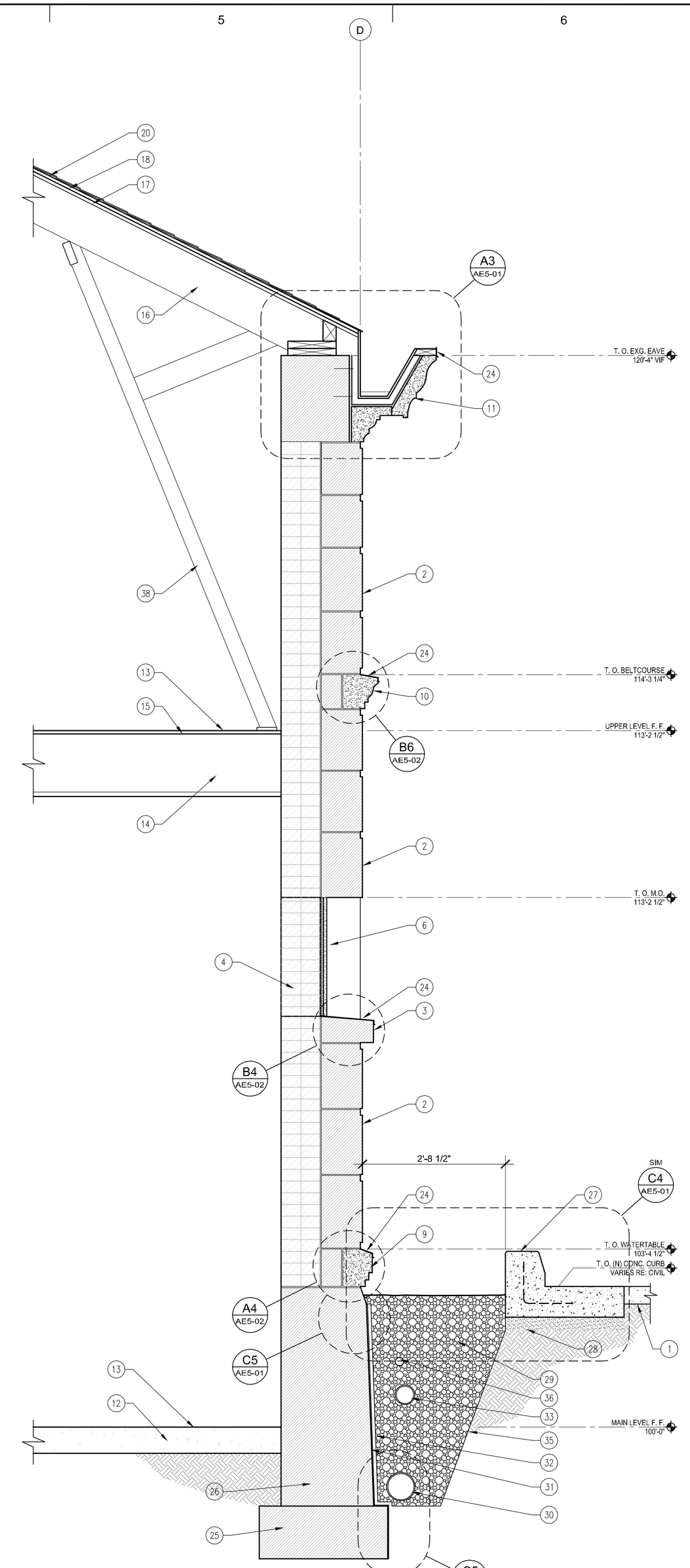

A5 AE3-11 WALL SECTION - NORTH
SCALE: 3/4" = 1'-0"

REFERENCE NOTES

1. CONC 'SKIRT'/SIDEWALK - MATCH EXISTING EXTENT AND APPEARANCE.
2. (E) LIMESTONE VENEER- SEE BUILDING ELEVATIONS FOR REPAIR AND RESTORATION NOTES.
3. (E) LIMESTONE SILL- SEE BUILDING ELEVATIONS FOR REPAIR AND RESTORATION NOTES.
4. (E) BRICK INFILL @ HISTORIC WALL OPENING.
5. (E) SANDSTONE SILL- SEE BUILDING ELEVATIONS FOR REPAIR AND RESTORATION NOTES.
6. STUCCO @ (E) BRICK WINDOW INFILL. MATCH (E) STUCCO TEXTURE AND FINISH.
7. DOOR AND TRANSOM AS SCHEDULED, TO REPLACE (E).
8. DOOR AS SCHEDULED, TO REPLACE (E) CMU INFILL.
9. (N) LIMESTONE WATERTABLE TO REPLACE (E).
10. (N) LIMESTONE BELT COURSE TO REPLACE (E).
11. STONE FASCIA AND SOFFIT WITH INTEGRAL GUTTER.
12. (E) CONC. SLAB ON GRADE.
13. (E) FLOOR FINISH TO REMAIN UNDISTURBED. PROTECT AS REQUIRED.
14. (E) FLOOR FRAMING.
15. (E) FLOOR SHEATHING.
16. (E) ROOF FRAMING TO REMAIN UNDISTURBED UNLESS NOTED OTHERWISE FOR SEISMIC UPGRADE RE: STRUCTURAL.
17. (E) ROOF SHEATHING TO REMAIN UNDISTURBED UNLESS NOTED OTHERWISE FOR SEISMIC UPGRADE RE: STRUCTURAL.
18. ROOF SHEATHING RE: STRUCTURAL.
19. STANDING SEAM 16 OZ. COPPER ROOFING TO REPLACE (E) ROOFING.
20. ASPHALT SHINGLE ROOFING TO REPLACE (E) ROOFING.
21. SUPPORT AT (E) HAYLOFT BEAM RE: STRUCTURAL.
22. REPAIR (E) COPPER FLASHING AT (E) WOOD BEAM TO REMAIN.
23. (N) EXTERIOR LIGHTING FIXTURE TO REPLACE (E) RE: ELEC.- WINONA LIGHTING FIXTURE # 4923-WL OR SIM.
24. CONT. 16 OZ. COPPER FLASHING.
25. (E) FOOTING. FIELD VERIFY SIZE AND ELEVATION.
26. (E) FOUNDATION WALL- CLEAN AN PREPARE EXTERIOR FACE TO RECEIVE WATERPROOFING.
27. CONT. REINFORCED CONC. CURB & GUTTER / WHEEL STOP RE: CIVIL.
28. 3" MIN. UNTREATED BASE COURSE.
29. GRAVEL FILL.
30. CONT. PERFORATED FOUNDATION DRAIN LINE RE: CIVIL.
31. FOUNDATION WATERPROOFING.
32. DRAINAGE COMPOSITE.
33. ROOF DRAIN LINE RE: CIVIL.
34. (E) SUSPENDED ACOUSTICAL PANEL CEILING SYSTEM TO REMAIN UNDISTURBED.
35. DRAINAGE FILTER FABRIC.
36. CONDUIT RE: ELECTRICAL.
37. REPLACE ASPHALT PAVING RE: CIVIL.
38. (E) WOOD STRUTS TO REMAIN UNDISTURBED.
39. REPAIR (E) COPPER INFILL @ BEAM PENETRATION AS REQUIRED.

GENERAL NOTES

A. IT IS BEYOND THE SCOPE OF THIS DRAWING TO SHOW EACH AND EVERY DETAIL AND/OR ASPECT OF EXISTING CONDITIONS. IT IS THE CONTRACTOR'S RESPONSIBILITY TO FIELD VERIFY EXISTING CONDITIONS AND DETERMINE THE EXACT AMOUNT OF DEMOLITION, PREPARATION, MATERIALS, ETC. NECESSARY FOR IMPLEMENTING THE WORK AS SHOWN ON THE CONSTRUCTION DOCUMENTS.

STAMP

STATE OF UTAH
ROBERT M. JOHNSON
#1142
LICENSED ARCHITECT

WALL SECTIONS
SCALE: 3/4" = 1'-0"

REVISIONS:

BID SET

GOVERNOR'S CARRIAGE HOUSE STABILIZATION
DFCM PROJECT NO. 10032310
603 EAST SOUTH TEMPLE
SALT LAKE CITY, UTAH 84103

MJSA
357 West Pierpont Avenue □ Salt Lake City, Utah 84101
Telephone 801 364 5161 □ Facsimile 801 364 5167
ARCHITECTURE INTERIOR DESIGN

THESE DRAWINGS ARE INSTRUMENTS OF SERVICE AND SHALL REMAIN THE PROPERTY OF THE ARCHITECT. NO USE OR RE-USE OF THESE DOCUMENTS SHALL BE PERMITTED UNLESS AUTHORIZED IN WRITING BY MJSA ARCHITECTS WITH APPROPRIATE COMPENSATION.

PROJECT NO.: 10014

DATE: 4/12/10

SHEET: AE3-11

S:\10014 - Governor's Mansion Carriage House Restoration\CAD\03_CD\AE3-11 Wall Sections.dwg - Mon, 26 Apr 2010 - 10:03am

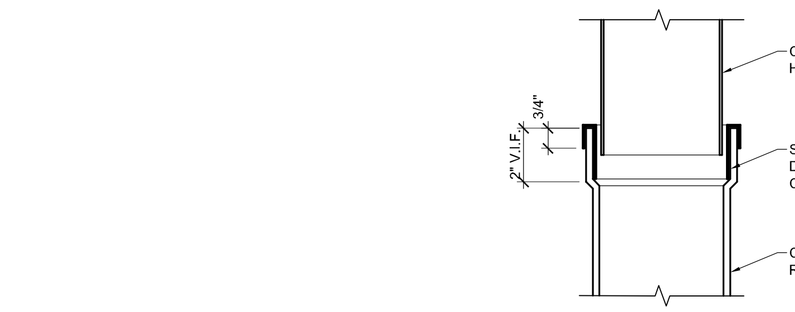

D4 AE5-01 DOWNSPOUT RECEPTOR DETAIL
SCALE: 3" =1'-0"

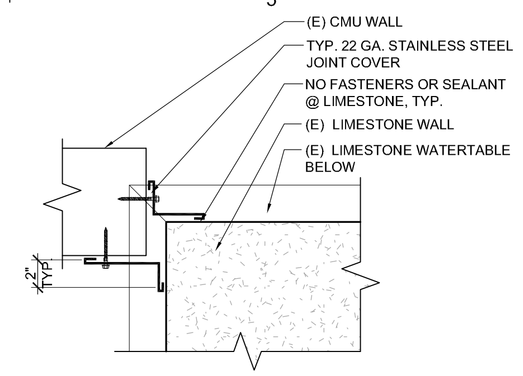

E5 AE5-01 WALL CLOSURE DETAIL
SCALE: 1 1/2" = 1'-0"

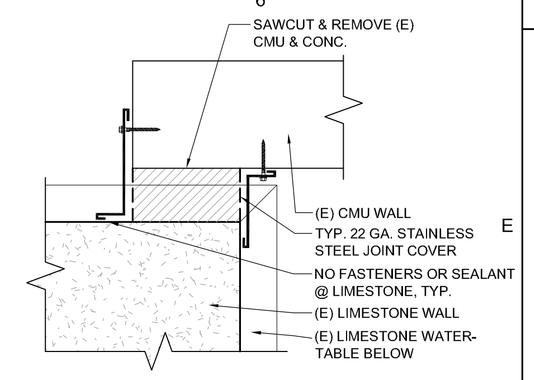

E6 AE5-01 WALL CLOSURE DETAIL
SCALE: 1 1/2" = 1'-0"

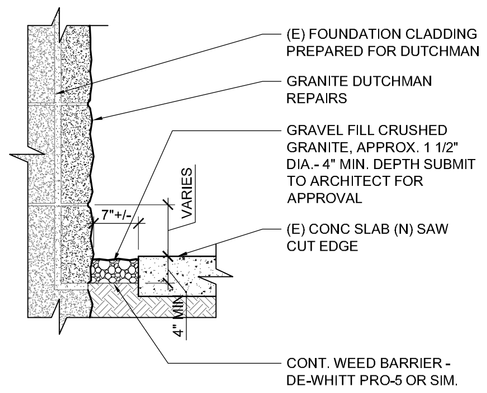

C3 AE5-01 DRY MOAT DETAIL - EAST
SCALE: 3/4" =1'-0"

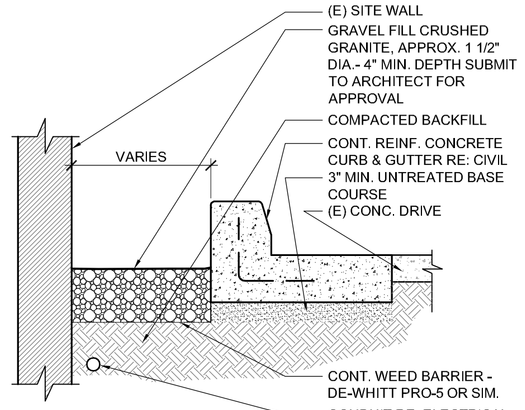

C4 AE5-01 DRY MOAT DETAIL
SCALE: 3/4" =1'-0"

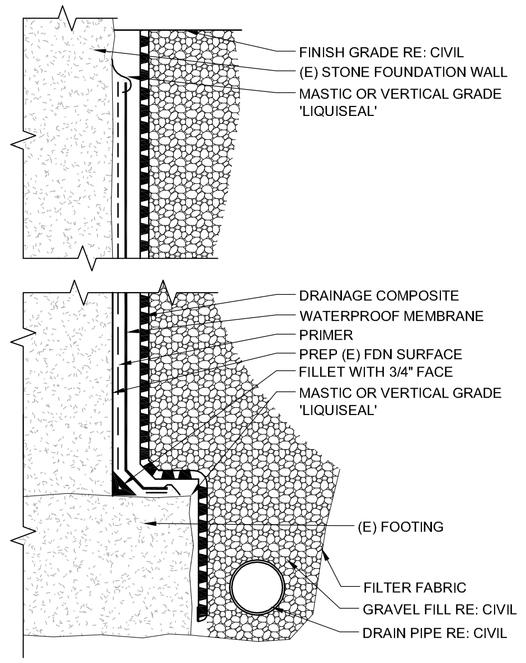

C5 AE5-01 WATERPROOFING DETAIL
SCALE: NTS

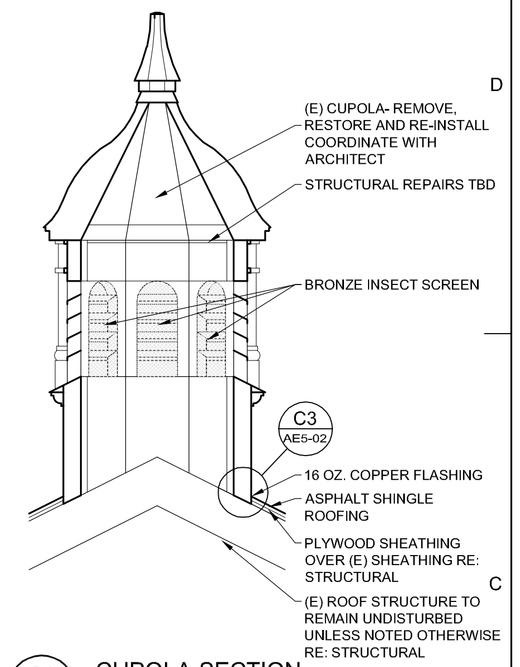

C6 AE5-01 CUPOLA SECTION
SCALE: 1/2" = 1'-0"

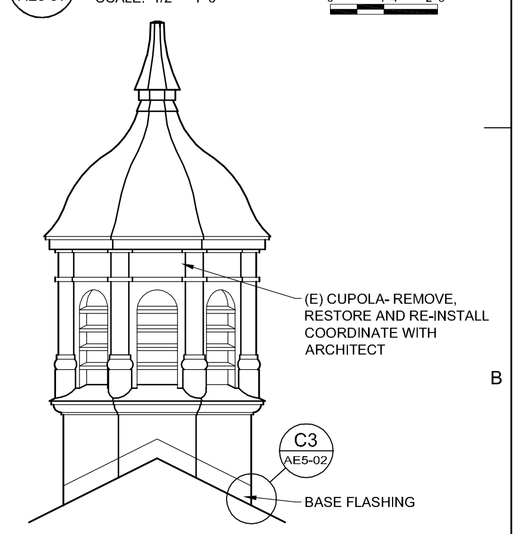

B6 AE5-01 CUPOLA ELEVATION
SCALE: 1/2" = 1'-0"

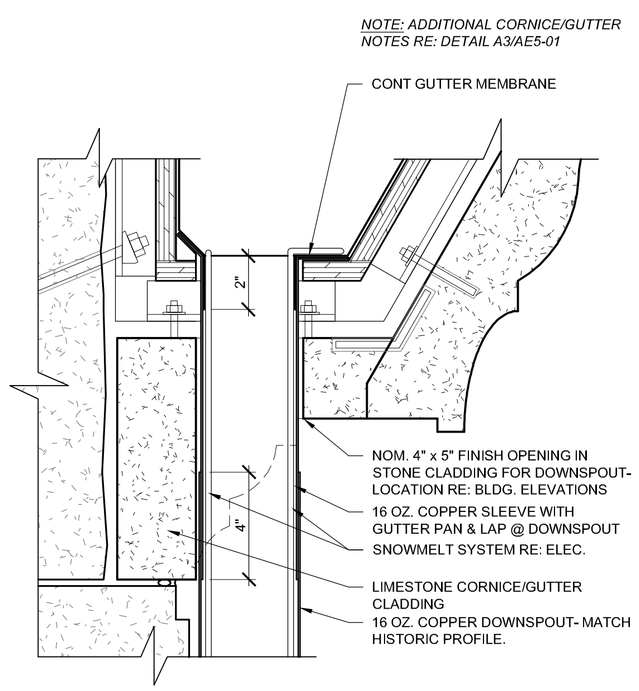

A2 AE5-01 DOWNSPOUT DETAIL
SCALE: 3" = 1'-0"

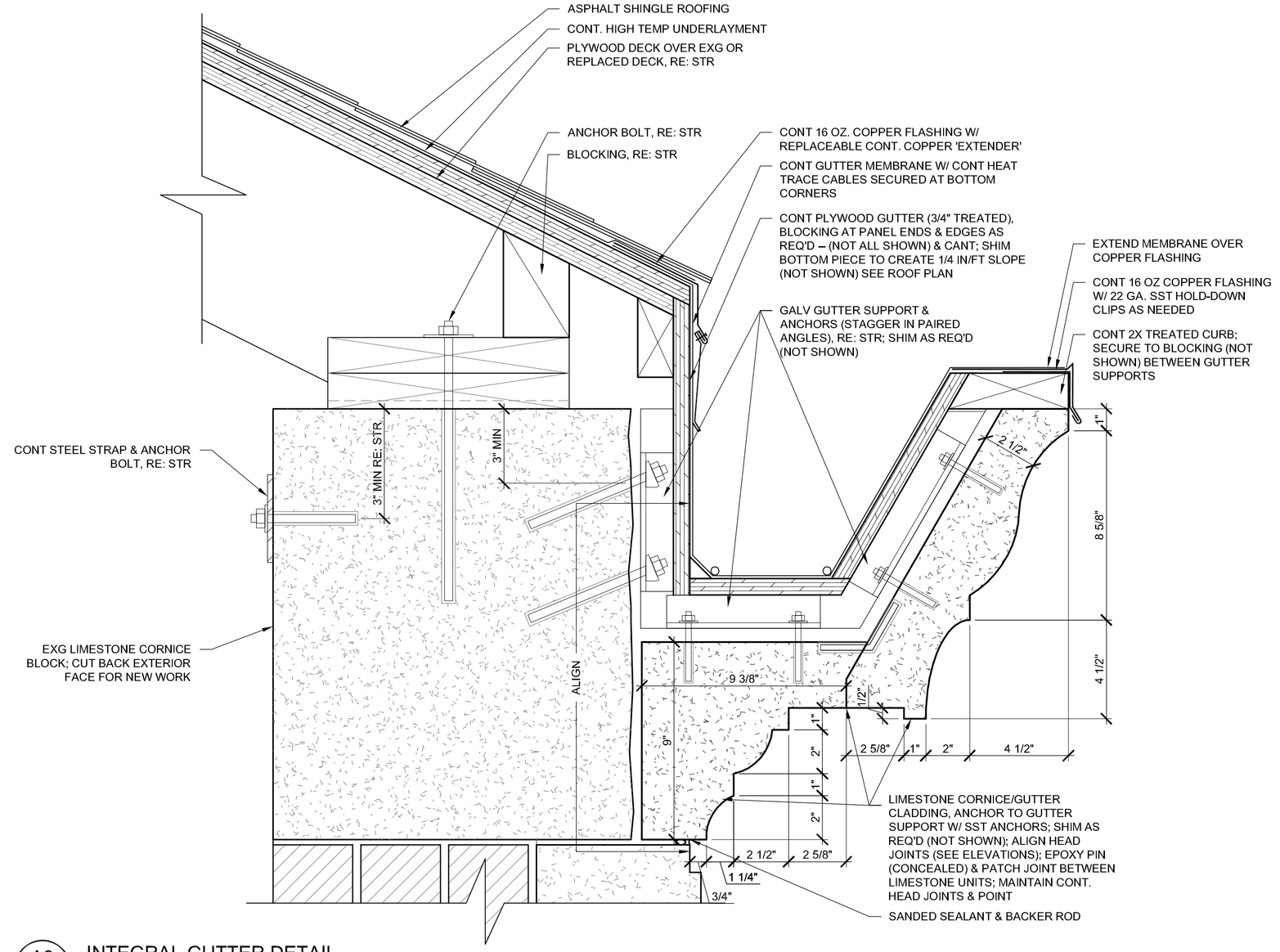

A3 AE5-01 INTEGRAL GUTTER DETAIL
SCALE: 3" = 1'-0"

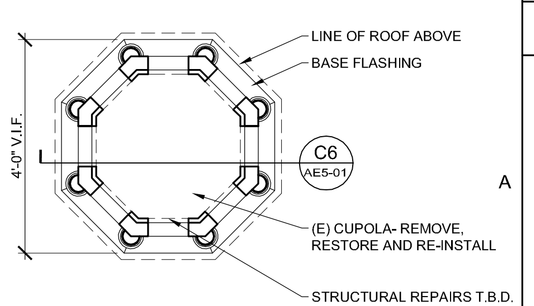

A6 AE5-01 CUPOLA PLAN
SCALE: 1/2" = 1'-0"

REFERENCE NOTES

REVISIONS:

BID SET

GOVERNOR'S CARRIAGE HOUSE STABILIZATION
DFCM PROJECT NO. 10032310
603 EAST SOUTH TEMPLE
SALT LAKE CITY, UTAH 84103

MJSA
357 West Pierpont Avenue ☐ Salt Lake City, Utah 84101
Telephone 801 364 5161 ☐ Facsimile 801 364 5167
ARCHITECTURE INTERIOR DESIGN

STAMP

STATE OF UTAH
ROBERT J. PETERSEN
#1142
LICENSED ARCHITECT

THESE DRAWINGS ARE INSTRUMENTS OF SERVICE AND SHALL REMAIN THE PROPERTY OF THE ARCHITECT. NO USE OR RE-USE OF THESE DOCUMENTS SHALL BE PERMITTED UNLESS AUTHORIZED IN WRITING BY MJSA ARCHITECTS WITH APPROPRIATE COMPENSATION.

PROJECT NO.: 10014

DATE: 4/12/10

DETAILS
SCALE: AS SHOWN

SHEET: AE5-01

S:\10014 - Governor's Mansion Carriage House Restoration\CAD\3_CD\AE5-01 Details.dwg - Mon, 26 Apr 2010 - 10:04am

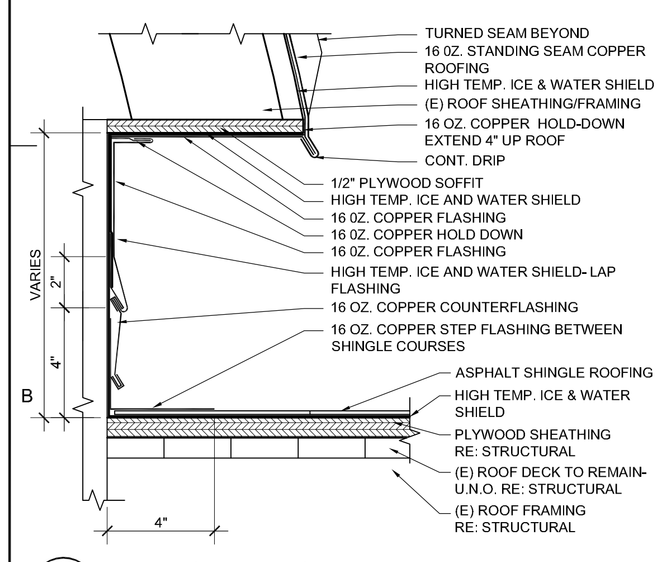

B1 AE5-02 FLASHING DETAIL
SCALE: 3" = 1'-0"

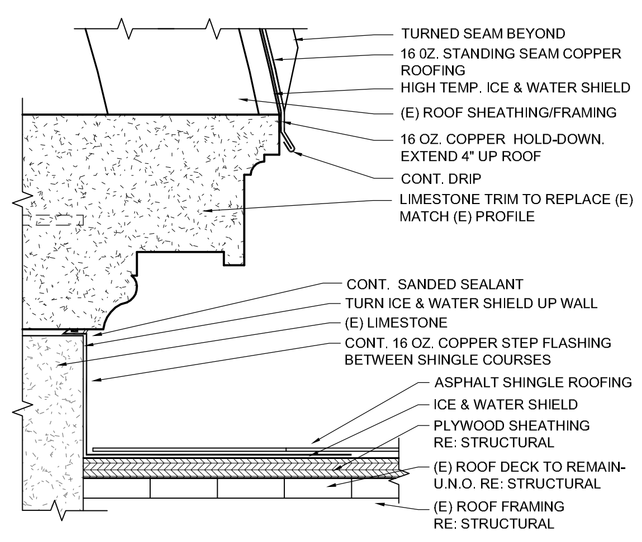

B2 AE5-02 FLASHING DETAIL
SCALE: 3" = 1'-0"

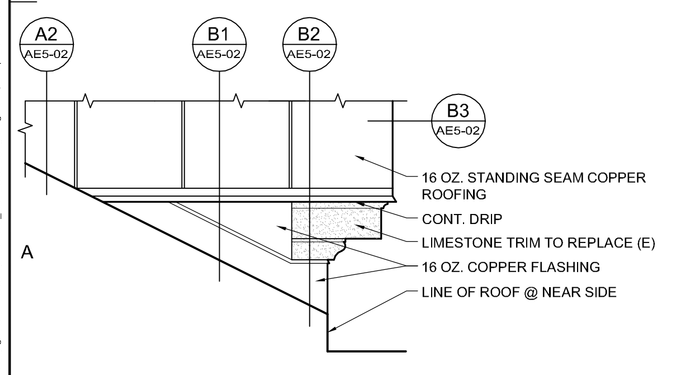

A1 AE5-02 DORMER ELEVATION (PARTIAL)
SCALE: 1" = 1'-0"

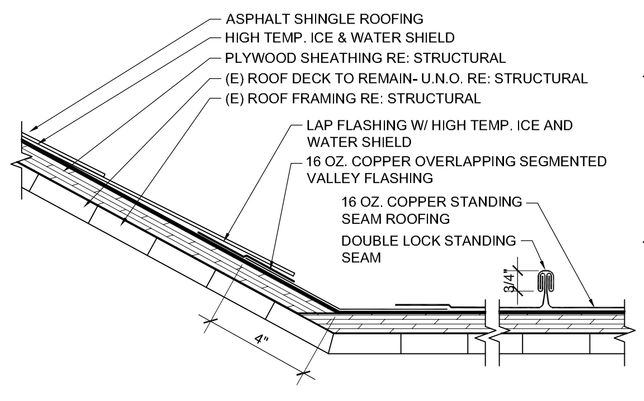

A2 AE5-02 ROOF TRANSITION DETAIL
SCALE: 3" = 1'-0"

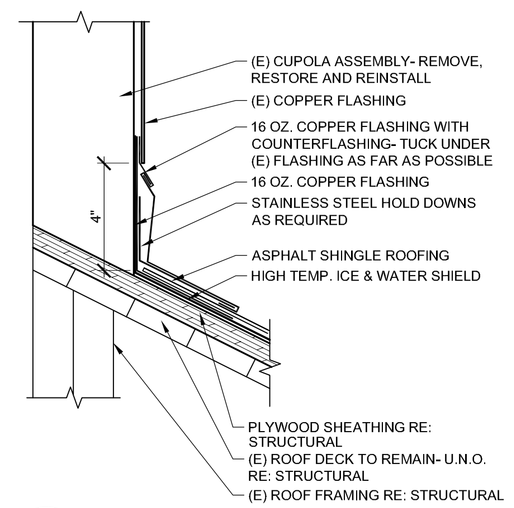

C3 AE5-02 CUPOLA FLASHING DETAIL
SCALE: 3" = 1'-0"

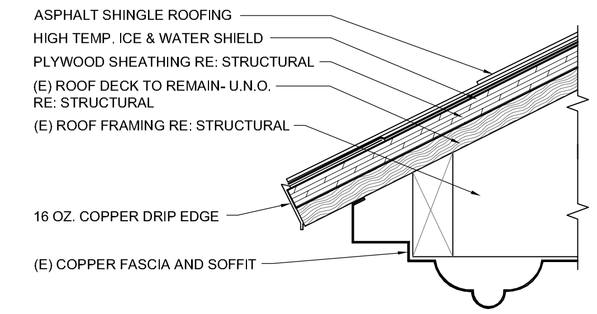

D4 AE5-02 EAVE DETAIL
SCALE: 3" = 1'-0"

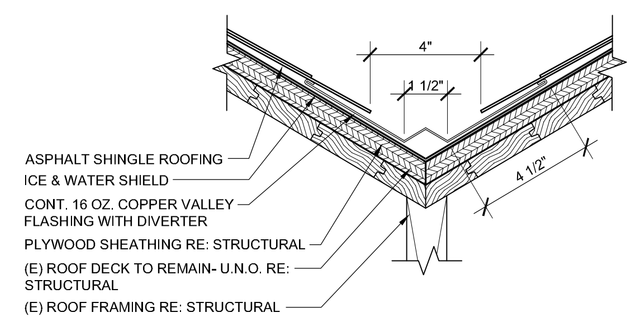

C4 AE5-02 VALLEY FLASHING DETAIL
SCALE: 3" = 1'-0"

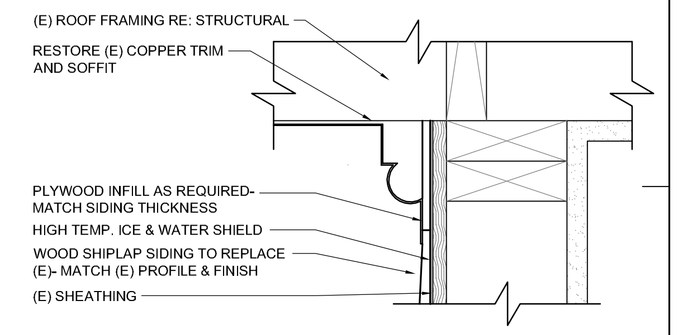

D6 AE5-02 SOFFIT FLASHING DETAIL
SCALE: 3" = 1'-0"

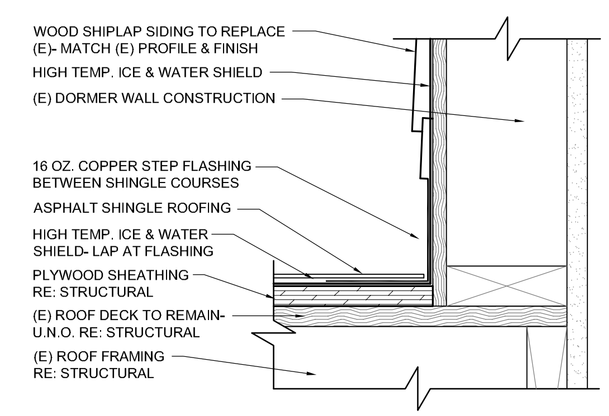

C6 AE5-02 FLASHING DETAIL
SCALE: 3" = 1'-0"

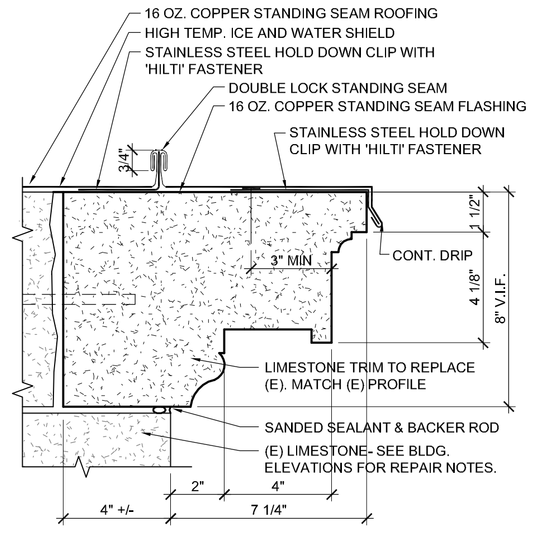

B3 AE5-02 STONE TRIM DETAIL
SCALE: 3" = 1'-0"

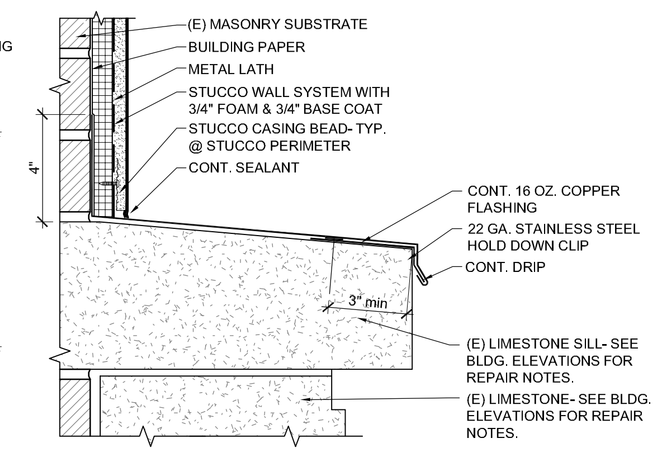

B4 AE5-02 SILL DETAIL
SCALE: 3" = 1'-0"

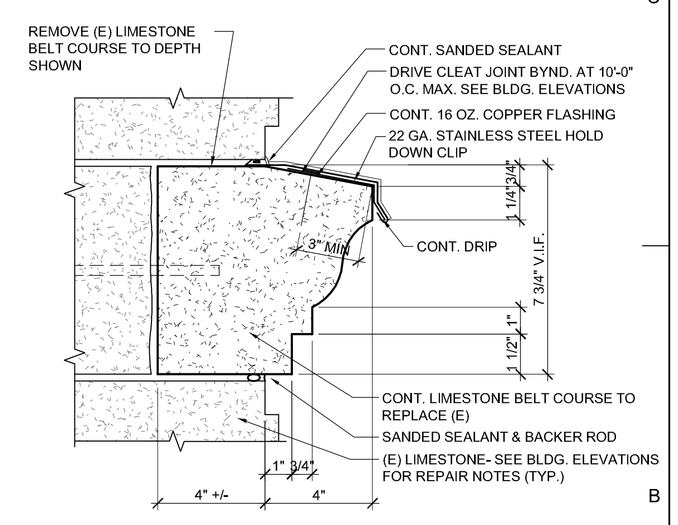

B6 AE5-02 BELT COURSE DETAIL
SCALE: 3" = 1'-0"

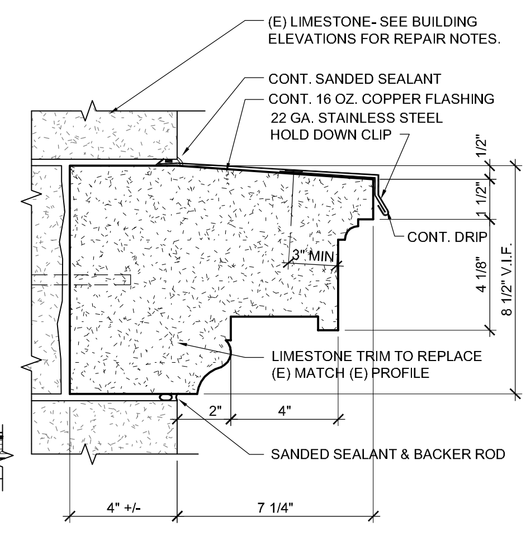

A3 AE5-02 STONE TRIM DETAIL
SCALE: 3" = 1'-0"

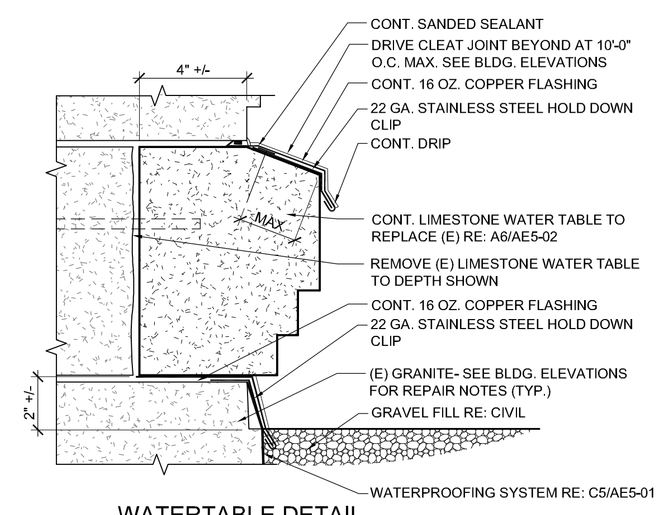

A4 AE5-02 WATERTABLE DETAIL @ NORTH ELEVATION
SCALE: 3" = 1'-0"

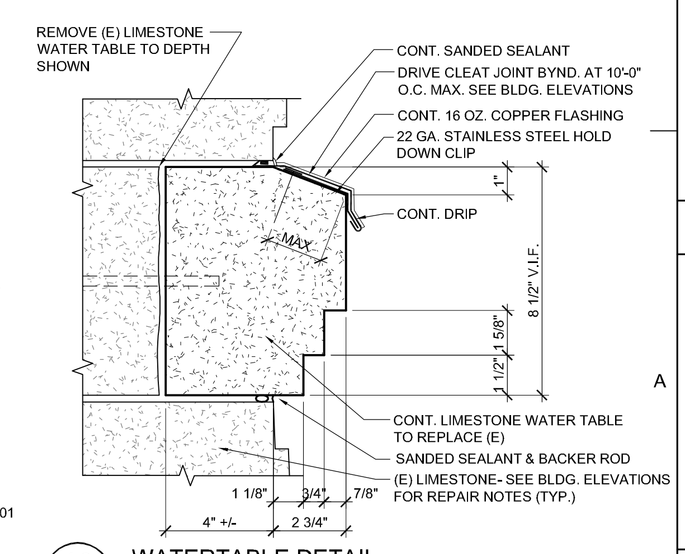

A6 AE5-02 WATERTABLE DETAIL
SCALE: 3" = 1'-0"

REFERENCE NOTES

REVISIONS:

BID SET

GOVERNOR'S CARRIAGE HOUSE STABILIZATION
DFCM PROJECT NO. 10032310
603 EAST SOUTH TEMPLE
SALT LAKE CITY, UTAH 84103

MJSA
357 West Pierpont Avenue □ Salt Lake City, Utah 84101
Telephone 801 364 5161 □ Facsimile 801 364 5167
ARCHITECTURE INTERIOR DESIGN

STAMP

STATE OF UTAH
ROBERT D. JOHNSON
#1142
LICENSED ARCHITECT

THESE DRAWINGS ARE INSTRUMENTS OF SERVICE AND SHALL REMAIN THE PROPERTY OF THE ARCHITECT. NO USE OR REUSE OF THESE DOCUMENTS SHALL BE PERMITTED UNLESS AUTHORIZED IN WRITING BY MJSA ARCHITECTS WITH APPROPRIATE COMPENSATION.

PROJECT NO.: 10014

DATE: 4/12/10

DETAILS
SCALE: AS SHOWN

SHEET: AE5-02

S:\10014 - Governor's Mansion Carriage House Restoration\CAD\3_CD\AE5-02 Details.dwg - Mon, 26 Apr 2010 - 10:04am

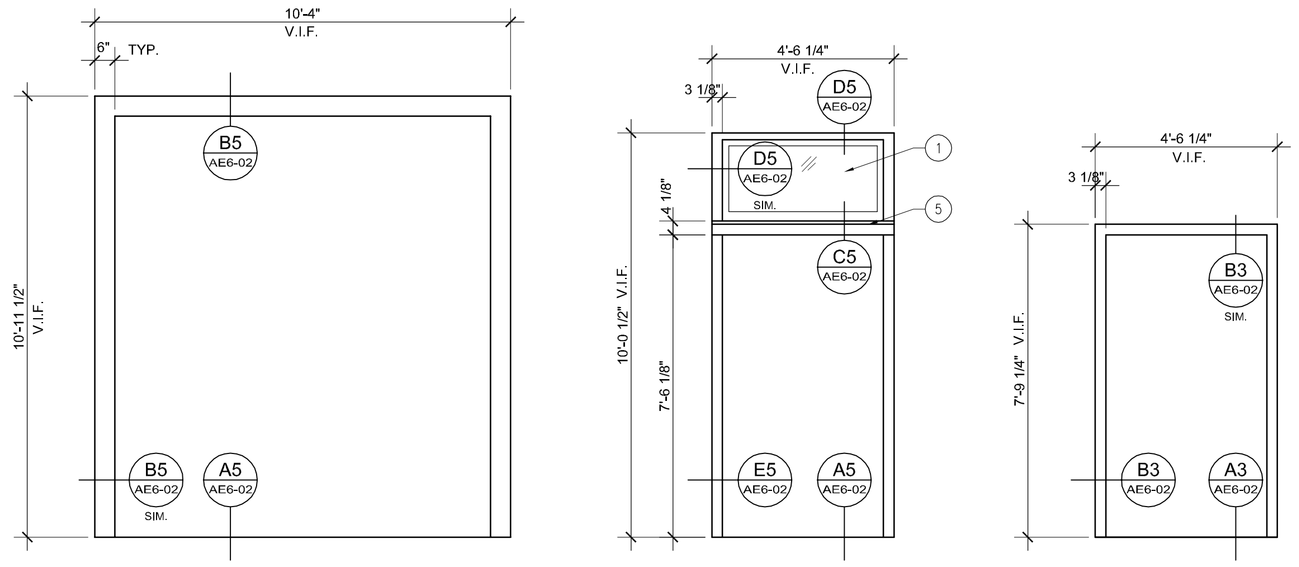

TYPE 1 TYPE 2 TYPE 3

D1 / AE6-01 DOOR FRAME ELEVATIONS

SCALE: 3/8" = 1'-0"

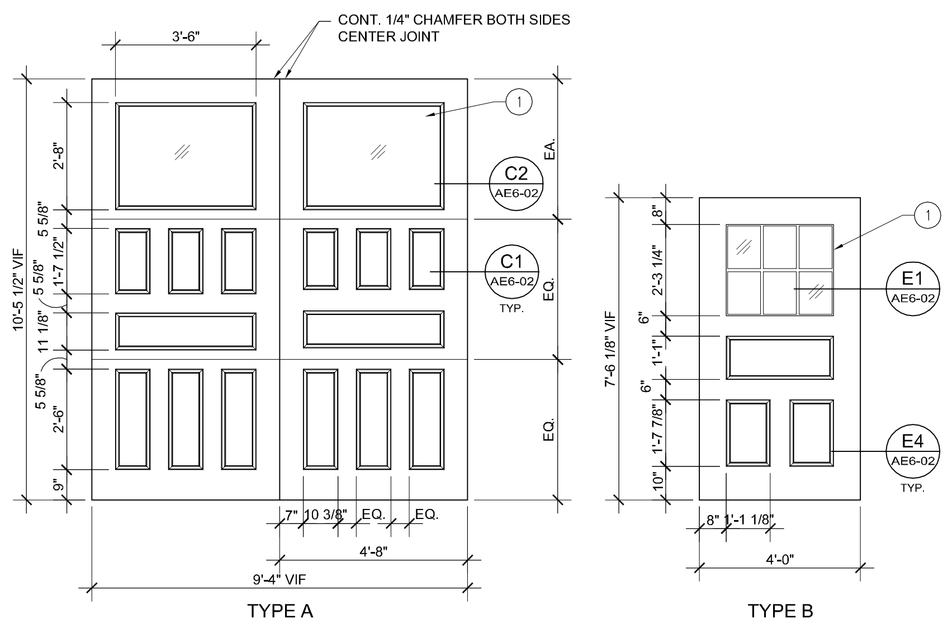

TYPE A TYPE B

C1 / AE6-01 DOOR ELEVATIONS

SCALE: 3/8" = 1'-0"

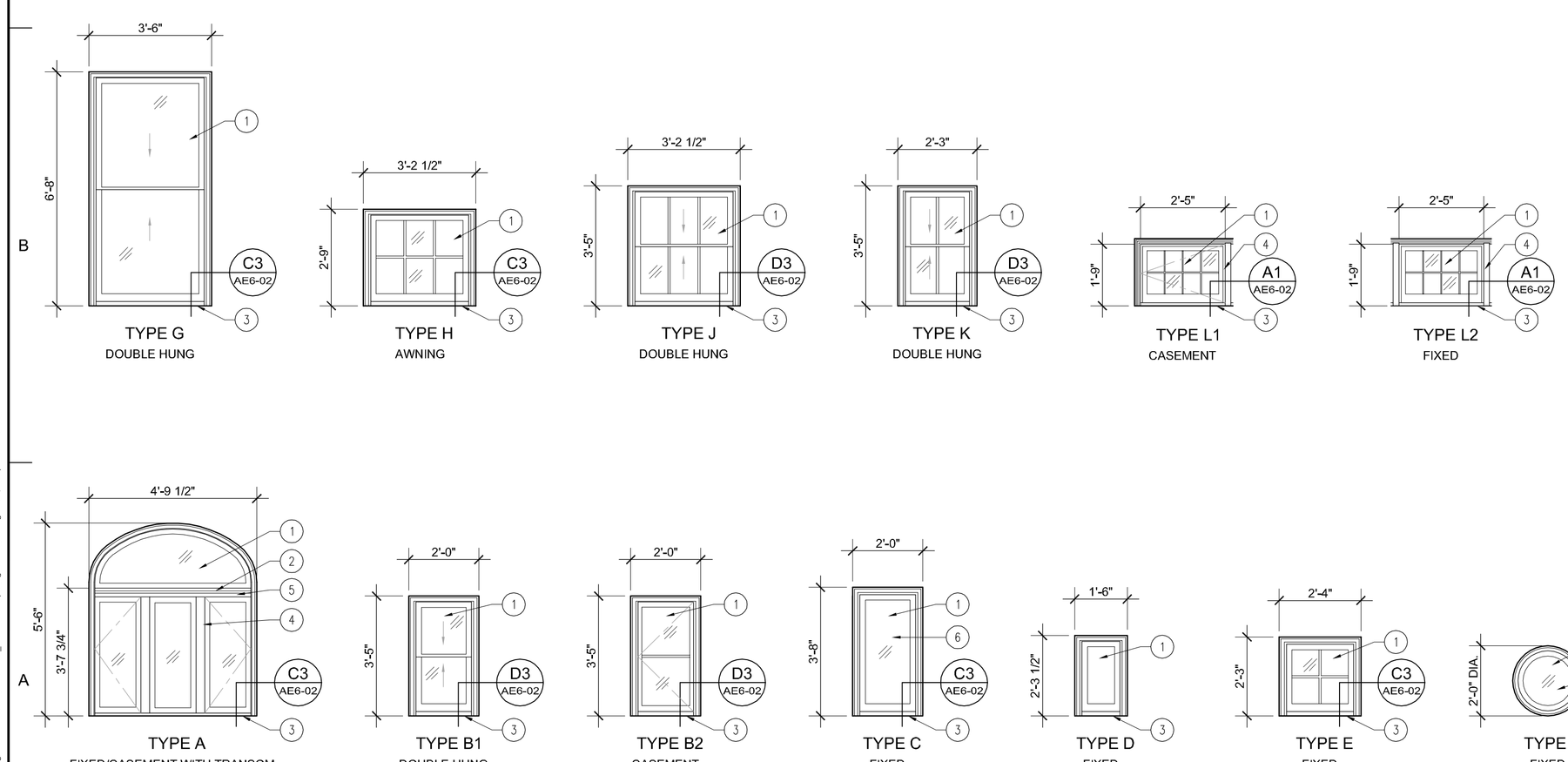

TYPE G DOUBLE HUNG
TYPE H AWNING
TYPE J DOUBLE HUNG
TYPE K DOUBLE HUNG
TYPE L1 CASEMENT
TYPE L2 FIXED
TYPE A FIXED/CASEMENT WITH TRANSOM
TYPE B1 DOUBLE HUNG
TYPE B2 CASEMENT
TYPE C FIXED
TYPE D FIXED
TYPE E FIXED
TYPE F FIXED

A1 / AE6-01 WINDOW ELEVATIONS

SCALE: 3/8" = 1'-0"

DOOR SCHEDULE

DOOR NO.	DOOR SIZE W x H (VIF)	TYPE: DOOR	TYPE: FRAME / TRIM	HDWR. GROUP	LOCATION	DOOR: MATERIAL	DOOR: FINISH	DOOR: THICKNESS	FRAME: MATERIAL	FRAME: FINISH	FRAME: THICKNESS	GLAZING TYPE	FIRE RATING	NOTES
101A	9'-4" X 10'-5 1/2"	A	1	-	STORAGE 101	WOOD	STAIN	2 1/4"+/-	WOOD	PAINT	2 1/4"	LG-1	-	7, 8
104A	4'-0" X 7'-4"	B	2	1	SECURITY 104	WOOD	STAIN	2 1/4"	WOOD	PAINT	2 1/4"	LG-1	-	1, 3, 4
204A	4'-0" X 7'-4"	B	3	2	UNUSED 204	WOOD	STAIN	2 1/4"	WOOD	PAINT	2 1/4"	LG-1	-	1, 3, 5

DOOR SCHEDULE NOTES

1. WOOD STILE AND RAIL DOOR.
2. NOT USED.
3. GLAZED TRUE DIVIDED HALF-LITE.
4. TRANSOM ABOVE WITH INSULATED GLAZED PANEL (GLAZING TYPE IG-1).
5. FIXED DOOR UNIT.
6. NOT USED.
7. SIMULATED WOOD STILE AND RAIL OVERHEAD SECTIONAL DOOR
8. DOOR SIZE REPRESENTS CLR. OPENING FOR DOOR, DOOR SIZE WILL VARY PER MANUFACTURER'S REQUIREMENTS

WINDOW SCHEDULE

Mark	Window Type	Window Operation	Lights	Size (MO)	Material	Glazing Type	Exterior Finish	Interior Finish	Notes
S101	A	FG/CS	4 total	4'-9 1/2" x 5'-6"	Wood	(E)	Paint	Varnish	1, 3
S102	C	FG	1 total	2'-0" x 3'-8 1/2"	Wood	(E)	Paint	Paint	1
S103	C	FG	1 total	2'-0" x 3'-8 1/2"	Wood	(E)	Paint	Paint	1
S104	A	FG/CS	4 total	4'-9 1/2" x 5'-6"	Wood	PG-1	Paint	Varnish	1, 2, 3, 4
W101	E	CS	4 total	2'-4" x 2'-4"	Wood	(E)	Paint	Paint	1, 3
W102	E	CS	4 total	2'-4" x 2'-4"	Wood	(E)	Paint	Paint	1, 3
W103	E	CS	4 total	2'-4" x 2'-4"	Wood	(E)	Paint	Paint	1, 3
W104	A	FG/CS	4 total	4'-9 1/2" x 5'-6"	Wood	(E)	Paint	Varnish	1, 3
E101	D	FG	1 total	1'-6" x 2'-3 1/2"	Wood	N/A	Paint	Paint	1, 3, 5
E102	G	DH	2 total	3'-6" x 6'-8"	Wood	(E)	Paint	Varnish	1, 3
E103	H	HPR	6 total	3'-2 1/2" x 2'-9"	Wood	(E)	Paint	Varnish	1, 3
E104	F	HPR	6 total	3'-2 1/2" x 3'-9"	Wood	(E)	Paint	Varnish	1, 3
S201	B1	DH	2 total	2'-0" x 3'-5"	Wood	(E)	Paint	Varnish	1, 2, 3
S202	B2	CS	2 total	2'-0" x 3'-5"	Wood	(E)	Paint	Varnish	1, 2, 3
S203	B1	DH	2 total	2'-0" x 3'-5"	Wood	(E)	Paint	Varnish	1, 2, 3
S204	F	FG	1 total	2'-0" DIA	Wood	(E)	Paint	Paint	1
S205	F	FG	1 total	2'-0" x DIA	Wood	(E)	Paint	Paint	1
S206	B1	DH	2 total	2'-0" x 3'-5"	Wood	(E)	Paint	Paint	1, 2, 3
S207	B2	CS	2 total	2'-0" x 3'-5"	Wood	(E)	Paint	Paint	1, 2, 3
S208	B1	DH	2 total	2'-0" x 3'-5"	Wood	(E)	Paint	Paint	1, 2, 3
S211	L1	CS	8 total	2'-5" X 1'-8"	Wood	(E)	Paint	Paint	1, 3
S212	L2	FG	8 total	2'-5" X 1'-8"	Wood	(E)	Paint	Paint	1, 3
S213	L1	CS	8 total	2'-5" X 1'-8"	Wood	(E)	Paint	Paint	1, 3
W201	B1	DH	2 total	2'-0" x 3'-5"	Wood	(E)	Paint	Unfin.	1, 2, 3, 6
W202	B1	DH	2 total	2'-0" x 3'-5"	Wood	(E)	Paint	Paint	1, 2, 3
W203	B1	DH	2 total	2'-0" x 3'-5"	Wood	(E)	Paint	Varnish	1, 2, 3
W204	B2	CS	2 total	2'-0" x 3'-5"	Wood	(E)	Paint	Varnish	1, 2, 3
W205	B1	DH	2 total	2'-0" x 3'-5"	Wood	(E)	Paint	Varnish	1, 2, 3
E201	J	DH	6 total	3'-2 1/2" X 3'-5"	Wood	(E)	Paint	Paint	1, 2, 3, 7
E202	J	DH	6 total	3'-2 1/2" X 3'-5"	Wood	(E)	Paint	Paint	1, 2, 3, 7
E203	J	DH	6 total	3'-2 1/2" X 3'-5"	Wood	(E)	Paint	Paint	1, 2, 3
E204	J	DH	6 total	3'-2 1/2" X 3'-5"	Wood	(E)	Paint	Paint	1, 2, 3
E205	K	DH	4 total	2'-3" X 3'-5"	Wood	(E)	Paint	Unfin.	1, 2, 3, 6
E206	K	DH	4 total	2'-3" X 3'-5"	Wood	(E)	Paint	Unfin.	1, 2, 3, 6

WINDOW SCHEDULE NOTES

1. PROVIDE MINOR REPAIRS, PREPARATION AND PAINT, WITH SEPARATE COLORS AT SASH AND FRAME (COLORS TBD.).
2. REPLACE GLAZING AS SCHEDULED.
3. REPLACE (E) PAINTED WOOD BRICK MOLD.
4. ADJACENT INTERIOR FINISHES AND PARTITION CONSTRUCTION TO REMAIN UNDISTURBED. PROTECT AS REQUIRED.
5. (E) PLYWOOD AND VENT TO REMAIN UNDISTURBED, EXCEPT AS REQUIRED FOR WINDOW REPAIRS. PAINT TO MATCH ADJACENT SASH.
6. REPLACE MISSING INTERIOR STOP. MATCH (E) BUILDING PROFILE.
7. REPLACE (E) UPPER AND LOWER SASH. SEE WINDOW TYPES.

REFERENCE NOTES

1. GLAZING AS SCHEDULED.
2. 16 OZ. COPPER FLASHING.
3. 16 OZ. COPPER SILL FLASHING.
4. WOOD VERTICAL MULLION.
5. WOOD HORIZONTAL MULLION.

WINDOW GENERAL NOTES

1. REFER TO FOLLOWING FOR GENERAL REPAIR AND REFURBISHMENT OF EXISTING HISTORIC WINDOWS. REFER TO WINDOW SCHEDULE FOR ADDITIONAL NOTES AND DATA ON SPECIFIC WINDOWS.
2. CONTRACTOR TO FIELD VERIFY ALL DIMENSIONS, WINDOW FEATURE AND GLAZING TYPES & SIZES, INSTALLATION CONDITIONS, ETC.
3. ALL WINDOW PARTS AND SECTIONS SHALL BE NOTED AND CATALOGUED FOR REINSTALLATION TO CORRECT LOCATIONS. ARCHITECT'S WINDOW DESIGNATIONS SHALL BE USED TO FULLEST EXTENT POSSIBLE TO SIMPLIFY COORDINATION.
4. ALL WEATHERSTRIPPING SHALL BE REMOVED AND REPLACED WITH NEW AS PART OF MAJOR REFURBISHMENT OR SASH REMOVAL OR REPLACEMENT, U.N.O.
5. REMOVE PAINT FROM WINDOW PARTS FOR NEW STAIN FINISH AS SCHEDULED. WHERE HEAT TREATMENTS ARE USED, REMOVE GLAZING OR PROTECT WITH ALUMINUM FOIL ON GYPSUM BOARD, OR SIMILAR.
6. WHEN SASHES ARE REMOVED, CONDITION OF REMAINING WOOD PIECES SHALL BE ASSESSED. REPAIR AND/OR REPLACE DAMAGED, ROTTED OR MISSING PIECES. MATCH EXISTING SPECIES WHERE STAIN FINISH IS SCHEDULED. TO FULLEST EXTENT POSSIBLE, REPAIR DAMAGED PIECES IN PLACE.
7. WHERE REMOVAL IS REQUIRED, WINDOW PARTS SHALL BE REMOVED BY GENTLEST MEANS POSSIBLE TO PREVENT DAMAGE TO COMPONENTS, TRIM, ETC. WHERE ALL OR PARTS OF WINDOWS ARE REMOVED, OPENINGS SHALL BE WEATHERPROOFED UNTIL RE-INSTALLATION.
8. REMOVE GLAZING COMPOUND WHERE DAMAGED OR AS REQUIRED FOR GLAZING REMOVAL. REMOVE MANUALLY AND PREVENT DAMAGE TO RABBETS. WHERE HEAT IS USED TO SOFTEN HARDENED PUTTY FOR REMOVAL, PROTECT GLAZING AND RABBET. PUTTY ON GLAZING MAY BE SOFTENED BY SOAKING IN LINSEED OIL.
9. UPON REMOVAL OF GLAZING, PATCH & SAND SASH AND PRIME WITH PRESERVATION PRIMER. PROVIDE BEAD OF GLAZING COMPOUND OR LINSEED OIL. PUTTY AROUND RABBET BEFORE REINSTALLATION OF GLAZING. BRUSH WOOD WITH LINSEED OIL AND PRIME WITH OIL BASED PRIMER OR PAINT BEFORE APPLYING NEW GLAZING COMPOUND.
10. INSTALL GLAZING POINTS AND FINAL GLAZING COMPOUND/PUTTY. BEVEL COMPOUND/PUTTY AND PAINT ONLY WHEN CURING IS COMPLETE.
11. PROVIDE DOWNWARD & OUTWARD SLOPE TO EXTERIOR SILLS.
12. UNLESS NOTED OTHERWISE, MATCH EXISTING DIMENSIONS, SHAPES AND PROFILES.

GLAZING SCHEDULE

TG-1	TEMPERED GLAZING
PG-1	PATTERNED GLAZING
LG-1	LAMINATED GLAZING
(E)	DENOTES EXISTING GLAZING TO REMAIN

STAMP

STATE OF UTAH
ROBERT J. PETERSON
#1142
LICENSED ARCHITECT

DOOR AND WINDOW SCHEDULES AND ELEVATIONS

SCALE: AS NOTED

REVISIONS:

BID SET

GOVERNOR'S CARRIAGE HOUSE STABILIZATION
DFCM PROJECT NO. 10032310
603 EAST SOUTH TEMPLE
SALT LAKE CITY, UTAH 84103

MJSA
357 West Pierpont Avenue □ Salt Lake City, Utah 84101
Telephone 801 364 5161 □ Facsimile 801 364 5167
ARCHITECTURE INTERIOR DESIGN

THESE DRAWINGS ARE INSTRUMENTS OF SERVICE AND SHALL REMAIN THE PROPERTY OF THE ARCHITECT. NO USE OR RE-USE OF THESE DOCUMENTS SHALL BE PERMITTED UNLESS AUTHORIZED IN WRITING BY MJSA ARCHITECTS WITH APPROPRIATE COMPENSATION.

PROJECT NO.: 10014

DATE: 4/12/10

SHEET: AE6-01

S:\10014 - Governor's Mansion Carriage House Restoration\CADD_CD\AE6-01 Opening Schedules.dwg - Mon, 26 Apr 2010 - 10:05am

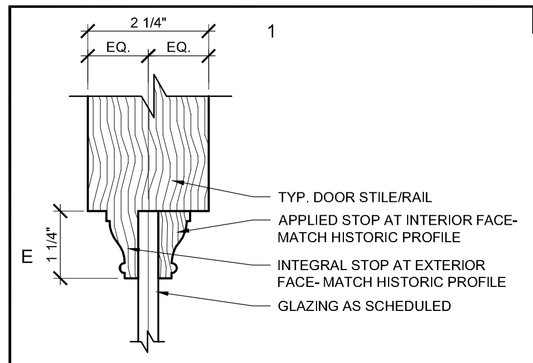

E1 AE6-02 DOOR LITE JAMB DETAIL (HEAD/SILL SIMILAR)
SCALE: 6" = 1'-0"

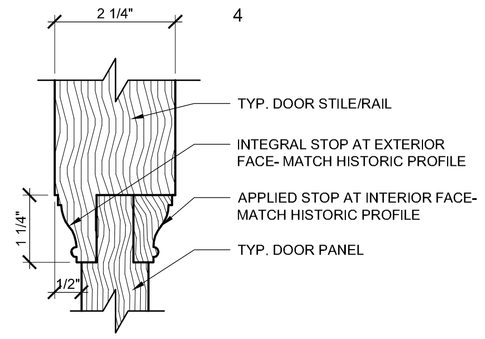

E4 AE6-02 DOOR STILE/RAIL DETAIL
SCALE: 6" = 1'-0"

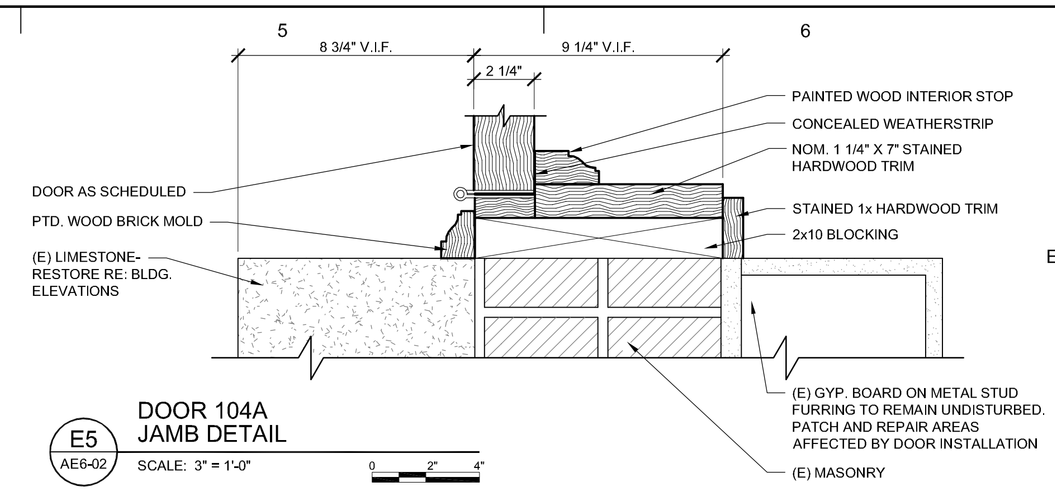

E5 AE6-02 DOOR 104A JAMB DETAIL
SCALE: 3" = 1'-0"

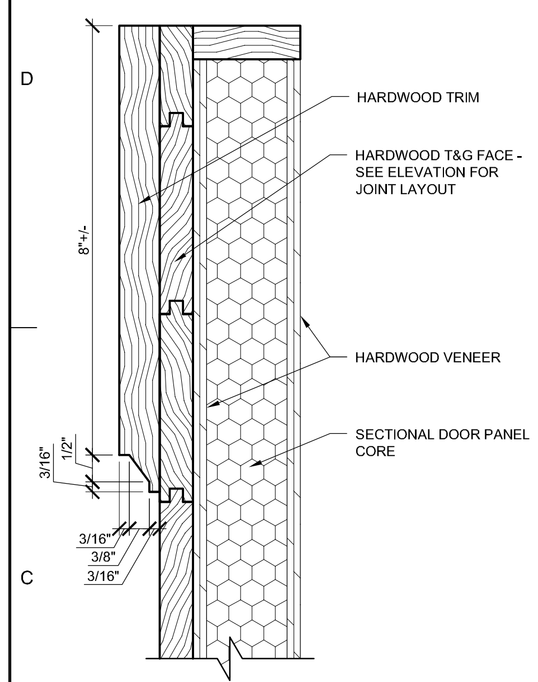

C1 AE6-02 SECTIONAL OVERHEAD DOOR STILE DETAIL (RAIL SIM)
SCALE: 6" = 1'-0"

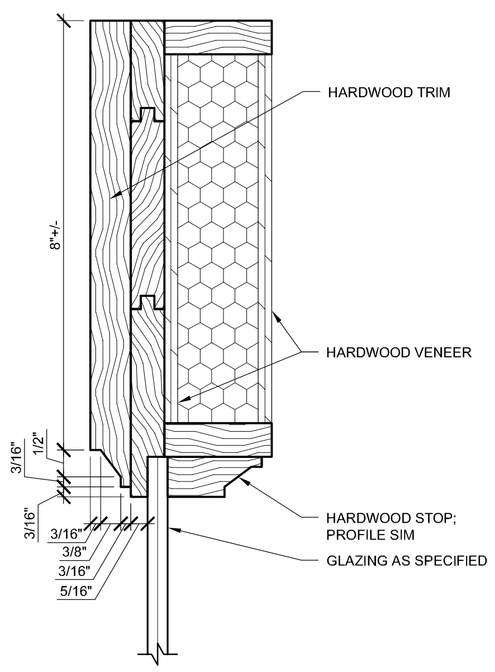

C2 AE6-02 SECTIONAL OVERHEAD DOOR RAIL / GLAZING DETAIL
SCALE: 6" = 1'-0"

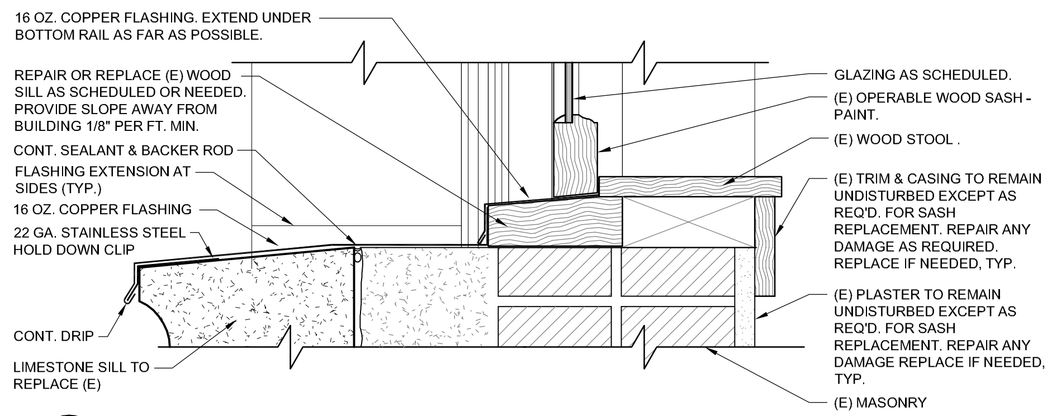

D3 AE6-02 SILL DETAIL
SCALE: 3" = 1'-0"

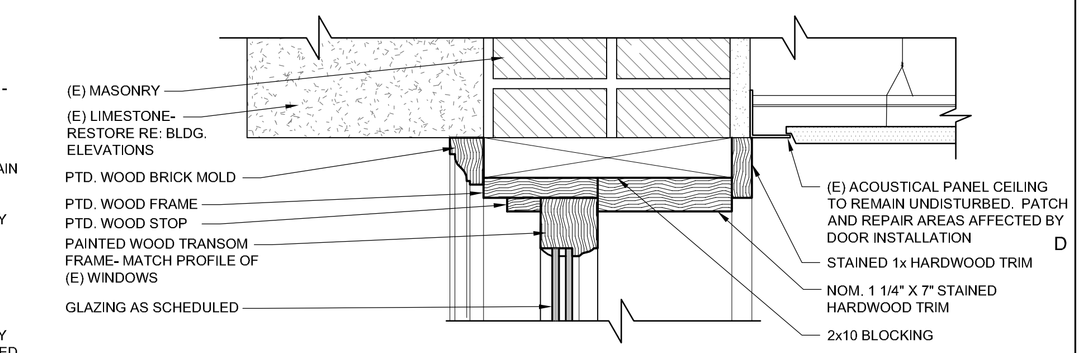

D5 AE6-02 DOOR 104A TRANSOM HEAD DETAIL
SCALE: 3" = 1'-0"

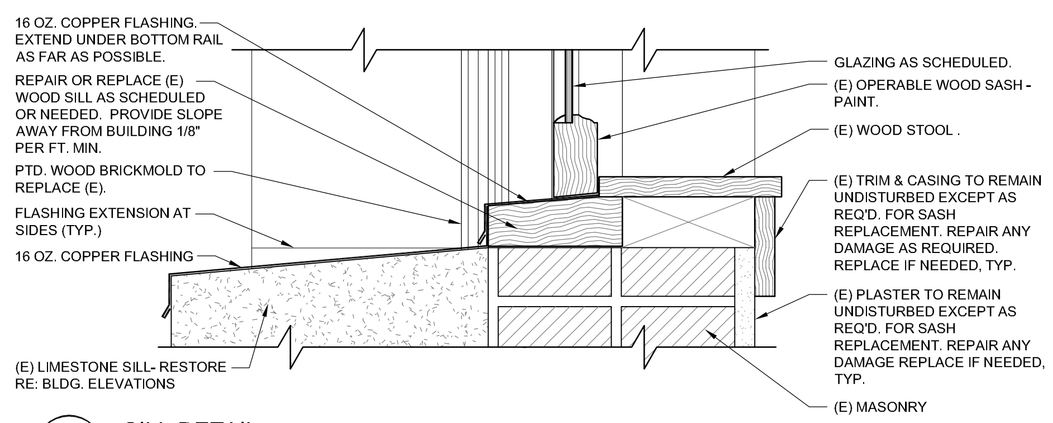

C3 AE6-02 SILL DETAIL
SCALE: 3" = 1'-0"

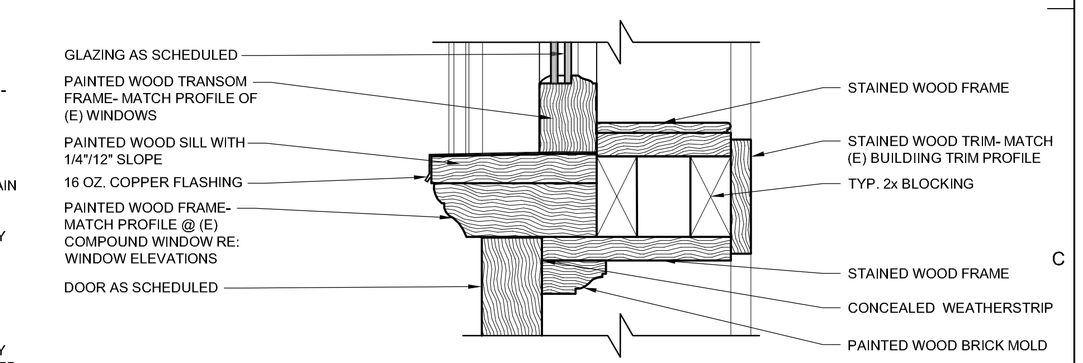

C5 AE6-02 DOOR 104A DOOR HEAD DETAIL
SCALE: 3" = 1'-0"

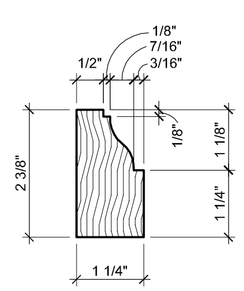

B2 AE6-02 BRICK MOLD
SCALE: 6" = 1'-0"

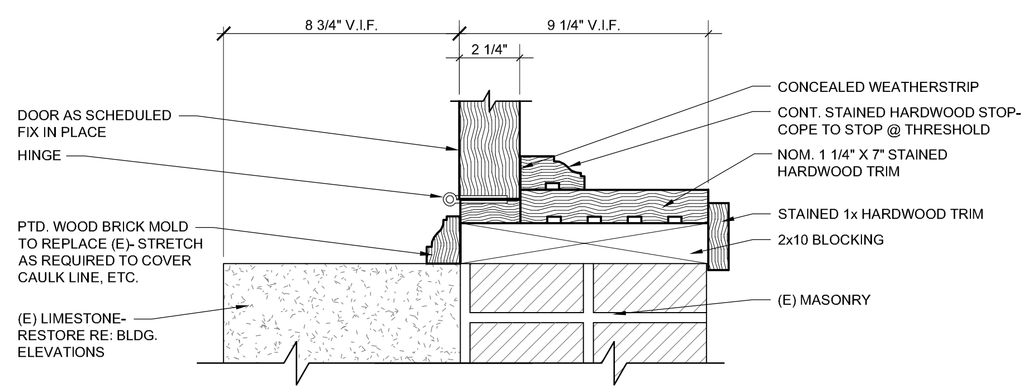

B3 AE6-02 DOOR 204A JAMB DETAIL (HEAD SIM.)
SCALE: 3" = 1'-0"

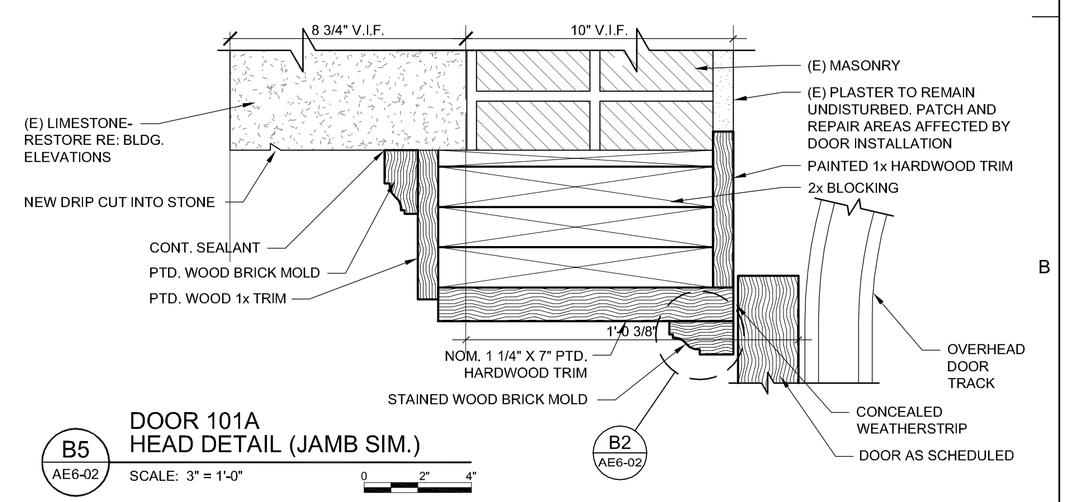

B5 AE6-02 DOOR 101A HEAD DETAIL (JAMB SIM.)
SCALE: 3" = 1'-0"

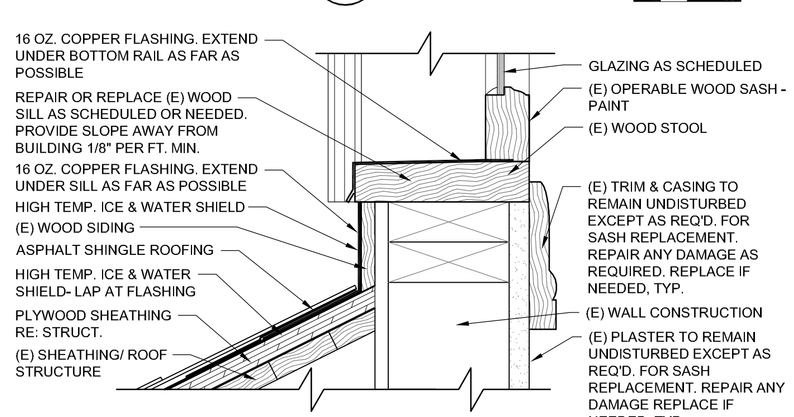

A1 AE6-02 SILL DETAIL
SCALE: 3" = 1'-0"

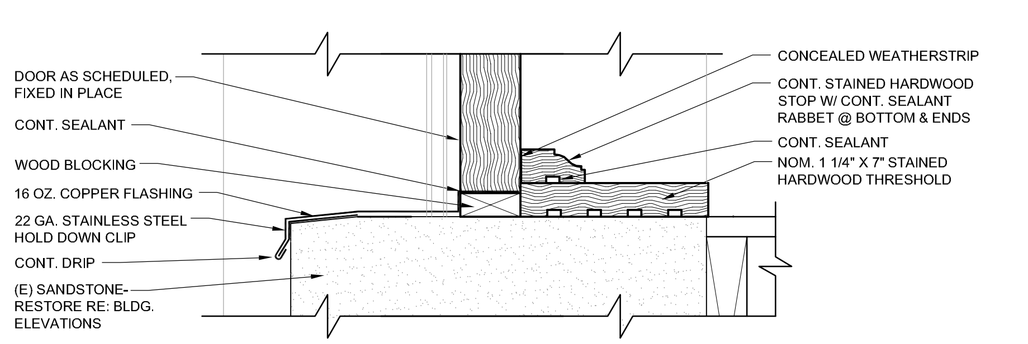

A3 AE6-02 DOOR 204A THRESHOLD DETAIL
SCALE: 3" = 1'-0"

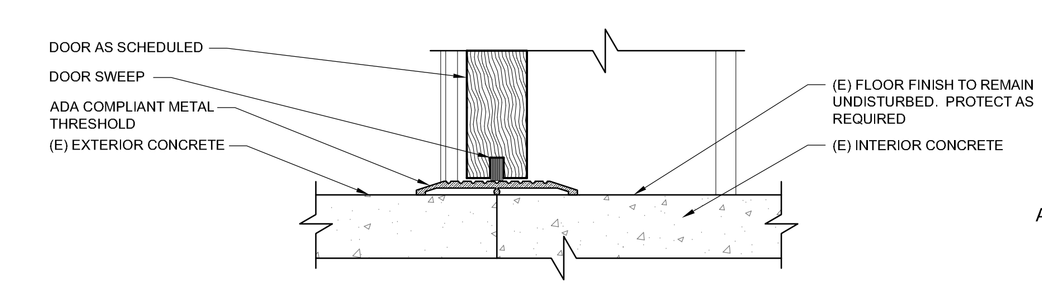

A5 AE6-02 DOOR 101A (DOOR 104A SIM.) THRESHOLD DETAIL
SCALE: 3" = 1'-0"

REFERENCE NOTES

REVISIONS:

BID SET

GOVERNOR'S CARRIAGE HOUSE STABILIZATION
DFCM PROJECT NO. 10032310
603 EAST SOUTH TEMPLE
SALT LAKE CITY, UTAH 84103

MJSA
357 West Pierpont Avenue □ Salt Lake City, Utah 84101
Telephone 801 364 5161 □ Facsimile 801 364 5167
ARCHITECTURE INTERIOR DESIGN

STAMP

STATE OF UTAH
ROBERT J. MAYS
#1142
LICENSED ARCHITECT

THESE DRAWINGS ARE INSTRUMENTS OF SERVICE AND SHALL REMAIN THE PROPERTY OF THE ARCHITECT. NO USE OR RE-USE OF THESE DOCUMENTS SHALL BE PERMITTED UNLESS AUTHORIZED IN WRITING BY MJSA ARCHITECTS WITH APPROPRIATE COMPENSATION.

PROJECT NO.: 10014

DATE: 4/12/10

DOOR AND WINDOW DETAILS
SCALE: AS SHOWN

SHEET: AE6-02

S:\10014 - Governor's Mansion Carriage House Restoration\CAD\03_CD\AE6-02 Opening Details.dwg - Mon, 26 Apr 2010 - 10:06am

BASIS OF DESIGN

1. BUILDING CODE		2006 IEBC
2. OCCUPANCY CATEGORY		III
3. ALTERATIONS		LEVEL 1
4. GRAVITY DESIGN:		
DEAD LOADS:		
Roofs		20 psf
LIVE LOADS:		
Roofs		20 psf
SNOW LOADS:		
Snow load on ground,	Pg	42.8 psf
Snow load on flat roof,	Pf	30 psf
Exposure factor,	Ce	1.0
Importance factor,	Is	1.0
Thermal factor,	Ct	1.0
5. WIND DESIGN:		
Basic wind speed		90 mph
Importance factor,	Iw	1.0
Exposure		B
Internal pressure coefficient,	GCpi	±0.18
MWFRS wind pressures:		
Interior Zone (Wall)		11.5 psf
Interior Zone (Roof)		7.9 psf
End Zone (Wall)		14.4 psf
End Zone (Roof)		9.9 psf
6. SEISMIC DESIGN:		
Importance factor,	Ie	1.0
Mapped Spectral response accelerations:		
	Ss & S1	1.17 & 0.67
Site class		D
Spectral response coefficients:		
	SDs & SD1	0.11 & 0.67
Seismic Design Category		D
Basic Seismic-Force-Resisting System:		
ORDINARY MASONRY WALLS		
Design Base Shear		300 kips
Seismic response coefficient,	Cs	.75 *0.67 *0.5
Response modification factor,	R	1.5
Analysis procedure		Equivalent Lateral Force

7. ABBREVIATIONS:
   EOR = Engineer of record. See professional stamp this page.
   UNO = Unless noted otherwise
   (E) = Existing condition
   (N) = New construction

GENERAL

1. THE GENERAL CONTRACTOR SHALL:
   A. Be familiar with the contract documents and insure that subcontractors are familiar with their portion of the work. Submit a written request to the Arch/EOR for approval before proceeding with any changes.
   B. Verifies site conditions and dimensions at the site. If they differ from the contract documents, notify the Arch/EOR prior to fabrication/construction of affected elements. Existing condition information on the drawings is based on best knowledge acquired during the design phase and may differ from actual conditions. Affected details may require redesign.
   C. Report to the Arch/EOR modifications made to the structure.
   D. Be responsible for safety and protection on and around the job site and adjacent properties.

2. THE GENERAL CONTRACTOR SHALL COORDINATE:
   A. And verify locations, weights and sizes of mechanical units, equipment, etc. prior to the fabrication and erecting of structural supporting elements. Report sizes and locations that differ from those shown on the drawings to the Arch/EOR for review. Additional framing maybe required.
   B. Roof, floor, and wall openings required for mechanical, etc, which are not shown on the structural drawings with the Arch/EOR.
   C. Any structural situation not covered by the drawings with the Arch/EOR.
   D. Doors, windows, walls, elevations, slopes, stairs, curbs, drains, recesses, depressions, railings, waterproofing, finishes, chamfers, kerfs, pads, landscape walls, trenches in slabs, etc, with the structural work.
   E. Inspections, testing, and structural observations as work proceeds. Notify the EOR 48 hours prior to any required structural observations.

3. CONTRACT DOCUMENTS & DRAWINGS:
   A. These structural notes complement the specifications and the drawings.
   B. Specific details, sections and notes shown on the drawings govern over these general notes and typical details.
   C. Contract documents take precedence over shop drawings, UNO.
   D. Apply typical or similar details, sections and notes to similar situations on the drawings where specific details are not referenced.
   E. Drawings and details have been prepared to visually represent information provided in scaled form. However, DO NOT scale plans or details for dimensional information.
   F. Refer to architectural drawings for dimensions.

4. BUILDING CODE COMPLIANCE: Construction, inspection, materials, testing, and workmanship shall conform to the requirements of the governing building code.

5. CONSTRUCTION SEQUENCE, SHORING, AND BRACING REQUIREMENTS: The general contractor is responsible for the method, means, and sequence of structural erection, UNO. He shall provide adequate temporary shoring or bracing for all structural elements until the entire structural system is completed. Design of shoring and bracing is by others at no additional cost to the owner.

6. OMISSIONS, CONFLICTS & DISCREPANCIES:
   A. Bring omissions, conflicts or discrepancies between the elements of the contract documents to the attention of the Arch/EOR before proceeding with work involved.
   B. In case of conflicts or discrepancies, follow the most stringent requirements as directed by the Arch/EOR.

7. MISCELLANEOUS:
   A. During and after construction, builder and/owner shall keep loads on the structure within the limits of this design. See Basis of Design.
   B. Site observations by WCA's field representative shall neither be construed as inspection nor approval of construction.

8. SUBMITTALS:
   A. Make submittals in a timely manner. WCA's review is for general compliance only and is not intended as approval. Contractor is responsible for verifying sizes, dimensions and elevations on submittals as related to the contract documents.
   B. Submit the following items for review prior to proceeding with the work:

   Shop Drawings: Structural steel
   Wood (joist and beams (Manufactured)
   Roof, floor and wall openings not shown on the drawings.
   Welding procedures and certifications.
   * stamped by a professional engineer currently registered in the state of the project.

   C. Allow two weeks for the review of submittals by the EOR.
   D. Have EOR approved shop drawings & materials on site before construction of those components begins.
   E. Substitutions are not allowed unless approved by the EOR. Submit requests for structural substitutions to the Arch/EOR.

WOOD

1. CODES AND STANDARDS. Comply with:
   A. The ANSI/AF&PA "National Design Specification", (NDS).
   B. The grading requirements of the WWPA.

2. MATERIALS: (All materials shall be clearly marked)
   A. Structural lumber species and grade shall be as follows:
      a. Joists, beams or headers: 'DF/L #2' or better.
      b. Posts and columns: 'DF/L #1' or better.
      c. Studs: 'DF/L #2' or better.
      d. Sill plates: 'DF/L #2' or better, treated.
   B. Manufactured joists: Trus-Joist or approved equal.
   C. Structural Glued-Laminated Timber: 24F-V4 for simple spans and 24F-V8 for continuous or cantilevered beams.
   D. Engineered Lumber:
      a. Structural Laminated-Veneer-Lumber (LVL): conform to the following minimum design values:
         Fb = 2,600 psi. (Joist/Beam orientation)
         Fv = 285 psi.
         E = 1,900,000 psi.
      b. Structural Laminated-Strand-Lumber (LSL): conform to the following minimum design values:
         Fb = 2,325 psi. (Joist/Beam orientation)
         Fv = 310 psi.
         E = 1,550,000 psi.
      c. Structural Parallel-Strand-Lumber (PSL): conform to the following minimum design values:
         Fb = 2,900 psi. (Joist/Beam orientation)
         Fv = 290 psi.
         E = 2,000,000 psi.
   E. Wood structural panels shall be Exposure 1 Grade or better APA rated sheathing with exterior glue and conform to Standard PS 1-83, or PS 2-92.
   F. Wood connectors shall be Simpson-Strong-Tie.

3. CONSTRUCTION:
   A. See plans for roof and floor joists sizes. Joists shall be laterally supported at bearing points by solid blocking or with metal hangers.
   B. Erect manufactured joists in accordance with the fabricator's commendations. Joists shall be able support the loads published in their design catalogs.
   C. Provide bridging at 8'-0" o.c. maximum spacing for dimensional lumber and LVL joists. Provide bridging in all other manufactured joists as per the manufacturer's recommendations.
   D. Fill all nail holes in wood connectors (framing anchors, joist hangers, purlin anchors, etc.) with nails as specified by the manufacturer, UNO.
   E. Install washers under all bolt nuts. Make bolt holes only 1/32 to 1/16 inch larger than bolts. Tighten nuts snugly, but DO NOT crush the wood. DO NOT countersink bolts, UNO.
   F. Specified nails are common and shall correspond to the following diameters and lengths: (16d -0.162"Ø & 3-1/2" long; 10d-0.148"Ø & 3" long; 8d-0.131"Ø & 2-1/2" long)
   G. Minimum nailing of members: Conform to IBC, Table 2304.9.1, UNO.
   H. Nail built-up beams of 2x_ members 12" deep or less together with 16d nails at 12" o.c., staggered. Add (2) 16d common nails at supports. Bolt 2x_ members deeper than 12" together with 1/2" bolts at 16" o.c. staggered. Add (2) bolts at supports.
   I. Fasteners in preservative-treated and fire-retardant-treated wood: Conform to IBC, Section 2304.9.5, UNO.

EPOXY

1. PRODUCT:
   A. Epoxy for Concrete Connections shall be:
      1. "Hilt RE 500" by Hilti Corporation
      2. "Set-XP" by Simpson Strong Tie
   B. Epoxy for Masonry and Stone Connections shall be:
      1. "Hilt RE 500" or "Hilt HY 150 Max" by Hilti Corporation (grouted cells)
      2. "Hilt HY 20" by Hilti Corporation (un-grouted cells, with screen tubes)
      3. "Set Epoxy-Tie" by Simpson Strong Tie
      4. "Powers-Fast" by Powers Fasteners

2. INSTALLATION:
   A. All drilled holes for anchors rods 1" in diameter and smaller shall be 1/8" larger than the anchor rod being installed. All drilled holes for anchor rods greater than 1" in diameter shall be 1/4" larger than the bar or anchor rod being installed.
   B. After drilling the proper size hole, clean the walls and bottom of the drilled hole of all dust and debris using a nylon brush in conjunction with oil free compressed air. The hole shall be free of dust, debris and standing water.
   C. Follow all manufacturers' recommendations for epoxy installation.

STRUCTURAL STEEL

1. CODES AND STANDARDS: Comply with:
   A. AISC "Specification for Structural Steel Buildings & Commentary",
   B. AISC "Code of Standard Practice" excluding sections 7.5.4. and 7.11.5.
   C. AWS "Structural Welding Code", exclude items conflicting with ABC.

2. MATERIALS SHALL CONFORM AS FOLLOWS:

A. Hollow Structural Sections:	ASTM A500,	Fy = 46 ksi, Gr. B.
B. Misc. shapes & plates:	ASTM A53,	Fy = 36 ksi.
C. Pipe:	ASTM A53,	Fy = 35 ksi. Gr. B.
D. Anchor rods:	ASTM F1554,	Fy = 36 ksi.
E. Bolts:	ASTM A307 or better.	
F. Welded anchors studs (WAS, HAS):	ASTM A108,	Fu = 65 ksi.

3. CONSTRUCTION:
   A. Fabricate in an approved fabricator's shop.
   B. Fabricate beams with incidental camber up, UNO.
   C. Use 6000 psi (minimum at 28-days) non-shrink liquid grout beneath bearing plates. Place grout per manufacturer's recommendations prior to loading member.
   D. Add deformed bar anchors to structural sections embedded in concrete or masonry, UNO. Use the same size and spacing as the adjacent reinforcing bars. Minimum length of bars shall be 48 bar diameters but not less than 24 inches.

4. BOLTED CONNECTIONS:
   A. Use 3/4" diameter bolts in Std. holes (bolt diameter + 1/16"), UNO.
   B. Steel-to-steel connections: Use ASTM A325 type "N" connections, UNO.
   C. Other connections: Use ASTM A307 bolts or better except for anchor rods, UNO.
   D. Use hardened washers beneath the turned element of the bolt or nut. Use beveled hardened washers where the outer face of bolted parts has a slope greater than one in twenty with respect to the plane normal to the bolts axis. At oversized holes, use hardened washers or plates at least 5/16" thick conforming to ASTM F436.
   E. Tighten bolts until all plies of the joint are in firm contact. Snug tight condition, UNO.
   F. Enlarge bolt holes by reaming, DO NOT torch cut.

5. WELDED CONNECTIONS:
   A. Perform welding and cutting by AWS certified welders in accordance with ANSI/AWS D1.1 (latest edition).
   B. For typical shop & field welds, use filler metals with nominal 70 ksi tensile strength having:
      a. Matching material for multiple pass welds.
      b. A diffusible hydrogen limit of H16 or less.
      c. A CVN toughness of 20 ft-lbs at 0 deg. F.
   C. For all connections of braced frames, use the same criteria as above but with a CVN toughness of 40 ft-lbs at 70 deg. F.
   D. Use pre-qualified procedures.
   E. Weld intersecting steel shapes together, which are not connected with bolts, with all-around fillet welds, UNO.
   F. Weld studs and DBA's according to Manufacturer's specs.
   G. Wherever possible use long welds. The contractor shall coordinate field and shop welds between shop fabrication and the steel erector.
   H. Remove slag from welds.

STATEMENT OF SPECIAL INSPECTIONS

1. The Inspection requirements as noted on this sheet are required for the items that are specifically noted, designed and detailed in the structural documents. Refer to the current IBC, Chapter 17, the architectural drawings, and the geotechnical report for additional information and additional inspection requirements for non-structural items.

2. The project owner shall employ one or more special inspectors to provide inspections during construction on the types of work listed below. The special inspector shall be a qualified person who shall demonstrate competence, to the satisfaction of the building official and/or EOR, for inspection of the particular type of construction or operation requiring special inspection. These inspections are in addition to the inspections required by the building department of the local jurisdiction.

3. Special inspectors shall keep records of inspections. The special inspector shall furnish inspection reports to the building official and to the EOR in responsible charge. Reports shall indicate that work inspected was done in conformance with approved construction documents. Discrepancies shall be brought to the immediate attention of the contractor for correction. If the discrepancies are not corrected, the discrepancies shall be brought to the attention of the building official and to the EOR in responsible charge prior to the completion of that phase of the work. A final report documenting required special inspections and correction of any discrepancies noted in the inspections shall be submitted at a point in time agreed upon by the permit applicant and the building official prior to the start of work.

4. Special inspections for each task shall be carried out in compliance with requirements per the current IBC and other material standards.

5. FABRICATION SHOP REQUIREMENTS
   A. Where fabrication of structural load bearing members and assemblies are being performed on the premises of a fabricators shop, special inspections required shall be provided in the shop during the fabrication process. This requirement may be excepted if the work is done on the premises of a fabricator registered and approved to perform such work without special inspection. A certificate shall be required to verify such approvall. At completion of the fabrication, the approved fabricator shall submit a certificate of compliance to the building official stating that the work was performed in accordance with the approved construction drawings

6. TESTING: The owner will provide testing by qualified testing personnel for the following types of construction:

   Bolting: installation and correct torque and/or tension.
   Welding: type, size, length, and quality of shop and all field welds by approved methods. Ultrasonically test complete penetration welds.
   Drill and epoxy anchors: load test 10% of anchors, with a minimum of (2) anchors tested

7. THE CONTRACTOR SHALL:

   A. Coordinate testing. DO NOT proceed with subsequent work until inspections and testing has been approved.
   B. Copy inspection reports/testing results to the Arch/EOR and owner before work proceeds.
   C. Correct deficient work at no additional cost to the owner.

STRUCTURAL OBSERVATIONS

1. WCA Structural Engineering, Inc. shall be notified by the contractor 5 business days before the completion of the items listed in this section so that structural observations may be performed in accordance with IBC Section 1709. The observations will be performed at the discretion of WCA Structural Engineering, Inc.

A. Proper placement and attachment of roof to wall connections.
B. Diaphragm nailing, both boundary nailing and edge nailing.
C. Continuous cross ties, or steel strapping across diaphragm

STEEL CONSTRUCTION INSPECTIONS

ITEM NO.	ITEM FOR VERIFICATION & INSPECTION	INSPECTION FREQUENCY CONTINUOUS	INSPECTION FREQUENCY PERIODIC	ITEMS REQUIRED FOR THIS PROJECT
1	MATERIAL VERIFICATION OF HIGH-STRENGTH BOLTS, NUTS AND WASHERS:			
1a	Identification markings to conform to ASTM standards specified in the approved construction documents	--	X	NO
1b	Manufacturer's certificate of compliance required	--	X	NO
2	INSPECTION OF HIGH-STRENGTH BOLTING:			
2a	Snug-tight joints	--	X	NO
2b	Pretensioned and slip-critical joints using turn-of-nut with matchmarking, twist-off bolt or direct tension indicator methods of installation	--	X	NO
2c	Pretensioned and slip-critical joints using turn-of-nut without matchmarking or calibrated wrench methods of installation	X	--	NO
3	MATERIAL VERIFICATION OF STRUCTURAL STEEL AND COLD-FORMED STEEL DECK:			
3a	For structural steel, identification of markings to conform to AISC 360	--	X	NO
3b	For other steel, identification markings to conform to ASTM standards specified in the approved construction documents	--	X	NO
3c	Manufacturer's certified test reports	--	X	NO
4	MATERIAL VERIFICATION OF WELD FILLER MATERIALS:			
4a	Identification markings to conform to AWS specification in the approved construction documents	--	X	YES
4b	Manufacturer's certificate of compliance required	--	X	YES
5	Inspection of welding:			
5a	Structural steel and cold-formed steel deck			
	1) Complete and partial joint penetration grove welds	X	--	YES
	2) Multipass fillet welds	X	--	YES
	3) Single-pass fillet welds > 5/16"	X	--	YES
	4) Plug and slot welds	X	--	NO
	5) Single-pass fillet welds ≤ 5/16"	--	X	YES
	6) Floor and roof deck welds	--	X	NO
5b	Reinforcing steel			
	1) Verification of weldability of reinforcing steel other than ASTM A706	--	X	NO
	2) Reinforcing steel resisting flexural and axial forces in intermediate and special moment frames, and boundary elements of special structural walls of concrete and shear reinforcement	X	--	NO
	3) Shear reinforcing steel	X	--	NO
	4) Other reinforcing steel	--	X	NO
6	Inspection of steel frame joint details for compliance:			
6a	Details such as bracing and stiffening	--	X	NO
6b	Member locations	--	X	NO
6c	Application of joint details at each connection	--	X	NO

CONCRETE CONSTRUCTION INSPECTIONS

ITEM NO.	ITEM FOR VERIFICATION & INSPECTION	INSPECTION FREQUENCY CONTINUOUS	INSPECTION FREQUENCY PERIODIC	ITEMS REQUIRED FOR THIS PROJECT
1	Inspection of reinforcing steel, including prestressing tendons, and placement	--	X	NO
2	Inspection of reinforcing steel welding in accordance with IBC Table 1704.3, Item 5b	--	--	NO
3	Inspection of bolts to be installed in concrete prior to and during placement of concrete	X	--	NO
4	Inspection of anchors installed in hardened concrete	--	X	NO
5	Verifying use of required design mix	--	X	NO
6	At the time fresh concrete is sampled to fabricate specimens for strength tests, perform slump and air content tests, and determine the temperature of the concrete	X	--	NO
7	Inspection of concrete and shotcrete placement for proper application techniques	X	--	NO
8	Inspection for maintenance of specified curing temperature and techniques	--	X	NO
9	Inspection of prestressed concrete: a) Application of prestressing forces b) Grouting of bonded prestressing tendons in the seismic-force-resisting system	X	--	NO
10	Erection of precast concrete members	--	X	NO
11	Verification of in-situ concrete strength, prior to stressing of tendons in posttensioned concrete and prior to removal of shores and forms from beams and structural slabs	--	X	NO
12	Inspection formwork for shape, location and dimensions of the concrete member being formed	--	X	NO

Note:
1. See Concrete Notes Section 3(E) on GSN for concrete items that require testing.

MASONRY CONSTRUCTION INSPECTIONS (LEVEL 1)

ITEM NO.	ITEM FOR VERIFICATION & INSPECTION	INSPECTION FREQUENCY CONTINUOUS	INSPECTION FREQUENCY PERIODIC	ITEMS REQUIRED FOR THIS PROJECT
1	Compliance with required inspection provisions of the construction documents and the approved submittals shall be verified	--	X	NO
2	Verification of f'm and f'aco prior to construction	--	X	NO
3	Verification of slump flow and VSI as delivered to the site for self-consolidation grout	X	--	NO
4	As masonry construction begins, the following shall be verified to ensure compliance			
4a	Proportions of site-prepared mortar	--	X	NO
4b	Construction of mortar joints	--	X	NO
4c	Location of reinforcement, connectors, prestressing tendons and anchorages	--	X	NO
4d	Prestressing technique	--	X	NO
4e	Grade and size of prestressing tendons and anchorages	--	X	NO
5	During construction the inspection program shall verify:			
5a	Size and location of structural elements	--	X	NO
5b	Type, size and location of anchors, including other details of anchorage of masonry to structural members, frames or other construction	--	X	NO
5c	Specified size, grade and type of reinforcement, anchor bolts, prestressing tendons and anchorages	--	X	NO
5d	Welding of reinforcing bars	X	--	NO
5e	Preparation, construction and protection of masonry during cold weather (temperature below 40°F) or hot weather (temperature above 90°F)	--	X	NO
5f	Application and measurement of prestressing force	X	--	NO
6	Prior to grouting, the following shall be verified to ensure compliance			
6a	Grout space is clean	--	X	NO
6b	Placement of reinforcement and connectors, and prestressing tendons and anchorages	--	X	NO
6c	Proportions of site-prepared grout and prestressing grout for bonded tendons	--	X	NO
6d	Construction of mortar joints	--	X	NO
7	Grout placement shall be verified to ensure compliance:	X	--	NO
7a	Grouting of prestressing bonded tendons	X	--	NO
8	Preparation of any required grout specimens, mortar specimens and/or prisms shall be observed	--	X	NO

SOILS INSPECTIONS

ITEM NO.	ITEM FOR VERIFICATION & INSPECTION	INSPECTION FREQUENCY CONTINUOUS	INSPECTION FREQUENCY PERIODIC	ITEMS REQUIRED FOR THIS PROJECT
1	Verify materials below shallow foundations are adequate to achieve the design bearing capacity	--	X	NO
2	Verify excavations are extended to proper depth and have reached proper material	--	X	NO
3	Perform classification and testing of compacted fill materials	--	X	NO
4	Verify use of proper materials, densities and lift thicknesses during placement and compaction of compacted fill	X	--	NO
5	Prior to placement of compacted fill, observe subgrade and verify that site has been prepared properly	--	X	NO

Note:
1. The approved soils report and the construction documents shall be used to determine compliance

WOOD CONSTRUCTION INSPECTIONS

ITEM NO.	ITEM FOR VERIFICATION & INSPECTION	INSPECTION FREQUENCY CONTINUOUS	INSPECTION FREQUENCY PERIODIC	ITEMS REQUIRED FOR THIS PROJECT
1	During field gluing operations of elements of the wind-force-resisting or seismic-force-resisting system (see note 2)	X	--	NO
2	For nailing, bolting, anchoring and other fastening of components within the wind-force-resisting or seismic-force-resisting-system, including wood shear walls, wood diaphragms, drag struts, braces, shear panels and holdowns (see note 2)	--	X	YES
3	High-load diaphragms as per IBC Section 1704.6.1	--	X	YES
4	Where a truss clear span in 60ft or greater, the special inspector shall verify that the temporary installation restraint/bracing and the permanent individual truss member restraint/bracing are installed in accordance with the approved truss submittal package	--	X	NO

Note:
1. Special inspections of the fabrication process of prefabricated wood structural elements and assemblies shall be in accordance with IBC Section 1704.2
2. Inspections are not required for shear walls, shear panels and diaphragms, including nailing, bolting, anchoring and other fastening to other components where the fastener spacing of the sheathing is more than 4" o.c.

COLD-FORMED LIGHT-FRAME STEEL CONSTRUCTION INSPECTIONS

ITEM NO.	ITEM FOR VERIFICATION & INSPECTION	INSPECTION FREQUENCY CONTINUOUS	INSPECTION FREQUENCY PERIODIC	ITEMS REQUIRED FOR THIS PROJECT
1	During welding operations of elements within the wind-force-resisting or seismic-force-resisting system (see note 2)	--	X	NO
2	For screw attachment, bolting, anchoring and other fastening of components within the wind-force-resisting or seismic-force-resisting system (see note 2)	--	X	NO

Note:
1. Special inspections of the fabrication process of prefabricated cold-formed light-frame steel structural elements and assemblies shall be in accordance with IBC Section 1704.2
2. Inspections are not required for shear walls, braces, diaphragms, collectors (drag struts) and holdowns where the sheathing is wood structural panels or steel sheets on only one side of the shear wall, shear panel or diaphragm assembly and the fastener spacing of the sheathing is more than 4" o.c.

DRILLED PIER FOUNDATION ELEMENTS INSPECTIONS (HELICAL PIERS)

ITEM NO.	ITEM FOR VERIFICATION & INSPECTION	INSPECTION FREQUENCY CONTINUOUS	INSPECTION FREQUENCY PERIODIC	ITEMS REQUIRED FOR THIS PROJECT
1	Observe drilling operations and maintain complete and accurate records for each element. The information recorded shall include installation equipment used, pile dimensions, tip elevations, final depth, torque logs for each pier section and final torque.	X	--	NO
2	Verify placement locations and plumbness, confirm pier diameters and thickness, helices diameter and thickness and number of required helices	X	--	NO
3	For steel elements, perform additional inspections in accordance with IBC Section 1704.3	X	--	NO

MASONRY CONSTRUCTION INSPECTIONS (LEVEL 2)

ITEM NO.	ITEM FOR VERIFICATION & INSPECTION	INSPECTION FREQUENCY CONTINUOUS	INSPECTION FREQUENCY PERIODIC	ITEMS REQUIRED FOR THIS PROJECT
1	Compliance with required inspection provisions of the construction documents and the approved submittals	--	X	NO
2	Verification of f'm and f'aco prior to construction and for every 5000 square feet during construction	--	X	NO
3	Verification of proportions of materials i premixed or preblended mortar and grout as delivered to the site	--	X	NO
4	Verification of slump flow and VSI as delivered to the site for self-consolidation grout	X	--	NO
5	The following shall be verified t ensure compliance:			
5a	Proportions of site-prepared mortar, grout and prestressing grout for bonded tendons	--	X	NO
5b	Placement of masonry units and construction of mortar joints	--	X	NO
5c	Placement of reinforcement, connectors and prestressing tendons and anchorages	--	X	NO
5d	Grout space prior to grout	X	--	NO
5e	Placement of grout	X	--	NO
5f	Placement of prestressing grout	X	--	NO
5g	Size and location of structural elements	--	X	NO
5h	Type, size and location of anchors, including other details of anchorage of masonry to structural members, frames or other construction	X	--	NO
5i	Specified size, grade and type of reinforcement, anchor bolts, prestressing tendons and anchorages	--	X	NO
5j	Welding of reinforcing bars	X	--	NO
5k	Preparation, construction and protection of masonry during cold weather (temperature below 40°F) or hot weather (temperature above 90°F)	--	X	NO
5l	Application and measurement of prestressing force	X	--	NO
6	Preparation of any required grout specimens and/or prisms shall be observed	X	--	NO

DEEP FOUNDATION ELEMENTS INSPECTIONS

ITEM NO.	ITEM FOR VERIFICATION & INSPECTION	INSPECTION FREQUENCY CONTINUOUS	INSPECTION FREQUENCY PERIODIC	ITEMS REQUIRED FOR THIS PROJECT
1	Verify element materials, sizes and lengths comply with the requirements	X	--	NO
2	Determine capacities of test elements and conduct additional load tests, as required	X	--	NO
3	Observe driving operations and maintain complete and accurate records for each element	X	--	NO
4	Verify placement locations and plumbness, confirm type and size of hammer, record number of blows per foot of penetration, determine required penetrations to achieve design capacity, record tip and butt elevations and document any damage to foundation element	X	--	NO
5	For steel elements, perform additional inspections in accordance with IBC Section 1704.3	--	--	NO
6	For concrete elements and concrete-filled elements, perform additional inspections in accordance with IBC Section 1704.4	--	--	NO

CAST-IN-PLACE DEEP FOUNDATION ELEMENTS INSPECTIONS

ITEM NO.	ITEM FOR VERIFICATION & INSPECTION	INSPECTION FREQUENCY CONTINUOUS	INSPECTION FREQUENCY PERIODIC	ITEMS REQUIRED FOR THIS PROJECT
1	Observe drilling operations and maintain complete and accurate records for each element	X	--	NO
2	Verify placement locations and plumbness, confirm element diameters, bell diameters (if applicable), lengths, embedments into bedrock (if applicable) and adequate end-bearing strata capacity. Record concrete or grout volumes	X	--	NO
3	For concrete elements and concrete-filled elements, perform additional inspections in accordance with IBC Section 1704.4	--	--	NO

REFERENCE NOTES

REVISIONS:

PERMIT SET

GOVERNOR'S CARRIAGE HOUSE STABILIZATION
DFCM PROJECT NO. 10032310
603 EAST SOUTH TEMPLE
SALT LAKE CITY, UTAH 84103

State of Utah–Department of Administrative Services
DIVISION OF FACILITIES CONSTRUCTION AND MANAGEMENT
4110 State Office Building/Salt Lake City, Utah 84114/801-538-3018

Structural Engineering inc.
442 North Main Street, Suite 200
Bountiful, Utah 84010
e-mail: wca@wcaeng.com
(801) 298-1118, Office 298-1122 Fax

LICENSED CERTIFIED STRUCTURAL ENGINEER No.160916 KENNETH PAUL WILLMORE STATE OF UTAH

MJSA
357 West Pierpont Avenue ◻ Salt Lake City, Utah 84101
Telephone 801 364 5161 ◻ Facsimile 801 364 5167
ARCHITECTURE INTERIOR DESIGN

STAMP

THESE DRAWINGS ARE INSTRUMENTS OF SERVICE AND SHALL REMAIN THE PROPERTY OF THE ARCHITECT. NO USE OR RE-USE OF THESE DOCUMENTS SHALL BE PERMITTED UNLESS AUTHORIZED IN WRITING BY MJSA ARCHITECTS WITH APPROPRIATE COMPENSATION.

PROJECT NO.: 10014

DATE: 4/12/10

SCALE:

SHEET: SG100

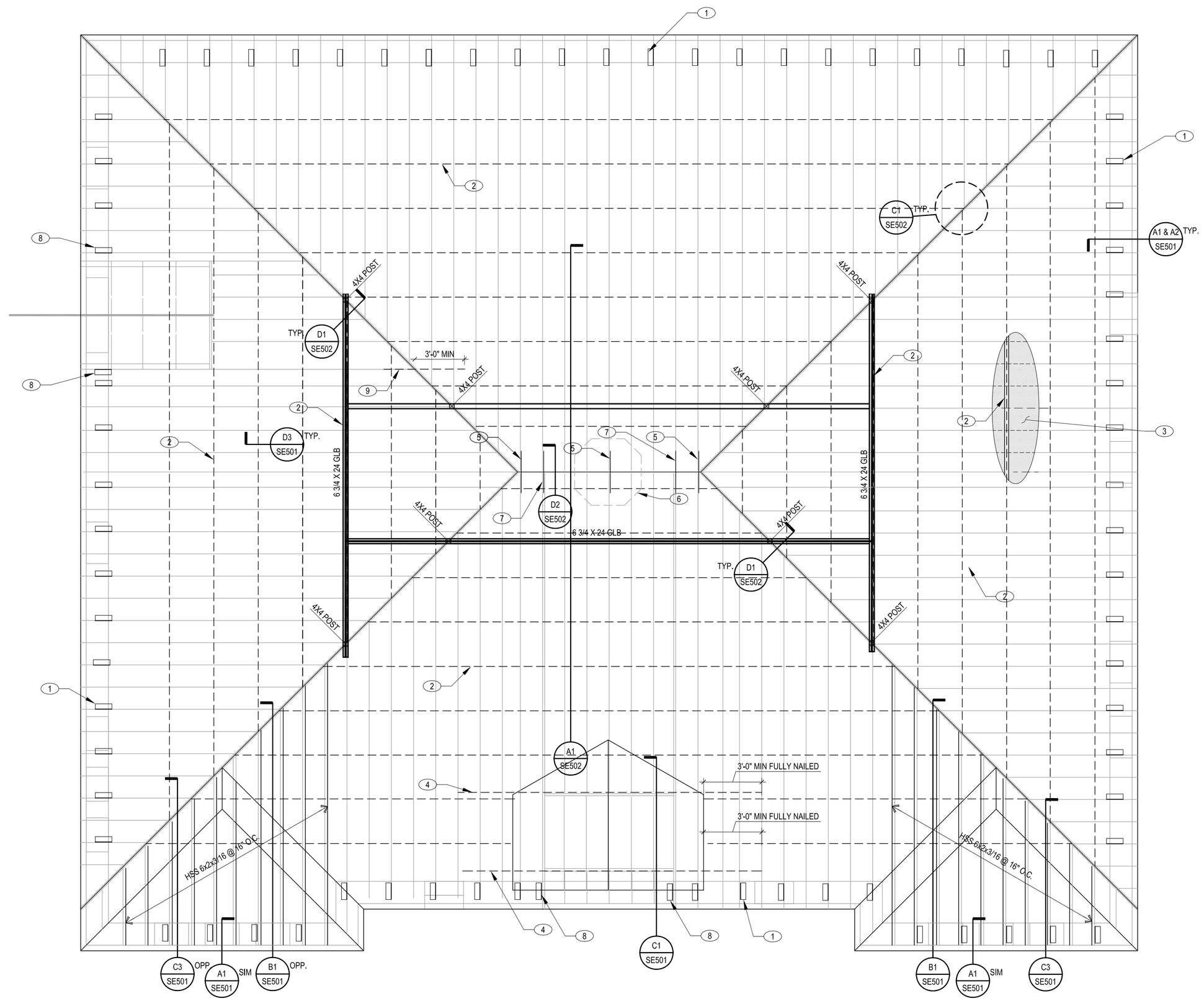

ROOF FRAMING PLAN SCALE: 1/4" = 1'-0"

REFERENCE NOTES

KEYNOTES:

1. STEEL ANGLE SEE DETAILS **A1/SE501** AND **D4/SE501** STEEL ANGLE AT 32" O.C TYPICAL UNO.
2. SIMPSON STRAPS SEE DETAIL **C3/SE502** FOR TYPICAL STRAP SPLICE
3. WD-1 WOOD DIAPHRAGM OVERLAY ON ENTIRE ROOF SEE SCHEDULE BELOW
4. SIMPSON CMST14 STRAP
5. STEEL STRAP @ RIDGE ALIGN WITH STEEL ANGLES, SEE DETAIL **D2/SE502**
6. (E) CUPOLA TO BE REMOVED DURING CONSTRUCTION, CONTINUE PLYWOOD BENEATH AND RE ATTACH. ATTACHMENT TO BE DETERMINED LATER DURING CONST. 12" Ø HOLES MAY BE MADE IN THE ROOF SHEATHING TO PROVIDE VENTILATION INTO THE CUPOLA.
7. SIMPSON CMSTC16 STRAP AT RIDGE SIMILAR TO DETAIL D2/SE502
8. PROVIDE (3) 5/8"Ø BOLTS IN STEEL ANGLE AT DOUBLE JOISTS
9. SIMPSON CMSTC16 STEEL STRAP 6'-0" LONG CENTER AT HIP

EMBEDMENT OF ADHESIVE ANCHORS

BASE MATERIAL	REBAR DOWELS	THREADED ROD Ø	EMBEDMENT LENGTH	SCREEN LENGTH
CONCRETE/ STONE	#3	3/8"	5"	--
	#4	1/2"	6"	--
	#5	5/8"	8"	--
	#6	3/4"	10"	--
	#7	7/8"	12"	--
CMU (GROUTED)	#3	3/8"	4"	--
	#4	1/2"	5"	--
	#5	5/8"	6"	--
	#6	3/4"	7"	--
CMU (HOLLOW)	#3	3/8"	--	4"
	#4	1/2"	--	5"
	#5	5/8"	--	6"
	#6	3/4"	--	7"

NOTES:

1. INSTALLATION SHALL BE IN ACCORDANCE WITH THE MANUFACTURER'S RECOMMENDATIONS AND SPECIFICATIONS.
2. EMBEDMENT LENGTH IS INTO STRUCTURE AND NOT VENEER, UNO.
3. REBAR SHALL BE DEFORMED.
4. MINIMUM WALL THICKNESS TO BE EMBEDMENT LENGTH PLUS 1-1/2" OTHERWISE SEE STRUCTURAL ENGINEER.
5. URM WALL TO USE SCREENS AND TO BE EMBEDED IN MORTAR JOINT UNO.
6. SEE GSN FOR EPOXY TYPES TO BE USED IN CONCRETE, STONE, URM, AND MASONRY.

WOOD DIAPHRAGM NAILING AND SHEATHING SCHEDULE

MARK	SHEATHING REQUIREMENT		NAILING REQUIREMENT				
	THICK	SPAN RATING	NAIL SIZE	BOUNDARY ELEMENTS	CONT. PANEL JOINTS	NON-CONT. PANEL JOINTS	FIELD SPACING
WD-1	19/32" OVERLAY	40/20	10d	3" O.C.	4" O.C.	4" O.C.	12" O.C.

1. BOUNDARIES EXIST AT ALL DIAPHRAGM-SHEAR WALL INTERFACES AND ALONG ALL STRUCTURAL ELEMENTS THAT TRANSFER DIAPHRAGM FORCES INTO THOSE WALLS.
2. PROVIDE (2) 10d NAILS FROM EACH 1x ROOF SHEATHING INTO FRAMING MEMBER BELOW
3. SHEATHING ORIENTATION: LONG DIRECTION (STRONG AXIS) PERPENDICULAR TO 1X FRAMING & SHORT DIRECTION (WEAK AXIS) PARALLEL TO RAFTERS (JOISTS).
4. SPECIFIED NAILS ARE COMMON AND SHALL CORRESPOND TO THE FOLLOWING DIAMETERS AND LENGTHS: (16d -0.162"Ø & 3-1/2" LONG; 10d-0.148"Ø & 3" LONG; 8d-0.131"Ø & 2-1/2" LONG), OTHERWISE CONTACT EOR, USING NAILS OTHER THAN THOSE SPECIFIED MAY RESULT IN THE DEMOLITION OF WORK AND FRAMING TO BE REPLACED.
5. SEE DETAIL **D1/SE501** FOR TYPICAL DIAPHRAGM BLOCKING, AND DETAIL **D2/SE501** FOR TYPICAL DIAPHRAGM REPLACEMENT DETAIL

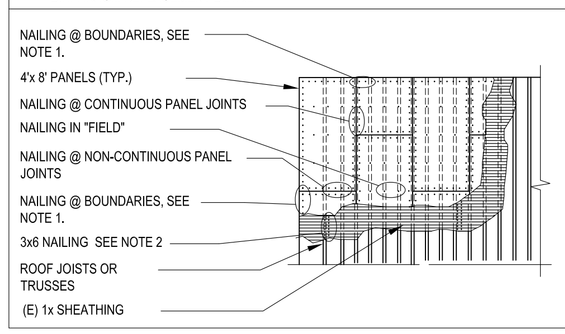

State of Utah–Department of Administrative Services

DIVISION OF FACILITIES CONSTRUCTION AND MANAGEMENT

4110 State Office Building/Salt Lake City, Utah 84114/801-538-3018

Structural Engineering inc.
442 North Main Street, Suite 200
Bountiful, Utah 84010
e-mail: wca@wcaeng.com
(801) 298-1118, Office 298-1122 Fax

STAMP

LICENSED CERTIFIED STRUCTURAL ENGINEER No.160916 KENNETH PAUL WILLMORE STATE OF UTAH

SCALE:

REVISIONS:

PERMIT SET

GOVERNOR'S CARRIAGE HOUSE STABILIZATION

DFCM PROJECT NO. 10032310
603 EAST SOUTH TEMPLE
SALT LAKE CITY, UTAH 84103

MJSA
ARCHITECTURE INTERIOR DESIGN
357 West Pierpont Avenue ◻ Salt Lake City, Utah 84101
Telephone 801 364 5161 ◻ Facsimile 801 364 5167

THESE DRAWINGS ARE INSTRUMENTS OF SERVICE AND SHALL REMAIN THE PROPERTY OF THE ARCHITECT. NO USE OR REUSE OF THESE DOCUMENTS SHALL BE PERMITTED UNLESS AUTHORIZED IN WRITING BY MJSA ARCHITECTS WITH APPROPRIATE COMPENSATION.

PROJECT NO.: 10014

DATE: 4/12/10

SHEET: SE301

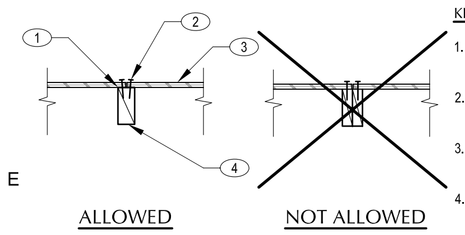

KEYNOTES:

1. BUTT BLOCKING TIGHT TO SHEATHING.
2. PANEL EDGE NAILING, SEE PLAN AND SCHEDULE.
3. SHEATHING, SEE PLAN & SCHED.
4. 3X BLOCKING ON EDGE OR 2X FLAT WISE, UNO

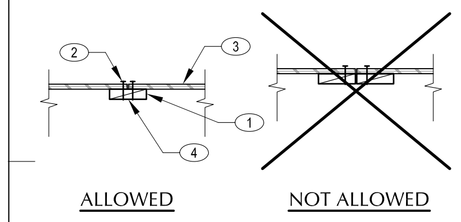

NOTES:

A. ALL BLOCKING: USE HEM-FIR #1 OR BTR GRADE.
B. REMOVE AND REPLACE ANY SPLIT BLOCKING. USE 3x BLOCKING TO PRE-DRILL HOLES W/ 7/64"Ø BOT FOR 10d COMMON NAILS & 3/32"Ø BIT FOR 8d COMMON NAILS
C. PROVIDE SIMPSON Z4 OR (2) 16 AT EACH END

D1 SE501 TYPICAL DIAPHRAGM BLOCKING
3/4"=1'-0"

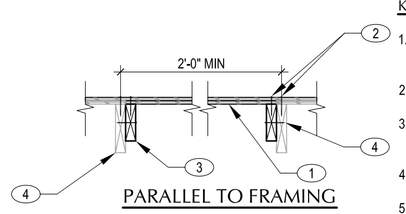

KEYNOTES:

1. MATCHING REPLACEMENT SHEATHING (3'-0" MIN. WIDTH)
2. REQ'D PANEL EDGE NAILING
3. SISTERED 2x6 CONT. BLOCKING W/ 16d NAILS AT 6" O.C.
4. (E) FRAMING.
5. BLOCKING, SEE TYPICAL DIAPHRAGM BLOCKING DETAIL **D1/SE501**

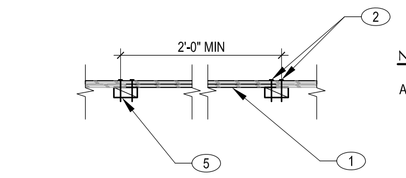

NOTES:

A. ALL BLOCKING: USE HEM-FIR #1 OR BTR GRADE.

D2 SE501 TYPICAL DIAPHRAGM REPLACMENT
3/4"=1'-0"

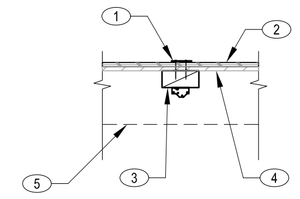

KEYNOTES:

1. SIMPSON STRAP, SEE PLANS FOR LENGTH
2. SHEATHING, SEE PLAN (DETAIL SHOWS OVERLAY.
3. 3x6 BLOCKING, UNO (SEE SPECIFIC DETAILS) W/ SIMPSON A34 @ EACH END. GLUE AND TOE NAIL IN PLACE WITH 3M5200 MARINE ADHESIVE.
4. (E) 1x SHEATHING
5. (E) FRAMING BEYOND

NOTES:

A. ALL BLOCKING: USE HEM-FIR #1 OR BTR GRADE.
B. REMOVE AND REPLACE ANY SPLIT BLOCKING. USE 3x BLOCKING PRE-DRILL HOLES W/ 7/64"Ø BOT FOR 10d COMMON NAILS & 3/32"Ø BIT FOR 8d COMMON NAILS

D3 SE501 TYPICAL STEEL STAP DETAIL
3/4"=1'-0"

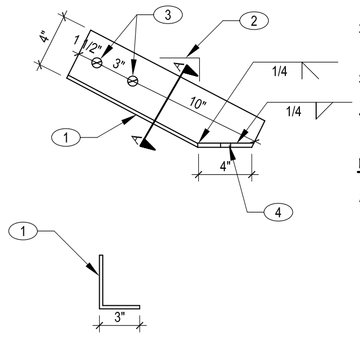

KEYNOTES:

1. L 4x3x1/4 W/ 5/16 BASE PLATE
2. SLP0E TO MATCH EXISTING ROOF SLOPE
3. TYP HOLES FOR 5/8"Ø BOLTS
4. HOLE FOR 3/4"Ø BOLTS

NOTES:

A. AT DOUBLE ROOF JOISTS PROVIDE (3) 5/8" BOLTS

D4 SE501 STEEL ANGLE PROFILE
1 1/2"=1'-0"

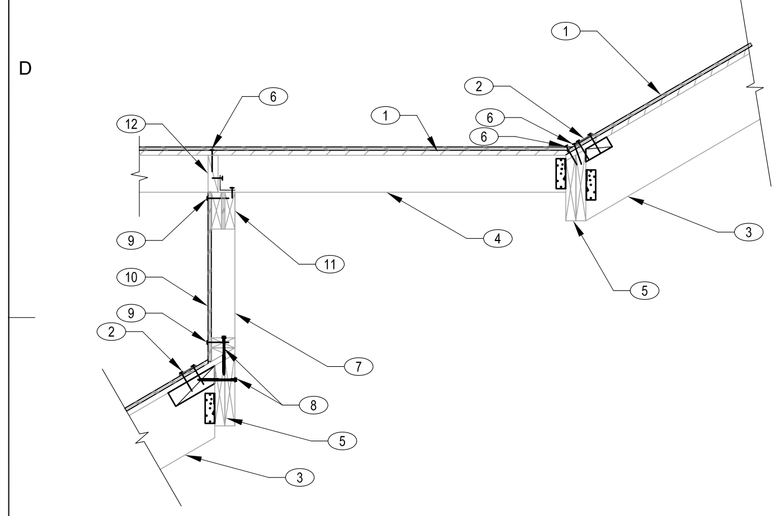

KEYNOTES:

1. (E) ROOF SHEATHING W/ PLYWOOD OVERLAY, SEE PLANS
2. STEEL STRAP SEE ROOF PLAN, PROVIDE BLOCKING BELOW STRAP IF STRAP DOES NOT NAIL INTO BEAM BELOW. SEE DETAIL **D3/SE501.**
3. (E) ROOF JOIST SEE DETAIL **D1/SE502** FOR MECHANICAL CONNECTORS
4. (E) ROOF JOISTS PROVIDE SIMPSON LS50 OR EQUAL AT ROOF BEAM
5. (E) ROOF BEAM PROVIDE SIMPSON LS90 EACH SIDE WHERE BEAM CONNECTS TO DOUBLE JOISTS.
6. REQ'D PANEL BOUNDARY NAILING
7. (E) WOOD COLUMNS AT EDGE OF WINDOWS
8. 1/4" SDS SCREWS 5 1/2" LONG AT 12" O.C
9. REQ'D PANEL EDGE NAILING
10. 15/32" PLYWOOD OR OSB W/ 10d NAILS AT 4" O.C AT PANEL EDGES AND 12" O.C. IN THE FIELD.
11. (E) HEADER OVER WINDOWS
12. 2x BLOCKING WITH SIMPSON LS50 EACH BLOCK. PROVIDE BLOCKING IF NOT PRESENT

C1 SE501 DETAIL
3/4"=1'-0"

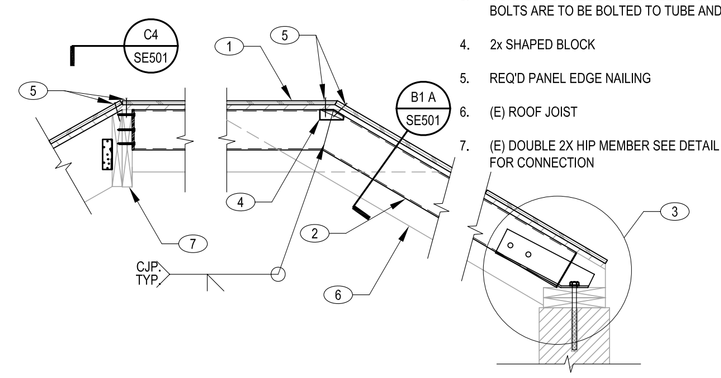

KEYNOTES:

1. (2) LAYERS OF PLYWOOD SHEATHING, BOTTOM LAYER TO MATCH THICKNESS OF EXISTING LAYER. OVERLAY, SEE PLANS
2. HSS TUBE SISTERED NEXT TO (E) JOISTS SEE PLANS
3. CONNECTION SEE DETAIL **A1/SE501 SIM.** 5/8"Ø BOLTS ARE TO BE BOLTED TO TUBE AND JOIST
4. 2x SHAPED BLOCK
5. REQ'D PANEL EDGE NAILING
6. (E) ROOF JOIST
7. (E) DOUBLE 2X HIP MEMBER SEE DETAIL C4/SE501 FOR CONNECTION

C3 SE501 DETAIL
3/4"=1'-0"

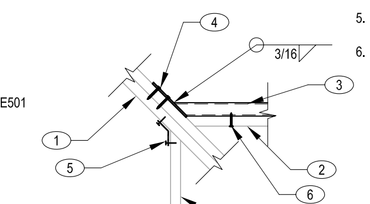

KEYNOTES:

1. CORE DRILL HOLE TYP. 1"Ø x 8" DEEP WITH CARBIDE TIPPED DRILL BIT WITH DRILL SET ON ROTATION MODE ONLY. CLEAN HOLE WITH WIRE BRASS AND COMPRESSED AIR.
2. INSERT SCREEN TUBE TYP. 15/16"Ø
3. THREADED ROD TYP. 3/4"Ø
4. WASER AND NUTS ONLY
5. WOOD LEDGER, SEE SPECIFIC DETAILS
6. BOUNDARY NAILING
7. WOOD SHEATHING
8. (3) WYTH BRICK WALL

NOTES:

A. DETAIL NOT TO BE USED FOR TENSION BOLTS
B. SEE GSN FOR ALLOWABLE EPOXY TYPES.

C4 SE501 DETAIL
3/4"=1'-0"

KEYNOTES:

1. CORE DRILL HOLE TYP. 3/4"Ø x 8" DEEP WITH CARBIDE TIPPED DRILL BIT WITH DRILL SET ON ROTATION MODE ONLY. OPTION 1 OR 13" DEEP OPTION 2
2. BLOCKING OR LEDGER, SEE SPECIFIC DETAILS
3. WASHERS
4. HOLE IN BLOCK CAN BE OVERSIZED TO PLACE SCREEN TUBE. FILL ANNULUS IN WOOD WITH ADHESIVE
5. PRE-BENT THREADED ROD TYP. 1/2"Ø
6. SCREEN TUBE TYP. 15/16"Ø

NOTES:

SEE GSN FOR ALLOWABLE EPOXY TYPES

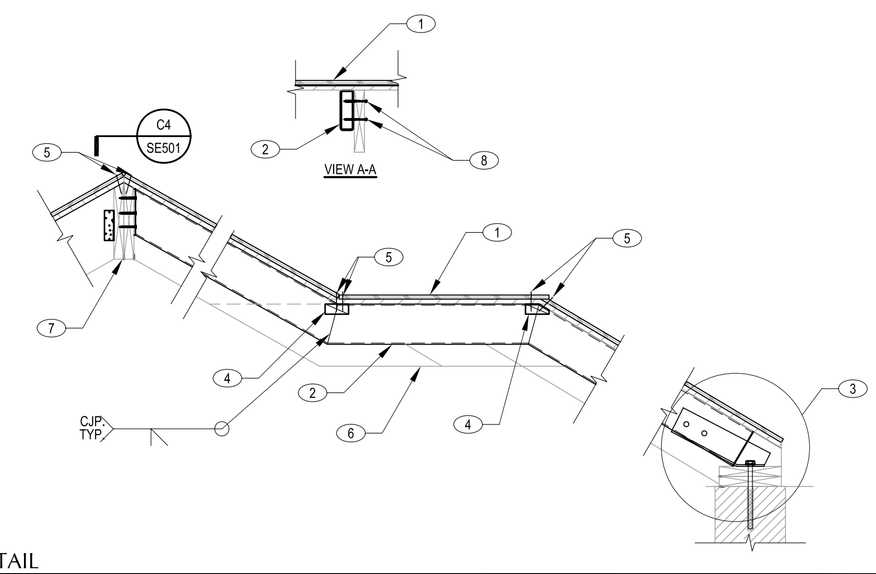

KEYNOTES:

1. (E) ROOF SHEATHING W/ PLYWOOD OVERLAY, SEE PLANS
2. HSS TUBE SISTERED NEXT TO (E) JOISTS SEE PLANS
3. CONNECTION SEE DETAIL **A1/SE501 SIM.** 5/8"Ø BOLTS ARE TO BE BOLTED TO TUBE AND JOIST
4. 2x SHAPED BLOCK
5. REQ'D PANEL EDGE NAILING
6. (E) ROOF JOIST
7. (E) DOUBLE 2X HIP MEMBER SEE DETAIL C4/SE501 FOR CONNECTION
8. (2) SIMPSON TB1460S COLLATED SCREWS 2 16"O.C. STAGGERED

B1 SE501 DETAIL
NO SCALE

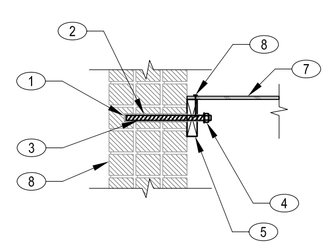

KEYNOTES:

1. (E) ROOF SHEATHING W/ PLYWOOD OVERLAY, SEE PLANS.
2. (N) STEEL ANGLE SEE DETAIL **D4/SE501** FOR ANGLE AND PROVIDE 3/4"Ø ANCHOR BOLTS, SEE DETAIL B3/SE501
3. (E) 2x ROOF JOISTS
4. REQ'D PANEL BOUNDARY NAILING.
5. (E) STONE BLOCKS AT TOP OF WALL
6. FULL HEIGHT 3X BLOCKING W/ SIMPSON LS90 EACH BLOCK.
7. (E) DOUBLE 2x PLATES W/ 3/4"Ø THREADED RODS AT 24" O.C. SEE EMBEDMENT SCHEDULE.
8. (E) STONE VENEER
9. CONT 3/8"x4" STEEL PLATE WITH 5/8"Ø DRILL AND EPOXY BOLTS @ 24"O.C. SEE EMBEDMENT SCHEDULE AND DETAIL B3/SE501
10. SIMPSON H3 EACH JOIST

B3 SE501 TYP. SHEAR BOLTING
NO SCALE

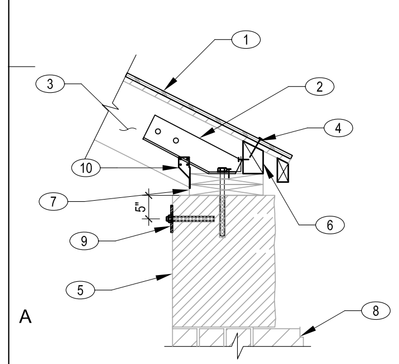

NOTES:

A. FOR GUTTER DETAIL SEE **A2/SE501**
B. AT SIM HSS MEMBER OCCURS SISTERED NEXT TO ROOF JOIST. BOLT STEEL ANGLE TO JOIST AND HSS MEMBER

A1 SE501 DETAIL
3/4"=1'-0"

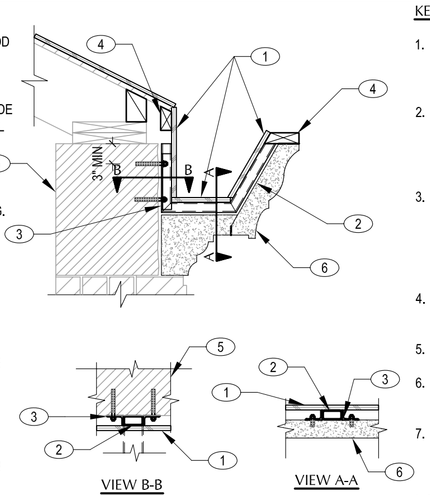

KEYNOTES:

1. PRESSURE TREATED PLYWOOD, ATTACH TO STEEL FRAME WITH #8 SCREWS @ 6" O.C.
2. STEEL GUTTER FRAME AT THIRD POINTS ON EACH STONE OR A MAXIMUM OF 24" O.C. SEE DETAIL **A3/SE501**
3. 2 1/2 x 1 1/2 x 3/16 STEEL ANGLE 8 1/2" LONG W/ (2) 1/2" Ø EPOXIED TENSION ANCHOR BOLTS. SEE EMBEDMENT SCHEDULE AND DETAIL **B4/SE501** STAGGER HOLES VERTICALLY IN ADJACENT ANGLES
4. CONT, 2x NAILER(PRESSURE TREATED)
5. (E) LIMESTONE CORNICE
6. NEW LIMESTONE CLADDING SEE ARCH, ATTACHMENT BY OTHERS
7. PROVIDE BLOCKING BETWEEN STEEL FRAMES FOR ATTACHMENT OF SHEATHING (NOT SHOWN)

NOTES:

A. FOR WALL CONNECTION SEE DETAIL A1/SE501

A2 SE501 GUTTER DETAIL
3/4"=1'-0"

B4 SE501 TYP. SHEAR OR TENSION BOLTING
NO SCALE

KEYNOTES:

1. 3x1 1/2 x 3/16 HSS TUBE
2. 1/8" CAP PLATE

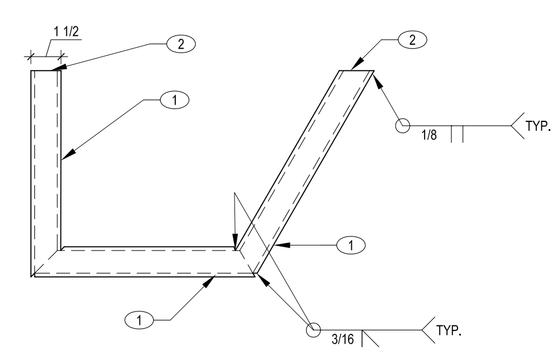

A3 SE501 GUTTER FRAME
3"=1'-0"

REFERENCE NOTES

REVISIONS:

PERMIT SET

GOVERNOR'S CARRIAGE HOUSE STABILIZATION
DFCM PROJECT NO. 10032310
603 EAST SOUTH TEMPLE
SALT LAKE CITY, UTAH 84103

THE GREAT SEAL OF THE STATE OF UTAH 1896

State of Utah–Department of Administrative Services
DIVISION OF FACILITIES CONSTRUCTION AND MANAGEMENT
4110 State Office Building/Salt Lake City, Utah 84114/801-538-3018

WCA Structural Engineering inc.
442 North Main Street, Suite 200
Bountiful, Utah 84010
e-mail: wca@wcaeng.com
(801) 298-1118, Office 298-1122 Fax

MJSA
357 West Pierpont Avenue ◻ Salt Lake City, Utah 84101
Telephone 801 364 5161 ◻ Facsimile 801 364 5167
ARCHITECTURE INTERIOR DESIGN

STAMP

LICENSED CERTIFIED STRUCTURAL ENGINEER
No.160916
KENNETH PAUL WILLMORE
STATE OF UTAH

THESE DRAWINGS ARE INSTRUMENTS OF SERVICE AND SHALL REMAIN THE PROPERTY OF THE ARCHITECT. NO USE OR REUSE OF THESE DOCUMENTS SHALL BE PERMITTED UNLESS AUTHORIZED IN WRITING BY MJSA ARCHITECTS WITH APPROPRIATE COMPENSATION.

PROJECT NO.: 10014

DATE: 4/12/10

SCALE:

SHEET: SE501

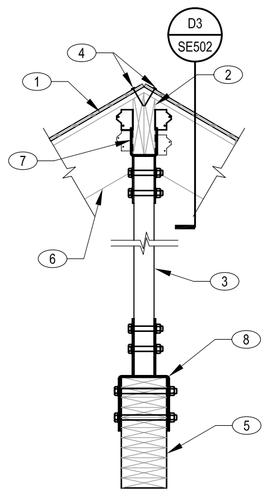

KEYNOTES:

1. (E) ROOF SHEATHING W/ PLYWOOD OVERLAY, SEE PLANS.
2. (E) DOUBLE 2x HIP MEMBER PROVIDE (2) SIMPSON LS30 OPPOSITE SIDES OF JOIST OR (1) LS90 EACH SIDE.
3. WOOD POST, SEE PLANS
4. REQ'D PANEL EDGE NAILING
5. GLUE LAMINATED BEAM, SEE PLAN
6. (E) ROOF JOISTS
7. SIMPSON CC COLUMN CAP TO MATCH SLOP OF HIP SEE DETAIL **D3/SE502**
8. SIMPSON CC COLUMN CAP. INSTALL UPSIDE DOWN

D1 SE502 DETAIL
3/4"=1'-0"

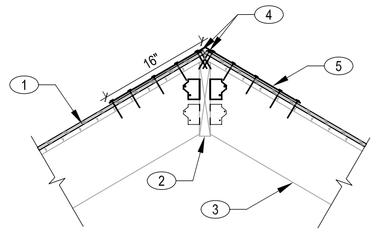

KEYNOTES:

1. (E) ROOF SHEATHING W/ PLYWOOD OVERLAY, SEE PLANS.
2. (E) 2xRIDGE BEAM PROVIDE (2) SIMPSON LS30 OPPOSITE SIDES OF JOIST OR (1) LS90 EACH SIDE
3. (E) ROOF JOISTS.
4. REQ'D PANEL EDGE NAILING.
5. SIMPSON CS14 STRAP FULLY NAILED UNO.

D2 SE502 DETAIL
3/4"=1'-0"

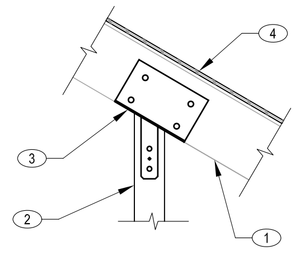

KEYNOTES:

1. (E) HIP BEAM
2. WOOD POST, SEE PLANS.
3. SIMPSON COLUMN CAP, SEE DETAIL **D1/SE502.**
4. (E) ROOF SHEATHING WITH PLYWOOD OVERLAY SEE PLANS.

D3 SE502 DETAIL
3/4"=1'-0"

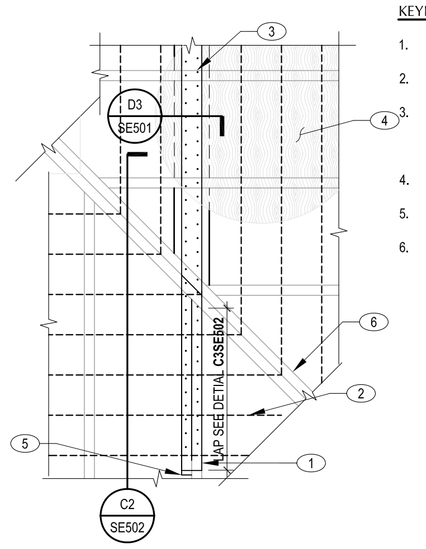

KEYNOTES:

1. (E) ROOF JOISTS.
2. (E) 1x STRAIGHT SHEATHING
3. SIMPSON CMSTC16 STRAPS SEE PLANS FOR LOCATIONS. SEE DETAIL **C3/SE502** FOR SPLICES
4. PLYWOOD OVERLAY, SEE PLANS.
5. 2x BLOCK SEE DETAIL **C2/SE502**
6. (E) DOUBLE 2x HIP MEMBER.

C1 SE502 STEEL STRAP AT HIP
3/4"=1'-0"

KEYED NOTES CONT.

6. 2x BLOCK SISTERED NEXT TO EXISTING. CONNECT TO EXISTING JOIST W/ A MINIMUM OF (10) 16d NAILS.
7. (E) DOUBLE 2x HIP MEMBER.
8. SIMPSON LS CLIPS SEE DETAIL **D1/SE501**

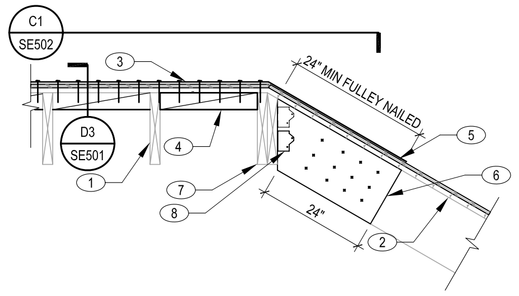

KEYNOTES:

1. (E) ROOF JOISTS.
2. (E) 1x STRAIGHT
3. SIMPSON CMSTC16 STRAPS SEE PLANS FOR LOCATIONS. SEE DETAIL **C3/SE502** FOR SPLICES
4. BLOCKING SEE DETAIL **C3/SE502**
5. PLYWOOD OVERLAY, SEE PLANS.

C2 SE502 STEEL STRAP AT HIP
3/4"=1'-0"

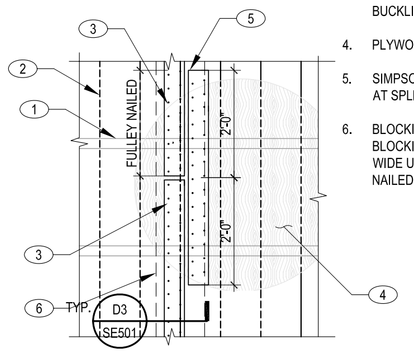

KEYNOTES:

1. (E) ROOF JOISTS.
2. (E) 1x STRAIGHT SHEATHING
3. SIMPSON CMSTC16 STRAPS SEE PLANS FOR LOCATIONS. SPLICE STRAP EVERY 20 ' MINIMUM TO REDUCE BUCKLING OF STRAPS.
4. PLYWOOD OVERLAY, SEE PLANS.
5. SIMPSON CMSTC16 STRAP CENTERED AT SPLICE. FILL EVERY NAIL HOLE
6. BLOCKING BELOW STRAPS AT SPLICE, BLOCKING MUST BE AT LEAST 7 1/4" WIDE USE 3X8 OR (2) 2X8 GLUED AND NAILED TOGETHER

C3 SE502 TYPICAL STRAP SPLICE
3/4"=1'-0"

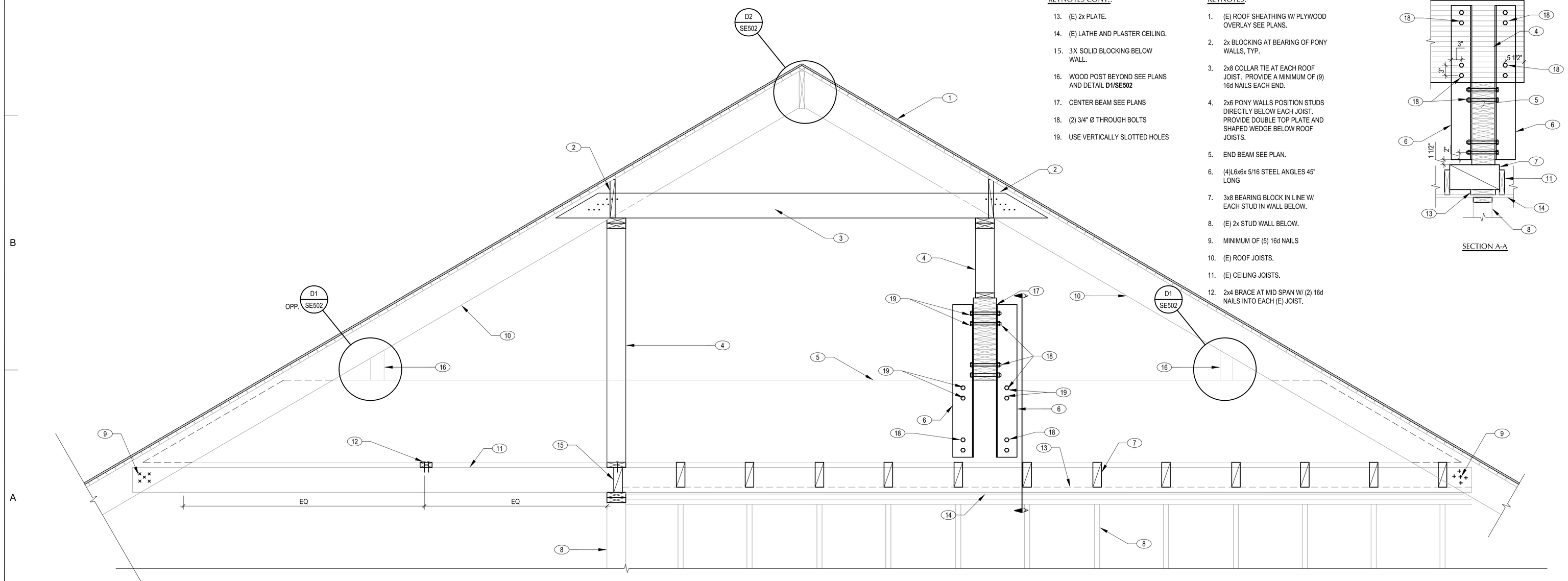

KEYNOTES CONT.:

13. (E) 2x PLATE.
14. (E) LATHE AND PLASTER CEILING.
15. 3X SOLID BLOCKING BELOW WALL.
16. WOOD POST BEYOND SEE PLANS AND DETAIL **D1/SE502**
17. CENTER BEAM SEE PLANS
18. (2) 3/4" Ø THROUGH BOLTS
19. USE VERTICALLY SLOTTED HOLES

KEYNOTES:

1. (E) ROOF SHEATHING W/ PLYWOOD OVERLAY SEE PLANS.
2. 2x BLOCKING AT BEARING OF PONY WALLS, TYP.
3. 2x8 COLLAR TIE AT EACH ROOF JOIST. PROVIDE A MINIMUM OF (9) 16d NAILS EACH END.
4. 2x6 PONY WALLS POSITION STUDS DIRECTLY BELOW EACH JOIST. PROVIDE DOUBLE TOP PLATE AND SHAPED WEDGE BELOW ROOF JOISTS.
5. END BEAM SEE PLAN.
6. (4)L6x6x 5/16 STEEL ANGLES 45" LONG
7. 3x8 BEARING BLOCK IN LINE W/ EACH STUD IN WALL BELOW.
8. (E) 2x STUD WALL BELOW.
9. MINIMUM OF (5) 16d NAILS
10. (E) ROOF JOISTS.
11. (E) CEILING JOISTS.
12. 2x4 BRACE AT MID SPAN W/ (2) 16d NAILS INTO EACH (E) JOIST.

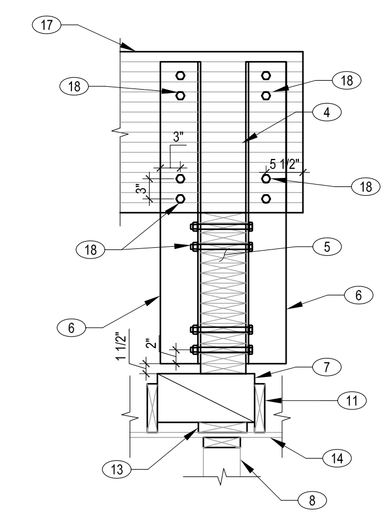

SECTION A-A

A1 SE502 DETAIL
3/4"=1'-0"

REFERENCE NOTES

REVISIONS:

PERMIT SET

GOVERNOR'S CARRIAGE HOUSE STABILIZATION
DFCM PROJECT NO. 10032310
603 EAST SOUTH TEMPLE
SALT LAKE CITY, UTAH 84103

State of Utah–Department of Administrative Services
DIVISION OF FACILITIES CONSTRUCTION AND MANAGEMENT
4110 State Office Building/Salt Lake City, Utah 84114/801-538-3018

Structural Engineering inc.
442 North Main Street, Suite 200
Bountiful, Utah 84010
e-mail: wca@wcaeng.com
(801) 298-1118, Office 298-1122 Fax

MJSA
357 West Pierpont Avenue ◻ Salt Lake City, Utah 84101
Telephone 801 364 5161 ◻ Facsimile 801 364 5167
ARCHITECTURE INTERIOR DESIGN

STAMP

LICENSED CERTIFIED STRUCTURAL ENGINEER
No.160916
KENNETH PAUL WILLMORE
STATE OF UTAH

THESE DRAWINGS ARE INSTRUMENTS OF SERVICE AND SHALL REMAIN THE PROPERTY OF THE ARCHITECT. NO USE OR RE-USE OF THESE DOCUMENTS SHALL BE PERMITTED UNLESS AUTHORIZED IN WRITING BY MJSA ARCHITECTS WITH APPROPRIATE COMPENSATION.

PROJECT NO.: 10014

DATE: 4/12/10

SCALE:

SHEET: SE502

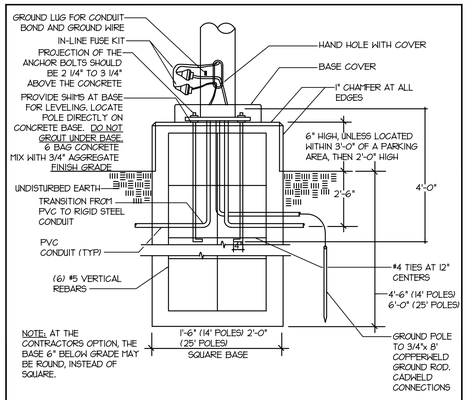

SCALE: N.T.S.

POLE BASE DETAIL

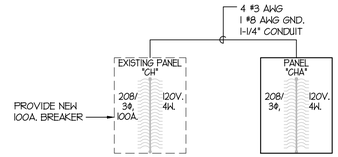

NOTES:

1. REMOVE (3) CIRCUITS FROM PANEL "CH" AND INSTALL IN NEW PANEL "CHA".
2. FURNISH AND INSTALL NEW 100A. BREAKER IN PANEL "CH" TO FEED PANEL "CHA".

SCALE: N.T.S.

PARTIAL POWER SINGLE LINE DIAGRAM

ELECTRICAL SYMBOL LIST

SYMBOL	DESCRIPTION
	LIGHTING SYMBOLS
$	EXISTING SINGLE POLE TOGGLE SWITCH - 20 AMP
T-X	LIGHTING FIXTURE CALLOUT. NUMBER INDICATES A SUGGESTED QUANTITY- TO BE VERIFIED
X	REFERENCE NOTE CALLOUT
$	SINGLE POLE TOGGLE SWITCH - 20 AMP
	POWER SYMBOLS
	EXISTING DUPLEX CONVENIENCE OUTLET
J	EXISTING JUNCTION BOX
	DUPLEX CONVENIENCE OUTLET - 20 AMP
	TWIST-LOCK RECEPTACLE
J	JUNCTION BOX - SIZE AND FUNCTION AS REQUIRED
	CONDUITS CONCEALED IN CEILING AND WALLS
	ARROWS INDICATE HOME RUNS - LINES INDICATE NUMBER CONDUCTORS
	MOTOR
	MOTOR OPERATOR
	FUSED DISCONNECT SWITCH
	COMM/DATA OUTLET
	SPECIAL OUTLET
S	FIRE ALARM SMOKE DETECTOR
	PANEL

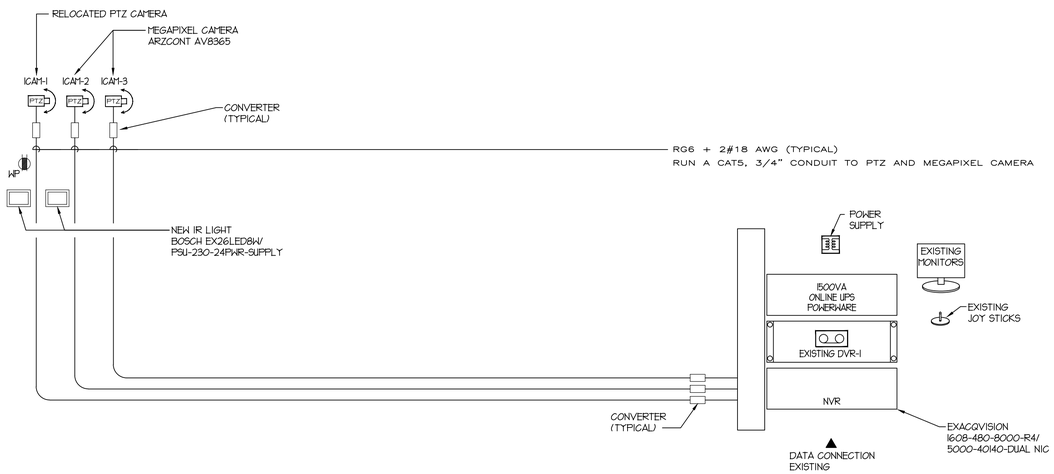

SCALE: N.T.S.

CCTV RISER DIAGRAM

EXISTING SCHEDULE

PANEL NO. "CHA" VOLTAGE 120/208 4 WIRE X

SURFACE X FLUSH ____ MOUNTED. TYPE NQOD MAIN BREAKER ____

MAINS ONLY 100

AREA SERVED	LOAD	CCT	BKR	A	B	C	BKR	CCT	LOAD	AREA SERVED
		1	20				20	2		
HEATING CABLE GFI		3	20				20	4		EXISTING
HEATING CABLE GFI		5	20				20	6		EXISTING
HEATING CABLE GFI		7	20				20	8		EXISTING
IR CCTV LIGHT		9	20				20	10		SPARE
IT CCTV LIGHT		11	20				20	12		SPARE
OVERHEAD DOOR		13	20				20	14		SPARE
SPARE		15	20				20	16		SPARE
SPARE		17	20				20	18		SPARE
SPARE		19	20				20	20		SPARE
SPARE		21	20				20	22		SPARE
SPACE		23	20				20	24		SPACE
SPACE		25	20				20	26		SPACE
SPACE		27	20				20	28		SPACE
SPACE		29	20				20	30		SPACE
SPACE		31	20				20	32		SPACE
SPACE		33	20				20	34		SPACE
SPACE		35	20				20	36		SPACE
SPACE		37	20				20	38		SPACE
SPACE		39	20				20	40		SPACE
SPACE		41	20				20	42		SPACE

SN ____

EG ____

E.C.E. L.L.C.
939 So. West Temple
Salt Lake City, Utah 84101
Telephone (801) 521-8007
Telefax (801) 521-8057

ECE PROJECT NO.: 3799

REFERENCE NOTES

1. IN THE EXISTING SPACES TO BE RENOVATED, THE CONTRACTOR SHALL REMOVE ALL LIGHT FIXTURES, WIRING, CONDUIT, FIRE ALARM DEVICES, ETC. AS REQUIRED WHETHER OR NOT SHOWN ON THE DRAWINGS.
2. ALL MATERIALS SHALL BE RETURNED TO THE OWNER. MATERIALS WHICH THE OWNER DECIDES NOT TO KEEP SHALL BE REMOVED FROM THE SITE BY THE CONTRACTOR.
3. ALL CONCEALED CONDUIT WHICH CANNOT BE REUSED SHALL BE CUT FLUSH WITH THE FINISHED SURFACES AND CAPPED OFF AFTER THE WIRING HAS BEEN DISCONNECTED AT THE PANEL AND REMOVED FROM THE CONDUIT.
4. IN THE AREAS WHERE CIRCUIT CONTINUITY IS INTERRUPTED BUT MUST BE MAINTAINED BECAUSE OF THE NATURE OF THE FACILITY, MAKE ALL THE NECESSARY MODIFICATIONS IMMEDIATELY TO THE CIRCUITS IN ORDER TO MAINTAIN THE CIRCUIT INTEGRITY.
5. THE CONTRACTOR SHALL PATCH THE WALLS AND CEILINGS WHERE THE DEVICES ARE BEING REMOVED OR NEW DEVICES ARE BEING INSTALLED TO MATCH THE EXISTING WALLS AND CEILINGS.
6. MINIMUM SIZE OF CONDUIT TO BE 3/4". ALUMINUM CONDUIT SHALL NOT BE USED.
7. USE RIGID STEEL SET SCREW TYPE FITTINGS ONLY. DIE CAST FITTINGS SHALL NOT BE USED.
8. ALL NEW WORK MUST MEET THE NATIONAL ELECTRICAL CODE 2008.
9. THE MINIMUM SIZE OF THE CONDUCTORS SHALL BE #12 AWG THWN STRANDED COPPER UNLESS INDICATED OTHERWISE ON THE DRAWINGS.
10. DETAILS ARE SHOWN ON DIFFERENT SHEETS. THE CONTRACTOR SHALL REFER TO THOSE DETAILS WHETHER OR NOT THEY ARE CALLED OUT IN THE REFERENCE NOTES.
11. ALL NEW EXPOSED CONDUIT MUST RUN AGAINST THE CEILINGS OR WALLS. DO NOT PENDANT MOUNT ANY CONDUIT FROM THE CEILING.
12. PAINT ALL THE J-BOXES AND CONDUIT COUPLINGS FOR FIRE ALARM SYSTEM WITH RED PAINT. CLEARLY LIST ON THE J-BOX COVER WITH A BLACK PERMANENT MARKER ALL CIRCUITS AND ADDRESSES OF ADDRESSABLE DEVICES CONTAINED THEREIN.
13. USE EPOXY ANCHORS TO SUPPORT THE ELECTRICAL EQUIPMENT. EXPANSION ANCHOR BOLTS ARE NOT ACCEPTABLE.
14. AT THE END OF THE JOB, PROVIDE BLANK COVER PLATES TO MATCH THE OTHER COVER PLATES FOR ALL J-BOXES WHERE DEVICES HAVE BEEN REMOVED OR HAVE NOT YET BEEN INSTALLED.
15. SEAL AROUND ALL CONDUIT PENETRATIONS THROUGH WALLS AND CEILINGS WITH FIRE RATED MATERIAL. 3M IS AN APPROVED MANUFACTURER.
16. ALL MATERIALS USED IN THIS INSTALLATION SHALL BE U.L. APPROVED AND NEW.
17. ALL ELECTRICAL WIRING MUST BE IN CONDUIT. (ROMEX AND MC CABLES NOT PERMITTED)
18. FLEXIBLE CONDUITS CAN ONLY BE USED FOR SHORT RUNS (6 FEET MAXIMUM).
19. NO CONDUITS SHALL RUN IN DUCT WORK.
20. PRIOR TO SUBMITTING A BID, THE ELECTRICAL CONTRACTOR SHALL INSPECT THE SITE AND INCLUDE IN HIS BID PACKAGE ALL CHARGES DUE TO EXISTING CONDITIONS. SHOP DRAWINGS ARE REQUIRED. ALL LABOR, CONTRACTOR SUPPLIED MATERIAL, AND WORKMANSHIP SHALL BE GUARANTEED FOR A PERIOD OF 1 YEAR FROM THE DATE OF ACCEPTANCE BY THE TENANT. REPLACE OR REPAIR ALL DEFECTS DURING GUARANTEE PERIOD.
21. REPLACE EXISTING CEILING TILES WITH NEW TO MATCH EXISTING IN LOCATIONS WHERE EXISTING SMOKE DETECTORS WERE REMOVED AND NOT REINSTALLED IN SAME TILE.
22. PROVIDE ALL NEW CONDUIT FOR NEW FIRE ALARM SYSTEM. UTILIZE EXISTING CONDUITS ONLY AS APPROVED BY BYU ELECTRICAL SHOP.
23. CAP SMOKE DETECTORS IN THE AREA DURING THIS RENOVATION. COORDINATE WITH BYU ELECTRICAL SHOP.

STAMP

GENERAL NOTES AND SYMBOLS LIST

SCALE: N/A

REVISIONS:

PERMIT SET

GOVERNOR'S CARRIAGE HOUSE STABILIZATION
DFCM PROJECT NO. 10032310
603 EAST SOUTH TEMPLE
SALT LAKE CITY, UTAH 84103

MJSA
357 West Pierpont Avenue ◻ Salt Lake City, Utah 84101
Telephone 801 364 5161 ◻ Facsimile 801 364 5167
ARCHITECTURE INTERIOR DESIGN

THESE DRAWINGS ARE INSTRUMENTS OF SERVICE AND SHALL REMAIN THE PROPERTY OF THE ARCHITECT. NO USE OR RE-USE OF THESE DOCUMENTS SHALL BE PERMITTED UNLESS AUTHORIZED IN WRITING BY MJSA ARCHITECTS WITH APPROPRIATE COMPENSATION.

PROJECT NO.: 10014

DATE: 4/12/10

SHEET: EE0-01

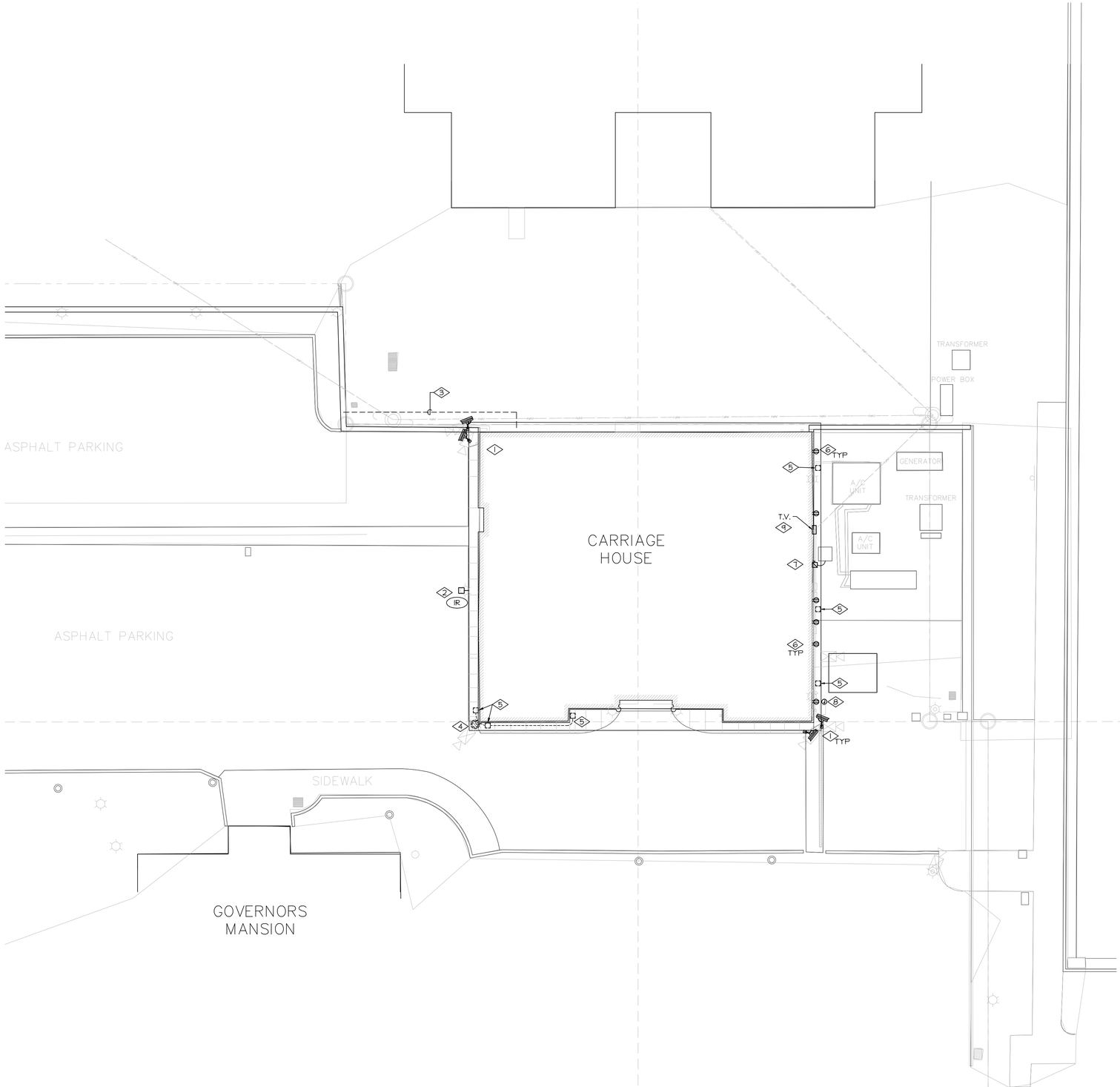

N

DEMOLITION SITE PLAN – ELECTRICAL

SCALE: 1" = 10'-0"

REFERENCE NOTES:

1. REMOVE EXISTING CAMERAS, CONDUIT AND CONDUCTORS ALL THE WAY TO THE DVR ON THE FIRST LEVEL. THIS WORK MUST BE COORDINATED WITH THE SECURITY OFFICE.
2. REMOVE AND RELOCATE EXISTING IR SECURITY LIGHT FROM EXISTING LOCATION TO THE NEW POLE.
3. REMOVE EXISTING SURFACE MOUNTED FEEDER AND BURRY IT A MINIMUM OF 36" BELOW FINAL FINISHED GRADE. CORE DRILL EXISTING WALLS.
4. REMOVE EXISTING DOME MOUNTED CAMERA AND REINSTALL ON THE NEW POLE AT THE NORTH WEST. TIE THE RELOCATED CAMERA TO THE EXISTING HEAD AND EQUIPMENT IN THE EXISTING SECURITY OFFICE. PROVIDE ALL HARDWARE, PROGRAMMING, CABLES, ETC. AS REQUIRED FOR A COMPLETE INSTALLATION. SEE SHEET ES1-02 FOR MORE INFORMATION.
5. REMOVE EXISTING SURFACE MOUNTED CONDUIT THAT FEEDS EXISTING LIGHTS ON THE BUILDING. REMOVE LIGHTS, CONDUIT, CONDUCTORS, J-BOXES, ETC. ALL THE WAY TO THE ORIGINATION POINTS.
6. REMOVE EXISTING DUPLEX OUTLET FROM THE BUILDING. REMOVE CONDUIT AND CONDUCTORS. UTILIZE EXISTING CIRCUITS TO FEED THE NEW OUTLETS IN THE NEW LOCATIONS.
7. REMOVE AND RELOCATE EXISTING CONDENSING UNIT SITE DISCONNECT SWITCHES. SEE SHEET ES1-02 FOR MORE INFORMATION.
8. REMOVE EXISTING DOG WATCH CONTROLLER AND J-BOX.
9. REMOVE AND RELOCATE EXISTING T.V. SYSTEM.

REVISIONS:

PERMIT SET

GOVERNOR'S CARRIAGE HOUSE STABILIZATION
DFCM PROJECT NO. 10032310
603 EAST SOUTH TEMPLE
SALT LAKE CITY, UTAH 84103

MJSA
357 West Pierpont Avenue □ Salt Lake City, Utah 84101
Telephone 801 364 5161 □ Facsimile 801 364 5167
ARCHITECTURE INTERIOR DESIGN

THESE DRAWINGS ARE INSTRUMENTS OF SERVICE AND SHALL REMAIN THE PROPERTY OF THE ARCHITECT. NO USE OR RE-USE OF THESE DOCUMENTS SHALL BE PERMITTED UNLESS AUTHORIZED IN WRITING BY MJSA ARCHITECTS WITH APPROPRIATE COMPENSATION.

PROJECT NO.: 10014

DATE: 4/12/10

SHEET: ES1-01

LICENSED PROFESSIONAL ENGINEER
NO. 6156
ZAHIRAT ULLAH NAWABI
04-26-10
STATE OF UTAH

E.C.E. LLC.
939 So. West Temple
Salt Lake City, Utah 84101
Telephone (801) 521-8007
Telefax (801) 521-8057

ECE PROJECT NO.: 3799

DEMOLITION SITE PLAN - ELECTRICAL
SCALE: N/A

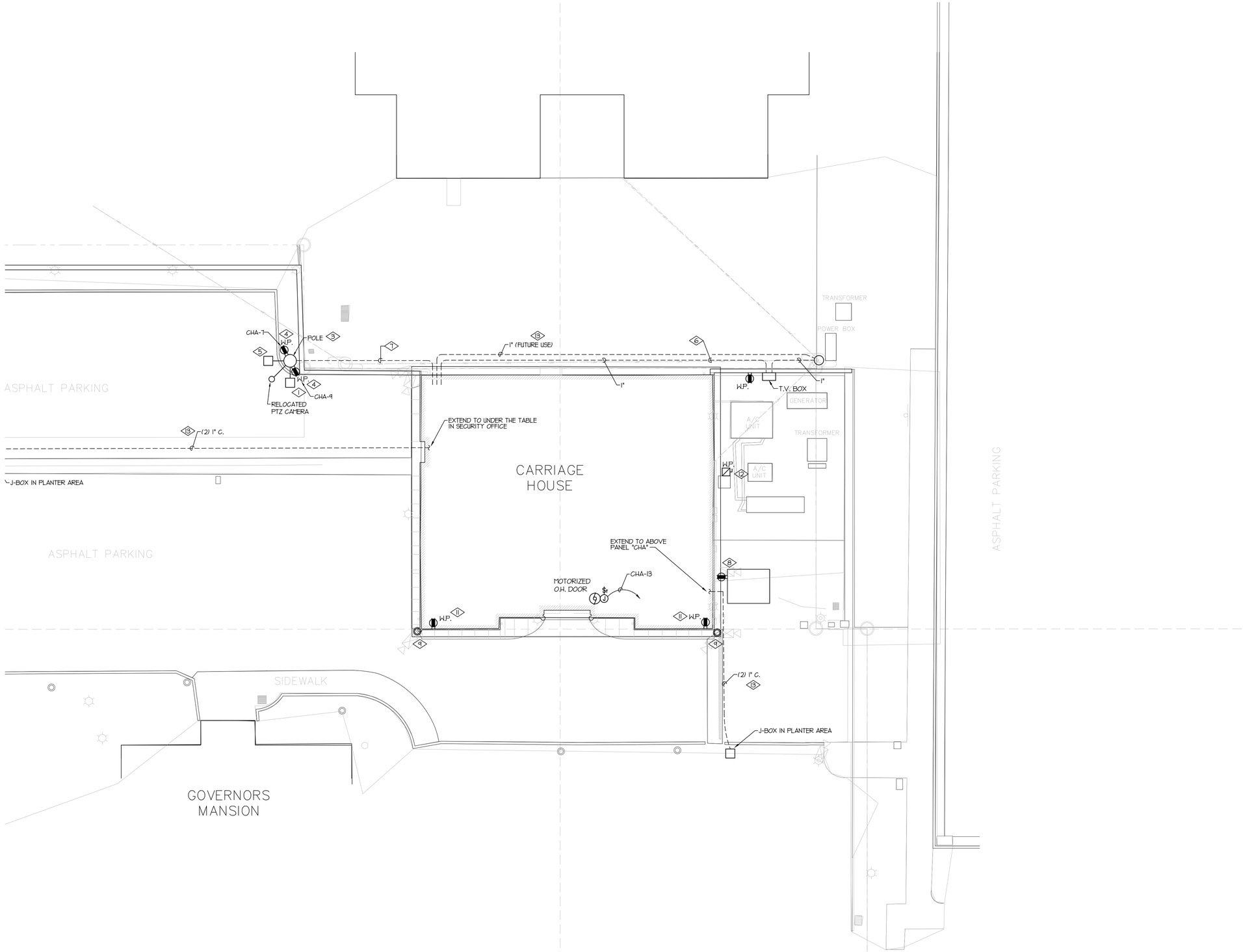

N

SITE PLAN – ELECTRICAL

SCALE: 1" = 10'-0"

REFERENCE NOTES:

1. RELOCATED IR SECURITY LIGHT. FURNISH AND INSTALL MOUNTING BRACKET. COORDINATE EXACT LOCATION AND AIMING ANGLE WITH SECURITY OFFICE.
2. FURNISH AND INSTALL NEW 18' TALL POLES TO BE 6" ROUND, ALUMINUM, BLACK PAINTED, TO RECEIVE THE NEW CAMERAS. PROVIDE ACCESS HOLES AND COVERS AT THE TOP AND BOTTOM OF THE POLE.
3. FURNISH AND INSTALL NEW CONCRETE POLE BASE. PROVIDE AN EXTRA SPARE 1" CONDUIT FROM THE POLE TO THE ACCESSIBLE AREA OF THE BUILDING FOR FUTURE USE. LABEL THE CONDUIT AND INSERT PULL ROPE IN EACH ONE.
4. FURNISH AND INSTALL A NEW GFCI DUPLEX OUTLET IN THE APPROXIMATE LOCATION AS SHOWN. TIE TO THE SPECIFIED CIRCUITS.
5. FURNISH AND INSTALL NEW IR LIGHT FIXTURE TO MATCH EXISTING, SUITABLE FOR OUTDOOR INSTALLATION. COMPLETE WITH ALL HARDWARE AS REQUIRED, 120 V. AC AUTOMATIC PHOTOCELL ON/OFF, MEDIUM WIDE FLOOD (180 DEGREE) BEAM.
6. RUN NEW COMMUNICATION SERVICES(MINIMUM (2) 1" CONDUITS) FROM THE EXISTING POLE UNDERGROUND TO THE EXISTING BUILDING ON THE NORTH. BURY CONDUIT A MINIMUM OF 24" BELOW FINAL FINISHED GRADE. LOOP THE COMCAST T.V. CONDUIT THRU THE RELOCATED BOX.
7. EXISTING SERVICE TO BE BURIED A MINIMUM OF 36" BELOW FINAL FINISHED GRADE ON THE NORTH SIDE. NO EXPOSED CONDUIT IS ACCEPTABLE.
8. FURNISH AND INSTALL A NEW GFCI OUTLET ON THE EXISTING STRUCTURE. EXTEND EXISTING 120V. CIRCUITS IN THE AREA TO THIS OUTLET. PROVIDE WATER PROOF COVER WHEN IN USE.
9. FURNISH AND INSTALL NEW MEGAPIXEL CAMERAS INSIDE NEW WALL MOUNTED LIGHT FIXTURES IN SUCH A WAY THAT THE BOTTOM DOME OF THE CAMERA SHALL BE EXPOSED AT THE BOTTOM OF THE LIGHT FIXTURE. COORDINATE THIS INSTALLATION WITH ARCHITECT AND LIGHT FIXTURE SUPPLIER.
10. NOT USED.
11. PROVIDE 120V. POWER FROM EXISTING CIRCUITS TO THE NEW GFCI OUTLETS TO FEED THE NEW PTZ CAMERAS.
12. FURNISH AND INSTALL UNISTRUT TO HOLD EXISTING RELOCATED SITE DISCONNECT SWITCH OF EXISTING CONDENSING UNIT. SAW CUT EXISTING CONCRETE AND EXTEND EXISTING CONDUIT AND CONDUCTORS TO THE RELOCATED DISCONNECT SWITCH.
13. FURNISH AND INSTALL NEW SPARE CONDUITS UNDER THE NEW DRIVEWAY IN THE APPROXIMATE LOCATIONS AS SHOWN.

E.C.E. LLC.
939 So. West Temple
Salt Lake City, Utah 84101
Telephone (801) 521-8007
Telefax (801) 521-8057

ECE PROJECT NO.: 3799

SITE PLAN - ELECTRICAL

SCALE: N/A

REVISIONS:

PERMIT SET

GOVERNOR'S CARRIAGE HOUSE STABILIZATION
DFCM PROJECT NO. 10032310
603 EAST SOUTH TEMPLE
SALT LAKE CITY, UTAH 84103

MJSA
357 West Pierpont Avenue ◻ Salt Lake City, Utah 84101
Telephone 801 364 5161 ◻ Facsimile 801 364 5167
ARCHITECTURE INTERIOR DESIGN

THESE DRAWINGS ARE INSTRUMENTS OF SERVICE AND SHALL REMAIN THE PROPERTY OF THE ARCHITECT. NO USE OR RE-USE OF THESE DOCUMENTS SHALL BE PERMITTED UNLESS AUTHORIZED IN WRITING BY MJSA ARCHITECTS WITH APPROPRIATE COMPENSATION.

PROJECT NO.: 10014

DATE: 4/12/10

SHEET: ES1-02

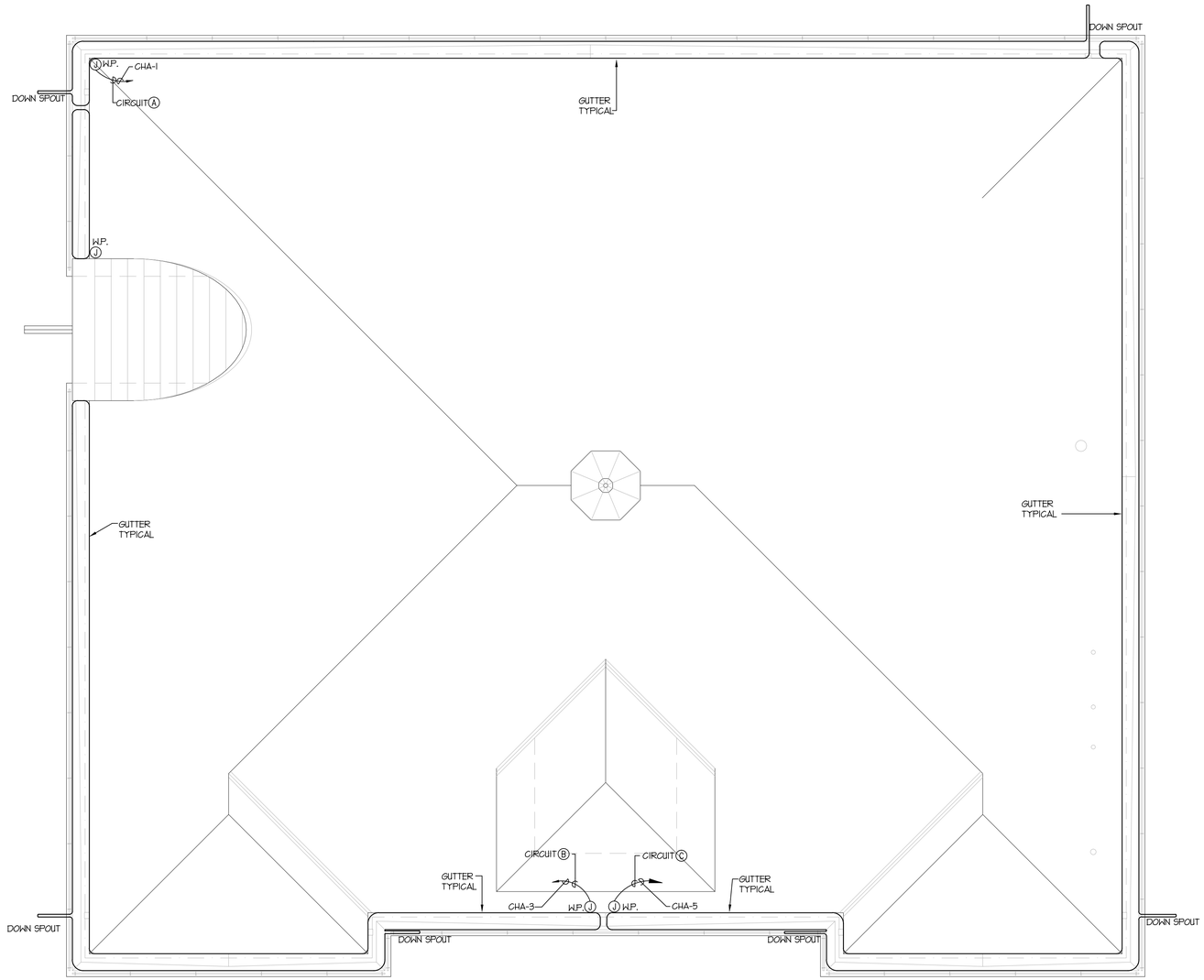

N

ROOF PLAN – ELECTRICAL

SCALE: 1/4" = 1'-0"

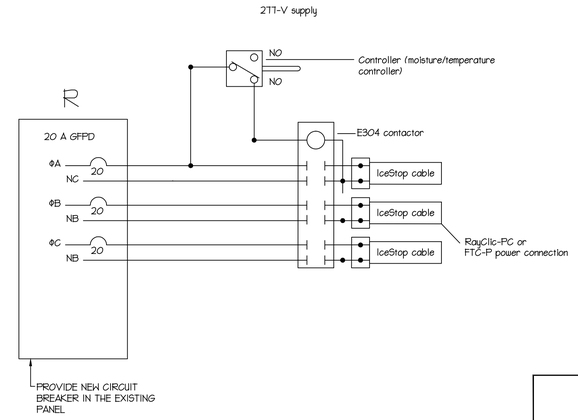

SPECIAL NOTES:

1. FURNISH AND INSTALL RAYCHEM ICE STOP, SELF REGULATED HEATING CABLE INSIDE THE DOWN SPOUTS (FIELD VERIFY EXACT LOCATIONS) AND IN THE MAIN GUTTER, THE CABLE SHALL BE GM-2XT WITH CONTROLLER GIT3A, CONTACTOR, WIRE CONNECTORS RAYCLIC-PS, RAYCLIC-T AND END SEALS AS REQUIRED. APPROXIMATE TOTAL HEATING CABLE LENGTH (800'). FIELD VERIFY EXACT LENGTH. INSTALL THE SYSTEM PER MANUFACTURER RECOMMENDATIONS.
2. FURNISH AND INSTALL THREE (3) NEW 20A, 1-POLE, GROUND FAULT PROTECTED CIRCUIT BREAKERS IN THE EXISTING PANEL TO FEED THE HEAT TRACE CABLES. EQUALLY DIVIDE THE HEATING LOAD ON THE CIRCUITS AND ON THE PANELS.
3. SECURE THE HEATING CABLE EVERY 36" WITH GHK-RC FOR THE ENTIRE LENGTHS OF THE RAIN GUTTERS. SECURE GHK-RC PER MANUFACTURER RECOMMENDATIONS. MINIMUM 24 HOURS OF CURING IS REQUIRED FOR THE GLUE.
4. MINIMUM OF TWO RUNS ARE REQUIRED IN THE RAIN GUTTERS AND DOWN SPOUTS. EXTEND THE CABLES DOWN INTO THE CATCH BASIN A MINIMUM OF 24".

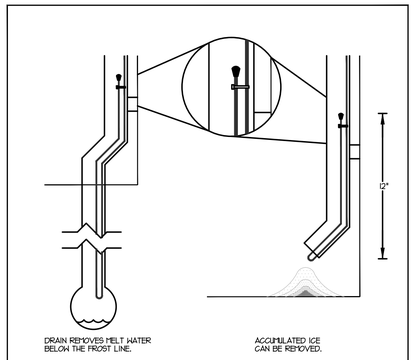

SCALE: N.T.S. — HEATING CABLE AT BOTTEM OF DOWNSPOUT

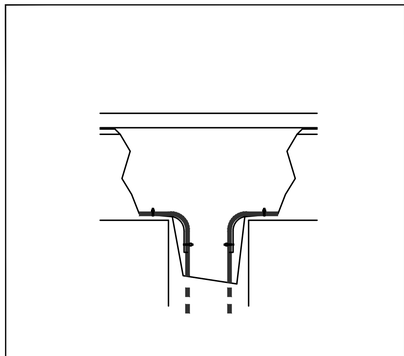

SCALE: N.T.S. — HEATING CABLE AT TOP OF DOWNSPOUT

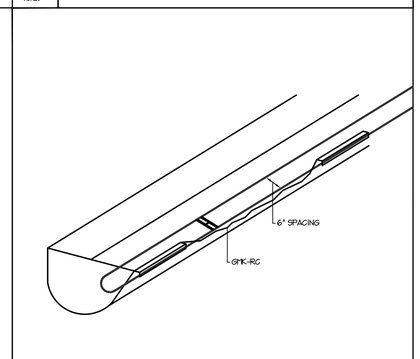

SCALE: N.T.S. — 6" RAIN GUTTER

REVISIONS:

PERMIT SET

GOVERNOR'S CARRIAGE HOUSE STABILIZATION
DFCM PROJECT NO. 10032310
603 EAST SOUTH TEMPLE
SALT LAKE CITY, UTAH 84103

MJSA
357 West Pierpont Avenue □ Salt Lake City, Utah 84101
Telephone 801 364 5161 □ Facsimile 801 364 5167
ARCHITECTURE INTERIOR DESIGN

THESE DRAWINGS ARE INSTRUMENTS OF SERVICE AND SHALL REMAIN THE PROPERTY OF THE ARCHITECT. NO USE OR RE-USE OF THESE DOCUMENTS SHALL BE PERMITTED UNLESS AUTHORIZED IN WRITING BY MJSA ARCHITECTS WITH APPROPRIATE COMPENSATION.

PROJECT NO.: 10014

DATE: 4/12/10

SHEET: ES1-03

LICENSED PROFESSIONAL ENGINEER
No. 6147547-2202
EMDAD ULLAH NAWABI
04-26-10
STATE OF UTAH

E.C.E. LLC.
939 So. West Temple
Salt Lake City, Utah 84101
Telephone (801) 521-8007
Telefax (801) 521-8057

ECE PROJECT NO.: 3799

ROOF PLAN - ELECTRICAL

SCALE: N/A

REFERENCE NOTES:

1. EXISTING CCTV HEAD END, JOYSTICK AND MULTIPLAYER TO STAY AND SHALL REMAIN OPERATIONAL DURING RENOVATION.
2. FURNISH AND INSTALL A NEW PANEL "CHA" IN THE APPROXIMATE LOCATION SHOWN. REMOVE (3) BREAKERS FROM EXISTING PANEL "CH" TO HOUSE A NEW 3-POLE, 100A. CIRCUIT BREAKER TO FEED THE NEW PANEL. REFER TO PARTIAL POWER SINGLE LINE DIAGRAM AND PANEL SCHEDULE FOR MORE INFORMATION.
3. REMOVE POWER FROM EXISTING OVERHEAD DOOR. EXTEND THIS CIRCUIT TO THE NEW OVERHEAD DOOR THRU DOOR CONTROLLER AND OPERATOR PER MANUFACTURER RECOMMENDATIONS.

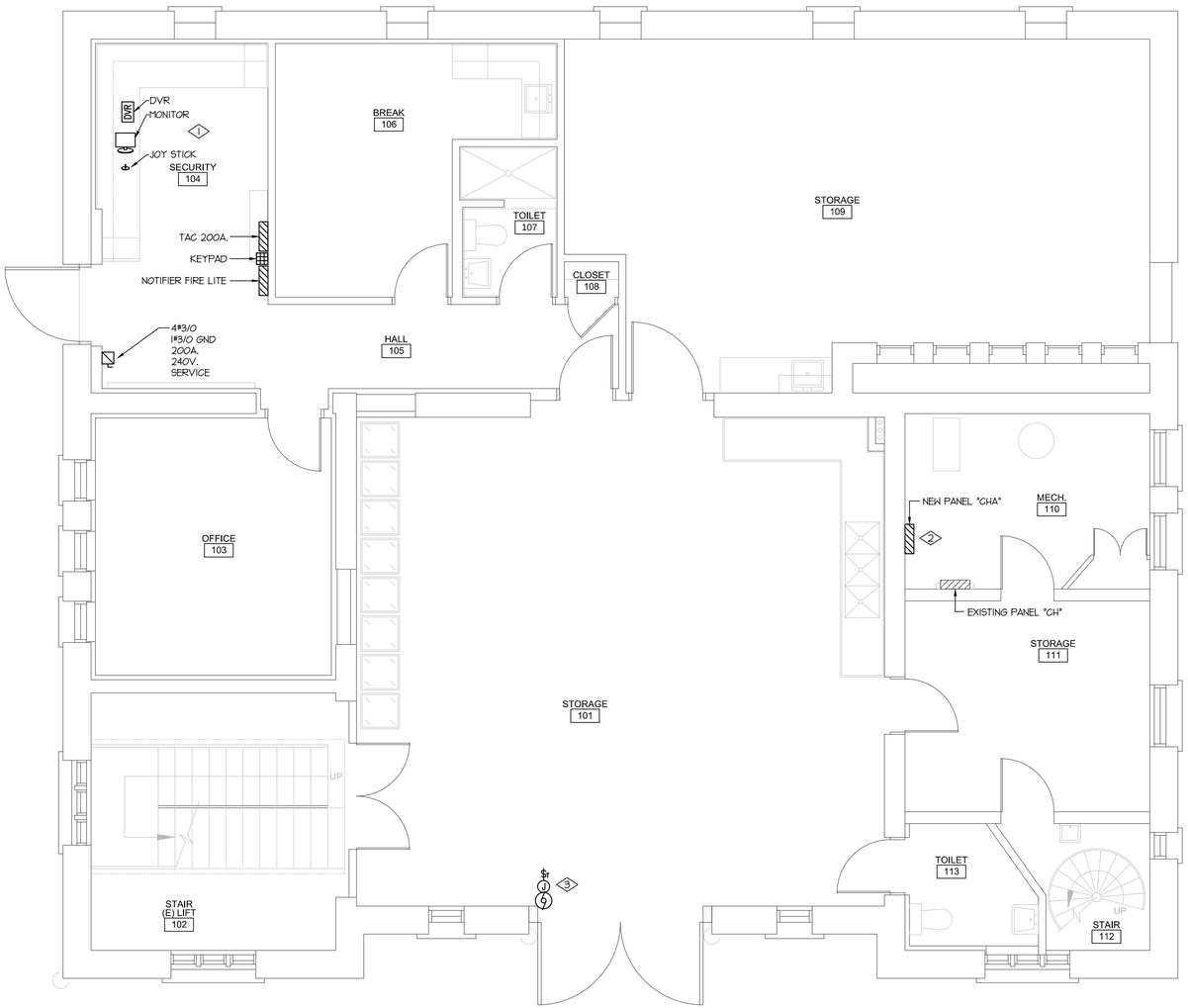

N

FIRST FLOOR PLAN – ELECTRICAL

SCALE: 1/4" = 1'-0"

REVISIONS:

PERMIT SET

GOVERNOR'S CARRIAGE HOUSE STABILIZATION

DFCM PROJECT NO. 10032310
603 EAST SOUTH TEMPLE
SALT LAKE CITY, UTAH 84103

MJSA
357 West Pierpont Avenue □ Salt Lake City, Utah 84101
Telephone 801 364 5161 □ Facsimile 801 364 5167
ARCHITECTURE INTERIOR DESIGN

THESE DRAWINGS ARE INSTRUMENTS OF SERVICE AND SHALL REMAIN THE PROPERTY OF THE ARCHITECT. NO USE OR RE-USE OF THESE DOCUMENTS SHALL BE PERMITTED UNLESS AUTHORIZED IN WRITING BY MJSA ARCHITECTS WITH APPROPRIATE COMPENSATION.

PROJECT NO.: 10014

DATE: 4/12/10

LICENSED PROFESSIONAL ENGINEER
NO. 6188
EHSAN ULLAH NAWABI
04-26-10
STATE OF UTAH

ECE
E.C.E. LLC.
939 So. West Temple
Salt Lake City, Utah 84101
Telephone (801) 521-8007
Telefax (801) 521-8057

ECE PROJECT NO.: 3799

FIRST FLOOR PLAN - ELECTRICAL

SCALE: N/A

SHEET: EE1-01

REFERENCE NOTES:

1. REMOVE EXISITING CONDUIT, CABLE, ETC. THAT USED TO FEED THE OLD CAMERAS TO BR REMOVED.

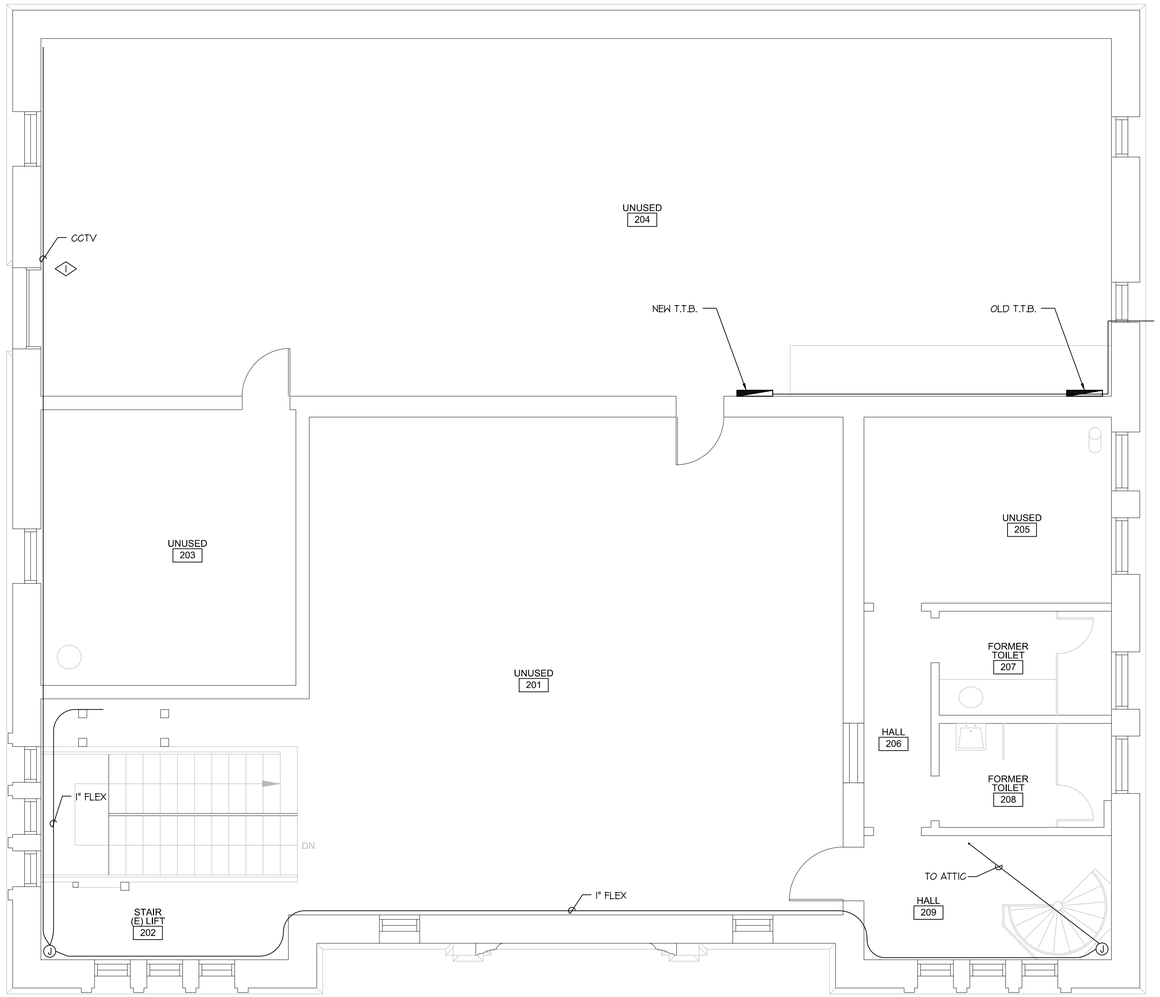

N

SECOND FLOOR PLAN – ELECTRICAL

SCALE: 1/4" = 1'-0"

E.C.E. LLC.
939 So. West Temple
Salt Lake City, Utah 84101
Telephone (801) 521-8007
Telefax (801) 521-8057

ECE PROJECT NO.: 3799

SECOND FLOOR PLAN - ELECTRICAL

SCALE: N/A

REVISIONS:

PERMIT SET

GOVERNOR'S CARRIAGE HOUSE STABILIZATION
DFCM PROJECT NO. 10032310
603 EAST SOUTH TEMPLE
SALT LAKE CITY, UTAH 84103

MJSA
357 West Pierpont Avenue □ Salt Lake City, Utah 84101
Telephone 801 364 5161 □ Facsimile 801 364 5167
ARCHITECTURE INTERIOR DESIGN

THESE DRAWINGS ARE INSTRUMENTS OF SERVICE AND SHALL REMAIN THE PROPERTY OF THE ARCHITECT. NO USE OR RE-USE OF THESE DOCUMENTS SHALL BE PERMITTED UNLESS AUTHORIZED IN WRITING BY MJSA ARCHITECTS WITH APPROPRIATE COMPENSATION.

PROJECT NO.: 10014

DATE: 4/12/10

SHEET: EE1-02

REFERENCE NOTES:

1. REMOVE SURFACE MOUNTED CONDUIT/CONDUCTORS ALL THE WAY BACK TO THEIR ORIGINATION POINTS.
2. REMOVE AND RELOCATE EXISTING DOME CAMERA. REMOVE EXISTING FEEDERS ALL THE WAY BACK TO DVR.
3. REMOVE EXISTING CAMERA. REMOVE EXISTING FEEDERS ALL THE WAY BACK TO DVR.
4. REMOVE J-BOX AND CONDUIT ALL THE WAY BACK TO ORIGINATION POINT.
5. INSTALL NEW MEGAPIXEL CAMERAS. TIE NEW CAMERAS TO NEW DVR IN THE EXISTING CCTV HEAD-END EQUIPMENT.
6. REMOVE EXISTING LIGHTING FIXTURE AND REINSTALL THEM IN THE SAME LOCATION AFTER THEY ARE REFURBISHED.

FRONT ELEVATION PLAN – ELECTRICAL

SCALE: 1/4" = 1'-0"

REVISIONS:

PERMIT SET

GOVERNOR'S CARRIAGE HOUSE STABILIZATION
DFCM PROJECT NO. 10032310
603 EAST SOUTH TEMPLE
SALT LAKE CITY, UTAH 84103

MJSA
357 West Pierpont Avenue ◻ Salt Lake City, Utah 84101
Telephone 801 364 5161 ◻ Facsimile 801 364 5167
ARCHITECTURE INTERIOR DESIGN

THESE DRAWINGS ARE INSTRUMENTS OF SERVICE AND SHALL REMAIN THE PROPERTY OF THE ARCHITECT. NO USE OR RE-USE OF THESE DOCUMENTS SHALL BE PERMITTED UNLESS AUTHORIZED IN WRITING BY MJSA ARCHITECTS WITH APPROPRIATE COMPENSATION.

PROJECT NO.: 10014

DATE: 4/12/10

SHEET: EE1-03

LICENSED PROFESSIONAL ENGINEER
No. 6144247-2202
ELAHAT ULLAH NAWABI
04-26-10
STATE OF UTAH

ECE
E.C.E. LLC.
939 So. West Temple
Salt Lake City, Utah 84101
Telephone (801) 521-8007
Telefax (801) 521-8057

ECE PROJECT NO.: 3799

ELEVATION PLAN - ELECTRICAL
SCALE: N/A

REFERENCE NOTES:

1. REMOVE, RELOCATE AND BURRY EXISTING FEEDER. CORE DRILL EXISTING WALLS AS REQUIRED. PROVIDE PULL BOXES. MINIMUM DEPTH SHALL BE 36".

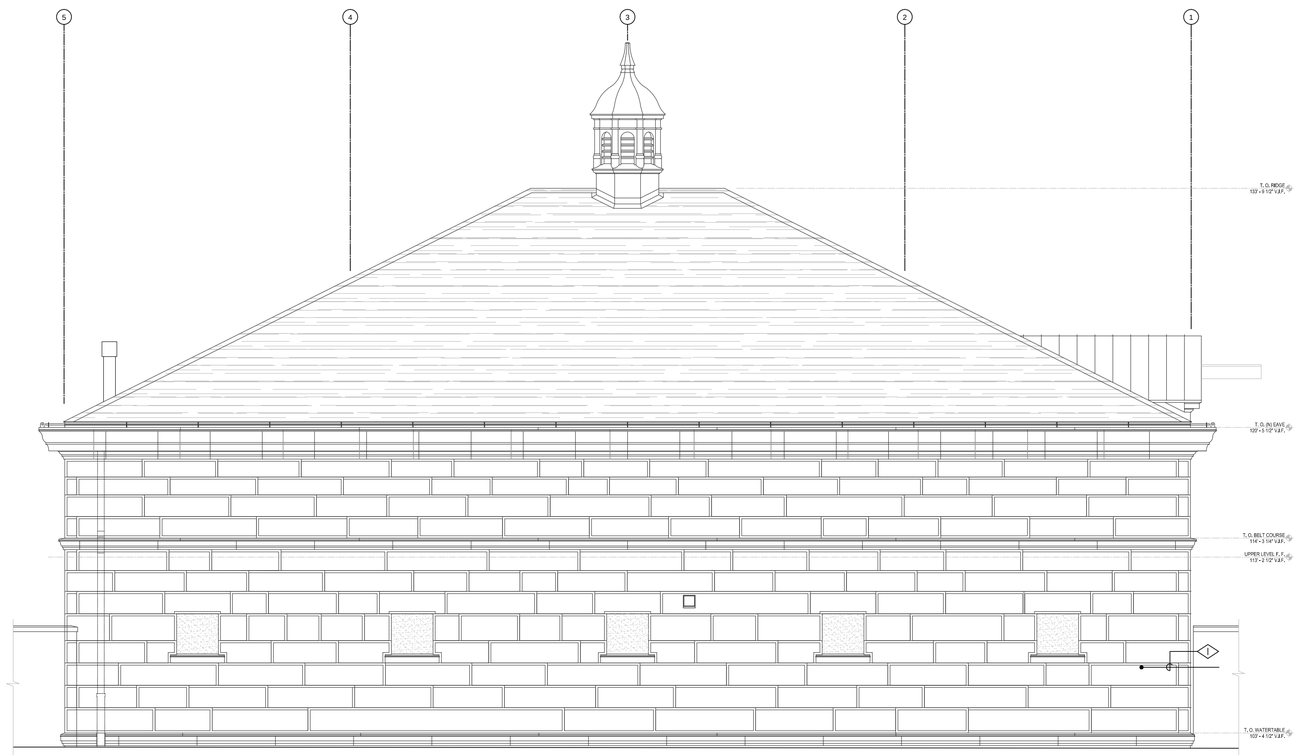

REAR ELEVATION PLAN – ELECTRICAL

SCALE: 1/4" = 1'-0"

REVISIONS:

PERMIT SET

GOVERNOR'S CARRIAGE HOUSE STABILIZATION
DFCM PROJECT NO. 10032310
603 EAST SOUTH TEMPLE
SALT LAKE CITY, UTAH 84103

MJSA
357 West Pierpont Avenue □ Salt Lake City, Utah 84101
Telephone 801 364 5161 □ Facsimile 801 364 5167
ARCHITECTURE INTERIOR DESIGN

THESE DRAWINGS ARE INSTRUMENTS OF SERVICE AND SHALL REMAIN THE PROPERTY OF THE ARCHITECT. NO USE OR REUSE OF THESE DOCUMENTS SHALL BE PERMITTED UNLESS AUTHORIZED IN WRITING BY MJSA ARCHITECTS WITH APPROPRIATE COMPENSATION.

LICENSED PROFESSIONAL ENGINEER
NO. 10032310
NAYAT ULLAH NAWABI
04-26-10
STATE OF UTAH

ECE
E.C.E. LLC.
939 So. West Temple
Salt Lake City, Utah 84101
Telephone (801) 521-8007
Telefax (801) 521-8057

ECE PROJECT NO.: 3799

PROJECT NO.: 10014

DATE: 4/12/10

REAR ELEVATION PLAN - ELECTRICAL
SCALE: N/A

SHEET: EE1-04

REFERENCE NOTES:

1. REMOVE CAMERA AND FEEDS.
2. REMOVE IR ILLUMINATOR. REMOVE FEEDERS ALL THE WAY BACK TO ORIGINATION POINTS.
3. REMOVE AND RELOCATE DOME CAMERA.
4. REMOVE EXISTING LIGHT FIXTURE, J-BOX, CONDUIT. EXTEND EXISTING CIRCUITS FROM INSIDE THE BUILDING TO THE NEW LIGHT FIXTURE.
5. INSTALL THE NEW LIGHT FIXTURE. TIE THE NEW LIGHT FIXTURE TO THE EXISTING SWITCHED LIGHTING CIRCUIT.
6. FURNISH AND INSTALL A NEW MEGAPIXEL DOME MOUNTED CAMERA.

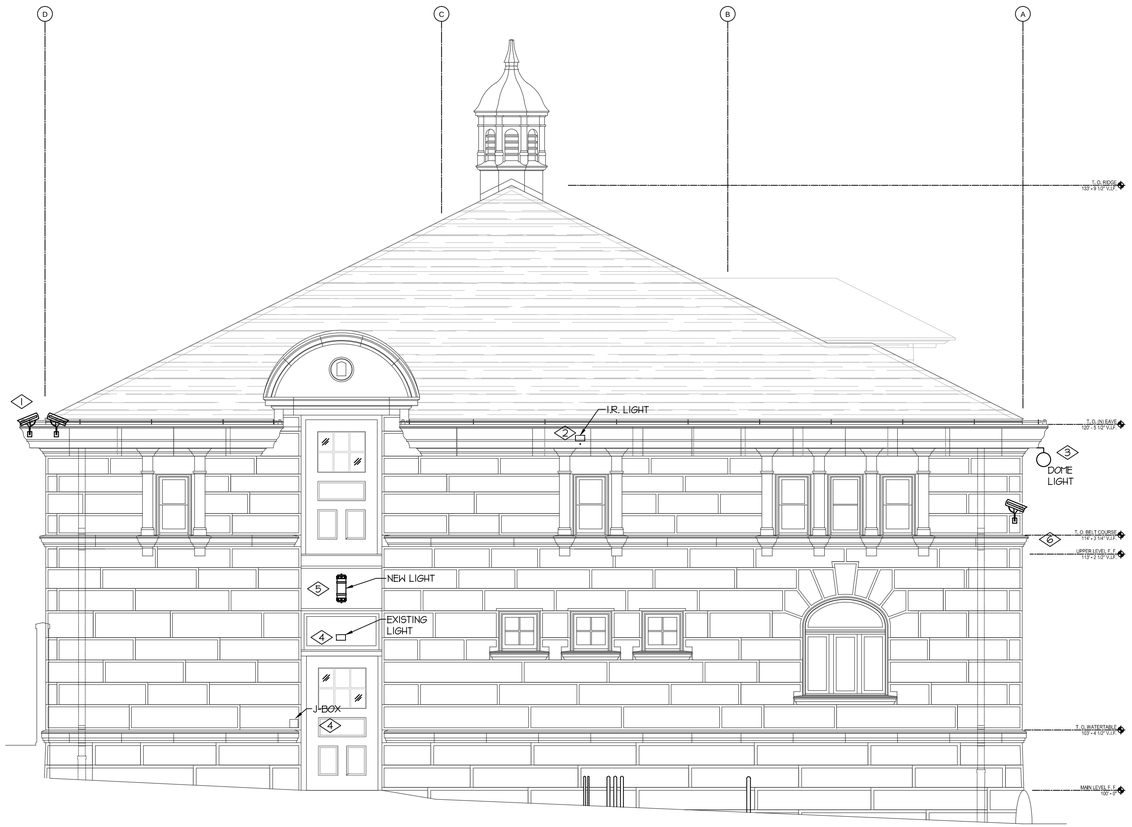

LEFT ELEVATION PLAN – ELECTRICAL

SCALE: 1/4" = 1'-0"

REVISIONS:

PERMIT SET

GOVERNOR'S CARRIAGE HOUSE STABILIZATION
DFCM PROJECT NO. 10032310
603 EAST SOUTH TEMPLE
SALT LAKE CITY, UTAH 84103

MJSA
357 West Pierpont Avenue □ Salt Lake City, Utah 84101
Telephone 801 364 5161 □ Facsimile 801 364 5167
ARCHITECTURE INTERIOR DESIGN

THESE DRAWINGS ARE INSTRUMENTS OF SERVICE AND SHALL REMAIN THE PROPERTY OF THE ARCHITECT. NO USE OR REUSE OF THESE DOCUMENTS SHALL BE PERMITTED UNLESS AUTHORIZED IN WRITING BY MJSA ARCHITECTS WITH APPROPRIATE COMPENSATION.

LICENSED PROFESSIONAL ENGINEER
ENAYAT ULLAH NAWABI
04-26-10
STATE OF UTAH

E.C.E. LLC.
939 So. West Temple
Salt Lake City, Utah 84101
Telephone (801) 521-8007
Telefax (801) 521-8057

ECE PROJECT NO.: 3799

PROJECT NO.: 10014

DATE: 4/12/10

LEFT ELEVATION PLAN - ELECTRICAL
SCALE: N/A

SHEET: EE1-05

REFERENCE NOTES:

1. REMOVE AND RELOCATE EXISTING CAMERA.
2. REMOVE EXISTING CAMERA.
3. REMOVE EXISTING WALL MOUNTED LIGHTS, CONDUIT, CONDUCTORS, ETC.
4. COORDINATE WITH COMCAST/TELEPHONE COMPANY. REMOVE AND RELOCATE EXISTING SERVICES.
5. REMOVE AND RELOCATE EXISTING SITE WITH DISCONNECT SWITCH.
6. REMOVE AND RELOCATE EXISTING CONDUIT, CONDUCTORS, OUTLETS, J-BOXES, TIMER, ETC.
7. REMOVE AND RELOCATE EXISTING COMMUNICATION SYSTEM. COORDINATE WITH OWNER IT DEPARTMENT AND LOCAL PHONE COMPANY.
8. REMOVE EXISTING DOG WATCH SYSTEM.
9. FURNISH AND INSTALL NEW MEGAPIXEL DOME MOUNTED CAMERA.

NOTE:

SEE SHEET ES1-01 FOR MORE INFORMATION.

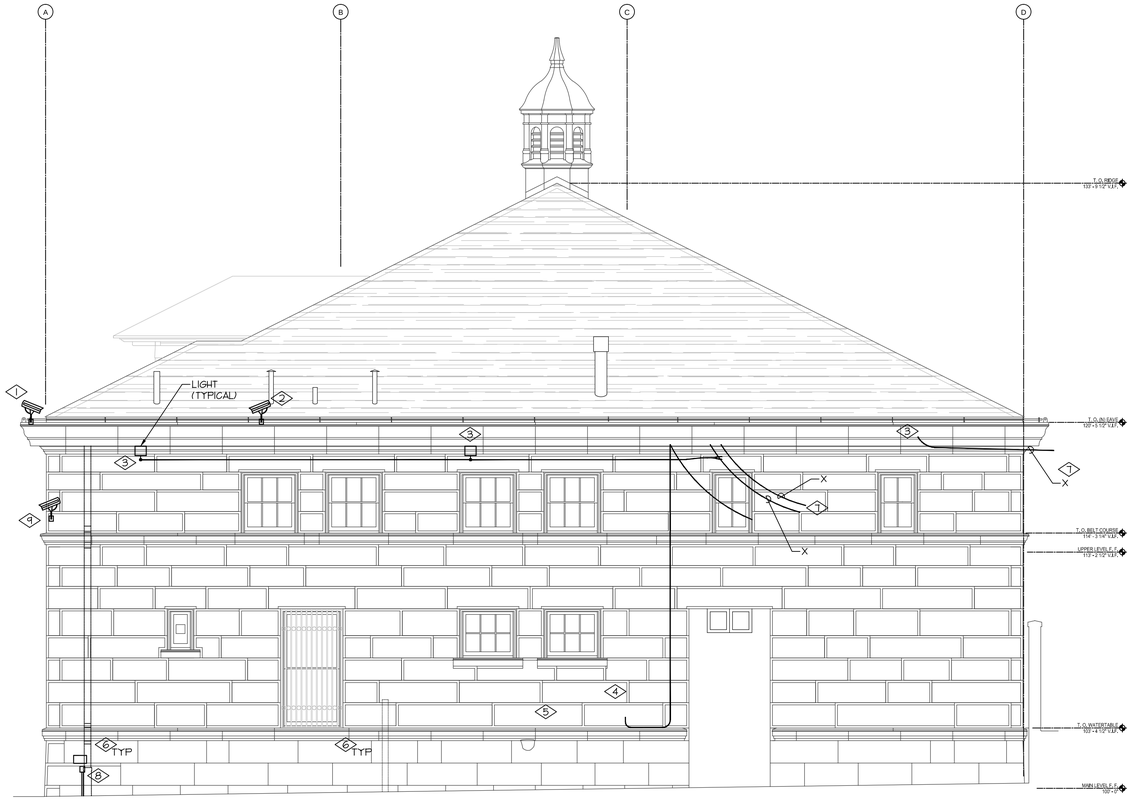

RIGHT ELEVATION PLAN – ELECTRICAL

SCALE: 1/4" = 1'-0"

REVISIONS:

PERMIT SET

GOVERNOR'S CARRIAGE HOUSE STABILIZATION
DFCM PROJECT NO. 10032310
603 EAST SOUTH TEMPLE
SALT LAKE CITY, UTAH 84103

MJSA
357 West Pierpont Avenue □ Salt Lake City, Utah 84101
Telephone 801 364 5161 □ Facsimile 801 364 5167
ARCHITECTURE INTERIOR DESIGN

THESE DRAWINGS ARE INSTRUMENTS OF SERVICE AND SHALL REMAIN THE PROPERTY OF THE ARCHITECT. NO USE OR RE-USE OF THESE DOCUMENTS SHALL BE PERMITTED UNLESS AUTHORIZED IN WRITING BY MJSA ARCHITECTS WITH APPROPRIATE COMPENSATION.

PROJECT NO.: 10014

DATE: 4/12/10

LICENSED PROFESSIONAL ENGINEER
NAWAT ULLAH NAWABI
04-26-10
STATE OF UTAH

E.C.E. LLC.
939 So. West Temple
Salt Lake City, Utah 84101
Telephone (801) 521-8007
Telefax (801) 521-8057

ECE PROJECT NO.: 3799

ELEVATION PLAN - ELECTRICAL
SCALE: N/A

SHEET: EE1-06