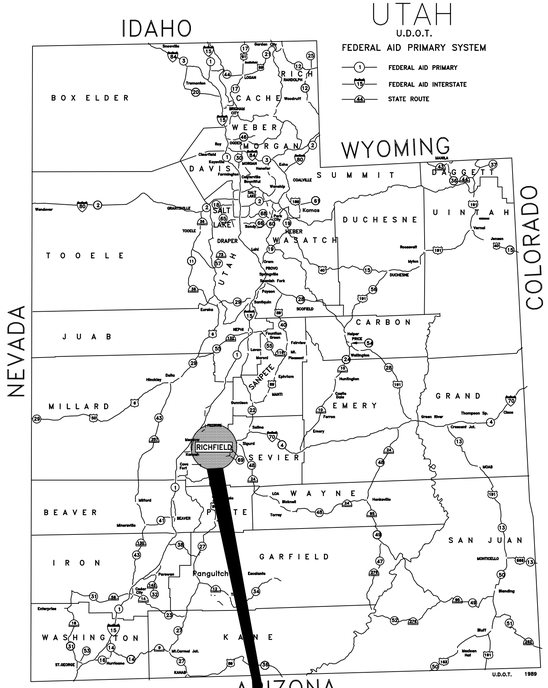

UDOT CONNECTING COMMUNITIES

REGION 4 WAREHOUSE OFFICE REMODEL

RICHFIELD, UTAH 84701

CONSTRUCTION DOCUMENTS

DFCM PROJECT #10046900
CONTRACT #107453
SEPTEMBER 2010

708 SOUTH 100 WEST
RICHFIELD, UTAH 84701
NO SCALE

N

PREPARED BY

ARCHIPLEX GROUP

architecture · planning · design services

255 Crossroad Square
Salt Lake City, UT 84115
P:(801) 961-7070
F:(801) 961-7373
Ralph Stanislaw

CONSULTANTS

CIVIL	STRUCTURAL	MECHANICAL	ELECTRICAL
Epic Engineering	Dunn Engineering	Olsen & Peterson	ECE
50 East 100 South	380 West 800 South	14 East 2700 South	939 S. West Temple
Heber City, Utah 84032	Suite 100	Salt Lake City, Utah 84115	Salt Lake City, Utah 84101
T: (435) 654-6600	Salt Lake City, Utah 84101	T: (801) 486-4646	T: (801) 521-8007
F: (435) 562-6622	T: (801) 575-8877	F: (801) 467-2531	F: (801) 521-8057
Joseph Santos	F: (801) 575-8875	Paul Laird	Phil Borup
ahuff@epiceng.net	Paul McMullin	paul@op-eng.com	phillip@eceonline.com
	pmcmullin@dunn-se.com		

CODE ANALYSIS

APPLICABLE CODES

	Year		Year
International Building Code	2009	National Electrical Code	2008
International Mechanical Code	2009	Uniform Code for Building Conservation	N.A.
International Plumbing Code	2009	ADA Accessibility Guildelines-ANSI A117.1	2010
International Fire Code	2009		
International Energy Conservation Code	2009		

A. Occupancy and Group: B (OFFICES ACCESSORY) A3 (ASSEMBLY UNCONCENTRATED)

Change in Use: Yes X No ____ Mixed Occupancy: Yes X No ____
Special Use and Occupancy (e.g. High Rise, Covered Mall): N.A.

B. Seismic Design Category: D Design Wind Speed: 90 MPH

C. Type of Construction (circle one):

I/A I/B II/A II/B III/A III/B IV/HT V/A (V/B)

D. Fire Resistance Rating Requirements for the Exterior Walls based on the fire separation distance (in hours):

North: 0 South: 0 East: 0 West: 0

E. Mixed Occupancies: YES Nonseparated Uses: YES

F: Group B Fire Area (Office Building) = 4,600

Sprinklers Required: NO Provided: YES Type of Sprinkler System: WET PIPE (NFPA 13)

G: Number of Stories: 1 Building Height: 23'-9"

H: Actual Area per Floor (square feet): 12,356 SF

I: Tabular Area (Table 503): 9,000 SF (B Occupancy)

J: Area Modifications (Section 506.1):

a) $A_a = A_t + \left[\frac{A_t\, I_f}{100}\right] + \left[\frac{A_t\, I_s}{100}\right]$ $\quad I_f = 100\left[\frac{F}{P} - 0.25\right]\frac{W}{30}$

$75 = 100\left[\frac{519}{519} - .025\right]\frac{30}{30}$

$15930\ SF = 9000 + \left[\frac{9000\ (75)}{100}\right] + \left[\frac{13500\ (2)}{100}\right]$

b) Sum of the Ratio Calculations for Mixed Occupancies (508):

A3/B = 1091/11824 = 9.23% < 10%

Therefore A is less than 10% and is less than 1182 SF and is not considered a separate occupancy.

c) Total Allowable Area for:

1) One Story: 15,930 SF
2) Two Story: $A_a(2)$ N.A.
3) Three Story: $A_a(3)$ N.A.

d) Unlimited Area Building: Yes ____ No X Code Section: ____

K. Fire Resistance Rating Requirements for Building Elements (hours).

Element	Hours	Assembly Listing	Element	Hours	Assembly Listing
Exterior Bearing Walls	0	N.A.	Floors - Ceiling Floors	0	N.A.
Interior Bearing Walls	0	N.A.	Roofs - Ceiling Roofs	0	N.A.
Exterior Non-Bearing Walls	0	N.A.	Exterior Doors and Windows	0	N.A.
Structural Frame	0	N.A.	Shaft Enclosures	0	N.A.
Partitions - Permanent	0	N.A.	Fire Walls	0	N.A.
Fire Barriers	0	N.A.	Fire Partitions	0	N.A.
			Smoke Partitions	0	N.A.

L. Design Occupant Load: 173 (Per IBC TABLE 1004.1.1 Using 300 S.F. per Occupant for accessory storage areas, 100 S.F. for office areas, 15 S.F. for assembly areas)

Exit Width Required (1005): 14" Exit Width Provided: 36"

M. Minimum Number of Required Plumbing Facilities: (IBC SECTION 2902.1)

Actual Occupant Load: 13

a) Water Closets - Required 6 Provided 7 (3 FEMALE / 4 MALE)
b) Lavatories - Required 4 Provided 4 (2 FEMALE / 2 MALE)
c) Bath Tubs or Showers: 2 (NOT REQUIRED BY CODE)
d) Drinking Fountains: 2 Service Sinks: 1

GENERAL NOTE:
1. CONSTRUCTION OF NEW STATE BUILDINGS AND REMODELING 0F EXISTING BUILDINGS SHALL COMPLY WITH ALL THE REQUIREMENTS OF THE DFCM STANDARDS, INCLUDING ENHANCED ACCESSIBILITY. TO THE BEST OF OUR KNOWLEDGE, DRAWINGS & SPECIFICATIONS INCORPORATED HEREIN CONFORM WITH DFCM STANDARDS FOUND AT THE FOLLOWING WEB SITE: www.dfcm.utah.gov.

2. EVERY STRUCTURE, AND PORTION THEREOF, INCLUDING NONSTRUCTURAL COMPONENTS THAT ARE PERMANENTLY ATTACHED TO STRUCTURES AND THEIR SUPPORTS AND ATTACHMENTS, SHALL BE DESIGNED AND CONSTRUCTED TO RESIST TO EFFECTS OF EARTHQUAKE MOTIONS IN ACCORDANCE WITH ASCE 7-05. REFERENCE IBC SECTION 1613.1
3. FOR THE PURPOSE OF THIS SECTION, DEFERRED SUBMITTALS ARE DEFINED AS PER SECTION 106.3.4.2 OF THE IBC. SUBMITTAL DOCUMENTS FOR DEFERRED SUBMITTAL ITEMS SHALL BE SUBMITTED TO THE ENGINEER, ARCHITECT, AND BUILDING OFFICIAL FOR THEIR REVIEW FOR GENERAL CONFORMANCE WITH THE DESIGN OF THE BUILDING. DEFERRED STRUCTURAL SUBMITTALS FOR THIS PROJECT ARE:

1- OPEN WEB STEEL ROOF JOISTS AND GIRDERS
2- FIRE SPRINKLERS

CLIENT

UDOT CONNECTING COMMUNITIES

REGION 4 OFFICE REMODEL
708 SOUTH 100 WEST
RICHFIELD UTAH 84701

DESIGNER

ARCHIPLEX GROUP
architecture · planning · design services
255 Crossroad Square
Salt Lake City, UT 84115
P:(801) 961-7070
F:(801) 961-7373

CONSULTANTS

PROFESSIONAL SEAL

STATE OF UTAH
RALPH M. STANISLAW
95-310619-0301
9/20/10
LICENSED ARCHITECT

ISSUE

MARK	DATE	DESCRIPTION
	9-20-10	DFCM REVIEW COMMENTS
	8-16-10	DFCM REVIEW SUBMITTAL

DFCM PROJECT NO:	10046900
DFCM CONTRACT NO:	107453
ARCHIPLEX PROJECT NO:	1007.01
DRAWN BY:	A. PHILLIPS
CHECKED BY:	K. PHILLIPS
SCALE:	1/8"=1'-0"
DATE:	AUGUST 16, 2010

SHEET TITLE

COVER SHEET

G000

GENERAL NOTES

1. CONTRACTOR IS RESPONSIBLE FOR VERIFYING ALL DIMENSIONS AND CONDITIONS AT THE SITE BEFORE SUBMITTING A BID OR PROCEEDING WITH ANY PORTION OF THE WORK.
2. WHENEVER QUESTIONS ARISE OR CONDITIONS ARE ENCOUNTERED WHICH ARE NOT COVERED BY OR ARE IN CONFLICT WITH THE CONTRACT DOCUMENTS, CONSULT WITH THE ARCHITECT PRIOR TO TAKING ANY FURTHER ACTION.
3. ALL DIMENSIONS ARE TO FACE OF CONCRETE OR FACE OF GYPSUM BOARD, U.N.O.
4. DO NOT SCALE DRAWINGS FOR DIMENSIONS.
5. DIMENSIONS NOTED AS N.T.S. ARE TO BE FIELD VERIFIED.
6. ALL WOOD IN CONTACT WITH OR WITHIN 8" OF SOILS IS TO BE FIELD TREATED FOR MOISTURE, RODENT AND INSECT PROTECTION.
7. THE CONTRACTOR SHALL COORDINATE THE SEQUENCING OF WORK WITH THE OWNER AND ARCHITECT TO MEET THE OWNERS SCHEDULE.
8. CONTRACTOR SHALL LEAVE WORK AREAS BROOM CLEAN AND FREE OF TOOLS, EQUIPMENT, ETC., AT THE END OF EACH SHIFT. ALL CONSTRUCTION ACTIVITY SHALL BE CONTAINED WITHIN CONSTRUCTION BARRICADES OR FENCES. CONTRACTOR SHALL PROTECT OWNERS EXISTING CONSTRUCTION AND EQUIPMENT ADJACENT TO NEW CONSTRUCTION. CONTRACTOR SHALL CLEAN ALL SURFACES TO "LIKE NEW" CONDITION AT THE COMPLETION OF
9. PROVIDE WATER SUPPLY ROUGH-IN AND ELECTRICAL SUPPLY TO IRRIGATION CONTROLS. PROVIDE PVC SLEEVE UNDER PAVEMENTS AND WALKS
10. GENERAL CONTRACTOR IS RESPONSIBLE FOR COORDINATION OF WORK BETWEEN TRADES AND COORDINATION OF CONTRACT DOCUMENTS BETWEEN TRADES. SUB-CONTRACTORS ARE ALSO RESPONSIBLE FOR COORDINATION WITH OTHER TRADES AND OTHER DISCIPLINES INCLUDED IN THE CONTRACTS DOCUMENTS. IF ANY DISCREPANCIES ARE FOUND, GENERAL CONTRACTOR IS TO NOTIFY ARCHITECT IMMEDIATELY BEFORE COMMENCEMENT OF WORK. NO EXTRA COSTS TO THE PROJECT WILL BE INCURRED DUE TO FAILURE OF SUB-CONTRACTORS TO REVIEW/COORDINATE WITH OTHER TRADES.

GRAPHIC SYMBOLS

ASPHALT	GRAVEL
EARTH	CONCRETE
SAND	CAST STONE
CONC. W/ FINISH	MARBLE
TILE W/ BED	GRANITE
BRICK	STONE
CMU	PLYWOOD
LIMESTONE	WOOD FINISH
WOOD (BLOCKING)	ALUMINUM
WOOD FRAMING	BATT INSULATION
STEEL	ACOUSTICAL TILE
RIGID INSULATION	BACKER ROD AND FILLER
PLASTER	GYPSUM BOARD
COMP. FILLER	FENCE
METAL LATH	

ARCHITECTURAL LEGEND

5 / E — COLUMN CENTER LINE

A1 / AE301 — SECTION NO. OR LETTER — SHEET NO. — BUILDING SECTION

A1 / AE201 — ELEVATION NO. OR LETTER — SHEET NO. — ELEVATION

A1 / AE311 — WALL SECTION NO. OR LETTER — SHEET NO. — WALL SECTION

C4 / C3 AE402 C5 / C2 — INTERIOR ELEVATION

A1 / AE401 — DETAIL NO. / SHEET NO. — ENLARGED DETAIL

A1 / AE401 — DETAIL NO. / SHEET NO. — ENLARGED SECTION DETAIL

DETAIL NO. — XX | DETAIL NAME
SHEET NO. — XXXXX | REF. REFERENCE DRAWING | SCALE: DWG. SCALE

10 — REVISION INDICATION

REFERENCE ELEVATION OR WORKING POINT

FIRE EXTINGUISHER 8 VALVE CABINET

FIRE EXTINGUISHER

OR — EXIT SIGN WITH OR WITHOUT DIRECTIONAL ARROW

FHVC — FIRE HOSE VALVE CABINET

D100A — DOOR REFERENCE

W # — WINDOW REFERENCE

A — WALL TYPES

ABBREVIATIONS

ALT.	ALTERNATE
ALUM.	ALUMINUM
A.B.	ANCHOR BOLT
&	AND
ARCH.	ARCHITECTURAL
@	AT OR AT THE
BM.	BEAM
BLK.	BLOCK
BLKG.	BLOCKING
BD.	BOARD
BOT.	BOTTOM
BLDG.	BUILDING
CLKG.	CAULKING
C.I.	CAST IRON
CLG.	CEILING
CEM.	CEMENT
CTR.	CENTER
	CENTER LINE
CER.	CERAMIC
C.T.	CERAMIC TILE
CFCI	CONTRACTOR FURNISH, CONTRACTOR INSTALL
CFOI	CONTRACTOR FURNISH, OWNER INSTALLED
CLR.	CLEAR (...ANCE)
CLO.	CLOSET
COL.	COLUMN
CONC.	CONCRETE
CMU	CONCRETE MASONRY UNIT
CONN.	CONNECTION
CONSTR.	CONSTRUCTION
CONT.	CONTINUE/CONTINUOUS
CONTR.	CONTRACTOR
C.J.	CONTROL JOINT
CORR.	CORRIDOR
CNTR.	COUNTER
CTSK.	COUNTERSUNK
DET.	DETAIL
DIA.	DIAMETER
DIM.	DIMENSION
DN.	DOWN
D.S.	DOWNSPOUT
DWG.	DRAWING
D.F.	DRINKING FOUNTAIN
EA.	EACH
ELEC.	ELECTRIC (AL)
ELEV./EL.	ELEVATION
EQ.	EQUAL
EQUIP.	EQUIPMENT
EXP.	EXPANSION
EXT.	EXTERIOR
EW	EACH WAY
FIN.	FINISH
F.A.	FIRE ALARM
F.E.	FIRE EXTINGUISHER
F.E.C.	F.E. CABINET
FLR./FL.	FLOOR
F.D.	FLOOR DRAIN
FTG.	FOOTING
FDN.	FOUNDATION
GALV.	GALVANIZED
G.I.	GALVANIZED IRON
GA.	GAUGE
GL.	GLASS
GR.	GRADE
GND.	GROUND
GYP.	GYPSUM
GYP. BD.	GYPSUM BOARD
HDWR.	HARDWARE
HDWD.	HARDWOOD
HT.	HEIGHT
H.P.	HIGH POINT
HORIZ.	HORIZONTAL
H.B.	HOSE BIBB
HM	HOLLOW METAL
HR.	HOURS (FIRE RATING)
IN.	INCH
I.D.	INSIDE DIAMETER
INUSL.	INSULATION
INT.	INTERIOR
JAN.	JANITOR
JT.	JOINT
J-BOX	JUNCTION BOX
KIT.	KITCHEN
LAM.	LAMINATE
LAV.	LAVATORY
LT.	LIGHT
L.P.	LOW POINT
MAINT.	MAINTENANCE
MFR.	MANUFACTURER
M.O.	MASONRY OPENING
MAX.	MAXIMUM
MECH.	MECHANICAL
MEMB.	MEMBRANE
MEN	MEN'S TOILET
MTL./MET.	METAL
MIN.	MINIMUM
MIR.	MIRROR
MISC.	MISCELLANEOUS
MTD.	MOUNTED
MUL.	MULLION
NOM.	NOMINAL
N.	NORTH
N.I.C.	NOT IN CONTRACT
N.T.S.	NOT TO SCALE
NO. OR #	NUMBER
OFOI	OWNER FURNISH, OWNER INSTALL
OFCI	OWNER FURNISH, CONTRACTOR INSTALL
OFF.	OFFICE
O.C.	ON CENTER
OPNG.	OPENING
OPP.	OPPOSITE
OPP. H.	OPPOSITE HAND
O.D.	OUTSIDE DIAMETER
PTD.	PAINTED
PR.	PAIR
PART.	PARTITION
PED.	PEDESTRIAN
PLAS.	PLASTER
P. LAM.	PLASTIC LAMINATE
PL	PLATE
PM	PRESSED METAL
PLYWD.	PLYWOOD
PT.	POINT
Q.T.	QUARRY TILE
RAD.	RADIUS
R.W.L.	RAIN WATER LEADER
RE:	REFER TO
REFL.	REFLECTED
REINF.	REINFORCING
REQ.	REQUIRED
REV.	REVISED
R.	RISER
R.D.	ROOF DRAIN
RM.	ROOM
R.O.	ROUGH OPENING
SCHED.	SCHEDULE
SEAL.	SEALANT
SECT.	SECTION
S.SK.	SERVICE SINK
SHT.	SHEET
SIM.	SIMILAR
SL./SLP.	SLOPE
S.C.	SOLID CORE
SPEC.	SPECIFICATIONS
SQ.	SQUARE
STD.	STANDARD
STL.	STEEL
STOR.	STORAGE
STRUCT.	STRUCTURAL/STRUCTURE
SYM.	SYMMETRICAL
S.STL	STAINLESS STEEL
TEL.	TELEPHONE
TEMP.	TEMPORARY/TEMPERED
THK.	THICK (NESS)
T & G	TONGUE AND GROOVE
T/CONC.	TOP OF CONCRETE
T/CURB	TOP OF CURB
T.O.P.	TOP OF PLATE
T/WALL	TOP OF WALL
T.	TREAD
TYP.	TYPICAL
UNF.	UNFINISHED
U.N.O.	UNLESS NOTED OTHERWISE
VAR.	VARY OR VARIES
VERT.	VERTICAL
V.T.R.	VENT THROUGH ROOF
W/	WITH
WD.	WOOD
WP.	WATERPROOF
WSCT.	WAINSCOT
W/O	WITHOUT
W.P.	WORKING POINT
W.R.	WATER RESISTANT

INDEX OF DRAWINGS

G000 COVER SHEET
G001 GENERAL NOTES, ABBREVIATIONS, SYMBOLS, LEGEND & DRAWING INDEX
G002 MASTER KEYNOTE LIST
G003 SPECIAL INSPECTION AND TESTING FORM

CIVIL

C100 BASE BID – SITE GRADING PLAN – SITE UTILITY PLAN
C101 BASE BID & ADD ALT #1 – SITE GRADING PLAN – SITE UTILITY PLAN
C102 OVERALL SITE
C103 CIVIL DETAILS
C104 SWPP
C105 SWPP DETAILS

ARCHITECTURAL

AD101 DEMOLITION PLAN
AD102 SLAB DEMOLITION & PREPARATION PLAN
AE100 EXITING PLAN
AE101 LEVEL ONE FLOOR PLAN
AE102 LEVEL TWO FLOOR PLAN
AE103 LEVEL ONE WALL TYPES & FINISH PLAN
AE104 LEVEL TWO WALL TYPES & FINISH PLAN
AE105 FURNITURE PLAN (FOR REFERENCE ONLY)
AE121 LEVEL ONE REFLECTED CEILING PLAN
AE122 LEVEL TWO REFLECTED CEILING PLAN
AE141 ROOF PLAN
AE201 EXTERIOR ELEVATIONS
AE202 ADD ALTERNATE EXTERIOR ELVATIONS
AE301 BUILDING SECTIONS
AE311 WALL SECTIONS
AE312 WALL SECTIONS
AE313 PARTIAL BUILDING SECTIONS
AE401 ENLARGED RESTROOM PLAN, INTERIOR ELEVATIONS AND DETAILS
AE402 STAIR PLAN, SECTION AND DETAILS
AE403 ENLARGED FLOOR PLANS AND MILLWORK DETAILS AND ELEVATIONS
AE501 WALL TYPES
AE502 INTERIOR DETAILS
AE503 INTERIOR DETAILS
AE504 EXTERIOR DETAILS
AE505 EXTERIOR DETAILS
AE600 DOOR SCHEDULE, DOOR & FRAME TYPES, FINISH SCHEDULE
AE601 DOOR DETAILS
AE602 WINDOW TYPES, SCHEDULE & DETAILS
AE603 WINDOW DETAILS

STRUCTURAL

S001 GENERAL STRUCTURAL NOTES
S002 GENERAL STRUCTURAL NOTES
S101 FOOTING AND FOUNDATION PLAN
S102 MEZZANINE FLOOR FRAMING PLAN
S103 ROOF FRAMING PLAN
S301 SCHEDULES
S302 SCHEDULES
S401 BRACED FRAME ELEVATIONS, SCHEDULE AND DETAILS
S501 FOOTING AND FOUNDATION DETAILS
S502 FOOTING AND FOUNDATION DETAILS
S601 FLOOR FRAMING DETAILS
S602 FLOOR FRAMING DETAILS
S701 ROOF FRAMING DETAILS
S702 ROOF FRAMING DETAILS

MECHANICAL

MD101 MECHANICAL DEMOLITION PLAN
M101 MAIN LEVEL MECHANICAL PLAN
M102 MEZZANINE MECHANICAL PLAN
M103 MAIN LEVEL MECHANICAL PIPING PLAN
M104 MEZZANINE LEVEL MECHANICAL PIPING PLAN
M401 MEZZANINE MECHANICAL ROOM PLAN
M501 MECHANICAL DETAILS
M502 MECHANICAL DETAILS
M503 MECHANICAL DETAILS
M504 MECHANICAL DETAILS
M601 MECHANICAL SCHEDULES & DETAILS

PD101 PLUMBING DEMOLITION PLAN
P101 MAIN LEVEL PLUMBING FLOOR PLAN
P102 MEZZANINE LEVEL PLUMBING PLAN
P401 ENLARGED PLUMBING PLANS
P501 PLUMBING SCHEDULES & DETAILS
P502 PLUMBING DETAILS
P601 PLUMBING SCHEDULES & LEGENDS

ELECTRICAL

E001 GENERAL NOTES, DETAILS AND SCHEDULES
E002 DETAILS
E003 PANEL SCHEDULES
ED101 LEVEL ONE DEMOLITION PLAN – ELECTRICAL
E100 SITE PLAN – ELECTRICAL
E101 LEVEL ONE FLOOR PLAN – ELECTRICAL
E102 LEVEL TWO FLOOR PLAN – ELECTRICAL
E103 ROOF PLAN ELECTRICAL
E104 ENLARGED PARTIAL FLOOR PLANS – ELECTRICAL
E201 LEVEL ONE FLOOR PLAN – LIGHTING
E202 LEVEL TWO FLOOR PLAN – LIGHTING

FIRE PROTECTION

FPD101 FIRE PROTECTION DEMOLITION PLAN
FP101 MAIN LEVEL FIRE PROTECTION PLAN
FP102 MEZZANINE LEVEL FIRE PROTECTION PLAN

CLIENT

UDOT CONNECTING COMMUNITIES

REGION 4 OFFICE REMODEL
708 SOUTH 100 WEST
RICHFIELD UTAH 84701

DESIGNER

ARCHIPLEX GROUP
architecture • planning • design services
255 Crossroad Square
Salt Lake City, UT 84115
P:(801) 961-7070
F:(801) 961-7373

CONSULTANTS

PROFESSIONAL SEAL

RALPH M. STANISLAW
95-310818-0301
9/20/10
LICENSED ARCHITECT

ISSUE

MARK	DATE	DESCRIPTION
	9-20-10	DFCM REVIEW COMMENTS
	8-16-10	DFCM REVIEW SUBMITTAL

DFCM PROJECT NO:	10046900
DFCM CONTRACT NO:	107453
ARCHIPLEX PROJECT NO:	1007.01
DRAWN BY:	A. PHILLIPS
CHECKED BY:	R. STANISLAW
SCALE:	NONE
DATE:	AUGUST 16, 2010

SHEET TITLE

GENERAL NOTES, ABBREVIATIONS, LEGENDS AND DRAWING INDEX

G001

MASTER KEYNOTE LIST – (APPLIES TO ARCHITECTURAL DRAWINGS ONLY)

DIVISION 2 SITEWORK

02200 EARTHWORK

02200.A0 COMPACTED FILL
02200.B0 GRAVEL BASE

02520 PAVING

02520.A0 CONCRETE PAVING
02520.C0 CONCRETE CURB
02520.F0 THICKENED EDGE
02520.G4 CONSTRUCTION JOINT
02520.L3 CONTINUOUS REINFORCING (SIZE, SPACING)

DIVISION 3 CONCRETE

03055 SALT & WATER BARRIER FOR EXT. CONCRETE

03055.A0 SALT AND WATER BARRIER

03300 CAST-IN-PLACE CONCRETE

03300.A0 CONCRETE – SLAB ON GRADE
03300.A1 CONCRETE SLAB-ON-GRADE – SEE STRUCTURAL
03300.A2 CONCRETE SLAB-ON-GRADE (THICKNESS)
03300.B1 CONCRETE SLAB – SEE STRUCTURAL
03300.B2 CONCRETE SLAB (THICKNESS)
03300.C0 FOOTING
03300.C1 FOOTING – SEE STRUCTURAL
03300.D0 CONCRETE PAD
03300.F0 CAST-IN-PLACE REINFORCED CONCRETE
03300.G0 CONCRETE OVER METAL DECK – SEE STRUCTURAL
03300.H0 FOUNDATION WALL – SEE STRUCTURAL
03300.H1 CONCRETE PIER – SEE STRUCTURAL
03300.J0 REINFORCING
03300.J1 REINFORCING – SEE STRUCTURAL
03300.K1 CONCRETE PIPE BASE
03300.M1 MOISTURE BARRIER
03300.M2 UNDER-SLAB VAPOR BARRIER
03300.N0 CONCRETE CURB
03300.P3 CONTROL JOINT – SEE STRUCTURAL
03300.P4 CONSTRUCTION JOINT
03300.P5 ISOLATION JOINT
03300.P6 CHAMFER JOINT
03300.P7 SAWCUT CONSTRUCTION JOINT, TYP.
03300.Q1 CONCRETE BOLLARD PAINTED (SEE STRUCTURAL)
03300.R0 3/4" CHAMFER
03300.S1 SPLASH BLOCK
03300.T1 CONCRETE AT STAIR TREAD

03925 CONCRETE RESUFACING & REHABILITATION

03925.A0 SELF-LEVELING CONCRETE TOPPING SLAB

DIVISION 4 MASONRY

04200 CONCRETE UNIT MASONRY

04200.A0 CMU – SEE STRUCTURAL
04200.A1 CMU TO MATCH ADJACENT – SALVAGED FROM CMU DEMOLITION
04200.A2 CMU (SIZE)
04200.A3 8" CMU – SPLIT FACE – COLOR TO MATCH EXISTING
04200.A4 8" CMU – HONED – COLOR TO MATCH EXISTING
04200.A5 8" CMU – HONED – NATURAL GRAY
04200.A6 8" CMU – HONED – RED TO MATCH EXISTING
04200.A7 4" CMU – HONED – COLOR TO MATCH EXISTING
04200.B0 GROUT SOLID
04200.C1 BOND BEAM – SEE STRUCTURAL
04200.D1 CMU LINTEL – SEE STRUCTURAL
04200.G1 REINFORCING – SEE STRUCTURAL
04200.K2 ANCHOR BOLTS (DIAMETER, SPACING)
04200.M0 WEEP HOLES
04200.N0 METAL FLASHING
04200.R0 MASONRY CONTROL JOINT

DIVISION 5 METALS

05120 STRUCTURAL STEEL FRAMING

05120.A0 STEEL BEAM – SEE STRUCTURAL
05120.B0 STEEL COLUMN – SEE STRUCTURAL
05120.C0 TUBE STEEL BEAM – SEE STRUCTURAL
05120.D1 TUBE STEEL COLUMN – SEE STRUCTURAL

05210 STEEL JOIST FRAMING

05210.A1 STEEL JOISTS – SEE STRUCTURAL
05210.A2 STEEL JOISTS – SEE STRUCTURAL – PRIMED AND PAINTED
05210.B2 STEEL GIRDERS – SEE STRUCTURAL – PRIMED AND PAINTED

05310 STEEL DECKING

05310.A1 METAL DECK – SEE STRUCTURAL

05400 COLD-FORMED METAL FRAMING

05400.A0 STRUCTURAL STEEL STUDS – SEE STRUCTURAL DRAWINGS FOR SIZE, SPACING AND GAUGE
05400.A1 6" STRUCTURAL STEEL STUDS – SEE STRUCTURAL DRAWINGS FOR SPACING AND GAUGE
05400.A2 3 5/8" STRUCTURAL STEEL STUDS – SEE STRUCTURAL DRAWINGS FOR SPACING AND GAUGE
05400.B0 STRUCTURAL STEEL TRACK – SEE STRUCTURAL

05500 METAL FABRICATIONS

05500.A1 STEEL ANGLE – SEE STRUCTURAL
05500.A2 STEEL ANGLE (SIZE) – GALVANIZED
05500.A3 STEEL ANGLE (SIZE) – GALVANIZED – PRIMED AND PAINTED
05500.B0 CLIP ANGLE
05500.B2 CLIP ANGLE (SIZE)
05500.C1 SHEET METAL ANGLE – 22 GA. – GALVANIZED (SIZE)
05500.D0 CHANNEL (SIZE)
05500.D1 CHANNEL – SEE STRUCTURAL
05500.D2 HAT CHANNEL (SIZE)
05500.D3 CHANNEL – SEE STRUCTURAL – PRIMED AND PAINTED
05500.E0 STEEL PLATE (SIZE)
05500.E1 STEEL PLATE – SEE STRUCTURAL
05500.E2 STEEL PLATE (SIZE) – GALVANIZED
05500.E3 BENT PLATE – SEE STRUCTURAL
05500.F1 THRU BOLT (DIAMETER)
05500.G1 BENT BAR TAB (THICKNESS)
05500.G2 BARTAB (THICKNESS)
05500.H1 LAG BOLTS (DIAMETER)
05500.J1 PIPE BOLLARD (DIAMETER) – GALVANIZED & PAINTED
05500.L1 ALUMINUM BREAK METAL SURROUND – FINISH TO MATCH WINDOW
05500.N1 EPOXY ANCHOR (SIZE)
05500.P0 ANCHOR BOLT(S)
05500.P1 ANCHOR BOLTS (DIAMETER, SPACING)
05500.V0 FLOOR PLATE
05500.X1 STRUCTURAL STEEL STUD (SEE STRUCTURAL FOR GA. & PLACEMENT)
05500.X2 STEEL RUNNER (SEE STRUCTURAL)
05500.Y0 AIR DUCT SCREEN
05500.Y1 AIR DUCT SCREEN – SEE MECHANICAL – PAINTED

05510 METAL STAIRS

05510.E1 NON SKID SURFACE AT NOSING
05510.F1 STEEL STRINGER – (SIZE)
05510.G1 3/16" STEEL CLOSURE PLATE
05510.H1 PRE-FORMED, CONC. FILLED METAL PAN STAIR TREAD – (SIZE)
05510.J1 METAL PAN STAIR SUPPORT – (SIZE)
05510.J2 PAN ANCHORAGE – (SIZE)

05521 PIPE AND TUBE RAILINGS

05521.B4 1 1/2" O.D. PIPE HANDRAIL – PAINTED
05521.C2 ESCUTCHEON WITH EASED EDGES (SIZE)
05521.D1 PIPE RAIL SUPPORT – PAINTED

DIVISION 6 WOOD AND PLASTICS

06105 MISCELLANEOUS CARPENTRY

06105.A0 PRESSURE TREATED WOOD NAILER
06105.A2 TAPERED WOOD CANT
06105.L2 BLOCKING AS REQUIRED
06105.P1 2X4
06105.P2 2X6
06105.P6 4X4
06105.P9 2 x FRAMING, FIRE TREATED
06105.P10 PRESSURE TREATED WOOD TIMBER (SIZE)
06105.Q2 SHIM AS REQUIRED
06105.R2 SHEATHING – PLYWOOD (THICKNESS)
06105.R4 PLYWOOD PANEL (THICKNESS)
06105.V1 EXTERIOR GRADE SHEATHING – PLYWOOD (THICKNESS)

06402 INTERIOR ARCHITECTURAL WOODWORK

06402.A0 SILL
06402.B1 PLASTIC LAMINATE BACKSPLASH (HEIGHT)
06402.C1 PAINT GRADE WOOD CAP (THICKNESS)
06402.D1 P. LAM. ON 1/4" PLYWOOD BACKING (FINISH)
06402.E1 WIRE PULL
06402.F1 PROVIDE WHITE MELAMINE FINISH AT ALL INTERIOR SURFACES
06402.G1 3/4" PARTICLE BOARD CABINET TOP W/PLAM (FINISH)
06402.G2 3/4" PARTICLE BOARD CABINET BASE W/PLAM (FINISH)
06402.H0 SHELF(VES)
06402.H1 ADJUSTABALE SHELVES (FINISH)
06402.H2 SHELVING (DEPTH)
06402.J1 RECESSED SHELF BRACKETS
06402.K0 BASE UNIT (FINISH)
06402.K2 BASE UNIT W/ADJ. SHELF(VES) (FINISH)
06402.K3 BASE UNIT W/DRAWERS (FINISH)
06402.K4 BASE UNIT W/DRAWER & ADJ. SHELF(VES) (FINISH)
06402.L1 WALL UNIT (FINISH)
06402.L2 WALL UNIT W/ADJ. SHELF(VES) (FINISH)
06402.M1 3/4" PARTICLE BOARD SCREEN (FINISH)
06402.P0 COUNTERTOP
06402.P2 COUNTERTOP – P. LAM. ON 3/4" PLYWOOD

06651 SOLID SURFACE FABRICATIONS

06651.A0 3/4" SOLID SURFACE WINDOW SILL – SEE FINISH SCHEDULE
06651.B0 SOLID SURFACE COUNTER TOP
06651.C0 SOLID SURFACE BACKSPLASH

DIVISION 7 THERMAL AND MOISTURE PROTECTION

07190 WATER REPELLANTS

07190.A0 CLEAR WATER RESISTANT COATING

07210 BUILDING INSULATION

07210.A0 BATT INSULATION
07210.A1 BATT INSULATION (R-VALUE)
07210.A3 VINYL-FACED BATT INSULATION (R-VALUE) MECHANICALLY FASTENED TO METAL DECK ABOVE – TAPE EDGES CONTINUOUS
07210.B0 RIGID INSULATION
07210.B1 RIGID INSULATION (R-VALUE)
07210.C0 RIGID INSULATION FOIL FACED W/VAPOR BARRIER (R-VALUE)
07210.C1 RIGID INSULATION (CONTINUOUSLY ADHERED TO CMU) W/FOIL FACED VAPOR BARRIER TOWARDS INTERIOR (R-VALUE)
07210.D0 VAPOR BARRIER
07210.E0 FOUNDATION WALL/UNDER SLAB INSULATION (THICKNESS)

07410 MANUFACTURED ROOF PANELS, GUTTERS & FLASHING

07410.A0 STANDING SEAM METAL ROOF
07410.A1 RAIN GUTTER
07410.A2 DOWNSPOUT
07410.B0 FASTENER
07410.B1 METAL REGLET
07410.C0 ROOFING FELT
07410.E0 BREAK METAL
07410.G0 FLASHING – FINISHED TO MATCH ROOF COLOR
07410.G3 FLASHING AT WINDOW JAMB, HEAD AND SILL
07410.G4 DRIP EDGE AT WINDOW HEAD AND SILL, FINISH TO MATCH WINDOW
06410.G5 FLASHING WITH DRIP EDGE
07410.H0 METAL SIDING
07410.J1 METAL WALL PANEL
07410.J2 JAMB TRIM
07410.K0 SEALANT
07410.L0 METAL FASCIA
07410.L2 METAL SOFFIT
07410.M1 ICE & WATER SHIELD
07410.N1 PARAPET CAP FLASHING
07410.P1 PANEL TRIM
07410.P2 RAKE TRIM
07410.P3 GUTTER STRAPS
07410.Q1 CLIP
07410.R0 NEOPRENE CLOSER
07410.R1 METAL EAVE CLOSURE
07410.T1 STANDING SEAM METAL ROOF CANOPY

07530 THERMOSET (EPDM) ROOFING MEMBRANE

07530.A0 EPDM ROOFING MEMBRANE
07530.A2 UNCURED EPDM FLASHING
07530.A3 TERMINATION BAR
07530.B1 LAP SEALANT PER MANUFACTURER

07729 MULTI LAYERED WATERPROOF FLOOR SURFACING

07550.A0 MULTI LAYERED WATERPROOF FLOOR SURFACING

07621 SHEET METAL AND MANUFACTURED SOFFITS

07621.A2 18 GA. X CONT. GALVANIZED HOLD DOWN CLIP
07621.D1 NEW METAL DOWNSPOUT ATTACHED TO EXISTING
07621.G1 GALVANIZED SHEET METAL GUTTER
07621.F1 GALVANIZED CORRUGATED METAL PANEL
07621.H1 24 GA. GALVANIZED METAL COLLAR

07729 ROOF SNOW GUARDS

07729.A0 STANDING SEAM METAL ROOF 2-PIPE SNOWGUARD SYSTEM

07901 JOINT SEALANTS

07901.A0 CONT. SEALANT
07901.A1 CONT. SEALANT BOTH SIDES
07901.A2 CONT. SEALANT WITH BACKER ROD
07901.B0 ASPHALT SATURATED FIBERBOARD
07901.C0 CONT. CAULK
07901.D0 JOINT FILLER
07901.G0 BACKER ROD
07901.H1 CONCRETE JOINT WATER PROOF SEALANT
07901.H2 JOINT SEALANT

DIVISION 8 DOORS AND WINDOWS

08111 STANDARD STEEL DOORS AND FRAMES

08111.A0 PRESSED METAL FRAME
08111.A1 GROUT-FILLED PRESSED METAL FRAME
08111.B0 HOLLOW METAL DOOR
08111.C0 JAMB ANCHOR

08211 FLUSH WOOD DOORS

08211.A0 WOOD DOOR

08410 METAL-FRAMED STOREFRONTS

08410.A0 ALUMINUM STOREFRONT FRAME
08410.B0 ALUMINUM DOOR
08410.C0 ALUMINUM BREAK METAL – SHAPE TO MATCH FRAME
08410.D0 ALUMINUM WINDOW

08710 DOOR HARDWARE

08710.A0 THRESHOLD
08710.B0 DOOR SWEEP
08710.C0 WEATHERSTRIPPING

08800 GLAZING

08800.A0 GLAZING AS SCHEDULED
08800.C0 WIRE GLASS
08800.G1 CLEAR INSULATING GLASS
08800.G2 TEMPERED GLASS
08800.G3 OPAQUE INSULATING GLASS
08800.G4 SPANDREL GLASS

DIVISION 9 FINISHES

09255 GYPSUM BOARD ASSEMBLIES

09255.A0 GYPSUM BOARD
09255.A1 GYPSUM BOARD (THICKNESS)
09255.A2 WATER RESISTANT GYPSUM BOARD (THICKNESS)
09255.B2 TYPE 'X' GYPSUM BOARD (THICKNESS)
09255.C3 CEMENT BOARD (THICKNESS)
09255.H0 METAL STUD
09255.H1 METAL STUDS (SIZE, SPACING)
09255.H2 METAL STUD BRACING AS REQUIRED
09255.J0 METAL RUNNER
09255.J1 METAL TOP TRACK
09255.K0 DOUBLE STUDS
09255.K1 DOUBLE STUDS (GAGE)
09255.L1 7/8" X 1-3/8" METAL ANGLE
09255.L2 2-1/2" X 2-1/2" METAL ANGLE
09255.M2 METAL CORNER BEAD (TYP)
09255.M3 METAL J-MOLD
09255.P0 Z-FURRING CHANNEL
09255.Q0 7/8" METAL FURRING CHANNEL
09255.R2 CHANNEL (SIZE, SPACING)
09255.S1 8 GA. WIRE HANGERS (SPACING)
09255.S2 18 GA. WIRE TIES
09255.S3 18 GA. METAL MOUNTING STRIPS
09255.S4 BRACING WIRE
09255.S5 VERTICAL WIRE HANGER (SIZE)
09255.U1 SUSPENDED CEILING SYSTEM
09255.U2 CROSS CHANNEL
09255.U3 3/4" CONDUIT COMPRESSION BRACE
09255.V0 EDGE TRIM (TYP)
09255.V2 LC-BEAD (PREFERRED USG 200-A TRIM)
09255.V4 VINYL TRIM

09300 TILE

09300.A1 FLOOR TILE – SEE FINISH SCHED.
09300.A2 FLOOR TILE, RANDOM PATTERN – SEE FINISH SCHED.
09300.B1 WALL TILE – SEE FINISH SCHED.
09300.C0 TILE BASE
09300.D1 BULLNOSE TRIM UNIT
09300.E1 MOSAIC TILE – SEE FINISH SCHED.
09300.F1 SEALED GROUT JOINT
09300.G1 MORTAR BED
09300.G4 WATERPROOF MEMBRANE

09510 ADHERED ACOUSTICAL TILE CEILINGS

09510.A0 ADHERED ACOUSTICAL CEILING TILE

09511 ACOUSTICAL PANEL CEILINGS

09511.A0 LAY-IN ACOUSTICAL CEILING SYSTEM
09511.A1 HEAVY DUTY "T" BAR GRID SYSTEM
09511.A2 CEILING SUSPENSION SYSTEM – MAIN RUNNER
09511.A3 CEILING SUSPENSION SYSTEM – CROSS RUNNER
09511.B1 VERTICAL WIRE HANGER (SIZE)
09511.B2 BRACING WIRE (SIZE)
09511.C1 COMPRESSION STRUTS
09511.D1 METAL ANGLE EDGE
09511.E1 LAY IN ACOUSTICAL CEILING PANEL
09511.F1 SPREADER BAR REQUIRED TO KEEP PERIMETER COMPONENTS FROM SPREADING APART

09660 RESILIENT TILE FLOORING

09660.A1 VINYL COMPOSITION TILE
09660.B1 VINYL TRANSITION STRIP

09678 RESILIENT WALL BASE AND ACCESSORIES

09678.E1 RUBBER BASE (SIZE)

09681 CARPET TILE

09681.A0 CARPET
09681.C0 METAL EDGE STRIP

09900 PAINTING

09900.A1 PAINT – SEE FINISH SCHED.

DIVISION 10 SPECIALTIES

10100 VISUAL DISPLAY SURFACES

10100.C0 MARKER BOARD 48x96, ALUMINUM CONFERENCE CABINET WITH ONE OPERABLE TACKBOARD PANEL (LEFT ONLY) AS SPECIFIED
10100.C1 MARKER BOARD 48x96, ALUMINUM CONFERENCE CABINET WITH ONE OPERABLE TACKBOARD PANEL, (RIGHT ONLY) AS SPECIFIED
10100.C2 MARKER BOARD 48x96, ALUMINUM CONFERENCE CABINET WITH TWO OPERABLE TACKBOARD PANELS AS SPECIFIED

10155 TOILET COMPARTMENTS

10155.A0 TOILET STALL PARTITION
10155.A1 DOUBLE PARTITION WALL
10155.B0 URINAL STALL PARTITION

10425 SIGNS

10425.A0 ROOM SIGNAGE
10425.B0 EMPLOYEE OFFICE SIGNAGE
10425.B1 EMPLOYEE CUBICAL SIGNAGE
10425.C1 ACCESIBLE RESTROOM SIGNAGE
10425.D0 ADA COMPLIANT ENTRANCE SIGN
10425.E1 VINYL SIGNAGE – UDOT LOGO
10425.E2 VINYL SIGNAGE – UDOT BUILDING ADDRESS – VERIFY EXACT NUMBER WITH OWNER

10522 FIRE EXTINGUISHERS, CABINETS AND ACCESSORIES

10522.A0 SURFACE MOUNTED FIRE EXTINGUISHER
10522.B0 SEMI-RECESSED FIRE EXTINGUISHER CABINET W/FIRE EXTINGUISHER – SEE DETAIL B4/AE502

10650 OPERABLE PARTITION WALLS

10650.A0 OPERABLE PARTITION WALL
10650.B0 ALUMINUM PANEL GUIDE
10650.C0 HANGER ROD

10800 TOILET AND BATH ACCESSORIES

10800.B0 PAPER TOWEL DISPENSER & WASTE RECEPTACLE
10800.B1 RECESSED PAPER TOWEL DISPENSER & WASTE RECEPTACLE
10800.C0 RECESSED TOILET TISSUE DISPENSER
10800.C1 RECESSED TOILET TISSUE DISPENSER/SAN. NAP. DISPOSAL
10800.D0 MOP RACK
10800.E0 GRAB BAR
10800.E1 GRAB BAR (SHOWER)
10800.F0 ROBE HOOK
10800.F1 DOUBLE PRONG ROBE HOOK
10800.H0 SOAP DISPENSER
10800.H1 SOAP DISH
10800.P1 SHOWER CURTAIN ROD
10800.P2 SHOWER CURTAIN
10800.R1 FRAMED MIRROR (SIZE)
10800.T1 ADA-COMPLIANT FOLDING SHOWER SEAT
10800.T0 METAL SHELF (SIZE)

DIVISION 11 EQUIPMENT

11130 AUDIO-VISUAL EQUIPMENT

11130.A0 MANUAL-PULL PROJECTION SCREEN

11999 CIRCULATION FANS

11999.A0 8' DIA. HIGH VOLUME, LOW SPEED CEILING FAN

DIVISION 12 FURNISHINGS

12485 ROLL-UP MATS AND FRAMES

12485.A1 ROLL-UP ENTRANCE FLOORING MAT WITH TAPERED FRAME

12511 HORIZONTAL LOUVER BLINDS

12511.A0 HORIZONTAL LOUVER BLINDS

DIVISION 13 SPECIAL CONSTRUCTION

13700 ELECTRONIC SECURITY SYSTEMS

13750.A1 PROX CARD READER – SEE ELECTRICAL

DIVISION 15 EQUIPMENT

15000 MECHANICAL

15050.A0 GAS METER – SEE MECHANICAL
15050.A1 MECH. PENETRATIONS
15050.A2 PIPE INSULATION AT ALL EXPOSED PIPE
15050.A3 PIPE INSULATION
15050.C1 DRAIN PIPE – SEE MECHANICAL
15050.D0 VAPOR BARRIER
15400.A1 URINAL, ACCESSIBLE
15400.B1 SINK FAUCET W/ADA LEVER HANDLES
15400.C0 UTILITY SINK
15400.E2 FLOOR DRAIN
15400.F0 TOILET
15400.G0 ADA-COMPLIANT SHOWER HEAD – SEE PLUMBING
15400.H0 DUAL-LEVEL DRINKING FOUNTAIN
15400.J0 ROOF DRAIN & OVERFLOW DRAIN
15400.J1 CAST IRON DOME – PRIMARY DRAIN
15400.J2 CAST IRON DOME – SECONDARY DRAIN
15400.J3 DRAIN CLAMP
15400.J4 2" EXTERNAL WATER DAM
15400.K0 LAMB'S TONGUE AT OVERFLOW DRAIN
15700.B0 CONDENSING UNIT – SEE MECHANICAL
15700.C0 EXHAUST FAN – SEE MECHANICAL
15700.C1 EXHAUST FAN VENT – SEE MECHANICAL
15700.D0 LOUVER WITH BIRD SCREEN – SEE MECHANICAL
15800.A0 VENT – SEE MECHANICAL
15800.B0 MECHANICAL DUCTWORK – SEE MECHANICAL

DIVISION 16 ELECTRICAL

16000 ELECTRICAL

16135.A1 ELECTRICAL METER – SEE ELECTRICAL
16135.B1 EMERGENCY DISCONNECT – SEE ELECTRICAL
16135.C1 ELECTRICAL PANEL – SEE ELECTRICAL
16511.A0 INTERIOR LIGHTS
16511.B0 INTERIOR WALL MOUNTED LIGHTS
16511.C0 EXTERIOR WALL MOUNTED LIGHTS

CLIENT

UDOT CONNECTING COMMUNITIES

REGION 4 OFFICE REMODEL
708 SOUTH 100 WEST
RICHFIELD UTAH 84701

DESIGNER

ARCHIPLEX GROUP
architecture · planning · design services
255 Crossroad Square
Salt Lake City, UT 84115
P:(801) 961-7070
F:(801) 961-7373

CONSULTANTS

PROFESSIONAL SEAL

RALPH M. STANISLAW
95-310619-0301
9/20/10
LICENSED ARCHITECT

ISSUE

MARK	DATE	DESCRIPTION
	9-20-10	DFCM REVIEW COMMENTS
	8-16-10	DFCM REVIEW SUBMITTAL

DFCM PROJECT NO:	10046900
DFCM CONTRACT NO:	107453
ARCHIPLEX PROJECT NO:	1007.01
DRAWN BY:	A. PHILLIPS
CHECKED BY:	R. STANISLAW
SCALE:	NONE
DATE:	AUGUST 16, 2010

SHEET TITLE

MASTER KEYNOTE LIST

G002

KEYNOTES

1. – ADA RAMP AS PER IBC, ICC, ANSI 117.1 SEE DETAIL H/C103
2. – LANDSCAPED AREA, ALL LANDSCAPING WILL BE COMPLETED BY UDOT.
3. – TIE INTO EXISTING LINE
4. – CURB & GUTTER PROVIDED BY UDOT
5. – FENCE PROVIDED BY UDOT
6. – EXISTING LANDING
7. – PAD FOR CONDENSING UNIT SEE MECHANICAL FOR SIZE & LOCATION. UNLESS NOTED OTHERWISE, SLAB TO BE 5" THICK W/ #4 @ 16" O.C. BOTH DIRECTIONS CENTERED IN SLAB
8. – 5' SIDEWALK OVER 4" COMPACTED ROAD BASE, 4" THICK.CONCRETE,4,000PSI, 5%(+−)2% AIR.
   – PREPARATION OF SUBGRADE FOR CONCRETE WALKS.
   A. EXCAVATE EXISTING MATERIAL TO A MINIMUM DEPTH OF 8" TO ALLOW FOR 4" OF CONCRETE OVER 4" OF UNTREATED GRANULAR BASE.
   B. IN ALL AREAS REQUIRING STRUCTURAL FILL, IT SHALL BE CONSTRUCTED USING IMPORTED MATERIAL AND METHODS CONFORMING TO GEOTECHNICAL REPORT AND SECTION 02200.
   C. CONTINUE PLACING COMPACTED FILL UNTIL SUBGRADE ELEVATION AT PAVING AREAS ARE REACHED.
   AT SLAB AREA ALLOW FOR 4" OF CONCRETE OVER 4" OF FREE DRAINING GRAVEL.
   D. ALL LIFTS OF STRUCTURAL FILL TO BE OBSERVED AND TESTED PRIOR TO PLACING SUBSEQUENT LIFTS.
9. – 5'x5'x4" THICK CONCRETE LANDING (LANDING CONSTRUCTION TO FOLLOW KEY NOTE 8 WHERE APPLICABLE)
10. – PREPARATION FOR SUB-GRADE AND NEW ASPHALT PAVING. CONTRACTOR TO PREP AREA, UDOT WILL PAVE AREA.
11. – CURB CUT, REMOVE EXISTING SIDEWALK AND CURB
12. – EXISTING LOADING DOCK TO BE REMOVED, AND DISPOSED OF. CONTRACTOR TO REMOVE ALL CONCRETE THEN TO BE FILLED W/ STRUCTURAL FILL COMPACTED IN 8" LIFTS TO 95% MAXIMUM DRY DENSITY AS PER ASTM D-1557. PERFORM COMPACTION TESTS FREQUENTLY.
13. – EXISTING FIRE LINE
14. – APPROX. 200 LF OF 6" DUCTILE IRON FIRE LINE, COORDINATE W/ MECHANICAL PLANS.
15. – EXISTING SEWER LATERAL
16. – EXTEND SEWER LATERAL, SEE MECHANICAL PLANS.
17. – LANDINGS. MAX RISE EQUAL 7"
18. – SEE DETAIL A/C102 FOR TRENCH REQUIREMENTS.
19. – GENERAL CONTRACTOR TO SAW-CUT EXISTING ASPHALT, AND REMOVE AND DISPOSE ASPHALT FOR SIDEWALK INSTALLATION AS REQUIRED.
20. – 2" PVC CONDUIT SLEEVE
21. – BOLLARD, SEE DETAIL G/C103
22. – PLACE 2" WATERLINE IN SAME TRENCH
23. – HOT TAP EXISTING WATER MAIN
24. – 2" POLY-PIPE, 36" BURY DEPTH
25. – NEW WATER METER VAULT, AND SETTER. RE-USE EXISTING 2" WATER METER.
26. – INSTALL 2" STOP AND WASTE VALVE AND RISER. EXTEND 2" LINE FROM VALVE TO GRADE.
27. – ADA STALL SIGN MARKER SEE DETAIL F/C103
28. – APPLY SALT AND WATER BARRIER AT ALL EXTERIOR CONCRETE PADS, SIDEWALKS, RAMPS, ECT. SEE SPECIFICATIONS SECTION 03055.
29. – SEE DETAIL J/C103 FOR CURB PROFILE

– AREA TABLE:
SIDEWALK: 2261 SF
CONSTRUCT CURB: 54 LF

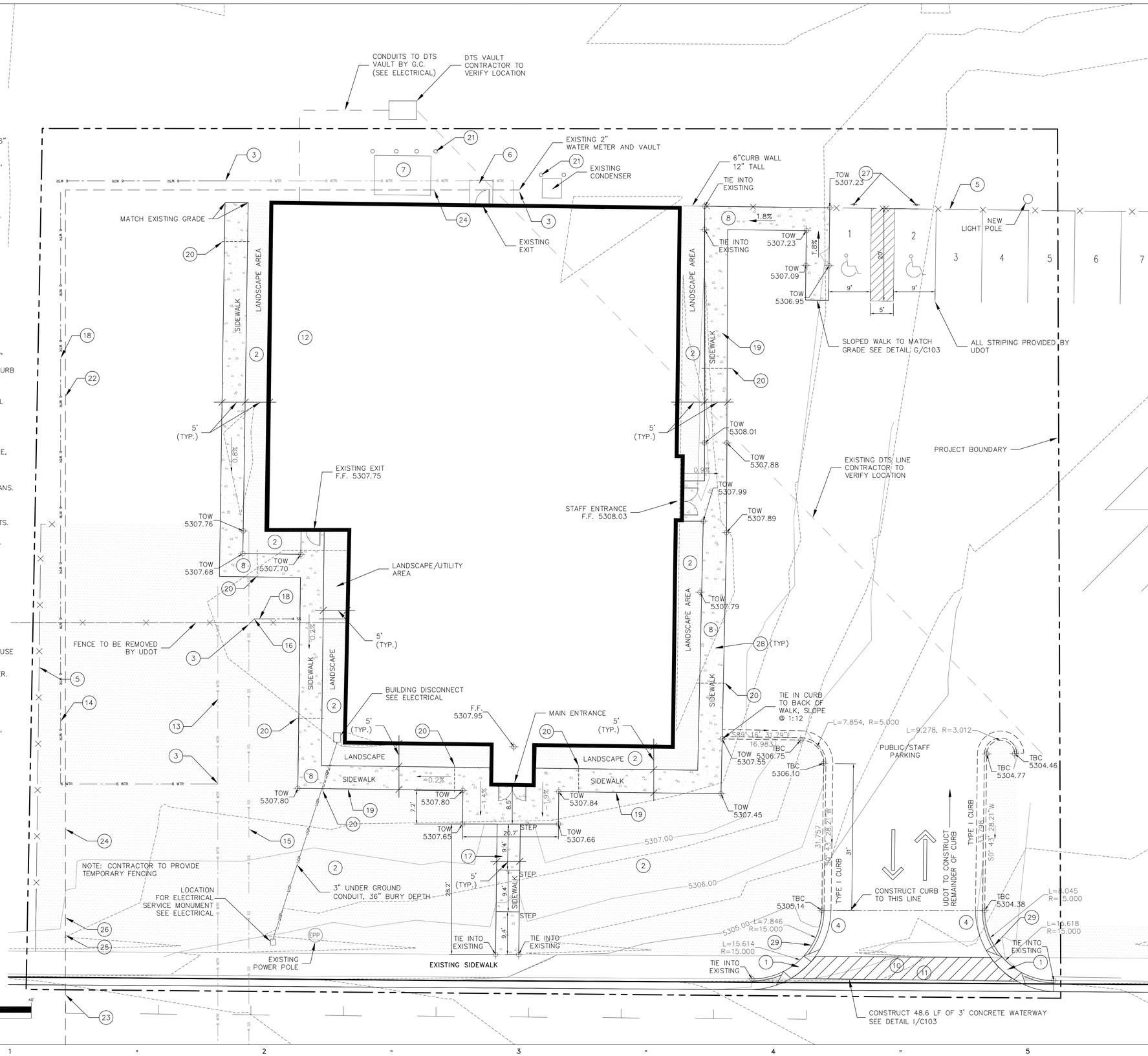

GRAPHIC SCALE
(IN FEET)
1 inch = 10 ft.

CLIENT

UDOT CONNECTING COMMUNITIES

REGION 4 OFFICE REMODEL
708 SOUTH 100 WEST
RICHFIELD UTAH 84701

DESIGNER

ARCHIPLEX GROUP
architecture · planning · design services
255 Crossroad Square
Salt Lake City, UT 84115
P:(801) 961-7070
F:(801) 961-7373

CONSULTANTS

epic ENGINEERING

PROFESSIONAL SEAL

ISSUE

MARK	DATE	DESCRIPTION
	8-16-10	DFCM REVIEW SUBMITTAL

DFCM PROJECT NO:	10046900
DFCM CONTRACT NO:	107453
ARCHIPLEX PROJECT NO:	1007.01
DRAWN BY:	RJM
CHECKED BY:	AJH
SCALE:	1"=10'
DATE:	8/11/2010

SHEET TITLE

BASE BID
SITE GRADING PLAN
SITE UTILITY PLAN

C100

KEYNOTES

1. – ADA RAMP AS PER IBC, ICC, ANSI 117.1 SEE DETAIL H/C103
2. – LANDSCAPED AREA, ALL LANDSCAPING WILL BE COMPLETED BY UDOT.
3. – TIE INTO EXISTING LINE
4. – CURB & GUTTER PROVIDED BY UDOT
5. – FENCE PROVIDED BY UDOT
6. – EXISTING LANDING
7. – PAD FOR CONDENSING UNIT SEE MECHANICAL FOR SIZE & LOCATION. UNLESS NOTED OTHERWISE, SLAB TO BE 5" THICK W/ #4 @ 16" O.C. BOTH DIRECTIONS CENTERED IN SLAB
8. – 5' SIDEWALK OVER 4" COMPACTED ROAD BASE, 4" THICK.CONCRETE,4,000PSI, 5%(+−)2% AIR.
   – PREPARATION OF SUBGRADE FOR CONCRETE WALKS.
   A. EXCAVATE EXISTING MATERIAL TO A MINIMUM DEPTH OF 8" TO ALLOW FOR 4" OF CONCRETE OVER 4" OF UNTREATED GRANULAR BASE.
   B. IN ALL AREAS REQUIRING STRUCTURAL FILL, IT SHALL BE CONSTRUCTED USING IMPORTED MATERIAL AND METHODS CONFORMING TO GEOTECHNICAL REPORT AND SECTION 02200.
   C. CONTINUE PLACING COMPACTED FILL UNTIL SUBGRADE ELEVATION AT PAVING AREAS ARE REACHED.
   AT SLAB AREA ALLOW FOR 4" OF CONCRETE OVER 4" OF FREE DRAINING GRAVEL.
   D. ALL LIFTS OF STRUCTURAL FILL TO BE OBSERVED AND TESTED PRIOR TO PLACING SUBSEQUENT LIFTS.
9. – 5'x5'x4" THICK CONCRETE LANDING (LANDING CONSTRUCTION TO FOLLOW KEY NOTE 8 WHERE APPLICABLE)
10. – PREPARATION FOR SUB-GRADE AND NEW ASPHALT PAVING. CONTRACTOR TO PREP AREA, UDOT WILL PAVE AREA.
11. – CURB CUT, REMOVE EXISTING SIDEWALK AND CURB
12. – EXISTING LOADING DOCK TO BE REMOVED, AND DISPOSED OF. CONTRACTOR TO REMOVE ALL CONCRETE THEN TO BE FILLED W/ STRUCTURAL FILL COMPACTED IN 8" LIFTS TO 95% MAXIMUM DRY DENSITY AS PER ASTM D-1557. PERFORM COMPACTION TESTS FREQUENTLY.
13. – EXISTING FIRE LINE
14. – APPROX. 200 LF OF 6" DUCTILE IRON FIRE LINE, COORDINATE W/ MECHANICAL PLANS.
15. – EXISTING SEWER LATERAL
16. – EXTEND SEWER LATERAL, SEE MECHANICAL PLANS.
17. – LANDINGS. MAX RISE EQUAL 7"
18. – SEE DETAIL A/C102 FOR TRENCH REQUIREMENTS.
19. – GENERAL CONTRACTOR TO SAW-CUT EXISTING ASPHALT, AND REMOVE AND DISPOSE ASPHALT FOR SIDEWALK INSTALLATION AS REQUIRED.
20. – 2" PVC CONDUIT SLEEVE
21. – BOLLARD, SEE DETAIL G/C103
22. – PLACE 2" WATERLINE IN SAME TRENCH
23. – HOT TAP EXISTING WATER MAIN
24. – 2" POLY-PIPE, 36" BURY DEPTH
25. – NEW WATER METER VAULT, AND SETTER. RE-USE EXISTING 2" WATER METER.
26. – INSTALL 2" STOP AND WASTE VALVE AND RISER. EXTEND 2" LINE FROM VALVE TO GRADE.
27. – ADA STALL SIGN MARKER SEE DETAIL F/C103
28. – APPLY SALT AND WATER BARRIER AT ALL EXTERIOR CONCRETE PADS, SIDEWALKS, RAMPS, ECT. SEE SPECIFICATIONS SECTION 03055.
29. – SEE DETAIL J/C103 FOR CURB PROFILE

– AREA TABLE:
SIDEWALK: 2072.6 SF
CONSTRUCT CURB: 54 LF

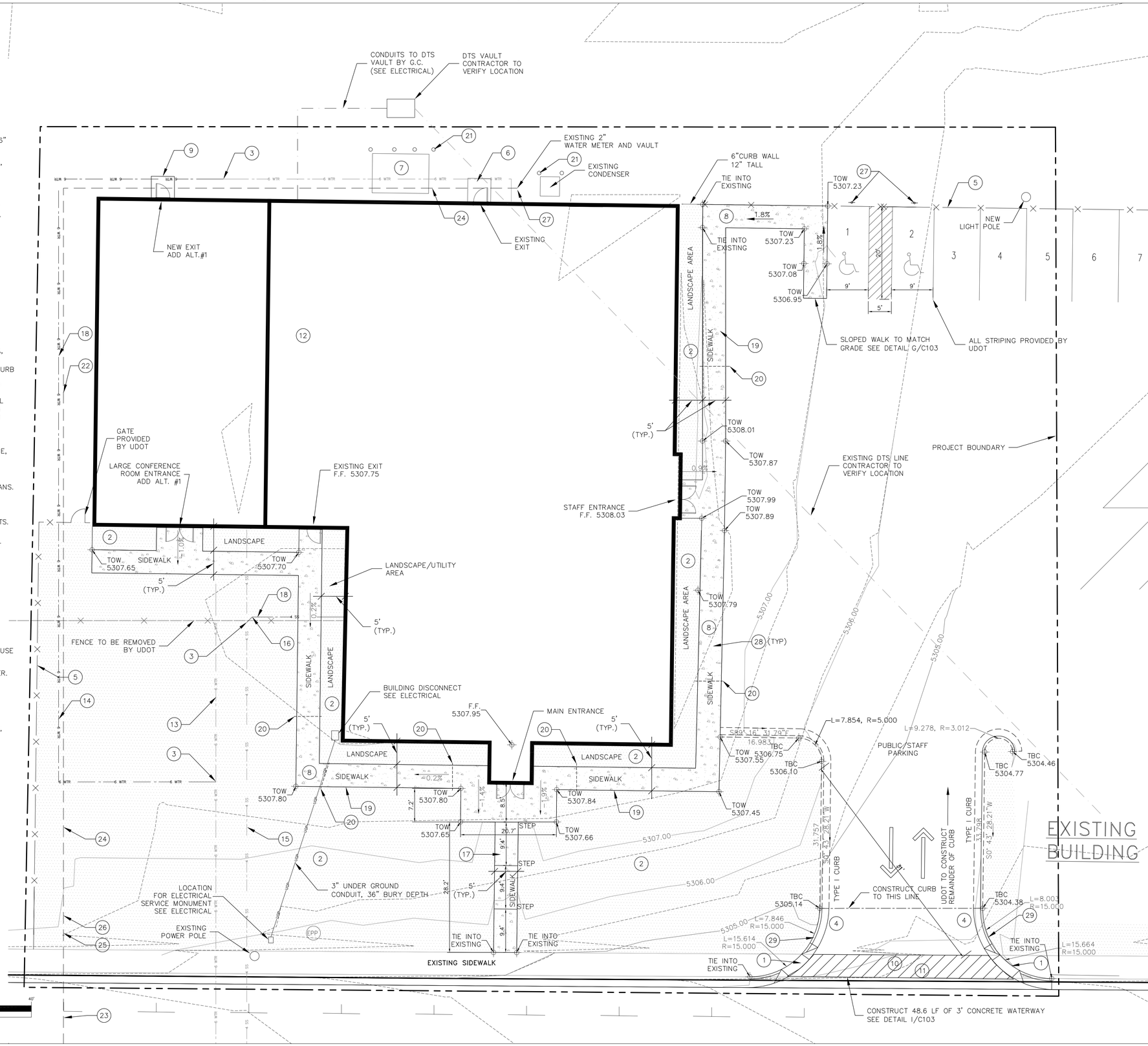

CLIENT

UDOT CONNECTING COMMUNITIES

REGION 4 OFFICE REMODEL
708 SOUTH 100 WEST
RICHFIELD UTAH 84701

DESIGNER

ARCHIPLEX GROUP
architecture · planning · design services
255 Crossroad Square
Salt Lake City, UT 84115
P:(801) 961-7070
F:(801) 961-7373

CONSULTANTS

epic ENGINEERING

PROFESSIONAL SEAL

ISSUE

MARK	DATE	DESCRIPTION
	8-16-10	DFCM REVIEW SUBMITTAL

DFCM PROJECT NO:	10046900
DFCM CONTRACT NO:	107453
ARCHIPLEX PROJECT NO:	1007.01
DRAWN BY:	RJM
CHECKED BY:	AJH
SCALE:	1"=10'
DATE:	8/11/2010

SHEET TITLE

BASE BID & ADD ATL#1
SITE GRADING PLAN
SITE UTILITY PLAN

C101

EXISTING

ACCESS

PARKING REQUIREMENTS
300SF/STALL.
40 STALLS PROVIDED = MAXIMUM BUILDING
FOOTPRINT OF 12,000 SF.

215.06

NOTE TO FIRE MARSHALL.
ALL ACCESS POINTS ARE
SECURED w/ KEYPAD.

134.74

130.31

ALT#1

BUILDING BASE BID

PROJECT
BOUNDARY

116.39

15.36

50.51

41.64

800 S. STREET

GRAPHIC SCALE

30' 0 15' 30' 60' 120'

(IN FEET)
1 inch = 30 ft.

CLIENT

UDOT CONNECTING COMMUNITIES

REGION 4 OFFICE REMODEL
708 SOUTH 100 WEST
RICHFIELD UTAH 84701

DESIGNER

ARCHIPLEX GROUP

architecture · planning · design services

255 Crossroad Square
Salt Lake City, UT 84115
P:(801) 961-7070
F:(801) 961-7373

CONSULTANTS

epic ENGINEERING

PROFESSIONAL SEAL

ISSUE

MARK	DATE	DESCRIPTION
	8-16-10	DFCM REVIEW SUBMITTAL

DFCM PROJECT NO:	10046900
DFCM CONTRACT NO:	107453
ARCHIPLEX PROJECT NO:	1007.01
DRAWN BY:	RJM
CHECKED BY:	AJH
SCALE:	1"=30'
DATE:	8/11/2010

SHEET TITLE

OVERALL
SITE

C102

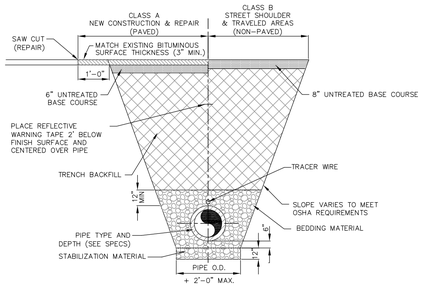

A TYPICAL TRENCH DETAIL
SCALE: N.T.S.

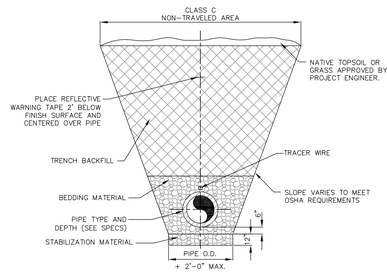

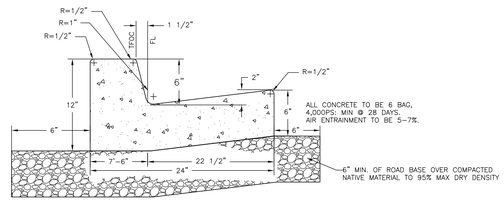

J TYPE 1 CURB
SCALE: N.T.S.

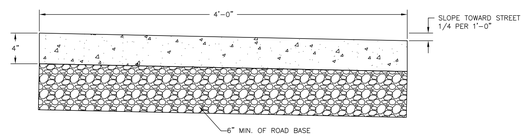

B SIDEWALK DETAIL
SCALE: N.T.S.

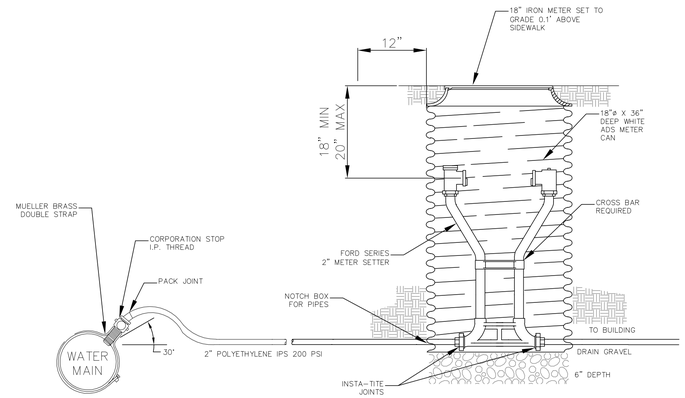

NOTES:

1- METER PROVIDED BY OWNER IMPROVEMENT DISTRICT

2- METER BOX, COVER, CORPORATION STOP AND SERVICE LINES TO BE FURNISHED AND INSTALLED BY CONTRACTOR, IF REQUESTED BY OWNER. OWNER ANTICIPATES USING EXISTING METER SETTERS AND BOX.

C WATER METER
SCALE: N.T.S.

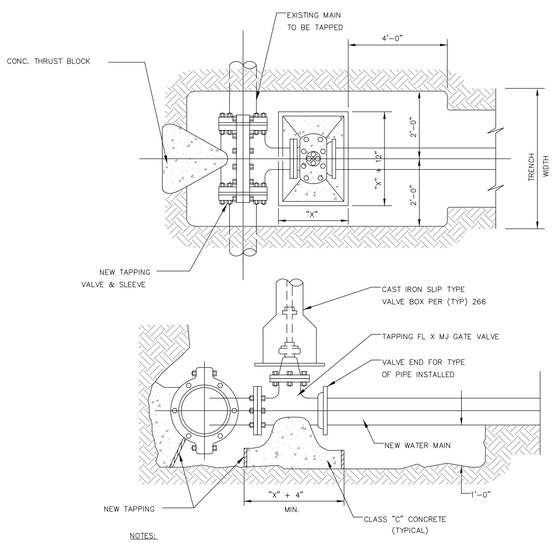

NOTES:

1. BLOCK IS TO EXTEND TO UNDISTURBED EARTH.
2. INSTALL PERMANENT BLOCKING UNDER VALVE BEFORE TAP IS MADE. JOINTS AND BOLTS TO BE CLEAR OF CONCRETE.
3. TAPPING SLEEVE TO BE PLACED 18" MIN. FROM ANY BELL, COUPLING, VALVE, OR FITTING.

D TAPPING SLEEVE AND VALVE DETAIL
SCALE: N.T.S.

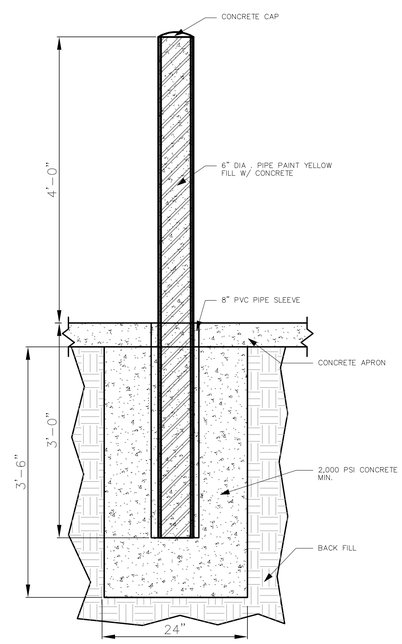

E BOLLARD DETAIL
SCALE: N.T.S.

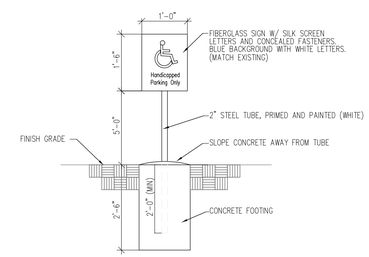

F ADA SIGNAGE
SCALE: N.T.S.

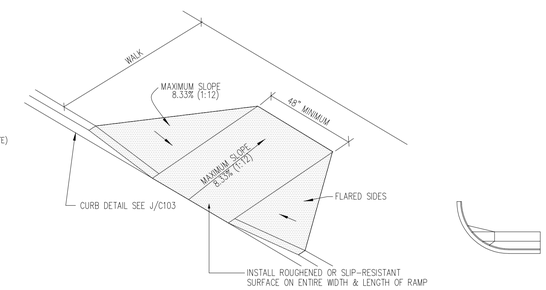

H ADA RAMP
SCALE: N.T.S.

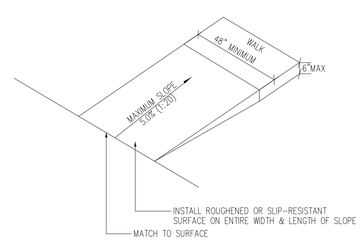

G SLOPE WALK
SCALE: N.T.S.

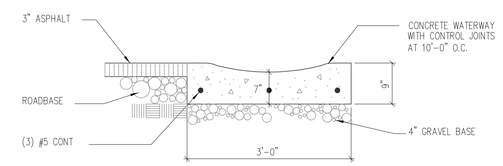

I CONCRETE WATERWAY
SCALE: N.T.S.

CLIENT

UDOT CONNECTING COMMUNITIES

REGION 4 OFFICE REMODEL
708 SOUTH 100 WEST
RICHFIELD UTAH 84701

DESIGNER

ARCHIPLEX GROUP
architecture · planning · design services
255 Crossroad Square
Salt Lake City, UT 84115
P:(801) 961-7070
F:(801) 961-7373

CONSULTANTS

epic ENGINEERING

PROFESSIONAL SEAL

ISSUE

MARK	DATE	DESCRIPTION
	8-16-10	DFCM REVIEW SUBMITTAL

DFCM PROJECT NO:	10046900
DFCM CONTRACT NO:	107453
ARCHIPLEX PROJECT NO:	1007.01
DRAWN BY:	RJM
CHECKED BY:	AJH
SCALE:	
DATE:	8/11/2010

SHEET TITLE

CIVIL DETAILS

C103

NOTES

1 – CONTRACTOR TO INSTALL SILT FENCE AT TOE OF SLOPE OF ALL DISTURBED AREAS. FOR INSTALLATION INSTRUCTIONS SEE DETAIL D/C105

2 – CONTRACTOR TO INSTALL FIBER ROLL AROUND ALL INLETS IN THE AREA OF CONSTRUCTION. SEE DETAIL C/C105

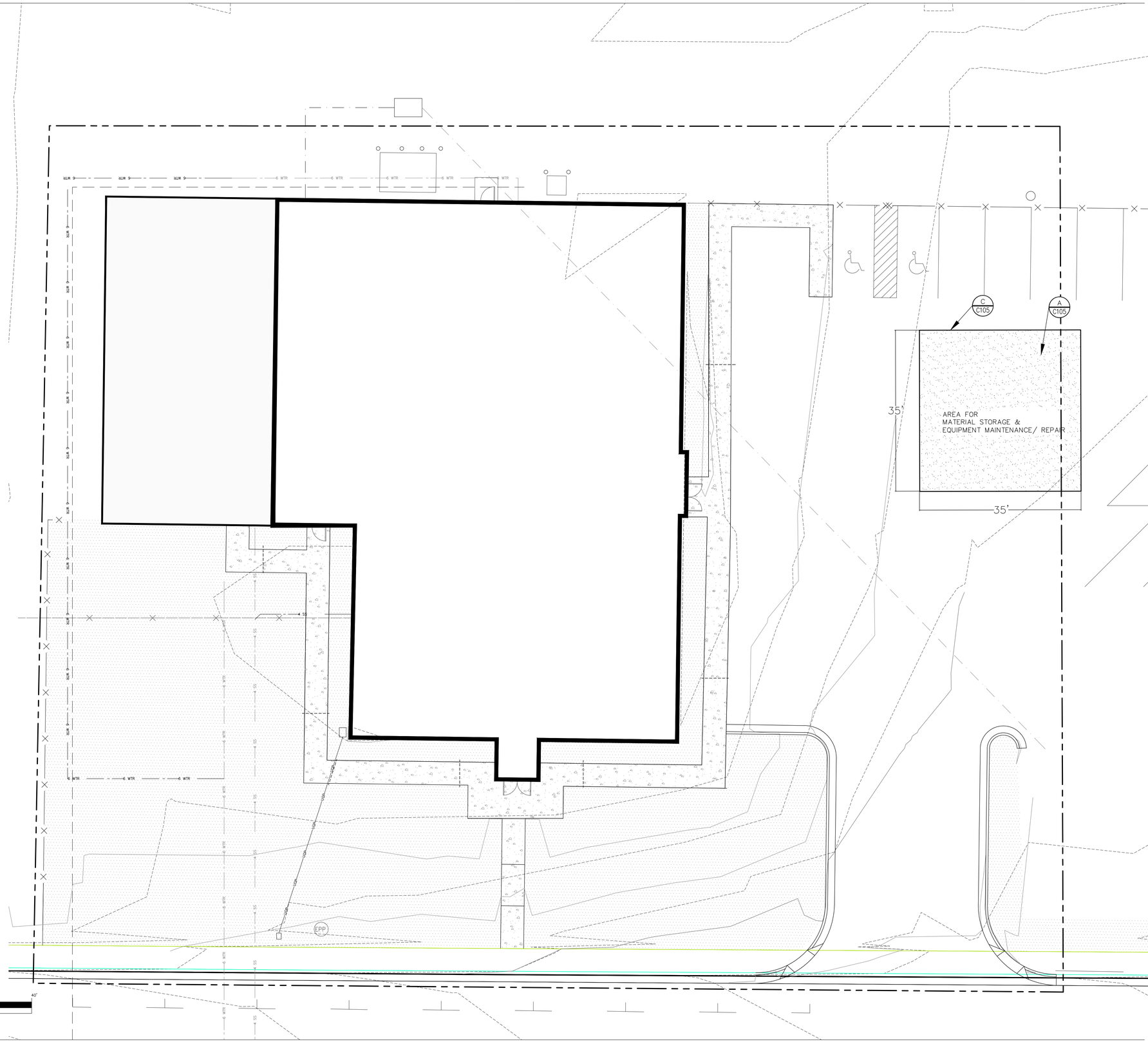

CLIENT

UDOT CONNECTING COMMUNITIES

REGION 4 OFFICE REMODEL
708 SOUTH 100 WEST
RICHFIELD UTAH 84701

DESIGNER

ARCHIPLEX GROUP
architecture · planning · design services
255 Crossroad Square
Salt Lake City, UT 84115
P:(801) 961-7070
F:(801) 961-7373

CONSULTANTS

epic ENGINEERING

PROFESSIONAL SEAL

ISSUE

MARK	DATE	DESCRIPTION
	8-16-10	DFCM REVIEW SUBMITTAL

DFCM PROJECT NO:	10046900
DFCM CONTRACT NO:	107453
ARCHIPLEX PROJECT NO:	1007.01
DRAWN BY:	RJM
CHECKED BY:	AJH
SCALE:	1"=10'
DATE:	8/11/2010

SHEET TITLE

STORM WATER POLLUTION PREVENTION

C104

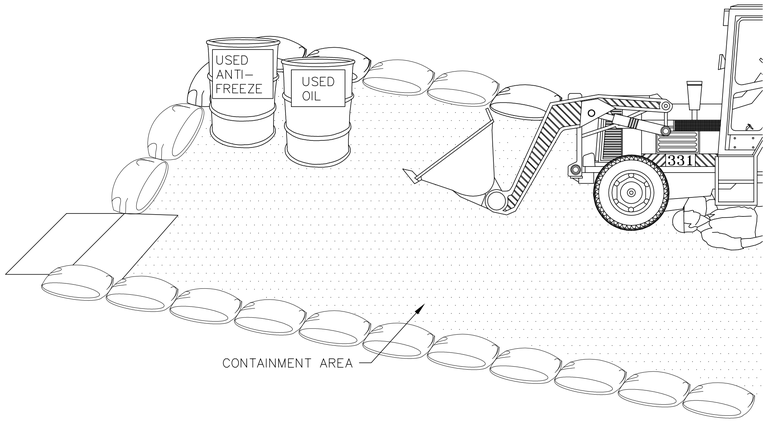

NOTES:

1. LEAKING VEHICLES AND EQUIPMENT SHALL NOT BE ALLOWED ON-SITE. EQUIPMENT AND VEHICLES SHALL BE INSPECTED FREQUENTLY FOR LEAKS AND SHALL BE REPAIRED IMMEDIATELY. CLEAN UP SPILLS AND LEAKS PROMPTLY WITH ABSORBENT MATERIALS; DO NOT FLUSH WITH WATER.
2. VEHICLES AND EQUIPMENT SHALL BE MAINTAINED, AND REPAIRED ON-SITE ONLY IN DESIGNATED AREAS. PREVENT RUN-ON AND RUN-OFF FROM DESIGNATED AREAS.
3. CONTAINMENT DEVISE SHALL BE PROVIDED AND AREAS SHALL BE COVERED IF NECESSARY.
4. DESIGNATE ON-SITE VEHICLE AND EQUIPMENT MAINTENANCE AREAS, AWAY FROM STORM DRAIN INLETS AND WATERCOURSES.
5. ALWAYS USE SECONDARY CONTAINMENT, SUCH AS A DRAIN PAN OR DROP CLOTH TO CATCH SPILLS AND LEAKS WHEN REMOVING OR CHANGING FLUIDS. LEGALLY DISPOSE OF USED OILS, FLUIDS AND LUBRICANTS.
6. PROVIDE SPILL CONTAINMENT DIKES OR SECONDARY CONTAINMENT AROUND STORED OIL, FUEL, AND CHEMICAL DRUMS.
7. MAINTAIN AN ADEQUATE SUPPLY OF ABSORBENT SPILL CLEANUP MATERIALS IN DESIGNATED AREAS.

A EQUIPMENT MAINTENANCE/ REPAIR
SCALE: N.T.S.

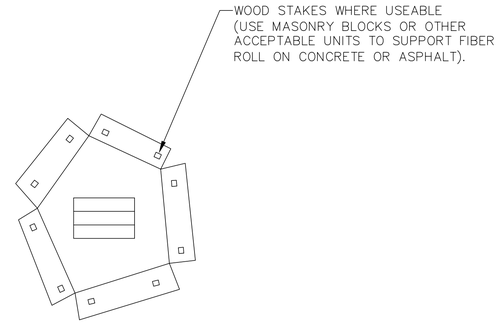

C FIBER ROLL OR GRAVEL BAG DETAIL
SCALE: N.T.S.

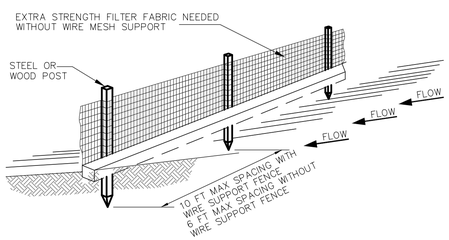

NOTES:
1. INSPECT AND REPAIR FENCE AFTER EACH STORM EVENT SEE PLAN VIEW.
2. REMOVED SEDIMENT SHALL BE DEPOSITED TO AN AREA THAT WILL NIT CONTRIBUTE SEDIMENT OFF-SITE AND CAN BE PERMANENTLY STABILIZED.
3. SILT FENCE SHALL BE PLACED ON SLOPE CONTOURS TO MAXIMIZE PONDING EFFICIENCY.

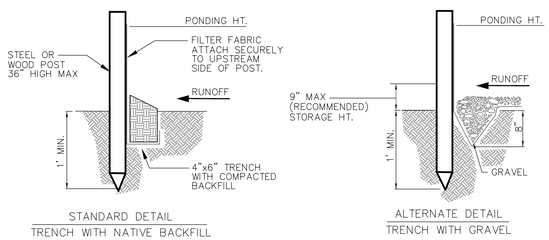

STANDARD DETAIL
TRENCH WITH NATIVE BACKFILL

ALTERNATE DETAIL
TRENCH WITH GRAVEL

D SILT FENCE DETAIL
SCALE: N.T.S.

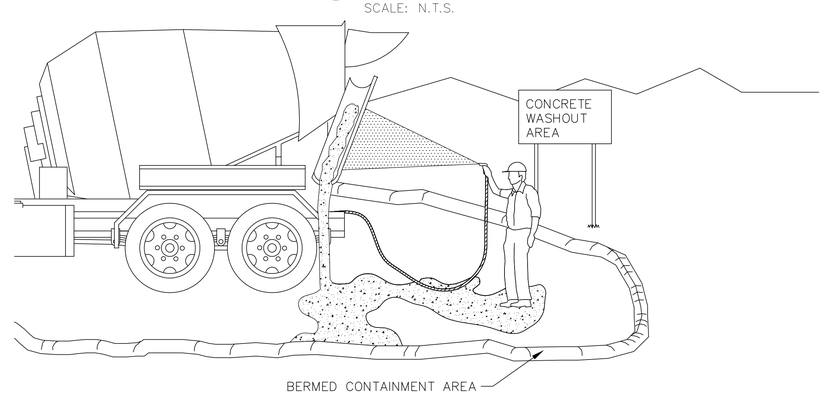

NOTES:

1. EXCESS AND WASTE CONCRETE SHALL NOT BE WASHED INTO STREET OR INTO A DRAINAGE SYSTEM. FOR WASHOUT OF CONCRETE AND MORTAR PRODUCTS, A DESIGNATED CONTAINMENT FACILITY OF SUFFICIENT CAPACITY TO RETAIN LIQUID AND SOLID WASTE SHALL BE PROVIDED ON SITE.

E CONCRETE WASTE MANAGEMENT
SCALE: N.T.S.

CLIENT

UDOT CONNECTING COMMUNITIES

REGION 4 OFFICE REMODEL
708 SOUTH 100 WEST
RICHFIELD UTAH 84701

DESIGNER

ARCHIPLEX GROUP
architecture · planning · design services
255 Crossroad Square
Salt Lake City, UT 84115
P:(801) 961-7070
F:(801) 961-7373

CONSULTANTS

epic ENGINEERING

PROFESSIONAL SEAL

ISSUE

MARK	DATE	DESCRIPTION
	8-16-10	DFCM REVIEW SUBMITTAL

DFCM PROJECT NO:	10046900
DFCM CONTRACT NO:	107453
ARCHIPLEX PROJECT NO:	1007.01
DRAWN BY:	RJM
CHECKED BY:	AJH
SCALE:	
DATE:	8/11/2010

SHEET TITLE

STORM WATER POLLUTION PREVENTION DETAILS

C105

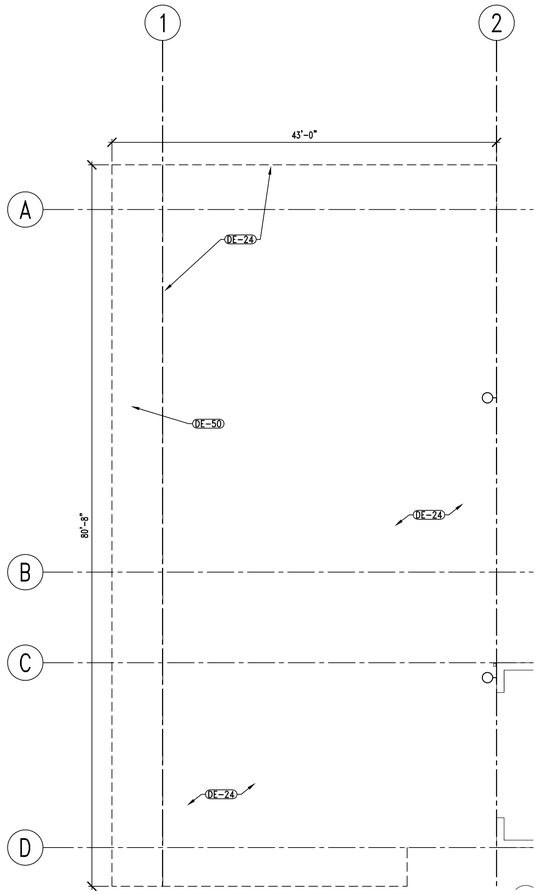

B1 | DEMOLITION PLAN – ADD ALT. #1

AD101 | REF.

SCALE: 1/8" = 1'-0"

8' 6' 4' 2' 0' 4' 8' 16'

NORTH

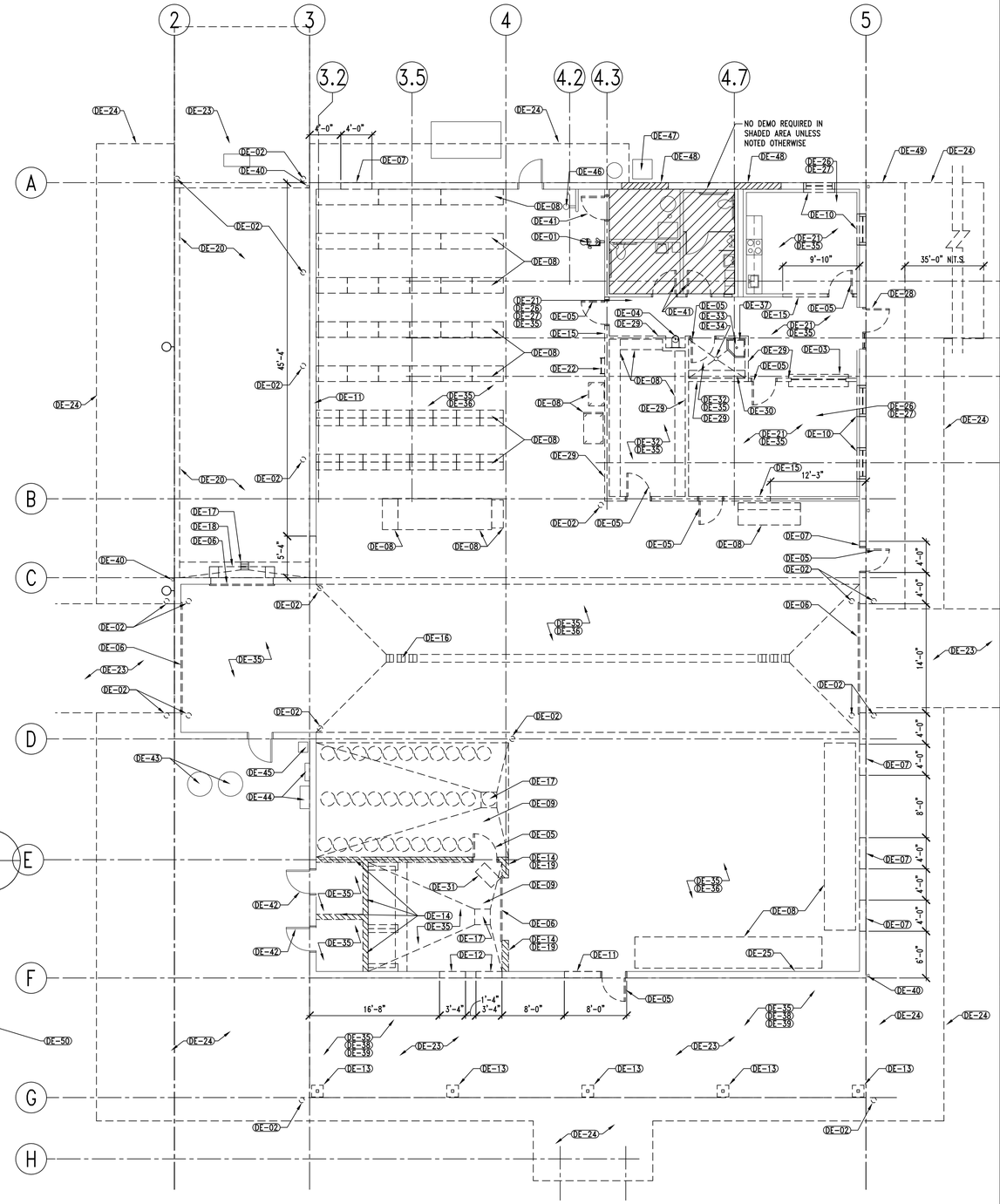

A2 | DEMOLITION PLAN – BASE BID

AD101 | REF.

SCALE: 1/8" = 1'-0"

8' 6' 4' 2' 0' 4' 8' 16'

NORTH

SALVAGED ITEMS

ALL ITEMS LISTED ARE TO BE SALVAGED AND RETURNED TO OWNER – COORDINATE STORAGE LOCATION WITH OWNER

1. LIGHT FIXTURES
2. DOORS, FRAMES & HARDWARE
3. WINDOWS
4. HEATING AND HEATING CONTROLS
5. GARAGE DOORS AND MOTORS
6. FLOOR GRATES
7. ROOF EXHAUST POWER VENTILATORS
8. EMERGENCY SHOWER
9. STORAGE RACKS & SHELVING
10. OVERHEAD RADIANT HEATING SYSTEM AND CONTROLS

DEMOLITION PLAN KEYNOTES

DE-01	REMOVE AND DISCARD EMERGENCY EYEWASH STATION – CAP SUPPLY & DRAIN LINES, PATCH HOLE IN CONCRETE SLAB
DE-02	CUT PIPE BOLLARD AT EXISTING GRADE/FLOOR LEVEL AND GRIND SMOOTH TO RECEIVE NEW FLOOR FINISH WHERE OCCURS – REMOVE PIPE BOLLARD BELOW GRADE IF IT INTERFERES WITH NEW FOOTINGS, SLAB OR FOUNDATION WALLS
DE-03	REMOVE AND DISCARD EXISTING COUNTER
DE-04	REMOVE AND DISCARD EXISTING DRINKING FOUNTAIN AND SUPPLY & DRAIN LINES, SEE: FLOOR PLANS & PLUMB.
DE-05	REMOVE AND SALVAGE DOOR, FRAME & HARDWARE
DE-06	REMOVE AND SALVAGE OVERHEAD DOOR AND CONTROLS – REMOVE AND DISCARD EXISTING ELECTRICAL SUPPLY & CONDUIT
DE-07	REMOVE AND SALVAGE CMU TO ACCOMODATE NEW WINDOW, VERIFY SIZE PRIOR TO CUTTING CMU. STORE REMOVED CMU TO BE USED FOR INFILL – PREP OPENING TO RECEIVE NEW WINDOW
DE-08	REMOVE AND SALVAGE EXISTING STORAGE RACKS
DE-09	REMOVE AND SALVAGE EXISITING FLOOR GRATING
DE-10	REMOVE AND SALVAGE EXISTING WINDOW – PREP OPENING TO RECEIVE NEW WINDOW
DE-11	REMOVE AND SALVAGE CMU WALL TO NEAREST COURSING ABOVE FINISH CEILING HEIGHT – PREP OPENING TO RECEIVE NEW FINISH OR FRAMING. STORE CMU REMOVED DURING DEMOLITION TO BE USED FOR CMU INFILL – SEE: EXTERIOR ELEVATIONS
DE-12	REMOVE CMU TO ACCOMODATE NEW DOOR – PREP OPENING TO RECEIVE NEW DOOR. VERIFY SIZE PRIOR TO CUTTING CMU. STORE REMOVED CMU TO BE USED FOR INFILL – SEE: EXTERIOR ELEVATIONS
DE-13	REMOVE AND DISCARD STEEL COLUMN & CONCRETE PIER
DE-14	REMOVE AND DISCARD EXISTING CMU WALL
DE-15	REMOVE AND DISCARD EXISTING PARTITION WALL – PREP ADJACENT WALL TO RECEIVE NEW FINISH OR NEW FRAMING, SEE: FLOOR PLANS
DE-16	REMOVE AND DISCARD EXISTING TRENCH DRAIN AND GRATING – CAP DRAIN LINES, SEE: PLUMB.
DE-17	REMOVE AND DISCARD CATCH BASIN – CAP DRAIN LINE, SEE: PLUMB.
DE-18	REMOVE AND DISCARD DOCK LEVELER – PREP OPENING TO RECEIVE NEW CMU WALL OR CONC. SLAB – SEE: FLOOR PLANS
DE-19	PROVIDE TEMPORARY BRACING FOR ROOF TRUSSES, SEE: STRUCT.
DE-20	REMOVE AND DISCARD CONCRETE LOADING RAMP, CONCRETE CURB & FOOTINGS. CONTRACTOR TO INFILL AREA WITH FILL AS PER CIVIL DRAWINGS
DE-21	REMOVE AND DISCARD SUSPENDED CEILING GRID & TILE IN THIS AREA
DE-22	TRIM AND RELOCATE ROOF ACCESS LADDER TO MEZZANINE LEVEL – REPLACE LADDER IF DAMAGED
DE-23	REMOVE AND DISCARD EXISTING CONCRETE APRON
DE-24	REMOVE AND DISCARD EXISTING ASPHALT TO ALLOW FOR NEW CONSTRUCTION
DE-25	REMOVE AND DISCARD PORTION OF EXISTING PARTITION WALL TO ALLOW FOR NEW FIRE EXTINGUISHER CABINET
DE-26	REMOVE AND DISCARD EXISTING VINYL WALL BASE IN THIS AREA – PATCH AND REPAIR WALL AS REQUIRED TO RECEIVE NEW FINISH
DE-27	REMOVE AND DISCARD EXISTING VCT FLOORING IN THIS AREA – PATCH AND REPAIR SUBFLOOR AS REQUIRED TO RECEIVE NEW FINISH
DE-28	REMOVE AND SALVAGE EXISTING ALUM. DOOR, FRAME, HARDWARE AND SIDELIGHT, PREP OPENING TO RECEIVE NEW WINDOW & CMU INFILL
DE-29	REMOVE AND DISCARD EXISTING PARTITION WALL
DE-30	REMOVE AND SALVAGE EXISTING SHELVING – INSTALL IN NEW JAN. CLOSET
DE-31	REMOVE AND SALVAGE EXISTING UNIT HEATER AND CONTROLS – REMOVE AND DISCARD EXISTING ELECTRICAL SUPPLY & CONDUIT
DE-32	REMOVE AND DISCARD GYPSUM BOARD CEILING IN THIS AREA
DE-33	REMOVE AND DISCARD UTILITY SINK AND SUPPLY & DRAIN LINES, SEE: PLUMB.
DE-34	REMOVE AND DISCARD FLOOR DRAIN & CAP DRAIN LINE, SEE: PLUMB.
DE-35	REMOVE AND SALVAGE EXISTING LIGHT FIXTURES IN THIS AREA
DE-36	REMOVE AND SALVAGE EXISTING RADIANT HEATING SYSTEM IN THIS AREA
DE-37	REMOVE AND SALVAGE EXISTING MOP RACK – INSTALL IN NEW JAN. CLOSET
DE-38	REMOVE AND DISCARD METAL ROOF JOISTS & STEEL BEAM IN THIS AREA
DE-39	REMOVE AND DISCARD STANDING SEAM METAL ROOF IN THIS AREA
DE-40	TRIM (E) DOWNSPOUT AT BOTTOM OF SOFFIT
DE-41	REMOVE AND SALVAGE DOOR, SALVAGE ALL HARDWARE TO BE REINSTALLED ON NEW DOOR
DE-42	EXISTING DOOR AND FRAME TO REMAIN, CONTRACTOR TO REMOVE EXISTING LOCKSET AND PROVIDE COVERS AND WELD DOOR SHUT
DE-43	EXISTING WATER AND OIL SEPARATOR TO REMAIN
DE-44	EXISTING ELECTRICAL PANELS TO REMAIN
DE-45	EXISTING GAS METER TO REMAIN
DE-46	EXISTING FIRE RISER TO REMAIN
DE-47	EXISTING CONDENSING UNIT TO REMAIN
DE-48	REMOVE AND SALVAGE CMU TO ACCOMODATE NEW MECHANICAL LOUVER, VERIFY SIZE & LOCATION PRIOR TO CUTTING CMU (SEE: EXTERIOR ELEVATIONS). STORE REMOVED CMU TO BE USED FOR INFILL
DE-49	REMOVE AND DISCARD EXISTING CONCRETE SIDEWALK
DE-50	AS PART OF BASE BID, CONTRACTOR TO SAW CUT AND REMOVE ASPHALT TRENCH AS REQUIRED TO PROVIDE NEW WATER LINE & CONDUIT AT WEST OF ADD ALT. #1.

GENERAL NOTES

1. FIELD VERIFY ALL EXISTING CONDITIONS AND THEIR COMPATIBILITY WITH NEW CONSTRUCTION PRIOR TO THE COMMENCEMENT OF WORK. COORDINATE DISCREPANCIES WITH ARCHITECT.
2. DO NOT SCALE DRAWINGS.
3. SEE CIVIL, MECHANICAL, PLUMBING & ELECTRICAL DRAWINGS FOR ADDITIONAL DEMOLITION WORK.
4. CONTRACTOR RESPONSIBLE FOR DISPOSAL OF ALL DEMOLITION MATERIAL.
5. CONTRACTOR TO PATCH AND REPAIR ALL REMAINING SURFACES TO RECEIVE NEW FINISHES AS PER ROOM FINISH SCHEDULED.
6. CONTRACTOR TO VERIFY ALL DIMENSIONS PRIOR TO CUTTING ANY EXISTING WALLS – COORDINATE DIMENSIONS WITH SHEET AE101.
7. CONTRACTOR TO PROVIDE SAMPLES OF ALL EXISTING CMU TO ARCHITECT FOR SELECTION OF NEW CMU.
8. GENERAL CONTRACTOR IS RESPONSIBLE FOR COORDINATION OF WORK BETWEEN TRADES AND COORDINATION OF CONTRACT DOCUMENTS BETWEEN TRADES. SUB-CONTRACTORS ARE ALSO RESPONSIBLE FOR COORDINATION WITH OTHER TRADES AND OTHER DISCIPLINES INCLUDED IN THE CONTRACTS DOCUMENTS. IF ANY DISCREPANCIES ARE FOUND, GENERAL CONTRACTOR IS TO NOTIFY ARCHITECT IMMEDIATELY BEFORE COMMENCEMENT OF WORK. NO EXTRA COSTS TO THE PROJECT WILL BE INCURRED DUE TO FAILURE OF SUB-CONTRACTORS TO REVIEW/COORDINATE WITH OTHER TRADES.

CLIENT

UDOT CONNECTING COMMUNITIES

REGION 4 OFFICE REMODEL
708 SOUTH 100 WEST
RICHFIELD UTAH 84701

DESIGNER

ARCHIPLEX GROUP
architecture · planning · design services
255 Crossroad Square
Salt Lake City, UT 84115
P:(801) 961-7070
F:(801) 961-7373

CONSULTANTS

PROFESSIONAL SEAL

RALPH M. STANISLAW
95-310819-0301
9/20/10
LICENSED ARCHITECT

ISSUE

MARK	DATE	DESCRIPTION
	9-20-10	DFCM REVIEW COMMENTS
	8-16-10	DFCM REVIEW SUBMITTAL

DFCM PROJECT NO:	10046900
DFCM CONTRACT NO:	107453
ARCHIPLEX PROJECT NO:	1007.01
DRAWN BY:	A. PHILLIPS
CHECKED BY:	R. STANISLAW
SCALE:	AS SHOWN
DATE:	AUGUST 16, 2010

SHEET TITLE

DEMOLITION PLAN

AD101

SLAB DEMOLITION PLAN KEYNOTES

DE-01	REMOVE AND DISCARD CONCRETE FLOOR SLAB TO ALLOW FOR NEW CONSTRUCTION – VERIFY FOOTING SIZES & LOCATIONS WITH STRUCT.
DE-02	PROVIDE NEW SELF-LEVELING CONCRETE IN-FILL SLAB, SEE: STRUCT. MATCH ADJACENT SLAB ELEVATION
DE-03	PROVIDE COMPACTED SAND BASE AND LEVEL CONCRETE IN-FILL SLAB, SEE: STRUCT. MATCH ADJACENT SLAB ELEVATION

GENERAL NOTES

1. FIELD VERIFY ALL EXISTING CONDITIONS AND THEIR COMPATIBILITY WITH NEW CONSTRUCTION PRIOR TO THE COMMENCEMENT OF WORK. COORDINATE DISCREPANCIES WITH ARCHITECT.
2. DO NOT SCALE DRAWINGS.
3. SEE CIVIL, MECHANICAL, PLUMBING & ELECTRICAL DRAWINGS FOR ADDITIONAL DEMOLITION WORK.
4. CONTRACTOR RESPONSIBLE FOR DISPOSAL OF ALL DEMOLITION MATERIAL.
5. GENERAL CONTRACTOR IS RESPONSIBLE FOR COORDINATION OF WORK BETWEEN TRADES AND COORDINATION OF CONTRACT DOCUMENTS BETWEEN TRADES. SUB-CONTRACTORS ARE ALSO RESPONSIBLE FOR COORDINATION WITH OTHER TRADES AND OTHER DISCIPLINES INCLUDED IN THE CONTRACTS DOCUMENTS. IF ANY DISCREPANCIES ARE FOUND, GENERAL CONTRACTOR IS TO NOTIFY ARCHITECT IMMEDIATELY BEFORE COMMENCEMENT OF WORK. NO EXTRA COSTS TO THE PROJECT WILL BE INCURRED DUE TO FAILURE OF SUB-CONTRACTORS TO REVIEW/COORDINATE WITH OTHER TRADES.

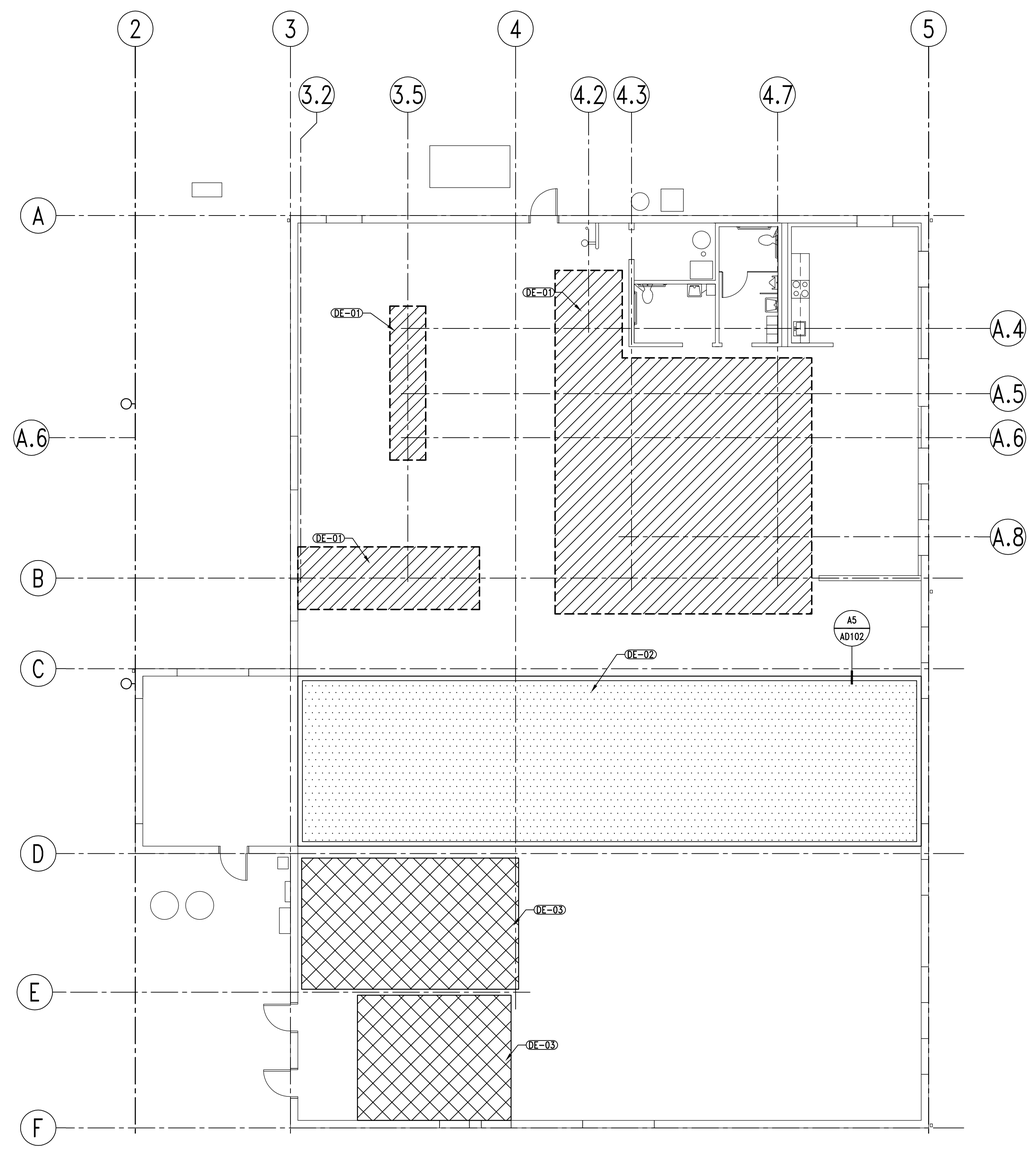

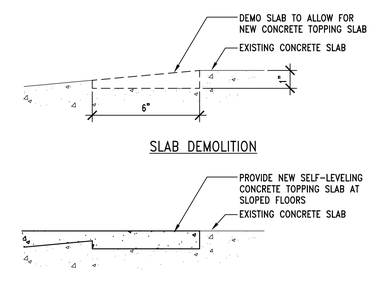

SLAB DEMOLITION

SLAB PREPARATION

A2 | SLAB DEMOLITION & PREPARATION PLAN

AD102 | REF.

SCALE: 1/8" = 1'-0"

8' 6' 4' 2' 0' 4' 8' 16'

NORTH

A5 | SLAB DETAIL

AD102 | REF. AD102

SCALE: 3" = 1'-0"

4" 3" 2" 1" 0 2" 4" 8"

CLIENT

UDOT CONNECTING COMMUNITIES

REGION 4 OFFICE REMODEL
708 SOUTH 100 WEST
RICHFIELD UTAH 84701

DESIGNER

ARCHIPLEX GROUP

architecture · planning · design services

255 Crossroad Square
Salt Lake City, UT 84115
P:(801) 961-7070
F:(801) 961-7373

CONSULTANTS

PROFESSIONAL SEAL

RALPH M. STANISLAW
95-310819-0301
9/20/10
LICENSED ARCHITECT

ISSUE

MARK	DATE	DESCRIPTION
	9-20-10	DFCM REVIEW COMMENTS
	8-16-10	DFCM REVIEW SUBMITTAL

DFCM PROJECT NO:	10046900
DFCM CONTRACT NO:	107453
ARCHIPLEX PROJECT NO:	1007.01
DRAWN BY:	A. PHILLIPS
CHECKED BY:	R. STANISLAW
SCALE:	AS SHOWN
DATE:	AUGUST 16, 2010

SHEET TITLE

SLAB DEMOLITION & PREPARATION PLAN

AD102

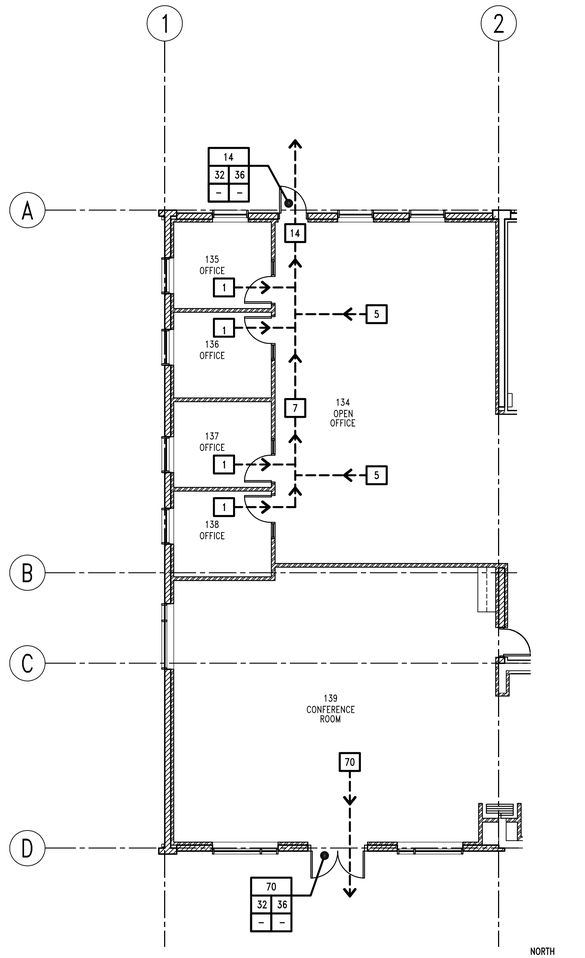

B1 | EXITING PLAN – ADD ALT. #1

AE100 | REF. | SCALE: 1/8" = 1'-0"

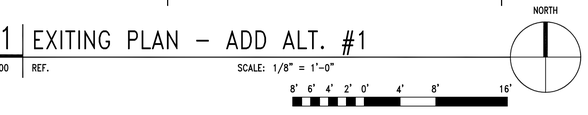

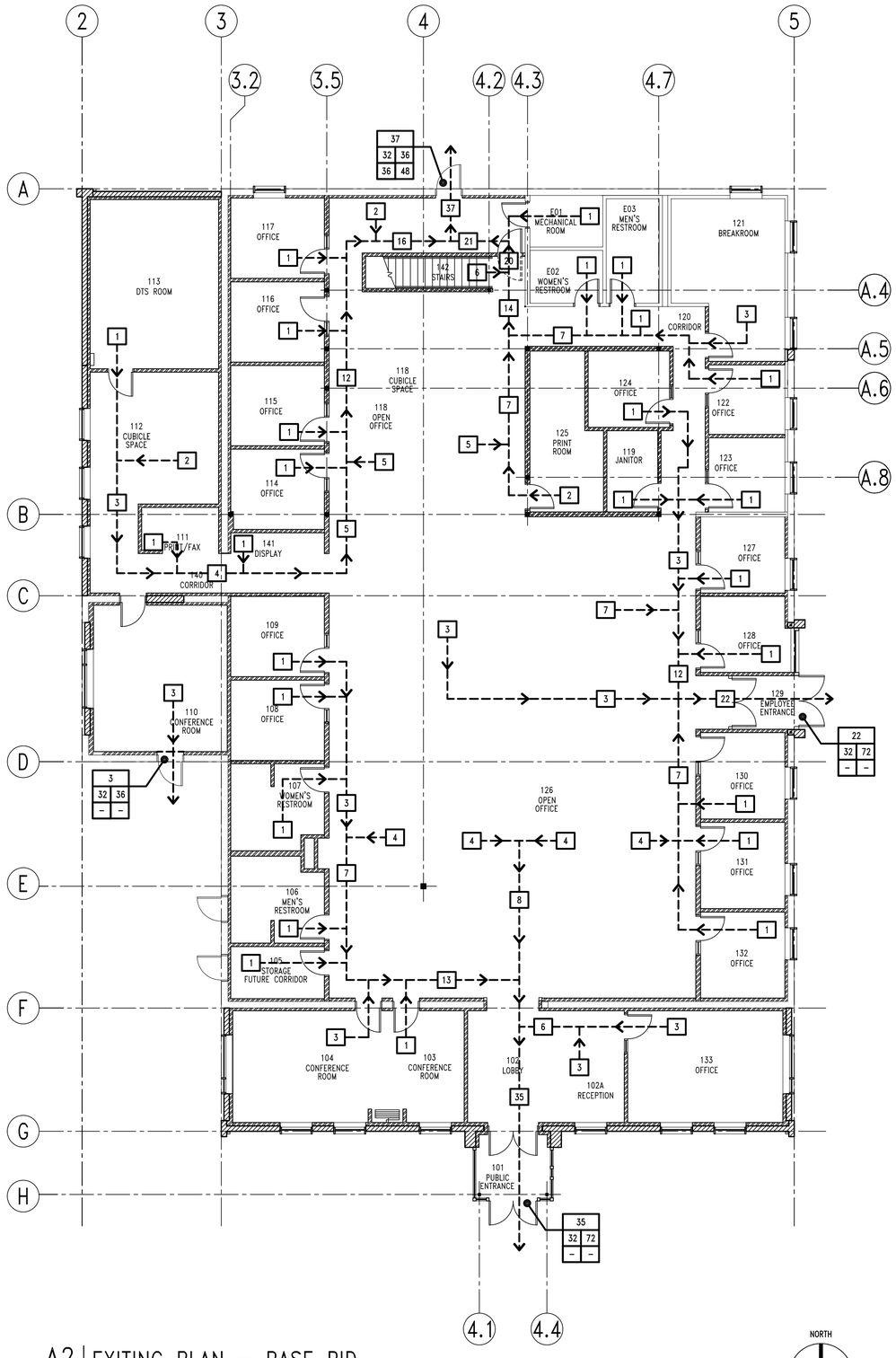

A2 | EXITING PLAN – BASE BID

AE100 | REF. | SCALE: 1/8" = 1'-0"

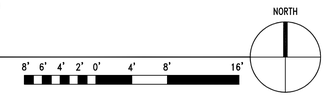

LEGEND

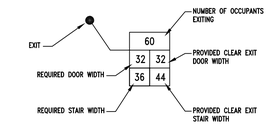

CLIENT

UDOT CONNECTING COMMUNITIES

REGION 4 OFFICE REMODEL
708 SOUTH 100 WEST
RICHFIELD UTAH 84701

DESIGNER

ARCHIPLEX GROUP
architecture · planning · design services
255 Crossroad Square
Salt Lake City, UT 84115
P:(801) 961-7070
F:(801) 961-7373

CONSULTANTS

PROFESSIONAL SEAL

RALPH M. STANISLAW
95-310818-0301
9/20/10
LICENSED ARCHITECT

ISSUE

MARK	DATE	DESCRIPTION
	9-20-10	DFCM REVIEW COMMENTS
	8-16-10	DFCM REVIEW SUBMITTAL

DFCM PROJECT NO:	10046900
DFCM CONTRACT NO:	107453
ARCHIPLEX PROJECT NO:	1007.01
DRAWN BY:	A. PHILLIPS
CHECKED BY:	R. STANISLAW
SCALE:	AS SHOWN
DATE:	AUGUST 16, 2010

SHEET TITLE

EXITING PLAN

AE100

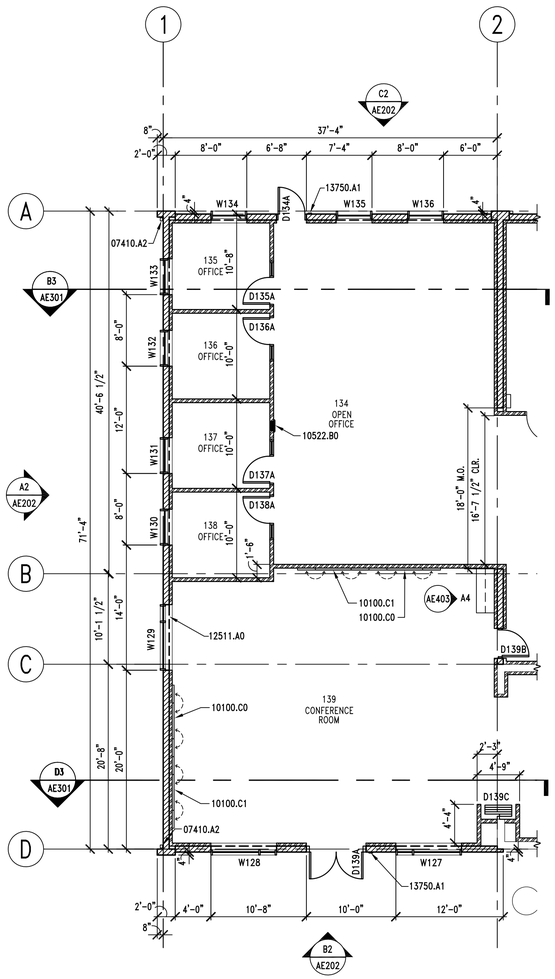

B1 LEVEL ONE FLOOR PLAN ADD ALT. #1

AE101 REF. SCALE: 1/8" = 1'-0"

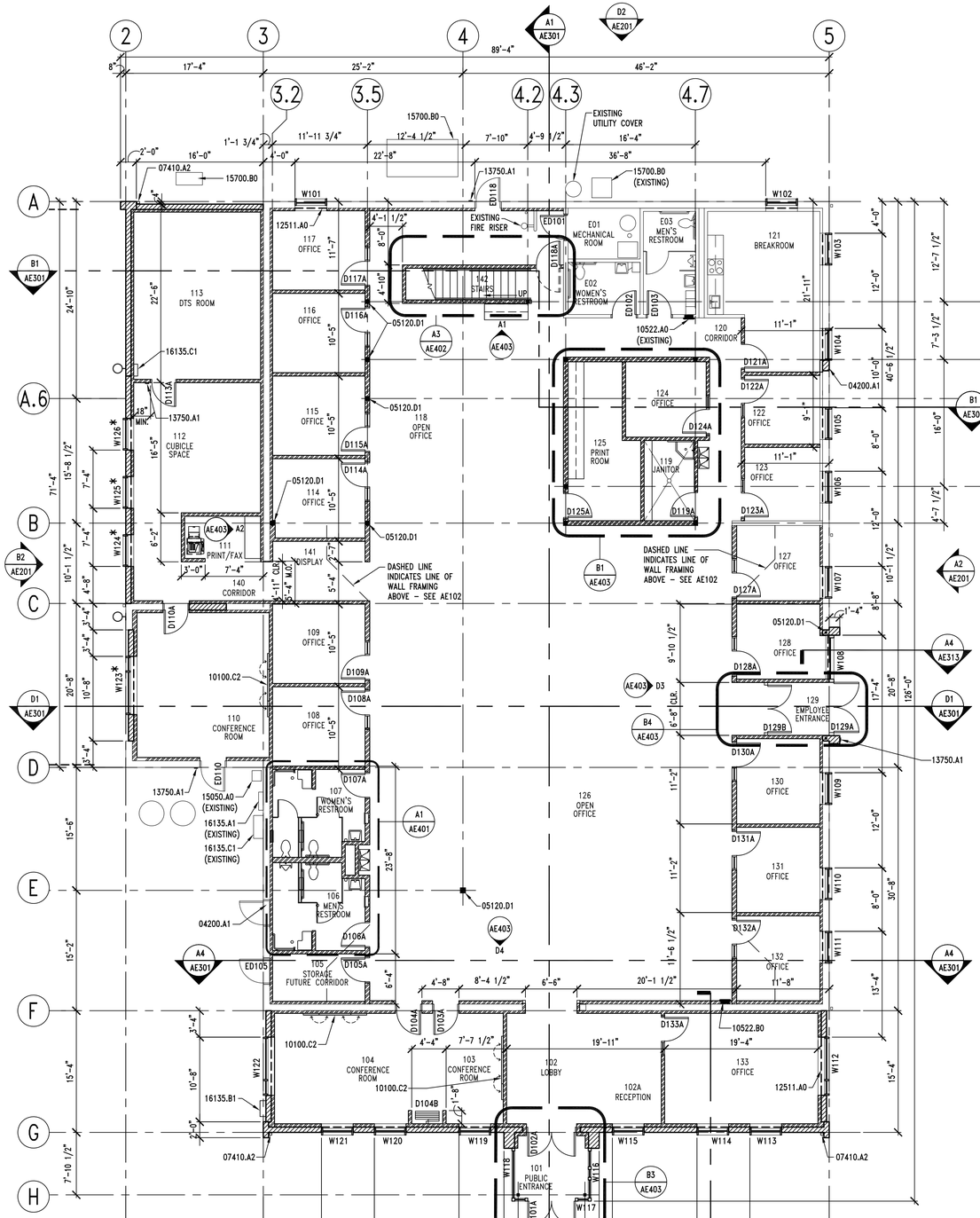

A2 LEVEL ONE FLOOR PLAN – BASE BID

AE101 REF. SCALE: 1/8" = 1'-0"

KEYNOTES

04200.A1	CMU TO MATCH ADJACENT – SALVAGED FROM CMU DEMOLITION
05120.D1	TUBE STEEL COLUMN – SEE STRUCTURAL
07410.A2	DOWNSPOUT
10100.C0	MARKER BOARD 48x96, ALUMINUM CONFERENCE CABINET WITH ONE OPERABLE TACK BOARD PANEL (LEFT LEAF ONLY) AS SPECIFIED
10100.C1	MARKER BOARD 48x96, ALUMINUM CONFERENCE CABINET WITH ONE OPERABLE TACK BOARD PANEL (RIGHT LEAF ONLY) AS SPECIFIED
10100.C2	MARKER BOARD 48x96, ALUMINUM CONFERENCE CABINET WITH TWO OPERABLE TACK BOARD PANELS AS SPECIFIED
10522.B0	SEMI-RECESSED FIRE EXTINGUISHER CABINET W/FIRE EXTINGUISHER – SEE DETAIL A5/AE502
12511.A0	HORIZONTAL LOUVER BLINDS
13750.A1	PROX CARD READER – SEE ELECTRICAL
15050.A0	GAS METER – SEE PLUMBING DRAWINGS
15700.B0	CONDENSING UNIT – SEE MECHANICAL
16135.A1	ELECTRICAL METER – SEE ELECTRICAL
16135.B1	EMERGENCY DISCONNECT – SEE ELECTRICAL
16135.C1	ELECTRICAL PANEL – SEE ELECTRICAL

GENERAL NOTES

1. FIELD VERIFY ALL EXISTING CONDITIONS AND THEIR COMPATIBILITY WITH NEW CONSTRUCTION PRIOR TO THE COMMENCEMENT OF WORK. COORDINATE DISCREPANCIES WITH ARCHITECT.
2. DO NOT SCALE DRAWINGS.
3. SEE CIVIL, STRUCTURAL, MECHANICAL AND ELECTRICAL DRAWINGS FOR MORE INFORMATION.
4. SEE SHEET AE501 FOR WALL TYPES.
5. SEE STRUCTURAL DRAWINGS FOR CONSTRUCTION/CONTROL JOINT LOCATIONS IN CONCRETE SLAB.
6. ALL DIMENSIONS ARE TO FACE OF MASONRY OR FACE OF FRAMING, UNLESS NOTED OTHERWISE.
7. GENERAL CONTRACTOR IS RESPONSIBLE FOR COORDINATION OF WORK BETWEEN TRADES AND COORDINATION OF CONTRACT DOCUMENTS BETWEEN TRADES. SUB-CONTRACTORS ARE ALSO RESPONSIBLE FOR COORDINATION WITH OTHER TRADES AND OTHER DISCIPLINES INCLUDED IN THE CONTRACTS DOCUMENTS. IF ANY DISCREPANCIES ARE FOUND, GENERAL CONTRACTOR IS TO NOTIFY ARCHITECT IMMEDIATELY BEFORE COMMENCEMENT OF WORK. NO EXTRA COSTS TO THE PROJECT WILL BE INCURRED DUE TO FAILURE OF SUB-CONTRACTORS TO REVIEW/COORDINATE WITH OTHER TRADES.

LEGEND

* INDICATES AN ITEM OR SYSTEM THAT IS PART OF BASE BID ONLY AND WILL NOT BE USED IF ADD ALTERNATE #1 IS INCLUDED IN THE CONTRACT FOR CONSTRUCTION

– – – – – INDICATES WINDOWS THAT GET HORIZONTAL LOUVER BLINDS TREATMENT.

CLIENT

UDOT CONNECTING COMMUNITIES

REGION 4 OFFICE REMODEL
708 SOUTH 100 WEST
RICHFIELD UTAH 84701

DESIGNER

ARCHIPLEX GROUP
architecture · planning · design services
255 Crossroad Square
Salt Lake City, UT 84115
P:(801) 961-7070
F:(801) 961-7373

CONSULTANTS

PROFESSIONAL SEAL

RALPH M. STANISLAW
95-310889-0301
9/20/10
LICENSED ARCHITECT

ISSUE

MARK	DATE	DESCRIPTION
	9-20-10	DFCM REVIEW COMMENTS
	8-16-10	DFCM REVIEW SUBMITTAL

DFCM PROJECT NO:	10046900
DFCM CONTRACT NO:	107453
ARCHIPLEX PROJECT NO:	1007.01
DRAWN BY:	A. PHILLIPS
CHECKED BY:	R. STANISLAW
SCALE:	AS SHOWN
DATE:	AUGUST 16, 2010

SHEET TITLE

LEVEL ONE FLOOR PLAN

AE101

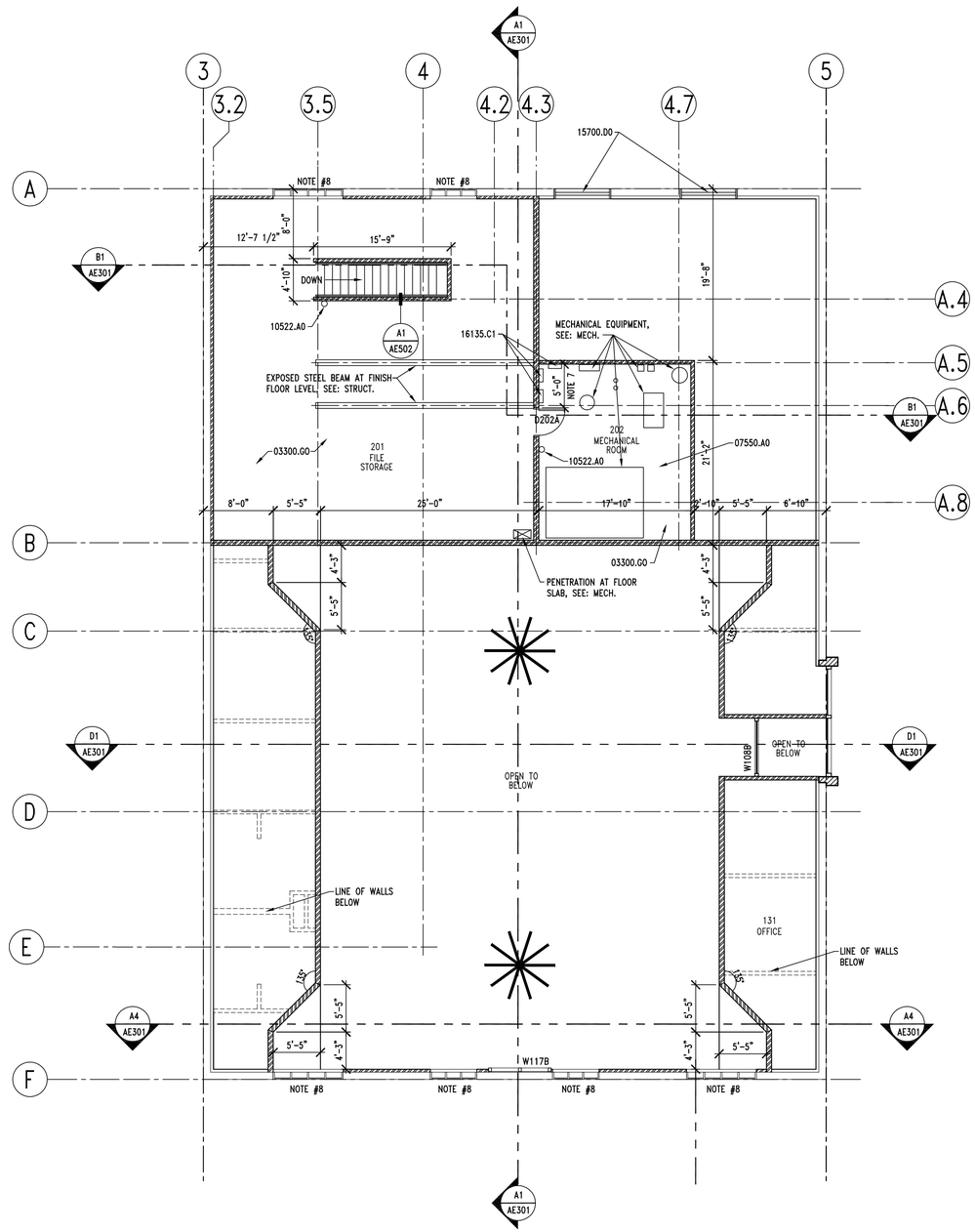

A2 | LEVEL TWO FLOOR PLAN

AE102 | REF.

SCALE: 1/8" = 1'-0"

8' 6' 4' 2' 0' 4' 8' 16'

NORTH

KEYNOTES

03300.G0	CONCRETE OVER METAL DECK – SEE STRUCTURAL
07550.A0	MULTI LAYERED WATERPROOF FLOOR SURFACING
10522.A0	SURFACE MOUNTED FIRE EXTINGUISHER
15700.D0	MECHANICAL LOUVER WITH BIRD SCREEN – SEE MECHANICAL
16135.C1	ELECTRICAL PANEL – SEE ELECTRICAL DRAWINGS

GENERAL NOTES

1. FIELD VERIFY ALL EXISTING CONDITIONS AND THEIR COMPATIBILITY WITH NEW CONSTRUCTION PRIOR TO THE COMMENCEMENT OF WORK. COORDINATE DISCREPANCIES WITH ARCHITECT.
2. DO NOT SCALE DRAWINGS.
3. SEE CIVIL, STRUCTURAL, MECHANICAL AND ELECTRICAL DRAWINGS FOR MORE INFORMATION.
4. SEE SHEET AE501 FOR WALL TYPES.
5. SEE STRUCTURAL DRAWINGS FOR CONSTRUCTION/CONTROL JOINT LOCATIONS IN CONCRETE SLAB.
6. ALL DIMENSIONS ARE TO FACE OF MASONRY OR FACE OF FRAMING, UNLESS NOTED OTHERWISE.
7. CONTRACTOR TO ENSURE DOOR IS PLACED BETWEEN JOISTS ABOVE TO AVOID DOOR SWING HITTING STRUCTURE.
8. TURN GYPSUM BOARD BACK TO EXISTING WINDOWS AT HEAD, JAMB AND SILL. PROVIDE CONT. METAL CORNER BEAD AND ¾" SOLID SURFACE SILL AT EACH WINDOW SIMILAR TO DETAIL A3/AE603.
9. GENERAL CONTRACTOR IS RESPONSIBLE FOR COORDINATION OF WORK BETWEEN TRADES AND COORDINATION OF CONTRACT DOCUMENTS BETWEEN TRADES. SUB-CONTRACTORS ARE ALSO RESPONSIBLE FOR COORDINATION WITH OTHER TRADES AND OTHER DISCIPLINES INCLUDED IN THE CONTRACTS DOCUMENTS. IF ANY DISCREPANCIES ARE FOUND, GENERAL CONTRACTOR IS TO NOTIFY ARCHITECT IMMEDIATELY BEFORE COMMENCEMENT OF WORK. NO EXTRA COSTS TO THE PROJECT WILL BE INCURRED DUE TO FAILURE OF SUB-CONTRACTORS TO REVIEW/COORDINATE WITH OTHER TRADES.

CLIENT

UDOT CONNECTING COMMUNITIES

REGION 4 OFFICE REMODEL
708 SOUTH 100 WEST
RICHFIELD UTAH 84701

DESIGNER

ARCHIPLEX GROUP
architecture · planning · design services
255 Crossroad Square
Salt Lake City, UT 84115
P:(801) 961-7070
F:(801) 961-7373

CONSULTANTS

PROFESSIONAL SEAL

RALPH M. STANISLAW
95-310619-0301
9/20/10
LICENSED ARCHITECT

ISSUE

MARK	DATE	DESCRIPTION
	9-20-10	DFCM REVIEW COMMENTS
	8-16-10	DFCM REVIEW SUBMITTAL

DFCM PROJECT NO:	10046900
DFCM CONTRACT NO:	107453
ARCHIPLEX PROJECT NO:	1007.01
DRAWN BY:	A. PHILLIPS
CHECKED BY:	R. STANISLAW
SCALE:	AS SHOWN
DATE:	AUGUST 16, 2010

SHEET TITLE

LEVEL TWO FLOOR PLAN

AE102

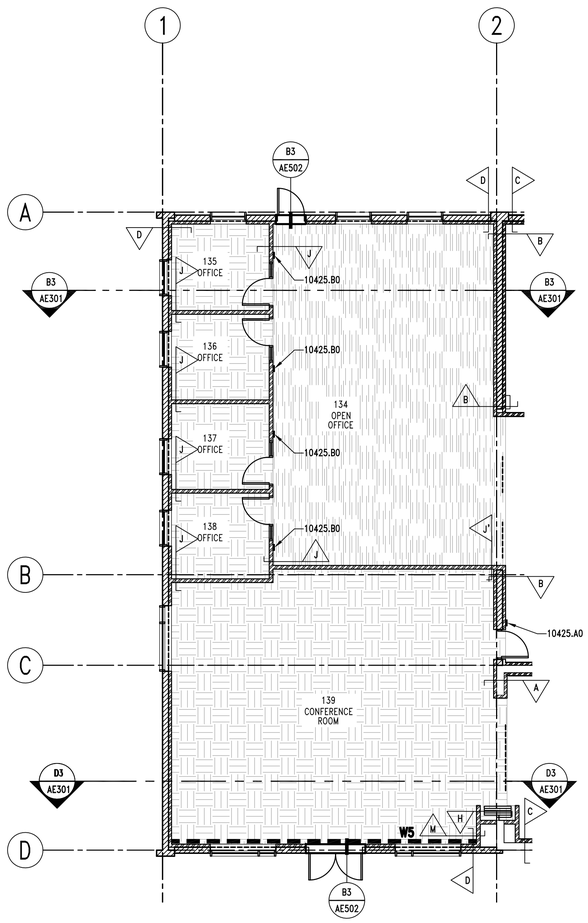

C1 LEVEL ONE WALL TYPES & FINISH PLAN – ADD ALTERNATE

AE103 | REF. | SCALE: 1/8" = 1'-0"

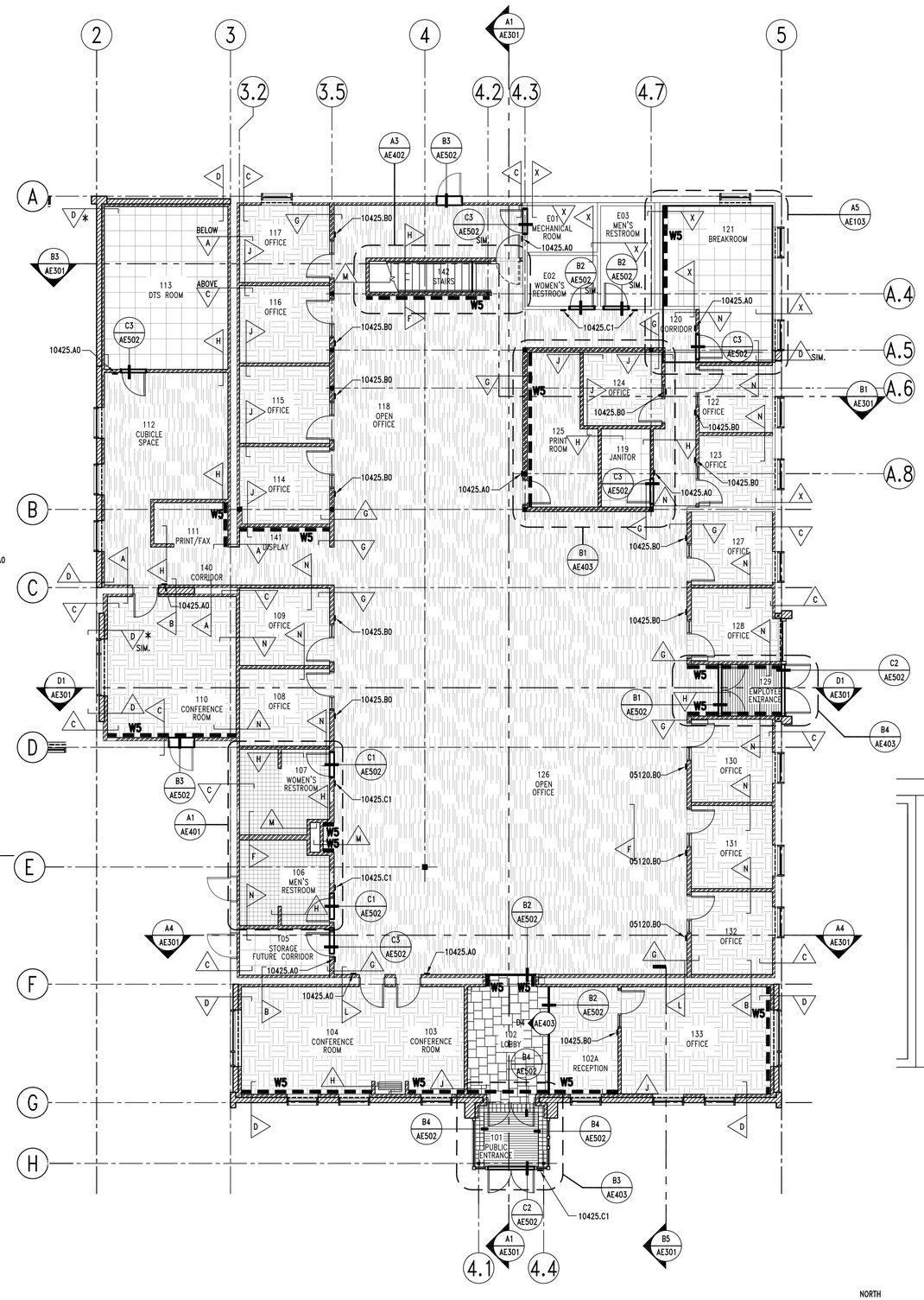

A2 LEVEL ONE WALL TYPES & FINISH PLAN – BASE BID

AE103 | REF. | SCALE: 1/8" = 1'-0"

NORTH

8' 6' 4' 2' 0' 4' 8' 16'

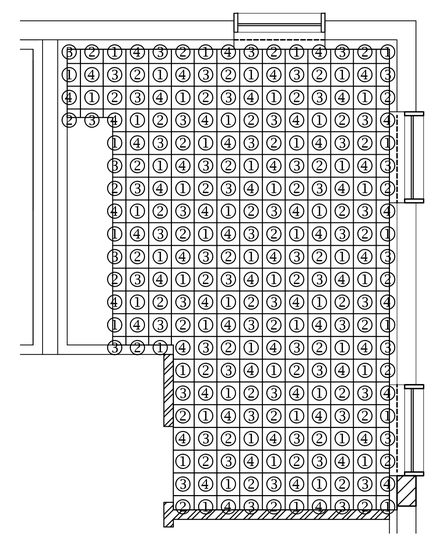

VINYL COMPOSITION TILE TYPE/COLOR:

① MANNINGTON, SOLID POINT, 302 GRAVEL (12"x12")
② MANNINGTON, SOLID POINT, 313 PRAIRIE (12"x12")
③ MANNINGTON, SOLID POINT, 317 COOL BEIGE (12"x12")
④ MANNINGTON, SOLID POINT, 337 TOASTED SESAME (12"x12")

A5 FLOOR PATTERN 121 BREAKROOM

AE103 | REF. AE103 | SCALE: NTS

KEYNOTES

10425.A0 ROOM SIGNAGE
10425.B0 EMPLOYEE SIGNAGE
10425.C1 ACCESSIBLE SIGNAGE

FINISH LEGEND

- XX — ACCENTED WALL COLOR, REFER TO FINISH SCHEDULE
- CARPET TILE, MONOLITHIC LAYOUT, REFER TO FINISH SCHEDULE
- CARPET TILE, QUARTER-TURN LAYOUT, REFER TO FINISH SCHEDULE
- VINYL COMPOSITION TILE, 12"x12", REFER TO FINISH SCHEDULE
- PORCELAIN TILE 6.5"x6.5", REFER TO FINISH SCHEDULE
- PORCELAIN TILE 17"x17" & 13"x13", REFER TO FINISH SCHEDULE
- ENTRY MAT, REFER TO FINISH SCHEDULE AND SPECIFICATIONS
- EXPOSED CONCRETE WITH EPOXY COATING

GENERAL NOTES

1. FIELD VERIFY ALL EXISTING CONDITIONS AND THEIR COMPATIBILITY WITH NEW CONSTRUCTION PRIOR TO THE COMMENCEMENT OF WORK. COORDINATE DISCREPANCIES WITH ARCHITECT.
2. DO NOT SCALE DRAWINGS.
3. REFER TO DETAILS D1, D2 & D3/AE502 FOR ROOM AND ACCESSIBLE SIGNAGE.
4. ALL SIGNAGE, REFER TO SPECIFICATION SECTION 10425. EMPLOYEE SIGNAGE FOR SYSTEMS FURNITURE, CONTRACTOR TO COORDINATE WITH OWNER FOR LOCATIONS AND PLACEMENT. PROVIDE MINIMUM QUANTITY 27 FOR BASE BID AND MINIMUM ADDITIONAL QUANTITY 8 FOR ADD-ALTERNATE.
5. WALL TYPE SHOWN TO CARRY ACROSS DOOR & WINDOW HEADS, AND OPENINGS, UNLESS NOTED OTHERWISE.

* INDICATES AN ITEM OR SYSTEM THAT IS PART OF BASE BID ONLY AND WILL NOT BE USED IF ADD ALTERNATE #1 IS INCLUDED IN THE CONTRACT FOR CONSTRUCTION.

CLIENT

UDOT CONNECTING COMMUNITIES

REGION 4 OFFICE REMODEL
708 SOUTH 100 WEST
RICHFIELD UTAH 84701

DESIGNER

ARCHIPLEX GROUP
architecture · planning · design services
255 Crossroad Square
Salt Lake City, UT 84115
P:(801) 961-7070
F:(801) 961-7373

CONSULTANTS

PROFESSIONAL SEAL

RALPH M. STANISLAW
05-310819-0301
9/20/10
LICENSED ARCHITECT

ISSUE

MARK	DATE	DESCRIPTION
	9-20-10	DFCM REVIEW COMMENTS
	8-16-10	DFCM REVIEW SUBMITTAL

DFCM PROJECT NO:	10046900
DFCM CONTRACT NO:	107453
ARCHIPLEX PROJECT NO:	1007.01
DRAWN BY:	A. PHILLIPS
CHECKED BY:	R. STANISLAW
SCALE:	AS SHOWN
DATE:	AUGUST 16, 2010

SHEET TITLE

LEVEL ONE WALL TYPES & FINISH PLAN

AE103

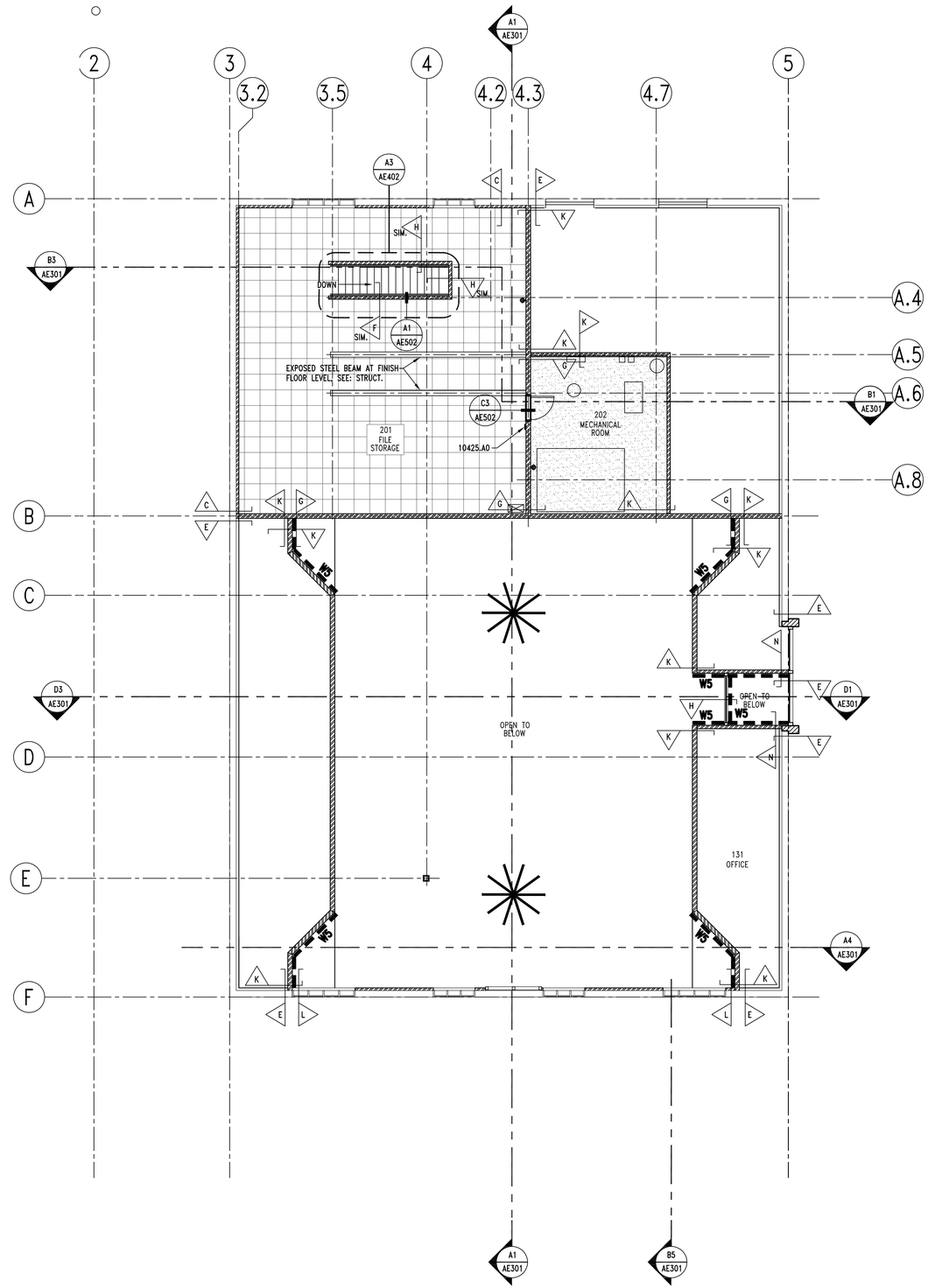

KEYNOTES

10425.A0 ROOM SIGNAGE
10425.B0 EMPLOYEE SIGNAGE
10425.C1 ACCESSIBLE SIGNAGE

FINISH LEGEND

- XX — ACCENTED WALL COLOR, REFER TO FINISH SCHEDULE
- CARPET TILE, MONOLITHIC LAYOUT, REFER TO FINISH SCHEDULE
- CARPET TILE, QUARTER-TURN LAYOUT, REFER TO FINISH SCHEDULE
- VINYL COMPOSITION TILE, 12"x12", REFER TO FINISH SCHEDULE
- PORCELAIN TILE 6.5"x6.5", REFER TO FINISH SCHEDULE
- PORCELAIN TILE 17"x17" & 13"x13", REFER TO FINISH SCHEDULE
- ENTRY MAT, REFER TO FINISH SCHEDULE AND SPECIFICATIONS
- EXPOSED CONCRETE WITH EPOXY COATING

GENERAL NOTES

1. FIELD VERIFY ALL EXISTING CONDITIONS AND THEIR COMPATIBILITY WITH NEW CONSTRUCTION PRIOR TO THE COMMENCEMENT OF WORK. COORDINATE DISCREPANCIES WITH ARCHITECT.
2. DO NOT SCALE DRAWINGS.
3. REFER TO DETAILS D1, D2 & D3/AE502 FOR ROOM AND ACCESSIBLE SIGNAGE.
4. ALL SIGNAGE, REFER TO SPECIFICATION SECTION 10425. EMPLOYEE SIGNAGE FOR SYSTEMS FURNITURE, CONTRACTOR TO COORDINATE WITH OWNER FOR LOCATIONS AND PLACEMENT. PROVIDE MINIMUM QUANTITY 27 FOR BASE BID AND MINIMUM ADDITIONAL QUANTITY 8 FOR ADD-ALTERNATE.
5. WALL TYPE SHOWN TO CARRY ACROSS DOOR & WINDOW HEADS, AND OPENINGS, UNLESS NOTED OTHERWISE.

* INDICATES AN ITEM OR SYSTEM THAT IS PART OF BASE BID ONLY AND WILL NOT BE USED IF ADD ALTERNATE #1 IS INCLUDED IN THE CONTRACT FOR CONSTRUCTION.

A2 | LEVEL TWO WALL TYPES & FINISH PLAN – BASE BID

AE103 | REF.

SCALE: 1/8" = 1'-0"

8' 6' 4' 2' 0' 4' 8' 16'

NORTH

CLIENT

UDOT CONNECTING COMMUNITIES

REGION 4 OFFICE REMODEL
708 SOUTH 100 WEST
RICHFIELD UTAH 84701

DESIGNER

ARCHIPLEX GROUP
architecture - planning - design services
255 Crossroad Square
Salt Lake City, UT 84115
P:(801) 961-7070
F:(801) 961-7373

CONSULTANTS

PROFESSIONAL SEAL

RALPH M. STANISLAW
95-310659-0301
9/20/10
LICENSED ARCHITECT

ISSUE

MARK	DATE	DESCRIPTION
	9-20-10	DFCM REVIEW COMMENTS
	8-16-10	DFCM REVIEW SUBMITTAL

DFCM PROJECT NO:	10046900
DFCM CONTRACT NO:	107453
ARCHIPLEX PROJECT NO:	1007.01
DRAWN BY:	A. PHILLIPS
CHECKED BY:	R. STANISLAW
SCALE:	AS SHOWN
DATE:	AUGUST 16, 2010

SHEET TITLE

LEVEL TWO WALL TYPES & FINISH PLAN

AE104

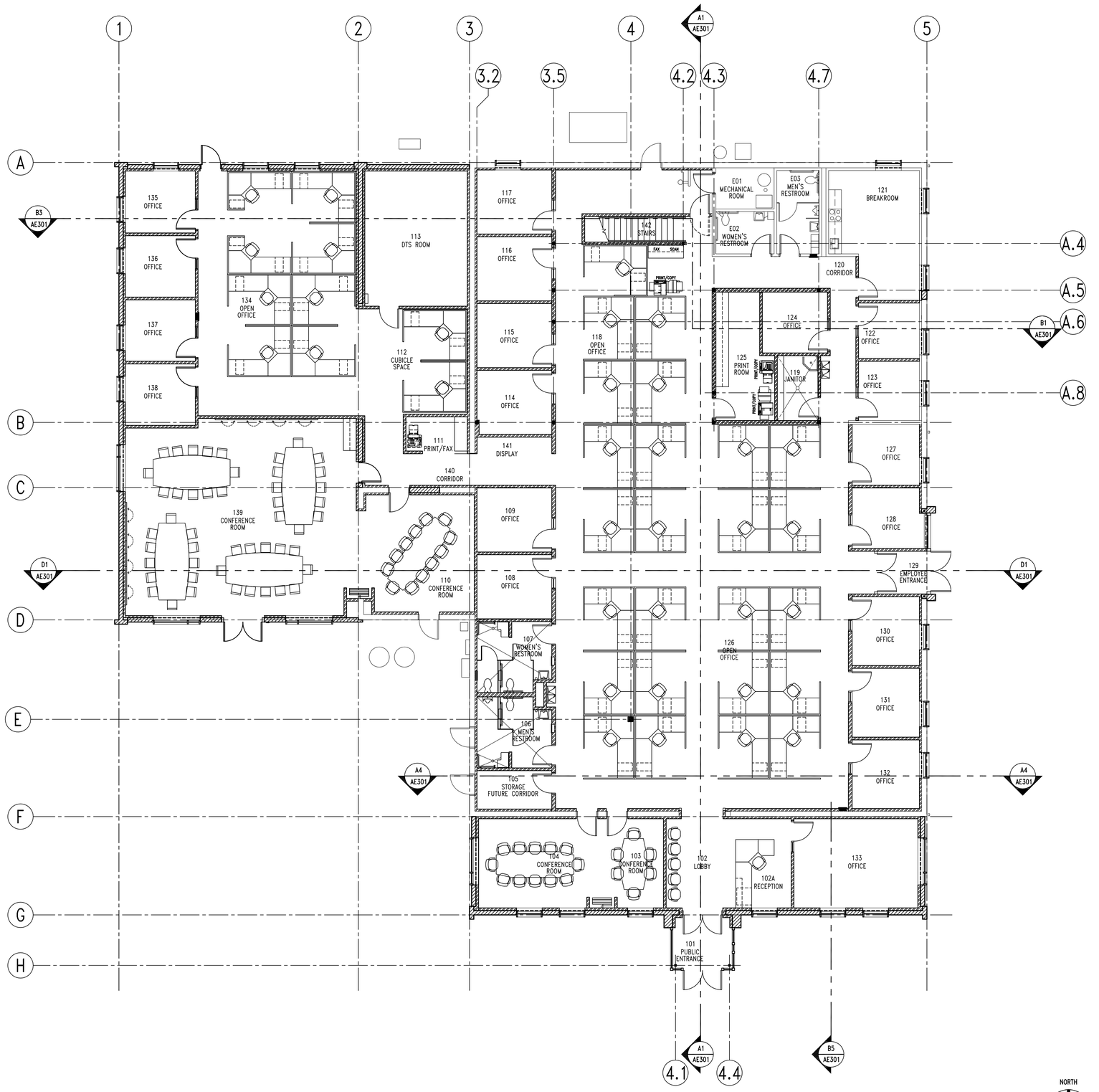

A1 | FURNITURE PLAN (FOR REFERENCE ONLY)

AE105 | REF. SCALE: 1/8" = 1'-0"

CLIENT

UDOT CONNECTING COMMUNITIES

REGION 4 OFFICE REMODEL
708 SOUTH 100 WEST
RICHFIELD UTAH 84701

DESIGNER

ARCHIPLEX GROUP
architecture · planning · design services
255 Crossroad Square
Salt Lake City, UT 84115
P:(801) 961-7070
F:(801) 961-7373

CONSULTANTS

PROFESSIONAL SEAL

RALPH M. STANISLAW
95-310889-0301
9/20/10
LICENSED ARCHITECT

ISSUE

MARK	DATE	DESCRIPTION
	9-20-10	DFCM REVIEW COMMENTS
	8-16-10	DFCM REVIEW SUBMITTAL

DFCM PROJECT NO:	10046900
DFCM CONTRACT NO:	107453
ARCHIPLEX PROJECT NO:	1007.01
DRAWN BY:	A. PHILLIPS
CHECKED BY:	R. STANISLAW
SCALE:	AS SHOWN
DATE:	AUGUST 16, 2010

SHEET TITLE

FURNITURE PLAN (FOR REFERENCE ONLY)

AE105

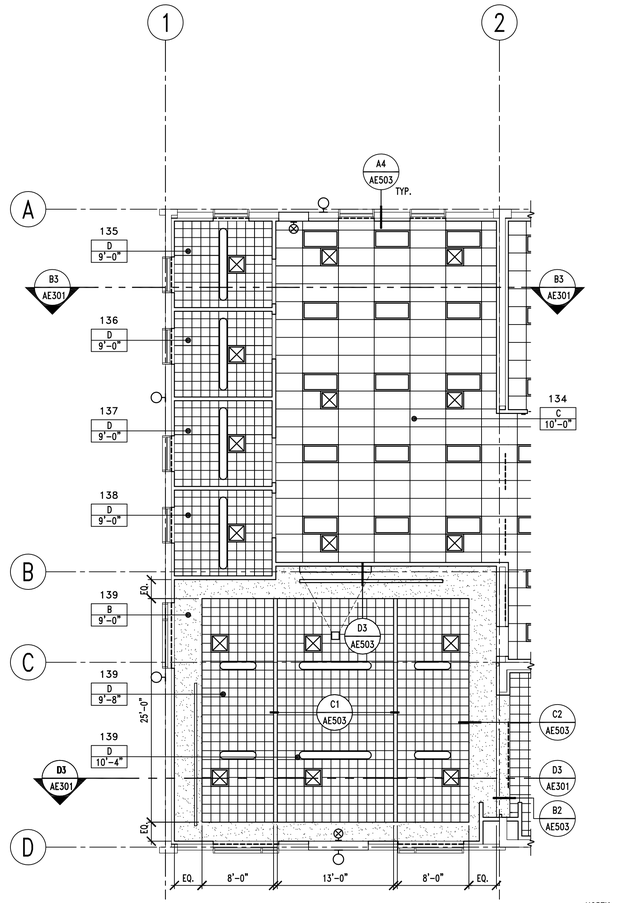

B1 | LEVEL ONE REFLECTED CEILING PLAN–ADD ALT.#1

AE121 | REF. | SCALE: 1/8" = 1'-0"

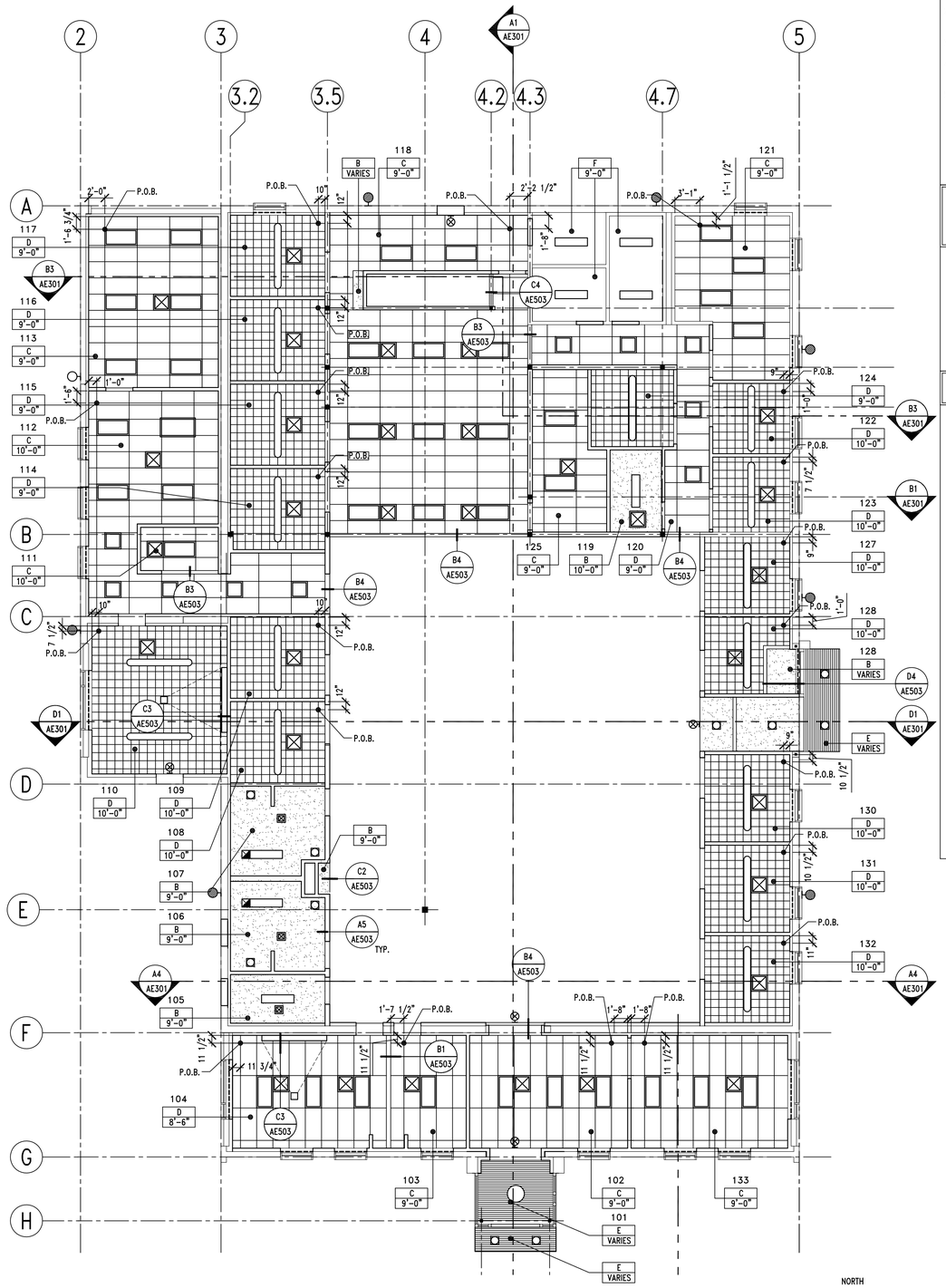

A2 | LEVEL ONE REFLECTED CEILING PLAN

AE121 | REF. | SCALE: 1/8" = 1'-0"

GENERAL NOTES

1. SEE MECHANICAL AND ELECTRICAL DRAWINGS FOR ADDITIONAL LIGHTING AND DIFFUSER INFORMATION.
2. CEILING HEIGHT SHOWN IN ROOM TAG INDICATES HEIGHT OF DOMINANT CEILING FINISH. SEE NOTES FOR ADDITIONAL CEILING FINISH INFORMATION.
3. SEE DETAILS A1, A2 & A3/AE503 FOR SEISMIC BRACING.
4. POINT OF BEGINING (P.O.B.) IS TO DENOTE WHERE THE GRID SHOULD START, AS TO CREATE EVEN TILES ON ALL SIDES OF ROOM.
5. GENERAL CONTRACTOR IS RESPONSIBLE FOR COORDINATION OF WORK BETWEEN TRADES AND COORDINATION OF CONTRACT DOCUMENTS BETWEEN TRADES. SUB-CONTRACTORS ARE ALSO RESPONSIBLE FOR COORDINATION WITH OTHER TRADES AND OTHER DISCIPLINES INCLUDED IN THE CONTRACTS DOCUMENTS. IF ANY DISCREPANCIES ARE FOUND, GENERAL CONTRACTOR IS TO NOTIFY ARCHITECT IMMEDIATELY BEFORE COMMENCEMENT OF WORK. NO EXTRA COSTS TO THE PROJECT WILL BE INCURRED DUE TO FAILURE OF SUB-CONTRACTORS TO REVIEW/COORDINATE WITH OTHER TRADES.

REFLECTED CEILING PLAN LEGEND

ROOM # —— 131
TYPE —— E
ELEVATION —— VARIES
A.F.F.

TYPE A	EXPOSED STRUCTURE – PAINTED
TYPE B	5/8" GYPSUM BOARD – PAINTED
TYPE C	2'x4' LAY-IN CEILING GRID SYSTEM WITH ACOUSTICAL PANELS
TYPE D	⅝" G.B. WITH 12"x12" SURFACE MOUNTED ACOUSTICAL CEILING TILE
TYPE E	GALVANIZED CORRUGATED METAL PANEL
TYPE F	EXISTING TO REMAIN – PAINTED

CEILING SYMBOLS

- PAINTED GYP. BD. CEILING
- 2' x 4' FLUORESCENT LIGHT FIXTURE, SEE ELECT. DRAWINGS FOR TYPE.
- 1' x 4' FLUORESCENT LIGHT FIXTURE
- 1' x 8' FLUORESCENT PENDANT LIGHT FIXTURE
- 1' x 4' FLUORESCENT PENDANT FIXTURE
- RETURN AIR GRILLE – HORIZONTAL (SEE MECH. DRAWINGS)
- SUPPLY AIR GRILLE – HORIZONTAL (SEE MECH. DRAWINGS)
- EXHAUST FAN (SEE MECH. DRAWINGS)
- EXIT SIGN
- NEW EXTERIOR WALL MOUNTED LIGHTS
- EXISTING EXTERIOR WALL MOUNTED LIGHTS
- OVERHEAD PROJECTOR & MANUAL PULL SCREEN
- 8' DIAMETER HIGH VOLUME LOW SPEED CEILING FAN

CLIENT

UDOT CONNECTING COMMUNITIES

REGION 4 OFFICE REMODEL
708 SOUTH 100 WEST
RICHFIELD UTAH 84701

DESIGNER

ARCHIPLEX GROUP
architecture · planning · design services
255 Crossroad Square
Salt Lake City, UT 84115
P:(801) 961-7070
F:(801) 961-7373

CONSULTANTS

PROFESSIONAL SEAL

STATE OF UTAH — RALPH M. STANISLAW — 05-310819-0301 — 9/20/10 — LICENSED ARCHITECT

ISSUE

MARK	DATE	DESCRIPTION
	9-20-10	DFCM REVIEW COMMENTS
	8-16-10	DFCM REVIEW SUBMITTAL

DFCM PROJECT NO:	10046900
DFCM CONTRACT NO:	107453
ARCHIPLEX PROJECT NO:	1007.01
DRAWN BY:	A. PHILLIPS
CHECKED BY:	R. STANISLAW
SCALE:	AS SHOWN
DATE:	AUGUST 16, 2010

SHEET TITLE

LEVEL ONE REFLECTED CEILING PLAN

AE121

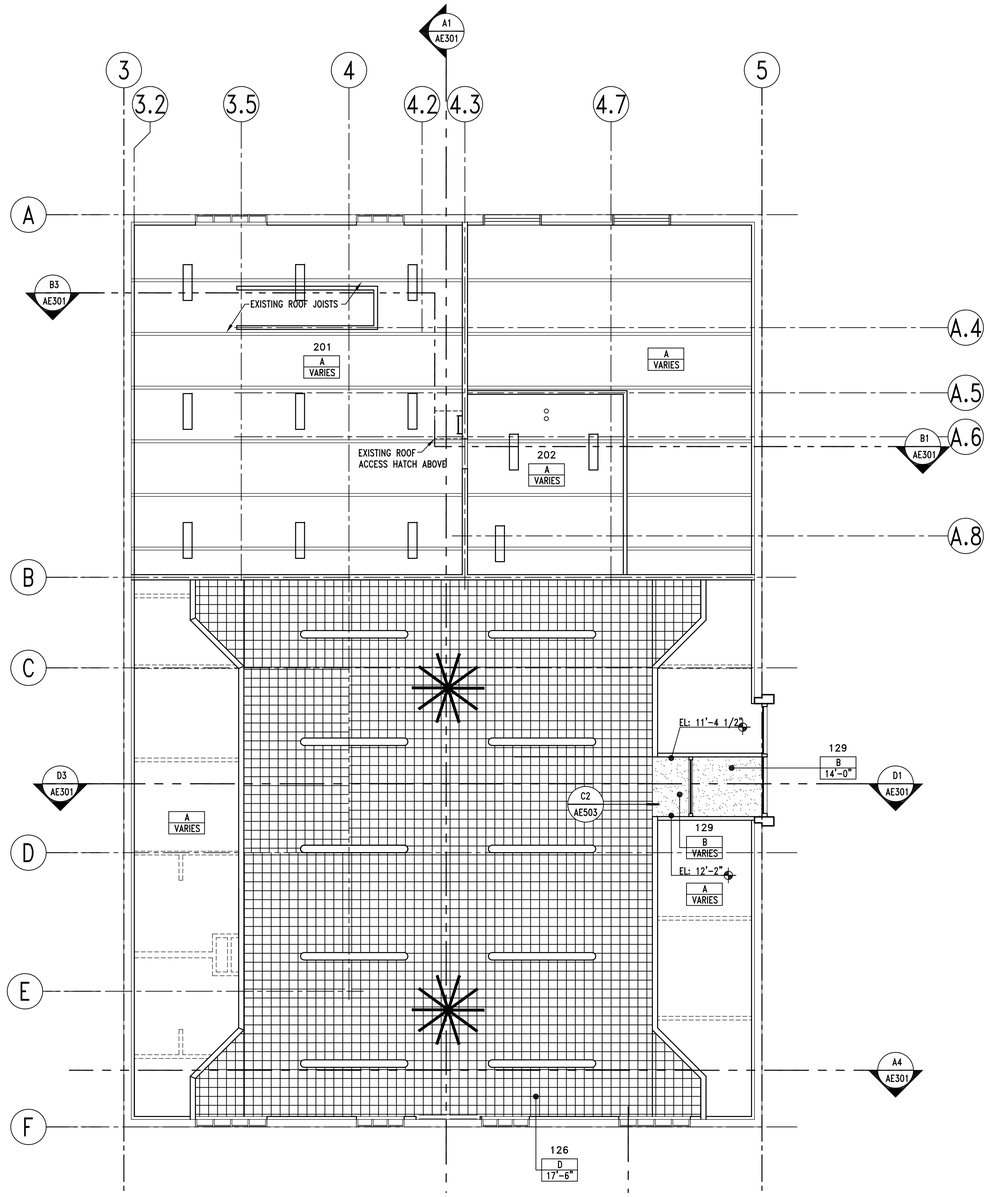

A2 | LEVEL TWO REFLECTED CEILING PLAN

AE122 | REF.

SCALE: 1/8" = 1'-0"

8' 6' 4' 2' 0' 4' 8' 16'

NORTH

GENERAL NOTES

1. SEE MECHANICAL AND ELECTRICAL DRAWINGS FOR ADDITIONAL LIGHTING AND DIFFUSER INFORMATION.
2. CEILING HEIGHT SHOWN IN ROOM TAG INDICATES HEIGHT OF DOMINANT CEILING FINISH. SEE NOTES FOR ADDITIONAL CEILING FINISH INFORMATION.
3. SEE DETAILS A1, A2 & A3/AE503 FOR SEISMIC BRACING.
4. POINT OF BEGINING (P.O.B.) IS TO DENOTE WHERE THE GRID SHOULD START, AS TO CREATE EVEN TILES ON ALL SIDES OF ROOM.
5. GENERAL CONTRACTOR IS RESPONSIBLE FOR COORDINATION OF WORK BETWEEN TRADES AND COORDINATION OF CONTRACT DOCUMENTS BETWEEN TRADES. SUB-CONTRACTORS ARE ALSO RESPONSIBLE FOR COORDINATION WITH OTHER TRADES AND OTHER DISCIPLINES INCLUDED IN THE CONTRACTS DOCUMENTS. IF ANY DISCREPANCIES ARE FOUND, GENERAL CONTRACTOR IS TO NOTIFY ARCHITECT IMMEDIATELY BEFORE COMMENCEMENT OF WORK. NO EXTRA COSTS TO THE PROJECT WILL BE INCURRED DUE TO FAILURE OF SUB-CONTRACTORS TO REVIEW/COORDINATE WITH OTHER TRADES.

REFLECTED CEILING PLAN LEGEND

ROOM # — 131
TYPE — E
ELEVATION A.F.F. — VARIES

TYPE A	EXPOSED STRUCTURE – PAINTED
TYPE B	5/8" GYPSUM BOARD – PAINTED
TYPE C	2'x4' LAY-IN CEILING GRID SYSTEM WITH ACOUSTICAL PANELS
TYPE D	⅝" G.B. WITH 12"x12" SURFACE MOUNTED ACOUSTICAL CEILING TILE
TYPE E	GALVANIZED CORRUGATED METAL PANEL
TYPE F	EXISTING TO REMAIN – PAINTED

CEILING SYMBOLS

- PAINTED GYP. BD. CEILING
- 2' x 4' FLUORESCENT LIGHT FIXTURE, SEE ELECT. DRAWINGS FOR TYPE.
- 1' x 4' FLUORESCENT LIGHT FIXTURE
- 1' x 8' FLUORESCENT PENDANT LIGHT FIXTURE
- 1' x 4' FLUORESCENT PENDANT FIXTURE
- RETURN AIR GRILLE – HORIZONTAL (SEE MECH. DRAWINGS)
- SUPPLY AIR GRILLE – HORIZONTAL (SEE MECH. DRAWINGS)
- EXHAUST FAN (SEE MECH. DRAWINGS)
- EXIT SIGN
- NEW EXTERIOR WALL MOUNTED LIGHTS
- EXISTING EXTERIOR WALL MOUNTED LIGHTS
- OVERHEAD PROJECTOR & MANUAL PULL SCREEN
- 8' DIAMETER HIGH VOLUME LOW SPEED CEILING FAN

CLIENT

UDOT CONNECTING COMMUNITIES

REGION 4 OFFICE REMODEL
708 SOUTH 100 WEST
RICHFIELD UTAH 84701

DESIGNER

ARCHIPLEX GROUP
architecture · planning · design services
255 Crossroad Square
Salt Lake City, UT 84115
P:(801) 961-7070
F:(801) 961-7373

CONSULTANTS

PROFESSIONAL SEAL

RALPH M. STANISLAW
95-310819-0301
9/20/10
LICENSED ARCHITECT

ISSUE

MARK	DATE	DESCRIPTION
	9-20-10	DFCM REVIEW COMMENTS
	8-16-10	DFCM REVIEW SUBMITTAL

DFCM PROJECT NO:	10046900
DFCM CONTRACT NO:	107453
ARCHIPLEX PROJECT NO:	1007.01
DRAWN BY:	A. PHILLIPS
CHECKED BY:	R. STANISLAW
SCALE:	AS SHOWN
DATE:	AUGUST 16, 2010

SHEET TITLE

LEVEL TWO REFLECTED CEILING PLAN

AE122

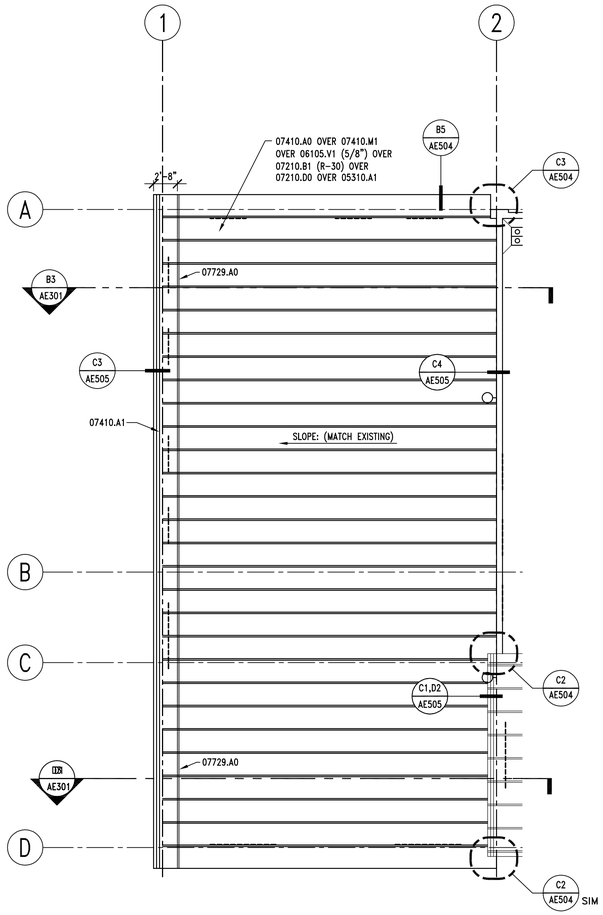

B1 | ROOF PLAN – ADD. ALT #1

AE141 | REF. SCALE: 1/8" = 1'-0"

NORTH

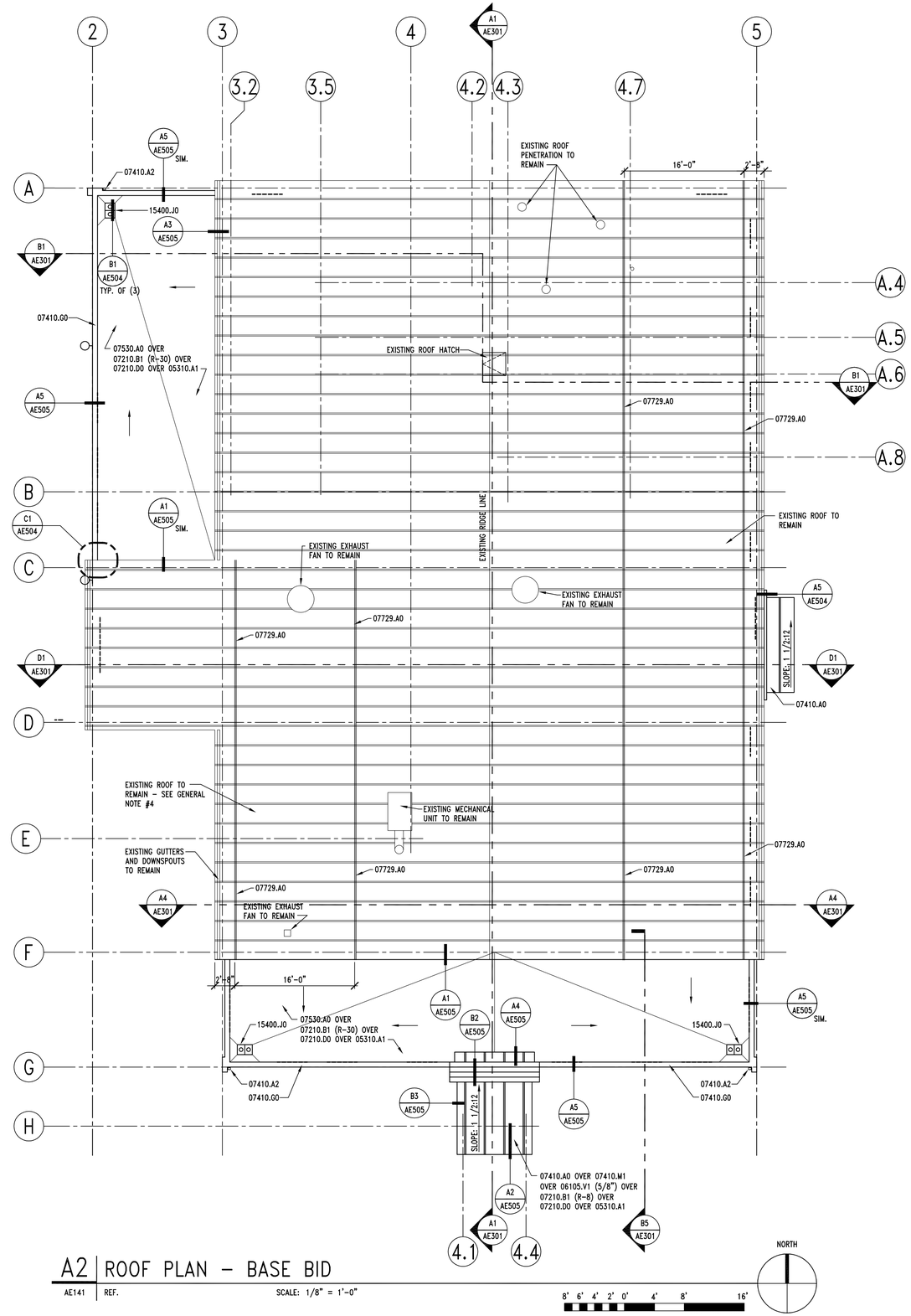

A2 | ROOF PLAN – BASE BID

AE141 | REF. SCALE: 1/8" = 1'-0"

NORTH

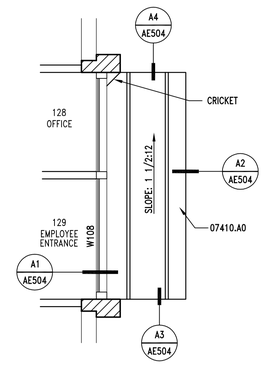

B5 | CANOPY ROOF PLAN

AE141 | REF. SCALE: 1/4" = 1'-0"

KEYNOTES

05310.A1	METAL DECK – SEE STRUCTURAL
06105.V1	EXTERIOR GRADE SHEATHING – PLYWOOD (THICKNESS)
07210.B1	RIGID INSULATION (R-VALUE)
07210.D0	VAPOR BARRIER
07410.A0	STANDING SEAM METAL ROOF
07410.A1	RAIN GUTTER
07410.A2	DOWNSPOUT
07410.G0	FLASHING – FINISHED TO MATCH ROOF COLOR
07410.M1	ICE & WATER SHIELD
07530.A0	EPDM ROOFING MEMBRANE
07729.A0	STANDING SEAM METAL ROOF 2-PIPE SNOWGUARD SYSTEM
15400.J0	ROOF DRAIN & OVERFLOW DRAIN

GENERAL NOTES

1. FIELD VERIFY ALL EXISTING CONDITIONS AND THEIR COMPATIBILITY WITH NEW CONSTRUCTION PRIOR TO THE COMMENCEMENT OF WORK. COORDINATE DISCREPANCIES WITH ARCHITECT.
2. DO NOT SCALE DRAWINGS.
3. SEE CIVIL, STRUCTURAL, MECHANICAL AND ELECTRICAL DRAWINGS FOR MORE INFORMATION.
4. GENERAL CONTRACTOR IS RESPONSIBLE FOR COORDINATION OF WORK BETWEEN TRADES AND COORDINATION OF CONTRACT DOCUMENTS BETWEEN TRADES. SUB-CONTRACTORS ARE ALSO RESPONSIBLE FOR COORDINATION WITH OTHER TRADES AND OTHER DISCIPLINES INCLUDED IN THE CONTRACTS DOCUMENTS. IF ANY DISCREPANCIES ARE FOUND, GENERAL CONTRACTOR IS TO NOTIFY ARCHITECT IMMEDIATELY BEFORE COMMENCEMENT OF WORK. NO EXTRA COSTS TO THE PROJECT WILL BE INCURRED DUE TO FAILURE OF SUB-CONTRACTORS TO REVIEW/COORDINATE WITH OTHER TRADES.

CLIENT

UDOT CONNECTING COMMUNITIES

REGION 4 OFFICE REMODEL
708 SOUTH 100 WEST
RICHFIELD UTAH 84701

DESIGNER

ARCHIPLEX GROUP
architecture · planning · design services
255 Crossroad Square
Salt Lake City, UT 84115
P:(801) 961-7070
F:(801) 961-7373

CONSULTANTS

PROFESSIONAL SEAL

RALPH M. STANISLAW
95-310619-0301
9/20/10
LICENSED ARCHITECT

ISSUE

MARK	DATE	DESCRIPTION
	9-20-10	DFCM REVIEW COMMENTS
	8-16-10	DFCM REVIEW SUBMITTAL

DFCM PROJECT NO:	10046900
DFCM CONTRACT NO:	107453
ARCHIPLEX PROJECT NO:	1007.01
DRAWN BY:	A. PHILLIPS
CHECKED BY:	R. STANISLAW
SCALE:	AS SHOWN
DATE:	AUGUST 16, 2010

SHEET TITLE

ROOF PLAN

AE141

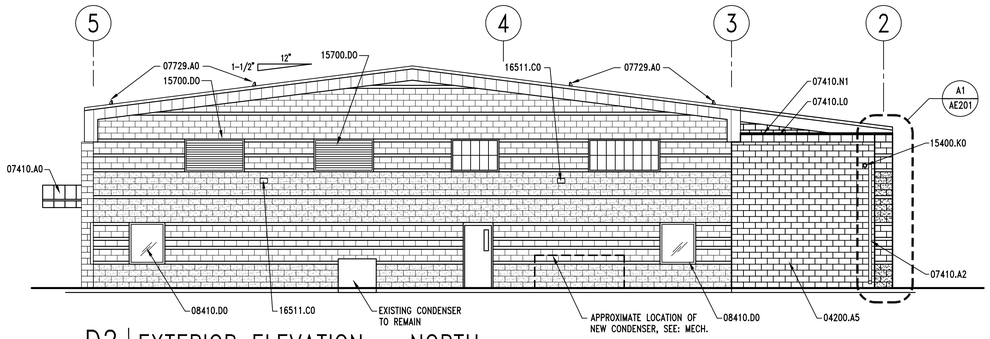

D2 | EXTERIOR ELEVATION – NORTH

AE201 | REF. AE101 | SCALE: 1/8" = 1'-0"

8' 6' 4' 2' 0' 4' 8' 16'

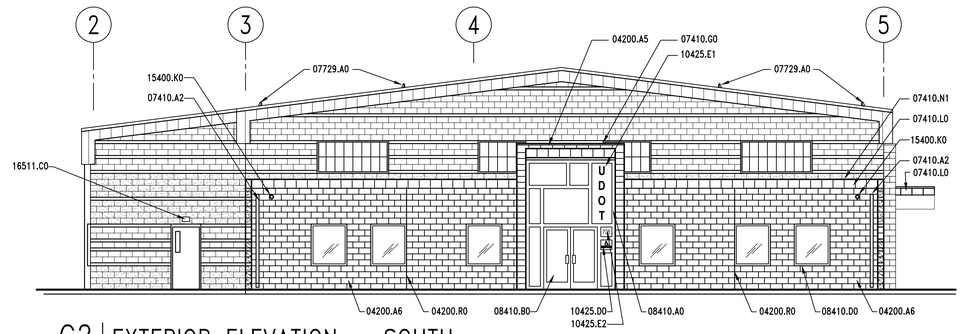

C2 | EXTERIOR ELEVATION – SOUTH

AE201 | REF. AE101 | SCALE: 1/8" = 1'-0"

8' 6' 4' 2' 0' 4' 8' 16'

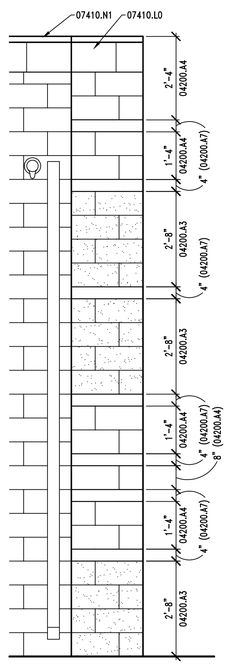

A1 | ELEVATION DETAIL

AE201 | REF. AE201 | SCALE: 1/2" = 1'-0"

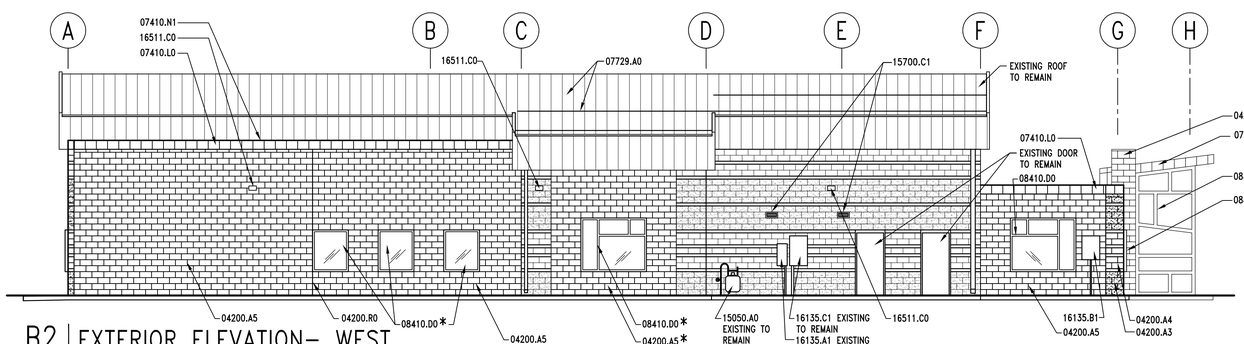

B2 | EXTERIOR ELEVATION– WEST

AE201 | REF. AE101 | SCALE: 1/8" = 1'-0"

8' 6' 4' 2' 0' 4' 8' 16'

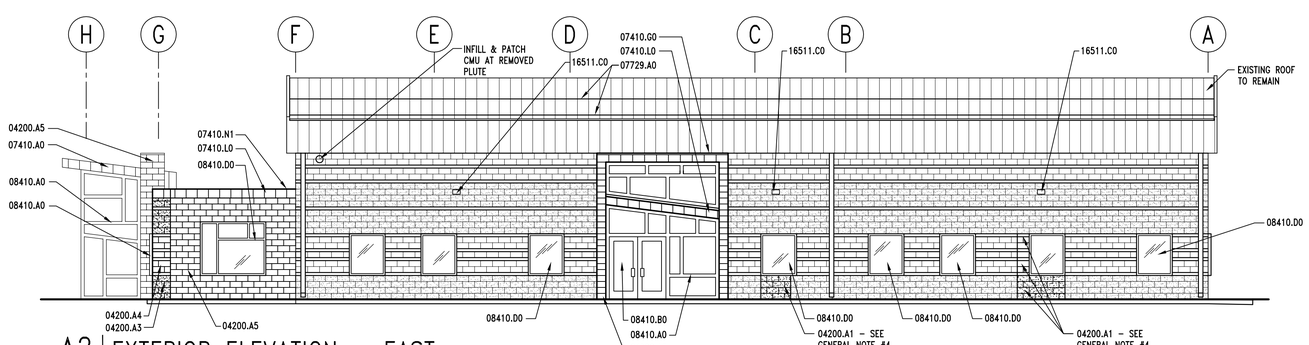

A2 | EXTERIOR ELEVATION – EAST

AE201 | REF. AE101 | SCALE: 1/8" = 1'-0"

8' 6' 4' 2' 0' 4' 8' 16'

KEYNOTES

04200.A1	CMU TO MATCH ADJACENT – SALVAGED FROM CMU DEMOLITION
04200.A3	8" CMU – SPLIT FACE – COLOR TO MATCH EXISTING
04200.A4	8" CMU – HONED – COLOR TO MATCH EXISTING
04200.A5	8" CMU – HONED – NATURAL GRAY
04200.A6	8" CMU – HONED – RED TO MATCH EXISTING
04200.A7	4" CMU – HONED – COLOR TO MATCH EXISTING
04200.R0	MASONRY CONTROL JOINT
07410.A0	STANDING SEAM METAL ROOF
07410.A1	RAIN GUTTER
07410.A2	DOWNSPOUT
07410.G0	FLASHING
07410.L0	METAL FASCIA
07410.N1	PARAPET CAP FLASHING
07729.A0	STANDING SEAM METAL ROOF 2-PIPE SNOWGUARD SYSTEM
08111.B0	HOLLOW METAL DOOR
08410.A0	ALUMINUM STOREFRONT FRAME
08410.B0	ALUMINUM DOOR
08410.D0	ALUMINUM WINDOW
10425.D0	ADA COMPLIANT ENTRANCE SIGN
10425.E1	VINYL SIGNAGE – UDOT LOGO
10425.E2	VINYL SIGNAGE – UDOT BUILDING ADDRESS – VERIFY EXACT NUMBER WITH OWNER
15050.A0	GAS METER – SEE MECHANICAL
15400.K0	LAMB'S TONGUE AT OVERFLOW DRAIN
15700.C1	EXHAUST FAN VENT – SEE MECHANICAL
15700.D0	LOUVER WITH BIRD SCREEN – SEE MECHANICAL
16135.A1	ELECTRICAL METER – SEE ELECTRICAL
16135.B1	EMERGENCY DISCONNECT – SEE ELECTRICAL
16135.C1	ELECTRICAL PANEL – SEE ELECTRICAL
16511.C0	EXTERIOR WALL MOUNTED LIGHT

GENERAL NOTES

1. FIELD VERIFY ALL EXISTING CONDITIONS AND THEIR COMPATIBILITY WITH NEW CONSTRUCTION PRIOR TO THE COMMENCEMENT OF WORK. COORDINATE DISCREPANCIES WITH ARCHITECT.
2. DO NOT SCALE DRAWINGS.
3. PROVIDE CLEAR WATER RESISTANT COATING AT ALL CMU WALLS EXISTING AND NEW. SEE SPEC. 07190
4. CONTRACTOR TO PROVIDE SAMPLES OF ALL EXISTING CMU TO ARCHITECT FOR SELECTION OF NEW CMU.
5. KEYNOTES APPLY TO ALL EXTERIOR ELEVATION SHEETS. THEREFORE, NOT ALL KEYNOTES WILL BE FOUND ON THIS SHEET. KEYNOTES FOR BASE BID MAY BE FOUND ON SHEET AE201 – KEYNOTES FOR ADD ALTERNATE #1 MAY BE FOUND ON SHEET AE202.
6. GENERAL CONTRACTOR IS RESPONSIBLE FOR COORDINATION OF WORK BETWEEN TRADES AND COORDINATION OF CONTRACT DOCUMENTS BETWEEN TRADES. SUB-CONTRACTORS ARE ALSO RESPONSIBLE FOR COORDINATION WITH OTHER TRADES AND OTHER DISCIPLINES INCLUDED IN THE CONTRACTS DOCUMENTS. IF ANY DISCREPANCIES ARE FOUND, GENERAL CONTRACTOR IS TO NOTIFY ARCHITECT IMMEDIATELY BEFORE COMMENCEMENT OF WORK. NO EXTRA COSTS TO THE PROJECT WILL BE INCURRED DUE TO FAILURE OF SUB-CONTRACTORS TO REVIEW/COORDINATE WITH OTHER TRADES.

EXTERIOR COLOR SCHEDULE

METAL ROOF: MATCH EXISTING COLOR, FINISH & PROFILE

METAL FASCIA, SOFFIT & FLASHING: MATCH EXISTING COLOR, FINISH AND PROFILE

DOWN SPOUTS: MATCH EXISTING COLOR, FINISH AND PROFILE

HOLLOW METAL DOORS & FRAMES: MATCH EXISTING COLOR AND FINISH

ALUMINUM STOREFRONT DOORS & FRAMES: CLEAR ANODIZED WITH SATIN FINISH

ALUMINUM WINDOW FRAMES: CLEAR ANODIZED WITH SATIN FINISH

GLAZING: VARIES – SEE AE602 AND SPECIFICATIONS

EXHAUST VENTS & LOUVERS: PRE-FINISHED SILVER ANODIZED

EXTERIOR LIGHT FIXTURES: PRE-FINISHED SILVER

LEGEND

* INDICATES AN ITEM OR SYSTEM THAT IS PART OF BASE BID ONLY AND WILL NOT BE USED IF ADD ALTERNATE #1 IS INCLUDED IN THE CONTRACT FOR CONSTRUCTION

CLIENT

UDOT CONNECTING COMMUNITIES

REGION 4 OFFICE REMODEL
708 SOUTH 100 WEST
RICHFIELD UTAH 84701

DESIGNER

ARCHIPLEX GROUP
architecture · planning · design services
255 Crossroad Square
Salt Lake City, UT 84115
P:(801) 961-7070
F:(801) 961-7373

CONSULTANTS

PROFESSIONAL SEAL

RALPH M. STANISLAW
95-310819-0301
9/20/10
LICENSED ARCHITECT

ISSUE

MARK	DATE	DESCRIPTION
	9-20-10	DFCM REVIEW COMMENTS
	8-16-10	DFCM REVIEW SUBMITTAL

DFCM PROJECT NO:	10046900
DFCM CONTRACT NO:	107453
ARCHIPLEX PROJECT NO:	1007.01
DRAWN BY:	A. PHILLIPS
CHECKED BY:	R. STANISLAW
SCALE:	AS SHOWN
DATE:	AUGUST 16, 2010

SHEET TITLE

EXTERIOR ELEVATIONS

AE201

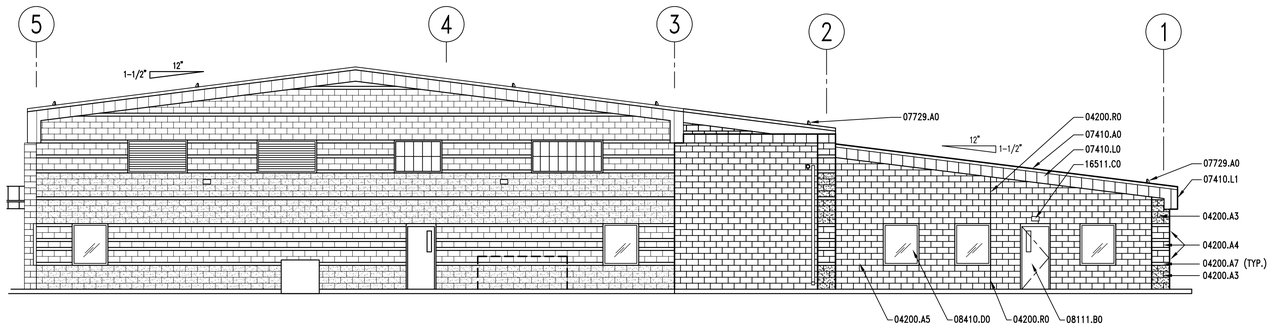

C2 ADD ALTERNATE EXTERIOR ELEVATION – NORTH

AE202 REF. AE101 SCALE: 1/8" = 1'-0"

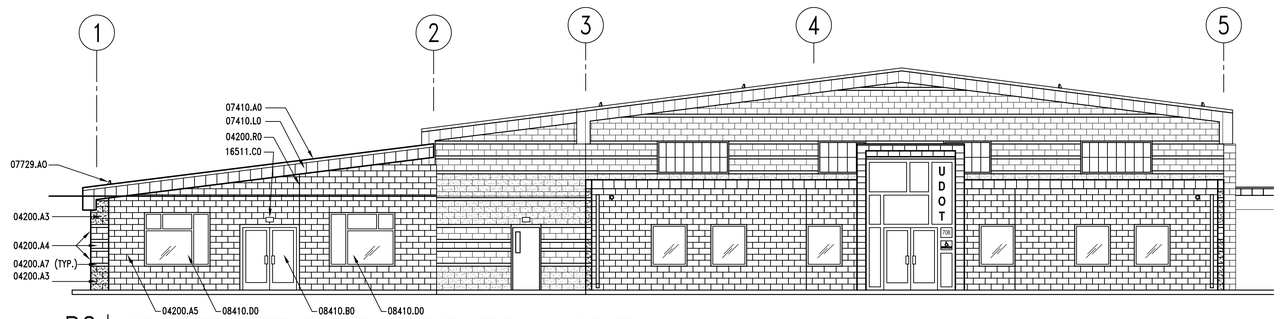

B2 ADD ALTERNATE EXTERIOR ELEVATION – SOUTH

AE202 REF. AE101 SCALE: 1/8" = 1'-0"

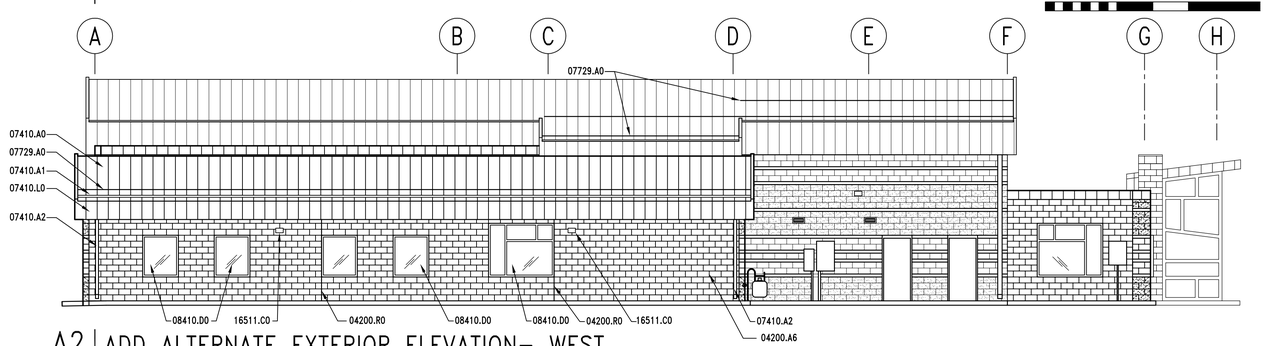

A2 ADD ALTERNATE EXTERIOR ELEVATION– WEST

AE202 REF. AE101 SCALE: 1/8" = 1'-0"

KEYNOTES

04200.A1	CMU TO MATCH ADJACENT – SALVAGED FROM CMU DEMOLITION
04200.A3	8" CMU – SPLIT FACE – COLOR TO MATCH EXISTING
04200.A4	8" CMU – HONED – COLOR TO MATCH EXISTING
04200.A5	8" CMU – HONED – NATURAL GRAY
04200.A6	8" CMU – HONED – RED TO MATCH EXISTING
04200.A7	4" CMU – HONED – COLOR TO MATCH EXISTING
04200.R0	MASONRY CONTROL JOINT
07410.A0	STANDING SEAM METAL ROOF
07410.A1	RAIN GUTTER
07410.A2	DOWNSPOUT
07410.G0	FLASHING
07410.L0	METAL FASCIA
07410.N1	PARAPET CAP FLASHING
07729.A0	STANDING SEAM METAL ROOF 2-PIPE SNOWGUARD SYSTEM
08111.B0	HOLLOW METAL DOOR
08410.A0	ALUMINUM STOREFRONT FRAME
08410.B0	ALUMINUM DOOR
08410.D0	ALUMINUM WINDOW
10425.D0	ADA COMPLIANT ENTRANCE SIGN
10425.E1	VINYL SIGNAGE – UDOT LOGO
10425.E2	VINYL SIGNAGE – UDOT BUILDING ADDRESS – VERIFY EXACT NUMBER WITH OWNER
15050.A0	GAS METER – SEE MECHANICAL
15400.K0	LAMB'S TONGUE AT OVERFLOW DRAIN
15700.C1	EXHAUST FAN VENT – SEE MECHANICAL
15700.D0	LOUVER WITH BIRD SCREEN – SEE MECHANICAL
16135.A1	ELECTRICAL METER – SEE ELECTRICAL
16135.B1	EMERGENCY DISCONNECT – SEE ELECTRICAL
16135.C1	ELECTRICAL PANEL – SEE ELECTRICAL
16511.C0	EXTERIOR WALL MOUNTED LIGHT

GENERAL NOTES

1. FIELD VERIFY ALL EXISTING CONDITIONS AND THEIR COMPATIBILITY WITH NEW CONSTRUCTION PRIOR TO THE COMMENCEMENT OF WORK. COORDINATE DISCREPANCIES WITH ARCHITECT.
2. DO NOT SCALE DRAWINGS.
3. PROVIDE CLEAR WATER RESISTANT COATING AT ALL CMU WALLS EXISTING AND NEW. SEE SPEC. 07190
4. CONTRACTOR TO PROVIDE SAMPLES OF ALL EXISTING CMU TO ARCHITECT FOR SELECTION OF NEW CMU.
5. KEYNOTES APPLY TO ALL EXTERIOR ELEVATION SHEETS. THEREFORE, NOT ALL KEYNOTES WILL BE FOUND ON THIS SHEET. KEYNOTES FOR BASE BID MAY BE FOUND ON SHEET AE201 – KEYNOTES FOR ADD ALTERNATE #1 MAY BE FOUND ON SHEET AE202.
6. GENERAL CONTRACTOR IS RESPONSIBLE FOR COORDINATION OF WORK BETWEEN TRADES AND COORDINATION OF CONTRACT DOCUMENTS BETWEEN TRADES. SUB-CONTRACTORS ARE ALSO RESPONSIBLE FOR COORDINATION WITH OTHER TRADES AND OTHER DISCIPLINES INCLUDED IN THE CONTRACTS DOCUMENTS. IF ANY DISCREPANCIES ARE FOUND, GENERAL CONTRACTOR IS TO NOTIFY ARCHITECT IMMEDIATELY BEFORE COMMENCEMENT OF WORK. NO EXTRA COSTS TO THE PROJECT WILL BE INCURRED DUE TO FAILURE OF SUB-CONTRACTORS TO REVIEW/COORDINATE WITH OTHER TRADES.

EXTERIOR COLOR SCHEDULE

METAL ROOF: MATCH EXISTING COLOR, FINISH & PROFILE

METAL FASCIA, SOFFIT & FLASHING: MATCH EXISTING COLOR, FINISH AND PROFILE

DOWN SPOUTS: MATCH EXISTING COLOR, FINISH AND PROFILE

HOLLOW METAL DOORS & FRAMES: MATCH EXISTING COLOR AND FINISH

ALUMINUM STOREFRONT DOORS & FRAMES: CLEAR ANODIZED WITH SATIN FINISH

ALUMINUM WINDOW FRAMES: CLEAR ANODIZED WITH SATIN FINISH

GLAZING: VARIES – SEE AE602 AND SPECIFICATIONS

EXHAUST VENTS & LOUVERS: PRE-FINISHED SILVER ANODIZED

EXTERIOR LIGHT FIXTURES: PRE-FINISHED SILVER

LEGEND

* INDICATES AN ITEM OR SYSTEM THAT IS PART OF BASE BID ONLY AND WILL NOT BE USED IF ADD ALTERNATE #1 IS INCLUDED IN THE CONTRACT FOR CONSTRUCTION

CLIENT

UDOT CONNECTING COMMUNITIES

REGION 4 OFFICE REMODEL
708 SOUTH 100 WEST
RICHFIELD UTAH 84701

DESIGNER

ARCHIPLEX GROUP
architecture · planning · design services
255 Crossroad Square
Salt Lake City, UT 84115
P:(801) 961-7070
F:(801) 961-7373

CONSULTANTS

PROFESSIONAL SEAL

RALPH M. STANISLAW
95-310819-0301
9/20/10
LICENSED ARCHITECT

ISSUE

MARK	DATE	DESCRIPTION
	9-20-10	DFCM REVIEW COMMENTS
	8-16-10	DFCM REVIEW SUBMITTAL

DFCM PROJECT NO:	10046900
DFCM CONTRACT NO:	107453
ARCHIPLEX PROJECT NO:	1007.01
DRAWN BY:	A. PHILLIPS
CHECKED BY:	R. STANISLAW
SCALE:	AS SHOWN
DATE:	AUGUST 16, 2010

SHEET TITLE

ADD. ALTERNATE EXTERIOR ELEVATIONS

AE202

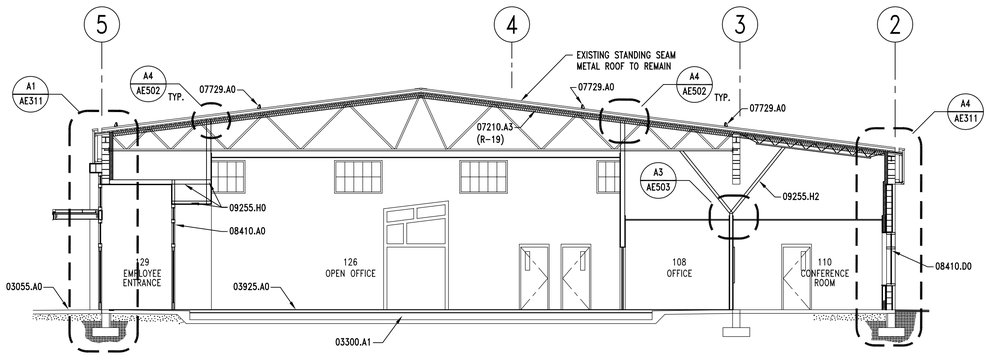

D1 | BUILDING SECTION – BASE BID

AE301 | REF. AE101 | SCALE: 1/8" = 1'-0"

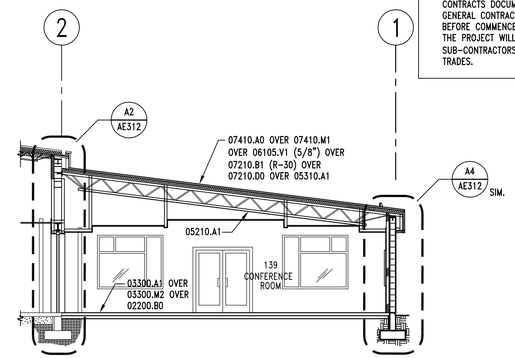

D3 | PARTIAL BUILDING SECTION – ADD ALT. #1

AE301 | REF. AE101 | SCALE: 1/8" = 1'-0"

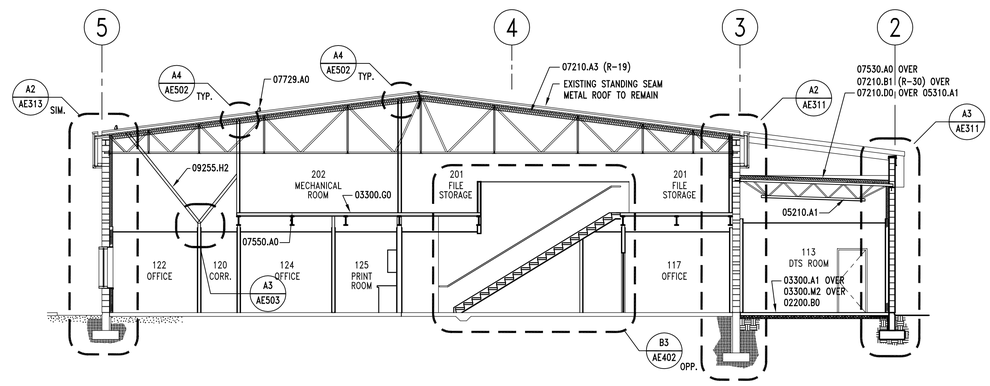

B1 | BUILDING SECTION – BASE BID

AE301 | REF. AE101 | SCALE: 1/8" = 1'-0"

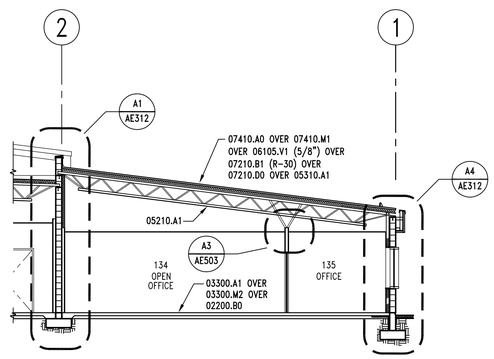

B3 | PARTIAL BUILDING SECTION – ADD ALT. #1

AE301 | REF. AE101 | SCALE: 1/8" = 1'-0"

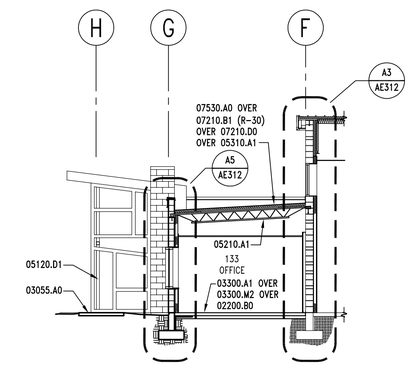

B5 | PARTIAL BUILDING SECTION – BASE BID

AE301 | REF. AE101 | SCALE: 1/8" = 1'-0"

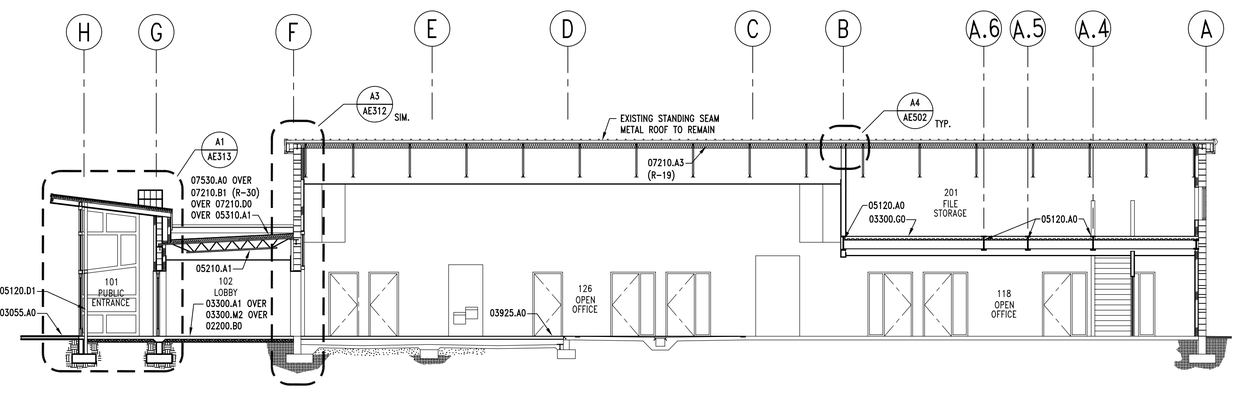

A1 | BUILDING SECTION – BASE BID

AE301 | REF. AE101 | SCALE: 1/8" = 1'-0"

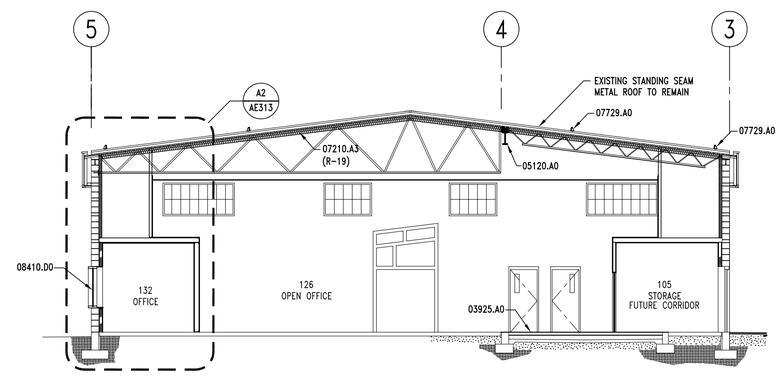

A4 | BUILDING SECTION – BASE BID

AE301 | REF. AE101 | SCALE: 1/8" = 1'-0"

GENERAL NOTES – CONTINUED

5. GENERAL CONTRACTOR IS RESPONSIBLE FOR COORDINATION OF WORK BETWEEN TRADES AND COORDINATION OF CONTRACT DOCUMENTS BETWEEN TRADES. SUB-CONTRACTORS ARE ALSO RESPONSIBLE FOR COORDINATION WITH OTHER TRADES AND OTHER DISCIPLINES INCLUDED IN THE CONTRACTS DOCUMENTS. IF ANY DISCREPANCIES ARE FOUND, GENERAL CONTRACTOR IS TO NOTIFY ARCHITECT IMMEDIATELY BEFORE COMMENCEMENT OF WORK. NO EXTRA COSTS TO THE PROJECT WILL BE INCURRED DUE TO FAILURE OF SUB-CONTRACTORS TO REVIEW/COORDINATE WITH OTHER TRADES.

KEYNOTES

02200.B0	GRAVEL BASE
03055.A0	SALT AND WATER BARRIER
03300.A1	CONCRETE SLAB-ON-GRADE – SEE STRUCTURAL
03300.G0	CONCRETE OVER METAL DECK – SEE STRUCTURAL
03300.M2	UNDER-SLAB VAPOR BARRIER
03925.A0	SELF-LEVELING CONCRETE TOPPING SLAB
04200.A0	CMU – SEE STRUCTURAL
05120.A0	STEEL BEAM – SEE STRUCTURAL
05120.D1	TUBE STEEL COLUMN – SEE STRUCTURAL
05210.A1	STEEL JOISTS – SEE STRUCTURAL
05310.A1	METAL DECK – SEE STRUCTURAL
06105.V1	EXTERIOR GRADE SHEATHING – PLYWOOD (THICKNESS)
07210.A3	VINYL-FACED BATT INSULATION (R-VALUE) MECHANICALLY FASTENED TO METAL DECK ABOVE – TAPE EDGES CONTINUOUS
07210.B1	RIGID INSULATION (R-VALUE)
07210.D0	VAPOR BARRIER
07410.A0	STANDING SEAM METAL ROOF
07410.M1	ICE & WATER SHIELD
07530.A0	EPDM ROOFING MEMBRANE
07550.A0	MULTI LAYERED WATERPROOF FLOOR SURFACING
07729.A0	STANDING SEAM METAL ROOF 2-PIPE SNOWGUARD SYSTEM
08410.A0	ALUMINUM STOREFRONT FRAME
08410.D0	ALUMINUM WINDOW
09255.H0	METAL STUD
09255.H2	METAL STUD BRACING AS REQUIRED

GENERAL NOTES

1. FIELD VERIFY ALL EXISTING CONDITIONS AND THEIR COMPATIBILITY WITH NEW CONSTRUCTION PRIOR TO THE COMMENCEMENT OF WORK. COORDINATE DISCREPANCIES WITH ARCHITECT.
2. DO NOT SCALE DRAWINGS.
3. SEE CIVIL, STRUCTURAL, MECHANICAL AND ELECTRICAL DRAWINGS FOR MORE INFORMATION.
4. SEE SHEETS AE103 & AE104 FOR ADDITIONAL WALL INFORMATION.

CLIENT

UDOT CONNECTING COMMUNITIES

REGION 4 OFFICE REMODEL
708 SOUTH 100 WEST
RICHFIELD UTAH 84701

DESIGNER

ARCHIPLEX GROUP
architecture · planning · design services
255 Crossroad Square
Salt Lake City, UT 84115
P:(801) 961-7070
F:(801) 961-7373

CONSULTANTS

PROFESSIONAL SEAL

RALPH M. STANISLAW
95-310818-0301
9/20/10
LICENSED ARCHITECT

ISSUE

MARK	DATE	DESCRIPTION
	9-20-10	DFCM REVIEW COMMENTS
	8-16-10	DFCM REVIEW SUBMITTAL

DFCM PROJECT NO:	10046900
DFCM CONTRACT NO:	107453
ARCHIPLEX PROJECT NO:	1007.01
DRAWN BY:	A. PHILLIPS
CHECKED BY:	R. STANISLAW
SCALE:	1/8"=1'-0"
DATE:	AUGUST 16, 2010

SHEET TITLE

BUILDING SECTIONS

AE301

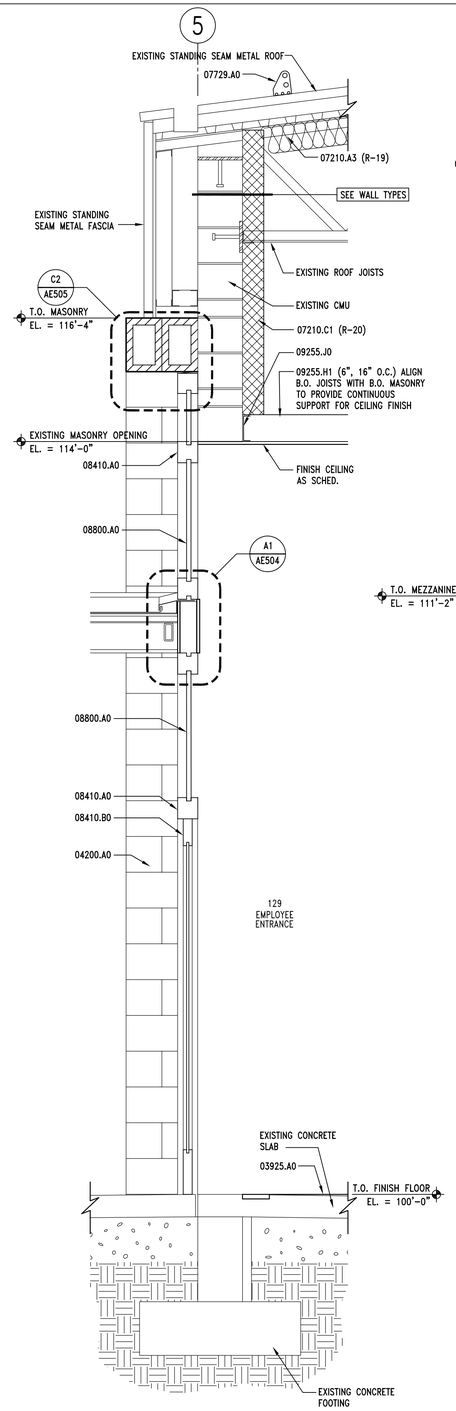

A1 | WALL SECTION – BASE BID

AE311 | REF. AE301 | SCALE: 3/4" = 1'-0"

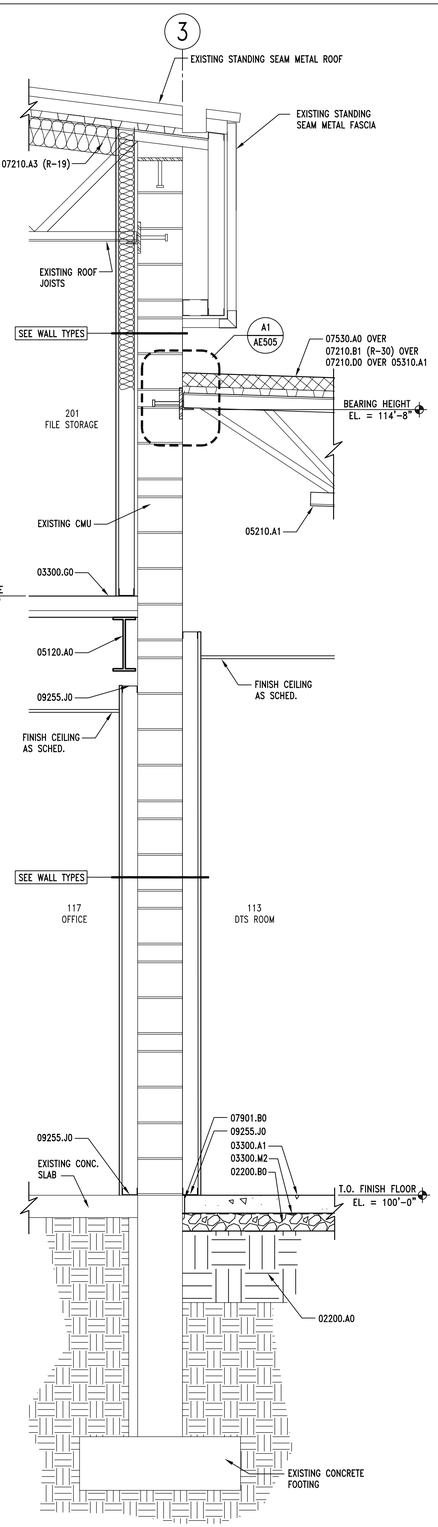

A2 | WALL SECTION – BASE BID

AE311 | REF. AE301 | SCALE: 3/4" = 1'-0"

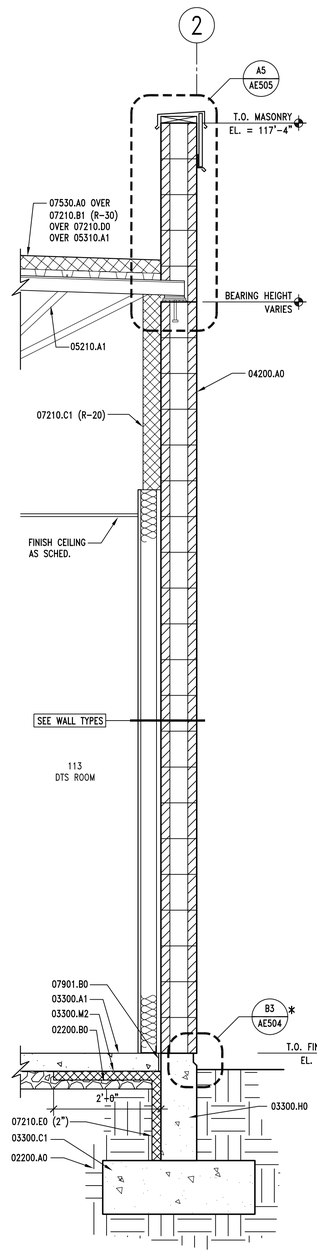

A3 | WALL SECTION – BASE BID

AE311 | REF. AE301 | SCALE: 3/4" = 1'-0"

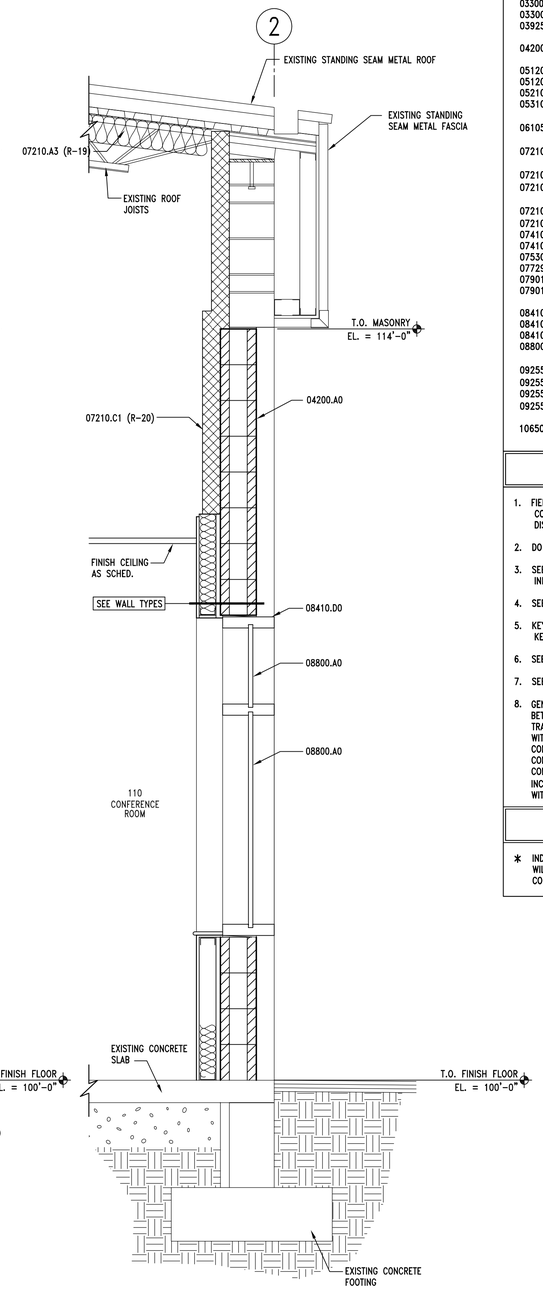

A4 | WALL SECTION – BASE BID

AE311 | REF. AE301 | SCALE: 3/4" = 1'-0"

KEYNOTES

02200.A0	COMPACTED FILL
02200.B0	GRAVEL BASE
03300.A1	CONCRETE SLAB-ON-GRADE – SEE STRUCTURAL
03300.C1	FOOTING – SEE STRUCTURAL
03300.G0	CONCRETE OVER METAL DECK – SEE STRUCTURAL
03300.H0	FOUNDATION WALL – SEE STRUCTURAL
03300.M2	UNDER-SLAB VAPOR BARRIER
03925.A0	SELF-LEVELING CONCRETE TOPPING SLAB
04200.A0	CMU – SEE STRUCTURAL
05120.A0	STEEL BEAM – SEE STRUCTURAL
05120.B0	STEEL COLUMN – SEE STRUCTURAL
05210.A1	STEEL JOISTS – SEE STRUCTURAL
05310.A1	METAL DECK – SEE STRUCTURAL
06105.V1	EXTERIOR GRADE SHEATHING – PLYWOOD (THICKNESS)
07210.A3	VINYL-FACED BATT INSULATION (R-VALUE) MECHANICALLY FASTENED TO METAL DECK ABOVE – TAPE EDGES CONTINUOUS
07210.B1	RIGID INSULATION (R-VALUE)
07210.C1	RIGID INSULATION (CONTINUOUSLY ADHERED TO CMU) W/FOIL FACED VAPOR BARRIER TOWARDS INTERIOR (R-VALUE)
07210.D0	VAPOR BARRIER
07210.E0	FOUNDATION WALL/UNDER SLAB INSULATION (THICKNESS)
07410.A0	STANDING SEAM METAL ROOF
07410.M1	ICE & WATER SHIELD
07530.A0	EPDM ROOFING MEMBRANE
07729.A0	STANDING SEAM METAL ROOF 2-PIPE SNOWGUARD SYSTEM
07901.A0	CONT. SEALANT
07901.B0	ASPHALT SATURATED FIBERBOARD
08410.A0	ALUMINUM STOREFRONT FRAME
08410.B0	ALUMINUM DOOR
08410.D0	ALUMINUM WINDOW
08800.A0	GLAZING AS SCHED.
09255.A1	GYPSUM BOARD (THICKNESS)
09255.H1	METAL STUDS (SIZE, SPACING)
09255.J0	METAL RUNNER
09255.M2	METAL CORNER BEAD (TYP)
10650.A0	OPERABLE PARTITION WALL

GENERAL NOTES

1. FIELD VERIFY ALL EXISTING CONDITIONS AND THEIR COMPATIBILITY WITH NEW CONSTRUCTION PRIOR TO THE COMMENCEMENT OF WORK. COORDINATE DISCREPANCIES WITH ARCHITECT.
2. DO NOT SCALE DRAWINGS.
3. SEE CIVIL, STRUCTURAL, MECHANICAL AND ELECTRICAL DRAWINGS FOR MORE INFORMATION.
4. SEE SHEETS AE103, AE104 & AE501 FOR WALL TYPE INFORMATION.
5. KEYNOTES APPLY TO ALL WALL SECTION SHEETS. THEREFORE, NOT ALL KEYNOTES WILL BE FOUND ON THIS SHEET.
6. SEE SHEET AE103, AE104 & AE600 FOR ROOM FINISHES.
7. SEE SHEET AE602 & AE603 FOR ADDITIONAL WINDOW INFORMATION.
8. GENERAL CONTRACTOR IS RESPONSIBLE FOR COORDINATION OF WORK BETWEEN TRADES AND COORDINATION OF CONTRACT DOCUMENTS BETWEEN TRADES. SUB-CONTRACTORS ARE ALSO RESPONSIBLE FOR COORDINATION WITH OTHER TRADES AND OTHER DISCIPLINES INCLUDED IN THE CONTRACTS DOCUMENTS. IF ANY DISCREPANCIES ARE FOUND, GENERAL CONTRACTOR IS TO NOTIFY ARCHITECT IMMEDIATELY BEFORE COMMENCEMENT OF WORK. NO EXTRA COSTS TO THE PROJECT WILL BE INCURRED DUE TO FAILURE OF SUB-CONTRACTORS TO REVIEW/COORDINATE WITH OTHER TRADES.

LEGEND

* INDICATES AN ITEM OR SYSTEM THAT IS PART OF BASE BID ONLY AND WILL NOT BE USED IF ADD ALTERNATE #1 IS INCLUDED IN THE CONTRACT FOR CONSTRUCTION

CLIENT

UDOT CONNECTING COMMUNITIES

REGION 4 OFFICE REMODEL
708 SOUTH 100 WEST
RICHFIELD UTAH 84701

DESIGNER

ARCHIPLEX GROUP
architecture · planning · design services
255 Crossroad Square
Salt Lake City, UT 84115
P:(801) 961-7070
F:(801) 961-7373

CONSULTANTS

PROFESSIONAL SEAL

RALPH M. STANISLAW
95-310818-0301
9/20/10
LICENSED ARCHITECT

ISSUE

MARK	DATE	DESCRIPTION
	9-20-10	DFCM REVIEW COMMENTS
	8-16-10	DFCM REVIEW SUBMITTAL

DFCM PROJECT NO:	10046900
DFCM CONTRACT NO:	107453
ARCHIPLEX PROJECT NO:	1007.01
DRAWN BY:	A. PHILLIPS
CHECKED BY:	R. STANISLAW
SCALE:	AS SHOWN
DATE:	AUGUST 16, 2010

SHEET TITLE

WALL SECTIONS

AE311

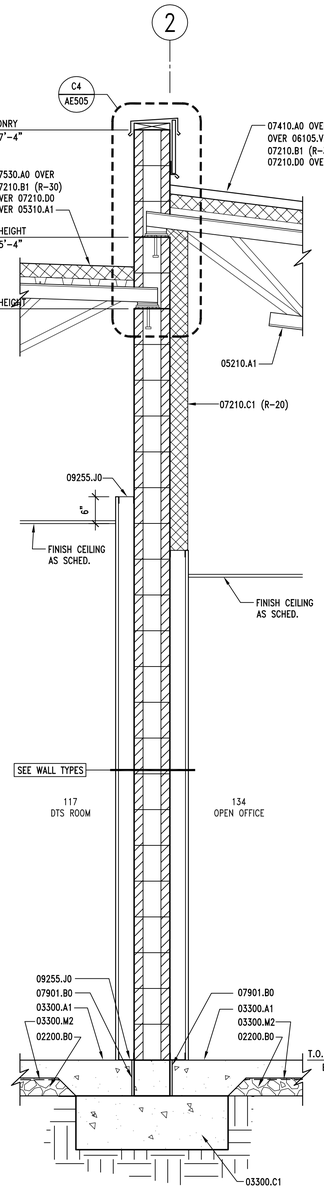

A1 | WALL SECTION – ADD ALT. #1

AE312 | REF. AE301 | SCALE: 3/4" = 1'-0"

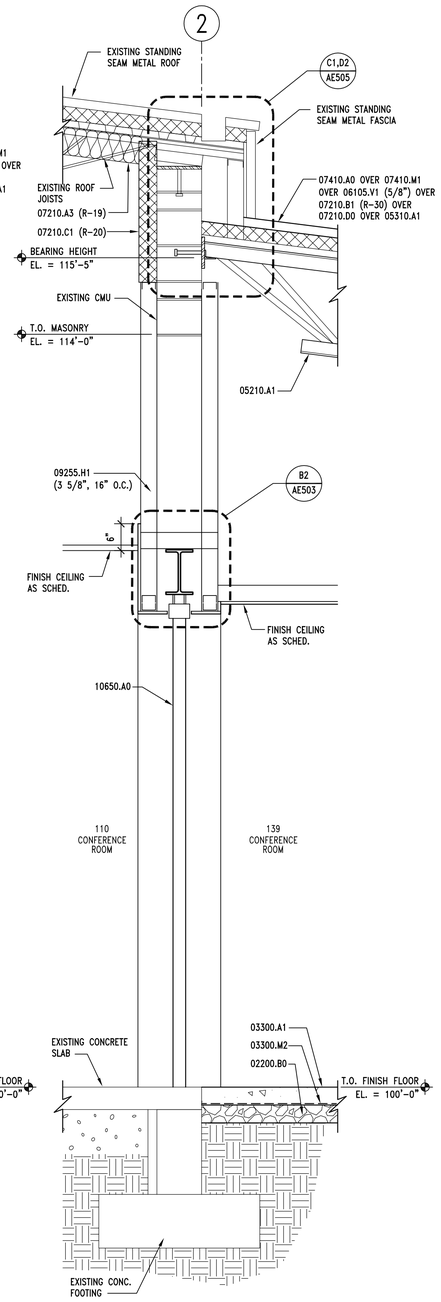

A2 | WALL SECTION – ADD ALT. #1

AE312 | REF. AE301 | SCALE: 3/4" = 1'-0"

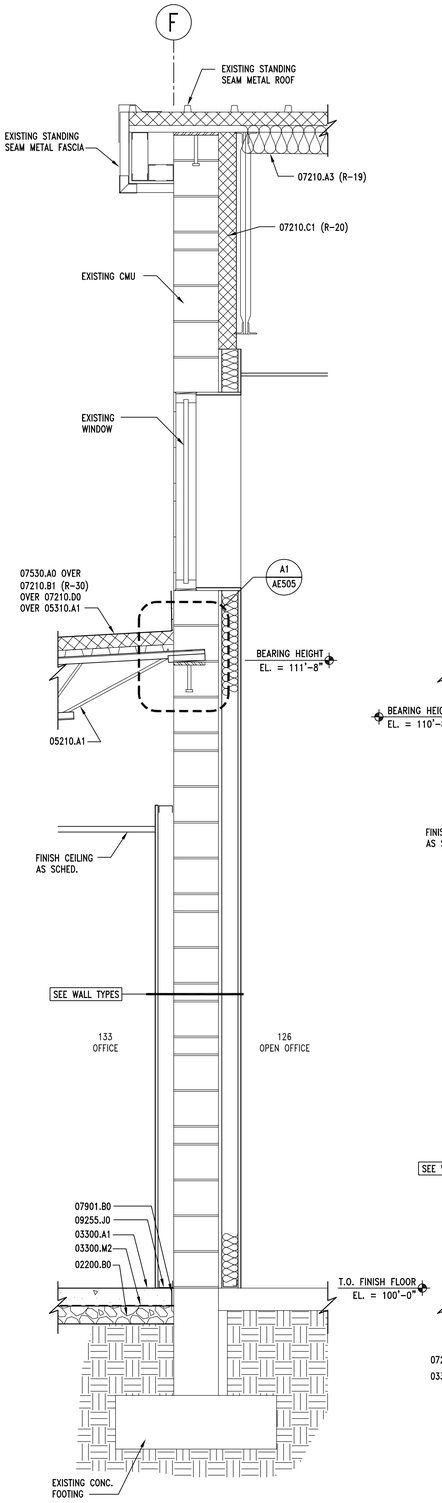

A3 | WALL SECTION – BASE BID

AE312 | REF. AE301 | SCALE: 3/4" = 1'-0"

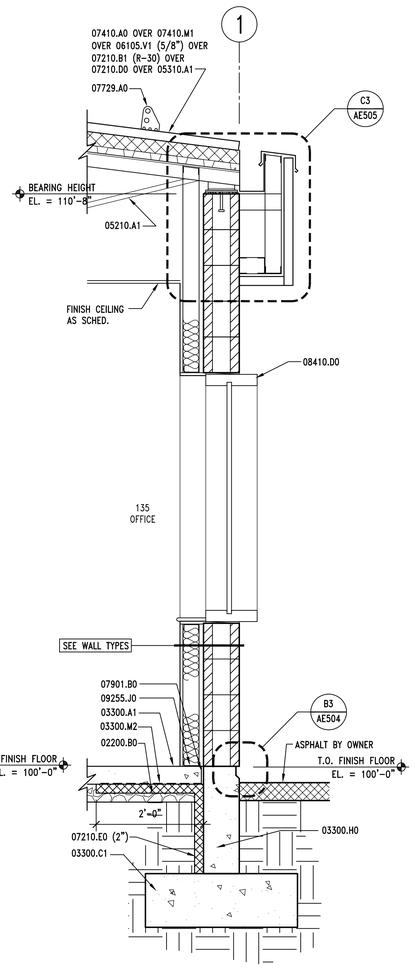

A4 | WALL SECTION – ADD ALT. #1

AE312 | REF. AE301 | SCALE: 3/4" = 1'-0"

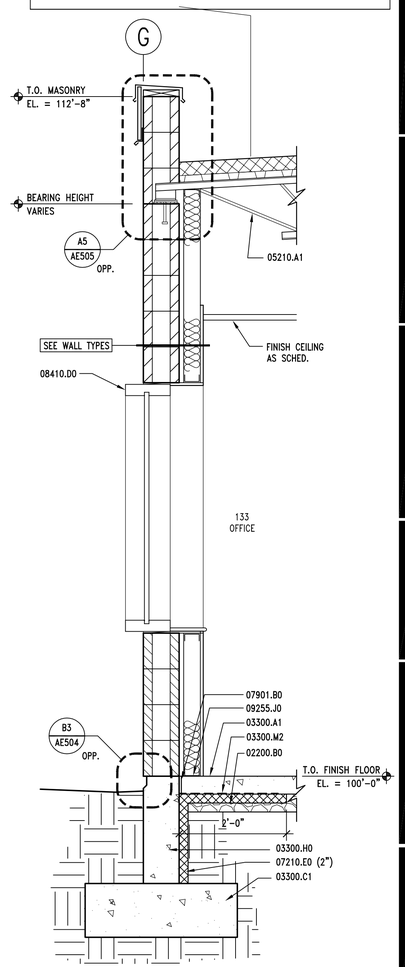

A5 | WALL SECTION – BASE BID

AE312 | REF. AE301 | SCALE: 3/4" = 1'-0"

GENERAL NOTES

1. FIELD VERIFY ALL EXISTING CONDITIONS AND THEIR COMPATIBILITY WITH NEW CONSTRUCTION PRIOR TO THE COMMENCEMENT OF WORK. COORDINATE DISCREPANCIES WITH ARCHITECT.
2. DO NOT SCALE DRAWINGS.
3. SEE CIVIL, STRUCTURAL, MECHANICAL AND ELECTRICAL DRAWINGS FOR MORE INFORMATION.
4. SEE SHEETS AE103, AE104 & AE501 FOR WALL TYPE INFORMATION.
5. KEYNOTES APPLY TO ALL WALL SECTION SHEETS. THEREFORE, NOT ALL KEYNOTES WILL BE FOUND ON THIS SHEET.
6. SEE SHEET AE103, AE104 & AE600 FOR ROOM FINISHES.
7. SEE SHEET AE602 & AE603 FOR ADDITIONAL WINDOW INFORMATION.
8. GENERAL CONTRACTOR IS RESPONSIBLE FOR COORDINATION OF WORK BETWEEN TRADES AND COORDINATION OF CONTRACT DOCUMENTS BETWEEN TRADES. SUB-CONTRACTORS ARE ALSO RESPONSIBLE FOR COORDINATION WITH OTHER TRADES AND OTHER DISCIPLINES INCLUDED IN THE CONTRACTS DOCUMENTS. IF ANY DISCREPANCIES ARE FOUND, GENERAL CONTRACTOR IS TO NOTIFY ARCHITECT IMMEDIATELY BEFORE COMMENCEMENT OF WORK. NO EXTRA COSTS TO THE PROJECT WILL BE INCURRED DUE TO FAILURE OF SUB-CONTRACTORS TO REVIEW/COORDINATE WITH OTHER TRADES.

LEGEND

* INDICATES AN ITEM OR SYSTEM THAT IS PART OF BASE BID ONLY AND WILL NOT BE USED IF ADD ALTERNATE #1 IS INCLUDED IN THE CONTRACT FOR CONSTRUCTION

KEYNOTES

02200.A0	COMPACTED FILL
02200.B0	GRAVEL BASE
03300.A1	CONCRETE SLAB-ON-GRADE – SEE STRUCTURAL
03300.C1	FOOTING – SEE STRUCTURAL
03300.G0	CONCRETE OVER METAL DECK – SEE STRUCTURAL
03300.H0	FOUNDATION WALL – SEE STRUCTURAL
03300.M2	UNDER-SLAB VAPOR BARRIER
03925.A0	SELF-LEVELING CONCRETE TOPPING SLAB
04200.A0	CMU – SEE STRUCTURAL
05120.A0	STEEL BEAM – SEE STRUCTURAL
05120.B0	STEEL COLUMN – SEE STRUCTURAL
05210.A1	STEEL JOISTS – SEE STRUCTURAL
05310.A1	METAL DECK – SEE STRUCTURAL
06105.V1	EXTERIOR GRADE SHEATHING – PLYWOOD (THICKNESS)
07210.A3	VINYL-FACED BATT INSULATION (R-VALUE) MECHANICALLY FASTENED TO METAL DECK ABOVE – TAPE EDGES CONTINUOUS
07210.B1	RIGID INSULATION (R-VALUE)
07210.C1	RIGID INSULATION (CONTINUOUSLY ADHERED TO CMU) W/FOIL FACED VAPOR BARRIER TOWARDS INTERIOR (R-VALUE)
07210.D0	VAPOR BARRIER
07210.E0	FOUNDATION WALL/UNDER SLAB INSULATION (THICKNESS)
07410.A0	STANDING SEAM METAL ROOF
07410.M1	ICE & WATER SHIELD
07530.A0	EPDM ROOFING MEMBRANE
07729.A0	STANDING SEAM METAL ROOF 2-PIPE SNOWGUARD SYSTEM
07901.A0	CONT. SEALANT
07901.B0	ASPHALT SATURATED FIBERBOARD
08410.A0	ALUMINUM STOREFRONT FRAME
08410.B0	ALUMINUM DOOR
08410.D0	ALUMINUM WINDOW
08800.A0	GLAZING AS SCHED.
09255.A1	GYPSUM BOARD (THICKNESS)
09255.H1	METAL STUDS (SIZE, SPACING)
09255.J0	METAL RUNNER
09255.M2	METAL CORNER BEAD (TYP)
10650.A0	OPERABLE PARTITION WALL

CLIENT

UDOT CONNECTING COMMUNITIES

REGION 4 OFFICE REMODEL
708 SOUTH 100 WEST
RICHFIELD UTAH 84701

DESIGNER

ARCHIPLEX GROUP
architecture · planning · design services
255 Crossroad Square
Salt Lake City, UT 84115
P:(801) 961-7070
F:(801) 961-7373

CONSULTANTS

PROFESSIONAL SEAL

RALPH M. STANISLAW
95-310818-0301
9/20/10
LICENSED ARCHITECT

ISSUE

MARK	DATE	DESCRIPTION
	9-20-10	DFCM REVIEW COMMENTS
	8-16-10	DFCM REVIEW SUBMITTAL

DFCM PROJECT NO:	10046900
DFCM CONTRACT NO:	107453
ARCHIPLEX PROJECT NO:	1007.01
DRAWN BY:	A. PHILLIPS
CHECKED BY:	R. STANISLAW
SCALE:	AS SHOWN
DATE:	AUGUST 16, 2010

SHEET TITLE

WALL SECTIONS

AE312

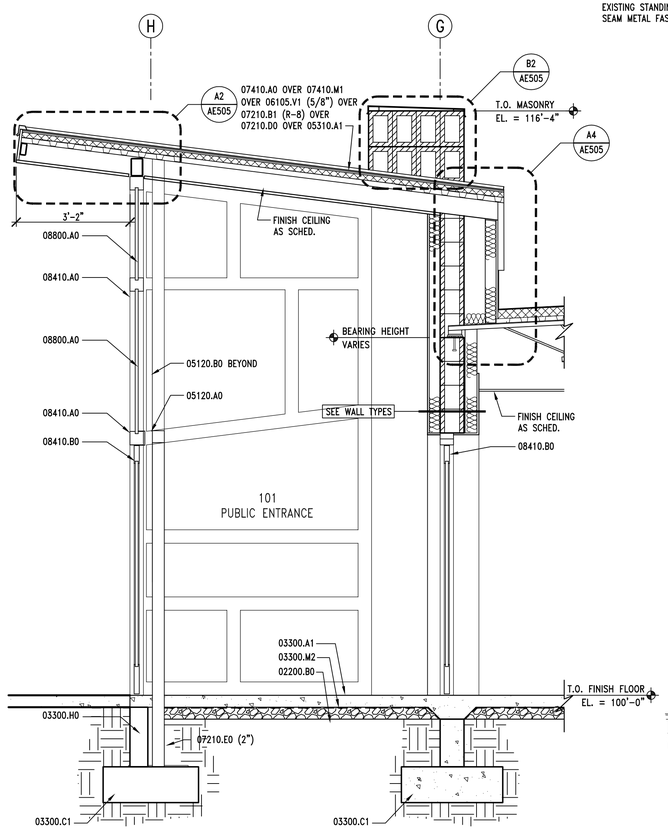

A1 PARTIAL BUILDING SECTION – BASE BID

AE313 | REF. AE301 | SCALE: 1/2" = 1'-0"

8' 6' 4' 2' 0' 4' 8' 16'

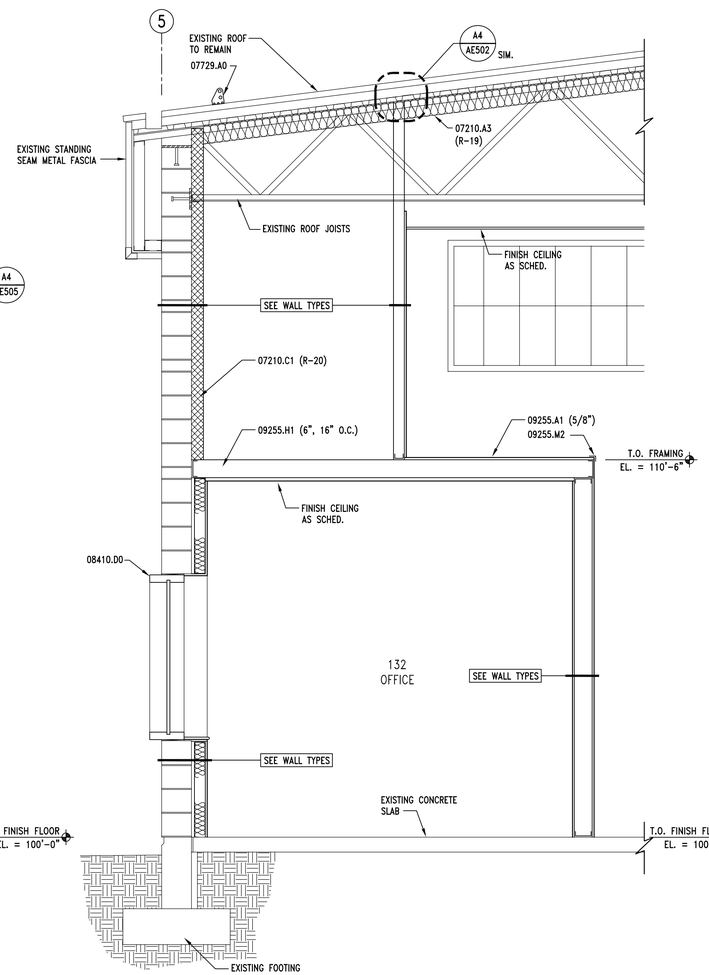

A2 PARTIAL BUILDING SECTION – BASE BID

AE313 | REF. AE301 | SCALE: 1/2" = 1'-0"

8' 6' 4' 2' 0' 4' 8' 16'

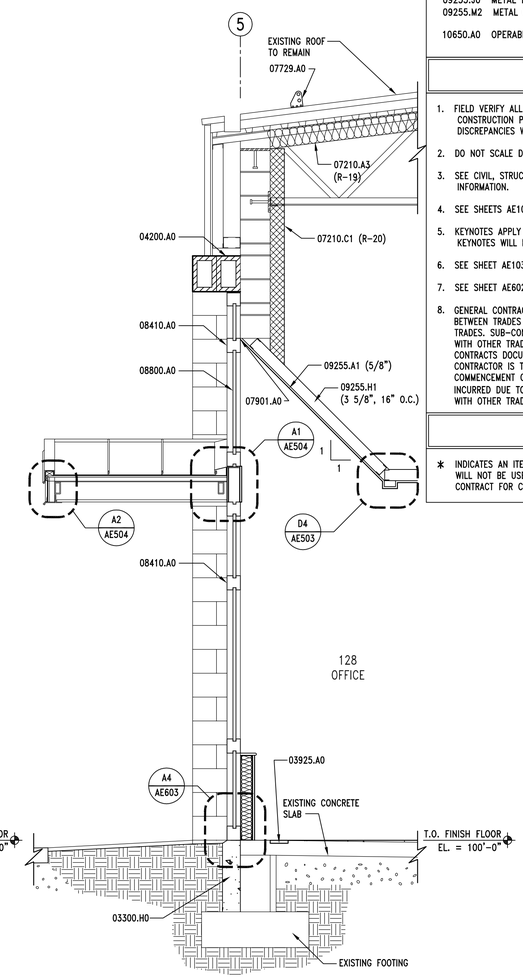

A4 PARTIAL BUILDING SECTION – BASE BID

AE313 | REF. | SCALE: 1/2" = 1'-0"

8' 6' 4' 2' 0' 4' 8' 16'

KEYNOTES

02200.A0	COMPACTED FILL
02200.B0	GRAVEL BASE
03300.A1	CONCRETE SLAB-ON-GRADE – SEE STRUCTURAL
03300.C1	FOOTING – SEE STRUCTURAL
03300.G0	CONCRETE OVER METAL DECK – SEE STRUCTURAL
03300.H0	FOUNDATION WALL – SEE STRUCTURAL
03300.M2	UNDER-SLAB VAPOR BARRIER
03925.A0	SELF-LEVELING CONCRETE TOPPING SLAB
04200.A0	CMU – SEE STRUCTURAL
05120.A0	STEEL BEAM – SEE STRUCTURAL
05120.B0	STEEL COLUMN – SEE STRUCTURAL
05210.A1	STEEL JOISTS – SEE STRUCTURAL
05310.A1	METAL DECK – SEE STRUCTURAL
06105.V1	EXTERIOR GRADE SHEATHING – PLYWOOD (THICKNESS)
07210.A3	VINYL-FACED BATT INSULATION (R-VALUE) MECHANICALLY FASTENED TO METAL DECK ABOVE – TAPE EDGES CONTINUOUS
07210.B1	RIGID INSULATION (R-VALUE)
07210.C1	RIGID INSULATION (CONTINUOUSLY ADHERED TO CMU) W/FOIL FACED VAPOR BARRIER TOWARDS INTERIOR (R-VALUE)
07210.D0	VAPOR BARRIER
07210.E0	FOUNDATION WALL/UNDER SLAB INSULATION (THICKNESS)
07410.A0	STANDING SEAM METAL ROOF
07410.M1	ICE & WATER SHIELD
07530.A0	EPDM ROOFING MEMBRANE
07729.A0	STANDING SEAM METAL ROOF 2-PIPE SNOWGUARD SYSTEM
07901.A0	CONT. SEALANT
07901.B0	ASPHALT SATURATED FIBERBOARD
08410.A0	ALUMINUM STOREFRONT FRAME
08410.B0	ALUMINUM DOOR
08410.D0	ALUMINUM WINDOW
08800.A0	GLAZING AS SCHED.
09255.A1	GYPSUM BOARD (THICKNESS)
09255.H1	METAL STUDS (SIZE, SPACING)
09255.J0	METAL RUNNER
09255.M2	METAL CORNER BEAD (TYP)
10650.A0	OPERABLE PARTITION WALL

GENERAL NOTES

1. FIELD VERIFY ALL EXISTING CONDITIONS AND THEIR COMPATIBILITY WITH NEW CONSTRUCTION PRIOR TO THE COMMENCEMENT OF WORK. COORDINATE DISCREPANCIES WITH ARCHITECT.
2. DO NOT SCALE DRAWINGS.
3. SEE CIVIL, STRUCTURAL, MECHANICAL AND ELECTRICAL DRAWINGS FOR MORE INFORMATION.
4. SEE SHEETS AE103, AE104 & AE501 FOR WALL TYPE INFORMATION.
5. KEYNOTES APPLY TO ALL WALL SECTION SHEETS. THEREFORE, NOT ALL KEYNOTES WILL BE FOUND ON THIS SHEET.
6. SEE SHEET AE103, AE104 & AE600 FOR ROOM FINISHES.
7. SEE SHEET AE602 & AE603 FOR ADDITIONAL WINDOW INFORMATION.
8. GENERAL CONTRACTOR IS RESPONSIBLE FOR COORDINATION OF WORK BETWEEN TRADES AND COORDINATION OF CONTRACT DOCUMENTS BETWEEN TRADES. SUB-CONTRACTORS ARE ALSO RESPONSIBLE FOR COORDINATION WITH OTHER TRADES AND OTHER DISCIPLINES INCLUDED IN THE CONTRACTS DOCUMENTS. IF ANY DISCREPANCIES ARE FOUND, GENERAL CONTRACTOR IS TO NOTIFY ARCHITECT IMMEDIATELY BEFORE COMMENCEMENT OF WORK. NO EXTRA COSTS TO THE PROJECT WILL BE INCURRED DUE TO FAILURE OF SUB-CONTRACTORS TO REVIEW/COORDINATE WITH OTHER TRADES.

LEGEND

* INDICATES AN ITEM OR SYSTEM THAT IS PART OF BASE BID ONLY AND WILL NOT BE USED IF ADD ALTERNATE #1 IS INCLUDED IN THE CONTRACT FOR CONSTRUCTION

CLIENT

UDOT CONNECTING COMMUNITIES

REGION 4 OFFICE REMODEL
708 SOUTH 100 WEST
RICHFIELD UTAH 84701

DESIGNER

ARCHIPLEX GROUP
architecture • planning • design services
255 Crossroad Square
Salt Lake City, UT 84115
P:(801) 961-7070
F:(801) 961-7373

CONSULTANTS

PROFESSIONAL SEAL

RALPH M. STANISLAW
95-310818-0301
9/20/10
LICENSED ARCHITECT

ISSUE

MARK	DATE	DESCRIPTION
	9-20-10	DFCM REVIEW COMMENTS
	8-16-10	DFCM REVIEW SUBMITTAL

DFCM PROJECT NO:	10046900
DFCM CONTRACT NO:	107453
ARCHIPLEX PROJECT NO:	1007.01
DRAWN BY:	A. PHILLIPS
CHECKED BY:	R. STANISLAW
SCALE:	AS SHOWN
DATE:	AUGUST 16, 2010

SHEET TITLE

PARTIAL BUILDING SECTIONS

AE313

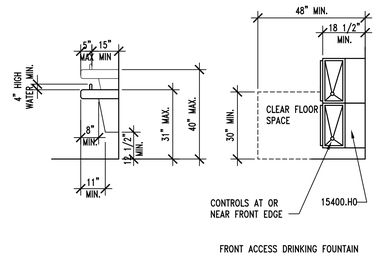

FRONT ACCESS DRINKING FOUNTAIN

D1 ACCESSIBLE DRINKING FOUNTAIN DETAIL

AE401 | REF. AE401 | SCALE: 3/8" = 1'-0"

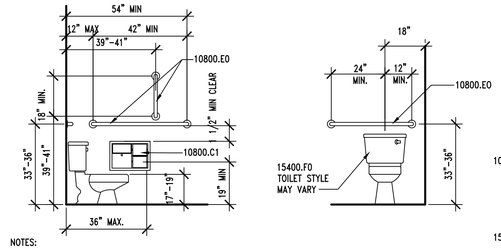

NOTES:

(1) ALL GRAB BARS MUST SUPPORT A LOAD OF 250 POUNDS MIN.

(2) MOUNT GRAB BARS TO MAINTAIN 1 1/2" CLEAR SPACE FROM WALL.

D2 ACCESSIBLE TOILET DETAIL

AE401 | REF. AE401 | SCALE: 3/8"= 1'-0"

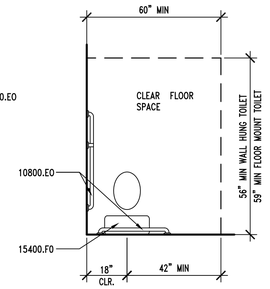

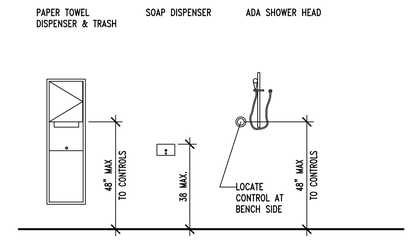

D4 MOUNTING HEIGHTS

AE401 | REF. AE401 | SCALE: 3/8" = 1'-0"

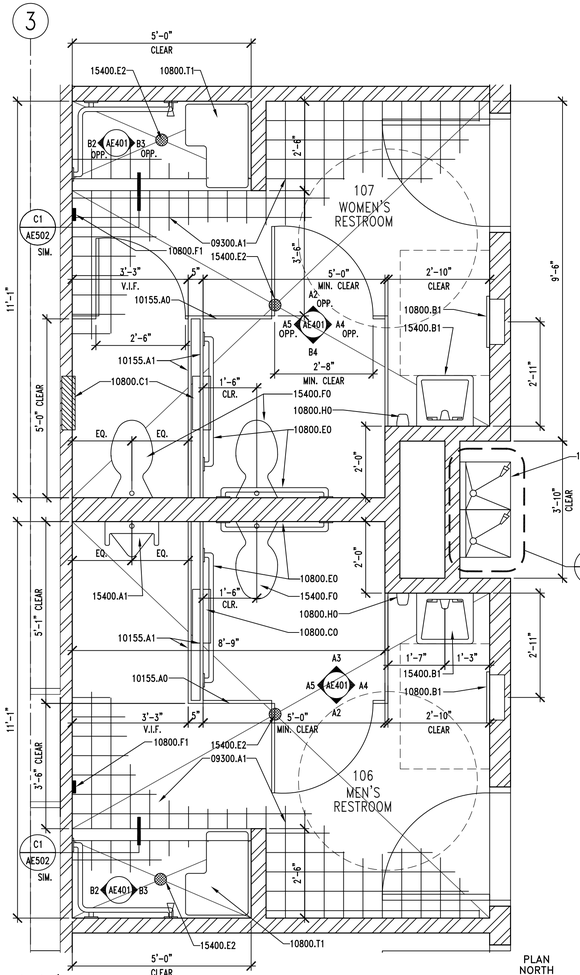

A1 ENLARGED RESTROOM PLAN

AE401 | REF. AE101 | SCALE: 1/2" = 1'-0"

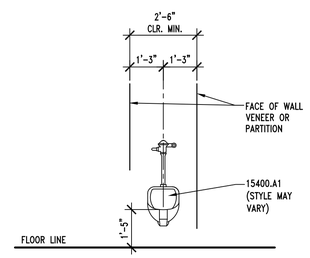

C2 ACCESSIBLE URINAL DETAIL

AE401 | REF. AE401 | SCALE: 3/8" = 1'-0"

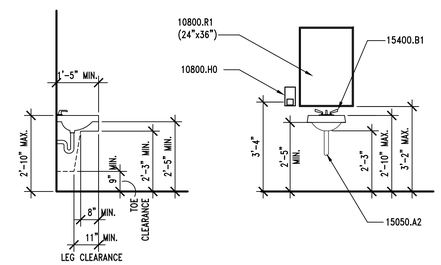

C3 ACCESSIBLE SINK DETAIL

AE401 | REF. AE401 | SCALE: 3/8" = 1'-0"

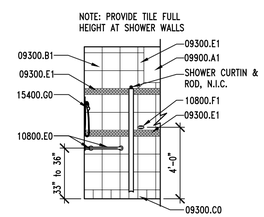

B2 RESTROOM ELEVATION

AE401 | REF. AE401 | SCALE: 1/4" = 1'-0"

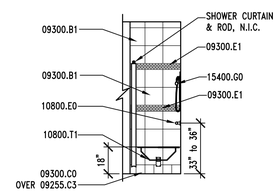

B3 RESTROOM ELEVATION

AE401 | REF. AE401 | SCALE: 1/4" = 1'-0"

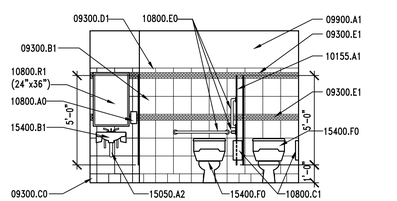

B4 RESTROOM ELEVATION

AE401 | REF. AE401 | SCALE: 1/4" = 1'-0"

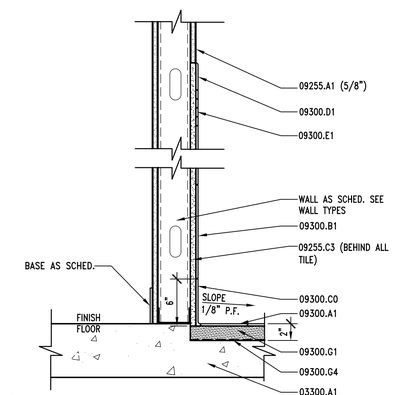

B5 RECESSED SLAB DETAIL

AE401 | REF. AE401 | SCALE: 3" = 1'-0"

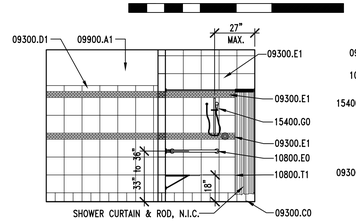

A2 RESTROOM ELEVATION

AE401 | REF. AE401 | SCALE: 1/4" = 1'-0"

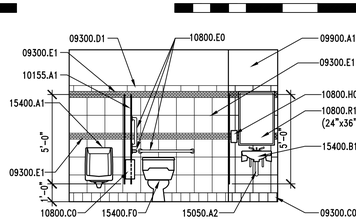

A3 RESTROOM ELEVATION

AE401 | REF. AE401 | SCALE: 1/4" = 1'-0"

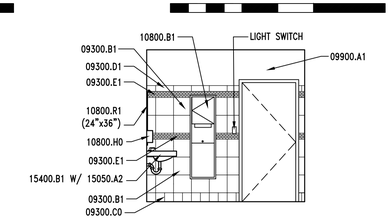

A4 RESTROOM ELEVATION

AE401 | REF. AE401 | SCALE: 1/4" = 1'-0"

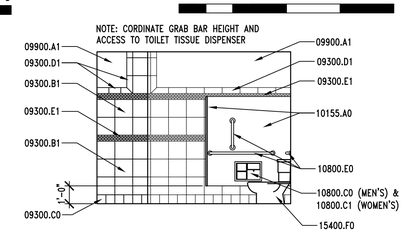

A5 RESTROOM ELEVATION

AE401 | REF. AE401 | SCALE: 1/4" = 1'-0"

KEYNOTES

03300.A1 CONCRETE SLAB-ON-GRADE - SEE STRUCTURAL

09255.A1 GYPSUM BOARD (THICKNESS)
09255.A2 WATER RESISTANT GYPSUM BOARD (THICKNESS)
09255.C3 CEMENT BOARD (THICKNESS)
09300.A1 FLOOR TILE - SEE FINISH SCHEDULE
09300.B1 WALL TILE - SEE FINISH SCHEDULE
09300.C0 TILE BASE - SEE FINISH SCHEDULE
09300.D1 BULLNOSE TRIM UNIT
09300.E1 MOSAIC ACCENT TILE - SEE FINISH SCHEDULE
09300.G1 MORTAR BED
09300.G4 WATERPROOF MEMBRANE
09900.A1 PAINT - SEE FINISH SCHEDULE

10155.A0 TOILET STALL PARTITION
10155.A1 DOUBLE PARTITION WALL
10800.B1 RECESSED PAPER TOWEL DISPENSER & WASTE RECEPTACLE
10800.C0 RECESSED TOILET TISSUE DISPENSER
10800.C1 RECESSED TOILET TISSUE DISPENSER/SAN. NAP. DISPOSAL
10800.E0 GRAB BAR
10800.F1 DOUBLE PRONG ROBE HOOK
10800.H0 SOAP DISPENSER
10800.R1 FRAMED MIRROR (SIZE)
10800.T1 FOLDING SHOWER SEAT - ADA COMPLIANT

15050.A2 PIPE INSULATION AT ALL EXPOSED PIPE
15400.A1 URINAL, ACCESSIBLE
15400.B1 SINK AND FAUCET WITH ADA LEVER HANDLES
15400.E2 FLOOR DRAIN
15400.F0 TOILET
15400.G0 ADA ACCESSIBLE SHOWER HEAD - SEE PLUMBING
15400.H0 DUAL-LEVEL DRINKING FOUNTAIN

GENERAL NOTES

1. FIELD VERIFY ALL EXISTING CONDITIONS AND THEIR COMPATIBILITY WITH NEW CONSTRUCTION PRIOR TO THE COMMENCEMENT OF WORK. COORDINATE DISCREPANCIES WITH ARCHITECT.
2. DO NOT SCALE DRAWINGS.
3. SEE CIVIL, STRUCTURAL, MECHANICAL AND ELECTRICAL DRAWINGS FOR MORE INFORMATION.
4. PROVIDE BACKING BEHIND ALL SURFACE MOUNTED EQUIPMENT AND/OR FIXTURES PER DETAIL A3/AE502.
5. SEE DETAILS C2, C3, D1, D2 & D4/AE401 FOR ADA AND TYPICAL MOUNTING DETAILS.
6. GENERAL CONTRACTOR IS RESPONSIBLE FOR COORDINATION OF WORK BETWEEN TRADES AND COORDINATION OF CONTRACT DOCUMENTS BETWEEN TRADES. SUB-CONTRACTORS ARE ALSO RESPONSIBLE FOR COORDINATION WITH OTHER TRADES AND OTHER DISCIPLINES INCLUDED IN THE CONTRACTS DOCUMENTS. IF ANY DISCREPANCIES ARE FOUND, GENERAL CONTRACTOR IS TO NOTIFY ARCHITECT IMMEDIATELY BEFORE COMMENCEMENT OF WORK. NO EXTRA COSTS TO THE PROJECT WILL BE INCURRED DUE TO FAILURE OF SUB-CONTRACTORS TO REVIEW/COORDINATE WITH OTHER TRADES.

CLIENT

UDOT CONNECTING COMMUNITIES

REGION 4 OFFICE REMODEL
708 SOUTH 100 WEST
RICHFIELD UTAH 84701

DESIGNER

ARCHIPLEX GROUP
architecture · planning · design services
255 Crossroad Square
Salt Lake City, UT 84115
P:(801) 961-7070
F:(801) 961-7373

CONSULTANTS

PROFESSIONAL SEAL

RALPH M. STANISLAW
95-310889-0301
9/20/10
LICENSED ARCHITECT

ISSUE

MARK	DATE	DESCRIPTION
	9-20-10	DFCM REVIEW COMMENTS
	8-16-10	DFCM REVIEW SUBMITTAL

DFCM PROJECT NO:	10046900
DFCM CONTRACT NO:	107453
ARCHIPLEX PROJECT NO:	1007.01
DRAWN BY:	A. PHILLIPS
CHECKED BY:	R. STANISLAW
SCALE:	1/8"=1'-0"
DATE:	AUGUST 16, 2010

SHEET TITLE

ENLARGED RESTROOM PLAN, INTERIOR ELEVATIONS AND DETAILS

AE401

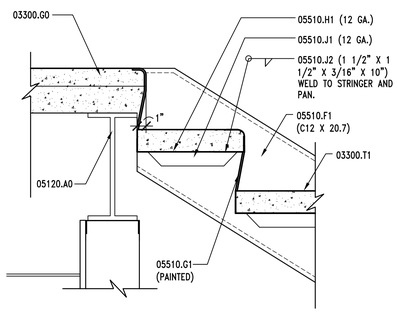

C1 STAIR LANDING DETAIL

AE402 REF. AE402 SCALE: 1 1/2" = 1'-0"

8" 6" 4" 2" 0 4" 8" 16"

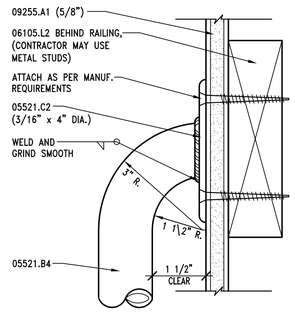

C2 HANDRAIL ATTACHMENT DTL.

AE402 REF. AE402 SCALE: 6" = 1'-0"

2" 1" 0 1" 2" 4"

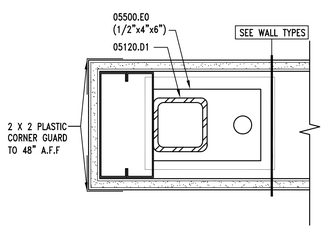

B1 CORNER GUARD DTL.

AE402 REF. AE402 SCALE: 3" = 1'-0"

4" 3" 2" 1" 0 2" 4" 8"

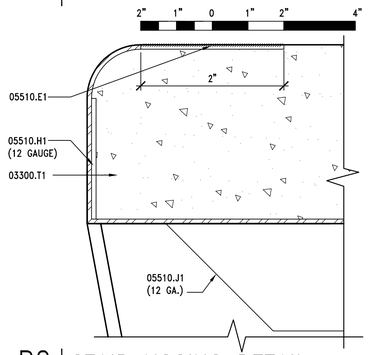

B2 STAIR NOSING DETAIL

AE402 REF. AE402 SCALE: NONE

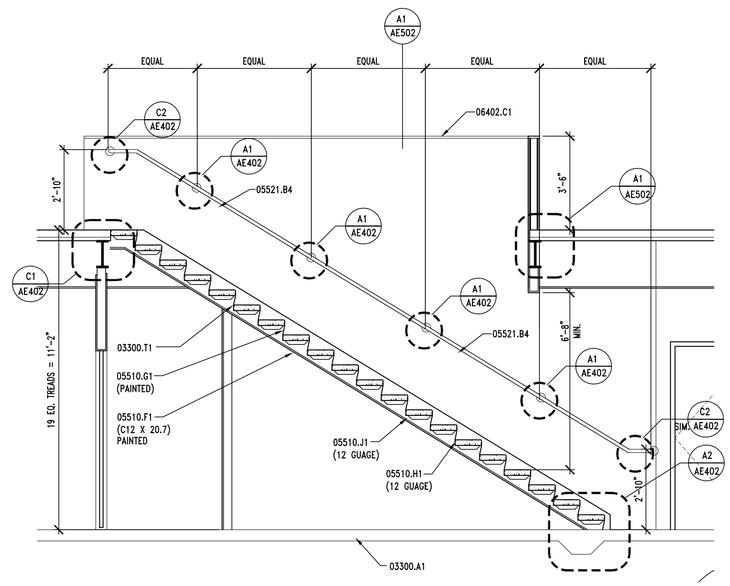

B3 STAIR SECTION & HANDRAIL ELEVATION

AE402 REF. AE402 SCALE: 3/8" = 1'-0"

12" 6" 0 1' 2' 4'

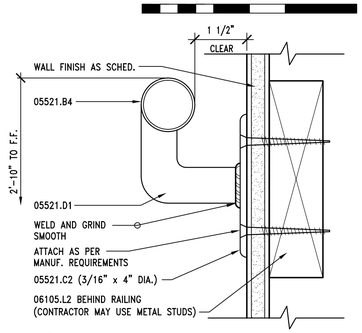

A1 HANDRAIL ATTACHMENT DTL.

AE402 REF. AE402 SCALE: 6" = 1'-0"

2" 1" 0 1" 2" 4"

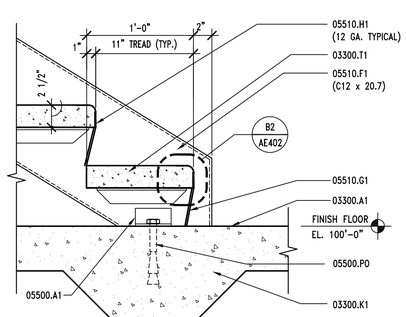

A2 STAIR BASE DETAIL

AE402 REF. AE402 SCALE: 1 1/2" = 1'-0"

8" 6" 4" 2" 0 4" 8" 1'-4"

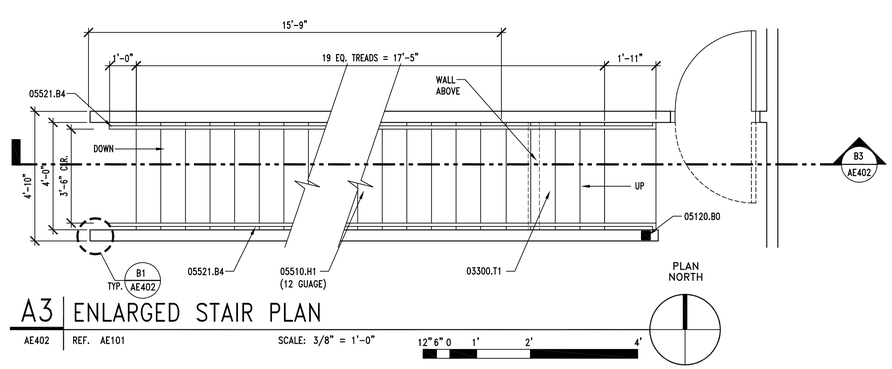

A3 ENLARGED STAIR PLAN

AE402 REF. AE101 SCALE: 3/8" = 1'-0"

12" 6" 0 1' 2' 4'

KEYNOTES

03300.A1	CONCRETE SLAB-ON-GRADE – SEE STRUCTURAL
03300.G0	CONCRETE OVER METAL DECK – SEE STRUCTURAL
03300.K1	THICKENED SLAB – SEE STRUCTURAL
03300.T1	CONCRETE AT STAIR TREAD
05120.A0	STEEL BEAM – SEE STRUCTURAL
05120.B0	STEEL COLUMN – SEE STRUCTURAL
05120.D1	TUBE STEEL COLUMN – SEE STRUCTURAL
05500.A1	ANGLE – SEE STRUCTURAL
05500.P0	ANCHOR BOLT(S)
05510.E1	NON SKID SURFACE AT NOSING
05510.F1	STEEL STRINGER – (SIZE)
05510.G1	3/16" STEEL CLOSURE PLATE
05510.H1	PRE-FORMED, CONC. FILLED METAL PAN STAIR TREAD – (SIZE)
05510.J1	METAL PAN STAIR SUPPORT – (SIZE)
05510.J2	PAN ANCHORAGE – (SIZE)
05521.B4	1 1/2" O.D. PIPE HANDRAIL – PAINTED
05521.C2	ESCUTCHEON WITH EASED EDGES (SIZE)
05521.D1	PIPE RAIL SUPPORT – PAINTED
06105.L2	BLOCKING AS REQUIRED
06402.C1	PAINT GRADE WOOD CAP (THICKNESS)
09255.A1	GYPSUM BOARD (THICKNESS)

GENERAL NOTES

1. FIELD VERIFY ALL EXISTING CONDITIONS AND THEIR COMPATIBILITY WITH NEW CONSTRUCTION PRIOR TO THE COMMENCEMENT OF WORK. COORDINATE DISCREPANCIES WITH ARCHITECT.
2. DO NOT SCALE DRAWINGS.
3. SEE STRUCTURAL DRAWINGS FOR MORE INFORMATION.
4. ALL COMPONENTS OF STAIRS ARE TO BE PAINTED. TREADS, HANDRAILS, STRINGERS, ETC.
5. GENERAL CONTRACTOR IS RESPONSIBLE FOR COORDINATION OF WORK BETWEEN TRADES AND COORDINATION OF CONTRACT DOCUMENTS BETWEEN TRADES. SUB-CONTRACTORS ARE ALSO RESPONSIBLE FOR COORDINATION WITH OTHER TRADES AND OTHER DISCIPLINES INCLUDED IN THE CONTRACTS DOCUMENTS. IF ANY DISCREPANCIES ARE FOUND, GENERAL CONTRACTOR IS TO NOTIFY ARCHITECT IMMEDIATELY BEFORE COMMENCEMENT OF WORK. NO EXTRA COSTS TO THE PROJECT WILL BE INCURRED DUE TO FAILURE OF SUB-CONTRACTORS TO REVIEW/COORDINATE WITH OTHER TRADES.

CLIENT

UDOT CONNECTING COMMUNITIES

REGION 4 OFFICE REMODEL
708 SOUTH 100 WEST
RICHFIELD UTAH 84701

DESIGNER

ARCHIPLEX GROUP
architecture · planning · design services
255 Crossroad Square
Salt Lake City, UT 84115
P:(801) 961-7070
F:(801) 961-7373

CONSULTANTS

PROFESSIONAL SEAL

RALPH M. STANISLAW
95-310818-0301
9/20/10
LICENSED ARCHITECT

ISSUE

MARK	DATE	DESCRIPTION
	9-20-10	DFCM REVIEW COMMENTS
	8-16-10	DFCM REVIEW SUBMITTAL

DFCM PROJECT NO:	10046900
DFCM CONTRACT NO:	107453
ARCHIPLEX PROJECT NO:	1007.01
DRAWN BY:	A. PHILLIPS
CHECKED BY:	R. STANISLAW
SCALE:	1/8"=1'-0"
DATE:	AUGUST 16, 2010

SHEET TITLE

STAIR PLAN, SECTION AND DETAILS

AE402

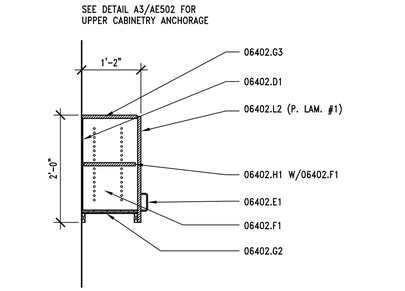

D1 | UPPER CABINET SECTION

AE403 | REF. AE403 | SCALE: 3/4" = 1'-0"

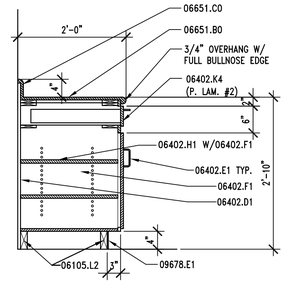

D2 | BASE CABINET SECTION

AE403 | REF. AE403 | SCALE: 3/4" = 1'-0"

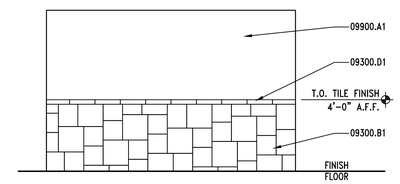

D4 | INTERIOR ELEVATION

AE403 | REF. AE103 | SCALE: 1/4" = 1'-0"

KEYNOTES

04200.A0	CMU
05120.D1	TUBE STEEL COLUMN – SEE STRUCTURAL
06105.L2	BLOCKING AS REQUIRED
06402.D1	3/4" PARTICAL BOARD W/ MELAMINE FINISH
06402.E1	WIRE PULL
06402.F1	PROVIDE WHITE MELAMINE FINISH AT ALL INTERIOR SURFACES
06402.G2	3/4" PARTICAL BOARD CABINET BASE
06402.G3	3/4" PARTICAL BOARD CABINET TOP
06402.H1	ADJUSTABLE SHELVES (FINISH)
06402.K4	
06402.L2	WALL UNIT WITH ADJUSTABLE SHELF (FINISH)
06651.B0	SOLID SURFACE COUNTER TOP – SEE FINISH SCHEDULE
06651.C0	SOLID SURFACE BACK SPLASH – SEE FINISH SCHEDULE
09300.A1	FLOOR TILE – SEE FINISH SCHED.
09300.B1	WALL TILE – SEE FINISH SCHED.
09300.D1	BULLNOSE TRIM UNIT
09678.E1	RUBBER BASE (SIZE)
09900.A1	PAINT – SEE FINISH SCHEDULE
12485.A1	ROLL-UP ENTRANCE FLOORING MAT WITH TAPERED FRAME
13750.A1	PROX CARD READER – SEE ELECTRICAL
15400.C0	UTILITY SINK
15400.E2	FLOOR DRAIN
15400.H0	DUAL-LEVEL DRINKING FOUNTAIN

GENERAL NOTES

1. FIELD VERIFY ALL EXISTING CONDITIONS AND THEIR COMPATIBILITY WITH NEW CONSTRUCTION PRIOR TO THE COMMENCEMENT OF WORK. COORDINATE DISCREPANCIES WITH ARCHITECT.
2. DO NOT SCALE DRAWINGS.
3. SEE SHEET AE600 FOR FINISH SCHEDULE.
4. GENERAL CONTRACTOR IS RESPONSIBLE FOR COORDINATION OF WORK BETWEEN TRADES AND COORDINATION OF CONTRACT DOCUMENTS BETWEEN TRADES. SUB-CONTRACTORS ARE ALSO RESPONSIBLE FOR COORDINATION WITH OTHER TRADES AND OTHER DISCIPLINES INCLUDED IN THE CONTRACTS DOCUMENTS. IF ANY DISCREPANCIES ARE FOUND, GENERAL CONTRACTOR IS TO NOTIFY ARCHITECT IMMEDIATELY BEFORE COMMENCEMENT OF WORK. NO EXTRA COSTS TO THE PROJECT WILL BE INCURRED DUE TO FAILURE OF SUB-CONTRACTORS TO REVIEW/COORDINATE WITH OTHER TRADES.

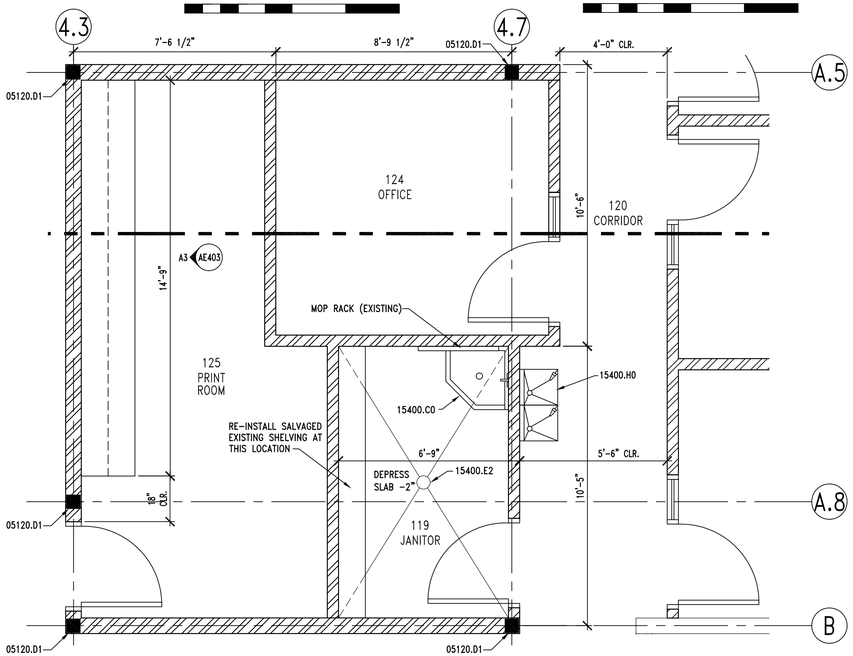

B1 | ENLARGED FLOOR PLAN

AE403 | REF. AE101 | SCALE: 3/8" = 1'-0"

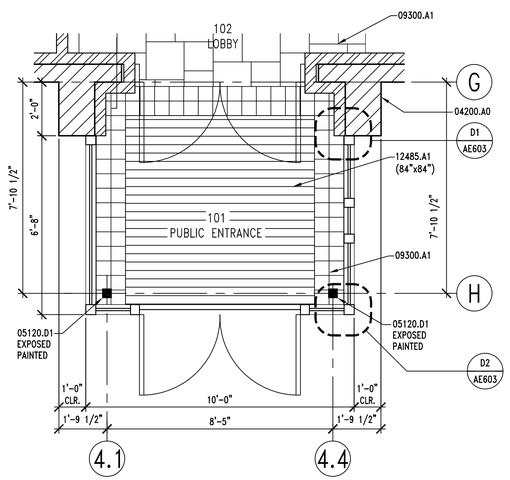

B3 | ENLARGED FLOOR PLAN

AE403 | REF. AE101 | SCALE: 3/8" = 1'-0"

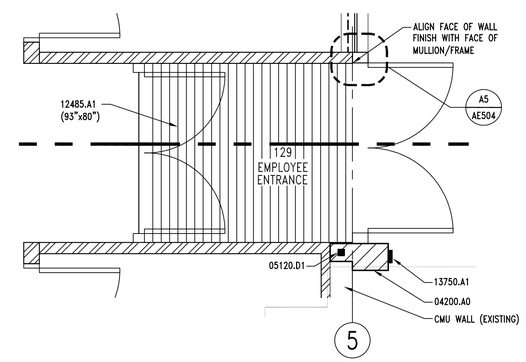

B4 | ENLARGED FLOOR PLAN

AE403 | REF. AE101 | SCALE: 3/8" = 1'-0"

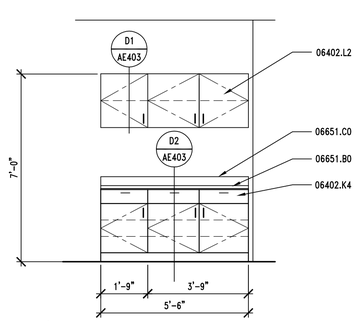

A1 | MILLWORK ELEVATION

AE403 | REF. AE101 | SCALE: 3/8" = 1'-0"

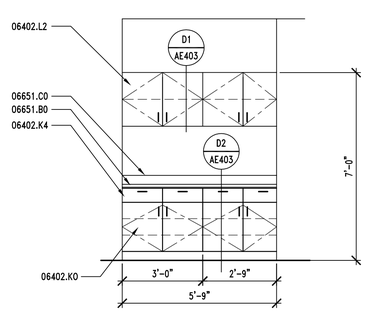

A2 | MILLWORK ELEVATION

AE403 | REF. AE101 | SCALE: 3/8" = 1'-0"

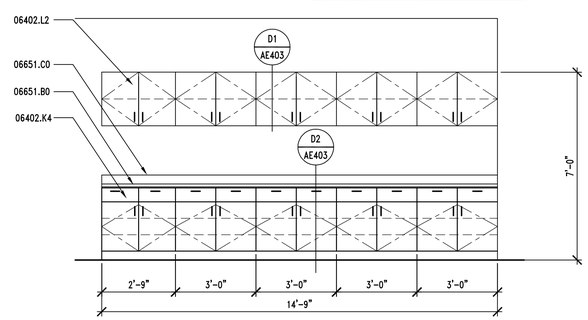

A3 | MILLWORK ELEVATION

AE403 | REF. AE403 | SCALE: 3/8" = 1'-0"

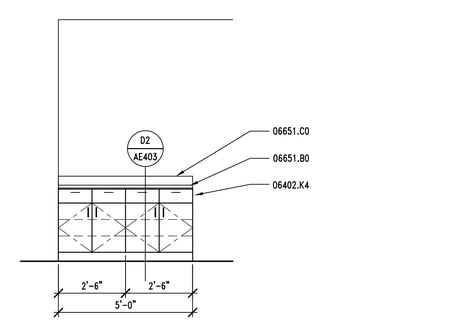

A4 | MILLLWORK ELEVATION–ADD ALT. #1

AE403 | REF. AE101 | SCALE: 3/8" = 1'-0"

CLIENT

UDOT CONNECTING COMMUNITIES

REGION 4 OFFICE REMODEL
708 SOUTH 100 WEST
RICHFIELD UTAH 84701

DESIGNER

ARCHIPLEX GROUP
architecture · planning · design services
255 Crossroad Square
Salt Lake City, UT 84115
P:(801) 961-7070
F:(801) 961-7373

CONSULTANTS

PROFESSIONAL SEAL

RALPH M. STANISLAW
95-310818-0301
9/20/10
LICENSED ARCHITECT

ISSUE

MARK	DATE	DESCRIPTION
	9-20-10	DFCM REVIEW COMMENTS
	8-16-10	DFCM REVIEW SUBMITTAL

DFCM PROJECT NO:	10046900
DFCM CONTRACT NO:	107453
ARCHIPLEX PROJECT NO:	1007.01
DRAWN BY:	A. PHILLIPS
CHECKED BY:	R. STANISLAW
SCALE:	1/8"=1'-0"
DATE:	AUGUST 16, 2010

SHEET TITLE

ENLARGED FLOOR PLANS AND MILLWORK DETAILS AND ELEVATIONS

AE403

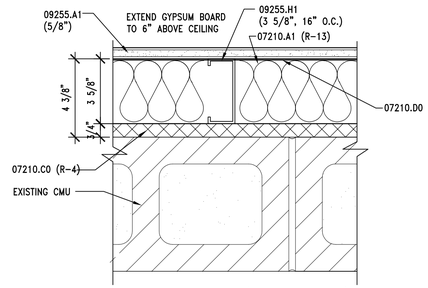

HIGH CONDITION (EXTERIOR WALL)

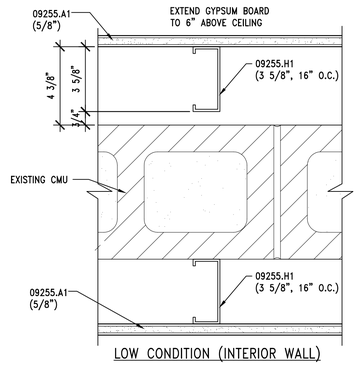

LOW CONDITION (INTERIOR WALL)

C1 | WALL TYPE L

XX4-AE01-AE501-A1

AE501 | REF. AE103 & AE104 | SCALE: 3" = 1'-0"

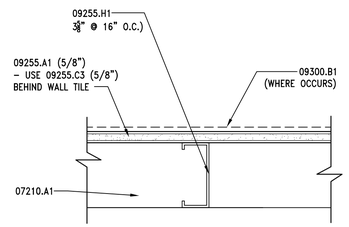

C2 | WALL TYPE M

XX4-AE01-AE501-C2

AE501 | REF. AE103 & AE104 | SCALE: 3" = 1'-0"

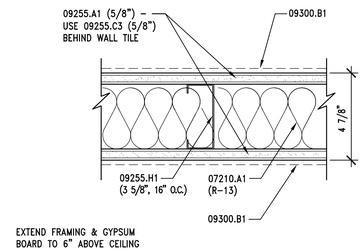

C3 | WALL TYPE N

XX4-AE01-AE501-C3

AE501 | REF. AE103 & AE104 | SCALE: 3" = 1'-0"

EXISTING WALL TO REMAIN - SEE FINISH SCHEDULE FOR EXTENT OF NEW FINISHES

C5 | WALL TYPE X

XX4-AE01-AE501-C5

AE501 | REF. AE103 & AE104 | SCALE: 3" = 1'-0"

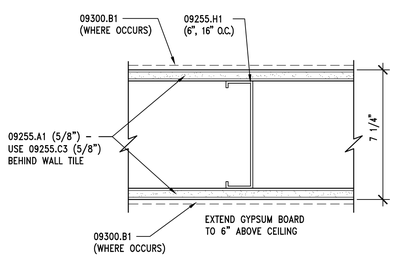

B1 | WALL TYPE F

XX4-AE01-AE501-B1

AE501 | REF. AE103 & AE104 | SCALE: 3" = 1'-0"

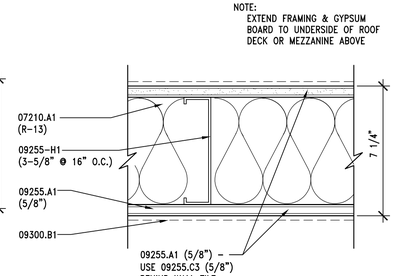

B2 | WALL TYPE G

XX4-AE01-AE501-B2

AE501 | REF. AE103 & AE104 | SCALE: 3" = 1'-0"

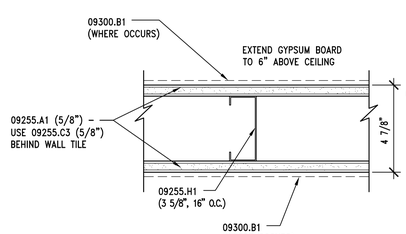

B3 | WALL TYPE H

XX4-AE01-AE501-B3

AE501 | REF. AE103 & AE104 | SCALE: 3" = 1'-0"

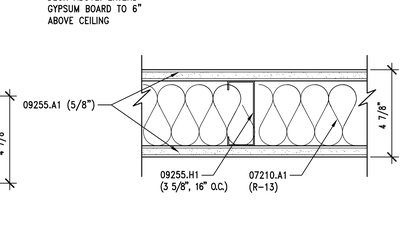

B4 | WALL TYPE J

XX4-AE01-AE501-B4

AE501 | REF. AE103 & AE104 | SCALE: 3" = 1'-0"

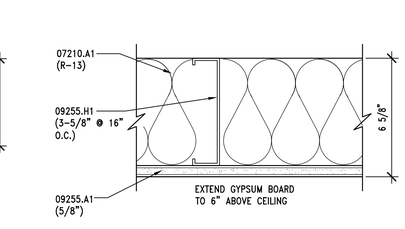

B5 | WALL TYPE K

XX4-AE01-AE501-B5

AE501 | REF. AE103 & AE104 | SCALE: 3" = 1'-0"

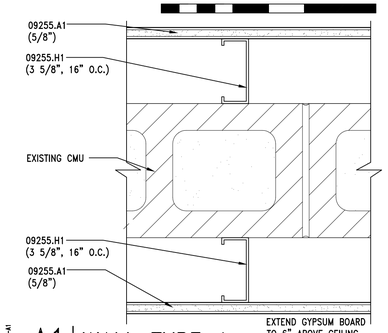

A1 | WALL TYPE A

XX4-AE01-AE501-A1

AE501 | REF. AE103 & AE104 | SCALE: 3" = 1'-0"

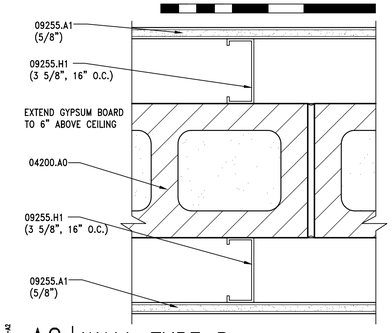

A2 | WALL TYPE B

XX4-AE01-AE501-A2

AE501 | REF. AE103 & AE104 | SCALE: 3" = 1'-0"

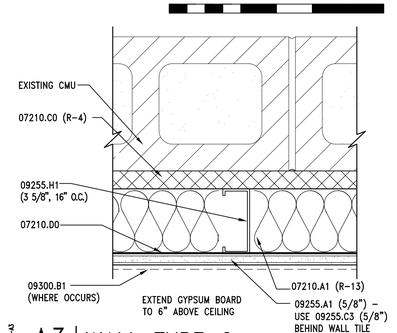

A3 | WALL TYPE C

XX4-AE01-AE501-A3

AE501 | REF. AE103 & AE104 | SCALE: 3" = 1'-0"

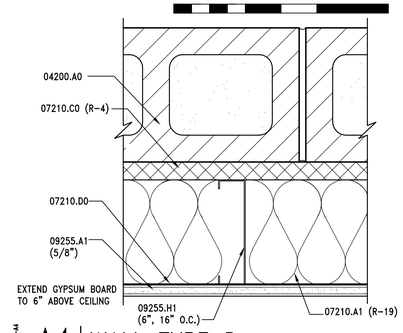

A4 | WALL TYPE D

XX4-AE01-AE501-A4

AE501 | REF. AE103 & AE104 | SCALE: 3" = 1'-0"

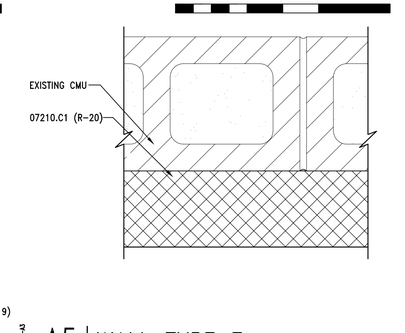

A5 | WALL TYPE E

XX4-AE01-AE501-A5

AE501 | REF. AE103 & AE104 | SCALE: 3" = 1'-0"

KEYNOTES

04200.A0	CMU
05400.A1	6" STRUCTURAL STEEL STUDS - SEE STRUCTURAL DRAWINGS FOR SPACING AND GAUGE
07210.A1	BATT INSULATION (R-VALUE)
07210.C0	RIGID INSULATION FOIL FACED W/VAPOR BARRIER (R-VALUE)
07210.C1	RIGID INSULATION (CONTINUOUSLY ADHERED TO CMU) W/FOIL FACED VAPOR BARRIER TOWARDS INTERIOR (THICKNESS)
07210.D0	VAPOR BARRIER
09255.A1	GYPSUM BOARD (THICKNESS)
09255.C3	CEMENT BOARD (THICKNESS)
09255.H1	METAL STUDS (SIZE, SPACING)
09300.B1	WALL TILE - SEE FINISH SCHED.

GENERAL NOTES

1. FIELD VERIFY ALL EXISTING CONDITIONS AND THEIR COMPATIBILITY WITH NEW CONSTRUCTION PRIOR TO THE COMMENCEMENT OF WORK. COORDINATE DISCREPANCIES WITH ARCHITECT.
2. DO NOT SCALE DRAWINGS.
3. SEE CIVIL, STRUCTURAL, MECHANICAL AND ELECTRICAL DRAWINGS FOR MORE INFORMATION.
4. GENERAL CONTRACTOR IS RESPONSIBLE FOR COORDINATION OF WORK BETWEEN TRADES AND COORDINATION OF CONTRACT DOCUMENTS BETWEEN TRADES. SUB-CONTRACTORS ARE ALSO RESPONSIBLE FOR COORDINATION WITH OTHER TRADES AND OTHER DISCIPLINES INCLUDED IN THE CONTRACTS DOCUMENTS. IF ANY DISCREPANCIES ARE FOUND, GENERAL CONTRACTOR IS TO NOTIFY ARCHITECT IMMEDIATELY BEFORE COMMENCEMENT OF WORK. NO EXTRA COSTS TO THE PROJECT WILL BE INCURRED DUE TO FAILURE OF SUB-CONTRACTORS TO REVIEW/COORDINATE WITH OTHER TRADES.

CLIENT

UDOT CONNECTING COMMUNITIES

REGION 4 OFFICE REMODEL
708 SOUTH 100 WEST
RICHFIELD UTAH 84701

DESIGNER

ARCHIPLEX GROUP
architecture · planning · design services
255 Crossroad Square
Salt Lake City, UT 84115
P:(801) 961-7070
F:(801) 961-7373

CONSULTANTS

PROFESSIONAL SEAL

RALPH M. STANISLAW
95-310818-0301
9/20/10
LICENSED ARCHITECT

ISSUE

MARK	DATE	DESCRIPTION
	9-20-10	DFCM REVIEW COMMENTS
	8-16-10	DFCM REVIEW SUBMITTAL

DFCM PROJECT NO:	10046900
DFCM CONTRACT NO:	107453
ARCHIPLEX PROJECT NO:	1007.01
DRAWN BY:	A. PHILLIPS
CHECKED BY:	R. STANISLAW
SCALE:	1/8"=1'-0"
DATE:	AUGUST 16, 2010

SHEET TITLE

WALL TYPES

AE501

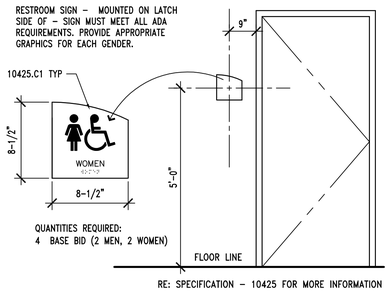

RE: SPECIFICATION - 10425 FOR MORE INFORMATION

D1 | SIGNAGE "A"

AE502 | REF. AE103, AE104 | SCALE: NONE

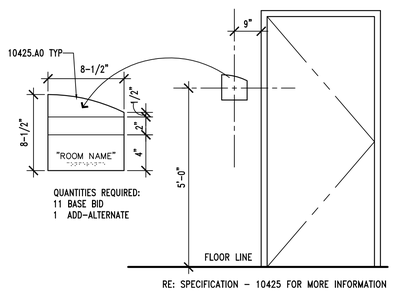

RE: SPECIFICATION - 10425 FOR MORE INFORMATION

D2 | SIGNAGE "B"

AE502 | REF. AE103, AE104 | SCALE: NONE

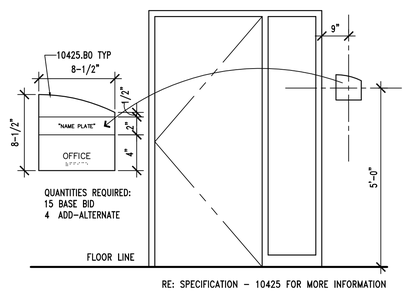

RE: SPECIFICATION - 10425 FOR MORE INFORMATION

D3 | SIGNAGE "C"

AE502 | REF. AE103, AE104, AE201 | SCALE: NONE

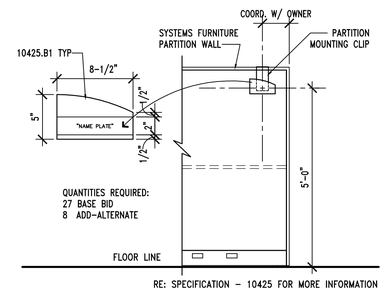

RE: SPECIFICATION - 10425 FOR MORE INFORMATION

D4 | SIGNAGE "D"

AE502 | REF. AE103, AE104 | SCALE: NONE

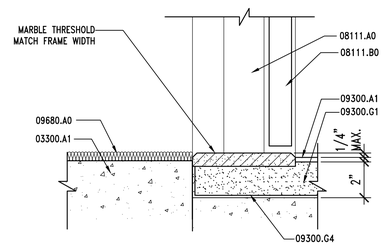

C1 | TRANSITION DETAIL

AE502 | REF. | SCALE: 3" = 1'-0"

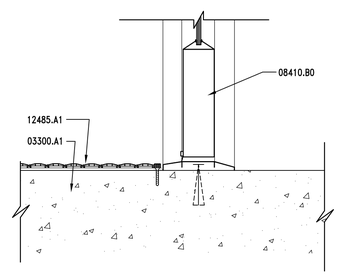

C2 | TRANSITION DETAIL

AE502 | REF. | SCALE: 3" = 1'-0"

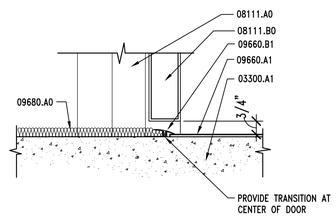

C3 | TRANSITION DETAIL

AE502 | REF. | SCALE: 3" = 1'-0"

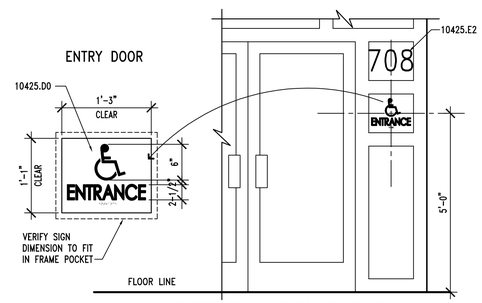

RE: SPECIFICATION - 10425 FOR MORE INFORMATION

C4 | SIGNAGE "E"

AE502 | REF. AE103, AE104, AE201 | SCALE: NONE

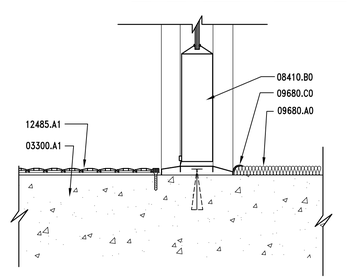

B1 | TRANSITION DETAIL

AE502 | REF. | SCALE: 3" = 1'-0"

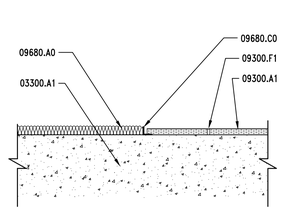

B2 | TRANSITION DETAIL

AE502 | REF. | SCALE: 3" = 1'-0"

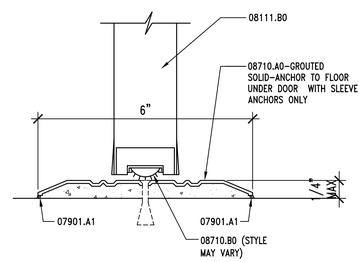

B3 | TRANSITION DETAIL

AE502 | REF. | SCALE: 6" = 1'-0"

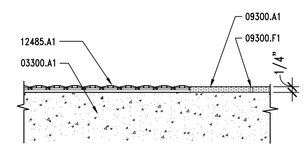

B4 | TRANSITION DETAIL

AE502 | REF. | SCALE: 3" = 1'-0"

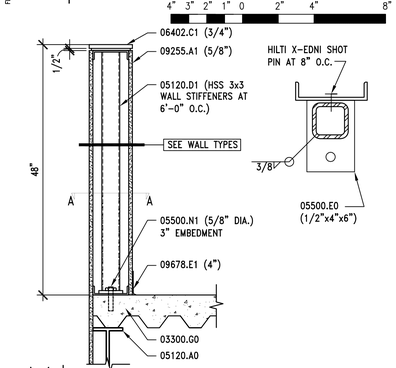

A1 | LOW WALL PARTITION DETAIL

AE502 | REF. AE402 | SCALE: 1" =1'-0"

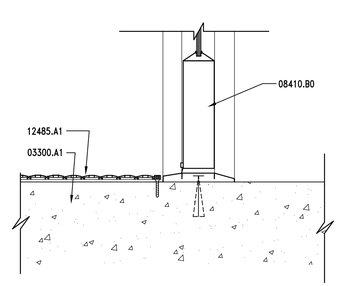

A2 | TRANSITION DETAIL

AE502 | REF. | SCALE: 3" = 1'-0"

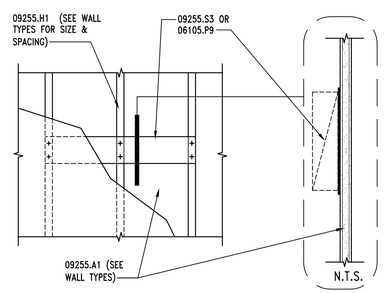

A3 | MOUNTING PLATE ELEV.

AE502 | REF. AE401 | SCALE: 3/4" = 1'-0"

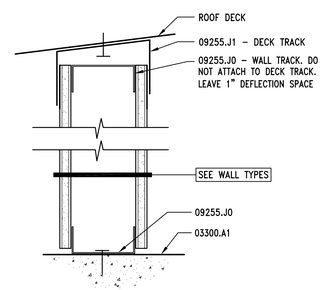

A4 | SLIP JOINT DETAIL

AE502 | REF. | SCALE: 3" = 1'-0"

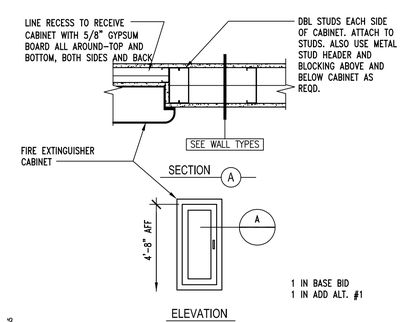

A5 | FIRE EXTINGUISHER CABINET

AE502 | REF. AE101 | SCALE: 1" =1'-0"

KEYNOTES

03300.A1	CONCRETE - SLAB ON GRADE SEE STRUCTURAL
03300.G0	CONCRETE OVER METAL DECK - SEE STRUCTURAL
05120.A0	STEEL BEAM - SEE STRUCTURAL
05120.D1	TUBE STEEL COLUMN - SEE STRUCTURAL
05500.E0	STEEL PLATE (SIZE)
05500.N1	EPOXY ANCHOR (SIZE)
06105.P9	2 x FRAMING, FIRE TREATED
06402.C1	PAINT GRADE WOOD CAP (THICKNESS)
07901.A1	CONT. SEALANT BOTH SIDES
08111.A0	PRESSED METAL FRAME
08111.B0	HOLLOW METAL DOOR
08410.B0	ALUMINUM DOOR
08710.A0	THRESHOLD
08710.B0	DOOR SWEEP
09255.A1	GYPSUM BOARD (THICKNESS)
09255.H1	METAL STUDS (SIZE, SPACING)
09255.J0	METAL RUNNER
09255.J1	METAL TOP TRACK
09255.S3	18 GA. METAL MOUNTING STRIPS
09300.A1	FLOOR TILE - SEE FINISH SCHED.
09300.F1	SEALED GROUT JOINT
09300.G1	MORTAR BED
09300.G4	WATERPROOF MEMBRANE
09660.A1	VINYL COMPOSITION TILE
09660.B1	VINYL TRANSITION STRIP
09678.E1	RUBBER BASE (SIZE)
09681.A0	CARPET TILE
09680.C0	METAL EDGE STRIP
10425.A0	ROOM SIGNAGE
10425.B0	EMPLOYEE OFFICE SIGNAGE
10425.B1	EMPLOYEE CUBICAL SIGNAGE
10425.C1	ACCESIBLE RESTROOM SIGNAGE
10425.D0	ADA COMPLIANT ENTRANCE SIGN
10425.E2	VINYL SIGNAGE - UDOT BUILDING ADDRESS - VERIFY EXACT NUMBER WITH OWNER
12485.A1	ROLL-UP ENTRANCE FLOORING MAT WITH TAPERED FRAME

GENERAL NOTES

1. FIELD VERIFY ALL EXISTING CONDITIONS AND THEIR COMPATIBILITY WITH NEW CONSTRUCTION PRIOR TO THE COMMENCEMENT OF WORK. COORDINATE DISCREPANCIES WITH ARCHITECT.
2. DO NOT SCALE DRAWINGS.
3. GENERAL CONTRACTOR IS RESPONSIBLE FOR COORDINATION OF WORK BETWEEN TRADES AND COORDINATION OF CONTRACT DOCUMENTS BETWEEN TRADES. SUB-CONTRACTORS ARE ALSO RESPONSIBLE FOR COORDINATION WITH OTHER TRADES AND OTHER DISCIPLINES INCLUDED IN THE CONTRACTS DOCUMENTS. IF ANY DISCREPANCIES ARE FOUND, GENERAL CONTRACTOR IS TO NOTIFY ARCHITECT IMMEDIATELY BEFORE COMMENCEMENT OF WORK. NO EXTRA COSTS TO THE PROJECT WILL BE INCURRED DUE TO FAILURE OF SUB-CONTRACTORS TO REVIEW/COORDINATE WITH OTHER TRADES.

CLIENT

UDOT CONNECTING COMMUNITIES

REGION 4 OFFICE REMODEL
708 SOUTH 100 WEST
RICHFIELD UTAH 84701

DESIGNER

ARCHIPLEX GROUP
architecture · planning · design services
255 Crossroad Square
Salt Lake City, UT 84115
P:(801) 961-7070
F:(801) 961-7373

CONSULTANTS

PROFESSIONAL SEAL

STATE OF UTAH
RALPH M. STANISLAW
95-310818-0301
9/20/10
LICENSED ARCHITECT

ISSUE

MARK	DATE	DESCRIPTION
	9-20-10	DFCM REVIEW COMMENTS
	8-16-10	DFCM REVIEW SUBMITTAL

DFCM PROJECT NO:	10046900
DFCM CONTRACT NO:	107453
ARCHIPLEX PROJECT NO:	1007.01
DRAWN BY:	A. PHILLIPS
CHECKED BY:	R. STANISLAW
SCALE:	1/8"=1'-0"
DATE:	AUGUST 16, 2010

SHEET TITLE

INTERIOR DETAILS

AE502

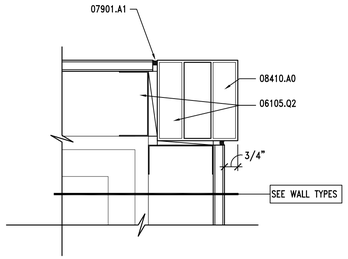

D1 STOREFRONT JAMB DETAIL

AE503 REF. SCALE: 3" = 1'-0"

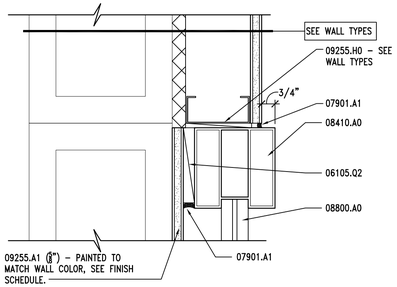

D2 STOREFRONT HEAD DETAIL

AE503 REF. SCALE: 3" = 1'-0"

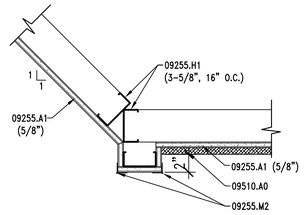

D4 CEILING TRANSITION DETAIL

AE503 REF. AE121 SCALE: 1 1/2" = 1'-0"

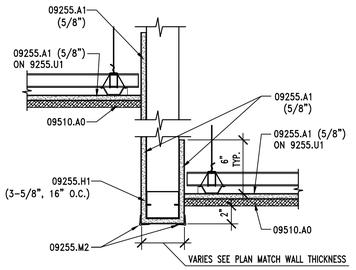

C1 CEILING TRANSITION DETAIL

AE503 REF. AE121 SCALE: 1 1/2" = 1'-0"

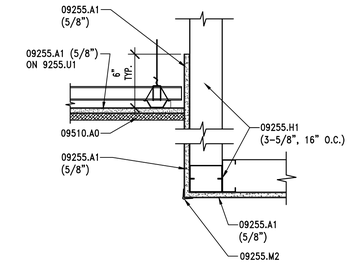

C2 CEILING TRANSITION DETAIL

AE503 REF. AE121 SCALE: 1 1/2" = 1'-0"

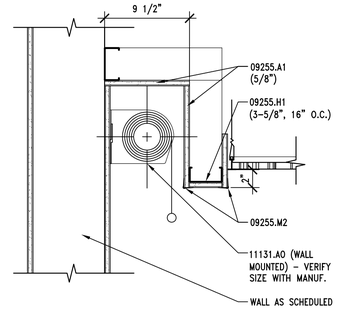

C3 CEILING TRANSITION DETAIL

AE503 REF. AE121 SCALE: 1 1/2" = 1'-0"

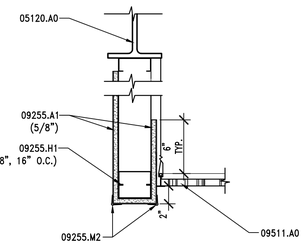

C4 CEILING TRANSITION DETAIL

AE503 REF. AE121 SCALE: 1 1/2" = 1'-0"

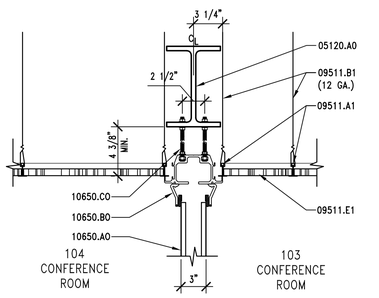

B1 PARTITION WALL-CLNG DTL.

AE503 REF. AE121 SCALE: 1 1/2" = 1'-0"

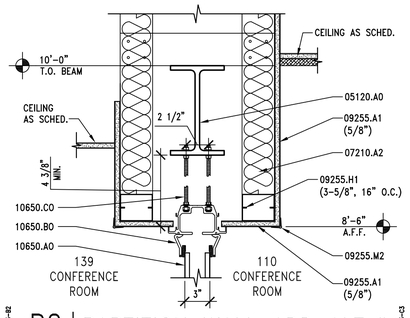

B2 PARTITION WALL ADD ALT.#1

AE503 REF. AE121 & AE312 SCALE: 1 1/2" = 1'-0"

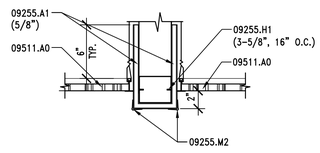

B3 CEILING TRANSITION DETAIL

AE503 REF. AE121 SCALE: 1 1/2" = 1'-0"

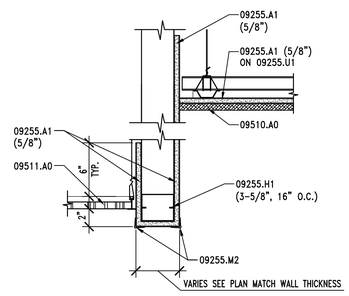

B4 CEILING TRANSITION DETAIL

AE503 REF. AE121 SCALE: 1 1/2" = 1'-0"

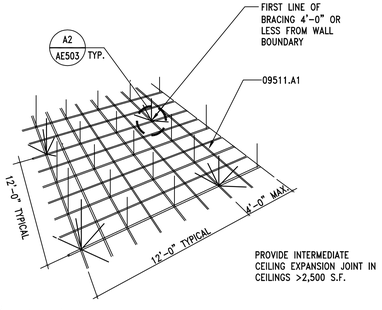

A1 SEISMIC BRACING DETAIL

AE503 REF. AE121 SCALE: NO SCALE

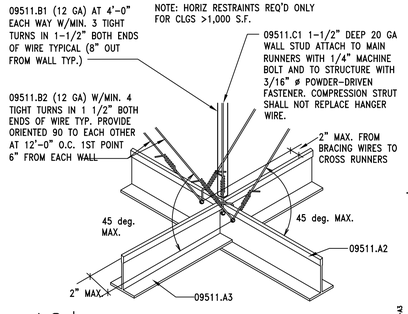

A2 SEISMIC BRACING DETAIL

AE503 REF. AE121 SCALE: NO SCALE

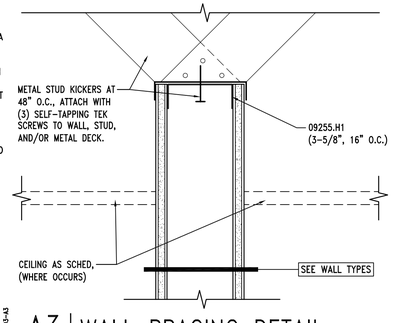

A3 WALL BRACING DETAIL

AE503 REF. SCALE: 3" = 1'-0"

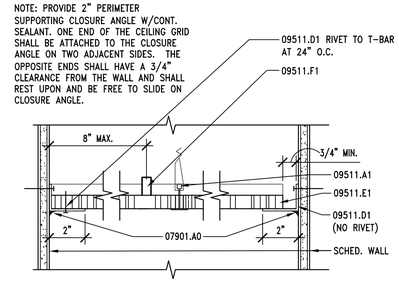

A4 LAY-IN PANEL EDGE DTL.

AE503 REF. AE121 SCALE: 3" = 1'-0"

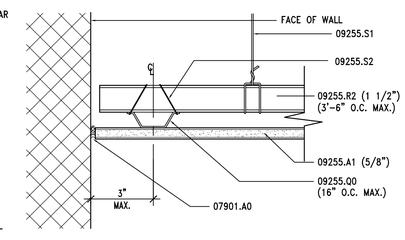

A5 CEILING DETAIL

AE503 REF. AE121 SCALE: 3" = 1'-0"

KEYNOTES

05120.A0	STEEL BEAM - SEE STRUCTURAL
06105.P9	2 x FRAMING, FIRE TREATED
06105.Q2	SHIM AS REQUIRED
07210.A0	BATT INSULATION
07901.A0	CONT. SEALANT
08410.A0	ALUMINUM STOREFRONT FRAME
08800.A0	GLAZING AS SCHEDULED
09255.A1	GYPSUM BOARD (THICKNESS)
09255.H1	METAL STUDS (SIZE, SPACING)
09255.M2	METAL CORNER BEAD (TYP.)
09255.M3	METAL J-MOLD
09255.Q0	7/8" METAL FURRING CHANNEL
09255.R2	CHANNEL (SIZE, SPACING)
09255.S1	8 GA. WIRE HANGERS
09255.S2	18 GA. WIRE TIES
09255.S3	18 GA. METAL MOUNTING STRIPS
09255.U1	SUSPENDED CEILING SYSTEM
09510.A0	ADHERED ACOUSTICAL CEILING TILE
09511.A0	LAY-IN ACOUSTICAL CEILING SYSTEM
09511.A1	HEAVY DUTY "T" BAR GRID SYSTEM
09511.A2	CEILING SUSPENSION SYSTEM - MAIN RUNNER
09511.A3	CEILING SUSPENSION SYSTEM - CROSS RUNNER
09511.B1	VERTICAL WIRE HANGER (SIZE)
09511.B2	BRACING WIRE (SIZE)
09511.C1	COMPRESSION STRUTS
09511.D1	METAL ANGLE EDGE
09511.E1	LAY IN ACOUSTICAL CEILING PANEL
09511.F1	SPREADER BAR REQUIRED TO KEEP PERIMETER COMPONENTS FROM SPREADING APART
10650.A0	OPERABLE PARTITION WALL
10650.B0	PANEL GUIDE ALUMINUM
10650.C0	HANGER RODS
11131.A0	MANUAL PULL PROJECTOR SCREEN

GENERAL NOTES

1. FIELD VERIFY ALL EXISTING CONDITIONS AND THEIR COMPATIBILITY WITH NEW CONSTRUCTION PRIOR TO THE COMMENCEMENT OF WORK. COORDINATE DISCREPANCIES WITH ARCHITECT.
2. DO NOT SCALE DRAWINGS.
3. GENERAL CONTRACTOR IS RESPONSIBLE FOR COORDINATION OF WORK BETWEEN TRADES AND COORDINATION OF CONTRACT DOCUMENTS BETWEEN TRADES. SUB-CONTRACTORS ARE ALSO RESPONSIBLE FOR COORDINATION WITH OTHER TRADES AND OTHER DISCIPLINES INCLUDED IN THE CONTRACTS DOCUMENTS. IF ANY DISCREPANCIES ARE FOUND, GENERAL CONTRACTOR IS TO NOTIFY ARCHITECT IMMEDIATELY BEFORE COMMENCEMENT OF WORK. NO EXTRA COSTS TO THE PROJECT WILL BE INCURRED DUE TO FAILURE OF SUB-CONTRACTORS TO REVIEW/COORDINATE WITH OTHER TRADES.

CLIENT

UDOT CONNECTING COMMUNITIES

REGION 4 OFFICE REMODEL
708 SOUTH 100 WEST
RICHFIELD UTAH 84701

DESIGNER

ARCHIPLEX GROUP
architecture · planning · design services
255 Crossroad Square
Salt Lake City, UT 84115
P:(801) 961-7070
F:(801) 961-7373

CONSULTANTS

PROFESSIONAL SEAL

STATE OF UTAH — RALPH M. STANISLAW — 95-310818-0301 — 9/20/10 — LICENSED ARCHITECT

ISSUE

MARK	DATE	DESCRIPTION
	9-20-10	DFCM REVIEW COMMENTS
	8-16-10	DFCM REVIEW SUBMITTAL

DFCM PROJECT NO:	10046900
DFCM CONTRACT NO:	107453
ARCHIPLEX PROJECT NO:	1007.01
DRAWN BY:	A. PHILLIPS
CHECKED BY:	R. STANISLAW
SCALE:	1/8"=1'-0"
DATE:	AUGUST 16, 2010

SHEET TITLE

INTERIOR DETAILS

AE503

GENERAL NOTES

1. FIELD VERIFY ALL EXISTING CONDITIONS AND THEIR COMPATIBILITY WITH NEW CONSTRUCTION PRIOR TO THE COMMENCEMENT OF WORK. COORDINATE DISCREPANCIES WITH ARCHITECT.
2. DO NOT SCALE DRAWINGS.
3. SEE CIVIL, STRUCTURAL, MECHANICAL AND ELECTRICAL DRAWINGS FOR MORE INFORMATION.
4. GENERAL CONTRACTOR IS RESPONSIBLE FOR COORDINATION OF WORK BETWEEN TRADES AND COORDINATION OF CONTRACT DOCUMENTS BETWEEN TRADES. SUB-CONTRACTORS ARE ALSO RESPONSIBLE FOR COORDINATION WITH OTHER TRADES AND OTHER DISCIPLINES INCLUDED IN THE CONTRACTS DOCUMENTS. IF ANY DISCREPANCIES ARE FOUND, GENERAL CONTRACTOR IS TO NOTIFY ARCHITECT IMMEDIATELY BEFORE COMMENCEMENT OF WORK. NO EXTRA COSTS TO THE PROJECT WILL BE INCURRED DUE TO FAILURE OF SUB-CONTRACTORS TO REVIEW/COORDINATE WITH OTHER TRADES.

KEYNOTES

02200.A0	COMPACTED FILL
02200.B0	GRAVEL BASE
03300.H0	FOUNDATION WALL – SEE STRUCTURAL
03300.M2	UNDER-SLAB VAPOR BARRIER
03300.R0	3/4" CHAMFER
04200.A0	CMU
05120.C0	TUBE STEEL BEAM – SEE STRUCTURAL
05310.A1	METAL DECK – SEE STRUCTURAL
06105.A0	PRESSURE TREATED WOOD NAILER
06105.O2	SHIM AS REQUIRED
06105.V1	EXTERIOR GRADE SHEATHING – PLYWOOD (THICKNESS)
07210.A1	BATT INSULATION (R-VALUE)
07210.A3	VINYL-FACED BATT INSULATION (R-VALUE) MECHANICALLY FASTENED TO METAL DECK ABOVE – TAPE EDGES CONTINUOUS
07210.B0	RIGID INSULATION
07210.B1	RIGID INSULATION (R-VALUE)
07210.D0	VAPOR BARRIER
07210.E0	FOUNDATION WALL INSULATION (THICKNESS)
07410.A0	STANDING SEAM METAL ROOF
07410.B1	METAL REGLET
07410.G0	FLASHING
07410.G5	FLASHING WITH DRIP EDGE
07410.L0	METAL FASCIA
07410.L2	METAL SOFFIT
07410.M1	ICE & WATER SHIELD
07530.A0	EPDM ROOFING MEMBRANE
07530.A2	UNCURED EPDM FLASHING
07621.A2	18 GA. X CONT. GALVANIZED HOLD DOWN CLIP
07621.H1	24 GA. GALVANIZED METAL COLLAR
07621.F1	GALVANIZED CORRUGATED METAL PANEL
07901.A0	CONT. SEALANT
07901.A1	CONT. SEALANT BOTH SIDES
08410.A0	ALUMINUM STOREFRONT FRAME
08410.B0	ALUMINUM DOOR
08410.C0	ALUMINUM BREAK METAL – SHAPE TO MATCH FRAME
08800.A0	GLAZING AS SCHEDULED
09255.A1	GYPSUM BOARD (THICKNESS)
09255.H1	METAL STUDS (SIZE, SPACING)
09255.J0	METAL RUNNER
09255.K0	DOUBLE STUDS
09255.M3	METAL J-MOLD
15050.A3	PIPE INSULATION
15050.C1	DRAIN PIPE – SEE MECHANICAL
15050.D0	VAPOR BARRIER
15400.J1	CAST IRON DOME – PRIMARY DRAIN
15400.J2	CAST IRON DOME – SECONDARY DRAIN
15400.J3	DRAIN CLAMP
15400.J4	2" EXTERNAL WATER DAM

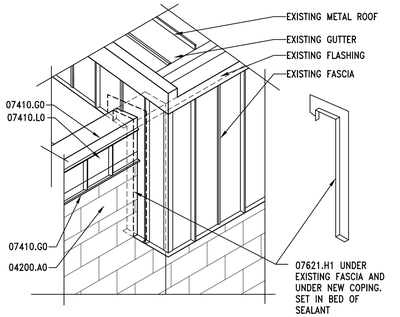

C1 | ISO DETAIL AT NEW PARAPET
AE504 | REF. AE141 | SCALE: 1/2" = 1'-0"

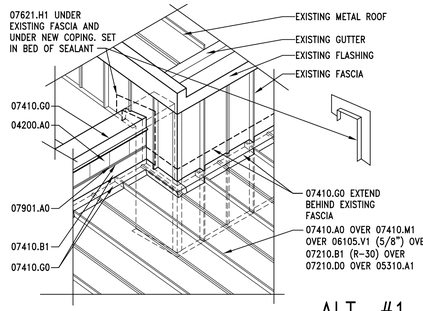

ALT. #1

C2 | ISO DETAIL AT NEW PARAPET
AE504 | REF. AE141 | SCALE: 1/2" = 1'-0"

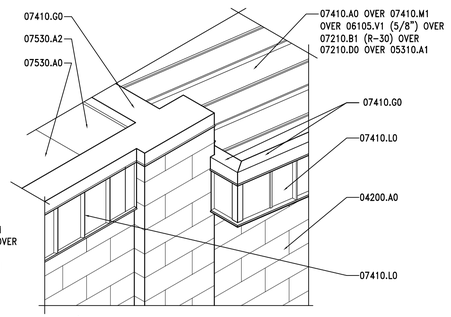

C3 | ISO DETAIL AT NEW PARAPET
AE504 | REF. AE141 | SCALE: 1/2" = 1'-0"

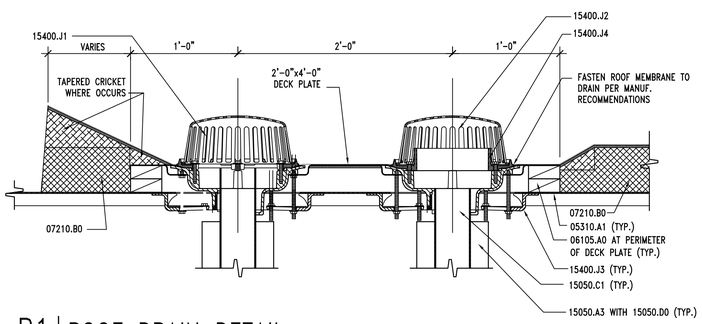

B1 | ROOF DRAIN DETAIL
AE504 | REF. AE141 | SCALE: 1 1/2" = 1'-0"

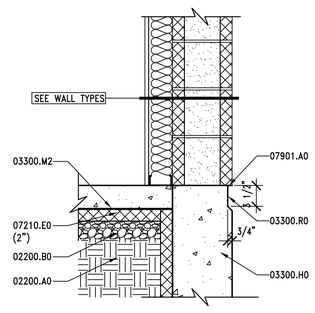

XUH-AE01-AE501-C3

B3 | FOUNDATION WALL
AE504 | REF. AE311, AE312 | SCALE: 1" = 1'-0"

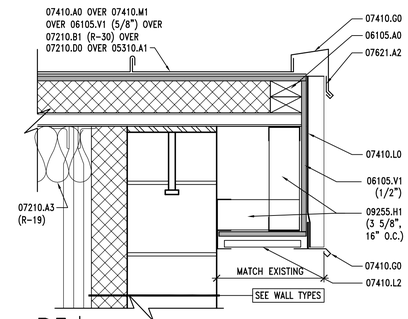

B5 | FASCIA DETAIL
AE504 | REF. AE141 | SCALE: 1-1/2" = 1'-0"

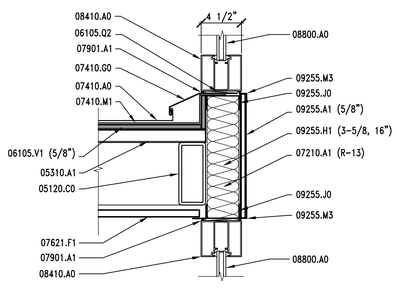

A1 | WINDOW SILL DETAIL
AE504 | REF. AE313, AE141 | SCALE: 1-1/2" = 1'-0"

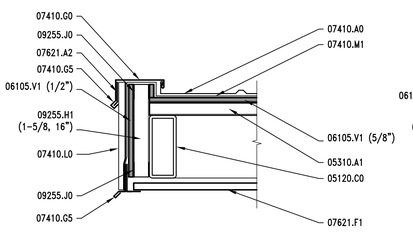

A2 | CANOPY FLASHING DETAIL
AE504 | REF. AE141 | SCALE: 1-1/2" = 1'-0"

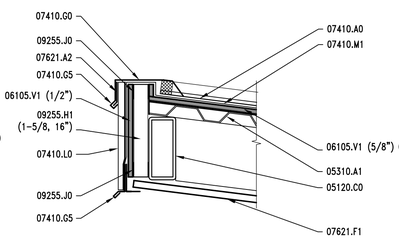

A3 | CANOPY FLASHING DETAIL
AE504 | REF. AE141 | SCALE: 1-1/2" = 1'-0"

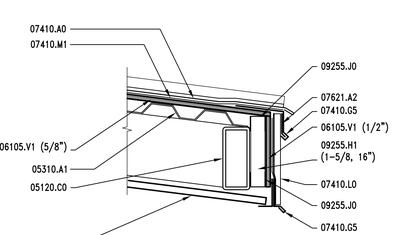

A4 | CANOPY FLASHING DETAIL
AE504 | REF. AE141 | SCALE: 1-1/2" = 1'-0"

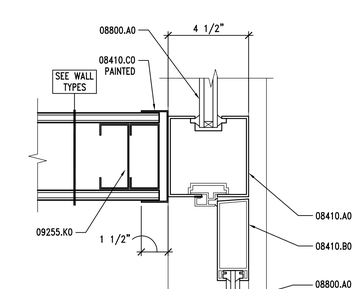

A5 | WINDOW DETAIL
AE504 | REF. AE403 | SCALE: 3" = 1'-0"

CLIENT

UDOT CONNECTING COMMUNITIES

REGION 4 OFFICE REMODEL
708 SOUTH 100 WEST
RICHFIELD UTAH 84701

DESIGNER

ARCHIPLEX GROUP
architecture · planning · design services
255 Crossroad Square
Salt Lake City, UT 84115
P:(801) 961-7070
F:(801) 961-7373

CONSULTANTS

PROFESSIONAL SEAL

STATE OF UTAH
RALPH M. STANISLAW
95-310818-0301
9/20/10
LICENSED ARCHITECT

ISSUE

MARK	DATE	DESCRIPTION
	9-20-10	DFCM REVIEW COMMENTS
	8-16-10	DFCM REVIEW SUBMITTAL

DFCM PROJECT NO:	10046900
DFCM CONTRACT NO:	107453
ARCHIPLEX PROJECT NO:	1007.01
DRAWN BY:	A. PHILLIPS
CHECKED BY:	R. STANISLAW
SCALE:	VARIES
DATE:	AUGUST 16, 2010

SHEET TITLE

EXTERIOR DETAILS

AE504

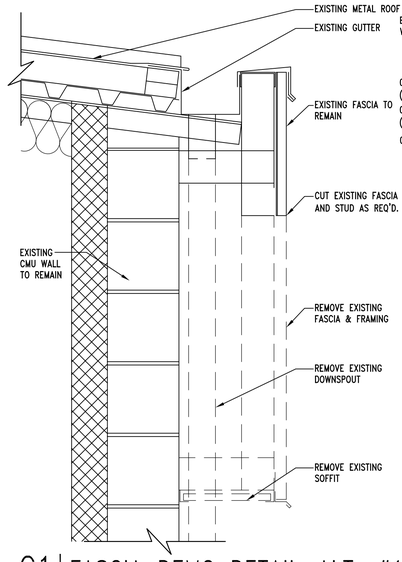

C1 | FASCIA DEMO DETAIL–ALT. #1

AE505 REF. AE312 SCALE: 1-1/2" = 1'-0"

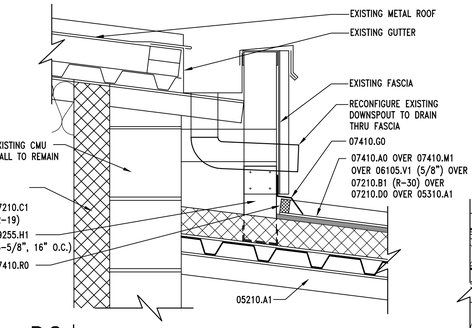

D2 | FASCIA AT NEW ROOF–ALT. #1

AE505 REF. AE312 SCALE: 1-1/2" = 1'-0"

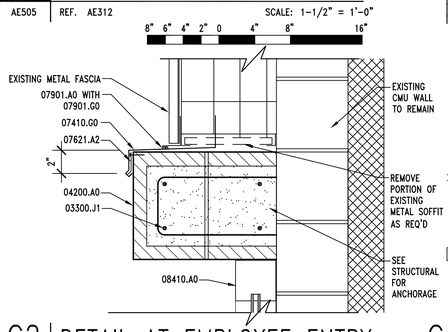

C2 | DETAIL AT EMPLOYEE ENTRY

AE505 REF. AE311 SCALE: 1-1/2" = 1'-0"

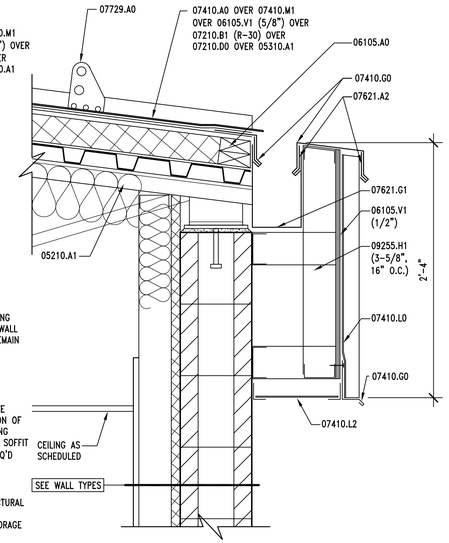

C3 | FASCIA DETAIL – ALT. #1

AE505 REF. AE312 SCALE: 1-1/2" = 1'-0"

C4 | PARAPET DETAIL–ALT. #1

AE505 REF. AE312 SCALE: 1-1/2" = 1'-0"

KEYNOTES

03300.J1	REINFORCING – SEE STRUCTURAL
04200.A0	CMU
05120.A0	STEEL BEAM – SEE STRUCTURAL
05210.A1	STEEL JOISTS – SEE STRUCTURAL
05310.A1	METAL DECK – SEE STRUCTURAL
06105.A0	PRESSURE TREATED WOOD NAILER
06105.A2	TAPERED WOOD CANT
06105.V1	EXTERIOR GRADE SHEATHING – PLYWOOD (THICKNESS)
07210.A0	BATT INSULATION
07210.B1	RIGID INSULATION (R-VALUE)
07210.C1	RIGID INSULATION (CONTINUOUSLY ADHERED TO CMU) W/FOIL FACED VAPOR BARRIER TOWARDS INTERIOR (R-VALUE)
07210.D0	VAPOR BARRIER
07410.A0	STANDING SEAM METAL ROOF
07410.B1	METAL REGLET
07410.G0	FLASHING
07410.L0	METAL FASCIA
07410.L2	METAL SOFFIT
07410.M1	ICE & WATER SHIELD
07410.R0	NEOPRENE CLOSER
07530.A0	EPDM ROOFING MEMBRANE
07530.A2	UNCURED EPDM FLASHING
07530.A3	TERMINATION BAR
07530.B1	LAP SEALANT PER MANUFACTURER
07621.A2	18 GA. X CONT. GALVANIZED HOLD DOWN CLIP
07621.D1	NEW METAL DOWNSPOUT ATTACHED TO EXISTING
07621.G1	GALVANIZED SHEET METAL GUTTER
07621.F1	GALVANIZED CORRUGATED METAL PANEL
07901.A0	CONT. SEALANT
07901.A1	CONT. SEALANT BOTH SIDES
07901.G0	BACKER ROD
08410.A0	ALUMINUM STOREFRONT FRAME
09255.H1	METAL STUDS (SIZE, SPACING)

GENERAL NOTES

1. FIELD VERIFY ALL EXISTING CONDITIONS AND THEIR COMPATIBILITY WITH NEW CONSTRUCTION PRIOR TO THE COMMENCEMENT OF WORK. COORDINATE DISCREPANCIES WITH ARCHITECT.
2. DO NOT SCALE DRAWINGS.
3. SEE CIVIL, STRUCTURAL, MECHANICAL AND ELECTRICAL DRAWINGS FOR MORE INFORMATION.
4. GENERAL CONTRACTOR IS RESPONSIBLE FOR COORDINATION OF WORK BETWEEN TRADES AND COORDINATION OF CONTRACT DOCUMENTS BETWEEN TRADES. SUB-CONTRACTORS ARE ALSO RESPONSIBLE FOR COORDINATION WITH OTHER TRADES AND OTHER DISCIPLINES INCLUDED IN THE CONTRACTS DOCUMENTS. IF ANY DISCREPANCIES ARE FOUND, GENERAL CONTRACTOR IS TO NOTIFY ARCHITECT IMMEDIATELY BEFORE COMMENCEMENT OF WORK. NO EXTRA COSTS TO THE PROJECT WILL BE INCURRED DUE TO FAILURE OF SUB-CONTRACTORS TO REVIEW/COORDINATE WITH OTHER TRADES.

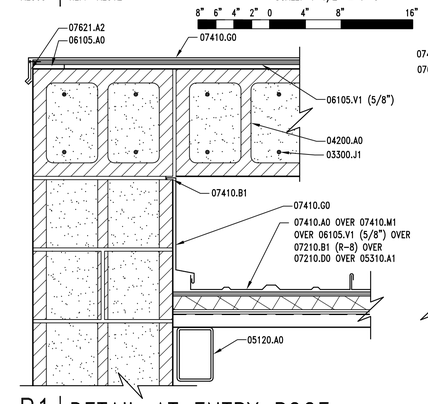

B1 | DETAIL AT ENTRY ROOF

AE505 REF. AE505 SCALE: 1-1/2" = 1'-0"

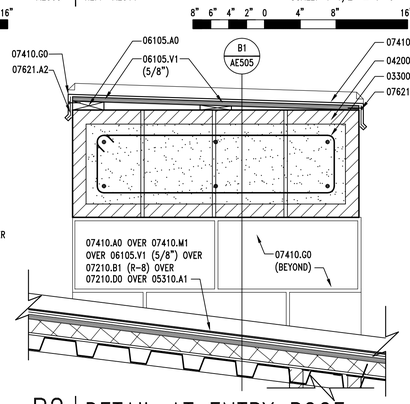

B2 | DETAIL AT ENTRY ROOF

AE505 REF. AE313 SCALE: 1-1/2" = 1'-0"

B3 | DETAIL AT ENTRY ROOF RAKE

AE505 REF. AE141 & AE603 SCALE: 1-1/2" = 1'-0"

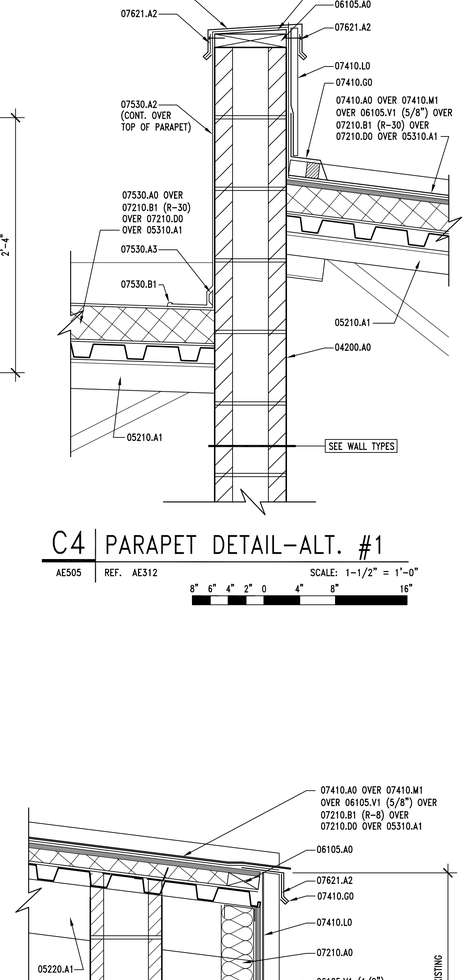

A4 | ENTRY ROOF FLASHING DETAIL

AE505 REF. AE313 SCALE: 1-1/2" = 1'-0"

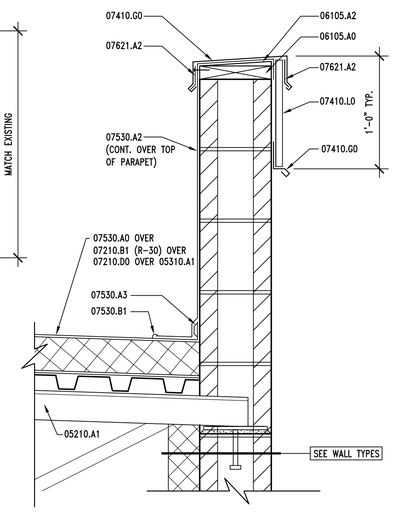

A5 | PARAPET WALL FLASHING

AE505 REF. AE311, AE312 SCALE: 1-1/2" = 1'-0"

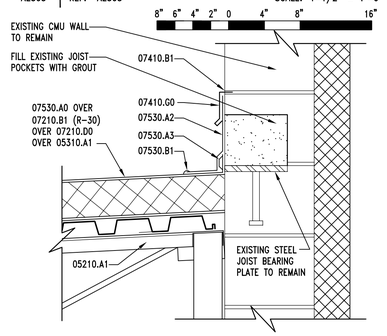

A1 | FLASHING AT EXISTING WALL

AE505 REF. AE311, AE312 SCALE: 1-1/2" = 1'-0"

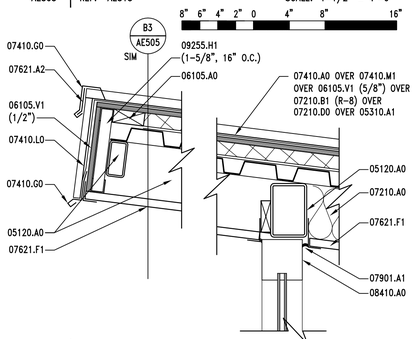

A2 | DETAIL AT ENTRY ROOF

AE505 REF. AE313 & AE603 SCALE: 1-1/2" = 1'-0"

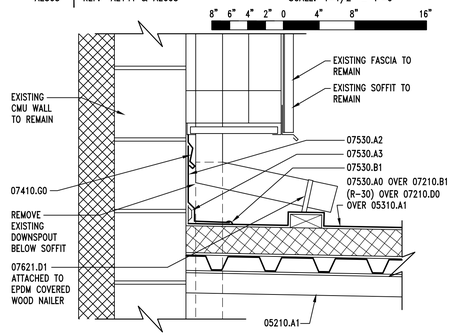

A3 | NEW ROOF AT EXISTING FASCIA

AE505 REF. AE141 SCALE: 1-1/2" = 1'-0"

CLIENT

UDOT CONNECTING COMMUNITIES

REGION 4 OFFICE REMODEL
708 SOUTH 100 WEST
RICHFIELD UTAH 84701

DESIGNER

ARCHIPLEX GROUP
architecture · planning · design services
255 Crossroad Square
Salt Lake City, UT 84115
P:(801) 961-7070
F:(801) 961-7373

CONSULTANTS

PROFESSIONAL SEAL

RALPH M. STANISLAW
95-310618-0301
9/20/10
LICENSED ARCHITECT

ISSUE

MARK	DATE	DESCRIPTION
	9-20-10	DFCM REVIEW COMMENTS
	8-16-10	DFCM REVIEW SUBMITTAL

DFCM PROJECT NO:	10046900
DFCM CONTRACT NO:	107453
ARCHIPLEX PROJECT NO:	1007.01
DRAWN BY:	A. PHILLIPS
CHECKED BY:	R. STANISLAW
SCALE:	1/8"=1'-0"
DATE:	AUGUST 16, 2010

SHEET TITLE

EXTERIOR DETAILS

AE505

DOOR SCHEDULE

DOOR #	ROOM #	DOORS TYPE	DOORS WIDTH	DOORS HEIGHT	DOORS THICK.	DOORS MATERIAL	DOORS FINISH	DOORS GLASS	FRAMES TYPE	FRAMES WIDTH	FRAMES MATERIAL	FRAMES FINISH	DETAILS HEAD	DETAILS JAMB	DETAILS THRESH.	DETAILS LABEL	HARDWARE	REMARKS
D101A	101	2	PR. 3'-0"	7'-0"	1 3/4"	AL	P. FIN.	G3	WF	4-1/2"	AL	P. FIN	C5/AE603 SIM.	C5/AE603	A2/AE502	–	8	
D102A	102	2	PR. 3'-0"	7'-0"	1 3/4"	AL	P. FIN.	G3	D	4-1/2"	AL	P. FIN.	D2/AE601	C3/AE601	B1/AE502	–	9	
D103A	103	3	3'-0"	7'-0"	1 3/4"	WD	STN	G5	B	5 3/4"	HM	PT	B3/AE601	A3/AE601	–	–	12	DOOR FINISH D3
D104A	104	3	3'-0"	7'-0"	1 3/4"	WD	STN	G5	B	5 3/4"	HM	PT	B3/AE601	A3/AE601	–	–	12	DOOR FINISH D3
D104B	104	–	13'-9"	8'-6"	–	–	–	–	–	–	–	–	B1/AE503	–	–	–	–	REFER TO SPECIFICATION 10650
D105A	105	1	3'-0"	7'-0"	1 3/4"	WD	STN	–	A	7 3/4"	HM	PT	D1/AE601	C1/AE601	C3/AE502	–	2	DOOR FINISH D5
D106A	106	1	3'-0"	7'-0"	1 3/4"	WD	STN	–	A	7 3/4"	HM	PT	D1/AE601	C1/AE601	C1/AE502	–	3	DOOR FINISH D5
D107A	107	1	3'-0"	7'-0"	1 3/4"	WD	STN	–	A	7 3/4"	HM	PT	D1/AE601	C1/AE601	C1/AE502	–	3	DOOR FINISH D5
D108A	108	1	3'-0"	7'-0"	1 3/4"	WD	STN	–	C	7 3/4"	HM	PT	D1/AE601	C1/AE601 & D2/AE602	–	–	1	DOOR FINISH D4
D109A	109	1	3'-0"	7'-0"	1 3/4"	WD	STN	–	C	7 3/4"	HM	PT	D1/AE601	C1/AE601 & D2/AE602	–	–	1	DOOR FINISH D4
D110A	110	3	3'-0"	7'-0"	1 3/4"	WD	STN	G5	B	5 3/4"	HM	PT	B3/AE601	A3/AE601	–	–	12	DOOR FINISH D3
D113A	113	1	3'-0"	7'-0"	1 3/4"	WD	STN	–	A	5 3/4"	HM	PT	D1/AE601	A5/AE601	C3/AE502	–	6	DOOR FINISH D5
D114A	114	1	3'-0"	7'-0"	1 3/4"	WD	STN	–	C	7 3/4"	HM	PT	D1/AE601	C1/AE601 & D2/AE602	–	–	1	DOOR FINISH D4
D115A	115	1	3'-0"	7'-0"	1 3/4"	WD	STN	–	C	7 3/4"	HM	PT	D1/AE601	C1/AE601 & D2/AE602	–	–	1	DOOR FINISH D4
D116A	116	1	3'-0"	7'-0"	1 3/4"	WD	STN	–	C	7 3/4"	HM	PT	D1/AE601	C1/AE601 & D2/AE602	–	–	1	DOOR FINISH D4
D117A	117	1	3'-0"	7'-0"	1 3/4"	WD	STN	–	C	7 3/4"	HM	PT	D1/AE601	C1/AE601 & D2/AE602	–	–	1	DOOR FINISH D4
D118A	118	1	3'-0"	7'-0"	1 3/4"	WD	STN	–	–	5 3/4"	HM	PT	C2/AE601 SIM.	C2/AE601	–	–	7	DOOR FINISH D5
D119A	119	1	3'-0"	7'-0"	1 3/4"	WD	STN	–	A	5 3/4"	HM	PT	D1/AE601	C4/AE601 SIM.	C3/AE502	–	2	DOOR FINISH D5
D121A	121	3	3'-0"	7'-0"	1 3/4"	WD	STN	G5	A	5 3/4"	HM	PT	D1/AE601	C1/AE601	C3/AE502	–	4	DOOR FINISH D5
D122A	122	1	3'-0"	7'-0"	1 3/4"	WD	STN	–	C	5 3/4"	HM	PT	D1/AE601	C1/AE601 & D2/AE602	–	–	1	DOOR FINISH D4
D123A	123	1	3'-0"	7'-0"	1 3/4"	WD	STN	–	C	5 3/4"	HM	PT	D1/AE601	A5/AE601 SIM. & D2/AE602	–	–	1	DOOR FINISH D4
D124A	124	1	3'-0"	7'-0"	1 3/4"	WD	STN	–	C	5 3/4"	HM	PT	D1/AE601	C4/AE601 SIM & D2/AE602	–	–	1	DOOR FINISH D4
D125A	125	3	3'-0"	7'-0"	1 3/4"	WD	STN	G5	A	7 3/4"	HM	PT	D1/AE601 SIM.	C4/AE601	–	–	4	DOOR FINISH D5
D127A	127	1	3'-0"	7'-0"	1 3/4"	WD	STN	–	C	7 3/4"	HM	PT	D1/AE601	C1/AE601 & D2/AE602	–	–	1	DOOR FINISH D4
D128A	128	1	3'-0"	7'-0"	1 3/4"	WD	STN	–	C	7 3/4"	HM	PT	D1/AE601	C1/AE601 & D2/AE602	–	–	1	DOOR FINISH D4
D129A	129	2	PR. 3'-2"	7'-0"	1 3/4"	AL	P. FIN.	G3	WD	4-1/2"	AL	P. FIN.	C5/AE603	A5/AE603 & B5/AE504	A2/AE502	–	8	
D129B	129	2	PR. 3'-0"	7'-0"	1 3/4"	AL	P. FIN.	G3	WH	4-1/2"	AL	P. FIN.	D4/AE601	D3/AE601	B1/AE502	–	9	
D130A	130	1	3'-0"	7'-0"	1 3/4"	WD	STN	–	C	7 3/4"	HM	PT	D1/AE601	C1/AE601 & D2/AE602	–	–	1	DOOR FINISH D4
D131A	131	1	3'-0"	7'-0"	1 3/4"	WD	STN	–	C	7 3/4"	HM	PT	D1/AE601	C1/AE601 & D2/AE602	–	–	1	DOOR FINISH D4
D132A	132	1	3'-0"	7'-0"	1 3/4"	WD	STN	–	C	7 3/4"	HM	PT	D1/AE601	C1/AE601 & D2/AE602	–	–	1	DOOR FINISH D4
D133A	133	1	3'-0"	7'-0"	1 3/4"	WD	STN	–	C	5 3/4"	HM	PT	D1/AE601	C1/AE601 & D2/AE602	–	–	1	DOOR FINISH D3
SECOND FLOOR DOORS																		
D202A	202	1	3'-0"	7'-0"	1 3/4"	HM	PT	–	A	7 3/4"	HM	PT	D1/AE601	B4/AE601	–	–	2	

HM = HOLLOW METAL ST = STEEL AL = ALUMINIM P. FIN. = PRE-FINISHED PT = PAINTED STN = STAINED G* = SEE GLAZING SCHEDULE

ADD ALTERNATE DOOR SCHEDULE

DOOR #	ROOM #	DOORS TYPE	DOORS WIDTH	DOORS HEIGHT	DOORS THICK.	DOORS MATERIAL	DOORS FINISH	DOORS GLASS	FRAMES TYPE	FRAMES WIDTH	FRAMES MATERIAL	FRAMES FINISH	DETAILS HEAD	DETAILS JAMB	DETAILS THRESH.	DETAILS LABEL	HARDWARE	REMARKS
D134A	134	3	3'-0"	7'-0"	1 3/4"	HM	PT	G5	B	5 3/4"	HM	PT	B2/AE601	A2/AE601	B3/AE502	–	5	
D135A	135	1	3'-0"	7'-0"	1 3/4"	WD	STN	–	C	5 3/4"	HM	PT	D1/AE601	C1/AE601	–	–	1	DOOR FINISH D4
D136A	136	1	3'-0"	7'-0"	1 3/4"	WD	STN	–	C	5 3/4"	HM	PT	D1/AE601	C1/AE601	–	–	1	DOOR FINISH D4
D137A	137	1	3'-0"	7'-0"	1 3/4"	WD	STN	–	C	5 3/4"	HM	PT	D1/AE601	C1/AE601	–	–	1	DOOR FINISH D4
D138A	138	1	3'-0"	7'-0"	1 3/4"	WD	STN	–	C	5 3/4"	HM	PT	D1/AE601	C1/AE601	–	–	1	DOOR FINISH D4
D139A	139	2	PR. 3'-0"	7'-0"	1 3/4"	AL	P. FIN.	G3	B	4 1/2"	AL	P. FIN.	D2/AE601	D2/AE601 SIM.	B3/AE502	–	8	
D139B	139	3	3'-0"	7'-0"	1 3/4"	WD	STN	G5	B	5 3/4"	HM	PT	B3/AE601	A3/AE601	–	–	12	DOOR FINISH D3
D139C	139	–	14'-0"	8'-6"	–	–	–	–	–	–	–	–	–	–	–	–	–	REFER TO SPECIFICATION 10650

HM = HOLLOW METAL ST = STEEL AL = ALUMINIM P. FIN. = PRE-FINISHED PT = PAINTED STN = STAINED G* = SEE GLAZING SCHEDULE

EXISTING DOOR SCHEDULE

DOOR #	ROOM #	DOORS TYPE	DOORS WIDTH	DOORS HEIGHT	DOORS THICK.	DOORS MATERIAL	DOORS FINISH	DOORS GLASS	FRAMES TYPE	FRAMES WIDTH	FRAMES MATERIAL	FRAMES FINISH	DETAILS HEAD	DETAILS JAMB	DETAILS THRESH.	DETAILS LABEL	HARDWARE	REMARKS
ED101	E01	1	3'-0"	7'-0"	1 3/4"	WD	STN	–	EXISTING TO REMAIN				–	–	C3/AE502 SIM.		10	DOOR FINISH D5
ED102	E02	1	3'-0"	7'-0"	1 3/4"	WD	STN	–	EXISTING TO REMAIN				–	–	B2/AE502		10	DOOR FINISH D5
ED103	E03	1	3'-0"	7'-0"	1 3/4"	WD	STN	–	EXISTING TO REMAIN				–	–	B2/AE502		10	DOOR FINISH D5
ED105	105	EXISTING TO REMAIN							EXISTING TO REMAIN				–	–	–	–	–	WELD DOOR SHUT
ED106	106	EXISTING TO REMAIN							EXISTING TO REMAIN				–	–	–	–	–	WELD DOOR SHUT
EE110	110	EXISTING TO REMAIN							EXISTING TO REMAIN				–	–	–	–	11	REPAINT DOOR
ED118	118	EXISTING TO REMAIN							EXISTING TO REMAIN				–	–	–	–	11	REPAINT DOOR

HM = HOLLOW METAL ST = STEEL AL = ALUMINIM P. FIN. = PRE-FINISHED PT = PAINTED STN = STAINED G* = SEE GLAZING SCHEDULE

DOOR TYPES

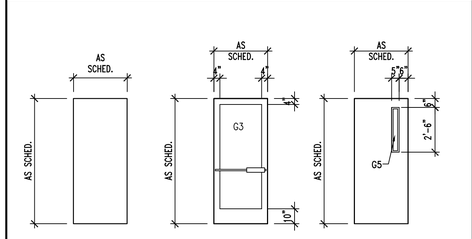

DOOR FRAME TYPES

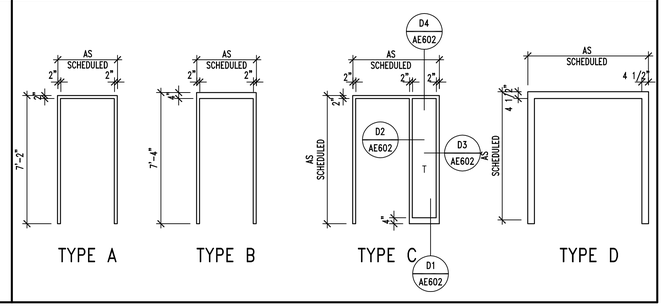

ROOM FINISH SCHEDULE

	ROOM NAME & NUMBER	FLOOR	BASE	WALLS WEST	WALLS EAST	WALLS NORTH	WALLS SOUTH	DOOR/ FRAMES	P. LAM.	CEILING	S. SURF.	TOILET PART.	REMARKS
E01	MECHANICAL ROOM	F1	B1	W1	W1	W1	W1	D1, D5	–	C1	–	–	
E02	WOMEN'S RESTROOM	F1	B1	W1	W1	W1	W1	D1, D5	–	C1	–	T1	
E03	MEN'S RESTROOM	F1	B1	W1	W1	W1	W1	D1, D5	–	C1	–	T1	
101	PUBLIC ENTRANCE	F7, F9	B5	W4	W4	W4	–	D2	–	C8	–	–	PAINT STEEL COLUMNS SHERWIN WILLIAMS BLACK FOX
102	LOBBY	F8	B5	W4,W4,W9	–	W4	W4	D2	–	C6	–	–	CONTINUE FLOOR TILE PATTERN ON WEST WALL UP TO 48" INCLUDING 3" SURFACE BULLNOSE TRIM, SEE DETAIL D4/AE403.
102A	RECEPTION	F4	B3	–	W4	W4	W4	–	–	C6	SS2	–	
103	CONFERENCE ROOM	F3	B3	–	W4	W4	W4	D1, D3	–	C6	SS2	–	
104	CONFERENCE ROOM	F3	B3	W4	–	W4	W4	D1, D3	–	C6	SS2	–	
105	STORAGE/FUTURE CORR.	F5	B2	W4	W4	W4	W4	D1, D5	–	C2	SS2	–	
106	MEN'S RESTROOM	F7	B3	W7, W8	W7, W8	W7, W8	W7, W8	D1, D5	–	C3	–	T2	
107	WOMEN'S RESTROOM	F7	B3	W7, W8	W7, W8	W7, W8	W7, W8	D1, D5	–	C3	–	T2	
108	OFFICE	F4	B3	W4	W4	W6	W4	D1, D4	–	C5	–	–	
109	OFFICE	F4	B3	W4	W4	W4	W6	D1, D4	–	C5	–	–	
110	CONFERENCE ROOM	F3	B3	W4	W4	W4	W4	D1, D3	–	C5	SS2	–	
111	PRINT/FAX	F3	B3	W4	W4	W4	W4	–	P1, P2	C6	SS1	–	
112	CUBICLE SPACE	F3	B3	W4	W4	W4	W4	–	–	C6	SS2	–	PAINT CEILING AT DRINKING FOUNTAIN & EMPLOYEE VESTIBULE – W5, SHERWIN WILLIAMS CAJUN RED
113	DTS ROOM	F5	B2	W4	W4	W4	W4	D1, D5	–	C6	–	–	
114	OFFICE	F4	B3	W4	W4	W6	W4	D1, D4	–	C5	–	–	
115	OFFICE	F4	B3	W4	W4	W4	W6	D1, D4	–	C5	–	–	
116	OFFICE	F4	B3	W4	W4	W6	W4	D1, D4	–	C5	–	–	
117	OFFICE	F4	B3	W4	W4	W4	W6	D1, D4	–	C5	SS2	–	
118	OPEN OFFICE	F3	B3	W4	W2, W4	W4,W5	–	D1, D5	P1, P2	C6	SS1	–	
119	JANITOR	F5	B2	W2	W2	W4	W4	D1, D5	–	C2	SS2	–	
120	CORRIDOR	F3	B3	W2, W4	W2, W4	W2, W4	W2, W4	–	–	C6	SS2	–	
121	BREAKROOM	F6	B2	W2,W4,W5	W2, W4	W2	W4	D1, D5	–	C6	SS2	–	REFER TO DETAIL A5/AE103 FOR VCT PATTERN
122	OFFICE	F4	B3	W4	W4	W6	W4	D1, D4	–	C5	SS2	–	
123	OFFICE	F4	B3	W4	W4	W4	W3	D1, D4	–	C5	SS2	–	
124	OFFICE	F4	B3	W4	W4	W4	W6	D1, D4	–	C5	–	–	
125	PRINT ROOM	F3	B3	W5	W4	W4	W4	D1, D5	P1, P2	C6	SS1	–	
126	OPEN OFFICE	F3	B3	W4	W4	W4, W5	W4, W5	–	–	C3,C6	–	–	
127	OFFICE	F4	B3	W4	W4	W2	W6	D1, D4	–	C5	SS2	–	
128	OFFICE	F4	B3	W4	W4	W4	W6	D1, D4	–	C2,C5	SS2	–	
129	EMPLOYEE ENTRANCE	F9	–	W5	–	W5	W5	D2	–	C3	–	–	
130	OFFICE	F4	B3	W4	W4	W6	W4	D1, D4	–	C5	SS2	–	
131	OFFICE	F4	B3	W4	W4	W6	W4	D1, D4	–	C5	SS2	–	
132	OFFICE	F4	B3	W4	W4	W6	W4	D1, D4	–	C5	SS2	–	
133	OFFICE	F4	B3	W4	W6	W4	W4	D1, D4	–	C5	SS2	–	
134	CUBICLE SPACE	F3	B3	W4	W4	W4	W4	D1	–	C6	SS2	–	
135	OFFICE	F4	B3	W4	W4	W4	W6	D1, D4	–	C5	SS2	–	
136	OFFICE	F4	B3	W4	W4	W6	W4	D1, D4	–	C5	SS2	–	
137	OFFICE	F4	B3	W4	W4	W4	W6	D1, D4	–	C5	SS2	–	
138	OFFICE	F4	B3	W4	W4	W6	W4	D1, D4	–	C5	SS2	–	
139	CONFERENCE ROOM	F3	B3	W4	W4	W4	W5	D1, D3	P2	C2,C6	SS1,SS2	–	
140	CORRIDOR	F3	B3	W4	W4	W4	W4	–	–	C5	–	–	
141	DISPLAY AREA	F3	B3	W4	W4	W5	–	–	–	C6	–	–	
142	STAIRS	F2	B2	W4	W4	W4	W4	–	–	–	–	–	
SECOND FLOOR													
201	FILE STORAGE	F5	B2	W4	W4	W4	W4	–	–	C7	–	–	
202	MECHANICAL ROOM	F2	B6	W4	W4	W4	W4	D1	–	C7	–	–	

ROOM FINISH LEGEND

FLOOR

F1. EXISTING TO REMAIN

F2. CONCRETE FLOOR WITH MULTI-LAYERED WATERPROOF SURFACING, DEX-O-TEX, M-E FLOORING, COLOR TO BE SELECTED BY ARCHITECT

F3. 24"x24" CARPET TILE – SHAW, WORK*LIFE, BALANCE (59340) ATMOSFERA (40760)

F4. 24"x24" CARPET TILE – SHAW, WORK*LIFE, CONNECT (59340) ATMOSFERA (40760)

F5. 12"x12" VINYL COMPOSITION TILE – MANNINGTON, SOLIDPOINT, 313 PRAIRIE

F6. 12"x12" VINYL COMPOSITION TILE – MANNINGTON, SOLIDPOINT, 302 GRAVEL, 313 PAIRIE, 317 COOL BEIGE, & 337 TOASTED SESAME. REFER TO DETAIL A5/AE103 FOR COLOR PATTERN.

F7. 6.5"x6.5" FLOOR TILE – INTERCERAMIC, VIALETTO, CHINA MULTICOLOR

F8. 20"x20" & 13"x13" FLOOR TILE – INTERCERAMIC, VIALETTO, CHINA MULTICOLOR

F9. ALUMINUM FRAME ENTRANCE FLOORING WITH CARPET INSERTS – COLOR BY ARCHITECT

BASE

B1. EXISTING TO REMAIN

B2. 4" RUBBER BASE – JOHNSONITE, MOON ROCK RWDC-29

B3. 4" CARPET BASE – TO MATCH CARPET TILE

B4. 6" COVED TILE BASE – INTERCERAMIC, CONCRETE, IVORY

B5. 6.5" SURFACE BULLNOSE – INTERCERAMIC, VIALETTO, CHINA MULTICOLOR

B6. COVED BASE – MULTI-LAYERED WATERPROOF SURFACING, DEX-O-TEX, M-E FLOORING, COLOR TO BE SELECTED BY ARCHITECT

WALL

W1. EXISTING TO REMAIN

W2. EXISTING TO REMAIN – PAINT, SHERWIN WILLIAMS, EIDER WHITE

W3. EXISTING TO REMAIN – PAINT, SHERWIN WILLIAMS, ESSENTIAL GRAY

W4. GYPSUM BOARD – PAINT, SHERWIN WILLIAMS, EIDER WHITE

W5. GYPSUM BOARD – PAINT, SHERWIN WILLIAMS, CAJUN RED

W6. GYPSUM BOARD – PAINT, SHERWIN WILLIAMS, ESSENTIAL GRAY

W7. WATER RESISTANT GYPSUM BOARD – PAINT, SHERWIN WILLIAMS, NATURAL CHOICE

W8. 12"x12" WALL TILE & 4" SURFACE BULLNOSE – INTERCERAMIC, MANHATTAN, BIANCO NATURAL, WITH 4" MOSAIC ACCENT BAND – INTERCERAMIC, SHIMMER BLENDS, PRAIRIE (1"x2" PATTERN)

W9. 20"x20" & 13"x13" FLOOR TILE – INTERCERAMIC, VIALETTO, CHINA MULTICOLOR

PLASTIC LAMINATE

P1. WILSONART, MONTEREY HAZE, #4637-60

P2. WILSONART, MONTEREY STORM, #4639-60

SOLID SURFACE

SS1. SOLID SURFACE COUNTER TOP – CORIAN, SORREL

SS2. SOLID SURFACE WINDOW SILL – CORIAN, SORREL

CEILING

C1. EXISTING TO REMAIN

C2. GYPSUM BOARD – PAINTED, SHERWIN WILLIAMS, EIDER WHITE

C3. GYPSUM BOARD – PAINTED, SHERWIN WILLIAMS, NATURAL CHOICE

C4. GYPSUM BOARD – PAINTED, SHERWIN WILLIAMS, CAJUN RED

C5. ADHERED ACOUSTIC CEILING TILE – ARMSTRONG, CIRRUS, SQUARE LAY-IN EGDE, 12"x12", NRC 0.75 & CAC 35. WHITE.

C6. SUSPENDED CEILING GRID & LAY-IN TILE – ARMSTRONG CIRRUS, SQUARE LAY-IN EGDE, 12"x12", NRC 0.75 & CAC 35. WHITE.

C7. EXPOSED STRUCTURE – PAINTED, SHERWIN WILLIAMS, EIDER WHITE

C8. CORRUGATED METAL

DOORS & FRAMES

D1. PAINT – SHERWIN WILLIAMS, BLACK FOX

D2. FACTORY FINISHED

D3. STAINED – VT INDUSTRIES, RED OAK, TIMBER, TI07

D4. STAINED – VT INDUSTRIES, RED OAK, CLEAR, CL07

D5. STAINED – VT INDUSTRIES, RED OAK, RAVINE, RA07

TOILET PARTITION

T1. EXISTING TO REMAIN

T2. SOLID PHENOLIC PARTITIONS – WILSONART, TWILIGHT ZEPHYR, #4845-60

CLIENT

UDOT CONNECTING COMMUNITIES

REGION 4 OFFICE REMODEL
708 SOUTH 100 WEST
RICHFIELD UTAH 84701

DESIGNER

ARCHIPLEX GROUP
architecture · planning · design services
255 Crossroad Square
Salt Lake City, UT 84115
P:(801) 961-7070
F:(801) 961-7373

CONSULTANTS

PROFESSIONAL SEAL

RALPH M. STANISLAW
95-310818-0301
9/20/10
LICENSED ARCHITECT

ISSUE

MARK	DATE	DESCRIPTION
	9-20-10	DFCM REVIEW COMMENTS
	8-16-10	DFCM REVIEW SUBMITTAL

DFCM PROJECT NO:	10046900
DFCM CONTRACT NO:	107453
ARCHIPLEX PROJECT NO:	1007.01
DRAWN BY:	
CHECKED BY:	
SCALE:	1/8"=1'-0"
DATE:	AUGUST 16, 2010

SHEET TITLE

DOOR SCHEDULE, DOOR AND FRAME TYPES, FINISH SCHEDULE

AE600

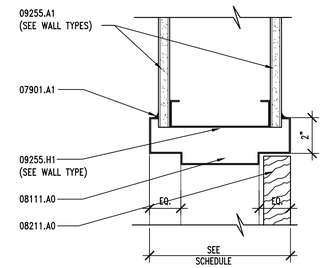

D1 | DOOR HEAD DETAIL

AE601 | REF. AE600 | SCALE: 3" = 1'-0"

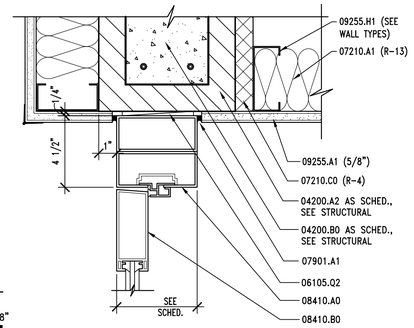

D2 | ALUMINUM HEAD DETAIL

AE601 | REF. AE600 | SCALE: 3" = 1'-0"

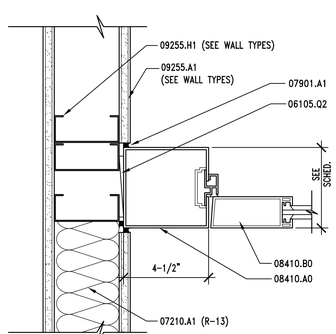

D3 | ALUMINUM JAMB DETAIL

AE601 | REF. AE600 | SCALE: 3" = 1'-0"

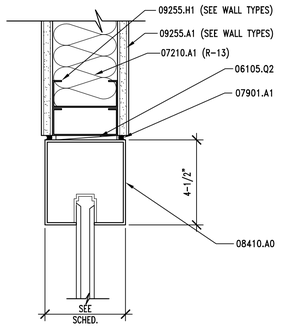

D4 | ALUMINUM HEAD DETAIL

AE601 | REF. AE600 | SCALE: 3" = 1'-0"

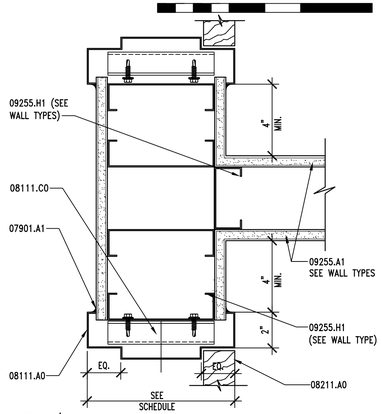

C1 | DOOR JAMB DETAIL

AE601 | REF. AE600 | SCALE: 3" = 1'-0"

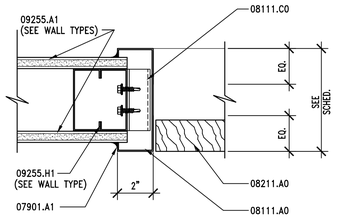

C2 | JAMB DETAIL (HEAD SIM)

AE601 | REF. AE600 | SCALE: 3" = 1'-0"

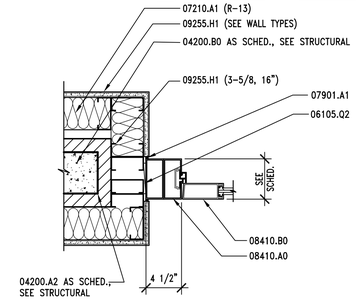

C3 | ALUMINUM JAMB DETAIL

AE601 | REF. AE600 | SCALE: 1-1/2" = 1'-0"

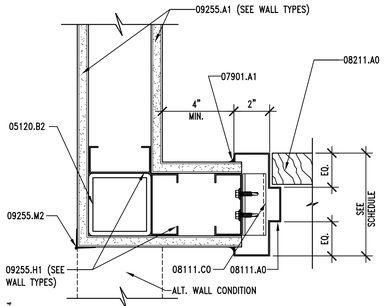

C4 | DOOR JAMB DETAIL

AE601 | REF. AE600 | SCALE: 3" = 1'-0"

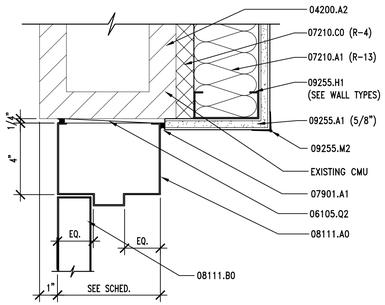

B2 | HOLLOW METAL HEAD DTL.

AE601 | REF. AE600 | SCALE: 3" = 1'-0"

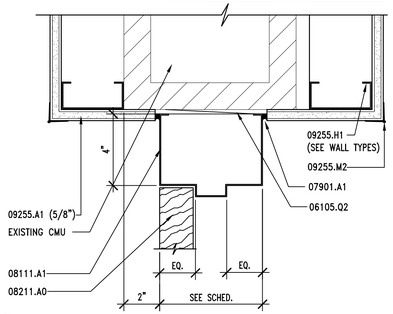

B3 | HOLLOW METAL HEAD DTL.

AE601 | REF. AE600 | SCALE: 3" = 1'-0"

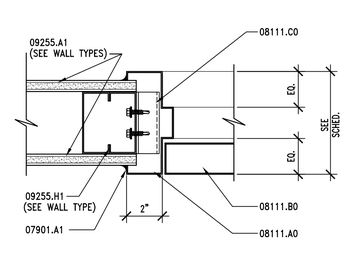

B4 | DOOR JAMB DETAIL

AE601 | REF. AE600 | SCALE: 3" = 1'-0"

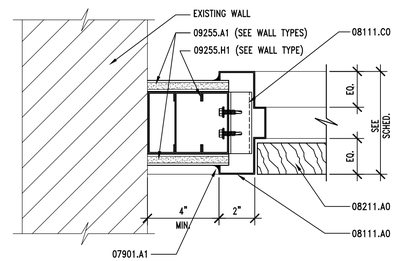

B5 | DOOR JAMB DETAIL

AE601 | REF. AE600 | SCALE: 3" = 1'-0"

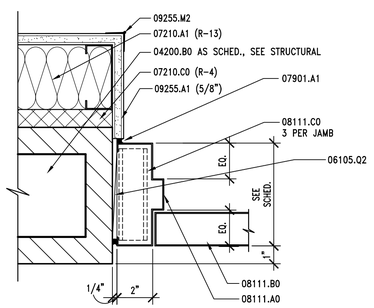

A2 | HOLLOW METAL JAMB DTL.

AE601 | REF. AE600 | SCALE: 3" = 1'-0"

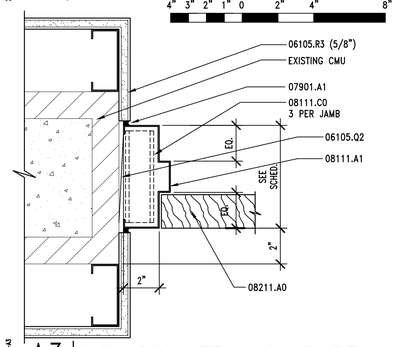

A3 | HOLLOW METAL JAMB DTL.

AE601 | REF. AE600 | SCALE: 3" = 1'-0"

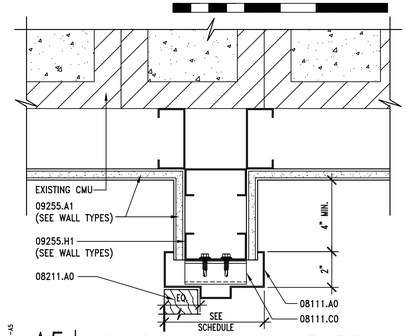

A5 | HOLLOW METAL JAMB DTL.

AE601 | REF. AE600 | SCALE: 3" = 1'-0"

KEYNOTES

03053.A0	CONCRETE WATER PROOFING ADMIXTURE
03300.H0	FOUNDATION WALL – SEE STRUCTURAL
03300.N0	CONCRETE CURB
03300.R0	CHAMFER
04200.A2	CMU (SIZE)
04200.B0	GROUT SOLID
05120.B2	STEEL COLUMN – SEE STRUCTURAL – PRIMED AND PAINTED
06105.Q2	SHIM AS REQUIRED
07210.A1	BATT INSULATION (R-VALUE)
07210.C0	RIGID INSULATION FOIL FACED W/VAPOR BARRIER (R-VALUE)
07901.A1	CONT. SEALANT BOTH SIDES
08111.A0	PRESSED METAL FRAME
08111.B0	HOLLOW METAL DOOR
08111.C0	JAMB ANCHOR
08211.A0	WOOD DOOR
08360.A0	HEAVY DUTY OVERHEAD SECTIONAL DOOR
08360.B0	3" HEAVY DUTY OVERHEAD SECTIONAL DOOR TRACK
08360.C0	WEATHERSTRIPPING
08410.A0	ALUMINUM STOREFRONT FRAME
08410.B0	ALUMINUM DOOR
09255.A1	GYPSUM BOARD (THICKNESS)
09255.H1	METAL STUDS (SIZE)
09300.B1	WALL TILE – SEE FINISH SCHED.
09255.M2	METAL CORNER BEAD (TYP.)

GENERAL NOTES

1. FIELD VERIFY ALL EXISTING CONDITIONS AND THEIR COMPATIBILITY WITH NEW CONSTRUCTION PRIOR TO THE COMMENCEMENT OF WORK. COORDINATE DISCREPANCIES WITH ARCHITECT.

2. DO NOT SCALE DRAWINGS.

3. SEE STRUCTURAL, MECHANICAL AND ELECTRICAL DRAWINGS FOR MORE INFORMATION.

4. SEE SHEET AE602 FOR GLAZING TYPES.

5. GENERAL CONTRACTOR IS RESPONSIBLE FOR COORDINATION OF WORK BETWEEN TRADES AND COORDINATION OF CONTRACT DOCUMENTS BETWEEN TRADES. SUB-CONTRACTORS ARE ALSO RESPONSIBLE FOR COORDINATION WITH OTHER TRADES AND OTHER DISCIPLINES INCLUDED IN THE CONTRACTS DOCUMENTS. IF ANY DISCREPANCIES ARE FOUND, GENERAL CONTRACTOR IS TO NOTIFY ARCHITECT IMMEDIATELY BEFORE COMMENCEMENT OF WORK. NO EXTRA COSTS TO THE PROJECT WILL BE INCURRED DUE TO FAILURE OF SUB-CONTRACTORS TO REVIEW/COORDINATE WITH OTHER TRADES.

CLIENT

UDOT CONNECTING COMMUNITIES

REGION 4 OFFICE REMODEL
708 SOUTH 100 WEST
RICHFIELD UTAH 84701

DESIGNER

ARCHIPLEX GROUP
architecture · planning · design services
255 Crossroad Square
Salt Lake City, UT 84115
P:(801) 961-7070
F:(801) 961-7373

CONSULTANTS

PROFESSIONAL SEAL

RALPH M. STANISLAW
95-310818-0301
9/20/10
LICENSED ARCHITECT

ISSUE

MARK	DATE	DESCRIPTION
	9-20-10	DFCM REVIEW COMMENTS
	8-16-10	DFCM REVIEW SUBMITTAL

DFCM PROJECT NO:	10046900
DFCM CONTRACT NO:	107453
ARCHIPLEX PROJECT NO:	1007.01
DRAWN BY:	A. PHILLIPS
CHECKED BY:	R, STANISLAW
SCALE:	1/8"=1'-0"
DATE:	AUGUST 16, 2010

SHEET TITLE

DOOR DETAILS

AE601

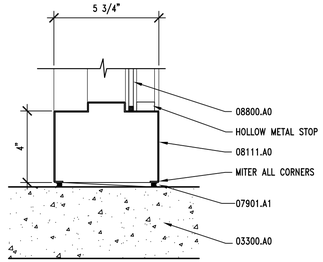

X04-AE01-AE602-D1

D1 | SIDELIGHT SILL DETAIL

AE602 | REF. AE600 | SCALE: 3" = 1'-0"

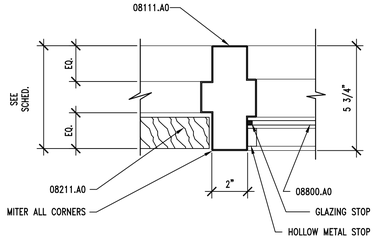

X04-AE01-AE602-D2

D2 | SIDELIGHT JAMB DETAIL

AE602 | REF. AE600 | SCALE: 3" = 1'-0"

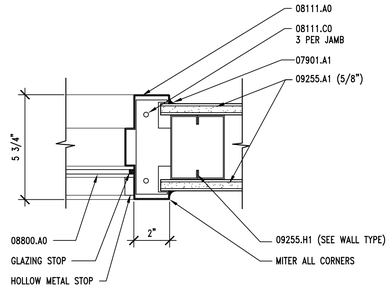

X04-AE01-AE602-D3

D3 | SIDELIGHT JAMB DETAIL

AE602 | REF. AE600 | SCALE: 3" = 1'-0"

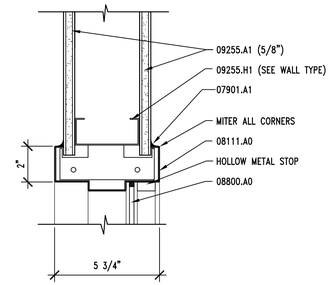

X04-AE01-AE602-D4

D4 | SIDELIGHT HEAD DEATAIL

AE602 | REF. AE600 | SCALE: 3" = 1'-0"

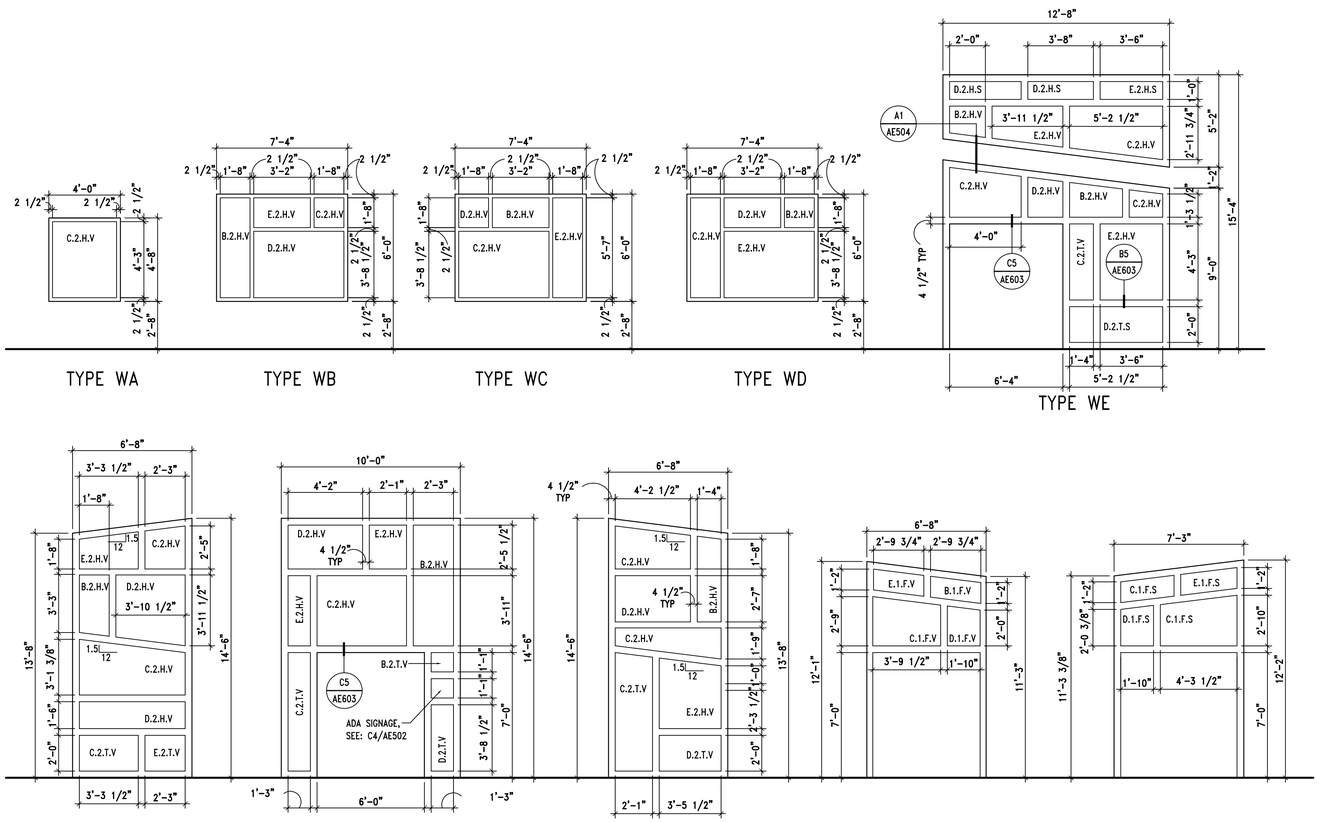

A1 | WINDOW TYPES

AE602 | REF. | SCALE: 1/4" = 1'-0"

KEYNOTES

03300.A0	CONCRETE - SLAB ON GRADE
07901.A1	CONT. SEALANT BOTH SIDES
08110.A0	PRESSED METAL FRAME
08211.A0	WOOD DOOR
08800.A0	GLAZING AS SCHEDULED
09255.A1	GYPSUM BOARD (THICKNESS)
09255.H1	METAL STUDS (SIZE, SPACING)

GENERAL NOTES

1. FIELD VERIFY ALL EXISTING CONDITIONS AND THEIR COMPATIBILITY WITH NEW CONSTRUCTION PRIOR TO THE COMMENCEMENT OF WORK. COORDINATE DISCREPANCIES WITH ARCHITECT.
2. DO NOT SCALE DRAWINGS.
3. GENERAL CONTRACTOR IS RESPONSIBLE FOR COORDINATION OF WORK BETWEEN TRADES AND COORDINATION OF CONTRACT DOCUMENTS BETWEEN TRADES. SUB-CONTRACTORS ARE ALSO RESPONSIBLE FOR COORDINATION WITH OTHER TRADES AND OTHER DISCIPLINES INCLUDED IN THE CONTRACTS DOCUMENTS. IF ANY DISCREPANCIES ARE FOUND, GENERAL CONTRACTOR IS TO NOTIFY ARCHITECT IMMEDIATELY BEFORE COMMENCEMENT OF WORK. NO EXTRA COSTS TO THE PROJECT WILL BE INCURRED DUE TO FAILURE OF SUB-CONTRACTORS TO REVIEW/COORDINATE WITH OTHER TRADES.

WINDOW SCHEDULE

WINDOWS						DETAILS			REMARKS
WINDOW #	ROOM #	TYPE	THICK.	MATERIAL	FINISH	HEAD	JAMB	SILL	
W101	117	WA	11 1/2"	AL	P. FIN.	C2/AE603	B2/AE603	A2/AE603	
W102	121	WA	11 1/2"	AL	P. FIN.	C3/AE603	B3/AE603	A3/AE603	
W103	121	WA	11 1/2"	AL	P. FIN.	C3/AE603	B3/AE603	A3/AE603	
W104	121	WA	11 1/2"	AL	P. FIN.	C3/AE603	B2/AE603-B3/AE603	A1/AE603	
W105	122	WA	11 1/2"	AL	P. FIN.	C3/AE603	B3/AE603	A3/AE603	
W106	123	WA	11 1/2"	AL	P. FIN.	C3/AE603	B3/AE603	A3/AE603	
W107	127	WA	11 1/2"	AL	P. FIN.	C2/AE603	B2/AE603	A1/AE603	
W108	128	WE	4 1/2"	AL	P. FIN.	C4/AE603	B4/AE603-A5/AE603	B4/AE504	
W108B	129	WJ	4-1/2"	AL	P. FIN.	D4/AE601	D3/AE601	B1/AE502	
W109	130	WA	11 1/2"	AL	P. FIN.	C2/AE603	B2/AE603	A2/AE603	
W110	131	WA	11 1/2"	AL	P. FIN.	C2/AE603	B2/AE603	A2/AE603	
W111	132	WA	11 1/2"	AL	P. FIN.	C2/AE603	B2/AE603	A2/AE603	
W112	133	WB	11 1/2"	AL	P. FIN.	C1/AE603	B1/AE603	A1/AE603	
W113	133	WA	11 1/2"	AL	P. FIN.	C1/AE603	B1/AE603	A1/AE603	
W114	133	WA	11 1/2"	AL	P. FIN.	C1/AE603	B1/AE603	A1/AE603	
W115	102A	WA	11 1/2"	AL	P. FIN.	C1/AE603	B1/AE603	A1/AE603	
W116	101	WH	4 1/2"	AL	P. FIN.	B3/AE505	D1/AE603-D2/AE603	D3/AE603	
W117	101	WG	4 1/2"	AL	P. FIN.	A2/AE505	D2/AE603	D3/AE603	
W117B	126	WK	4 1/2"	AL	P. FIN.	D2/AE503	D1/AE503	D2/AE503	NOTE 2
W118	101	WF	4 1/2"	AL	P. FIN.	B3/AE505	D1/AE603-D2/AE603	A4/AE603	
W120	103	WA	11 1/2"	AL	P. FIN.	C1/AE603	B1/AE603	A1/AE603	
W121	104	WA	11 1/2"	AL	P. FIN.	C1/AE603	B1/AE603	A1/AE603	
W122	104	WD	11 1/2"	AL	P. FIN.	C1/AE603	B1/AE603	A1/AE603	TYPE WD MIRRORED
W123	110	WD	11 1/2"	AL	P. FIN.	C1/AE603	B1/AE603	A1/AE603	NOTE 1
W124	112	WA	11 1/2"	AL	P. FIN.	C1/AE603	B1/AE603	A1/AE603	NOTE 1
W125	112	WA	11 1/2"	AL	P. FIN.	C1/AE603	B1/AE603	A1/AE603	NOTE 1
W126	112	WA	11 1/2"	AL	P. FIN.	C1/AE603	B1/AE603	A1/AE603	NOTE 1
W127	139	WB	11 1/2"	AL	P. FIN.	C1/AE603	B1/AE603	A1/AE603	ADD ALT #1
W128	139	WC	11 1/2"	AL	P. FIN.	C1/AE603	B1/AE603	A1/AE603	ADD ALT #1
W129	139	WB	11 1/2"	AL	P. FIN.	C1/AE603	B1/AE603	A1/AE603	ADD ALT #1
W130	138	WA	11 1/2"	AL	P. FIN.	C1/AE603	B1/AE603	A1/AE603	ADD ALT #1
W131	137	WA	11 1/2"	AL	P. FIN.	C1/AE603	B1/AE603	A1/AE603	ADD ALT #1
W132	136	WA	11 1/2"	AL	P. FIN.	C1/AE603	B1/AE603	A1/AE603	ADD ALT #1
W133	135	WA	11 1/2"	AL	P. FIN.	C1/AE603	B1/AE603	A1/AE603	ADD ALT #1
W134	135	WA	11 1/2"	AL	P. FIN.	C1/AE603	B1/AE603	A1/AE603	ADD ALT #1
W135	134	WA	11 1/2"	AL	P. FIN.	C1/AE603	B1/AE603	A1/AE603	ADD ALT #1
W136	134	WA	11 1/2"	AL	P. FIN.	C1/AE603	B1/AE603	A1/AE603	ADD ALT #1

NOTES:
1 - THIS WINDOW IS PART OF BASE BID ONLY AND WILL NOT BE USED IF ADD ALTERNATE #1 IS INCLUDED IN THE CONTRACT FOR CONSTRUCTION
2 - PAINT GYPSUM BOARD BEHIND WINDOW FRAME TO MATCH WALL COLOR, SEE FINISH SCHEDULE AND REFER TO DETAILS D1 & D2/AE503.

P. FIN. = PRE-FINISHED AL = ALUMINUM

GLAZING LEGEND

EXAMPLE: A.1.F.V

DESIGNATION	DESCRIPTION	REMARKS
A	CLEAR GLASS	SEE SPEC. SECTION 08800
B	ULTRA-CLEAR GLASS	SEE SPEC. SECTION 08800
C	BRONZE TINTED GLASS	SEE SPEC. SECTION 08800
D	MEDIUM GRAY TINTED GLASS	SEE SPEC. SECTION 08800
E	GRAY REFLECTIVE GLASS	SEE SPEC. SECTION 08800
1	1/4" GLASS PANEL	SEE SPEC. SECTION 08800
2	1" INSULATED, LOW-E, ARGON FILLED GLAZING PANEL	SEE SPEC. SECTION 08800
3	INSULATED GLAZING PANEL, LOW-E, PROVIDED BY DOOR MANUFACTURER	SEE SPEC. SECTION 08800
F	ANNEALED FLOAT GLASS	SEE SPEC. SECTION 08800
H	HEAT-STRENGTHENED GLASS	SEE SPEC. SECTION 08800
T	FULLY TEMPERED GLASS	SEE SPEC. SECTION 08800
V	VISION GLASS	SEE SPEC. SECTION 08800
S	SPANDREL GLASS	SEE SPEC. SECTION 08800

CLIENT

UDOT CONNECTING COMMUNITIES

REGION 4 OFFICE REMODEL
708 SOUTH 100 WEST
RICHFIELD UTAH 84701

DESIGNER

ARCHIPLEX GROUP
architecture · planning · design services
255 Crossroad Square
Salt Lake City, UT 84115
P:(801) 961-7070
F:(801) 961-7373

CONSULTANTS

PROFESSIONAL SEAL

RALPH M. STANISLAW
95-310818-0301
9/20/10
LICENSED ARCHITECT

ISSUE

MARK	DATE	DESCRIPTION
	9-20-10	DFCM REVIEW COMMENTS
	8-16-10	DFCM REVIEW SUBMITTAL

DFCM PROJECT NO:	10046900
DFCM CONTRACT NO:	107453
ARCHIPLEX PROJECT NO:	1007.01
DRAWN BY:	A. PHILLIPS
CHECKED BY:	R. STANISLAW
SCALE:	1/8"=1'-0"
DATE:	AUGUST 16, 2010

SHEET TITLE

WINDOW TYPES, SCHEDULE & DETAILS

AE602

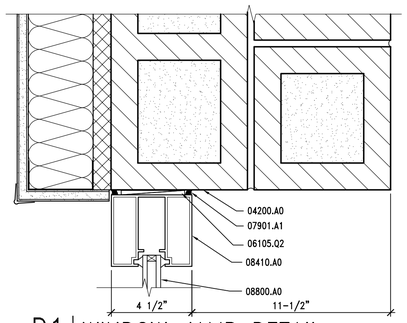

D1 | WINDOW JAMB DETAIL

AE603 REF. AE602 SCALE: 3" = 1'-0"

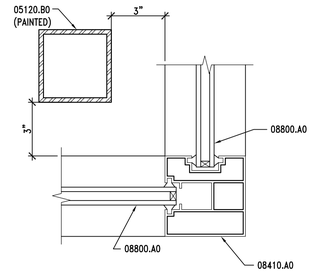

D2 | WINDOW JAMB-CORNER DTL.

AE603 REF. AE602 SCALE: 3" = 1'-0"

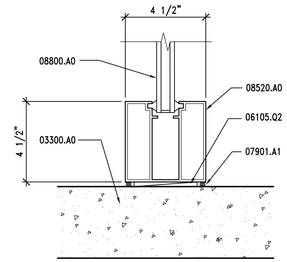

D3 | WINDOW SILL DETAIL

AE603 REF. AE602 SCALE: 3" = 1'-0"

GENERAL NOTES

1. FIELD VERIFY ALL EXISTING CONDITIONS AND THEIR COMPATIBILITY WITH NEW CONSTRUCTION PRIOR TO THE COMMENCEMENT OF WORK. COORDINATE DISCREPANCIES WITH ARCHITECT.
2. DO NOT SCALE DRAWINGS.
3. GENERAL CONTRACTOR IS RESPONSIBLE FOR COORDINATION OF WORK BETWEEN TRADES AND COORDINATION OF CONTRACT DOCUMENTS BETWEEN TRADES. SUB-CONTRACTORS ARE ALSO RESPONSIBLE FOR COORDINATION WITH OTHER TRADES AND OTHER DISCIPLINES INCLUDED IN THE CONTRACTS DOCUMENTS. IF ANY DISCREPANCIES ARE FOUND, GENERAL CONTRACTOR IS TO NOTIFY ARCHITECT IMMEDIATELY BEFORE COMMENCEMENT OF WORK. NO EXTRA COSTS TO THE PROJECT WILL BE INCURRED DUE TO FAILURE OF SUB-CONTRACTORS TO REVIEW/COORDINATE WITH OTHER TRADES.

KEYNOTES

03300.A0	CONCRETE - SLAB ON GRADE
03300.H0	FOUNDATION WALL - SEE STRUCTURAL
03300.R0	3/4" CHAMFER
04200.A0	CMU
05120.B0	STEEL COLUMN - SEE STRUCTURAL
05500.L1	ALUMINUM BREAK METAL SURROUND - FINISH TO MATCH WINDOW
06105.Q2	SHIM AS REQUIRED
06651.A0	3/4" SOLID SURFACE WINDOW SILL
07210.A0	BATT INSULATION
07210.B0	RIGID INSULATION
07410.G4	DRIP EDGE AT WINDOW HEAD AND SILL, FINISH TO MATCH WINDOW
07901.A0	CONT. SEALANT
07901.A1	CONT. SEALANT BOTH SIDES
07901.A2	CONT. SEALANT WITH BACKER ROD
08410.A0	ALUMINUM STOREFRONT FRAME
08410.B0	ALUMINUM DOOR
08520.A0	ALUMINUM WINDOW
08800.A0	GLAZING AS SCHEDULED
09255.A1	GYPSUM BOARD (THICKNESS)
09255.H1	METAL STUDS (SIZE)
09255.M2	METAL CORNER BEAD (TYP)
12511.A0	HORIZONTAL LOUVER BLINDS

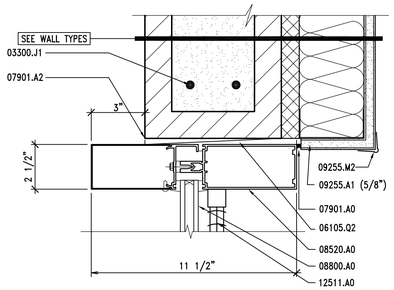

C1 | WINDOW HEAD DETAIL

AE603 REF. AE602 SCALE: 3" = 1'-0"

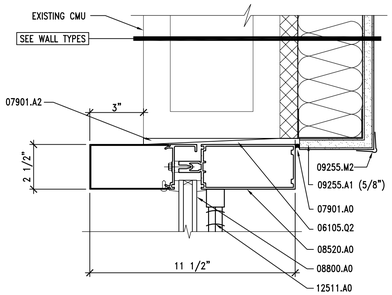

C2 | WINDOW HEAD DETAIL

AE603 REF. AE602 SCALE: 3" = 1'-0"

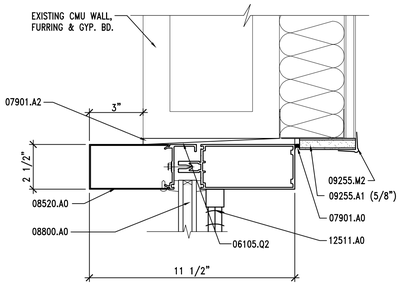

C3 | WINDOW HEAD DETAIL

AE603 REF. AE602 SCALE: 3" = 1'-0"

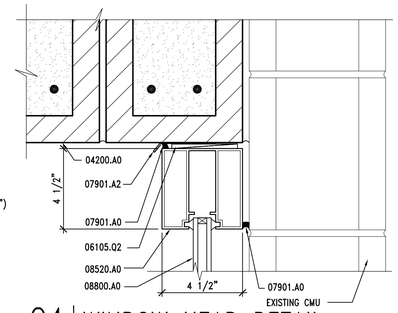

C4 | WINDOW HEAD DETAIL

AE603 REF. AE602 SCALE: 3" = 1'-0"

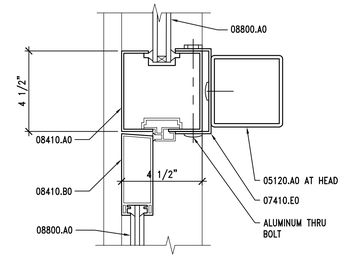

C5 | WINDOW JAMB (HEAD SIM)

AE603 REF. SCALE: 3" = 1'-0"

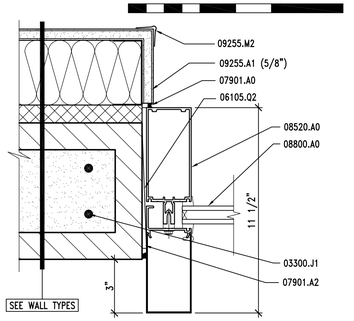

B1 | WINDOW JAMB DETAIL

AE603 REF. AE602 SCALE: 3" = 1'-0"

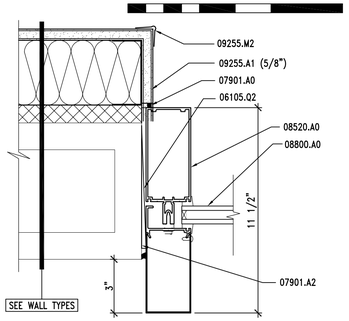

B2 | WINDOW JAMB DETAIL

AE603 REF. AE602 SCALE: 3" = 1'-0"

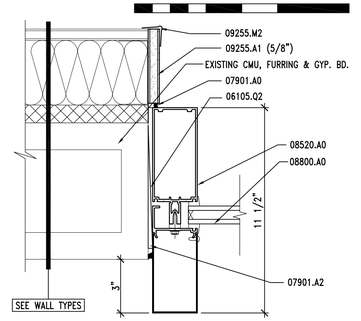

B3 | WINDOW JAMB DETAIL

AE603 REF. AE602 SCALE: 3" = 1'-0"

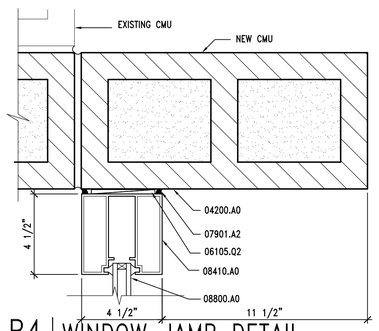

B4 | WINDOW JAMB DETAIL

AE603 REF. AE602 SCALE: 3" = 1'-0"

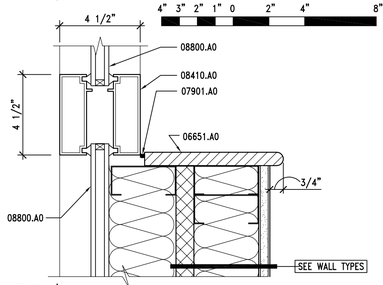

B5 | MULLION DETAIL

AE603 REF. AE602 SCALE: 3" = 1'-0"

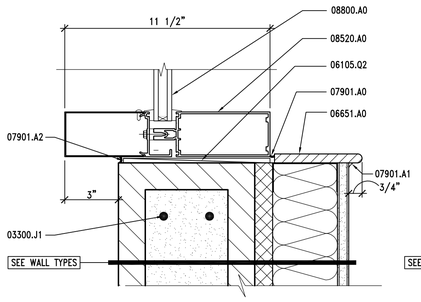

A1 | WINDOW SILL DETAIL

AE603 REF. AE602 SCALE: 3" = 1'-0"

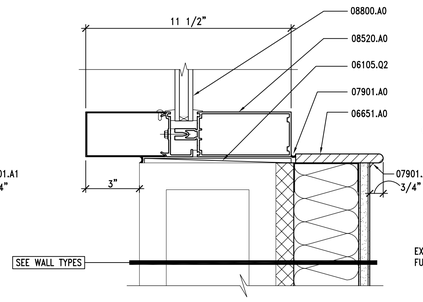

A2 | WINDOW SILL DETAIL

AE603 REF. AE602 SCALE: 3" = 1'-0"

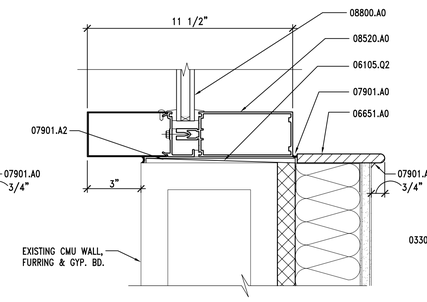

A3 | WINDOW SILL DETAIL

AE603 REF. AE602 SCALE: 3" = 1'-0"

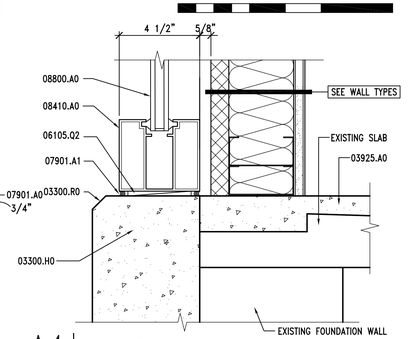

A4 | WINDOW SILL DETAIL

AE603 REF. AE313, AE603 SCALE: 3" = 1'-0"

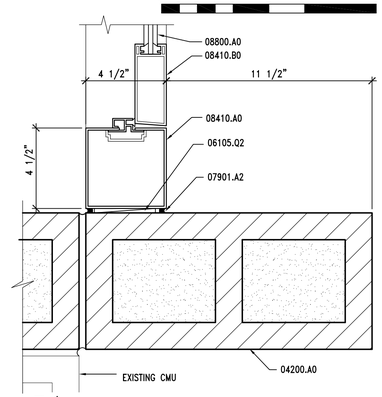

A5 | JAMB DETAIL

AE603 REF. AE602 SCALE: 3" = 1'-0"

CLIENT

LTDOT CONNECTING COMMUNITIES

REGION 4 OFFICE REMODEL
708 SOUTH 100 WEST
RICHFIELD UTAH 84701

DESIGNER

ARCHIPLEX GROUP
architecture · planning · design services
255 Crossroad Square
Salt Lake City, UT 84115
P:(801) 961-7070
F:(801) 961-7373

CONSULTANTS

PROFESSIONAL SEAL

RALPH M. STANISLAW
95-310818-0301
9/20/10
LICENSED ARCHITECT

ISSUE

MARK	DATE	DESCRIPTION
	9-20-10	DFCM REVIEW COMMENTS
	8-16-10	DFCM REVIEW SUBMITTAL

DFCM PROJECT NO:	10046900
DFCM CONTRACT NO:	107453
ARCHIPLEX PROJECT NO:	1007.01
DRAWN BY:	A. PHILLIPS
CHECKED BY:	R. STANISLAW
SCALE:	1/8"=1'-0"
DATE:	AUGUST 16, 2010

SHEET TITLE

WINDOW DETAILS

AE603

GENERAL

1. The structural notes are intended to complement the project specifications. Specific notes and details in the drawings shall govern over the structural notes and typical details.
2. Typical details and sections shall apply where specific details are not shown.
3. The contractor shall verify all site conditions and dimensions. If actual conditions differ from those shown in the contract drawings, the contractor shall immediately notify the architect/engineer before proceeding with the fabrication or construction of any affected elements.
4. Changes to these contract drawings may be made only by an authorized representative of Dunn Associates, Inc. Dunn Associates, Inc. shall not be held responsible or liable for any claims arising directly or indirectly from changes made without written authorization by an authorized representative of Dunn Associates, Inc.
5. Omissions or conflicts between the contract drawings and/or specifications shall be brought to the attention of the architect/engineer before proceeding with any work involved. In case of conflict, follow the most stringent requirement as directed by the architect/engineer at no additional cost to the owner.
6. The contractor shall submit a written request to the architect/engineer before proceeding with any changes, substitutions, or modifications. Any work done by the contractor before receiving written approval will be at the contractor's risk.
7. The contractor shall coordinate with all trades any items that are to be integrated into the structural system such as openings, penetrations, mechanical and electrical equipment, etc. Sizes and locations of mechanical and other equipment that differs from those shown on the contract drawings shall be reported to the architect/engineer.
8. The contractor shall be responsible for means, methods, techniques, sequences, and procedures in order to comply with the contract drawings and specifications. The contractor shall provide adequate shoring and bracing as required for the chosen method of erection. Shoring and bracing shall remain in place until final connections for the permanent members are completed. The building shall not be considered stable until all connections are completed. Walls shall not be considered self-supporting and shall be braced until the floor/roof system is completed.
9. Site observations by a field representative of Dunn Associates, Inc. shall not be construed as approval of construction, the procedures, nor special inspection.
10. Detailing and shop drawing production for structural elements will require information (including dimensions) contained in the architectural, structural and/or other consultants' drawings. The structural drawings shall be used in conjunction with the architectural and other consultant's drawings. Most dimensions and most non-structural elements such as elevations, depressions, slopes, mechanical housekeeping pads, etc. are not shown in the structural drawings. See the Architectural Drawings for dimensions, doors, windows, non-bearing interior and exterior walls, elevations, slopes, stairs, curbs, drains, recesses, depressions, railings, waterproofing, finishes, chamfers, kerfs, etc.
11. Review of shop drawing submittals by Dunn Associates, Inc. is for general compliance only and is not intended for approval. The shop drawing review shall not relieve the contractor from the responsibility of completing the project according to the contract documents.
12. Shop drawings made from reproductions of the structural drawings will be rejected unless the contractor signs a release agreement prior to the shop drawings being reviewed. The contractor may also obtain electronic files of the plan sheets after signing a release agreement. Electronic files of the detail sheets and schedule sheets will not be made available.
13. All work shall be done in accordance with OSHA requirements. Potential conflicts between these documents and OSHA requirements shall be brought to the attention of the structural engineer before proceeding with the work.

BASIS OF DESIGN

1. Governing Building Code — International Building Code 2009
2. Occupancy Category — II
3. Floor Live Loads
   - 3.1. Uniformly Distributed Loads
     - 3.1.1. Mezzanine — 250 psf (unreduced)
   - 3.2. Concentrated Loads, all areas — 2000 lbs
4. Roof Live Load (Not concurrent with Roof Snow Load) — 20 psf
5. Roof Snow Load
   - 5.1. Ground Snow Load — Pg = 43 psf
   - 5.2. Flat Roof Snow Load — Pf = 30 psf
   - 5.3. Snow Exposure Factor — Ce = 1.0
   - 5.4. Thermal Factor — Ct = 1.0
   - 5.5. Snow Load Importance Factor — Is = 1.0
6. Wind Load
   - 6.1. Basic Wind Speed (3 Second Gust) — 90 mph
   - 6.2. Wind Importance Factor — 1.00
   - 6.3. Wind Exposure — C
   - 6.4. Internal Pressure Coefficient — ± 0.18
7. Seismic Design Criteria
   - 7.1. Mapped Spectral Response Accelerations
     - 7.1.1. Short Period Acceleration — SS = 0.96
     - 7.1.2. 1-Second Acceleration — S1 = 0.46
   - 7.2. Spectral Response Coefficients
     - 7.2.1. Short Period Acceleration — SDS = 0.64
     - 7.2.2. 1-Second Acceleration — SD1 = 0.31
   - 7.2. Site Class (Soil Profile) — D
   - 7.3. Seismic Importance Factor — 1.0
   - 7.4. Seismic Design Category — D
   - 7.5. Effective Structural Seismic Weight — W
   - 7.6. Basic Seismic Force Resisting System — Ordinary Concentric Braced Frames

Special Reinforced Masonry Shear Walls
   - 7.6.1. Response Modification Coefficient — R = 3.25
   - 7.6.2. System Overstrength Factor — Ωo = 2
   - 7.6.3. Deflection Amplification Factor — CD = 3.25
   - 7.6.4. Design Base Shear — V = Cs*W = 0.20 W
   - 7.7. Analysis Procedure — Equivalent Lateral Force
8. Serviceability Criteria
   - 8.1. Interstory Seismic/Wind Drift — Δa < 0.007h ('h' is story height)
   - 8.2. Deflection Limits — Total: L/240; Live/Snow: L/360
     - Floor — L/240 — L/360
     - Roof — L/240 — L/360

FOUNDATION

1. Soils Report by: — Intermountain GeoEnvironmental Services, Inc.
2. Report Number & Date: — August 5, 2010
3. Soil Bearing Pressure: — 1800 psf, on native material or compacted structural fill.
4. Frost Protection: — 30 inches minimum
5. Lateral Soil Pressure Fluid Equivalent Density:
   - 5.1. Active — 43 pcf (retaining walls)
   - 5.2. At Rest — 64 pcf (rigid foundation walls)
   - 5.3. Passive — 332 pcf
6. Coefficient of Friction — 0.36
7. The soils engineer shall review all excavations and fill placement prior to placing concrete.

EARTHWORK

1. Clearing: The entire building area shall be scraped to remove the top 4" of soil including all vegetation and debris.
2. Proof rolling: The natural undisturbed soil below all footings shall be proof rolled prior to placing concrete. Remove all soft spots and replace with compacted structural fill.
3. Compacted structural fill: All fill material shall be a well-graded granular material with a maximum size less than 4" and with not more than 10% passing a #200 sieve. It shall be compacted to 95% of the maximum laboratory density as determined by ASTM D 1557. All fill shall be tested. Compacted structural fill shall be placed in lifts not exceeding 8" in uncompacted thickness.
4. Consult the project specifications and soils report for further earthwork requirements. The soils engineer shall review all excavations and fill placement prior to placing concrete.

CONCRETE

1. Concrete shall be supplied in accordance with the following requirements:

Concrete Use	Comp. Strength f'c (psi)	Exposure Classes	Cement Type[a]	Max. W/CM Ratio	Max. Flyash	Air Content[b]	Aggregate Size, Max.	Slump Limit[c]
Exterior Footings	5000	F1, S0, P0, C2	I, II	0.40	25%	5%	1 1/2"	4"
Interior Footings	3000	F0, S0, P0, C2	I, II	0.40	25%	1.5%	1 1/2"	5"
Foundation Walls	5000	F1, S0, P0, C2	I, II	0.40	25%	5%	3/4"	4"
Interior Slabs on Grade	3500	F0, S0, P0, C2	I, II	0.40	25%	1.5%	3/4"	5"
Normal Weight Concrete on Steel Deck	3500	F0, S0, P0, C0	I, II	0.45	25%	1.5%	3/4"	4"
All Site Concrete (curb, gutter and sidewalk)	5000	F3, S0, P0, C2	I, II	0.40	25%	6%	3/4"	4"

Table Footnotes:

a. Cement to comply with ASTM C150. Use Type V cement where required by soils report.
b. Air content ± 1.5%, measured at point of final placement. Air-entraining admixtures shall comply with ASTM C260 (when used). Calcium chloride shall not be added to the concrete mix. Unreinforced concrete slabs on grade may have calcium chloride not exceeding one percent air entrainment shall be adjusted for the use of admixtures and fly ash.
c. Slump limit ± 1" applies to non-plasticized concrete. Test shall be conducted prior to adding plasticizer if used.

2. Materials unless noted otherwise:
   - 2.1. Normal Weight aggregates — ASTM C33
   - 2.2. Fly Ash, Class F Pozzolan — ASTM C618
   - 2.3. Reinforcing Steel
     - 2.3.1. General — ASTM 615 Grade 60-60ksi
     - 2.3.2. Deformed Bar Anchors (DBA) — ASTM A496
   - 2.4. Headed Stud Anchors (HSA) — ASTM A108
   - 2.5. Anchor Bolts: See steel and/or wood section(s) of general notes.
   - 2.6. No aluminum conduit or product containing aluminum or any other material injurious to concrete shall be embedded in concrete.
3. Reinforce composite slabs over metal deck with 6" x 6" - W2.1/W2.1 welded wire reinforcement minimum, unless noted otherwise. Welded wire reinforcement shall be placed 1" to 1 1/2" below the top of the slab. Welded wire reinforcement may be substituted with "Fibermesh Fibers" manufactured by Propex Concrete Systems Corporation, as approved by ICC ER-4811. The rate of fiber application shall be based on ICC ER-4811. Other substitutions may be permitted if an ICC Evaluation report is submitted to and approved by the Structural Engineer.
4. The contractor shall be responsible for the design, detailing, care, placement and removal of all formwork and shores.
   - 4.1. Supporting forms and shoring shall not be removed until structural members have acquired sufficient strength to safely support their own weight and any construction load to which they may be subjected. In no case, however, shall forms and shoring be removed in less than 24 hours after concrete placement.
5. Reinforcement shall have the following concrete cover: — Clear Cover
   - 5.1. Cast-in-place Concrete
     - 5.1.1. Cast against and permanently exposed to earth — 3"
     - 5.1.2. Formed concrete exposed to earth or weather:
       - #6 thru #18 bars — 2"
       - #5 and smaller bars — 1 1/2"
     - 5.1.3. Concrete not exposed to weather or in contact with ground:
       - Slabs, Walls, Joists; #11 bars and smaller — 3/4"
       - Beams, Columns: Primary Reinforcement, Ties, Stirrups, Spirals — 1 1/2"
6. Construction Joints and Control Joints:
   - 6.1. Provide a beveled 2" x 4" x intermediate keyway that shall be installed in all horizontal and vertical construction joints including between top of footing and foundation walls. In addition, all joints shall be intentionally roughened to a full amplitude of approximately 1/4".
   - 6.2. Control joints shall be installed in slabs on grade so the length to width ratio of the slab is no more than 1.25:1. Control joints shall be completed within 12 hours of concrete placement. Control joints may be installed by either:
     - 6.2.1. Saw cut with depth of 1/4 the thickness of the slab
     - 6.2.2. Tooled joints with depth of 1/4 the thickness of the slab
   - 6.3. Install construction or control joints in slabs on grade at a spacing not to exceed 30 times the slab thickness in any direction, unless noted otherwise. Construction joints shall not exceed a distance of 125'-0" on center in any direction.
7. Construction
   - 7.1. Use chairs or other support devices recommended by the CRSI to support bar and tie reinforcement bars and WWF prior to placing concrete. WWF shall be continuously supported at 36" on center maximum. Reinforcing steel for slabs on grade shall be adequately supported on precast concrete units. Lifting the reinforcing off the grade during placement of concrete is not permitted.
   - 7.2. Contractor shall coordinate placement of all openings, curbs, dowels, sleeves, conduits, bolts, inserts and other embedded items prior to concrete placement.
   - 7.3. All embeds and dowels shall be securely tied to formwork or to adjacent reinforcing prior to the placement of concrete.
   - 7.4. No pipes, ducts, sleeves, etc. shall be placed in structural concrete unless specifically detailed or approved by the structural engineer. Penetrations through walls when approved shall be built into the wall prior to concrete placement. Penetrations will not be allowed in footings or grade beams unless detailed. Piping shall be routed around these elements and footings stepped to avoid piping.
   - 7.5. Reinforcing bars shall not be welded unless specifically shown on drawings. In such cases, use only AWS standards. Do not substitute reinforcing bars for DBAs or HSAs.
   - 7.6. Top of concrete columns shall be flush (±1/4") with bottom of supported cast-in-place members.
8. Detailing:
   - 8.1. Lap splice lengths shall be detailed to comply with the "Reinforcing Bar Lap Splice Schedule" contained within the contract drawings.
     - 8.1.1. Do not splice stirrups and ties. Do not splice vertical bars in retaining walls unless specifically shown.
     - 8.1.2. At shearwall boundary elements and at moment frame beams to columns, lap lengths shall be increased by 25%.
     - 8.1.3. Splices may be made with mechanical splices capable of 125% tension capacity of the bar being spliced. Mechanical splices shall be the positive connecting type coupler and shall meet all ACI requirements. Use "Cadweld", "Lenton" Standard Couplers, "Bar-Lock" or equal with internal protector. If mechanical splices are used, splices or couplers on adjacent bars shall be staggered a minimum of 24" apart along the longitudinal axis of the reinforcing bars.
   - 8.2. At joints provide reinforcing dowels to match the member reinforcing, unless noted otherwise.
   - 8.3. At all discontinuous control or construction slab on grade joints, provide (2) #4 x 48".
   - 8.4. Provide corner bars at intersecting wall corners using the same bar size and spacing as the horizontal wall reinforcing.
   - 8.5. All vertical reinforcing shall be doweled to footings, or to the structure below with the same size and spacing as the vertical reinforcing for the element above. Dowels extending into footings shall terminate with a 90° standard hook and shall extend to within 4" of the bottom of the footing. Footing dowels (#8 bars and smaller) with hooks need not extend more than 20" into footings.
   - 8.6. In concrete shearwalls, the horizontal wall reinforcing shall terminate at ends of walls and openings into the far end of the jamb column with a 90°standard hook plus a 6 b bar diameter extension. Horizontal wall reinforcing shall be continuous through construction and control joints.
   - 8.7. See details for reinforcing around miscellaneous openings (8" to 36" wide). For openings wider than 36", contact the engineer. All recesses that interrupt reinforcing shall be reinforced the same as an opening.
9. Contractor required to submit concrete mix design for review by the engineer prior to any placement of concrete.

POST-INSTALLED ANCHORS

1. Follow all ICC Evaluation Report and manufacturers' requirements and recommendations for post-installed anchor installation. Where conflicts may exist, the most stringent requirement applies.
2. All holes in hollow, brick, or stone masonry shall be performed in the "rotary-only" mode with the hammer function off.
3. Follow manufacturer and ICC evaluation report requirements for installation temperature of adhesive anchors. Adhesive anchors shall not be installed or cured outside of approved temperature ranges.
   - 3.1. Adhesive anchors in concrete shall be
     - 3.1.1. HIT RE-500 SD by Hilti (ESR-2322) - normal weight concrete only
     - 3.1.2. SET-XP by Simpson (ESR-2508)
     - 3.1.3. PE1000+ by Powers Fasteners (ESR-2583) - 1/2" to 7/8" diameter only
   - 3.2. Adhesive anchors in grouted masonry shall be
     - 3.2.1. HIT HY-150 MAX by Hilti (ESR-1967)
     - 3.2.2. SET by Simpson (ESR-1772)
4. Mechanical (Expansion) anchors
   - 4.1. Mechanical anchors in concrete shall be
     - 4.1.1. Kwik Bolt TZ by Hilti (ESR-1917)
     - 4.1.2. Strong-Bolt by Simpson (ESR-1771)
     - 4.1.3. Titen HD by Simpson (ESR-2713)
     - 4.1.4. Trubolt+ by ITW Redhead (ESR-2427)
   - 4.2. Mechanical anchors in grouted masonry shall be
     - 4.2.1. Kwik Bolt 3 by Hilti (ESR-1385)
     - 4.2.2. Titen HD by Simpson (ESR-1056)
     - 4.2.3. Wedge-All by Simpson (ESR-1396)
5. The Contractor may submit, for review and approval, the manufacturer's ICC evaluation report of alternate anchor systems. The alternate method shall provide minimum capacities equal to or greater than those in the above noted anchors. The alternate method shall be approved by the engineer of record prior to the substitution.
6. Special Inspection and Testing
   - 6.1. Special inspection shall be performed according to the requirements of the ICC evaluation report, per section 1704.13 of the IBC. Periodic inspection is allowed for mechanical anchors per section 6.6 of ICC-ES AC193.
   - 6.2. Testing shall be done according to the more stringent requirements of the ICC evaluation report and the values listed below.
     - 6.2.1. Adhesive Anchors in Concrete or Solid Grouted Masonry: 10% of anchors in redundant elements shall be tension tested at the following loads in kips:

Bar Size	Concrete	Masonry
#4	2.7	1.8
#5	4.3	2.8
#6	6.0	5.0
#7	7.5	-

     - 6.2.2. Mechanical anchors shall be tension tested to twice the allowable tension load listed in the ICC evaluation report.

MASONRY

1. Materials, unless noted otherwise:
   - 1.1. Concrete Masonry Units (CMU): Lightweight Grade N, Type 1 (ASTM C90) f'm = 1500 psi
   - 1.2. Mortar: Type "S" (1800 psi minimum compressive strength)
   - 1.3. Grout shall attain a 28-day minimum compressive strength of 2000 psi or f'm, whichever is greater.
   - 1.4. Reinforcing Steel — ASTM 615 Grade 60 (Fy = 60 ksi)
   - 1.5. Anchor Bolts: See steel section(s) of general notes.
   - 1.6. Heavy hex nuts and hardened washers — ASTM A563
2. Reinforcement shall have the following cover:
   - 2.1. Joint reinforcement shall have not less than 5/8" mortar coverage from the exposed face.
   - 2.2. Other reinforcement shall have a minimum coverage of one bar diameter over all the bars, but not less than 3/4". When masonry is exposed to soil, minimum coverage shall be 1 1/2".
3. Construction Requirements
   - 3.1. All units shall be laid with full mortar beds on the face shells. All head joints shall be filled solidly with mortar for a distance in from the face of the units not less than the thickness of the longitudinal face shells. Cells which are to be grouted shall have full head joints.
   - 3.2. Masonry walls, beams and columns shall be constructed with running bond unless noted otherwise.
   - 3.3. Solid grouting of walls is unacceptable except where specifically noted.
   - 3.4. All cells containing reinforcement, embeds, anchor bolts, etc. shall be filled solid with grout. Grout shall be placed by mechanical vibration during placing and revibrated after excess moisture has been absorbed but before workability is lost. Puddling or rodding of grout is not allowed.
   - 3.5. Where walls are not grouted solid, each grout pour shall terminate flush with the top of the uppermost unit except at cells with vertical reinforcing where the grout shall be 1 1/2" below top of unit to provide construction key.
   - 3.6. Grout pours shall be limited to 4'-0" unless high lift grouting procedures are followed.
   - 3.7. All masonry below grade shall be solid grouted.
   - 3.8. Vertical cells to be filled with grout shall have vertical alignment sufficient to maintain a clear, unobstructed, vertical cell measuring not less than 2" by 3". All steel reinforcement shall be secured against displacement prior to grouting by wire positioners or other suitable devices at intervals not exceeding 200 bar diameters or 10'-0" maximum, or at bar splice locations. Vertical reinforcing shall be located at the center of the wall unless noted otherwise.
   - 3.9. Reinforcing bars shall not be welded unless specifically shown on drawings. In such cases, use only AWS standards. Do not substitute reinforcing bars for DBAs or HSAs.
   - 3.10. Control Joints: Spacing shall not exceed 26'-0". See architectural drawings for locations.
   - 3.11. Grout all beam and joist pockets solid after installation of beams and joists.
   - 3.12. Embed channels and plates shall be placed so as to create a flush surface with the face of the wall.
   - 3.13. Anchor bolts and headed stud anchors shall be set in a grouted cell. Anchor bolts and headed stud anchors shall have 1/2" grout surrounding the shank at its penetration. Grout shall be flush with the face or top of the masonry.
4. Detailing Requirements
   - 4.1. Lap all masonry reinforcing per the "Masonry Reinforcing Bar Lap Splice Schedule" contained within the contract drawings.
   - 4.2. All vertical reinforcing shall be doweled to the foundation wall, footing (structure below) and to the structure below with the same size dowel, spacing (and in the same core) as the vertical wall reinforcing above.
   - 4.3. Corner Bars: Horizontal reinforcement shall be continuous at all corners and at intersecting walls. Provide corner bars with the required lap splice length.
   - 4.4. Wall Openings 24" wide and wider: For unscheduled openings, provide reinforcing on all sides per details. Also, for all openings, provide horizontal bar at bottom of opening per details. Vertical bars shall extend from floor level below to the floor, or roof level above. Horizontal bars for all openings shall extend a minimum of 48 bar diameters beyond the corners of the opening. Where a 48 bar diameter extension is not possible, extend bars as far beyond the opening as possible and terminate the bar(s) with a 90°standard ACI hook.
   - 4.5. Horizontal wall reinforcing shall be continuous through joining concrete walls, masonry walls, columns, and pilasters. Provide a key between the wall and the column or pilaster. Horizontal wall reinforcing shall be placed inside the column vertical reinforcing.
   - 4.6. Horizontal reinforcing shall terminate with a standard hook at edge of openings and ends of walls without corner bars as shown in details.
   - 4.7. All masonry column ties shall terminate with 135°hooks plus a 6 bar diameter extension (4" minimum).

STRUCTURAL STEEL

1. Codes and Standards: Fabrication and installation shall comply with the latest edition of the following:
   - 1.1. American Institute of Steel Construction (AISC), "Specification for the Design, Fabrication and Erection of Structural Steel for Buildings," with "Commentary".
   - 1.2. AISC "Code of Standard Practice" excluding sections 3.4, 4.4 and 4.4.1.
   - 1.3. AISC "Specification for Structural Joints Using ASTM A325 or A490 Bolts"
   - 1.4. AISC "Seismic Provisions for Structural Steel Buildings."
   - 1.5. American Welding Society (AWS), Structural Welding Codes D1.1, D1.3, D1.4, and D1.8, except as modified by the "Steel Construction Manual".
2. Material:
   - 2.1. Wide Flange Sections — ASTM A992 (50 ksi)
   - 2.2. Plate
     - 2.2.1. Typical — ASTM A36
     - 2.2.2. Braced/Moment Frames — ASTM A572 Grade 50
   - 2.3. Notch-toughness requirements apply for demand critical welds. Minimum Charpy V-Notch requirements are 20 ft-lbs at -20°F and 40 ft-lbs at 70°F
   - 2.4. Hollow Structural Shapes
     - 2.4.1. Round — ASTM A500 Grade B (42 ksi)
   - 2.5. Other Structural Shapes (MC, C, etc) — ASTM A36
   - 2.6. Bolted Connections — ASTM A325
   - 2.7. Anchor Bolts
     - 2.7.1. All Columns unless noted otherwise: ASTM F1554 Grade 36 with ASTM A563 heavy hex nuts with Grade A hardened washers.
   - 2.8. Weld Filler Metal
     - 2.8.1. Shielded Metal Arc Welding — AWS A5.1, low-hydrogen only. Low-hydrogen restrictions do not apply when welding sheet steels in accordance with AWS D1.3, including attaching these steels to structural members.
     - 2.8.2. Gas-Metal & Metal-Cored Arc Welding — AWS A5.18
     - 2.8.3. Flux-Cored Arc Welding — AWS A5.20. E7XT-4 or E7XT-11 electrodes are not permitted.
     - 2.8.4. Intermixing of welds made from self-shielded welding electrodes with gas-shielded electrodes is not allowed in seismic critical welds, unless tested in accordance with AWS D1.8, annex B. The Field Erection Contractor is responsible for verifying intermixing of self-shielded and gas-shielded welding will not occur, or alternatively, the welding procedure is qualified by testing.
   - 2.9. Deformed Bar Anchors (DBA) — ASTM A496
   - 2.10. Headed Stud Anchors (HSA) — ASTM A108
   - 2.11. Non-Shrink Grout — ASTM C1107 Grade B
     - Non-shrink grout shall be prepackaged, non-metallic and non-gaseous.
     - Furnish certified independent test data to Structural Engineer.
     - Fluid Consistency (flow cone) = 20 to 30 seconds
     - Compressive Strength in 28 days = 7,500 psi
3. Structural Detailing
   - 3.1. Provide full depth web stiffener plates at each side of all beams at all bearing points. Stiffener plates shall be the thickness called out below unless noted otherwise. Stiffeners shall be welded on both sides of the plate-to-flange and plate-to-web interfaces. Do not weld into the web-to-flange fillet region of the member.

FLANGE WIDTH	STIFFENER THICKNESS & WELD SIZE
Less than 8 1/4"	1/4" & 3/16"
8 1/4" to 12 1/4"	3/8" & 1/4"
12 1/4" to 16 1/2"	1/2" & 5/16"
16 1/2" to 20 3/4"	5/8" & 3/8"

   - 3.2. Bolting and Fasteners
     - 3.2.1. Ordinary steel-to-steel connections, simple span framing, and beam/girder-to-bearing plates are the standard connection used throughout the design drawings, unless noted otherwise:
       - 3.2.1.1. Use A325N bolts or tension-controlled bolts.
       - 3.2.1.2. Tighten these fasteners to a "snug tight" condition.
       - 3.2.1.3. Where a steel-to-steel connection is not shown, provide a framed connection per AISC for one half the total uniform load capacity of the beam for the span and steel specified.
     - 3.2.2. Fasteners and washers shall not be reused. Scrap dirty, rusted, or water-contaminated bolt assemblies.
   - 3.3. Weld Access Holes and Temporary Attachments
     - 3.3.1. Fabricate beam copes and weld access holes using the geometry described in AISC 360 Section J1.6.
     - 3.3.2. Runoff tabs are to be removed unless noted otherwise.
   - 3.4. Backup Bars: Remove backup bars from all beam bottom flange connections in demand critical welds, unless noted otherwise. Backgouge the root and weld to sound metal. Reweld the gouged area and add a 5/16" reinforcing fillet weld.
   - 3.5. Field weld symbols indicate welds that may be performed in the field. The general contractor shall coordinate shop and field welds between the fabricator and erector.
   - 3.6. All structural steel members shall be considered as an unrestrained fire-resistance-rated assembly.
4. Welding of Reinforcing Steel or Bolts
   - 4.1. Reinforcing Bars: Do not weld rebar except as specifically detailed in the drawings. In such cases, use only AWS standards. Do not substitute reinforcing bars for deformed bar anchors, structural bolts, or headed stud anchors.
   - 4.2. Do not weld anchor bolts, including "tack" welds.
   - 4.3. Headed Stud Anchor welding and Deformed Bar Anchor welding shall conform to the manufacturer's specifications.

COMPOSITE STEEL BEAMS

1. Composite beams are indicated on the framing plans with a suffix (nn). The number inside parentheses indicates the number of studs for this beam or section of beam. Beams or sections of beams shall have the studs spaced uniformly over the beam or section.
2. All headed stud anchors shall conform to ASTM A-108. Dimensions shall comply with AISC. Use 3/4" diameter studs. Headed studs shall extend 1 1/2" minimum (2" maximum) above the top of the steel deck after welding. Headed studs shall be applied through the metal deck to the top flange of the steel section or welded directly to the steel section.
3. The minimum on center spacing of stud connectors shall be 6 diameters along the longitudinal axis of the supporting composite beam and 4 diameters transverse to the longitudinal axis of the supporting composite beam. The maximum spacing shall not exceed 36" on center.
4. Slab shall be screeded to a constant thickness as indicated.

SEPTEMBER 20, 2010
FOR CONSTRUCTION

NOTE:
THESE STRUCTURAL DRAWINGS ARE BASED ON ARCHITECTURAL DRAWINGS DATED 07.23.2010

DIMENSIONS AND ELEVATIONS, AS THEY RELATE TO THE BUILDING IN GENERAL, i.e. GRID TO GRID DIMENSIONS OR DECK BEARING ELEVATIONS, ARE SUPPLIED BY THE ARCHITECT. THEY ARE PROVIDED ON THE STRUCTURAL PLANS AND DETAILS FOR THE CONVENIENCE OF THE CONTRACTOR. VERIFY DIMENSIONS AND ELEVATIONS WITH ARCHITECTURAL DRAWINGS.

DUNN
DUNN ASSOCIATES, INC
Consulting Structural Engineers
EMAIL: ENG@DUNN-SE.COM
PH: 801-575-8877 FAX: 801-575-8875

This drawing, as an instrument of professional service, is the property of DUNN ASSOCIATES INC, and shall not be used, in whole or part for any other project without the written permission of an authorized representative of DUNN ASSOCIATES INC. Unauthorized use will be prosecuted to the fullest extent of the law. Copyright © 2009 by DUNN ASSOCIATES INC.

CLIENT

UDOT CONNECTING COMMUNITIES
REGION 4 OFFICE REMODEL
708 SOUTH 100 WEST
RICHFIELD UTAH 84701

DESIGNER

ARCHIPLEX GROUP
architecture · planning · design services
255 Crossroad Square
Salt Lake City, UT 84115
P:(801) 961-7070
F:(801) 961-7373

CONSULTANTS

PROFESSIONAL SEAL

ISSUE

MARK	DATE	DESCRIPTION
	09/20/2010	DFCM REVIEW COMMENTS

DFCM PROJECT NO:	10046900
DFCM CONTRACT NO:	107453
DUNN PROJECT NO:	10069
DRAWN BY:	CLAYTON E. COSTER
DESIGN BY:	KYLE MULLIKIN
REVIEW BY:	PAUL McMULLIN
SCALE:	AS NOTED
DATE:	SEPTEMBER 20, 2010

SHEET TITLE

GENERAL STRUCTURAL NOTES

S001

9/16/2010 4:42:19 PM

OPEN WEB STEEL JOISTS AND GIRDERS

1. All open web steel joist and girders shall be fabricated and erected in accordance with the latest edition of Steel Joist Institute (SJI), "Standard Specifications and Code of Standard Practice."
2. Joists or girders with slopes greater than 1/2" per foot shall be designed to meet or exceed the load capacities, listed in the SJI load tables, of the joist or girder sizes indicated on the framing plan, as if the joists or girders were installed level.
3. Provide special bearing ends to accommodate slopes from sloped joists, sloped girders or sloped bearing conditions.
4. Modifications to any joist or girder, including holes through the top and bottom chords, without the written consent and direction from the manufacturer is not allowed.
5. Design loads, unless noted otherwise:
   - 5.1. Wind loads (W) shown are calculated using ASCE 7.
   - 5.2. Seismic loads (E and Em) shown are calculated using ASCE 7.
   - 5.3. Gravity loads (D, L, S, etc.) shown are Allowable Stress (Working Stress) levels.
   - 5.4. All loads shown are at the levels to be directly used by all of the Load Combinations shown in the IBC 2006 Section 1605, Equations 16-1 through 16-21, WITHOUT further adjustment.
   - 5.5. Allowable stress increases are permitted as allowed by the referenced standard being used for design.
6. The deflection of all open web joists and girders shall be limited to L/240 for total load and L/360 for live load, unless noted otherwise.
7. A certificate of compliance must be submitted to the building official upon completion of fabrication per IBC 2206.5.

METAL DECKING

1. Steel deck shall comply with the latest requirements of the Steel Deck Institute.
2. Steel deck material shall comply with the manufacturer's ICC Report and have a minimum yield strength of 33ksi.
3. All deck shall be 3-span continuous minimum. In areas where 3-span conditions are not possible, the contractor shall provide heavier gauge deck as required to provide the equivalent loading of the specified deck under a 3-span condition.
4. Steel roof deck shall not be used to support loads from plumbing, HVAC ducts, light fixtures, architectural elements, or equipment of any kind, unless specifically noted.
5. All members supporting deck shall be dry before welding.
6. Crimp seams before button punching or welding interlocking seams.
7. Where deck is to receive sprayed-on fire proofing, painted deck shall be coated with special paint that will allow the sprayed-on fire proofing to adhere to the painted deck.
8. All welds performed on the steel deck are to be painted.
9. Steel floor deck shall be galvanized (G60) when used above or below mechanical equipment rooms.
10. Steel floor deck shall be phosphatized/painted, composite, with interlocking side seams with the following minimum properties:

Type/Ga	S(in3/ft)	I (in4/ft)	Concrete (Total)	Allowable shear value
W2/20	0.361	0.423	2 3/4 "(4 3/4") LW	1920 plf for 6'-0" span

   - 10.1. Weld deck to supporting framing members with 3/4" diameter puddle welds at the following spacing (Closer spacings may be used to develop minimum shear requirements):
     - 10.1.1. 12" on center to supports perpendicular to deck corrugations (4 welds per 36" wide sheet).
     - 10.1.2. 12" on center to all supports parallel to deck corrugations.
   - 10.2. Attach interlocking seams with 3/16" diameter button punch at 18" on center or 1 1/2" top seam weld at 36" on center between adjacent pieces of deck. Closer spacings may be used to develop minimum shear requirements.
   - 10.3. Provide a 2" minimum bearing at all supports.
   - 10.4. Butt all end splices.
11. Steel roof deck shall be painted with interlocking side seams with the following minimum properties:

Type/Ga	S(in3/ft)	I (in4/ft)	Allowable shear value	Notes
1 1/2" B/20	0.235	0.216	770 plf for 5-6 span	Typ. Roof

   - 11.1. Weld steel roof deck to supporting framing members with 3/4" diameter puddle welds at the following spacings (Closer spacings may be used to develop minimum shear requirements):
     - 11.1.1. 6" on center to all supports perpendicular to deck corrugations (7 welds per 36" sheet).
     - 11.1.2. 6" on center to all supports parallel to deck corrugations.
     - 11.1.3. Interlocking side seams between adjacent pieces of decking may be attached with "Verco Sidelap Connections" by Verco Manufacturing (VSC) or "ASC DeltaGrip side seam connection" by ASC Steel Deck at 12" on center minimum.
   - 11.2. At the Contractor's option, Hilti X-EDN19/X-EDNK 22 powder-actuated fasteners may be used in lieu of puddle welds. Follow fastener manufacturer's recommendations for installation. Fasteners shall be installed at the following spacings (Closer spacings may be used to develop minimum shear requirements):
     - 11.2.1. 6" on center to all supports perpendicular to deck corrugations (7 fasteners per 36" sheet).
     - 11.2.2. 6" on center to all supports parallel to deck corrugations.
     - 11.2.3. Interlocking side seams between adjacent pieces of decking may be attached with "Verco Sidelap Connections" by Verco Manufacturing (VSC) or "ASC DeltaGrip side seam connection" by ASC Steel Deck at 4" on center. Closer spacing may be used to develop minimum shear requirements.
   - 11.3. The Contractor may submit, for review and approval, the manufacturer's ICC report of an alternate method of deck attachment. The alternate method shall provide minimum deck diaphragm shear values equal to or greater than those noted above. The alternate method shall be approved by the engineer of record prior to the substitution.
   - 11.4. Provide a 2" minimum bearing and an 8" lap at the splice points, centering the splice over the support.

COLD FORMED STEEL

1. Cold Formed Steel Framing
   - 1.1. The design of cold formed steel and low alloy steel structural members shall be in accordance with AISI-NASPEC, North American Specification for the Design of Cold-Formed Steel Structural Members.
   - 1.2. The design, installation and construction of cold formed steel for structural and non-structural framing shall be in accordance with AISI-CFSD, Standard for Cold-Formed Steel Framing - General Provisions.
   - 1.3. All steel framing members shall comply with ASTM C955.
   - 1.4. Follow all manufacturers' guidelines and recommendations for all products.
   - 1.5. Unless noted otherwise, all welded connections shall be done according to AWS standards.
   - 1.6. All interior non-bearing steel stud walls that extend above the ceiling but do not attach to the structure above shall be braced with diagonal metal-stud braces (45). The l/r ratio of the brace shall not exceed 200 and shall not be spaced further apart than 10'-0" on center. Connect diagonal braces to the top of the steel stud walls and to the top flange of the steel beams with (2) #10 tek screws minimum. Where a concrete deck occurs above, use two powder-driven fasteners per diagonal brace. Other approved methods may be used.
   - 1.7. Anchor bolts: See steel section of general notes.
2. Connection Hardware
   - 2.1. Exterior framing shall be attached to primary structure to provide vertical and lateral drift as indicated in these drawings. The "DriftTrack DTSL" by the Steel Network or equivalent is suitable to meet this requirement. Inside and outside corner joints shall be detailed to accommodate the lateral drift indicated. See architectural drawings for joint location and details.
   - 2.2. All connection hardware (examples: "StiffClip", "VertiClip", "DriftClip", "BridgeClip", etc) shown shall be supplied by:
     The Steel Network, Inc.
     3221 Wellington Court
     Raleigh, NC 27615
     Phone: (888) 474-4876
     www.steelnetwork.com
   - 2.3. Install all hardware per the manufacturer's guidelines and recommendations.
   - 2.4. The contractor may submit an alternate connection method for approval by Dunn Associates, Inc. and the Architect.

QUALITY ASSURANCE PLAN/SPECIAL INSPECTION REQUIREMENTS

1. Seismic/Wind-force-resisting systems:
   - 1.1. Masonry shear walls
   - 1.2. Steel braced frames
2. Special inspection and testing as required by the IBC shall be provided by an independent agency employed by the owner unless waived by the building official. The contractor shall coordinate and cooperate with the required inspections/tests as indicated below, referring to the IBC section indicated as appropriate.
3. Special inspection reports from the inspector shall be sent to the engineer and building official.
   - 3.1. Bring any discrepancies to the contractor's immediate attention.
   - 3.2. Notify the engineer of any non-passing work that the contractor cannot readily correct.
   - 3.3. Any uncorrected discrepancies shall be brought to the attention of the engineer and building official prior to completion of that phase of the work.
   - 3.4. A final report documenting required special inspections and corrections of any discrepancies shall be provided.
4. Quality Control Submittals for Structural Steel
   - 4.1. Furnish Level III nondestructive testing (NDT) personnel certifications.
   - 4.2. Furnish welder qualification records to verify project welders are tested and qualified in accordance with AWS D1.1 before welding structural or miscellaneous steels, D1.3 before welding sheet steels (10 ga and thinner), and D1.4 before welding reinforcing steel. Submit documentation to the approved inspection agency for review before welding.
   - 4.3. Furnish welding procedures that comply with AWS D1.1, D1.3, D1.4, D1.8, as required by the project. Welding procedures shall be made available to welders and inspectors.
     - 4.3.1. Furnish weld filler metal product data sheets identifying optimum welding parameters and storage conditions with each welding procedure submittal.
     - 4.3.2. Identify the maximum welding heat input per inch of weld (KJ/in) permitted by the welding procedures.
     - 4.3.3. Identify the maximum deposition rate that will be used while welding on any demand critical weld.
     - 4.3.4. Furnish typical welding filler metal Certificates of Conformance that identify the WPS Heat Input Envelope.
   - 4.4. Provide bolt storage and installation procedures to the approved inspection agency for review.
   - 4.5. Provide mill/material test reports (MTR) or certificates of conformance (CoIC) that verify compliance of furnished materials to the requirements of the approved contract documents. MTRs or CoICs are required for structural shapes, plate, metal deck, fasteners, headed studs, DBAs, weld filler metal, and bolt assemblies used as primary, load-bearing members. Maintain the heat number traceability of structural shapes and plate used as primary, load bearing members.
5. Special Inspectors
   - 5.1. Special inspectors shall be qualified persons who shall demonstrate competence, to the satisfaction of the building official, for inspection of the particular type of construction or operation requiring special inspection.
   - 5.2. Structural Steel Non-Destructive Testing (NDT)
     - 5.2.1. NDT personnel will:
       - 5.2.1.1. Qualify in accordance with the recommended practices of the American Society of Nondestructive Testing, SNT-TC-1A, latest edition.
       - 5.2.1.2. Pass eye examinations meeting: (1) ASTM requirements at least once a year, and (2) AWS D1.1 every three years.
       - 5.2.1.3. Be certified in accordance with the AWS QC-1, latest edition.
       - 5.2.1.4. Level III must be qualified by ASNT testing in the applicable method under review.
     - 5.2.2. Only Level II and Level III technicians, qualified by testing in the applicable method, are permitted to interpret nondestructive testing results.
     - 5.2.3. Only Senior Certified or Certified Welding Inspectors (SCWI, CWI) are permitted to evaluate welds. Certified Associate Welding Inspectors may evaluate welds when under the direct supervision of a SCWI and/or CWI.
   - 5.3. Approved Inspection Agency will certify the following:
     - 5.3.1. Level III inspector has reviewed the NDT procedures
     - 5.3.2. Project ultrasonic testing technicians, testing demand critical welds, are trained and qualified in accordance with AWS D1.8, Annex E
     - 5.3.3. That the Inspection Agencies' ultrasonic testing procedures are qualified by weld mockups similar to AWS D1.1, Annex S
6. Section 1704: Special Inspections
   - 6.1. Fabricators (1704.2): All offsite fabrication of structural members (structural steel, precast concrete, wood glulams, etc.) shall be special inspected as required by the IBC, except work performed by fabricators registered and approved to perform work without special inspection. Approved fabricators shall submit a certificate of compliance to the building official at the completion of fabrication.
   - 6.2. Steel (1704.3): Special inspection is required during the fabrication of any load-bearing members and assemblies, unless the fabricator and/or erector demonstrate prior approval by the jurisdiction where fabricated steel will be installed.
     - 6.2.1. Perform all welding and welding special inspection activities in accordance with AWS D1.1, D1.3, D1.4, and D1.8 as appropriate for the material form and welding methods employed. Approved methods and acceptance criteria are established in these codes.
     - 6.2.2. Perform all bolting and bolting inspection in accordance with AISC Specification for Structural Joints Using A325 and A490 Bolts.
     - 6.2.3. Continuous Special Inspection of welding is required for:
       - 6.2.3.1. Complete and partial penetration welds, except flare-bevel groove welds
       - 6.2.3.2. Multi-pass fillet welds
       - 6.2.3.3. Single-pass fillet welds larger than 5/16"
     - 6.2.4. Periodic Special Inspection of welding is required for (Inspect 25% of welds while welding operations are taking place):
       - 6.2.4.1. Single-pass fillet welds equal to or smaller than 5/16"
       - 6.2.4.2. Floor and roof deck arc spot, puddle welds
       - 6.2.4.3. Welding of stairs and railing systems, cold formed steel studs/joists.
     - 6.2.5. Periodic Special Inspection of all bolts is required as follows:
       - 6.2.5.1. Verify the proper grade of fasteners are installed where indicated in the approved construction drawings.
       - 6.2.5.2. Verify the storage and cleanliness of high strength fasteners meets AISC requirements.
       - 6.2.5.3. Store fasteners in protected storage until released for use. Temperature control is not required. Do not use fastener components showing rust, dirt, or grit. Cleaning or modifying fastener components from the as-delivered condition is not permitted.
       - 6.2.5.4. Verify the faying surfaces have been brought into firm contact, the bolts are in a snug tight condition, and that washers have been used as required.
     - 6.2.6. Non-Destructive Testing (NDT) of Welds is required as follows:
       - 6.2.6.1. Fabricators will visually inspect all welds for conformance to the approved construction drawings before releasing items for installation.
       - 6.2.6.2. Test all complete joint penetration welds joining primary structural members 5/16" or thicker, by radiographic or ultrasonic testing. Test in accordance with AWS D1.1, Section 6.
       - 6.2.6.3. Amount of NDT is permitted to be reduced according to AISC 341, Appendix Q5.2(g) and (h) if appropriate criteria are met and if approved by the building official and engineer of record.
   - 6.3. Concrete (1704.4): Concrete construction shall be special inspected according to Table 1704.4, except in buildings 3 stories or less where structural design of continuous concrete footings is based on compressive strength, f'c, no greater than 2500 psi. In the absence of sufficient data or documentation showing conformance to quality standards for materials, testing shall be required to determine material properties under the direction of the building official according to Chapter 3 of ACI 318.
   - 6.4. Masonry (1704.5): Engineered masonry in Occupancy Category I, II or III shall be special inspected according to Table 1704.5.1.
   - 6.5. Soils (1704.7): Existing site soil conditions, fill placement and procedure and load-bearing requirements shall be special inspected to verify compliance with the approved soils report and Table 1704.7. Where total depth of controlled fill is 12" or less, special inspection is not required during fill placement.
   - 6.6. Sprayed fire-resistant materials (1704.10): Special inspections for sprayed fire-resistant materials applied to structural elements and decks shall be in accordance with Sections 1704.10.1 through 1704.10.5 and based on the fire-resistance design as designated in the architectural drawings.
   - 6.7. Special Cases (1704.13): Special inspect all post-installed anchors per ICC report.
7. Section 1705: See specific discipline drawings for additional seismic systems requiring special inspection which are not contained in the structural drawings.
8. Section 1707: Special Inspections for Seismic Resistance
   - 8.1. Structural steel (1707.2): See special inspections for steel above.
   - 8.2. Structural wood (1707.3): Continuous special inspection is required during field gluing operations of elements of the seismic-force-resisting system. Periodic special inspection is required for nailing, bolting, anchoring and other fastening of components within the seismic-force-resisting system, including drag struts, and braces.
9. Section 1708: Structural Testing for Seismic Resistance
   - 9.1. Engineered masonry in Occupancy Category I, II or III (1708.1.3):
     - 9.1.1. Certificates of compliance used in masonry construction shall be verified prior to construction.
     - 9.1.2. Compressive strength of masonry, f'm, shall be verified prior to construction per the Unit Strength or Prism Test Methods (2105).
   - 9.2. Structural steel (1708.4): See special inspections for steel above.
10. Structural Observations for Seismic Resistance: Contractor shall notify the engineer at least 2 days prior to the following stages of construction so the engineer may have the opportunity to review the work. Observation reports shall be sent to architect, contractor and building official.
    - 10.1. Initial placing of any concrete, including but not limited to: footings, shear walls, moment frame beams, post-tensioned slabs, slabs on grade or concrete over steel deck
    - 10.2. Initial grout pours for masonry walls
    - 10.3. Initial erection of structural steel
    - 10.4. Completion of structural roof deck
    - 10.5. Initial finish work

LEGEND OF MARKS AND ABBREVIATIONS

AB	Anchor Bolt	JST	Joist
ABV	Above		
ALT	Alternate	K	Kip(S) = 1000 Pounds
ARCH	Architect	KLF	Kips Per Lineal Foot
		KSF	Kips Per Square Foot
BFB	Braced Frame Beam		
BLDG	Building	LB	Pounds (#)
BLK	Blocking	LOC	Location
BLW	Below		
BM	Beam	MAS	Masonry
BOTT	Bottom	MAX	Maximum
BRDG	Bridging	MECH	Mechanical
BRG	Bearing	MEZZ	Mezzanine
BTW	Between	MFR	Manufacturer
		MIN	Minimum
CJ	Control Joint	MISC	Miscellaneous
CJP	Complete Joint Penetration	MTL	Metal
CL	Center Line		
CMU	Concrete Masonry Unit	NTS	Not To Scale
COL	Column		
CONC	Concrete	oc	On Center
CONN	Connection	OPNG	Opening
CONT	Continuous	OPP	Opposite
COORD	Coordinate		
CTR	Center	PCF	Pounds per Cubic Foot
		PEN	Penetrate or Penetration
DB	Deck Bearing	PERP	Perpendicular
DBA	Deformed Bar Anchor	PL	Plate
DBL	Double	PLF	Pounds per Lineal Foot
DCW	Demand Critical Weld	PREFAB	Prefabricated
DET	Detail	PSF	Pounds per Square Foot
DIA	Diameter	PSI	Pounds per Square Inch
DIM	Dimension		
DWG	Drawing	REINF	Reinforce
		REQD	Required
(E)	Existing	RTU	Roof Top Unit
EA	Each		
EF	Each Face	SCHED	Schedule
EL	Elevation	SIM	Similar
ELEC	Electrical	SOG	Slab on Grade
ENGR	Engineer	STD	Standard
EQ	Equal	STIFF	Stiffener
EQUIP	Equipment	STL	Steel
EQ SP	Equally Spaced	STRUCT	Structural
EW	Each Way	SW	Shear Wall
EJ	Expansion Joint		
EXT	Exterior	T&B	Top and Bottom
		TEMP	Temperature
FLR	Floor	THRU	Through
FND	Foundation	T/	Top of
FTG	Footing	TYP	Typical
ga	Gage	UNO	Unless Noted Otherwise
GALV	Galvanized		
GSN	General Structural Notes	VERT	Vertical
HORIZ	Horizontal	W/	With
HSA	Headed Stud Anchor	WWR	Welded Wire Reinforcement
HSS	Hollow Structural Section	WP	Working Point
ICBO	International Conference of Building Officials		
IBC	International Building Code		
ICC	International Code Council		
INT	Interior		

DEFERRED SUBMITTALS

1. Items requiring deferred submittals that are listed below are to be designed and fabricated by the manufacturer according to specifications given in the construction documents.
   - 1.1. Open Web Steel Roof Joists and Girders (by steel joist manufacturer)
2. These deferred submittals shall first be submitted to the project architect and/or engineer for review and coordination. Upon completion of the architect/engineer review, the architect/engineer will submit the deferred submittals to the Building Official for review and approval. The submittal to the Building Official shall include a letter stating that the architect/engineer review has been performed and that the plans and calculations for the deferred submittal items are found to be in general conformance with the design drawings with no exceptions.
3. The final submittal shall be signed and sealed by a Professional Engineer licensed in the state in which construction will occur and shall be available at the jobsite throughout construction.
4. Construction related to deferred submittals shall not commence until the Building Official has approved the submittal.

STRUCTURAL SHEET INDEX

S001	General Structural Notes
S002	General Structural Notes
S101	Footing and Foundation Plan
S102	Mezzanine Floor Framing Plan
S103	Roof Framing Plan
S301	Schedules
S302	Schedules
S401	Braced Frame Elevations, Schedules and Details
S501	Footing and Foundation Details
S502	Footing and Foundation Details
S601	Floor Framing Details
S602	Floor Framing Details
S701	Roof Framing Details
S702	Roof Framing Details

SEPTEMBER 20, 2010
FOR CONSTRUCTION

NOTE:
THESE STRUCTURAL DRAWINGS ARE BASED ON ARCHITECTURAL DRAWINGS DATED 07.23.2010

DIMENSIONS AND ELEVATIONS, AS THEY RELATE TO THE BUILDING IN GENERAL, i.e. GRID TO GRID DIMENSIONS OR DECK BEARING ELEVATIONS, ARE SUPPLIED BY THE ARCHITECT. THEY ARE PROVIDED ON THE STRUCTURAL PLANS AND DETAILS FOR THE CONVENIENCE OF THE CONTRACTOR. VERIFY DIMENSIONS AND ELEVATIONS WITH ARCHITECTURAL DRAWINGS.

DUNN ASSOCIATES, INC
Consulting Structural Engineers
EMAIL: ENG@DUNN-SE.COM
PH: 801-575-8877 FAX: 801-575-8875

This drawing, as an instrument of professional service, is the property of DUNN ASSOCIATES INC. and shall not be used, in whole or part for any other project without the written permission of an authorized representative of DUNN ASSOCIATES INC. Unauthorized use will be prosecuted to the fullest extent of the law. Copyright © 2009 by DUNN ASSOCIATES INC.

CLIENT

UDOT CONNECTING COMMUNITIES

REGION 4 OFFICE REMODEL
708 SOUTH 100 WEST
RICHFIELD UTAH 84701

DESIGNER

ARCHIPLEX GROUP
architecture · planning · design services
255 Crossroad Square
Salt Lake City, UT 84115
P:(801) 961-7070
F:(801) 961-7373

CONSULTANTS

PROFESSIONAL SEAL

ISSUE

MARK	DATE	DESCRIPTION
	09/20/2010	DFCM REVIEW COMMENTS

DFCM PROJECT NO:	10046900
DFCM CONTRACT NO:	107453
DUNN PROJECT NO:	10069
DRAWN BY:	CLAYTON E. COSTER
DESIGN BY:	KYLE MULLIKIN
REVIEW BY:	PAUL McMULLIN
SCALE:	AS NOTED
DATE:	SEPTEMBER 20, 2010

SHEET TITLE

GENERAL STRUCTURAL NOTES

S002

9/16/2010 4:42:20 PM

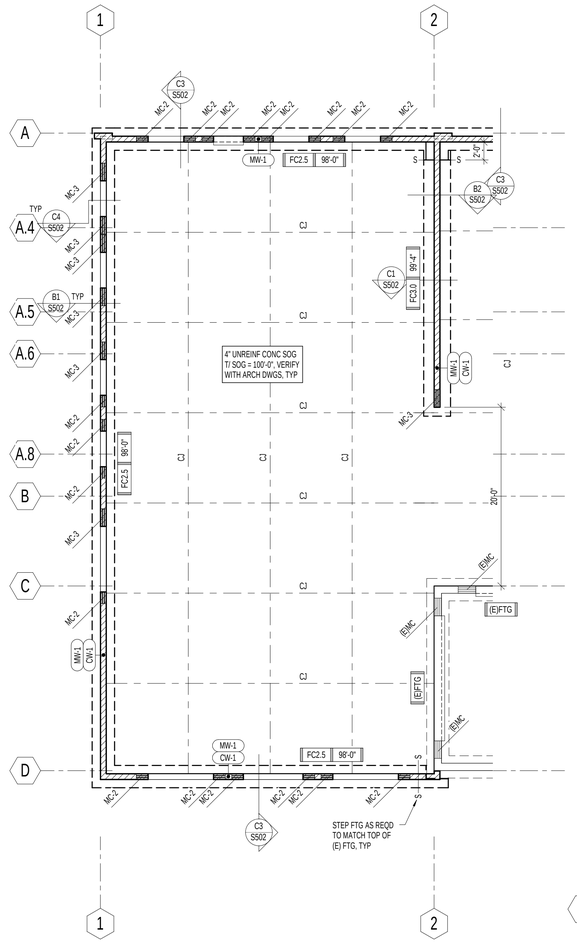

2 S101 LEVEL ONE FOOTING AND FOUNDATION PLAN - ADD ALT. #1
NO SCALE

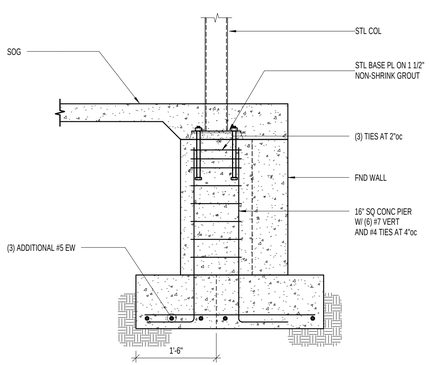

3 S101 COLUMN DETAIL AT ENTRY
NO SCALE

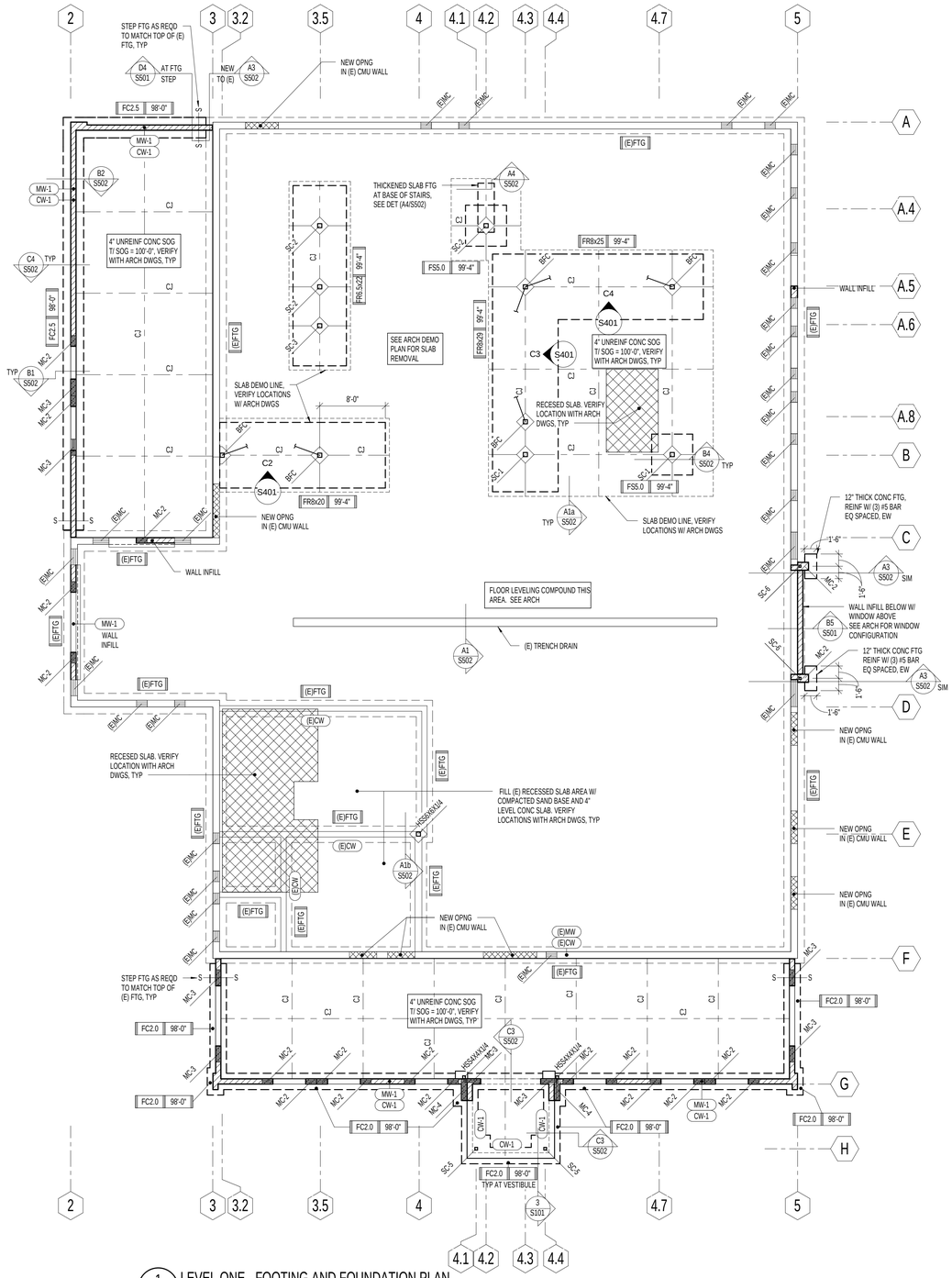

1 S101 LEVEL ONE - FOOTING AND FOUNDATION PLAN
NO SCALE

FOOTING AND FOUNDATION PLAN NOTES:

1. COORDINATE LOCATION OF DEPRESSED SLABS, SLOPED SLABS, AND FLOOR DRAINS WITH ARCHITECTURAL AND MECHANICAL DRAWINGS.
2. SEE ARCHITECTURAL DRAWINGS AND CIVIL DRAWINGS FOR EXTERIOR CONCRETE WORK AT DOORS, SIDEWALKS, ETC.
3. CENTER ALL SPOT FOOTINGS UNDER COLUMNS AS SHOWN ON PLAN, TYPICAL UNO.
4. SEE ARCHITECTURAL DRAWINGS FOR DIMENSIONS TO ALL STEEL COLUMNS.
5. SEE FOOTING AND FOUNDATION DETAILS ON SHEET (S501) FOR BURIED PIPES RUNNING PARALLEL AND PERPENDICULAR TO FOOTINGS.
6. SEE FOOTING AND FOUNDATION DETAILS ON SHEET (S501) FOR TYPICAL CONSTRUCTION AND CONTROL JOINTS IN FLOOR SLABS.
7. FOR LOCATIONS WHERE CONTROL JOINTS ARE DISCONTINUOUS, SEE FOOTING AND FOUNDATION DETAILS ON SHEET (S501).
8. SEE FOOTING AND FOUNDATION DETAILS ON SHEET (S501) FOR REINFORCING AROUND MISCELLANEOUS OPENINGS IN MASONRY WALLS.
9. SEE FOOTING AND FOUNDATION DETAILS ON SHEET (S501) FOR MASONRY CONTROL JOINTS.
10. SEE FOOTING AND FOUNDATION DETAILS ON SHEET (S501) FOR TERMINATION ON HORIZONTAL WALL REINFORCING AT ENDS OF WALLS.

MARKS AND SYMBOLS LEGEND

	SECTION MARK SHEET NUMBER
FTG | EL	FTG DESIGNATION TOF EL
	DEPRESSED FND WALL, POUR SLAB OVER, SEE FTG AND FND DETS ON (S501)
S —— S	FTG STEP, SEE FTG AND FND DETS ON (S501)
	CONC WALL, SEE SCHED ON (S301)
	MAS WALL, SEE SCHED ON (S301)
	STL COL, SEE SCHED ON (S301)
	MAS COL, SEE SCHED ON (S301)
CW-X	CONC WALL, SEE SCHED ON (S301)
MW-X	MAS WALL, SEE SCHED ON (S301)
MW-X CW-X	CONC WALL BLW AND MAS WALL ABV, SEE SCHED ON (S301)
MC-x	MAS COL, SEE SCHED ON (S301)
SC-x	STL COL, SEE SCHED ON (S301)
FC-x	CONT FTG, SEE SCHED ON (S301)
FS-x	SPOT FTG, SEE SCHED ON (S301)
FR-x	RECTANGULAR FTG, SEE SCHED ON (S301)
CJ	CONTROL JOINT, SEE FTG AND FND DETS ON (S501)
	RECESSED SLAB, SEE ARCH PLANS FOR EXACT LOCATION AND EL

SEPTEMBER 20, 2010
FOR CONSTRUCTION

NOTE:
THESE STRUCTURAL DRAWINGS ARE BASED ON ARCHITECTURAL DRAWINGS DATED 07.23.2010

DIMENSIONS AND ELEVATIONS, AS THEY RELATE TO THE BUILDING IN GENERAL, i.e. GRID TO GRID DIMENSIONS OR DECK BEARING ELEVATIONS, ARE SUPPLIED BY THE ARCHITECT. THEY ARE PROVIDED ON THE STRUCTURAL PLANS AND DETAILS FOR THE CONVENIENCE OF THE CONTRACTOR. VERIFY DIMENSIONS AND ELEVATIONS WITH ARCHITECTURAL DRAWINGS.

DUNN ASSOCIATES, INC
Consulting Structural Engineers
EMAIL: ENG@DUNN-SE.COM
PH: 801-575-8877 FAX: 801-575-8875

This drawing, as an instrument of professional service, is the property of DUNN ASSOCIATES INC. and shall not be used, in whole or part for any other project without the written permission of an authorized representative of DUNN ASSOCIATES INC. Unauthorized use will be prosecuted to the fullest extent of the law. Copyright © 2009 by DUNN ASSOCIATES INC.

CLIENT

UDOT CONNECTING COMMUNITIES

REGION 4 OFFICE REMODEL
708 SOUTH 100 WEST
RICHFIELD UTAH 84701

DESIGNER

ARCHIPLEX GROUP
architecture · planning · design services
255 Crossroad Square
Salt Lake City, UT 84115
P:(801) 961-7070
F:(801) 961-7373

CONSULTANTS

PROFESSIONAL SEAL

ISSUE

MARK	DATE	DESCRIPTION
	09/20/2010	DFCM REVIEW COMMENTS

DFCM PROJECT NO:	10046900
DFCM CONTRACT NO:	107453
DUNN PROJECT NO:	10069
DRAWN BY:	CLAYTON E. COSTER
DESIGN BY:	KYLE MULLIKIN
REVIEW BY:	PAUL McMULLIN
SCALE:	AS NOTED
DATE:	SEPTEMBER 20, 2010

SHEET TITLE

FOOTING AND FOUNDATION PLAN

S101

9/16/2010 4:42:22 PM

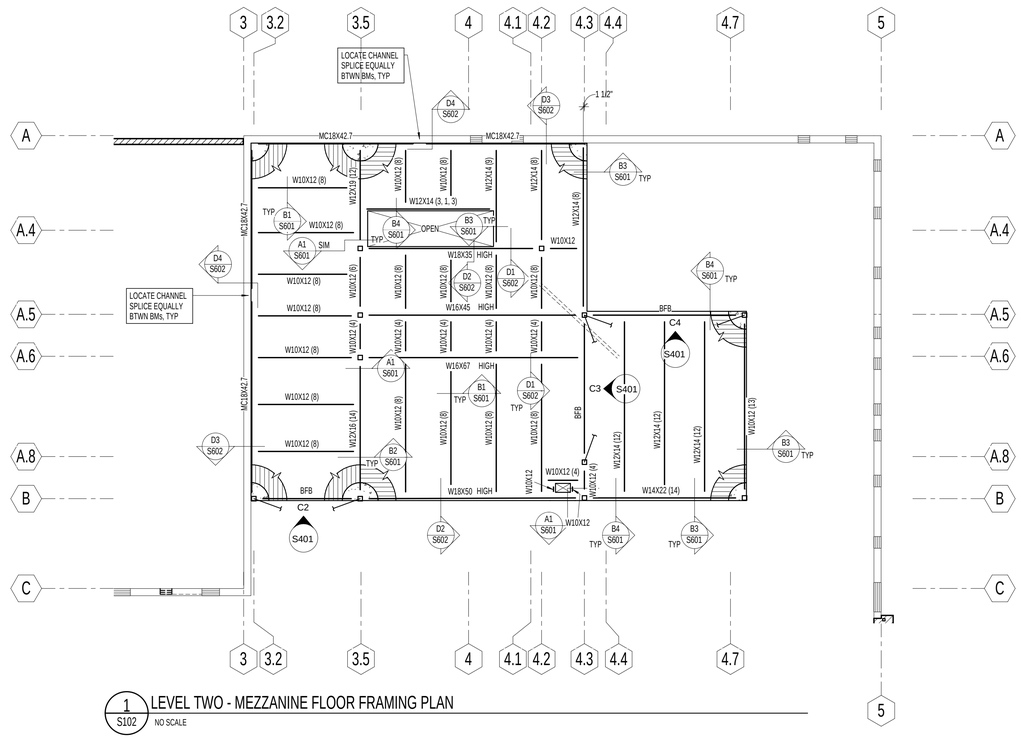

1 / S102 LEVEL TWO - MEZZANINE FLOOR FRAMING PLAN

NO SCALE

FLOOR FRAMING DESIGN LOADS:

FLOOR LOADS

CONCRETE COVER	51.0	PSF
STEEL DECK	2.0	PSF
STEEL FRAMING	4.0	PSF
LIVE LOAD	250.0	PSF
PARTITIONS	20.0	PSF
TOTAL LOAD	327.0	PSF

FLOOR FRAMING PLAN NOTES:

1. VERIFY WALL FLOOR OPENINGS FOR MECHANICAL SHAFTS, STAIRS, ETC. WITH ARCHITECTURAL DRAWINGS.
2. SEE FLOOR FRAMING DETAILS ON SHEET (S601) FOR FRAMING AROUND ALL OPENINGS.
3. SEE FLOOR FRAMING DETAILS ON SHEET (S601) FOR CONCENTRATED LOADS LOCATED FURTHER THAN 6" FROM JOIST/GIRDER PANEL POINT.

MARKS & SYMBOLS LEGEND

- SECTION MARK / SHEET NUMBER
- CONC OVER MTL DECK, SEE GSN ON (S101)
- ADDITIONAL CONC REINF OF (2) #6 BARS x 12'-0", CTR ON CORNERS, NO SPLICES
- MAS WALL, SEE SCHED ON (S301)
- STL COL, SEE SCHED ON (S301)
- SC-x — STL COL, SEE SCHED ON (S301)
- W_x_ — COMPOSITE STL BMS, SEE GSN ON (S101)
- (x) — NUMBER OF HSA FOR SECTION OF COMPOSITE STL BM, SEE GSN ON (S101)

SEPTEMBER 20, 2010
FOR CONSTRUCTION

NOTE:
THESE STRUCTURAL DRAWINGS ARE BASED ON ARCHITECTURAL DRAWINGS DATED 07.23.2010

DIMENSIONS AND ELEVATIONS, AS THEY RELATE TO THE BUILDING IN GENERAL, i.e. GRID TO GRID DIMENSIONS OR DECK BEARING ELEVATIONS, ARE SUPPLIED BY THE ARCHITECT. THEY ARE PROVIDED ON THE STRUCTURAL PLANS AND DETAILS FOR THE CONVENIENCE OF THE CONTRACTOR. VERIFY DIMENSIONS AND ELEVATIONS WITH ARCHITECTURAL DRAWINGS.

DUNN ASSOCIATES, INC
Consulting Structural Engineers
EMAIL: ENG@DUNN-SE.COM
PH: 801-575-8877 FAX: 801-575-8875

This drawing, as an instrument of professional service, is the property of DUNN ASSOCIATES INC, and shall not be used, in whole or part for any other project without the written permission of an authorized representative of DUNN ASSOCIATES INC. Unauthorized use will be prosecuted to the fullest extent of the law. Copyright © 2009 by DUNN ASSOCIATES INC.

CLIENT

UDOT CONNECTING COMMUNITIES

REGION 4 OFFICE REMODEL
708 SOUTH 100 WEST
RICHFIELD UTAH 84701

DESIGNER

ARCHIPLEX GROUP
architecture · planning · design services
255 Crossroad Square
Salt Lake City, UT 84115
P:(801) 961-7070
F:(801) 961-7373

CONSULTANTS

PROFESSIONAL SEAL

ISSUE

MARK	DATE	DESCRIPTION
	09/20/2010	DFCM REVIEW COMMENTS

DFCM PROJECT NO:	10046900
DFCM CONTRACT NO:	107453
DUNN PROJECT NO:	10069
DRAWN BY:	CLAYTON E. COSTER
DESIGN BY:	KYLE MULLIKIN
REVIEW BY:	PAUL McMULLIN
SCALE:	AS NOTED
DATE:	SEPTEMBER 20, 2010

SHEET TITLE

MEZZANINE FLOOR FRAMING PLAN

S102

9/16/2010 4:42:23 PM

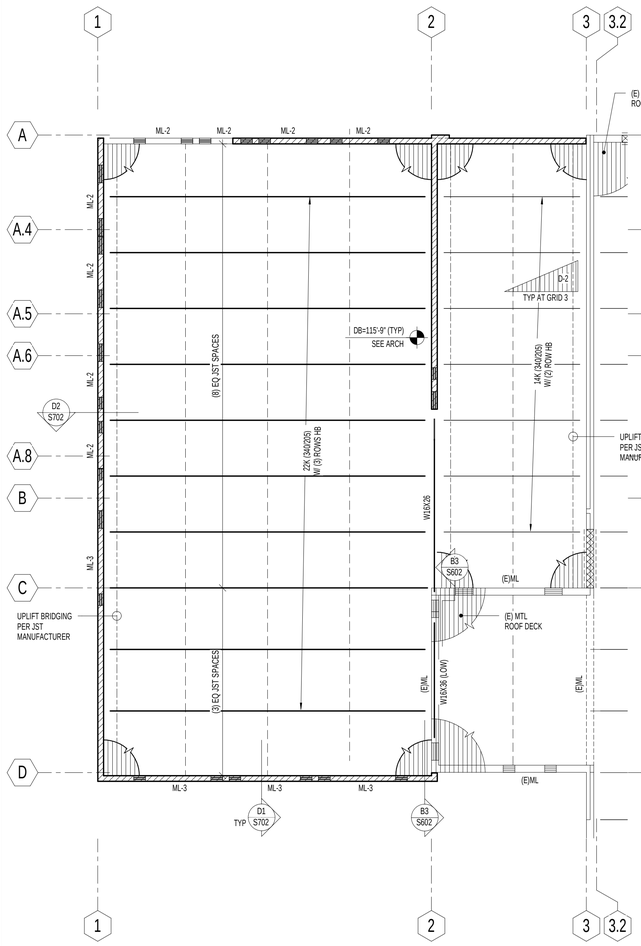

B1 S103 ROOF FRAMING PLAN - ADD ALT. #1
NO SCALE

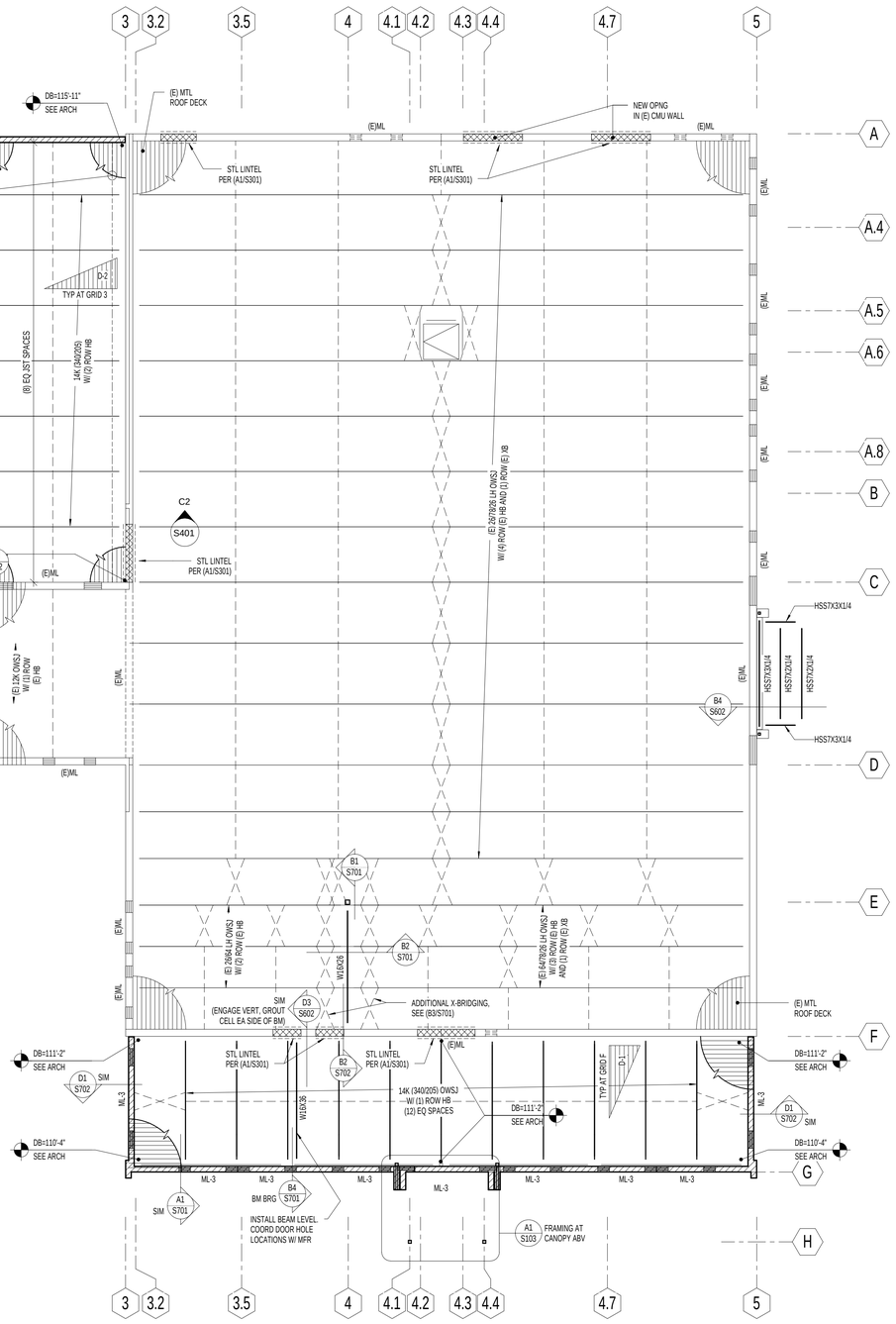

A3 S103 ROOF FRAMING PLAN
NO SCALE

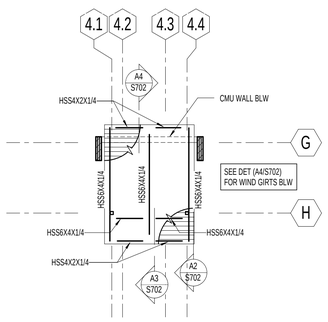

A1 S103 HIGH ROOF FRAMING PLAN
NO SCALE

ROOF FRAMING PLAN NOTES:

1. VERIFY ROOF SLOPES, DRAINS, AND DECK BEARING ELEVATIONS WITH ARCHITECTURAL DRAWINGS. SEE ROOF FRAMING DETAILS ON SHEET (S701).
2. ALL JOISTS SHALL HAVE 2 1/2" DEEP BEARING ENDS. UNO.
4. ALL ROOF OPENINGS SHALL BE FRAMED AS INDICATED IN ROOF FRAMING DETAILS ON SHEET (S701).
5. SEE ROOF FRAMING DETAILS ON SHEET (S701) FOR CONCENTRATED LOADS LOCATED FURTHER THAN 6" FROM JOIST/GIRDER PANEL JOINT.
7. VERIFY SIZE, WEIGHT, AND LOCATION OF ALL ROOF TOP MECHANICAL UNITS WITH ARCHITECTURAL AND MECHANICAL DRAWINGS. SEE ROOF FRAMING DETAILS ON SHEET (S701) FOR STEEL FRAMES AT ALL ROOF TOP EQUIPMENT. COORDINATE OPENINGS WITH MECHANICAL, ELECTRICAL, AND GENERAL CONTRACTORS.
8. OPEN WEB STEEL JOISTS AND JOIST GIRDERS SHALL BE DESIGNATED BY THE MANUFACTURER TO SUPPORT THE MECHANICAL AND LATERAL LOADS SHOWN ON THE ROOF FRAMING PLANS IN ADDITION TO THE UNIFORM AND POINT LOADS SHOWN.
9. WHERE SKYLIGHTS OR MECHANICAL UNITS INTERRUPT HORIZONTAL BRIDGING, PROVIDE CROSS BRIDGING AT JOIST SPACES ON EACH SIDE, TYPICAL.
10. WHERE DIAGONAL BRIDGING CONFLICTS WITH MECHANICAL DUCTS, REMOVE DIAGONAL BRIDGING AND REPLACE WITH HORIZONTAL BRIDGING (AFTER ROOF DECK IS IN PLACE).
11. * - INDICATES THAT THESE JOISTS SHALL BE DESIGNED FOR AN ADLOAD OF 1000# AT ANY TOP CHORD PANEL POINT. THIS LOAD IS TO BE ADDED TO THE GIRDER TOP CHORD LOAD. MULTIPLE "*" ARE ADDITIVE.
12. JOIST DESIGNER SHALL DESIGN JOISTS AND SUPPLY ADDITIONAL BRIDGING AS REQUIRED FOR 8 PSF NET UPLIFT DUE TO WIND. THERE IS NO UPLIFT ON GIRDERS.
14. SEE FOOTING AND FOUNDATION DETAILS ON SHEET (S501) FOR MASONRY CONTROL JOINTS.
15. SEE FOOTING AND FOUNDATION DETAILS ON SHEET (S501) FOR TERMINATION OF HORIZONTAL REINFORCING AT ENDS OF MASONRY WALLS.
16. SEE ARCHITECTURAL PLANS FOR ALL STEEL COLUMN LOCATIONS (DIMENSIONS).
17. SPRINKLER DESIGNER SHALL COORDINATE THE SPRINKLER DESIGN WITH THE JOIST/GIRDER SHOP DRAWINGS.

MARKS AND SYMBOLS LEGEND

- SECTION MARK / SHEET NUMBER
- MTL ROOF DECK, SEE GSN ON (S101)
- MAS WALL, SEE SCHED ON (S301)
- BRG WALL BLW
- STL COL, SEE SCHED ON (S301)
- MAS COL, SEE SCHED ON (S301)
- JST TOP CHORD TIE, SEE ROOF FRAMING DETS ON (S701)
- HORIZ BRIDG
- X-BRIDG
- HORIZ BRDG REQD FOR UPLIFT, SEE STL JST SUPPLIER FOR REQUIREMENTS
- ML-x — MAS LINTEL, SEE SCHED ON (S301)
- T=C=vK — ROOF JST TOP CHORD SHALL BE DESIGNED FOR AN ADDITIONAL LOAD OF K/PS IN TENSION AND COMPRESSION. LOADS ARE PROVIDED AT ULTIMATE STRENGTH LEVEL
- RD — ROOF DRAIN, SEE ARCH AND MECH FOR EXACT LOCATION

SNOW DRIFT LOADING DIAGRAM

D-1 MAX = 78 PSF, L = 16'-0"
D-2 MAX = 65 PSF, L = 13'-6"
MAX PSF, 0 PSF, D-x, UNIFORM ROOF SNOW LOAD, SEE GSN, L'

SEPTEMBER 20, 2010
FOR CONSTRUCTION

NOTE:
THESE STRUCTURAL DRAWINGS ARE BASED ON ARCHITECTURAL DRAWINGS DATED 07.23.2010

DIMENSIONS AND ELEVATIONS, AS THEY RELATE TO THE BUILDING IN GENERAL, i.e. GRID TO GRID DIMENSIONS OR DECK BEARING ELEVATIONS, ARE SUPPLIED BY THE ARCHITECT. THEY ARE PROVIDED ON THE STRUCTURAL PLANS AND DETAILS FOR THE CONVENIENCE OF THE CONTRACTOR. VERIFY DIMENSIONS AND ELEVATIONS WITH ARCHITECTURAL DRAWINGS.

DUNN ASSOCIATES, INC
Consulting Structural Engineers
EMAIL: ENG@DUNN-SE.COM
PH: 801-575-8877 FAX: 801-575-8875

This drawing, as an instrument of professional service, is the property of DUNN ASSOCIATES INC. and shall not be used, in whole or part for any other project without the written permission of an authorized representative of DUNN ASSOCIATES INC. Unauthorized use will be prosecuted to the fullest extent of the law. Copyright © 2009 by DUNN ASSOCIATES INC.

CLIENT

UDOT CONNECTING COMMUNITIES

REGION 4 OFFICE REMODEL
708 SOUTH 100 WEST
RICHFIELD UTAH 84701

DESIGNER

ARCHIPLEX GROUP
architecture · planning · design services
255 Crossroad Square
Salt Lake City, UT 84115
P:(801) 961-7070
F:(801) 961-7373

CONSULTANTS

PROFESSIONAL SEAL

ISSUE

MARK	DATE	DESCRIPTION
	09/20/2010	DFCM REVIEW COMMENTS

DFCM PROJECT NO:	10046900
DFCM CONTRACT NO:	107453
DUNN PROJECT NO:	10069
DRAWN BY:	CLAYTON E. COSTER
DESIGN BY:	KYLE MULLIKIN
REVIEW BY:	PAUL McMULLIN
SCALE:	AS NOTED
DATE:	SEPTEMBER 20, 2010

SHEET TITLE

ROOF FRAMING PLAN

S103

9/16/2010 4:42:26 PM

CONCRETE FOOTING SCHEDULE

MARK	WIDTH	LENGTH	DEPTH	REINFORCING CROSSWISE				REINFORCING LENGTHWISE				COMMENTS
				NO	SIZE	LENGTH	SPACING	NO	SIZE	LENGTH	SPACING	
FC1.5	1'-6"	CONT	12"	—	—	—	—	2	#4	CONT	EQ	
FC2.0	2'-0"	CONT	12"	—	—	—	—	3	#4	CONT	EQ	
FC2.5	2'-6"	CONT	12"	—	#5	2'-0"	14"	3	#5	CONT	EQ	
FC3.0	3'-0"	CONT	12"	—	#5	2'-6"	14"	3	#5	CONT	EQ	
FC3.5	3'-6"	CONT	12"	—	#5	3'-0"	14"	3	#5	CONT	EQ	
FR8X20	8'-0"	SEE PLAN	30"		#7	7'-6"	10"	9	#7	CONT	EQ	T&B
FR8x25	8'-0"	25'-0"	22"		#7	7'-6"	12"	9	#7	CONT	EQ	T&B
FR8x29	8'-0"	29'-0"	22"		#7	7'-6"	12"	9	#7	CONT	EQ	T&B
FR6.5x22	6'-6"	22'-0"	18"		#7	6'-0"	12"	5	#7	CONT	EQ	
FS5	5'-0"	5'-0"	12"	6	#5	4'-6"	EQ	6	#5	4'-6"	EQ	

C3000-S2000

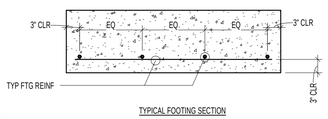

TYPICAL FOOTING SECTION

CONCRETE FOOTING NOTES:

1. PLACE ALL FOOTING REINFORCING IN BOTTOM OF FOOTING WITH 3" CLEAR CONCRETE COVER, UNLESS NOTED OTHERWISE.
2. TOP REINFORCING, WHERE SPECIFIED, SHALL BE PLACED IN THE TOP OF THE FOOTING WITH 2" MINIMUM CONCRETE COVER.
3. IF FOOTINGS ARE EARTH FORMED, FOOTING WIDTH AND LENGTH SHALL BE 6" WIDER AND LONGER THAN SCHEDULED.
4. SEE GENERAL STRUCTURAL NOTES FOR ALL OTHER REQUIREMENTS.
5. NOT ALL FOOTINGS ARE USED, SEE FOUNDATION PLAN FOR FOOTING MARKS.
6. RUN CONTINUOUS BARS IN 'FC' FOOTING THROUGH INTERSECTED 'FS' FOOTINGS.
7. WHERE CONTINUOUS SPREAD FOOTINGS OVERLAP, CARRY HEAVIEST REINFORCING BETWEEN CROSSWISE AND LENGTHWISE REINFORCING OF OVERLAP FOOTINGS.

C1 / S301 CONCRETE FOOTING SCHEDULE
NO SCALE

CONCRETE WALL SCHEDULE

MARK	THICKNESS	REINFORCING			WALL TYPE	COMMENTS
		VERTICAL	HORIZONTAL	TOP AND BOTTOM		
CW-1	8"	#4 AT16"oc	#4 AT16"oc	(2) #4	4	—

CONCRETE WALL NOTES:

1. SEE GENERAL STRUCTURAL NOTES FOR COVER AND OTHER REQUIREMENTS NOT NOTED IN SCHEDULE.
2. CONCRETE WALLS NOT DESIGNATED ON THE PLANS SHALL BE REINFORCED AS FOLLOWS:

THICKNESS	VERTICAL REINFORCING	HORIZONTAL REINFORCING
6"	#4 BARS AT 18"oc	#4 BARS AT 16"oc
8"	#4 BARS AT 18"oc	#4 BARS AT 12"oc
10"	#4 BARS AT 16"oc	#5 BARS AT 15"oc
12"	#4 BARS AT 18"oc EA FACE	#4 BARS AT 16"oc EA FACE

3. PLACE STEEL IN THE CENTER OF THE WALL (EXCEPT TYPE 'B' AND RETAINNING WALLS). WALLS THICKER THAN 10" SHALL HAVE TWO CURTAINS OF REINFORCEMENT (PLACED NEAR EACH FACE OF THE WALL), UNLESS NOTED OTHERWISE ON THE STRUCTURAL DRAWINGS.

WALL REINFORCEMENT PLACEMENT TYPES:

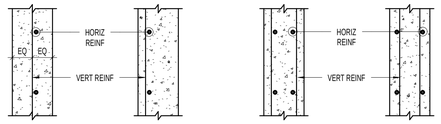

TYPE "A" TYPE "B" TYPE "C" TYPE "D"

C2 / S301 CONCRETE WALL SCHEDULE
NO SCALE

CONCRETE REINFORCING BAR LAP SPLICE SCHEDULE

BAR SIZE	fc = 3000 PSI				fc = 4000 PSI				fc = 5000 PSI				fc = 6000 PSI			
	REGULAR		TOP		REGULAR		TOP		REGULAR		TOP		REGULAR		TOP	
	CLASS		CLASS		CLASS		CLASS		CLASS		CLASS		CLASS		CLASS	
	A	B	A	B	A	B	A	B	A	B	A	B	A	B	A	B
#3	17"	22"	22"	28"	15"	19"	19"	24"	13"	17"	17"	22"	12"	16"	16"	20"
#4	22"	29"	29"	38"	19"	25"	25"	33"	17"	22"	22"	29"	16"	21"	21"	27"
#5	28"	36"	36"	47"	24"	31"	31"	41"	22"	28"	28"	36"	20"	26"	26"	33"
#6	33"	43"	43"	56"	29"	37"	37"	49"	26"	34"	34"	43"	24"	31"	31"	40"
#7	49"	63"	63"	81"	42"	54"	54"	70"	37"	48"	48"	63"	35"	45"	45"	58"
#8	55"	72"	72"	93"	47"	62"	62"	80"	42"	55"	71"	71"	39"	51"	51"	66"
#9	62"	81"	81"	105"	53"	69"	69"	90"	48"	62"	62"	81"	44"	58"	58"	75"
#10	70"	91"	91"	118"	60"	78"	78"	101"	54"	70"	70"	91"	50"	65"	65"	84"
#11	78"	101"	101"	131"	67"	87"	87"	112"	60"	77"	77"	100"	55"	72"	72"	93"

CONCRETE REINFORCING BAR LAP SPLICE NOTES:

1. THIS SCHEDULE SHALL BE USED FOR ALL SPLICES, UNLESS NOTED OTHERWISE.
2. HORIZONTAL BARS ARE CLASSIFIED AS TOP BARS WHERE 12", OR MORE, OF FRESH CONCRETE IS CAST BELOW THE REINFORCING BARS.
3. CLASS 'B' SPLICES SHALL BE USED FOR ALL SPLICES UNLESS NOTED OTHERWISE.
4. TIES AND STIRRUPS SHALL NOT BE SPLICED.
5. FOR ALL LIGHTWEIGHT CONCRETE, LAP LENGTHS SHALL BE MULTIPLIED BY 1.3.
6. FOR ALL EPOXY COATED BARS, LAP LENGTHS SHALL BE MULTIPLIED BY 1.3 FOR TOP BARS AND 1.5 FOR REGULAR BARS.
7. LAP LENGTHS SHALL BE MULTIPLIED BY 1.25 AT SHEARWALL BOUNDARY ELEMENTS AT FOOTINGS AND AT MOMENT FRAME BEAMS TO COLUMNS.

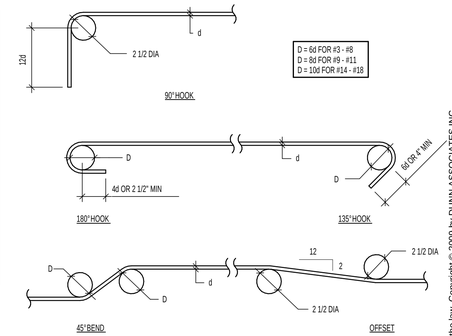

C3 / S301 CONCRETE REINFORCING BAR LAP SPLICE SCHEDULE / BAR BENDING DIAGRAMS
NO SCALE

MASONRY WALL SCHEDULE

MARK	THICKNESS	MATERIALS	SOLID GROUT	REINFORCING			
				VERTICAL	HORIZONTAL	TYPE	JOINT
MW-1	8"	CMU 1500psi	NO	(1) #5 AT32"oc	(1) #5 AT48"oc	A	YES

MASONRY WALL NOTES:

1. COORDINATE WITH ARCHITECTURAL DRAWINGS, MASONRY WALL FINISHES, TYPES OF MATERIAL, COURSING, ETC.
2. DO NOT SOLID GROUT WALLS UNLESS NOTED OTHERWISE.
3. ALL MASONRY BELOW GRADE SHALL BE GROUTED SOLID.
4. VERTICAL REINFORCING SHALL BE CENTETED IN THE WALL UNLESS NOTED OTHERWISE.
5. (1) VERTICAL BARS MINIMUM AT ALL CORNERS AND END OF WALLS.
6. HORIZONTAL WALL REINFORCING SHALL BE PLACED BETWEEN VERTICAL MASONRY COLUMN REINFORCING BARS.
7. HORIZONTAL WALL REINFORCING SHALL CONTINUE THRU MASONRY LINTELS, WHERE BOTH HORIZONTAL WALL REINFORCING AND LINTEL REINFORCING OCCUR IN THE SAME COURSE, USE THE LARGER REINFORCING.
8. SEE GENERAL STRUCTURAL NOTES FOR ADDITIONAL REQUIREMENTS.
9. MASONRY SHALL BE SPECIAL INSPECTED SEE GENERAL STRUCTURAL NOTES

B1 / S301 MASONRY WALL SCHEDULE
NO SCALE

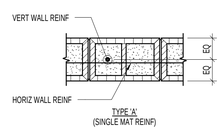

MASONRY REINFORCING BAR LAP SPLICE SCHEDULE

REBAR SIZE	SINGLE BAR CENTERED IN CELL																	
	THICKNESS			THICKNESS			THICKNESS			THICKNESS			THICKNESS			THICKNESS		
	8"	10"	12"	8"	10"	12"	8"	10"	12"	8"	10"	12"	8"	10"	12"	8"	10"	12"
	f'm = 1500psi			f'm = 1800psi			f'm = 2000psi			f'm = 2500psi			f'm = 3000psi			f'm = 3500psi		
#3	16"			15"			15"			15"			15"			15"		
#4	22"			20"			20"			20"			20"			20"		
#5	26"			25"			25"			25"			25"			25"		
#6	43"	40"		40"	36"		38"	34"		34"	31"		31"	30"		30"		
#7	60"	46"		55"	42"		52"	40"		46"	36"		42"	35"		39"	35"	
#8	72"	72"	61"	72"	64"	56"	72"	64"	53"	71"	55"	47"	56"	50"	43"	60"	46"	40"
#9	82"	82"	74"	82"	82"	68"	82"	79"	64"	82"	71"	57"	82"	64"	52"	82"	60"	48"
FLUSH WALL PILASTER OR COLUMN, TWO BARS IN EACH CELL																		
#3	16"			15"			15"			15"			15"			15"		
#4	22"			20"			20"			20"			20"			20"		
#5	32"			29"			28"			25"			25"			25"		
#6	54"			54"			51"			46"			42"			39"		
#7	63"			63"			63"			63"			57"			53"		
#8	72"			72"			72"			72"			72"			72"		
#9	82"			82"			82"			82"			82"			82"		

MASONRY REINFORCING BAR LAP SPLICE NOTES:

1. MECHANICAL SPLICES ARE REQUIRED FOR BARS IN MASONRY GREATER THAN #9 BARS.
2. MECHANICAL SPLICES MAY BE USED IN LIEU OF LAP SPLICES SHOWN.
3. MECHANICAL SPLICES SHALL DEVELOPE 125% OF SPECIFIED YIELD STRENGTH OF BAR.
4. MASONRY DEVELOPMENT LENGTHS SHOWN SHALL BE INCREASED BY 50% WHERE REBAR IS COATED WITH EPOXY.

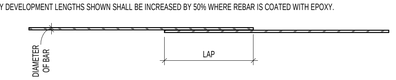

B2 / S301 MASONRY REINFORCING BAR LAP SPLICE SCHEDULE
NO SCALE

MASONRY COLUMN SCHEDULE

MARK	COLUMN SIZE	REINFORCING	
		VERTICAL	TIES
MC-1	8" x 16"	(2) #5	#2 AT8"oc
MC-2	8" x 16"	(4) #5	#2 AT8"oc
MC-3	8" x 24"	(6) #5	#2 AT8"oc
MC-4	8" x 32"	(8) #5	#2 AT8"oc

MASONRY COLUMN NOTES:

1. HORIZONTAL WALL REINFORCEMENT SHALL BE LOCATED TO THE INSIDE OF VERITCAL BARS. THE CENTERLINE OF VERTICAL BARS SHALL BE LOCATED 2 1/2" FROM FACE OF THE MASONRY.
2. UNLESS NOTED OTHERWISE, VERTICAL REINFORCING AND TIES SHALL EXTEND TO FULL WALL HEIGHT.
3. VERTICAL MASONRY COLUMN REINFORCING SHALL EXTEND INTO FOOTING AND TERMINATE WITH A STANDARD 90° HOOK. FOR CONCRETE FOUNDATION WALLS OVER 5'-0" TALL, VERTICAL COLUMN REINFORCING SHALL DOWEL 4'-0" MINIMUM INTO THE FOUNDATION WALL.
4. IN CONCRETE FOUNDATION WALLS, VERTICAL MASONRY COLUMN REINFORCING SHALL BE TIED WITH #3 TIES AT THE SAME SPACING AND CONFIGURATION AS MASONRY COLUMNS ABOVE.
5. SEE GENERAL STRUCTURAL NOTES FOR ADDITIONAL REQUIREMENTS.
6. SPACE TIES AT 48"oc FROM A POINT 24" ABOVE OPENINGS TO THE TOP OF THE WALL.

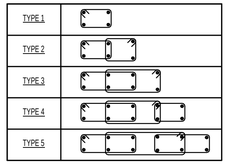

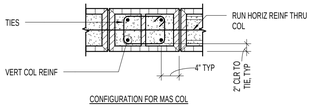

CONFIGURATION FOR MAS COL

B4 / S301 MASONRY COLUMN SCHEDULE
NO SCALE

STEEL ANGLE LINTEL SCHEDULE (NON-STRUCTURAL)

CLEAR OPENING	ANGLE SIZE
UP TO 5'-0"	L3 1/2x3x1/4
5'-1" TO 7'-0"	L3 1/2x3 1/2x1/4
7'-1" TO 9'-0"	L5x3 1/2x1/4
9'-1" TO 10'-0"	L5x3 1/2x5/16
10'-1" TO 11'-0"	L5x3 1/2x3/8
11'-1" TO 12'-0"	L6x4x3/8

NOTES:

1. SEE DETAIL FOR QTY.
2. PROVIDE 1" OF BEARING EACH END FOR EACH FOOT OF SPAN. MIN BEARING OF 6" EACH SIDE OF OPENING.
3. USE THIS SCHEDULE UNLESS NOTED OTHERWISE.
4. LINTELS ARE TO BE GALVANIZED.
5. SAW CUT AND INSTALL LINTEL ONE SIDE AT A TIME.

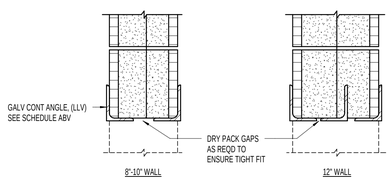

A1 / S301 STEEL ANGLE LINTEL SCHEDULE (NON-STRUCTURAL)
NO SCALE

SEPTEMBER 20, 2010
FOR CONSTRUCTION

NOTE:
THESE STRUCTURAL DRAWINGS ARE BASED ON ARCHITECTURAL DRAWINGS DATED 07.23.2010

DIMENSIONS AND ELEVATIONS, AS THEY RELATE TO THE BUILDING IN GENERAL, i.e. GRID TO GRID DIMENSIONS OR DECK BEARING ELEVATIONS, ARE SUPPLIED BY THE ARCHITECT. THEY ARE PROVIDED ON THE STRUCTURAL PLANS AND DETAILS FOR THE CONVENIENCE OF THE CONTRACTOR. VERIFY DIMENSIONS AND ELEVATIONS WITH ARCHITECTURAL DRAWINGS.

DUNN
DUNN ASSOCIATES, INC
Consulting Structural Engineers
EMAIL: ENG@DUNN-SE.COM
PH: 801-575-8877 FAX: 801-575-8875

This drawing, as an instrument of professional service, is the property of DUNN ASSOCIATES INC. and shall not be used, in whole or part for any other project without the written permission of an authorized representative of DUNN ASSOCIATES INC. Unauthorized use will be prosecuted to the fullest extent of the law. Copyright © 2009 by DUNN ASSOCIATES INC.

CLIENT

UDOT CONNECTING COMMUNITIES

REGION 4 OFFICE REMODEL
708 SOUTH 100 WEST
RICHFIELD UTAH 84701

DESIGNER

ARCHIPLEX GROUP
architecture · planning · design services
255 Crossroad Square
Salt Lake City, UT 84115
P:(801) 961-7070
F:(801) 961-7373

CONSULTANTS

PROFESSIONAL SEAL

ISSUE

MARK	DATE	DESCRIPTION
	09/20/2010	DFCM REVIEW COMMENTS

DFCM PROJECT NO:	10046900
DFCM CONTRACT NO:	107453
DUNN PROJECT NO:	10069
DRAWN BY:	CLAYTON E. COSTER
DESIGN BY:	KYLE MULLIKIN
REVIEW BY:	PAUL McMULLIN
SCALE:	AS NOTED
DATE:	SEPTEMBER 20, 2010

SHEET TITLE

SCHEDULES

S301

9/16/2010 4:42:27 PM

MASONRY LINTEL SCHEDULE

MARK	LINTEL DEPTH	LINTEL SPAN (MAX)	REINFORCING		COMMENTS
			HORIZONTAL	STIRRUPS	
ML-1	8"	3' - 4"	(1) #7 BAR	NONE	__
ML-2	16"	4' - 0"	(1) #7BAR CONT T&B	#4 AT 8"oc	__
ML-3	24"	6' - 0"	(1) #7BAR CONT T&B	#4 AT 8"oc	__
ML-4	32"	8' - 0"	(1) #7BAR CONT T&B	#4 AT 8"oc	__

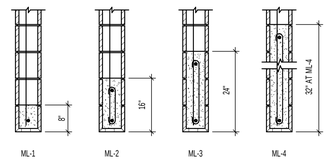

MASONRY LINTEL NOTES:

1. INTEL WIDTH AND MATERIAL TYPES SHALL BE THE SAME AS THE WALL IN WHICH THE LINTEL IS CONSTRUCTED.
2. GROUT MASONRY LINTELS MONOLITHICALLY WITH THE SUPPORT WALL OR COLUMN AT EACH END.
3. MASONRY LINTELS ML-1 THRU ML-4 SHALL BE USED OVER OPENINGS IN MASONRY WALLS WHEN A SPECIFIC MASONRY LINTEL IS NOT OTHERWISE SPECIFIED. WHEN A LINTEL IS SPECIFIED ON THE PLANS, THE MAXIMUM SPAN AS NOTED IN THIS SCHEDULE SHALL NOT APPLY. CONSULT THE STRUCTURAL ENGINEER FOR LINTELS NOT SPECIFIED ON THE PLANS WHICH HAVE A SPAN GREATER THAN 10'-0".
4. MASONRY LINTELS ML-1 THRU ML-4 SHALL NOT BE LOCATED DIRECTLY BELOW FLOOR OR ROOF BEAMS OR GIRDERS UNLESS NOTED OTHERWISE ON THE PLANS. JOISTS SHALL NOT BEAR ON ANY LINTEL LESS THAN 16" DEEP. CONSULT THE STRUCTURAL ENGINEER FOR LINTELS NOT SHOWN ON THE PLANS WHICH ARE LOCATED DIRECTLY BELOW FLOOR OR ROOF BEAMS OR GIRDERS.
5. EXTEND ALL HORIZONTAL REINFORCING BEYOND THE EDGE OF ALL OPENINGS. IF HORIZONTAL REINFORCING CONNOT EXTEND LAP SPLICE LENGTH BEYOND EDGE OF OPENING, PROVIDE 90° STANDARD HOOK.
6. SPLICE TOP BARS AT MIDSPAN OF LINTEL ONLY AND BOTTOM BARS OVER SUPPORTS ONLY.
7. HORIZONTAL WALL REINFORCING SHALL CONTINUE THRU MASONRY LINTELS, WHERE BOTH HORIZONTAL WALL REINFORCING AND LINTEL REINFORCING OCCUR IN THE SAME COURSE, USE THE LARGER REINFORCING.
8. DOWEL VERTICAL REINFORCING OF WALL ABOVE LINTEL INTO THE FULL DEPTH OF LINTEL.
9. SEE GENERAL STRUCTURAL NOTES FOR ADDITIONAL REQUIREMENTS.

C1 / S302 MASONRY LINTEL SCHEDULE
NO SCALE

STEEL COLUMN SCHEDULE

MARK	SIZE	STEEL BASE PLATE	STEEL CAP PLATE THICKNESS	COMMENTS
SC-1	HSS6x6x1/4	1" (SBP - 1)	SEE DET	__
SC-2	HSS6x6x1/2	1" (SBP - 1)	SEE DET	__
SC-3	HSS6x6x5/8	1" (SBP - 1)	SEE DET	__
SC-4	HSS6x6x1/4	1" (SBP - 1)	SEE DET	__
SC-5	HSS4x4x1/4	1" (SBP - 1)	SEE DET	__
SC-6	HSS3x3x1/4	1" (SBP - 1)	SEE DET	__

STEEL COLUMN BASE PLATE TYPES:

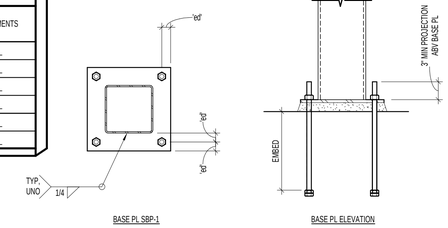

BASE PL SBP-1

BASE PL ELEVATION

STEEL COLUMN NOTES:

1. UNLESS NOTED OTHERWISE, ALL COLUMNS SHALL BE INSTALLED WITH 3/4"Ø HEADED (OR DOUBLE NUT) ANCHOR BOLTS. PROJECT ANCHOR BOLTS 3" MINIMUM ABOVE THE TOP OF THE BASE PLATE. EMBEDMENT SHALL BE 9" MINIMUM. ALL BOLTS SHALL BE INSTALLED WITH HARDENED WASHERS BENEATH THE NUT. ANY BOLT HOLES LARGER THAN THE BOLT DIAMETER PLUS 5/16" SHALL HAVE A PLATE WASHERS INSTALLED BENEATH THE HARDENED WASHERS.
2. ANCHOR BOLTS SHALL NOT BE WELDED (INCLUDING TACK WELDS).
3. ALL CAP PLATE BOLTS SHALL BE 3/4"Ø A325N BOLTS, TYPICAL UNLESS NOTED OTHERWISE.
4. SEE GENERAL STRUCTURAL NOTES FOR OTHER REQUIREMENTS.

BASE PL LEGEND:

'co' = 1/2" MINIMUM
'ed' = 1 1/2" MINIMUM
'bc' = 3" MINIMUM

CAP PL LEGEND:

'co' = 1/2" MINIMUM
'ed' = 1 1/2" MINIMUM
'bc' = BEAM OR GIRDER GAGE
'w' = BEAM OR GIRDER GAGE + 3"
OR
BEAM OR GIRDER FLANGE WIDTH + 1"
OR
COLUMN WIDTH + 1"
WHICHEVER IS GREATER

C3 / S302 STEEL COLUMN SCHEDULE
NO SCALE

A-325 BOLT SCHEDULE

MAXIUMU BEAM SIZE IN EACH BEAM DEPTH GROUP	A-325N BOLTS	
	No. PER BEAM	SIZE
W8	2	7/8"Ø
W10	2	7/8"Ø
W12	3	7/8"Ø
W14	3	7/8"Ø
W16	4	7/8"Ø
W18	5	7/8"Ø
W21	6	7/8"Ø
W24	7	7/8"Ø
W27	7	7/8"Ø
W30	8	7/8"Ø
W33	9	7/8"Ø
W36	10	7/8"Ø
W40	11	7/8"Ø
W44	12	7/8"Ø

1. BEAM WEB CONNECTION PLATES. THICKNESS EQUALS THE BEAM WEB THICKNESS PLUS 1/8" (1/2" MIN).
2. FILLET WELDS SHALL BE AS FOLLOWS:
   ONE SIDE: PLATE THICKNESS MINUS 1/16" (1/4" MINIMUM)
   TWO SIDES: 1/2" PLATE THICKNESS PLUS 1/16" (1/4" MINIMUM) EACH SIDE.
3. THICKNESS EQUALS BEAM FLANGE THICKNESS OF BEAM FRAMING INTO COLUMN WEB (3/8" MINIMUM).
4. BOLT EDGE DISTANCE SHALL BE 1 3/4" MINIMUM AT ALL EDGES, BOLT SPACING SHALL BE 3" MINIMUM, UNLESS NOTED OTHERWISE.
5. WHEN MORE THAN ONE COLUMN OF BOLTS IS NEEDED, THE FIRST COLUMN SHALL BE COMPLETE WITH THE REMAINDER OF THE BOLTS PLACED IN THE SECOND COLUMN.
6. CLIP ANGLES: L5x3 1/2. THICKNESS SHALL BE EQUAL TO ONE HALF THE BEAM WEB THICKNESS PLUS 1/16" (1/4" MIN). FOR TWO ROWS OF BOLTS OR SKEWED CONNECTIONS, USE BENT PLATES. WHERE COLUMN WIDTH IS SMALLER THAN THE CONNECTING CLIP ANGLES, ANGLE LEGS MAY BE REDUCED TO MATCH WIDTH OF COLUMN.

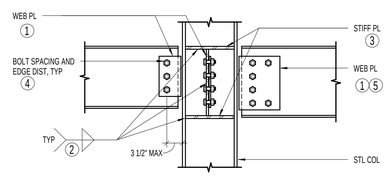

BEAM TO WIDE FLANGE COLUMN WEB PLATE CONNECTION

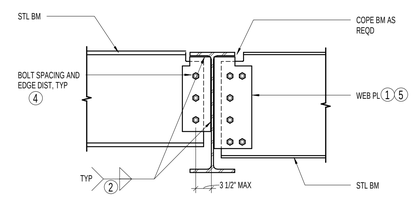

BEAM TO BEAM WEB PLATE CONNECTION

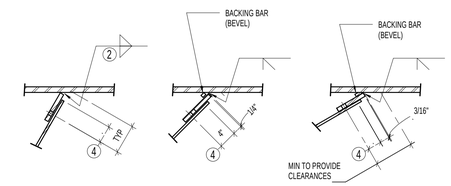

CONDITION A
FOR SKEWS UP TO 30 DEGREES

CONDITION B
FOR SKEWS OVER 30 TO 45 DEGREES

CONDITION C
FOR SKEWS OVER 45 TO 60 DEGREES

SHEAR CONNECTOR PLATES AT SKEWED MEMBERS

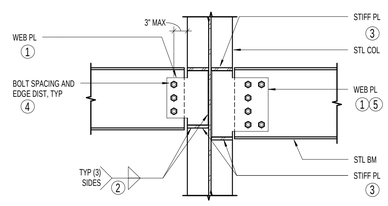

BEAM TO WIDE FLANGE COLUMN WEB PLATE CONNECTION

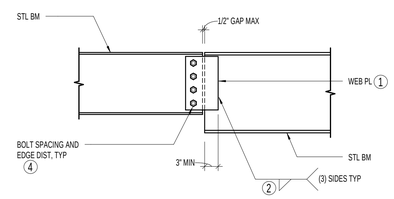

BEAM TO PARALLEL BEAM WEB PLATE CONNECTION

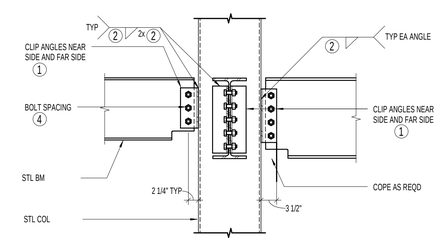

BEAM TO HSS CLIP ANGLE CONNECTION

B1 / S302 TYPICAL BOLTED WEB PLATE CONNECTIONS WITH BOLT SCHEDULE (SINGLE SHEAR)
NO SCALE

SEPTEMBER 20, 2010
FOR CONSTRUCTION

NOTE:
THESE STRUCTURAL DRAWINGS ARE BASED ON ARCHITECTURAL DRAWINGS DATED 07.23.2010

DIMENSIONS AND ELEVATIONS, AS THEY RELATE TO THE BUILDING IN GENERAL, i.e. GRID TO GRID DIMENSIONS OR DECK BEARING ELEVATIONS, ARE SUPPLIED BY THE ARCHITECT. THEY ARE PROVIDED ON THE STRUCTURAL PLANS AND DETAILS FOR THE CONVENIENCE OF THE CONTRACTOR. VERIFY DIMENSIONS AND ELEVATIONS WITH ARCHITECTURAL DRAWINGS.

DUNN ASSOCIATES, INC
Consulting Structural Engineers
EMAIL: ENG@DUNN-SE.COM
PH: 801-575-8877 FAX: 801-575-8875

This drawing, as an instrument of professional service, is the property of DUNN ASSOCIATES INC, and shall not be used, in whole or part for any other project without the written permission of an authorized representative of DUNN ASSOCIATES INC. Unauthorized use will be prosecuted to the fullest extent of the law. Copyright © 2009 by DUNN ASSOCIATES INC.

CLIENT

UDOT CONNECTING COMMUNITIES

REGION 4 OFFICE REMODEL
708 SOUTH 100 WEST
RICHFIELD UTAH 84701

DESIGNER

ARCHIPLEX GROUP
architecture · planning · design services
255 Crossroad Square
Salt Lake City, UT 84115
P:(801) 961-7070
F:(801) 961-7373

CONSULTANTS

PROFESSIONAL SEAL

ISSUE

MARK	DATE	DESCRIPTION
	09/20/2010	DFCM REVIEW COMMENTS

DFCM PROJECT NO:	10046900
DFCM CONTRACT NO:	107453
DUNN PROJECT NO:	10069
DRAWN BY:	CLAYTON E. COSTER
DESIGN BY:	KYLE MULLIKIN
REVIEW BY:	PAUL McMULLIN
SCALE:	AS NOTED
DATE:	SEPTEMBER 20, 2010

SHEET TITLE

SCHEDULES

S302

9/16/2010 4:42:29 PM

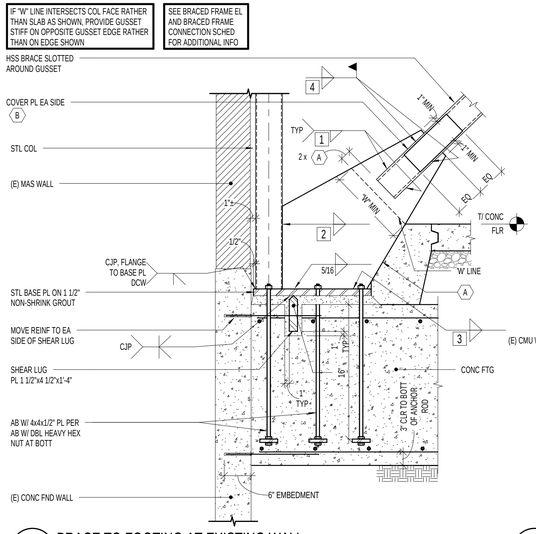

C1 S401 BRACE TO FOOTING AT EXISTING WALL
NO SCALE

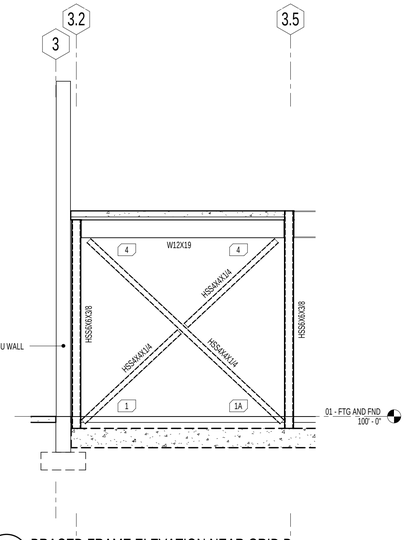

C2 S401 BRACED FRAME ELEVATION NEAR GRID B
NO SCALE

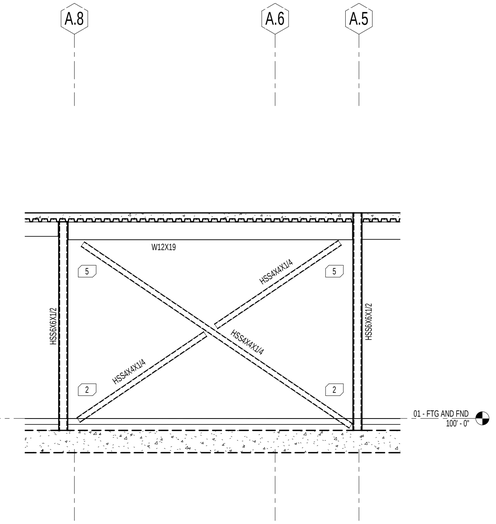

C3 S401 BRACED FRAME ELEVATION ALONG GRID 4.3
NO SCALE

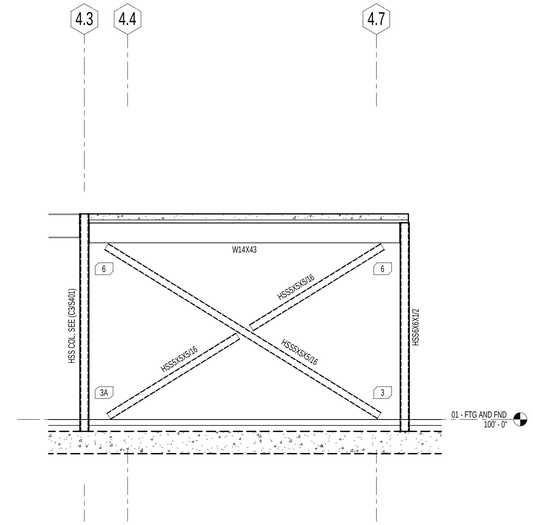

C4 S401 BRACED FRAME ELEVATION ALONG GRID A.5
NO SCALE

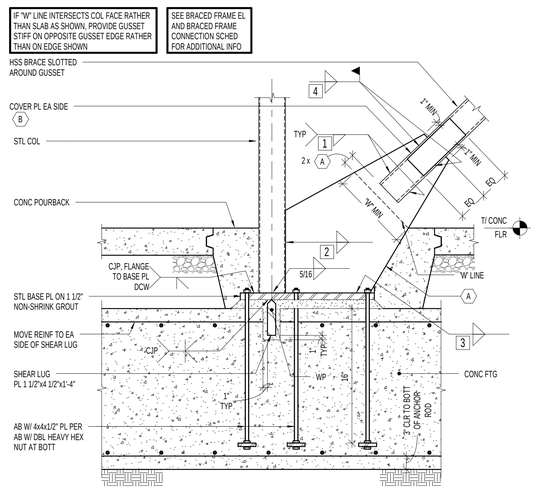

B1 S401 BRACE TO FOOTING
NO SCALE

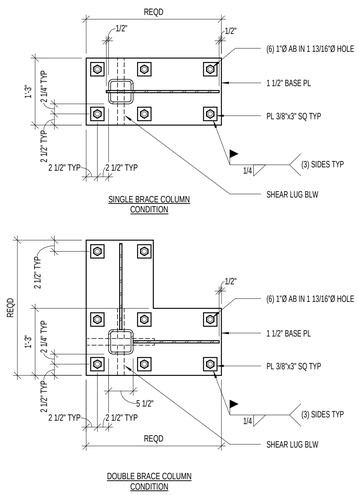

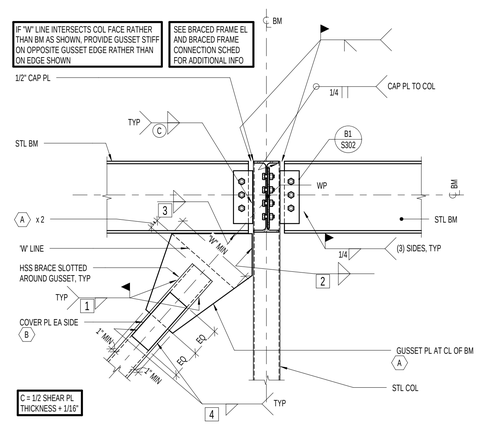

B3 S401 BRACE TO COLUMN (STRONG AXIS)
NO SCALE

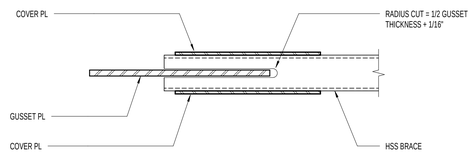

B4 S401 BRACE SLOT DETAIL
NO SCALE

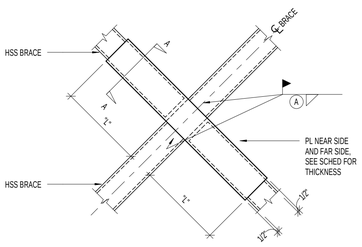

A1 S401 X-BRACE CONNECTION DETAIL
NO SCALE

X-BRACE CONNECTION SCHEDULE			
BRACE	PL THICKNESS (in)	WELD SIZE (in) (A)	"L" (in)
HSS4x4x1/4	3/8	1/4	10
HSS5x5x5/16	1/2	5/16	13

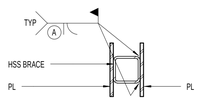

SECTION A-A

BRACED FRAME CONNECTION SCHEDULE

MARK	MINIMUM REQUIRED FIELD					PLATE THICKNESS			BM STIFF REQD
	DETAIL	BRACE 1	VERT 2	HORIZ 3	COVER 4	GUSSET (A)	'W' (MIN)	COVER (B)	
1	(C1 / S401)	7/16" x 20"	1/2" x 25"	1/2" x 29"	3/8" x 34"	1 1/4"	31"	7/8"	YES
1A	(B1 / S401)	1/4" x 8"	1/4" x 9"	1/4" x 13"	1/4"	3/4"	9"	5/16" x 2" x 1'-4"	__
2	(B1 / S401)	1/4" x 8"	1/4" x 9"	1/4" x 13"	1/4"	3/4"	10"	5/16" x 2" x 1'-4"	__
3	(B1 / S401)	1/4" x 8"	1/4" x 11"	1/4" x 22"	5/16"	3/4"	11"	3/8" x 3" x 1'-4"	__
3A	(B4 / S401)	1/4" x 8"	1/4" x 11"	1/4" x 22"	5/16"	3/4"	11"	3/8" x 3" x 1'-4"	__
4	(B2 / S401)	1/4" x 8"	1/4" x 9"	1/4" x 13"	1/4"	3/4"	9"	5/16" x 2" x 1'-4"	__
5	(B2 / S401)	1/4" x 8"	1/4" x 9"	1/4" x 13"	1/4"	3/4"	10"	5/16" x 2" x 1'-4"	__
6	(B2 / S401)	1/4" x 8"	1/4" x 11"	1/4" x 22"	5/16"	3/4"	11"	3/8" x 3" x 1'-4"	__

NOTES:
1. DO NOT WELD RETURNS AT BRACE CONNECTIONS.
2. AFTER BRACE INSTALLATION, SLOT LENGTH SHALL BE FILLED IN WITH WELD MATERIAL.
3. CONTRACTOR HAS OPTION TO SHIP GUSSET PLATES LOOSE IN ORDER TO FACILITATE ERECTION OF BRACES.
4. WHEN BRACE INSTALLATION REQUIRES ONE SIDE OF SLOTTED TUBE TO BE REMOVED, REPLACE TUBE AND WELD IT BACK TO THE TUBE WITH A C.P.J. WELD. TEST WELD AFTER C.P.J. IS COMPLETE.
5. ALL WELDS SCHEDULED AND DETAILED ARE DEMAND CRITICAL.
6. ALL GUSSETS PLATES & BRACES WITHIN 9" OF A GUSSET PLATE ARE TO BE PROTECTED ZONES. WELDED, BOLTED, SCREWED OR SHOT-IN ATTACHMENTS FOR PERIMETER, EDGE ANGLE, EXTERIOR FACADES, PARTITIONS, DUCT WORK PIPING OR OTHER CONSTRUCTION SHALL NOT BE PLACED WITHIN THE PROTECTED ZONE.
7. PLACE (2) #7 LONGITUDINAL BARS EITHER SIDE OF BASE PLATE WITH DEVELOPMENT LENGTH BEYOND BASE PLATE IN BOTH DIRECTIONS.
8. PLATE WASHERS AT ALL ANCHOR BOLTS AS INDICATED.

A2 S401 BRACED FRAME CONNECTION SCHEDULE
NO SCALE

SEPTEMBER 20, 2010
FOR CONSTRUCTION

NOTE:
THESE STRUCTURAL DRAWINGS ARE BASED ON ARCHITECTURAL DRAWINGS DATED 07.23.2010

DIMENSIONS AND ELEVATIONS, AS THEY RELATE TO THE BUILDING IN GENERAL, i.e. GRID TO GRID DIMENSIONS OR DECK BEARING ELEVATIONS, ARE SUPPLIED BY THE ARCHITECT. THEY ARE PROVIDED ON THE STRUCTURAL PLANS AND DETAILS FOR THE CONVENIENCE OF THE CONTRACTOR. VERIFY DIMENSIONS AND ELEVATIONS WITH ARCHITECTURAL DRAWINGS.

DUNN ASSOCIATES, INC
Consulting Structural Engineers
EMAIL: ENG@DUNN-SE.COM
PH: 801-575-8877 FAX: 801-575-8875

This drawing, as an instrument of professional service, is the property of DUNN ASSOCIATES INC. and shall not be used, in whole or part for any other project without the written permission of an authorized representative of DUNN ASSOCIATES INC. Unauthorized use will be prosecuted to the fullest extent of the law. Copyright © 2009 by DUNN ASSOCIATES INC.

CLIENT
UDOT CONNECTING COMMUNITIES
REGION 4 OFFICE REMODEL
708 SOUTH 100 WEST
RICHFIELD UTAH 84701

DESIGNER
ARCHIPLEX GROUP
architecture · planning · design services
255 Crossroad Square
Salt Lake City, UT 84115
P:(801) 961-7070
F:(801) 961-7373

CONSULTANTS

PROFESSIONAL SEAL

ISSUE

MARK	DATE	DESCRIPTION
	09/20/2010	DFCM REVIEW COMMENTS

DFCM PROJECT NO:	10046900
DFCM CONTRACT NO:	107453
DUNN PROJECT NO:	10069
DRAWN BY:	CLAYTON E. COSTER
DESIGN BY:	KYLE MULLIKIN
REVIEW BY:	PAUL McMULLIN
SCALE:	AS NOTED
DATE:	SEPTEMBER 20, 2010

SHEET TITLE
BRACED FRAME ELEVATIONS SCHED AND DETAILS

S401

9/16/2010 4:42:31 PM

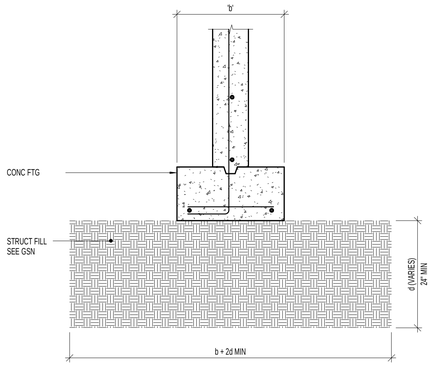

D1 S501 TYPICAL COMPACTED STRUCTURAL FILL
NO SCALE

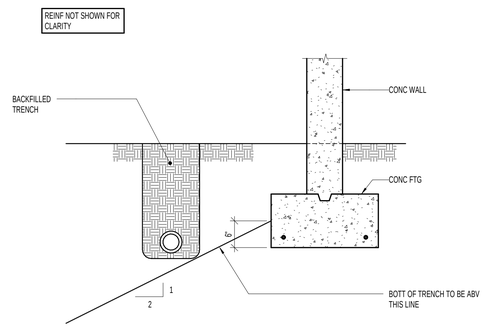

D2 S501 TYPICAL PIPE PARALLEL TO FOOTING
NO SCALE

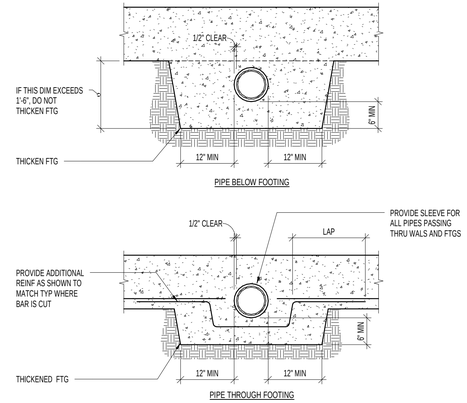

D3 S501 TYPICAL PIPE PERPENDICULAR TO FOOTING
NO SCALE

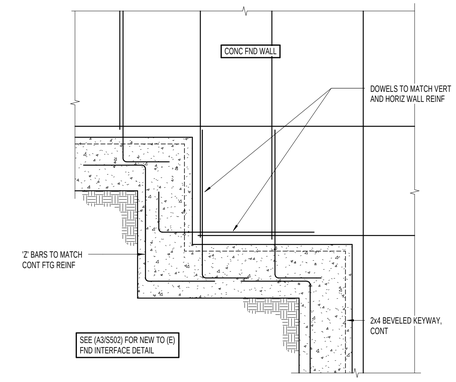

D4 S501 TYPICAL FOOTING STEP AT CONCRETE FOUNDATION WALL
NO SCALE

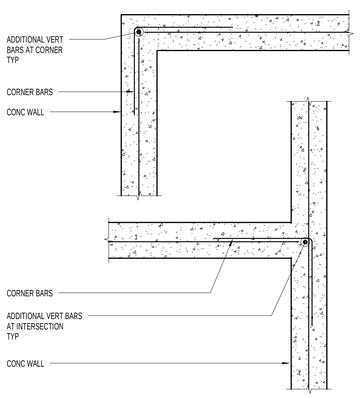

B1 S501 TYPICAL CORNER WALL REINFORCING FOR SINGLE REINFORCED CONCRETE WALLS (PLAN VIEW)
NO SCALE

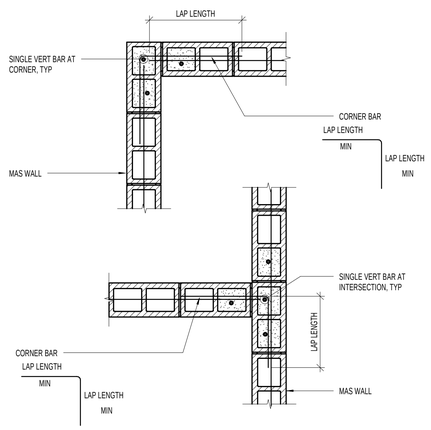

B2 S501 TYPICAL CORNER WALL REINFORCING FOR SINGLE REINFORCED MASONRY WALLS (PLAN VIEW)
NO SCALE

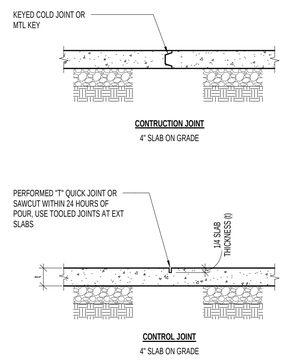

B3 S501 TYPICAL SLAB ON GRADE JOINT
NO SCALE

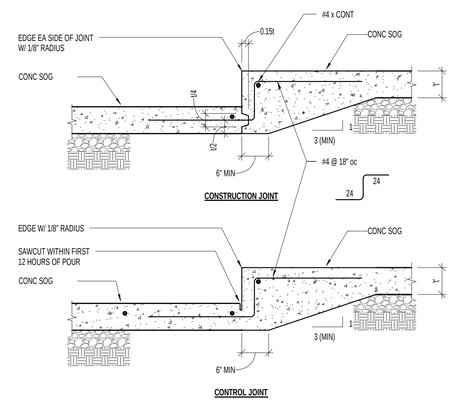

B4 S501 TYPICAL SLAB DEPRESSION DETAIL
NO SCALE

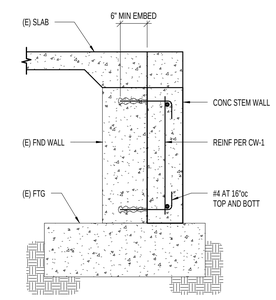

B5 S501 EXPANDED STEMWALL DETAIL
NO SCALE

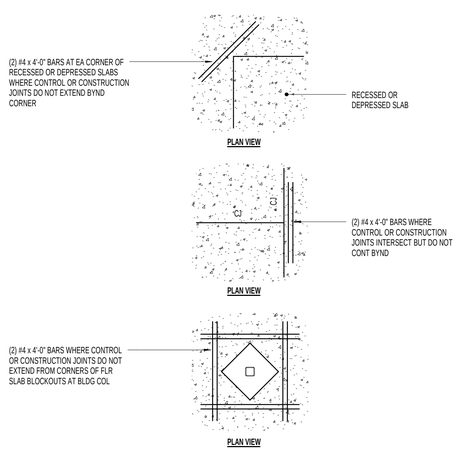

A1 S501 TYPICAL LOCATIONS REQUIRING ADDITONAL SLAB REINFORCING STEEL
NO SCALE

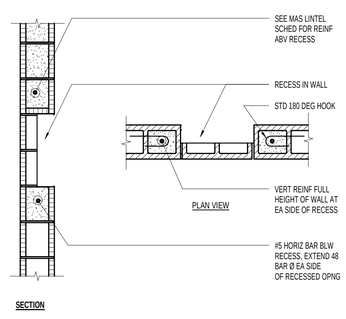

A2 S501 TYPICAL MASONRY WALL RECESS DETAILS FOR SINGLE REINFORCED MASONRY WALLS (PLAN VIEW)
NO SCALE

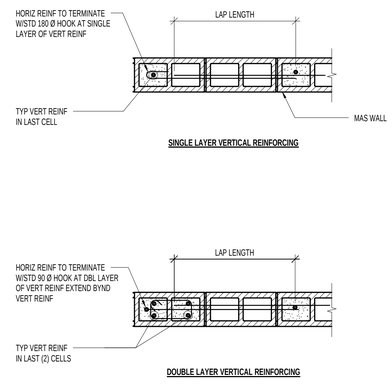

A3 S501 TYPICAL TERMINATION OF HORIZONTAL REINFORCING FOR SINGLE REINFORCED MASONRY WALLS (PLAN VIEW)
NO SCALE

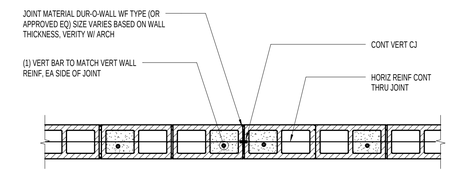

CONDITION AT HORIZONTAL BOND BEAM AND JOINT REINFORCING

A4 S501 TYPICAL CONTROL JOINT FOR SINGLE REINFORCED MASONRY WALLS (PLAN VIEW)
NO SCALE

SEPTEMBER 20, 2010
FOR CONSTRUCTION

NOTE:
THESE STRUCTURAL DRAWINGS ARE BASED ON ARCHITECTURAL DRAWINGS DATED 07.23.2010

DIMENSIONS AND ELEVATIONS, AS THEY RELATE TO THE BUILDING IN GENERAL, i.e. GRID TO GRID DIMENSIONS OR DECK BEARING ELEVATIONS, ARE SUPPLIED BY THE ARCHITECT. THEY ARE PROVIDED ON THE STRUCTURAL PLANS AND DETAILS FOR THE CONVENIENCE OF THE CONTRACTOR. VERIFY DIMENSIONS AND ELEVATIONS WITH ARCHITECTURAL DRAWINGS.

DUNN ASSOCIATES, INC
Consulting Structural Engineers
EMAIL: ENG@DUNN-SE.COM
PH: 801-575-8877 FAX: 801-575-8875

This drawing, as an instrument of professional service, is the property of DUNN ASSOCIATES INC. and shall not be used, in whole or part for any other project without the written permission of an authorized representative of DUNN ASSOCIATES INC. Unauthorized use will be prosecuted to the fullest extent of the law. Copyright © 2009 by DUNN ASSOCIATES INC.

CLIENT
UDOT CONNECTING COMMUNITIES
REGION 4 OFFICE REMODEL
708 SOUTH 100 WEST
RICHFIELD UTAH 84701

DESIGNER
ARCHIPLEX GROUP
architecture · planning · design services
255 Crossroad Square
Salt Lake City, UT 84115
P:(801) 961-7070
F:(801) 961-7373

CONSULTANTS

PROFESSIONAL SEAL

ISSUE

MARK	DATE	DESCRIPTION
	09/20/2010	DFCM REVIEW COMMENTS

DFCM PROJECT NO:	10046900
DFCM CONTRACT NO:	107453
DUNN PROJECT NO:	10069
DRAWN BY:	CLAYTON E. COSTER
DESIGN BY:	KYLE MULLIKIN
REVIEW BY:	PAUL McMULLIN
SCALE:	AS NOTED
DATE:	SEPTEMBER 20, 2010

SHEET TITLE
FOOTING AND FOUNDATION DETAILS

S501

9/16/2010 4:42:34 PM

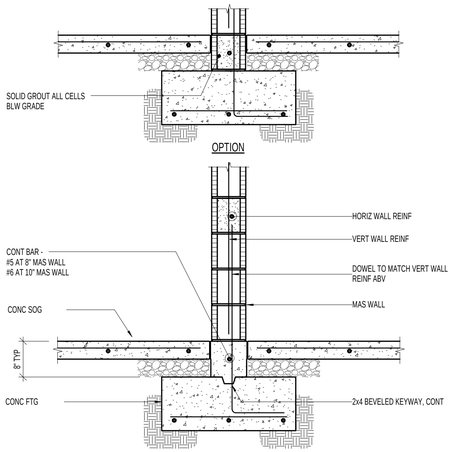

C1 S502 TYPICAL SINGLE MAT REINFORCING MASONRY WALL ON CONCRETE CURB
NO SCALE

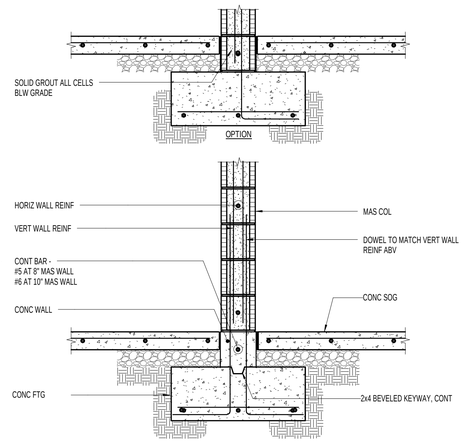

C2 S502 TYPICAL SINGLE MAT REINFORCING MASONRY COLUMN ON CONCRETE CURB
NO SCALE

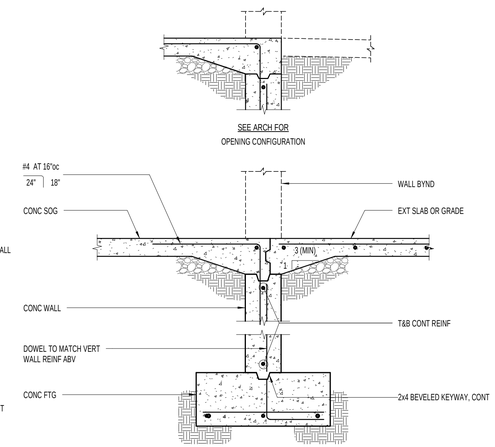

C3 S502 TYPICAL FOUNDATION WALL OPENING
NO SCALE

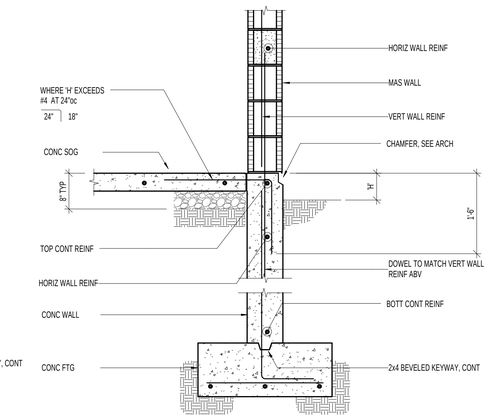

C4 S502 TYPICAL SINGLE MAT REINFORCING MASONRY WALL ON CONCRETE FOUNDATION WALL
NO SCALE

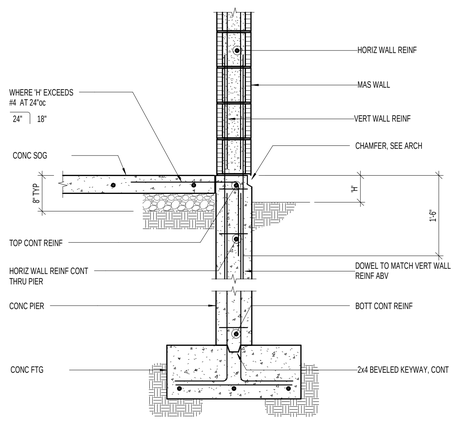

B1 S502 TYPICAL SINGLE MAT REINFORCING MASONRY COLUMN ON CONCRETE FOUNDATION WALL
NO SCALE

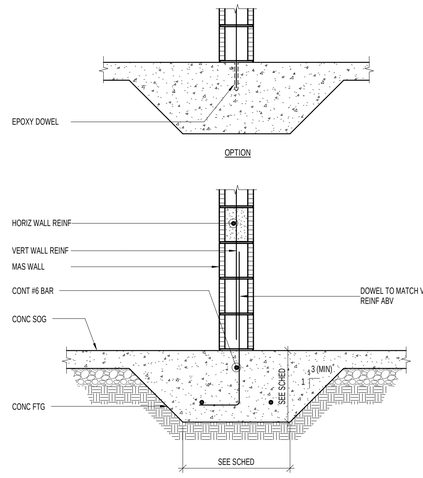

B2 S502 THICKENED SLAB FOOTING DETAIL AT 8" MASONRY WALLS
NO SCALE

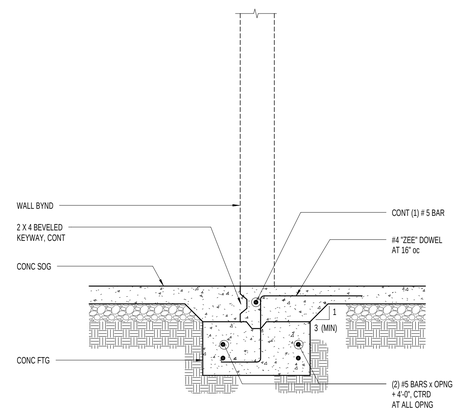

B3 S502 WALL OPENING DETAIL AT 8" WALLS
NO SCALE

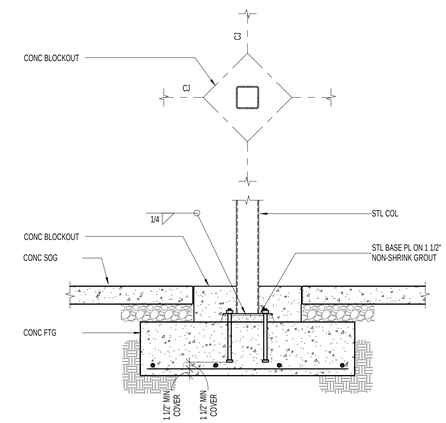

B4 S502 TYPICAL STEEL COLUMN TO CONCRETE FOOTING
NO SCALE

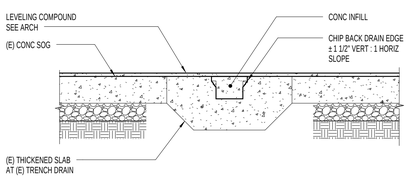

A1 S502 TRENCH DRAIN INFILL DETAIL
NO SCALE

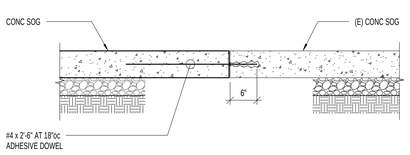

A1a S502 NEW SLAB TO EXISTING SLAB DETAIL
NO SCALE

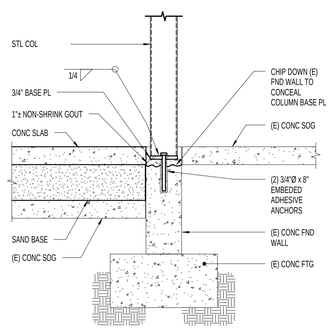

A1b S502 STEEL COLUMN AT EXISTING FOUNDATION WALL
NO SCALE

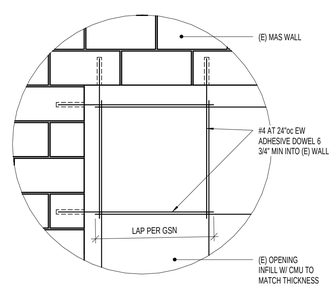

A2 S502 INFILL WALL DETAIL
NO SCALE

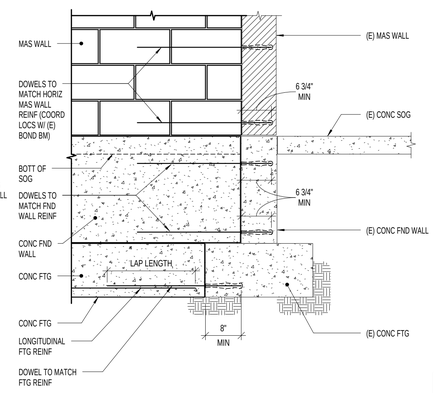

A3 S502 WALL AND FOOTING TO EXISTING WALL AND FOOTING
NO SCALE

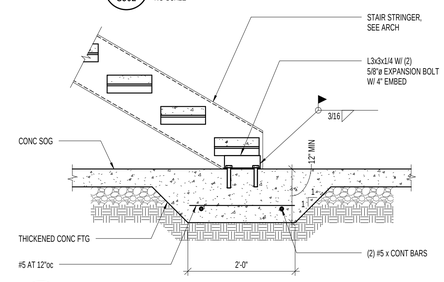

A4 S502 TYPICAL THICKENED SLAB AT BASE OF STAIRS
NO SCALE

SEPTEMBER 20, 2010
FOR CONSTRUCTION

NOTE:
THESE STRUCTURAL DRAWINGS ARE BASED ON ARCHITECTURAL DRAWINGS DATED 07.23.2010

DIMENSIONS AND ELEVATIONS, AS THEY RELATE TO THE BUILDING IN GENERAL, i.e. GRID TO GRID DIMENSIONS OR DECK BEARING ELEVATIONS, ARE SUPPLIED BY THE ARCHITECT. THEY ARE PROVIDED ON THE STRUCTURAL PLANS AND DETAILS FOR THE CONVENIENCE OF THE CONTRACTOR. VERIFY DIMENSIONS AND ELEVATIONS WITH ARCHITECTURAL DRAWINGS.

DUNN
DUNN ASSOCIATES, INC
Consulting Structural Engineers
EMAIL: ENG@DUNN-SE.COM
PH: 801-575-8877 FAX: 801-575-8875

This drawing, as an instrument of professional service, is the property of DUNN ASSOCIATES INC. and shall not be used, in whole or part for any other project without the written permission of an authorized representative of DUNN ASSOCIATES INC. Unauthorized use will be prosecuted to the fullest extent of the law. Copyright © 2009 by DUNN ASSOCIATES INC.

CLIENT
UDOT CONNECTING COMMUNITIES
REGION 4 OFFICE REMODEL
708 SOUTH 100 WEST
RICHFIELD UTAH 84701

DESIGNER
ARCHIPLEX GROUP
architecture · planning · design services
255 Crossroad Square
Salt Lake City, UT 84115
P:(801) 961-7070
F:(801) 961-7373

CONSULTANTS

PROFESSIONAL SEAL

ISSUE

MARK	DATE	DESCRIPTION
	09/20/2010	DFCM REVIEW COMMENTS

DFCM PROJECT NO:	10046900
DFCM CONTRACT NO:	107453
DUNN PROJECT NO:	10069
DRAWN BY:	CLAYTON E. COSTER
DESIGN BY:	KYLE MULLIKIN
REVIEW BY:	PAUL McMULLIN
SCALE:	AS NOTED
DATE:	SEPTEMBER 20, 2010

SHEET TITLE
FOOTING AND FOUNDATION DETAILS

S502

9/16/2010 4:42:36 PM

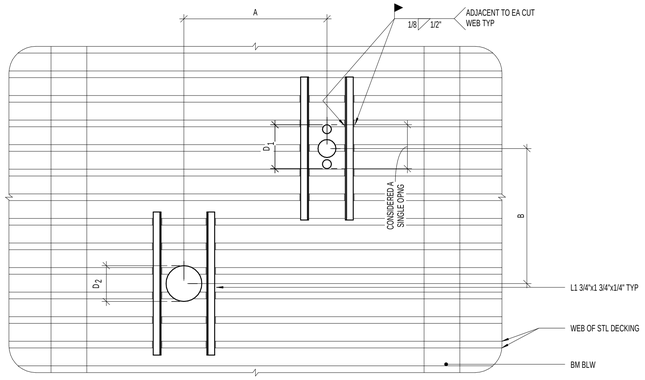

NOTES:
1. THIS DETAIL APPLIES TO HOLES CUTTING NO MORE THAN:
   -3 ADJACENT WEBS FOR 6" AND 8" (152 AND 203mm) MODEL DECK
   -2 ADJACENT WEBS FOR 12" (305mm) MODULE DECK
   -3 INDIVIDUAL HOLES LESS THAN 6" IN DIAMETER AND CUTTING NO MORE THAN ONE WEB DO NOT REQUIRE REINFORCING.
2. OPENINGS SHALL BE BLOCKED OUT AND THE DECK LEFT INTACT. AFTER THE CONCRETE HAS CURED, THE DECK IN THE AREA OF THE OPENING CAN BE REMOVED.
3. ANGLES SHALL BE PLACED ON TOP OF THE DECK, ANGLES SHAL EXTEND 3 WEBS PAST THE DECK OPENING (TYP)
   IF DIMENSION A IS >4D$_1$, 4D$_2$, OR 32" (812mm) WHICHEVER IS LARGER, THERE IS NO RESTRICTION ON DIMENSION B
   IF DIMENSION B IS >4D$_1$, 4D$_2$, OR 32" (813mm) WHICHEVER IS LARGER, THERE IS NO RESTRICTION ON DIMENSION A
4. IF DIMENSIONS A AND B ARE <4D$_1$, 4D$_2$, OR 32" (813mm) WHICHEVER IS LARGER, THE OPENING GROUP SHALL BE CONSIDERED AS A SINGLE HOLE, AND SHALL BE REINFORCED AS REQUIRED FOR THE LARGER OPENING AS SHOWN IN DETAILS

INDIVIDUAL HOLES LESS THAN 6" (152mm) IN DIAMETER AND CUTTING NO MORE THAN ONE WEB NEED NO REINF

C1 / S601 TYPICAL SMALL OPENING IN FLOOR SLAB
NO SCALE

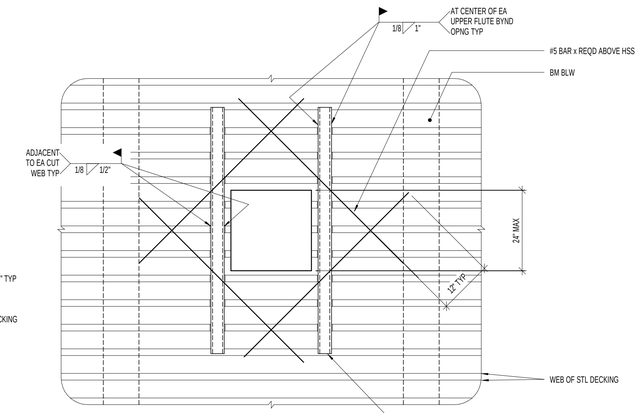

NOTES:
1. THIS DETAIL APPLIES TO OPENING UP TO 24".
2. TUBES SHALL BE PLACED ON TOP OF DECK.
3. IF THE OPENING OR GROUP OF OPENINGS OCCURS IN ONE DECK UNIT, THE OPIORVG OPENING GROUP MAY BE CUT BEFORE POURING CONCRETE.
4. IF THE OPENING OR GROUP OF OPENINGS CUTS THROUGH TWO DECK UNITS, THE DECK SHALL NOT BE CUT UNTIL CONCRETE HAS BEEN PLACED AND CURED. AT THE TIME OF POURING, SUITABLE SLEEVES OR BULKHEADS SHALL BE PLACED AROUND THE OPENING.
5. SEE ADDITIONAL DETAILS IF OPENING IS GREATER THAN 24".

C3 / S601 TYPICAL MEDIUM OPENING IN FLOOR SLAB
NO SCALE

NOTES:
1. DECK BEARING ANGLE NOT REQUIRED IF DECK IS CUT TIGHT AROUND COLUMN.
2. SIMILAR AT BUILDING PERIMETER AND CORNERS.

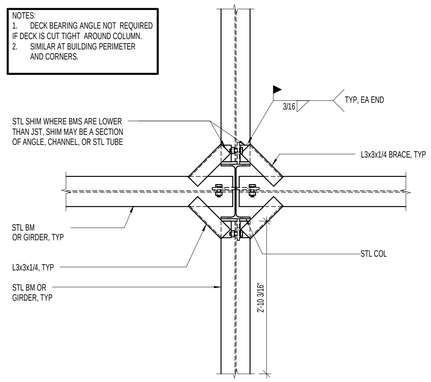

C4 / S601 TYPICAL DECK BEARING ANGLES AT COLUMNS (WHERE REQUIRED)
NO SCALE

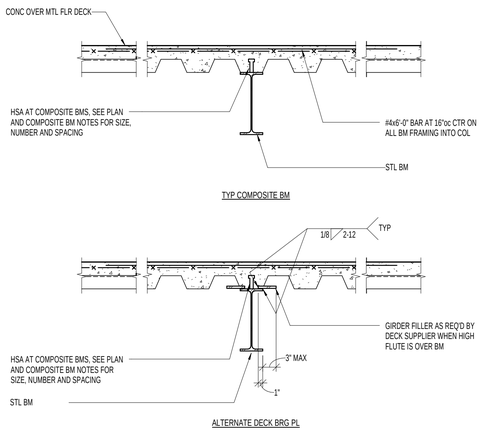

B1 / S601 TYPICAL COMPOSITE BEAM DETAILS
NO SCALE

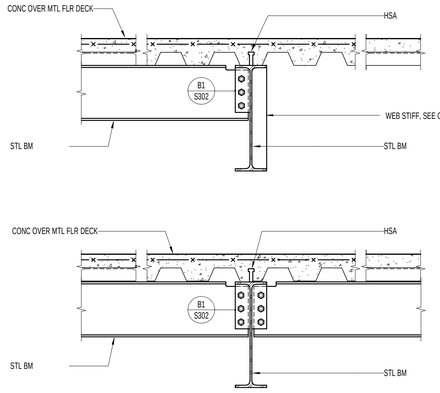

B2 / S601 TYPICAL STEEL BEAM TO STEEL BEAM CONNECTION DETAILS
NO SCALE

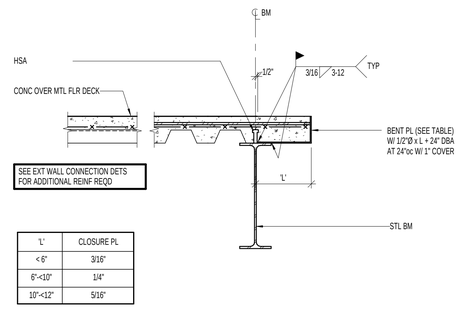

SEE EXT WALL CONNECTION DETS FOR ADDITIONAL REINF REQD

'L'	CLOSURE PL
< 6"	3/16"
6"-<10"	1/4"
10"-<12"	5/16"

B3 / S601 TYPICAL CLOSURE PLATE (OVERHANG 'L' ≤ 12")
NO SCALE

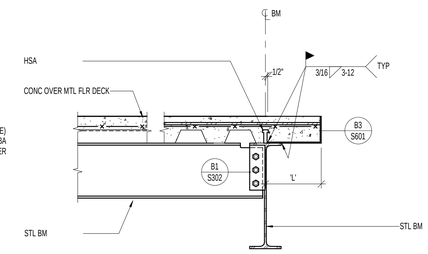

B4 / S601 TYPICAL SLAB EDGE CONDITION AT BEAM (OVERHANG 'L' ≤ 12")
NO SCALE

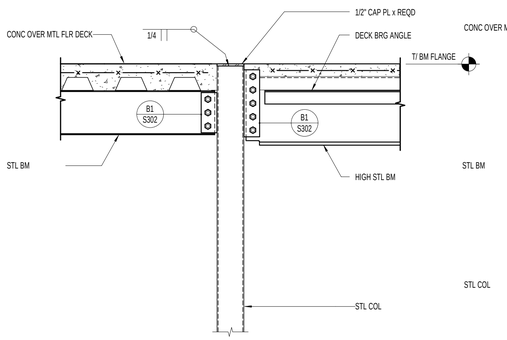

A1 / S601 HIGH GIRDER TO COLUMN CONNECTION DETAIL
NO SCALE

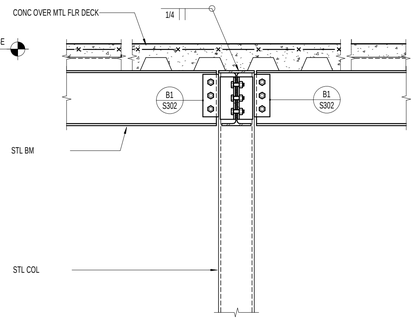

A2 / S601 TYPICAL STEEL BEAM TO COLUMN DETAIL
NO SCALE

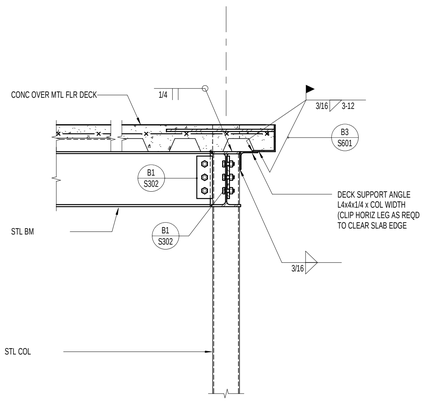

A3 / S601 TYPICAL SLAB EDGE AT STEEL COLUMN FLANGE (OVERHANG 'L' ≤ 12")
NO SCALE

SEPTEMBER 20, 2010
FOR CONSTRUCTION

NOTE:
THESE STRUCTURAL DRAWINGS ARE BASED ON ARCHITECTURAL DRAWINGS DATED 07.23.2010

DIMENSIONS AND ELEVATIONS, AS THEY RELATE TO THE BUILDING IN GENERAL, i.e. GRID TO GRID DIMENSIONS OR DECK BEARING ELEVATIONS, ARE SUPPLIED BY THE ARCHITECT. THEY ARE PROVIDED ON THE STRUCTURAL PLANS AND DETAILS FOR THE CONVENIENCE OF THE CONTRACTOR. VERIFY DIMENSIONS AND ELEVATIONS WITH ARCHITECTURAL DRAWINGS.

DUNN ASSOCIATES, INC
Consulting Structural Engineers
EMAIL: ENG@DUNN-SE.COM
PH: 801-575-8877 FAX: 801-575-8875

This drawing, as an instrument of professional service, is the property of DUNN ASSOCIATES INC. and shall not be used, in whole or part for any other project without the written permission of an authorized representative of DUNN ASSOCIATES INC. Unauthorized use will be prosecuted to the fullest extent of the law. Copyright © 2009 by DUNN ASSOCIATES INC.

CLIENT

UDOT CONNECTING COMMUNITIES

REGION 4 OFFICE REMODEL
708 SOUTH 100 WEST
RICHFIELD UTAH 84701

DESIGNER

ARCHIPLEX GROUP
architecture · planning · design services
255 Crossroad Square
Salt Lake City, UT 84115
P:(801) 961-7070
F:(801) 961-7373

CONSULTANTS

PROFESSIONAL SEAL

ISSUE

MARK	DATE	DESCRIPTION
	09/20/2010	DFCM REVIEW COMMENTS

DFCM PROJECT NO:	10046900
DFCM CONTRACT NO:	107453
DUNN PROJECT NO:	10069
DRAWN BY:	CLAYTON E. COSTER
DESIGN BY:	KYLE MULLIKIN
REVIEW BY:	PAUL McMULLIN
SCALE:	AS NOTED
DATE:	SEPTEMBER 20, 2010

SHEET TITLE

FLOOR FRAMING DETAILS

S601

9/16/2010 4:42:38 PM

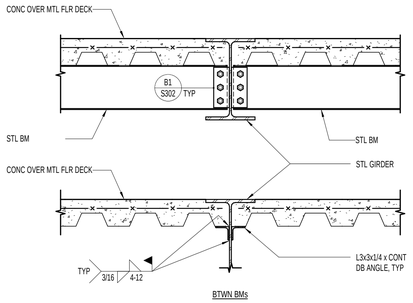

D1 S602 HIGH GIRDER DETAIL
NO SCALE

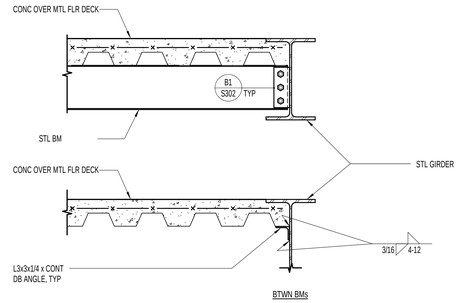

D2 S602 HIGH GIRDER DETAIL AT FLOOR EDGE
NO SCALE

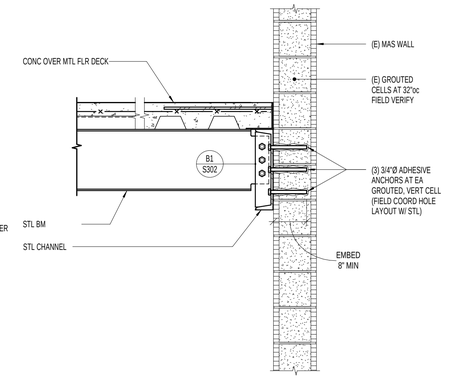

D3 S602 CHANNEL AND BEAM CONNECTION AT EXISTING MASONRY WALL
NO SCALE

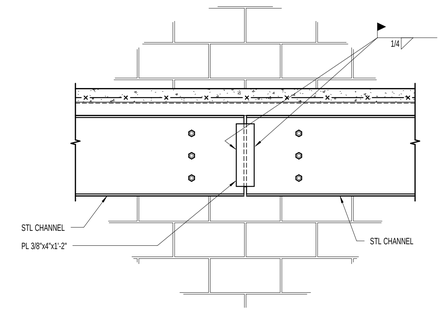

D4 S602 CHANNEL SPLICE DETAIL
NO SCALE

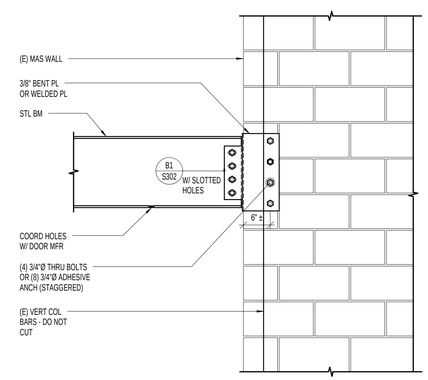

B3 S602 FOLDING PARTITION BEAM AT EXISTING WALL
NO SCALE

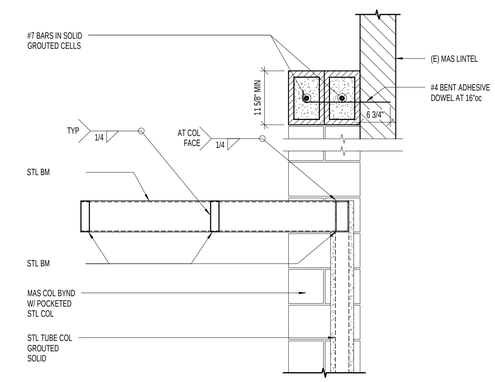

B4 S602 CANOPY FRAMING DETAIL
NO SCALE

SEPTEMBER 20, 2010
FOR CONSTRUCTION

NOTE:
THESE STRUCTURAL DRAWINGS ARE BASED ON ARCHITECTURAL DRAWINGS DATED 07.23.2010

DIMENSIONS AND ELEVATIONS, AS THEY RELATE TO THE BUILDING IN GENERAL, i.e. GRID TO GRID DIMENSIONS OR DECK BEARING ELEVATIONS, ARE SUPPLIED BY THE ARCHITECT. THEY ARE PROVIDED ON THE STRUCTURAL PLANS AND DETAILS FOR THE CONVENIENCE OF THE CONTRACTOR. VERIFY DIMENSIONS AND ELEVATIONS WITH ARCHITECTURAL DRAWINGS.

DUNN ASSOCIATES, INC
Consulting Structural Engineers
EMAIL: ENG@DUNN-SE.COM
PH: 801-575-8877 FAX: 801-575-8875

This drawing, as an instrument of professional service, is the property of DUNN ASSOCIATES INC. and shall not be used, in whole or part for any other project without the written permission of an authorized representative of DUNN ASSOCIATES INC. Unauthorized use will be prosecuted to the fullest extent of the law. Copyright © 2009 by DUNN ASSOCIATES INC.

CLIENT

UDOT CONNECTING COMMUNITIES

REGION 4 OFFICE REMODEL
708 SOUTH 100 WEST
RICHFIELD UTAH 84701

DESIGNER

ARCHIPLEX GROUP
architecture · planning · design services
255 Crossroad Square
Salt Lake City, UT 84115
P:(801) 961-7070
F:(801) 961-7373

CONSULTANTS

PROFESSIONAL SEAL

ISSUE

MARK	DATE	DESCRIPTION
	09/20/2010	DFCM REVIEW COMMENTS

DFCM PROJECT NO:	10046900
DFCM CONTRACT NO:	107453
DUNN PROJECT NO:	10069
DRAWN BY:	CLAYTON E. COSTER
DESIGN BY:	KYLE MULLIKIN
REVIEW BY:	PAUL McMULLIN
SCALE:	AS NOTED
DATE:	SEPTEMBER 20, 2010

SHEET TITLE

FLOOR FRAMING DETAILS

S602

9/16/2010 4:42:40 PM

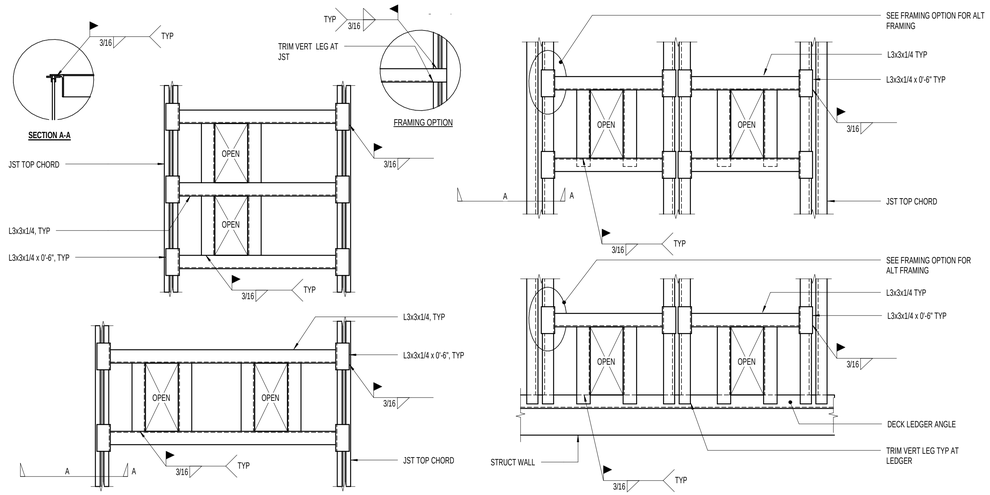

C1 S701 TYPICAL ROOF DRAIN SUPPORT (PLAN VIEW)
NO SCALE

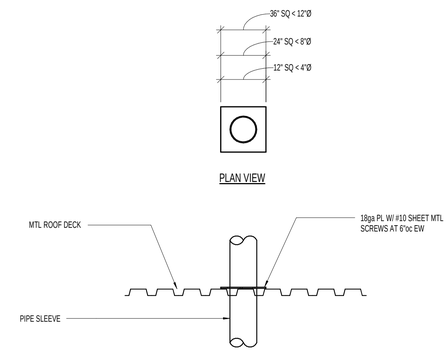

C3 S701 TYPICAL PIPE SLEEVE HOLE DETAIL (12"Ø OR LESS) THRU ROOF DECK
NO SCALE

NOTE:
WHERE CONCENTRATED LOADS ON OPEN WEB JSTS ARE LOCATED MORE THAN 6" FROM THE PANEL POINTS AT EITHER THE TOP OR BOTT CHORD, ADDITIONAL DIAGONAL WEB MEMBERS SHALL BE FURNISHED AND INSTALLED BY THE CONTRACTOR AT THE LOCATION OF THE CONCENTRATED LOAD

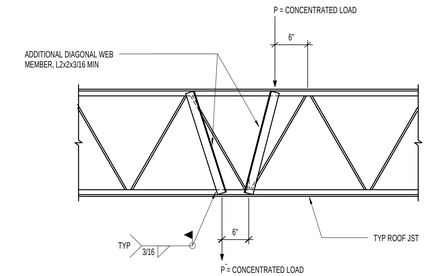

C4 S701 TYPICAL JOIST REINFORCING
NO SCALE

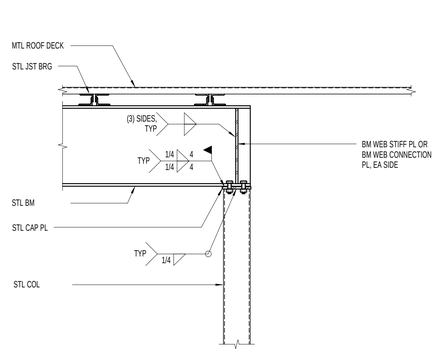

B1 S701 TYPICAL STEEL BEAM TO STEEL COLUMN
NO SCALE

CONTRACTOR TO DESIGN AND PROVIDE TEMPORARY SUPPORT FOR JOISTS. ASSUME TEMPORARY SUPPORTS MUST PROVIDE A MINIMUM OF 13,500 lbs (LRFD) FOR BID PURPOSES.

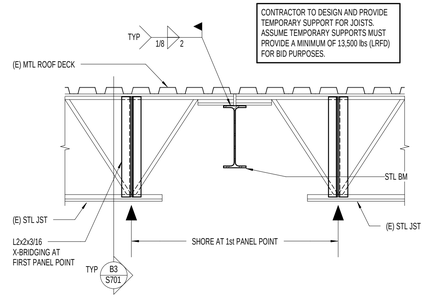

B2 S701 TYPICAL JOISTS BEARING ON STEEL BEAM
NO SCALE

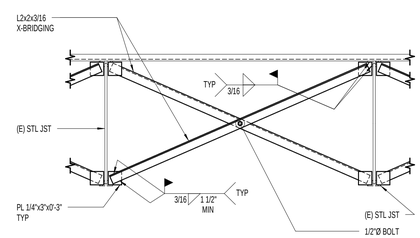

B3 S701 BRIDGING AT EXISTING JOISTS
NO SCALE

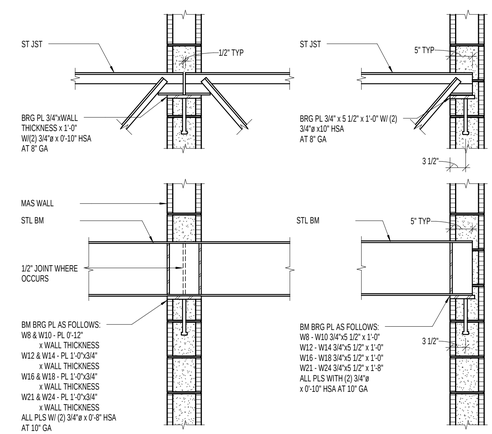

B4 S701 BEARING PLATE SCHEDULE FOR ROOF JOIST/BEAM
NO SCALE

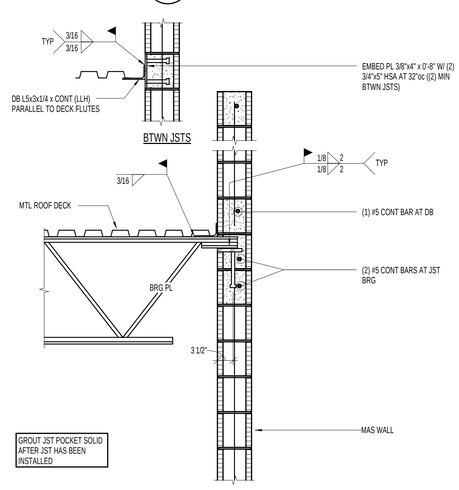

A1 S701 TYPICAL JOIST / DECK BEARING DETAIL
NO SCALE

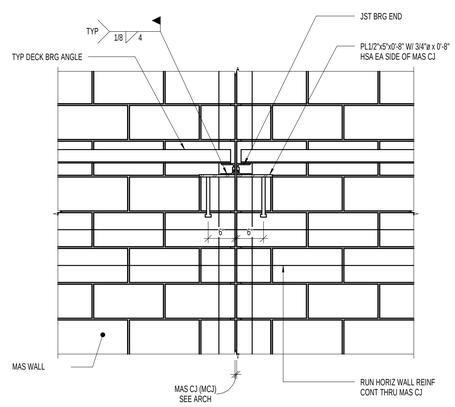

A2 S701 JOIST BEARING AT MASONRY CONTROL JOINT DETAIL
NO SCALE

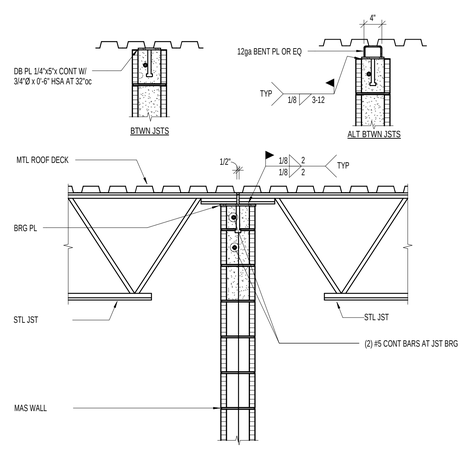

A3 S701 TYPICAL JOIST / DECK BEARING DETAIL
NO SCALE

SEPTEMBER 20, 2010
FOR CONSTRUCTION

NOTE:
THESE STRUCTURAL DRAWINGS ARE BASED ON ARCHITECTURAL DRAWINGS DATED 07.23.2010

DIMENSIONS AND ELEVATIONS, AS THEY RELATE TO THE BUILDING IN GENERAL, i.e. GRID TO GRID DIMENSIONS OR DECK BEARING ELEVATIONS, ARE SUPPLIED BY THE ARCHITECT. THEY ARE PROVIDED ON THE STRUCTURAL PLANS AND DETAILS FOR THE CONVENIENCE OF THE CONTRACTOR. VERIFY DIMENSIONS AND ELEVATIONS WITH ARCHITECTURAL DRAWINGS.

DUNN ASSOCIATES, INC
Consulting Structural Engineers
EMAIL: ENG@DUNN-SE.COM
PH: 801-575-8877 FAX: 801-575-8875

This drawing, as an instrument of professional service, is the property of DUNN ASSOCIATES INC. and shall not be used, in whole or part for any other project without the written permission of an authorized representative of DUNN ASSOCIATES INC. Unauthorized use will be prosecuted to the fullest extent of the law. Copyright © 2009 by DUNN ASSOCIATES INC.

CLIENT
UDOT CONNECTING COMMUNITIES
REGION 4 OFFICE REMODEL
708 SOUTH 100 WEST
RICHFIELD UTAH 84701

DESIGNER
ARCHIPLEX GROUP
architecture · planning · design services
255 Crossroad Square
Salt Lake City, UT 84115
P:(801) 961-7070
F:(801) 961-7373

CONSULTANTS

PROFESSIONAL SEAL

ISSUE

MARK	DATE	DESCRIPTION
	09/20/2010	DFCM REVIEW COMMENTS

DFCM PROJECT NO:	10046900
DFCM CONTRACT NO:	107453
DUNN PROJECT NO:	10069
DRAWN BY:	CLAYTON E. COSTER
DESIGN BY:	KYLE MULLIKIN
REVIEW BY:	PAUL McMULLIN
SCALE:	AS NOTED
DATE:	SEPTEMBER 20, 2010

SHEET TITLE
ROOF FRAMING DETAILS

S701

9/16/2010 4:42:42 PM

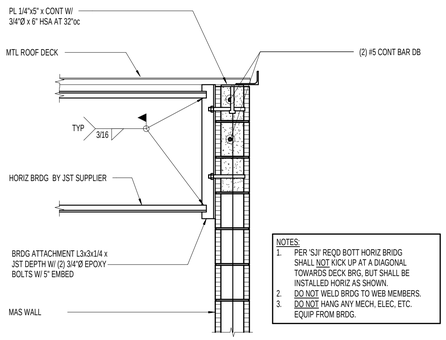

NOTES:
1. PER 'SJI' REQD BOTT HORIZ BRIDG SHALL NOT KICK UP AT A DIAGONAL TOWARDS DECK BRG, BUT SHALL BE INSTALLED HORIZ AS SHOWN.
2. DO NOT WELD BRDG TO WEB MEMBERS.
3. DO NOT HANG ANY MECH, ELEC, ETC. EQUIP FROM BRDG.

D1 / S702 TYPICAL DECK BEARING WITH BRIDGING DETAIL
NO SCALE

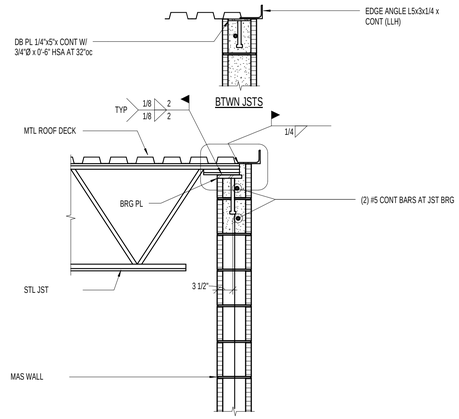

D2 / S702 TYPICAL JOIST / DECK BEARING DETAIL
NO SCALE

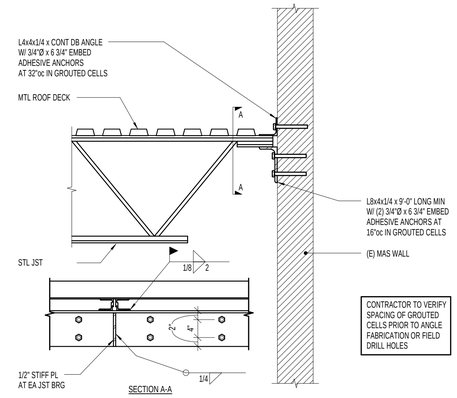

CONTRACTOR TO VERIFY SPACING OF GROUTED CELLS PRIOR TO ANGLE FABRICATION OR FIELD DRILL HOLES

D3 / S702 JOIST CONNECTION DETAIL TO EXISTING MASONRY WALL
NO SCALE

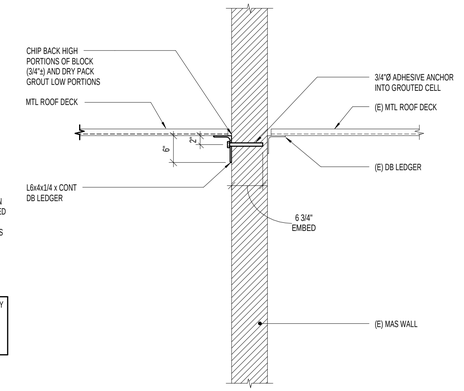

D4 / S702 ROOF DECK TO EXISTING MASONRY WALL
NO SCALE

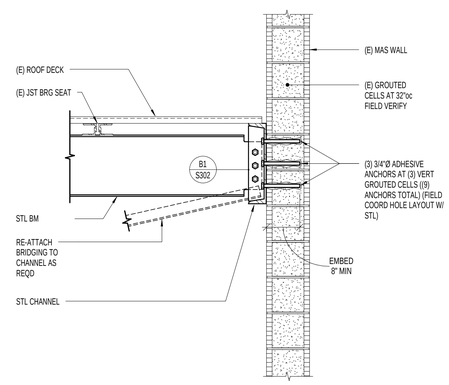

B2 / S702 ROOF BEAM CONNECTION AT EXISTING MASONRY WALL
NO SCALE

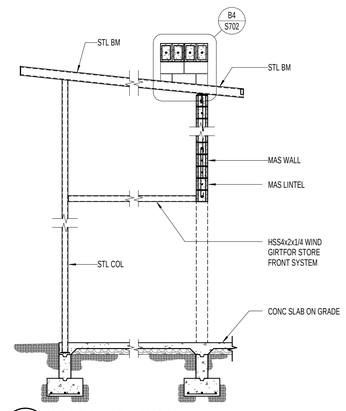

B3 / S702 SECTION AT CANOPY
NO SCALE

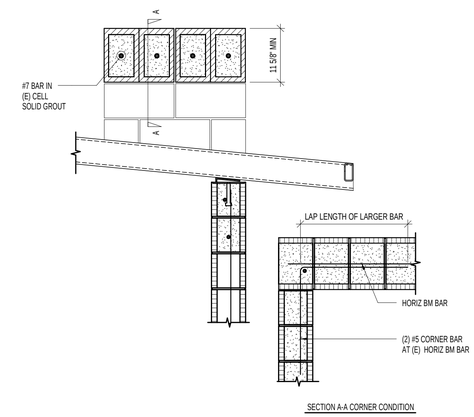

B4 / S702 MASONRY BAND AT FRONT ENTRY
NO SCALE

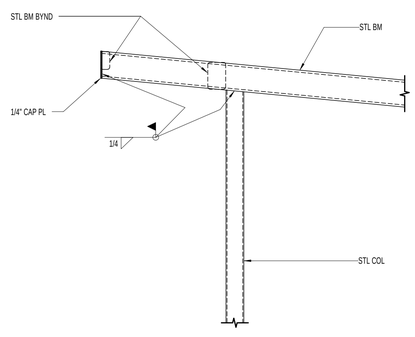

A2 / S702 CANOPY COLUMN TO BEAM CONNECTION
NO SCALE

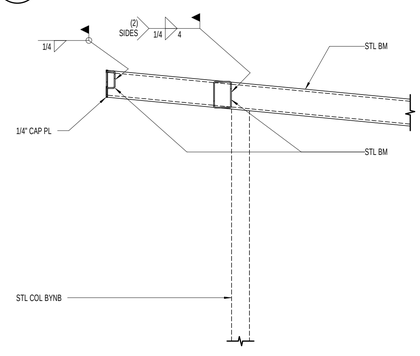

A3 / S702 CANOPY BEAM TO BEAM CONNECTION
NO SCALE

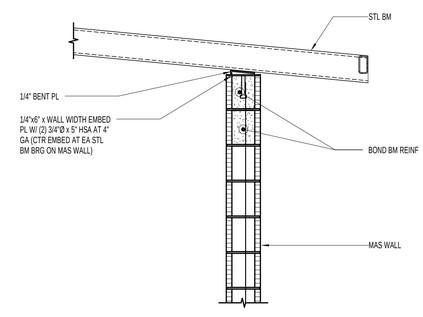

A4 / S702 STEEL BEAM TO MASONRY CONNECTION
NO SCALE

SEPTEMBER 20, 2010
FOR CONSTRUCTION

NOTE:
THESE STRUCTURAL DRAWINGS ARE BASED ON ARCHITECTURAL DRAWINGS DATED 07.23.2010

DIMENSIONS AND ELEVATIONS, AS THEY RELATE TO THE BUILDING IN GENERAL, i.e. GRID TO GRID DIMENSIONS OR DECK BEARING ELEVATIONS, ARE SUPPLIED BY THE ARCHITECT. THEY ARE PROVIDED ON THE STRUCTURAL PLANS AND DETAILS FOR THE CONVENIENCE OF THE CONTRACTOR. VERIFY DIMENSIONS AND ELEVATIONS WITH ARCHITECTURAL DRAWINGS.

DUNN ASSOCIATES, INC
Consulting Structural Engineers
EMAIL: ENG@DUNN-SE.COM
PH: 801-575-8877 FAX: 801-575-8875

This drawing, as an instrument of professional service, is the property of DUNN ASSOCIATES INC, and shall not be used, in whole or part for any other project without the written permission of an authorized representative of DUNN ASSOCIATES INC. Unauthorized use will be prosecuted to the fullest extent of the law. Copyright © 2009 by DUNN ASSOCIATES INC.

CLIENT

UDOT CONNECTING COMMUNITIES

REGION 4 OFFICE REMODEL
708 SOUTH 100 WEST
RICHFIELD UTAH 84701

DESIGNER

ARCHIPLEX GROUP
architecture · planning · design services
255 Crossroad Square
Salt Lake City, UT 84115
P:(801) 961-7070
F:(801) 961-7373

CONSULTANTS

PROFESSIONAL SEAL

ISSUE

MARK	DATE	DESCRIPTION
	09/20/2010	DFCM REVIEW COMMENTS

DFCM PROJECT NO:	10046900
DFCM CONTRACT NO:	107453
DUNN PROJECT NO:	10069
DRAWN BY:	CLAYTON E. COSTER
DESIGN BY:	KYLE MULLIKIN
REVIEW BY:	PAUL McMULLIN
SCALE:	AS NOTED
DATE:	SEPTEMBER 20, 2010

SHEET TITLE

ROOF FRAMING DETAILS

S702

9/16/2010 4:42:44 PM

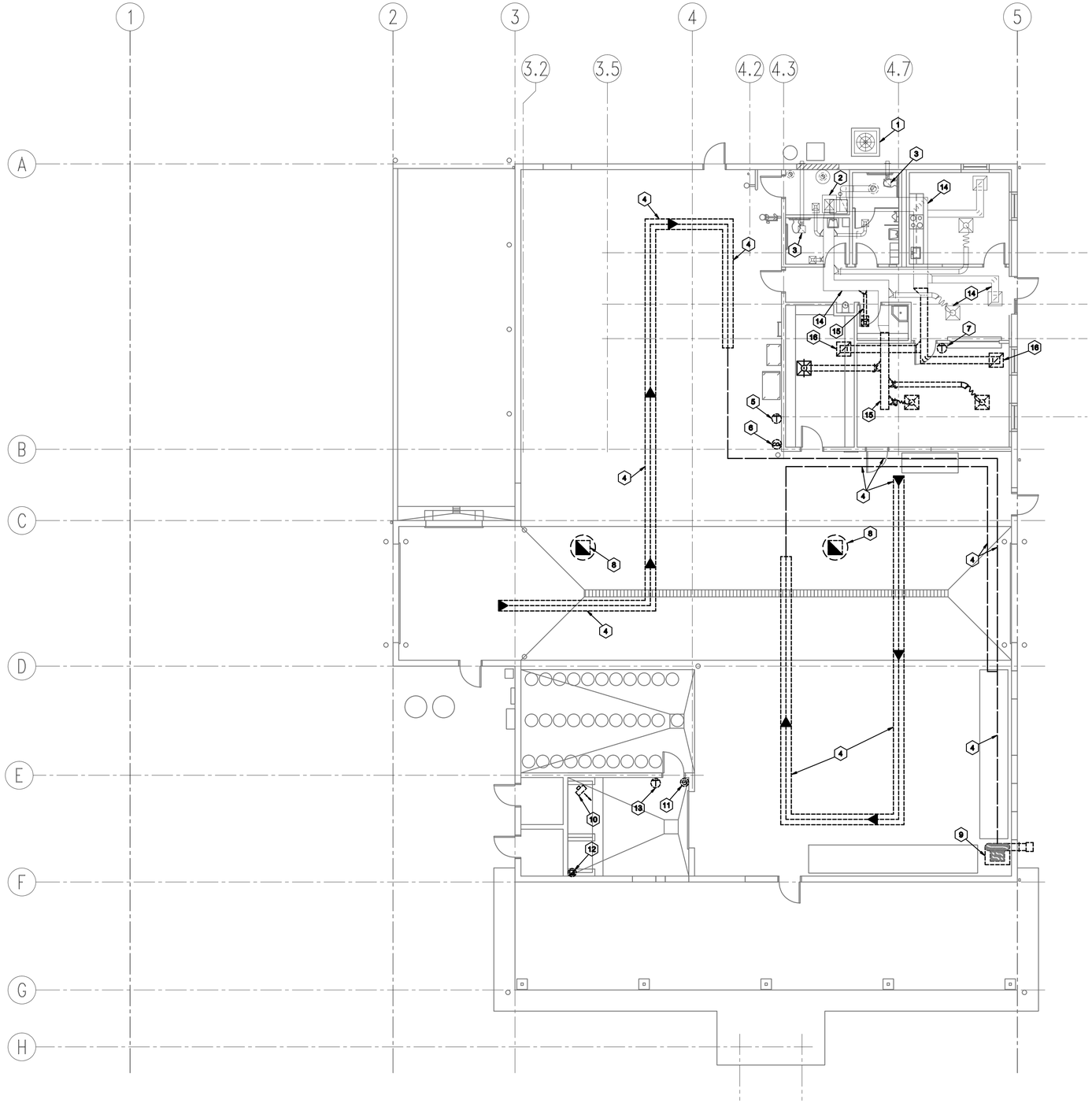

REFERENCE NOTES

1. EXISTING CONDENSING UNIT TO REMAIN INTACT.
2. EXISTING FURNACE AND ASSOCIATED DUCTWORK TO REMAIN INTACT.
3. EXISTING CEILING EXHAUST FAN AND ASSOCIATED DUCTWORK TO REMAIN INTACT.
4. REMOVE EXISTING RADIANT TUBE HEATING SYSTEM COMPLETE. REMOVE BURNERS, TUBING, REFLECTORS, VACUUM PIPE, CONTROLS AND ALL SUPPORTS. SALVAGE BURNERS TO OWNER.
5. REMOVE EXISTING THERMOSTAT AND ALL CONTROL WIRING. INSTALL CHROME PLATED BLANK COVER PLATE OVER ABANDONED J-BOX.
6. REMOVE EXISTING CARBON MONOXIDE SENSOR AND ALL CONTROL WIRING. INSTALL CHROME PLATED BLANK COVER PLATE OVER ABANDONED J-BOX.
7. REMOVE AND RELOCATE EXISTING THERMOSTAT.
8. REMOVE EXISTING ROOF MOUNTED EXHAUST FAN AND ASSOCIATED DUCTWORK. EXISTING ROOF CURB TO BE RE-USED.
9. REMOVE EXISTING RADIANT TUBE VACUUM PUMP AND ASSOCIATED DUCTWORK. REMOVE FLUE COMPLETE. PATCH REMAINING WALL OPENING WITH NEW CMU BLOCK TO MATCH EXISTING.
10. REMOVE EXISTING UNIT HEATER. REMOVE FLUE COMPLETE. REUSE ROOF OPENING FOR NEW PLUMBING VENT.
11. REMOVE EXISTING MAKE UP AIR DUCT INSIDE BLDG. ROOF DUCT AND PENTHOUSE ABOVE ROOF TO REMAIN INTACT.
12. REMOVE EXISTING ROOF MOUNTED EXHAUST FAN AND ASSOCIATED DUCTWORK. ROOF CURB TO REMAIN INTACT. COVER ROOF CURB WITH 18 GA. GALVANIZED SHEET METAL COVER.
13. REMOVE EXISTING THERMOSTAT, CONDUIT AND J-BOX COMPLETE.
14. EXISTING SUPPLY AND RETURN AIR DUCTWORK SERVING THIS AREA TO REMAIN INTACT.
15. REMOVE EXISTING S.A. DUCTWORK AS INDICATED. SEE DWG M101 FOR NEW WORK.
16. REMOVE EXISTING R.A. DUCTWORK AS INDICATED. SEE DWG M101 FOR NEW WORK.

MECHANICAL DEMOLITION PLAN

SCALE: 1/8" = 1'-0"

0 4' 8' 16'

NORTH

CLIENT

UDOT CONNECTING COMMUNITIES

REGION 4 OFFICE REMODEL
708 SOUTH 100 WEST
RICHFIELD UTAH 84701

DESIGNER

ARCHIPLEX GROUP
architecture • planning • design services
255 Crossroad Square
Salt Lake City, UT 84115
P:(801) 961-7070
F:(801) 961-7373

CONSULTANTS

OLSEN & PETERSON
consulting engineers, inc.
14 East 2700 South, Salt Lake City, UT 84115
Phone: (801) 486-4646 Fax: (801) 467-2531

PROFESSIONAL SEAL

LICENSED PROFESSIONAL ENGINEER
174126
PAUL W. LAIRD
STATE OF UTAH

ISSUE

MARK	DATE	DESCRIPTION
	AUGUST	DFCM REVIEW SUBMITTAL

DFCM PROJECT NO:	10046900
DFCM CONTRACT NO:	107453
ARCHIPLEX PROJECT NO:	1007.01
DRAWN BY:	STAFF
CHECKED BY:	PWL
SCALE:	1/8"=1'-0"
DATE:	SEPTEMBER 16, 2010

SHEET TITLE

MECHANICAL DEMOLITION PLAN

MD101

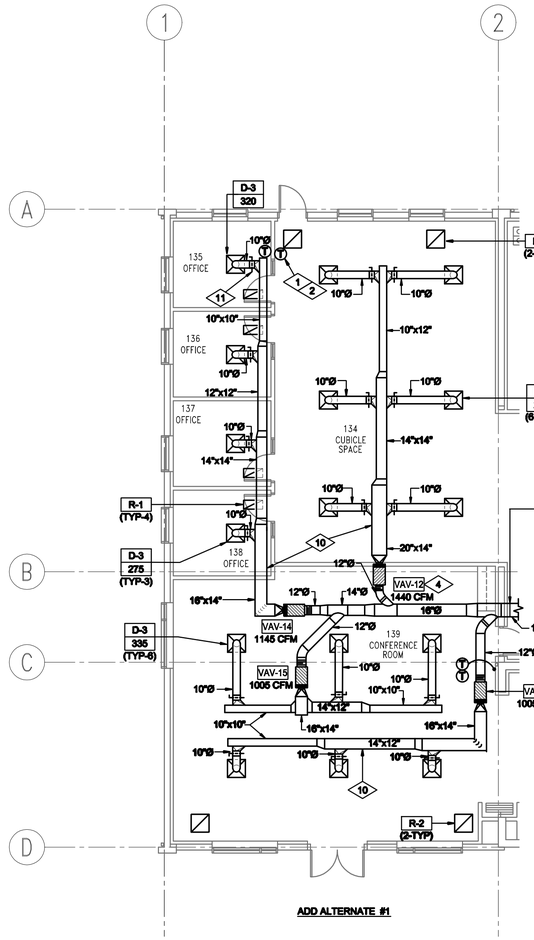

MAIN LEVEL MECHANICAL PLAN – ADD ALTERNATE

SCALE: 1/8" = 1'-0"

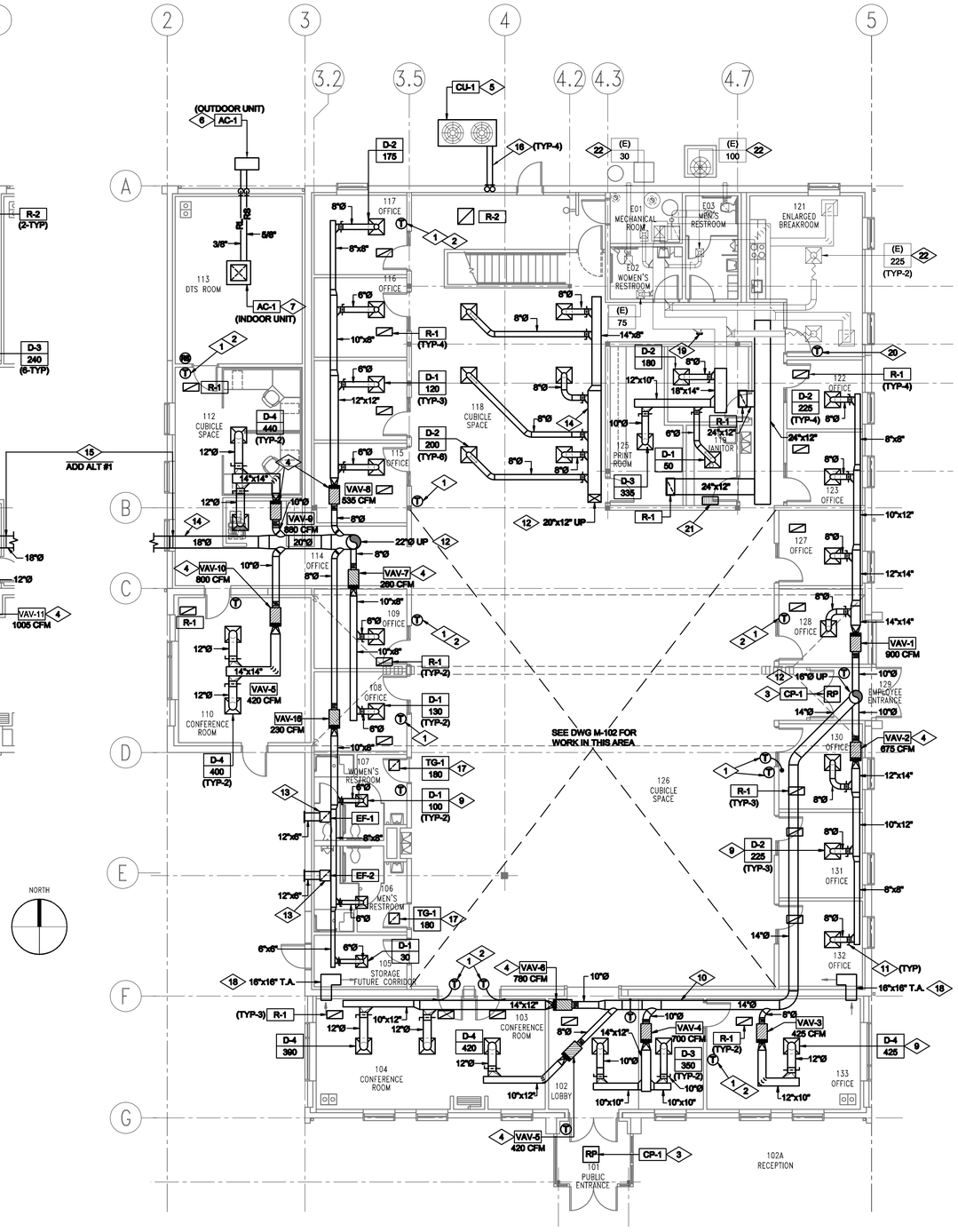

MAIN LEVEL MECHANICAL PLAN

SCALE: 1/8" = 1'-0"

REFERENCE NOTES

1. THERMOSTAT. MOUNT 54 INCHES A.F.F. (TYP)
2. ALL TEMPERATURE CONTROL WIRING INSIDE WALLS SHALL BE INSTALLED IN EMT CONDUIT. TEMPERATURE CONTROL WIRING ABOVE CEILING MAY BE PLENUM RATED CABLE. (TYP)
3. INSTALL RADIANT CEILING PANEL IN THIS LOCATION. COORDINATE LOCATION WITH LIGHTING AND FIRE SPRINKLERS.
4. INSTALL VAV REHEAT BOX IN THIS LOCATION. SEE DETAIL 1/M503. (TYP)
5. INSTALL CONDENSING UNIT IN THIS LOCATION. MOUNT ON 6 INCH HIGH CONCRETE PAD. PROVIDE OPERATION AND SERVICE CLEARANCES PER MANUFACTURERS INSTALLATION INSTRUCTIONS. SEE INSTALLATION DETAIL 1/M502.
6. INSTALL HEAT PUMP OUTDOOR UNIT IN THIS LOCATION. MOUNT ON 6 INCH HIGH CONCRETE PAD. PROVIDE OPERATION AND SERVICE CLEARANCES PER MANUFACTURERS INSTALLATION INSTRUCTIONS. SEE INSTALLATION DETAIL 6/M502.
7. INSTALL HEAT PUMP INDOOR UNIT IN THIS LOCATION. MOUNT FLUSH WITH CEILING. COORDINATE LOCATION WITH LIGHTS AND FIRE SPRINKLER SYSTEM.
8. INSTALL COMBINATION FIRE/SMOKE DAMPER W/ 120 VOLT ACTUATOR AT DUCT/WALL PENETRATION PROVIDE U.L. RATED DUCT ACCESS DOOR.
9. INSTALL DIFFUSERS AND GRILLES AS INDICATED. REFER TO ARCHITECTURAL REFLECTED CEILING PLANS FOR EXACT LOCATION. (TYP)
10. RUN DUCTWORK HIGH CLOSE TO ROOF STRUCTURE. COORDINATE LOCATION WITH ELECTRICAL AND PLUMBING TRADES.
11. VOLUME DAMPER (TYP).
12. FOR CONTINUATION OF DUCTWORK SEE DWG M102
13. INSTALL CEILING MOUNTED EXHAUST FAN IN THIS LOCATION. EXTEND E.A. DUCT OF SIZE INDICATED TO EXTERIOR WALL. PROVIDE MANUFACTURERS STANDARD WALL CAP AND INSECT SCREEN.
14. RUN DUCTWORK HIGH CLOSE TO STRUCTURE. COORDINATE LOCATION WITH ELECTRICAL AND PLUMBING TRADES.
15. IF ADD ALTERNATE #1 IS ACCEPTED BY THE OWNER, CONTRACTOR SHALL EXTEND 18" DIA. SUPPLY AIR DUCT TO BLDG ADDITION AS INDICATED. IF ADD ALTERNATE #1 IS REJECTED BY THE OWNER, CONTRACTOR SHALL CAP AND TERMINATE 18" DIA. SUPPLY AIR DUCT AS INDICATED.
16. EXTEND REFRIGERANT LINES TO AIR HANDLER. SEE DETAIL 1/M502.
17. TRANSFER AIR DUCT OPEN TO PLENUM ABOVE.
18. INSTALL T.A. DUCT ABOVE CEILING AND THROUGH CMU WALL.
19. CAP DUCT IN THIS LOCATION.
20. RELOCATE EXISTING THERMOSTAT TO THIS LOCATION.
21. RADIANT CEILING PANEL WALL MOUNTED CONTROL MODULE.
22. BALANCE EXISTING DIFFUSER TO CFM INDICATED.

CLIENT

UDOT CONNECTING COMMUNITIES

REGION 4 OFFICE REMODEL
708 SOUTH 100 WEST
RICHFIELD UTAH 84701

DESIGNER

ARCHIPLEX GROUP
architecture • planning • design services
255 Crossroad Square
Salt Lake City, UT 84115
P:(801) 961-7070
F:(801) 961-7373

CONSULTANTS

OLSEN & PETERSON
consulting engineers, inc.
14 East 2700 South, Salt Lake City, UT 84115
Phone: (801) 486-4646 Fax: (801) 467-2531

PROFESSIONAL SEAL

LICENSED PROFESSIONAL ENGINEER # 174126 PAUL W. LAIRD STATE OF UTAH

ISSUE

MARK	DATE	DESCRIPTION
	AUGUST	DFCM REVIEW SUBMITTAL

DFCM PROJECT NO:	10046900
DFCM CONTRACT NO:	107453
ARCHIPLEX PROJECT NO:	1007.01
DRAWN BY:	STAFF
CHECKED BY:	PWL
SCALE:	1/8"=1'-0"
DATE:	SEPTEMBER 16, 2010

SHEET TITLE

MAIN LEVEL MECHANICAL PLAN

M101

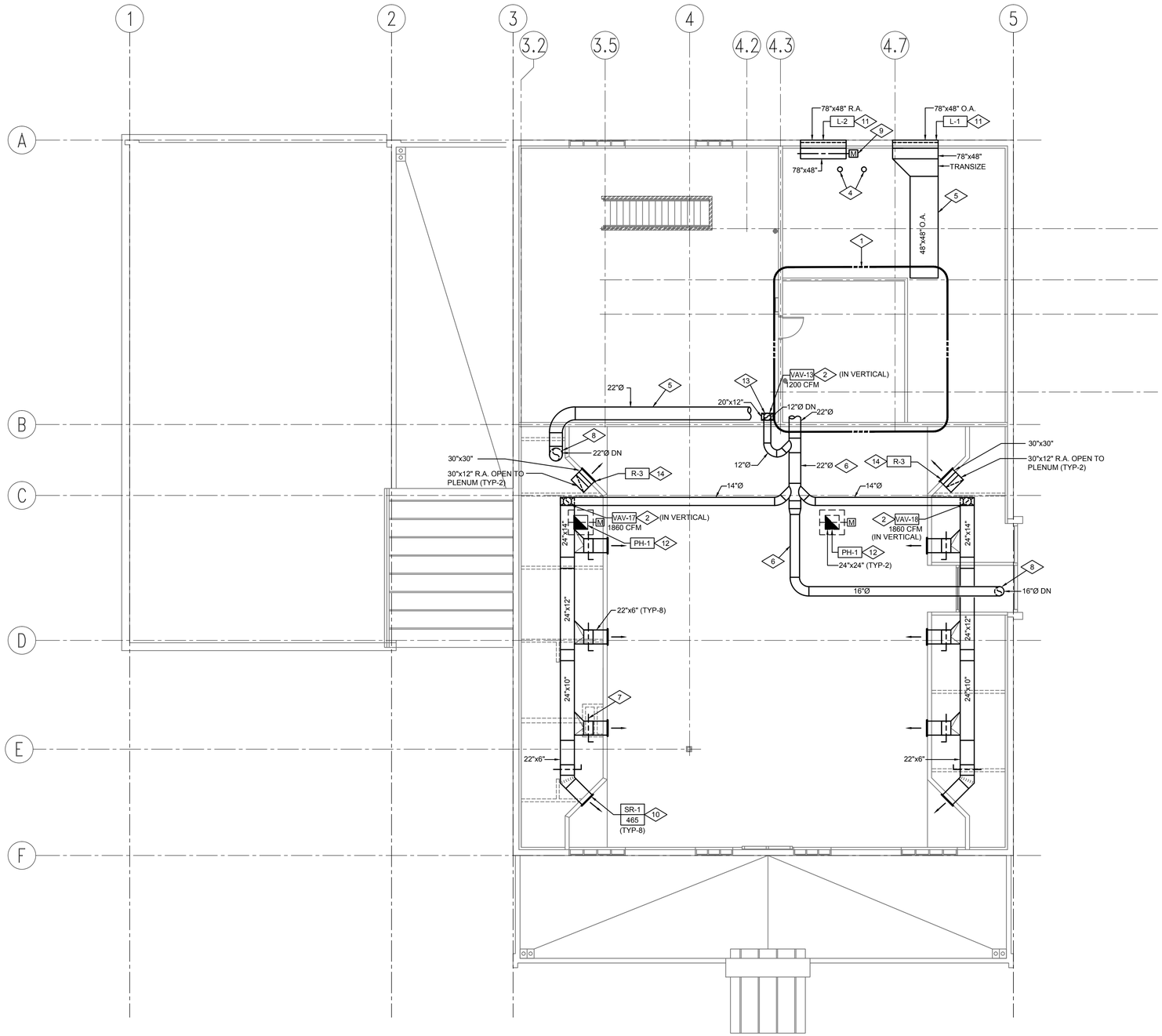

REFERENCE NOTES

1. FOR MECHANICAL WORK IN THIS AREA SEE DRAWING M401.
2. INSTALL VAV REHEAT BOX IN VERTICAL DUCT IN THIS LOCATION. SEE DETAIL 1/M503.
3. INSTALL COMBINATION FIRE/SMOKE DAMPER W/ 120 VOLT ACTUATOR AT DUCT/WALL PENETRATION PROVIDE U.L. RATED DUCT ACCESS DOOR.
4. EXISTING FURNACE AND WATER HEATER FLUES THROUGH ROOF. COORDINATE LOCATION OF NEW WORK WITH EXISTING FLUES.
5. RUN DUCTWORK HIGH CLOSE TO ROOF STRUCTURE. COORDINATE LOCATION WITH ELECTRICAL AND PLUMBING TRADES.
6. EXTEND ROUND DUCTWORK OF SIZE INDICATED THROUGH EXISTING OPEN WEB ROOF TRUSSES.
7. VOLUME DAMPER. (TYP)
8. FOR CONTINUATION OF DUCTWORK SEE DWG M101.
9. MOTORIZED DAMPER. (TYP)
10. INSTALL SIDEWALL REGISTER EVENLY SPACED. TOP OF GRILLE SHALL BE 12'-0" A.F.F.
11. INSTALL LOUVER EVEN WITH CAL-WALL WINDOWS.
12. INSTALL PENTHOUSE ON EXISTING ROOF CURB INSTALL MOTORIZED RELIEF AIR DAMPER. (TYP-2)
13. SLEEVE AND FRAME MEZZANINE FLOOR OPENING FOR SUPPLY AIR DUCT.
14. MOUNT BOTTOM OF R.A. GRILLE 11'-6" A.F.F.

MEZZANINE LEVEL MECHANICAL PLAN

SCALE: 1/8" = 1'-0"

0 4' 8' 16'

NORTH

CLIENT

UDOT CONNECTING COMMUNITIES

REGION 4 OFFICE REMODEL
708 SOUTH 100 WEST
RICHFIELD UTAH 84701

DESIGNER

ARCHIPLEX GROUP
architecture • planning • design services
255 Crossroad Square
Salt Lake City, UT 84115
P:(801) 961-7070
F:(801) 961-7373

CONSULTANTS

OLSEN & PETERSON
consulting engineers, inc.
14 East 2700 South, Salt Lake City, UT 84115
Phone: (801) 486-4646 Fax: (801) 467-2531

PROFESSIONAL SEAL

REGISTERED PROFESSIONAL ENGINEER
174126
PAUL W. LAIRD
STATE OF UTAH

ISSUE

MARK	DATE	DESCRIPTION
	AUGUST	DFCM REVIEW SUBMITTAL

DFCM PROJECT NO:	10046900
DFCM CONTRACT NO:	107453
ARCHIPLEX PROJECT NO:	1007.01
DRAWN BY:	STAFF
CHECKED BY:	PWL
SCALE:	1/8"=1'-0"
DATE:	SEPTEMBER 16, 2010

SHEET TITLE

MEZZANINE MECHANICAL PLAN

M102

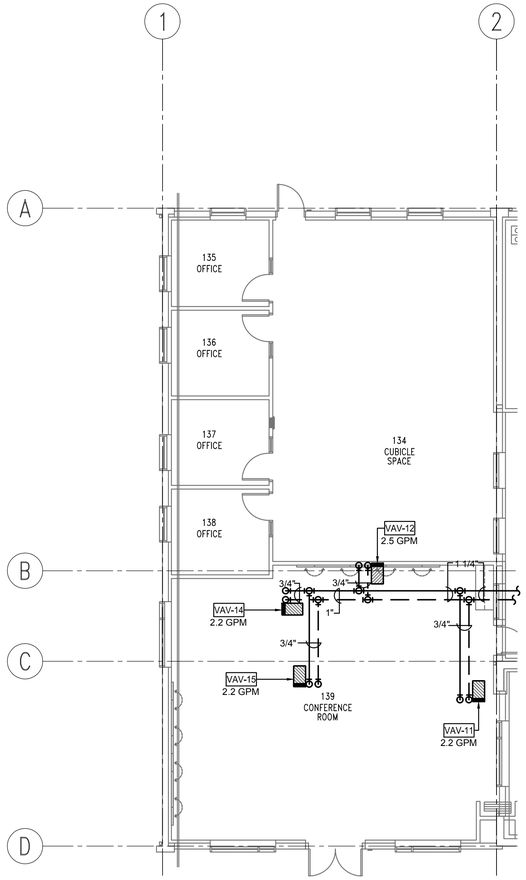

MAIN LEVEL MECHANICAL PIPING PLAN – ADD ALTERNATE

SCALE: 1/8" = 1'-0"

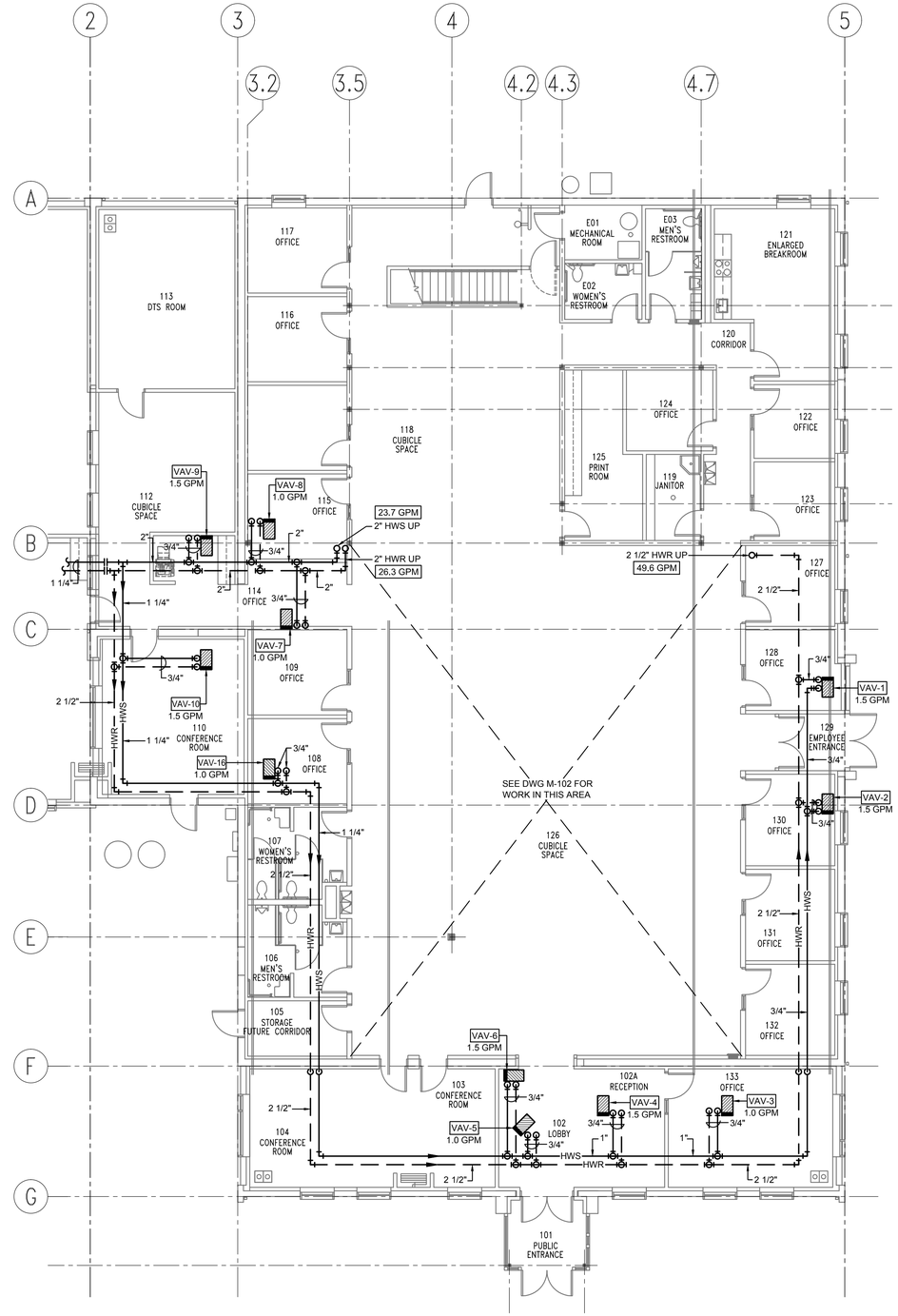

MAIN LEVEL MECHANICAL PIPING PLAN

SCALE: 1/8" = 1'-0"

NORTH

CLIENT

UDOT CONNECTING COMMUNITIES

REGION 4 OFFICE REMODEL
708 SOUTH 100 WEST
RICHFIELD UTAH 84701

DESIGNER

ARCHIPLEX GROUP
architecture • planning • design services
255 Crossroad Square
Salt Lake City, UT 84115
P:(801) 961-7070
F:(801) 961-7373

CONSULTANTS

OLSEN & PETERSON
consulting engineers, inc.
14 East 2700 South, Salt Lake City, UT 84115
Phone: (801) 486-4646 Fax: (801) 467-2531

PROFESSIONAL SEAL

REGISTERED PROFESSIONAL ENGINEER # 174126 PAUL W. LAIRD STATE OF UTAH

ISSUE

MARK	DATE	DESCRIPTION
	AUGUST	DFCM REVIEW SUBMITTAL

DFCM PROJECT NO:	10046900
DFCM CONTRACT NO:	107453
ARCHIPLEX PROJECT NO:	1007.01
DRAWN BY:	STAFF
CHECKED BY:	PWL
SCALE:	1/8"=1'-0"
DATE:	SEPTEMBER 16, 2010

SHEET TITLE

MAIN LEVEL MECHANICAL PIPING PLAN

M103

REFERENCE NOTES

1. FOR MECHANICAL WORK IN THIS AREA SEE DRAWING M401.
2. RUN REFRIGERATION LIQUID AND SUCTION LINES CONCEALED IN EXTERIOR WALLS AND ABOVE CEILING IN ATTIC SPACES. MAINTAIN NEGATIVE SLOPE BACK TO CONDENSING UNIT. SEE PIPING SUPPORT DETAILS 4/M502.
3. EXTEND HWS AND HWR PIPING TO VAV BOX REHEAT COIL. SEE COIL CONNECTION DETAIL 1/M104.
4. RUN PIPING HIGH THROUGH STRUCTURE. COORDINATE LOCATION WITH MECHANICAL DUCTWORK AND LIGHTING.
5. FOR CONTINUATION OF PIPING SEE DWG M103.

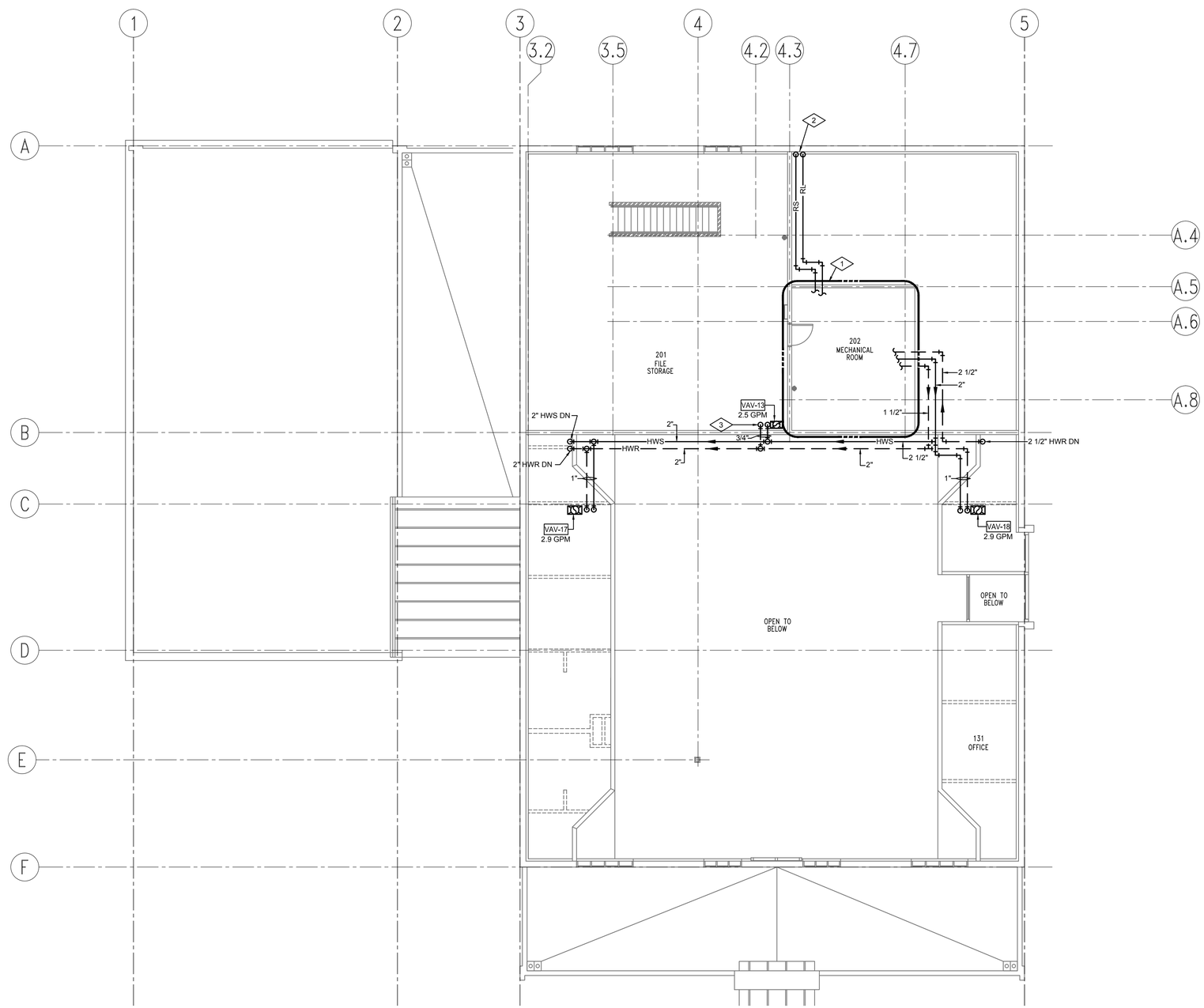

MEZZANINE LEVEL MECHANICAL PIPING PLAN

SCALE: 1/8" = 1'-0"

0 4' 8' 16'

NORTH

CLIENT

UDOT CONNECTING COMMUNITIES

REGION 4 OFFICE REMODEL
708 SOUTH 100 WEST
RICHFIELD UTAH 84701

DESIGNER

ARCHIPLEX GROUP
architecture · planning · design services
255 Crossroad Square
Salt Lake City, UT 84115
P:(801) 961-7070
F:(801) 961-7373

CONSULTANTS

OLSEN & PETERSON
consulting engineers, inc.
14 East 2700 South, Salt Lake City, UT 84115
Phone: (801) 486-4646 Fax: (801) 467-2531

PROFESSIONAL SEAL

REGISTERED PROFESSIONAL ENGINEER
174126
PAUL W. LAIRD
STATE OF UTAH

ISSUE

MARK	DATE	DESCRIPTION
	AUGUST	DFCM REVIEW SUBMITTAL

DFCM PROJECT NO:	10046900
DFCM CONTRACT NO:	107453
ARCHIPLEX PROJECT NO:	1007.01
DRAWN BY:	STAFF
CHECKED BY:	PWL
SCALE:	1/8"=1'-0"
DATE:	SEPTEMBER 16, 2010

SHEET TITLE

MEZZANINE LEVEL
MECHANICAL PIPING PLAN

M104

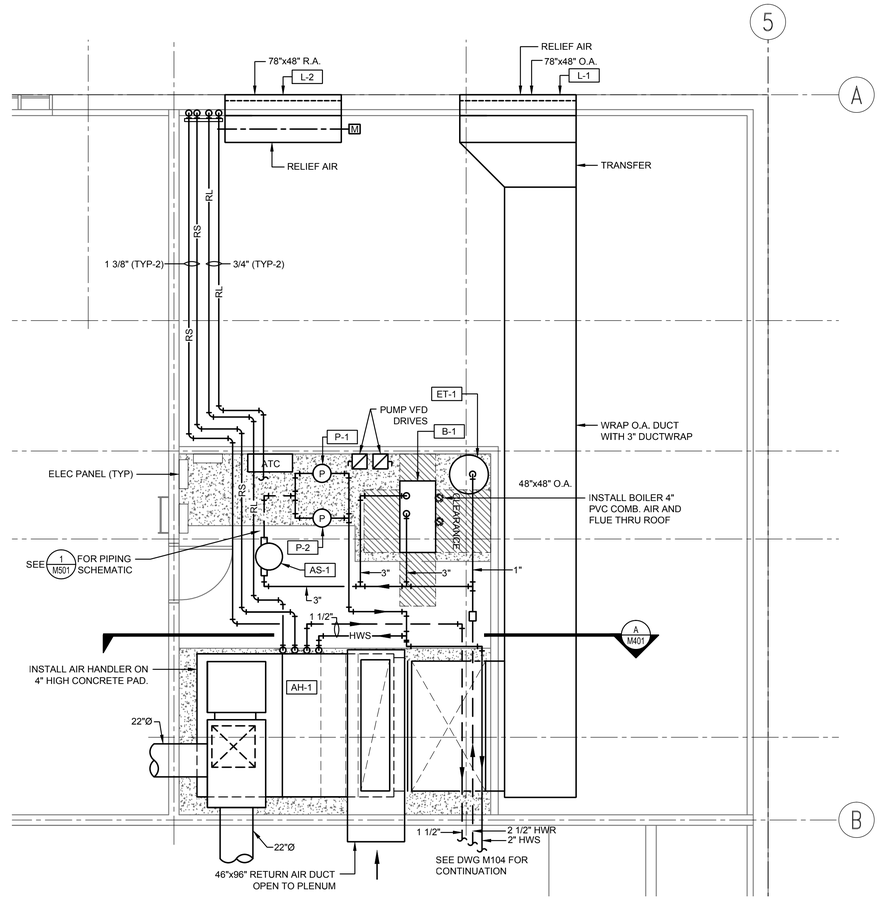

MEZZANINE MECHANICAL ROOM PLAN

SCALE: 1/4" = 1'-0"

0 2' 4' 8'

NORTH

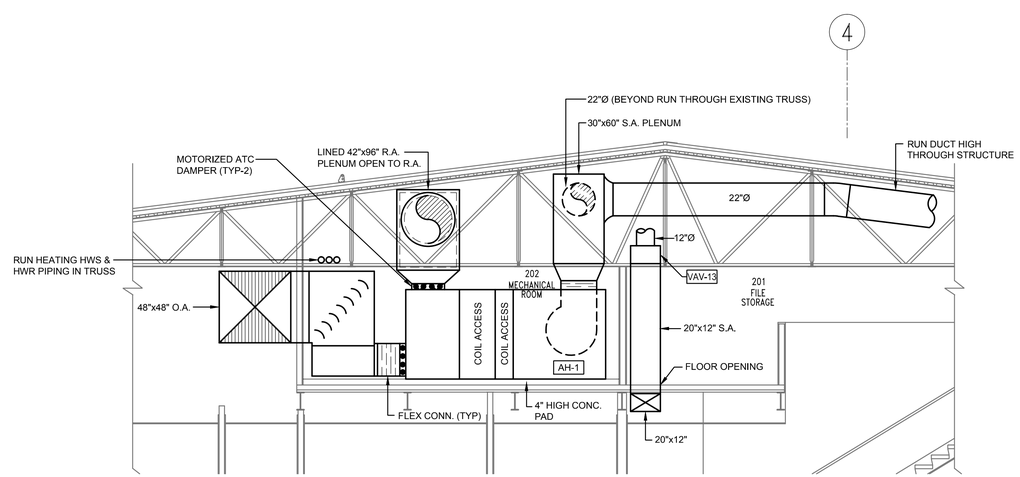

A M401 MEZZANINE MECHANICAL ROOM SECTION

SCALE: 1/4" = 1'-0"

0 2' 4' 8'

NORTH

CLIENT

UDOT CONNECTING COMMUNITIES

REGION 4 OFFICE REMODEL
708 SOUTH 100 WEST
RICHFIELD UTAH 84701

DESIGNER

ARCHIPLEX GROUP
architecture · planning · design services
255 Crossroad Square
Salt Lake City, UT 84115
P:(801) 961-7070
F:(801) 961-7373

CONSULTANTS

OLSEN & PETERSON
consulting engineers, inc.
14 East 2700 South, Salt Lake City, UT 84115
Phone: (801) 486-4646 Fax: (801) 467-2531

PROFESSIONAL SEAL

REGISTERED PROFESSIONAL ENGINEER
174126
PAUL W. LAIRD
STATE OF UTAH

ISSUE

MARK	DATE	DESCRIPTION
	AUGUST	DFCM REVIEW SUBMITTAL

DFCM PROJECT NO:	10046900
DFCM CONTRACT NO:	107453
ARCHIPLEX PROJECT NO:	1007.01
DRAWN BY:	STAFF
CHECKED BY:	PWL
SCALE:	1/4"=1'-0"
DATE:	SEPTEMBER 16, 2010

SHEET TITLE

MEZZANINE MECHANICAL ROOM PLAN

M401

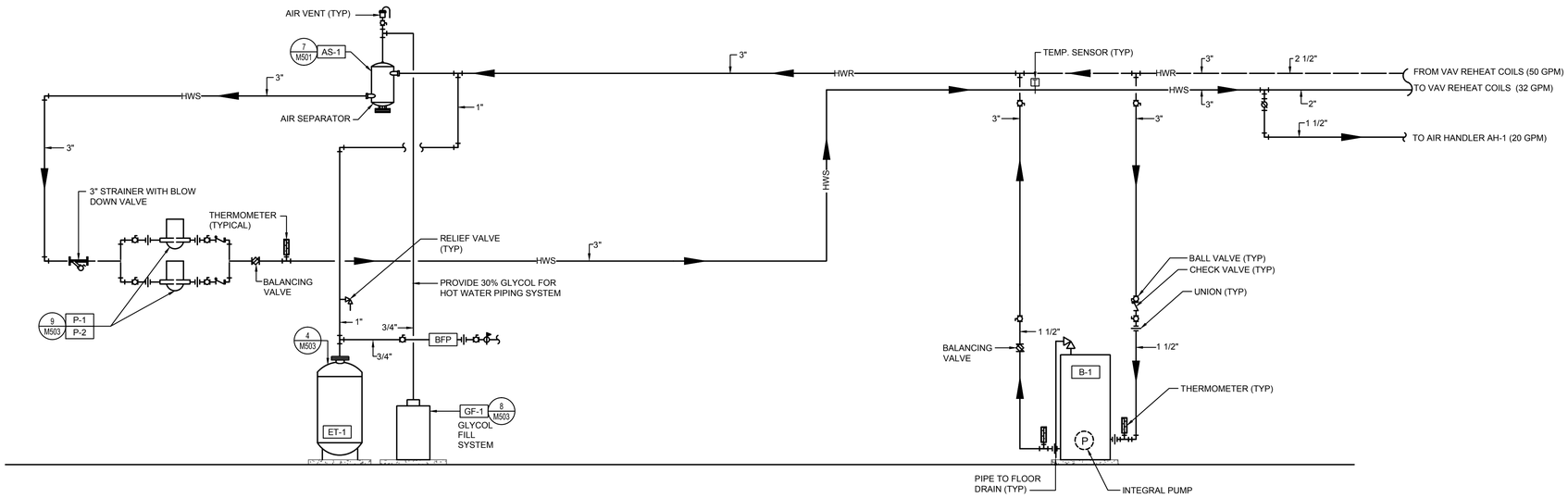

MECHANICAL ROOM PIPING SCHEMATIC

NOT TO SCALE — 1 / M501

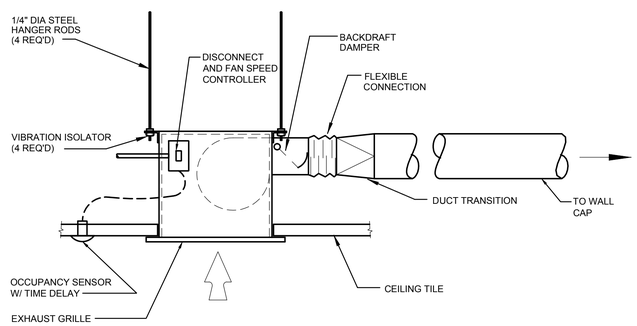

CEILING EXHAUST FAN DETAIL

NOT TO SCALE — 6 / M501

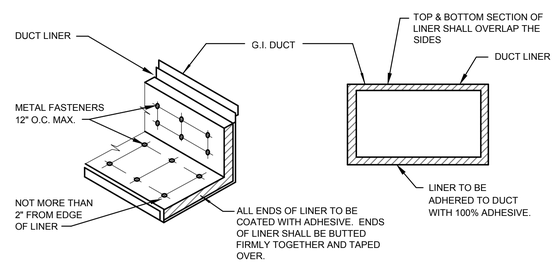

DUCT LINER DETAIL

NOT TO SCALE — 4 / M501

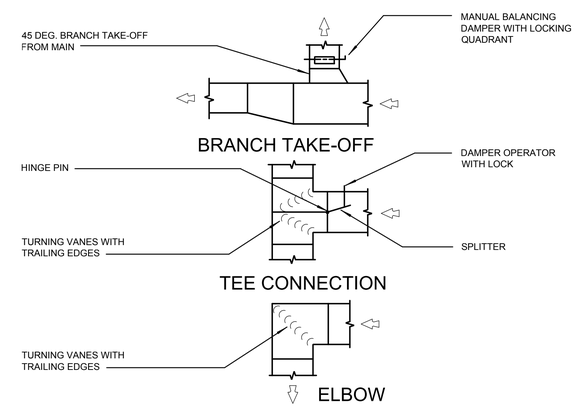

LOW PRESSURE DUCT DETAILS

NOT TO SCALE — 2 / M501

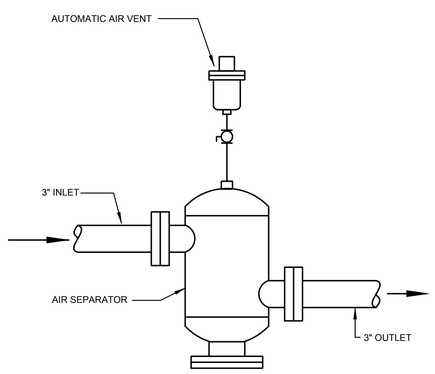

AIR SEPARATOR DETAIL

NOT TO SCALE — 13-131 — 7 / M501

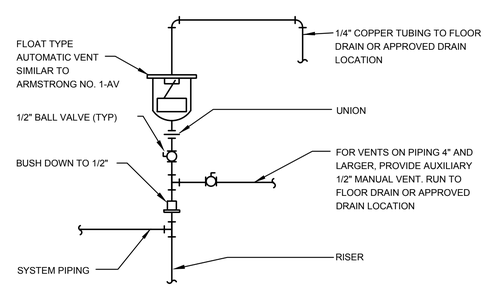

AUTOMATIC AIR VENT ASSEMBLY

NOT TO SCALE — 13-104 — 5 / M501

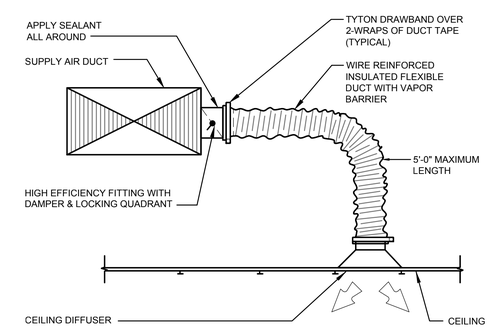

CEILING DIFFUSER DETAIL

NOT TO SCALE — 3 / M501

CLIENT

UDOT CONNECTING COMMUNITIES

REGION 4 OFFICE REMODEL
708 SOUTH 100 WEST
RICHFIELD UTAH 84701

DESIGNER

ARCHIPLEX GROUP
architecture · planning · design services
255 Crossroad Square
Salt Lake City, UT 84115
P:(801) 961-7070
F:(801) 961-7373

CONSULTANTS

OLSEN & PETERSON consulting engineers, inc.
14 East 2700 South, Salt Lake City, UT 84115
Phone: (801) 486-4646 Fax: (801) 467-2531

PROFESSIONAL SEAL

REGISTERED PROFESSIONAL ENGINEER # 174126 PAUL W. LAIRD STATE OF UTAH

ISSUE

MARK	DATE	DESCRIPTION
	AUGUST	DFCM REVIEW SUBMITTAL

DFCM PROJECT NO:	10046900
DFCM CONTRACT NO:	107453
ARCHIPLEX PROJECT NO:	1007.01
DRAWN BY:	STAFF
CHECKED BY:	PWL
SCALE:	NTS
DATE:	SEPTEMBER 16, 2010

SHEET TITLE

MECHANICAL DETAILS

M501

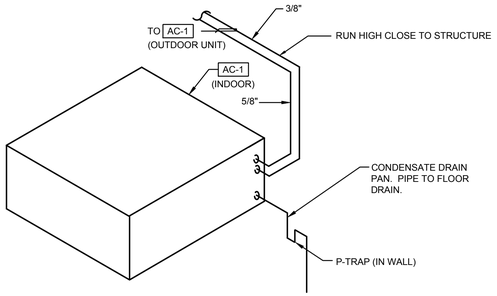

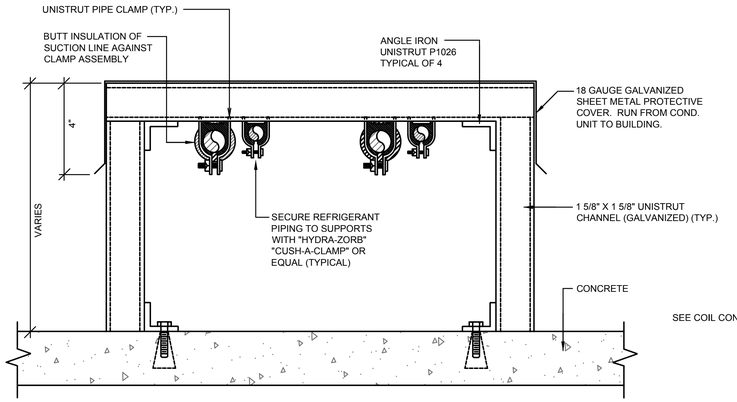

EXTERIOR REFRIGERANT PIPE SUPPORT DETAIL

SCALE: NONE

3 / M502

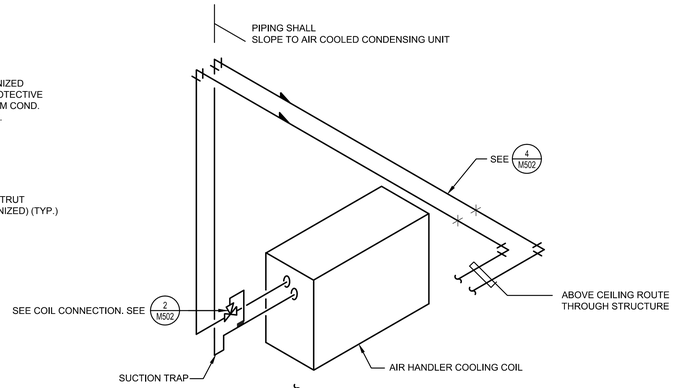

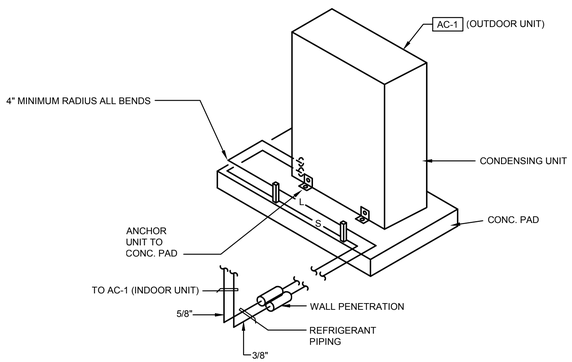

REFRIGERATION PIPING SCHEME

SCALE: NONE

6 / M502

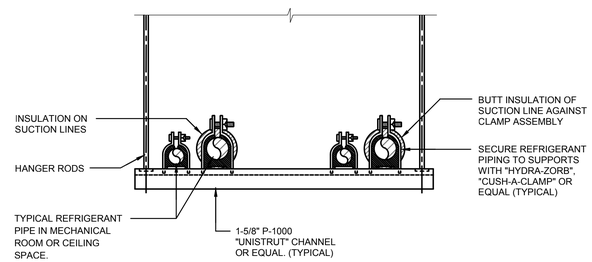

SUSPENDED REFRIGERANT PIPE SUPPORT AT CEILING

SCALE: NONE

4 / M502

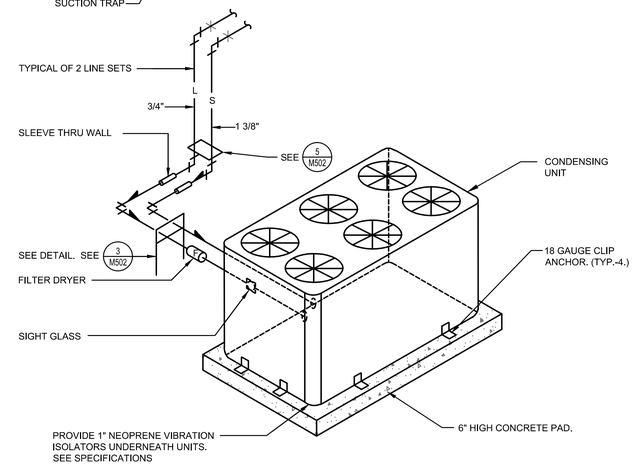

REFRIGERANT PIPING DETAIL

SCALE: NONE

1 / M502

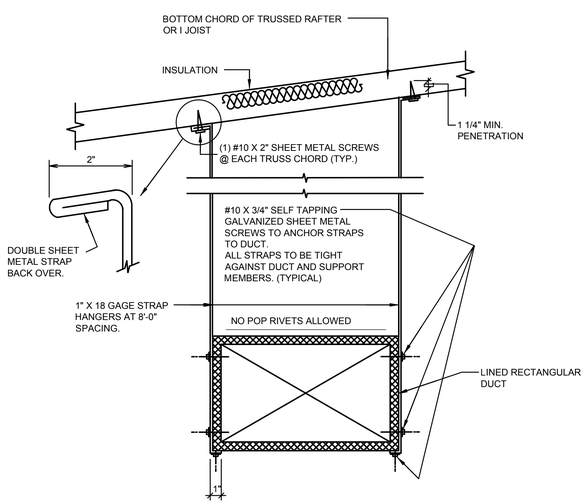

DUCT STRAP HANGER DETAIL

SCALE: NONE

7 / M502

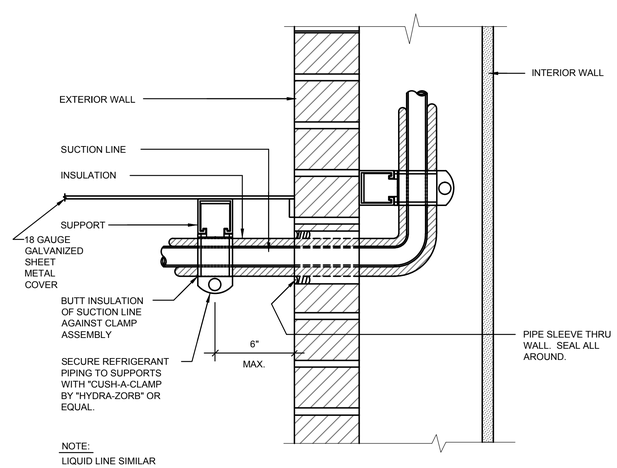

REFRIGERANT PIPE SUPPORT AT WALL

SCALE: NONE

5 / M502

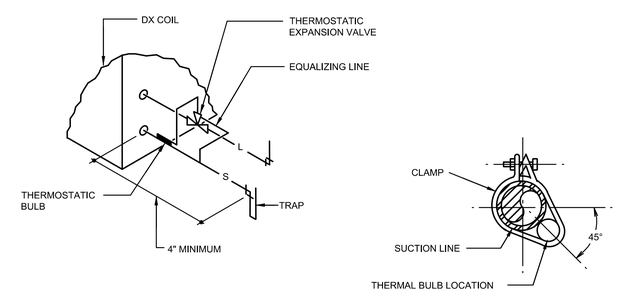

REFRIGERANT COIL CONNECTION DETAIL

SCALE: NONE

2 / M502

CLIENT

UDOT CONNECTING COMMUNITIES

REGION 4 OFFICE REMODEL
708 SOUTH 100 WEST
RICHFIELD UTAH 84701

DESIGNER

ARCHIPLEX GROUP
architecture · planning · design services
255 Crossroad Square
Salt Lake City, UT 84115
P:(801) 961-7070
F:(801) 961-7373

CONSULTANTS

OLSEN & PETERSON consulting engineers, inc.
14 East 2700 South, Salt Lake City, UT 84115
Phone: (801) 486-4646 Fax: (801) 467-2531

PROFESSIONAL SEAL

REGISTERED PROFESSIONAL ENGINEER # 174126 PAUL W. LAIRD STATE OF UTAH

ISSUE

MARK	DATE	DESCRIPTION
	AUGUST	DFCM REVIEW SUBMITTAL

DFCM PROJECT NO:	10046900
DFCM CONTRACT NO:	107453
ARCHIPLEX PROJECT NO:	1007.01
DRAWN BY:	STAFF
CHECKED BY:	PWL
SCALE:	NTS
DATE:	SEPTEMBER 16, 2010

SHEET TITLE

MECHANICAL DETAILS

M502

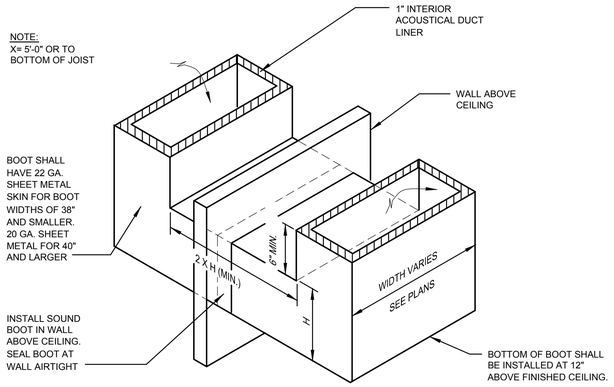

RETURN AIR SOUND BOOT DETAIL

NOT TO SCALE — 7 / M503

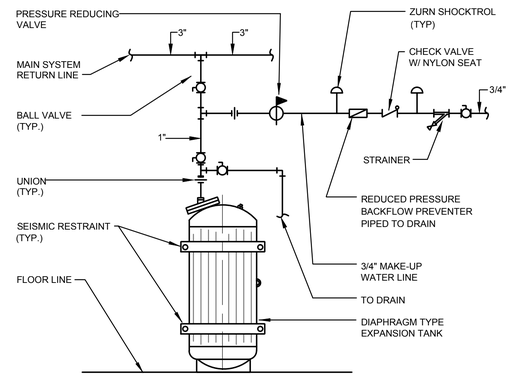

EXPANSION TANK PIPING DETAIL

NOT TO SCALE — 13-101b — 4 / M503

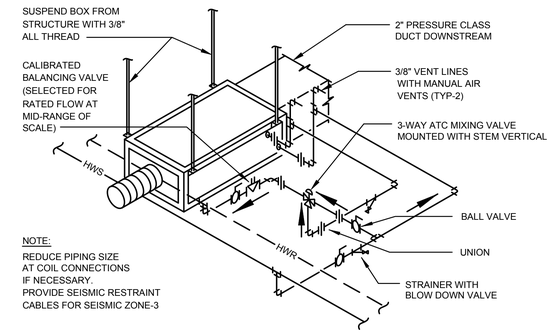

REHEAT BOX WITH 3-WAY ATC VALVE

NOT TO SCALE — 6-109 — 1 / M503

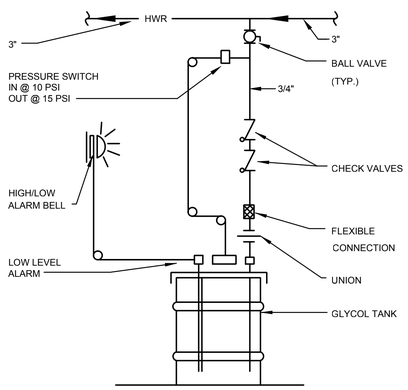

GLYCOL FILL & PRESSURE SYSTEM

NOT TO SCALE — 13-108 — 8 / M503

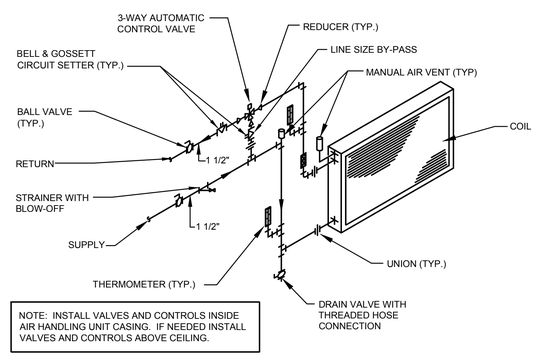

NOTE: INSTALL VALVES AND CONTROLS INSIDE AIR HANDLING UNIT CASING. IF NEEDED INSTALL VALVES AND CONTROLS ABOVE CEILING.

AIR HANDLER HOT WATER COIL PIPING DETAIL

NOT TO SCALE — TYPICAL FOR ALL HEATING & COOLING COILS — 5 / M503

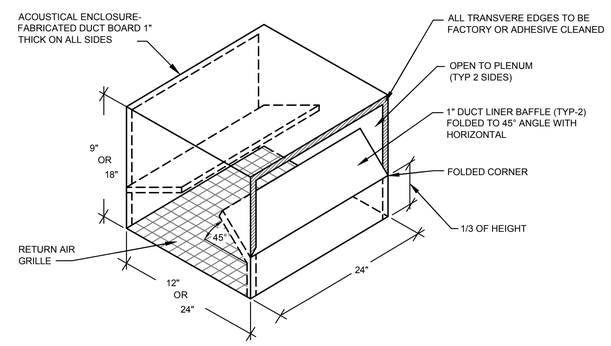

RETURN AIR BOOT DETAIL

NOT TO SCALE — 6-110a — 2 / M503

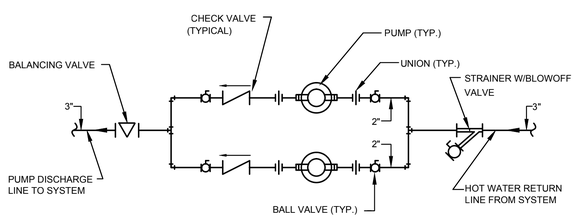

CIRCULATING PUMP DETAIL

NOT TO SCALE — 10-102 — 9 / M503

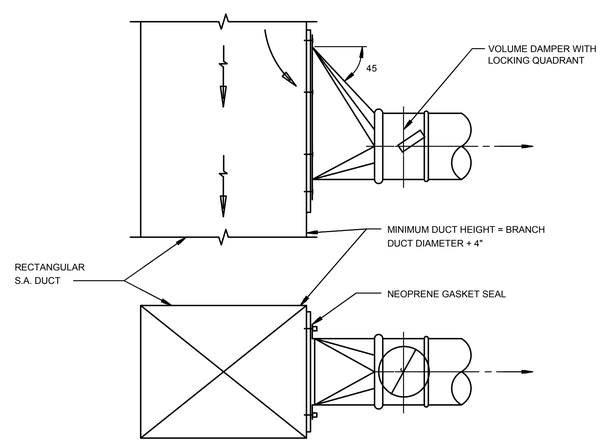

45 DEG. HIGH EFFICIENCY DUCT TAKEOFF

NOT TO SCALE — 6 / M503

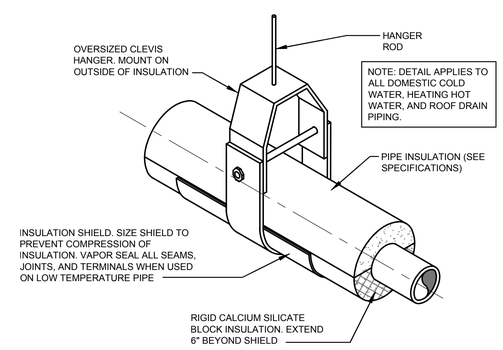

PIPE SUPPORT DETAIL

NOT TO SCALE — 3 / M503

CLIENT

UDOT CONNECTING COMMUNITIES

REGION 4 OFFICE REMODEL
708 SOUTH 100 WEST
RICHFIELD UTAH 84701

DESIGNER

ARCHIPLEX GROUP
architecture • planning • design services
255 Crossroad Square
Salt Lake City, UT 84115
P:(801) 961-7070
F:(801) 961-7373

CONSULTANTS

OLSEN & PETERSON
consulting engineers, inc.
14 East 2700 South, Salt Lake City, UT 84115
Phone: (801) 486-4646 Fax: (801) 467-2531

PROFESSIONAL SEAL

REGISTERED PROFESSIONAL ENGINEER
174126
PAUL W. LAIRD
STATE OF UTAH

ISSUE

MARK	DATE	DESCRIPTION
	AUGUST	DFCM REVIEW SUBMITTAL

DFCM PROJECT NO:	10046900
DFCM CONTRACT NO:	107453
ARCHIPLEX PROJECT NO:	1007.01
DRAWN BY:	STAFF
CHECKED BY:	PWL
SCALE:	NTS
DATE:	SEPTEMBER 16, 2010

SHEET TITLE

MECHANICAL DETAILS

M503

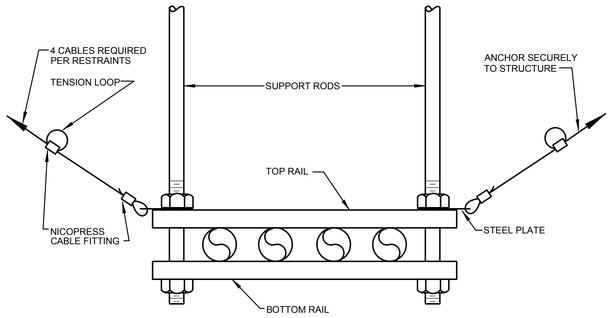

TYPICAL TRAPEZE HANGER SEISMIC RESTRAINT

NOT TO SCALE 19-106 7 / M504

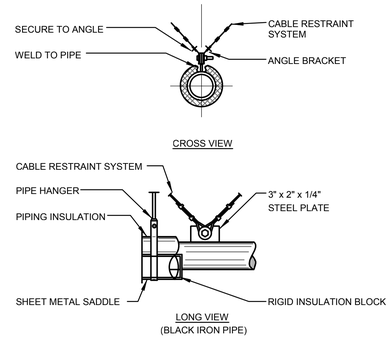

PIPING RESTRAINT DETAIL

NOT TO SCALE 19-102a 4 / M504

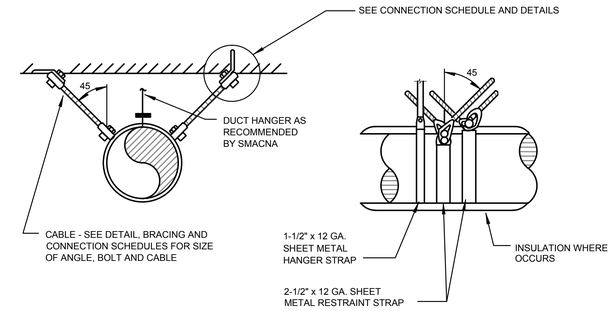

CABLE BRACING FOR ROUND DUCTS

NOT TO SCALE 19-112 1 / M504

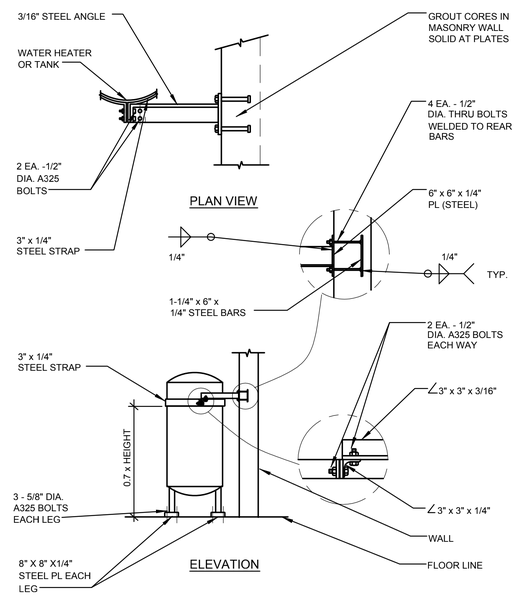

VERTICAL TANK SEISMIC RESTRAINT

NOT TO SCALE 19-103 5 / M504

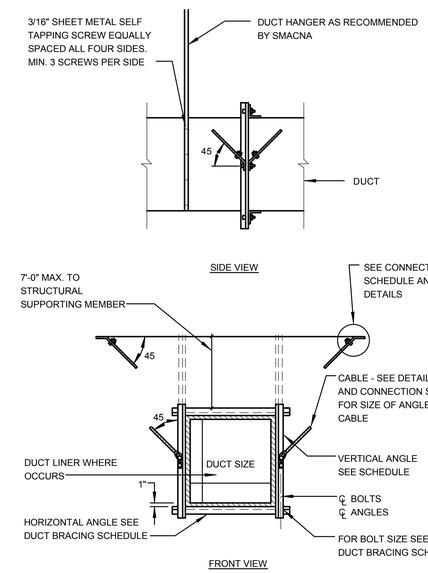

CABLE BRACING FOR RECTANGULAR DUCTS

NOT TO SCALE 19-113 2 / M504

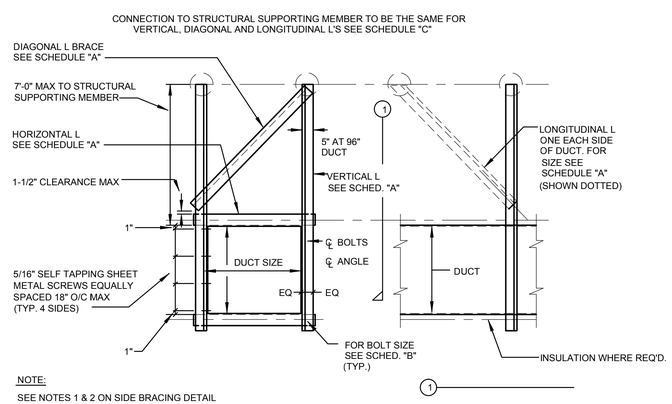

NOTE:
SEE NOTES 1 & 2 ON SIDE BRACING DETAIL

TYPICAL CENTER BRACING FOR RECTANGULAR DUCTS

NOT TO SCALE 19-104 6 / M504

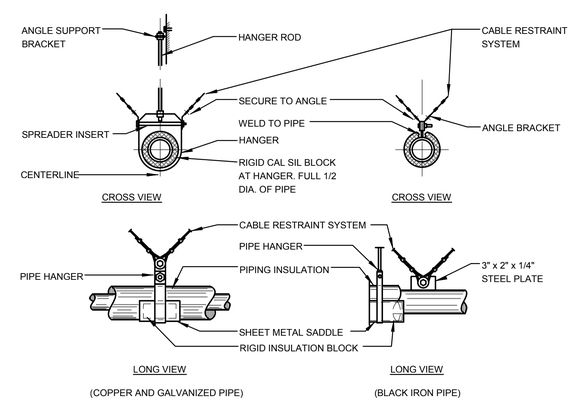

PIPING RESTRAINT DETAIL

NOT TO SCALE 19-102 3 / M504

CLIENT

UDOT CONNECTING COMMUNITIES

REGION 4 OFFICE REMODEL
708 SOUTH 100 WEST
RICHFIELD UTAH 84701

DESIGNER

ARCHIPLEX GROUP
architecture • planning • design services
255 Crossroad Square
Salt Lake City, UT 84115
P:(801) 961-7070
F:(801) 961-7373

CONSULTANTS

OLSEN & PETERSON
consulting engineers, inc.
14 East 2700 South, Salt Lake City, UT 84115
Phone: (801) 486-4646 Fax: (801) 467-2531

PROFESSIONAL SEAL

REGISTERED PROFESSIONAL ENGINEER
174126
PAUL W. LAIRD
STATE OF UTAH

ISSUE

MARK	DATE	DESCRIPTION
	AUGUST	DFCM REVIEW SUBMITTAL

DFCM PROJECT NO:	10046900
DFCM CONTRACT NO:	107453
ARCHIPLEX PROJECT NO:	1007.01
DRAWN BY:	STAFF
CHECKED BY:	PWL
SCALE:	NTS
DATE:	SEPTEMBER 16, 2010

SHEET TITLE

MECHANICAL DETAILS

M504

SCHEDULE FOR TYPICAL CONNECTIONS TO STRUCTURAL SUPPORTING MEMBERS

TYPE	MAX. LOAD CAPACITY POUNDS	PHILLIPS REDHEAD ANCHORS TO CONC.		CONC. CAST-IN PLACE INSERT	BOLT OF STL. BM. CLAMP
		LT. WT.	HARD ROCK		
I II	500 1000	3/8" 1/2"	3/8" 3/8"	3/8" 1/2"	3/8" 3/8"
III IV	1500 2000	5/8" 3/4"	3/8" 1/2"	1/2" 5/8"	3/8" 1/2"
V VI	3000 4000	2-5/8" 2-3/4"	2-1/2" 2-5/8"	2-1/2" 2-5/8"	5/8" 5/8"

TYPE	SPREADER SIZE	BOLT THRU WOOD	SPAN-CRETE ROD	ANGLE TO SUPPORTING STRUCTURAL MEMBER	ROD SIZE FOR PIPES
I II	C4 X 5.4 C5 X 6.7	1/2" 3/4"	3/8" 3/8"	3 X 2 X 1/4" X 0'-3" LLH 3-1/2 X 2-1/2 X 5/16 X 0'-3" LLH	1/2"Ø 1/2"Ø
III IV	C6 X 8.5 C8 X 11.5	*** ***	1/2" 1/2"	3-1/2 X 2-1/2 X 7/16 X 0'-4" LLH 5 X 3 X 1/2 X 0'-4" LLH	5/8"Ø 3/4"Ø
V VI	C9 X 13.4 C10 X 15.3	****		2 - 3-1/2 X 2-1/2 X 7/16 X 0'-4" 2 - 5 X 3-1/2 X 0'-4"	7/8"Ø 7/8"Ø

NOTES:

19-118

1. FOR SLABS LESS THAN 5" THICK ONLY, THIN SLAB INSERTS MAY BE USED.
2. FOR USE W/ CONC. CAST-IN PLACE INSERTS OR PHILLIP REDHEAD IN HARD ROCK ONLY.
3. FOR USE WITH CONC. CAST-IN PLACE INSERTS ONLY.
4. WHERE TYPE III CONNECTIONS ARE REQUIRED FOR WOOD SYSTEMS, TYPEII CONNECTIONS SHALL BE USED WITH REDUCED RESTRAINT SPACING TO 20 FT. O.C. WHERE TYPE IV CONNECTIONS ARE REQUIRED FOR WOOD SYSTEMS, TYPE II CONNECTIONS SHALL BE USED WITH REDUCED RESTRAINT SPACING TO 15 FT. O.C. WHERE TYPE V CONNECTIONS ARE REQUIRED FOR WOOD SYSTEMS, TYPE II CONNECTIONS SHALL BE USED WITH REDUCED RESTRAINT SPACING TO 10 FT. O.C.
5. THE MECHANICAL CONTRACTOR SHALL SUBMIT SHOP DRAWINGS TO THE STRUCTURAL ENGINEER AND THEN TO THE MECHANICAL ENGINEER, SHOWING CONNECTION TYPE AND LOCATION OF ALL RESTRAINT CONNECTIONS TO THE STRUCTURE.
6. FOR ESSENTIAL FACILITIES WHERE CONCRETE ANCHOR BOLTS OF THE "REDHEAD" EXPANSION TYPE ARE LOADED IN PULL OUT, 50 PERCENT OF THE BOLTS (ALTERNATE BOLTS IN ANY GROUP ARRANGEMENT) SHALL BE PROOF TESTED TO TWICE THE ALLOWABLE LOAD. IF THERE ARE FAILURES, THE IMMEDIATELY ADJACENT BOLTS MUST THEN ALSO BE TESTED.
7. "HILTI" AND "RAMSET" ANCHORS ARE EQUAL SUBSTITUTES FOR "REDHEAD".

PIPE CABLE BRACING SCHEDULE

PIPE SIZE	HANGER ROD SIZE	MAX. ROD LENGTH	HANGER TYPE	BOLTS TO CABLE	* CABLE SIZE	** CABLE TYPE	ANCHOR CONN. TYPE
1-1/2"	1/2"Ø	25"	CLEVIS	3/8"Ø	1/8"Ø	7x19 GALV	I
2"	1/2"Ø	25"	CLEVIS	3/8"Ø	1/8"Ø	7x19 GALV	I
2-1/2"	5/8"Ø	31"	CLEVIS	3/8"Ø	1/8"Ø	7x19 GALV	I
3"	5/8"Ø	31"	CLEVIS	3/8"Ø	3/16"Ø	7x19 GALV	II
3-1/2"	5/8"Ø	31"	CLEVIS	3/8"Ø	3/16"Ø	7x19 GALV	II
4"	3/4"Ø	37"	CLEVIS	3/8"Ø	3/16"Ø	7x19 GALV	II
5"	3/4"Ø	37"	CLEVIS	1/2"Ø	1/4"Ø	7x19 GALV	III
6"	3/4"Ø	37"	CLEVIS	5/8"Ø	1/4"Ø	7x19 GALV	IV
8"	7/8"Ø	43"	CLEVIS	5/8"Ø	5/16"Ø	7x19 GALV	V
10"	7/8"Ø	43"	CLEVIS	3/4"Ø	3/8"Ø	7x19 GALV	VI

19-119

FOR ANCHOR CONNECTIONS SEE SCHEDULE.
SEE PIPE BRACING DETAILS.

* TWO CABLES REQUIRED AT EACH RESTRAINT POINT, EACH CABLE TO BE INSTALLED 45° TO HORIZONTAL AND 45° TO LONGITUDINAL DIRECTION OF PIPE.

** CABLE SYSTEMS TO BE EQUAL TO AMBER BOOTH C/W CLAMPS, THIMBLES AND GROMMETS.

DUCT BRACING GENERAL NOTES

1. DETAILS SHOWN PROVIDE GENERAL GUIDELINES FOR A LATERAL BRACING SYSTEM. A TYPICAL VERTICAL SUPPORT SYSTEM MUST ALSO BE USED.
2. BRACE ALL RECTANGULAR DUCTS 6 SQ. FT. AREA AND LARGER. BRACE ALL ROUND DUCTS 28" IN DIAMETER AND LARGER.
3. CABLE RESTRAINTS AND BRACING NOT TO EXCEED 30'-0" CENTERS AND SHALL BE PROVIDED AT EACH TURN, AT THE END OF EACH DUCT RUN, AND ON EACH SIDE OF FLEXIBLE CONNECTIONS. BRACE POINTS SHALL NOT EXCEED 15'-0" FROM FLEXIBLE CONNECTION.
4. WHEN COMBINING DUCT GROUPS ON COMMON BRACING SYSTEMS, USE WEIGHTS AND DIMENSIONS FROM BRACING SCHEDULE.
5. ALL HOLES IN ANGLES ARE TO BE 1/16 INCH OVERSIZED. PLACE STANDARD CUT WASHERS BETWEEN SHEET METAL ANGLES AND NUT.
6. DUCTS NOT BRACED SHALL BE INSTALLED WITH A 6" MIN. CLEARANCE TO VERTICAL CEILING HANGER WIRES.
7. REHEAT BOXES AND OTHER ITEMS WHICH ATTACH TO THE DUCT SYSTEM SHALL BE BRACED INDEPENDENTLY OF THE DUCTS.
8. ALL SHEET METAL FOR BRACING TO BE FY = 33 KSI MINIMUM. GAUGE FOR SHEET METAL BRACING SHALL BE AS FOLLOWS:

   16 GA = (0.0598 INCH)
   14 GA = (0.0747 INCH)
   12 GA = (0.1046 INCH)
9. MINIMUM DISTANCE FROM EDGE OF ANGLE TO BOLTS SHALL BE AS FOLLOWS:

   1/4" TO 1/2" DIA. = 1"
   5/8" DIA. = 1-1/8"
   3/4" DIA. = 1-1/4"
   7/8" DIA. = 1-1/2"
10. DO NOT FASTEN RESTRAINT SYSTEM TO TWO DISSIMILAR PARTS OF A BUILDING THAT MAY RESPOND IN A DIFFERENT MODE DURING AN EARTHQUAKE. FOR EXAMPLE, A WALL AND A ROOF.
11. ALTERNATE EVERY OTHER CABLE RESTRAINT IN OPPOSITE DIRECTION (SHOWN DOTTED).

19-117

DUCT CABLE BRACING SCHEDULE

DUCT SIZE (MAX.)	*WT/ LIN FT. (MAX.)	BOLT SIZE	HORIZONTAL ANGLE	VERTICAL ANGLE	CABLE DIA. **	CABLE DESIGN ***	ANCHOR CONN. TYPE
12"	5#	3/8"Ø	2x2x16 GA.	2x2x12 GA.	1/8"Ø	7x19 GALV	I
18"	8#	3/8"Ø	2x2x16 GA.	2.1/2x2.1/2x12 GA.	1/8"Ø	7x19 GALV	I
24"	10#	3/8"Ø	2x2x16 GA.	2.1/2x2.1/2x12 GA.	1/8"Ø	7x19 GALV	I
30"	13#	3/8"Ø	2x2x16 GA.	2.1/2x2.1/2x12 GA.	1/8"Ø	7x19 GALV	I
42"	20#	3/8"Ø	2.1/2x2.1/2x16 GA.	4x4x12 GA.	3/16"Ø	7x19 GALV	II
54"	27#	3/8"Ø	2.1/2x2.1/2x16 GA.	4x4x12 GA.	3/16"Ø	7x19 GALV	II
60"	36#	3/8"Ø	3x3x16 GA.	4x4x12 GA.	3/16"Ø	7x19 GALV	II
84"	53#	3/8"Ø	4x4x14 GA.	4x4x1/4	1/4"Ø	7x19 GALV	III
96"	80#	1/2"Ø	4x4x14 GA.	5x3x1/4	5/16"Ø	7x19 GALV	IV

19-109

* MAXIMUM WEIGHT OF DUCTS OR COMBINATIONS OF DUCTS PER LINEAR FOOT. THE DUCTS MAXIMUM DIMENSION SHALL GOVERN WHAT BRACING IS REQUIRED. FOR ANCHOR CONNECTIONS SEE SCHEDULE. SEE DUCT BRACING DETAILS.

** TWO CABLES REQUIRED AT EACH RESTRAINT POINT, EACH CABLE TO BE INSTALLED 45 DEG. TO HORIZONTAL AND 45 DEG. TO LONGITUDINAL DIRECTION OF DUCT.

*** CABLE SYSTEMS TO BE EQUAL TO AMBER BOOTH C/W THIMBLES, CLAMPS AND GROMMETS.

PIPE BRACING GENERAL NOTES

1. DETAILS SHOWN PROVIDE GENERAL GUIDELINES FOR A LATERAL BRACING SYSTEM. A TYPICAL VERTICAL SUPPORT SYSTEM MUST ALSO BE USED.
2. BRACE ALL PIPES 1-1/2" I.D. AND LARGER.
3. CABLE RESTRAINTS AND BRACING NOT TO EXCEED 30'-0" CENTERS AND SHALL BE PROVIDED AT ALL CHANGES IN DIRECTION OF PIPE, ALL DROPS TO EQUIPMENT, AND ON EACH SIDE OF FLEXIBLE CONNECTIONS. BRACE POINTS SHALL NOT EXCEED 15'-0" FROM FLEXIBLE CONNECTION.
4. ALL HOLES IN ANGLES ARE TO BE 1/16 INCH OVERSIZED. PLACE STANDARD CUT WASHERS BETWEEN SHEET METAL ANGLES AND NUT.
5. EQUIPMENT WHICH ATTACHES TO THE PIPING SYSTEM SHALL BE BRACED INDEPENDENTLY OF THE PIPES.
6. ALL SHEET METAL FOR BRACING TO BE FY = 33 KSI MINIMUM. GAUGE FOR SHEET METAL BRACING SHALL BE AS FOLLOWS:

   16 GA. = (0.0598 INCH)
   14 GA. = (0.0747 INCH)
   12 GA. = (0.1046 INCH)
7. MINIMUM DISTANCE FROM EDGE OF ANGLE TO BOLTS SHALL BE AS FOLLOWS:

   1/4" TO 1/2" DIA. = 1"
   5/8" DIA. = 1-1/8"
   3/4" DIA. = 1-1/4"
   7/8" DIA. = 1-1/2"
8. DO NOT FASTEN RESTRAINT SYSTEM TO TWO DISSIMILAR PARTS OF A BUILDING THAT MAY RESPOND IN A DIFFERENT MODE DURING AN EARTHQUAKE. FOR EXAMPLE, A WALL AND A ROOF.
9. PROVIDE LARGE ENOUGH PIPE SLEEVES THROUGH WALLS OR FLOORS TO ALLOW FOR ANTICIPATED DIFFERENTIAL MOVEMENTS.
10. DO NOT FASTEN ONE RIGID PIPING SYSTEM TO TWO DISSIMILAR PARTS OF A BUILDING THAT MAY RESPOND IN A DIFFERENT MODE DURING AN EARTHQUAKE. FOR EXAMPLE, A WALL AND A ROOF.
11. BRACING DETAILS, SCHEDULE AND NOTES ARE TO BE USED WITH THE FOLLOWING TYPES OF PIPE: STEEL PIPE SCHEDULE 40 AND 80, COPPER PIPE TYPE K,L,M (ONLY SILVER SOLDERED BRAZED JOINTS TO BE USED WITH COPPER PIPE)
12. FOR GAS PIPING, THE BRACING DETAILS, SCHEDULES AND NOTES MAY BE USED EXCEPT THAT RESTRAINTS SHALL BE INSTALLED AT EVERY 20'-0" O.C. ALSO ALL PIPE 1 INCH AND LARGER SHALL BE BRACED.
13. WASTE, VENT AND ROOF DRAINAGE PIPING SYSTEMS ARE EXCLUDED FROM THE RESTRAINT GUIDELINES.
14. ALTERNATE EVERY OTHER CABLE RESTRAINT IN OPPOSITE DIRECTION. (SHOWN DOTTED)

19-116

CLIENT

UDOT CONNECTING COMMUNITIES

REGION 4 OFFICE REMODEL
708 SOUTH 100 WEST
RICHFIELD UTAH 84701

DESIGNER

ARCHIPLEX GROUP
architecture • planning • design services
255 Crossroad Square
Salt Lake City, UT 84115
P:(801) 961-7070
F:(801) 961-7373

CONSULTANTS

OLSEN & PETERSON consulting engineers, inc.
14 East 2700 South, Salt Lake City, UT 84115
Phone: (801) 486-4646 Fax: (801) 467-2531

PROFESSIONAL SEAL

REGISTERED PROFESSIONAL ENGINEER # 174126 PAUL W. LAIRD STATE OF UTAH

ISSUE

MARK	DATE	DESCRIPTION
	AUGUST	DFCM REVIEW SUBMITTAL

DFCM PROJECT NO:	10046900
DFCM CONTRACT NO:	107453
ARCHIPLEX PROJECT NO:	1007.01
DRAWN BY:	STAFF
CHECKED BY:	PWL
SCALE:	NTS
DATE:	SEPTEMBER 16, 2010

SHEET TITLE

MECHANICAL DETAILS

M505

REHEAT V.A.V. BOX SCHEDULE

SYMBOL	COOLING CFM	INLET SIZE	HEATING C.F.M.	HEATING MBH	GPM	MAKE & MODEL
VAV-1	900	10"Ø	540	15	1.5	PRICE 50V W/ 2 ROW HW REHEAT COIL & SOLID TRAP
VAV-2	675	10"Ø	405	15	1.5	PRICE 50V W/ 2 ROW HW REHEAT COIL & SOLID TRAP
VAV-3	425	8"Ø	255	10	1.0	PRICE 50V W/ 2 ROW HW REHEAT COIL & SOLID TRAP
VAV-4	700	10"Ø	420	15	1.5	PRICE 50V W/ 2 ROW HW REHEAT COIL & SOLID TRAP
VAV-5	420	8"Ø	250	10	1.0	PRICE 50V W/ 2 ROW HW REHEAT COIL & SOLID TRAP
VAV-6	780	10"Ø	470	15	1.5	PRICE 50V W/ 2 ROW HW REHEAT COIL & SOLID TRAP
VAV-7	260	8"Ø	160	10	1.0	PRICE 50V W/ 2 ROW HW REHEAT COIL & SOLID TRAP
VAV-8	535	8"Ø	320	10	1.0	PRICE 50V W/ 2 ROW HW REHEAT COIL & SOLID TRAP
VAV-9	880	10"Ø	530	15	1.5	PRICE 50V W/ 2 ROW HW REHEAT COIL & SOLID TRAP
VAV-10	800	10"Ø	480	15	1.5	PRICE 50V W/ 2 ROW HW REHEAT COIL & SOLID TRAP
VAV-11	1005	12"Ø	600	22	2.2	PRICE 50V W/ 2 ROW HW REHEAT COIL & SOLID TRAP
VAV-12	1440	12"Ø	720	25	2.5	PRICE 50V W/ 2 ROW HW REHEAT COIL & SOLID TRAP
VAV-13	1200	12"Ø	700	25	2.5	PRICE 50V W/ 2 ROW HW REHEAT COIL & SOLID TRAP
VAV-14	1145	12"Ø	690	22	2.2	PRICE 50V W/ 2 ROW HW REHEAT COIL & SOLID TRAP
VAV-15	1005	12"Ø	600	22	2.2	PRICE 50V W/ 2 ROW HW REHEAT COIL & SOLID TRAP
VAV-16	230	8"Ø	140	10	1.0	PRICE 50V W/ 2 ROW HW REHEAT COIL & SOLID TRAP
VAV-17	1860	14"Ø	1120	29	2.9	PRICE 50V W/ 2 ROW HW REHEAT COIL & SOLID TRAP
VAV-18	1860	14"Ø	1120	29	2.9	PRICE 50V W/ 2 ROW HW REHEAT COIL & SOLID TRAP

SYMBOL LIST

- SUPPLY DIFFUSER
- RETURN OR EXHAUST GRILLE
- SUPPLY DROP
- RETURN OR EXHAUST RISER
- FLEXIBLE DUCTWORK
- TURNING VANES
- SPIN-IN FITTING WITH VOLUME CONTROL DAMPER
- FSD — COMBINATION FIRE/SMOKE DAMPER
- T — THERMOSTAT
- S — SENSOR
- AD — ACCESS DOOR
- M — MOTORIZED DAMPER

MECHANICAL EQUIPMENT

AH-1 AIR HANDLER: VAV AIR HANDLER, 16120 CFM @ 3.0 INCHES TDSP, HORIZONTAL TYPE CONSISTING OF INDEPENDENT DISCHARGE AIR PLENUM, AIR FOIL FAN, DX COOLING COIL AND HOT WATER HEATING COIL, ANGLED FILTER AND MIXING BOX SECTIONS. UNIT CASING SHALL BE DOUBLE WALL GALVANIZED STEEL WITH R-13 BATT INSULATION WITH ANTIMICROBIAL COATING, 2 INCH ANGLE FILTERS, HINGED LOCKING DOORS WITH FULL GASKETING AND STAINLESS STEEL DRAIN PAN. COOLING SECTION SHALL BE DX INTERTWINED, 24.4 SQ FT, 6 ROW 14 FPI, .025 INCH 1/2" DIA COPPER TUBE ALUMINUM FINNED COIL. 404 MBH TOTAL CAPACITY, 268 MBH SENSIBLE CAPACITY, 0.71 APD, 80 DEG F EDB, 67 DEG F EWB, 56.1 DEG F LADB, 55.7 DEG F LAWB. COIL SHALL BE COMPLETE WITH TXV'S AND GALVANIZED STEEL CASING.
HEATING SECTION SHALL BE HOT WATER 24.4 SQ. FT. 2 ROW, 8 FPI FULL CIRCUITED, .025 INCH 1/2" DIA COPPER TUBE ALUMINUM FINNED COIL. 665 MBH HEATING CAPACITY, 0.5 APD, 180 DEG F EWT, 160 DEG F LWT, 66.5 GPM TOTAL FLOW CAPACITY. 60 DEG F DELTA T. COIL SHALL BE COMPLETE WITH GALVANIZED STEEL CASING. 30% PROPYLENE GLYCOL FLUID.
FURNISH AIR HANDLER COMPLETE WITH MATCHED VARIABLE FREQUENCY DRIVE, SPRING VIBRATION ISOLATION, FAN BELTS, 6 INCH HIGH BASE RAIL, DRIVE GUARD, PREMIUM EFFICIENCY MOTOR, FAN GATES, AND FILTER MAGNAHELIC GAUGE.
MANUFACTURER: CARRIER
MODEL: AERO SIZE 25
SIZE: 189" X 104" X 62" TALL
ELEC: 15 HP, 208 VOLT/ 3 PH/ 60 HZ
WEIGHT: 4008 LBS

CU-1 CONDENSING UNIT: 30 TON NOMINAL CONDENSING UNIT, 95 DEG F AMB, 40 DEG F SST, DUAL MULTIPLE SCROLL COMPRESSORS. TWO INDEPENDENT CIRCUITS, STAGING TO 15% OF TOTAL CAPACITY, TWO CONDENSER FANS, R-410 A REFRIGERANT, 10.8 EER. FURNISH WITH SERVICE VALVES, CRANKCASE HEATERS, RUBBER MOUNTING PADS, SUCTION PIPING INSULATION, EPOXY PAINTED G-90 GALVANIZED STEEL CABINET, COPPER TUBE ALUMINUM FIN CONDENSER COILS, TIME DELAY RELAYS, HOT GAS BYPASS, INDIVIDUAL CONDENSER FANS,LOW AMBIENT HEAD PRESSURE CONTROLLER, SUCTION ACCUMULATOR, LIQUID LINE SIGHT GLASS, PUMP DOWN SWITCH, NEMA 3 R PANEL, ENERGY MANAGEMENT MODULE AND SINGLE POINT POWER CONNECTION WITH INTEGRAL NON-FUSED DISCONNECT. FURNISH WITH SECURITY GRILLES AND HAIL GUARDS. MOUNT UNIT ON 6 INCH HIGH CONCRETE PAD.
MANUFACTURER: CARRIER
MODEL: 38APD030
SIZE: 89" X 41" X 79" TALL
ELEC: MCA = 137.6, MFS = 175, 208 VOLT/ 3 PH/ 60 HZ
WEIGHT: 2400 LBS

B-1 BOILER: HIGH EFFICIENCY, MODULATING, CONDENSING TYPE, LOW NOX, FLOOR MOUNTED HOT WATER BOILER. 500 MBH INPUT MAX, 475 MBH OUTPUT MIN, 95.0% EFFICIENT, 316 TI STAINLESS STEEL HEAT EXCHANGER AND BURNER, 5:1 TURNDOWN RATIO, SEALED COMBUSTION, DIRECT VENT, CPVC OR PVC COMBUSTION AIR AND FLUE CONNECTIONS, NATURAL GAS 4-13" W.C. GAS PRESSURE, FIRED, 12 YEAR LIMITED WARRANTY, 160 PSI MAXIMUM WORKING PRESSURE WITH 30% WATER/GLYCOL MIXTURE. FURNISH WITH INTEGRAL CIRCULATING PUMP, SYSTEM PUMP CONTROL, INTEGRAL CONDENSATE TRAP PIPED TO DRAIN, 4" DIAM SIDEWALL VENT TERMINATIONS, PRESSURE AND TEMPERATURE RELIEF VALVE, BURNER SIGHT GLASS, ON/OFF TOGGLE SWITCH, OUTDOOR RESET WITH SENSOR, DRAIN VALVE, MANUAL RESET HIGH LIMIT, WATER PRESSURE SENSOR, ALL SAFETIES, WATER FLOW SENSORS, LOW WATER CUTOFFS, PUMP INTERLOCKS AND LCD DIAGNOSTIC DISPLAY SCREEN. 1-1/2" NPT WATER CONNECTIONS, 1" NPT GAS CONNECTION. ASME "H" STAMP REQUIRED.
MANUFACTURER: LARRS
MODEL: NT-500
SIZE: 38" X 25" X 39 "
ELEC: 120 VOLT/ 1 PH/ 60 HZ <15.0 AMPS
WEIGHT: 280 LBS

AS-1 AIR SEPARATOR: 56 GPM MAX CAPACITY, CAST IRON CONSTRUCTION, 3 INCH THREADED INLET AND OUTLET, STAINLESS STEEL STRAINER, 125 PSIG MAX WORKING PRESSURE, 350 DEG F MAX OPERATING TEMPERATURE
MANUFACTURER: B&G
MODEL: R-3
SIZE: 20" TALL X 15 DIA"
WEIGHT: 30 LBS

ET-1 EXPANSION TANK: 53 GALLON ACCEPTANCE VOLUME, FORGED STEEL CONSTRUCTION, HEAVY DUTY BUTYL RUBBER BLADDER DIAPHRAGM, 125 PSI MAX WORKING PRESSURE, 240 DEG F MAX WORKING TEMPERATURE. 12 PSI FACTORY CHARGE.
MANUFACTURER: B&G
MODEL: B-200
SIZE: 24 DIA X 37" TALL
WEIGHT: 630 LBS

P-1, P-2 HOT WATER PUMP: IN-LINE TYPE, 25 GPM @ 58 FEET TOTAL HEAD. 30% PROP GLYCOL/WATER MIXTURE, CAST IRON/STEEL CONSTRUCTION, 7.5 INCH IMPELLER DIAM. 1750 RPM, 2 INCH INLET AND OUTLET. FURNISH WITH BB-3 2X2 SUCTION DIFFUSER AND TRIPLE DUTY VALVE.
MANUFACTURER: B&G
MODEL: SERIES 80 SC 2x2x9 - 1/2B
SIZE: 22" X 12" X 24 "
ELEC: 3 HP, 208 VOLT/ 3 PH/ 60 HZ
WEIGHT: 180 LBS

CP-1 RADIANT CEILING PANEL: 550 WATT CEILING PANEL COMPLETE WITH THERMOSTAT AND CONTROL PANEL. OPERATING TEMPERATURE 194-248 DEG F. ALUMINUM FRAME, PRE-STRESSED GLASS PANEL, SILVER OXIDE MIRROR/INSULATOR, THERMAL SAFETY SWITCHES, ELECTRICAL CONTACTS, ALUMINUM BACKPLATE. LONG WAVE INFRARED TECHNOLOGY, 170 DEGREE RADIANT HEAT PATTERN. FURNISH COMPLETE WITH THERMOSTAT AND CONTROL PANEL. MOUNT CONTROL PANEL IN JANITOR CLOSET.
MANUFACTURER: LEXIN
MODEL: CH06363
SIZE:24 X 24 X 1.38"
ELEC: 550 WATTS, 120 VOLT/1 PH/60 HZ, 2.39 AMPS
WEIGHT: 15.4 LBS

EF-1, EF-2 EXHAUST FAN. CEILING MOUNTED, 270 CFM @ .25" TDSP. CENTRIFUGAL FAN, DIRECT DRIVE, 1375 RPM, 1.9 SONES MAX. FURNISH WITH INTEGRAL DISCONNECT SWITCH, FAN SPEED CONTROLLER, ALUMINUM GRILLE, ALUMINUM WALL CAP, BACKDRAFT DAMPER, VIBRATION ISOLATION KIT. CONTROL: WALL MOUNTED TIMER FURNISHED BY ELECTRICAL CONTRACTOR.
MANUFACTURER: COOK
MODEL: GC-720
SIZE: 18" X 10" X 10"
ELEC: 87 WATTS, 120 VOLT/ 1 PH/ 60 HX
WEIGHT: 46 LBS

AC-1 HEAT PUMP: SPLIT SYSTEM TYPE, R-410A REFRIGERANT, 14.4 SEER, 42000 BTUH COOLING CAPACITY, 30,000 BTUH HEATING CAPACITY AT 17 DEG F AMBIENT, 1090 CFM, MULTIPLE SPEED FAN MOTOR CEILING MOUNTED INDOOR CASSETTE UNIT WITH INTEGRAL CONDENSATE LIFT PUMP, DIFFUSER AND RETURN GRILLES. EXTERIOR PAD MOUNTED UNIT, INVERTER DRIVEN SCROLL COMPRESSOR, 3/8" LIQUID LINE, 5/8" SUCTION LINE, FLARED CONNECTIONS. FURNISH WITH INDOOR REMOTE WALL MOUNTED CONTROL. PROVIDE SPRING VIBRATION KIT FOR MOUNTING INDOOR UNIT. MOUNT OUTDOOR UNIT ON 6 INCH HIGH CONCRETE PAD COMPLETE WITH 1 INCH THICK NEOPRENE VIBRATION ISOLATORS AND SEISMIC HOLD-DOWN CLIPS.
MANUFACTURER: MITSUBISHI
MODEL: PLA-A42BA (INDOOR UNIT) PUZ-A42NHA-BS (OUTDOOR UNIT)
SIZE: 34" X 34" X 12" (INDOOR UNIT) 38" X 14" X 54" (OUTDOOR UNIT)
ELEC: MCA=2, MFS = 15, 208 VOLT/ 1 PH/ 60 HZ (INDOOR UNIT) MCA = 26, MFS = 30, 208 VOLT/ 1 PH/ 60 HZ (OUTDOOR UNIT)
WEIGHT: 55 LBS (INDOOR UNIT) 260 LBS (OUTDOOR UNIT)

DIMENSION OF LONGEST SIDE, INCHES	SHEET METAL GAGE (ALL FOUR SIDES)	TRANSVERSE REINFORCING (1)					
		MINIMUM REINFORCING ANGLE SIZE AND MAXIMUM LONGITUDINAL SPACING BETWEEN TRANSVERSE JOINTS &/OR INTERMEDIATE REINFORCING	AT JOINTS				
			MIN. H, IN.	DRIVE SLIP / PLAIN S SLIP	HEMMED S SLIP	ALTER'NT BAR SLIP	REIN-FORCED BAR SLIP
				RECOM-MENDED GAGE	RECOM-MENDED GAGE	RECOM-MENDED GAGE	RECOM-MENDED GAGE
UP THRU 12	26	NONE REQUIRED	1	26	26	24	24
13 - 18	24	NONE REQUIRED	1	24	24	24	24
19 - 30	24	1"X1"X1/8" @ 60 IN	1	-	24	24	24
31 - 36	22	1"X1"X1/8" @ 60 IN	1	-	-	22	22

(1) TRANSVERSE REINFORCING SIZE IS DETERMINED BY DIMENSION OF SIDE TO WHICH ANGLE IS APPLIED.

(2) LONGITUDINAL JOINTS TO BE PITTSBURG OR SNAP LOCK TYPE.

DUCT CONSTRUCTION DETAIL

SCALE: NONE

1 / M-501

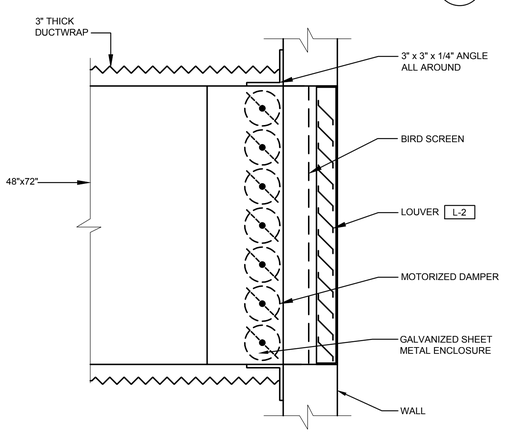

RELIEF AIR LOUVER DETAIL

NOT TO SCALE

2 / M-501

DIFFUSER SCHEDULE

SYMBOL	TYPE	NECK SIZE	LOCATION	AIR PATTERN	MAKE & MODEL (1)(2)
D-1 / CFM	LAY-IN	6"Ø	CEILING	4-WAY	PRICE SPD 12" x 12" FACE
D-2 / CFM	LAY-IN	8"Ø	CEILING	4-WAY	PRICE SPD 24" x 24" FACE
D-3 / CFM	LAY-IN	10"Ø	CEILING	4-WAY	PRICE SPD 24" x 24" FACE
D-4 / CFM	LAY-IN	12"Ø	CEILING	4-WAY	PRICE SPD 24" x 24" FACE
D-5 / CFM	LAY-IN	14"Ø	CEILING	4-WAY	PRICE SPD 24" x 24" FACE

NOTES:
(1) PROVIDE FRAME FOR MOUNTING IN LAY-IN CEILING OR GYP BOARD CEILING.
(2) TO HAVE BRIGHT WHITE POWDER COAT FINISH.

LOUVER & PENTHOUSE SCHEDULE

SYMBOL	SIZE	LOCATION	TYPE	MAKE & MODEL
L-1	78" x 48"	EXTERIOR WALL	OUTSIDE AIR	AMERICAN WARMING LE-SERIES (1)(2)
L-2	78" x 48"	EXTERIOR WALL	RELIEF AIR	AMERICAN WARMING LE-SERIES (1)(2)
PH-1	24" x 24" 5 TIER	ROOF	RELIEF AIR	GREENHECK WRH W/ MOTORIZED DAMPER (1)(2)(3)

NOTES:
(1) LOUVERS TO BE ALL ALUMINUM WITH DRAINABLE BLADES, CHANNEL FRAME AND BIRDSCREEN.
(2) PROVIDE POWER COATED PAINT FINISH FOR ALL LOUVERS. COLOR OF LOUVER TO BE SELECTED BY ARCHITECT.
(3) MATCH NEW PENTHOUSE TO EXISTING ROOF CURB.

REGISTER & GRILLE SCHEDULE

SYMBOL	NECK SIZE	LOCATION	TYPE	MAKE & MODEL
R-1	24"x12"	CEILING	RETURN	PRICE 535
R-2	24"x24"	CEILING	RETURN	PRICE 535
R-3	30"x30"	SIDEWALL	RETURN	PRICE LBMR
TG-1 / CFM	8"x8"	CEILING	TRANSFER AIR	PRICE 535
SR-1 / CFM	22"x6"	WALL	SUPPLY AIR	PRICE LBMR

NOTES:
(1) REGISTER TO HAVE OPPOSED BLADE VOLUME DAMPER.

CLIENT

UDOT CONNECTING COMMUNITIES

REGION 4 OFFICE REMODEL
708 SOUTH 100 WEST
RICHFIELD UTAH 84701

DESIGNER

ARCHIPLEX GROUP
architecture • planning • design services
255 Crossroad Square
Salt Lake City, UT 84115
P:(801) 961-7070
F:(801) 961-7373

CONSULTANTS

OLSEN & PETERSON consulting engineers, inc.
14 East 2700 South, Salt Lake City, UT 84115
Phone: (801) 486-4646 Fax: (801) 467-2531

PROFESSIONAL SEAL

REGISTERED PROFESSIONAL ENGINEER # 174126 PAUL W. LAIRD STATE OF UTAH

ISSUE

MARK	DATE	DESCRIPTION
	AUGUST	DFCM REVIEW SUBMITTAL

DFCM PROJECT NO:	10046900
DFCM CONTRACT NO:	107453
ARCHIPLEX PROJECT NO:	1007.01
DRAWN BY:	STAFF
CHECKED BY:	PWL
SCALE:	NTS
DATE:	SEPTEMBER 16, 2010

SHEET TITLE

MECHANICAL SCHEDULES & DETAILS

M601

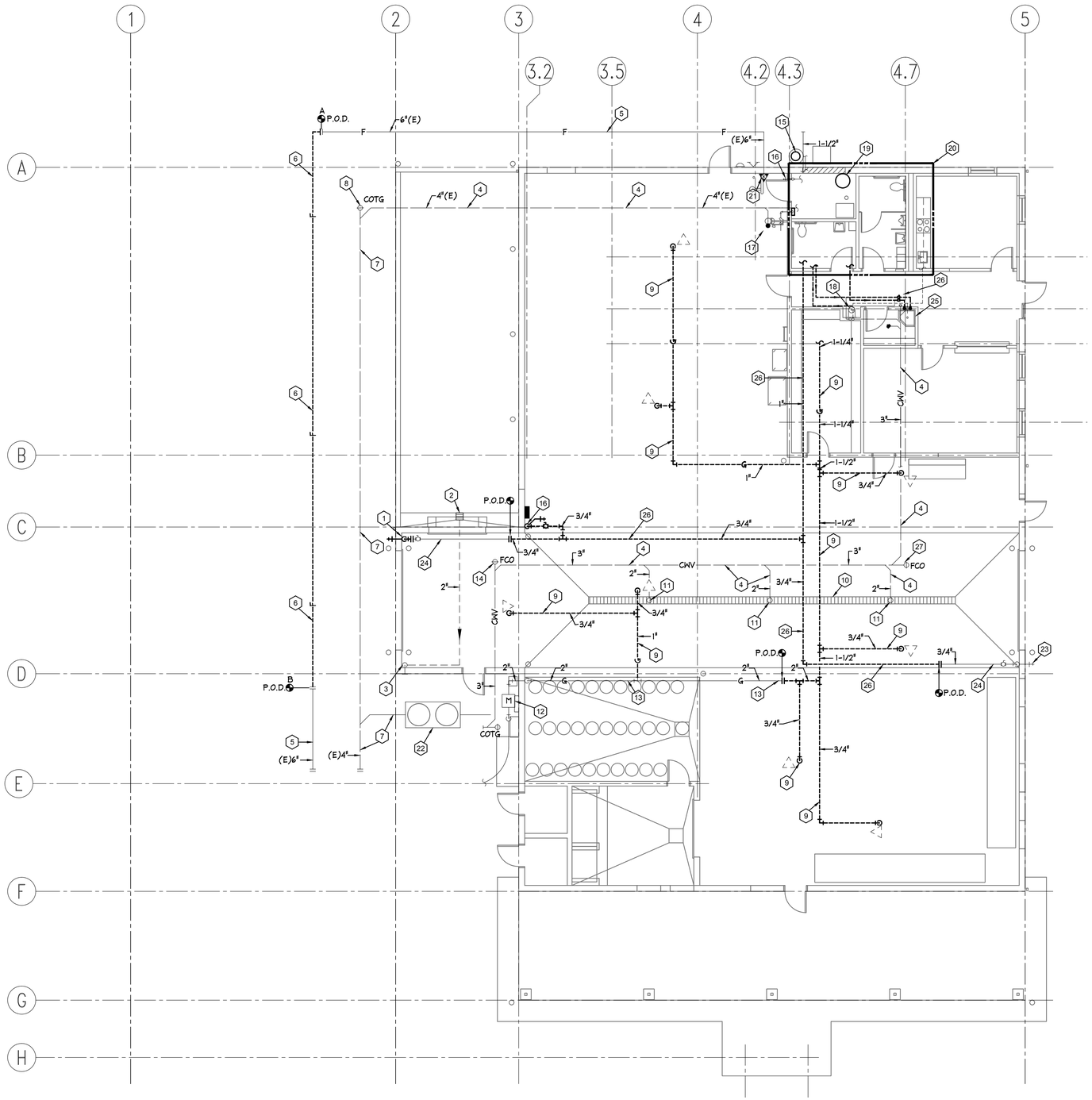

REFERENCE NOTES

1. REMOVE EXISTING EXTERIOR HOSE BIBB. REMOVE BRANCH PIPING BACK TO BALL VALVE. SEE DWG P101 FOR NEW WORK.
2. REMOVE EXISTING DOCK AREA SUMP PUMP AND DOCK DRAIN. CAP DRAIN PIPING BELOW GRADE.
3. REMOVE EXISTING SUMP PUMP DISCHARGE RISER. REMOVE EXTERIOR DRAIN LINE THRU WALL. PATCH WALL OPENING TO MATCH EXISTING.
4. EXISTING PIPING BELOW SLAB TO REMAIN INTACT. CONTRACTOR TO VERIFY AND MARK LOCATION OF PIPING DURING NEW CONSTRUCTION.
5. EXISTING FIRE AND WATER SERVICE LINE TO REMAIN INTACT.
6. EXISTING FIRE AND WATER SERVICE LINE BETWEEN POINTS "A" AND "B". TO BE REMOVED AND RELOCATED BY SITE/CIVIL CONTRACTOR. SEE CIVIL DWG'S FOR WORK REQUIRED.
7. EXISTING BLDG SEWER LINE TO REMAIN INTACT. CONTRACTOR TO VERIFY AND MARK LOCATION OF PIPING DURING NEW CONSTRUCTION.
8. REMOVE AND RELOCATE EXISTING COTG. SEE DWG P101 FOR RELOCATION.
9. REMOVE BRANCH GAS LINE. REMOVE GAS LINE BACK TO MAIN AND CAP.
10. EXISTING TRENCH DRAIN TO REMAIN INTACT AND PRESERVED FOR FUTURE ELECTRICAL USE. CLEAN DRAIN OF ALL DEBRIS.
11. CAP TRENCH DRAIN OUTLET IN PLACE. OUTLET TO BE INFILLED OR PLUGGED WATERTIGHT. DO NOT PLUG BELOW GRADE PIPING.
12. EXISTING GAS METER. SEE DRAWING P101 FOR NEW GAS REQUIREMENTS.
13. EXISTING GAS LINE TO REMAIN INTACT.
14. REMOVE AND RELOCATE EXISTING FCO. SEE DWG P101 FOR RELOCATION.
15. EXISTING WATER METER AND VALVE BOX TO REMAIN INTACT.
16. REMOVE EXISTING INTERIOR HOSE BIBB. REMOVE BRANCH PIPING BACK TO MAIN AND CAP.
17. REMOVE AND SALVAGE TO OWNER EXISTING EMERGENCY EYEWASH AND SHOWER. REMOVE ALL ASSOCIATED DRAIN, WASTE, WATER SUPPLY AND VENT PIPING COMPLETE. REMOVE PIPING BACK TO MAINS AND CAP.
18. REMOVE EXISTING DRINKING FOUNTAIN. REMOVE AND CAP WATER DRAIN LINES.
19. EXISTING WATER HEATER TO REMAIN INTACT.
20. UNLESS OTHERWISE NOTED NO PLUMBING DEMOLITION WORK IS REQUIRED IN THIS AREA.
21. EXISTING FIRE RISER FOR INTERIOR FIRE SPRINKLER DEMOLITION WORK SEE DWG FPD101.
22. EXISTING SAND / OIL INTERCEPTOR TO REMAIN INTACT.
23. EXTERIOR HOSE BIBB TO REMAIN INTACT.
24. EXISTING WATER LINE TO REMAIN INTACT.
25. REMOVE EXISTING SERVICE SINK. REMOVE AND CAP WATER AND DRAIN LINES.
26. REMOVE EXISTING WATER LINE.
27. EXISTING FLOOR CLEANOUT TO REMAIN.

PLUMBING DEMOLITION PLAN

SCALE: 1/8" = 1'-0"

0 4' 8' 16'

NORTH

CLIENT

UDOT CONNECTING COMMUNITIES

REGION 4 OFFICE REMODEL
708 SOUTH 100 WEST
RICHFIELD UTAH 84701

DESIGNER

ARCHIPLEX GROUP
architecture • planning • design services
255 Crossroad Square
Salt Lake City, UT 84115
P:(801) 961-7070
F:(801) 961-7373

CONSULTANTS

OLSEN & PETERSON consulting engineers, inc.
14 East 2700 South, Salt Lake City, UT 84115
Phone: (801) 486-4646 Fax: (801) 467-2531

PROFESSIONAL SEAL

REGISTERED PROFESSIONAL ENGINEER # 174126 PAUL W. LAIRD STATE OF UTAH

ISSUE

MARK	DATE	DESCRIPTION
	AUGUST	DFCM REVIEW SUBMITTAL

DFCM PROJECT NO:	10046900
DFCM CONTRACT NO:	107453
ARCHIPLEX PROJECT NO:	1007.01
DRAWN BY:	STAFF
CHECKED BY:	PWL
SCALE:	1/8"=1'-0"
DATE:	SEPTEMBER 16, 2010

SHEET TITLE

PLUMBING DEMOLITION PLAN

PD101

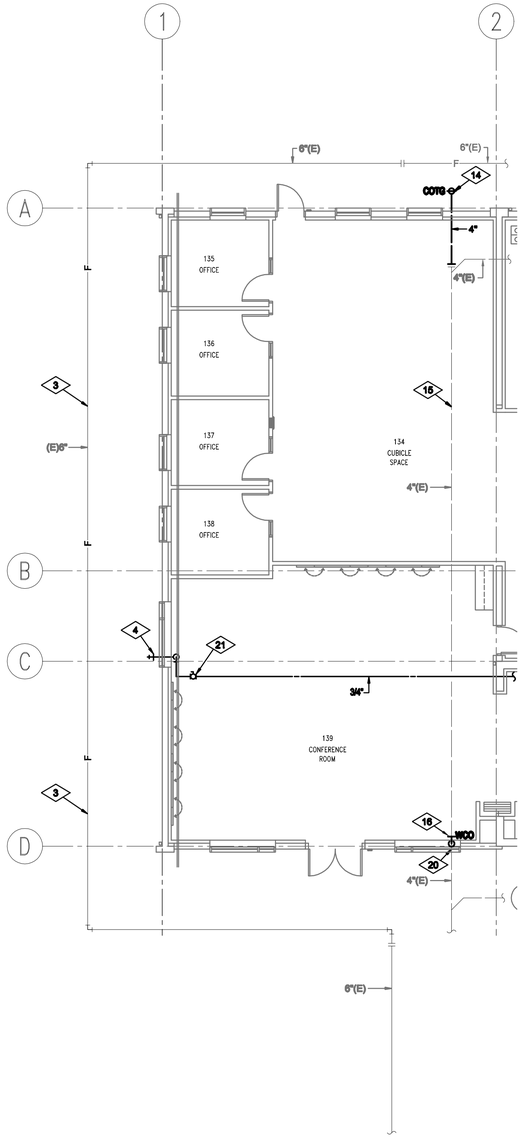

MAIN LEVEL PLUMBING PLAN – ADD ALTERNATE

SCALE: 1/8" = 1'-0"

0 4' 8' 16'

NORTH

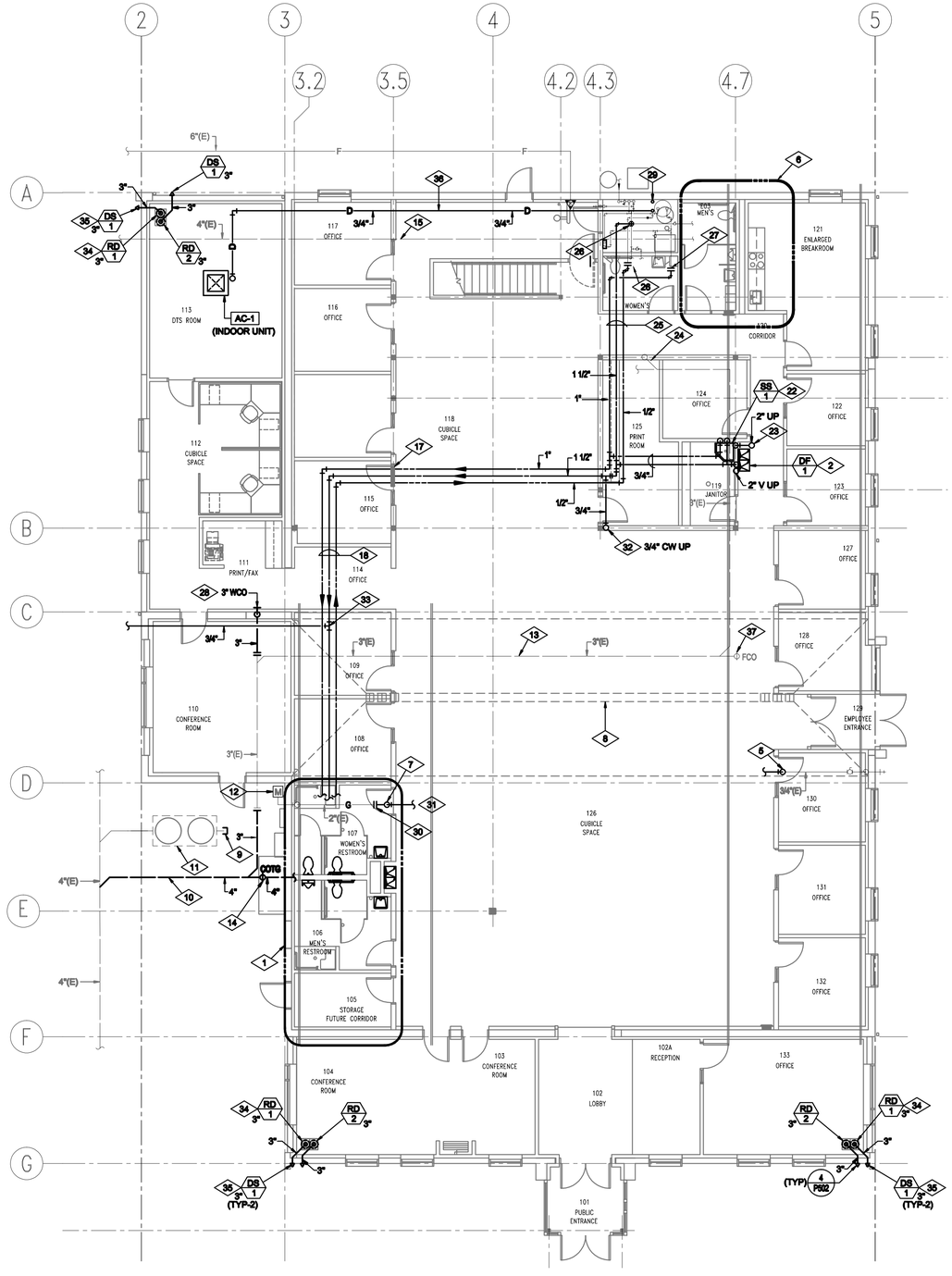

MAIN LEVEL PLUMBING FLOOR PLAN

SCALE: 1/8 = 1'-0"

0 4' 8' 16'

NORTH

REFERENCE NOTES

1. FOR PLUMBING WORK IN THIS AREA SEE DRAWING P401.
2. INSTALL NEW DRINKING FOUNTAIN IN THIS LOCATION. PIPE NEW 1-1/4" WASTE AND CONNECT TO EXISTING WASTE LINE BELOW SLAB. CONNECT NEW WATER SUPPLY LINE AS INDICATED. MAKE ALL REQUIRED CONNECTIONS FOR A COMPLETE INSTALLATION.
3. RELOCATED 6"DIA. FIRE AND WATER SERVICE LINE. BY SITE UTILITIES CONTRACTOR. NO WORK REQUIRED.
4. RELOCATE EXISTING HOSE BIBB TO THIS LOCATION. PIPE 3/4" CW LINE DOWN IN WALL TO HOSE BIBB. MOUNT HOSE BIBB 36" A.F.G.
5. DROP EXISTING WATER LINE IN THIS LOCATION TO RUN ABOVE NEW OPEN OFFICE AREA. SEE DRAWING P102 FOR CONTINUATION.
6. UNLESS OTHERWISE NOTED, NO PLUMBING WORK IS REQUIRED IN THIS AREA.
7. EXTEND NEW 2" GAS LINE UP IN THIS LOCATION TO RUN ABOVE NEW OPEN OFFICE AREA.
8. EXISTING TRENCH DRAIN TO BE USED BY ELECTRICAL CONTRACTOR.
9. CAP EXISTING 3 INCH LINE TO EXISTING SAND/OIL SEPARATOR. BLUE STAKE THIS AREA PRIOR TO EXCAVATION. NOTE LOCATION OF EXISTING ELECTRICAL AND GAS SERVICE UTILITIES. SAWCUT PAVEMENT AND CAREFULLY EXCAVATE TO EXPOSE EXISTING SEWER LATERAL. CAP LINE TO SAND/OIL SEPARATOR. PATCH PAVEMENT TO MATCH EXISTING UPON COMPLETION OF WORK.
10. SAWCUT PAVEMENT AND CAREFULLY EXCAVATE TO EXPOSE EXISTING 4" SEWER LATERAL. CONNECT NEW SEWER LINE FROM NEW RESTROOM AREA TO EXISTING AS INDICATED. PATCH PAVEMENT TO MATCH EXISTING UPON COMPLETION OF WORK.
11. EXISTING SAND/OIL SEPARATOR TO REMAIN INTACT. PUMP OUT CHAMBERS AND SEAL INLETS AND OUTLET WATERTIGHT.
12. CONTRACT WITH QUESTAR GAS TO ADJUST EXISTING GAS METER SET. NEW BUILDING DEMAND = 675 MBH (760 CFH).
13. EXISTING 3" COMBINATION WASTE AND VENT SYSTEM BELOW SLAB.
14. INSTALL NEW CLEANOUT TO GRADE (COTG) AND EXTEND SEWER LATERAL TO EXTERIOR AS INDICATED.
15. EXISTING 4" SANITARY WASTE SYSTEM BELOW SLAB.
16. WALL CLEANOUT (WCO). SEE DETAIL 1/P501
17. WALL PENETRATION. CAULK AND SEAL AROUND PIPE PENETRATION WITH FIBERGLASS BATT AND SILICONE SEALANT.
18. PIPING TO RUN HIGH ABOVE CEILING. COORDINATE LOCATION WITH MECHANICAL, STRUCTURAL, AND ELECTRICAL TRADES.
19. FIRE WALL PENETRATION. CAULK AND SEAL AROUND PIPE(S) WITH MINERAL WOOL BATT AND INTUMESCENT FIRE STOP SEALANT. SEE DETAIL 7/P501
20. COORDINATE LOCATION OF PIPING WITH STRUCTURAL FOOTINGS. COORDINATE WITH GENERAL CONTRACTOR AND STRUCTURAL ENGINEER FOR PIPE SLEEVES THROUGH FOOTINGS.
21. INSTALL ISOLATION VALVES ABOVE CEILING. PROVIDE LOCKING CEILING DOOR OR REMOVABLE CEILING TILE FOR SERVICE ACCESS.
22. INSTALL NEW SERVICE SINK IN THIS LOCATION. SAWCUT FLOOR AND LOCATE EXISTING 3" DRAIN LINE. INSTALL NEW DRAIN LINE FROM SERVICE SINK AND DRINKING FOUNTAIN. PIPE NEW WATER LINES TO SINK FAUCET AS INDICATED.
23. 2 INCH DRAIN LINE FROM MECHANICAL ROOM ABOVE. RUN DOWN IN WALL AND CONNECT TO EXISTING BLDG. SEWER.
24. CAP UNUSED WASTE LINES BELOW FLOOR. (TYP)
25. EXTEND NEW 1 1/2" CW, 1" HW AND 1/2" HWR LINES FROM EXISTING MECHANICAL ROOM TO NEW RESTROOMS. RUN NEW PIPING HIGH ABOVE CEILING.
26. CONNECT NEW 1 1/2" CW AND 1" HW TO EXISTING PIPING IN THIS LOCATION PROVIDE NEW BALL VALVE AT EACH P.O.C.
27. CONNECT NEW 1/2" HWR LINE TO EXISTING 1/2" LINE IN THIS LOCATION. PROVIDE NEW 1/2" BALANCE VALVES FOR NEW AND EXISTING LINES.
28. RELOCATE EXISTING FLOOR CLEANOUT TO NEW WALL. PROVIDE NEW WALL CLEANOUT 12" A.F.F.
29. PIPE NEW 1 1/2" GAS FROM ,MEZZANINE ABOVE TO EXISTING MECHANICAL ROOM. RE-PIPE 1 1/4" GAS LINE TO EXISTING WATER HEATER AND 1" GAS LINE TO EXISTING FURNACE.
30. CONNECT NEW 2" GAS LINE TO EXISTING IN THIS LOCATION.
31. FOR CONTINUATION OF PIPING SEE DWG P102.
32. PIPE 3/4" CW LINE UP TO MECHANICAL ROOM ABOVE. SEE DWG P401. FOR CONTINUATION.
33. CONNECT EXISTING 3/4" CW LINE TO NEW 1 1/2" CW LINE IN THIS LOCATION.
34. INSTALL PRIMARY AND SECONDARY ROOF DRAINS IN THIS LOCATION.
35. EXTEND PRIMARY AND SECONDARY ROOF DRAIN LINES INTO DOWNSPOUT.
36. PIPE PUMPED CONDENSATE DRAIN LINE FROM AC UNIT OVERHEAD TO FLOOR DRAIN IN MECHANICAL ROOM.
37. MODIFY EXISTING FLOOR CLEANOUT AS NEEDED TO MATCH NEW FLOOR COVERING.

CLIENT

UDOT CONNECTING COMMUNITIES

REGION 4 OFFICE REMODEL
708 SOUTH 100 WEST
RICHFIELD UTAH 84701

DESIGNER

ARCHIPLEX GROUP
architecture • planning • design services
255 Crossroad Square
Salt Lake City, UT 84115
P:(801) 961-7070
F:(801) 961-7373

CONSULTANTS

OLSEN & PETERSON
consulting engineers, inc.
14 East 2700 South, Salt Lake City, UT 84115
Phone: (801) 486-4646 Fax: (801) 467-2531

PROFESSIONAL SEAL

REGISTERED PROFESSIONAL ENGINEER # 174126 PAUL W. LAIRD STATE OF UTAH

ISSUE

MARK	DATE	DESCRIPTION
	AUGUST	DFCM REVIEW SUBMITTAL

DFCM PROJECT NO:	10046900
DFCM CONTRACT NO:	107453
ARCHIPLEX PROJECT NO:	1007.01
DRAWN BY:	STAFF
CHECKED BY:	PWL
SCALE:	1/8"=1'-0"
DATE:	SEPTEMBER 16, 2010

SHEET TITLE

MAIN LEVEL PLUMBING FLOOR PLAN

P101

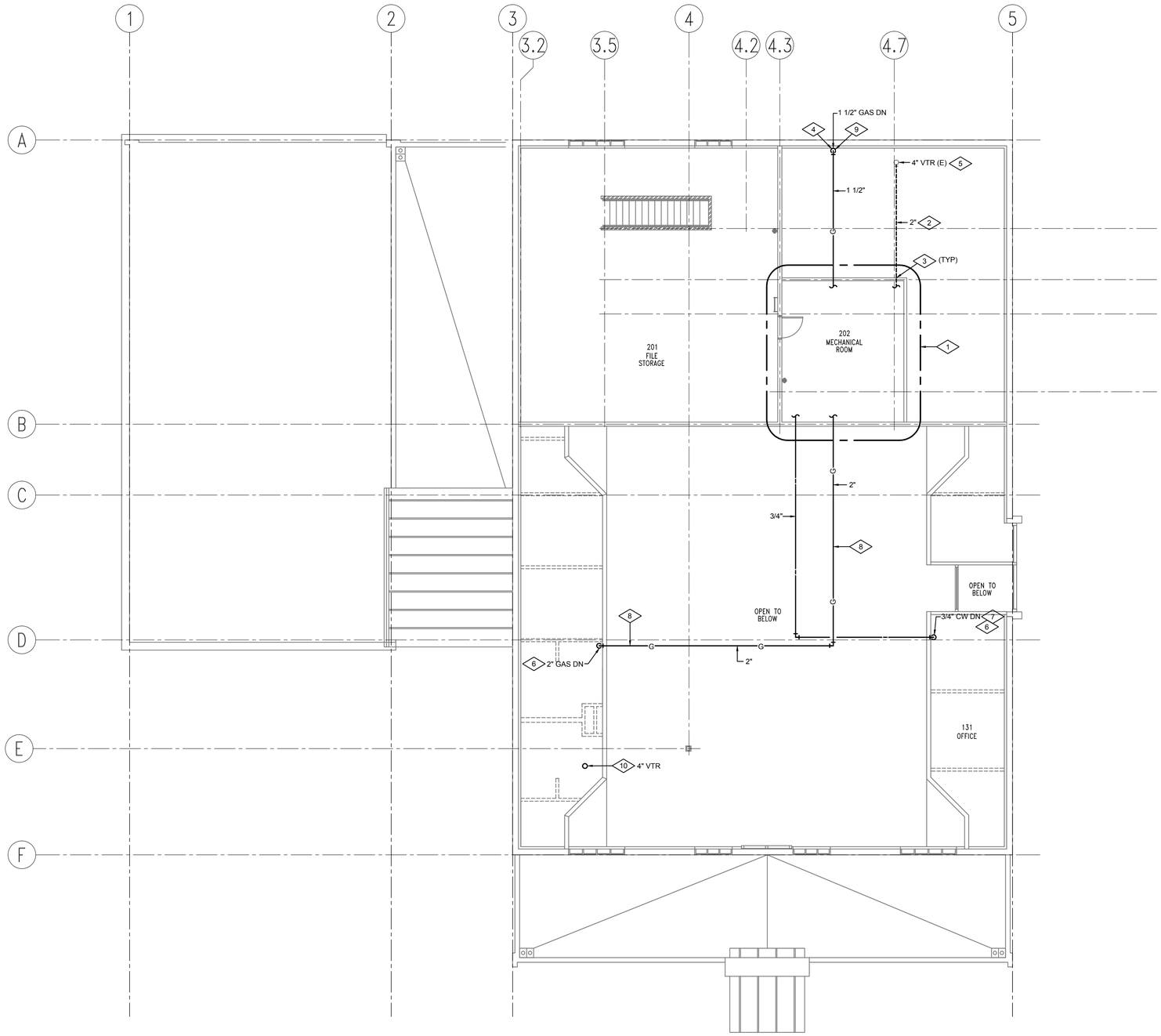

MEZZANINE LEVEL PLUMBING PLAN

SCALE: 1/8" = 1'-0"

0 4' 8' 16'

NORTH

REFERENCE NOTES

1. MECHANICAL ROOM. FOR PLUMBING IN THIS AREA SEE ENLARGED PLUMBING PLAN ON DWG P401.
2. PIPING TO RUN HIGH ABOVE CEILING. COORDINATE LOCATION WITH MECHANICAL, STRUCTURAL, AND ELECTRICAL TRADES.
3. FIRE WALL PENETRATION. CAULK AND SEAL AROUND PIPE(S) WITH MINERAL WOOL BATT AND INTUMESCENT FIRE STOP SEALANT. SEE DETAIL 7/P501
4. FLOOR PENETRATION. CAULK AND SEAL AROUND PIPE PENETRATION WITH FIBERGLASS BATT AND SILICONE SEALANT.
5. EXISTING 4" VENT THRU ROOF (VTR). CONNECT NEW VENT LINES TO EXISTING VTR IN THIS LOCATION.
6. FOR CONTINUATION OF PIPING SEE DRAWING P101
7. DROP WATER LINE IN THIS LOCATION.
8. RUN GAS LINE HIGH THROUGH STRUCTURE. COORDINATE LOCATION WITH MECHANICAL, STRUCTURAL, AND ELECTRICAL TRADES.
9. DROP 1-1/2" GAS LINE DN IN THIS LOCATION TO EXISTING MECHANICAL ROOM BELOW. REMAKE GAS LINE CONNECTIONS TO EXISTING WATER HEATER AND FURNACE.
10. EXTEND NEW 4" VTR UP THROUGH EXISTING ROOF OPENING IN THIS LOCATION.

CLIENT

UDOT CONNECTING COMMUNITIES

REGION 4 OFFICE REMODEL
708 SOUTH 100 WEST
RICHFIELD UTAH 84701

DESIGNER

ARCHIPLEX GROUP
architecture • planning • design services
255 Crossroad Square
Salt Lake City, UT 84115
P:(801) 961-7070
F:(801) 961-7373

CONSULTANTS

OLSEN & PETERSON
consulting engineers, inc.
14 East 2700 South, Salt Lake City, UT 84115
Phone: (801) 486-4646 Fax: (801) 467-2531

PROFESSIONAL SEAL

REGISTERED PROFESSIONAL ENGINEER
174126
PAUL W. LAIRD
STATE OF UTAH

ISSUE

MARK	DATE	DESCRIPTION
	AUGUST	DFCM REVIEW SUBMITTAL

DFCM PROJECT NO:	10046900
DFCM CONTRACT NO:	107453
ARCHIPLEX PROJECT NO:	1007.01
DRAWN BY:	STAFF
CHECKED BY:	PWL
SCALE:	1/8"=1'0"
DATE:	SEPTEMBER 16, 2010

SHEET TITLE

MEZZANINE LEVEL PLUMBING PLAN

P102

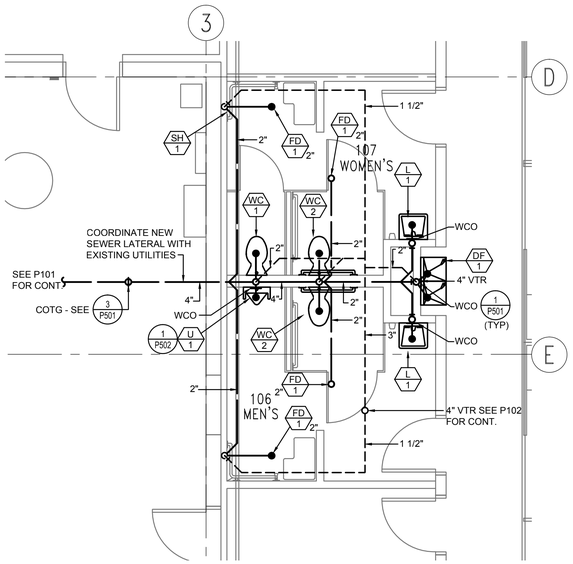

ENLARGED PLUMBING WASTE AND VENT PLAN

SCALE: 1/4" =1'-0"

0 2' 4' 8'

NORTH

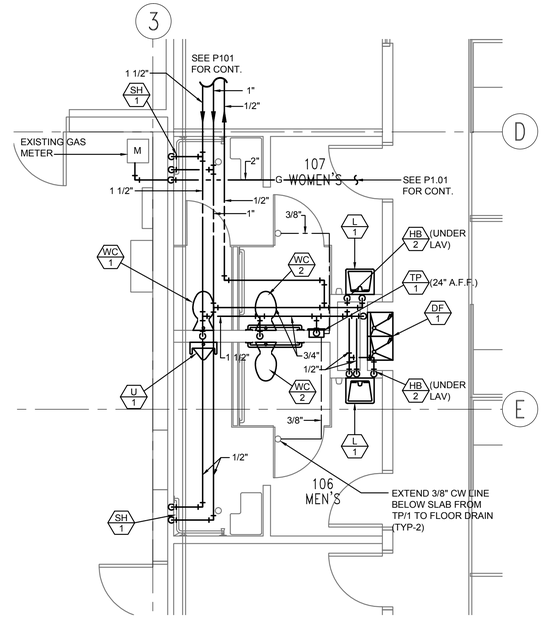

ENLARGED PLUMBING WATER SUPPLY PLAN

SCALE: 1/4" =1'-0"

0 2' 4' 8'

NORTH

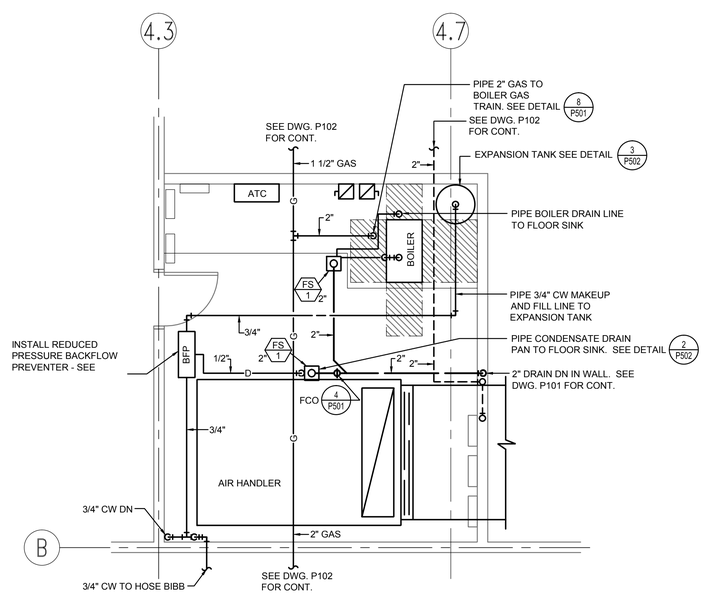

ENLARGED MECHANICAL ROOM PLUMBING PLAN

SCALE: 1/4" =1'-0"

0 2' 4' 8'

CLIENT

UDOT CONNECTING COMMUNITIES

REGION 4 OFFICE REMODEL
708 SOUTH 100 WEST
RICHFIELD UTAH 84701

DESIGNER

ARCHIPLEX GROUP
architecture • planning • design services
255 Crossroad Square
Salt Lake City, UT 84115
P:(801) 961-7070
F:(801) 961-7373

CONSULTANTS

OLSEN & PETERSON consulting engineers, inc.
14 East 2700 South, Salt Lake City, UT 84115
Phone: (801) 486-4646 Fax: (801) 467-2531

PROFESSIONAL SEAL

REGISTERED PROFESSIONAL ENGINEER
174126
PAUL W. LAIRD
STATE OF UTAH

ISSUE

MARK	DATE	DESCRIPTION
	AUGUST	DFCM REVIEW SUBMITTAL

DFCM PROJECT NO:	10046900
DFCM CONTRACT NO:	107453
ARCHIPLEX PROJECT NO:	1007.01
DRAWN BY:	STAFF
CHECKED BY:	PWL
SCALE:	1/4"=1'-0"
DATE:	SEPTEMBER 16, 2010

SHEET TITLE

ENLARGED PLUMBING PLANS

P401

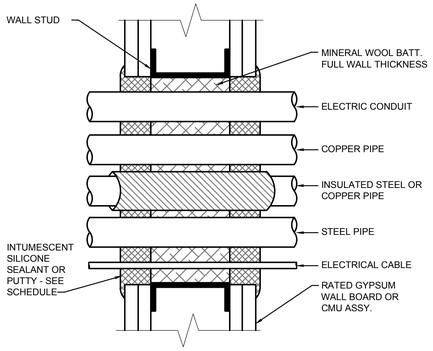

WALL RATING	DEPTH OF SEALANT	SEALANT CROWN
1 HR	1"	1/4"
2 HR	1-1/4"	3/8"
3 HR	1-1/2"	1/2"

PIPE & CONDUIT FIRE STOP DETAIL (7 / P501)

NOT TO SCALE

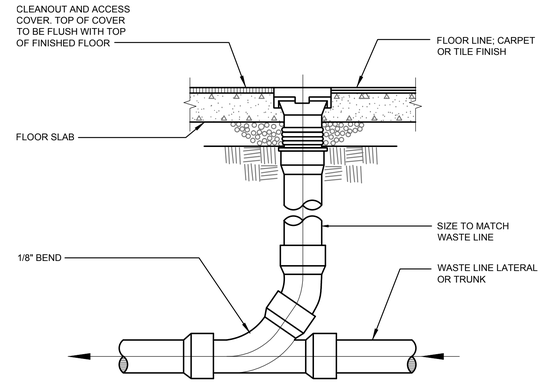

FLOOR CLEANOUT DETAIL (4 / P501)

NOT TO SCALE

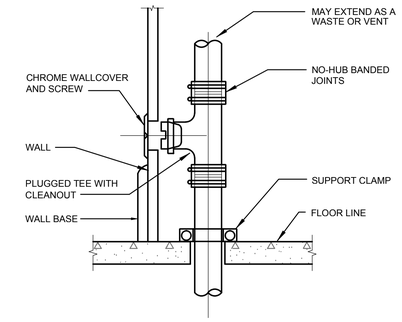

WALL CLEANOUT DETAIL (1 / P501)

NOT TO SCALE

LEGEND

NO.	ITEM
1	MAIN LUBRICATED PLUG VALVE W/HANDLE
2	MAIN GAS PRESSURE REGULATOR
3	LOW PRESSURE GAS SWITCH
4	OPERATING GAS VALVE
5	SAFETY GAS VALVE
6	GAS PRESSURE GAUGE CONN. 1/4" FNPT W/PLUB
7	HIGH PRESSURE GAS SWITCH
8	SHUT-OFF COCK
9	PILOT GAS PRESSURE REGULATOR
10	PILOT SOLENOID VALVE

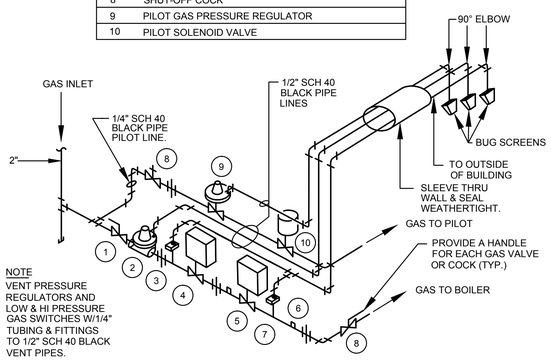

BOILER GAS TRAIN (8 / P501)

SCALE: 1/8" = 1'-0" 24-107

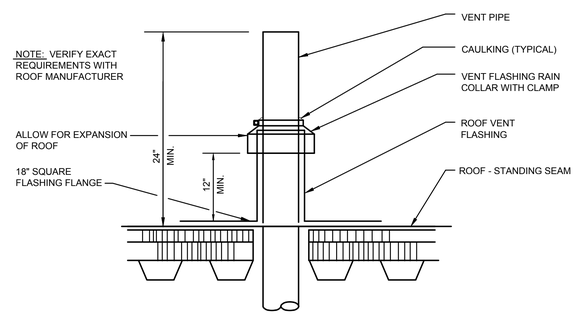

VENT THRU ROOF DETAIL (5 / P501)

NOT TO SCALE

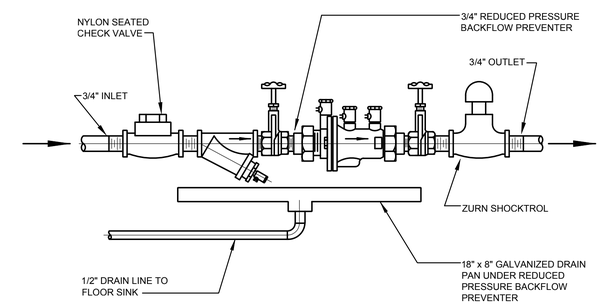

REDUCED PRESSURE BACKFLOW PREVENTER DETAIL (2 / P501)

NOT TO SCALE

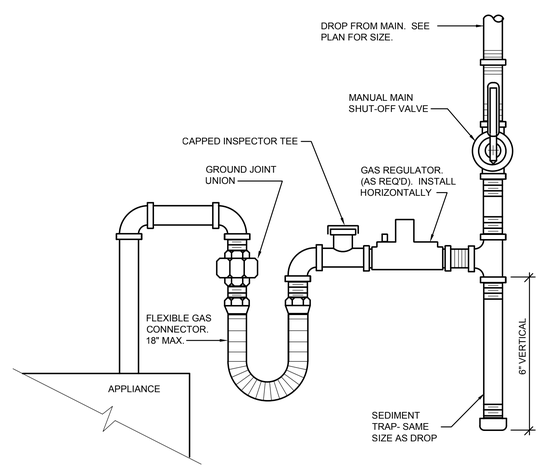

GAS LINE CONNECTION DETAIL (6 / P501)

NOT TO SCALE

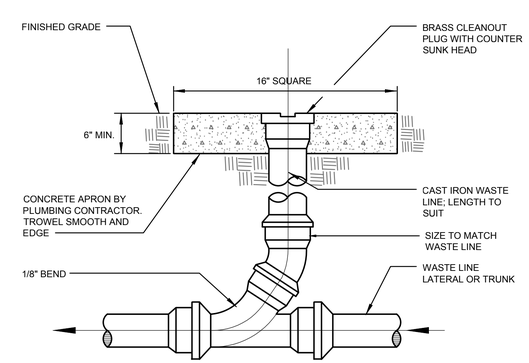

CLEANOUT TO GRADE DETAIL (3 / P501)

NOT TO SCALE

CLIENT

UDOT CONNECTING COMMUNITIES

REGION 4 OFFICE REMODEL
708 SOUTH 100 WEST
RICHFIELD UTAH 84701

DESIGNER

ARCHIPLEX GROUP
architecture · planning · design services
255 Crossroad Square
Salt Lake City, UT 84115
P:(801) 961-7070
F:(801) 961-7373

CONSULTANTS

OLSEN & PETERSON consulting engineers, inc.
14 East 2700 South, Salt Lake City, UT 84115
Phone: (801) 486-4646 Fax: (801) 467-2531

PROFESSIONAL SEAL

REGISTERED PROFESSIONAL ENGINEER # 174126 PAUL W. LAIRD STATE OF UTAH

ISSUE

MARK	DATE	DESCRIPTION
	AUGUST	DFCM REVIEW SUBMITTAL

DFCM PROJECT NO:	10046900
DFCM CONTRACT NO:	107453
ARCHIPLEX PROJECT NO:	1007.01
DRAWN BY:	STAFF
CHECKED BY:	PWL
SCALE:	NTS
DATE:	SEPTEMBER 16, 2010

SHEET TITLE

PLUMBING SCHEDULES & DETAILS

P501

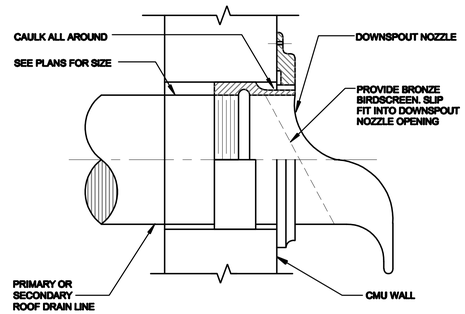

DOWNSPOUT NOZZLE DETAIL (4 / P502)

NOT TO SCALE

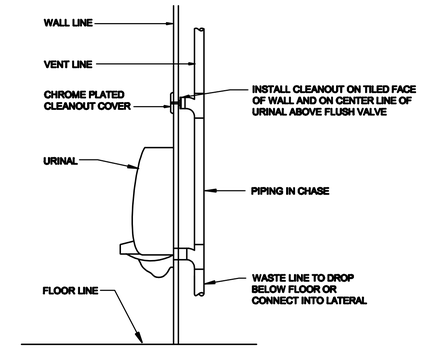

CLEANOUT AT URINAL DETAIL (1 / P502)

NOT TO SCALE

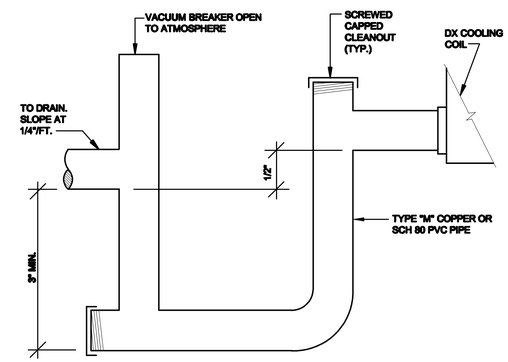

COOLING COIL CONDENSATE DRAIN DETAIL (2 / P502)

NOT TO SCALE

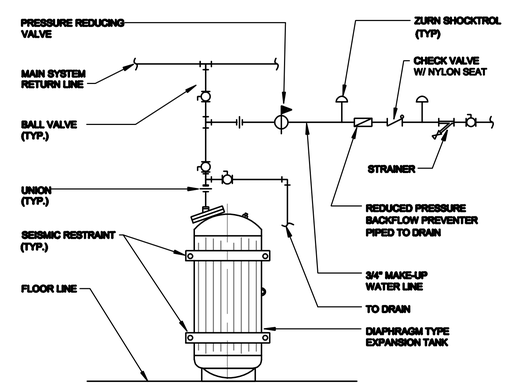

EXPANSION TANK PIPING DETAIL (3 / P502)

NOT TO SCALE

CLIENT

UDOT CONNECTING COMMUNITIES

REGION 4 OFFICE REMODEL
708 SOUTH 100 WEST
RICHFIELD UTAH 84701

DESIGNER

ARCHIPLEX GROUP
architecture • planning • design services
255 Crossroad Square
Salt Lake City, UT 84115
P:(801) 961-7070
F:(801) 961-7373

CONSULTANTS

OLSEN & PETERSON consulting engineers, inc.
14 East 2700 South, Salt Lake City, UT 84115
Phone: (801) 486-4646 Fax: (801) 467-2531

PROFESSIONAL SEAL

LICENSED PROFESSIONAL ENGINEER # 174126 PAUL W. LAIRD STATE OF UTAH

ISSUE

MARK	DATE	DESCRIPTION
	AUGUST	DFCM REVIEW SUBMITTAL

DFCM PROJECT NO:	10046900
DFCM CONTRACT NO:	107453
ARCHIPLEX PROJECT NO:	1007.01
DRAWN BY:	STAFF
CHECKED BY:	PWL
SCALE:	NTS
DATE:	SEPTEMBER 16, 2010

SHEET TITLE

PLUMBING DETAILS

P502

PLUMBING PIPING LEGEND

DESCRIPTION	SYMBOL
WASTE	
VENT	
COLD WATER	
HOT WATER	
HOT WATER RECIRCULATING	
NATURAL GAS	G
DRAIN	D
TRAP PRIMER	TP

PLUMBING FIXTURE SCHEDULE

SYMBOL	FIXTURE	WASTE	VENT	C.W.	H.W.	NOTES
WC 1	WATER CLOSET	4"	2"	1 1/4"	--	FLOOR MOUNTED FLUSH VALVE
WC 2	WATER CLOSET	4"	2"	1 1/4"	--	FLOOR MOUNTED FLUSH VALVE - ADA
U 1	URINAL	2"	1 1/2"	3/4"	--	WALL HUNG FLUSH VALVE - ADA
L 1	LAVATORY	1 1/2"	1 1/2"	1/2"	1/2"	WALL HUNG - ADA
SS 1	SERVICE SINK	3"	1 1/2"	1/2"	1/2"	FLOOR MOUNTED - CORNER TYPE
DF 1	DRINKING FOUNTAIN	1 1/2"	1 1/2"	1/2"	--	WALL MOUNTED - BI-LEVEL - ADA
SH 1	SHOWER	2"	2"	1/2"	1/2"	PRESSURE BALANCED MIXING VALVE
HB 1	HOSE BIBB	--	--	3/4"	--	FREEZE PROOF - INTEGRAL VACUUM BREAKER
HB 2	HOSE BIBB	--	--	3/4"	--	UNDER LAVATORY - CHROME PLATED - LOOSE KEY- INTEGRAL VACUUM BREAKER
FD 1	FLOOR DRAIN	2"	2"	--	--	FINISHED AREAS AND EQUIPMENT ROOMS WITH DEEP SEAL P-TRAP AND TRAP PRIMER
FS 1	FLOOR SINK	2"	2"	--	--	8"x8" W/ CENTER OPENING GRATE
TP 1	TRAP PRIMER	--	--	1/2"	--	PRESSURE ACTUATED. PROVIDE RECESSED STAIN. STEEL WALL BOX W/ LOCKING COVER.
RD 1	ROOF DRAIN	3"	--	--	--	PRIMARY ROOF DRAIN
RD 2	ROOF DRAIN	3"	--	--	--	OVERFLOW ROOF DRAIN
DS 1	DOWN SPOUT	3"	--	--	--	---

NOTE:
REFER TO SPECIFICATIONS FOR COMPLETE DESCRIPTION OF ALL FIXTURES.

PLUMBING FIXTURE SCHEDULE

ABS	Acrylonitrile Butadiene Styrene
AFC	Above Finished Ceiling
AFF	Above Finished Floor
AFG	Above Finished Grade
AFR	Above Finished Roof
ARCH	Architect
ASSY	Assembly
BFC	Below Finished Ceiling
BFF	Below Finished Floor
BFG	Below Finished Grade
BFP	Back Flow Preventer
BFR	Below Finished Roof
BTUH	British Thermal Unit Per Hour
CI	Cast Iron
CMU	Concrete Masonry Unit
CO	Cleanout
CONC	Concrete
CONST	Construction
CW	Cold Water
DN	Down
DWG	Drawing
DWV	Drainage Waste and Vent
ELEC	Electrical
ELEV	Elevation
F	Degree Fahrenheit
FCO	Floor Cleanout
FD	Floor Drain
FS	Floor Sink
FS	Fire Sprinkler
FPS	Feet Per Second
FT	Feet
FTG	Footing
G	Gas
GI	Galvanized Iron
GPM	Gallons Per Minute
HE	High Efficiency
HW	Hot Water
HWR	Hot Water Recirculated
HZ	Hertz
IN	Inches
KW	Kilowatts
LB	Pound
MAX	Maximum
MECH	Mechanical
MIN	Minimum
NIC	Not In Contract
OZ	Ounce
PH	Phase
POC	Point of Connection
POD	Point of Disconnect
PSI	Pounds Per Square Inch
PSIG	Pounds Square Inch Gauge
P&T	Pressure and Temperature
PVC	Poly Vinyl Chloride
RD	Roof Drain
RL	Refrigerant Liquid
RS	Refrigerant Suction
SQ	Square
SRD	Secondary Roof Drain
TYP	Typical
TXV	Thermal Expansion Valve
V	Vent
V	Volts
VERT	Vertical
VTR	Vent Thru Roof
W	Watts
WC	Water Closet
WCO	Wall Cleanout

BRANCH WATER LINE SCHEDULE

FIXTURE	FIXTURE UNITS	TOTAL QUANTITY OF FIXTURES SERVED BY A GIVEN PIPE SIZE					
		1/2"	3/4"	1"	1 1/4"	1 1/2"	2"
WATER CLOSET	10	--	--	1	2	3	8
URINAL	5	--	1	2	3	6	20
LAVATORY	2	1	3	5	7	15	50
SINK	2	1	3	5	7	15	50
KITCHEN SINK	2	1	3	5	7	15	50
SERVICE SINK	4	--	1	2	3	7	25
DRINKING FOUNTAIN	1	2	6	10	15	30	--
HOSE BIBB	3	--	1	3	5	10	33
WALL HYDRANT	3	--	1	3	5	10	33
DISHWASHER	4	--	1	2	3	7	25
TOTAL FIXTURE UNITS SERVED BY PIPE SIZE		2	6	10	15	30	100

NOTE:
MINIMUM PIPE SIZE TO ANY FIXTURE TO BE 1/2". IN THE EVENT PIPE SIZES ARE NOT SHOWN, THE SIZE OF ANY BRANCH LINE SHALL BE DETERMINED BY USING THIS TABLE. FIND SUM OF TOTAL FIXTURE UNITS ON BRANCH LINE, THEN REDUCE TOTAL BY SUBTRACTING OFF INDIVIDUAL FIXTURE UNITS FOR EACH SUCCESSIVE FIXTURE ALONG THE BRANCH LINE.

CLIENT

UDOT CONNECTING COMMUNITIES

REGION 4 OFFICE REMODEL
708 SOUTH 100 WEST
RICHFIELD UTAH 84701

DESIGNER

ARCHIPLEX GROUP
architecture • planning • design services
255 Crossroad Square
Salt Lake City, UT 84115
P:(801) 961-7070
F:(801) 961-7373

CONSULTANTS

OLSEN & PETERSON
consulting engineers, inc.
14 East 2700 South, Salt Lake City, UT 84115
Phone: (801) 486-4646 Fax: (801) 467-2531

PROFESSIONAL SEAL

REGISTERED PROFESSIONAL ENGINEER
174126
PAUL W. LAIRD
STATE OF UTAH

ISSUE

MARK	DATE	DESCRIPTION
	AUGUST	DFCM REVIEW SUBMITTAL

DFCM PROJECT NO:	10046900
DFCM CONTRACT NO:	107453
ARCHIPLEX PROJECT NO:	1007.01
DRAWN BY:	STAFF
CHECKED BY:	PWL
SCALE:	NTS
DATE:	SEPTEMBER 16, 2010

SHEET TITLE

PLUMBING SCHEDULES & LEGENDS

P601

LIGHTING FIXTURE SCHEDULE

SYMBOL	DESCRIPTION	LAMPS	APPROVED MANUFACTURERS	CATALOG NUMBER	PICTURE
T-1	4' STRIP FLUORESCENT LIGHT FIXTURE WITH WIRE GUARD AND CHAIN.	2F28 T8	METALUX	SNF-232-UNV-ER81/WG-SNF-4FT/AYC CHAIN	
			THOMAS	T232-UNV-1/2-EB10R-CG4	
			LITHONIA	Z-2-32-MVOLT-ADOPL-(WGZ48,MS5ACF36)	
			LIGHTOLIER	SW4SHPF232-UNV-HI/AWG3WCSP/AH5CSP	
			COLMUMBIA	CS4-232-ELWU-CSHC	
T-2	2'x4' LAY-IN FLUORESCENT LIGHT FIXTURE WITH PERFORATED BASKET. 100% / 50% STEP DIMMING BALLAST.	2F28 T8	METALUX	2RDI-232RP-UNV-NDIM	
			THOMAS	2PFG-232-PMW-UNV-1/2-EBSD	
			LITHONIA	2AV-G-2-32-MDR-MVOLT-BSNP-ALG	
			LIGHTOLIER	CFS2GPF232-UNV-HI STEP DIMMING	
			COLMUMBIA	STR24-232G-MPO-ESD-U	
T-3	PENDANT MOUNTED DECORATIVE FLUORESCENT LIGHT FIXTURE WITH 100%-50% STEP DIMMING. LENGTH AS SHOWN ON DRAWINGS	2F28 T8 PER 4'	FOCAL POINT	FV2SPS-2T8-1C-UNV-D (STEP) C48-SCBA-**	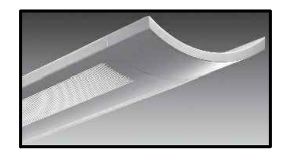
			FINELIGHT	S12P-XX-2T8-SD-91W-120-FA-CE	
			PEERLESS	10CRM1-2-32-SCBA-*-*-120-BSNP-SCT-L/L P-*/*-SCBA	
			LIGHTOLIER	LSC2-XX-B-32-UNV-SCBA STEP DIMMING	
			ALERA	CV-*-2T8-PERF-CM48-ESDU-MW-SCE	
T-4	SAME AS T-2 EXCEPT 2'X2' & WITHOUT STEP DIMMING.	2F17 T8	METALUX	2RDI-217RP-UNV-ER81	
			THOMAS	2PFG-217-PMW-UNV-1/2-EB10R	
			LITHONIA	2AV-G-2-17-MDR-MVOLT-OS1015L-ALG	
			LIGHTOLIER	CFS2GPF217-UNV-HI	
			COLUMBIA	STR22-217G-MPO-ELWU	
T-5	2'x4' LAY-IN FLUORESCENT LIGHT FIXTURE WITH REGRESSED DOOR AND .125 PRISMATIC LENS.	2F28 T8	METALUX	2GC8-RA-232A125-UNV-ER81	
			THOMAS	2SPG-232-RA21-UNV-1/2-EB10R	
			LITHONIA	2SP8-G-2-32-RW-A12125-MVOLT-ADOPL	
			LIGHTOLIER	SPS2GRAV1232-UNV-HI	
			COLUMBIA	ST824-232G-RAA12125-ELWU	
T-6	6" RECESSED FLUORESCENT LIGHT FIXTURE WITH LENS SUITABLE FOR SHOWER.	26W CFL	HALO	H2721CAT / 270PS	
			THOMAS	S6SRD-1H26PLT-U-T6SRD-1HSHWROF	
			ELITE	B6PLIC-26-E-120-AT-B741-SCBA	
			LIGHTOLIER	1177SH / 1101F2642U	
			PRESCOLITE	TBX-TL3	
T-7	1'X4' FLUORESCENT FLANGED MOUNTED LIGHT FIXTURE WITH .125 PRISMATIC LENS AND REGRESSED DOOR.	2F28 T8	METALUX	FC8-RA-232A125-UNV-ER81	
			THOMAS	IDG-232-RA21-UNV-1/2-EB10R	
			LITHONIA	GT8-F-2-32-RW-A12125-MVOLT-OS1015L	
			LIGHTOLIER	SPS1GRAV1232-UNV-HI FK91X4	
			COLUMBIA	ST814-232F-RAA12125-ELWU	
T-8	6" RECESSED LED LIGHT FIXTURE.	INCLUDED 27W	PORTFOLIO	LD615840--6LS51-L1	
			OMEGA	OM6LED-27-120-R6LED-400K-MD-CSS	
			GOTHAM	ECSR-41/14-6AR-120	
			LIGHTOLIER	C6L1520DL??KMCCLW / C6L15N?	
			CREE	LR6-C-DR1000	
T-9	SAME AS T-2 EXCEPT WITHOUT STEP DIMMING.	2F28 T8	METLAUX	2RDI-232RP-UNV-ER81	
			THOMAS	2PFG-232-PMW-UNV-1/2-EB10R	
			LITHONIA	2AV-G-2-32-MDR-MVOLT-OS1015L-ALG	
			LIGHTOLIER	CFS2GPF232-UNV-HI	
			COLUMBIA	STR24-232G-MPO-ELWU	
T-10	POLE MOUNTED METAL HALIDE LIGHT FIXTURE WITH 20' POLE.	250 W MH	INVIEW	ICM-250-MP-UNV-2S-SCBA/SRX4A20S-SCBA	
			GARDCO	G18-1-2XL-250MH-120-SFBA	
			LITHONIA	MR2-250M-SR2-TB-SCWA-SPA-DM19AS-SCB A-L/LP / SSS-20-4C-DM19AS-SCBA	
			VISIONAIRE	ARI-1-T2-250-P-1-AM-SCBA	
			KIM	ISA/WP9LE*/250PMH120/SCBA	
T-11	EXTERIOR LED WALL MOUNTED LIGHT FIXTURE.	LED INCLUDED 35W	MCGRAW-ED	1ST-A01-LED-E1-BL3-SCBA-LCF	
			GARDCO	121-CWL-MT-35-NW-UNIV	
			VISIONAIRE	ARS-1-T3-34L-65KL-1-WM-SCBA	
			DECO	D453-LED-44-33-SCBA	
T-12	FLUORESCENT PENDANT LIGHT FIXTURE WITH 60% UPLIGHT. COLOR OF REFLECTOR BY ARCHITECT.	(1) 42WCFL DOWN (2) 42WCFL UP	BETA CALCO	440923-SCBA-EM	
T-13	LINEAR RECESSED FLANGELESS FLUORESCENT WALL WASH LIGHT FIXTURE. LENGTH AS SHOWN ON THE DRAWINGS.	1F28 T8	SELUX	MIWO-1T5-SF*-*-SCBA-120-DM	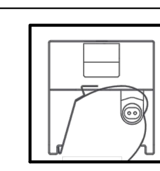
			BIRCHWOOD	KEL-325-TL-CR-XX-1-HRW	
			PEERLESS	LWR9-FLANGELESS-1-28T5-HOL-*-120	
			PINNACLE	EW-1T5-XX-NF-IC-W	
			WINONA	P1-S2-148T8-U-S2*-FO-SGW-X-STD	
T-14	PENDANT MOUNTED DECORATIVE FLUORESCENT LIGHT FIXTURE TO MATCH T-3. CENTER LAMP TO BE ON A SEPARATE SWITCH. LENGTH AS SHOWN ON DRAWINGS.	3F28 T8 PER 4'	FOCAL POINT	FV2SPS-3T8-2C-UNV-S-C48-SCBA-**	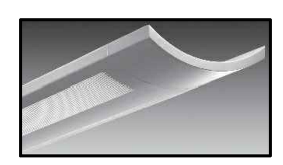
			FINELIGHT	S12P-XX-3T8-DC-91W-120-FA-CE	
			PEERLESS	10CRM1-3-32-SCBA-*-*-120-GEB10/OS1015L -DCT-L/LP-*/*-SCBA	
			LIGHTOLIER	LSC-3-**-B-32-UNV-SCBA-DS	
			ALERA		
EX-1	LED EDGE LITE EXIT SIGN WITH RECESSED 90 MINUTE NiCAD BATTERY.	INCLUDED	ISOLITE	ELT-EM-G-*M-**-**-UC	
			MCPHILBEN	ER45VXL-X-1-SCBA-GC-XX	
			LITHONIA	EDG-1-G-EL	
			LIGHTOLIER	EX-1-G-?-?-RC-C-N	
			DUAL LITE	LE*SG*NE	
EX-2	SAME AS EX-1 EXCEPT DOUBLE SIDED.	INCLUDED	ISOLITE	ELTEM2GM-**-**-UC	
			MCPHILBEN	ER45VXL-X-2-SCBA-GC-XX	
			LITHONIA	EDG-2-G-EL	
			LIGHTOLIER	EX-2-G-?-?-RC-M-N	
			DUAL LITE	LE*DG*NE	

NOTES:

1. ALL FLUORESCENT LIGHTS SHALL HAVE ELECTRONIC INSTANT START BALLASTS, .78 BF, ADVANCE AND SYLVANIA ARE APPROVED MANUFACTURERS.
2. ALL FLUORESCENT LAMPS SHALL HAVE 4100° COLOR TEMPERATURE.
3. FIELD VERIFY ALL LIGHTING VOLTAGES PRIOR TO PLACING ANY ORDER.
4. THE WRITTEN CRITERIA OF THE FIXTURE DESCRIPTION TAKES PRECEDENCE OVER THE CATALOG NUMBER.
5. ALL MR16 LAMPS ARE TO BE USHIA WITH 10,000 LAMP HOURS.
6. ALL LIGHT FIXTURE FINISHES AND LAMP TEMPERATURE COLORS ARE TO BE SELECTED BY THE ARCHITECT.

CALLOUT SYMBOL LIST

SYMBOL	DESCRIPTION
T-X x	LIGHTING FIXTURE CALLOUT NUMBER INDICATES A SUGGESTED QUANTITY- TO BE VERIFIED
XX-X	MECHANICAL EQUIPMENT CALLOUT
X x	REFERENCE NOTE CALLOUT

FIRE ALARM SYSTEMS SYMBOL LIST

SYMBOL	DESCRIPTION
	ELECTRICAL PANEL LOCATION
	FIRE ALARM SYSTEM PHOTOELECTRIC SMOKE DETECTOR
F	FIRE ALARM MANUAL PULL STATION, +42" A.F.F.
	FIRE ALARM HORN WITH STROBE, HIGH DECIBEL, +96" A.F.F.
	A.D.A. STROBE FOR FIRE ALARM, +96" A.F.F.
FS	FIRE SPRINKLER FLOW SWITCH
TS	FIRE SPRINKLER TEMPER SWITCH

ABBREVIATIONS SYMBOL LIST

SYMBOL	DESCRIPTION
W.P.	INDICATES WEATHER PROOF EQUIPMENT
CLG.	INDICATES CEILING MOUNTED DEVICE
E	INDICATES DEVICE IS ON EMERGENCY CIRCUIT
F.A.C.P.	FIRE ALARM CONTROL PANEL
F.A.R.A.P.	FIRE ALARM REMOTE ANNUNCIATOR PANEL
TYP	TYPICAL

DISCONNECTS/CIRCUIT BREAKER SYMBOL LIST

SYMBOL	DESCRIPTION
	FUSED DISCONNECT SWITCH - SIZE AS REQUIRED
S	COMBINATION STARTER/FUSED DISCONNECT SWITCH - SIZE AS REQUIRED
	MOTOR LOCATION
M	ELECTRICAL METER LOCATION

SWITCHES SYMBOL LIST

SYMBOL	DESCRIPTION
$	SINGLE POLE TOGGLE SWITCH - 20 AMP
$a,b	SINGLE POLE TOGGLE SWITCH - 20 AMP, LETTERS INDICATE SWITCH ASSIGNMENT
$3	THREE WAY TOGGLE SWITCH - 20 AMP
U,I,DT	CEILING MOUNTED OCCUPANCY SENSOR - U = ULTRASONIC, I = INFRARED, DT = DUAL TECH.
U,I,DT	WALL MOUNTED OCCUPANCY SENSOR - U = ULTRASONIC, I = INFRARED, DT = DUAL TECH.
PC	PHOTO CELL SENSOR - LIGHTING CONTROL SYSTEM
$T	MANUAL DISCONNECT WITH THERMAL OVERLOAD PROTECTION
	PUSH BUTTON SWITCH

RECEPTACLES SYMBOL LIST

SYMBOL	DESCRIPTION
	DUPLEX CONVENIENCE OUTLET - 20 AMP
	DUPLEX CONVENIENCE OUTLET - 20 AMP GROUND FAULT INTERRUPTER
	4-PLEX CONVENIENCE OUTLET - 20 AMP
	FLUSH FLOOR OUTLET BOX
J	JUNCTION BOX - SIZE AND FUNCTION AS REQUIRED

COMMUNICATION SYSTEMS SYMBOL LIST

SYMBOL	DESCRIPTION
	TELEPHONE TERMINAL BOARD
	FLUSH TELE/DATA OUTLET BY TELECOMMINICATIONS CONTRACTOR
	FLUSH FLOOR OUTLET WITH TELE/DATA

LIGHTING SYSTEMS SYMBOL LIST

SYMBOL	DESCRIPTION
J	LAY-IN MOUNTED FLUORESCENT FIXTURE
J	SURFACE MOUNTED FLUORESCENT FIXTURE
E	EMERGENCY LIGHTING
J	FLUORESCENT STRIP LIGHT FIXTURE
	RECESSED FIXTURE
	PENDANT MOUNTED LIGHT FIXTURE - LENGTH AS SHOWN
	EXIT LIGHT. ARROWS SHOW EXIT DIRECTION
	WALL MOUNTED CAN LIGHT FIXTURE

GENERAL NOTES:

1. ALL MATERIALS TO BE REMOVED AND RETURNED TO THE OWNER. MATERIALS WHICH THE OWNER DECIDES NOT TO KEEP SHALL BE SALVAGED AND REMOVED FROM THE SITE BY THE CONTRACTOR.
2. ALL CONCEALED CONDUIT THAT CANNOT BE REMOVED SHALL BE CUT FLUSH WITH THE FINISH SURFACES AND CAPPED OFF AFTER THE WIRING HAS BEEN DISCONNECTED AT THE PANEL AND REMOVED FROM THE CONDUIT.
3. ALL MATERIALS USED IN THIS INSTALLATION SHALL BE U.L. APPROVED AND NEW.
4. THE CONTRACTOR SHALL PATCH THE WALLS AND CEILINGS WHERE THE DEVICES ARE REMOVED TO MATCH THE EXISTING WALLS AND CEILINGS. COORDINATE WITH GENERAL CONTRACTOR.
5. REFER TO THE ARCHITECTURAL REFLECTED CEILING PLANS FOR THE EXACT LOCATION OF ALL LIGHTING FIXTURES.
6. ALL DISCONNECTS SHALL BE HEAVY DUTY TYPE.
7. COORDINATE WITH THE OWNER AND ARCHITECT FOR THE EXACT LOCATION OF THE OUTLETS.
8. PRIOR TO SUBMITTING A BID THE ELECTRICAL CONTRACTOR SHALL INSPECT THE SITE AND INCLUDE IN HIS BID PACKAGE ALL CHARGES DUE TO EXISTING CONDITIONS. SHOP DRAWINGS ARE REQUIRED. ALL LABOR, MATERIAL AND WORKMANSHIP SHALL BE GUARANTEED FOR A PERIOD OF 1 YEAR FROM THE DATE OF ACCEPTANCE BY THE TENANT. REPLACE OR REPAIR ALL DEFECTS DURING THE GUARANTEED PERIOD.
9. THE CONTRACTOR SHALL INFORM THE ARCHITECT/ENGINEER IN WRITING OF ANY DISCREPANCIES FOUND BETWEEN THE INTENDED FUNCTION OF EQUIPMENT AND EQUIPMENT SPECIFIED IN THE CONTRACT DOCUMENTS A MINIMUM OF FIVE (5) WORKING DAYS PRIOR TO ISSUANCE OF THE FINAL BID. FAILURE TO REPORT ANY DISCREPANCY (CATALOG NUMBERS, DISCONTINUED ITEMS, ETC.) DOES NOT RELIEVE THE CONTRACTOR FROM PROVIDING EQUIPMENT WHICH SHALL CONFORM TO AND FULFILL THE INTENT OF THE CONTRACT DOCUMENTS, NOR SHALL IT BE USED AS A CONDITION TO OBTAIN ADDITIONAL FUNDS FROM THE OWNER AFTER THE CONTRACT IS AWARDED. THE CONTRACTOR SHALL REQUEST ALL CLARIFICATIONS OF CONTRACT DOCUMENT REQUIREMENTS IN WRITING TO THE ARCHITECT/ENGINEER A MINIMUM OF FIVE (5) WORKING DAYS PRIOR TO ISSUANCE OF THE FINAL BID.
10. REFER TO THE MECHANICAL SHEETS FOR THE EXACT LOCATION OF THE MECHANICAL EQUIPMENT.
11. THE ELECTRICAL CONTRACTOR SHALL NOTIFY AND COORDINATE WITH THE MECHANICAL CONTRACTOR SO THAT NO PIPING, DUCTS, OR OTHER EQUIPMENT SHALL BE INSTALLED IN ENTRY OR PASS THROUGH ELECTRICAL ROOM OR SPACES ABOVE OR BELOW ELECTRICAL PANELS.
12. ELECTRICAL CONTRACTOR SHALL VERIFY ALL ELECTRICAL LOADS (VOLTAGE, PHASE, CONNECTION REQUIREMENT, ETC.) OF EQUIPMENT FURNISHED UNDER OTHER DIVISIONS WITH APPROVED SHOP DRAWINGS PRIOR TO BEGINNING ROUGH-IN.
13. TEMPORARY ELECTRICAL SERVICE IS TO BE PROVIDED BY THE ELECTRICAL CONTRACTOR AND REMOVED BY THE ELECTRICAL CONTRACTOR.
14. MINIMUM SIZE OF CONDUIT TO BE 3/4". ALUMINUM CONDUITS SHALL NOT BE USED.
15. USE RIGID STEEL SET SCREW TYPE FITTINGS ONLY. DIE CAST FITTINGS SHALL NOT BE USED.
16. RUN A NEUTRAL CONDUCTOR FOR EACH PHASE CONDUCTOR (EACH CIRCUIT) IN A CONDUIT. NOT MORE THAN THREE (3) CIRCUITS IN A CONDUIT. THREE (3) PHASE CONDUCTORS, THREE (3) NEUTRAL CONDUCTORS (ONE FOR EACH PHASE) AND ONE (1) GROUND CONDUCTOR FOR A TOTAL OF SEVEN (7) CONDUCTORS.
17. CONTRACT DOCUMENTS SHALL TAKE PRECEDENCE OVER SHOP DRAWINGS UNLESS SPECIFICALLY NOTED OTHERWISE.
18. FOR SPECIFICATION OF PULL WIRES IN EMPTY CONDUITS, REFER TO THE ELECTRICAL SPECIFICATION FOR RACEWAYS SECTION 16110.
19. THE MINIMUM SIZE OF THE CONDUCTORS ARE TO BE #12 AWG THHN COPPER, UNLESS INDICATED OTHERWISE ON THE DRAWINGS.
20. ALL J-BOXES SHALL HAVE MINIMUM DEPTH OF 2-1/8" UNLESS OTHERWISE SPECIFIED. SECURE ALL J-BOXES AS SHOWN IN THE DETAILS. FURNISH AND INSTALL PROPER MUD RINGS.
21. FLOORS SHALL BE SCANNED FOR NEW HOLES IN EXISTING CONCRETE SLABS WITH GROUND PENETRATING RADAR. METHOD OF PROCEDURE IS REQUIRED AND SHALL BE APPROVED BY STRUCTURAL ENGINEER PRIOR TO START OF CORE DRILLING.
22. AT THE END OF THE JOB, PROVIDE BLANK COVER PLATES TO MATCH THE OTHER COVER PLATES FOR ALL J-BOXES WHERE DEVICES HAVE NOT YET BEEN INSTALLED.
23. SEAL AROUND ALL CONDUIT PENETRATIONS THROUGH FIRE RATED WALLS AND CEILINGS WITH FIRE RATED MATERIAL. 3M IS AN APPROVED MANUFACTURER.
24. ALL ELECTRICAL WIRING MUST BE IN CONDUIT (ROMEX AND MC CABLE NOT PERMITTED).
25. FLEXIBLE CONDUITS CAN ONLY BE USED FOR SHORT RUNS (6' MAXIMUM).
26. NO CONDUITS SHALL RUN IN DUCT WORK.
27. THE ELECTRICAL CONTRACTOR SHALL TERMINATE THE ELECTRICAL CONNECTIONS TO ALL THE EQUIPMENT BY PROVIDING THE NECESSARY MALE/FEMALE CONNECTOR, RECEPTACLE, PLUG, ETC.
28. USE NO. 10 THHN CONDUCTORS FOR CONDUCTOR LENGTH OVER 100 FEET, NO. 8 THHN OVER 200 FEET, NO. 6 THHN OVER 300 FEET AND NO. 4 THHN OVER 400 FEET LENGTH.
29. UPDATE THE BUILDING FIRE ALARM SCHEMATIC DRAWINGS TO SHOW LOCATIONS OF NEW AND EXISTING FIRE ALARM DEVICES CHANGED DURING THIS PROJECT. FIRE ALARM SYSTEM SHALL BE TESTED FOR PROPER OPERATION AT THE END OF THE PROJECT. ALL TESTS AND REPORTS SHALL BE COMPLIANT WITH NFPA 72 CHAPTER 7. COORDINATE TESTING WITH THE OWNER AND FIRE MARSHALL.
30. THE FIRST 10' LENGTH OF ALL BURIED CONDUIT OVER 1" SHALL BE RIGID GALVANIZED STEEL WHERE THEY ARE LEAVING OR ENTERING THE BUILDING, MANHOLE, VAULT, ETC.
31. ALL METALLIC CONDUITS, JOINTS, FITTINGS, ETC., IN CONTACT WITH THE GROUND SHALL BE SPIRALLY WRAPPED WITH 3M SCOTCHRAP-51, 20 MIL TAPE (OR APPROVED EQUAL). 1/2" OVERLAP IS REQUIRED.
32. ALL UNDERGROUND CONDUIT SHALL BE BURIED 24" MINIMUM UNDER THE GROUND.
33. PROVIDE TYPED LABEL FOR ALL DUPLEX OUTLETS AND LIGHT SWITCHES TO INDICATE WHICH CIRCUIT THEY ARE TIED TO.
34. ALL DUPLEX OUTLETS AND SWITCHES SHALL BE 20 AMP., 120 VOLT SPEC GRADE. HUBBELL AND PASS & SEYMOUR AND LEVITON ARE APPROVED MANUFACTURERS.
35. LIGHT SWITCHES INSTALLED ADJACENT TO EACH OTHER, SHALL BE GANGED TOGETHER WITH ONE PIECE COVERPLATE.
36. INSTALL LIGHT SWITCHES AS CLOSE AS POSSIBLE TO THE DOOR. COORDINATE EXACT LOCATION OF LIGHT SWITCHES WITH ARCHITECT.
37. SUPPORT THE LAY-IN TYPE FIXTURES FROM THE CEILING DECK INDEPENDENT OF THE CEILING GRID, AS SHOWN ON THE TYPICAL RECESSED FIXTURE MOUNTING DETAIL.
38. INSTALL EXIT SIGNS ON THE WALL IF POSSIBLE.
39. ALL PANELBOARDS SHALL HAVE FULL SIZE ISOLATED NEUTRAL AND GROUND COPPER BUS BARS.
40. PAINT ALL THE J-BOXES FOR FIRE ALARM SYSTEM WITH RED PAINT. ALL THE CONDUIT FOR FIRE ALARM SYSTEM SHALL BE RED.
41. USE EPOXY ANCHORS TO SUPPORT THE ELECTRICAL EQUIPMENT. EXPANSION ANCHOR BOLTS ARE NOT ACCEPTED.
42. ALL PANELS SHALL HAVE COPPER BUSSES AND SHALL BE BRACED FOR A MINIMUM OF 10,000 AIC OR AS SPECIFIED.
43. PANELBOARDS SHALL BE FIELD MARKED TO WARN QUALIFIED PERSONS OF POTENTIAL ELECTRIC ARC FLASH HAZARDS. THE MARKING SHALL BE LOCATED SO AS TO BE CLEARLY VISIBLE TO QUALIFIED PERSONS BEFORE EXAMINATION, ADJUSTMENT, SERVICING, OR MAINTENANCE OF THE EQUIPMENT. (NEC 110-16)
44. A SIGN SHALL BE PLACED AT THE SERVICE ENTRANCE EQUIPMENT, INDICATING TYPE AND LOCATION OF ONSITE EMERGENCY POWER SOURCES.
45. ANY CIRCUIT BREAKER FEEDING FIRE ALARM SYSTEMS SHALL CONTAIN RED MARKING AND SHALL BE LABELED "FOR FIRE ALARM SYSTEM".
46. ALL NEW WORK MUST MEET THE CURRENT ADOPTED NATIONAL ELECTRICAL CODE.
47. ALL DISCONNECTS, J-BOXES AND CONDUITS EXPOSED TO THE OUTSIDE WEATHER SHALL BE NON-CORROSIVE, WEATHER PROOF TYPE.

CLIENT

UDOT CONNECTING COMMUNITIES

REGION 4 OFFICE REMODEL
RICHFIELD, UTAH XXXXX

DESIGNER

ARCHIPLEX GROUP
architecture · planning · design services
255 Crossroad Square
Salt Lake City, UT 84115
P:(801) 961-7070
F:(801) 961-7373

CONSULTANTS

ECE
E.C.E. LLC
Electrical Consulting Engineers
939 So. West Temple
Salt Lake City, Utah 84101
Telephone (801) 521-8007
Telefax (801) 521-8057

PROFESSIONAL SEAL

LICENSED PROFESSIONAL ENGINEER
AKBAR MATINKHAH
#172577
STATE OF UTAH

ISSUE

MARK	DATE	DESCRIPTION

DFCM PROJECT NO:	10046900
DFCM CONTRACT NO:	107453
ECE PROJECT NO:	3991
DRAWN BY:	PB
CHECKED BY:	AM
SCALE:	AS SHOWN
DATE:	AUG 13, 2010

SHEET TITLE

GENERAL NOTES, DETAILS AND SCHEDULES

E001

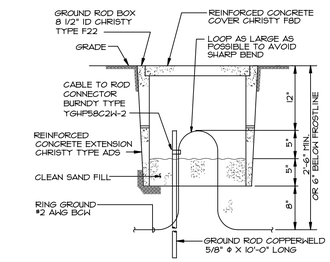

SCALE: N.T.S. — GROUND ROD ACCESS DETAIL

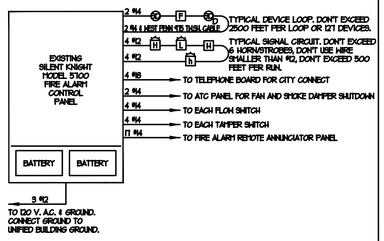

NOTE:
1. IN AND OUT CABLES TO THE DEVICES MUST RUN IN A SEPERATE CONDUIT. 3/4" CONDUIT SHALL BE THE MINIMUM SIZE.

SCALE: N.T.S. — TYPICAL FIRE ALARM RISER DIAGRAM

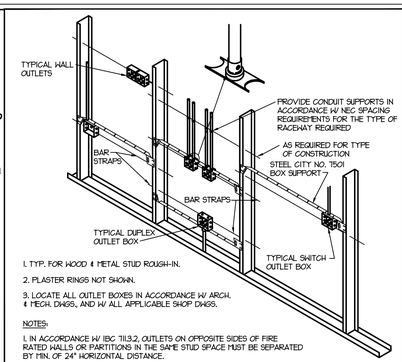

1. TYP. FOR WOOD & METAL STUD ROUGH-IN.
2. PLASTER RINGS NOT SHOWN.
3. LOCATE ALL OUTLET BOXES IN ACCORDANCE W/ ARCH. & MECH. DWGS., AND W/ ALL APPLICABLE SHOP DWGS.

NOTES:
1. IN ACCORDANCE W/ IBC 713.3.2, OUTLETS ON OPPOSITE SIDES OF FIRE RATED WALLS OR PARTITIONS IN THE SAME STUD SPACE MUST BE SEPARATED BY MIN. OF 24" HORIZONTAL DISTANCE.

SCALE: N.T.S. — TYPICAL ROUGH-IN REQUIREMENTS DETAIL

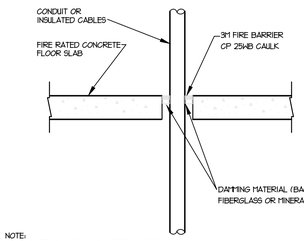

NOTE:
TYPICAL DETAILS SHOWING GENERAL FIRE STOPPING PROCEDURE. ACTUAL PROCEDURE DEPENDS UPON ANNULAR SPACE BETWEEN PIPE AND/OR INSULATION AND OPENING. FOLLOW MANUFACTURER'S INSTRUCTIONS.

UL SYSTEM #49

SCALE: N.T.S. — TYPICAL FIRESTOP FOR CABLES/CONDUIT THROUGH CONCRETE FLOORING

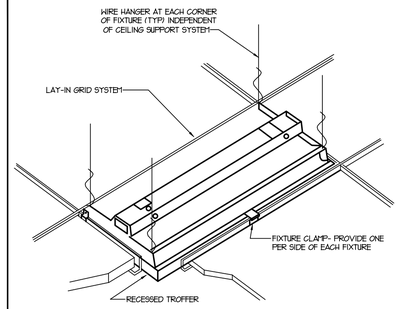

SCALE: N.T.S. — TYPICAL RECESSED FIXTURE MOUNTING DETAIL

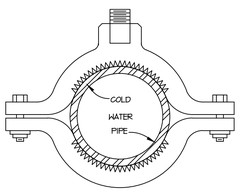

SCALE: N.T.S. — TWO PIECE COPPER PIPE CLAMP DETAIL

IF PANEL BOARD IS FEED FROM A TRANSFORMER LOCATED IN THE SAME ROOM AS THE PANEL. THE TOTAL LENGTH OF BRANCH CIRCUITS SHALL NOT EXCEED THE FOLLOWING:

	120 VOLTS	277 VOLTS
a- USING #12 AWG	90 FT.	180 FT.
b- USING #10 AWG	150 FT.	300 FT.
c- USING #8 AWG	250 FT.	450 FT.
d- USING #6 AWG	380 FT.	700 FT.

THE ABOVE CIRCUIT LENGTHS ARE BASED ON 4% VOLTAGE DROP AT 16 AMPS LOAD AT THE END OF THE CIRCUIT. SAME WIRE SIZE SHALL BE USED FOR THE ENTIRE CIRCUIT.

IF PANELBOARD IS FEED FROM A TRANSFORMER LOCATED REMOTLY FROM THE PANEL. THE TOTAL LENGTH OF BRANCH CIRCUITS SHALL NOT EXCEED THE FOLLOWING:

	120 VOLTS	277 VOLTS
a- USING #12 AWG	75 FT.	180 FT.
b- USING #10 AWG	125 FT.	260 FT.
c- USING #8 AWG	205 FT.	420 FT.
d- USING #6 AWG	325 FT.	640 FT.

THE ABOVE CIRCUIT LENGTHS ARE BASED ON 3% VOLTAGE DROP AT 16 AMPS LOAD AT THE END OF THE CIRCUIT. SAME WIRE SIZE SHALL BE USED FOR THE ENTIRE CIRCUIT.

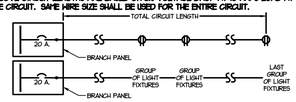

BRANCH CIRCUIT DEFINITION:
CIRCUIT ORIGINATING FROM A 20 AMP CIRCUIT BREAKER IN A BRANCH PANEL AND ENDING AT THE LAST DUPLEX OUTLET ON THE CIRCUIT OR ENDS AT THE LAST LIGHT FIXTURE.

SCALE: N.T.S. — TYPICAL BRANCH CIRCUIT LENGTH DETAIL

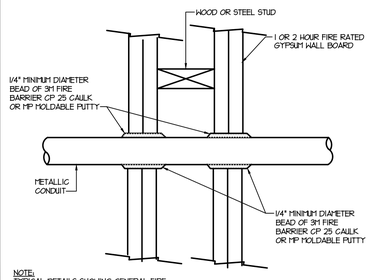

NOTE:
TYPICAL DETAILS SHOWING GENERAL FIRE STOPPING PROCEDURE. ACTUAL PROCEDURE DEPENDS UPON ANNULAR SPACE BETWEEN PIPE AND/OR INSULATION AND OPENING. FOLLOW MANUFACTURER'S INSTRUCTIONS.

SCALE: N.T.S. — FIRESTOP FOR METAL CONDUIT THROUGH GYPSUM WALL BOARD

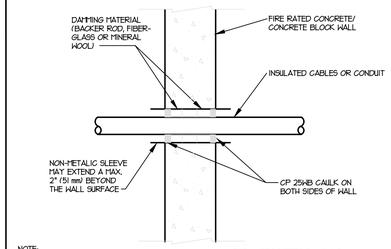

NOTE:
TYPICAL DETAILS SHOWING GENERAL FIRE STOPPING PROCEDURE. ACTUAL PROCEDURE DEPENDS UPON ANNULAR SPACE BETWEEN PIPE AND/OR INSULATION AND OPENING. FOLLOW MANUFACTURER'S INSTRUCTIONS.

UL SYSTEM #49

SCALE: N.T.S. — TYPICAL FIRESTOP FOR CABLES/CONDUIT THROUGH CONCRETE WALLS

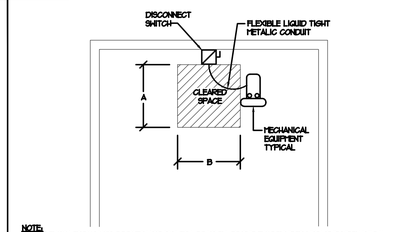

NOTE:
1. THE CONTRACTOR MUST COORDINATE EXACT LOCATION OF THE DISCONNECT WITH THE MECHANICAL CONTRACTOR TO ELIMINATE ANY OBSTACLE (PIPE, CONCRETE PAD, ETC.) IN FRONT OF THE DISCONNECT. IF THERE ARE ANY OBSTACLES, PROVIDE UNISTRUT AND INSTALL THE DISCONNECT NEXT TO MECHANICAL EQUIPMENT IN ORDER TO PROVIDE THE REQUIRED CLEARANCE.

2. PROVIDE MINIMUM CLEARANCE AS FOLLOWS:

SYSTEM VOLTAGE	A	B
480	42"	30"
208	36"	30"

3. IF THERE ARE EXPOSED LIVE PARTS ON BOTH SIDES OF WORKING SPACE, THE MINIMUM CLEAR DISTANCES FOR 151-600V TO GROUND SHALL INCREASE FROM 42" TO 48".

SCALE: N.T.S. — TYPICAL DISCONNECT CLEARANCE REQUIREMENTS

SYSTEM VOLTAGE	A
480	42"
208	36"

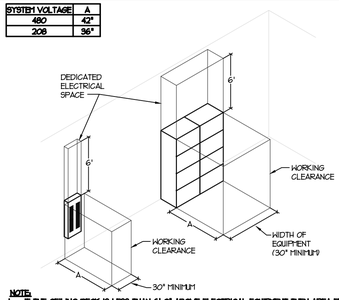

NOTE:
1. IF THE CEILING DECK IS LESS THAN 6'-0" ABOVE ELECTRICAL EQUIPMENT THEN AREA FROM EQUIPMENT TO CEILING DECK SHALL BE DEDICATED ELECTRICAL SPACE (LAY-IN DROP CEILING ARE NOT CONSIDERED AS CEILING DECK)
2. IF THERE ARE EXPOSED LIVE PARTS ON BOTH SIDES OF WORKING SPACE, THE MINIMUM CLEAR DISTANCES FOR 151-600V TO GROUND SHALL INCREASE FROM 42" TO 48".

SCALE: N.T.S. — TYPICAL PANELBOARD CLEARANCE REQUIREMENTS

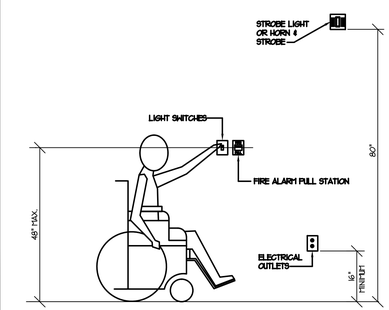

SCALE: N.T.S. — STANDARD HEIGHTS FOR HANDICAPPED ACCESS

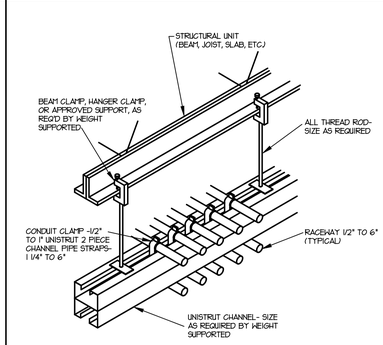

SCALE: N.T.S. — TYPICAL CONDUIT RACK DETAIL

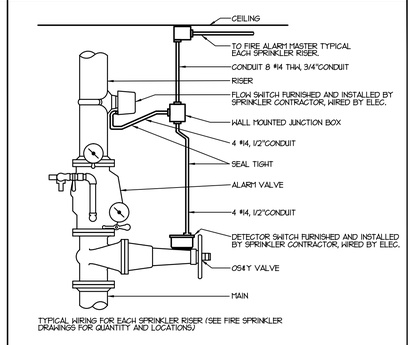

TYPICAL WIRING FOR EACH SPRINKLER RISER (SEE FIRE SPRINKLER DRAWINGS FOR QUANTITY AND LOCATIONS)

SCALE: N.T.S. — FIRE SPRINKLER CONNECTION DETAIL

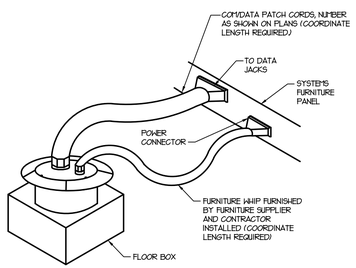

SCALE: N.T.S. — TYPICAL FLOOR FEED FURNITURE DETAIL

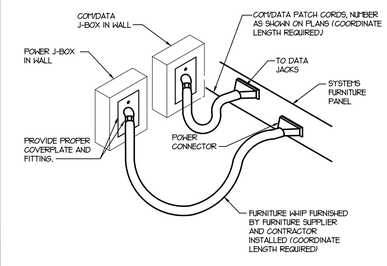

SCALE: N.T.S. — TYPICAL WALL FEED FURNITURE DETAIL

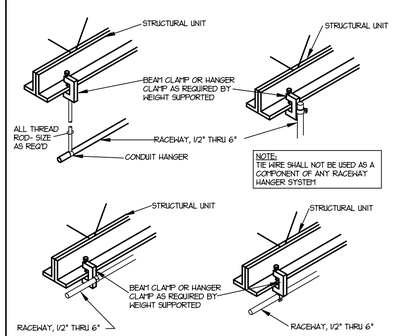

NOTE:
TIE WIRE SHALL NOT BE USED AS A COMPONENT OF ANY RACEWAY HANGER SYSTEM

SCALE: N.T.S. — TYPICAL RACEWAY SUPPORT METHODS DETAIL

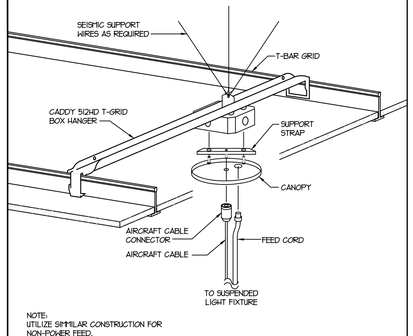

NOTE:
UTILIZE SIMILAR CONSTRUCTION FOR NON-POWER FEED.

SCALE: N.T.S. — INDIRECT LIGHT FIXTURE MOUNTING DETAIL

CLIENT

UDOT CONNECTING COMMUNITIES

REGION 4 OFFICE REMODEL
RICHFIELD, UTAH XXXXX

DESIGNER

ARCHIPLEX GROUP
architecture · planning · design services
255 Crossroad Square
Salt Lake City, UT 84115
P:(801) 961-7070
F:(801) 961-7373

CONSULTANTS

E.C.E. LLC
Electrical Consulting Engineers
939 So. West Temple
Salt Lake City, Utah 84101
Telephone (801) 521-8007
Telefax (801) 521-8057

PROFESSIONAL SEAL

LICENSED PROFESSIONAL ENGINEER
AKBAR
MATINKHAH
#172577
STATE OF UTAH

ISSUE

MARK	DATE	DESCRIPTION

DFCM PROJECT NO:	10046900
DFCM CONTRACT NO:	107453
ECE PROJECT NO:	3991
DRAWN BY:	PB
CHECKED BY:	AM
SCALE:	AS SHOWN
DATE:	AUG 13, 2010

SHEET TITLE

DETAILS

E002

PANEL	NEW PANEL "DTS"	AIC RATING	22K AMPS
PHASE/WIRE	3/4	RATING	120/208 VOLTS
MAIN LUG	100A AMPS	SUBFEED LUGS	NO
MAIN BREAKER	-- AMPS	COMMENT	

CKT	LOCATION	RECEPT	LTG	OTHER	POLE	SIZE	PHASE	SIZE	POLE	OTHER	LTG	RECEPT	LOCATION	CKT
1	RADIO RACK	1800			1	20	A	20	1			1800	GHEST RACK	2
3	RADIO RACK	1800			1	20	B	20	1			1800	GHEST RACK	4
5	CAMPUS RACK	1800			1	20	C	20	1			1800	NETWORK RACK	6
7	CAMPUS RACK	1800			1	20	A	20	1			1800	NETWORK RACK	8
9	BUILDING RACK	1800			1	20	B	20	1			1800	ATM RACK	10
11	BUILDING RACK	1800			1	20	C	20	1			1800	ATM RACK	12
13	BUILDING FUTURE RACK				1	20	A	20	1				FUTURE RACK	14
15	BUILDING FUTURE RACK				1	20	B	20	1				FUTURE RACK	16
17	EMPTY RACK				1	20	C	20	1				EMPTY RACK	18
19	EMPTY RACK				1	20	A	20	1				EMPTY RACK	20
21	CONVENIENCE OUTLET	720			1	20	B	20	1			720	CONVENIENCE OUTLET	22
23	SPARE				1	30	C	30	1				SPARE	24
25	SPARE				1	30	A	30	1				SPARE	26
27	SPARE				1	30	B	30	1				SPARE	28
29	SPARE				1	30	C	30	1				SPARE	30
31	SPARE				1	30	A	30	1				SPARE	32
33	SPARE				1	30	B	30	1				SPARE	34
35	SPARE				1	30	C	30	1				SPARE	36
37	SPARE				1	30	A	30	1				SPARE	38
39	SPARE				1	30	B	30	1				SPARE	40
41	SPARE				1	30	C	30	1				SPARE	42
		VA	VA	VA		AMPS		KVA		VA	VA	VA		
		3600	0	0	A	60.00	A	7.200	A	0	0	3600		
		4320	0	0	B	72.00	B	8.640	B	0	0	4320		
		3600	0	0	C	60.00	C	7.200	C	0	0	3600		
		11520	0	0		63.95	TOTAL	23.04		0	0	11520		

PANEL	NEW PANEL "A1"	AIC RATING	22K AMPS
PHASE/WIRE	3/4	RATING	120/208 VOLTS
MAIN LUG	200 AMPS	SUBFEED LUGS	YES
MAIN BREAKER	-- AMPS	COMMENT	

CKT	LOCATION	RECEPT	LTG	OTHER	POLE	SIZE	PHASE	SIZE	POLE	OTHER	LTG	RECEPT	LOCATION	CKT
1	(E) BREAK ROOM C.O.	180			1	20	A	20	1				SPARE	2
3	(E) BREAK ROOM C.O.	180			1	20	B	20	1			1080	OFFICE 108, 109	4
5	(E) BREAK ROOM C.O.	180			1	20	C	20	1			1080	OFFICE 114, 115	6
7	(E) BREAK ROOM C.O.	180			1	20	A	20	1			1080	OFFICE 116, 117	8
9	(E) BREAK ROOM C.O.	540			1	20	B	20	1			900	CUBICLE 112	10
11	(E) R.R. MECH. JAN. HALL C.O.	900			1	20	C	20	1			180	PRINT/FAX III PRINTERS	12
13	OFFICE 122,123	1080			1	20	A	20	1			720	PRINT/FAX III PRINTERS	14
15	OFFICE 127,128	1080			1	20	B	20	1			360	T.T.B. OUTLET	16
17	CUBICLE SPACE 118	900			1	20	C	20	1			1000	CUBICLE SPACE 126	18
19	OFFICE 132,133	1080			1	20	A	20	1	500			DISPOSAL	20
21	OFFICE 130,131	1080			1	20	B	20	1			360	CUBICLE SPACE 118 PRINT/FAX	22
23	LOBBY 102	540			1	20	C	20	1			720	CUBICLE SPACE 118	24
25	CONF 103,104 C.O.	900			1	20	A	20	1			540	OFFICE 124	26
27	CONF 103,104	720			1	20	B	20	1			180	PRINT 125	28
29	RR, 106,107 JAN 105	540			1	20	C	20	1			180	PRINT 125	30
31	EHC	360			1	20	A	20	1				SPARE	32
33	EXTERIOR OUTLETS	900			1	20	B	20	1			1440	114, 115 CUBICLE C.O.	34
35	SPARE				1	20	C	20	1			720	PRINT ROOM 125	36
37	SPARE				1	20	A	20	1				SPARE	38
39	SPARE				1	20	B	20	1				SPARE	40
41	SPARE				1	20	C	20	1				SPARE	42
		VA	VA	VA		AMPS		KVA		VA	VA	VA		
		3180	0	0	A	55.17	A	6.620	A	500	0	2340		
		4500	0	0	B	73.50	B	8.820	B	0	0	4320		
		3060	0	0	C	51.83	C	6.940	C	0	0	3880		
		11340	0	0		62.12	TOTAL	22.38		500	0	10540		

PANEL	NEW PANEL "A2"	AIC RATING	22K AMPS
PHASE/WIRE	3/4	RATING	120/208 VOLTS
MAIN LUG	200 AMPS	SUBFEED LUGS	YES
MAIN BREAKER	-- AMPS	COMMENT	

CKT	LOCATION	RECEPT	LTG	OTHER	POLE	SIZE	PHASE	SIZE	POLE	OTHER	LTG	RECEPT	LOCATION	CKT
1	CUBICLE SPACE 126	720			1	20	A	20	1		1126		OFFICE, ENTRANCE, LOBBY LTG.	2
3	CUBICLE SPACE 126	720			1	20	B	20	1		1616		OFFICE, CUBICLE 112 LTG.	4
5	CUBICLE SPACE 126	720			1	20	C	20	1		1680		CUBICLE 126 LTG.	6
7	SPARE				1	20	A	20	1		1225		EXTERIOR LTG.	8
9	CUBICLE SPACE 126	720			1	20	B	20	1		1738		MEZZANINE LTG. 118 ,120	10
11	CONF 121 C.O.	720			1	20	C	20	1		840		ALT. AREA LTG	12
13	CONF 121	360			1	20	A	20	1	200			FACP	14
15	SPARE				1	20	B	20	1				SECURITY DEVICES	16
17	ALT. OFFICE 137, 138	1080			1	20	C	20	1				PROJECTORS	18
19	ALT. OFFICE 139, 140	1080			1	20	A	20	1		896		ALT. OFFICE, CONFERENCE LTG	20
21	ALT. CONF 141	720			1	20	B	20	1				ALT. EXTERIOR LTG.	22
23	ALT. CONF 141	720			1	20	C	20	1				SPARE	24
25	ALT. CONF 141 C.O.	1080			1	20	A	20	1				SPARE	26
27	MEZZANINE C.O.	1260			1	20	B	20	1				SPARE	28
29	ALT. CUBICLE	1800			1	20	C	20	1				SPARE	30
31	ALT. CUBICLE	1800			1	20	A	20	1				SPARE	32
33	SPARE				1	20	B	20	1				SPARE	34
35	SPARE				1	20	C	20	1				SPARE	36
37	SPARE				1	20	A	20	1				SPARE	38
39	SPARE				1	20	B	20	1				SPARE	40
41	SPARE				1	20	C	20	1				SPARE	42
		VA	VA	VA		AMPS		KVA		VA	VA	VA		
		5040	0	0	A	75.73	A	9.081	A	200	3847	0		
		3420	0	0	B	56.45	B	6.774	B	0	3954	0		
		5040	0	0	C	63.00	C	7.560	C	0	2520	0		
		13500	0	0		65.01	TOTAL	23.42		200	9721	0		

PANEL	NEW PANEL "MDP"	AIC RATING	22K AMPS
PHASE/WIRE	3/4	RATING	120/208 VOLTS
MAIN LUG	400 AMPS	SUBFEED LUGS	NO
MAIN BREAKER	-- AMPS	COMMENT	

CKT	LOCATION	RECEPT	LTG	OTHER	POLE	SIZE	PHASE	SIZE	POLE	OTHER	LTG	RECEPT	LOCATION	CKT
1				5560			A			2215				2
3				5560			B	30	2	2215			EXISTING CONDENSING UNIT	4
5	AIR HANDLER (AH-1)			5560	3	100	C	20	1	200			EXISTING CIRCULATION PUMP	6
7				16524			A	20	1	828			EXISTING FURNACE	8
9				16524			B	20	1	200			ATC PANEL	10
11	CONDENSING UNIT (CU-1)			16524	3	175	C	20	1				SPARE	12
13				1265			A	20	1				SPARE	14
15				1265			B	20	1				SPARE	16
17	PUMP (P-2)			1265	3	20	C	20	1				SPARE	18
19				1265			A	20	1				SPARE	20
21				1265			B	20	1				SPARE	22
23	PUMP (P-1)			1265	3	20	C	20	1				SPARE	24
25				2412			A	20	1				SPARE	26
27	HEAT PUMPS (HP-1,2)			2412	2	40	B	20	1				SPARE	28
29	BOILER			720	1	20	C	20	1				SPARE	30
31	CP-1, 2, EF-1, 2			1274	1	20	A	20	1				SPARE	32
33	SPARE				1	20	B	20	1				SPARE	34
35	SPARE				1	20	C	20	1				SPARE	36
37				7200			A			15707				38
39				8460			B			15594				40
41	PANEL "DTS"			7200	3	100	C	200	3	14500			PANEL "A1"	42
		VA	VA	VA		AMPS		KVA		VA	VA	VA		
		0	0	36000	A	456.25	A	54.750	A	18750	0	0		
		0	0	35986	B	449.96	B	53.995	B	18009	0	0		
		0	0	32534	C	393.62	C	47.234	C	14700	0	0		
		0	0	104520		432.97	TOTAL	155.98		51459	0	0		

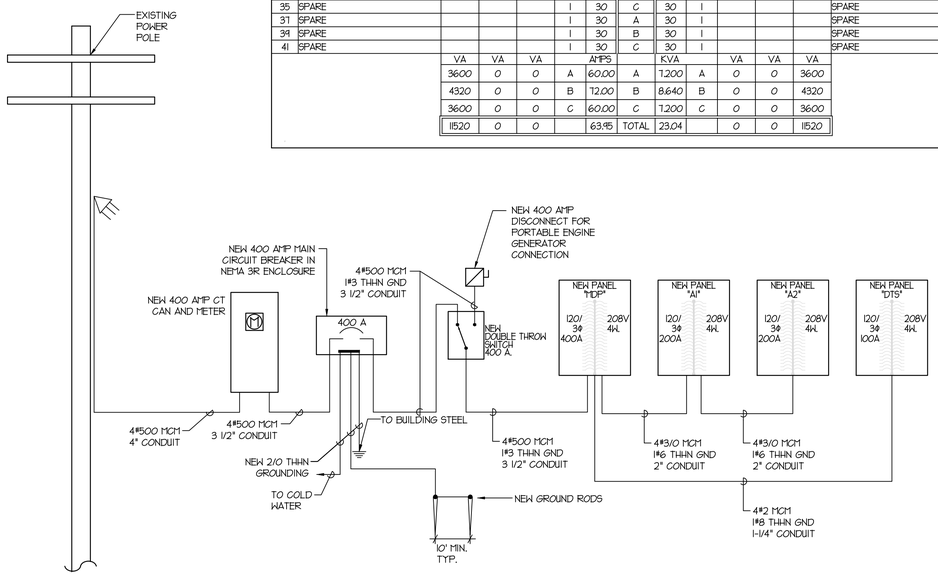

POWER SINGLE LINE DIAGRAM

SCALE: N.T.S.

MECHANICAL EQUIPMENT SCHEDULE

	NAME OF MECHANICAL EQUIPMENT	AIR HANDLER	BOILER	RADIANT PANEL	CONDENSING UNIT	EXHAUST FAN	EXHAUST FAN	HEAT PUMP (OUTDOOR UNIT)	HEAT PUMP (INDOOR UNIT)	HOT WATER PUMP	HOT WATER PUMP	EXTING CONDENSING UNIT	EXISTING CIRC. PUMP	EXISTING FURNACE	EXISTING EXHAUST FANS
	EQUIPMENT NO.	AH-1	B-1	CP-1	CU-1	EF-1	EF-2	HP-1	HP-1	P-1	P-2	ECU-1	ECP-1	EFU-1	EEF-1,2
	RATING/WATTS	15 HP	--	550 W	--	87 W	87 W	--	--	3 HP	3 HP	--	200W	1/3HP	100W
	VOLTAGE	208	120	120	208	120	120	208	208	208	208	208	120	120	120
	PHASE	3	1	1	3	1	1	1	1	3	3	1	1	1	1
MOTOR DATA	AMPS	--	10	--	137.6	--	--	26	2	--	--	21.3	--	--	--
	WIRE SIZE	3#6	2#12	2#12	3#2/0	2#12	2#12	1#10	2#12	3#12	3#12	2#10	2#12	2#12	2#12
	GROUND WIRE	1#8	1#12	1#12	1#6	1#12	1#12	1#10	1#12	1#12	1#12	1#10	1#12	1#12	1#12
	CONDUIT SIZE	3/4"	3/4"	3/4"	2"	3/4"	3/4"	3/4"	3/4"	3/4"	3/4"	3/4"	3/4"	3/4"	3/4"
	FUSE DISC. SW.	60	--	--	200	--	--	60	--	--	--	--	--	--	--
	TYPE RK1 FUSES	60	--	--	175	--	--	35	--	--	--	--	--	--	--
	NON-FUSE SW.	--	--	--	--	--	--	--	--	--	--	--	--	--	--
	NOTES	4,5	2	2	1	2	2	3	7	4	4	6	6	6	6

NOTES:
1. STARTER IS FURNISHED WITH THE UNIT. PROVIDE SITE DISCONNECT.
2. PROVIDE THERMAL OVERLOAD SWITCH.
3. PROVIDE COMBINATION STARTER & DISCONNECT (HOA) W/ (2) N.O. & N.C. CONTACTS.
4. UNIT FURNISHED WITH VFD.
5. TIE-INTO FIRE ALARM SYSTEM FOR AUTOMATIC OPERATION.
6. EXISTING DISCONNECT, THERMAL SWITCH, J-BOX ETC. IS TO REMAIN.
7. TIE INDOOR HEAT PUMP TO THE OUTDOOR HEAT PUMP OUTSIDE.

CLIENT

UDOT CONNECTING COMMUNITIES

REGION 4 OFFICE REMODEL
RICHFIELD, UTAH XXXXX

DESIGNER

ARCHIPLEX GROUP
architecture · planning · design services
255 Crossroad Square
Salt Lake City, UT 84115
P:(801) 961-7070
F:(801) 961-7373

CONSULTANTS

E.C.E. LLC
Electrical Consulting Engineers
939 So. West Temple
Salt Lake City, Utah 84101
Telephone (801) 521-8007
Telefax (801) 521-8057

PROFESSIONAL SEAL

LICENSED PROFESSIONAL ENGINEER
AKBAR MATINKHAH
#172577
STATE OF UTAH

ISSUE

MARK	DATE	DESCRIPTION

DFCM PROJECT NO:	10046900
DFCM CONTRACT NO:	107453
ECE PROJECT NO:	3991
DRAWN BY:	PB
CHECKED BY:	AM
SCALE:	AS SHOWN
DATE:	AUG 13, 2010

SHEET TITLE

PANEL SCHEDULES

E003

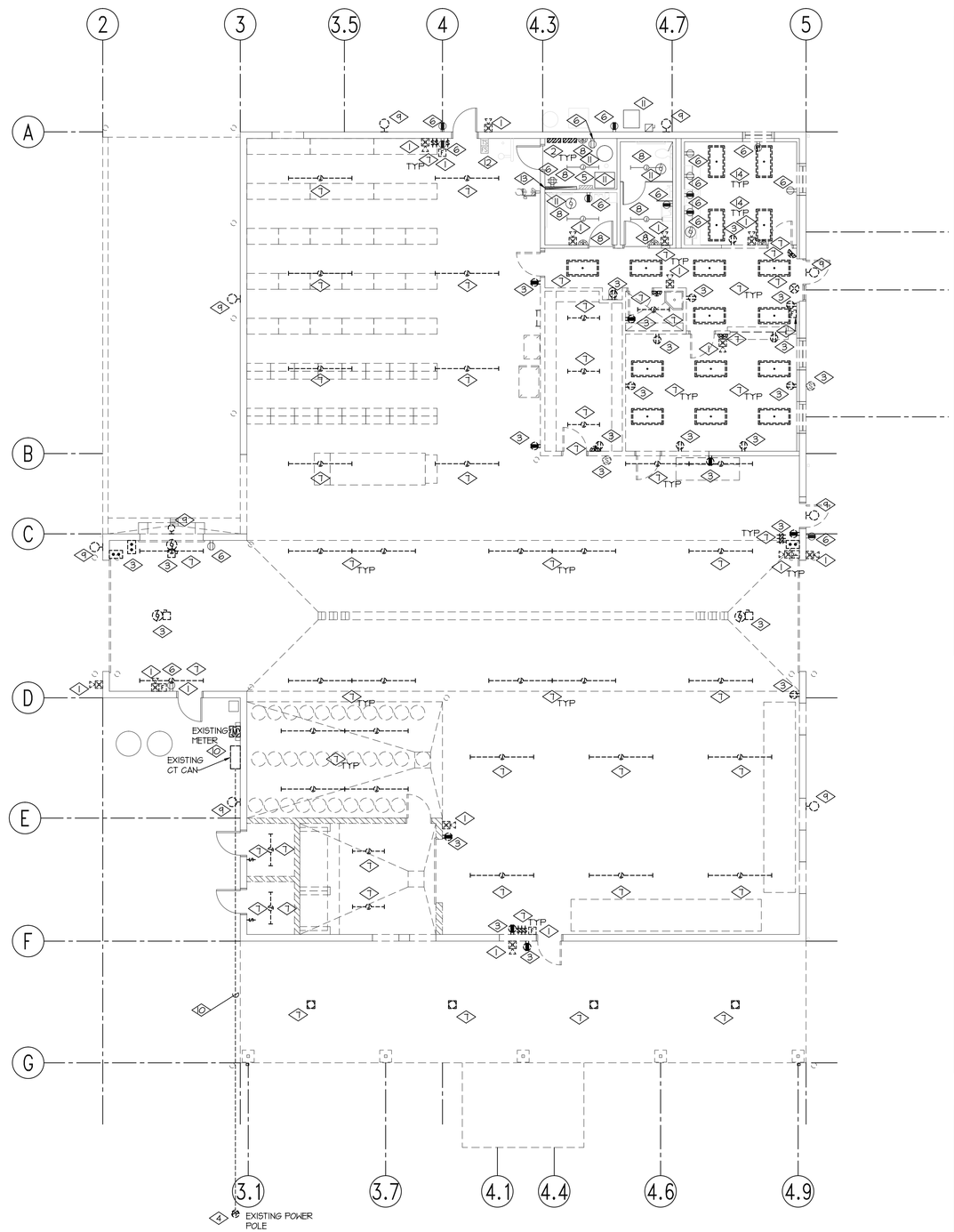

N

LEVEL ONE DEMOLITION PLAN – ELECTRICAL

SCALE: 1/8" = 1'-0"

REFERENCE NOTES:

1. REMOVE THE EXISTING FIRE ALARM DEVICES SHOWN.IN LOCATIONS WHERE FIRE ALARM DEVICES WILL NOT BE RE-INSTALLED, REMOVE ASSOCIATED CONDUIT AND CONDUCTORS ALL THE WAY BACK TO FIRE ALARM CONTROL PANEL. OTHER WISE RE-USE CONDUIT AND CONDUCTORS AS POSSIBLE. PROVIDE NEW CONDUIT AND CONDUCTORS AS REQUIRED. CLEAN, TEST AND STORE DEVICES AND REINSTALL IN NEW LOCATIONS SHOWN ON POWER PLANS. ADDRESSABLE HORN/STROBES WILL NEED TO BE RE ADDRESSED PRIOR TO RE-INSTALLING FIELD VERIFY EXACT NUMBER AND QUANTITY OF DEVICES.
2. REMOVE EXISTING PANELBOARD, ASSOCIATED CONDUIT, CONDUCTORS, ETC., WHETHER OR NOT SHOWN ON THE DEMO PLANS.
3. REMOVE EXISTING DUPLEX OUTLETS, VOICE/DATA BOXES, J-BOXES, SPEAKERS, CONDUIT, CONDUCTORS, ETC., IN THE REMODEL SPACE WHETHER OR NOT SHOWN ON THE DEMOLITION PLANS. REMOVE CONDUIT AND CONDUCTORS ALL THE WAY BACK TO PANELBOARDS. CUT THE CONDUIT IN MASONRY WALL FLUSH WITH MASONRY WALL SURFACES AND LEAVE THE J-BOXES IN PLACE. PROVIDE BLANK COVERPLATE IF THE WALLS ARE NOT FURRED OUT OR J-BOXES ARE NOT GOING TO BE USED FOR NEW DEVICES.
4. EXISTING TRANSFORMER ON EXISTING POLE IS TO BE REPLACED BY THE POWER COMPANY.
5. EXISTING FIRE ALARM PANEL IS TO REMAIN. TEMPORARILY SUPPORT THE BOX FROM CEILING DECK OR FLOOR. MAINTAIN CIRCUIT INTEGRITY.
6. EXISTING CONDUIT AND J-BOXES ARE TO REMAIN. REMOVE ALL CONDUCTORS ALL THE WAY BACK TO THEIR ORIGINATION POINTS. UTILIZE EXISTING CONDUIT AND RUN NEW CONDUCTORS FOR NEW DEVICES.
7. REMOVE ALL EXISTING LIGHT FIXTURES, LIGHT SWITCHES, EXIT SIGNS, ETC., WHETHER OR NOT SHOWN ON THE DRAWINGS. REMOVE EXISTING CONDUCTORS ALL THE WAY BACK TO THEIR ORIGINATION POINTS. REMOVE ALL CONDUITS, CONDUCTORS, J-BOXES, ETC., ALL THE WAY BACK TO PANELBOARDS. PATCH EXISTING WALLS WHERE DEVICES OR FIXTURES ARE REMOVED.
8. EXISTING LIGHT FIXTURES, SWITCHES INDICATED ARE TO REMAIN. TIE TO NEW CIRCUITS INDICATED ON THE LIGHTING PLANS. REMOVE ALL UNUSED CONDUIT AND CONDUCTORS.
9. REMOVE EXISTING LIGHT FIXTURE, ASSOCIATED CONDUIT AND CONDUCTORS ALL THE WAY BACK TO PANELBOARD. INSTALL NEW LIGHT FIXTURE IN THE SAME LOCATION. TIE THE NEW FIXTURES TO NEW CIRCUIT AS SHOWN. ON LIGHTING SHEET.
10. REMOVE EXISTING CT CAN, ASSOCIATED CONDUIT AND CONDUCTORS ALL THE WAY BACK TO POWER POLE. REMOVE EXISTING GROUNDING. SEE SHEET E100 AND POWER SINGLE LINE DIAGRAM FOR MORE INFORMATION.
11. EXISTING MECHANICAL UNIT, ASSOCIATED DISCONNECT, THERMAL SWITCH, J-BOX, ETC. IS TO REMAIN. REMOVE EXISTING CONDUIT AND CONDUCTORS ALL THE WAY BACK TO PANELBOARD. TIE TO NEW CIRCUIT AS SHOWN ON POWER SHEET. COORDINATE WITH MECHANICAL CONTRACTOR.
12. EXISTING TAMPER AND FLOW SWITCHES ARE TO REMAIN.
13. EXISTING TTB TO REMAIN.
14. REMOVE EXISTING LIGHT FIXTURE, J-BOX, ASSOCIATED CONDUIT AND CONDUCTORS ALL THE WAY BACK TO ORIGINATION POINT. CLEAN AND STORE LIGHT FIXTURES FOR RE-INSTALLATION IN LOCATIONS SHOWN ON LIGHTING SHEET.

GENERAL DEMOLITION NOTES:

1. UNDER DEMOLITION THE INTENT OF ELECTRICAL WORK IS TO REMOVE ALL ELECTRICAL DEVICES, LIGHT FIXTURES, CONDUIT, CONDUCTORS, J-BOXES, FIRE ALARM DEVICES, CAMERAS, BELLS, SPEAKERS, PANELBOARD, VOICE/DATA CABLING, VOICE/DATA OUTLETS, ETC. UNLESS INDICATED OTHERWISE. SEE REFERENCE NOTES FOR MORE INFORMATION. CONDUITS AND J-BOXES IN CONCRETE, MASONRY, AND BLOCK WALLS CAN BE LEFT IN THE WALLS AND REUSED FOR NEW DEVICES AS POSSIBLE. REFER TO ARCHITECTURAL DRAWINGS FOR ITEMS THAT ARE TO BE RE-USED.

2. ALL MATERIAL MUST BE REMOVED AND DISPOSED OF BY DEMOLITION CONTRACTOR, UNLESS INDICATED OTHERWISE ON DEMOLITION PLANS.

3. EXISTING DEMOLITION MATERIALS CAN NOT BE REUSED UNLESS INDICATED OTHERWISE.

4. ELECTRICAL CONTRACTOR IS TO PROVIDE TEMPORARY LIGHTING AND POWER FOR OTHER. COORDINATE THIS WORK WITH THE GENERAL CONTRACTOR.

5. DEMOLITION CONTRACTOR IS TO REMOVE ALL ELECTRICAL CONNECTIONS AND CONTROL WIRING TO ALL THE EXISTING MECHANICAL EQUIPMENT IN THE REMODEL AREA, ETC. AS INDICATED. REMOVE ALL CONDUIT AND CONDUCTORS ALL THE WAY BACK TO PANELBOARDS. COORDINATE THIS WORK WITH MECHANICAL CONTRACTOR.

6. ALL MATERIALS TO BE REMOVED FROM THE PREMISES BY THE DEMOLITION CONTRACTOR.

7. PRIOR TO SUBMITTING A BID THE DEMOLITION CONTRACTOR SHALL INSPECT THE SITE AND INCLUDED IN HIS BID PACKAGE ALL CHARGES DUE TO EXISTING CONDITIONS.

8. ANY DAMAGE DONE TO EXISTING EQUIPMENT WHICH IS TO REMAIN WILL BE DEMOLITION CONTRACTOR RESPONSIBILITY TO REPLACE THEM WITH NEW ONES.

SPECIAL NOTES:

1. CONTRACTOR MUST REFER TO MECHANICAL DEMOLITION WORK FOR ADDITIONAL ELECTRICAL WORK REQUIRED FOR MECHANICAL EQUIPMENTS.
2. REMOVE ALL SUPPORTING HANGERS FOR LIGHT FIXTURES FROM THE CEILING DECK.
3. UTILIZE EXISTING BOXES AND CONDUIT IN CONCRETE OR BLOCK WALL FOR NEW DEVICES. PROVIDE A BLANK COVERPLATE FOR J-BOXES WHICH ARE NOT USED.

CLIENT

UDOT CONNECTING COMMUNITIES

REGION 4 OFFICE REMODEL
RICHFIELD, UTAH XXXXX

DESIGNER

ARCHIPLEX GROUP
architecture · planning · design services
255 Crossroad Square
Salt Lake City, UT 84115
P:(801) 961-7070
F:(801) 961-7373

CONSULTANTS

ECE
E.C.E. LLC
Electrical Consulting Engineers
939 So. West Temple
Salt Lake City, Utah 84101
Telephone (801) 521-8007
Telefax (801) 521-8057

PROFESSIONAL SEAL

LICENSED PROFESSIONAL ENGINEER
AKBAR MATINKHAH
#172577
STATE OF UTAH

ISSUE

MARK	DATE	DESCRIPTION

DFCM PROJECT NO:	10046900
DFCM CONTRACT NO:	107453
ECE PROJECT NO:	3991
DRAWN BY:	PB
CHECKED BY:	AM
SCALE:	AS SHOWN
DATE:	AUG 13, 2010

SHEET TITLE

LEVEL ONE DEMOLITION PLAN – ELECTRICAL

ED101

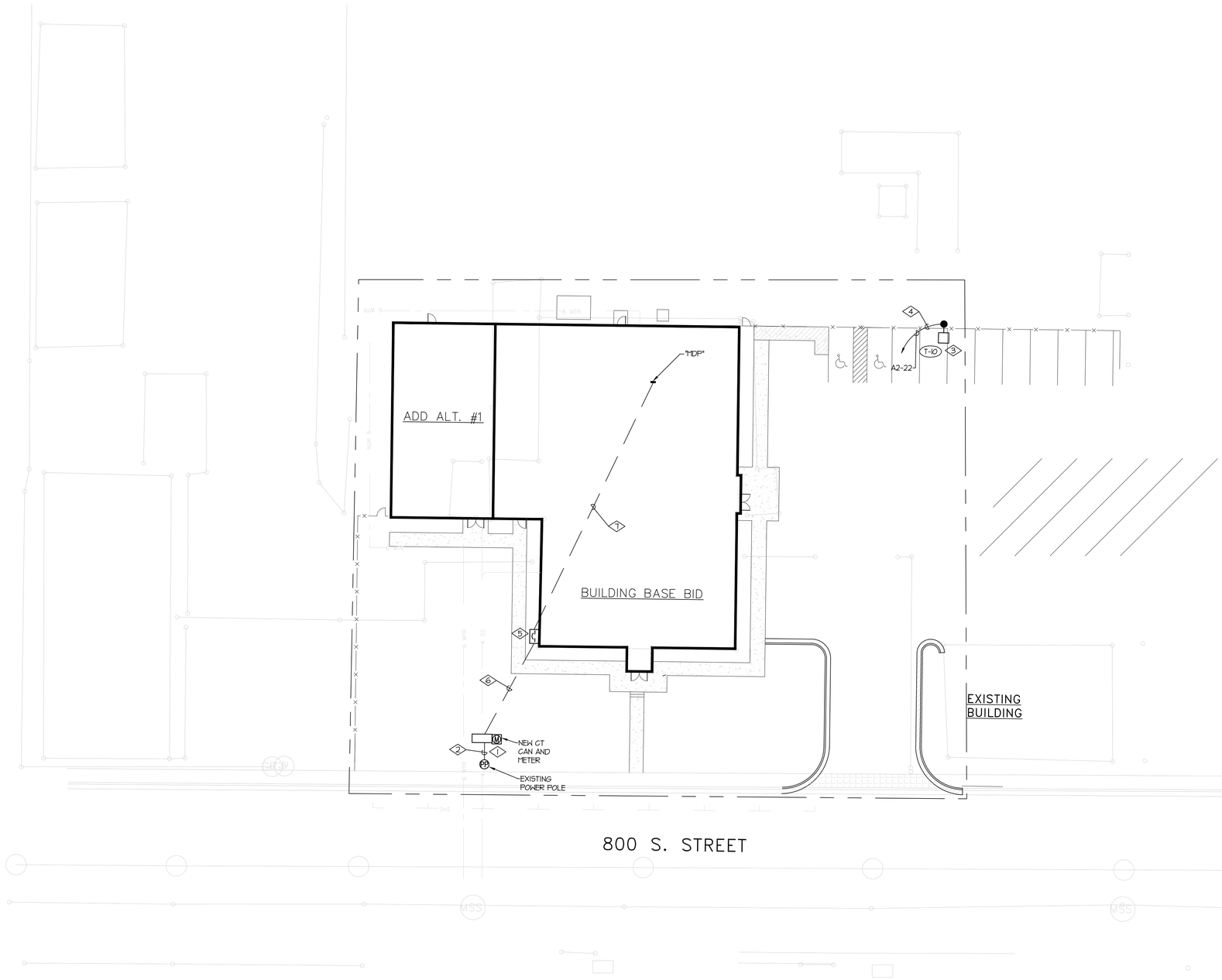

REFERENCE NOTES:

1. FURNISH AND INSTALL A NEW 400 AMP CT CAN AND METER IN THE APPROXIMATE LOCATION SHOWN. PROVIDE UNISTRUT AND CONCRETE BASE TO SUPPORT CT CAN. COORDINATE WITH POWER COMPANY. SEE POWER SINGLE LINE DIAGRAM FOR MORE INFORMATION.
2. RUN CONDUIT AND CONDUCTORS FROM NEW CT CAN TO NEW TRANSFORMER ON THE EXISTING POWER POLE. RUN CONDUIT UP POLE APPROXIMATELY 20 FEET. BURY CONDUIT 36" BELOW GRADE MINIMUM. COORDINATE WITH POWER COMPANY. SEE POWER SINGLE LINE DIAGRAM FOR MORE INFORMATION.
3. PROVIDE CONCRETE POLE BASE FOR POLE MOUNTED LIGHT FIXTURE. SEE DETAILS FOR MORE INFORMATION.
4. TIE LIGHT FIXTURE TO THE INDICATED CIRCUIT THROUGH THE TIME CLOCK NEXT TO THE PANEL BOARDS.
5. FURNISH AND INSTALL A NEW 400A, 208V, 3-PHASE CIRCUIT BREAKER IN NEMA 3R ENCLOSURE IN THE APPROXIMATE LOCATION SHOWN. COORDINATE EXACT LOCATION WITH ARCHITECT. SEE POWER SINGLE LINE DIAGRAM FOR MORE INFORMATION.
6. RUN CONDUIT AND CONDUCTORS FROM NEW CT CAN TO NEW MAIN CIRCUIT BREAKER AS SHOWN. BURY CONDUIT 36" BELOW GRADE MINIMUM. SEE POWER SINGLE LINE DIAGRAM FOR MORE INFORMATION.
7. RUN CONDUIT AND CONDUCTORS FROM NEW CIRCUIT BREAKER TO PANEL "MDP" AS SHOWN. RUN NEW CONDUIT THROUGH WALLS AND CEILING PLENUM TO PANEL "MDP". SEE POWER SINGLE LINE DIAGRAM FOR MORE INFORMATION.

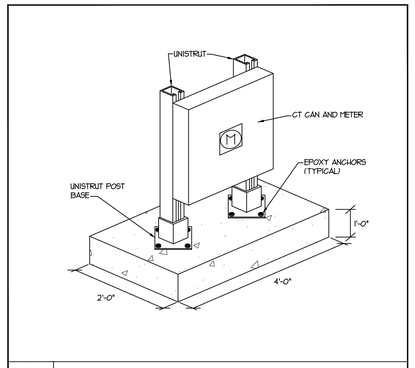

SCALE: N.T.S. — CT CAN AND METER MOUNTING DETAIL

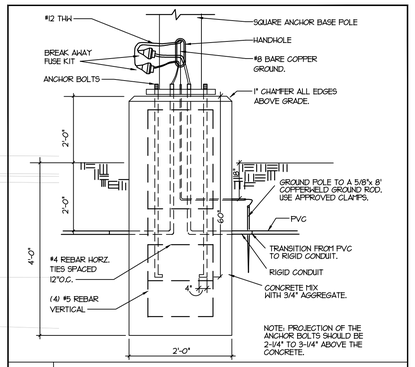

SCALE: N.T.S. — POLE BASE DETAIL

N

SITE PLAN – ELECTRICAL

SCALE: 1" = 20'-0"

CLIENT

UDOT CONNECTING COMMUNITIES

REGION 4 OFFICE REMODEL
RICHFIELD, UTAH XXXXX

DESIGNER

ARCHIPLEX GROUP
architecture · planning · design services
255 Crossroad Square
Salt Lake City, UT 84115
P:(801) 961-7070
F:(801) 961-7373

CONSULTANTS

ECE
E.C.E. LLC
Electrical Consulting Engineers
939 So. West Temple
Salt Lake City, Utah 84101
Telephone (801) 521-8007
Telefax (801) 521-8057

PROFESSIONAL SEAL

LICENSED PROFESSIONAL ENGINEER
AKBAR MATINKHAH
#172577
STATE OF UTAH

ISSUE

MARK	DATE	DESCRIPTION

DFCM PROJECT NO:	10046900
DFCM CONTRACT NO:	107453
ECE PROJECT NO:	3991
DRAWN BY:	PB
CHECKED BY:	AM
SCALE:	AS SHOWN
DATE:	AUG 13, 2010

SHEET TITLE

SITE PLAN – ELECTRICAL

E100

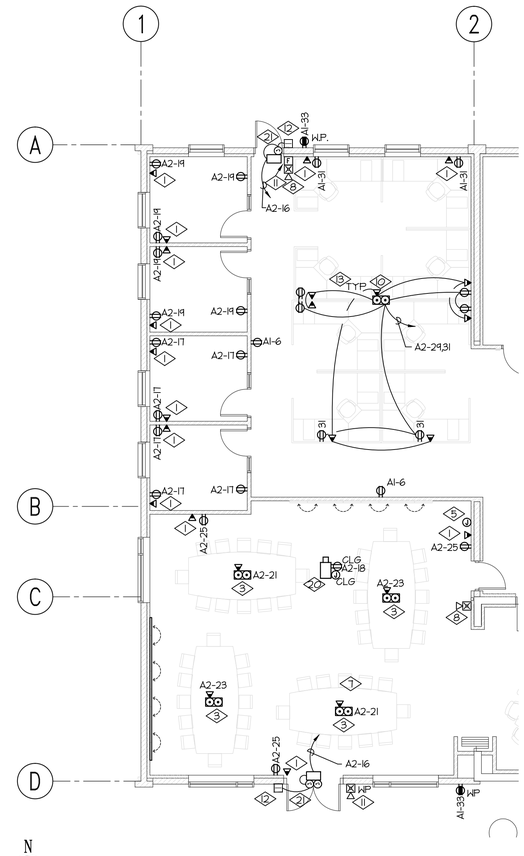

LEVEL ONE FLOOR PLAN – ADD ALT. #1 – ELECTRICAL

SCALE: 1/8" = 1'-0"

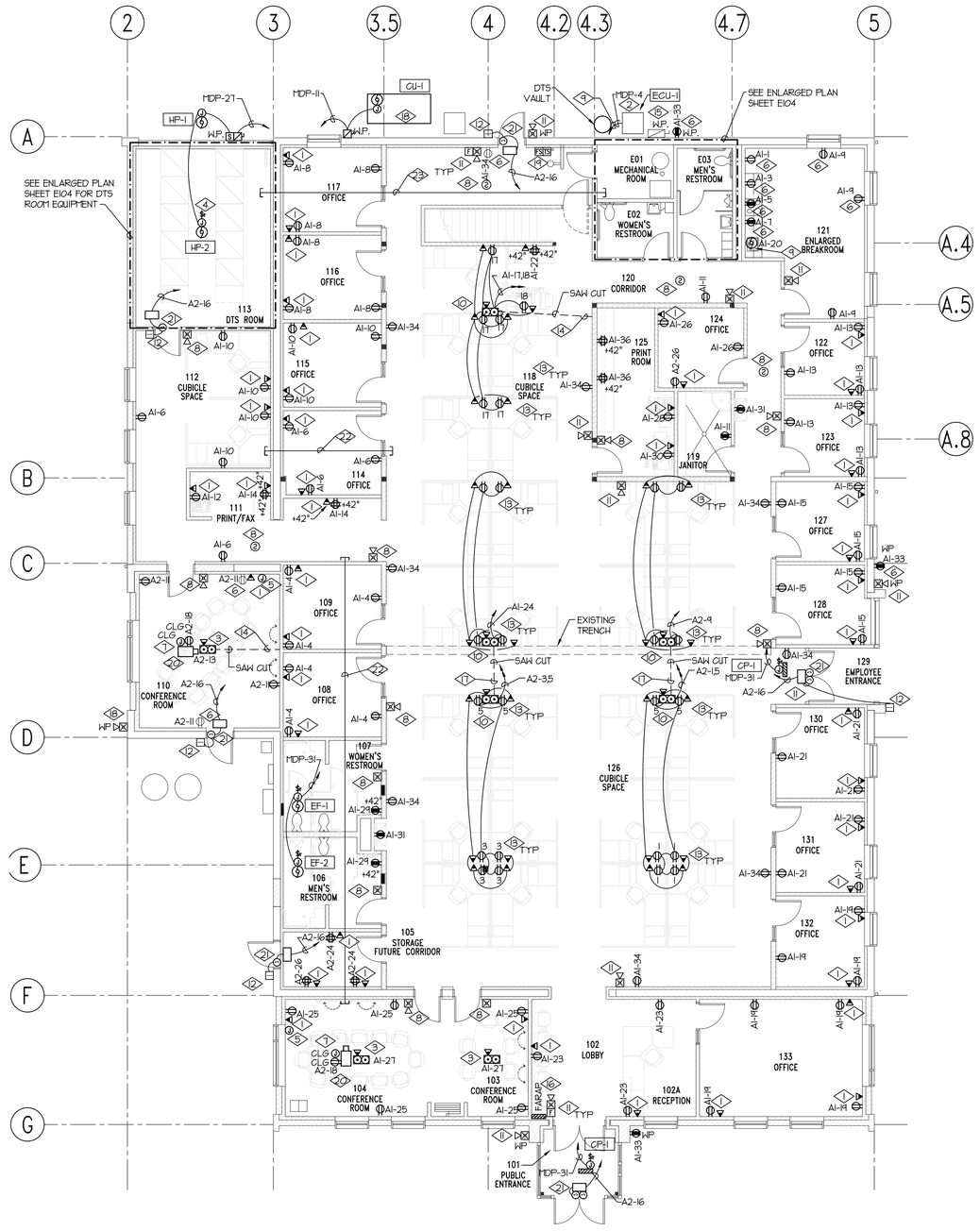

LEVEL ONE FLOOR PLAN – ELECTRICAL

SCALE: 1/8" = 1'-0"

REFERENCE NOTES:

1. FURNISH AND INSTALL A 4" X 4" X 2 1/8"D J-BOX WITH SINGLE GANG MUDRING IN THE WALL FOR VOICE / DATA JACKS. RUN A 1" CONDUIT FROM EACH J-BOX TO THE CABLE TRAY IN DTS ROOM 113. INSERT PULL STRING AND LABEL.
2. EXISTING MECHANICAL UNIT, ASSOCIATED DISCONNECT, THERMAL SWITCH, J-BOX, ETC. IS TO REMAIN. RUN NEW CONDUIT AND CONDUCTORS TO CIRCUIT SHOWN. SEE POWER SINGLE LINE DIAGRAM FOR MORE INFORMATION. COORDINATE WITH MECHANICAL CONTRACTOR.
3. FURNISH AND INSTALL A STEEL CONCRETE FLOOR BOX IN THE APPROXIMATE LOCATION SHOWN WITH ONE DUPLEX OUTLET AND ONE SPACE FOR VOICE/DATA. HUBBELL CAT. # S6SFB-S1CFC**-S1SP. RUN A 1" CONCEALED CONDUIT FROM THE FLOOR BOX TO THE CABLE TRAY IN DTS ROOM 113. INSERT PULL STRING AND LABEL. COORDINATE EXACT LOCATION AND COLOR WITH ARCHITECT.
4. TIE THE INDOOR HEAT PUMP TO THE OUTDOOR HEAT PUMP. COORDINATE WITH MECHANICAL CONTRACTOR.
5. FURNISH AND INSTALL A MULTI-CONNECT 2-GANG RECESSED WALL BOX IN THE APPROXIMATE LOCATION SHOWN FOR PROJECTOR A/V CONNECTIONS. HUBBELL CAT. #BLW5GS2RMO OR APPROVED EQUAL. COORDINATE WITH ARCHITECT FOR EXACT LOCATION. RUN 2" CONDUIT FROM THIS J-BOX TO A/V J-BOX ON CEILING AT PROJECTOR LOCATION. INSERT PULL STRING AND LABEL. PROVIDE BLANK COVERPLATE. COORDINATE EXACT LOCATION WITH ARCHITECT.
6. FURNISH AND INSTALL NEW DEVICE AS SHOWN IN EXISTING J-BOX. UTILIZE EXISTING CONDUIT AS POSSIBLE TO RUN NEW CONDUCTORS AS POSSIBLE.
7. FURNISH AND INSTALL A 4"x4"x2-1/8" J-BOX WITH SINGLE GANG MUD RING ON THE CEILING IN THE APPROXIMATE LOCATION SHOWN FOR PROJECTOR A/V CONNECTIONS. RUN 2" CONDUIT FROM THIS J-BOX TO A/V J-BOX ON THE WALL. INSERT PULL STRING AND LABEL. PROVIDE BLANK COVERPLATE. COORDINATE EXACT LOCATION WITH ARCHITECT.
8. FURNISH AND INSTALL NEW ADDRESSABLE FIRE ALARM DEVICES IN THE APPROXIMATE LOCATIONS SHOWN. NEW DEVICES MUST BE COMPATIBLE WITH THE EXISTING FIRE ALARM SYSTEM. TIE THE NEW DEVICES TO EXISTING FIRE ALARM CONTROL PANEL IN A CLASS "A" LOOP. PROVIDE ALL THE PARTS NECESSARY FOR A COMPLETE INSTALLATION.
9. RUN NEW CONDUIT AND CONDUCTORS FOR EXISTING EQUIPMENT TO NEW CIRCUIT AS SHOWN.
10. FURNISH AND INSTALL A 2-GANG NON-METALLIC CONCRETE FLOOR BOX IN THE APPROXIMATE LOCATION SHOWN WITH FURNITURE WHIP FOR POWER AND VOICE/DATA. HUBBELL CAT. # PFBRG2-PFBRAC-5*50ITG-9*3625. RUN A 1" CONCEALED CONDUIT FROM THE FLOOR BOX TO THE CABLE TRAY IN DTS ROOM 113. INSERT PULL STRING AND LABEL. COORDINATE EXACT LOCATION AND COLOR WITH ARCHITECT. UTILIZE EXISTING TRENCH TO RUN CONDUIT.
11. INSTALL EXISTING FIRE ALARM DEVICES THAT WERE REMOVED DURING DEMOLITION IN THE APPROXIMATE LOCATION SHOWN. TIE TO EXISTING CONTROL PANEL IN A CLASS "A" LOOP. PROVIDE ALL THE PARTS NECESSARY FOR A COMPLETE INSTALLATION.
12. FURNISH AND INSTALL A 4"x4"x2-1/8" J-BOX WITH SINGLE GANG MUD RING IN THE APPROXIMATE LOCATION SHOWN FOR CARD READER. RUN 3/4" CONDUIT TO POWER SUPPLY/CONTROLLER ABOVE DOOR. TIE THE DOOR STRIKE TO THE SECURITY DOOR CONTROLLER. INSERT PULL STRING AND LABEL. COORDINATE WITH OWNER FOR EXACT LOCATION.
13. COORDINATE EXACT LOCATION OF DEVICES IN THE FURNITURE WITH FURNITURE INSTALLER.
14. SAW CUT EXISTING CONCRETE FLOOR TO NEAREST ACCESSIBLE WALL. X-RAY FLOOR PRIOR TO SAW CUTTING.
15. FURNISH AND INSTALL A DISCONNECT ON THE EXTERIOR WALL AS SHOWN FOR PORTABLE ENGINE GENERATOR CONNECTION. TIE DISCONNECT TO THE DOUBLE THROW SWITCH FOR A COMPLETE INSTALLATION. COORDINATE EXACT LOCATION WITH ARCHITECT.
16. FURNISH AND INSTALL A FIRE ALARM REMOTE ANNUNCIATOR PANEL IN THE APPROXIMATE LOCATION SHOWN. COORDINATE WITH ARCHITECT FOR EXACT LOCATION. TIE TO EXISTING FIRE ALARM CONTROL PANEL FOR A COMPLETE INSTALLATION.
17. SAW CUT EXISTING CONCRETE FLOOR TO EXISTING TRENCH. UTILIZE EXISTING TRENCH TO RUN CONDUIT TO FLOOR BOXES. X-RAY FLOOR PRIOR TO SAW CUTTING.
18. UNDER BASE BID, INSTALL EXISTING FIRE ALARM DEVICES THAT WERE REMOVED DURING DEMOLITION IN THE APPROXIMATE LOCATION SHOWN. TIE TO EXISTING CONTROL PANEL IN A CLASS "A" LOOP. PROVIDE ALL THE PARTS NECESSARY FOR A COMPLETE INSTALLATION.
   UNDER ALT. #1, REMOVE EXISTING J-BOX AND PATCH WALL.
19. FURNISH AND INSTALL TAMPER AND FLOW SWITCH MONITOR MODULES AND TIE THEM TO THE EXISTING FIRE ALARM CONTROL PANEL. PROVIDE CONDUIT AND CONDUCTORS FOR A COMPLETE INSTALLATION. COORDINATE WITH SPRINKLER CONTRACTOR FOR NUMBER OF TAMPER AND FLOW SWITCHES AND EXACT LOCATION.
20. FURNISH AND INSTALL DUPLEX OUTLET ON THE CEILING FOR PROJECTOR. COORDINATE EXACT LOCATION WITH ARCHITECT.
21. TIE SECURITY POWER SUPPLY/CONTROLLER TO THE CIRCUIT SHOWN. RUN A 3/4" CONDUIT FROM POWER SUPPLY/CONTROLLER TO THE NEAREST ACCESSIBLE CEILING PLENUM. INSERT PULL STRING AND LABEL. POWER SUPPLY/CONTROLLER IS FURNISHED AND INSTALLED BY OTHERS.
22. FURNISH AND INSTALL (3) THREE 2" CONDUITS ACROSS THE HARD LID CEILINGS AS SHOWN TO RUN VOICE/DATA AND FIRE ALARM WIRING. STUB CONDUIT INTO THE PLENUM SPACE ABOVE LAY-IN CEILINGS. PROVIDE PVC BUSHING ON THE END OF EACH CONDUIT. INSERT PULL STRING AND LABEL. PROVIDE A #6 GROUND FROM EACH CONDUIT BACK TO THE GROUND BUSS IN MECHANICAL ROOM E01.
23. FURNISH AND INSTALL (3) THREE 3" CONDUITS FROM DTS ROOM 113 TO MECHANICAL ROOM E01 AS SHOWN. INSERT PULL STRING AND LABEL.

CLIENT

UDOT CONNECTING COMMUNITIES

REGION 4 OFFICE REMODEL
RICHFIELD, UTAH XXXXX

DESIGNER

ARCHIPLEX GROUP
architecture · planning · design services
255 Crossroad Square
Salt Lake City, UT 84115
P:(801) 961-7070
F:(801) 961-7373

CONSULTANTS

E.C.E. LLC
Electrical Consulting Engineers
939 So. West Temple
Salt Lake City, Utah 84101
Telephone (801) 521-8007
Telefax (801) 521-8057

PROFESSIONAL SEAL

LICENSED PROFESSIONAL ENGINEER
AKBAR MATINKHAH
#172577
STATE OF UTAH

ISSUE

MARK	DATE	DESCRIPTION

DFCM PROJECT NO:	10046900
DFCM CONTRACT NO:	107453
ECE PROJECT NO:	3991
DRAWN BY:	PB
CHECKED BY:	AM
SCALE:	AS SHOWN
DATE:	AUG 13, 2010

SHEET TITLE

LEVEL ONE FLOOR PLAN – ELECTRICAL

E101

REFERENCE NOTES:

1. VFD'S ARE TO BE FURNISHED BY MECHANICAL AND INSTALLED BY ELECTRICAL. COORDINATE EXACT LOCATION WITH MECHANICAL CONTRACTOR.
2. FURNISH AND INSTALL A DUCT DETECTOR WITH SAMPLING TUBE IN THE RETURN AIR DUCT OF THE MECHANICAL UNIT AS SHOWN. TIE THE DUCT DETECTOR TO THE EXISTING FIRE ALARM CONTROL PANEL IN A CLASS "A" LOOP. IN AND OUT CABLES ARE TO BE IN SEPARATE CONDUIT. COORDINATE EXACT LOCATION WITH MECHANICAL CONTRACTOR.

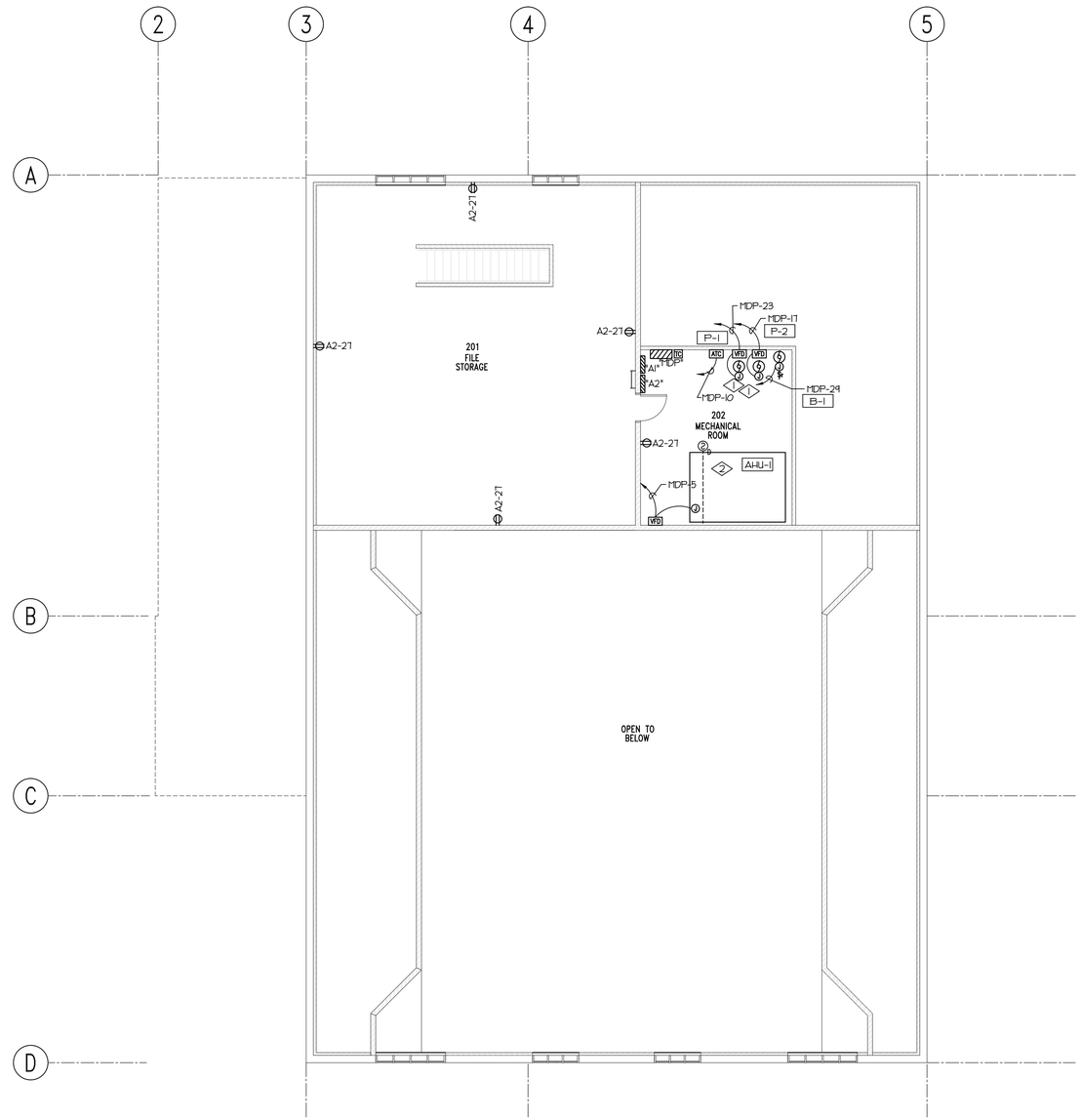

N

LEVEL TWO FLOOR PLAN – ELECTRICAL

SCALE: 1/8" = 1'-0"

CLIENT

UDOT CONNECTING COMMUNITIES

REGION 4 OFFICE REMODEL
RICHFIELD, UTAH XXXXX

DESIGNER

ARCHIPLEX GROUP

architecture · planning · design services

255 Crossroad Square
Salt Lake City, UT 84115
P:(801) 961-7070
F:(801) 961-7373

CONSULTANTS

ECE

E.C.E. LLC
Electrical Consulting Engineers
939 So. West Temple
Salt Lake City, Utah 84101
Telephone (801) 521-8007
Telefax (801) 521-8057

PROFESSIONAL SEAL

LICENSED PROFESSIONAL ENGINEER
AKBAR MATINKHAH
#172577
STATE OF UTAH

ISSUE

MARK	DATE	DESCRIPTION

DFCM PROJECT NO:	10046900
DFCM CONTRACT NO:	107453
ECE PROJECT NO:	3991
DRAWN BY:	PB
CHECKED BY:	AM
SCALE:	AS SHOWN
DATE:	AUG 13, 2010

SHEET TITLE

LEVEL TWO FLOOR PLAN – ELECTRICAL

E102

REFERENCE NOTES:

1. FURNISH AND INSTALL A 4"x4"x2-1/8" WEATHERPROOF J-BOX IN THE APPROXIMATE LOCATION SHOWN FOR FUTURE HEAT TRACE. RUN A 3/4" CONDUIT FROM J-BOX TO THE ELECTRICAL ROOM ON THE 2ND FLOOR. PROVIDE A PULL STRING AND LABEL. SEAL AROUND ALL CONDUIT PENETRATIONS THROUGH ROOF OR RATED WALLS.

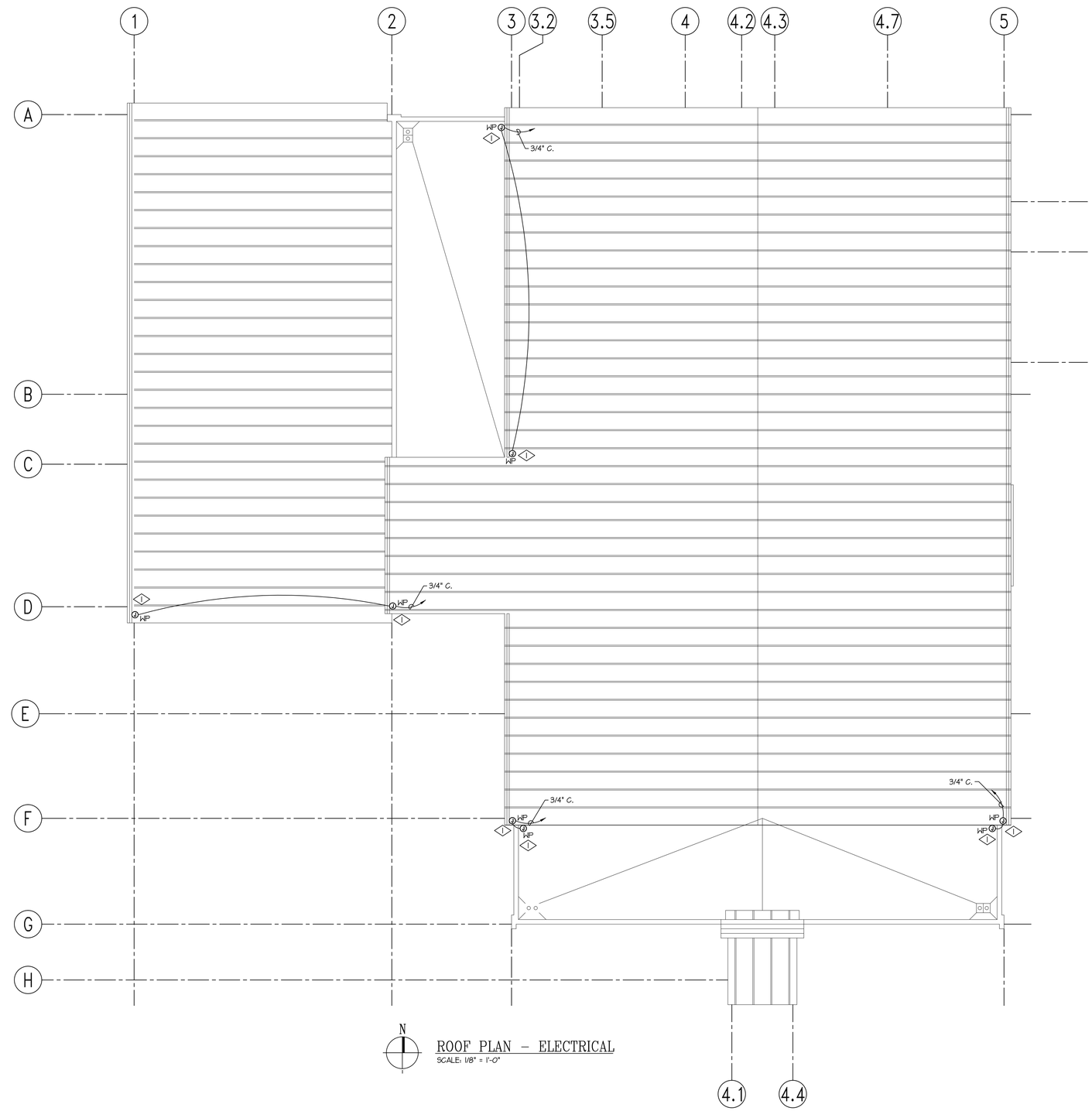

N

ROOF PLAN – ELECTRICAL

SCALE: 1/8" = 1'-0"

CLIENT

UDOT CONNECTING COMMUNITIES

REGION 4 OFFICE REMODEL
RICHFIELD, UTAH XXXXX

DESIGNER

ARCHIPLEX GROUP

architecture · planning · design services

255 Crossroad Square
Salt Lake City, UT 84115
P:(801) 961-7070
F:(801) 961-7373

CONSULTANTS

E.C.E. LLC
Electrical Consulting Engineers
939 So. West Temple
Salt Lake City, Utah 84101
Telephone (801) 521-8007
Telefax (801) 521-8057

PROFESSIONAL SEAL

LICENSED PROFESSIONAL ENGINEER
AKBAR MATINKHAH
#172577
STATE OF UTAH

ISSUE

MARK	DATE	DESCRIPTION

DFCM PROJECT NO:	10046900
DFCM CONTRACT NO:	107453
ECE PROJECT NO:	3991
DRAWN BY:	ELECTRICAB
CHECKED BY:	AM
SCALE:	AS SHOWN
DATE:	AUG 13, 2010

SHEET TITLE

ROOF PLAN
ELECTRICAL

E103

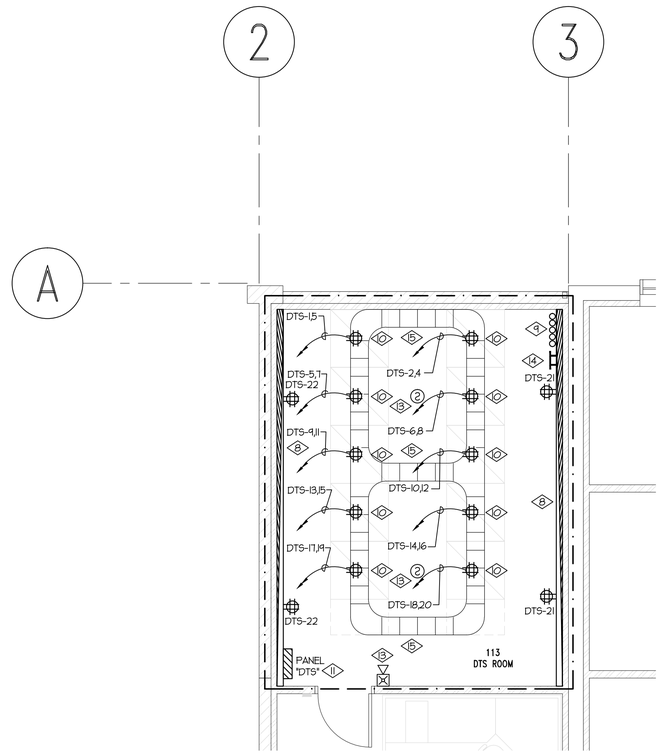

N

ENLARGED PARTIAL FLOOR PLAN – ELECTRICAL

SCALE: 1/4" = 1'-0"

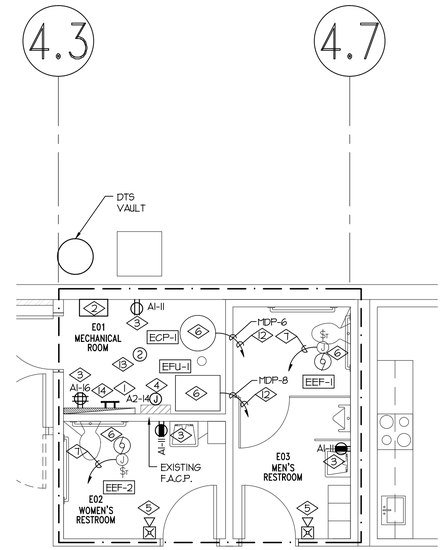

N

ENLARGED PARTIAL FLOOR PLAN – ELECTRICAL

SCALE: 1/8" = 1'-0"

REFERENCE NOTES:

1. EXISTING TTB IS TO REMAIN.
2. FURNISH AND INSTALL A 400A, 120/208V, 3-PHASE, DOUBLE THROW SWITCH IN THE APPROXIMATE LOCATION SHOWN. TIE DOUBLE THROW SWITCH TO THE GENERATOR DISCONNECT AND PANEL "MDP". SEE POWER SINGLE LINE DIAGRAM FOR MORE INFORMATION.
3. FURNISH AND INSTALL NEW DEVICE AS SHOWN IN EXISTING J-BOX. UTILIZE EXISTING CONDUIT AS POSSIBLE TO RUN NEW CONDUCTORS.
4. EXISTING SILENT KNIGHT FIRE ALARM CONTROL PANEL, MODEL #5700 IS TO REMAIN. TIE TO CIRCUIT INDICATED.
5. INSTALL EXISTING FIRE ALARM DEVICES THAT WERE REMOVED DURING DEMOLITION IN THE APPROXIMATE LOCATION SHOWN. TIE TO EXISTING CONTROL PANEL IN A CLASS "A" LOOP. PROVIDE ALL THE PARTS NECESSARY FOR A COMPLETE INSTALLATION.
6. EXISTING MECHANICAL UNIT, ASSOCIATED DISCONNECT, THERMAL SWITCH, J-BOX, ETC. IS TO REMAIN. RUN NEW CONDUIT AND CONDUCTORS TO CIRCUIT SHOWN. SEE POWER SINGLE LINE DIAGRAM FOR MORE INFORMATION. COORDINATE WITH MECHANICAL CONTRACTOR.
7. TIE EXISTING EXHAUST FAN TO THE SWITCHED LIGHTING CIRCUIT IN THE ROOM.
8. FURNISH AND INSTALL PLYWOOD ON THE ENTIRE EAST AND WEST WALLS. PAINT WITH (2) TWO COATS OF WHITE FIRE RETARDANT PAINT. COORDINATE THIS WORK WITH THE GENERAL CONTRACTOR.
9. FURNISH AND INSTALL (5) 4" CONDUITS FROM THE EXISTING DTS VAULT TO THE DTS ROOM. STUB UP IN THE APPROXIMATE LOCATION SHOWN.
10. FURNISH AND INSTALL 4PLEX OUTLET ON THE SIDE OF THE NEW LADDER TYPE CABLE TRAY FOR POWER TO THE NEW EQUIPMENT RACKS. COORDINATE WITH THE OWNER FOR EXACT LOCATION.
11. FURNISH AND INSTALL NEW PANEL "DTS" IN THE APPROXIMATE LOCATION SHOWN. SEE POWER SINGLE LINE DIAGRAM FOR MORE INFORMATION. RUN #10 THHN WIRE WITH #10 THHN GROUND TO 4PLEX OUTLETS TO ALLOW FOR FUTURE UPGRADE TO 30A BREAKERS IN PANEL "DTS".
12. RUN NEW CONDUIT AND CONDUCTORS FOR EXISTING EQUIPMENT TO NEW CIRCUIT AS SHOWN.
13. FURNISH AND INSTALL NEW ADDRESSABLE FIRE ALARM DEVICES IN THE APPROXIMATE LOCATIONS SHOWN. NEW DEVICES MUST BE COMPATIBLE WITH THE EXISTING FIRE ALARM SYSTEM. TIE THE NEW DEVICES TO EXISTING FIRE ALARM CONTROL PANEL IN A CLASS "A" LOOP. PROVIDE ALL THE PARTS NECESSARY FOR A COMPLETE INSTALLATION.
14. FURNISH AND INSTALL AN ISOLATED COPPER GROUND BUS BAR IN THE APPROXIMATE LOCATION SHOWN. REFER TO GROUND BUS BAR DETAIL FOR MORE INFORMATION. RUN #6 GREEN GROUND TO THE GROUND BUS BAR IN THE MAIN CIRCUIT BREAKER OUTSIDE. TERMINATE BOTH ENDS OF THE CABLE WITH TWO HOLE CRIMP TYPE CONNECTORS. COORDINATE EXACT LOCATION AND HEIGHT OF GROUND BUS BAR WITH ARCHITECT.
15. LADDER TYPE CABLE TRAY IS FURNISHED AND INSTALLED BY THE DTS CONTRACTOR. CABLE TRAY SHOWN IS FOR REFERENCE ONLY. COORDINATE WITH DTS CONTRACTOR FOR EXACT LOCATION OF CABLE TRAY.

CLIENT

UDOT CONNECTING COMMUNITIES

REGION 4 OFFICE REMODEL
RICHFIELD, UTAH XXXXX

DESIGNER

ARCHIPLEX GROUP
architecture · planning · design services
255 Crossroad Square
Salt Lake City, UT 84115
P:(801) 961-7070
F:(801) 961-7373

CONSULTANTS

ECE
E.C.E. LLC
Electrical Consulting Engineers
939 So. West Temple
Salt Lake City, Utah 84101
Telephone (801) 521-8007
Telefax (801) 521-8057

PROFESSIONAL SEAL

LICENSED PROFESSIONAL ENGINEER
AKBAR MATINKHAH
#172577
STATE OF UTAH

ISSUE

MARK	DATE	DESCRIPTION

DFCM PROJECT NO:	10046900
DFCM CONTRACT NO:	107453
ECE PROJECT NO:	3991
DRAWN BY:	PB
CHECKED BY:	AM
SCALE:	AS SHOWN
DATE:	AUG 13, 2010

SHEET TITLE

ENLARGED PARTIAL FLOOR PLANS – ELECTRICAL

E104

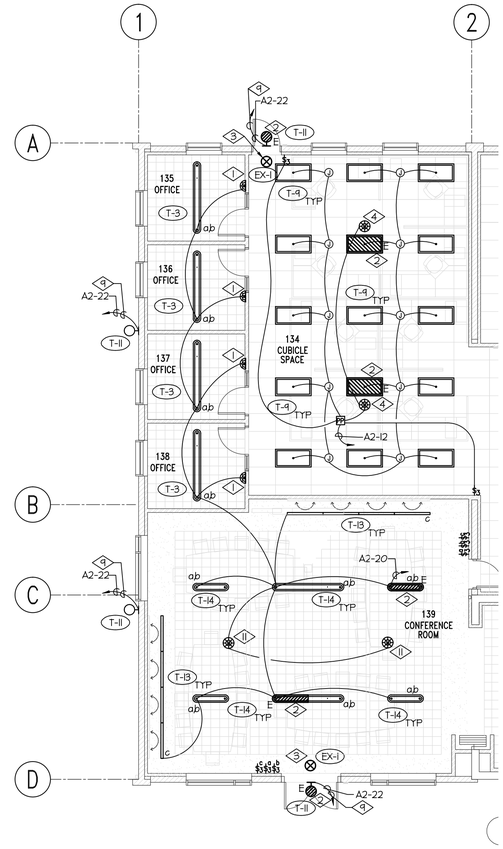

N

LEVEL ONE FLOOR PLAN – ADD ALT. #1 – LIGHTING

SCALE: 1/8" = 1'-0"

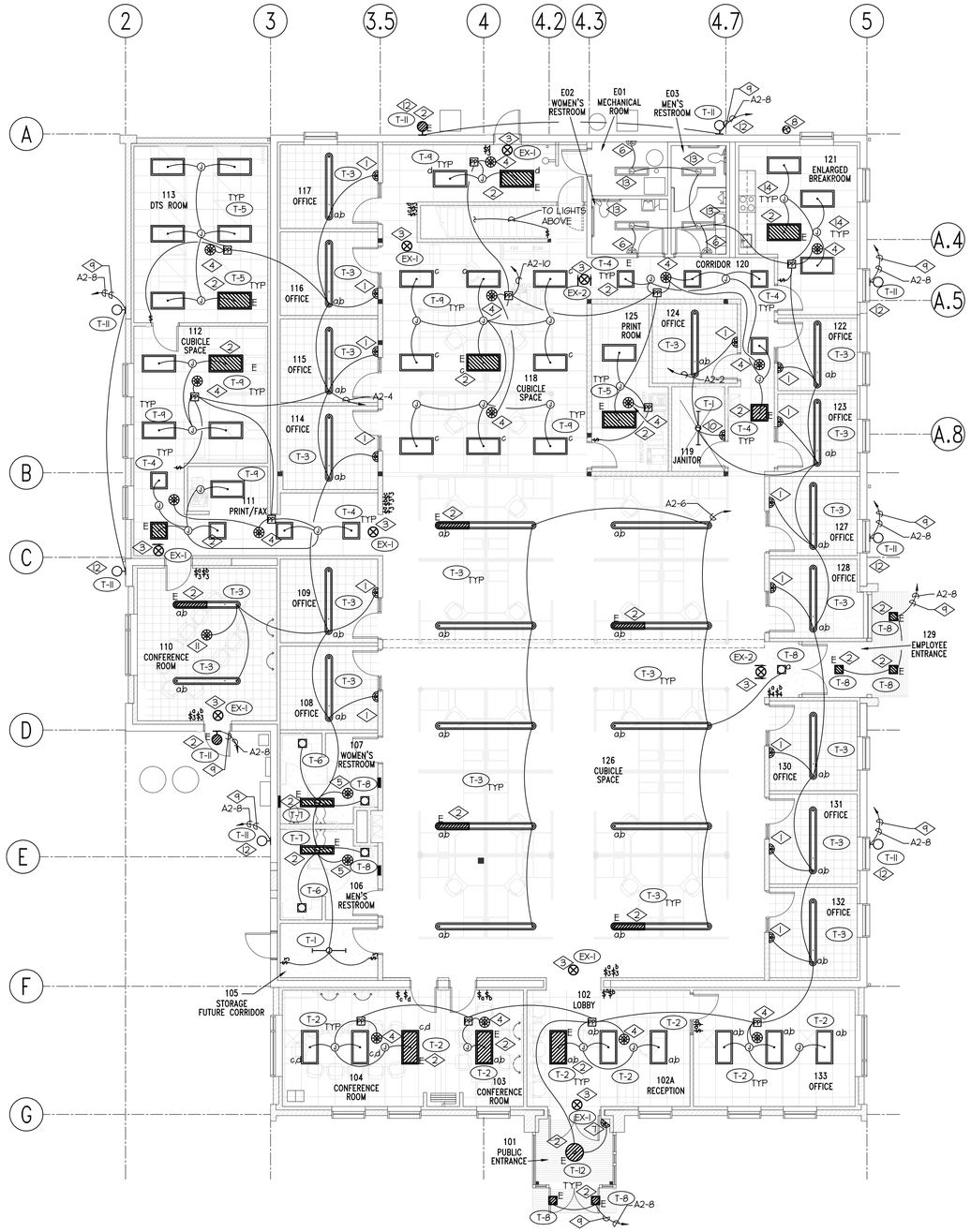

N

LEVEL ONE FLOOR PLAN – LIGHTING

SCALE: 1/8" = 1'-0"

REFERENCE NOTES:

1. FURNISH AND INSTALL A 2-BUTTON WALL MOUNTED DUAL TECHNOLOGY MOTION SENSOR WITH AUTO OFF SWITCH IN THE APPROXIMATE LOCATION SHOWN. WATTSTOPPER TYPE DW-200 OR APPROVED EQUAL.
2. PROVIDE A 90 MINUTE EMERGENCY BATTERY PACK UNIT (1100 LUMENS) FOR THE DESIGNATED EMERGENCY LIGHTS. TIE THE EMERGENCY BATTERY BACK TO UNSWITCHED LIGHTING CIRCUIT FOR A COMPLETE INSTALLATION.
3. TIE EXIT SIGN TO NEAREST UNSWITCHED LIGHTING CIRCUIT.
4. FURNISH AND INSTALL A DUAL TECHNOLOGY OCCUPANCY SENSOR COMPLETE WITH POWER PACK AND ISOLATED RELAY WITH AUXILIARY CONTACTS IN THE APPROXIMATE LOCATION SHOWN. WATTSTOPPER TYPE DT-300 OR APPROVED EQUAL. REFER TO MANUFACTURER WIRING DIAGRAM FOR MORE INFORMATION. PROVIDE CONDUIT AND CONDUCTORS FOR A COMPLETE INSTALLATION.
5. FURNISH AND INSTALL A LINE VOLTAGE ULTRASONIC MOTION SENSOR IN THE APPROXIMATE LOCATION SHOWN. WATTSTOPPER TYPE UT-355 OR APPROVED EQUAL. REFER TO MANUFACTURER WIRING DIAGRAM FOR MORE INFORMATION. PROVIDE CONDUIT AND CONDUCTORS FOR A COMPLETE INSTALLATION.
6. EXISTING MOTION SENSOR IS TO REMAIN. MAKE ANY MODIFICATIONS REQUIRED TO MAINTAIN CIRCUIT INTEGRITY.
7. FURNISH AND INSTALL A LINE VOLTAGE MOTION SENSOR WITH BUILT IN LIGHT LEVEL SENSOR IN THE APPROXIMATE LOCATION SHOWN. WATTSTOPPER TYPE CX-100 OR APPROVED EQUAL. REFER TO MANUFACTURER WIRING DIAGRAM FOR MORE INFORMATION. PROVIDE CONDUIT AND CONDUCTORS FOR A COMPLETE INSTALLATION.
8. INSTALL PHOTOCELL ON THE WALL IN THE APPROXIMATE LOCATION SHOWN. TIE TO THE TIME CLOCK. COORDINATE EXACT LOCATION WITH ARCHITECT.
9. TIE LIGHT FIXTURES TO THE INDICATED CIRCUIT THROUGH THE TIME CLOCK BY THE ELECTRICAL PANELS.
10. FURNISH AND INSTALL A 1-BUTTON WALL MOUNTED DUAL TECHNOLOGY MOTION SENSOR WITH AUTO OFF SWITCH IN THE APPROXIMATE LOCATION SHOWN. WATTSTOPPER TYPE DW-100 OR APPROVED EQUAL.
11. FURNISH AND INSTALL A LINE VOLTAGE DUAL TECHNOLOGY MOTION SENSOR WITH INTEGRAL POWER PACK IN THE APPROXIMATE LOCATION SHOWN. WATTSTOPPER TYPE DT-355 OR APPROVED EQUAL. REFER TO MANUFACTURER WIRING DIAGRAM FOR MORE INFORMATION. PROVIDE CONDUIT AND CONDUCTORS FOR A COMPLETE INSTALLATION.
12. MOUNT NEW LIGHT FIXTURE IN THE SAME LOCATION AS THE EXISTING FIXTURE THAT HAS REMOVED DURING DEMOLITION. TIE THE NEW LIGHT FIXTURES TO THE NEW CIRCUIT SHOWN.
13. EXISTING LIGHT FIXTURES ARE TO REMAIN. TIE EXISTING LIGHT FIXTURES TO THE NEW CIRCUIT SHOWN.
14. NEW LOCATION OF EXISTING LIGHT FIXTURES THAT WERE REMOVED IN DEMOLITION. TIE TO NEW CIRCUIT AS SHOWN. PROVIDE CONDUIT AND CONDUCTORS FOR A COMPLETE INSTALLATION.

SPECIAL NOTES:

1. REFER TO ARCHITECTURAL REFLECTED CEILING PLAN FOR EXACT LOCATION OF ALL LIGHT FIXTURES.

CLIENT

UDOT CONNECTING COMMUNITIES

REGION 4 OFFICE REMODEL
RICHFIELD, UTAH XXXXX

DESIGNER

ARCHIPLEX GROUP
architecture · planning · design services
255 Crossroad Square
Salt Lake City, UT 84115
P:(801) 961-7070
F:(801) 961-7373

CONSULTANTS

ECE
E.C.E. LLC
Electrical Consulting Engineers
939 So. West Temple
Salt Lake City, Utah 84101
Telephone (801) 521-8007
Telefax (801) 521-8057

PROFESSIONAL SEAL

LICENSED PROFESSIONAL ENGINEER
AKBAR MATINKHAH
#172577
STATE OF UTAH

ISSUE

MARK	DATE	DESCRIPTION

DFCM PROJECT NO:	10046900
DFCM CONTRACT NO:	107453
ECE PROJECT NO:	3991
DRAWN BY:	PB
CHECKED BY:	AM
SCALE:	AS SHOWN
DATE:	AUG 13, 2010

SHEET TITLE

LEVEL ONE FLOOR PLAN – LIGHTING

E201

REFERENCE NOTES:

1. PROVIDE AN EMERGENCY BATTERY PACK UNIT (1100 LUMENS) FOR THE DESIGNATED EMERGENCY LIGHTS. TIE THE EMERGENCY BATTERY BACK TO UNSWITCHED LIGHTING CIRCUIT FOR A COMPLETE INSTALLATION.
2. FURNISH AND INSTALL A NEW 120 VOLT TIME CLOCK WITH PHOTOCELL IN THE APPROXIMATE LOCATION SHOWN. LC4D CAT # GR1404LT-PCO OR APPROVED EQUAL. TIE EXTERIOR LIGHTING CIRCUITS TO THEIR INDICATED CIRCUIT THROUGH THIS TIME CLOCK. TIE TIME CLOCK TO UNSWITCHED 120 VOLT POWER. PROVIDE CONDUIT AND CONDUCTORS FOR A COMPLETE INSTALLATION.
3. TIE EXIT SIGN TO NEAREST UNSWITCHED LIGHTING CIRCUIT.

SPECIAL NOTES:

1. MOUNT ALL LIGHT FIXTURES TO THE STRUCTURE. DO NOT MOUNT LIGHT FIXTURE TO THE RIGID INSULATION.

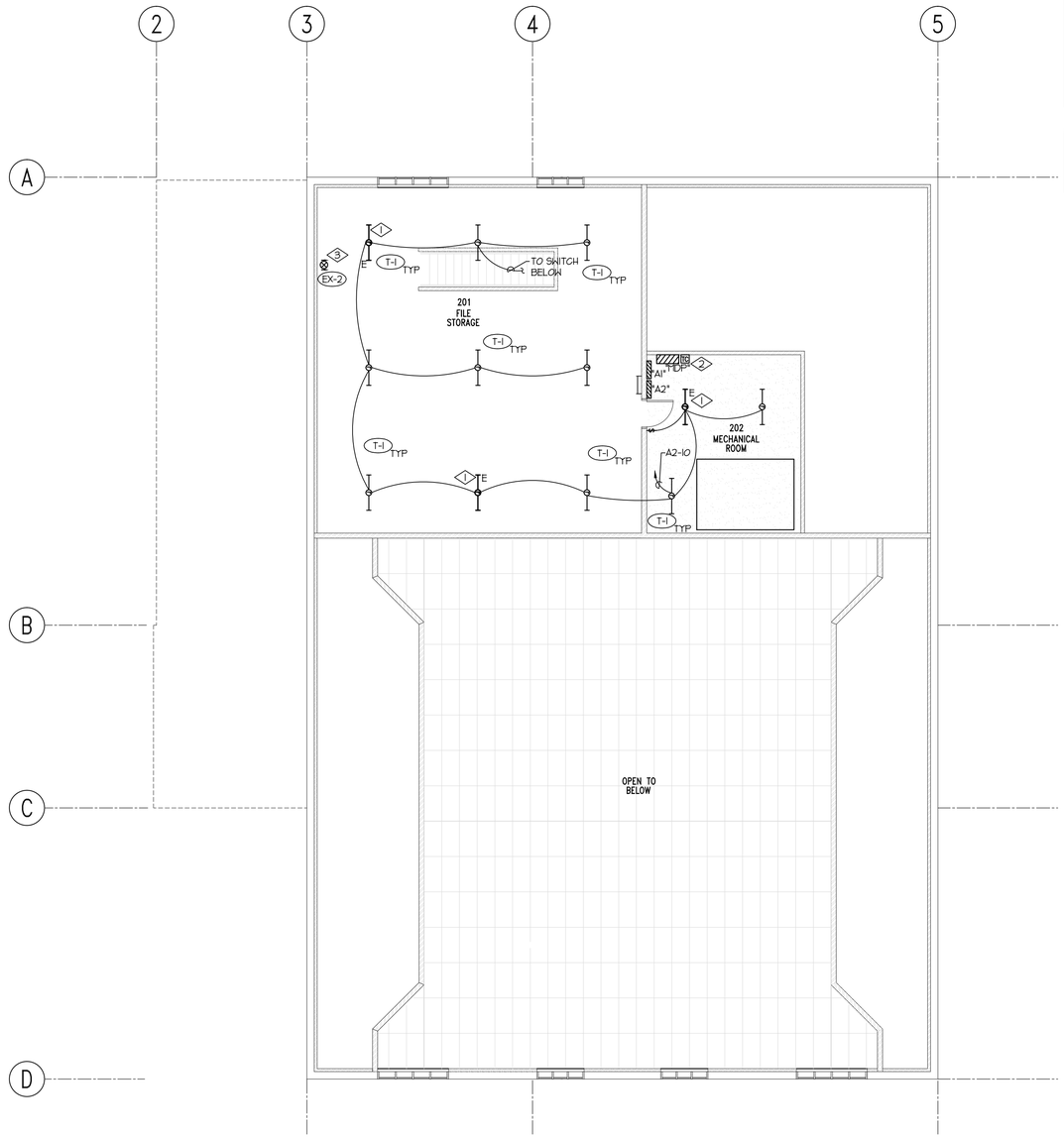

N

LEVEL TWO FLOOR PLAN – LIGHTING

SCALE: 1/8" = 1'-0"

CLIENT

UDOT CONNECTING COMMUNITIES

REGION 4 OFFICE REMODEL
RICHFIELD, UTAH XXXXX

DESIGNER

ARCHIPLEX GROUP
architecture · planning · design services
255 Crossroad Square
Salt Lake City, UT 84115
P:(801) 961-7070
F:(801) 961-7373

CONSULTANTS

ECE
E.C.E. LLC
Electrical Consulting Engineers
939 So. West Temple
Salt Lake City, Utah 84101
Telephone (801) 521-8007
Telefax (801) 521-8057

PROFESSIONAL SEAL

LICENSED PROFESSIONAL ENGINEER
AKBAR MATINKHAH
#172577
STATE OF UTAH

ISSUE

MARK	DATE	DESCRIPTION

DFCM PROJECT NO:	10046900
DFCM CONTRACT NO:	107453
ECE PROJECT NO:	3991
DRAWN BY:	PB
CHECKED BY:	AM
SCALE:	AS SHOWN
DATE:	AUG 13, 2010

SHEET TITLE

LEVEL TWO FLOOR PLAN – LIGHTING

E202

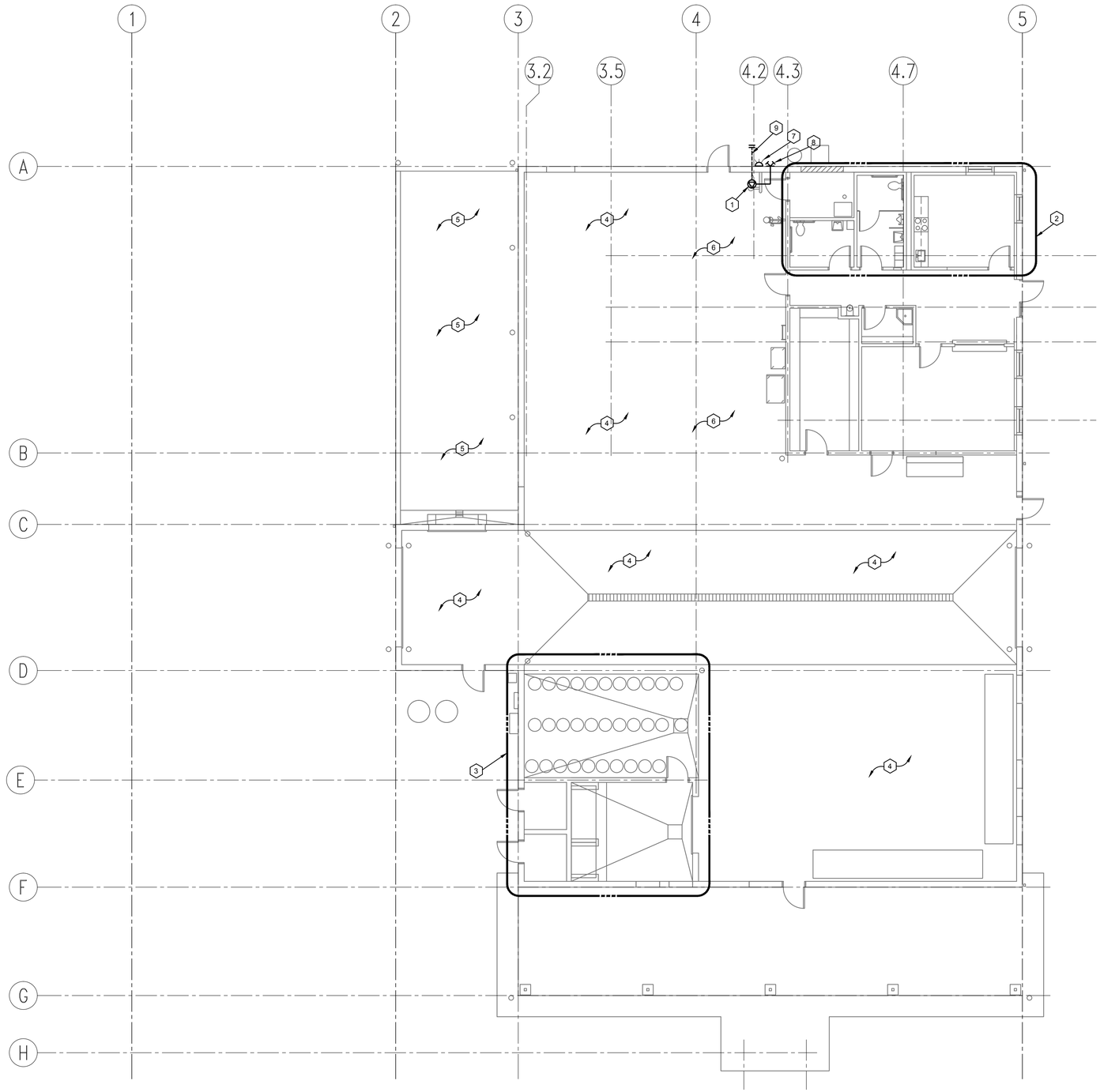

REFERENCE NOTES

1. EXISTING FIRE RISER TO REMAIN INTACT. MODIFY AS NEEDED TO MEET NEW BUILDING ALARM REQUIREMENTS. SEE DWG FP101 FOR NEW WORK REQUIRED.
2. EXISTING FIRE PROTECTION PIPING IN THIS AREA TO REMAIN INTACT. MODIFY SPRINKLER HEAD HEIGHT TO MATCH NEW CEILINGS.
3. REMOVE SPRINKLER PIPING IN THIS AREA AS NEEDED TO MEET NEW LIGHT HAZARD OFFICE REQUIREMENTS. SEE DWG FP101 FOR NEW FIRE PROTECTION CLASSIFICATION.
4. EXISTING FIRE SPRINKLERS IN THIS AREA TO BE MODIFIED TO ACCOMMODATE NEW OFFICE AREA. REMOVE, RELOCATE AND ADJUST EXISTING SPRINKLER PIPING AND HEADS TO ACCOMMODATE NEW FLOOR PLAN. COORDINATE EXISTING FIRE PROTECTION PIPING WITH NEW MECHANICAL, PLUMBING AND ELECTRICAL TRADES. SEE DWG FP101 FOR NEW FIRE PROTECTION CLASSIFICATION.
5. EXISTING DOCK AREA TO BE REMOVED AND REPLACED WITH NEW OFFICE AREA. SEE DWG FP101 FOR NEW FIRE PROTECTION CLASSIFICATION.
6. REMOVE, RELOCATE AND ADJUST EXISTING SPRINKLER PIPING AND HEADS IN THIS AREA TO ACCOMMODATE NEW MECHANICAL/STORAGE MEZZANINE. SEE DWG FP102 FOR NEW FIRE PROTECTION CLASSIFICATION.
7. EXISTING EXTERIOR ALARM BELL TO REMAIN INTACT.
8. EXISTING FIRE DEPT CONNECTION (FDC) TO REMAIN INTACT.
9. EXISTING UNDERGROUND FIRE AND WATER SERVICE LINE TO BUILDING TO REMAIN INTACT UNLESS OTHERWISE NOTED.

FIRE PROTECTION DEMOLITION PLAN

SCALE: 1/8" = 1'-0"

0 4' 8' 16'

NORTH

CLIENT

UDOT CONNECTING COMMUNITIES

REGION 4 OFFICE REMODEL
708 SOUTH 100 WEST
RICHFIELD UTAH 84701

DESIGNER

ARCHIPLEX GROUP
architecture • planning • design services
255 Crossroad Square
Salt Lake City, UT 84115
P:(801) 961-7070
F:(801) 961-7373

CONSULTANTS

OLSEN & PETERSON
consulting engineers, inc.
14 East 2700 South, Salt Lake City, UT 84115
Phone: (801) 486-4646 Fax: (801) 467-2531

PROFESSIONAL SEAL

REGISTERED PROFESSIONAL ENGINEER
174126
PAUL W. LAIRD
STATE OF UTAH

ISSUE

MARK	DATE	DESCRIPTION
	AUGUST	DFCM REVIEW SUBMITTAL

DFCM PROJECT NO:	10046900
DFCM CONTRACT NO:	107453
ARCHIPLEX PROJECT NO:	1007.01
DRAWN BY:	STAFF
CHECKED BY:	PWL
SCALE:	1/8"=1'-0"
DATE:	SEPTEMBER 16, 2010

SHEET TITLE

FIRE PROTECTION DEMOLITION PLAN

FPD101

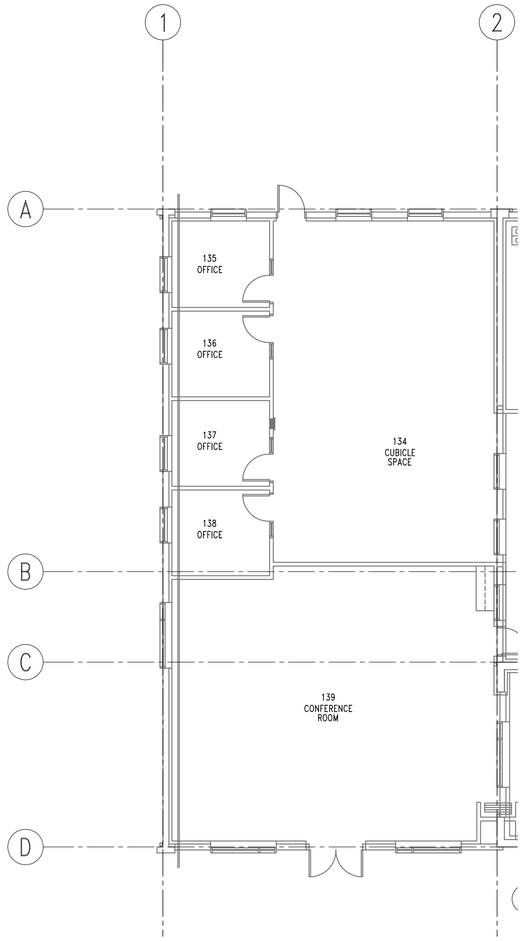

MAIN LEVEL FIRE PROTECTION PLAN ADD ALTERNATE

SCALE: 1/8" = 1'-0"

0 4' 8' 16'

NORTH

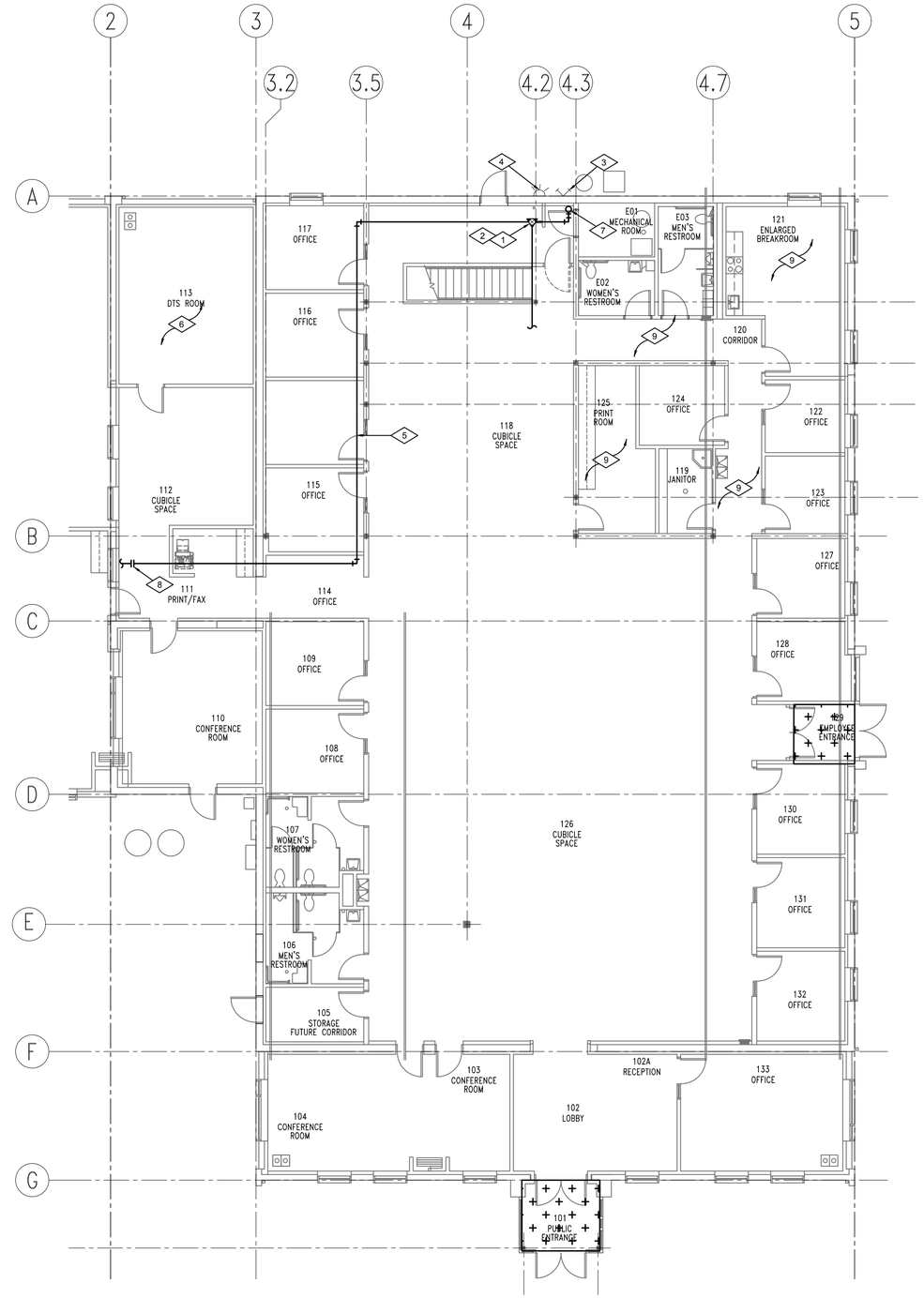

MAIN LEVEL FIRE PROTECTION PLAN

SCALE: 1/8" = 1'-0"

0 4' 8' 16'

NORTH

REFERENCE NOTES

1. EXISTING FIRE SPRINKLER RISER. CONNECT TO EXISTING FIRE RISER IN THIS LOCATION AND EXTEND NEW FIRE PROTECTION PIPING AND SPRINKLER HEADS TO ALL AREAS OF THE BUILDING IN ACCORDANCE WITH NFPA 13 REQUIREMENTS. SEE LEGEND FOR SPECIFIED HAZARD REQUIREMENTS
2. COORDINATE EXISTING FIRE RISER TAMPER AND FLOW SWITCHES WITH BUILDING FIRE ALARM SYSTEM. INTEGRATE ALL EXISTING SWITCHES INTO THE BUILDING ALARM SYSTEM OR PROVIDE NEW AS REQUIRED TO MEET NFPA 13 REQUIREMENTS.
3. EXISTING FIRE DEPT CONNECTION TO REMAIN INTACT. VERIFY OPERATION.
4. EXISTING EXTERIOR ALARM BELL TO REMAIN INTACT. VERIFY OPERATION. INTEGRATE WITH BUILDING FIRE ALARM SYSTEM.
5. SLOPE ALL NEW FIRE SPRINKLER PIPING TO NEW OR EXISTING DRAIN POINTS.
6. DTS ROOM. DO NOT TRANSIT FIRE SPRINKLER PIPING THRU THIS ROOM.
7. EXTEND FIRE SPRINKLER PIPING TO UPPER MEZZANINE LEVEL. SEE DRAWING FP102 FOR FIRE SPRINKLER REQUIREMENTS ON UPPER LEVEL MEZZANINE.
8. TERMINATE FIRE SPRINKLER PIPING IN THIS LOCATION IF ADD ALTERNATE #1 IS NOT ACCEPTED.
9. EXISTING OFFICE AREA TO RECEIVE NEW CEILING SYSTEM. REMOVE AND RELOCATE EXISTING FIRE SPRINKLER HEADS AND PIPING AS NEEDED TO MATCH NEW CEILING SYSTEM. COORDINATE WITH GENERAL CONTRACTOR.

FIRE PROTECTION LEGEND

- NO MARK — LIGHT HAZARD, LAY-IN OR GYP. BOARD CEILING. FULLY CONCEALED HEADS. WITH WHITE PAINTED COVERS. (SEE ARCHITECTURAL DRAWINGS).
- LIGHT HAZARD, EXPOSED STRUCTURE, UPRIGHT ROUGH BRASS HEADS ON EXPOSED PIPING.
- LIGHT HAZARD, FULLY CONCEALED, NON-FREEZE HEADS WITH WHITE PAINTED COVERS.
- ORDINARY HAZARD GROUP I EXPOSED STRUCTURE, UPRIGHT ROUGH BRASS HEADS ON EXPOSED PIPING.
- FIRE SPRINKLER RISER (EXISTING)
- WALL MOUNTED ALARM BELL (EXISTING)
- WALL MOUNTED SIAMESE FIRE DEPARTMENT CONNECTION (EXISTING)
- SPRINKLER HEAD
- SIDEWALL SPRINKLER HEAD

NOTE:
HYDRAULIC DESIGN INFORMATION TO BE PROVIDED BY THE FIRE SPRINKLER CONTRACTOR. PROVIDE FIRE FLOW TEST AT PROJECT SITE.

HYDRAULIC DESIGN INFORMATION FOR WET SYSTEM

REMOTE AREA = _____ SQUARE FEET

DENSITY = _____ GPM/SQUARE FEET

RISER BASE _____ GPM_____ PSI

SUPPLY _____ STATIC PSI _____ RESIDUAL PSI _____ GPM FLOWING _____ GPM @ 20 PSI

CLIENT

UDOT CONNECTING COMMUNITIES

REGION 4 OFFICE REMODEL
708 SOUTH 100 WEST
RICHFIELD UTAH 84701

DESIGNER

ARCHIPLEX GROUP
architecture · planning · design services
255 Crossroad Square
Salt Lake City, UT 84115
P:(801) 961-7070
F:(801) 961-7373

CONSULTANTS

OLSEN & PETERSON consulting engineers, inc.
14 East 2700 South, Salt Lake City, UT 84115
Phone: (801) 486-4646 Fax: (801) 467-2531

PROFESSIONAL SEAL

REGISTERED PROFESSIONAL ENGINEER # 174126 PAUL W. LAIRD STATE OF UTAH

ISSUE

MARK	DATE	DESCRIPTION
	AUGUST	DFCM REVIEW SUBMITTAL

DFCM PROJECT NO:	10046900
DFCM CONTRACT NO:	107453
ARCHIPLEX PROJECT NO:	1007.01
DRAWN BY:	STAFF
CHECKED BY:	PWL
SCALE:	1/8"=1'-0"
DATE:	SEPTEMBER 16, 2010

SHEET TITLE

MAIN LEVEL FIRE PROTECTION PLAN

FP101

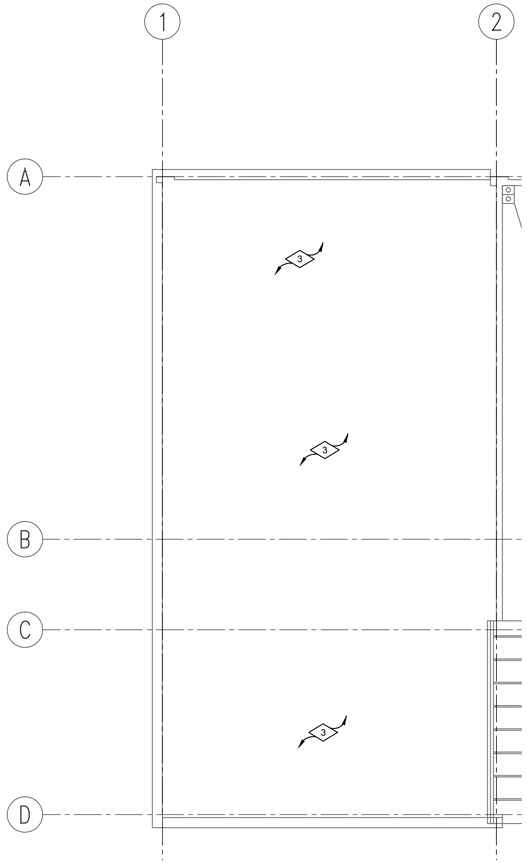

MEZZANINE LEVEL FIRE PROTECTION PLAN – ADD ALTERNATE

SCALE: 1/8" = 1'-0"

0 4' 8' 16'

NORTH

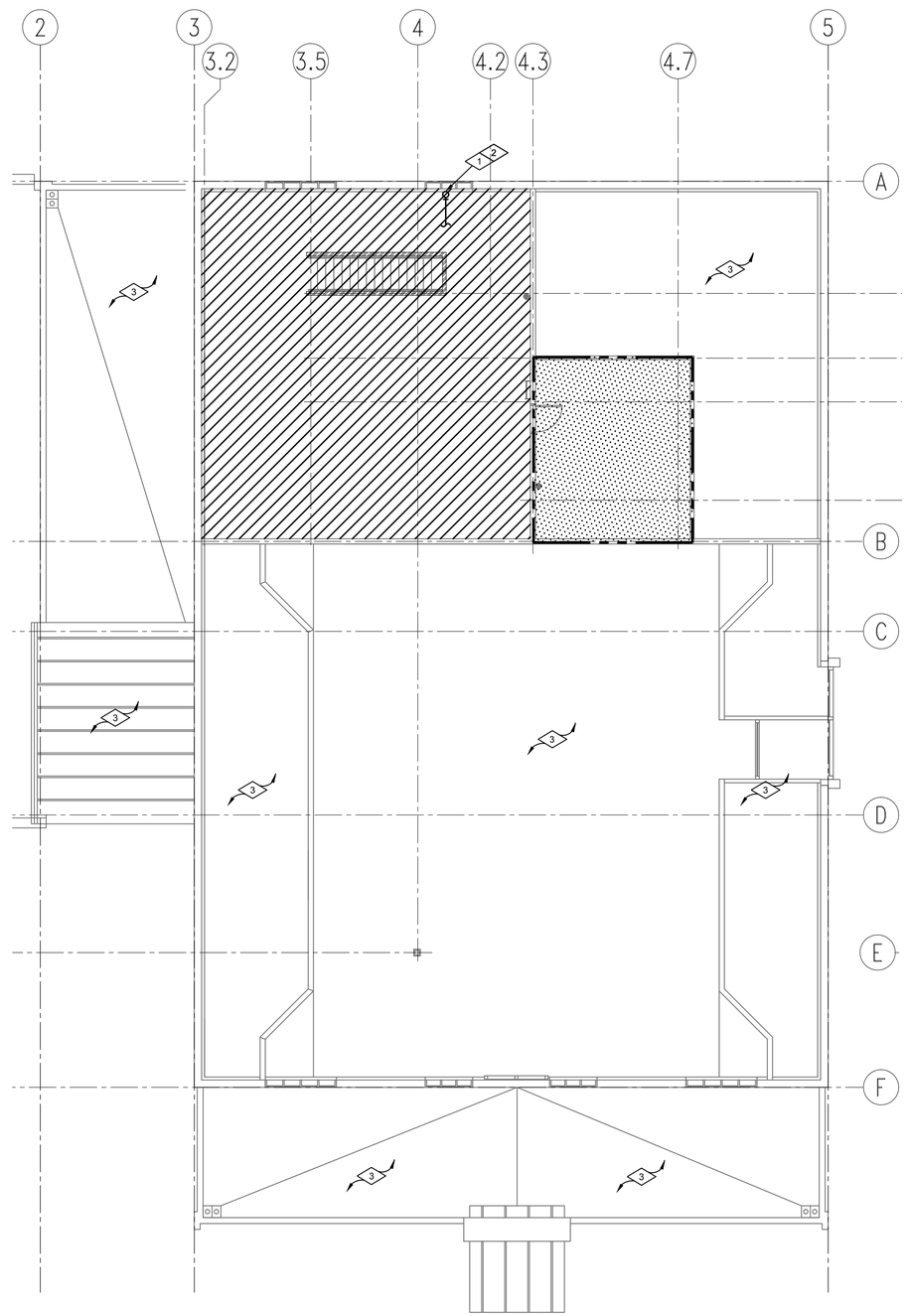

MEZZANINE LEVEL FIRE PROTECTION PLAN

SCALE: 1/8" = 1'-0"

0 4' 8' 16'

NORTH

REFERENCE NOTES

1. EXTEND OR MODIFY EXISTING FIRE SPRINKLER PIPING SYSTEMS TO PROVIDE COVERAGE OF NEW MEZZANINE AREA AND MECHANICAL ROOM IN ACCORDANCE WITH NFPA 13 REQUIREMENTS. SEE LEGEND FOR SPECIFIED HAZARD REQUIREMENTS.
2. SLOPE ALL NEW FIRE SPRINKLER PIPING TO DRAIN POINTS.
3. PROVIDE FIRE SPRINKLER COVERAGE ABOVE AND BELOW NEW CEILINGS AS REQUIRED BY NFPA 13

GENERAL FIRE PROTECTION NOTES

1. THE FIRE SPRINKLER CONTRACTOR SHALL COORDINATE HIS WORK WITH THE ELECTRICAL, SHEET METAL, PLUMBING, AND CEILING CONTRACTORS TO AVOID ANY CONFLICTS IN PIPE ROUTING OR HEAD LOCATIONS.
2. RUN SPRINKLER PIPING AS HIGH AS POSSIBLE IN SPACES ABOVE CEILING AND COORDINATE WITH DUCTWORK.
3. FIRE SPRINKLER PLANS SHALL BE APPROVED BY ALL GOVERNING AGENCIES PRIOR TO SUBMITTING PLANS TO THE CONTRACTING OFFICER.
4. THE FIRE PROTECTION CONTRACTOR SHALL PROVIDE COMPLETE FIRE SPRINKLER SYSTEMS, INCLUDING ALL ITEMS AS REQUIRED OR RECOMMENDED BY ALL GOVERNING AGENCIES.
5. FIRE SPRINKLER SYSTEM SHALL COMPLY WITH N.F.P.A. 13 REQUIREMENTS AND ALL GOVERNING AGENCIES.
6. FIRE SPRINKLER HEADS IN INDIVIDUAL ROOMS TO BE RUN IN STRAIGHT LINES AND COORDINATED WITH CEILING AND LIGHTS.
7. FIRE SPRINKLER CONTRACTOR SHALL COORDINATE HIS LOCATION OF PIPING VERY CAREFULLY WITH THE ARCHITECTURAL AND STRUCTURAL PLANS AND AS APPROVED BY THE ARCHITECT.
8. HEAD GUARDS TO BE PROVIDED IN ACCORDANCE WITH N.F.P.A.
9. THE CONTRACTING OFFICER SHALL BE NOTIFIED (IN WRITING) AT LEAST THREE DAYS IN ADVANCE OF HYDROSTATIC TESTING AND FINAL INSPECTION OF OVERHEAD SYSTEMS PRIOR TO INSTALLATION OF CEILINGS.
10. CONTRACTOR SHALL FIELD VERIFY ALL PIPE LOCATIONS PRIOR TO FABRICATION OF PIPE SYSTEMS.
11. FIRE PROTECTION DRAWINGS ARE DIAGRAMMATIC ONLY.

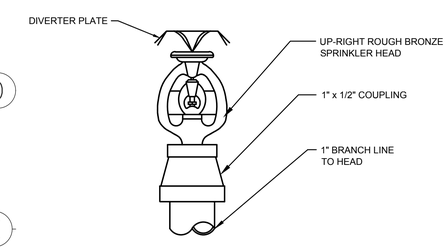

UPRIGHT ROUGH BRONZE SPRINKLER HEAD DETAIL

NOT TO SCALE

1 / FP102

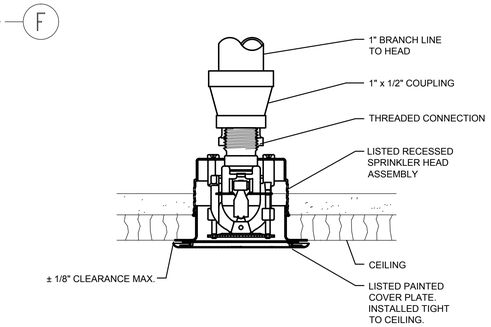

CONCEALED SPRINKLER HEAD DETAIL

NOT TO SCALE

2 / FP102

CLIENT

UDOT CONNECTING COMMUNITIES

REGION 4 OFFICE REMODEL
708 SOUTH 100 WEST
RICHFIELD UTAH 84701

DESIGNER

ARCHIPLEX GROUP
architecture · planning · design services
255 Crossroad Square
Salt Lake City, UT 84115
P:(801) 961-7070
F:(801) 961-7373

CONSULTANTS

OLSEN & PETERSON
consulting engineers, inc.
14 East 2700 South, Salt Lake City, UT 84115
Phone: (801) 486-4646 Fax: (801) 467-2531

PROFESSIONAL SEAL

REGISTERED PROFESSIONAL ENGINEER # 174126 PAUL W. LAIRD STATE OF UTAH

ISSUE

MARK	DATE	DESCRIPTION
	AUGUST	DFCM REVIEW SUBMITTAL

DFCM PROJECT NO:	10046900
DFCM CONTRACT NO:	107453
ARCHIPLEX PROJECT NO:	1007.01
DRAWN BY:	STAFF
CHECKED BY:	PWL
SCALE:	1/8"=1'-0"
DATE:	SEPTEMBER 16, 2010

SHEET TITLE

MEZZANINE LEVEL FIRE PROTECTION PLAN

FP102