State of Utah

GARY R. HERBERT
Governor

GREGORY S. BELL
Lieutenant Governor

Department of Administrative Services
KIMBERLY K. HOOD
Executive Director

Division of Facilities Construction and Management
DAVID G. BUXTON
Director

ADDENDUM NO. 1

Date:	February 7, 2011
To:	Contractors
From:	Jeff Reddoor
Reference:	Provo Juvenile Courts Animal Shelter Tenant Finish & Mechanical Administrative Office of the Courts - Provo, Utah Project No.10051150
Subject:	**Addendum No. 1**

Pages	Addendum	1 page
	Architects Addendum	24 pages
	Total	25 pages

Note: This Addendum shall be included as part of the Contract Documents. Items in this Addendum apply to all drawings and specification sections whether referenced or not involving the portion of the work added, deleted, modified, or otherwise addressed in the Addendum. Acknowledge receipt of this Addendum in the space provided on the Bid Form. Failure to do so may subject the Bidder to Disqualification.

1.1 SCHEDULE CHANGES – There are no changes to the project schedule.

1.2 GENERAL –EDA Architects, Inc. – Please see attached specs. and drawings.

PROVO JUVENILE COURTS-ANIMAL SHELTER - ADDENDUM NO. 1

PROJECT:	PROVO JUVENILE COURTS-ANIMAL SHELTER RENOVATION AND MECHANICAL UPGRADE DFCM PROJECT NO. 10051150 2200 SOUTH STATE STREET PROVO, UTAH 84606
ARCHITECT:	EDA ARCHITECTS INC. 9 EXHANGE PLACE, SUITE #1100 SALT LAKE CITY, UTAH 84111
DATE:	February 7, 2011
BID DATE:	February 16, 2011

The original Contract Documents issued for the above project are amended as noted on this Addendum. It shall be the responsibility of the bidder to appropriately disseminate this information to all concerned prior to the assigned bid time. Receipt of this Addendum shall be acknowledged by inserting its number and date in the appropriate space provided on the Bid Form.

A. *ARCHITECTURAL SPECIFICATION ITEMS*

1) SECTION 01 23 00—Alternates

On page 01 23 00-2, under article 3.1 Schedule of Alternates, reverse Alternates No. 2 and No. 3 so that the Paving is identified as Alternate No. 2 and the Landscaping and Irrigation work is identified as Alternate No. 3.

2) SECTION 05 12 00 Structural Steel Framing

On page 05 12 00-6, under article 2.8, delete item A in its entirety. All structural steel shall be fabricated by a DFCM approved steel fabrication shop and, therefore, the Owner will not be hiring an independent testing agency.

3) SECTION 06 40 23 Interior Architectural Woodwork:

On page 06 40 23-3, under article 2, Delete item 2.1 in its entirety. No prior approval for fabricators will be required.

On page 06 40 23-2, under article 1.1, delete item C in its entirety. AWI Certification will not be required.

On page 06 40 23-7, under article 2.10, paragraph A, item 1(a), all manufacturers meeting the requirement s of the specifications are acceptable. Wilson Art was referenced as a basis of design for a performance specification.

4) SECTION 07 31 13 Asphalt Shingles

On page 07 31 13-2, under article 2.1, paragraph A, item 2, architectural patterned shingles are acceptable.

On page 07 31 13-2, under article 2.2, a Type 1 underlayment **is** required.

5) SECTION 31 20 00- Earth Moving
On page 31 20 00-6, under article 3.12 Compaction of Soil Backfills and Fills, under item 4, increase the compaction from 85% to 95% for utility trenches.

6) SECTION 32 13 13- Concrete Pavement
On page 32 13 13-3, under article 2.6, paragraph A, item 1, change "4,000 PSI" to read "5,000 PSI".

B. *ADDITIONAL PRODUCT APPROVALS*

Only submittals for prior approval received by the A/E team no later than 5 PM MST will be considered.

All manufacturers, tradenames, and products listed below are approved with the provision that they completely satisfy all and every requirement of the drawings, specifications, and all Addenda and shall conform to the design, quality and standards specified, established and required for the complete and satisfactory installation and performance of the building and all its respective parts.

Section 08 71 00	Exit devices	Hager 4500 Series Grade 1
	Closers	Hager
	Bolts and Trim	Hager

C. *ARCHITECTURAL DRAWING ITEMS*

1) Drawing G-003
Under fabricators at the upper left hand corner of the drawing, note that only DFCM approved structural steel fabrication shops will be utilized for this project.

2) Drawing AS-001
On Keyed Note 11: Complete Alternate No. 2 description to read as follows: "Alt. #2: Remove existing asphalt drive and replace with 5" concrete paving over 8" base course over properly prepared subgrade."

On the Legend, add the following description to BASE BID: "The area of new paving work identified under the base bid shall be 5" concrete paving over 8" base course over properly prepared subgrade."

On the Legend, add the following description to ALT. # 2: "The additional area of new paving work identified under this alternate shall be 5" concrete paving over 8" base course over properly prepared subgrade."

On the Revised Site Plan, change the enlarged plan reference from drawing no. "AS-001" to read drawing no. "AS-002".

On the revised site plan (2/AS-001), in the area outlined by the detail 3/AS-002 reference, change the keynote 6 reference to keynote 1 for the parking chuck call out. Also add the Keynote 3 for the new curb layout around the ADA parking area. See Attachment Addendum. 1.1 for this and other information related to drawing AS-001.

On the revised site plan (2/AS-001), the pauche for alternate # 2 extends all along the east side of the building and continues around to the south side as indicated.

For keynote 16, add "as part of Alternate #2" to the end of the key note.

3) Drawing AS-002

On detail 1, 5, 6 and 10: Change note from "road base" to read "base".

On detail 2: Delete reference to 8' length, only the 6' length applies to this project.

On Detail 6: Delete references to asphalt and replace with "5" concrete pavement ".

On detail 11: Change Note from "8" asphalt" to read "8" base".

4) Drawing D-101

On all the building sections referenced on this drawing, change the drawing number from "A109" to "A108".

For clarity, see Attachment Addendum 1.2 for additional hatched areas of the floor slab to be removed .

5) Drawing A-101

Add new interior 4" concrete slab over drainage course in area identified to have concrete slab removed on drawing D-101 and Attachment Addendum 1.2.

In the area outlined by the enlarged plan 2/A-101, at the outside corner of WC 4, change the key note reference from 14 to 15 for the corner guard.

Pursuant to the pre-bid walk through discussion on February 3, 2011, the area of the building that requires abatement occurs between grids 1 through 5 and between grids A and B. There is no abatement required for the portion of the building extending west of grid B. As a result, DFCM's abatement contractor will provide and install all unistrut as called out in keynote 16 and the flat 2 x 4 nailers as identified in wall type B on A-107 in the area previously described as requiring abatement. As part of the window removal in this same area, the abatement contractor will also provide the temporary enclosures for the window openings until the general contractor can install the new windows. It will be the general contractor's responsibility to provide and install all demolition, temporary enclosures and wood nailers associated with wall type B on A-107 in the area of the building west of Grid B.

The shoring required for the new opening along grid A between grids 3 and 5 will be furnished and installed by DFCM's abatement contractor.

Along grid B between grids 4 and 5, delete the detail reference H/A-109 which does not apply here.

See attachment Addendum 1.3 for fire extinguisher location.

See Drawing A/105 for all room names and room numbers.

6) Drawing A-102

On the elevation A of Elevation 5/A-102, add the notes "2" ceramic tile border around the mirror" and "soap dispenser" . These notes were inadvertently cut off.

7) Drawing A107

In the Door Schedule, the head and jamb details are called out as numbers as opposed to letters. Therefore, revise as follows:

All references to "2" in the Details column shall be changed to "B".
All references to "3" in the Details column shall be changed to "O".
All references to "4" in the Details column shall be changed to "G".
All references to "5" in the Details column shall be changed to "H".
All references to "6" in the Details column shall be changed to "H".
All references to "1" in the Details column shall be changed to "J".

All these details are to be found on Drawing A/109.

8) Drawing A-109

On detail E/A-109, expansion anchors shall be ½" in diameter and 5" in length.

Delete details G/A-109 and F/A-109 and replace with details F and G on Attachment Addendum 1.4.

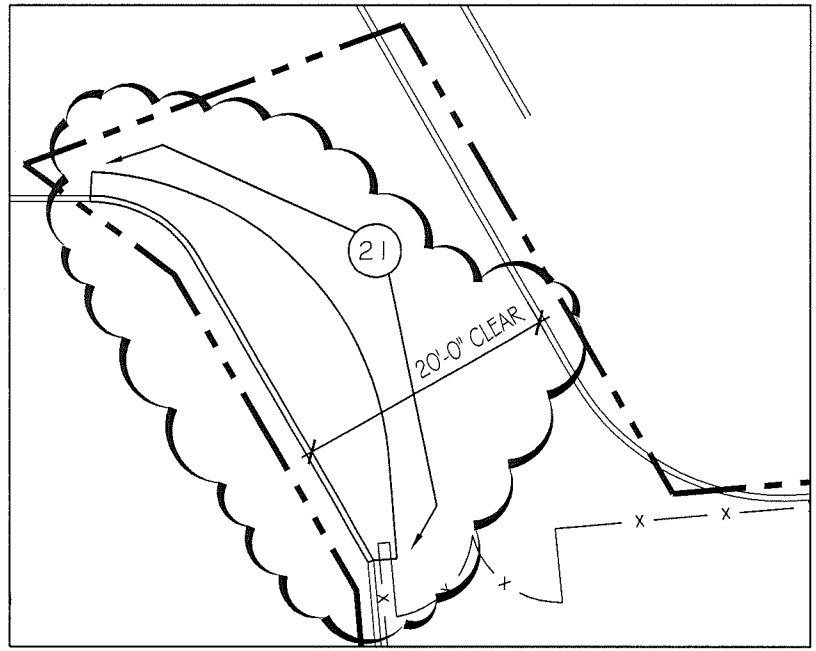

2 PARTIAL SITE PLAN - NORTH

SCALE: 1/16" = 1'-0"

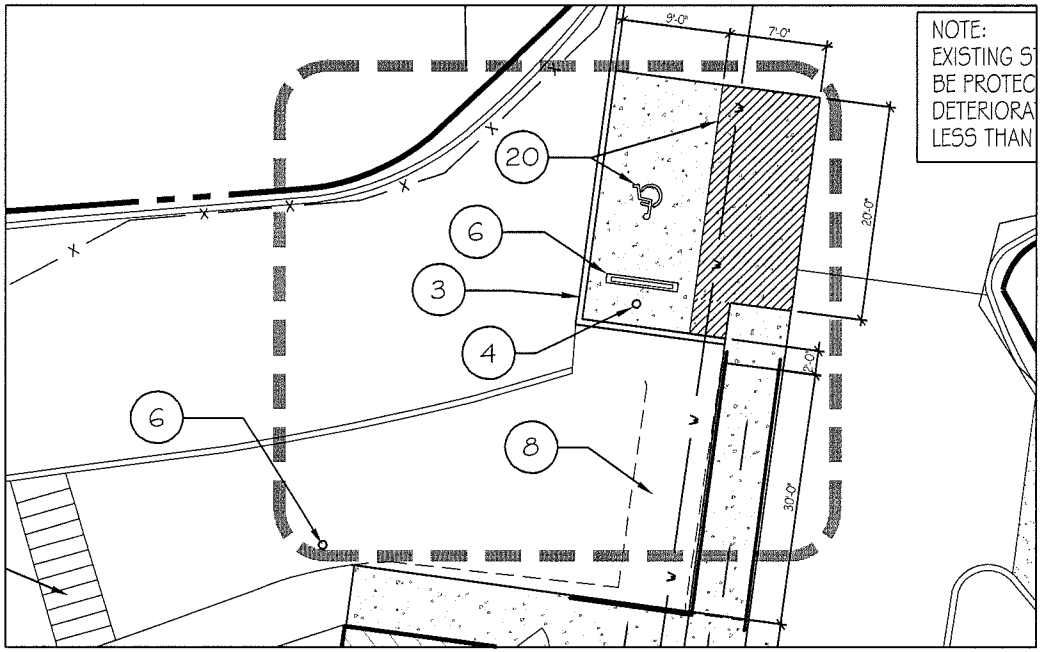

3 PARTIAL SITE PLAN - ADA PARKING

SCALE: 1/16" = 1'-0"

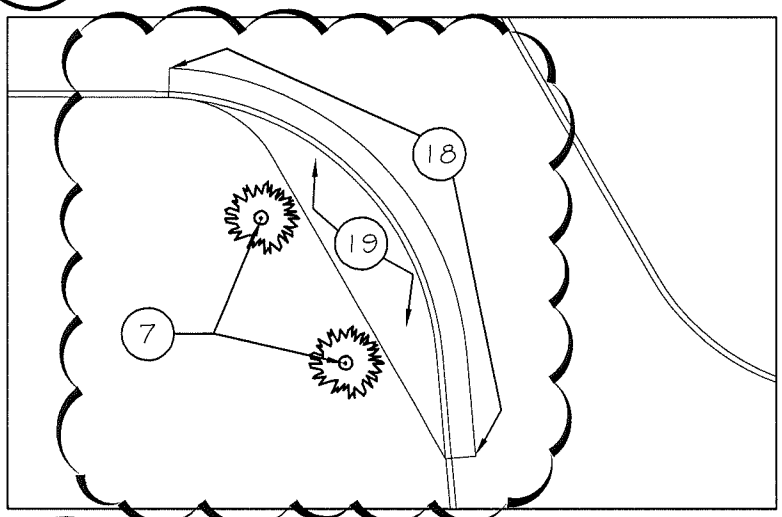

1 EXISTING SITE PLAN - NORTH

SCALE: 1/16" = 1'-0"

KEYED NOTES

18 SAW CUT & REMOVE 6" CONC CURB AND ADJACENT 2'-0" WIDE STRIP OF ASPHALT. PREP TO RECIEVE NEW ASPHALT TIE IN AND CURB.

19 STRIP LANDSCAPE AND PREP TO RECIEVE NEW ASHPALT DRIVE. MODIFY EXISTING IRRIGATION SYSTEM AS REQUIRED TO MAINTAIN COVERAGE.

20 NEW ASPHALT PAINT STRIPING

21 NEW 6' X 12' CONC CURB AND 3" ASPHALT TIE IN OVER 8" BASE.

Plot Scale: 1:1
Z:\PROJECTS\Provo Juvenile Courts-Animal Shelter Renovation\08-Drawings\210041 KS-001 Site.dwg Feb 04, 2011 - 12:01pm

THE BOSTON BUILDING
9 EXCHANGE PLACE, SUITE 1100
SALT LAKE CITY
UTAH 84111
O: 801 531 7600
F: 801 531 7600
www.edaarch.com

eda

PROVO JUVENILE COURT ANIMAL FACILITY RENOVATION

2200 STATE, PROVO, UTAH

DATE: 2.4.11
JOB NO: 210041
DWG REF: D-101

ADDENDUM 1

1.1

© EDA ARCHITECTS, INC. 2011

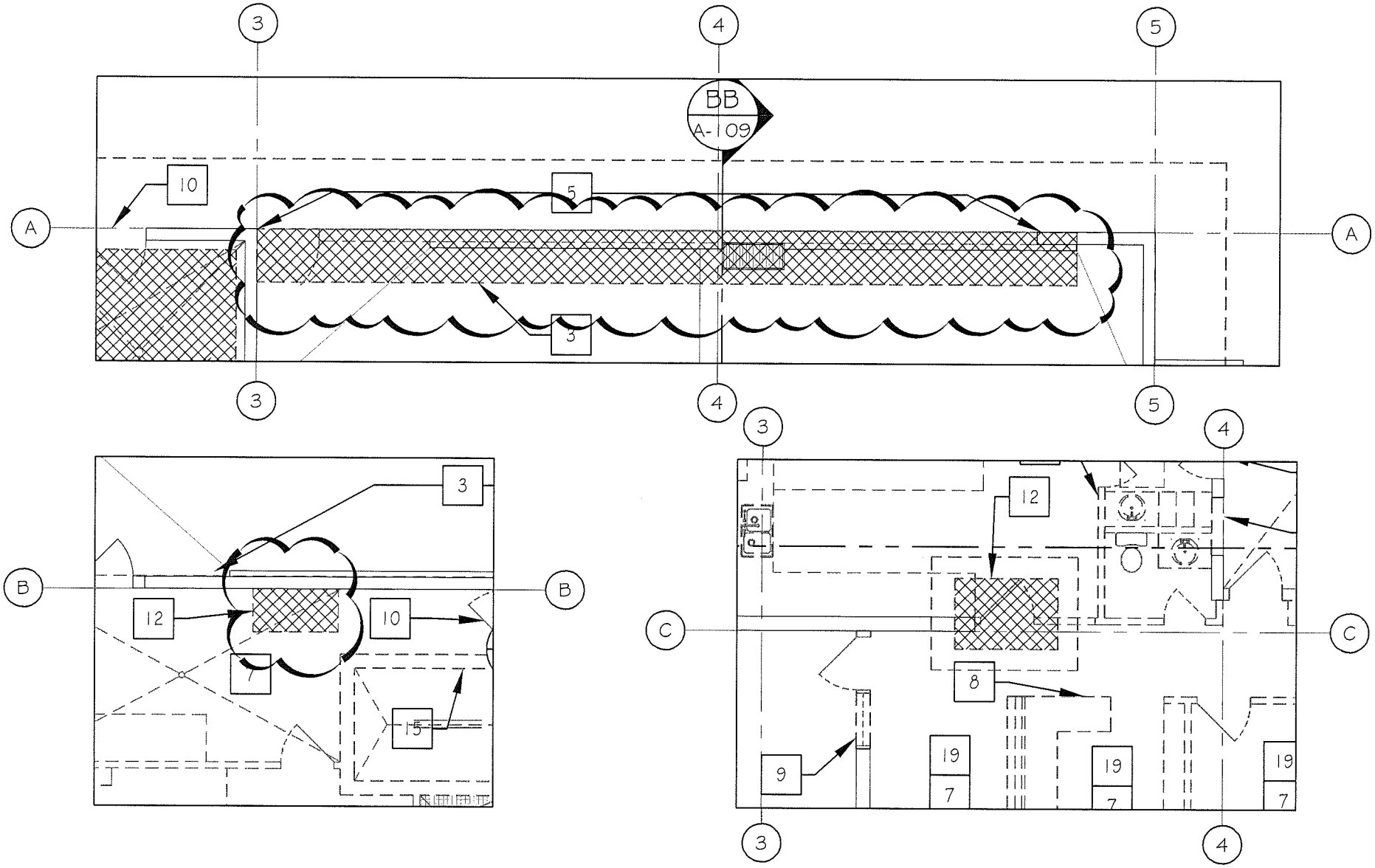

DEMOLITION PLAN - SLAB REMOVAL AREAS

SCALE: 1/8" = 1'-0"

THE BOSTON BUILDING
9 EXCHANGE PLACE, SUITE 1100
SALT LAKE CITY
UTAH 84111
O: 801 531 7600
F: 801 531 7600
www.edaarch.com

eda

PROVO JUVENILE COURT
ANIMAL FACILITY RENOVATION
2200 STATE, PROVO, UTAH

DATE: 2.4.11
JOB NO: 210041
DWG REF: D-101

ADDENDUM 1
1.2

© EDA ARCHITECTS, INC. 2011

Plot Scale: 1:1
Z:\PROJECTS\Provo Juvenile Courts-Animal Shelter Renovation\08-Drawings\210041 D-101 Demo Plan.dwg Feb 04, 2011 - 12:00pm

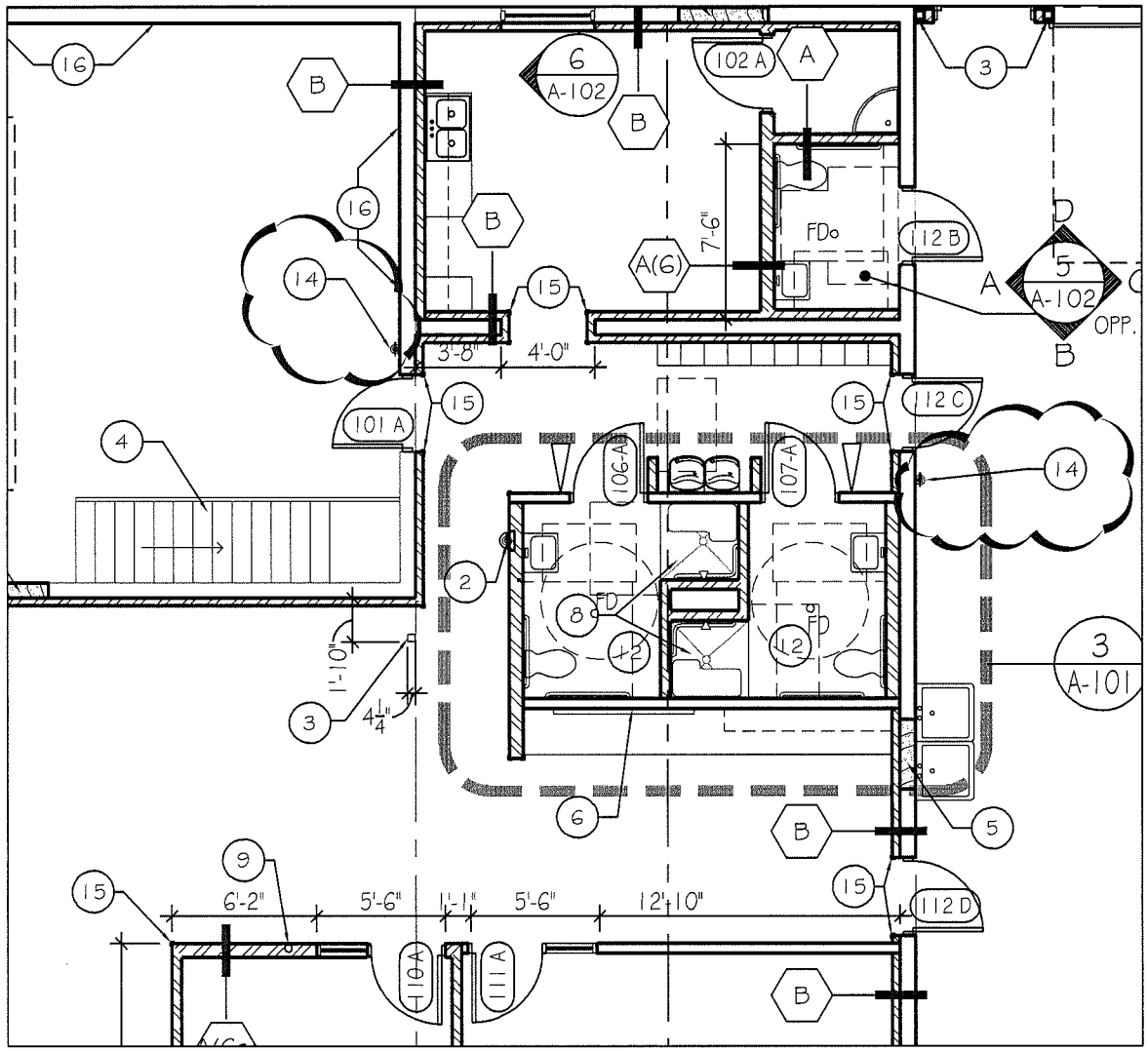

KEYED NOTES

(14) CLIP MOUNT FIRE EXTINGUISHER

FLOOR PLAN - FIRE EXTINGUISHERS

SCALE: 1/8" = 1'-0"

THE BOSTON BUILDING
9 EXCHANGE PLACE, SUITE 1100
SALT LAKE CITY
UTAH 84111
O: 801 531 7600
F: 801 531 7600
www.edaarch.com

PROVO JUVENILE COURT
ANIMAL FACILITY RENOVATION

2200 STATE, PROVO, UTAH

DATE: 2.4.11
JOB NO: 210041
DWG REF: A-101

ADDENDUM 1

1.3

© EDA ARCHITECTS, INC. 2011

Plot Scale: 1:1
Z:\PROJECTS\Provo Juvenile Courts-Animal Shelter Renovation\08-Drawings\210041 A-101 Floor Plan.dwg Feb 04, 2011 - 12:01pm

Plot Scale: 1:1
Z:\PROJECTS\Provo Juve

THE BOSTON BUILDING
9 EXCHANGE PLACE, SUITE 1100
SALT LAKE CITY
UTAH 84111
O: 801 531 7600
F: 801 531 7600
www.ndarch.com

PROVO JUVENILE COURT
ANIMAL FACILITY RENOVATION
2200 STATE, PROVO, UTAH

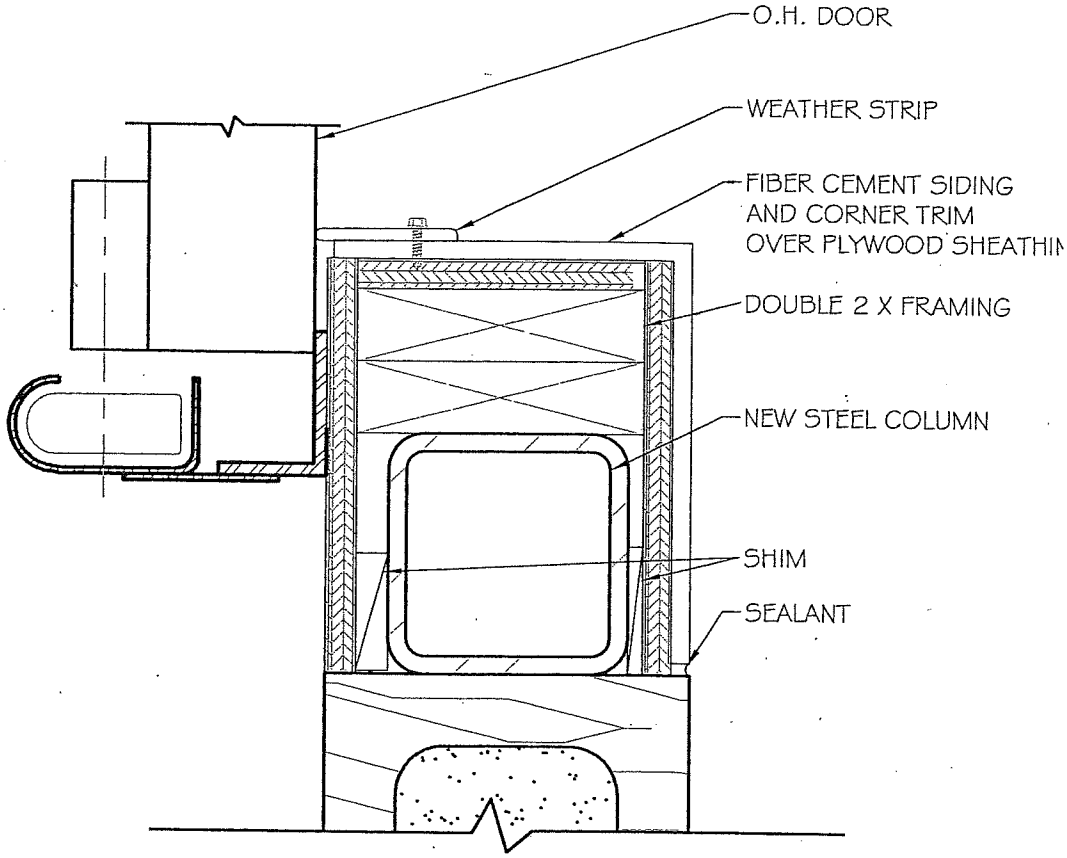

F O.H. DOOR TRACK DETAIL
SCALE: 3" = 1'-0"

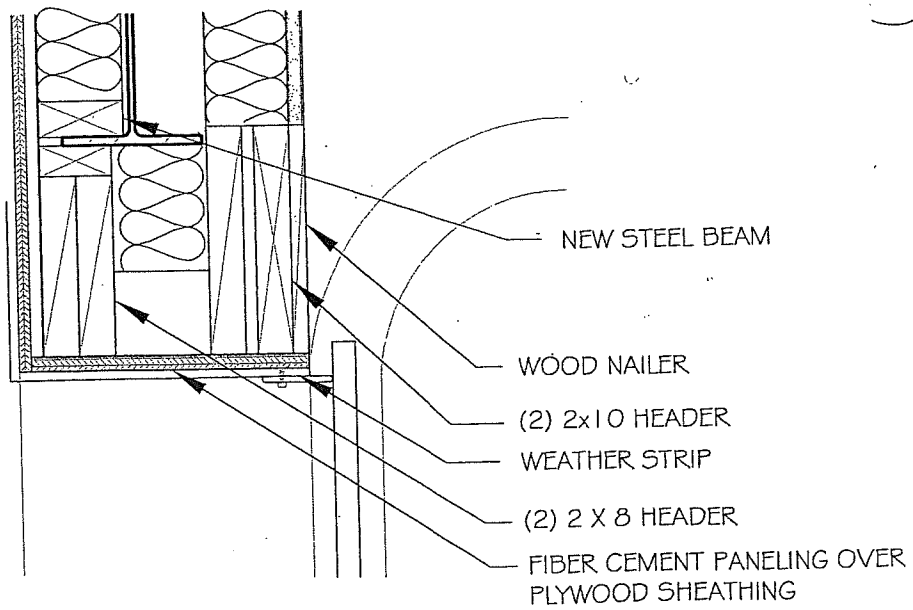

G SECTION GARAGE DOOR DETAIL
SCALE: 1 1/2" = 1'-0"

DATE: 2.4.11
JOB NO: 210041
DWG REF: A-104

ADDENDUM 1.4

© FOX ARCHITECTS, INC. 2011

DUNN ASSOCIATES, INC
Consulting Structural Engineers

February 4, 2011

EDA Architects
Attn: **John Shuttleworth**
111 East Broadway, Suite 200
Salt Lake City, Utah 84111
Phone: (801) 531-7600
Fax: (801) 363-3149
Email: shuttle@edaarch.com

RE: Provo Juvenile Courts - Animal Shelter Renovation **ADDENDUM #1**

Dear John:

Below are items it be included in addenda #1.

Sheet	Description
S101	Site cast concrete to be 4000 psi.
S203	• New LVL refters are to attach to the existing glue-lam beam with Simpson LSSU hangers. • Dbl LVL fascia beams shown in details 12 & 13 on S601 are to extend only to the new LVL rafters (at the three corners, not the entire length of the structure)

Please call if you need anything further.

Respectfully yours

DUNN ASSOCIATES, INC.

Frank Potter

380 West 800 South, Suite 100 Salt Lake City, Utah 84101 phone: 801-575-8877 fax: 801-575-8875 www.dunn-se.com

VAN BOERUM
& FRANK ASSOCIATES, INC.
CONSULTING ENGINEERS

ADDENDUM 1

DATE: February 04, 2011

PROJECT NO: 10273

PROJECT: Provo Juvenile courts

DIVISION – 26

DRAWINGS

SHEET - E001
1. Symbol schedule notes for the data outlets have been revised.

SHEET - E201
1. Keyed note 8 was added to reflect a 3/4 " conduit for each data outlet to the telephone terminal board.

SPECIFICATIONS

SECTION - 262726 Wiring Devices
1. Amended to include junction boxes for communications outlets.

SECTION - 260533 Raceways and Boxes
1. Amended to include conduits for communications to the telephone terminal board.

End of Addendum.

ELECTRICAL SYMBOL SCHEDULE

SYMBOL	DEVICE/FIXTURE DESCRIPTION	NOTES
	DUAL TELEPHONE/DATA	(11),(12)
	~~PANEL BOARD RECESSED~~	
	3 PUSH BUTTON SWITCH	(8)
PP	POWER PACK	(7)
	CEILING DUAL TECHNOLOGY OCCUPANCY SENSOR	(7)
	FACP	
	MOTOR	(22)
	MOTOR ON ROOF	
	EXIT FIXTURE – ONE WAY CEILING MOUNT	(1) (2) (4) (5)
	EXIT FIXTURE – TWO WAY CEILING MOUNT	(1) (2) (4) (5)
	EXIT FIXTURE – ONE WAY WALL MOUNT	(1) (2) (4) (5)
	EXIT FIXTURE – TWO WAY WALL MOUNT	(1) (2) (4) (5)
	MECHANICAL EQUIPMENT	
$F	FAN SWITCH	(24)
PE	PHOTO-ELECTRIC CELL WITH RELAY	(10)
	DUPLEX CONVENIENCE OUTLET, GROUNDING TYPE	(6)
	DUPLEX CONVENIENCE OUTLET – GFI	(6)
	DOUBLE DUPLEX OUTLET	(6)
#	SINGLE PHASE SPECIAL OUTLET	(6)
#	THREE PHASE SPECIAL OUTLET	(6)
J	JUNCTION BOX	(12)
J	JUNCTION BOX	(12)
	DISCONNECT SWITCH	(8) (13)
	MAGNETIC STARTER	(8) (13) (14)
F	FUSED DISCONNECT SWITCH	(8) (13)
	MAGNETIC STARTER WITH DISCONNECT	(8) (13) (14)
B	MAGNETIC STARTER WITH BREAKER	(8) (13) (14)
	~~PANEL BOARD~~	

11. USE A 4" X 4" BOX WITH A MUD RING TO MATCH THE DEVICE AND INSTALLATION.
12. PROVIDE MUD RING AND/OR BOX COVER APPROPRIATE FOR DEVICE/FIXTURE SERVED.

VAN BOERUM & FRANK ASSOCIATES, INC.
CONSULTING ENGINEERS
WWW.VBFA.COM
Salt Lake City · Logan · St. George · Tempe
330 South 300 East 801.530.3148 T
Salt Lake City, UT 84111 801.530.3150 F
VBFA Project Number:10273

PROVO JUVENILE COURTS
ANIMAL SHELTER RENOVATION & MECHANICAL UPGRADE
ADMINISTRATIVE OFFICE OF COURTS
DFCM PROJECT NUMBER 10051150
2200 SOUTH STATE STREET PROVO, UTAH 84606

VBFA PROJECT #: 0XXXX
CHECKED BY: DESIGNER
DRAWN BY: DRAFTER
CURRENT/BID DATE: DATE

SHEET CONTENTS: ELECTRICAL SYMBOLS SCHEDULES GENERAL NOTES & RISER DIAGRAM

ADD-01
EE001

KEYED NOTES

1

3. POKE THROUGH BLOCK WALL UNDERNEATH STAIRS FOR DATA LOCATION CONDUIT. DATA JUNCTION BOX SHALL BE FLUSH WITH WALL.

8. PROVIDE 3/4" CONDUIT FROM DEVICE LOCATION TO THE TELEPHONE TERMINAL BOARD. TYPICAL FOR ALL DATA JUNCTION BOXES.

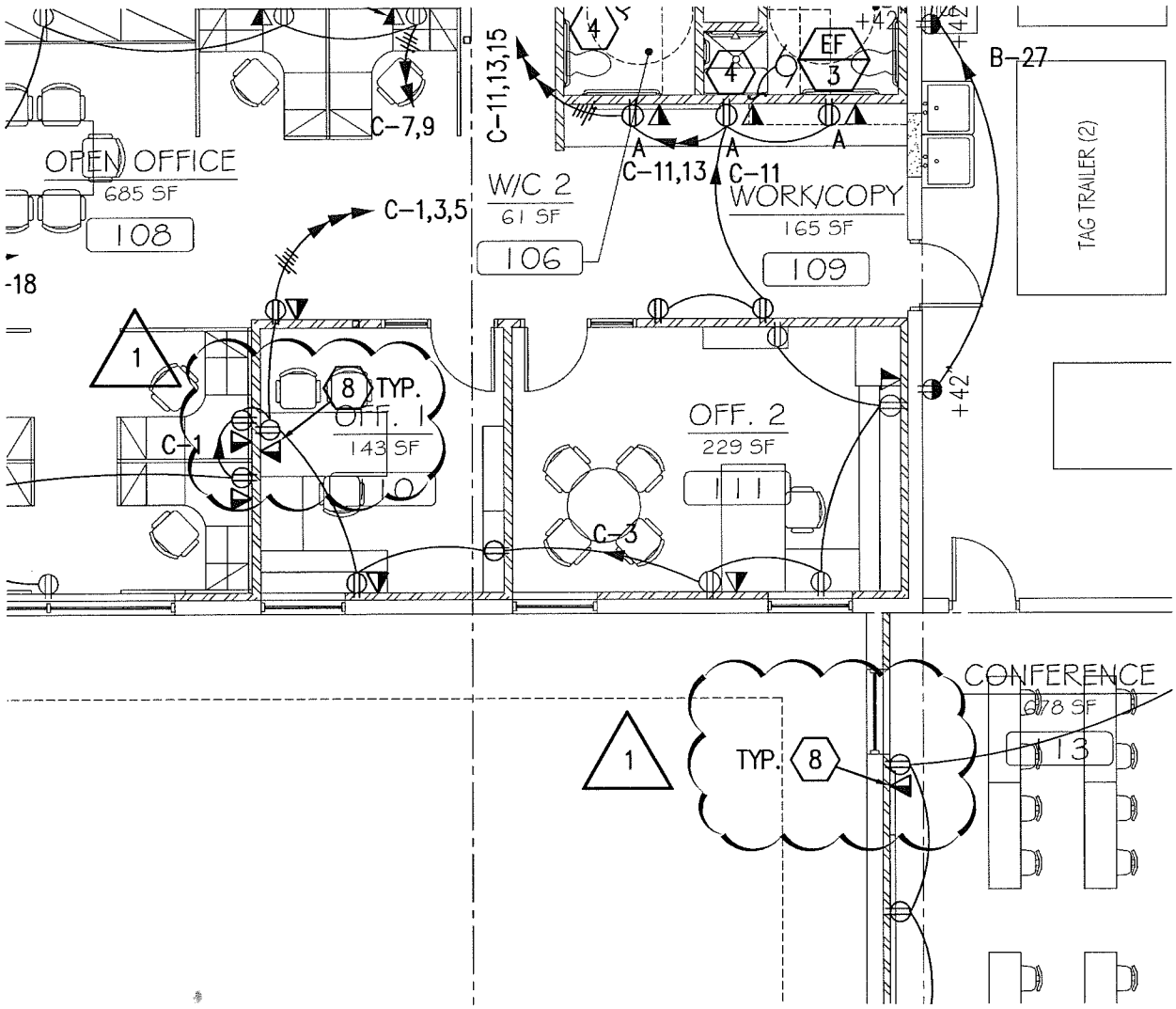

MAIN FLOOR POWER PLAN

EE201 SCALE: 1/8" = 1'-0"

VAN BOERUM & FRANK ASSOCIATES, INC.
CONSULTING ENGINEERS
WWW.VBFA.COM
Salt Lake City · Logan · St. George · Tempe
330 South 300 East 801.530.3148 T
Salt Lake City, UT 84111 801.530.3150 F
VBFA Project Number:10273

PROVO JUVENILE COURTS
ANIMAL SHELTER RENOVATION & MECHANICAL UPGRADE
ADMINISTRATIVE OFFICE OF COURTS
DFCM PROJECT NUMBER 10051150
2200 SOUTH STATE STREET PROVO, UTAH 84606

VBFA PROJECT #: 0XXXX
CHECKED BY: DESIGNER
DRAWN BY: DRAFTER
CURRENT/BID DATE: DATE
SHEET CONTENTS

MAIN FLOOR POWER PLAN

ADD-01
EE201

PROVO JUVENILE COURTS
2200 SOUTH STATE STREET
PROVO, UTAH 84606
DFCM PROJECT NO. 10051150

SECTION 260533 - RACEWAY AND BOXES

PART 1 - GENERAL

1.1 RELATED DOCUMENTS

A. Drawings and general provisions of the Contract, including General and Supplementary Conditions and Division 01 Specification Sections, apply to this Section.

1.2 SUMMARY

A. This Section includes raceways, fittings, boxes, enclosures, and cabinets for electrical wiring.

1.3 DEFINITIONS

A. EMT: Electrical metallic tubing.

B. LFMC: Liquidtight flexible metal conduit.

1.4 SUBMITTALS

A. Product Data: For surface raceways, wireways and fittings, floor boxes, hinged-cover enclosures, and cabinets.

B. Qualification Data: For professional engineer and testing agency.

1.5 QUALITY ASSURANCE

A. Comply with NFPA 70.

PART 2 - PRODUCTS

2.1 METAL CONDUIT AND TUBING

A. Available Manufacturers: Subject to compliance with requirements, manufacturers offering products that may be incorporated into the Work include, but are not limited to, the following:

1. AFC Cable Systems, Inc.
2. Alflex Inc.
3. Allied Tube & Conduit; a Tyco International Ltd. Co.
4. Anamet Electrical, Inc.; Anaconda Metal Hose.
5. Electri-Flex Co.
6. Manhattan/CDT/Cole-Flex.
7. Maverick Tube Corporation.

8. O-Z Gedney; a unit of General Signal.
9. Wheatland Tube Company.

B. EMT: ANSI C80.3.

C. LFMC: Flexible steel conduit with PVC jacket.

D. Fittings for Conduit (Including all Types and Flexible and Liquidtight), EMT, and Cable: NEMA FB 1; listed for type and size raceway with which used, and for application and environment in which installed.
   1. Fittings for EMT: Steel set-screw or compression type.
   2. Coating for Fittings for PVC-Coated Conduit: Minimum thickness, 0.040 inch, with overlapping sleeves protecting threaded joints.

E. Joint Compound for Rigid Steel Conduit or IMC: Listed for use in cable connector assemblies, and compounded for use to lubricate and protect threaded raceway joints from corrosion and enhance their conductivity.

2.2 COMMUNICATIONS CABLE RACEWAY AND FITTINGS

A. Manufacturers: Subject to compliance with requirements, provide products by one of the following:

   1. Arnco Corporation.
   2. Endot Industries Inc.
   3. IPEX Inc.
   4. Lamson & Sessions; Carlon Electrical Products.

B. Description: Comply with UL 2024; flexible type, approved for general-use installation.

2.3 METAL WIREWAYS

A. Available Manufacturers: Subject to compliance with requirements, manufacturers offering products that may be incorporated into the Work include, but are not limited to, the following:

   1. Cooper B-Line, Inc.
   2. Hoffman.

B. Fittings and Accessories: Include couplings, offsets, elbows, expansion joints, adapters, hold-down straps, end caps, and other fittings to match and mate with wireways as required for complete system.

C. Wireway Covers: As indicated.

D. Finish: Manufacturer's standard enamel finish.

2.4 BOXES, ENCLOSURES, AND CABINETS

A. Available Manufacturers: Subject to compliance with requirements, manufacturers offering products that may be incorporated into the Work include, but are not limited to, the following:

1. Cooper Crouse-Hinds; Div. of Cooper Industries, Inc.
2. EGS/Appleton Electric.
3. Erickson Electrical Equipment Company.
4. Hoffman.
5. Hubbell Incorporated; Killark Electric Manufacturing Co. Division.
6. O-Z/Gedney; a unit of General Signal.
7. RACO; a Hubbell Company.
8. Robroy Industries, Inc.; Enclosure Division.
9. Scott Fetzer Co.; Adalet Division.
10. Spring City Electrical Manufacturing Company.
11. Thomas & Betts Corporation.
12. Walker Systems, Inc.; Wiremold Company (The).
13. Woodhead, Daniel Company; Woodhead Industries, Inc. Subsidiary.

B. Sheet Metal Outlet and Device Boxes: NEMA OS 1.

C. Small Sheet Metal Pull and Junction Boxes: NEMA OS 1.

D. Hinged-Cover Enclosures: NEMA 250, Type 1, with continuous-hinge cover with flush latch, unless otherwise indicated.

1. Metal Enclosures: Steel, finished inside and out with manufacturer's standard enamel.

PART 3 - EXECUTION

3.1 RACEWAY APPLICATION

A. Comply with the following indoor applications, unless otherwise indicated:

1. Exposed, Not Subject to Physical Damage: EMT.
2. Exposed, Not Subject to Severe Physical Damage: EMT

3. Concealed in Ceilings and Interior Walls and Partitions: EMT.
4. Connection to Vibrating Equipment (Including Transformers and Hydraulic, Pneumatic, Electric Solenoid, or Motor-Driven Equipment): FMC, except use LFMC in damp or wet locations.
5. Damp or Wet Locations: Rigid steel conduit IMC.
6. Raceways for Optical Fiber or Communications Cable in Spaces Used for Environmental Air: EMT.
7. Raceways for Concealed General Purpose Distribution of Optical Fiber or Communications Cable: General-use, optical fiber/communications cable raceway EMT.
8. Boxes and Enclosures: NEMA 250, Type 1, except use NEMA 250, Type 4, stainless steel in damp or wet locations.

B. Minimum Raceway Size: **3/4-inch** trade size.

C. Raceway Fittings: Compatible with raceways and suitable for use and location.

1. Rigid and Intermediate Steel Conduit: Use threaded rigid steel conduit fittings, unless otherwise indicated.

2. PVC Externally Coated, Rigid Steel Conduits: Use only fittings listed for use with that material. Patch and seal all joints, nicks, and scrapes in PVC coating after installing conduits and fittings. Use sealant recommended by fitting manufacturer.

D. Install nonferrous conduit or tubing for circuits operating above 60 Hz. Where aluminum raceways are installed for such circuits and pass through concrete, install in nonmetallic sleeve.

E. Do not install aluminum conduits in contact with concrete.

3.2 INSTALLATION

A. Comply with NECA 1 for installation requirements applicable to products specified in Part 2 except where requirements on Drawings or in this Article are stricter.

B. Keep raceways at least 6 inches away from parallel runs of flues and steam or hot-water pipes. Install horizontal raceway runs above water and steam piping.

C. Complete raceway installation before starting conductor installation.

D. Support raceways as specified in Division 26 Section "Hangers and Supports for Electrical Systems."

E. Install no more than the equivalent of three 90-degree bends in any conduit run except for communications conduits, for which fewer bends are allowed.

F. Conceal conduit and EMT within finished walls, ceilings, and floors, unless otherwise indicated.

G. Threaded Conduit Joints, Exposed to Wet, Damp, Corrosive, or Outdoor Conditions: Apply listed compound to threads of raceway and fittings before making up joints. Follow compound manufacturer's written instructions.

H. Raceway Terminations at Locations Subject to Moisture or Vibration: Use insulating bushings to protect conductors, including conductors smaller than No. 4 AWG.

I. Install pull wires in empty raceways. Use polypropylene or monofilament plastic line with not less than 200-lb tensile strength. Leave at least 12 inches of slack at each end of pull wire.

J. Raceways for Communications Cable: Install raceways, metallic as follows:
   1. 3/4 Inch Trade Size minimum: Install raceways in maximum lengths of 75 feet.
   2. Provide 3/4" conduit from each telephone/data outlet to telephone terminal backboard.
   3. Install with a maximum of two 90-degree bends or equivalent for each length of raceway unless Drawings show stricter requirements. Separate lengths with pull or junction boxes or terminations at distribution frames or cabinets where necessary to comply with these requirements.

K. Flexible Conduit Connections: Use maximum of 72 inches of flexible conduit for recessed and semirecessed lighting fixtures, equipment subject to vibration, noise transmission, or movement; and for transformers and motors.

   1. Use LFMC in damp or wet locations subject to severe physical damage.
   2. Use LFMC or LFNC in damp or wet locations not subject to severe physical damage.

L. Recessed Boxes in Masonry Walls: Saw-cut opening for box in center of cell of masonry block, and install box flush with surface of wall.

3.3 SLEEVE INSTALLATION FOR ELECTRICAL PENETRATIONS

A. Coordinate sleeve selection and application with selection and application of firestopping specified in Division 07 Section "Penetration Firestopping."

B. Concrete Slabs and Walls: Install sleeves for penetrations unless core-drilled holes or formed openings are used. Install sleeves during erection of slabs and walls.

C. Use pipe sleeves unless penetration arrangement requires rectangular sleeved opening.

D. Rectangular Sleeve Minimum Metal Thickness:

1. For sleeve cross-section rectangle perimeter less than 50 inches and no side greater than 16 inches, thickness shall be 0.052 inch.
2. For sleeve cross-section rectangle perimeter equal to, or greater than, 50 inches and 1 or more sides equal to, or greater than, 16 inches, thickness shall be 0.138 inch.

E. Fire-Rated Assemblies: Install sleeves for penetrations of fire-rated floor and wall assemblies unless openings compatible with firestop system used are fabricated during construction of floor or wall.

F. Cut sleeves to length for mounting flush with both surfaces of walls.

G. Extend sleeves installed in floors 2 inches above finished floor level.

H. Size pipe sleeves to provide 1/4-inch annular clear space between sleeve and raceway unless sleeve seal is to be installed or unless seismic criteria require different clearance.

I. Seal space outside of sleeves with grout for penetrations of concrete and masonry and with approved joint compound for gypsum board assemblies.

J. Interior Penetrations of Non-Fire-Rated Walls and Floors: Seal annular space between sleeve and raceway, using joint sealant appropriate for size, depth, and location of joint. Refer to Division 07 Section "Joint Sealants" for materials and installation.

K. Fire-Rated-Assembly Penetrations: Maintain indicated fire rating of walls, partitions, ceilings, and floors at raceway penetrations. Install sleeves and seal with firestop materials. Comply with Division 07 Section "Penetration Firestopping."

L. Roof-Penetration Sleeves: Seal penetration of individual raceways with flexible, boot-type flashing units applied in coordination with roofing work.

M. Aboveground, Exterior-Wall Penetrations: Seal penetrations using sleeves and mechanical sleeve seals. Select sleeve size to allow for 1-inch annular clear space between pipe and sleeve for installing mechanical sleeve seals.

3.4 SLEEVE-SEAL INSTALLATION

A. Use type and number of sealing elements recommended by manufacturer for raceway material and size. Position raceway in center of sleeve. Assemble mechanical sleeve seals and install in annular space between raceway and sleeve. Tighten bolts against pressure plates that cause sealing elements to expand and make watertight seal.

3.5 FIRESTOPPING

A. Apply firestopping to electrical penetrations of fire-rated floor and wall assemblies to restore original fire-resistance rating of assembly. Firestopping materials and installation requirements are specified in Division 07 Section "Penetration Firestopping."

END OF SECTION 260533

PROVO JUVENILE COURTS
2200 SOUTH STATE STREET
PROVO, UTAH 84606
DFCM PROJECT NO. 10051150

SECTION 262726 - WIRING DEVICES

PART 1 - GENERAL

1.1 RELATED DOCUMENTS

A. Drawings and general provisions of the Contract, including General and Supplementary Conditions and Division 01 Specification Sections, apply to this Section.

1.2 SUMMARY

A. This Section includes the following:

1. Receptacles, receptacles with integral GFCI, and associated device plates.
2. Wall-box motion sensors.
3. Snap switches.
4. Communications outlets.

1.3 DEFINITIONS

A. EMI: Electromagnetic interference.

B. GFCI: Ground-fault circuit interrupter.

C. Pigtail: Short lead used to connect a device to a branch-circuit conductor.

D. RFI: Radio-frequency interference.

E. UTP: Unshielded twisted pair.

1.4 SUBMITTALS

A. Product Data: For each type of product indicated.

B. Shop Drawings: List of legends and description of materials and process used for premarking wall plates.

C. Samples: One for each type of device and wall plate specified, in each color specified.

D. Field quality-control test reports.

E. Operation and Maintenance Data: For wiring devices to include in all manufacturers' packing label warnings and instruction manuals that include labeling conditions.

1.5 QUALITY ASSURANCE

A. Source Limitations: Obtain each type of wiring device and associated wall plate through one source from a single manufacturer. Insofar as they are available, obtain all wiring devices and associated wall plates from a single manufacturer and one source.

B. Electrical Components, Devices, and Accessories: Listed and labeled as defined in NFPA 70, Article 100, by a testing agency acceptable to authorities having jurisdiction, and marked for intended use.

C. Comply with NFPA 70.

PART 2 - PRODUCTS

2.1 MANUFACTURERS

A. Manufacturers' Names: Shortened versions (shown in parentheses) of the following manufacturers' names are used in other Part 2 articles:

1. Cooper Wiring Devices; a division of Cooper Industries, Inc. (Cooper).
2. Hubbell Incorporated; Wiring Device-Kellems (Hubbell).
3. Leviton Mfg. Company Inc. (Leviton).
4. Pass & Seymour/Legrand; Wiring Devices & Accessories (Pass & Seymour).

2.2 STRAIGHT BLADE RECEPTACLES

A. Convenience Receptacles, 125 V, 20 A: Comply with NEMA WD 1, NEMA WD 6 configuration 5-20R, and UL 498.

1. Available Products: Subject to compliance with requirements, products that may be incorporated into the Work include, but are not limited to, the following:

a. Cooper; 5351 (single), 5352 (duplex).
b. Hubbell; HBL5351 (single), CR5352 (duplex).
c. Leviton; 5891 (single), 5352 (duplex).
d. Pass & Seymour; 5381 (single), 5352 (duplex).

2.3 GFCI RECEPTACLES

A. General Description: Straight blade, feed-through type. Comply with NEMA WD 1, NEMA WD 6, UL 498, and UL 943, Class A, and include indicator light that is lighted when device is tripped.

B. Duplex GFCI Convenience Receptacles, 125 V, 20 A:

1. Available Products: Subject to compliance with requirements, products that may be incorporated into the Work include, but are not limited to, the following:

a. Cooper; GF20.

b. Pass & Seymour; 2084.

2.4 SNAP SWITCHES

A. Comply with NEMA WD 1 and UL 20.

B. Switches, 120V, 20 A:

1. Available Products: Subject to compliance with requirements, products that may be incorporated into the Work include, but are not limited to, the following:

   a. Cooper; 2221 (single pole), 2222 (two pole), 2223 (three way), 2224 (four way).
   b. Hubbell; CS1221 (single pole), CS1222 (two pole), CS1223 (three way), CS1224 (four way).
   c. Leviton; 1221-2 (single pole), 1222-2 (two pole), 1223-2 (three way), 1224-2 (four way).
   d. Pass & Seymour; 20AC1 (single pole), 20AC2 (two pole), 20AC3 (three way), 20AC4 (four way).

2.5 OCCUPANCY SENSORS

A. Wall-Switch Sensors:

1. Products: Subject to compliance with requirements, provide one of the following:

   a. Cooper; 6111 for 120 V.
   b. Hubbell; WS1277.
   c. Leviton; ODS 10-ID.
   d. Pass & Seymour; WS3000.
   e. Watt Stopper (The); WS-200.

2. Description: Passive-infrared type, 120 V, adjustable time delay up to 30 minutes, 180-degree field of view, with a minimum coverage area of 900 sq. ft. (84 sq. m).

B. Wall-Switch Sensors:

1. Products: Subject to compliance with requirements, provide one of the following:

   a. Hubbell; AT120 for 120 V.
   b. Leviton; ODS 15-ID.

2. Description: Adaptive-technology type, 120 V, adjustable time delay up to 20 minutes, 180-degree field of view, with a minimum coverage area of 900 sq. ft. (84 sq. m).

C. Long-Range Wall-Switch Sensors:

1. Products: Subject to compliance with requirements, provide one of the following:

   a. Hubbell; ATP1600WRP.
   b. Leviton; ODWWV-IRW.
   c. Pass & Seymour; WA1001.
   d. Watt Stopper (The); CX-100.

2. Description: Passive-infrared type, 120 V, adjustable time delay up to 30 minutes, 110-degree field of view, with a minimum coverage area of 1200 sq. ft. (111 sq. m).

D. Wide-Range Wall-Switch Sensors:

1. Products: Subject to compliance with requirements, provide one of the following:

   a. Hubbell; ATP120HBRP.
   b. Leviton; ODWHB-IRW.
   c. Pass & Seymour; HS1001.
   d. Watt Stopper (The); CX-100-3.

2. Description: Passive-infrared type, 120 V, adjustable time delay up to 30 minutes, 150-degree field of view, with a minimum coverage area of 1200 sq. ft. (111 sq. m).

2.6 COMMUNICATIONS OUTLETS

A. Communications Outlet:

1. Provide outlet boxes not less than 4" square, with adapting tile or plaster covers where necessary to set flush with finished surfaces. Where three raceway entries are made, provide outlet boxes with a minimum depth of 2-1/8".

2.7 WALL PLATES

A. Single and combination types to match corresponding wiring devices.

1. Plate-Securing Screws: Metal with head color to match plate finish.
2. Material for Finished Spaces: Smooth, high-impact thermoplastic 0.04-inch- (1-mm-) brushed brass with factory polymer finish.
3. Material for Unfinished Spaces: Galvanized steel.
4. Material for Damp Locations: Thermoplastic with spring-loaded lift cover, and listed and labeled for use in "wet locations."

B. Wet-Location, Weatherproof Cover Plates: NEMA 250, complying with type 3R weather-resistant, die-cast aluminum with lockable cover.

2.8 FINISHES

A. Color: Wiring device catalog numbers in Section Text do not designate device color.

1. Wiring Devices Connected to Normal Power System: **As selected by Architect**, unless otherwise indicated or required by NFPA 70 or device listing.

PART 3 - EXECUTION

3.1 INSTALLATION

A. Comply with NECA 1, including the mounting heights listed in that standard, unless otherwise noted.

B. Coordination with Other Trades:

1. Take steps to insure that devices and their boxes are protected. Do not place wall finish materials over device boxes and do not cut holes for boxes with routers that are guided by riding against outside of the boxes.
2. Keep outlet boxes free of plaster, drywall joint compound, mortar, cement, concrete, dust, paint, and other material that may contaminate the raceway system, conductors, and cables.
3. Install device boxes in brick or block walls so that the cover plate does not cross a joint unless the joint is troweled flush with the face of the wall.
4. Install wiring devices after all wall preparation, including painting, is complete.

C. Conductors:

1. Do not strip insulation from conductors until just before they are spliced or terminated on devices.
2. Strip insulation evenly around the conductor using tools designed for the purpose. Avoid scoring or nicking of solid wire or cutting strands from stranded wire.
3. The length of free conductors at outlets for devices shall meet provisions of NFPA 70, Article 300, without pigtails.
4. Existing Conductors:

   a. Cut back and pigtail, or replace all damaged conductors.
   b. Straighten conductors that remain and remove corrosion and foreign matter.
   c. Pigtailing existing conductors is permitted provided the outlet box is large enough.

D. Device Installation:

1. Replace all devices that have been in temporary use during construction or that show signs that they were installed before building finishing operations were complete.
2. Keep each wiring device in its package or otherwise protected until it is time to connect conductors.
3. Do not remove surface protection, such as plastic film and smudge covers, until the last possible moment.
4. Connect devices to branch circuits using pigtails that are not less than 6 inches (152 mm) in length.
5. When there is a choice, use side wiring with binding-head screw terminals. Wrap solid conductor tightly clockwise, 2/3 to 3/4 of the way around terminal screw.
6. Use a torque screwdriver when a torque is recommended or required by the manufacturer.
7. When conductors larger than No. 12 AWG are installed on 15- or 20-A circuits, splice No. 12 AWG pigtails for device connections.
8. Tighten unused terminal screws on the device.
9. When mounting into metal boxes, remove the fiber or plastic washers used to hold device mounting screws in yokes, allowing metal-to-metal contact.

E. Receptacle Orientation:

1. Install ground pin of vertically mounted receptacles up, and on horizontally mounted receptacles to the right.

F. Device Plates: Do not use oversized or extra-deep plates. Repair wall finishes and remount outlet boxes when standard device plates do not fit flush or do not cover rough wall opening.

G. Arrangement of Devices: Unless otherwise indicated, mount flush, with long dimension vertical and with grounding terminal of receptacles on top. Group adjacent switches under single, multigang wall plates.

H. Adjust locations of floor service outlets and service poles to suit arrangement of partitions and furnishings.

3.2 FIELD QUALITY CONTROL

A. Perform tests and inspections and prepare test reports.

1. In healthcare facilities, prepare reports that comply with recommendations in NFPA 99.
2. Test Instruments: Use instruments that comply with UL 1436.
3. Test Instrument for Convenience Receptacles: Digital wiring analyzer with digital readout or illuminated LED indicators of measurement.

B. Tests for Convenience Receptacles:

1. Line Voltage: Acceptable range is 105 to 132 V.
2. Percent Voltage Drop under 15-A Load: A value of 6 percent or higher is not acceptable.
3. Ground Impedance: Values of up to 2 ohms are acceptable.
4. GFCI Trip: Test for tripping values specified in UL 1436 and UL 943.
5. Using the test plug, verify that the device and its outlet box are securely mounted.
6. The tests shall be diagnostic, indicating damaged conductors, high resistance at the circuit breaker, poor connections, inadequate fault current path, defective devices, or similar problems. Correct circuit conditions, remove malfunctioning units and replace with new ones, and retest as specified above.

END OF SECTION 262726