POPE SCIENCE BUILDING
UTAH VALLEY UNIVERSITY
ROOF REPLACEMENT

OREM, UTAH
DFCM PROJECT #10089790

UTAH VALLEY UVU UNIVERSITY

State of Utah
Department of Administrative Services

Division of Facilities
Construction & Management
4110 State Office Building
Salt Lake City, Utah 84114
Phone: (801) 538 - 3018
Fax: (801) 538 - 3267

http://dfcm.utah.gov

MAY 2010

McNEIL GROUP
Designing for the Future Since 1983
6895 SOUTH 900 EAST MIDVALE, UTAH 84047
TEL. (801) 255-7700 FAX (801) 255-8071
E-MAIL info@mcneileng.com WEB SITE AT www.mcneil-group.com

POPE SCIENCE BUILDING
UTAH VALLEY UNIVERSITY

DIVISION OF FACILITIES CONSTRUCTION & MANAGEMENT
OREM, UTAH

REVISIONS

REV.	DATE	DESCRIPTION

PROJECT NO:	10252
CAD DWG. FILE:	10252.dwg
DRAWN BY:	WOS
DFCM PROJECT #:	10089790
PROPERTY NO:	
DESIGNED BY:	WOS
FIELD CREW:	
CHECKED BY:	DLS
DATE:	MAY 2010

SHEET TITLE:
COVER SHEET

G1.00
SHEET 1 OF 7

S:\2010Files\10252\Consulting\Prod Dwg\10252.dwg Jun 10, 2010 - 11:19am

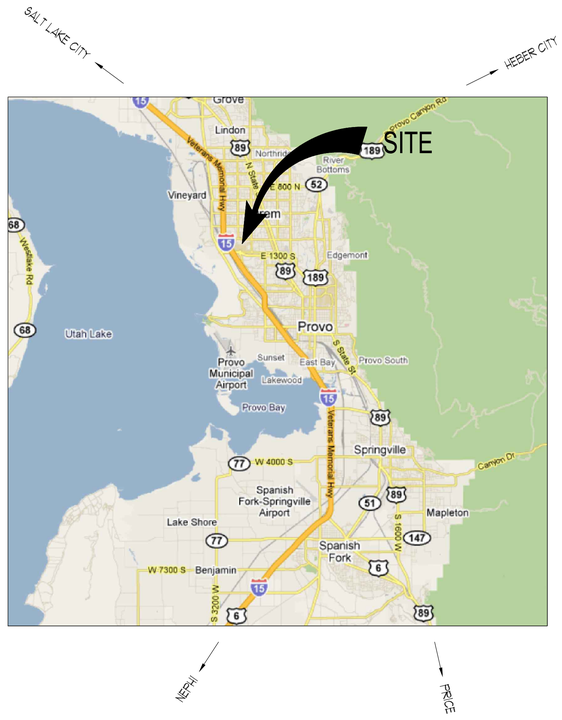

NORTH

VICINITY MAP

N.T.S.

GENERAL NOTES:

1. CONTRACTOR MUST VISIT THE SITE SO AS TO BE FAMILIAR WITH ALL EXISTING CONDITIONS BEFORE SUBMITTING BID, BRING ANY QUESTIONS OR CONCERNS TO THE ATTENTION OF THE ENGINEER FOR CLARIFICATION, FOR ADDENDUM PRIOR TO BID OPENING. NO ALLOWANCES WILL BE MADE FOR CONDITIONS THAT ARE CLEARLY VISIBLE.
2. CONTRACTOR SHALL WORK WITH LOCAL LEADERSHIP ON SCHEDULING TO INSURE CONTINUED USE OF THE BUILDING. NEITHER THE CONTRACTOR NOR ANY OF HIS PEOPLE SHALL HAVE ACCESS TO THE BUILDING WITHOUT PRIOR AUTHORIZATION.
3. ALL SAFETY STANDARDS AND REQUIREMENTS ARE THE RESPONSIBILITY OF THE CONTRACTOR.
4. BEFORE FABRICATION OF ANY SHEET METAL WORK, SUBMIT SHOP DRAWINGS TO ENGINEER FOR REVIEW AND APPROVAL. ALL WORK TO CONFORM TO NRCA OR SMACNA DETAILS AND REQUIREMENTS WHERE NOT SPECIFICALLY DETAILED OTHERWISE.
5. COMPLY WITH ALL MANUFACTURER'S SPECIFICATIONS AND RECOMMENDATIONS.
6. CONTRACTOR RESPONSIBLE TO KEEP BUILDING WATERTIGHT AT ALL TIMES. STARTING FROM NOTICE TO PROCEED TO SUBSTANTIAL COMPLETION ANY DAMAGE TO THE BUILDING OR ITS CONTENTS WILL BE THE RESPONSIBILITY OF THE CONTRACTOR.
7. CONTRACTOR TO CHECK ALL MECHANICAL EQUIPMENT BEFORE DISCONNECTING TO MAKE SURE THEY ARE OPERATING PROPERLY, CONTRACTOR IS ALSO RESPONSIBLE FOR UNITS TO BE IN COMPLETE OPERATING CONDITION AT THE COMPLETION OF THE PROJECT. COORDINATE SHUTDOWN WITH USERS.
8. BEFORE ORDERING ANY MATERIALS, VERIFY ALL EXISTING CONDITIONS AND DIMENSIONS. DO NOT SCALE DRAWINGS FOR QUANTITIES.
9. BEFORE INSTALLATION OF ALL NEW PIPE JACKS AND PIPE FLASHINGS CHECK MECHANICAL FLUES AND VENTS FOR ANY SETTLEMENT OR SHIFTING INTO ROOF. CONTRACTOR TO VERIFY THAT MECHANICAL EQUIPMENT VENTING TO HAVE POSITIVE RELEASE FLOW TO ROOF VENT AND FLUE IS SECURED TO ORIGINAL HEIGHT AND ALL CONNECTIONS ARE TIGHT AND SECURE.
10. PROTECT EXISTING ROOF TOP & WALL MOUNTED EQUIPMENT. ANY DAMAGE WILL BE REPAIRED BACK TO ORIGINAL CONDITION BY THE CONTRACTOR AT THE CONTRACTORS EXPENSE.

SHEET INDEX

SHEET NO.	SHEET TITLE
G1.00	COVER SHEET
G1.01	GENERAL NOTES AND INFORMATION
C1.01	SITE PLAN
A1.01	ROOF PLAN
A1.02	TAPERED INSULATION PLAN
A5.01	ROOF DETAILS
A5.02	ROOF DETAILS

DESIGN TEAM

McNEIL GROUP
6895 SOUTH 900 EAST MIDVALE, UTAH 84047
TEL. (801) 255-7700 FAX (801) 255-8071

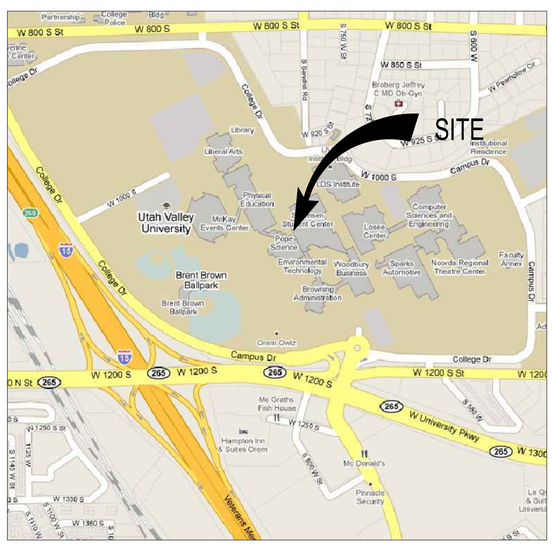

NORTH

ENLARGED VICINITY MAP

N.T.S.

DFCM DESIGN AND CODE CRITERIA

APPLICABLE CODES

	YEAR		YEAR
INTERNATIONAL BUILDING CODE	2006	NATIONAL ELECTRICAL CODE	2008
INTERNATIONAL MECHANICAL CODE	2006	UNIFORM CODE FOR	
INTERNATIONAL PLUMBING CODE	2006	BUILDING CONSERVATION	N/A
INTERNATIONAL FIRE CODE	2006	ADA ACCESSIBILITY	
INTERNATIONAL ENERGY		GUIDELINES	N/A
CONSERVATION CODE	2006		

A. OCCUPANCY AND GROUP: TYPE B

CHANGE IN USE: YES ___ NO X MIXED OCCUPANCY: YES ___ NO X

SPECIAL USE AND OCCUPANCY (e.g. HIGH RISE, COVERED MALL): N/A

B. SEISMIC DESIGN CATEGORY: 0 DESIGN WIND SPEED: 90 MPH

C. TYPE OF CONSTRUCTION (CIRCLE ONE):

I/A I/B II/A II/B III/A III/B IV/HT V/A V/B

D. FIRE RESISTANT RATING REQUIREMENTS FOR THE EXTERIOR WALLS BASED ON THE FIRE SEPARATION DISTANCE (IN HOURS)

NORTH 0 SOUTH 0 EAST 0 WEST N/A

E. MIXED OCCUPANCIES: ___ NONSEPARATED USES ✓

F. SPRINKLERS: NONE NONSEPARATED USES N/A

REQUIRED: N/A PROVIDED N/A TYPE OF SPRINKLER SYSTEM N/A

G. NUMBER OF STORIES: 1 BUILDING HEIGHT: 14'-6"

H. ACTUAL AREA PER FLOOR (SQUARE FEET): BLDG. A = 5,961
BLDG. B = 13,000
BLDG. C = 6,039
BLDG. D = 14,051

I. TABULAR AREA: 9000 S.F. (PER BLDG.)

J. AREA MODIFICATIONS:

a) $A_a = A_t + \left[\frac{A_t}{100}\right] + \left[\frac{A_t}{100}\right]$ $I_f = 100\left[\frac{F}{P} - 0.25\right]\frac{W}{30}$

BLDG. A.

$9000 + \left[\frac{9000 \cdot 67}{100}\right] + 0 = 15,030$ S.F. ALLOWABLE

BLDG. B.

$9000 + \left[\frac{9000 \cdot 52}{100}\right] + 0 = 13,680$ S.F. ALLOWABLE

BLDG. C.

$9000 + \left[\frac{9000 \cdot 65}{100}\right] + 0 = 14,850$ S.F. ALLOWABLE

BLDG. D.

$9000 + \left[\frac{9000 \cdot 60}{100}\right] + 0 = 14,400$ S.F. ALLOWABLE

b) SUM OF THE RATIO CALCULATIONS FOR MIXED OCCUPANCIES:

NO MIXED OCCUPANCIES

c) TOTAL ALLOWABLE AREA FOR:
1) ONE STORY: 57,960 S.F.
2) TWO STORY: $A_a(2)$ N/A
3) THREE STORY: $A_a(3)$ N/A

d) UNLIMITED AREA BUILDING: YES ___ NO X CODE SECTION: 507

K. FIRE RESISTANCE RATING REQUIREMENTS FOR BUILDING ELEMENTS (HOURS).

ELEMENT	HOURS	ASSEMBLY LISTING	ELEMENT	HOURS	ASSEMBLY LISTING
EXTERIOR BEARING WALLS	0	-	FLOORS - CEILING FLOORS	0	-
INTERIOR BEARING WALLS	0	-	ROOFS - CEILING ROOFS	0	-
EXTERIOR NON-BEARING WALLS	0	-	EXTERIOR DOORS AND WINDOWS	0	-
STRUCTURAL FRAME	0	-	SHAFT ENCLSURES	N/A	-
PARTITIONS - PERMANENT	0	-	FIRE WALLS	N/A	-
FIRE BARRIERS	2	-	FIRE PARTITIONS	N/A	-
			SMOKE PARTITIONS	N/A	-

L. DESIGN OCCUPANT LOAD: A=60, B=131, C=60, D=140: TOTAL = 391 OCCUPANTS

EXIT WIDTH REQUIRED: N/A EXIT WIDTH PROVIDED: N/A

M. MINIMUM NUMBER OF REQUIRED PLUMBING FACILITIES: N/A FOR WORK TO BE PERFORMED

a) WATER CLOSETS - REQUIRED (m) XX (f) XX PROVIDED: (m) XX (f) XX
b) LAVATORIES - REQUIRED (m) XX (f) XX PROVIDED: (m) XX (f) XX
c) BATH TUBS OR SHOWERS: XX
d) DRINKING FOUNTAINS: XX SERVICE SINKS: XX

FOOTNOTES:

1) IN CASE OF CONFLICT WITH THE U.S. DEPARTMENT OF JUSTICE FEDERAL REGISTERS PARTS I THOSUH V - ADA GUIDELINES AND SPECIFIC REFERENCE TO THE INTERNATIONAL BUILDING CODE ACCESSIBILITY CHAPTERS, THE MORE RESTRICTIVE REQUIREMENT SHALL GOVERN.

2) ADDITIONAL CODE INFORMATION SHALL BE PROVIDED AT THE DISCRETION OF THE BUILDING OFFICIAL FOR COMPLEX BUILDINGS. INCLUDING, BUT NOT LIMITED TO:
a) HIGH RISE REQUIREMENTS
b) ATRIUMS
c) PERFORMANCE BASED CRITERIA
d) MEANS OR EGRESS ANALYSIS
e) FIRE ASSEMBLY LOCATOR SHEET
f) EXTERIOR AND INTERIOR ACCESSIBILITY ROUTE
g) FIRE STOPPING, INCLUDING TESTED DESIGN NUMBER

McNEIL GROUP
Designing for the Future Since 1983
6895 SOUTH 900 EAST MIDVALE, UTAH 84047
TEL. (801) 255-7700 FAX (801) 255-8071
E-MAIL info@mcneileng.com WEB SITE AT www.mcneil-group.com

POPE SCIENCE BUILDING
UTAH VALLEY UNIVERSITY

DIVISION OF FACILITIES CONSTRUCTION & MANAGEMENT
OREM, UTAH

REVISIONS

REV.	DATE	DESCRIPTION

PROJECT NO:	10252
CAD DWG. FILE:	10252.dwg
DRAWN BY:	WOS
DFCM PROJECT #:	10089790
PROPERTY NO:	
DESIGNED BY:	WOS
FIELD CREW:	
CHECKED BY:	DLS
DATE:	MAY 2010

SHEET TITLE:
GENERAL NOTES AND INFORMATION

G1.01
SHEET 2 OF 7

S:\2010\Files\10252\Consulting\Proof Dwg\10252.dwg Jun 10, 2010 - 11:19am

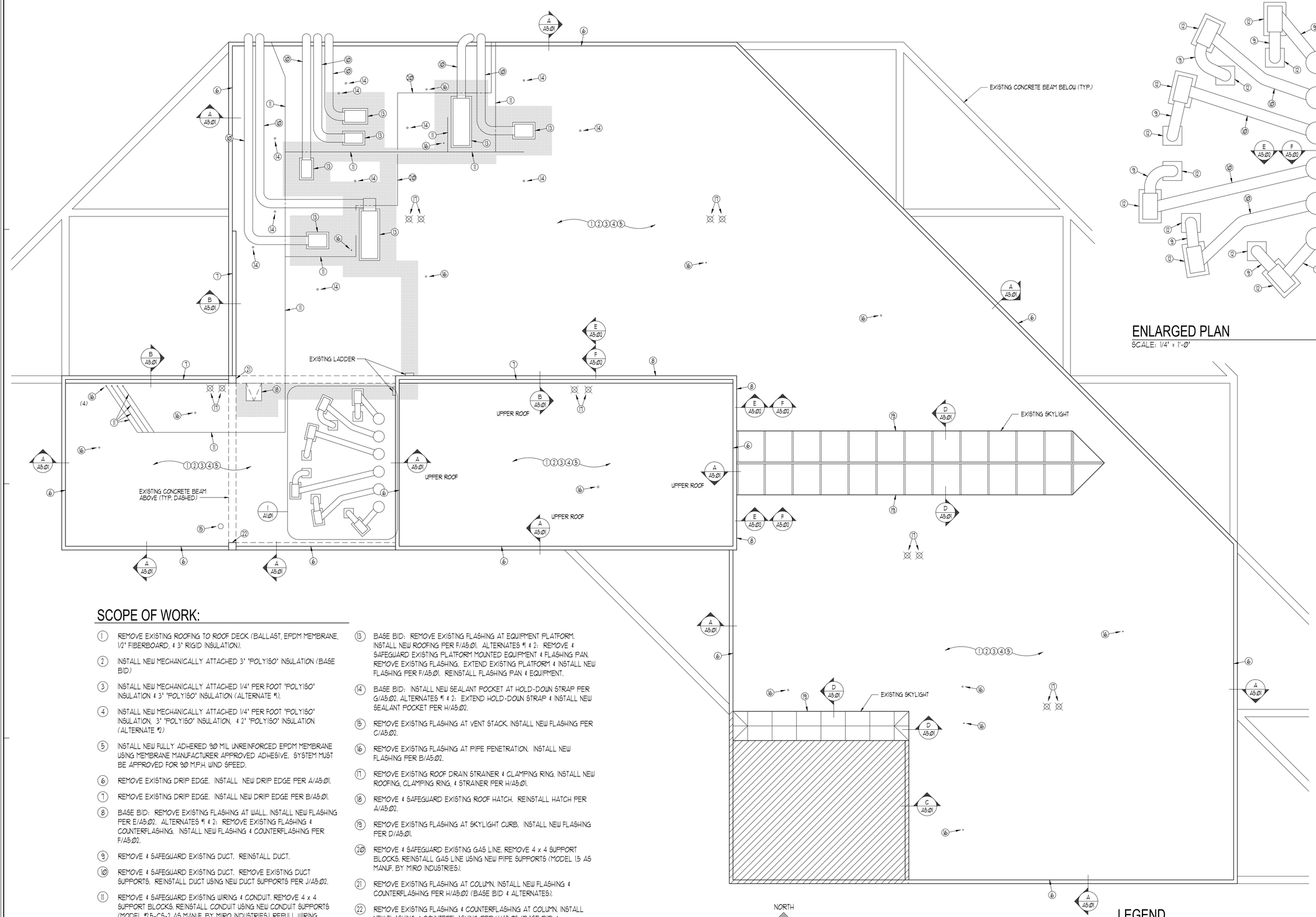

ENLARGED PLAN

SCALE: 1/4" = 1'-0" (1)

ROOF PLAN

SCALE: 1/8" = 1'-0"

SCOPE OF WORK:

1. REMOVE EXISTING ROOFING TO ROOF DECK (BALLAST, EPDM MEMBRANE, 1/2" FIBERBOARD, & 3" RIGID INSULATION).
2. INSTALL NEW MECHANICALLY ATTACHED 3" "POLYISO" INSULATION (BASE BID)
3. INSTALL NEW MECHANICALLY ATTACHED 1/4" PER FOOT "POLYISO" INSULATION & 3" "POLYISO" INSULATION (ALTERNATE #1).
4. INSTALL NEW MECHANICALLY ATTACHED 1/4" PER FOOT "POLYISO" INSULATION, 3" "POLYISO" INSULATION, & 2" "POLYISO" INSULATION (ALTERNATE #2)
5. INSTALL NEW FULLY ADHERED 90 MIL UNREINFORCED EPDM MEMBRANE USING MEMBRANE MANUFACTURER APPROVED ADHESIVE. SYSTEM MUST BE APPROVED FOR 90 M.P.H. WIND SPEED.
6. REMOVE EXISTING DRIP EDGE. INSTALL NEW DRIP EDGE PER A/A5.01.
7. REMOVE EXISTING DRIP EDGE. INSTALL NEW DRIP EDGE PER B/A5.01.
8. BASE BID: REMOVE EXISTING FLASHING AT WALL. INSTALL NEW FLASHING PER E/A5.02. ALTERNATES #1 & 2: REMOVE EXISTING FLASHING & COUNTERFLASHING. INSTALL NEW FLASHING & COUNTERFLASHING PER F/A5.02.
9. REMOVE & SAFEGUARD EXISTING DUCT. REINSTALL DUCT.
10. REMOVE & SAFEGUARD EXISTING DUCT. REMOVE EXISTING DUCT SUPPORTS. REINSTALL DUCT USING NEW DUCT SUPPORTS PER J/A5.02.
11. REMOVE & SAFEGUARD EXISTING WIRING & CONDUIT. REMOVE 4 x 4 SUPPORT BLOCKS. REINSTALL CONDUIT USING NEW CONDUIT SUPPORTS (MODEL #25-CS-2 AS MANUF. BY MIRO INDUSTRIES). REFULL WIRING.
12. BASE BID: REMOVE EXISTING FLASHING AT EQUIPMENT CURB. INSTALL NEW ROOFING PER E/A5.01. ALTERNATES #1 & 2: REMOVE & SAFEGUARD EXISTING CURB MOUNTED EQUIPMENT & FLASHING PAN. REMOVE EXISTING FLASHING. EXTEND EXISTING CURB & INSTALL NEW FLASHING PER E/A5.01. REINSTALL FLASHING PAN & EQUIPMENT.
13. BASE BID: REMOVE EXISTING FLASHING AT EQUIPMENT PLATFORM. INSTALL NEW ROOFING PER F/A5.01. ALTERNATES #1 & 2: REMOVE & SAFEGUARD EXISTING PLATFORM MOUNTED EQUIPMENT & FLASHING PAN. REMOVE EXISTING FLASHING. EXTEND EXISTING PLATFORM & INSTALL NEW FLASHING PER F/A5.01. REINSTALL FLASHING PAN & EQUIPMENT.
14. BASE BID: INSTALL NEW SEALANT POCKET AT HOLD-DOWN STRAP PER G/A5.02. ALTERNATES #1 & 2: EXTEND HOLD-DOWN STRAP & INSTALL NEW SEALANT POCKET PER H/A5.02.
15. REMOVE EXISTING FLASHING AT VENT STACK. INSTALL NEW FLASHING PER C/A5.02.
16. REMOVE EXISTING FLASHING AT PIPE PENETRATION. INSTALL NEW FLASHING PER B/A5.02.
17. REMOVE EXISTING ROOF DRAIN STRAINER & CLAMPING RING. INSTALL NEW ROOFING, CLAMPING RING, & STRAINER PER H/A5.01.
18. REMOVE & SAFEGUARD EXISTING ROOF HATCH. REINSTALL HATCH PER A/A5.02.
19. REMOVE EXISTING FLASHING AT SKYLIGHT CURB. INSTALL NEW FLASHING PER D/A5.01.
20. REMOVE & SAFEGUARD EXISTING GAS LINE. REMOVE 4 x 4 SUPPORT BLOCKS. REINSTALL GAS LINE USING NEW PIPE SUPPORTS (MODEL 15 AS MANUF. BY MIRO INDUSTRIES).
21. REMOVE EXISTING FLASHING AT COLUMN. INSTALL NEW FLASHING & COUNTERFLASHING PER H/A5.02 (BASE BID & ALTERNATES).
22. REMOVE EXISTING FLASHING & COUNTERFLASHING AT COLUMN. INSTALL NEW FLASHING & COUNTERFLASHING PER H/A5.02 (BASE BID & ALTERNATES).

LEGEND

- EXISTING EPDM ROOFING TO REMAIN
- WALKPAD
- ROOF DRAIN

McNEIL GROUP
Designing for the Future Since 1983
6895 SOUTH 900 EAST MIDVALE, UTAH 84047
TEL. (801) 255-7700 FAX (801) 255-8071
E-MAIL info@mcneileng.com WEB SITE AT www.mcneil-group.com

POPE SCIENCE BUILDING
UTAH VALLEY UNIVERSITY
OREM, UTAH

DIVISION OF FACILITIES CONSTRUCTION & MANAGEMENT

REVISIONS

REV.	DATE	DESCRIPTION

PROJECT NO:	10252
CAD DWG. FILE:	10252.dwg
DRAWN BY:	WOS
DFCM PROJECT #:	10089790
PROPERTY NO:	
DESIGNED BY:	WOS
FIELD CREW:	
CHECKED BY:	DLS
DATE:	MAY 2010

SHEET TITLE:

ROOF PLAN

A1.01

SHEET 4 OF 7

S:\2010Files\10252\Consulting\Prod Dwg\10252.dwg Jun 10, 2010 - 11:20am

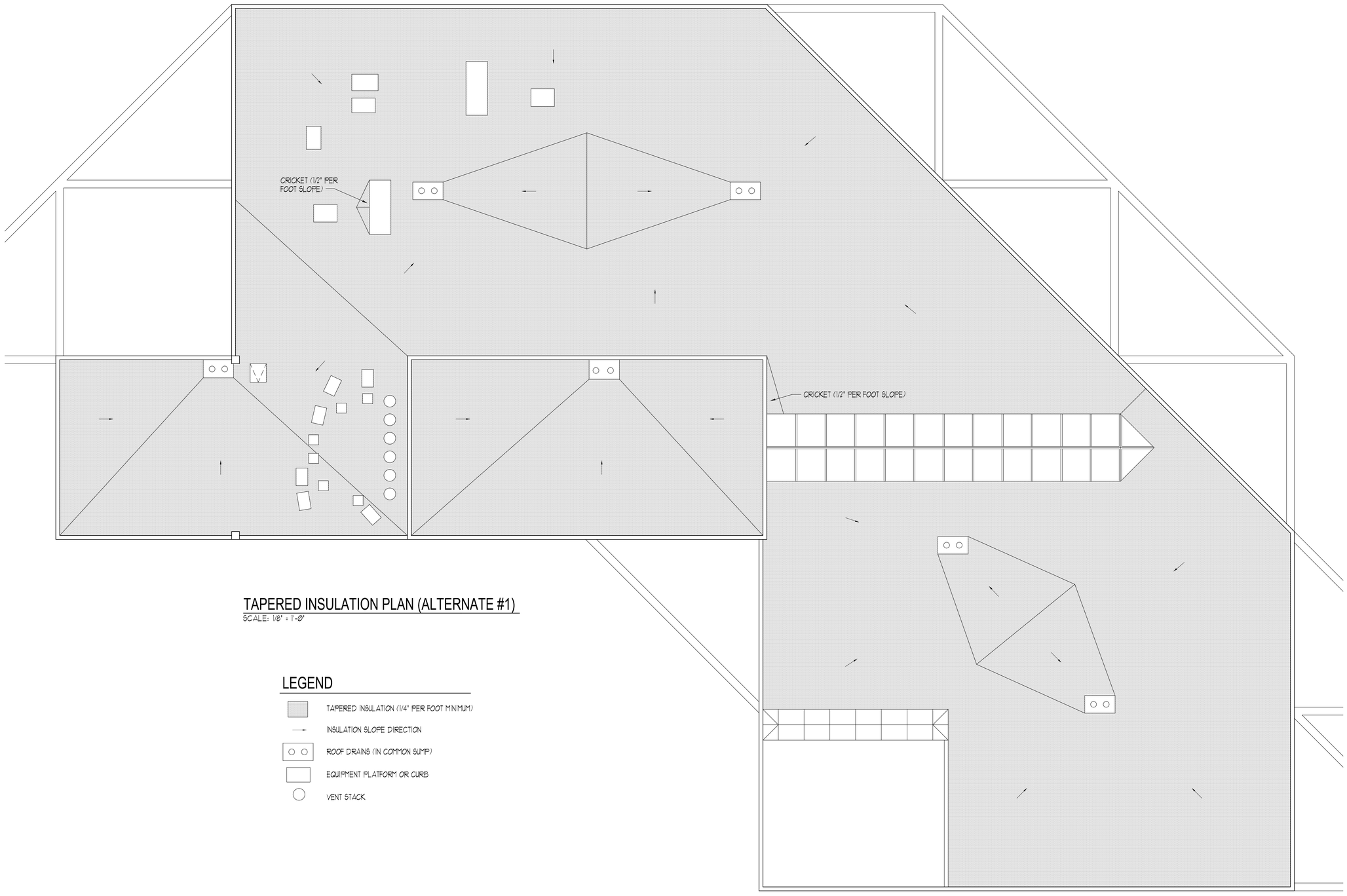

TAPERED INSULATION PLAN (ALTERNATE #1)

SCALE: 1/8" = 1'-0"

LEGEND

- TAPERED INSULATION (1/4" PER FOOT MINIMUM)
- INSULATION SLOPE DIRECTION
- ROOF DRAINS (IN COMMON SUMP)
- EQUIPMENT PLATFORM OR CURB
- VENT STACK

McNEIL GROUP
Designing for the Future Since 1983
6895 SOUTH 900 EAST MIDVALE, UTAH 84047
TEL. (801) 255-7700 FAX (801) 255-8071
E-MAIL info@mcneileng.com WEB SITE AT www.mcneil-group.com

POPE SCIENCE BUILDING
UTAH VALLEY UNIVERSITY

DIVISION OF FACILITIES CONSTRUCTION & MANAGEMENT

OREM, UTAH

REVISIONS

REV.	DATE	DESCRIPTION

PROJECT NO:	10252
CAD DWG. FILE:	10252.dwg
DRAWN BY:	WOS
DFCM PROJECT #:	10089790
PROPERTY NO:	
DESIGNED BY:	WOS
FIELD CREW:	
CHECKED BY:	DLS
DATE:	MAY 2010

SHEET TITLE:

TAPERED INSULATION PLAN

A1.02

SHEET 5 OF 7

S:\2010Files\10252\Consulting\Proof Dwg\10252.dwg Jun 10, 2010 - 11:21am

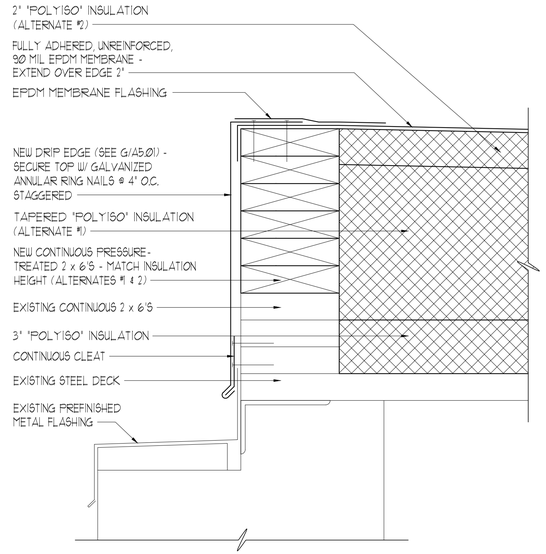

EDGE DETAIL (A)
SCALE: 3" = 1'-0"

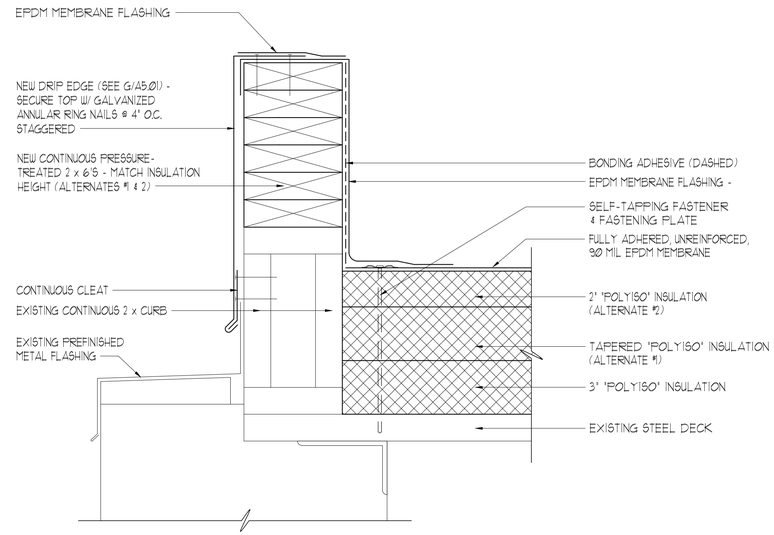

EDGE DETAIL (B)
SCALE: 3" = 1'-0"

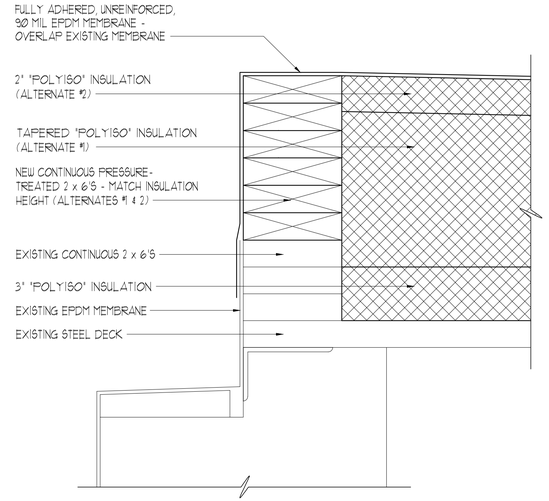

TRANSITION DETAIL (C)
SCALE: 3" = 1'-0"

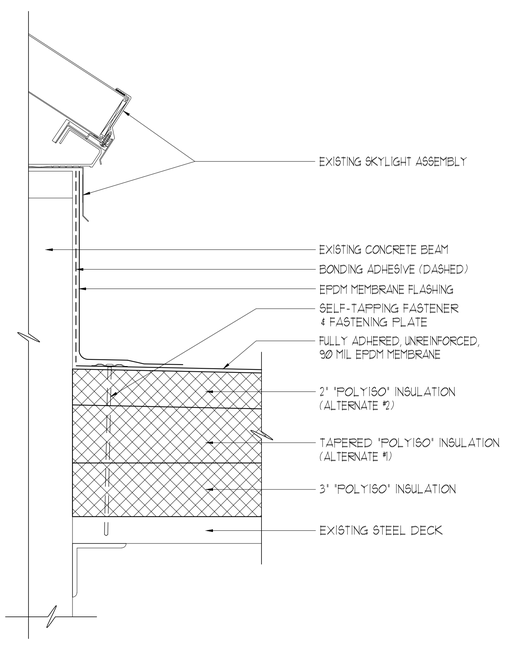

SKYLIGHT DETAIL (D)
SCALE: 3" = 1'-0"

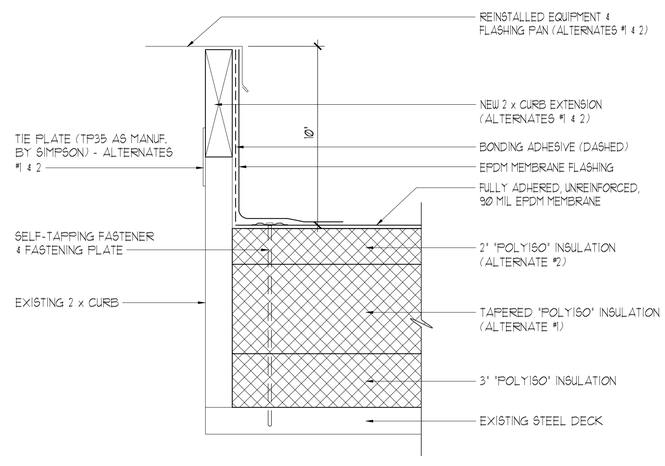

EQUIPMENT CURB DETAIL (E)
SCALE: 3" = 1'-0"

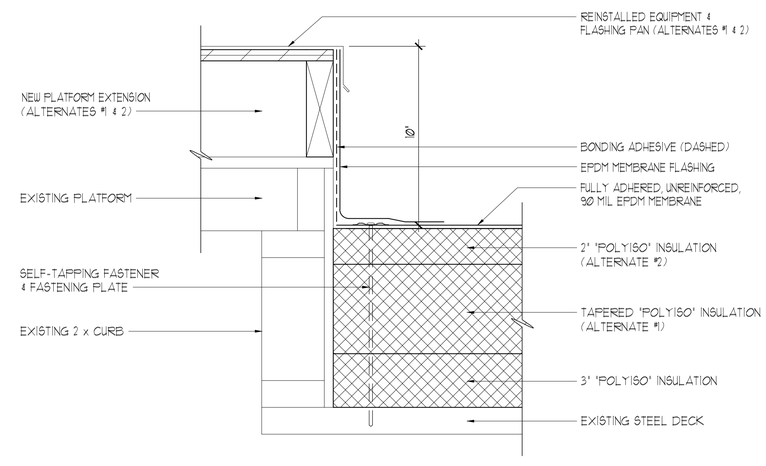

EQUIPMENT PLATFORM DETAIL (F)
SCALE: 3" = 1'-0"

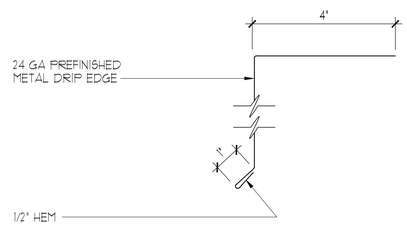

DRIP EDGE DETAIL (G)
SCALE: HALF

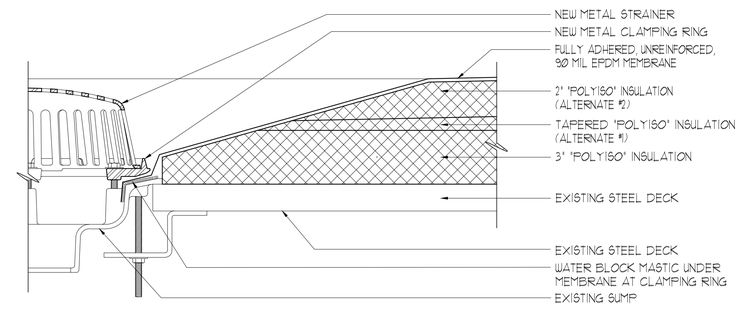

ROOF DRAIN DETAIL (H)
SCALE: 3" = 1'-0"

McNEIL GROUP
Designing for the Future Since 1983
6895 SOUTH 900 EAST MIDVALE, UTAH 84047
TEL. (801) 255-7700 FAX (801) 255-8071
E-MAIL info@mcneileng.com WEB SITE AT www.mcneil-group.com

POPE SCIENCE BUILDING
UTAH VALLEY UNIVERSITY
DIVISION OF FACILITIES CONSTRUCTION & MANAGEMENT
OREM, UTAH

REVISIONS

REV.	DATE	DESCRIPTION

PROJECT NO:	10252
CAD DWG. FILE:	10252.dwg
DRAWN BY:	WOS
DFCM PROJECT #:	10089790
PROPERTY NO:	
DESIGNED BY:	WOS
FIELD CREW:	
CHECKED BY:	DLS
DATE:	MAY 2010

SHEET TITLE:
ROOF DETAILS

A5.01
SHEET 6 OF 7

S:\2010Files\10252\Consulting\Prod Dwg\10252.dwg Jun 10, 2010 - 11:20am

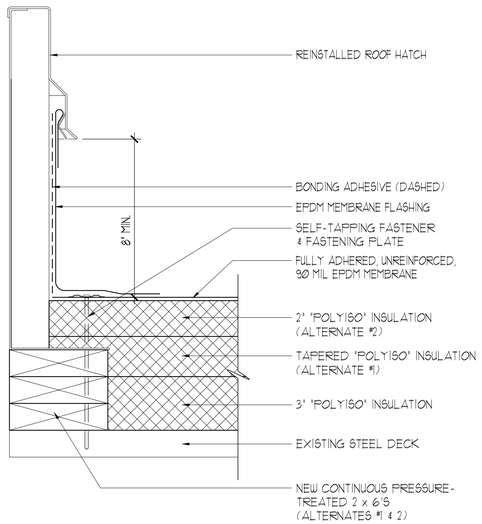

ROOF HATCH CURB DETAIL (A)
SCALE: 3" = 1'-0"

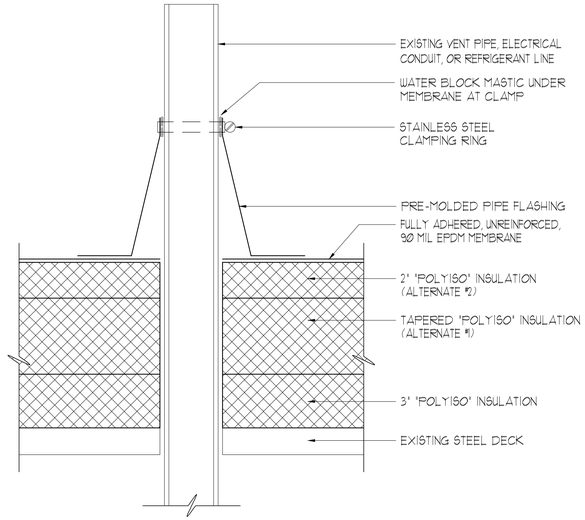

PIPE PENETRATION DETAIL (B)
SCALE: 3" = 1'-0"

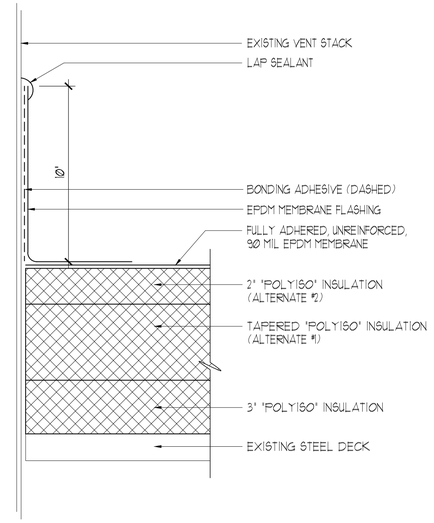

PIPE PENETRATION DETAIL (C)
SCALE: 3" = 1'-0"

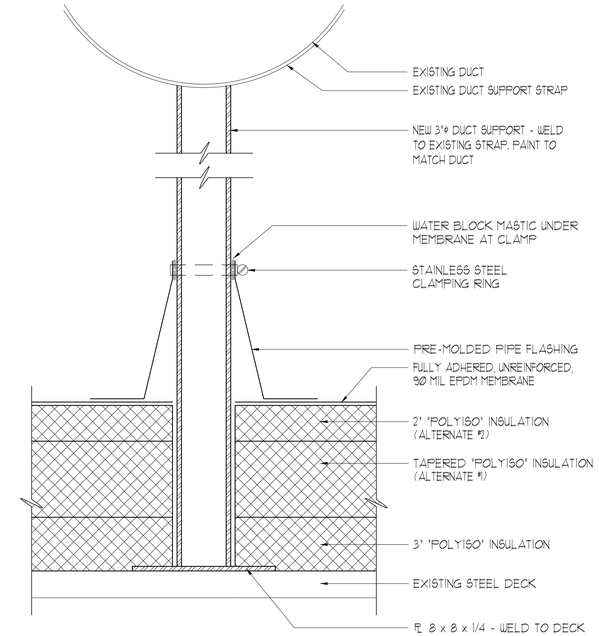

DUCT SUPPORT DETAIL (J)
SCALE: 3" = 1'-0"

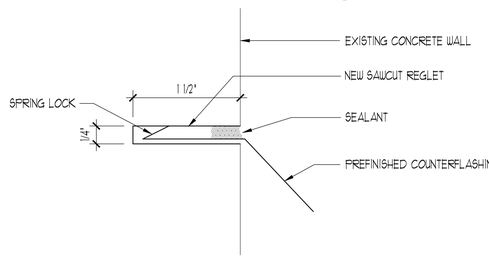

REGLET DETAIL (D)
SCALE: FULL

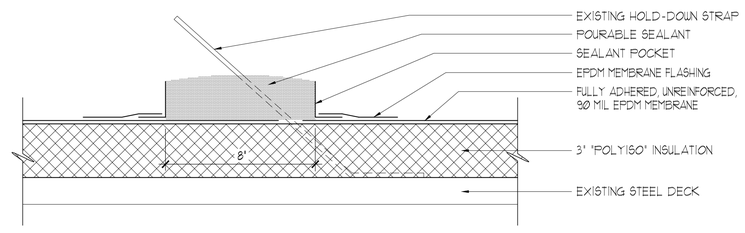

SEALANT POCKET DETAIL (BASE BID) (G)
SCALE: 3" = 1'-0"

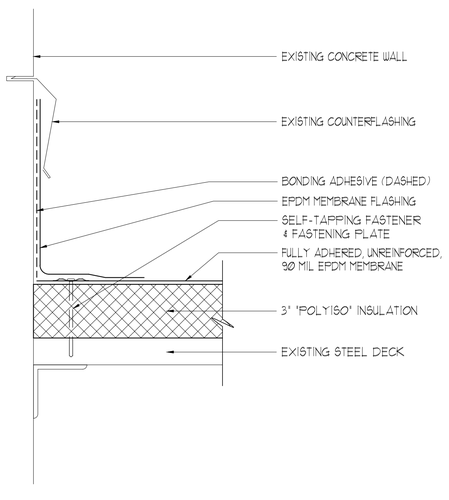

FLASHING DETAIL (BASE BID) (E)
SCALE: 3" = 1'-0"

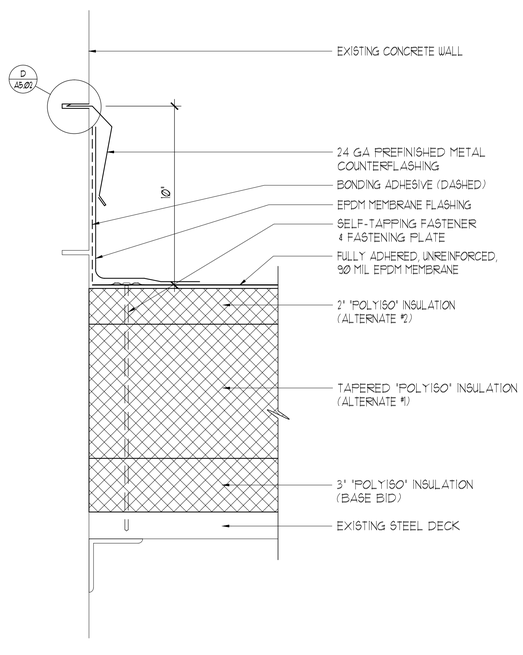

FLASHING DETAIL (ALTERNATES) (F)
SCALE: 3" = 1'-0"

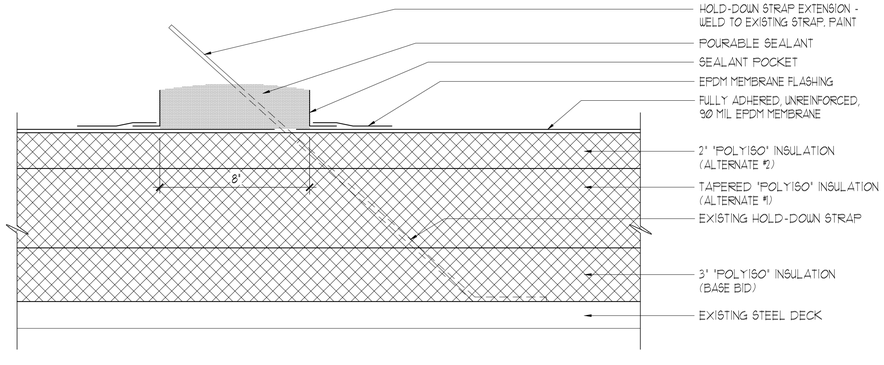

SEALANT POCKET DETAIL (ALTERNATES) (H)
SCALE: 3" = 1'-0"

McNEIL GROUP
Designing for the Future Since 1983
6895 SOUTH 900 EAST MIDVALE, UTAH 84047
TEL. (801) 255-7700 FAX (801) 255-8071
E-MAIL info@mcneileng.com WEB SITE AT www.mcneil-group.com

POPE SCIENCE BUILDING
UTAH VALLEY UNIVERSITY

DIVISION OF FACILITIES CONSTRUCTION & MANAGEMENT
OREM, UTAH

REVISIONS

REV.	DATE	DESCRIPTION

PROJECT NO:	10252
CAD DWG. FILE:	10252.dwg
DRAWN BY:	WOS
DFCM PROJECT #:	10089790
PROPERTY NO:	
DESIGNED BY:	WOS
FIELD CREW:	
CHECKED BY:	DLS
DATE:	MAY 2010

SHEET TITLE:
ROOF DETAILS

A5.02
SHEET 7 OF 7

S:\2010Files\10252\Consulting\Prod. Dwg\10252.dwg Jun 10, 2010 - 11:22am

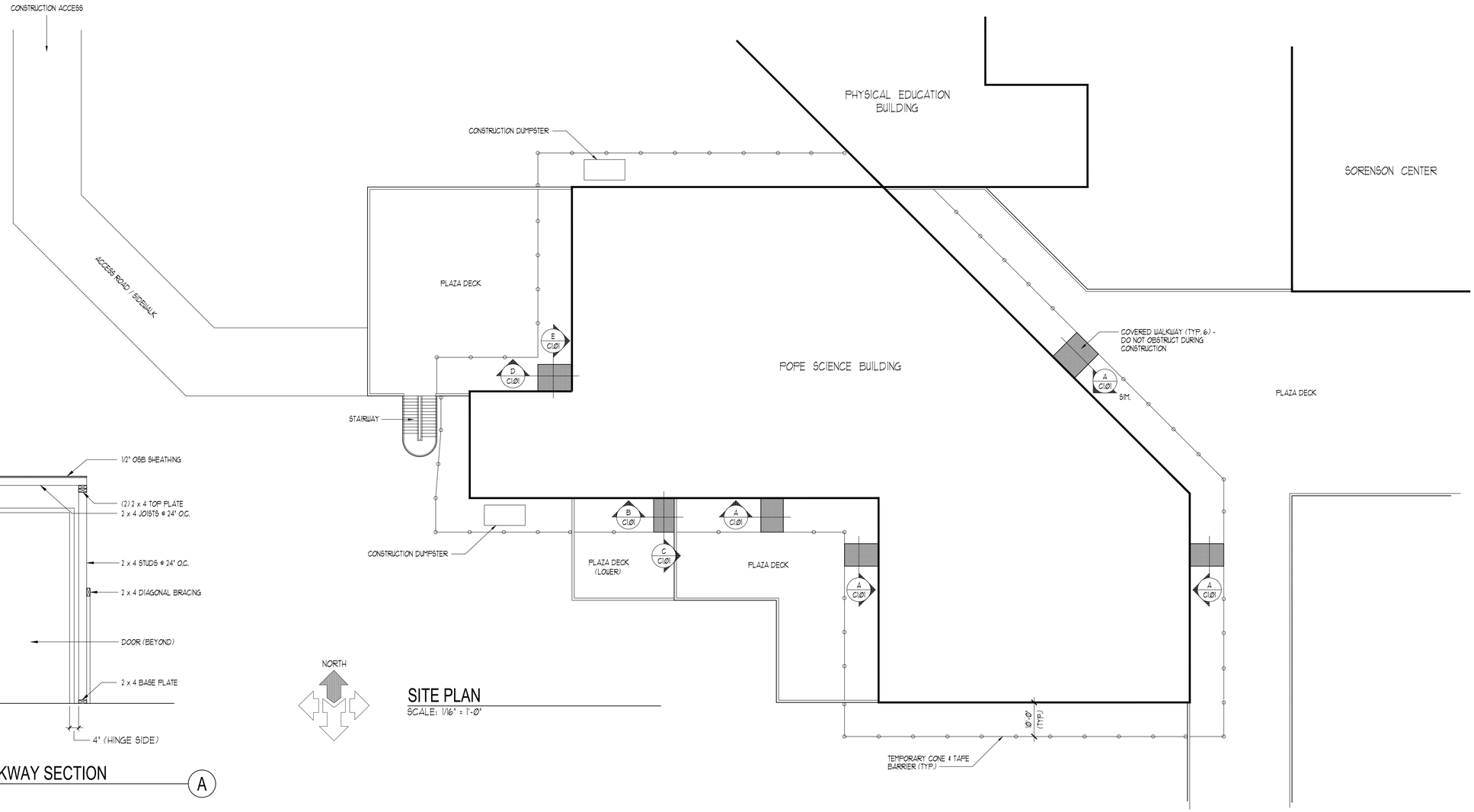

SITE PLAN
SCALE: 1/16" = 1'-0"

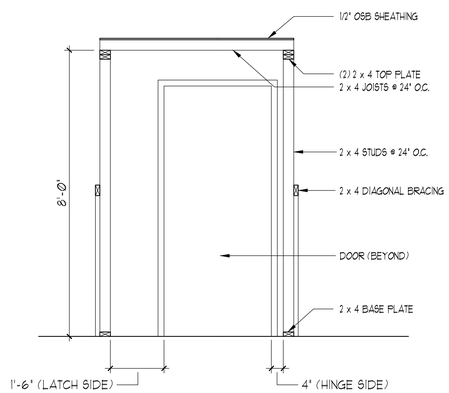

COVERED WALKWAY SECTION (A)
SCALE: 1/2" = 1'-0"

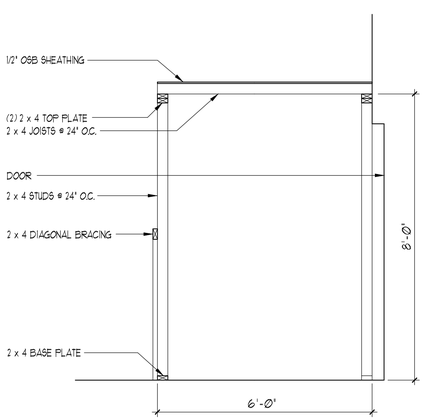

COVERED WALKWAY SECTION (B)
SCALE: 1/2" = 1'-0"

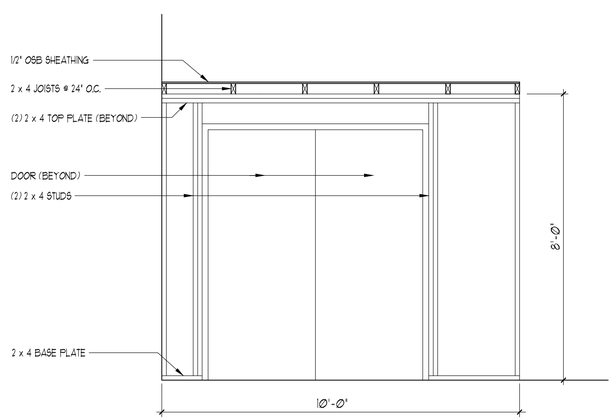

COVERED WALKWAY SECTION (C)
SCALE: 1/2" = 1'-0"

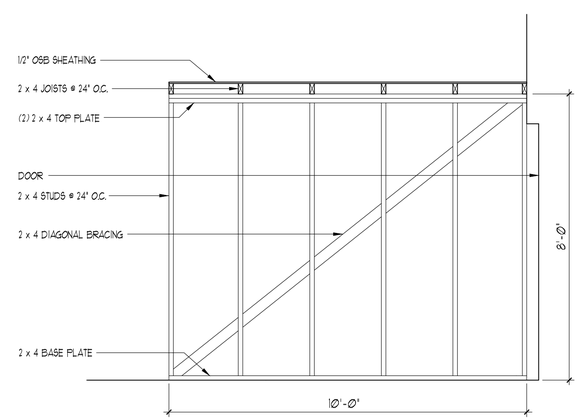

COVERED WALKWAY SECTION (D)
SCALE: 1/2" = 1'-0"

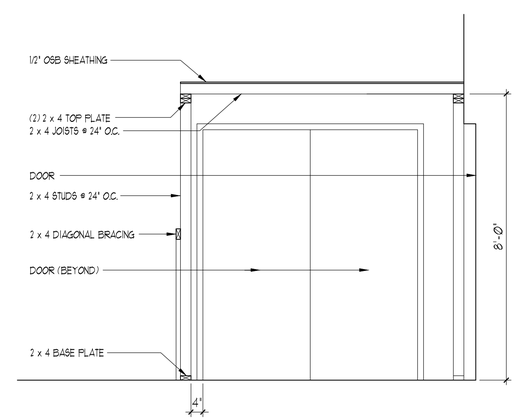

COVERED WALKWAY SECTION (E)
SCALE: 1/2" = 1'-0"

McNEIL GROUP
Designing for the Future Since 1983
6895 SOUTH 900 EAST MIDVALE, UTAH 84047
TEL. (801) 255-7700 FAX (801) 255-8071
E-MAIL info@mcneileng.com WEB SITE AT www.mcneil-group.com

POPE SCIENCE BUILDING
UTAH VALLEY UNIVERSITY

DIVISION OF FACILITIES CONSTRUCTION & MANAGEMENT
OREM, UTAH

REVISIONS

REV.	DATE	DESCRIPTION

PROJECT NO:	10252
CAD DWG. FILE:	10252.dwg
DRAWN BY:	WOS
DFCM PROJECT #:	10089790
PROPERTY NO:	
DESIGNED BY:	WOS
FIELD CREW:	
CHECKED BY:	DLS
DATE:	MAY 2010

SHEET TITLE:
SITE PLAN

C1.01
SHEET 3 OF 7

S:\2010Files\10252\Consulting\Prod Dwg\10252.dwg Jun 10, 2010 - 11:20am