WEBER STATE UNIVERSITY
EAST CAMPUS LANDSCAPE

OGDEN, UTAH

DFCM PROJECT NO. 10101810

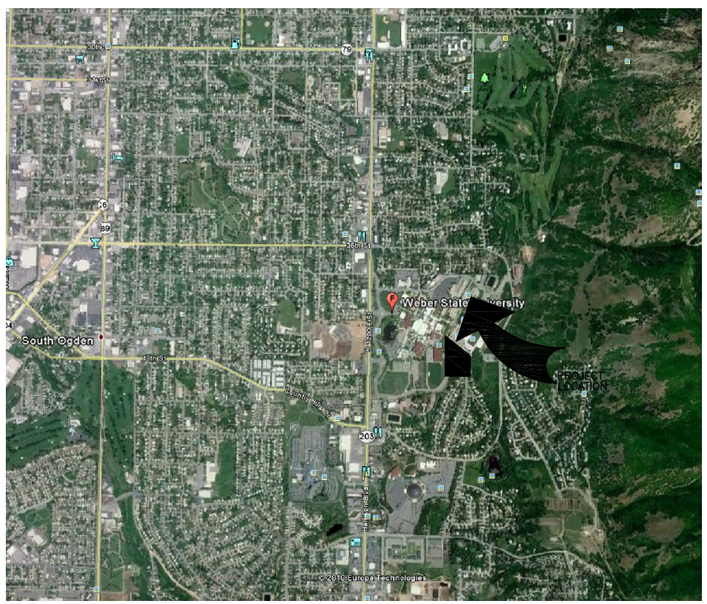

VICINITY MAP

APPROXIMATE ADDRESS: 3848 HARRISON BOULEVARD

DRAWING INDEX	
SHEET	DESCRIPTION
LC-101	COVER SHEET-VICINITY MAP & DRAWING INDEX
LD-101	DEMOLITION PLAN
LD-102	DEMOLITION PLAN
LL-101	LAYOUT AND DIMENSION PLAN
LL-102	LAYOUT AND DIMENSION PLAN
LI-101	IRRIGATION PLAN-MAINLINE AND VALVE LAYOUT
LI-102	IRRIGATION PLAN-MAINLINE AND VALVE LAYOUT
LI-103	IRRIGATION PLAN-HEAD AND LATERAL LAYOUT
LI-104	IRRIGATION PLAN-HEAD AND LATERAL LAYOUT
LI-201	IRRIGATION-NOTES AND SCHEDULE
LI-501	IRRIGATION DETAILS
LI-502	IRRIGATION DETAILS
LI-503	IRRIGATION DETAILS
LI-504	IRRIGATION DETAILS
LP-101	PLANTING PLAN
LP-102	PLANTING PLAN
LP-201	PLANTING PLAN-SCHEDULE
LP-202	PLANTING PLAN-NOTES
LP-501	PLANTING DETAILS

BID SET

SEPTEMBER 8, 2010

Engineers • Surveyors • Planners

PROJECT NO. 55-10-054

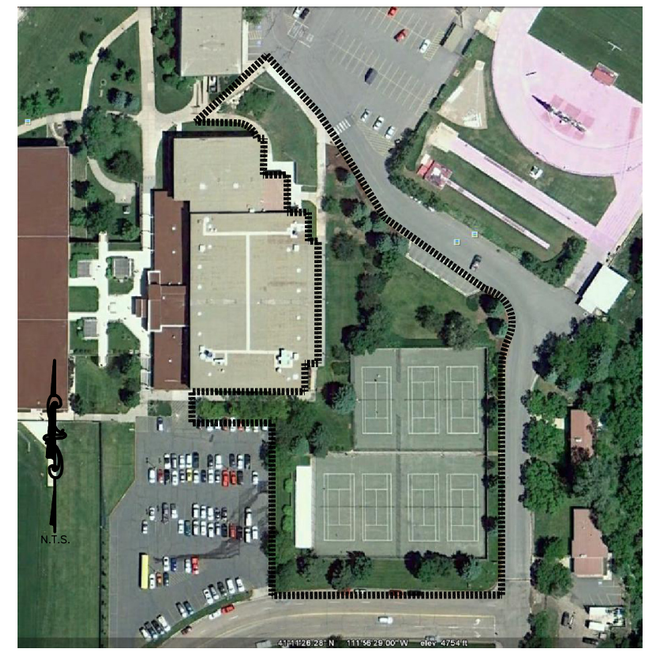

PROJECT SITE

SHEET
LC-101

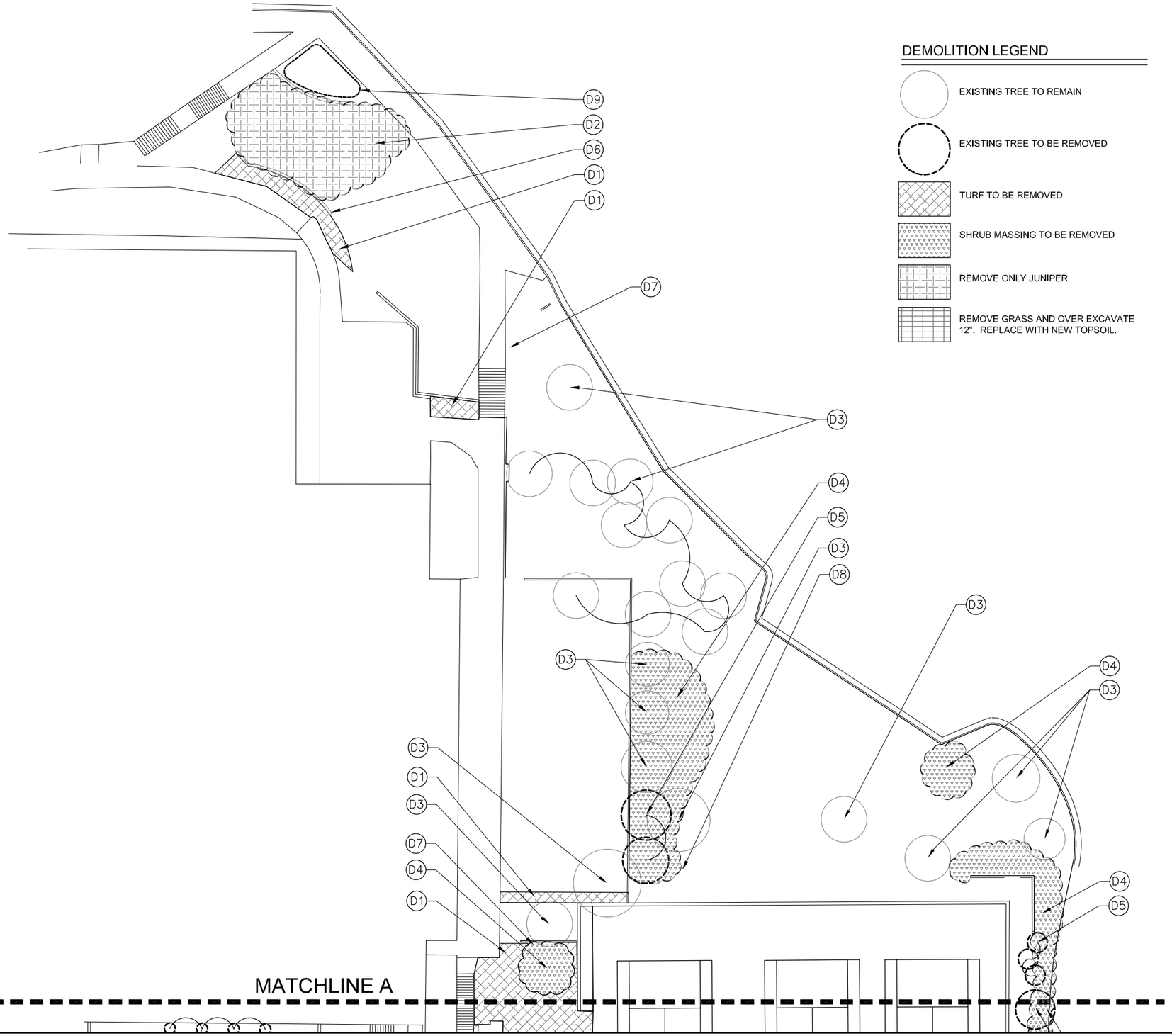

DEMOLITION LEGEND

- EXISTING TREE TO REMAIN
- EXISTING TREE TO BE REMOVED
- TURF TO BE REMOVED
- SHRUB MASSING TO BE REMOVED
- REMOVE ONLY JUNIPER
- REMOVE GRASS AND OVER EXCAVATE 12". REPLACE WITH NEW TOPSOIL.

DEMOLITION NOTES

D1 REMOVE TURF AND ALL IRRIGATION SPRAY HEADS AND ROTORS WITHIN THE HATCHED TURF AREA ON PLAN. REMOVE ANY EXPOSED IRRIGATION PIPE.

D2 REMOVE ONLY JUNPERS. PROTECT AND SAVE ALL OTHER VEGETATION.

D3 PROTECT IN PLACE TREES TO REMAIN.

D4 REMOVE SHRUB MASSINGS AND ALL IRRIGATION SPRAY HEADS AND ROTORS WITHIN HATCHED AREA ON PLAN. REMOVE ANY EXPOSED IRRIGATION PIPE. REMOVE ANY EXISTING WOODEN BENDER BOARDS THAT MAY BE ENCOUNTERED.

D5 REMOVE 5 TOTAL TREES AND GRIND ROOT TO 18" DEPTH.

D6 REMOVE EXISTING CONCRETE MOW STRIP.

D7 CUT AND CAP CULINARY PIPE.

D8 REMOVE ANY EXISTING WOODEN BENDER BOARDS THAT MAY BE ENCOUNTERED.

D9 REMOVE EXISTING BERM.

DEMOLITION GENERAL NOTES

1. CONTRACTOR IS RESPONSIBLE FOR VERIFYING THE DRAWING WITH ACTUAL FIELD CONDITIONS PRIOR TO BEGINNING ANY WORK AND IMMEDIATELY NOTIFYING THE LANDSCAPE ARCHITECT OF ANY DISCREPANCIES. IN THE EVENT THAT THE CONTRACTOR BEGINS WORK PRIOR TO VERIFYING AND COMPARING THE BASE INFORMATION WITH ACTUAL FIELD CONDITIONS, THEN ANY CHANGES OR ALTERATIONS TO THE WORK INVOLVED WITH THESE DRAWINGS DUE TO SUCH DISCREPANCIES WILL BE PERFORMED BY THE CONTRACTOR AT NO ADDITIONAL EXPENSE TO THE OWNER.
2. CONTRACTOR IS RESPONSIBLE FOR COORDINATING BLUE STAKING WITH OWNER. IN THE EVENT THE CONTRACTOR BEGINS DEMOLITION WORK PRIOR TO VERIFYING AND STAKING ALL UTILITIES AND DAMAGE TO UTILITIES OCCURS, THE DAMAGED UTILITIES WILL BE REPAIRED AND/OR REPLACED AT NO ADDITIONAL COST TO THE OWNER.
3. THE CONTRACTOR IS RESPONSIBLE FOR REMOVING AND LEGALLY DISPOSING OF ALL ITEMS TO BE REMOVED AND/OR DEMOLISHED ON THE SAME DAY THAT THE REMOVAL TAKES PLACE ON SITE. ALL RELATED COSTS FOR LEGALLY DISPOSING OF ITEMS TO BE REMOVED INCLUDING TRANSPORT AND HAULING SHALL BE INCLUDED IN THE CONTRACTORS BID FOR THIS WORK AND ADDITIONAL CHARGES FOR THESE ITEMS WILL NOT BE CONSIDERED AFTER BID AWARD.

811 Know what's below. Call before you dig.

CALL 2 BUSINESS DAYS IN ADVANCE BEFORE YOU DIG, GRADE, OR EXCAVATE FOR THE MARKING OF UNDERGROUND MEMBER UTILITIES

N

0 20 40
SCALE IN FEET

J-U-B
Engineers • Surveyors • Planners

J-U-B ENGINEERS, Inc.
466 North 900 West
Suite 5
Kaysville, Utah 84037
Phone: 801.547.0393
Fax: 801.547.0397
www.jub.com

REUSE OF DRAWINGS
THIS DOCUMENT, AND THE IDEAS AND DESIGNS INCORPORATED HEREIN, AS AN INSTRUMENT OF PROFESSIONAL SERVICE, IS THE PROPERTY OF J-U-B ENGINEERS, Inc. AND IS NOT TO BE USED, IN WHOLE OR PART, FOR ANY OTHER PROJECT WITHOUT THE EXPRESS WRITTEN AUTHORIZATION OF J-U-B ENGINEERS, Inc.

NO.	DESCRIPTION	BY	APR.	DATE
	REVISION			

EAST CAMPUS LANDSCAPE
WEBER STATE UNIVERSITY

DEMOLITION PLAN

CAD FILE: 55-10-054_L-DP
PROJ. #: 55-10-053
DRAWN BY: JR
DESIGN BY: JR
CHECKED BY: GG
SCALE OF SHEET
HOR SCALE: 1"=20'
VER SCALE: N/A
LAST UPDATED: 9/8/2010

SHEET
LD-101

Plot Date:9/9/2010
Date Created:7/20/2010 F:\PROJECTS\JUB\WEBER STATE UNIVERSITY\55-10-054 EAST CAMPUS LANDSCAPE\CAD\MODEL\55-10-054_L-DP.DWG

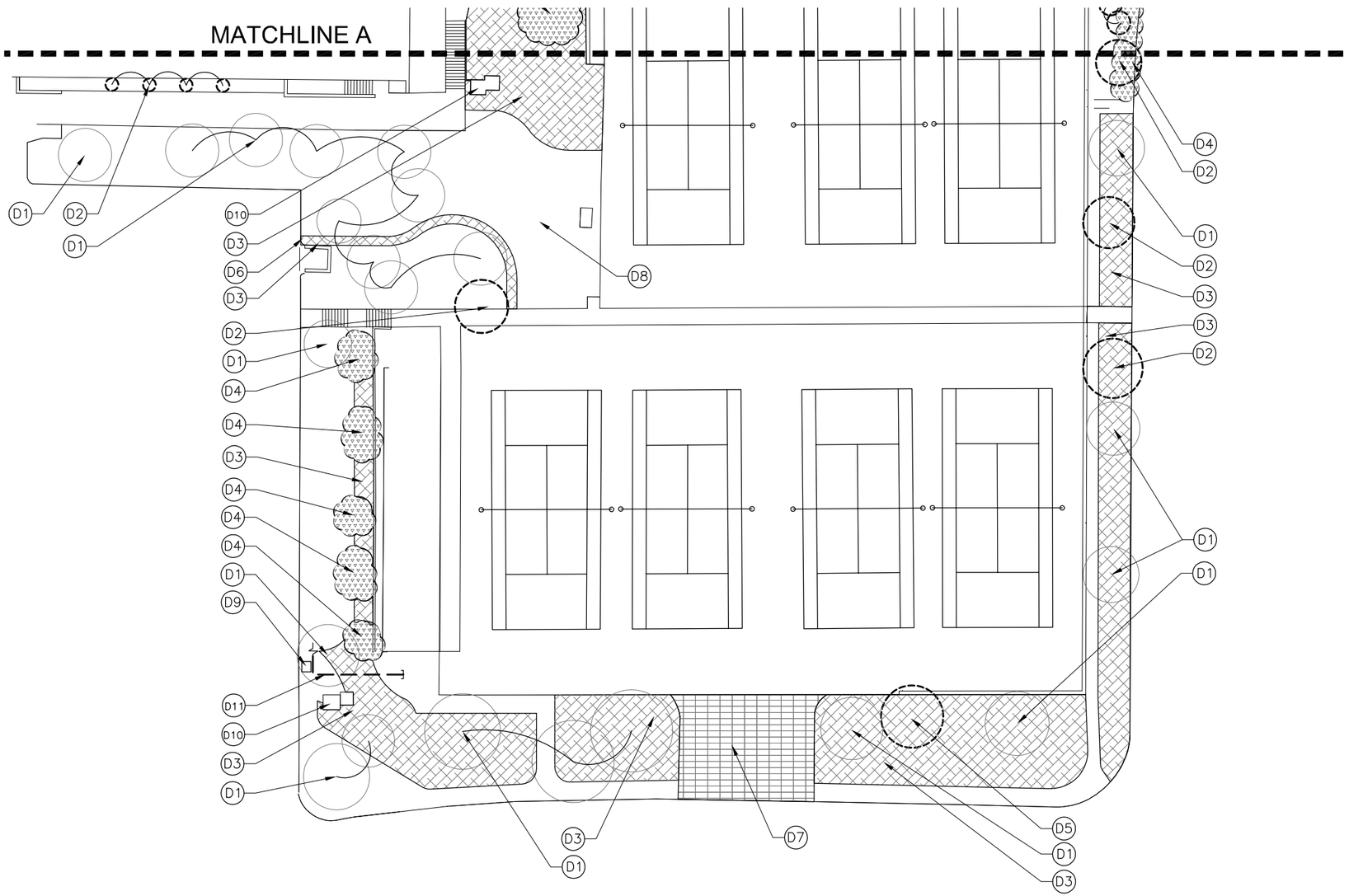

DEMOLITION LEGEND

- EXISTING TREE TO REMAIN
- EXISTING TREE TO BE REMOVED
- TURF TO BE REMOVED
- SHRUB MASSING TO BE REMOVED
- REMOVE ONLY JUNIPER
- REMOVE GRASS AND OVER EXCAVATE 12". REPLACE WITH NEW TOPSOIL.

DEMOLITION NOTES

- D1 PROTECT IN PLACE TREES TO REMAIN.
- D2 REMOVE 8 TOTAL TREES AND GRIND ROOT TO 18" DEPTH.
- D3 REMOVE TURF AND ALL IRRIGATION SPRAY HEADS AND ROTORS WITHIN THE HATCHED TURF AREA ON PLAN. REMOVE ANY EXPOSED IRRIGATION PIPE.
- D4 REMOVE SHRUB MASSINGS AND ALL IRRIGATION SPRAY HEADS AND ROTORS WITHIN HATCHED AREA ON PLAN. REMOVE ANY EXPOSED IRRIGATION PIPE.
- D5 REMOVE CLUMP OF TREES AND GRIND ROOTS TO 18" DEPTH. REMOVE ALL GROUND COVER UNDER AND AROUND CLUMP OF TREES.
- D6 REMOVE ANY EXISTING WOODEN BENDER BOARDS THAT MAY BE ENCOUNTERED.
- D7 REMOVE TURF AND ALL IRRIGATION SPRAY HEADS AND ROTORS WITHIN THE HATCHED TURF AREA ON PLAN. REMOVE AY EXPOSED IRRIGATION PIPE AS. OVER EXCAVATE 12" AND REPLACE WITH NEW TOPSOIL.
- D8 REPLACE TURF AS NEEDED.
- D9 PROTECT IN PLACE EXISTING STORM GRATE.
- D10 REMOVE EXISTING UTILITY BOXES.
- D11 REMOVE EXISTING SECTION OF 3" IRRIGATION MAIN LINE.

DEMOLITION GENERAL NOTES

1. CONTRACTOR IS RESPONSIBLE FOR VERIFYING THE DRAWING WITH ACTUAL FIELD CONDITIONS PRIOR TO BEGINNING ANY WORK AND IMMEDIATELY NOTIFYING THE LANDSCAPE ARCHITECT OF ANY DISCREPANCIES. IN THE EVENT THAT THE CONTRACTOR BEGINS WORK PRIOR TO VERIFYING AND COMPARING THE BASE INFORMATION WITH ACTUAL FIELD CONDITIONS, THEN ANY CHANGES OR ALTERATIONS TO THE WORK INVOLVED WITH THESE DRAWINGS DUE TO SUCH DISCREPANCIES WILL BE PERFORMED BY THE CONTRACTOR AT NO ADDITIONAL EXPENSE TO THE OWNER.
2. CONTRACTOR IS RESPONSIBLE FOR COORDINATING BLUE STAKING WITH OWNER. IN THE EVENT THE CONTRACTOR BEGINS DEMOLITION WORK PRIOR TO VERIFYING AND STAKING ALL UTILITIES AND DAMAGE TO UTILITIES OCCURS, THE DAMAGED UTILITIES WILL BE REPAIRED AND/OR REPLACED AT NO ADDITIONAL COST TO THE OWNER.
3. THE CONTRACTOR IS RESPONSIBLE FOR REMOVING AND LEGALLY DISPOSING OF ALL ITEMS TO BE REMOVED AND/OR DEMOLISHED ON THE SAME DAY THAT THE REMOVAL TAKES PLACE ON SITE. ALL RELATED COSTS FOR LEGALLY DISPOSING OF ITEMS TO BE REMOVED INCLUDING TRANSPORT AND HAULING SHALL BE INCLUDED IN THE CONTRACTORS BID FOR THIS WORK AND ADDITIONAL CHARGES FOR THESE ITEMS WILL NOT BE CONSIDERED AFTER BID AWARD.

811 Know what's below. Call before you dig.

CALL 2 BUSINESS DAYS IN ADVANCE BEFORE YOU DIG, GRADE, OR EXCAVATE FOR THE MARKING OF UNDERGROUND MEMBER UTILITIES

N

0 20 40

SCALE IN FEET

J-U-B
Engineers • Surveyors • Planners

J-U-B ENGINEERS, Inc.
466 North 900 West
Suite 5
Kaysville, Utah 84037
Phone: 801.547.0393
Fax: 801.547.0397
www.jub.com

REUSE OF DRAWINGS
THIS DOCUMENT, AND THE IDEAS AND DESIGNS INCORPORATED HEREIN, AS AN INSTRUMENT OF PROFESSIONAL SERVICE, IS THE PROPERTY OF **J-U-B ENGINEERS, Inc.** AND IS NOT TO BE USED, IN WHOLE OR PART, FOR ANY OTHER PROJECT WITHOUT THE EXPRESS WRITTEN AUTHORIZATION OF **J-U-B ENGINEERS, Inc.**

NO.	DESCRIPTION	BY	APR.	DATE
	REVISION			

EAST CAMPUS LANDSCAPE
WEBER STATE UNIVERSITY

DEMOLITION PLAN

CAD FILE: 55-10-054_L-DP
PROJ. #: 55-10-053
DRAWN BY: JR
DESIGN BY: JR
CHECKED BY: GG
SCALE OF SHEET
HOR SCALE: 1"=20'
VER SCALE: N/A
LAST UPDATED: 9/8/2010

SHEET

LD-102

Plot Date:9/9/2010
Date Created:7/20/2010 F:\PROJECTS\JUB\WEBER STATE UNIVERSITY\55-10-054 EAST CAMPUS LANDSCAPE\CAD\MODEL\55-10-054_L-DP.DWG

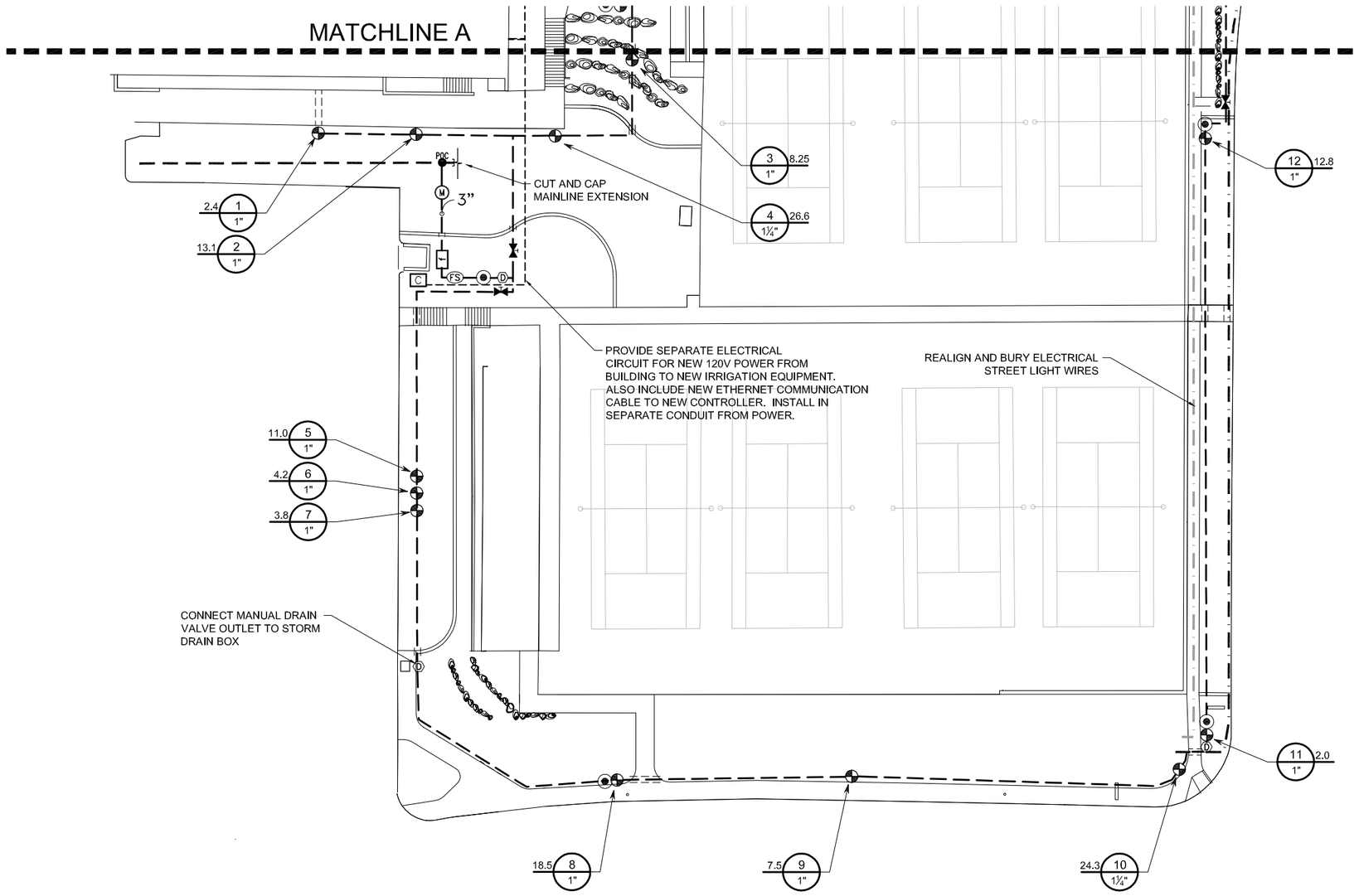

LEGEND

- EXISTING ALIGNMENT OF ELECTRICAL STREET LIGHT WIRES
- NEW ALIGNMENT OF ELECTRICAL STREET LIGHT WIRES
- IRRIGATION MAINLINE
- NEW ELECTRICAL WIRING FOR OUTLETS AND IRRIGATION CLOCK

NOTES

1. CONTRACTOR SHALL VERIFY WITH THE LANDSCAPE ARCHITECT AND WEBER STATE UNIVERSITY PROJECT MANAGERTHE LOCATION OF THE CLOCK AND FILTER PRIOR TO INSTALLATION.

2. CONTRACTOR SHALL COORDINATE WITH THE CONCRETE CONTRACTOR FOR ALL REQUIRED SLEEVES.

3. ALL ELECTRICAL CONDUIT ABOVE GROUND SHALL BE METAL AND ALL ELECTRICAL CONDUIT BELOW GROUND MAY BE PVC.

Know what's below. Call before you dig.

CALL 2 BUSINESS DAYS IN ADVANCE BEFORE YOU DIG, GRADE, OR EXCAVATE FOR THE MARKING OF UNDERGROUND MEMBER UTILITIES

N

0 20 40

SCALE IN FEET

J-U-B
Engineers • Surveyors • Planners

J-U-B ENGINEERS, Inc.
466 North 900 West
Suite 5
Kaysville, Utah 84037
Phone: 801.547.0393
Fax: 801.547.0397
www.jub.com

REUSE OF DRAWINGS
THIS DOCUMENT, AND THE IDEAS AND DESIGNS INCORPORATED HEREIN, AS AN INSTRUMENT OF PROFESSIONAL SERVICE, IS THE PROPERTY OF **J-U-B ENGINEERS, Inc.** AND IS NOT TO BE USED IN WHOLE OR PART, FOR ANY OTHER PROJECT WITHOUT THE EXPRESS WRITTEN AUTHORIZATION OF **J-U-B ENGINEERS, Inc.**

NO.	DESCRIPTION	BY	APR.	DATE

REVISION

EAST CAMPUS LANDSCAPE
WEBER STATE UNIVERSITY

IRRIGATION PLAN
MAINLINE AND VALVE LAYOUT

CAD FILE: 55-10-054_L-IRR
PROJ. #: 55-10-053
DRAWN BY: JR
DESIGN BY: JR
CHECKED BY: GG
SCALE OF SHEET
HOR SCALE: 1"=20'
VER SCALE: N/A
LAST UPDATED: 9/8/2010

SHEET
LI-101

Plot Date:9/9/2010
Date Created:6/30/2010 F:\PROJECTS\JUB WEBER STATE UNIVERSITY\55-10-054 EAST CAMPUS LANDSCAPE\CAD MODEL\55-10-054_L-IRR.DWG

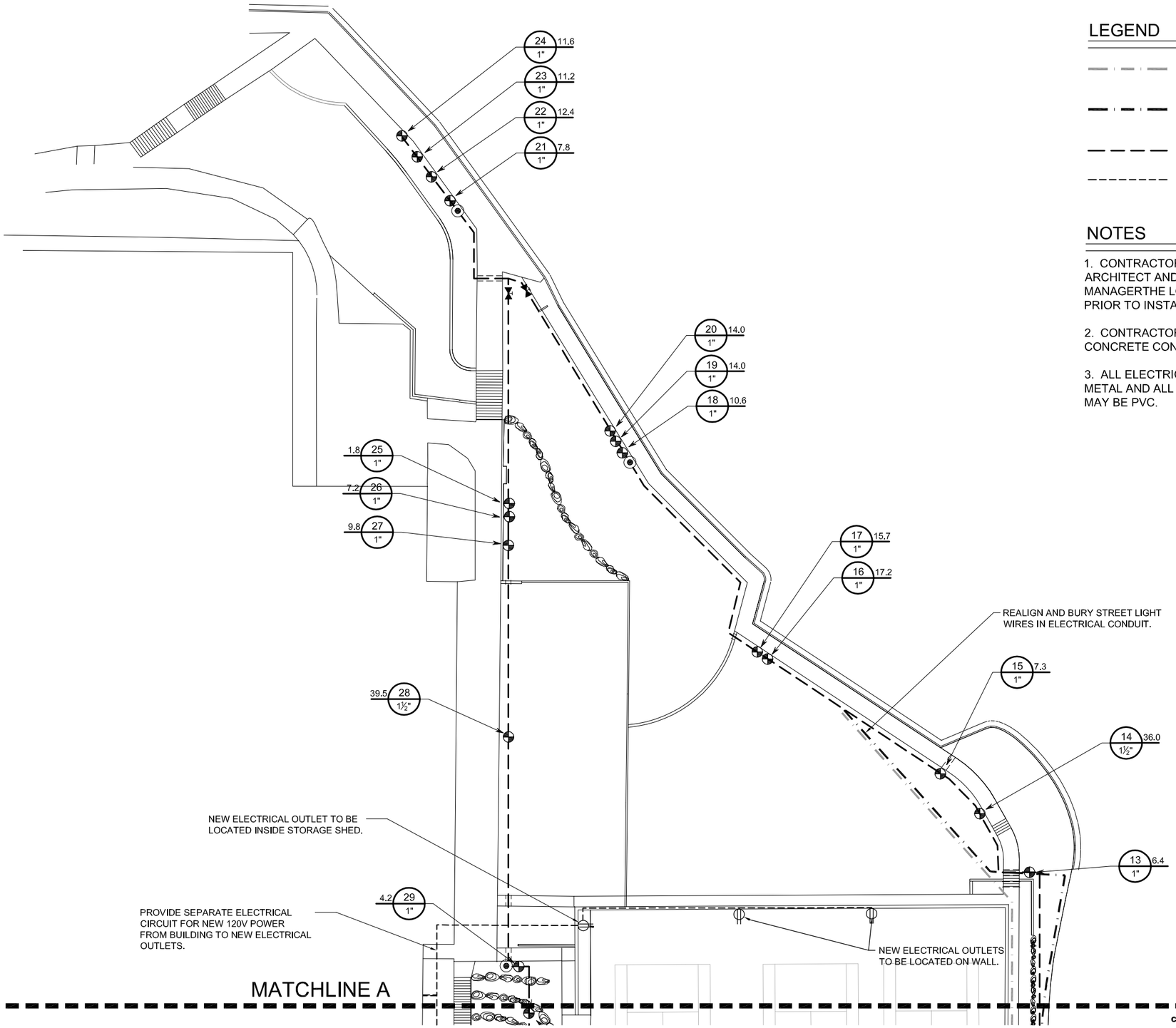

LEGEND

- EXISTING ALIGNMENT OF ELECTRICAL STREET LIGHT WIRES
- NEW ALIGNMENT OF ELECTRICAL STREET LIGHT WIRES
- IRRIGATION MAINLINE
- NEW ELECTRICAL WIRING FOR OUTLETS AND IRRIGATION CLOCK

NOTES

1. CONTRACTOR SHALL VERIFY WITH THE LANDSCAPE ARCHITECT AND WEBER STATE UNIVERSITY PROJECT MANAGERTHE LOCATION OF THE CLOCK AND FILTER PRIOR TO INSTALLATION.

2. CONTRACTOR SHALL COORDINATE WITH THE CONCRETE CONTRACTOR FOR ALL REQUIRED SLEEVES.

3. ALL ELECTRICAL CONDUIT ABOVE GROUND SHALL BE METAL AND ALL ELECTRICAL CONDUIT BELOW GROUND MAY BE PVC.

Know what's below. Call before you dig.

CALL 2 BUSINESS DAYS IN ADVANCE BEFORE YOU DIG, GRADE, OR EXCAVATE FOR THE MARKING OF UNDERGROUND MEMBER UTILITIES

N

0 20 40
SCALE IN FEET

J-U-B
Engineers • Surveyors • Planners

J-U-B ENGINEERS, Inc.
466 North 900 West
Suite 5
Kaysville, Utah 84037
Phone: 801.547.0393
Fax: 801.547.0397
www.jub.com

REUSE OF DRAWINGS
THIS DOCUMENT, AND THE IDEAS AND DESIGNS INCORPORATED HEREIN, AS AN INSTRUMENT OF PROFESSIONAL SERVICE, IS THE PROPERTY OF **J-U-B ENGINEERS, Inc.** AND IS NOT TO BE USED IN WHOLE OR PART, FOR ANY OTHER PROJECT WITHOUT THE EXPRESS WRITTEN AUTHORIZATION OF **J-U-B ENGINEERS, Inc.**

NO.	DESCRIPTION	BY	APR.	DATE

REVISION

EAST CAMPUS LANDSCAPE
WEBER STATE UNIVERSITY

IRRIGATION PLAN
MAINLINE AND VALVE LAYOUT

CAD FILE: 55-10-054_L-IRR
PROJ. #: 55-10-053
DRAWN BY: JR
DESIGN BY: JR
CHECKED BY: GG
SCALE OF SHEET
HOR SCALE: 1"=20'
VER SCALE: N/A
LAST UPDATED: 9/8/2010

SHEET
LI-102

Plot Date:9/9/2010
Date Created:6/30/2010 F:\PROJECTS\JUB\WEBER STATE UNIVERSITY\55-10-054 EAST CAMPUS LANDSCAPE\CAD\MODEL\55-10-054_L-IRR.DWG

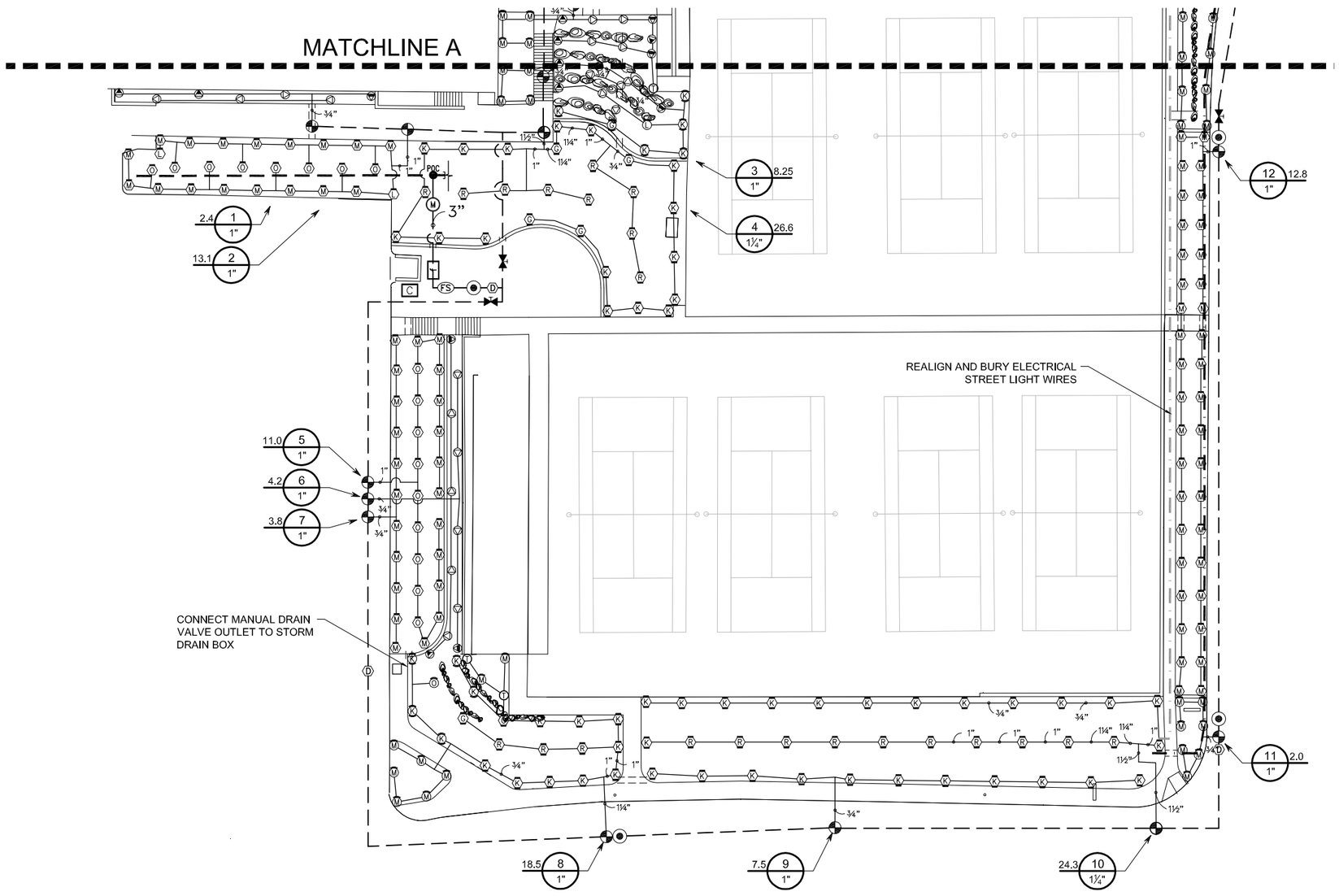

NOTES

1. TURF SPRINKLERS - 6" POP-UPS
2. SHRUB SPRINKLERS - 12" POP-UPS
3. SHRUB SPRINKLERS WITH ★ - 12" POP-UP ON FIXED RISE

Know what's below. Call before you dig.

CALL 2 BUSINESS DAYS IN ADVANCE BEFORE YOU DIG, GRADE, OR EXCAVATE FOR THE MARKING OF UNDERGROUND MEMBER UTILITIES

N

0 20 40

SCALE IN FEET

J-U-B ENGINEERS, Inc.
466 North 900 West
Suite 5
Kaysville, Utah 84037
Phone: 801.547.0393
Fax: 801.547.0397
www.jub.com

REUSE OF DRAWINGS
THIS DOCUMENT, AND THE IDEAS AND DESIGNS INCORPORATED HEREIN, AS AN INSTRUMENT OF PROFESSIONAL SERVICE, IS THE PROPERTY OF **J-U-B ENGINEERS, Inc.** AND IS NOT TO BE USED IN WHOLE OR PART, FOR ANY OTHER PROJECT WITHOUT THE EXPRESS WRITTEN AUTHORIZATION OF **J-U-B ENGINEERS, Inc.**

NO.	DESCRIPTION	BY	APR.	DATE

REVISION

EAST CAMPUS LANDSCAPE
WEBER STATE UNIVERSITY

IRRIGATION PLAN
HEAD AND LATERAL LAYOUT

CAD FILE: 55-10-054_L-IRR
PROJ. #: 55-10-053
DRAWN BY: JR
DESIGN BY: JR
CHECKED BY: GG
SCALE OF SHEET
HOR SCALE: 1"=20'
VER SCALE: N/A
LAST UPDATED: 9/8/2010

SHEET
LI-103

Plot Date:9/9/2010
Date Created:6/30/2010 F:\PROJECTS\JUB\WEBER STATE UNIVERSITY\55-10-054 EAST CAMPUS LANDSCAPE\CAD\MODEL\55-10-054_L-IRR.DWG

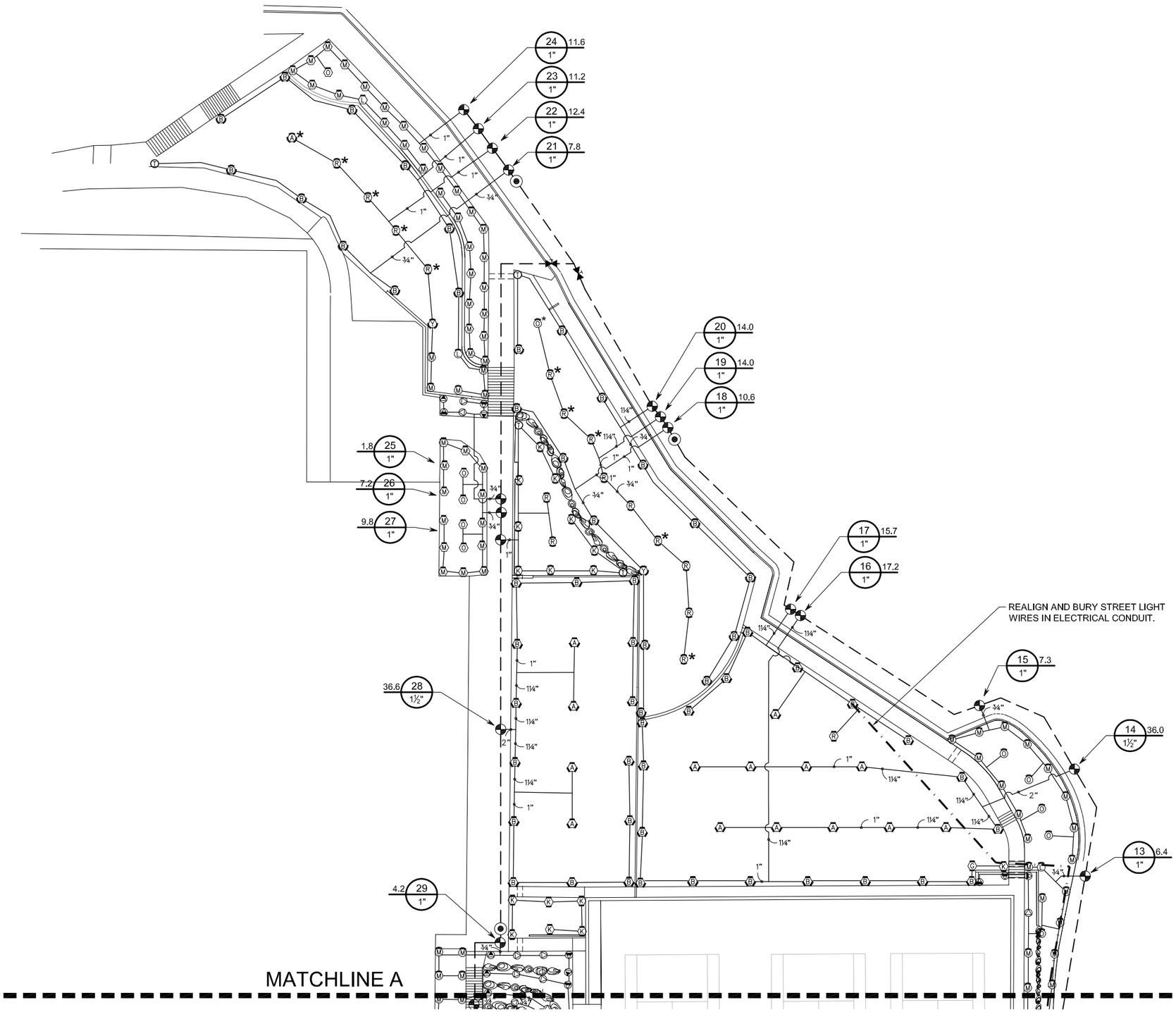

NOTES

1. TURF SPRINKLERS - 6" POP-UPS
2. SHRUB SPRINKLERS - 12" POP-UPS
3. SHRUB SPRINKLERS WITH ✱ - 12" POP-UP ON FIXED RISE

Know what's below. Call before you dig.

CALL 2 BUSINESS DAYS IN ADVANCE BEFORE YOU DIG, GRADE, OR EXCAVATE FOR THE MARKING OF UNDERGROUND MEMBER UTILITIES

N

0 20 40

SCALE IN FEET

J-U-B
Engineers • Surveyors • Planners

J-U-B ENGINEERS, Inc.
466 North 900 West
Suite 5
Kaysville, Utah 84037
Phone: 801.547.0393
Fax: 801.547.0397
www.jub.com

REUSE OF DRAWINGS
THIS DOCUMENT, AND THE IDEAS AND DESIGNS INCORPORATED HEREIN, AS AN INSTRUMENT OF PROFESSIONAL SERVICE, IS THE PROPERTY OF J-U-B ENGINEERS, Inc. AND IS NOT TO BE USED IN WHOLE OR PART, FOR ANY OTHER PROJECT WITHOUT THE EXPRESS WRITTEN AUTHORIZATION OF J-U-B ENGINEERS, Inc.

NO.	DESCRIPTION	BY	APR.	DATE

REVISION

EAST CAMPUS LANDSCAPE
WEBER STATE UNIVERSITY

IRRIGATION PLAN
HEAD AND LATERAL LAYOUT

CAD FILE: 55-10-054_L-IRR
PROJ. #: 55-10-053
DRAWN BY: JR
DESIGN BY: JR
CHECKED BY: GG
SCALE OF SHEET
HOR SCALE: 1"=20'
VER SCALE: N/A
LAST UPDATED: 9/8/2010

SHEET
LI-104

Plot Date:9/9/2010
Date Created:6/30/2010 F:\PROJECTS\JUB\WEBER STATE UNIVERSITY\55-10-054 EAST CAMPUS LANDSCAPE\CAD\MODEL\55-10-054_L-IRR.DWG

IRRIGATION INSTALLATION NOTES

1. IRRIGATION PLAN IS DIAGRAMMATIC. ALL IRRIGATION EQUIPMENT SHALL BE LOCATED IN PLANTING AREAS ONLY, UNLESS NOTED OTHERWISE. REFER TO THE IRRIGATION LEGEND, DETAILS, AND SPECIFICATIONS FOR EQUIPMENT AND INSTALLATION. SPECIFICATIONS SHALL TAKE PRECEDENCE OVER INSTALLATION DETAILS.

2. LANDSCAPE CONTRACTOR SHALL VERIFY LOCATION OF IRRIGATION POINT OF CONNECTION (POC) AND THE STATIC WATER PRESSURE AT THAT LOCATION PRIOR TO BEGINNING ANY IRRIGATION WORK. IF THE LOCATION OR WATER PRESSURE IS DIFFERENT THAN THAT EXPRESSED BY THE LANDSCAPE ARCHITECT, OR IF THE PRESSURE APPEARS TO BE UNUSUALLY HIGH OR LOW, THE CONTRACTOR SHALL NOTIFY THE LANDSCAPE ARCHITECT IMMEDIATELY.

3. CONTRACTOR SHALL KEEP THE PREMISES CLEAN AND FREE OF EXCESS EQUIPMENT, MATERIALS AND RUBBISH INCIDENTAL TO WORK OF THIS SECTION.

4. PIPE FITTINGS SHALL BE AS FOLLOWS:
A. ALL RISERS AND EXPOSED FITTINGS SHALL BE P.V.C. SCHEDULE 80.
B. ALL UNDERGROUND FITTINGS SHALL BE P.V.C. SCHEDULE 40.
C. ALL MAIN LINE FOUR (4) INCHES OR GREATER SHALL USE DUCTILE IRON FITTINGS. ALL MAINLINE SMALLER THAN FOUR (4) INCES SHALL USE SOLVENT WELD PVC FITTINGS.

5. IRRIGATION CONTROL WIRES SHALL CONFORM TO THE FOLLOWING:
A. ALL WIRE SHALL BE TYPE UF, 600 VOLT, SOLID COPPER , SINGLE CONDUCTOR WIRE. IT SHALL BE UL LISTED, DIRECT BURIAL TYPE, AND MINIMUM SIZE OF 14 GAUGE. ALL SPLICES AND CONNECTIONS SHALL BE WATER-TIGHT USING 3M-DBR/Y DIRECT BURG SPLICE KIT OR EQUAL. ALL WIRES SHALL BE INSTALLED WITH TWO (2) FEET OF EXCESS WIRE (COILED) AT THE END OF EACH WIRE RUN, WIRE SPLICE, AND AT EACH CONTROLLER.
B. CONTROL WIRE SHALL BE BUNDLED EVERY 10' AND PLACED ADJACENT TO MAIN LINE. ALL WIRE SPLICES SHALL BE LOCATED IN VALVE BOXES.

6. FILTER SHALL BE INSTALLED PER DETAIL SHOWN. PROVIDE PERMANENTLY ATTACHED HOSE (10' LENGTH) FROM FILTER EXHAUST PORT TO DIRECT FLUSHING WATER AWAY FROM FILTER ASSEMBLY AND TOWARDS APPROPRIATE DRAINAGE LOCATION.

7. MANUAL DRAIN VALVES SHALL BE PLACED ON THE MAIN LINE AT ALL LOW SPOTS TO ENSURE COMPLETE DRAINAGE AND WINTERIZATION OF MAIN LINE. ALL MANUAL DRAINS SHALL BE PLACE IN SEPARATE VALVE BOXES PER INSTALLATION DETAILS.

8. CHECK VALVES SHALL BE USED WHERE INDICATED AND WHERE NECESSARY TO PREVENT WATER FLOW FROM LOWER ELEVATION HEADS WHEN SYSTEM IS TURNED OFF. INSTALL PER MANUFACTURE'S RECOMMENDATION, WITH A ONE (1) CU. FT. MIN. GRAVEL SUMP AROUND EACH CHECK VALVE.

9. ALL POP-UP SPRAY SPRINKLERS SHALL CONFORM TO THE FOLLOWING UNLESS SPECIFICALLY NOTED OTHERWISE ON THE PLANS:
A. SPRINKLERS LOCATED IN GRASS AREAS SHALL BE SIX (6) INCHES IN HEIGHT.
B. SPRINKLERS LOCATED IN PLANTING BEDS SHALL BE TWELVE (12) INCHES IN HEIGHT.

10. ALL PRESSURE MAIN LINES SHALL HAVE EIGHTEEN (18) INCHES TO THIRTY (30) INCHES OF COVER. AND ALL LATERAL LINES SHALL HAVE TWELVE (12) INCHES TO FOURTEEN (14) INCHES OF COVER. TRENCH BEDDING AND BACKFILL MATERIAL SHALL BE EXISTING SITE SOIL FREE OF ROCKS, DEBRIS, ETC. GREATER THAN ONE (1) INCH IN ANY DIMENSION THAT MAY DAMAGE IRRIGATION PIPE OR EQUIPMENT. IN THE EVENT OF BACKFILL SETTLEMENT, CONTRACTOR SHALL PERFORM REQUIRED REPAIRS AT HIS OWN COST.

11. WHERE POSSIBLE, ALL AUTOMATIC CONTROL VALVES SHALL BE LOCATED WITHIN SHRUB AREAS AND INSTALLED IN GREEN VALVE BOXES, ONE VALVE PER BOX, WITH FOUR (4) INCHES OF 3/4" GRAVEL BENEATH THE VALVE. NO VALVE MANIFOLDS SHALL BE ALLOWED. ISOLATION GATE VALVES SHALL BE LOCATED IN SEPARATE VALVE BOXES. WIRE SPLICES SHALL ALSO BE LOCATED IN SEPARATE VALVE BOXES.

12. ALL MAIN LINE AND LATERAL LINES SHALL BE SLEEVED WITH P.V.C. SCHEDULE 40 PIPE (4" AND UNDER) OR CLASS 200 (GREATER THAN 4") WHERE THEY PASS UNDER PAVED AREAS. SLEEVE SIZE SHALL BE TWICE THE DIAMETER OF THE LINE TO BE SLEEVED UNLESS OTHERWISE NOTED ON THE PLANS.

13. AUTOMATIC CONTROLLERS SHALL BE OF THE SIZE AND TYPE NOTED, AND INSTALLED WHERE INDICATED ON IRRIGATION PLAN. CONTROL WIRES SHALL BE SLEEVED IN ELECTRICAL CONDUIT TO MAINLINE. 120-VOLT ELECTRICAL SERVICE TO CONTROLLERS SHALL BE PROVIDED BY THE LANDSCAPE CONTRACTOR. COORDINATE THIS WORK WITH WSU ELECTRICAL MANAGER STEVEN TIPPETS, AND OTHER CONTRACTORS FOR THIS PROJECT.

14. A MASTER VALVE SHALL BE INSTALLED ALONG WITH APPROPRIATE FLOW SENSING EQUIPMENT TO ELIMINATE EXCESS SYSTEM FLOW SHOULD A VALVE STICK OPEN AFTER A CYCLE HAS BEEN COMPLETED OR A MAIN LINE BREAK OCCURS.

15. PRIOR TO BACKFILLING IRRIGATION TRENCHES:
A. ALL MAIN LINES IN THE SYSTEM SHALL BE CAPPED AND PRESSURE TESTED AT 125 P.S.I. FOR A PERIOD OF FOUR (4) HOURS. ANY LEAKS FOUND SHALL BE CORRECTED BY REMOVING THE LEAKING PIPE OR FITTINGS AND INSTALLING NEW MATERIAL IN ITS PLACE. REPEAT PRESSURE TEST TO ASSURE ABSENCE OF LEAKS.
B. THE CONTRACTOR SHALL NOT ALLOW NOR CAUSE ANY OF HIS WORK TO BE COVERED UNTIL IT HAS BEEN INSPECTED, TESTED AND APPROVED BY THE OWNER/OWNER'S AUTHORIZED REPRESENTATIVE.
C. WHERE MAIN LINE WILL BE ALLOWED TO SIT UNCOVERED FOR ANY LENGTH OF TIME IN THE TRENCH PRIOR TO TESTING, SHADE MAIN LINE WITH A THIN COVERING OF SOIL TO MINIMIZE WEATHER-RELATED EXPANSION OR CONTRACTION OF PIPE.

16. IRRIGATION CONTRACTOR SHALL ADJUST ALL HEADS TO PROVIDE A UNIFORM COVERAGE AND TO KEEP SPRAY OFF BUILDINGS, WALLS, PARKING AREAS, AND DRIVES.

17. WHEN THE SPRINKLER SYSTEM IS COMPLETED THE CONTRACTOR SHALL, IN THE PRESENCE OF THE OWNER/OWNER'S AUTHORIZED REPRESENTATIVE, PERFORM A COVERAGE TEST OF WATER PROVIDED TO THE PLANTING AREAS TO ENSURE IT IS CONSISTENT AND UNIFORM. THE CONTRACTOR SHALL FURNISH ALL MATERIALS AND PERFORM ALL WORK REQUIRED TO CORRECT ANY INADEQUACIES OF COVERAGE AT HIS OWN COST.

18. THE CONTRACTOR SHALL FURNISH TO THE OWNER A COMPLETE "AS BUILT" DRAWING ON MYLAR OR TYVEK AND TWO PRINTS SHOWING EXACT LOCATIONS OF ALL ITEMS INSTALLED. THESE ARE TO BE DELIVERED ON OR BEFORE FINAL INSPECTION.

19. A REDUCED IRRIGATION PLAN INDICATING ALL SYSTEMS AND THEIR APPROPRIATE SEQUENCED VALVES SHALL BE LAMINATED AND MOUNTED ON THE INSIDE COVER OF THE IRRIGATION CONTROLLER(S).

20. IRRIGATION CONTRACTOR SHALL MAINTAIN THE SYSTEM FOR THE DURATION OF THE CONTRACT PERIOD.

21. IRRIGATION CONTRACTOR SHALL GUARANTEE THE ENTIRE IRRIGATION SYSTEM TO BE FREE OF DEFECTS IN WORKMANSHIP AND MATERIALS FOR A PERIOD OF ONE (1) YEAR FROM FINAL ACCEPTANCE BY THE OWNER.

22. UPON COMPLETION OF THE IRRIGATION SYSTEM INSTALLATION, A WATER AUDIT SHALL BE CONDUCTED ON EACH STATION TO DETERMINE ITS APPLICATION RATE AND OVERALL EFFICIENCY. ALL STATIONS MUST HAVE A MINIMUM EFFICIENCY OF 70%. ANY STATION NOT MEETING THIS MINIMUM STANDARD SHALL REQUIRE THE CONTRACTOR TO MODIFY THE SYSTEM AT HIS OWN EXPENSE UNTIL THE STATION IS BROUGHT INTO COMPLIANCE. ALL AUDITS SHALL BE PERFORMED BY AN INDEPENDENT PARTY AND PAID FOR BY THE CONTRACTOR.

IRRIGATION MAINTENANCE NOTES

IT IS THE OWNER'S RESPONSIBILITY TO SUPPLY THESE PLANS WITH THE FOLLOWING NOTES AND SPECIFICATIONS, ALONG WITH CONTRACTOR DRAWN "AS BUILT" PLANS TO ANY AND ALL FUTURE OWNERS AND MAINTENANCE COMPANIES.

1. THE PURPOSE OF THIS SPRINKLER SYSTEM IS TO PROVIDE ONLY SUFFICIENT WATER TO MAINTAIN PLANT LIFE DURING DRY WEATHER CONDITIONS OR SUMMER SEASONS. CONTROLLERS SHALL BE READJUSTED CONTINUOUSLY THROUGHOUT THE SEASON, ON A WEEKLY BASIS IF NECESSARY, TO PROVIDE WATER ONLY WHEN THE SOIL IS DRY AT A DEPTH OF FOUR (4) INCHES THE FIRST INITIAL GROWING SEASON AND SIX (6) INCHES THE FOLLOWING YEARS. IF THE GROUND IS MOIST EITHER AT THE SURFACE OR A DEPTH OF FOUR (4) INCHES DURING THE FIRST YEAR AFTER INITIAL PLANT ESTABLISHMENT, OR IS MOIST AT A DEPTH OF SIX (6) INCHES THEREAFTER, SHUT THE CONTROLLERS OFF AND DO NOT APPLY ADDITIONAL WATER UNTIL SOIL HAS BEEN ALLOWED TO DRY. READJUST CONTROLLERS PRIOR TO TURNING VALVES BACK ON. IF RAIN IS FORECAST OR IS EMINENT, ALL IRRIGATION SYSTEMS SHALL BE SHUT OFF AND NOT REACTIVATED UNTIL THE SOIL HAS DRIED TO THE ABOVE DEPTHS.

2. IF ANY SUBSURFACE DRAINAGE OR RUN-OFF IS VISIBLE AT LOW AREAS, ACROSS SIDEWALKS OR AT LOWER PORTIONS OF SLOPES, IMMEDIATELY SHUT THE VALVES OFF TO ALLOW THE AREA TO COMPLETELY DRY OUT. IF THIS CONDITION CONTINUES AFTER SUBSEQUENT WATERINGS, A QUALIFIED GEOLOGIST OR GEOTECHNICAL ENGINEER MUST BE RETAINED TO PROVIDE RECOMMENDATIONS TO ELIMINATE SUBSURFACE WATER OR DRAINAGE PROBLEMS. IF DURING NORMAL IRRIGATION, PONDING TAKES PLACE ON ANY LANDSCAPE AREA, DRIVES, PARKING AREAS OR ANY OTHER AREA, THE IRRIGATION SYSTEM SHALL BE IMMEDIATELY SHUT OFF AND A LICENSED CIVIL ENGINEER SHALL BE IMMEDIATELY CONTACTED TO PROVIDE RECOMMENDATIONS FOR POSITIVE AND PROPER DRAINAGE.

3. INSPECTIONS OF IRRIGATION SYSTEM SHALL BE MADE ON A DAILY BASIS TO OBSERVE AND PROVIDE REPAIRS OR REMEDIES TO THE FOLLOWING UNACCEPTABLE PROBLEMS:
A. OVER-SPRAY ON SIDEWALKS, STREETS, PAVED AREAS, PARKING AREAS, FENCES, WALLS, BUILDINGS OR STRUCTURES.
B. DRAINAGE OR RUN-OFF ACROSS SIDEWALKS, PAVING OR STREETS.
C. DAMAGED OR IMPROPERLY OPERATING HEADS, PIPING, VALVES, CONTROLLERS OR OTHER IRRIGATION EQUIPMENT.
D. IMPROPERLY ADJUSTED OR OPERATING MOISTURE SENSORS.

4. ONLY LICENSED AND QUALIFIED LANDSCAPE CONTRACTORS AND LANDSCAPE MAINTENANCE INDIVIDUALS SHALL PROVIDE OR MAKE REPAIRS TO IRRIGATION SYSTEM.

5. AT ALL TIMES, THE LANDSCAPE CONTRACTOR OR MAINTENANCE CONTRACTOR SHALL ASSIGN A QUALIFIED INDIVIDUAL OR INDIVIDUALS TO INSPECT AND MONITOR THE IRRIGATION SYSTEM. OWNERS SHALL BE SUPPLIED WITH 24 HOUR EMERGENCY PHONE NUMBERS FOR USE IN REPORTING BROKEN OR DAMAGED IRRIGATION EQUIPMENT.

6. ALL IRRIGATION EQUIPMENT REQUIRES CONTINUOUS MAINTENANCE, CLEANING, ADJUSTMENT, PARTS REPLACEMENT AND INSPECTION. IT IS THE RESPONSIBILITY OF THE LANDSCAPE CONTRACTOR OR LANDSCAPE MAINTENANCE COMPANY TO PROVIDE THESE SERVICES ON A CONTINUAL AND REGULAR BASIS AND SCHEDULE.

7. WATER SHALL BE APPLIED TO PLANTING AREAS IN SHORT INTERVALS TO PROHIBIT ANY SURFACE PONDING OR RUN-OFF, AND AT NO TIME SHALL WATER BE APPLIED TO CAUSE SOIL SATURATION.

8. OVER WATERING CAN RESULT IN DEATH OF PLANTS, POSSIBLE SOIL EXPANSION AND DAMAGE TO CONCRETE AND ASPHALT PAVING, DAMAGE TO FOUNDATIONS, AND POSSIBLE LOSS OF SOIL COMPACTION. A QUALIFIED GEOTECHNICAL ENGINEER SHALL BE RETAINED TO PROVIDE SITE INSPECTIONS AT LEAST ON AN ANNUAL BASIS TO INSPECT FOR EXCESS SOIL MOISTURE.

ENSURING THAT THE ABOVE PRECAUTIONS, REPAIRS AND CONTINUING MAINTENANCE ARE PROPERLY PERFORMED IS THE RESPONSIBILITY OF THE OWNER. THE LANDSCAPE ARCHITECT HAS BEEN RETAINED TO PREPARE THESE PLANS ONLY, AND DOES NOT PROVIDE POST CONSTRUCTION REVIEWS NOR REVIEWS OF ON-SITE MAINTENANCE. THE LANDSCAPE ARCHITECT DOES NOT ASSUME RESPONSIBILITY NOR LIABILITY OF MAINTENANCE OR REVIEW OF MAINTENANCE WORK OR REPAIRS OR DAMAGES RESULTING FROM LACK OF REPAIRS, MAINTENANCE, ADJUSTMENTS, OR IMPROPER INSTALLATION OF IRRIGATION EQUIPMENT.

IMPORTANT NOTE: CONTRACTOR MUST BE AWARE THAT HE IS RESPONSIBLE TO MAINTAIN THE EXISTING IRRIGATION SYSTEM IN FUNCTIONING ORDER DURING HIS INSTALLATION OF THE NEW SYSTEM IN ORDER TO SUSTAIN THE EXISTING VEGETATION. HE MUST ALSO RECOGNIZE THAT HIS WORK MAY AFFECT OTHER PARTS OF CAMPUS NOT SHOWN ON THE PLANS, AND MUST THEREFORE COORDINATE WITH WSU PROJECT MANAGER, WSU LANDSCAPE MANAGER/HORTICULTURIST, AND WSU CAMPUS PLUMBING DEPARTMENT IN ALL OF HIS WORK ACTIVITIES.

IRRIGATION SCHEDULE

SYMBOL	MANUFACTURER/MODEL/DESCRIPTION	QTY	PSI
M L O	Hunter MP1000 w/ MPR40-06-CV Turf Rotator, 6" pop-up with check valve, MP Rotator nozzle. M=Maroon adj arc 90 to 210, L=Light Blue 210 to 270 arc, O=Olive 360 arc, on MPR40 6" pop-up body.	145	40
K G R	Hunter MP2000 w/ MPR40-06-CV Turf Rotator, 6" pop-up with factory installed check valve, MP Rotator nozzle. K=Black adj arc 90-210, G=Green adj arc 210-270, R=Red 360 arc, on MPR40 6" pop-up body.	87	40
B Y A	Hunter MP3000 w/ MPR40-06-CV Turf Rotator, 6" pop-up with factory installed check valve, MP Rotator nozzle. B=Blue adj arc 90-210, Y=Yellow adj arc 210-270, A=Gray 360 arc, on MPR40 6" pop-up body.	46	40
M L O	Hunter MP1000 w/ MPR40-12-CV Shrub Rotator, 12" pop-up with check valve, MP Rotator nozzle. M=Maroon adj arc 90 to 210, L=Light Blue 210 to 270 arc, O=Olive 360 arc, on MPR40 12" pop-up body.	62	40
K G R	Hunter MP2000 w/ MPR40-12-CV Shrub Rotator, 12" pop-up with check valve, MP Rotator nozzle. K=Black adj arc 90-210, G=Green adj arc 210-270, R=Red 360 arc, on MPR40 12" pop-up body.	35	40
B Y A	Hunter MP3000 w/ MPR40-12-CV Shrub Rotator, 12" pop-up with check valve, MP rotary nozzle. B=Blue adj arc 90-210, Y=Yellow adj arc 210-270, A=Gray 360 arc, on MPR40 12" popup Body.	26	40
T	Hunter MP Corner w/ MPR40-12-CV Shrub Rotator, 12" pop-up with factory installed check valve, MP Rotator nozzle. T=Turquoise adj arc 45-105, on MPR40 12" pop-up body.	7	40
LST RST SST	Hunter MP Strip w/ MPR40-12-CV Shrub Rotator, 12" pop-up with factory installed check valve, MP Rotator nozzle. LST=Ivory left strip, SST=Brown side strip, RST=Copper right strip, on MPR40 12" pop-up body.	46	40

SYMBOL	MANUFACTURER/MODEL/DESCRIPTION
	Brass Remote Control Valve Assembly Rain Bird EFB-CP-PRS-D with pressure regulator
	Quick Coupler Valve Assembly Rain Bird 44LRC two piece body, locking cover
	Resilient Seat Gate Valve Assembly Clow, Matco, or Mueller (Line Size)
M	Master Control Valve Assembly, Normally Open Durot 61EL3IF-HP Globe Valve
D	Manual Drain Valve Assembly Ford B11-333 (Line Size)
C	Controller Assembly Rainmaster Controller Green Tech Satellite Assembly in a 16" Flip Top Satellite Assembly SA6-RM4-30T/ETHR/PMR-CAC/FSB/LPP/QP ETHR- GT Ether Option, FSB- Fow Sensing Board, PMR-CAC- Promax Remote CAC-Receiver, LPP-Line Primary Protection
FS	Flow Sensor Assembly Rainmaster FS-150, 1-1/2" Flow Sensor
f	Filter Assembly 3" Amiad Filter 2-0300-1110-4030 Steel Brushaway Filter Assembly with a Brush Away Cleaning System and Weavewire Screen (50 Mesh-300 Micron) in alluminum enclosure.
POC	Point of Connection 3"
	Irrigation Lateral Line: PVC Schedule 40 Only lateral transition pipe sizes 1" and above are indicated on the plan, with all others being 3/4" in size.
	Irrigation Mainline: PVC Schedule 40 3"
	Pipe Sleeve: PVC Schedule 40 Typical pipe sleeve for irrigation pipe. Pipe sleeve size shall allow for irrigation piping and their related couplings to easily slide through sleeving material. Extend sleeves 18 inches beyond edges of paving or construction.

Valve Callout
#1 — Valve Number
— Valve Flow
#" — Valve Size

Know what's below. Call before you dig.

CALL 2 BUSINESS DAYS IN ADVANCE BEFORE YOU DIG, GRADE, OR EXCAVATE FOR THE MARKING OF UNDERGROUND MEMBER UTILITIES

J-U-B
Engineers • Surveyors • Planners

J-U-B ENGINEERS, Inc.
466 North 900 West
Suite 5
Kaysville, Utah 84037
Phone: 801.547.0393
Fax: 801.547.0397
www.jub.com

REUSE OF DRAWINGS
THIS DOCUMENT, AND THE IDEAS AND DESIGNS INCORPORATED HEREIN, AS AN INSTRUMENT OF PROFESSIONAL SERVICE, IS THE PROPERTY OF J-U-B ENGINEERS, Inc. AND IS NOT TO BE USED IN WHOLE OR PART, FOR ANY OTHER PROJECT WITHOUT THE EXPRESS WRITTEN AUTHORIZATION OF J-U-B ENGINEERS, Inc.

NO.	DESCRIPTION	BY	APR.	DATE
	REVISION			

EAST CAMPUS LANDSCAPE
WEBER STATE UNIVERSITY

IRRIGATION PLAN
NOTES AND SCHEDULE

CAD FILE: 55-10-054_L-IRR
PROJ. #: 55-10-053
DRAWN BY: JR
DESIGN BY: JR
CHECKED BY: GG
SCALE OF SHEET
HOR SCALE: 1"=20'
VER SCALE: N/A
LAST UPDATED: 9/8/2010

SHEET
LI-201

Plot Date:9/9/2010
Date Created:6/30/2010 F:\PROJECTS\JUB\WEBER STATE UNIVERSITY\55-10-054 EAST CAMPUS LANDSCAPE\CAD\MODEL\55-10-054_L-IRR.DWG

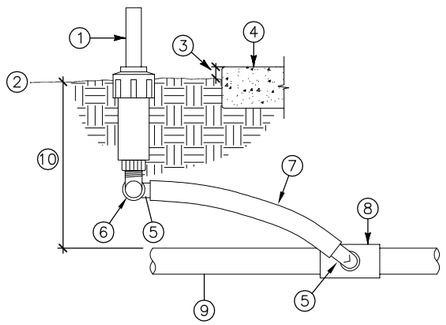

1. POP–UP SPRAY HEAD – SEE LEGEND
2. FINISH GRADE
3. 1" – 1 1/2"
4. NOTE: ALL SPRAY HEADS TO BE PLACED 2" CLEAR OF ALL HARDSCAPE SURFACES
5. SWING PIPE ELL WITH SPIRAL BARB FITTING (TYP.)
6. MARLEX STREET ELL
7. FLEXIBLE SWING PIPE, 12" MIN. 48" MAX. LENGTH
8. PVC SCH 40 SxSxT TEE (OR ELL)
9. PVC LATERAL LINE, SIZE AS NOTED ON PLAN
10. DEPTH – SEE NOTES & TRENCH DETAIL

A POP–UP SPRAY SPRINKLER
NTS

1. 12" POP–UP HEAD
2. ¾" GALVONIZED NIPPLE
3. FINISH GRADE
4. SCH 40 THREADED COUPLER
5. 12" LASCO UNITIZED SWING JOINT W/ BRASS INSERT STABILIZER ELBOW, OR 12" SPEARS SWING JOINT RISER ASSEMBLY W/ BRASS FEMALE THREAD 90° ELL OUTLET
6. LATERAL TEE OR ELL
7. LATERAL PIPE
8. 18" WOODEN STAKE
9. METAL TIE/STRAP

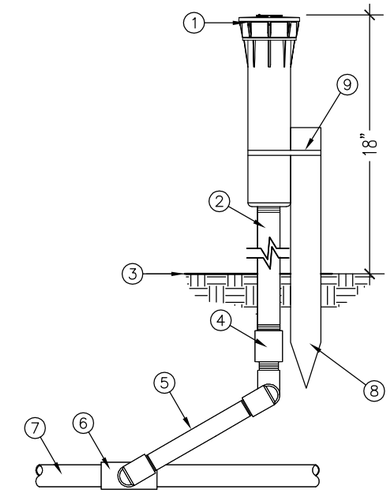

B 12" POP–UP SPRAY ON FIXED RISER
NTS

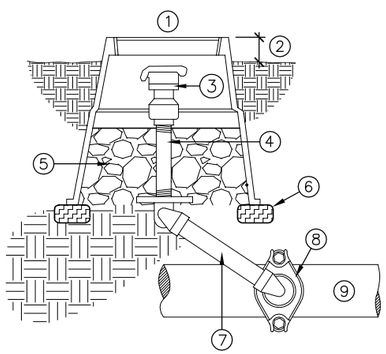

1. 10" ROUND GREEN PLASTIC VALVE BOX, CARSON–BROOKS 910 OR EQUAL
2. HEIGHT ABOVE FINISH GRADE: 1 1/2" IN TURF AREAS (SODDED); 1" IN TURF AREAS (SEEDED); 2" IN PLANTING AREAS
3. QUICK COUPLER VALVE – SEE EQUIPMENT SCHEDULE
4. BRASS NIPPLE, LENGTH AS REQUIRED
5. 6" MIN. DEPTH CLEAN PEA GRAVEL
6. REDWOOD OR BRICK BLOCKING, TYPICAL
7. 12" LASCO UNITIZED SWING JOINT W/ BRASS INSERT STABILIZER ELBOW, OR 12" SPEARS SWING JOINT RISER ASSEMBLY W/ BRASS FEMALE THREAD 90° ELL OUTLET
8. DUCTILE IRON SERVICE SADDLE W/ S.S. STRAP (SIDE MOUNTED, SIZE AS REQUIRED)
9. PVC MAIN LINE

C QUICK–COUPLING VALVE ASSEMBLY
NTS

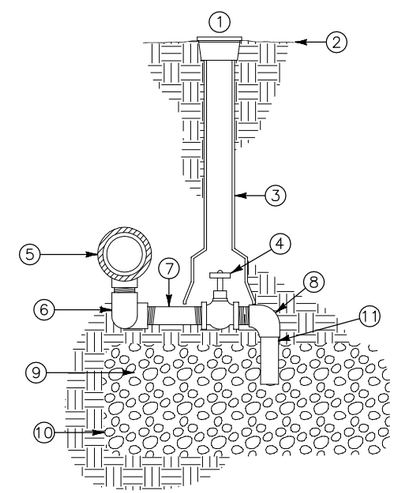

1. ADJUSTABLE CURB BOX W/ BOLT LID, CARSON–BROOKS 250 OR EQUAL
2. FINISH GRADE
3. ADJUST HEIGHT AS REQUIRED
4. 3/4" BRASS GLOBE VALVE W/ CROSS HANDLE – SEE IRRIGATION EQUIPMENT SCHEDULE
5. PVC MAINLINE & D. I. SERVICE TEE
6. (2)–FIPTxFIPT 90° ELL (2)–3/4" x CLOSE PVC NIPPLE
7. 3/4"x6" PVC NIPPLE
8. 3/4" 90° STREET ELL
9. 3/4" ROCK SUMP – 6 C.F. MIN. SIZE
10. FILTER FABRIC COVERING ROCK SUMP
11. 3/4" x 6" PVC NIPPLE

NOTE:
1) ALL PVC NIPPLES TO BE SCHEDULE 80.
2) PROVIDE VALVE KEY TO OWNER

D MANUAL DRAIN VALVE ASSEMBLY
NTS

J-U-B Engineers • Surveyors • Planners

J-U-B ENGINEERS, Inc.
466 North 900 West
Suite 5
Kaysville, Utah 84037
Phone: 801.547.0393
Fax: 801.547.0397
www.jub.com

REUSE OF DRAWINGS
THIS DOCUMENT, AND THE IDEAS AND DESIGNS INCORPORATED HEREIN, AS AN INSTRUMENT OF PROFESSIONAL SERVICE, IS THE PROPERTY OF **J-U-B ENGINEERS, Inc.** AND IS NOT TO BE USED, IN WHOLE OR PART, FOR ANY OTHER PROJECT WITHOUT THE EXPRESS WRITTEN AUTHORIZATION OF **J-U-B ENGINEERS, Inc.**

NO.	DESCRIPTION	BY	APPR.	DATE

REVISION

EAST CAMPUS LANDSCAPE
WEBER STATE UNIVERSITY

IRRIGATION DETAILS

CAD FILE: 55-10-054_IRRIGATION DETAILS
PROJ. #: 55-10-053
DRAWN BY: JR
DESIGN BY: JR
CHECKED BY: GG
SCALE OF SHEET
HOR SCALE: 1"=20'
VER SCALE: N/A
LAST UPDATED: 9/8/2010

SHEET

LI-501

Plot Date:9/9/2010
Date Created:7/27/2010 F:\PROJECTS\JUB\WEBER STATE UNIVERSITY\55-10-054 EAST CAMPUS LANDSCAPE\CAD\MODEL\55-10-054_IRRIGATION DETAILS.DWG

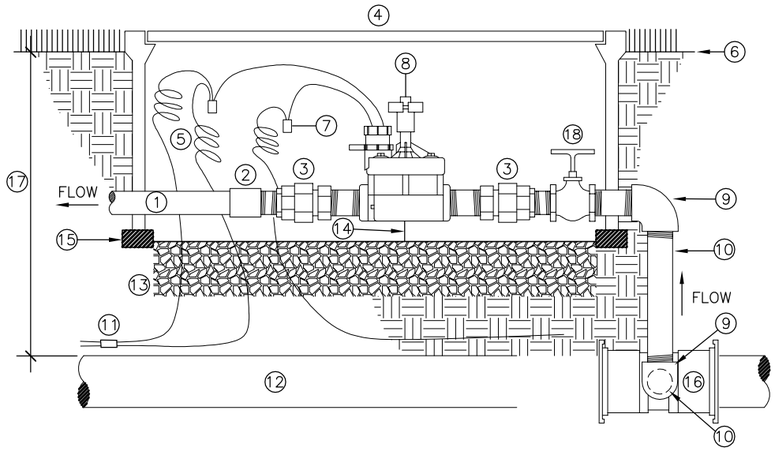

1. LATERAL LINE
2. PVC SCH. 80 FEMALE ADAPTER
3. PVC SCH. 80 UNION
4. GREEN PLASTIC VALVE BOX W/ BOLT LOCK (CARSON–BROOKS OR APPROVED EQUAL), SIZE AS REQUIRED
5. PROVIDE 12" EXPANSION LOOP AT EACH WIRE CONNECTOR IN BOX
6. FINISH GRADE
7. WATER TIGHT WIRE CONNECTORS (TYP.)
8. ELECTRIC CONTROL VALVE – SEE IRRIGATION EQUIPMENT SCHEDULE
9. SCH. 80 PVC ELL
10. SCH. 80 PVC TOE NIPPLE, LENGTH AS REQ'D
11. WIRES TO CONTROLLER, TAPE AND BUNDLE EVERY 10' – SEE TRENCH DETAIL
12. PVC MAIN LINE
13. 4" MIN. DEPTH PEA GRAVEL
14. 2" MIN. CLEARANCE REQUIRED
15. 2"x4" REDWOOD OR BRICK BLOCKING (TYP.)
16. DUCTILE IRON SERVICE TEE, SIZE AS REQ'D
17. DEPTH – SEE NOTES
18. GATE VALVE (LINE SIZE)

A CONTROL VALVE ASSEMBLY
NTS

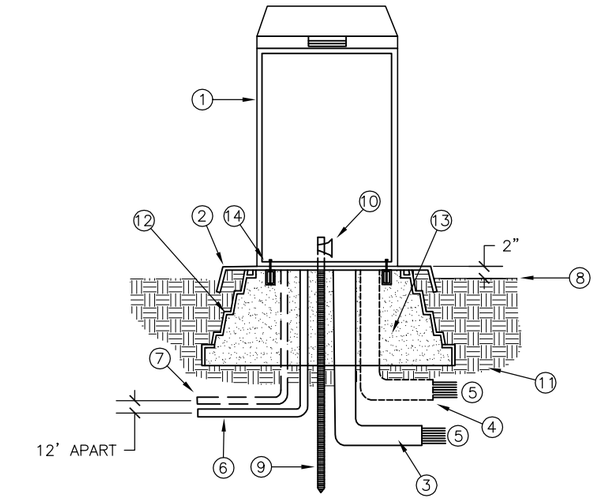

1. CONTROLLER AND CONTROLLER ENCLOSURE – SEE IRRIGATION EQUIPMENT SCHEDULE
2. QUICKPAD 3/16" MIN. THCKNESS ALUMINUM POWDER COATED PERFORMED PAD
3. PVC SWEEP ELL STATIONS 1–24
4. PVC SWEEP ELL STATIONS 25–40 (IF APPLICABLE)
5. DIRECT BURIAL CONTROL WIRES TO CONTROL VALVES
6. 110–VOLT SERVICE IN CONDUIT
7. EV–CAB–COM CABLE 1" CONDUIT
8. FINISH GRADE
9. 5/8" X 8' COPPER GROUND ROD
10. BRONZE GROUND CLAMP
11. UBGRADE COMPACTED TO 90%
12. PREFORMED PAD SUPPORT BASE
13. FILL INSIDE BASE WITH PEA GRAVEL
14. QUICKPAD FASTENING BRACKET (2)

*JOHN DEERE GREEN TECH TO VERIFY INSTALLATION.

B CONTROLLER & ENCLOSURE
NTS

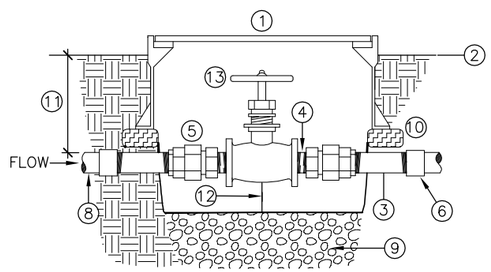

VALVES < 3" IN SIZE

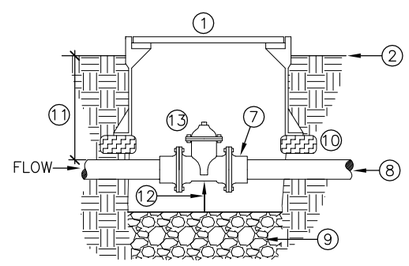

VALVES 3" AND LARGER IN SIZE

1. 10" ROUND PLASTIC VALVE BOX, W/ LOCK BOLT, CARSON–BROOKS 910 OR EQUAL, MARKED "G.V." WITH 2" WHITE LETTERS
2. FINISH GRADE
3. METAL NIPPLE, 12" MIN. LENGTH, PER BELOW:
   1" – 1 1/4" DIA. = GALVANIZED STEEL NIPPLE
   1 1/2" – 3" DIA. = DUCTILE IRON NIPPLE
4. 2" NIPPLE, DIA. AS REQUIRED
5. BRASS UNION (TYP.)
6. PVC SCH. 80 FEMALE ADAPTOR (TYP.)
7. BELL x FLANGE METAL ADAPTER (TYP.)
8. PVC MAINLINE
9. 4" MIN. DEPTH CLEAN PEA GRAVEL
10. 2"x4" REDWOOD OR BRICK BLOCKING (TYP.)
11. DEPTH – SEE NOTES
12. 2" MINIMUM CLEARANCE REQUIRED
13. GATE VALVE (LINE SIZE) – SEE EQUIPMENT SCHEDULE

NOTES:

VALVES ≥ 2" ø SHALL HAVE 2" SQUARE OPERATING NUTS.

MEGA LUG FITTINGS MAY BE USED AS REQUIRED.

C ISOLATION GATE VALVE ASSEMBLY
NTS

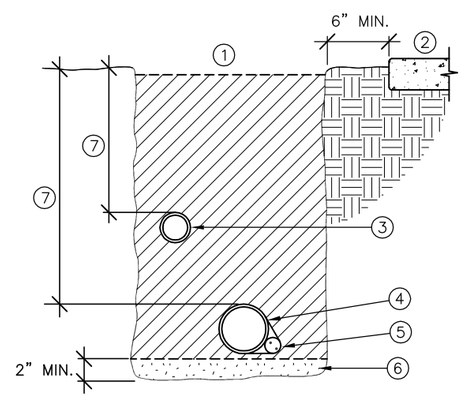

1. BACKFILL MATERIAL – SEE NOTES, COMPACT TO 90% MIN.
2. ADJACENT HARD SURFACE
3. NON–PRESSURE LATERAL LINE
4. PRESSURE MAIN LINE
5. DIRECT BURIAL, LOW VOLTAGE CONTROL WIRES; TAPE AND BUNDLE AT 10 FT. O.C.
6. BEDDING MATERIAL – SEE NOTES
7. PIPE DEPTHS – SEE NOTES

NOTE: SEE SLEEVING DETAIL FOR TRENCHING IN PAVED AREAS.

D TRENCH DETAIL
NTS

J-U-B
Engineers • Surveyors • Planners

J-U-B ENGINEERS, Inc.
466 North 900 West
Suite 5
Kaysville, Utah 84037
Phone: 801.547.0393
Fax: 801.547.0397
www.jub.com

REUSE OF DRAWINGS
THIS DOCUMENT, AND THE IDEAS AND DESIGNS INCORPORATED HEREIN, AS AN INSTRUMENT OF PROFESSIONAL SERVICE, IS THE PROPERTY OF J-U-B ENGINEERS, Inc. AND IS NOT TO BE USED, IN WHOLE OR PART, FOR ANY OTHER PROJECT WITHOUT THE EXPRESS WRITTEN AUTHORIZATION OF J-U-B ENGINEERS, Inc.

NO.	DESCRIPTION	BY	APPR.	DATE
	REVISION			

EAST CAMPUS LANDSCAPE
WEBER STATE UNIVERSITY

IRRIGATION DETAILS

CAD FILE: 55-10-054_IRRIGATION DETAILS
PROJ. #: 55-10-053
DRAWN BY: JR
DESIGN BY: JR
CHECKED BY: GG
SCALE OF SHEET
HOR SCALE: 1"=20'
VER SCALE: N/A
LAST UPDATED: 9/8/2010

SHEET
LI-502

Plot Date:9/9/2010
Date Created:7/27/2010 F:\PROJECTS\JUB\WEBER STATE UNIVERSITY\55-10-054 EAST CAMPUS LANDSCAPE\CAD\MODEL\55-10-054_IRRIGATION DETAILS.DWG

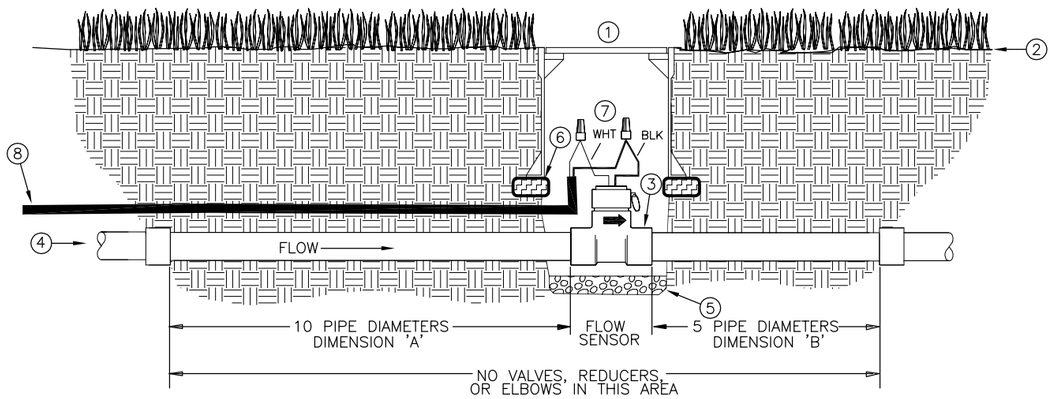

1. 10" ROUND GREEN PLASTIC VALVE BOX, W/ BOLT LOCK, AMATEK OR EQUAL, MARKED "F.S." IN 2" WHITE LETTERS
2. FINISH GRADE
3. FLOW SENSOR
4. PVC MAINLINE
5. 4" MIN. DEPTH PEA GRAVEL
6. 2x4 REDWOOD OR BRICK BLOCKING
7. WATERPROOF WIRE SPLICES
8. SENSOR CABLE TO CONTROLLER

A FLOW SENSOR INSTALLATION

NTS

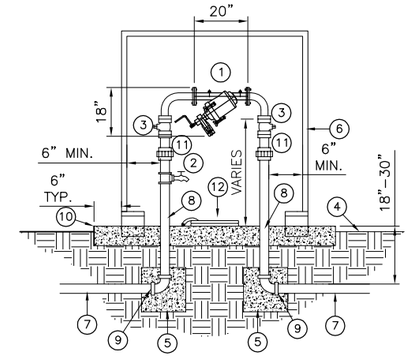

1. INLINE FILTER – SEE IRRIGATION EQUIPMENT SCHEDULE
2. ¾" BRASS HOSE BIB (W/ SADDLE OR TEE)
3. FL WAFER BUTTERFLY VALVE 4" AND LARGER; FULL PORT APOLLO BALL VALVE 3" AND SMALLER
4. FINISH GRADE
5. CONCRETE THRUST BLOCKS (TYP). WRAP PIPES W/ 10 MIL TAPE. CAST AGAINST UNDISTURBED SOIL
6. FILTER ENCLOSURE – SEE FILTER ENCLOSURE DETAIL. INSTALL PER DETAIL.
7. MAIN LINE – SEE IRRIGATION SCHEDULE FOR SIZE AND MATERIAL
8. FLxPE, SPOOL LENGTH AS REQUIRED (TYP 4" AND LARGER) BRASS NIPPLE LENGTH AS REQUIRED (TYP 3" AND SMALLER)
9. ELBOW AND FLANGE ADAPTER AS NEEDED
10. 4" THICK CONCRETE PAD (SIZE AS REQUIRED)
11. ACTION UNION (ON NON FLANGED PIPE)
12. 20' LENGTH OF RUBBER HOSE FOR DRAINING

B BRUSHAWAY STEEL FILTER ASSEMBLY

NTS

THRUST BLOCKING INSTRUCTIONS

1. PROVIDE THRUST BLOCKS AT ALL CHANGES IN SIZE OR DIRECTION. BENDS, REDUCERS, PLUGS, AND THE OPPOSITE SIDE OF TEE BRANCHES ALL REQUIRE THRUST BLOCKS.
2. THE SIZES OF THE BLOCKS ARE DETERMINED BY THE WORKING PRESSURE, THE SIZE AND TYPE OF FITTING, AND SOIL CONDITIONS AT THE JOB SITE. TO CALCULATE THE AREA OF CONTACT WITH THE SOIL, FOLLOW THESE STEPS:
   CALCULATE THE THRUST BY SELECTING THRUST/100 BY SIZE AND TYPE OF FITTING FROM TABLE 1 AND MULTIPLYING THRUST/100 BY SYSTEM PRESSURE DIVIDED BY 100.
3. DIVIDE THE TOTAL THRUST BY BEARING CAPACITY OF THE SOIL IN EXCAVATION (FROM TABLE 2) TO DETERMINE THE AREA IN SQUARE FEET OF THRUST BLOCK REQUIRED TO BE IN CONTACT WITH THE UNDISTURBED SOIL.
4. THE WORKING WATER PRESSURE FOR THESE CALCULATIONS SHALL BE ASSUMED TO BE 200 PSI.

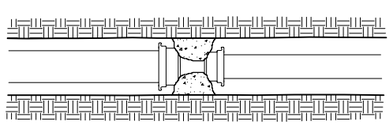

TABLE 1 – THRUST/100

Size	Tees. Plugs	90° Bends	45° Bends	22.5° Bends
2	363	513	259	141
2 1/2	531	751	379	207
3	788	1,114	562	307
4	1,302	1,841	928	508
6	2,822	3,990	2,012	1,101
8	4,783	6,763	3,410	1,865
10	7,430	10,506	5,297	2,898
12	10,452	14,778	7,452	4,076

FOR REDUCERS, SUBTRACT SMALL OPENING PLUG THRUST FROM LARGE OPENING PLUG THRUST TO CALCULATE THRUST/100.

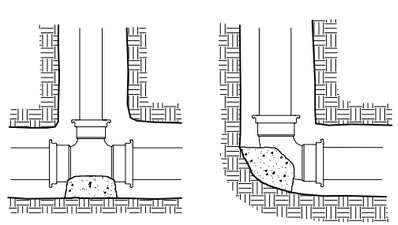

TABLE 2 – SAFE BEARING LOAD

SOIL TYPE	LBS PER SQ FT*
Soft Clay	1,000
Sand	2,000
Sand & Gravel	3,000
Sand & Gravel cemented w/Clay	4,000
Hard Pan	10,000

*HARCO ASSUMES NO RESPONSIBILITY FOR THE ABOVE BEARING LOAD DATA. THE ENGINEER IS RESPONSIBLE FOR DETERMINING SAFE BEARING LOADS, AND WHEN DOUBT EXISTS, SOIL BEARING TESTS SHOULD BE SPECIFIED. THE BEARING LOADS GIVEN ARE FOR HORIZONTAL THRUSTS WHEN DEPTH OF COVER EXCEEDS 2 FEET.

C THRUST BLOCKING DETAIL

NTS

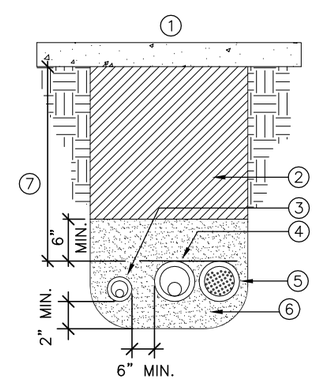

1. HARDSCAPE SURFACE – SEE CIVIL PLANS
2. BACKFILL MATERIAL – SEE NOTES
3. LATERAL LINE W/SLEEVE.
4. PRESSURE MAIN LINE SLEEVE
5. CONTROL WIRE SLEEVE (SAME SIZE AS MAIN LINE SLEEVE)
6. BEDDING MATERIAL – SEE NOTES
7. MINIMUM COVER:
   12" UNDER WALKS
   18" UNDER STREETS

NOTES:

- SLEEVES 4" AND SMALLER USE PVC SCH. 40 PIPE.
- SLEEVES >4" USE PVC CLASS 200 PIPE
- ALL SLEEVES SHALL BE TWO (2) TIMES LARGER THAN DIAMETER OF PIPE TO BE SLEEVED.
- INSTALL SLEEVES AT A DEPTH TO AVOID CONFLICT WITH OTHER UTILITIES AND MAINS.

D SLEEVING DETAIL

NTS

J-U-B Engineers • Surveyors • Planners

J-U-B ENGINEERS, Inc.
466 North 900 West
Suite 5
Kaysville, Utah 84037
Phone: 801.547.0393
Fax: 801.547.0397
www.jub.com

REUSE OF DRAWINGS
THIS DOCUMENT, AND THE IDEAS AND DESIGNS INCORPORATED HEREIN, AS AN INSTRUMENT OF PROFESSIONAL SERVICE, IS THE PROPERTY OF J-U-B ENGINEERS, Inc. AND IS NOT TO BE USED, IN WHOLE OR PART, FOR ANY OTHER PROJECT WITHOUT THE EXPRESS WRITTEN AUTHORIZATION OF J-U-B ENGINEERS, Inc.

NO.	DESCRIPTION	BY	APPR.	DATE

REVISION

EAST CAMPUS LANDSCAPE
WEBER STATE UNIVERSITY

IRRIGATION DETAILS

CAD FILE: 55-10-054_IRRIGATION DETAILS
PROJ. #: 55-10-053
DRAWN BY: JR
DESIGN BY: JR
CHECKED BY: GG
SCALE OF SHEET
HOR SCALE: 1"=20'
VER SCALE: N/A
LAST UPDATED: 9/8/2010

SHEET

LI-503

Plot Date:9/9/2010
Date Created:7/27/2010 F:\PROJECTS\JUB\WEBER STATE UNIVERSITY\55-10-054 EAST CAMPUS LANDSCAPE\CAD\MODEL\55-10-054_IRRIGATION DETAILS.DWG

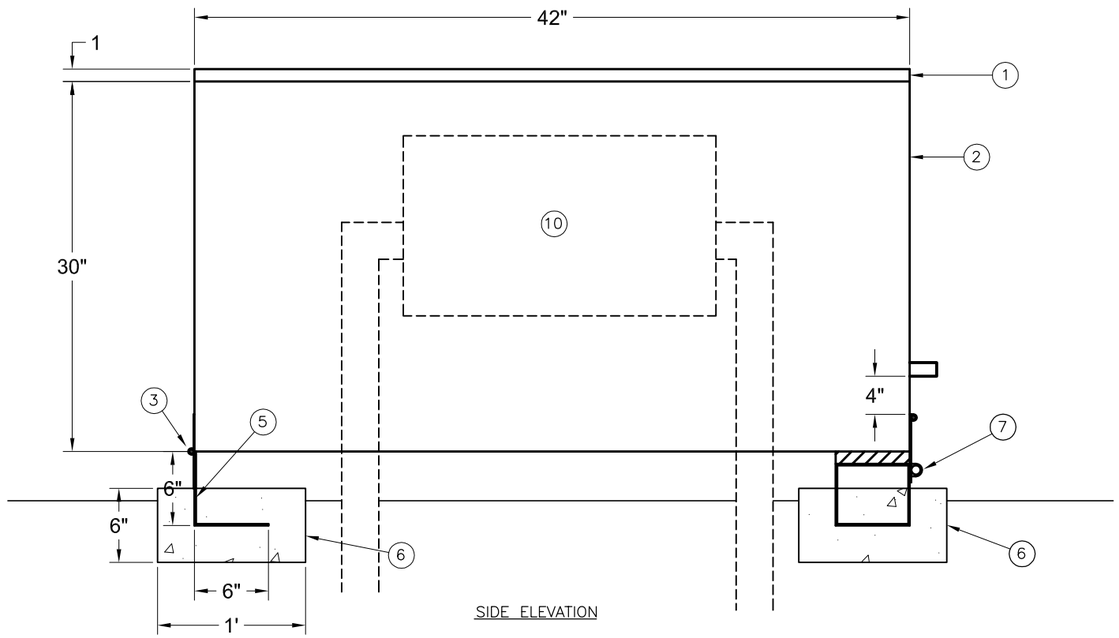

SIDE ELEVATION

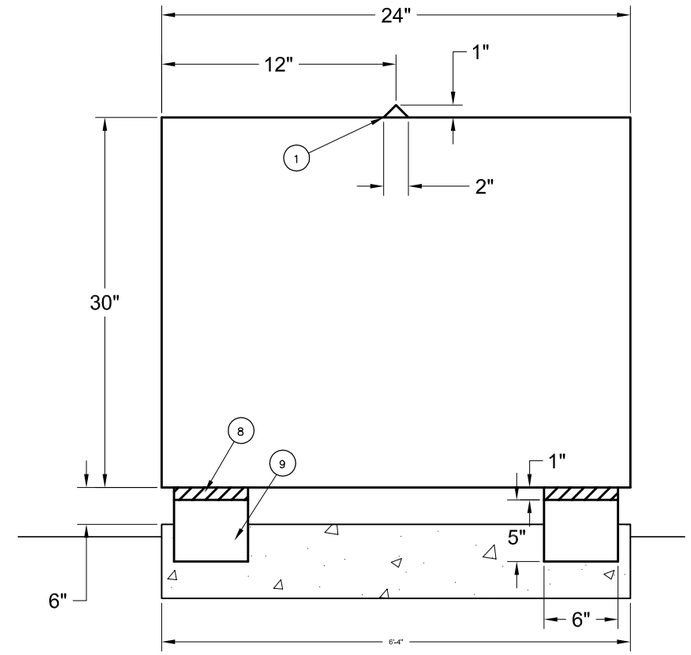

END ELEVATION (OPENING)

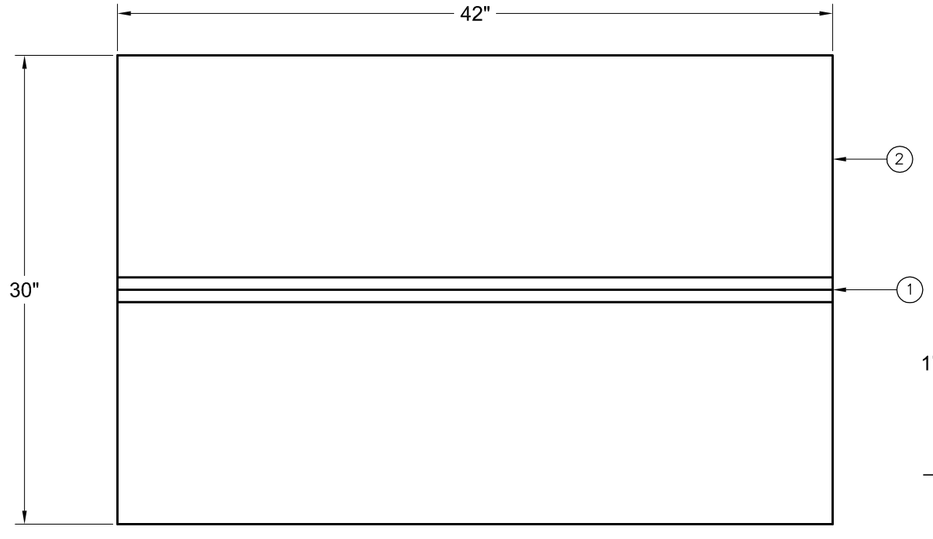

TOP ELEVATION

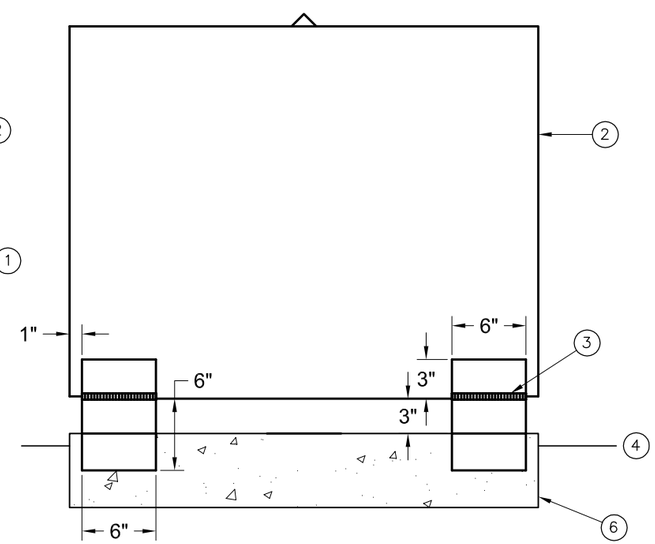

END ELEVATION (HINGE)

1. RIDGE STIFFENER – 1/8" THICKNESS
2. MARINE GRADE ALUMINUM ALLOY METAL ENCLOSURE, WALL THICKNESS OF 1/8" MIN.
3. 6"x3" MIN. STAINLESS STEEL HINGE W/ PIN. WELD TO ENCLOSURE END AND SUPPORT BRACKET (2 REQUIRED).
4. FINISH GRADE
5. STAINLESS STEEL HINGE SUPPORT BRACKETS (2 REQUIRED)
6. 12"x6"x38" CONCRETE BASE; ONE AT EACH END. PLACE 1" ABOVE FINISHED GRADE.
7. STAINLESS STEEL LOCKING MECHANISM (HASP OR OVERLAPPING METAL RINGS)
8. RUBBER CUSHINING PAD
9. STAINLESS STEEL SUPORT BRACKET W/ CUSHINGING SUPPORT PAD PERMANENTLY AFFIXED TO BRACKET (2 REQUIRED).
10. FILTER ASSEMBLY – SEE EQUIPMENT SCHEDULE
11. 4"x2" D HANDLE TO LIFT ENCLOSURE. CENTER IN MIDDLE OF ENCLOSURE.

A 4" FILTER ENCLOSURE
NTS

J-U-B
Engineers • Surveyors • Planners

J-U-B ENGINEERS, Inc.
466 North 900 West
Suite 5
Kaysville, Utah 84037
Phone: 801.547.0393
Fax: 801.547.0397
www.jub.com

REUSE OF DRAWINGS
THIS DOCUMENT, AND THE IDEAS AND DESIGNS INCORPORATED HEREIN, AS AN INSTRUMENT OF PROFESSIONAL SERVICE, IS THE PROPERTY OF **J-U-B ENGINEERS, Inc.** AND IS NOT TO BE USED, IN WHOLE OR PART, FOR ANY OTHER PROJECT WITHOUT THE EXPRESS WRITTEN AUTHORIZATION OF **J-U-B ENGINEERS, Inc.**

NO.	DESCRIPTION	BY	APPR.	DATE

REVISION

EAST CAMPUS LANDSCAPE
WEBER STATE UNIVERSITY

IRRIGATION DETAILS

CAD FILE: 55-10-054_IRRIGATION DETAILS
PROJ. #: 55-10-053
DRAWN BY: JR
DESIGN BY: JR
CHECKED BY: GG
SCALE OF SHEET
HOR SCALE: 1"=20'
VER SCALE: N/A
LAST UPDATED: 9/8/2010

SHEET
LI-504

Plot Date:9/9/2010
Date Created:7/27/2010 F:\PROJECTS\JUB\WEBER STATE UNIVERSITY\55-10-054 EAST CAMPUS LANDSCAPE\CAD\MODEL\55-10-054_IRRIGATION DETAILS.DWG

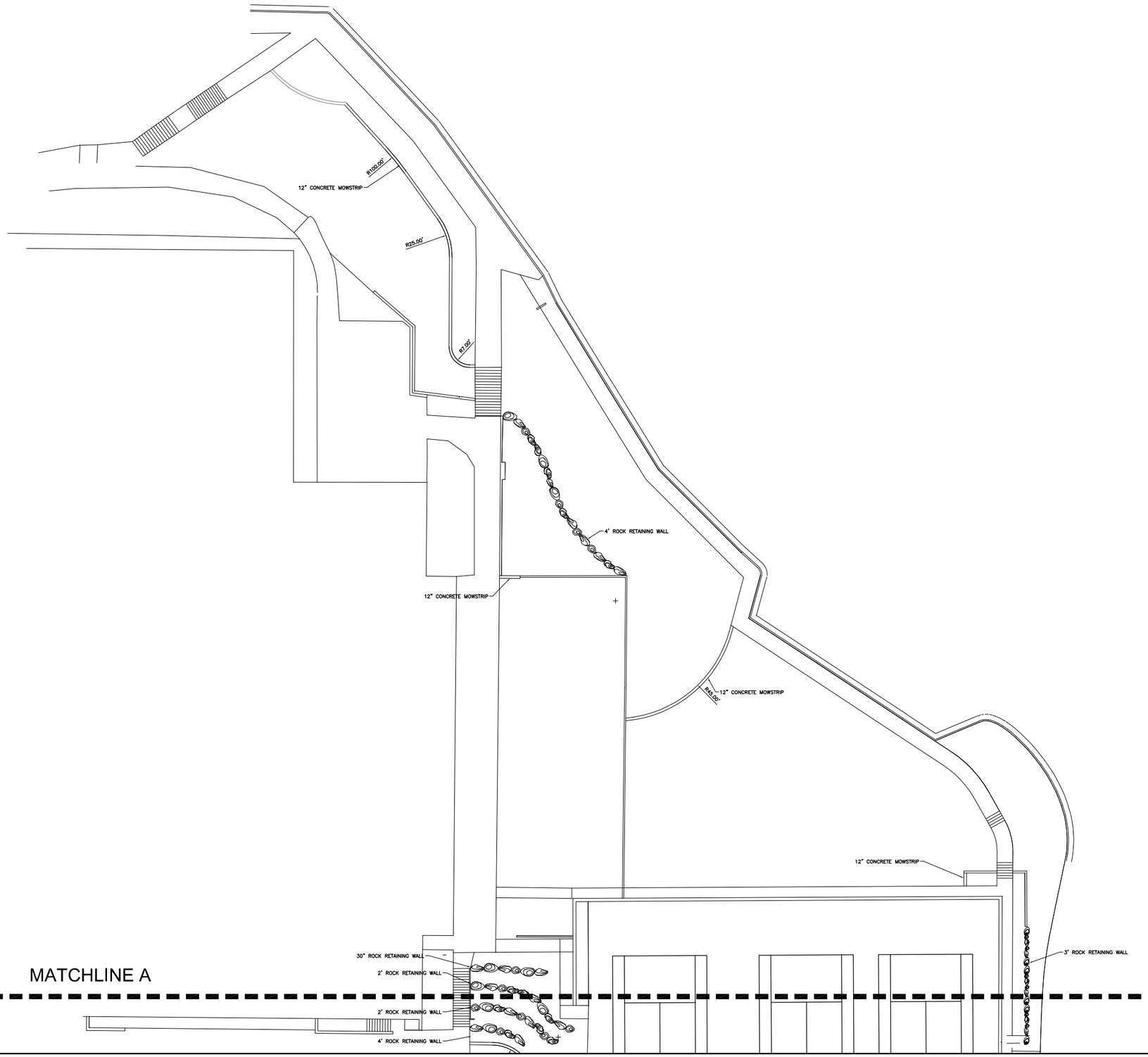

NOTE: CONCRETE MOW STRIPS SHALL JOIN AND MEET THE FINISHED SURFACE OF EXISTING CONCRETE SURFACES.

.

Know what's below. Call before you dig.

CALL 2 BUSINESS DAYS IN ADVANCE BEFORE YOU DIG, GRADE, OR EXCAVATE FOR THE MARKING OF UNDERGROUND MEMBER UTILITIES

N

0 20 40

SCALE IN FEET

J-U-B
Engineers • Surveyors • Planners

J-U-B ENGINEERS, INC.
466 North 900 West
Kaysville, Utah 84037
Phone: 801.547.0393
Fax: 801.547.0397
www.jub.com

REUSE OF DRAWINGS
THIS DOCUMENT, AND THE IDEAS AND DESIGNS INCORPORATED HEREIN, AS AN INSTRUMENT OF PROFESSIONAL SERVICE, IS THE PROPERTY OF **J-U-B ENGINEERS, Inc.** AND SHALL NOT BE REUSED IN WHOLE OR PART, FOR ANY OTHER PROJECT WITHOUT THE EXPRESS WRITTEN AUTHORIZATION OF **J-U-B ENGINEERS, Inc.**

NO.	DESCRIPTION	BY	APR.	DATE
	REVISION			

EAST CAMPUS LANDSCAPE IMPROVEMENTS
WEBER STATE UNIVERSITY

LAYOUT AND DIMENSION PLAN

FILE : 55-10-054_L-101X
JUB PROJ. #: 55-10-054
DRAWN BY: BT, JR
DESIGN BY: GG, BT
CHECKED BY: GG
ONE INCH
AT FULL SIZE, IF NOT ONE INCH, SCALE ACCORDINGLY
LAST UPDATED: 9/8/2010

SHEET NUMBER:
LL-101

Plot Date:9/9/2010 10:15 AM Plotted By: Jonathan Ruedas
Date Created:7/7/2010 F:\PROJECTS\JUB\WEBER STATE UNIVERSITY\55-10-054 EAST CAMPUS LANDSCAPE\CAD\SHEETS\55-10-054_L-101X.DWG

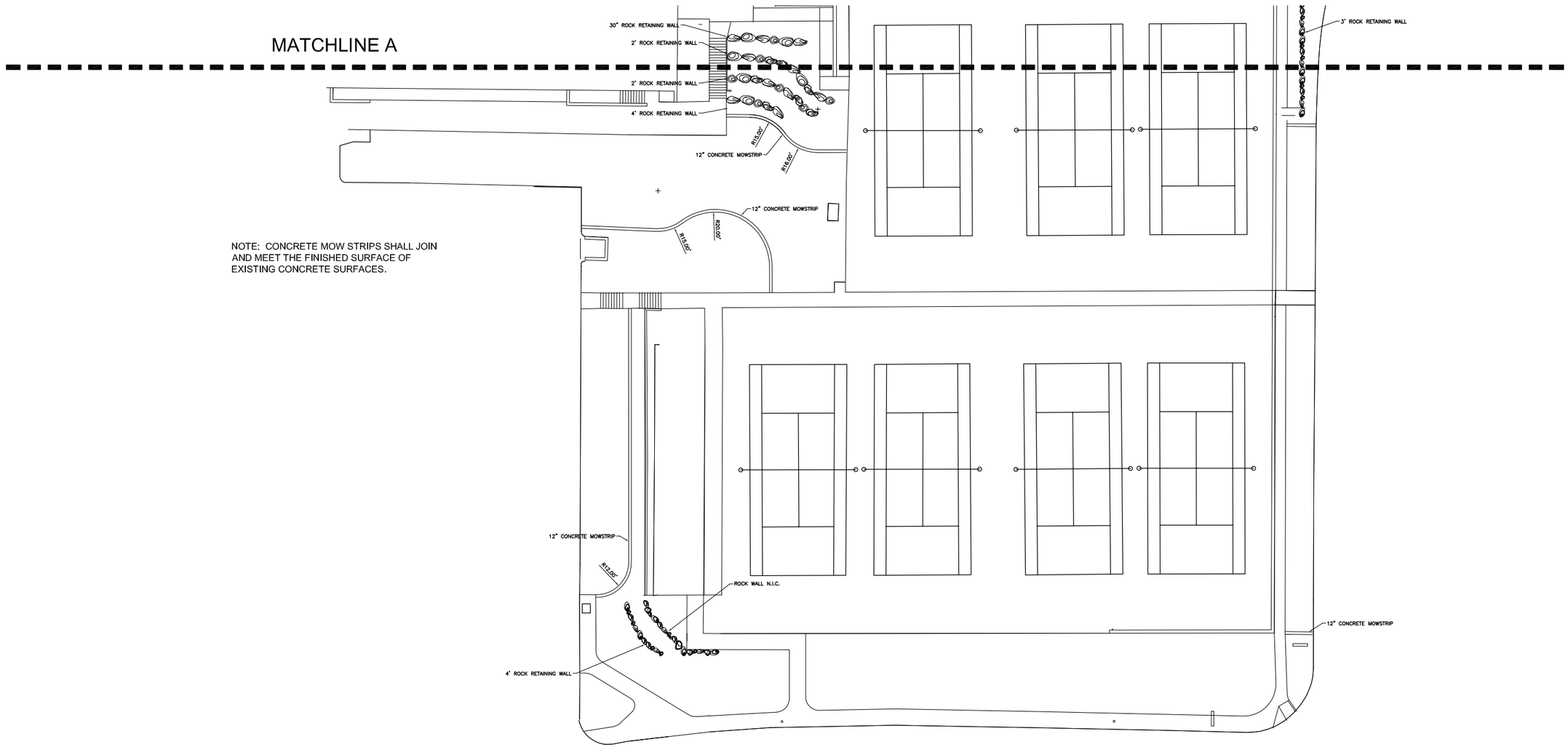

NOTE: CONCRETE MOW STRIPS SHALL JOIN AND MEET THE FINISHED SURFACE OF EXISTING CONCRETE SURFACES.

Know what's below. Call before you dig.

CALL 2 BUSINESS DAYS IN ADVANCE BEFORE YOU DIG, GRADE, OR EXCAVATE FOR THE MARKING OF UNDERGROUND MEMBER UTILITIES

N

0 20 40

SCALE IN FEET

J-U-B Engineers • Surveyors • Planners

J-U-B ENGINEERS, INC.
466 North 900 West
Kaysville, Utah 84037
Phone: 801.547.0393
Fax: 801.547.0397
www.jub.com

REUSE OF DRAWINGS
THIS DOCUMENT, AND THE IDEAS AND DESIGNS INCORPORATED HEREIN, AS AN INSTRUMENT OF PROFESSIONAL SERVICE, IS THE PROPERTY OF **J-U-B ENGINEERS, Inc.** AND IS NOT TO BE USED IN WHOLE OR PART, FOR ANY OTHER PROJECT WITHOUT THE EXPRESS WRITTEN AUTHORIZATION OF **J-U-B ENGINEERS, Inc.**

NO.	DESCRIPTION	BY	APR.	DATE
	REVISION			

EAST CAMPUS LANDSCAPE IMPROVEMENTS
WEBER STATE UNIVERSITY

LAYOUT AND DIMENSION PLAN

FILE : 55-10-054_L-101X
JUB PROJ. # : 55-10-054
DRAWN BY: BT, JR
DESIGN BY: GG, BT
CHECKED BY: GG
ONE INCH
AT FULL SIZE, IF NOT ONE INCH, SCALE ACCORDINGLY
LAST UPDATED: 9/8/2010

SHEET NUMBER:
LL-102

Plot Date:9/9/2010 10:16 AM Plotted By: Jonathan Rueda
Date Created:7/7/2010 P:\PROJECTS\JUB\WEBER STATE UNIVERSITY\55-10-054-EAST CAMPUS LANDSCAPE\CAD\SHEETS\55-10-054_L-101X.DWG

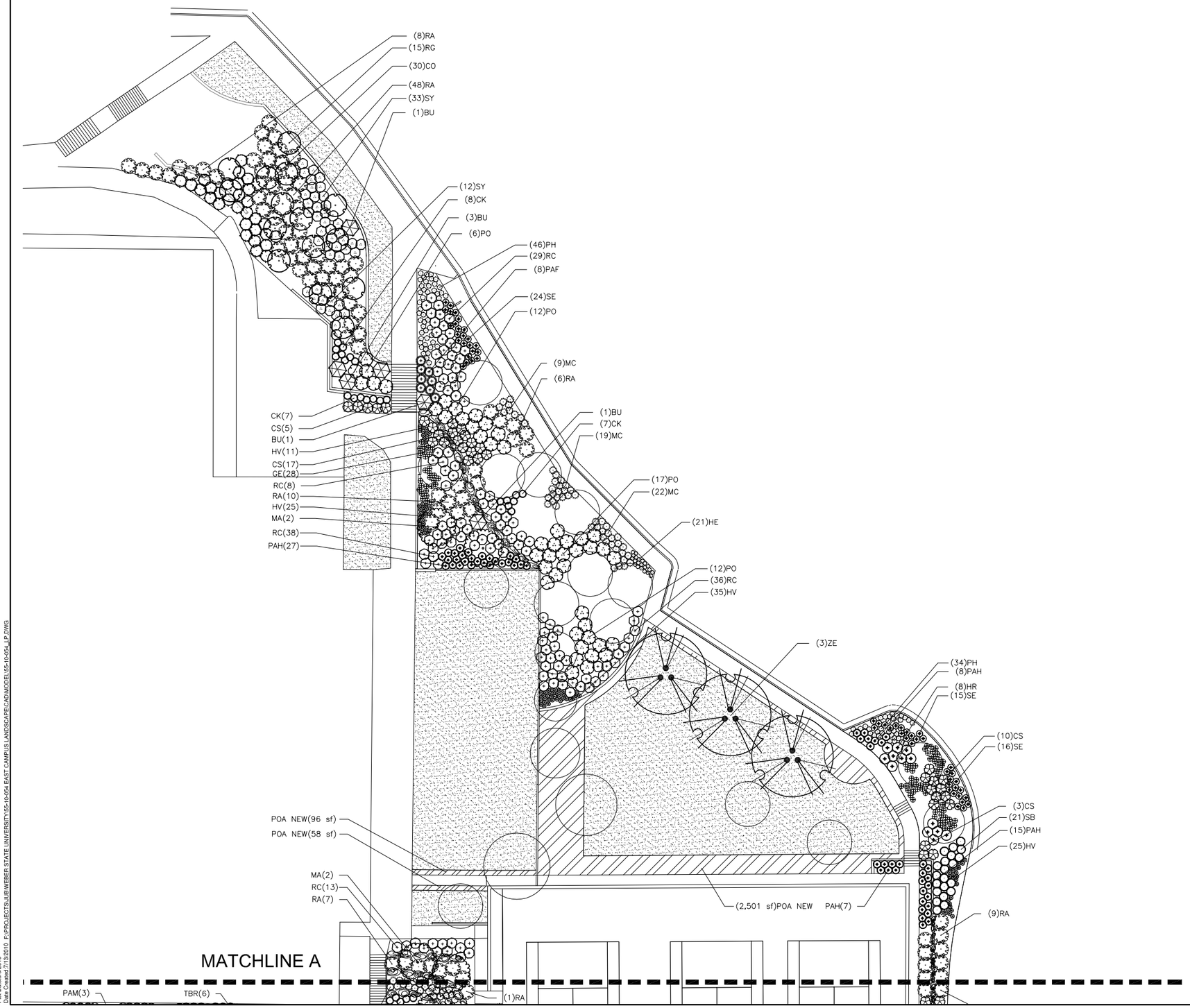

Know what's below. Call before you dig.

CALL 2 BUSINESS DAYS IN ADVANCE BEFORE YOU DIG, GRADE, OR EXCAVATE FOR THE MARKING OF UNDERGROUND MEMBER UTILITIES

N

0 20 40

SCALE IN FEET

J-U-B

Engineers • Surveyors • Planners

J-U-B ENGINEERS, Inc.
466 North 900 West
Suite 5
Kaysville, Utah 84037
Phone: 801.547.0393
Fax: 801.547.0397
www.jub.com

REUSE OF DRAWINGS
THE DOCUMENT AND THE IDEAS AND DESIGNS INCORPORATED HEREIN, AS AN INSTRUMENT OF PROFESSIONAL SERVICE, IS THE PROPERTY OF **J-U-B ENGINEERS, Inc.** AND IS NOT TO BE USED, IN WHOLE OR PART, FOR ANY OTHER PROJECT WITHOUT THE EXPRESS WRITTEN AUTHORIZATION OF **J-U-B ENGINEERS, Inc.**

NO.	DESCRIPTION	BY	APR.	DATE

REVISION

EAST CAMPUS LANDSCAPE
WEBER STATE UNIVERSITY

Planting Plan

CAD FILE: 55-10-054_LP
PROJ. #: 55-10-053
DRAWN BY: JR
DESIGN BY: JR
CHECKED BY: GG
SCALE OF SHEET
HOR SCALE: 1"=20'
VER SCALE: N/A
LAST UPDATED: 9/8/2010

SHEET

LP-101

Plot Date:9/9/2010
Date Created:7/13/2010 F:\PROJECTS\J-U-B\WEBER STATE UNIVERSITY\55-10-054 EAST CAMPUS LANDSCAPE\CAD\MODEL\55-10-054_LP.DWG

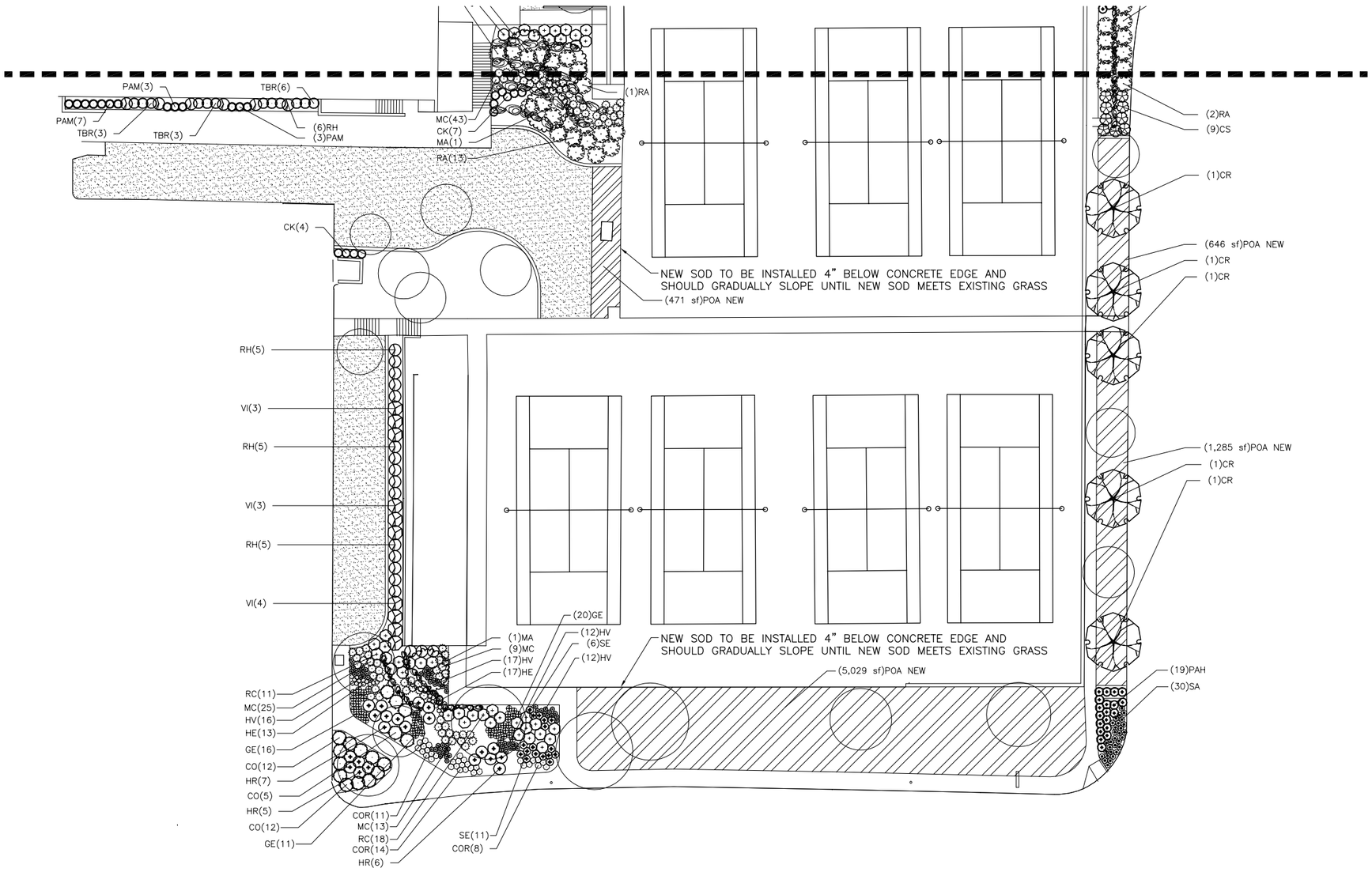

Know what's below. Call before you dig.

CALL 2 BUSINESS DAYS IN ADVANCE BEFORE YOU DIG, GRADE, OR EXCAVATE FOR THE MARKING OF UNDERGROUND MEMBER UTILITIES

N

0 20 40

SCALE IN FEET

J-U-B Engineers • Surveyors • Planners

J-U-B ENGINEERS, Inc.
466 North 900 West
Suite 5
Kaysville, Utah 84037
Phone: 801.547.0393
Fax: 801.547.0397
www.jub.com

REUSE OF DRAWINGS

THIS DOCUMENT, AND THE IDEAS AND DESIGNS INCORPORATED HEREIN, AS AN INSTRUMENT OF PROFESSIONAL SERVICE, IS THE PROPERTY OF **J-U-B ENGINEERS, Inc.** AND IS NOT TO BE USED, IN WHOLE OR PART, FOR ANY OTHER PROJECT WITHOUT THE EXPRESS WRITTEN AUTHORIZATION OF **J-U-B ENGINEERS, Inc.**

NO.	DESCRIPTION	DATE	BY	APR.
	REVISION			

EAST CAMPUS LANDSCAPE
WEBER STATE UNIVERSITY

Planting Plan

CAD FILE: 55-10-054_LP
PROJ. #: 55-10-053
DRAWN BY: JR
DESIGN BY: JR
CHECKED BY: GG
SCALE OF SHEET
HOR SCALE: 1"=20'
VER SCALE: N/A
LAST UPDATED: 9/8/2010

SHEET

LP-102

Plot Date:9/9/2010
Date Created:7/13/2010 F:\PROJECTS\JUB\WEBER STATE UNIVERSITY\55-10-054 EAST CAMPUS LANDSCAPE\CAD\MODEL\55-10-054_LP.DWG

PLANT SCHEDULE

TREES	CODE	QTY	BOTANICAL NAME	COMMON NAME	CONT	CAL
	CR	5	Crataegus phaenopyrum	Washington Hawthorn	B & B	2.5"Cal
	MA	6	Malus x 'Mary Potter'	Crab Apple	B & B	2.5"Cal
	ZE	3	Zelkova serrata 'Green Vase'	Sawleaf Zelkova	B & B	2"Cal

SHRUBS	CODE	QTY	BOTANICAL NAME	COMMON NAME	CONT
	BU	6	Buddleja davidii 'Royal Red'	Butterfly Bush	5 gal
	CS	44	Caryopteris x clandonensis 'Sunshine Blue'	Petit Bleu	5 gal
	CO	47	Cotoneaster dammeri 'Coral Beauty'	Bearberry Cotoneaster	5 gal
	MC	140	Mahonia aquifolium 'Compacta'	Compact Oregon Grape	5 gal
	PO	47	Physocarpus opulifolius 'Summer Wine'	Summer Wine Ninebark	5 gal
	RH	24	Rhamnus frangula 'Columnaris'	Tallhedge Buckthorn	5 gal
	RA	104	Rhus aromatica 'Gro-Low'	Gro-Low Fragrant Sumac	5 gal
	RG	15	Rhus glabra	Smooth Sumac	5 gal
	RC	153	Ribes alpinum	Alpine Currant	5 gal
	SB	21	Spiraea x bumalda 'Anthony Waterer'	Anthony Waterer Spiraea	5 gal
	SY	45	Symphoricarpos orbiculatus	Indian Currant	5 gal
	TBR	12	Taxus baccata 'Repandens'	Spreading English Yew	5 gal
	VI	10	Viburnum trilobum 'Bailey Compact'	Bailey's Compact American Cranberry Bush	5 gal

ANNUALS/PERENNIALS	CODE	QTY	BOTANICAL NAME	COMMON NAME	CONT
	COR	33	Coreopsis verticillata 'Moonbeam'	Threadleaf Coreopsis	1 gal
	GE	129	Geranium x 'Johnson's Blue'	Johnson's Blue Geranium	1 gal
	HE	51	Heuchera x 'Peach Flambe'	Peach Flambe Coral Bells	1 gal
	HV	168	Heuchera x 'Vesuvius'	Hybrid Coralbell	1 gal
	HR	34	Hosta x 'Royal Standard'	Plantain Lily	1 gal
	PH	80	Phlox subulata 'Blue Emerald'	Moss Phlox	1 gal
	SA	30	Salvia nemorosa 'May Night'	May Night Sage	1 gal
	SE	72	Sedum spectabile 'Autumn Joy'	Stonecrop	1 gal

GRASSES	CODE	QTY	BOTANICAL NAME	COMMON NAME	CONT
	CK	33	Calamagrostis x acutiflora 'Karl Foerster'	Feather Reed Grass	1 gal
	PAF	8	Pennisetum alopecuroides	Fountain Grass	1 gal
	PAH	76	Pennisetum alopecuroides 'Hameln'	Hameln Dwarf Fountain Grass	1 gal
	PAM	13	Pennisetum alopecuroides 'Moudry'	Black Flowered Fountain Grass	5 gal

SOD/SEED	CODE	QTY	BOTANICAL NAME	COMMON NAME	CONT
	POA EXI	22,302 sf	Poa pratensis (Existing)	Kentucky Bluegrass	sod
	POA NEW	10,089 sf	Poa pratensis (New)	Kentucky Bluegrass	sod

Know what's below. Call before you dig.

CALL 2 BUSINESS DAYS IN ADVANCE BEFORE YOU DIG, GRADE, OR EXCAVATE FOR THE MARKING OF UNDERGROUND MEMBER UTILITIES

J-U-B
Engineers • Surveyors • Planners

J-U-B ENGINEERS, Inc.
466 North 900 West
Suite 5
Kaysville, Utah 84037
Phone: 801.547.0393
Fax: 801.547.0397
www.jub.com

REUSE OF DRAWINGS
THIS DOCUMENT, AND THE IDEAS AND DESIGNS INCORPORATED HEREIN, AS AN INSTRUMENT OF PROFESSIONAL SERVICE, IS THE PROPERTY OF **J-U-B ENGINEERS, Inc.** AND IS NOT TO BE USED, IN WHOLE OR PART, FOR ANY OTHER PROJECT WITHOUT THE EXPRESS WRITTEN AUTHORIZATION OF **J-U-B ENGINEERS, Inc.**

REVISION

NO.	DESCRIPTION	BY	APR.	DATE

EAST CAMPUS LANDSCAPE
WEBER STATE UNIVERSITY

Planting Plan Schedule

CAD FILE: 55-10-054_LP
PROJ. #: 55-10-053
DRAWN BY: JR
DESIGN BY: JR
CHECKED BY: GG
SCALE OF SHEET
HOR SCALE: 1"=20'
VER SCALE: N/A
LAST UPDATED: 9/8/2010

SHEET
LP-201

Plot Date:9/9/2010
Date Created:7/13/2010 F:\PROJECTS\JUB\WEBER STATE UNIVERSITY\55-10-054 EAST CAMPUS LANDSCAPE\CAD\MODEL\55-10-054_LP.DWG

PLANTING NOTES

1. The planting plan is diagrammatic, and all plant locations are approximate. Plant symbols take precedence over plant quantities shown on the plans and in the Plant Material Schedule. The Contractor shall verify all plant quantities and notify the Landscape Architect of any discrepancies between the quantities and the symbols shown. The Plant Materials Schedule is for the convenience of the Contractor only.

2. Prior to any planting operations, the irrigation system shall be fully operational and all planting areas shall be thoroughly moistened.

3. All topsoil used on this project (stockpiled or import) shall meet the following criteria:
   a. pH: 5.5 - 8.0
   b. EC (electrical conductivity): < 2.0 mmhos per centimeter
   c. SAR (sodium absorption ratio): < 3.0
   d. % OM (percent organic matter): min. 2%
   e. Texture (particle size per USDA classification):
      i. Sand: < 70%
      ii. Silt: < 70%
      iii. Clay: < 30%
      iv. Stone Fragments (gravels or any soil particle > two (2) mm in size: < 5% by volume
      v. Rocks > 1.5": None

   In addition, the topsoil shall be fertile, friable, natural loam and shall be capable of sustaining vigorous plant growth. It shall be free of stones, lumps, clods of hard earth, plants or their roots, sticks, and other extraneous matter. The topsoil shall contain neither noxious weeds nor their seeds. It shall not be used for planting operations while in a frozen or muddy condition.

4. The following procedure shall be followed in placing all topsoil:
   a. All areas to receive topsoil which have a slope of less than ten (10) percent shall be cross-ripped to a depth of four (4) to six (6) inches.
   b. The subgrade material shall be rough graded to plus or minus one tenth (±0.1) foot of the final rough grade, which will allow the Contractor to achieve final finished grade through the placement of the topsoil.
   c. The surface of the subgrade shall be scarified to a depth of two (2) inches to provide a transition zone between the subgrade and the topsoil. Place the topsoil on the subgrade and fine grade to the final finished grade and topsoil depths as indicated on the drawings and in these specifications.
   d. Any required soil amendments (i.e. organic matter, fertilizer, gypsum, etc.) shall be placed directly on the topsoil at the required rates and spread evenly over the planting area. The amendments shall then be thoroughly blended into the topsoil to a depth of four (4) inches. Where only a dry, granular fertilizer is required, it may be applied to the surface and raked in during the fine grading process.

5. Prior to delivery of imported topsoil to the site, the Contractor shall provide to the City the name and location of the topsoil source, along with the certified soil analysis of the topsoil to be used. The analysis shall verify that the proposed topsoil meets the topsoil specifications listed herein, and that it is capable of supporting healthy plant growth. The soil samples shall be obtained per the testing agency directions. Allow ten (10) working days to obtain test results. The costs for such testing shall be the responsibility of the Contractor. Stockpiled topsoil shall also be similarly tested.

6. All plants used for this project shall conform to the following:
   a. Plants shall be fresh and vigorous, of normal habit and growth, and free of disease, insects and insect eggs and insect larvae, weeds and weed seed. No heeled-in plants from cold storage shall be accepted except on approval by the Landscape Architect prior to installation.
   b. Plants shall be subject to inspection and approval at the place of growth or upon delivery to the site for their quality, size, species, and variety. Such approval shall not impair the right of inspection and rejection at the site or during progress of work for size and condition of the plants, latent defects, or injuries. Any and all rejected plants shall be removed immediately from the premises by the Contractor.

7. All plants shall be installed using the following procedures:
   a. Plants shall be generally located as indicated by the drawing. The Contractor shall either stake out the location of all plants in all planting areas, or place the actual plants still in their containers for approval by the Landscape Manager prior to planting. No excavation or planting shall commence without this approval of plant placement by the Landscape Architect.
   b. All trees and shrubs shall be planted in pits as detailed in the planting details contained herein or as noted on the drawings. Tree and shrub pits shall be circular in outline, with a diameter at least two (2) times the diameter of the rootball of each plant to be installed. They shall be one to two and one half (1 - 21/2) inches shallower than the rootball depthy. When the plant is properly placed in the plant pit, the root collar shall be approximately one (1) inch above finished grade. The sides of the plant pit shall be roughened, and not smooth or sculpted.
   c. Plant backfill mix shall be one hundred (100) percent native site soil.
   d. For container grown plants, remove the container and place the plant vertically in the plant pit, directly on undisturbed soil. The root crown or collar shall be approximately one (1) inch above the finished grade.
   e. For balled and burlapped plants, place the plant vertically in the center of the pit, with the rootball resting on undisturbed soil. Cut and remove the wire basket and burlap or other wrapping material from the rootball. This may be done with the rootball in the pit. Any burlap or wire pieces underneath the rootball may be left in place if they cannot be removed. Do not fold the burlap over, but cut away as much as possible without disturbing the rootball. No burlap shall be pulled from under the rootball. Backfill the bottom one third (1/3) of the pit as the wire and burlap are removed. Maintain the integrity of rootball.
   f. Specified backfill material shall be carefully and firmly worked and tamped under and around the rootball to fill all voids. When backfilled and compacted to two thirds (2/3) the depth of the pit, thoroughly water with a hose to completely soak the roots and remove any air pockets.
   g. The plant pit shall then be completely backfilled with the specified backfill mix and tamped well. A shallow watering basin or rain cup shall be formed around each plant. This basin will be equal in diameter to that of the original planting pit.
   h. After planting, the following operations shall be performed:
      i. Stake and mulch all trees per installation details.
      ii. Remove all nursery stakes ties, and tags from all plants. Prune and remove any dead, damaged, or broken branches. Maintain side growth on all trees.

8. Staking shall be performed as follows:
   a. Two (2) 2"x 2" square or 2" diameter round wood stakes, minimum eight (8) feet in length, shall be used to support each tree planted under this contract unless otherwise indicated. Metal t-posts shall not be used.
   b. Tree ties shall follow the staking detail shown on the planting detail sheet. Wire and vinyl hose shall not be used.
   c. Each stake will be located adjacent to the rootball, on opposing sides, to provide maximum support to the trunk. Do not penetrate the rootball with the stake.
   d. The stakes will be driven into the pit bottom after the tree has been placed in the pit, but before backfilling begins so as to avoid damage to the roots.
   e. Stakes and ties shall be removed after one (1) full growing season from the time the tree was installed.

9. All plants shall be thoroughly watered immediately after planting. This shall mean full and thorough saturation of all backfill in the pits and beds during the same day of planting. Water shall be applied only by open end hose at very low pressure to avoid air pockets, injury to the plant, or washing away of backfill. When installed, watered, and fully settled, the plants shall be vertical. Subsequent watering shall be provided by the site's irrigation system.

10. A weed barrier fabric shall be placed to prevent the growth and spread of unwanted weeds in all planting bed areas. The fabric shall be Typar #3301B or approved equal.

11. Shredded bark mulch shall be placed to a depth of three (3) inches on top of the topsoil in all planting beds and over tree planting pits. The finished grade of the bark mulch shall be as follows:
    a. Two (2) inches below the surface or finished grade of any paving, mowstrips, or walks adjacent to the planting area.
    b. At adjacent finished grade of the turf surrounding tree planting pits. In tree pits, the bark shall be kept six (6) inches away from the base of the tree.

12. Throughout the course of planting, excess and waste materials as well as excavated subsoil shall be continuously and promptly removed. All areas shall be kept clear and all reasonable precautions taken to avoid damage to existing structures, plants, and grass.

13. Substantial Completion shall be defined as the complete installation of all plant materials, staking, mulching, and other work on the project in its entirety. Substantial completion shall not be given on designated portions of a project.
    a. At substantial completion of all planting work outlined in these plans, the Contractor shall contact the Landscape Architect to arrange for a walk through to verify that all aspects of the work have been completed. Work must be fully completed (except for final clean-up) according to all plans, notes, and specifications and exhibit professional workmanship.
    b. Notice by the Contractor shall be given, in writing, at least three (3) days in advance to the Landscape Architect so that proper scheduling can be made for those who are to attend.
    c. At the appointed time, an inspection of all plant materials, including staking and mulching, shall be made.
    d. A list of uncompleted items (punch list) shall be generated by the Project Manager and distributed to the Contractor and other involved parties within three (3) days of the substantial completion inspection. Each item on the punch list shall be corrected before the project will be approved and accepted by the Project Manager. The Contractor will be back charged for time spent by the Owner and any consultants who have been brought to the site for a final inspection when the project is not ready for said inspection.

14. The maintenance/establishment period shall begin one (1) day after the substantial completion inspection. The Contractor shall complete all punch list items during this period, as well as maintain and operate the entire irrigation system. The Contractor shall maintain all plantings for a minimum period of sixty (60) days. The maintenance work required shall include but not be limited to the following:
    a. Appropriate watering of all plant materials.
    b. Weeding and removal of all weeds from groundcover and planting areas.
    c. Replacement of any dead, dying, or damaged trees, shrubs, perennials, or groundcover.
    d. Filling and replanting of any low areas which may cause standing water.
    e. Adjusting or sprinkler head heights and watering patterns.
    f. Filling and recompaction of eroded areas, along with any required reseeding and/or replanting.
    g. Weekly removal of all trash, litter, clippings, and all foreign debris.

15. A final inspection shall be held prior to the end of the maintenance period to insure that all punch list items have been completed and the entire project is ready for acceptance by the Owner. Upon satisfaction that the Contractor has completed all punch list items, the irrigation system is fully and completely functional, and the required As-Built drawings, mylars and maintenance manuals have been submitted, the Owner shall accept the project. An official letter of final acceptance shall be prepared and issued to the Contractor and Landscape Architect by the Owner. Upon final acceptance of the project by the Owner, the Owner shall assume full responsibility for the project, and the guarantee period shall begin.

16. Upon final acceptance of the project, the Contractor shall guarantee the plant materials as follows:
    a. All shrubs and groundcovers shall be guaranteed by the Contractor as to growth and health for a period of sixty (60) days after completion of the maintenance period and final acceptance.
    b. All trees shall be guaranteed by the contractor to live and grow in an acceptable upright position for a period of one (1) year after completion of the maintenance period and final acceptance.

    This guarantee shall not apply when conditions beyond the Contractor's control (such as vandalism, theft, or acts of God) cause damage or destroy the landscape. Improper or unreasonalbe maintenance practices by the Owner (such as over-watering, excessive or extreme pruning, equipment damage, etc.) shall also void the guarantee.

17. The Contractor shall, within fifteen (15) days after receiving written notification by the Landscape Architect, remove and replace all guaranteed plant materials which die or become unhealthy or appear to be in a badly impaired condition at any time during the guarantee period. Any plants that settle below or rise above the desired finished grade shall also be reset to the proper grade.

J-U-B
Engineers • Surveyors • Planners

J-U-B ENGINEERS, Inc.
466 North 900 West
Suite 5
Kaysville, Utah 84037
Phone: 801.547.0393
Fax: 801.547.0397
www.jub.com

REUSE OF DRAWINGS
THIS DOCUMENT, AND THE IDEAS AND DESIGNS INCORPORATED HEREIN, AS AN INSTRUMENT OF PROFESSIONAL SERVICE, IS THE PROPERTY OF **J-U-B ENGINEERS, Inc.** AND IS NOT TO BE USED, IN WHOLE OR PART, FOR ANY OTHER PROJECT WITHOUT THE EXPRESS WRITTEN AUTHORIZATION OF **J-U-B ENGINEERS, Inc.**

NO.	DESCRIPTION	BY	APR.	DATE

REVISION

EAST CAMPUS LANDSCAPE
WEBER STATE UNIVERSITY

Planting Plan Notes

CAD FILE: 55-10-054_LP
PROJ. #: 55-10-053
DRAWN BY: JR
DESIGN BY: JR
CHECKED BY: GG
SCALE OF SHEET
HOR SCALE: 1"=20'
VER SCALE: N/A
LAST UPDATED: 9/8/2010

SHEET
LP-202

Plot Date:9/9/2010
Date Created:7/13/2010 F:\PROJECTS\JUB\WEBER STATE UNIVERSITY\55-10-054 EAST CAMPUS LANDSCAPE\CAD\MODEL\55-10-054_LP.DWG

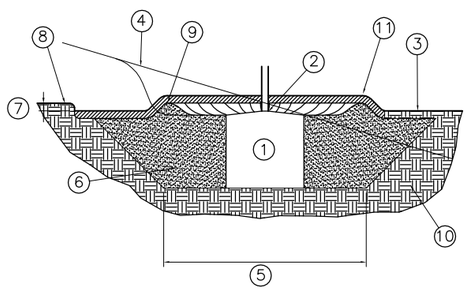

1. ROOTBALL
2. CROWN – 1" ABOVE FINISH GRADE
3. FINISH GRADE
4. FINISH GRADE AT SLOPE (WHERE OCCURS)
5. 2x ROOTBALL DIA. MIN. W/ 45° SIDES
6. BACKFILL MIX (SEE NOTES)
7. 2"
8. TOP OF PAVING (WHERE APPLICABLE)
9. 3" HIGH WATERING BASIN
10. UNDISTURBED SOIL
11. 3" LAYER SHREDDED BARK MULCH AROUND EACH TREE IN 3' RADIUS CIRCLE (WHEN IN TURF)

A TREE/SHRUB PLANTING
NTS

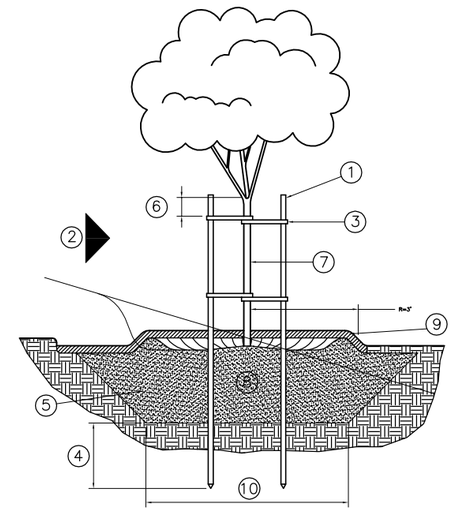

1. 2" DIA.x10' STRAIGHT WOODEN STAKE (2 REQUIRED)
2. PREVAILING WIND DIRECTION
3. V.I.T. CINCH–TIE VINYL TREE TIE (2 PER STAKE, LENGTH AS REQUIRED). SECURE TO STAKE W/ GALV. NAIL, 1 PER TIE
4. 24" MIN.
5. SEE TREE/SHRUB PLANTING DETAIL
6. 6" MAX.
7. TREE TRUNK
8. ROOTBALL
9. 3" LAYER SHREDDED BARK MULCH AROUND EACH TREE IN 3' RADIUS CIRCLE (WHEN IN TURF)
10. 2x ROOTBALL DIA. MIN. W/ 45° SIDES

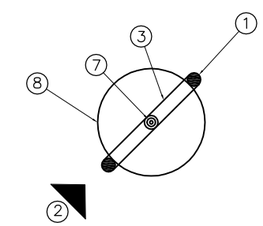

B DOUBLE TREE STAKING
NTS

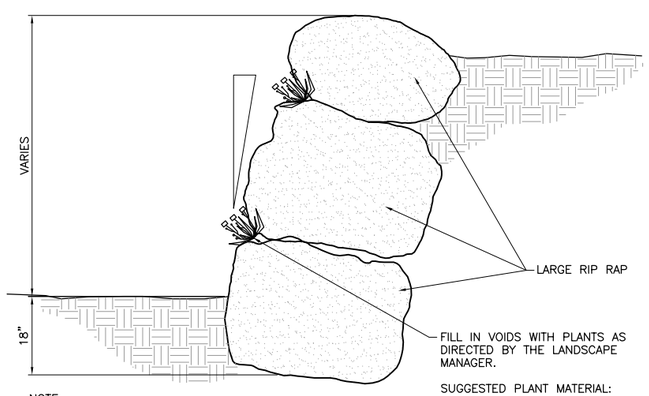

NOTE:

GEOFABRIC AND GROUT ARE NOT REQUIRED

SUGGESTED PLANT MATERIAL:
SEDUM
THYME
SAGINA–MOSS
HARDY ICE PLANT
CERASTIUM–SNOW IN SUMMER

C TYPICAL RETAINING WALL DETAIL
SCALE:N.T.S.

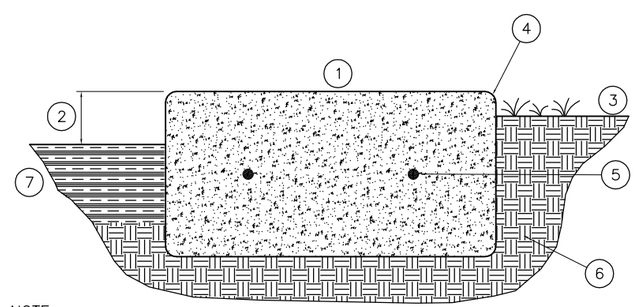

NOTE:
PROVIDE CONSTRUCTION OR CONTROL JOINTS AT 5' O.C. MAX. AND EXPANSION JOINTS WHERE MOWSTRIP ABUTS ANY MASONRY TYPE IMPROVEMENT.

1. 12" X 6" CONCRETE MOW STRIP (CLASS A (AE) MIN)
2. FINISH GRADE AT 2" FOR GROUNDCOVER AREAS
3. FINISH GRADE FOR LAWN AREAS: 1" FOR SEED; 1 1/2" FOR SOD.
4. 1/2" RADIUS TROWELED EDGES (TYP)
5. #3 REBAR CONT. (LAP 12" AT SPLICES)
6. UNDISTURBED OR 90% COMPACTED SUBGRADE
7. 3" LAYER SHREDDED BARK MULCH IN PLANTER BEDS

D 12" CONCRETE MOWSTRIP
NTS

J-U-B
Engineers • Surveyors • Planners

J-U-B ENGINEERS, Inc.
466 North 900 West
Suite 5
Kaysville, Utah 84037
Phone: 801.547.0393
Fax: 801.547.0397
www.jub.com

REUSE OF DRAWINGS
THIS DOCUMENT, AND THE IDEAS AND DESIGNS INCORPORATED HEREIN, AS AN INSTRUMENT OF PROFESSIONAL SERVICE, IS THE PROPERTY OF **J-U-B ENGINEERS, Inc.** AND IS NOT TO BE USED, IN WHOLE OR PART, FOR ANY OTHER PROJECT WITHOUT THE EXPRESS WRITTEN AUTHORIZATION OF **J-U-B ENGINEERS, Inc.**

NO.	DESCRIPTION	BY	APR.	DATE

REVISION

EAST CAMPUS LANDSCAPE
WEBER STATE UNIVERSITY

Planting Details

CAD FILE: 55-10-054_LP
PROJ. #: 55-10-053
DRAWN BY: JR
DESIGN BY: JR
CHECKED BY: GG
SCALE OF SHEET
HOR SCALE: 1"=20'
VER SCALE: N/A
LAST UPDATED: 9/8/2010

SHEET

LP-501

Plot Date:9/9/2010
Date Created:7/13/2010 F:\PROJECTS\JUB\WEBER STATE UNIVERSITY\55-10-054 EAST CAMPUS LANDSCAPE\CAD\MODEL\55-10-054_LP.DWG