utah state liquor store - brigham city remodel

brigham city, utah

project team

owner:

division of facilities construction and management.
4110 state office building.
salt lake city, utah 84114
801.538.3018

State of Utah–Department of Administrative Services

DIVISION OF FACILITIES CONSTRUCTION AND MANAGEMENT

4110 State Office Building/Salt Lake City, Utah 84114/538-3018

architect:

richards bott architects
620 24th street
ogden, utah 84401
801.394.3033

structural:

anw engineers
1594 west park circle
ogden, utah 84404
801.782.6008

sheet index

g1.0	cover sheet / general information
sd1.1	site plan
a1.1	elevations & details
s0.1	structural notes and schedules
s0.2	structural schedules
s1.1	footing and foundation plan, roof framing plan, and details

code analysis

APPLICABLE CODES

	Year
International Building Code	2006
International Mechanical Code	2006
International Fuel Gas Code	2006
International Plumbing Code	2006
International Fire Code	2006
International Energy Conservation Code	2006
National Electrical Code	2008
Uniform Code for Building Conservation	2006
ADA Accessibility Guildelines	2006

A. Occupancy and Group: B

B. Seismic Design Category: D

C. Type of Construction: III B

vicinity map

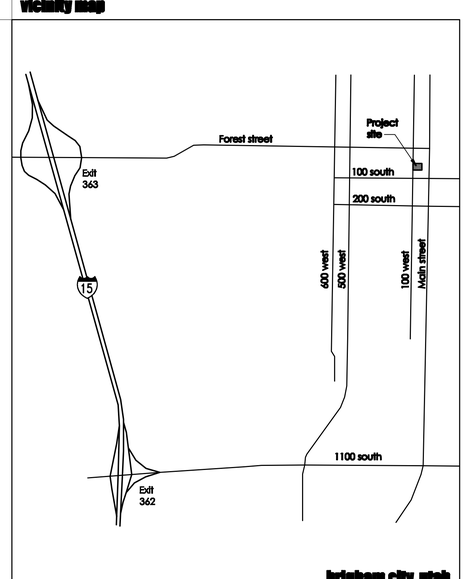

standard symbol legend

asphalt
batt insulation
ceramic tile (in elevation)
concrete
concrete & plaster (in elevation)
concrete masonry units
brick
compacted backfill
earth
finish lumber
glass
glass (in elevation)
gravel / rock fill
gypsum board
particle board
sand, plaster, stucco & sand setting beds
plywood
rigid insulation
steel
wood framing (cont. member)
wood framing (interrupted member)
metal studs

building section reference / sheet reference — a / a1.1
wall section reference / sheet reference — a / a1.1
detail reference / sheet reference — 1 / a1.1
elevation marker — 100'-0" fin. fl.
elevation reference / sheet reference — a, b, c, d / a1.1
room number / door designation — 101 / a
window designation — A
reflected ceiling elevation — 100'-0"
room title / room number — room title / 101

abbreviations

@	at	ga	gauge
Ø	diameter	galv	galvanized
#	pound or number	gc	general contractor
ab	anchor bolt	gl	glass
act	acoustical tile	gyp bd	gypsum board
adj	adjustable	hc	hollow case
aff	above finish floor	hdwd	hardwood
alum	aluminum	hdwr	hardware
bd	board	hdrl	handrail
bldg	building	hm	hollow metal
bm	beam	id	inside diameter
bot	bottom	incl	include(d) (ing)
brg	bearing	insul	insulation
bur	built up roofing	int	interior
cab	cabinet	jt	joint
cjt	control joint	max	maximum
℄	center line	mech	mechanical
clg	ceiling	mtl	metal
cmu	concrete masonry units	mfr	manufacturer
col	column	min	minimum
conc	concrete	nic	not in contract
constr	construction	nts	not to scale
constr jt	construction joint	o.c.	on center
cont	continuous	pl	plate
contr	contract(or)	ℙ	property line
corr	corridor	plas lam	plastic laminate
ct	ceramic tile	plywd	plywood
det	detail	rb	resilient base
dim	dimension	re:	reference
dn	down	reinf	reinforce(d) (ing)
dr	door	rfg	roofing
ea	each	rm	room
eb	expansion bolt	sc	solid core
efs	exterior insul fin system	sch	schedule
exp jt	expansion joint	sec	section
elec	electrical	sim	similar
elev	elevation	spec	specification
eq	equal	sq	square
equip	equipment	stl	steel
ewc	elec water cooler	temp gl	tempered glass
exist	existing	typ	typical
ext	exterior	vct	vinyl composition tile
fd	floor drain	w/	with
fdn	foundation	wd	wood
fecb	fire extinguisher cab	wdw	window
fin fl	finish(ed) floor	w/o	without
ft	foot or feet	wsct	wainscot
ftg	footing		
fur	furring		

these documents are not intended or represented to be suitable for reuse on extensions of this project or any other project. any reuse without written verification or adaptation by the architect for the specific purpose intended will be at the users sole risk and without liability or legal exposure to the architect

richards bott architects
620 24th street ogden, utah 84401 phone 801.394.3033 fax 801.394.9064

utah state liquor store -
brigham city remodel
43 south 100 west
brigham city, utah
project no. 0945
DFCM no. 10121030
05.28.10

set #

g1.0

cover sheet / general information

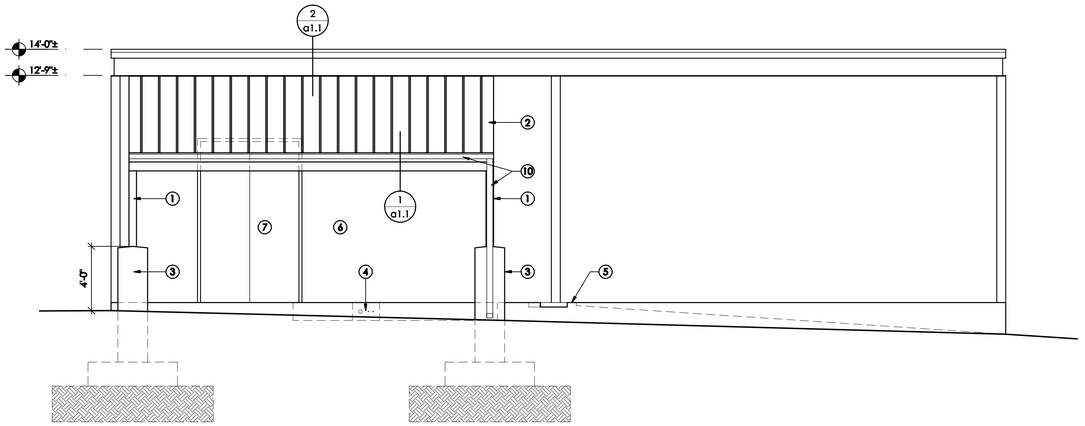

elevation a

scale: 1/4" = 1'-0"

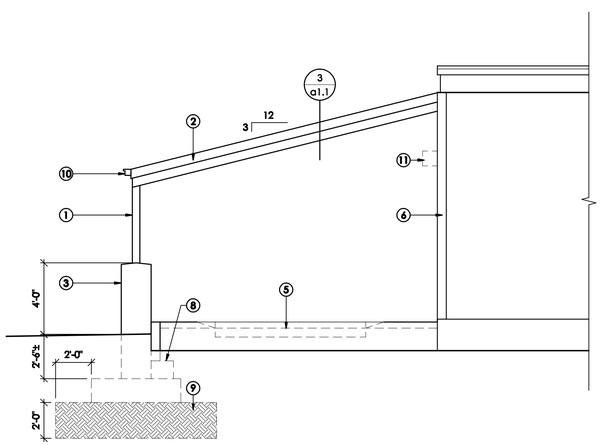

elevation b

scale: 1/4" = 1'-0"

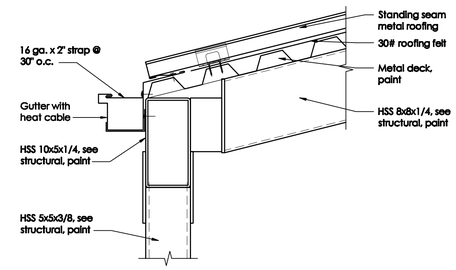

detail 1

scale: 1 1/2" = 1'-0"

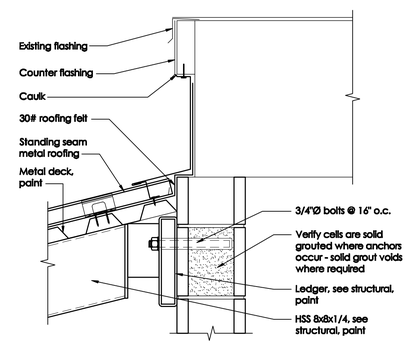

detail 2

scale: 1 1/2" = 1'-0"

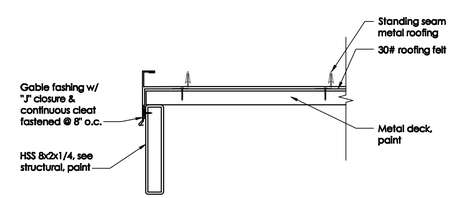

detail 3

scale: 1 1/2" = 1'-0"

keyed notes

1. Steel tube, paint.
2. Metal roof.
3. Concrete pier with sloped top. Rub concrete while still green. See structural for footing and foundation.
4. Provide new 3" conduit and (2) 3/4" conduits for new dock lift. Patch w/ 4" concrete on 4" gravel base.
5. Saw cut existing curb flush with asphalt.
6. Protect existing cmu wall.
7. Protect existing doors to remain.
8. Saw cut edge of existing footing. Place top of new footing at bottom of existing. Provide excavatable slurry backfill.
9. Over excavate 2'-0" under new footing. Provide engineered fill under footing.
10. Gutter, downspout & heat cables with moisture probe. Install pilot light inside next to double doors to indicate when cables are operating. Provide new circuit & conduit to panel 'A'.
11. Remove existing wall pack under new canopy. Provide painted cover plate at j-box.

STATE OF UTAH
G. BRIAN BOTT
No. 136728
LICENSED ARCHITECT

richards
bott
architects

richards bott architects 620 24th street ogden, utah 84401 phone 801.394.3033 fax 801.394.9064

utah state liquor store -
brigham city remodel
43 south 100 west
brigham city, utah
project no. 0945
DFCM no. 10121030
05.28.10

elevations & details

a1.1

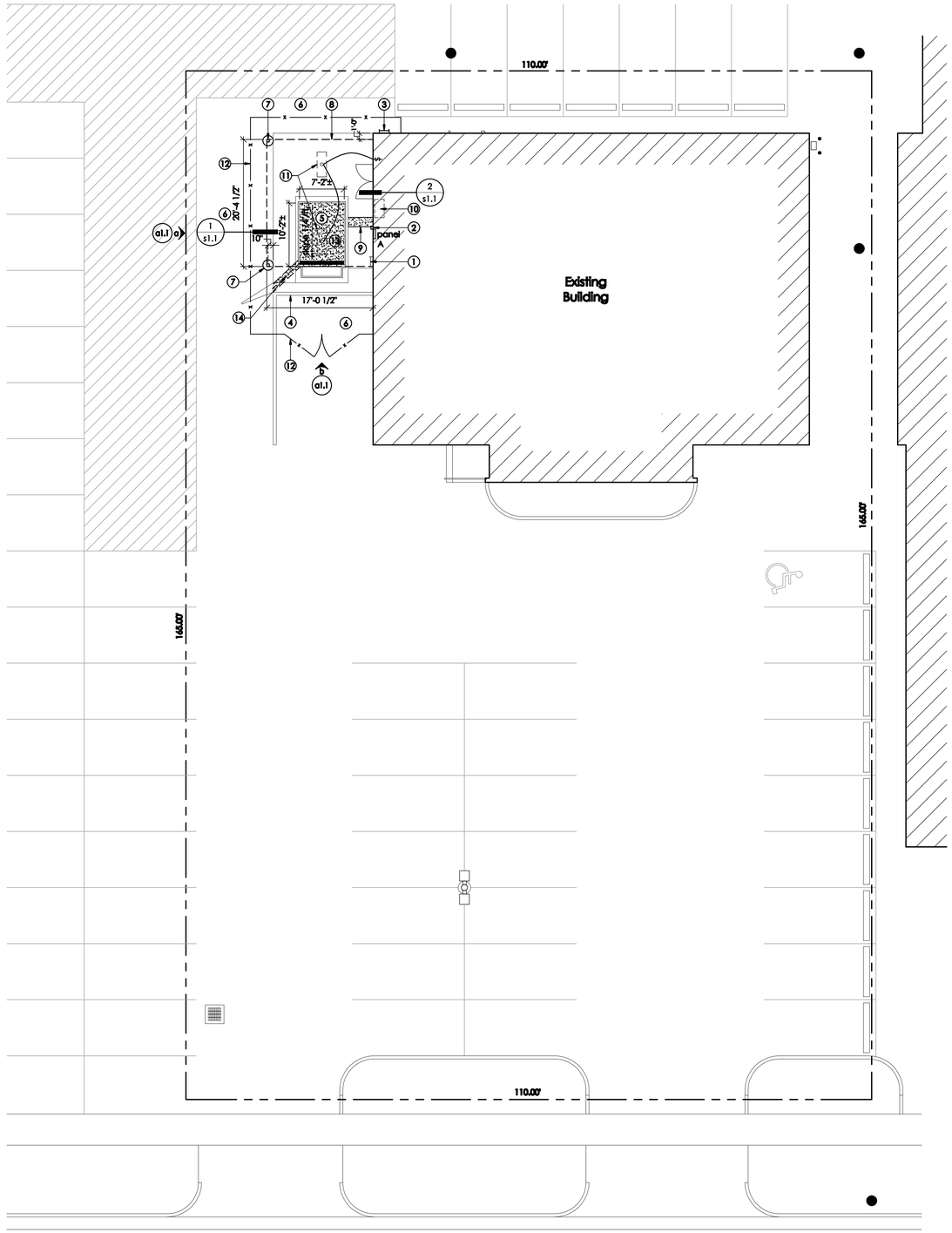

general notes

A. Field verify existing conditions.

B. Repair any damage to existing building or site caused by new construction.

C. Before any excavation verify existing utility locations.

D. The existing dock lift to remain in operation during construction. Lift may be down for 5 days in order to provide new lift.

keyed notes

1. Remove existing roof access ladder, salvage to be relocated. Patch holes in cmu walls.
2. Existing electrical j-box for lift.
3. Reinstall existing ladder.
4. Saw cut existing concrete curb flush with asphalt.
5. Remove existing dock lift. Provide new dock lift to fit in existing pit. If required fillers should be provided to fill gap around lift when in the lowered position, 1/2" max. gap. New dock lift to fit in pit with modification to conc pit. Shim new lift @ all edges to sit level in pit. Provide 2" clots in shim @ 6" o.c. to allow water to drain.
6. Protect existing asphalt to remain.
7. Saw cut existing asphalt for new footing and foundation, see 4/s1.1. Patch asphalt to match existing. Once excavation is complete Owner will provide testing of existing sub-base and compacted engineered fill.
8. New canopy, see structural.
9. Saw cut existing concrete, core through foundation and up thru interior slab with a 3" and (2) 3/4" conduit. Patch slabs to match existing. Coordinate location with lift manufacture.
10. Hydraulic pump and power pack. Saw cut floor and thru foundation for conduits. Patch floor slab with 4" concrete over 4" gravel base. Tie to existing circuit.
11. Light fixture shall be impact resistant, enclosed, surface mounted fluorescent with four F032 T8 lamps, low temperature electronic ballasts, and damp location label, Lithonia TDM 232-AR-120 of equal by Columbia, Day-Brite or Metalux. Run conduit through wall and down wall to switch. Tie to new 20 amp 1P circuit in panel 'A'.
12. Provide temporary 6'-0" chain link fence around construction site. Provide a pair of gates. Protect excavation pits during construction.
13. Remove existing 6" concrete slab & 12" of base. Provide 12" gravel base with a 6" concrete slab. Slope new slab 1/4"/ft. to new 6" shallow trench drain system, HDPE with cast iron grate, see a/ sd1.1.
14. Saw cut existing concrete slab & replace existing pipe w/ new 3" hdpe. Tie to new trench drain, patch slab with 6" conc. Protect existing metal angle around pit.

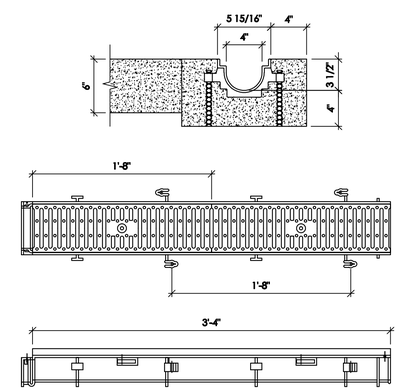

title

a

scale: 1 1/2" = 1'-0"

site plan

scale : 1" = 10'-0"

north

richards bott architects 620 24th street ogden, utah 84401 phone 801.394.3033 fax 801.394.9064

ABC store #22 loading dock improvement - brigham city, utah
43 south 100 west
brigham city, utah
project no. 0945

sd1

STRUCTURAL NOTES

A. GENERAL

1. THE STRUCTURAL NOTES ARE INTENDED TO COMPLEMENT THE PROJECT SPECIFICATIONS WHICH ARE PART OF THE CONSTRUCTION DOCUMENTS. SPECIFIC NOTES AND DETAILS ON THE DRAWINGS SHALL GOVERN OVER THE STRUCTURAL NOTES AND TYPICAL DETAILS.
2. THE ARCHITECTURAL DRAWINGS ARE THE PRIME CONTRACT DRAWINGS. THE STRUCTURAL DRAWINGS ARE SUPPLEMENTARY TO AND MUST BE USED IN CONJUNCTION WITH THE ARCHITECTURAL DRAWINGS AND OTHER CONSULTANTS DRAWINGS. ALL OMISSIONS OR CONFLICTS BETWEEN THE VARIOUS ELEMENTS OF THE WORKING DRAWINGS AND/OR SPECIFICATIONS SHALL BE BROUGHT TO THE ATTENTION OF THE ARCHITECT AND STRUCTURAL ENGINEER BEFORE PROCEEDING WITH ANY WORK INVOLVED. IN CASE OF CONFLICT, FOLLOW THE MOST STRINGENT REQUIREMENT AS DIRECTED BY THE ARCHITECT AT NO ADDITIONAL COST TO THE OWNER.
3. SEE SPECIFICATIONS FOR REQUIRED SUBMITTALS. SUBMITTALS SHALL BE MADE IN A TIMELY MANNER AS INDICATED IN SPECIFICATIONS. REVIEW OF SUBMITTALS BY ARW ENGINEERS IS FOR GENERAL COMPLIANCE ONLY AND IS NOT INTENDED AS APPROVAL. CONTRACTOR IS RESPONSIBLE FOR VERIFYING ALL SIZES, DIMENSIONS, AND ELEVATIONS ON SUBMITTALS AS RELATED TO DESIGN DOCUMENTS. PREPARATION OF SHOP DRAWINGS FOR STRUCTURAL ELEMENTS WILL REQUIRE INFORMATION (I.E. DIMENSIONS, ETC.) FOUND IN THE ARCHITECTURAL, STRUCTURAL, AND OTHER CONSULTANTS DRAWINGS.
4. THE CONTRACTOR SHALL VERIFY ALL CONDITIONS AND DIMENSIONS AT THE SITE. IF ACTUAL CONDITIONS DIFFER FROM THOSE SHOWN ON CONTRACT DOCUMENTS, CONTRACTOR SHALL NOTIFY ARCHITECT PRIOR TO FABRICATION OR CONSTRUCTION OF ANY AFFECTED ELEMENTS.
5. THE CONTRACTOR SHALL COORDINATE AND VERIFY ALL LOCATIONS AND SIZES OF MECHANICAL EQUIPMENT OR OTHER EQUIPMENT BEFORE FABRICATING AND ERECTING STRUCTURAL ELEMENTS. SIZES AND LOCATIONS THAT DIFFER FROM THOSE SHOWN ON THE CONTRACT DOCUMENTS SHALL BE REPORTED TO THE ARCHITECT.
6. THE CONTRACTOR SHALL SUBMIT A WRITTEN REQUEST TO THE ARCHITECT FOR ARCHITECT AND/OR ENGINEER APPROVAL BEFORE PROCEEDING WITH ANY CHANGES, MODIFICATIONS, OR SUBSTITUTIONS.
7. OBSERVATION VISITS TO THE SITE BY ARW ENGINEERS FIELD REPRESENTATIVES SHALL NEITHER BE CONSTRUED AS INSPECTION NOR APPROVAL OF CONSTRUCTION.
8. DURING AND AFTER CONSTRUCTION, BUILDER AND/OR OWNER SHALL KEEP LOADS ON STRUCTURE WITHIN THE LIMITS OF DESIGN LOADS AS NOTED IN THESE DOCUMENTS.
9. SUBJECT TO REVIEW AND APPROVAL BY THE ENGINEER, TYPICAL OR SIMILAR DETAILS AND SECTIONS SHALL APPLY WHERE SPECIFIC DETAILS ARE NOT SHOWN. TYPICAL OR SIMILAR DETAILS REFER TO THE CONDITION ADDRESSED AND ARE NOT NECESSARILY DETAILS LABELED "TYPICAL" OR "SIMILAR" IN THE PLANS AND DOCUMENTS.
10. DRAWINGS AND DETAILS HAVE BEEN PREPARED WITH THE INTENT TO VISUALLY REPRESENT INFORMATION PROVIDED IN SCALED FORM; HOWEVER CONTRACTOR/SUPPLIERS SHOULD NOT SCALE PLANS OR DETAILS FOR DIMENSIONAL INFORMATION.
11. THE CONTRACTOR SHALL PROVIDE ADEQUATE TEMPORARY SHORING AND BRACING FOR ALL STRUCTURAL ELEMENTS UNTIL THE ENTIRE STRUCTURAL SYSTEM IS COMPLETED. DESIGN OF ALL SHORING AND BRACING IS BY OTHERS AT NO ADDITIONAL COST TO THE OWNER.
12. ENGINEER SHALL NOT BE RESPONSIBLE FOR ACTIVITIES UNDER CONTROL OF THE CONTRACTOR SUCH AS CONSTRUCTION SITE SAFETY, MEANS, METHODS AND SEQUENCING OF CONSTRUCTION. ENGINEER SHALL NOT BE RESPONSIBLE FOR FABRICATION, ERECTION AND CONSTRUCTION REQUIREMENTS AS PRESCRIBED BY OSHA OR OTHER REGULATORY AGENCIES REGARDLESS OF INDICATIONS IN THESE DOCUMENTS.
13. NOTICE OF COPYRIGHT: THESE STRUCTURAL DRAWINGS ARE HEREBY COPYRIGHTED BY ARW ENGINEERS. ALL RIGHTS RESERVED. THESE DOCUMENTS DEFINE A STRUCTURE AND ARE INSTRUMENTS OF SERVICE, FOR ONE USE ONLY. REPRODUCTION AND DISTRIBUTION OF THESE DRAWINGS IS ONLY ALLOWED AS REQUIRED FOR REGULATORY AGENCIES AND FOR CONVEYANCE OF INFORMATION TO PARTIES INVOLVED IN THE CONSTRUCTION OF THIS PROJECT. THESE DOCUMENTS SHALL NOT BE REPRODUCED OR COPIED, IN PART OR WHOLE BY ANY PARTY FOR USE IN PREPARATION OF SHOP DRAWINGS OR OTHER SUBMITTALS.
14. CONTRACTOR TO LOCATE ALL EXISTING UTILITY LINES PRIOR TO EXCAVATING

B. SPECIAL INSPECTION

1. SPECIAL INSPECTION SHALL BE PROVIDED BY AN INDEPENDENT AGENCY IN ACCORDANCE WITH IBC 1704 AND AS OUTLINED AND SCHEDULED IN THESE DOCUMENTS. CONTRACTOR SHALL COORDINATE AND COOPERATE WITH REQUIRED INSPECTIONS.
2. ITEMS REQUIRING SPECIAL INSPECTION ARE LISTED IN THE SPECIAL INSPECTION SCHEDULE.

C. BASIS OF DESIGN

1. GOVERNING BUILDING CODE: INTERNATIONAL BUILDING CODE (IBC) 2006
   OCCUPANCY CATEGORY: II
2. ROOF LOADS
   A. FLAT-ROOF SNOW LOAD, Pf: 30 PSF
      1) GROUND SNOW LOAD, Pg: 43 PSF
      2) SNOW EXPOSURE FACTOR, Ce: 1.0
      3) SNOW LOAD IMPORTANCE FACTOR, Is: 1.0
      4) THERMAL FACTOR, Ct: 1.2
   B. DEAD LOAD = 15 PSF
3. WIND DESIGN
   A. BASIC WIND SPEED (3 SECOND GUST): 90 MPH
   B. WIND IMPORTANCE FACTOR, Iw: 1.0
   C. WIND EXPOSURE, C
   D. COMPONENT AND CLADDING DESIGN WIND PRESSURE SHALL BE AS REQUIRED PER ASCE 7-05.
4. SEISMIC DESIGN:
   A. SEISMIC IMPORTANCE FACTOR, IE: 1.0
   B. SITE CLASS: D
   C. SPECTRAL RESPONSE COEFFICIENTS: SDS =0.928 , SD1 = 0.550
   D. SEISMIC DESIGN CATEGORY: D
   E. BASIC SEISMIC-FORCE-RESISTING SYSTEM: CANTILEVERED COLUMN SYSTEM
   F. SEISMIC RESPONSE COEFFICIENT, CS: 0.26
   G. RESPONSE MODIFICATION FACTOR, R: 2.5
   H. ANALYSIS PROCEDURE: EQUIVALENT LATERAL FORCE

D. FOUNDATION

1. DESIGN SOIL PRESSURE: 1500 PSF
2. TOP OF FOOTING ELEVATIONS SHOWN ON THE FOOTING AND FOUNDATION PLAN ARE BASED ON PRELIMINARY GRADING INFORMATION AND MUST BE VERIFIED PRIOR TO CONSTRUCTION. STEPS WHERE SHOWN ARE AT APPROXIMATE LOCATIONS. ALL EXTERIOR FOOTINGS MUST BEAR A MINIMUM OF 30 INCHES BELOW LOWEST ADJACENT FINAL GRADE.
3. ALL WALLS (EXCEPT CANTILEVERED RETAINING WALLS) SHALL BE ADEQUATELY BRACED AGAINST LATERAL MOVEMENT PRIOR TO BACKFILLING. DESIGN AND ERECTION OF BRACING/SHORING IS THE RESPONSIBILITY OF THE GENERAL CONTRACTOR. BRACING SHALL REMAIN IN PLACE UNTIL SUPPORTING STRUCTURAL ELEMENTS ARE IN PLACE AND HAVE ATTAINED FULL STRENGTH.
4. UNLESS NOTED OTHERWISE, ALL FOOTINGS AT COLUMNS TO BE CENTERED BELOW COLUMNS.
5. UNLESS NOTED OTHERWISE, ALL FOOTINGS SHALL HAVE VERTICAL FACES FORMED WITH STANDARD FORMING MATERIALS (WOOD, METAL, ETC.). WITH PRIOR APPROVAL OF ARCHITECT AND ENGINEER, CONCRETE FOR FOOTINGS CAN BE PLACED IN EXCAVATED "SOIL" FORMS PROVIDED THAT THE DIMENSIONS ARE INCREASED 3" ON EACH SIDE.
6. ALL FOOTINGS SHALL BE PLACED ON MECHANICALLY COMPACTED FILL COMPACTED TO NOT LESS THAN 95% OF MODIFIED PROCTOR DENSITY (ASTM D-1557).
7. UNLESS NOTED OTHERWISE, ALL CONCRETE SLABS ON EARTH SHALL BEAR ON STRUCTURAL FILL COMPACTED TO 90% OF MODIFIED PROCTOR DENSITY (ASTM D-1557).

E. CONCRETE

1. ALL CONCRETE SHALL HAVE A DESIGN 28-DAY COMPRESSIVE STRENGTH AS FOLLOWS:
   A. FOOTINGS AND PIERS: 4000 PSI
2. NO PIPES, DUCTS, SLEEVES, ETC. SHALL BE PLACED IN STRUCTURAL CONCRETE UNLESS SPECIFICALLY DETAILED OR APPROVED BY THE STRUCTURAL ENGINEER. NO ALUMINUM PRODUCTS SHALL BE EMBEDDED IN CONCRETE. PENETRATIONS THRU STRUCTURAL CONCRETE ELEMENTS MUST BE APPROVED BY THE ENGINEER AND SHALL BE BUILT INTO THE ELEMENT PRIOR TO CONCRETE PLACEMENT.
3. REFER TO ARCHITECTURAL DRAWINGS FOR MOLDS, GROOVES, ORNAMENTS, ETC. TO BE CAST IN TO CONCRETE, AND FOR EXTENT AND LOCATION OF DEPRESSIONS, CURBS, RAMPS, ETC.

F. ANCHOR BOLTS/EMBEDDED BOLTS

1. ALL ANCHOR BOLTS SHALL HAVE ASTM A-563 HEAVY HEX NUT AND ASTM F-436 WASHERS AT STANDARD OR OVERSIZED HOLES PER AISC SPECIFICATION TABLE J3.3. WHERE HOLE SIZES DO NOT COMPLY WITH THE LIMITATIONS FOR OVERSIZED HOLES THE STRUCTURAL ENGINEER SHALL BE NOTIFIED TO DETERMINE STEEL PLATE WASHER REQUIREMENTS. ANCHOR BOLTS SHALL COMPLY WITH THE FOLLOWING:
   A. AT CANTILEVERED COLUMNS USE - ASTM F554 GRADE 105 HEADED BOLTS. (ASTM A449 THREADED ROD MAY BE USED WITH DOUBLE NUT AND WASHER)
   B. AT ALL OTHER ANCHOR BOLTS (UNLESS NOTED OTHERWISE) - ASTM F1554 GRADE 36 HEADED BOLTS. (ASTM A36 THREADED ROD MAY BE USED WITH DOUBLE NUT AND WASHER)
2. EMBEDDED BOLTS IN MASONRY SHALL BE (UNLESS NOTED OTHERWISE) ASTM A-307 GRADE HEADED BOLTS.
3. SEE TYPICAL ANCHOR BOLT DETAIL FOR DEFINITIONS OF EMBEDMENT LENGTH, ETC.
4. FURNISH TEMPLATES AND OTHER DEVICES AS NECESSARY FOR PRESETTING ALL BOLTS PRIOR TO PLACING CONCRETE AND/OR GROUT.
5. IF THREADED RODS ARE USED AS PERMITTED ABOVE, THEY SHALL BE CLEAR OF SOIL AND DIRT.

6. WHERE REQUIRED FOR ERECTION, HOLES LARGER THAN OVERSIZED MAY BE PERMITTED WITH THE USE OF STEEL PLATE WASHERS AT THE DISCRETION OF THE STRUCTURAL ENGINEER.

G. REINFORCING STEEL

1. ALL REINFORCING BARS SHALL CONFORM TO ASTM STANDARD A-615 GRADE 60 AND ALL WELDED WIRE FABRIC SHALL CONFORM TO ASTM STANDARD A-185 AND SHALL BE SUPPLIED IN FLAT SHEETS. ADEQUATELY TIE AND SUPPORT ALL REINFORCING STEEL AS SPECIFIED BY ACI 315, TO MAINTAIN EXACT REQUIRED POSITION.
2. ALL FIELD BENT DOWELS SHALL BE GRADE 40 WITH SPACING INDICATED REDUCED BY 1/3.
3. UNLESS NOTED OTHERWISE, REINFORCEMENT SHALL HAVE THE FOLLOWING CONCRETE COVERAGE:
   A. CAST AGAINST AND PERMANENTLY EXPOSED TO EARTH ..... 3"
   B. EXPOSED TO EARTH OR WEATHER:
      1) #6 & LARGER ..... 2"
      2) #5 & SMALLER ....1-1/2"
   C. NOT EXPOSED TO WEATHER OR EARTH:
      1) SLABS, WALLS, JOISTS, #11 & SMALLER ..... 3/4"
      2) BEAMS, COLUMNS: MAIN REINFORCING OR TIES ..... 1-1/2"
   D. SLAB ON GRADE:
      1) PLACE REINFORCING AT CENTER OF SLAB UNLESS INDICATED OTHERWISE.
4. EXCEPT WHERE NOTED ON PLANS OR DETAILS CONTINUOUS REINFORCEMENT SHALL BE SPLICED AT POINTS OF MINIMUM STRESS BY LAPPING PER THE REBAR LAP SCHEDULE.
5. REINFORCING STEEL MAY BE SPLICED WITH MECHANICAL COUPLERS THAT HAVE A TENSION CAPACITY OF AT LEAST 125% OF THE STRENGTH OF THE BAR. MECHANICAL COUPLERS SHALL BE A POSITIVE CONNECTING TYPE COUPLER, AND SHALL BE INSTALLED IN ACCORDANCE WITH AN APPROVED ICC RESEARCH REPORT. WHERE THESE ARE USED, SPLICES ON ADJACENT BARS SHALL BE STAGGERED AT LEAST 24 INCHES ALONG THE LENGTH OF THE BARS.
6. ALL VERTICAL REINFORCING IN STRUCTURAL ELEMENTS ABOVE SHALL BE SPLICED WITH MATCHING DOWELS EMBEDDED WITHIN THE FOOTINGS OR STRUCTURE BELOW. SPLICE LENGTHS SHALL COMPLY WITH REBAR LAP SCHEDULE. DOWELS INTO FOOTINGS SHALL TERMINATE WITH A STANDARD HOOK, AND SHALL EXTEND TO WITHIN 4" OF THE BOTTOM OF THE FOOTING, BUT NEED NOT EXTEND MORE THAN 20" INTO FOOTING.
7. DO NOT WELD REINFORCING EXCEPT AS NOTED ON PLANS. WHERE REINFORCING IS WELDED, USE ASTM A-706 REINFORCING.
8. REINFORCING BARS, TIES, AND TENDONS SHALL BE SUPPORTED BY NYLON CONES, PLASTIC-COATED TIE-WIRES, OR PLASTIC-COATED CHAIRS. REINFORCING IN FOOTINGS IS PERMITTED TO BE SUPPORTED ON CONCRETE DOBIES.
9. UNLESS NOTED OTHERWISE, HOOKS, STIRRUPS, TIES, AND OTHER BENDS IN REINFORCING STEEL SHALL MEET THE STANDARDS SET FORTH IN ACI 318/318R-05. UNLESS OTHERWISE PERMITTED BY THE ENGINEER, ALL REINFORCEMENT SHALL BE BENT COLD. REINFORCEMENT PARTIALLY EMBEDDED IN CONCRETE SHALL NOT BE FIELD BENT, EXCEPT AS SHOWN ON THESE DRAWINGS OR OTHERWISE PERMITTED BY THE ENGINEER.
10. UNLESS SPECIFICALLY NOTED AND/OR DETAILED IN THE STRUCTURAL DRAWINGS CONDUIT SHALL NOT BE IN CONTACT WITH REINFORCING STEEL.

H. STRUCTURAL STEEL

1. STRUCTURAL STEEL SHALL BE FABRICATED AND ERECTED IN ACCORDANCE WITH THE LATEST EDITION OF THE FOLLOWING:
   A. ANSI/AISC 360-05 "SPECIFICATION FOR STRUCTURAL STEEL BUILDINGS", WITH "COMMENTARY" AND "SUPPLEMENTS" AS REQUIRED BY BUILDING CODE.
   B. AISC 303-05 "CODE OF STANDARD PRACTICE FOR STEEL BUILDINGS AND BRIDGES" EXCLUDING THE FOLLOWING SECTIONS: 4.4, 4.4.1, AND 4.4.2.
   C. AISI "SPECIFICATIONS FOR THE DESIGN OF COLD-FORMED STEEL STRUCTURAL MEMBERS".
   D. AISC "SPECIFICATION FOR STRUCTURAL JOINTS USING ASTM A325 OR A490 BOLTS".
   E. AWS D1.1 AND 1.3, "STRUCTURAL WELDING CODE" (EXCEPT SPECIFIC ITEMS DO NOT APPLY IF THEY CONFLICT WITH AISC).
   F. ANSI/AISC 341-05 "SEISMIC PROVISIONS FOR STRUCTURAL STEEL BUILDINGS".
2. STRUCTURAL STEEL SHALL COMPLY WITH THE FOLLOWING:
   A. OTHER SHAPES AND PLATES - ASTM A-36 (UNO)
   B. TUBES (TS) AND HOLLOW STRUCTURAL SECTIONS (HSS) - ASTM A-500, GRADE B (FY = 46 KSI)
   C. PIPE COLUMNS - ASTM A-53, GRADE B TYPE E OR S
   D. DEFORMED BAR ANCHORS (DBA) - ASTM A-496, WELDED IN ACCORDANCE WITH ANS D1.1
   E. HEADED STUD ANCHORS (HSA) - ASTM A-108, GRADE 1015 STEEL AND WELDED IN ACCORDANCE WITH ASW D1.1 FOR TYPE "B". USE 3/4" DIAMETER STUDS, UNLESS NOTED OTHERWISE.
   F. THREADED ROD - ASTM A-449.
3. CONNECTIONS SHALL COMPLY WITH THE STRUCTURAL DRAWINGS UNLESS WRITTEN APPROVAL TO CHANGE IS GIVEN BY THE STRUCTURAL ENGINEER.
4. ALL SHOP FABRICATIONS SHALL BE PERFORMED BY AN APPROVED FABRICATOR IN ACCORDANCE WITH SECTIONS 1702 AND 1704 OF THE IBC OR WITH SHOP INSPECTION BY AN INDEPENDENT AGENCY IN ACCORDANCE WITH SECTION 1704.2 OF THE IBC.
5. WELDING
   A. ALL WELDING AND CUTTING SHALL BE PERFORMED BY AWS CERTIFIED WELDERS IN ACCORDANCE WITH ANSI/AWS D1.1 (LATEST EDITION).
   B. USE E-70XX ELECTRODES UNLESS NOTED OTHERWISE. E-60XX MAY BE USED FOR WELDING STEEL DECKS.
   C. ALL INTERSECTING STEEL SHAPES WHICH ARE NOT CONNECTED WITH BOLTS SHALL BE WELDED TOGETHER WITH A FILLET WELD ALL AROUND UNLESS NOTED OTHERWISE. WHERE WELD SIZES ARE NOT SHOWN USE THE FOLLOWING:
      1) WHERE ALL CONNECTED PARTS ARE THICKER THAN 1/4", WELD IS 1/16" LESS THAN THE THICKNESS OF THE THINNEST PART.
      2) WHERE ANY OF THE CONNECTED PARTS IS LESS THAN 1/4" THICK, WELD IS SAME AS THICKNESS OF THE THINNEST PART.
   D. WELDING OF HSA'S AND DBA'S SHALL CONFORM TO THE MANUFACTURER'S SPECIFICATIONS.
   E. WHEREVER POSSIBLE, WELDS SHALL BE SHOP WELDS. SPECIAL CONSIDERATIONS, SUCH AS ITEMS WHICH MAY NEED ADJUSTMENT AT THE SITE, REQUIRE THAT SOME WELDS BE FIELD WELDS. WHERE QUESTIONS OR DISCREPANCIES OCCUR THE CONTRACTOR SHALL COORDINATE THE WORK BETWEEN THE SHOP FABRICATOR AND THE STEEL ERECTOR.
6. BOLTING
   A. UNLESS NOTED OTHERWISE, ALL STRUCTURAL STEEL TO STEEL CONNECTIONS SHALL USE HIGH STRENGTH BOLTS CONFORMING TO ASTM A-325.
   B. UNLESS NOTED OTHERWISE, ALL BOLTING IS CLASSIFIED AS NON-SLIP CRITICAL BEARING TYPE CONNECTIONS WITH THREADS INCLUDED IN SHEAR PLANE. TIGHTEN BOLTS TO A SNUG TIGHT CONDITION, WITH ALL PLIES OF THE JOINT IN FIRM CONTACT.
   C. AT OVERSIZED AND SLOTTED HOLES, WASHERS SHALL CONFORM TO ASTM F-436 AND COMPLETELY COVER THE HOLE.
   D. WHERE A STEEL BEAM TO BEAM CONNECTION IS NOT SHOWN, PROVIDE AN AISC STANDARD FRAMED CONNECTION SIZED FOR 1/2 OF THE TOTAL LOAD CAPACITY OF THE BEAM FOR THE SPAN AND STEEL SPECIFIED.
7. METAL DECKING
   A. UNLESS NOTED OTHERWISE, METAL ROOF DECK SHALL BE 20 GAUGE TYPE B PAINTED STEEL DECK. SEE ROOF DECK SCHEDULE FOR ATTACHMENTS.
   B. ALL DECK SHALL BE CONTINUOUS OVER 3-SPANS. WHERE NOT POSSIBLE, THE DECK SUPPLIER/CONTRACTOR SHALL PROVIDE HEAVIER GAUGE DECK AS NEEDED TO PROVIDE THE EQUIVALENT PERFORMANCE OF THE SPECIFIED DECK WITH 3-SPAN CONTINUITY.
   C. PAINTED STEEL DECK SHALL CONFORM TO ASTM A1008 AND GALVANIZED STEEL DECK SHALL CONFORM TO A653 GRADE G60.
   D. BUILDING ELEMENTS MAY BE SUPPORTED BY HANGING DIRECTLY FROM METAL DECKING, PROVIDED THAT THE TOTAL WEIGHT PER CONNECTION IS LESS THAN 50 LBS AND THAT THE ATTACHMENT TO THE DECKING IS DISTRIBUTED ACROSS AT LEAST TWO RIBS AND SPACED AT LEAST 6 FEET APART IN ANY DIRECTION.
8. PROVIDE FULL DEPTH WEB STIFFENER PLATES AT EACH SIDE OF STEEL BEAMS AT ALL BEARING (EXCEPT SECONDARY FRAMING) POINTS. STIFFENER PLATES SHALL BE THICKNESS SHOWN UNLESS NOTED OTHERWISE AND SHALL BE WELDED BOTH SIDES WITH FILLET WELDS ALL AROUND.

FLANGE WIDTH	STIFFENER THICKNESS	WELD THICKNESS
< 8 1/4"	1/4"	3/16"
8 1/4" < BF < 12 1/2"	3/8"	1/4"
12 1/2" < BF < 18"	1/2"	5/16"

9. FABRICATORS AND SUPPLIERS SHALL COORDINATE PAINT/FINISHES WITH REQUIREMENTS FOR DIRECT APPLIED INSULATION, FIREPROOFING, ETC. AS NOTED IN THE PROJECT SPECIFICATIONS.
10. WHEN DETERMINING THE FIRE RESISTANCE OF ASSEMBLIES, USE THE FOLLOWING: STEEL ROOF MEMBERS ARE CONSIDERED UN-RESTRAINED AND STEEL FLOOR FRAMING MEMBERS ARE CONSIDERED RESTRAINED.
11. UNLESS NOTED OTHERWISE, ALL HORIZONTAL FRAMING MEMBERS SHALL BE ERECTED WITH THE NATURAL CROWN UP.

I. STATEMENT OF SPECIAL INSPECTIONS

1. DESIGNATED SEISMIC/WIND SYSTEMS AND SEISMIC/WIND-FORCE-RESISTING SYSTEMS ARE SUBJECT TO SPECIAL INSPECTIONS IN ACCORDANCE WITH IBC SECTION 1705.1. ITEMS, DETAILS, AND SYSTEMS SUBJECT TO SPECIAL INSPECTIONS ARE ALSO IDENTIFIED ON THESE DOCUMENTS WITH A CIRCLE "L".
2. SPECIAL INSPECTIONS AND TESTING ARE TO BE PROVIDED AS REQUIRED BY IBC SECTIONS 1704 AND 1708 AND OTHER APPLICABLE SECTIONS OF THE IBC. ITEMS REQUIRING SPECIAL INSPECTION ARE IDENTIFIED IN THE SPECIAL INSPECTION SCHEDULE ON SHEET S0.1. THE TYPE AND FREQUENCY OF TESTING AND SPECIAL INSPECTIONS SHALL BE AS NOTED IN THE SPECIAL INSPECTION SCHEDULE, JOB SPECIFICATIONS, AND ACCORDANCE WITH IBC SECTION 109 AND CHAPTER 17.
3. ALL TESTING AND SPECIAL INSPECTION SHALL BE PROVIDED BY A QUALIFIED SPECIAL INSPECTION AGENCY EMPLOYED AS OUTLINED IN THE JOB SPECIFICATIONS. REPORTS OF FINDINGS OR DISCREPANCIES SHALL BE NOTED AND FORWARDED TO THE CONTRACTOR, ARCHITECT, ENGINEERS, AND BUILDING OFFICIAL IN A TIMELY MANNER.
4. STRUCTURAL OBSERVATION VISITS SHALL BE PERFORMED BY A REPRESENTATIVE FROM ARW ENGINEERS IN ACCORDANCE WITH THE CONTRACT AS NEEDED TO OBSERVE THE CONSTRUCTION OF CRITICAL BUILDING ELEMENTS (I.E. FOOTINGS, BRACED FRAMES, MOMENT FRAMES, DRAG STRUTS AND THEIR CONNECTIONS, COLLECTORS, AND ROOF AND FLOOR DIAPHRAGMS). STRUCTURAL OBSERVATION REPORTS FOR EACH VISIT SHALL BE SENT DIRECTLY TO THE ARCHITECT FOR DISTRIBUTION TO THE CONTRACTOR AND BUILDING OFFICIAL. STRUCTURAL OBSERVATION VISITS SHALL NEITHER BE CONSTRUED AS SPECIAL INSPECTION NOR APPROVAL OF COMPLETED CONSTRUCTION.
5. IN ACCORDANCE WITH IBC 1706.1, THE CONTRACTOR SHALL SUBMIT A WRITTEN CONTRACTOR'S STATEMENT OF RESPONSIBILITY TO THE BUILDING OFFICIAL AND OWNER PRIOR TO CONSTRUCTION OF ANY SEISMIC/WIND-FORCE-RESISTING SYSTEM, DESIGNATED SEISMIC/WIND SYSTEM, OR COMPONENT IDENTIFIED IN THIS QUALITY ASSURANCE PLAN AND AS NOTED ON THE PLANS WITH A CIRCLE "L".

J. MASONRY

1. ALL GROUT (SITE MIXED OR PRE-MIXED) SHALL CONFORM TO ASTM C-476 OR BE PROPORTIONED PER TABLE 2103.12 OF THE IBC AND SHALL BE PLACED WITH SUFFICIENT WATER FOR POURING WITHOUT SEGREGATION. DO NOT USE MORTAR FOR GROUT. MECHANICALLY VIBRATE ALL GROUT.

STRUCTURAL SHEET INDEX

SHEET NO.	SHEET TITLE
S0.1	STRUCTURAL NOTES
S0.2	STRUCTURAL SCHEDULES
S1.1	FOOTING AND FOUNDATION PLAN, ROOF FRAMING PLAN, AND DETAILS

structural notes and schedules

scale : varies

PROFESSIONAL STRUCTURAL ENGINEER
McKay M. Parrish
No. 5253492
STATE OF UTAH

richards bott architects

richards bott architects
620 24th street ogden, utah 84401 phone 801.394.3033 fax 801.394.9064
ARW ENGINEERS structural consultants
1594 W. Park Cir. Ogden, Utah 84404
ph. 801.782.6008 fx. 801.782.4656

utah state liquor store -
brigham city remodel
43 south 100 west
brigham city, utah

0945
10121030

05.28.10

s0.1

ROOF DECK SCHEDULE

AREA	DECK DEPTH	DECK TYPE	DECK GA.	ATTACHMENT: SUPPORTS DIA. WELD	ATTACHMENT: SUPPORTS PATTERN	ATTACHMENT: SIDE SEAMS #12 TEK SCREWS	ATTACHMENT: SIDE SEAMS TOP SEAM WELD	ATTACHMENT: SIDE SEAMS PUNCH LOCK*	ATTACHMENT: SUPPORTS PARALLEL TO FLUTES DIA. WELD	ATTACHMENT: SUPPORTS PARALLEL TO FLUTES SPA.	MIN. SHEAR CAPACITY
A	1-1/2	B	22	3/4"	36/7	12"o.c.	12"o.c.	12"o.c.	3/4"ø	6"o.c.	300PLF

FASTENING PATTERNS

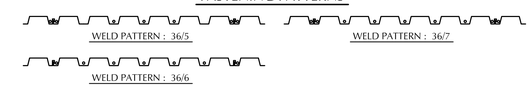

NOTES :

1. TOP SEAM WELDS SHALL BE 1 1/2" LONG AND SHALL BE ACCORDING TO SDI STANDARDS.
2. MIN. SHEAR CAPACITY IS THE CAPACITY REQUIRED FOR ALTERNATE SYSTEMS.
3. USE NESTABLE (OVERLAPPING) SIDE SEAMS AT SCREW ATTACHMENTS AND INTERLOCKING SIDE SEAMS AT WELDS.
4. ALL DECK WITH A PROFILE DEPTH OF 2" OR LESS SHALL HAVE NESTED OR TELESCOPED END LAPS.
5. SUBMIT CURRENT ICBO APPROVAL FOR ALL DECKS.
6. OTHER PNUEMATIC FASTENING SYSTEMS MUST MEET MIN. SHEAR CAPACITY SHOWN IN SCHEDULE. ALL ALTERNATE SYSTEMS SHALL BE SUBMITTED TO ENGINEER FOR REVIEW & APPROVAL.

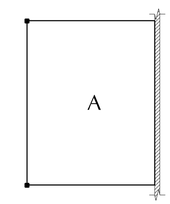

KEY PLAN

STANDARD HOOK & BEND SCHEDULE

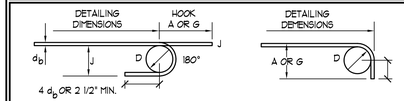

d_b = BAR DIAMETER
D = FINISHED INSIDE BEND DIAMETER

D = $6d_b$ FOR #3 THROUGH #8
D = $8d_b$ FOR #9 THROUGH #11

BAR SIZE	DIMENSION OF STANDARD 180-DEG HOOKS, ALL GRADES			DIMENSION OF STANDARD 90-DEG HOOKS, ALL GRADES	
	A or G	J	D	A or G	D
#3	5"	3"	2 1/4"	6"	2 1/4"
#4	6"	4"	3"	8"	3"
#5	7"	5"	3 3/4"	10"	3 3/4"
#6	8"	6"	4 1/2"	1'-0"	4 1/2"
#7	10"	7"	5 1/4"	1'-2"	5 1/4"
#8	11"	8"	6"	1'-4"	6"
#9	1'-3"	11 3/4"	9 1/2"	1'-7"	9 1/2"
#10	1'-5"	1'-1 1/4"	10 3/4"	1'-10"	10 3/4"
#11	1'-7"	1'-2 3/4"	12"	2'-0"	12"

SPECIAL INSPECTION SCHEDULE [1, 2]

ESTABLISHED PER 2006 IBC SECTION 109 AND CHAPTER 17

ITEM	CONTINUOUS [3]	PERIODIC [3]	REFERENCE
PRE-FAB CONSTRUCTION (IBC 1704.2)			REFERENCE NOTES P1 & P2
STEEL CONSTRUCTION (IBC 1704.3)			SEE IBC TABLE 1704.3
SHOP [2] AND FIELD WELDING			REFERENCE NOTE S1
SINGLE PASS FILLET WELD ≤ 5/16"		●	REFERENCE NOTE S2
FILLET WELDS > 5/16"	●		REFERENCE NOTE S2
MULTI-PASS FILLET WELDS	●		REFERENCE NOTE S2
PARTIAL / COMPLETE PENETRATION WELDS	●		REFERENCE NOTE S3
LIGHT GAUGE METAL FRAMING WELDING		●	REFERENCE NOTE S2
FLOOR AND ROOF DECK WELDING		●	REFERENCE NOTE S2
FLOOR AND ROOF DECK MECH. FASTENERS		●	
SIDE SEAM SCREWS, BUTTON PUNCHES ETC.			
WELDING OF ANCHORS & STUDS		●	REFERENCE NOTE S2
WELDING STAIRS / RAILING SYSTEMS		●	REFERENCE NOTE S2
REINFORCING STEEL			
WELDING OF REINFORCING STEEL	●	●	REFERENCE NOTE S4
SHEAR REINFORCING	●		
OTHER REINFORCING		●	
INSPECTION OF STEEL FRAME JOINT DETAILS		●	
EMBEDDED PLATES		●	
HIGH STRENGTH BOLTING (IBC 1704.3.3)			
VERIFY MATERIALS OF NUTS, BOLTS & WASHERS		●	
BEARING TYPE CONNECTIONS		●	
CONCRETE CONSTRUCTION (IBC 1704.4)			SEE IBC TABLE 1704.4 - REF. NOTE C1
REINFORCING STEEL PLACEMENT		●	
WELDING OF REINFORCING STEEL	●	●	REFERENCE NOTE C2
EMBEDDED BOLTS & PLATES	●		
VERIFYING REQUIRED DESIGN MIX		●	
CONCRETE PLACEMENT / SAMPLING	●		REFERENCE NOTE C3
CURING TEMPERATURE / TECHNIQUES		●	
EPOXY / EXPANSION ANCHOR PLACEMENT	●		REFERENCE NOTE C4
FORM WORK		●	
MASONRY CONSTRUCTION (IBC 1704.5)			SEE IBC TABLE 1704.5.1 (NON-ESSENTIAL)
EPOXY / EXPANSION ANCHOR PLACEMENT	●		REFERENCE NOTE M1
GROUT MIX	●		
SOILS (IBC 1704.7)			REFERENCE NOTE F1
VERIFY ADEQUATE MATERIALS BELOW FOOTINGS		●	REFERENCE NOTE F1
EXCAVATIONS EXTEND TO PROPER DEPTH AND REACH PROPER MATERIAL.		●	REFERENCE NOTE F2
CLASSIFY & TEST CONTROLLED FILL MATERIALS		●	REFERENCE NOTE F2
PERFORM MATERIALS, DENSITIES, AND LIFT THICKNESSES DURING PLACEMENT AND COMPACTION OF CONTROLLED FILL.	●		REFERENCE NOTE F1
PROPERLY PREPARED SITE AND SUB-GRADE PRIOR TO FILL.		●	REFERENCE NOTE F1

COMMENTS

P1. SPECIAL INSPECTION IS NOT REQUIRED WHERE THE WORK IS DONE ON THE PREMISES OF A FABRICATOR REGISTERED AND APPROVED TO PERFORM SUCH WORK WITHOUT SPECIAL INSPECTION, PROVIDED THE FABRICATOR COMPLIES WITH IBC
P2. INSPECTION FOR PREFABRICATED CONSTRUCTION SHALL BE THE SAME AS IF THE MATERIAL USED IN THE CONSTRUCTION TOOK PLACE ON SITE. SPECIAL INSPECTION WILL NOT BE REQUIRED DURING PREFABRICATION IF THE APPROVED AGENCY CERTIFIES THE CONSTRUCTION AND FURNISHES EVIDENCE OF COMPLIANCE. (SEE NOTE 2)

S1. WELDING INSPECTIONS SHALL BE IN COMPLIANCE WITH AWS D1.1.
S2. ALL WELDS SHALL BE VISUALLY INSPECTED. ALL MATERIALS, WELDING PROCEDURES, AND QUALIFICATIONS OF WELDERS SHALL BE VERIFIED PRIOR TO THE START OF THE WORK. (IBC 1704.3)
S3. ALL COMPLETE PENETRATION WELDS SHALL BE TESTED ULTRASONICALLY OR BY USING ANOTHER APPROVED METHOD (IBC 1708.4).
S4. PERIODIC SPECIAL INSPECTION IS ALLOWED FOR VERIFICATION OF THE WELDABILITY OF REINFORCING STEEL OTHER THAN ASTM A 706 IN ACCORDANCE WITH ANSI / AWS D1.4. CONTINUOUS SPECIAL INSPECTION IS REQUIRED FOR REINFORCING STEEL RESISTING FLEXURAL AND AXIAL FORCES IN INTERMEDIATE AND SPECIAL MOMENT FRAMES, BOUNDARY ELEMENTS OF SPECIAL REINFORCED CONCRETE SHEAR WALLS, AND SHEAR REINFORCEMENT. PERIODIC SPECIAL INSPECTION IS ALLOWED FOR WELDING OF OTHER ASTM A 706 REINFORCING STEEL NOT INCLUDED IN THE CONTINUOUS SPECIAL INSPECTION REQUIREMENTS NOTED ABOVE.

C1. SPECIAL INSPECTION IS NOT REQUIRED FOR CONC. ISOLATED SPREAD FOOTINGS, CONTINUOUS FOOTINGS, NON-STRUCTURAL SLABS, FOUNDATION WALLS, PATIOS, DRIVEWAYS, AND SIDEWALKS PROVIDED THE REQUIREMENTS OF IBC 1704.4 ARE MET.
C2. PERIODIC SPECIAL INSPECTION IS ALLOWED FOR VERIFICATION OF THE WELDABILITY OF REINFORCING STEEL OTHER THAN ASTM A 706 IN ACCORDANCE WITH ANSI / AWS D1.4. CONTINUOUS SPECIAL INSPECTION IS REQUIRED FOR REINFORCING STEEL RESISTING FLEXURAL AND AXIAL FORCES IN INTERMEDIATE AND SPECIAL MOMENT FRAMES, BOUNDARY ELEMENTS OF SPECIAL REINFORCED CONCRETE SHEAR WALLS, AND SHEAR REINFORCEMENT. PERIODIC SPECIAL INSPECTION IS ALLOWED FOR WELDING OF OTHER ASTM A 706 REINFORCING STEEL NOT INCLUDED IN THE CONTINUOUS SPECIAL INSPECTION REQUIREMENTS NOTED ABOVE.
C3. PERFORM AIR, SLUMP AND TEMP. TESTS WHEN CONCRETE SAMPLES ARE CAST.
C4. EPOXY AND EXPANSION ANCHORS INTO MASONRY OR CONCRETE MAY BE USED ONLY WHEN APPROVED BY ARCHITECT AND/OR ENGINEER USING AN APPROVED PRODUCT WITH CURRENT PUBLISHED ICBO RESEARCH REPORT NUMBERS.

M1. EPOXY AND EXPANSION ANCHORS INTO MASONRY OR CONCRETE MAY BE USED ONLY WHEN APPROVED BY ARCHITECT AND/OR ENGINEER USING AN APPROVED PRODUCT WITH CURRENT PUBLISHED ICBO RESEARCH REPORT NUMBERS.

F1. SPECIAL INSPECTION OF SOILS SHALL REFERENCE THE STRUCTURAL NOTES TO DETERMINE COMPLIANCE.
F2. SPECIAL INSPECTIONS ARE NOT REQUIRED DURING PLACEMENT OF FILL LESS THAN 12 INCHES DEEP.

GENERAL SPECIAL INSPECTION NOTES :

1. THE ITEMS MARKED WITH A " ● " IN THE SPECIAL INSPECTION SCHEDULE SHALL BE INSPECTED IN ACCORDANCE WITH IBC CHAPTER 17 BY A CERTIFIED SPECIAL INSPECTOR FROM AN ESTABLISHED TESTING AGENCY. FOR MATERIAL SAMPLING AND TESTING REQUIREMENTS, REFER TO THE MATERIAL SAMPLING AND TESTING SECTION, THE PROJECT SPECIFICATIONS, AND THE SPECIFIC GENERAL NOTES SECTIONS. THE TESTING AGENCY SHALL SEND COPIES OF ALL STRUCTURAL TESTING AND INSPECTION REPORTS DIRECTLY TO THE ARCHITECT, ENGINEER, CONTRACTOR, AND BUILDING OFFICIAL. ANY ITEMS WHICH FAIL TO COMPLY WITH THE APPROVED CONSTRUCTION DOCUMENTS SHALL IMMEDIATELY BE BROUGHT TO THE ATTENTION OF THE CONTRACTOR FOR CORRECTION. IF DISCREPANCIES ARE NOT CORRECTED, THEY SHALL BE BROUGHT TO THE ATTENTION OF THE BUILDING OFFICIAL, ARCHITECT, AND ENGINEER PRIOR TO COMPLETION OF THAT PHASE OF WORK. SPECIAL INSPECTION TESTING REQUIREMENTS APPLY EQUALLY TO ALL BIDDER DESIGNED COMPONENTS.
2. ANY CONSTRUCTION OR MATERIAL THAT HAS FAILED INSPECTION SHALL BE SUBJECT TO REMOVAL AND REPLACEMENT.
3. CONTINUOUS SPECIAL INSPECTION MEANS THE FULL-TIME OBSERVATION OF WORK REQUIRING SPECIAL INSPECTION BY AN APPROVED SPECIAL INSPECTOR WHO IS PRESENT IN THE AREA WHERE THE WORK IS BEING PERFORMED. PERIODIC SPECIAL INSPECTION MEANS THE PART-TIME OR INTERMITTENT OBSERVATION OF WORK REQUIRING SPECIAL INSPECTION BY AN APPROVED SPECIAL INSPECTOR WHO IS PRESENT IN THE AREA WHERE THE WORK HAS BEEN OR IS BEING PERFORMED AND AT THE COMPLETION OF THE WORK. (IBC SECTION 1702)

2006 IBC REBAR LAP SPLICE SCHEDULE

FOR CONCRETE APPLICATIONS (ACI 318 - 05)

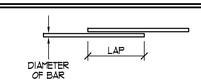

BAR SIZE NO.	BAR SIZE DIA.	f'c = 3000 PSI TYP. SPLICES CLASS 'A'	f'c = 3000 PSI TYP. SPLICES CLASS 'B'	f'c = 3000 PSI TOP BAR SPLICES CLASS 'A'	f'c = 3000 PSI TOP BAR SPLICES CLASS 'B'	f'c = 4000 PSI TYP. SPLICES CLASS 'A'	f'c = 4000 PSI TYP. SPLICES CLASS 'B'	f'c = 4000 PSI TOP BAR SPLICES CLASS 'A'	f'c = 4000 PSI TOP BAR SPLICES CLASS 'B'
2	0.250	12"	16"	15"	19"	12"	16"	13"	17"
3	0.375	17"	22"	22"	28"	15"	19"	19"	25"
4	0.500	22"	29"	29"	38"	19"	25"	25"	33"
5	0.625	28"	36"	36"	47"	24"	31"	31"	41"
6	0.750	33"	43"	43"	56"	29"	37"	37"	49"
7	0.875	48"	63"	63"	81"	42"	54"	54"	71"
8	1.000	55"	72"	72"	93"	48"	62"	62"	81"
9	1.128	62"	80"	80"	105"	54"	70"	70"	91"
10	1.270	69"	89"	89"	116"	60"	78"	78"	101"
11	1.410	76"	98"	98"	128"	66"	85"	85"	111"

NOTES:

1. ALL LAP SPLICE LENGTHS ARE CLASS 'A' UNLESS NOTED OTHERWISE.
2. MECHANICAL COUPLERS MAY BE USED IN LIEU OF LAP SPLICES SHOWN. SEE STRUCTURAL NOTES FOR MINIMUM COUPLER CAPACITY. WHERE MECHANICAL COUPLERS ARE USED, STAGGER ADJACENT SPLICES A MINIMUM OF 24".
3. CONCRETE LAP LENGTHS SHALL BE INCREASED BY 20% WHERE EPOXY COATING IS USED.
4. TOP BAR IS ANY HORIZONTAL BAR WITH MORE THAN 12" OF FRESH CONCRETE CAST BELOW IT.

LEGEND OF SYMBOLS AND ABBREVIATIONS

AB = ANCHOR BOLT
ABV = ABOVE
ARCH = ARCHITECT
BLW = BELOW
BN = BOUNDARY NAILING
℄ = CENTER LINE
CMU = CONCRETE MASONRY UNIT
COL = COLUMN
CONC = CONCRETE
DBA = DEFORMED BAR ANCHOR
DBE = DECK BEARING ELEVATION
ELEV = ELEVATION
EN = EDGE NAILING
FNDN = FOUNDATION
FTG = FOOTING
FFE = FINISHED FLOOR ELEVATION
HSA = HEADED STUD ANCHOR
JBE = JOIST BEARING ELEVATION
MIN = MINIMUM
MAX = MAXIMUM
MECH = MECHANICAL
MEZZ = MEZZANINE
OAE = OR APPROVED EQUAL
OPP = OPPOSITE
ℙ = PLATE
REINF = REINFORCING
REQ'D = REQUIRED
SIM = SIMILAR
TOF = TOP OF FOOTING
TOB = TOP OF BEAM ELEVATION
TOM = TOP OF MASONRY ELEVATION
TOC = TOP OF CONCRETE SLAB
TOG = TOP OF GIRDER ELEVATION
TOS = TOP OF STEEL ELEVATION
TYP = TYPICAL
UNO = UNLESS NOTED OTHERWISE
NS, FS = NEAR SIDE, FARSIDE

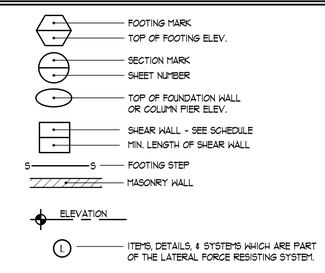

structural schedules

scale : varies

PROFESSIONAL STRUCTURAL ENGINEER
5/28/10
McKay M. Parrish
No. 5253492
STATE OF UTAH

richards bott architects

richards bott architects 620 24th street ogden, utah 84401 phone 801.394.3033 fax 801.394.9064

ARW ENGINEERS structural consultants
1594 W. Park Cir. Ogden, Utah 84404
ph. 801.782.6008 fx. 801.782.4656

utah state liquor store -
brigham city remodel
43 south 100 west
brigham city, utah

0945
10121030

05.28.10

s0.2

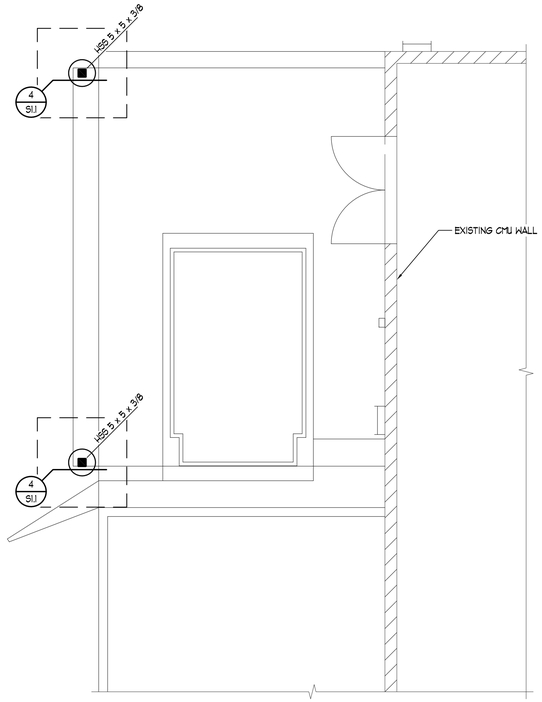

DETAIL A S1.1
SCALE: NONE

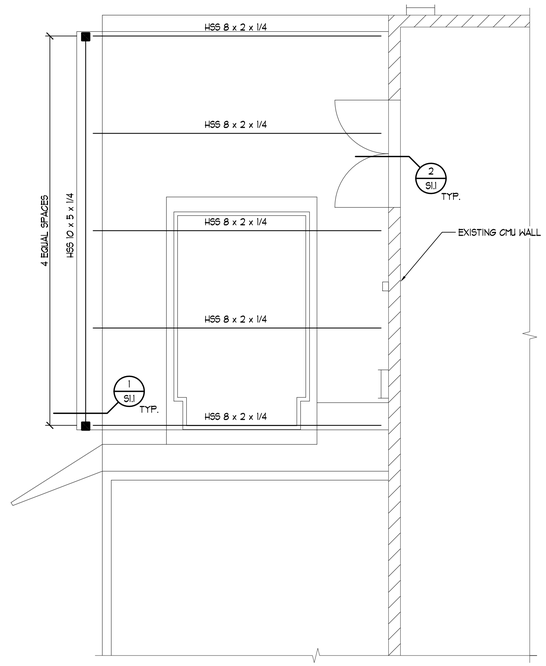

DETAIL B S1.1
SCALE: NONE

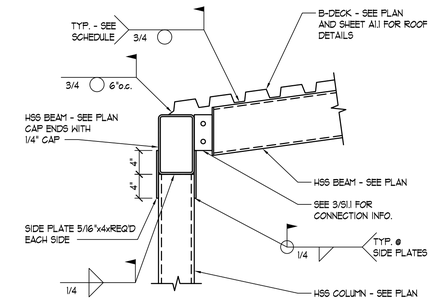

DETAIL 1 S1.1
SCALE: NONE

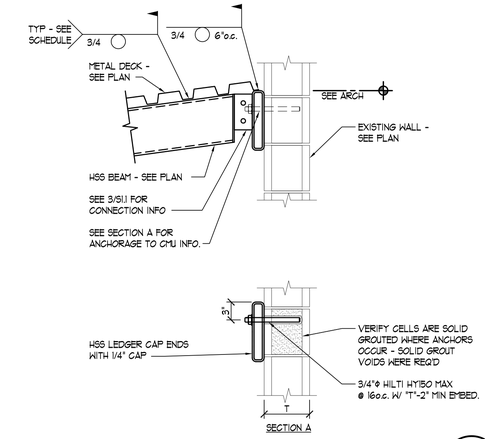

DETAIL 2 S1.1
SCALE: NONE

CONNECTION SCHEDULE					
BEAM DEPTH	SHEAR PLATE	BOLTS		WELD 'A'	COMMENTS
		No.	SIZE		
HSS 8	PL 1/4" x 3-1/2"	2	3/4"ϕ	3/16"	

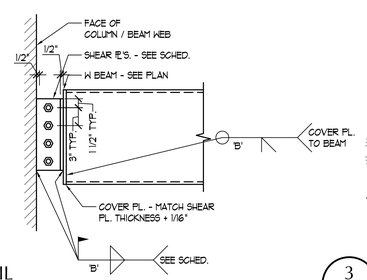

DETAIL 3 S1.1
SCALE: NONE

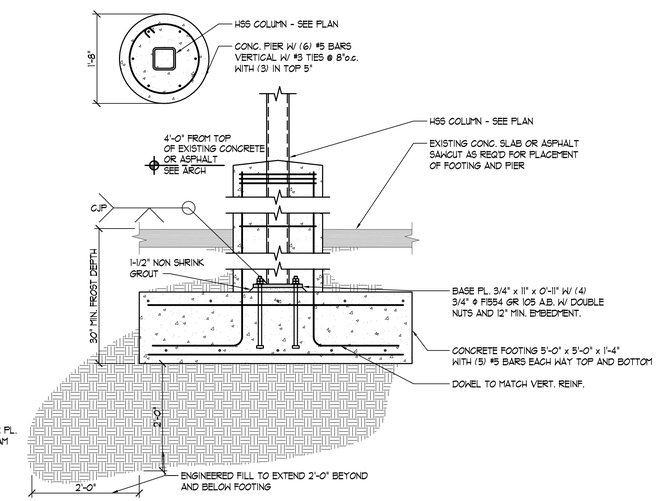

DETAIL 4 S1.1 L
SCALE: NONE

footing and foundation plan, roof framing plan, and details

scale : varies

PROFESSIONAL STRUCTURAL ENGINEER
5/28/10
McKay M. Parrish
No. 5253492
STATE OF UTAH

richards bott architects

richards bott architects 620 24th street ogden, utah 84401 phone 801.394.3033 fax 801.394.9064

ARW ENGINEERS structural consultants
1594 W. Park Cir. Ogden, Utah 84404
ph. 801.782.6008 fx. 801.782.4656

utah state liquor store - brigham city remodel
43 south 100 west
brigham city, utah

0945
10121030

05.28.10

s1.1