A NEW BUILDING FOR:

TAYLOR - HUNT ELECTRIC
PHASE ONE

1747 S. 900 W.
SALT LAKE CITY, UTAH

LEGEND

- EARTH
- POROUS FILL
- ASPHALT
- CONCRETE
- CONC. MAS. UNITS
- BRICK
- CAST STONE
- CERAMIC TILE
- WOOD (FINISH)
- WOOD (STUDS, NAILERS)
- WOOD (BLOCKING)
- PLYWOOD
- BATT INSULATION
- RIGID INSULATION
- ACOUSTIC TILE
- GYPSUM BOARD
- GLASS
- STEEL

3 / A-5 — DETAIL NUMBER SHEET ON WHICH DETAIL APPEARS
DETAIL

1 / A-3 — SECTION NUMBER SHEET ON WHICH DETAIL APPEARS
BLDG. SECTION

1 / A-3 — SECTION NUMBER SHEET ON WHICH DETAIL APPEARS
WALL SECTION

E-8 / A-4 — ELEVATION NUMBER SHEET ON WHICH DETAIL APPEARS
ELEVATION

101
ROOM NUMBER

10
DOOR NUMBER

100'-0"
FINISH SPOT ELEVATION

ABBREVIATIONS

ALT.	ALTERNATE	H.C.	HOLLOW CORE
ALUM.	ALUMINUM	HDWD.	HARDWOOD
A.C.	ASPHALTIC CONCRETE	H.M.	HOLLOW METAL
A/C	AIR CONDITIONING	HT.	HEIGHT
BD.	BOARD	INT.	INTERIOR
BLK.	BLOCK	JT.	JOINT
BM.	BEAM	M.O.	MASONRY OPENING
BOT.	BOTTOM	N.I.C.	NOT IN CONTRACT
CLG.	CEILING	N.T.S.	NOT TO SCALE
CL.	CENTERLINE	O.C.	ON CENTER
C.I.	CAST IRON	O.D.	OVERFLOW DRAIN
CLR.	CLEAR	OPP.	OPPOSITE
COL.	COLUMN	P.L.	PROPERTY LINE
CONC.	CONCRETE	PLYWD.	PLYWOOD
CONTR.	CONTRACTOR	PROJ.	PROJECTION
DET.	DETAIL	P.T.	PRESSURE TREATED
D.S.	DOWN SPOUT	Q.T.	QUARRY TILE
E.D.F.	ELEC. DRINKING FTN.	R.D.	ROOF DRAIN
E.P.	ELEC. PANEL	RM.	ROOM
E.W.C.	ELEC. WATER COOLER	S.C.	SOLID CORE
F.D.	FLOOR DRAIN	S.D.	SCUPPER DRAIN
F.E.	FIRE EXTINGUISHER	SIM.	SIMILAR
FIN.	FINISH	S.O.	SCUPPER OVERFLOW
FLR.	FLOOR	SUSP.	SUSPENDED
F.O.C.	FACE OF CONCRETE	T.O.C.	TOP OF CONCRETE
F.O.M.	FACE OF MASONRY	TEMP.	TEMPERED
F.O.S.	FACE OF STUD	T.S.	TOP OF SHEATHING
F.S.	FLOOR SINK	T.O.P.	TOP OF PARAPET
FTG.	FOOTING	TYP.	TYPICAL
G.A.	GAUGE	W/	WITH
G.I.	GALVANIZED IRON	W.C.	WATER CLOSET
GL.	GLASS	WD.	WOOD
GYP.	GYPSUM	W.H.	WATER HEATER
F.R.P.	FIBERGLASS REINFORCED PANEL		
A.F.F.	ABOVE FINISHED FLOOR		

BUILDING SUMMARY

LEGAL JURISDICTION : SALT LAKE CITY

HANDICAPPED PROVIDED : 2 SPACES

PARKING PROVIDED : 48 SPACES

TOTAL : 50 SPACES

FOR PARKING : SEE PARKING C-1

BUILDING CODE: UBC 1997
OCCUPANCY: S-2
SEISMIC ZONE: III

CONSTRUCTION TYPE: II N
REPAIR SHOP (50'X50') H-4

TOTAL SQ. FT : PHASE I ONLY

NEW STOREHOUSE ACTUAL:
115' x 175' = 20,125 S.F.
EXISTING STOREHOUSE:
75' x 100' = 7,500 S.F.
TOTAL: 27,625 S.F.
FUTURE OFFICE (PHASE 2):
52' x 150' x 2 = 15,600 S.F.
TOTAL: 43,225 S.F.

NOTE: PROVIDE 1 HR. AREA SEPERATION WALL BETWEEN STOREHOUSE (S-2) AND REPAIR SHOP (H-4).

BASIC ALLOWABLE : TABLE 5B - 18,000 S.F.
W/ SPRINKLERS - TRIPLE AREA : x 3
TOTAL ALLOWABLE : 54,000 S.F.

FIRE SPRINKLING:
PROVIDED

DESIGN TEAM

OWNER: TAYLOR-HUNT ELECTRIC

CONTRACTOR: UTAH COMMERCIAL CONTRACTORS INC.
3598 SOUTH 500 WEST
SALT LAKE CITY, UTAH 84115
PHONE: (801) 262-3472 FAX: 262-3478

ARCHITECT: PASKER, GOULD, AMES & WEAVER INC.
5263 SOUTH 300 WEST
MURRAY, UTAH 84107
PHONE: (801) 266-4669 FAX: 262-6122

CIVIL ENGINEER: BUSH & GUDGEL ENGINEERS
555 SOUTH 300 EAST
SALT LAKE CITY, UTAH 84111
PHONE: (801) 364-1212

STRUCTURAL ENGINEER: DUNN & ASSOCIATES INC.
380 WEST 800 SOUTH
SALT LAKE CITY, UTAH
PHONE: (801) 575-8877 FAX: 575-8875

METAL BUILDING COMPANY: STAR BUILDING SYSTEMS
12101 E.BRANDT RD/BOX 830
LOCKEFORD CA. 95237 (7827)
PHONE: (800)-685-STAR

ELECTRICAL ENGINEER: TAYLOR - HUNT ELECTRIC
2420 SOUTH 2570 WEST
WEST VALLEY CITY, UTAH 84119
PHONE: (801) 978-2600 FAX: 978-0304

MECHANICAL ENGINEER: CCI MECHANICAL INC.
758 SOUTH REDWOOD RD.
SALT LAKE CITY, UTAH 84104
PHONE: (801) 973-9000

FIRE SPRINKLER: FIRE ENGINEERING CO. INC.
4717 SOUTH 500 WEST
MURRAY, UTAH 84123
PHONE: (801) 262-3329

INDEX TO DRAWINGS

TITLE
T-1 TITLE SHEET AND DRAWING INDEX
T-2 STANDARDS

CIVIL
C-1 SITE LAYOUT PLAN
C-2 UTILITY PLAN
C-3 GRADING & DRAINAGE PLAN
C-4 SITE DETAILS

LANDSCAPING
L-1 PLANTING PLAN
L-2 LANDSCAPE DETAILS

ARCHITECTURAL
A-1 FLOOR PLAN
A-2 EXTERIOR ELEVATIONS
A-3 BUILDING & WALL SECTIONS
A-4 DOOR & FINISH SCHEDULE & DETAILS
A-5 ENLARGED PLANS & ELEVATIONS
A-6 LIGHT EQUIPMENT STORAGE
A-7 CONDUIT STORAGE BUILDING
A-8 HEAVY EQUIPMENT STORAGE

STRUCTURAL
S-1.1 GENERAL NOTES
S-1.2 SCHEDULES AND TYP. DETAILS
S-2.1 FOOTING AND FOUNDATION PLAN
S-2.2 MEZZANINE FRAMING PLAN
S-3.1 FOOTING AND FOUNDATION DETAILS

MECHANICAL
M-0.1 MECHANICAL PLAN
M-2.1 PANEL & EQUIPMENT SCHEDULES
M-5.1 EQUIPMENT ROOM & RISER DIAGRAM
M-7.1 SITE LIGHTING PLAN

PLUMBING
P-2.1 PLUMBING FLOOR PLAN
P-2.2 LARGE SCALE PLUMBING FLOOR PLAN
P-7.1 PLUMBING SCHEDULES AND DETAILS

ELECTRICAL
E-1 PANEL SCHEDULES
E-1.1 PANEL & EQUIPMENT SCHEDULES
E-2 EQUIPMENT ROOM & RISER DIAGRAM
E-3 SITE LIGHTING PLAN
E-4 SITE POWER PLAN
E-5 EXISTING WAREHOUSE LIGHTING PLAN
E-6 EXISTING WAREHOUSE POWER PLAN
E-7 WAREHOUSE LIGHTING PLAN
E-8 WAREHOUSE POWER PLAN

PGA&W
PASKER GOULD AMES & WEAVER
ARCHITECTS PLANNERS
5263 SOUTH 300 WEST MURRAY, UTAH (801) 266-4669

DRAWN BY	CHECKED BY	JOB NO.	DATE
D.A.P.	C.A.	2711	JUNE 15, 1999

TITLE SHEET AND DRAWING INDEX
A NEW BUILDING FOR
TAYLOR - HUNT ELECTRIC
1747 S. 900 W. SALT LAKE CITY, UTAH

Utah Commercial Contractors, Inc.

T 1

© PASKER GOULD AMES & WEAVER - 1999

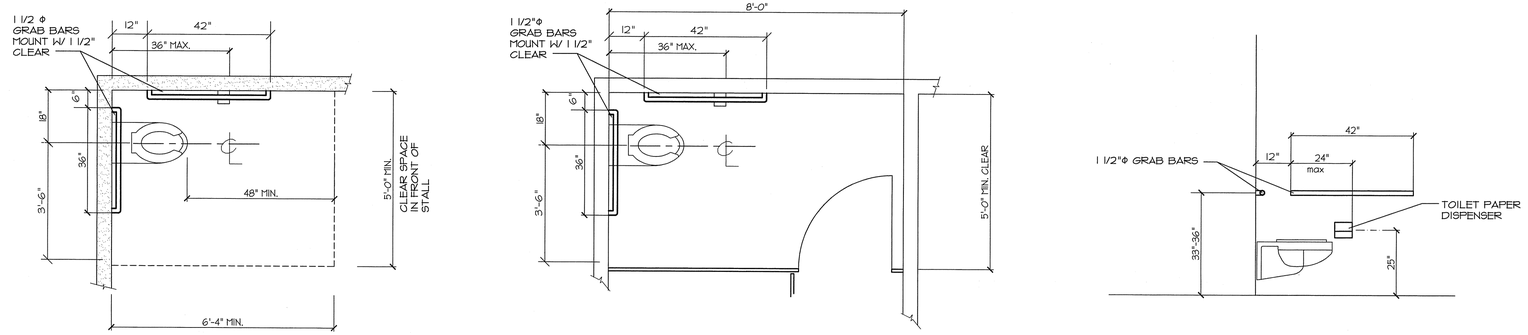

HANDICAPPED TOILET ROOM - TYPICAL MOUNTING STANDARDS

SCALE: 1/2" = 1'-0" | A

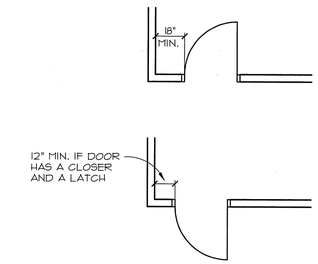

TYP. JAMB DIMENSIONS

SCALE: 1/4" = 1'-0" | B

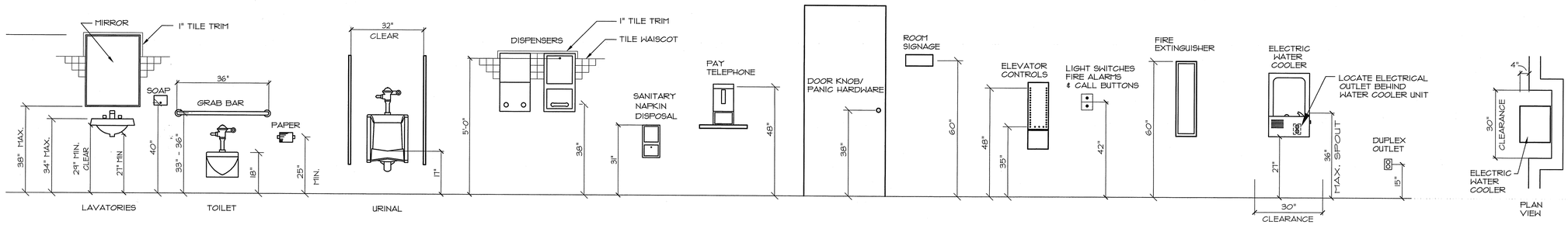

HANDICAPPED- TYPICAL MOUNTING STANDARDS

SCALE: 1/2" = 1'-0" | C

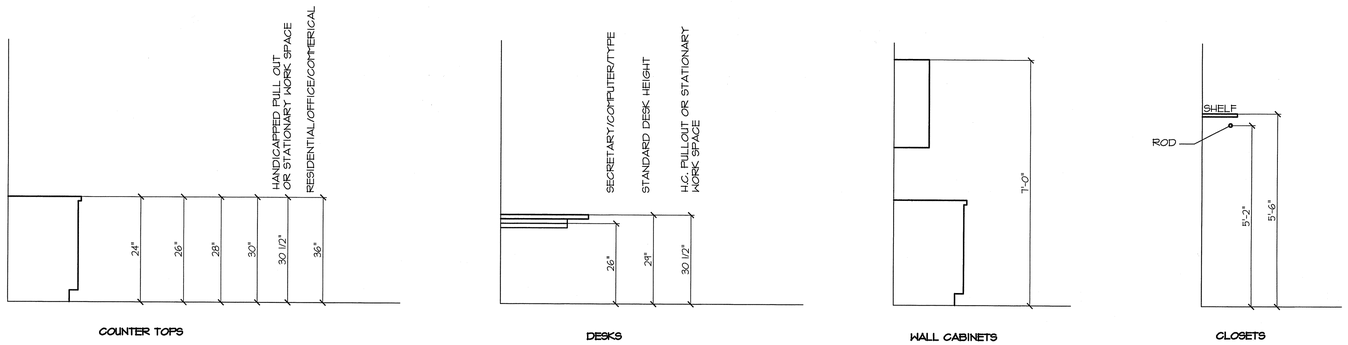

TYPICAL CABINET STANDARDS

SCALE: 1/2"=1'-0" | D

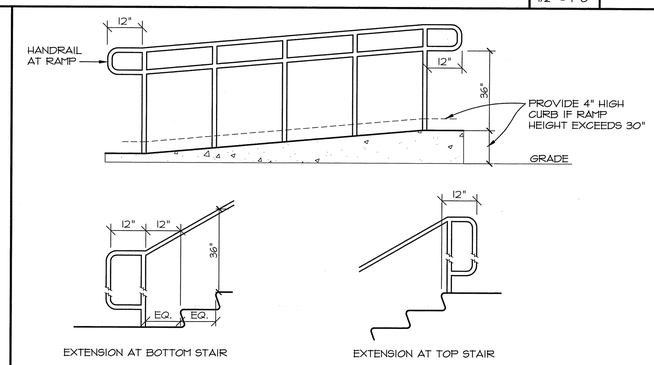

HANDRAIL ELEVATIONS

SCALE: 1/2" = 1'-0" | E

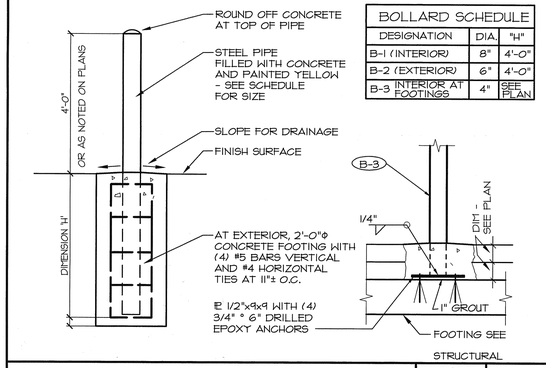

BOLLARD SCHEDULE		
DESIGNATION	DIA.	"H"
B-1 (INTERIOR)	8"	4'-0"
B-2 (EXTERIOR)	6"	4'-0"
B-3 INTERIOR AT FOOTINGS	4"	SEE PLAN

PIPE BOLLARD DETAIL

SCALE: 1/2" = 1'-0" | F

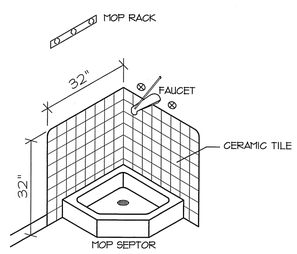

JANITOR MOP SINK

SCALE: N.T.S. | H

ITEM	FIRE RATING	GA FILE NO.
3 5/8 METAL STUDS WITH TYPE X GYP BD	1 HOUR	WP 1200
2 X 4 WOOD STUDS WITH TYPE X GYP BD	1 HOUR	WP 3510
3 3/8 METAL STUDS (2) LAYERS 5/8 TYPE X GYP BD	2 HOUR	WP 1711
2 X 4 WOOD STUDS (2) LAYERS TYPE X GYP BD	2 HOUR	WP 4135
FLOOR CEILING ASSEMBLY (TRUSS JOIST)	1 HOUR	FC 5515
FLOOR CEILING ASSEMBLY STEEL JOIST, CONC. METAL SLAB ACCOUSTICAL CEIL.	1 HOUR	ULG 252
ROOF CEILING ASSEMBLY METAL DECK ACCOUSTICAL CEIL.	1 HOUR	ULP 225

RESISTIVE CONSTRUCTION

J | SCALE: 1/2"=1'-0"

PASKER GOULD AMES & WEAVER
ARCHITECTS PLANNERS
5263 SOUTH 300 WEST
MURRAY, UTAH (801) 266-4669

DRAWN BY	CHECKED BY	JOB NO.	DATE
D.K.P.	C.A.	2711	JUNE 15, 1999

STANDARDS

A NEW BUILDING FOR

TAYLOR - HUNT ELECTRIC

1147 S. 900 W. SALT LAKE CITY, UTAH

REGISTERED ARCHITECT LICENSE NO. 113067 LOWELL A. GOULD STATE OF UTAH

T
2

© PASKER GOULD AMES & WEAVER - 1999

GRAPHIC SCALE

20 10 0 10 20 40 80

(IN FEET)
1 inch = 20 ft.

NORTH

900 WEST STREET

QUAYLE AVENUE

RIGHT OF WAY

EXISTING BUILDING

EXISTING BUILDING

CHAIN LINK FENCE

CONCRETE PATIO

ROOF DRAIN

RIVET 3' OFFSET

NEW GAS LINE

ABANDON EXISTING 50' CURB CUT

ROOF DOWN SPOUT

OFFICE AREA
2 STORY (15,560 sq ft)
FINISH FLOOR ELEV. = 101.00

INV: ±93.25

EXISTING GAS LINE

EXISTING 6" SEWER

EXISTING 1" WATERLINE USED FOR IRRIGATION. (OWNER CONVERT TO LAWN SERVICE AND INSTALL BACKFLOW PREVENTOR)

EXISTING 4' SIDEWALK

INSTALL 6" CURBWALL

INSTALL 6" CURBWALL

EXISTING WAREHOUSE AREA
FINISH FLOOR ELEV. = 101.00

NEW WAREHOUSE AREA
(28,700 sq ft)
FINISH FLOOR ELEV. = 101.00

FLARED END

RELOCATE HYDRANT NORTH

EXISTING HYDRANT

INSTALL 58 LF 8" CONC PIPE @ 1.0%

INSTALL 35 LF 8" CONC PIPE @ 1.0%

INSTALL 100 LF 6"ø SANITARY SEWER @ 1.0%

INSTALL C.O. INV: ±94.35

1.5' MIN SEPERATION BETWEEN SEWER AND WATER LINE (WATER LINE ON TOP)

EXIST. INLET BOX. INV ELEV: 96.75 (CONTRACTOR TO VERIFY ELEVATION)

EXISTING 15" PIPE

EXISTING CURB CUT

INSTALL 1-1/2" WATER METER AND SERVICE LINE SEE STD. PLANS W-5 FOR SLC PUBLIC UTILITIES

INSTALL 75 LF 6"ø SANITARY SEWER @ 1.0%

INSTALL 75 LF 6"ø SANITARY SEWER @ 1.0%

INSTALL SS C.O.

INSTALL SS C.O.

INSTALL 72.5 LF 6"ø SANITARY SEWER @ 1.0%

1.5' MIN SEPERATION BETWEEN SEWER AND WATER LINE (WATER LINE ON TOP)

INSTALL C.O. INV: ±96.61

ROOF DRAIN SEE MECHANICAL DRAWINGS FOR CONTINUATION.

CLEANOUT

INSTALL 25' OF 8" CONCRETE PIPE @ 0.5%

DOCK LEVELOR DOWN

INSTALL 2'X2' CATCH BASIN RIM 100.50

3 SIDED HEAVY EQUIPMENT COVERED PARKING

NEW CONCRETE SEE DETAIL G/3

INSTALL 85 LF 15" HDPE @ 0.5% SLOPE

NEW CONCRETE

INSTALL 2'X2' CATCH BASIN RIM: 99.75

INSTALL 2'X2' CATCH BASIN RIM ELV. 97.00 I.E. ELV. 95.00

INSTALL 92 LF 15"ø HDPE PIPE @ 0.5%

INSTALL 2'X2' CATCH BASIN RIM: 100.48

INSTALL 67 LF 15"ø HDPE PIPE @ 0.5%

46 LF OF 6" PVC @ 10%

45' OF 6" FIRE LINE

1.5" WATER LINE

INSTALL 1.5" WATER LINE

INSTALL 180 LF 15"ø HDPE PIPE @ 0.5%

INSTALL 360 L.F. 6" FIRE LINE DEPTH = 5'

INSTALL 2'X2' CATCH BASIN RIM 99.24

INSTALL 2.5' CURB & GUTTER

INSTALL 145 LF 15"ø HDPE PIPE @ 0.5%

NEW CONCRETE

CONDUIT YARD

STORAGE

TRASH

NEW CONCRETE SEE DETAIL G/3

3 SIDED COVERED PARKING

EXISTING 8" WATER LINE

SAW CUT & REMOVE, INSTALL NEW FIRE LINE, AND WATER LINE REPLACE CONCRETE.

RIVET 3' OFFSET

INSTALL 8" FIRE DETECTOR CHECK SEE STD PLANS W-19 FOR SLC PUBLIC UTILITIES

INSTALL 2'X2' CATCH BASIN RIM 99.07

EXISTING BUILDING

INSTALL 2'X2' CATCH BASIN RIM 99.70

INSTALL FIRE HYDRANT SEE STD. PLANS W-11 SLC PUBLIC UTILITIES

CHAIN LINK FENCE

BLOCK BUILDING

CHAIN LINK FENCE

LICENSED PROFESSIONAL ENGINEER
10/10/99
No. 270304
JAMES F. WOODRUFF
STATE OF UTAH

DISCLAIMER:
TOPOGRAPHIC AND UTILITY INFORMATION SHOWN ON THIS PLAT WAS RECEIVED FROM THE OWNER. BUSH AND GUDGELL ACCEPTS NO RESPONSIBILITY FOR THE ACCURACY OR COMPLETENESS OF THE INFORMATION. THE CONTRACTOR TAKES THE WHOLE RISK, RESPONSIBILITY AND EXPENSE WITH RESPECT TO THE LOCATION OF UTILITIES, AND IN WORKING WITH UTILITY OWNERS ABOUT LOCATING, MOVING, REPAIRING, AND MODIFYING UTILITIES. ALL UTILITY LOCATIONS SHOWN ON THE PLANS ARE APPROXIMATE AND ARE MARKED, IF AT ALL, ONLY FOR CONVENIENCE. BUSH & GUDGELL MAKES NO REPRESENTATION ABOUT THE LOCATION OF ANY SUCH UTILITIES AND THE CONTRACTOR IS ENCOURAGED TO CONTACT UTILITY COMPANIES AND OWNERS ABOUT THE LOCATION OF ALL UTILITIES THAT MAY BE IMPACTED BY OR IMPACT THE PROJECT WORK.

LEGEND

99	EXISTING GRADE CONTOURS
GB	GRADE BREAK
TBC	TOP BACK OF CURB ELEVATION
TC	TOP OF CONCRETE ELEVATION
TO	TOP OF OIL ELEVATION
1.93% ⇒	DIRECTION & SLOPE OF ASPHALT/CONCRETE
	SAWCUT EXISTING PAVEMENT AND CONC.
W	WATER LINE

APPROVED
WATER, SEWER & DRAINAGE
BY SLC PUBLIC UTILITIES
6-1-99

No	Date	By	Revision
6	10/6/99	BKS	AS PER CRAIG CHANGES
6	10/1/99	BKS	AS PER CITY CHANGES
5	6/21/99	BKS	AS PER CITY AND MR. HUNT
4	6/29/99	JFW	MOVED FRONT OFFICE BUILDING
3	4/26/99	JFW	CHANGES PER MR. RYAN
2	3/24/99	JFW	AS PER CITY CHANGES
1	2/15/99	BKS	AS PER CITY CHANGES

BUSH & GUDGELL, INC.
Engineers - Planners - Surveyors
555 South 300 East, Salt Lake City, Utah 84111
(801) 364-1212 Fax (801) 364-1225
Offices: St. George, Utah

Drawn : JEW Date : 4/5/99
Designer : JW
Checked : JW
Approved : JW
Scale : 1"=20'
Job No : 441C6

UTILITY PLAN
HUNT ELECTRIC COMPANY
1747 SOUTH 900 WEST
SEC 14, T1S, R1W, S.L.B. & M.

SHEET 1 OF 3 SHEETS

FILE: 1106

\\Bryan\C-DRIVE\Data\DWG\445124\c1.dwg Thu Jun 10 08:12:20 1999 PLOTTED FROM JDS COMPUTER

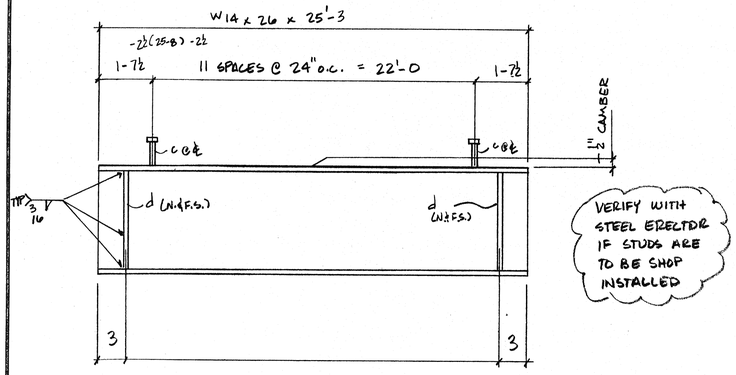

1C W14 x 26 x 25'-3 ~ 7 EACH

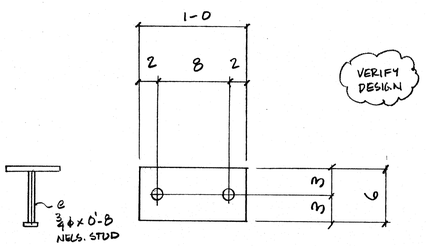

1D PL ½ x 6 x 1'-0 ~ 14 EACH

REF: BEAM BEARING PLATES

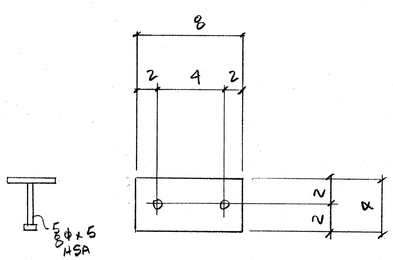

1F PL ½ x 4 x 0'-8 ~ 230 EACH

REF: 7-13-99 CHANGE ORDER ADD

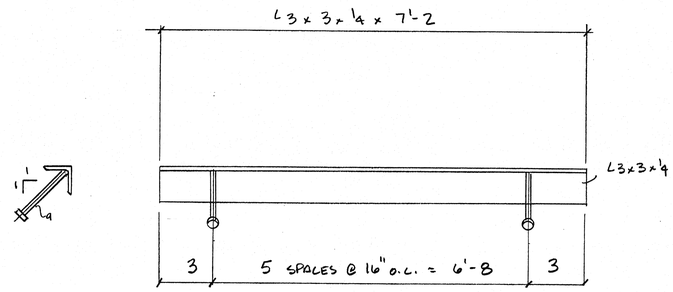

1A DOCK LEVELER ANGLE ~ ONE EACH

REF: FRONT EDGE @ PIT BOTTOM

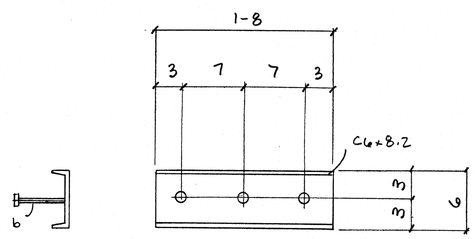

1B BUMPER EMBED ~ 2 EACH

REF: DOCK LEVELER

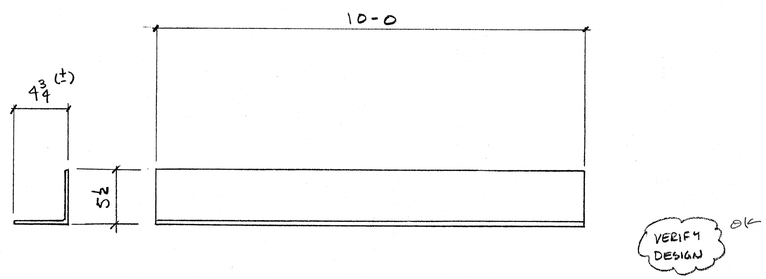

1G BNT PL 12ga x 10 x 10'-0 ~ 10 EACH

REF: DECK CLOSURE PL @ GRIDS 5 & 6.

(FIELD TRIM TO FIT)

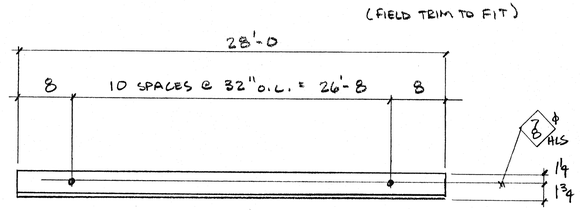

1H L 3 x 3 x ¼ x 28'-0 ~ ONE EACH

REF: DECK BEARING ANGLE @ GRID 6

(FIELD TRIM TO FIT)

BILL OF MATERIAL

SHIP MARK	PC. MARK	QTY.	DESCRIPTION	LENGTH FT.	LENGTH INCHES	REMARKS	WEIGHT	ORDERED
1A		ONE	L 3 x 3 x ¼	7	2			
	a	6	½ ϕ NELS. STUD	0	4			
1B		2	C 6 x 8.2	1	8			
	b	6	¾ ϕ NELS. STUD	0	6			
1C		7	W 14 x 26	25	3			
	c	84	¾ ϕ NELS. STUD	0	3½			
	d	28	PL ¼ x 2⅜	1	1			
1D		14	PL ½ x 6	1	0			
	e	28	¾ ϕ NELS. STUD	0	8			
1F		230	PL ½ x 4	0	8			
	f	460	⅝ ϕ NELS. STUD	0	5			
1G		10	PL 12ga x 10	10	0	BENT		
1H		ONE	L 3 x 3 x ¼	28	0			
			FIELD BOLTS					
		9	¾ ϕ ALL THR'D	0	8	w/N.W.		

RECEIVED
JUL 26 1999
DUNN ASSOCIATES, INC.
CONSULTING STRUCTURAL ENGINEERS

☑ No Corrections Noted ☐ Rejected ☐ Corrections Noted ☐ Revise and Resubmit

DUNN ASSOCIATES, INC.

This review is only for general conformance with the design concept of the project and general compliance with the information given in the Contract Documents. Corrections or comments made on the shop drawings during this review do not relieve contractor from compliance with the requirements of the plans and specifications. Approval of a specific item shall not include approval of an assembly of which the item is a component. Contractor is responsible for: dimensions to be confirmed and correlated at the jobsite; information that pertains solely to the fabrication processes or to the means, methods, techniques, sequences and procedures of construction; coordination of his or her Work with that of all other trades; and for performing all work in a safe and satisfactory manner.

Date 7/27/99 REVIEWED By RMW

REV. NO.	DATE	DESCRIPTION	BY
0	7-12-99	SUBMITTAL	DB

PAINT: STD SHOP PRIME PAINT — WELDS: E7xxx

STEEL SPECS.: A36 — HOLES — UNLESS NOTED

AMFAB
Steel Specialties
787 South 950 West
Woods Cross
Utah 84087
801.298.2900
801.298.3278 Fax

ITEM

SUBMITTAL ONLY

JOB NAME: TAYLOR HUNT ELECTRIC

LOCATION: 1747 SOUTH 900 WEST, SALT LAKE CITY UTAH

CONTRACTOR: UTAH COMMERCIAL CONTRACTORS INC

Scale: NTS

Drawn: DB

Job #: 19134

Sheet: 1

GRAPHIC SCALE

20 0 10 20 40 80

(IN FEET)
1 inch = 20 ft.

NORTH

LICENSED PROFESSIONAL ENGINEER
06/10/99
No. 270304
JAMES F. WOODRUFF
STATE OF UTAH

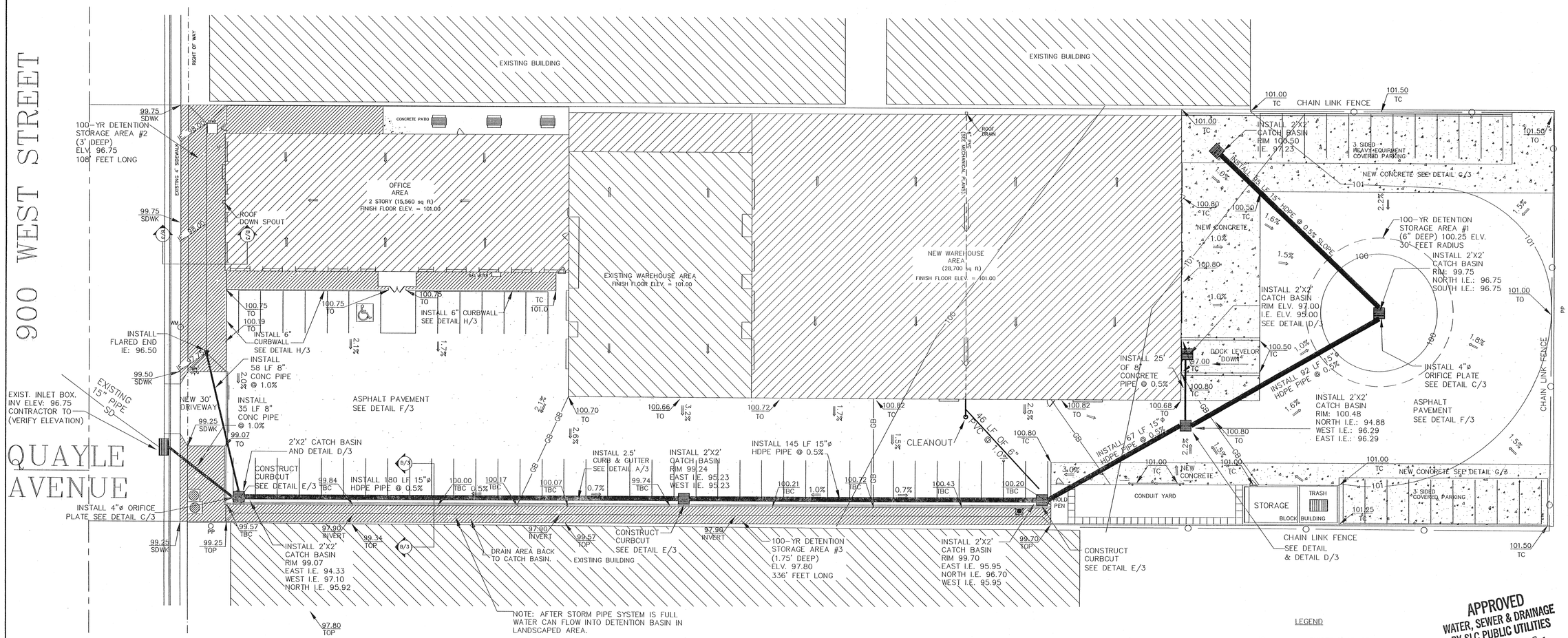

DRAINAGE CALCULATIONS FOR NEW IMPROVEMENTS

Land Use	Area (s.f.)	Runoff (c)
Asphalt & Conc.	37,743	0.90
Roofs	31,552	0.85
Lawn/Landscape	5,188	0.15
Total Area	74,483 s.f.	1.71 acres

Allowable Outfall (0.20 cfs/acre)(1.71 acres) = 0.34 cfs
Weighted Runoff Coefficient (c)=0.83

Salt Lake City Drain Program 100 Year 24 Hour Storm

Interval (min.)	Rainfall (in.)	Storage (c.f.)	Outfall (c.f.)	Req. Storage (c.f.)
15	0.77	3935	308	3628
30	1.07	5502	616	4887
60	1.37	7018	1231	5787
120	1.52	7779	2462	5317
180	1.66	8507	3693	4814
360	2.01	10,328	7,387	2,941
720	2.50	12,826	14,773	0
1440	3.21	16,479	29,547	0
		Total Required Storage		5,787 c.f.

Use 546 LF 15"ø Pipe = [(3.14)(15"/12)^2/4] x 579 = 711 c.f.
Use 84 LF 8"ø Pipe = [(3.14)(8"/12)^2/4] x 84 = 29 c.f.
Detention Area #1 = [(3.14)(30')^2 x 0.50']/3 = 471 c.f.
Detention Area #2 = [(108)(3)(7.5)] = 2430 c.f.
Detention Area #3 = [(1.75)(3.5)(336)] = 2058 c.f.
Catch Basin Storage = (7*(2'x2'x4'deep)) = 112 c.f.
Total Storage Capacity = 711+29+471+2430+2058+112 = 5811 c.f.
Approximate Storage Capacity Available = 5811 c.f. > 5,787 c.f. Required
Design Orifice Diameter Q = 0.6 x A x (2x32.2x.99')^0.5
h = (99.07 – 97.10)/2 = 0.99'
Q = 0.34 c.f.s.
A = 0.077 s.f. = 11.03 square inches
11.03 = (3.14)(D)^2/4 , Dia. Orifice Plate = 3.74 in. use 4 inches

DISCLAIMER:
TOPOGRAPHIC AND UTILITY INFORMATION SHOWN ON THIS PLAT WAS RECEIVED FROM THE OWNER. BUSH AND GUDGELL ACCEPTS NO RESPONSIBILITY FOR THE ACCURACY OR COMPLETENESS OF THE INFORMATION. THE CONTRACTOR TAKES THE WHOLE RISK, RESPONSIBILITY AND EXPENSE WITH RESPECT TO THE LOCATION OF UTILITIES, AND IN WORKING WITH UTILITY OWNERS ABOUT LOCATING, MOVING, REPAIRING, AND MODIFYING UTILITIES. ALL UTILITY LOCATIONS SHOWN ON THE PLANS ARE APPROXIMATE AND ARE MARKED, IF AT ALL, ONLY FOR CONVENIENCE. BUSH & GUDGELL MAKES NO REPRESENTATION ABOUT THE LOCATION OF ANY SUCH UTILITIES AND THE CONTRACTOR IS ENCOURAGED TO CONTACT UTILITY COMPANIES AND OWNERS ABOUT THE LOCATION OF ALL UTILITIES THAT MAY BE IMPACTED BY OR IMPACT THE PROJECT WORK.

LEGEND

99	EXISTING GRADE CONTOURS
100	FINISH GRADE CONTOURS
GB	GRADE BREAK
	NEW STORM DRAIN PIPE
	NEW CATCH BASIN
TBC	TOP BACK OF CURB ELEVATION
TC	TOP OF CONCRETE ELEVATION
TO	TOP OF OIL ELEVATION
1.93% ⇒	DIRECTION & SLOPE OF ASPHALT/CONCRETE
	ASPHALT

APPROVED
WATER, SEWER & DRAINAGE
BY SLC PUBLIC UTILITIES
6-11-99

No	Date	By	Revision
6	6/7/99	BKS	AS PER CITY CHANGES
5	5/21/99	BKS	AS PER CITY AND MR. HUNT
4	4/29/99	JFW	MOVED FRONT OFFICE BUILDING
3	4/6/99	JFW	CHANGED SITE PLAN PER RYAN
2	3/4/98	JFW	AS PER CITY CHANGES
1	2/13/98	BKS	AS PER CITY CHANGES

BUSH & GUDGELL, INC.
Engineers – Planners – Surveyors
555 South 300 East, Salt Lake City, Utah 84111
(801) 364-1212 Fax (801) 364-1225
Offices: St. George, Utah

Drawn : JFW Date : 4/6/99
Designer : JW
Checked : JW
Approved : JW
Scale : 1"=20'
Job No : 44106

GRADING & DRAINAGE PLAN
HUNT ELECTRIC COMPANY
1747 SOUTH 900 WEST
SEC. 14, T.1S. R1.W., S.L.B. & M.

SHEET 2 / 3 SHEETS
FILE: 44106

C:\Bryan\DWG\44512\1c-2.dwg Wed Jun 09 16:36:12 1999

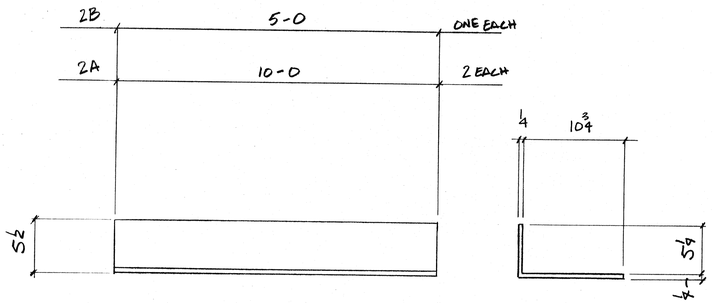

(FIELD TRIM TO FIT)

DECK BEARING ANGLE @ GRID E

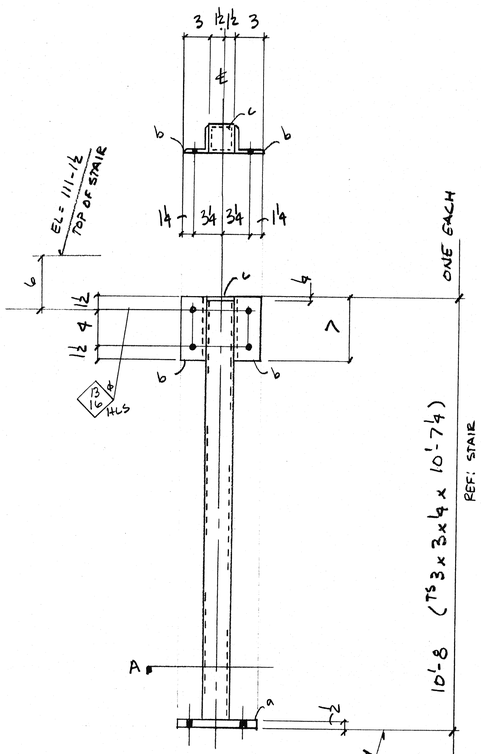

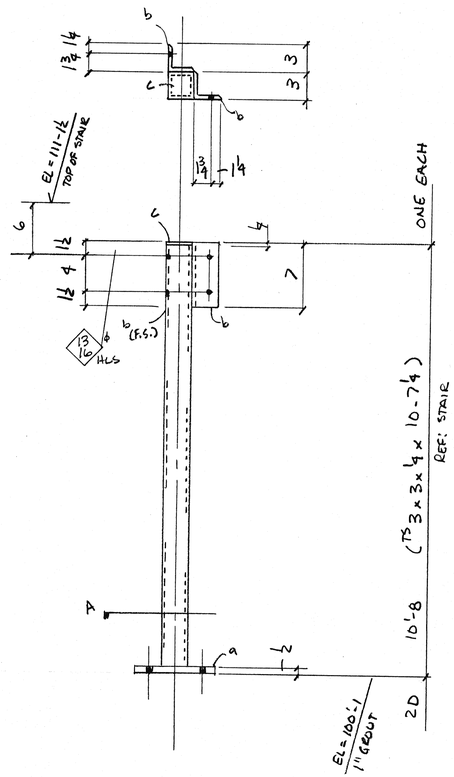

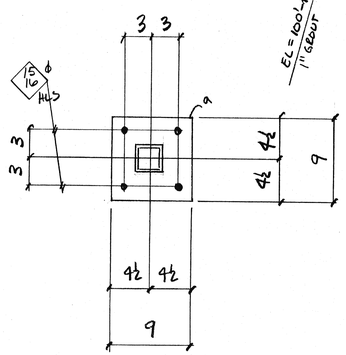

SECTION A

BILL OF MATERIAL

SHIP MARK	PC. MARK	QTY.	DESCRIPTION	LENGTH FT.	LENGTH INCHES	REMARKS	WEIGHT	ORDERED
2A		2	PL 1/4 x 16	10	0	BENT		
2B		ONE	PL 1/4 x 16	5	0	BENT		
2C		ONE	TS 3 x 3 x 1/4	10	7 1/4			
	a	1	PL 1/2 x 9	0	9			
	b	2	L 3 x 3 x 1/4	0	7			
	c	1	PL 1/4 x 3	0	3			
2D		ONE	TS 3 x 3 x 1/4	10	7 1/4			
	a	1	PL 1/2 x 9	0	9			
	b	2	L 3 x 3 x 1/4	0	7			
	c	1	PL 1/4 x 3	0	3			
			FIELD BOLTS					
		8	3/4 ϕ A325 BOLT	0	1 3/4	W/N.W		
		8	3/4 ϕ ANC BOLT	1	0	W/STD HEX W/2N.W		

RECEIVED
JUL 26 1999
DUNN ASSOCIATES, INC.
CONSULTING STRUCTURAL ENGINEERS

☑ No Corrections Noted ☐ Rejected
☐ Corrections Noted ☐ Revise and Resubmit

DUNN ASSOCIATES, INC.

This review is only for general conformance with the design concept of the project and general compliance with the information given in the Contract Documents. Corrections or comments made on the shop drawings during this review do not relieve contractor from compliance with the requirements of the plans and specifications. Approval of a specific item shall not include approval of an assembly of which the item is a component. Contractor is responsible for: dimensions to be confirmed and correlated at the jobsite; information that pertains solely to the fabrication processes or to the means, methods, techniques, sequences and procedures of construction; coordination of his or her Work with that of all other trades; and for performing all work in a safe and satisfactory manner.

Date 7/27/99 REVIEWED By RW

REV. NO.	DATE	DESCRIPTION	BY
0	7-13-99	SUBMITTAL	

PAINT: STD SHOP PRIME PAINT
WELDS: E7XXX 1/4 FILLET U.N.O.
STEEL SPECS.: A36 TUBE A500
HOLES: 13/16 ϕ UNLESS NOTED

AMFAB

Steel Specialties
787 South 950 West
Woods Cross
Utah 84087
801.298.2900
801.298.3278 Fax

ITEM

SUBMITTAL ONLY

JOB NAME: TAYLOR HUNT ELECTRIC
LOCATION: 1747 SOUTH 900 WEST SALT LAKE CITY UTAH
CONTRACTOR: UTAH COMMERCIAL CONTRACTORS INC

Scale NTS
Drawn DB
Job # 19134
Sheet 2

NOTE: MAX 10' TOOLED CONTROL JOINTS, EXPANSION JOINTS AT 50 FEET UNLESS OTHERWISE APPROVED.

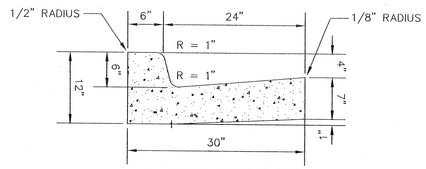

HIGH-BACK CURB AND GUTTER
(TYPE A)

NOTE: ALL CURB & GUTTER IS TO BE BEDDED WITH A MIN OF 4" OF UNTREATED BASE COURSE.

(A) CURB & GUTTER
NO SCALE

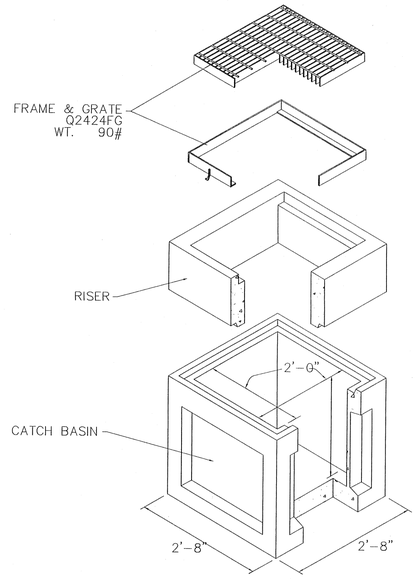

(D) 2' x 2' CATCH BASIN
NO SCALE

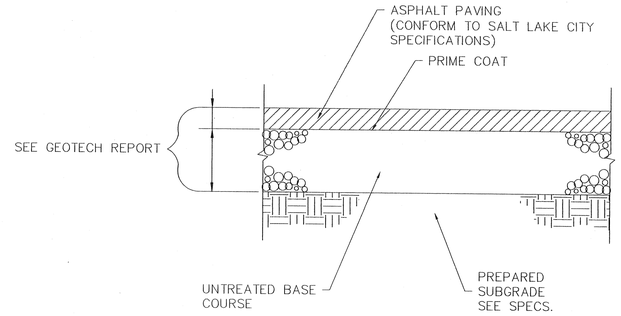

(F) ASPHALT PAVEMENT SECTION
NO SCALE

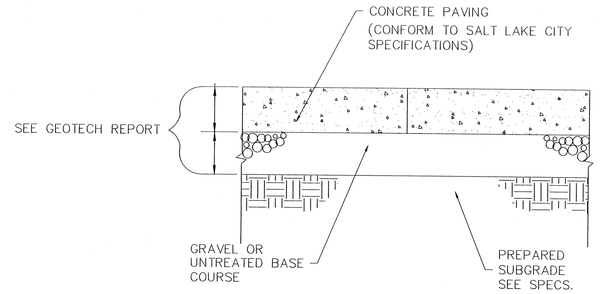

NOTE: PLACE CONTRACTION JOINTS EVERY 12' MAX. AT 1-1/2 INCH DEEP. PLACE EXPANSION JOINTS EVERY 36' MAX. WITH 1/2 INCH THICK, PREMOLDED, EXPANSION JOINT FILLER. PLACE JOINT FILLER BETWEEN THE CURB AND GUTTER AND SIDEWALK OR STRUCTURES.

(G) CONCRETE PAVEMENT SECTION
NO SCALE

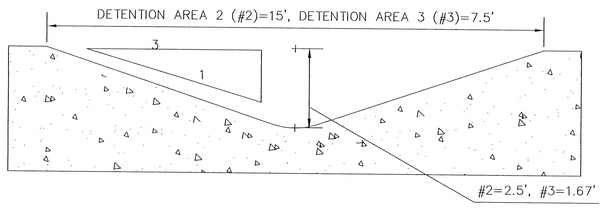

(B) STORAGE AREA DETAIL
NO SCALE

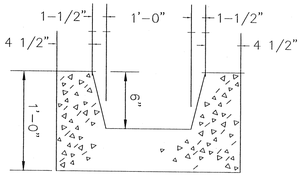

SECTION "A" – "A"

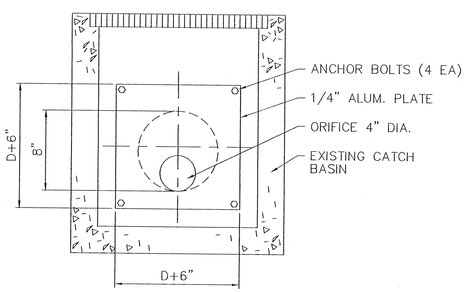

(C) ORIFICE DETAIL
NO SCALE

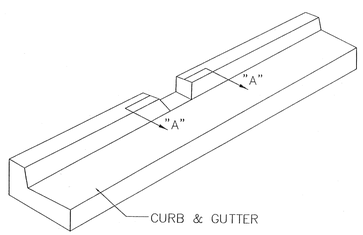

(E) CURB CUT
NO SCALE

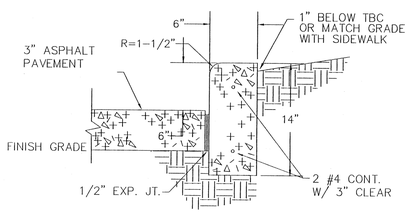

(H) 6" CONCRETE CURB
NO SCALE

APPROVED
WATER, SEWER & DRAINAGE
BY SLC PUBLIC UTILITIES
6-11-99

No.	Date	By	Revision
5	6/7/99	BKS	AS PER CITY CHANGES
4	5/21/98	BKS	AS PER MR HUNT AND THE CITY
3	4/7/99	JFW	CHANGED SITE PLAN PER RYAN
2	3/4/98	JFW	AS PER CITY CHANGES
1	2/15/98	BKS	AS PER CITY CHANGES

BUSH & GUDGELL, INC.
Engineers – Planners – Surveyors
555 South 300 East, Salt Lake City, Utah 84111
(801) 364-1212 Fax (801) 364-1225
Offices: St. George, Utah

Drawn : BKS Date : 10/12/98
Designer : JW
Checked : JW
Approved : JW
Scale : NO SCALE
Job No : 44106

DETIALS
HUNT ELECTRIC COMPANY
1747 SOUTH 900 WEST
SEC. 14, T.1S. R1.W., S.L.B. & M.

SHEET
3
3
SHEETS
FILE: 44106

C:\Bryan\DWG\44512~1\44106DTL.dwg Wed Jun 09 16:37:03 1999

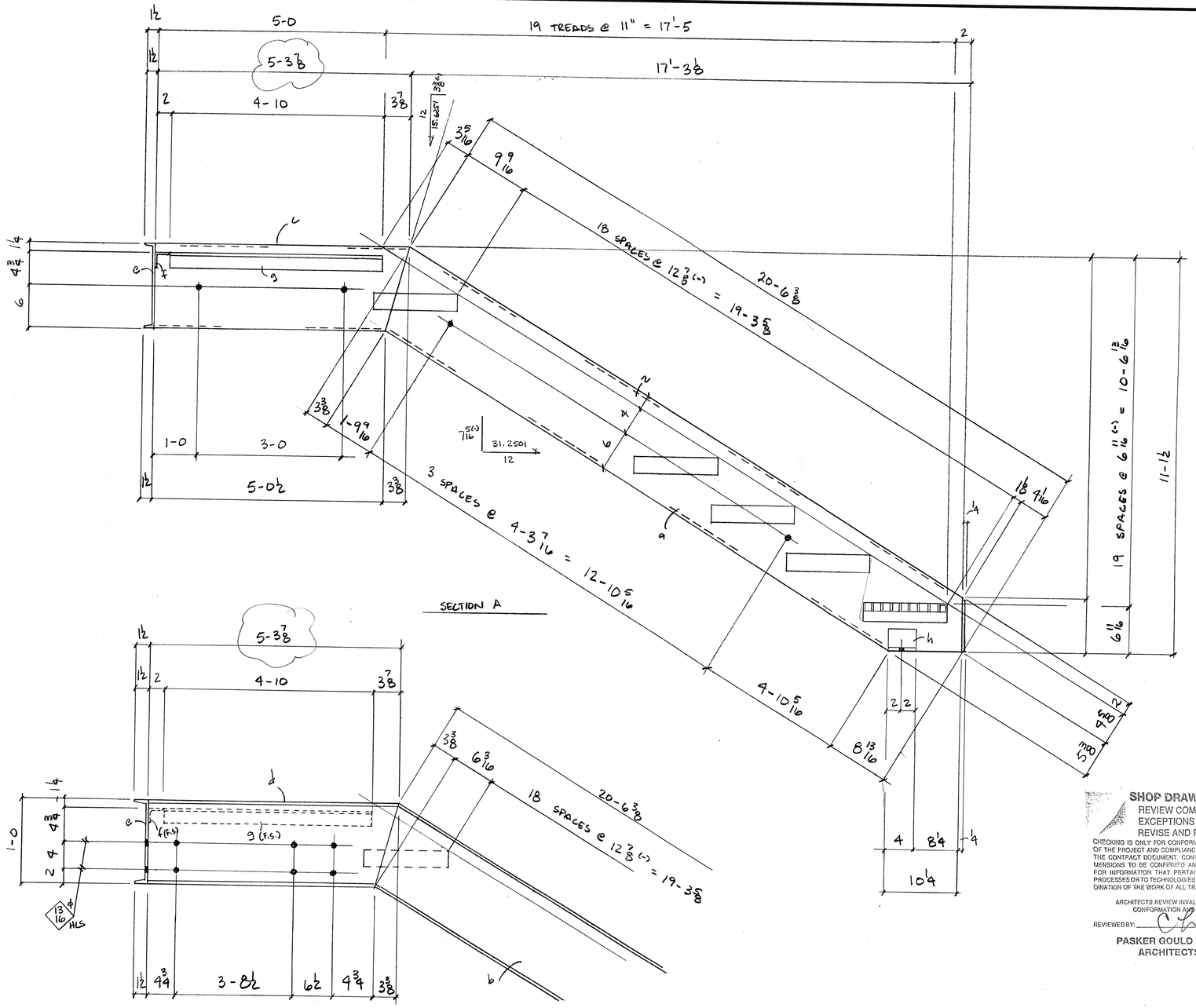

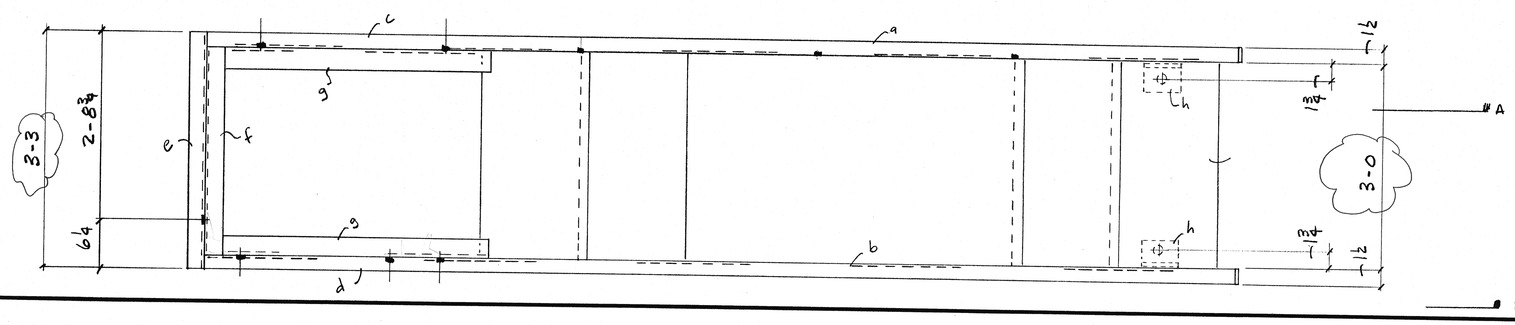

BILL OF MATERIAL

SHIP MARK	PC. MARK	QTY.	DESCRIPTION	LENGTH FT.	LENGTH INCHES	REMARKS	WEIGHT	ORDERED
3A		ONE	STAIR					
	a	1	MC 12 x 10.6	20	6 3/8			
	b	1	MC 12 x 10.6	20	6 3/8			
	c	1	MC 12 x 10.6	5	3 3/8			
	d	1	MC 12 x 10.6	5	3 3/8			
	e	1	MC 12 x 10.6	3	3			
	f	1	L 2 x 2 x 3/16	3	0			
	g	2	L 2 x 2 x 3/16	4	10			
	h	2	L 3 x 3 x 1/4	0	4			
	k	19	TREADS 12 1/16	3	0	W/ BNT FR NOSING		
			1 1/4 x 3/16 BAR GRATE	19	1/4	W/ STD SIDE PLATES		
			FURNISH					
			PLATFORM GRATE					
			1 1/4 x 3/16 BAR GRATE			BANDED		
				(SPAN)				
3B		ONE	37 1/16	2	11 3/4	W/ BNT FR NOSING	2'-11 3/4	
3C		ONE	22 3/4	2	11 3/4			
3D		8	STD SADDLE CLIP			W/ SCREWS		
			FIELD BOLTS					
		8	3/4 ϕ EXPANC	0	6 1/4	W/N.W		

SHOP DRAWING REVIEW
REVIEW COMPLETED ☐
EXCEPTIONS NOTED ☒
REVISE AND RESUBMIT ☐

CHECKING IS ONLY FOR CONFORMANCE WITH THE DESIGN CONCEPT OF THE PROJECT AND COMPLIANCE WITH THE INFORMATION GIVEN IN THE CONTRACT DOCUMENT. CONTRACTOR IS RESPONSIBLE FOR DIMENSIONS TO BE CONFIRMED AND CORRELATED AT THE JOB SITE FOR INFORMATION THAT PERTAINS SOLELY TO THE FABRICATION PROCESSES OR TO TECHNOLOGIES OF CONSTRUCTION; AND FOR COORDINATION OF THE WORK OF ALL TRADES.

ARCHITECTS REVIEW INVALID WITHOUT CONTRACTOR'S CONFORMATION AND APPROVAL INDICATED

REVIEWED BY: CHA DATE: 5 AUG 99

PASKER GOULD AMES & WEAVER
ARCHITECTS/PLANNERS

RECEIVED
JUL 26 1999
DUNN ASSOCIATES, INC.
CONSULTING STRUCTURAL ENGINEERS

☒ No Corrections Noted ☐ Corrections Noted
☐ Rejected ☐ Revise and Resubmit

DUNN ASSOCIATES, INC.

This review is only for general conformance with the design concept of the project and general compliance with the information given in the Contract Documents. Corrections or comments made on the shop drawings during this review do not relieve contractor from compliance with the requirements of the plans and specifications. Approval of a specific item shall not include approval of an assembly of which the item is a component. Contractor is responsible for dimensions to be confirmed and correlated at the jobsite; information that pertains solely to the fabrication processes or to the means, methods, techniques, sequences and procedures of construction; coordination of his or her Work with that of all other trades; and for performing all work in a safe and satisfactory manner.

Date 7/27/99 REVIEWED By RW

REV. NO.	DATE	DESCRIPTION	BY
0	7-12-99	SUBMITTAL	DB

PAINT: STD SHOP PRIME
WELDS: E7XXX
STEEL SPECS.: A36
HOLES: 15/16 ϕ UNLESS NOTED

AMFAB
Steel Specialties
787 South 950 West
Woods Cross
Utah 84087
801.298.2900
801.298.3278 Fax

ITEM: STAIR

JOB NAME: TAYLOR HUNT ELECTRIC SUBMITTAL ONLY
LOCATION: 1747 SOUTH 900 WEST SALT LAKE CITY UTAH
CONTRACTOR: UTAH COMMERCIAL CONTRACTORS INC

Scale: NTS
Drawn: DB
Job #: 19134
Sheet: 3

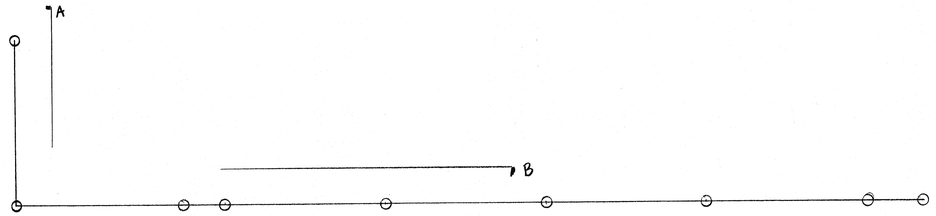

4A STAIR HANDRAIL ~ ONE EACH

VERIFY DESIGN
ARCH. VERIFY

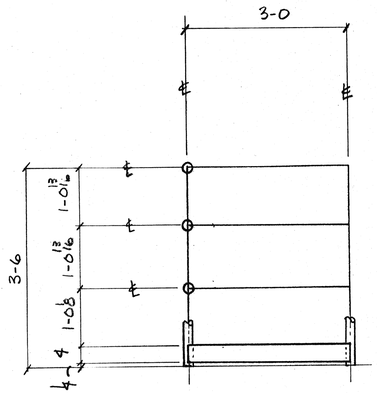

SECTION A

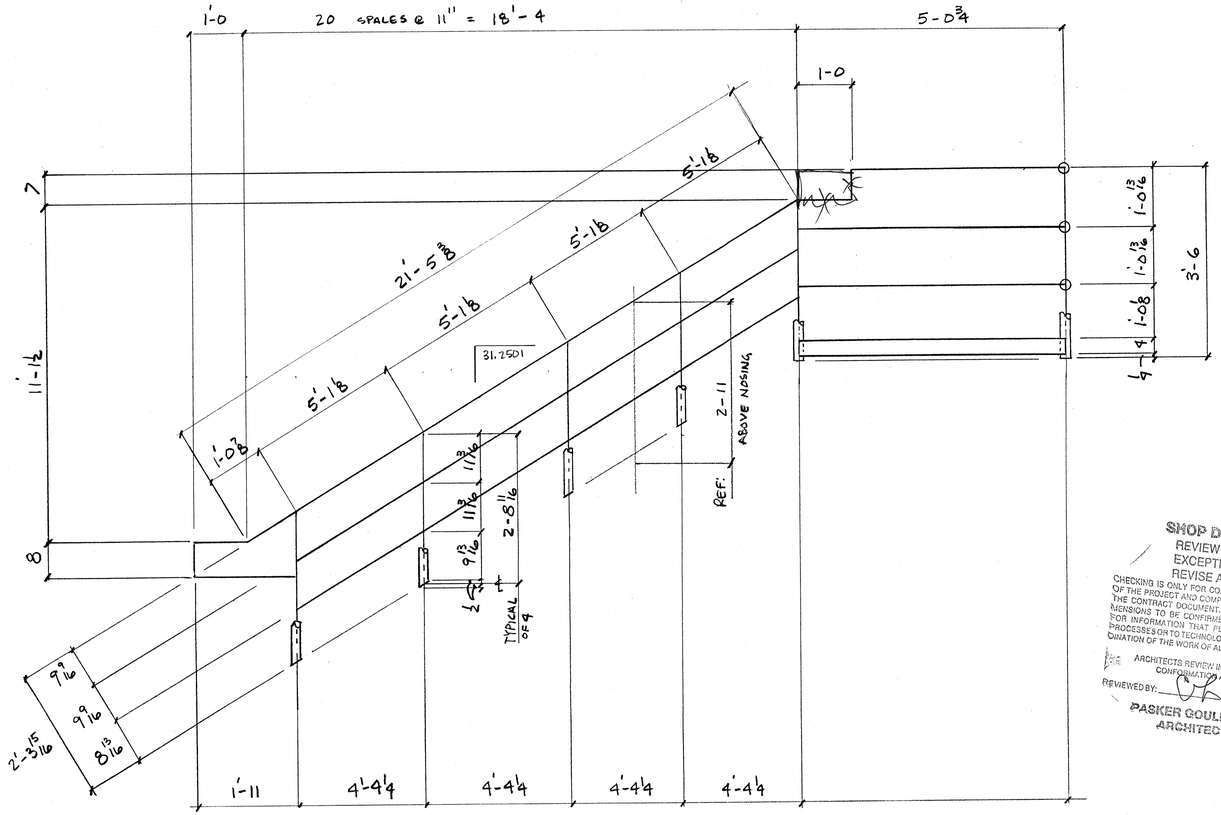

SECTION B

SHOP DRAWING REVIEW
REVIEW COMPLETED ☐
EXCEPTIONS NOTED ☒
REVISE AND RESUBMIT ☐
CHECKING IS ONLY FOR CONFORMANCE WITH THE DESIGN CONCEPT OF THE PROJECT AND COMPLIANCE WITH THE INFORMATION GIVEN IN THE CONTRACT DOCUMENT. CONTRACTOR IS RESPONSIBLE FOR DIMENSIONS TO BE CONFIRMED AND CORRELATED AT THE JOB SITE FOR INFORMATION THAT PERTAINS SOLELY TO THE FABRICATION PROCESSES OR TO TECHNOLOGIES OF CONSTRUCTION; AND FOR COORDINATION OF THE WORK OF ALL TRADES.
ARCHITECTS REVIEW INVALID WITHOUT CONTRACTOR'S CONFORMATION AND APPROVAL INDICATED
REVIEWED BY: _____ DATE 5 AUG.
PASKER GOULD AMES & WEAVER
ARCHITECTS/PLANNERS

BILL OF MATERIAL

SHIP MARK	PC. MARK	QTY.	DESCRIPTION	LENGTH FT.	LENGTH INCHES	REMARKS	WEIGHT	ORDERED
4A		ONE	HANDRAIL					
	a	1	PIPE 1½ ϕ STD	115	0	LN. FT		
	b	1	FB ¼ x 4	8	0			
	c	5	ELL 1½ ϕ STD					

RECEIVED
JUL 26 1999
DUHH ASSOCIATES, INC.
CONSULTING STRUCTURAL ENGINEERS

☐ No Corrections Noted ☐ Corrections Noted
☐ Rejected ☐ Revise and Resubmit

DUHH ASSOCIATES, INC.
This review is only for general conformance with the design concept of the project and general compliance with the information given in the Contract Documents. Corrections or comments made on the shop drawings during this review do not relieve contractor from compliance with the requirements of the plans and specifications. Approval of a specific item shall not include approval of an assembly of which the item is a component. Contractor is responsible for: dimensions to be confirmed and correlated at the jobsite; information that pertains solely to the fabrication processes or to the means, methods, techniques, sequences and procedures of construction; coordination of his or her Work with that of all other trades; and for performing all work in a safe and satisfactory manner.
Date _____ REVIEWED By _____
NOT REVIEWED

REV. NO.	DATE	DESCRIPTION	BY
0	7-13-99	SUBMITTAL	

PAINT: STD SHOP PRIME PAINT
WELDS: E7xxx
STEEL SPECS.: A36 PIPE A53
HOLES
UNLESS NOTED

AMFAB
Steel Specialties
787 South 950 West
Woods Cross
Utah 84087
801.298.2900
801.298.3278 Fax

ITEM: STAIR HANDRAIL

SUBMITTAL ONLY

JOB NAME: TAYLOR HUNT ELECTRIC
LOCATION: 1747 SOUTH 900 WEST SALT LAKE CITY UTAH
CONTRACTOR: UTAH COMMERCIAL CONTRACTORS INC

Scale NTS
Drawn DB
Job # 19134
Sheet 4

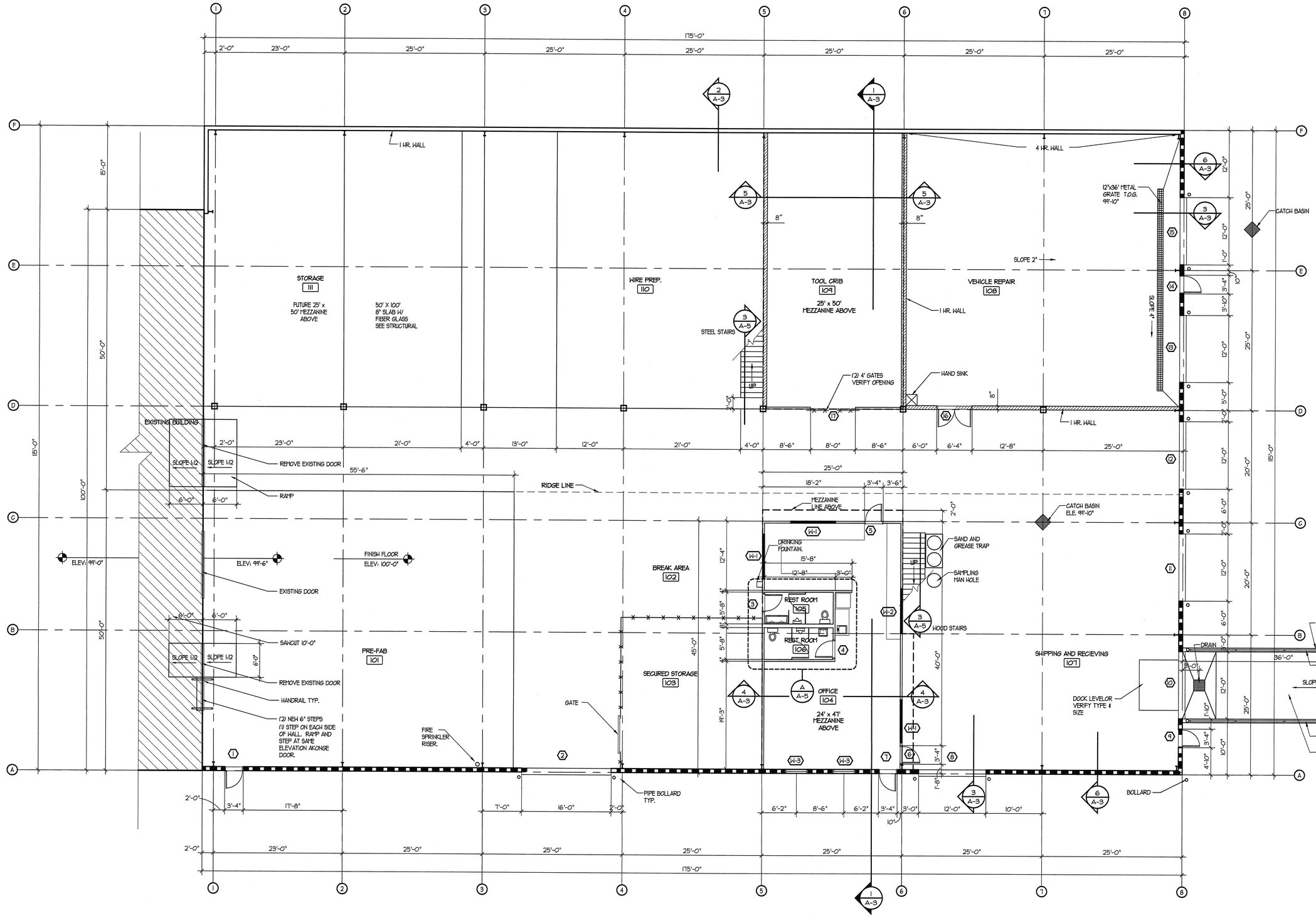

1/A1 FLOOR PLAN

SCALE: 1/8" = 1'-0"

NORTH

TONGUE & GROOVE PLYWOOD - TYP.

PGA&W

PASKER GOULD AMES & WEAVER
ARCHITECTS PLANNERS
5263 SOUTH 300 WEST MURRAY, UTAH (801) 266-4669

DRAWN BY	CHECKED BY	JOB NO.	DATE
DKP.	C.A.	2171	JUNE 15, 1999

FLOOR PLAN

A NEW BUILDING FOR

TAYLOR - HUNT ELECTRIC

1747 S. 900 W. SALT LAKE CITY, UTAH

A
1

© PASKER GOULD AMES & WEAVER - 1999

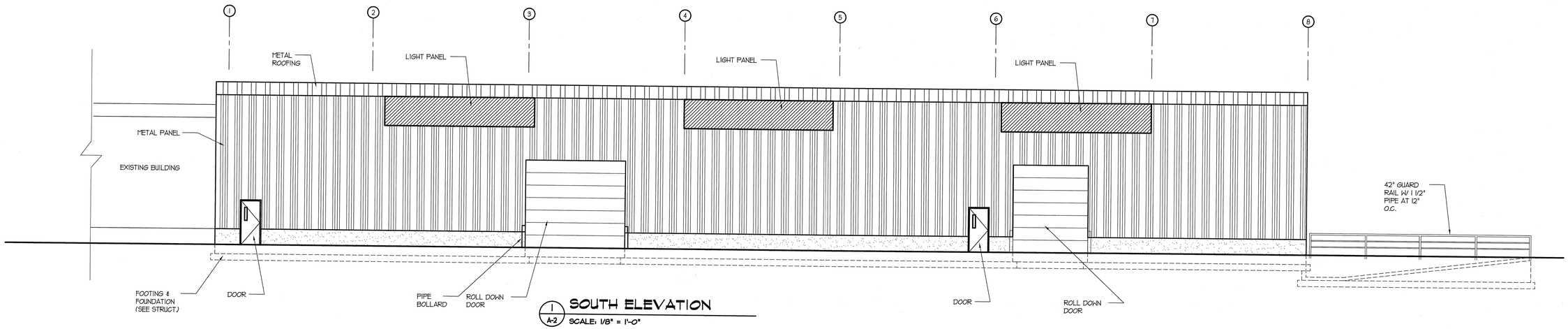

1 A-2 SOUTH ELEVATION
SCALE: 1/8" = 1'-0"

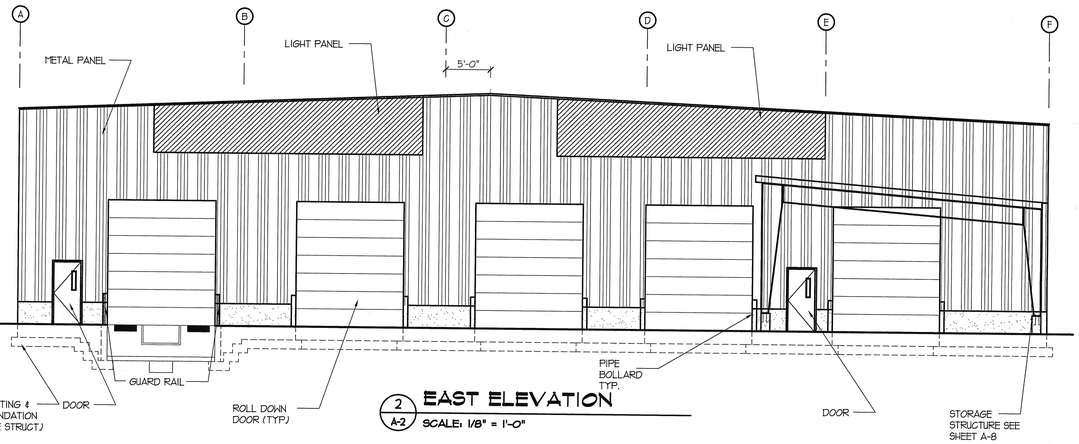

2 A-2 EAST ELEVATION
SCALE: 1/8" = 1'-0"

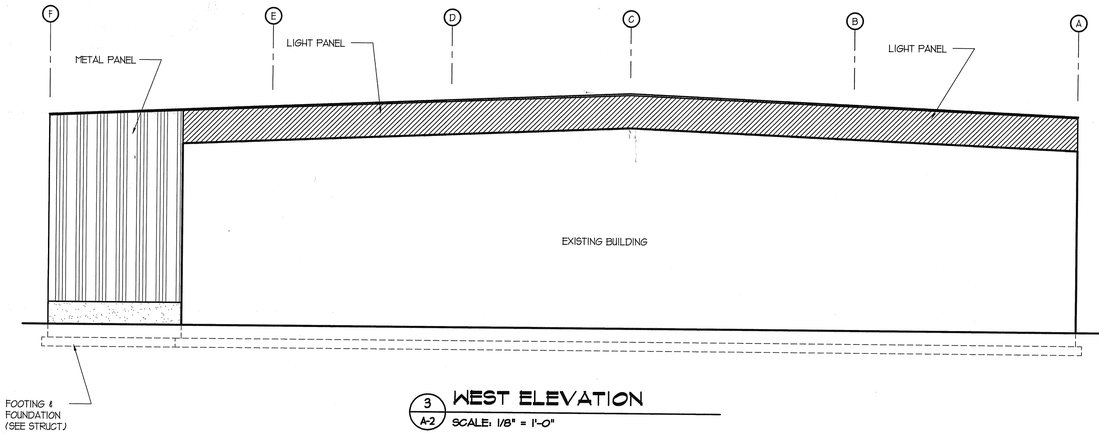

3 A-2 WEST ELEVATION
SCALE: 1/8" = 1'-0"

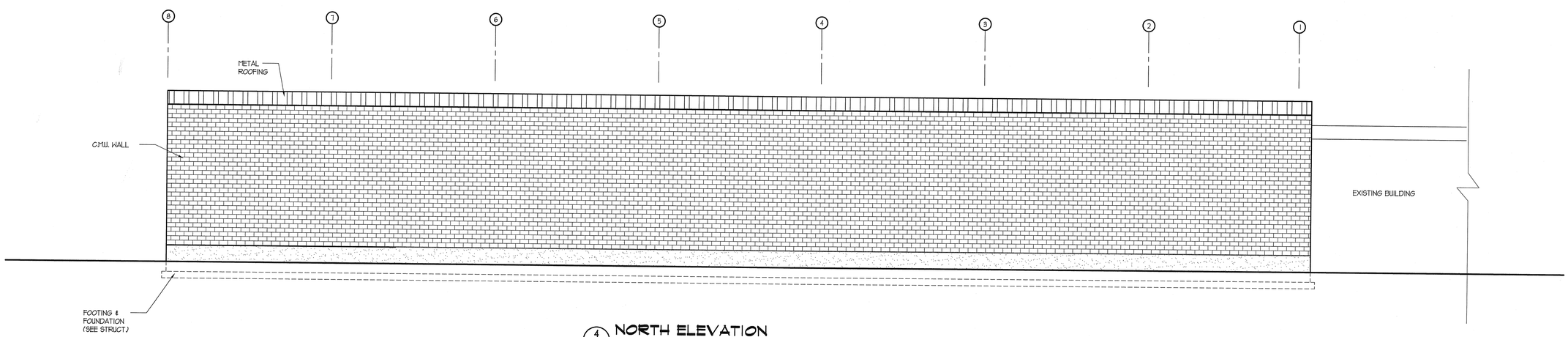

4 A-2 NORTH ELEVATION
SCALE: 1/8" = 1'-0"

PGA&W

PASKER GOULD AMES & WEAVER
ARCHITECTS PLANNERS
5263 SOUTH 300 WEST MURRAY, UTAH (801) 266-4669

DRAWN BY D.K.P.	CHECKED BY C.A.
JOB NO. 2711	DATE JUNE 15, 1999

EXTERIOR ELEVATIONS
A NEW BUILDING FOR
TAYLOR - HUNT ELECTRIC
1747 S. 900 W. SALT LAKE CITY, UTAH

A
2

© PASKER GOULD AMES & WEAVER - 1999

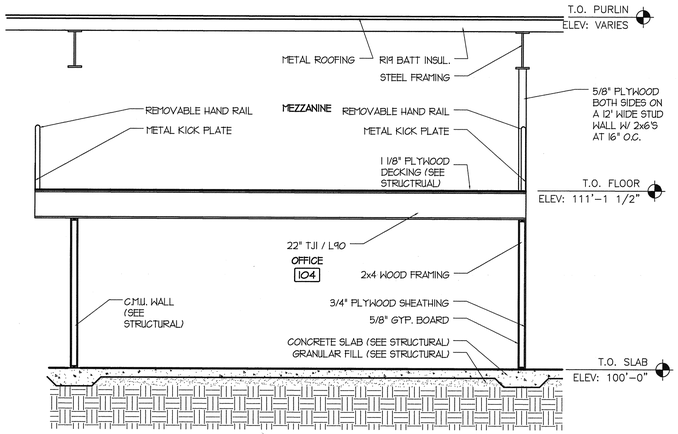

4 A-3 MEZZANINE SECTION
SCALE: 1/4" = 1'-0"

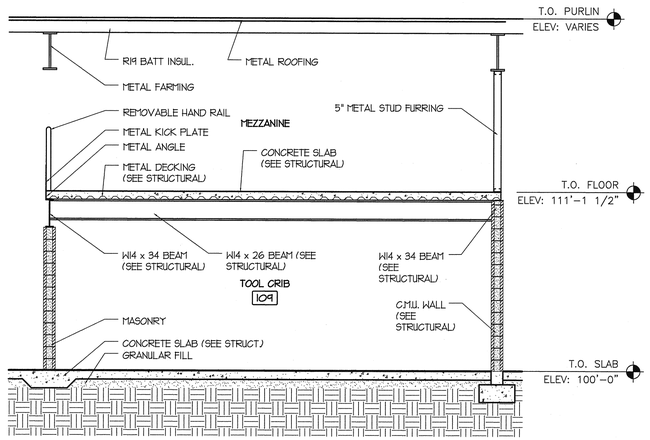

5 A-3 MEZZANINE SECTION
SCALE: 1/4" = 1'-0"

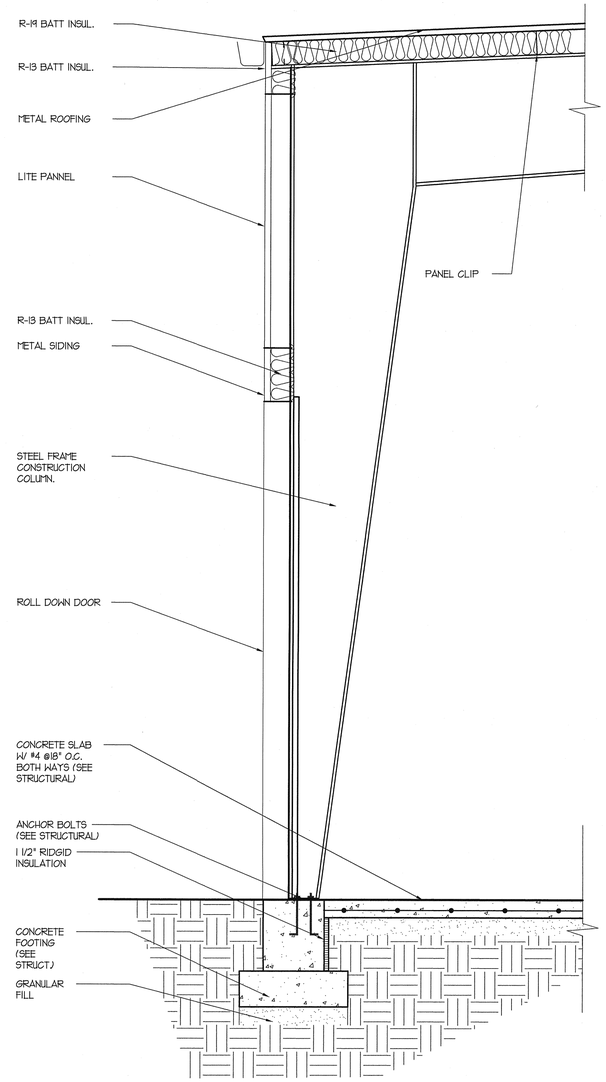

3 A-3 WALL SECTION
SCALE: 1/2" = 1'-0"

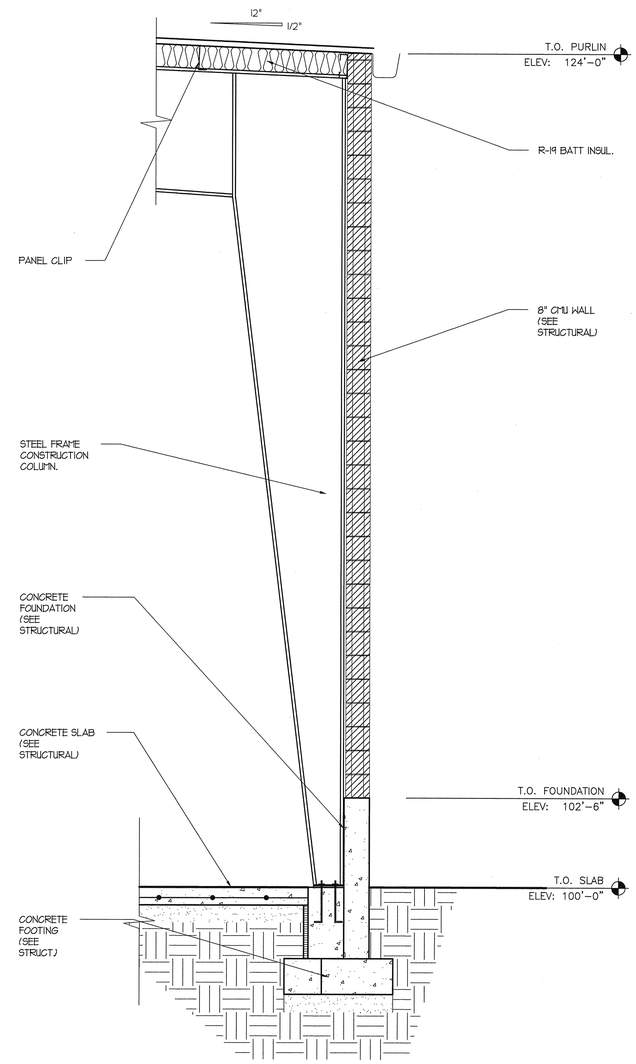

2 A-3 WALL SECTION
SCALE: 1/2" = 1'-0"

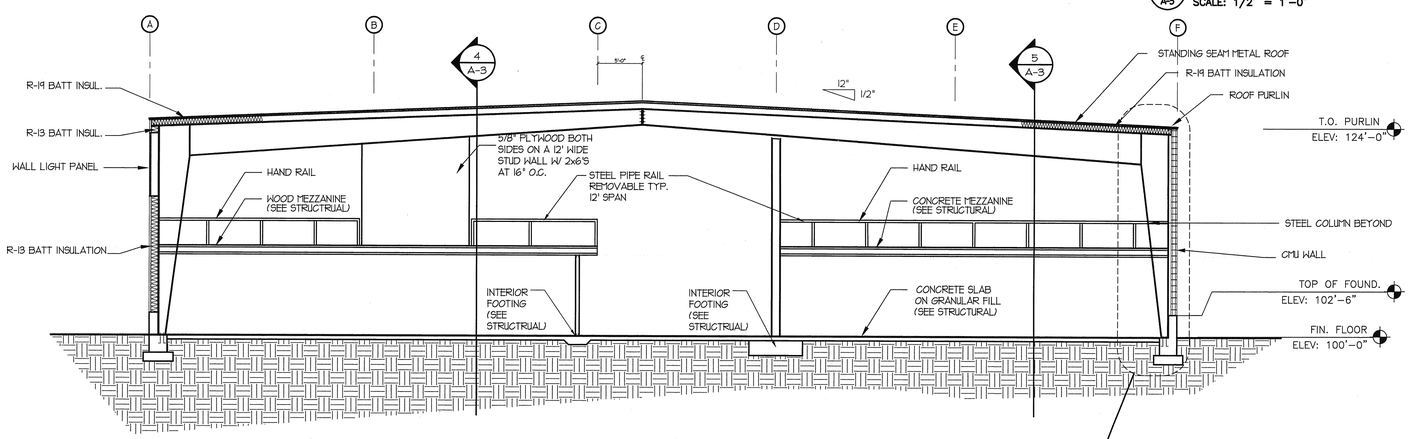

1 A-3 EAST ELEVATION
SCALE: 1/8" = 1'-0"

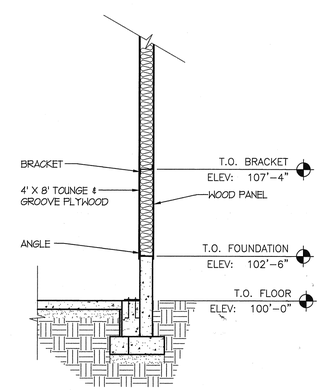

6 A-3 T & G SECTION
SCALE: 1/4" = 1'-0"

PGA&W

PASKER GOULD AMES & WEAVER
ARCHITECTS PLANNERS
5263 SOUTH 300 WEST MURRAY, UTAH (801) 266-4669

DRAWN BY	CHECKED BY	JOB NO.	DATE
DKP.	C.A.	2171	JUNE 15, 1999

BUILDING SECTION & WALL SECTIONS
A NEW BUILDING FOR
TAYLOR - HUNT ELECTRIC
1747 S. 900 W. SALT LAKE CITY, UTAH

A
3

© PASKER GOULD AMES & WEAVER - 1999

DOOR SCHEDULE

DOOR NO.	DOOR SIZE	DOOR TYPE	DOOR MAT.	DOOR FINISH	DETAILS HEAD	DETAILS JAMB	DETAILS SILL	FRAME TYPE	FRAME MAT.	FRAME FINISH	REMARKS	DOOR NO.
1	3'-0" X 7'-2" X 1 3/4"	D-1	H.M.	PAINT	4/A-4	3/A-4	11/A-4	F-2	H.M.	PAINT	INSULATED	1
2	16'-0" X 14'-0"	D-4	STEEL	PAINT	1/A-4	2/A-4			STEEL	PAINT	INSULATED	2
3	3'-0" X 7'-0" X 1 3/4"	D-5	H.M.	PAINT	10/A-4	10/A-4		F-1	H.M.	PAINT	INSULATED	3
4	3'-0" X 7'-0" X 1 3/4"	D-5	H.M.	PAINT	10/A-4	10/A-4		F-1	H.M.	PAINT	INS./PRIV. LOCK	4
5	3'-0" X 7'-0" X 1 3/4"	D-1	H.M.	PAINT	10/A-4	10/A-4		F-1	H.M.	PAINT	INSUL./LOCK	5
6	3'-0" X 7'-0" X 1 3/4"	D-1	H.M.	PAINT	10/A-4	10/A-4		F-1	H.M.	PAINT	INSUL./LOCK	6
7	3'-0" X 7'-2" X 1 3/4"	D-1	H.M.	PAINT	4/A-4	3/A-4	11/A-4	F-2	H.M.	PAINT	INSULATED	7
8	12'-0" X 14'-0"	D-3	STEEL	PAINT	1/A-4	2/A-4			STEEL	PAINT	INSULATED	8
9	3'-0" X 7'-2" X 1 3/4"	D-1	H.M.	PAINT	4/A-4	3/A-4	11/A-4	F-2	H.M.	PAINT	INSULATED	9
10	12'-0" X 14'-0"	D-3	STEEL	PAINT	1/A-4	2/A-4			STEEL	PAINT	INSULATED	10
11	12'-0" X 14'-0"	D-3	STEEL	PAINT	1/A-4	2/A-4			STEEL	PAINT	INSULATED	11
12	12'-0" X 14'-0"	D-4	STEEL	PAINT	1/A-4	2/A-4			STEEL	PAINT	INSULATED	12
13	12'-0" X 14'-0"	D-3	STEEL	PAINT	1/A-4	2/A-4			STEEL	PAINT	INSULATED	13
14	3'-0" X 7'-2" X 1 3/4"	D-1	H.M.	PAINT	4/A-4	3/A-4	11/A-4	F-2	H.M.	PAINT	INSULATED	14
15	12'-0" X 14'-0"	D-3	STEEL	PAINT	1/A-4	2/A-4			STEEL	PAINT	INSULATED	15
16	6'-0" X 8'-0" X 1 3/4"	D-1	H.M.	PAINT	10/A-4	10/A-4		F-1	H.M.	PAINT	INSULATED	16
17	(2) 5'-0" GATES											17

FINISH SCHEDULE

NO.	ROOM NAME	FLOOR	BASE	NORTH WALL	EAST WALL	SOUTH WALL	WEST WALL	CEILING	HT	REMARKS
101	PRE-FAB	SEAL. CONC.	——	——		METAL BLDG.	METAL BLDG.	OPEN TO ABOVE	VARIES	PLYWOOD WAINSCOT - SOUTH WALL
102	BREAK AREA	SEAL. CONC.	——	——	PLYWOOD	FENCING		OPEN TO ABOVE	VARIES	——
103	SECURED STORAGE	SEAL. CONC.	——	FENCING	PLYWOOD	METAL BLDG.	FENCING	——	VARIES	PLYWOOD WAINSCOT - SOUTH WALL
104	OFFICE	SEAL. CONC.	VINYL	GYPSUM BD.	GYPSUM BD.	GYPSUM BD.	GYPSUM BD.	GYPSUM BD.	8'-0"	——
105	REST ROOM	SEAL. CONC.	COVED C.T.	C.T. / GYP BD. 60"	C.T. / GYP BD. 60"	C.T. / GYP BD. 60"	C.T. / GYP BD. 60"	GYPSUM BD.	8'-0"	CERAMIC TILE UP 60"
106	REST ROOM	SEAL. CONC.	COVED C.T.	C.T. / GYP BD. 60"	C.T. / GYP BD. 60"	C.T. / GYP BD. 60"	C.T. / GYP BD. 60"	GYPSUM BD.	8'-0"	CERAMIC TILE UP 60"
107	SHIP & RECEIVE	SEAL. CONC.	——	——	METAL BLDG.	METAL BLDG.	PLYWOOD	OPEN TO ABOVE	VARIES	PLYWOOD WAINSCOT - SOUTH & EAST
108	VEHICLE REPAIR	SEAL. CONC.	——	CMU	METAL BLDG.	CMU. / GYP. BD.	CMU. / GYP. BD.	OPEN TO ABOVE	VARIES	PLYWOOD WAINSCOT - EAST WALL
109	TOOL CRIB	SEAL. CONC.	——	CMU	CMU	FENCING	CMU.	OPEN TO STRUCT	VARIES	PLYWOOD WAINSCOT
110	WIRE PREP.	SEAL. CONC.	——	CMU	GYP BD. / CMU.	——	——	OPEN TO ABOVE	VARIES	PLYWOOD WAINSCOT
111	STORAGE	SEAL. CONC.	——	CMU	——	——	METAL BLDG.	OPEN TO ABOVE	VARIES	PLYWOOD WAINSCOT

WINDOW SCHEDULE

NO.	SIZE	FRAME MATERIAL	FRAME TYPE	GLASS TYPE	FRAME FINISH	DETAILS HEAD	DETAILS JAMB	DETAILS SILL	REMARKS	NO.
W-1	6'-0" X 4'-0"	ALUMINUM	F-1	1/4" TEMPERED GLASS	PAINTED	8/A-4	8/A-4	8/A-4		W-1
W-3	4'-0" X 3'-0"	ALUMINUM	F-2	1/4" TEMPERED GLASS	PAINTED	5/A-4	6/A-4	5/A-4	SECURITY BARS	W-3

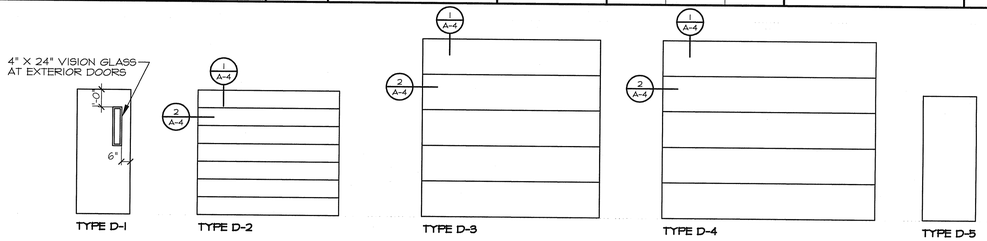

DOOR TYPES

SCALE: 1/4" =1'-0"

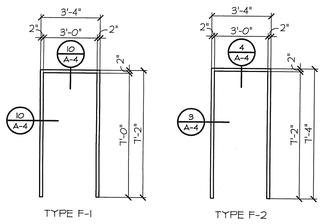

DOOR FRAME TYPES

SCALE: 1/4" =1'-0"

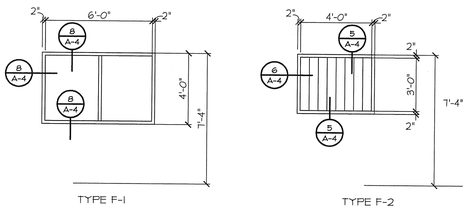

WINDOW FRAME TYPES

SCALE: 1/4" =1'-0"

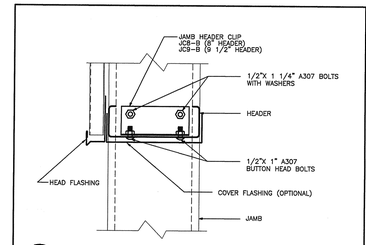

1 A-4 SECTION THRU FRAMED OPENING HEAD — OT21 AB
8" AND 9 1/2" HEADERS

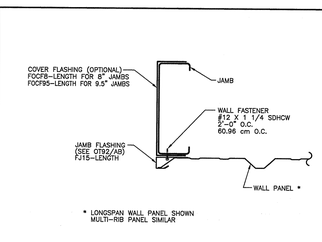

2 A-4 SECTION THRU FRAMED OPENING JAMB — OT26 AB
LONGSPAN OR MULTIRIB PANEL WALLS

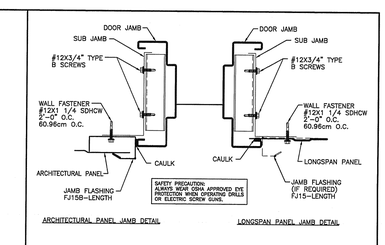

3 A-4 WALK DOOR JAMB DETAILS — WD06 AB
ARCHITECTURAL OR LONGSPAN WALLS

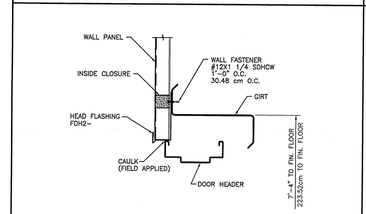

4 A-4 SECTION THROUGH WALK DOOR HEADER — WD02 AB
ARCHITECTURAL AND LONGSPAN WALLS

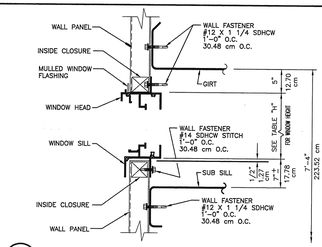

5 A-4 TYPICAL SECTION THROUGH WINDOW HEAD & SILL — WN02 AA
ARCHITECTURAL AND LONGSPAN WALLS

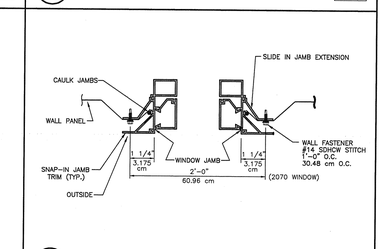

6 A-4 TYPICAL SECTION THROUGH WINDOW JAMBS (2'X7' WINDOW) — WN27 AB
LONGSPAN WALLS

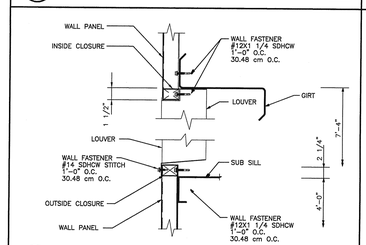

7 A-4 LOUVER HEAD AND SILL DETAIL — LV21 AA
ARCHITECTURAL AND LONGSPAN WALLS

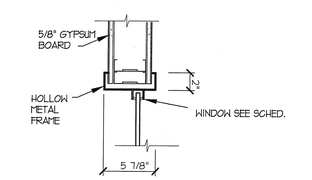

8 A-4 INTERIOR WINDOW HEAD & SILL (JAMB SIM)
ARCHITECTURAL AND LONGSPAN WALLS

9 A-4 NOT USED
ARCHITECTURAL AND LONGSPAN WALLS

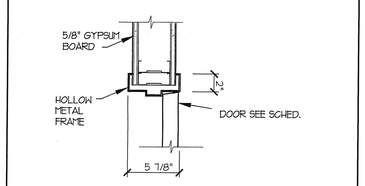

10 A-4 INTERIOR HEAD DETAIL (JAMB SIM)
ARCHITECTURAL AND LONGSPAN WALLS

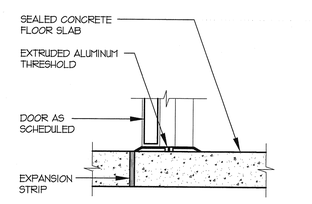

11 A-4 SILL DETAIL
ARCHITECTURAL AND LONGSPAN WALLS

PASKER GOULD AMES & WEAVER
ARCHITECTS PLANNERS
5263 SOUTH 300 WEST
MURRAY, UTAH (801) 266-4669

DRAWN BY D.C.P.
CHECKED BY C.A.
JOB NO. 2711
DATE JUNE 15, 1999

DOOR, FINISH SCHEDULES & DETAILS

A NEW BUILDING FOR

TAYLOR - HUNT ELECTRIC

1741 S. 900 W. SALT LAKE CITY, UTAH

A
4

© PASKER GOULD AMES & WEAVER - 1999

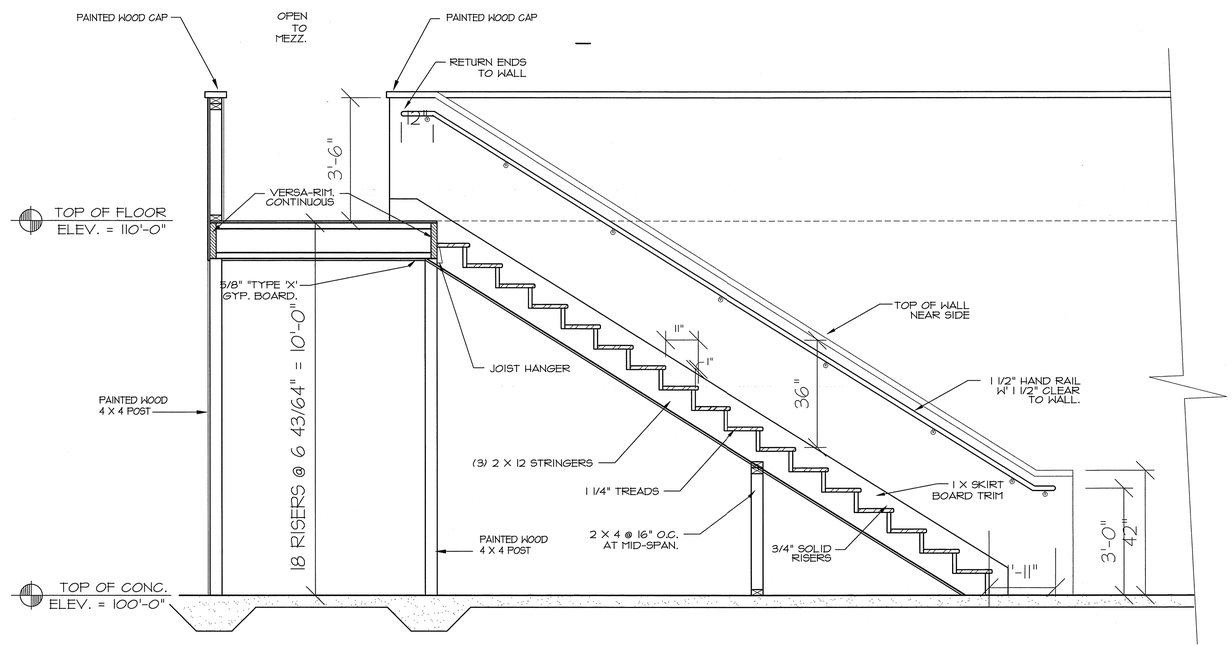

3 / A-5 STAIR SECTION

SCALE: 1/2" = 1'-0"

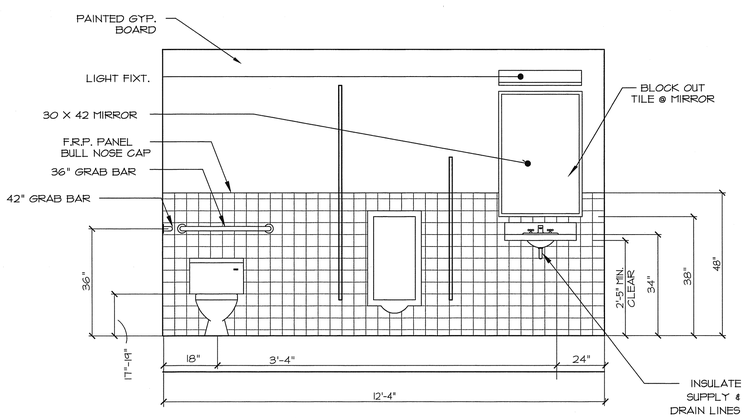

1 / A-5 TOILET RM. ELEV.

SCALE: 1/2" = 1'-0"

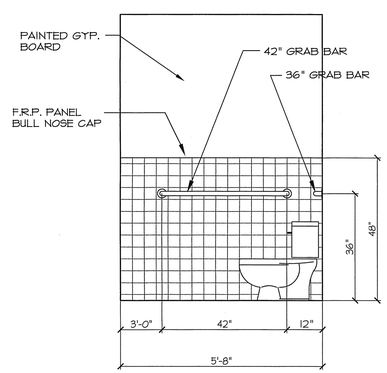

2 / A-5 TOILET RM. ELEV.

SCALE: 1/2" = 1'-0"

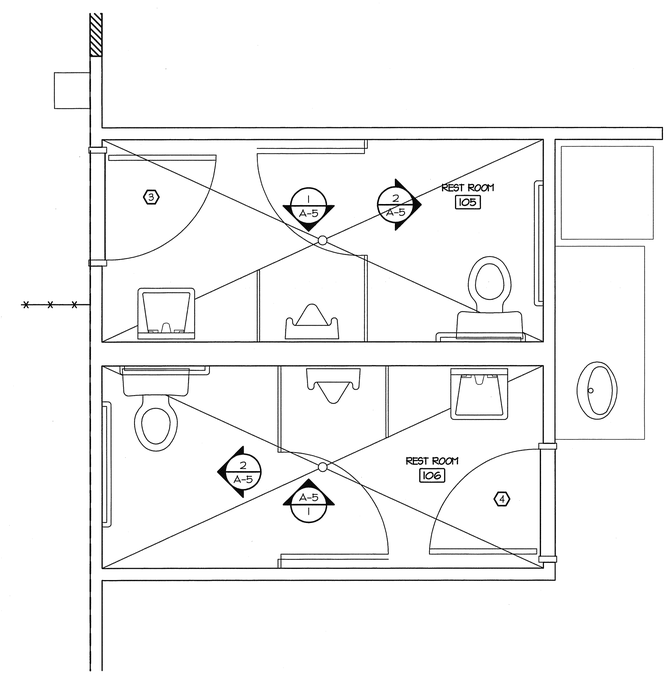

A / A-5 ENLARGED PLAN

SCALE: 1/2" = 1'-0"

PGA&W

PASKER GOULD AMES & WEAVER
ARCHITECTS PLANNERS
5263 SOUTH 300 WEST MURRAY, UTAH (801) 266-4669

DRAWN BY D.K.P.	CHECKED BY C.A.
JOB NO. 2711	DATE JUNE 15, 1999

ENLARGED PLANS, ELEVATIONS & SECTIONS
A NEW BUILDING FOR
TAYLOR - HUNT ELECTRIC
1747 S. 900 W. SALT LAKE CITY, UTAH

A
5

© PASKER GOULD AMES & WEAVER - 1999

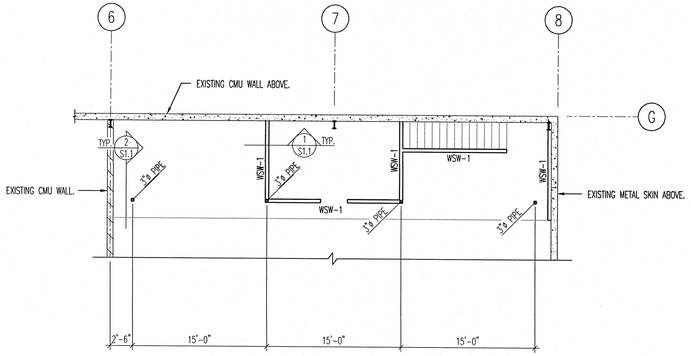

FOOTING PLAN

SCALE: 1/8" = 1'-0"

1. WSW-1 IS 2x4 STUD WALL WITH STUDS AT 16"cc. SHEATH WITH 1/2" WOOD SHEATHING NAIL WTIH 8d NAILS AT 6"cc. AT PERIMETER AND 10"cc. IN FIELD. BLOCK ALL UNSUPPORTED EDGES.

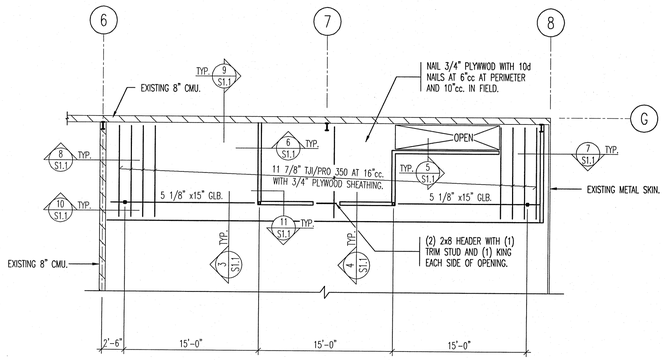

MEZZANINE PLAN

SCALE: 1/8" = 1'-0"

1. GLU-LAM BEAMS SHALL BE 24FV4 OR BETTER.

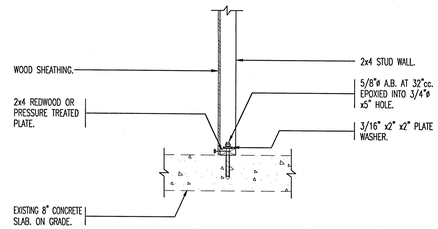

1 WOOD STUD WALL TO EXISTING SLAB.
xxx
NO SCALE

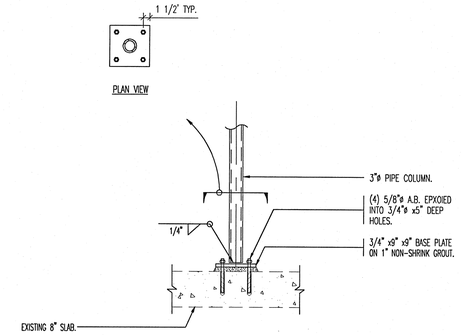

2 STEEL COLUMN INTO EXISTING SLAB.
xxx
NO SCALE

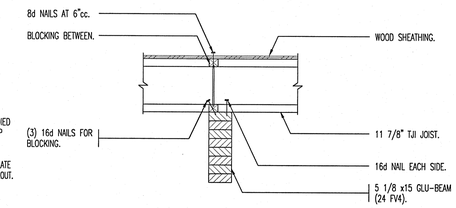

3 CANTELEVERED JOIST BEARING AT GLU-BEAM.
xxx
NO SCALE

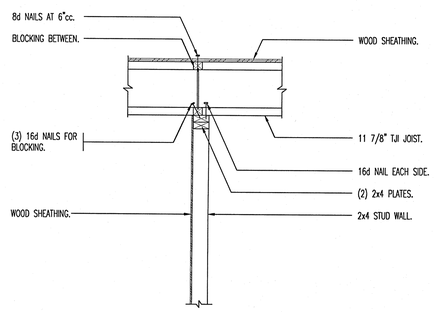

4 CANTELEVERED JOIST BEARING AT STUD WALL.
xxx
NO SCALE

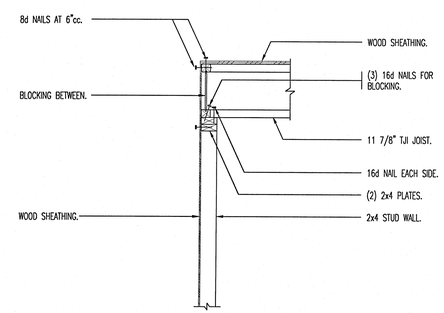

5 JOIST BEARING AT STUD WALL.
xxx
NO SCALE

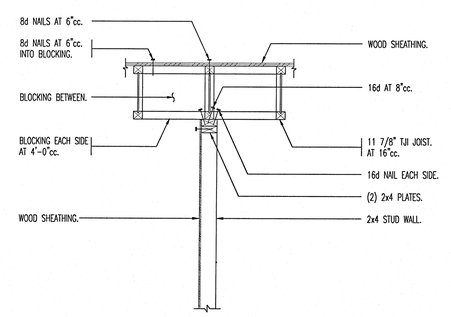

6 JOIST PARALLEL TO STUD WALL.
xxx
NO SCALE

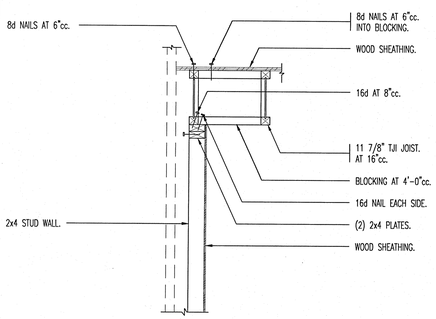

7 JOIST PARALLEL TO STUD WALL.
xxx
NO SCALE

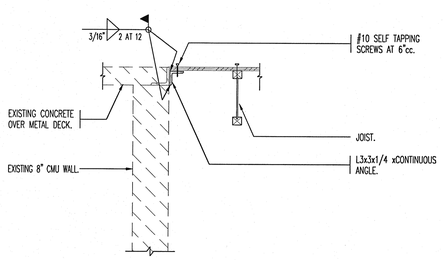

8 DETAIL.
xxx
NO SCALE

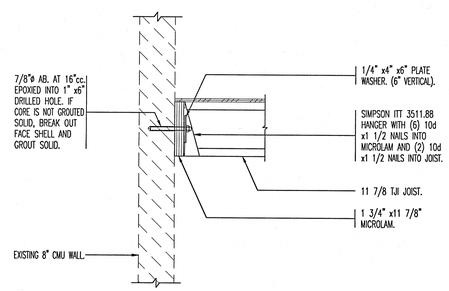

9 JOIST TO EXISTING WALL.
xxx
NO SCALE

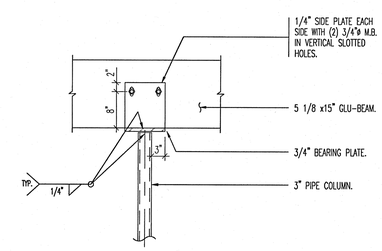

10 CANTELEVERED GLU-LAM BEAM TO STEEL COLUMN.
xxx
NO SCALE

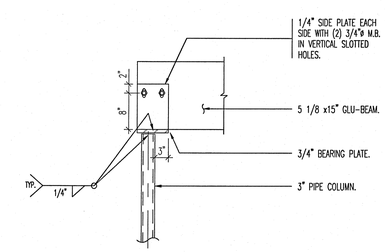

11 GLU-LAM BEAM TO STEEL COLUMN.
xxx
NO SCALE

PASKER GOULD AMES & WEAVER
ARCHITECTS PLANNERS
5263 SOUTH 300 WEST
MURRAY, UTAH (801) 266-4669

DRAWN BY	CHECKED BY	JOB NO.	DATE
D.K.P.	D.A.	2711	SEPTEMBER, 1999

MEZZANINE FOUNDATION AND FRAMING PLAN

A NEW BUILDING FOR

TAYLOR - HUNT ELECTRIC

1747 S. 900 W. SALT LAKE CITY, UTAH

REGISTERED CERTIFIED STRUCTURAL ENGINEER
No. 171026
DON W. BARKER
STATE OF UTAH
9/99

DUNN ASSOCIATES INC.
CONSULTING STRUCTURAL ENGINEERS
380 West 800 South Suite 100
Salt Lake City, Utah 84101
Telephone: (801) 575-8877
Telefax: (801) 575-8875
email: dunn@ix.netcom.com

S
1.1

PASKER GOULD AMES & WEAVER - 1999

GENERAL

1. The structural notes are intended to complement the project specifications. Specific notes and details in the drawings shall govern over the structural notes and typical details.
2. Typical details and sections shall apply where specific details are not shown.
3. The contractor shall verify all site conditions and dimensions. If actual conditions differ from those shown in the contract drawings, the contractor shall immediately notify the architect/engineer before proceeding with the fabrication or construction of any effected elements.
4. Omissions or conflicts between the contract drawings and/or specifications shall be brought to the attention of the architect/engineer before proceeding with any work involved. In case of conflict, follow the most stringent requirement as directed by the architect/engineer at no additional cost to the owner.
5. The contractor shall submit a written request to the architect/engineer before proceeding with any changes, substitutions or modifications.
6. The contractor shall coordinate with all trades any items that are to be integrated into the structural system such as openings, penetrations, mechanical and electrical equipment, etc. Sizes and locations of mechanical and other equipment that differs from those shown on the contract drawings shall be reported to the architect/engineer.
7. The contractor shall provide adequate shoring and bracing as required for his method of erection. Shoring and bracing shall remain in place until final connections for the permanent members are completed. The building shall not be considered stable until all connections are completed. Walls shall not be considered self-supporting and shall be braced until the floor/roof system is completed.
8. Site observations by field representative of Dunn Associate's Inc. shall not be construed as inspection or approval or the construction or the construction procedures.
9. Detailing and shop drawing production for structural elements will require information (including dimensions) contained in the architectural, structural and/or other consultants' drawings. The structural drawings shall be used in conjunction with the architectural and other consultant's drawings. Some dimensions and elements such as elevations, depressions, slopes, mechanical housekeeping pads, etc. may not be shown in the structural drawing.
10. Review of shop drawing submittals by Dunn Associates Inc's is for general compliance only and is not intended for approval. The shop drawing review shall not relieve the contractor from the responsibility of completing the project according to the contract documents.
11. Shop drawings made from reproductions of the contract drawings will be rejected unless the contractor signs a release agreement prior to the shop drawings being reviewed.

BASIS OF DESIGN

1. Governing Building Code ..... 1997 Uniform Building Code
2. Roof Snow Load ..... 30 psf plus Snow Drift
3. Floor Live Loads
   Storage ..... 125 psf
4. Seismic Loads
   Seismic Zone 3 ..... Z = 0.3
   Importance Factor ..... I = 1.00
   Building Type ..... R = 4.5
   Soil Profile Type ..... Co = 0.36
   W ..... Dead Loads of Structure + 1/4 storage LL
   Base Shear ..... V=s= 2.5*Co*I / R =0.20W (Strength Design)
5. Wind Loads
   Basic Wind Velocity ..... 70 mph
   Exposure Type C
   Importance Factor 1.00

FOUNDATION

1. Soils Report by Agra Earth and Environmental. Dated: June 1, 1999.
2. Soil Bearing Pressure: 2000 psf, on Compacted Fill or appropriate natural soil.
3. Frost Protection: 30 inches minimum.
4. Lateral Soil Pressure Fluid Equivalent Density.
   a. Active ..... 35 pcf (retaining walls)
   b. At Rest ..... 50 pcf (rigid foundation walls)
   c. Passive ..... 300 pcf
5. Coefficient of Friction 0.4

EARTHWORK

1. Clearing: Remove all existing structures and associated foundations, slabs, fencing, asphalt, concrete, and incidental structures as necessary for project completion. The building area shall be stripped of all vegetation, topsoil and debris. Following stripping, all fill soils and any remaining loose natural soils shall be excavated to expose competent natural soils.
2. Proof roll the entire building pad area with normal compaction equipment to check for the presence of unsuitable fills, soft spots, or other undesirable materials or conditions. Remove sub-grade materials that are unsuitable and replace with compacted structural fill to the appropriate footing or slab subgrade elevation. A maximum of 24" of existing fill material may remain in place below floor slabs if the top 12" is scarified and recompacted to 95% of the maximum density determined by ASTM D1557. Existing fill is not permitted below footings.
3. Compacted structural fill: All fill material shall be a well-graded granular material with a maximum size less than 3 inches and with not more than 15 percent passing a No. 200 sieve. It shall be compacted to at least 95 percent of the maximum laboratory density as determined by ASTM D 1557 for fill beneath footings and 95 percent for fill beneath floor slabs. All fill shall be tested. Compacted structural fill shall be placed in lifts not exceeding 8 inches in uncompacted thickness.
4. Floor slabs thicknesses shall be required by the plans and underlain by a granular layer at least 6 inches thick. The granular layer shall have a maximum size less than 1 inch with not more than 5 percent passing a #200 sieve and shall be compacted to at least 90 percent of the maximum laboratory density as determined by ASTM D 1557.
5. Consult the project specifications for further earthwork requirements

CONCRETE

1. Materials, unless noted otherwise:
   a. Normal weight aggregates ..... ASTM C 33
   d. Reinforcing Steel ..... ASTM 615 Grade 60 (Fy = 60 ksi)
      (Use Grade 40 (Fy = 40 ksi) for field bent dowels with spacings indicated
   c. Deformed Bar Anchors (DBA) ..... ASTM A496
   d. Headed Stud Anchors (HSA) ..... ASTM A108
   e. Anchor Bolts ..... ASTM A307 with ASTM A563 heavy hex nuts with hardened washers
   f. Admixtures:
      Air-entraining admixtures comply with ASTM C 260 (when used).
      Calcium chloride shall not be added to the concrete mix.
   g. Type I/II cement complying with ASTM C-150 shall be used for all concrete.
   h. The water/cement ratio shall not exceed 0.50 for all concrete.
   i. The slump of all concrete shall be limited to 4" plus or minus 1".
   j. Provide air entraining as recommended by ACI 318.
   k. No aluminum conduit or product containing aluminum or any other material injurious to concrete shall be embedded in concrete.
2. Compressive strengths of concrete at 28 days shall be as follows:
   a. Foolings ..... 3000 psi
   b. Interior Slabs on Grade ..... 3500 psi
   c. Walls ..... 3000 psi
   d. Normal Weight concrete over Steel Deck ..... 3500 psi
3. 3-1/2" thick (5-1/2" overall) normal weight concrete slab shall be poured over the steel deck. Reinforce slab with 6" x 6" - W2.1/W2.1 welded wire fabric minimum, unless noted otherwise. Welded Wire Fabric shall be placed 1" to 1-1/2" below the top of the slab.
4. Only one grade or type of concrete shall be poured on the site at any given time.
5. The contractor shall be responsible for the design, detailing, care, placement and removal of all formwork and shores.
   a. Supporting forms and shoring shall not be removed until structural members have acquired sufficient strength to safely support their own weight and any construction load to which they may be subjected. In no case, however, shall forms and shoring be removed in less than 24 hours after concrete placement.
   b. Suspended slabs shall be re-supported after form removal until concrete reaches its 28-day specified compressive strength.
6. Reinforcement shall have the following concrete cover:
   Cast-in-place Concrete: ..... Clear Cover
   a. Cast against and permanently exposed to earth ..... 3"
   b. Formed concrete exposed to earth or weather:
      #6 thru #18 bars ..... 2"
      #5 and smaller bars ..... 1-1/2"
   c. Concrete not exposed to weather or in contact with ground:
      Slabs, Walls, Joists: #11 bars and smaller ..... 3/4"
      Beams, Columns: Primary Reinf., Ties, Stirrups, Spirals ..... 1-1/2"
7. Construction Joints and Control Joints:
   a. Provide a formed and beveled 2 x 4 x continuous keyway shall be installed in all horizontal and vertical construction joints including between top of footing and foundation walls. In addition, all joints shall be intentionally roughened to a full amplitude of approximately 1/4 inch.
   b. Control joints shall be installed in slabs on grade so the length to width ratio of the slab is no more than 1.25:1. Control joints shall be completed within 12 hours of concrete placement. Control joints may be installed by:
      i. Saw cut a depth of 1/4 the thickness of the slab
      ii. Tooled joints a depth of 1/4 the thickness of the slab
   c. Install construction or control joints in slabs on grade at a spacing not to exceed 30 times the slab thickness in any direction unless noted otherwise. Construction joints shall not exceed a distance of 125'-0" o.c. in any direction.
8. Construction
   a. Use chairs or other support devices recommended by the CRSI to support and tie reinforcement bars and WWF prior to placing concrete. WWF shall be continuously supported at 36" o.c. maximum. Reinforcing steel for slabs on grade shall be adequately supported on precast concrete units. Lifting the reinforcing off the grade during placement of concrete is not permitted.
   b. Contractor shall coordinate placement of all openings, curbs, dowels, sleeves, conduits, bolts, inserts and other embedded items prior to concrete placement.
   c. All embeds and dowels shall be securely tied to formwork or to adjacent reinforcing prior to the placement of concrete.
   d. No pipes, ducts, sleeves, etc shall be placed in structural concrete unless specifically detailed or approved by the structural engineer. Penetrations through walls when approved shall be built into the wall prior to concrete placement. Penetrations will not be allowed in footings or grade beams unless detailed. Piping shall be routed around these elements and footings stepped to avoid piping.
   e. Reinforcing Bars shall not be welded unless specifically shown on drawings. In such cases, use only AWS standards. Do not substitute reinforcing bars for DBAs or HSAs.
9. Detailing:
   a. Lap lengths shall be as follows:
      i. 30 bar diameters for #3 and #4 bars
      ii. 40 bar diameters for #5 through #8 bars
      iii. Do not splice stirrups and ties.
      iv. Do not splice vertical bars in retaining walls unless specifically shown.
   b. At joints provide reinforcing dowels to match the member reinforcing, unless noted otherwise.
   c. At all discontinuous control or construction slab on grade joints, provide (2) #4 x 48 inches.
   d. Provide corner bars at intersecting wall corners using the same bar size and spacing as the horizontal wall reinforcing.
   e. All vertical reinforcing shall be doweled to footings, or to the structure below with the same size and spacing as the vertical reinforcing for the element above. Dowels extending into footings shall terminate with a 90 degree standard hook and shall extend to within 4" of the bottom of the footing. Footing dowels (#8 bars and smaller) with hooks need not extend more than 20" into footings.
   f. Horizontal wall reinforcing shall terminate at ends of walls and openings into the far end of the jamb column with a 90-degree standard hook plus a 6 bar diameter extension. Horizontal wall reinforcing shall be continuous through construction and control joints.
   g. Provide 2- #5 bars (or 1 - #7 bar in 10" walls and thinner) around all openings larger than 8 inches in any direction and smaller than 36 inches, unless noted otherwise. Extend reinforcing bars a minimum of 24" beyond the corner of the openings. Where 24" is not available, extend bars as far beyond the opening as possible and terminate them with a 90 standard hook. For unreinforced openings larger than this contact the engineer.
   h. Provide 2-#5 X 4'-0" diagonal bars (or 1 - #7 x 4'-0" bar in 10" walls and thinner) at the corners of all openings, unless noted otherwise. Diagonal bars shall be centered on the corner of the opening. All recesses in concrete walls that interrupt reinforcing steel shall be reinforced the same as an opening.

EPOXY:

1. EPOXY SHALL BE "ANCHOR-IT" BY ADHESIVE TECHNOLOGY CORPORATION, "EPCON INJECTION SYSTEM" BY RAMSET/REDHEAD, "TOL-FAST BY RAWL, OR APPROVED EQUAL.
2. ALL DRILLED HOLES SHALL BE 1/8 INCH LARGER THAN THE BAR OR ANCHOR BOLT BEING INSTALLED.
3. AFTER DRILLING THE PROPER SIZE HOLE, CLEAN THE WALLS AND BOTTOM OF THE HOLE OF ALL DUST AND DEBRIS USING A NYLON BRUSH IN CONJUNCTION WITH OIL FREE COMPRESSED AIR. THE HOLE SHALL BE FREE OF DUST, DEBRIS AND STANDING WATER.
4. FOLLOW ALL MANUFACTURER'S RECOMMENDATIONS FOR EPOXY INSTALLATION.

MASONRY

1. Materials, unless noted otherwise:
   a. Concrete Masonry Units (CMU): Lightweight Grade N, Type 1 (minimum unit strength of 1900 psi). f'm = 1500 psi
   b. Mortar: Use type "S" 1800 psi minimum compressive
   c. Grout shall attain a minimum compressive strength of 2000 psi at 28 days.
   d. Reinforcing Steel ..... ASTM 615 Grade 60 (Fy = 60 ksi)
   e. Deformed Bar Anchors (DBA) ..... ASTM A496
   f. Headed Stud Anchors (HSA) ..... ASTM A108
   g. Anchor Bolts ..... ASTM A307 with ASTM A563 heavy hex nuts hardened washers
2. Reinforcement shall have the following cover:
   a. Reinforcement shall have a minimum coverage of one bar diameter over all the bars, but not less than 3/4". When masonry is exposed to soil, minimum coverage shall be 1.5".
3. Construction Requirements:
   a. All units shall be laid with full mortar beds on the face shells. All head joints shall be filled solidly with mortar for a distance in from the face of the units not less than the thickness of the longitudinal face shells. Cells which are to be grouted shall have full head joints.
   b. Masonry walls, beams and columns shall be constructed with running bond, unless noted otherwise.
   c. All cells containing reinforcement, embeds, anchor bolts, etc. shall be filled solid with grout. Grout shall be placed by mechanical vibration during placing and rewitrated after excess moisture has been absorbed but before workability is lost. Puddling of grout is not allowed.
   d. Where walls are not grouted solid, each grout pour shall terminate flush with the top of the uppermost unit except at cells with vertical reinforcing where the grout shall be 1-1/2 inches below top of unit to provide construction key.
   e. Grout pours shall be limited to 4'-0".
   f. Vertical cells to be filled with grout shall have vertical alignment sufficient to maintain a clear, unobstructed vertical cell measuring not less than 2 inches by 3 inches. All steel reinforcement shall be secured against displacement prior to grouting by wire positioners or other suitable devices at intervals not exceeding 200 bar diameters or 10 feet maximum, or at bar splice locations. Vertical reinforcing shall be located at the center of the wall unless noted otherwise
   g. Reinforcing Bars shall not be welded unless specifically shown on drawings. In such cases, use only AWS standards. Do not substitute reinforcing bars for DBAs or HSAs.
   h. Control Joints: Spacing shall not exceed 40'-0". See architectural drawings for locations.
   i. Grout all beam and joist pockets solid after installation of beams and joists.
   j. Embed channels and plates shall be placed so as to create a flush surface with the face of the wall.
   k. Anchor bolts and headed stud anchors shall be set in a grouted cell. Anchor bolts and headed stud anchors shall have 1" grout surrounding the shank at its penetration. Grout shall be flush with the face or top of the masonry.
4. Detailing Requirement
   a. Lap all masonry reinforcing a minimum of 48 bar diameters with a minimum lap of 24". Joint reinforcement shall lap a minimum of 6".
   b. All vertical reinforcing shall be doweled to the foundation wall, footing (structure below) and to the structure below with the same size dowel, spacing (and in the same core) as the vertical wall reinforcing above.
   c. Corner Bars: Horizontal reinforcement shall be continuous at all corners and at intersecting walls. Provide corner bars with the required lap splice length.
   d. Wall Openings 24" wide and wider: For unscheduled openings, provide reinforcing on all sides per detail (6/S1.2). Also, for all openings, provide horizontal bar at bottom of opening per detail (6/S1.2). Vertical bars shall extend from floor level below to the floor, or roof level above. Horizontal bars for all openings shall extend a minimum of 48 bar diameters beyond the corners of the opening. Where a 48 bar diameter extension is not possible, extend bars as far beyond the opening as possible and terminate the bar(s) with a 90 degree standard ACI hook.
   e. Horizontal wall reinforcing shall be continuous through joining concrete walls, masonry walls, columns, and pilasters. Provide a lap between the wall and the column or pilaster. Horizontal wall reinforcing shall be placed inside the column vertical reinforcing.
   f. Horizontal wall reinforcing shall terminate at each side of control joints except at floor and roof level beams and at top of parapets.
   g. All masonry column ties shall terminate with 135 hooks plus a 6 bar diameter extension (4" minimum).
5. Masonry Strength Verification:
   a. Masonry strength, f'm shall be verified using the "Unit Strength Method" per UBC Section 2105.3.4 and as described below:
      i. Prior to construction, the masonry units shall be tested for strength and a letter of certification for the grout strength shall be provided.
      ii. During construction, the masonry units, grout and mortar shall be tested for every 5,000 square feet of masonry constructed.
   b. The contractor has the option of using the "Masonry Prism Test Method" or the "Masonry Prism Test Record Method" per UBC Section 2105.3.2 and 2105.3.3 in lieu of the "Unit Strength Method."

STRUCTURAL STEEL

1. Material:
   a. Wide Flanges Section ..... ASTM A572 (50 ksi)
   b. Other shapes & Plates ..... ASTM A36
   c. Steel Tubes ..... ASTM A500 Grade B (46KSI)
   d. Deformed Bar Anchors (DBA) ..... ASTM A496
   e. Headed Stud Anchors (HSA) ..... ASTM A108
   f. Anchor Bolts ..... ASTM A307 with ASTM A563 heavy hex nuts and hardened washers Grade A
   g. Bolted Connections: ..... ASTM A325
2. Fabrication and construction shall comply with the latest edition of the following Codes and Standards:
   a. American Institute of Steel Construction (AISC), "Specification for the Design, Fabrication and Erection of Structural Steel for Buildings," with "Commentary".
   b. AISC "Code of Standard Practice" excluding the following: Section 1.5.1, Section 3.3 (first and last sentence), Section 3.4, Section 4.2, Section 4.2.1, Section 4.2.2, Section 6.3.2, Section 7.5.4, and Section 7.11.5.
   c. AISC "Specification for Structural Joints Using ASTM A325 or A490 Bolts"
   d. American Welding Society (AWS), Structural Welding Code (specific items do not apply when they conflict with the AISC requirements).
3. Welding
   a. All welding and cutting shall be performed by AWS certified welders.
   b. Use E-70 XX or as noted otherwise. E60 XX may be used for welding steel floor decks.
   c. All intersecting steel shapes which are not bolted shall be connected by a fillet weld all around, unless noted otherwise. Where fillet weld sizes are not shown they shall be 1/16" less than the thinnest of the connected parts for thicknesses 1/4" and larger. Fillet welds on plates less than 1/4" shall be of the same size as the thinnest of the connected part.
   d. Reinforcing Bars: Do not weld rebar except as specifically detailed in the drawings. In such cases, use only AWS standards. Do not substitute reinforcing bars for deformed bar anchors (DBAs), machine bolts, or headed stud anchors (HSAs).
   e. Do not weld anchor bolts, including "lack" welds.
   f. Headed Stud Anchors (HSAs) welding and deformed bar anchor welding shall conform to the manufacturer's specifications.
4. Bolted Connections:
   a. Use ASTM A325N bolts for all steel to steel connections, unless noted otherwise. Tighten bolts by the turn of the nut, calibrated wrench, or direct tension indicator method. Alternate fastener designs as defined by AISC shall be submitted to the engineer for review and acceptability prior to installation. Provide hardened washers beneath turned element.
   b. Use hardened washers beneath the turned element of all bolts or nuts. Use hardened beveled washers, to compensate for the lack of parallelism, where the outer face of the bolted parts has a slope greater than one in twenty with respect to the plane normal to the bolt axis. At oversized holes hardened washers or plates shall conform with ASTM F-436 and shall completely cover the slot after installation.
   c. Where a steel to steel beam connection is not shown, provide a standard AISC framed connection for one half the total uniform load capacity of the beam for the span and steel specified.
   d. Bolts, nuts and washers shall not be reused.
5. Provide full-depth web-stiffener plates at each side of all beams at all bearing points. Stiffener plates shall be the thickness called out below unless noted otherwise and shall be welded both sides withfillet welds all around:

FLANGE WIDTH	STIFFENER THICKNESS	WELD SIZE
Less than 8 1/4"	1/4"	3/16"
8 1/4" to 12 1/4"	3/8"	1/4"
12 1/4" to 16 1/2"	1/2"	5/16"
16 1/2" to 20 3/4"	5/8"	3/8"

COMPOSITE STEEL BEAMS

1. Composite beams are indicated on the framing plans with the suffix ( ). The number inside the brackets indicates number of studs for this beam or section of beam. Beams shall have the studs spaced uniformly over the entire beam length or section of beam.
2. All headed stud type shear connectors shall be in conformance with ASTM A-108. Dimensions shall comply with AISC. Use 3/4" diameter studs. Headed studs shall extend 2" minimum above the top of the steel deck after welding. Headed studs shall be applied through the metal deck to the top flange of the steel section or welded directly to the steel section.
3. The minimum center-in-center spacing of stud connectors shall be six (6) diameters along the longitudinal axis of the supporting composite beam and four (4) diameters transverse to the longitudinal axis of the supporting composite beam. The maximum center to center spacing shall not exceed 32".
4. All composite beams shall be precambered. C= 0.00" on the plans denotes precamber dimension (upward) in inches.

METAL DECKING

1. Steel deck shall comply with the latest requirements of the Steel Deck Institute.
2. All deck shall be 3-span continuous minimum. In areas where 3-span conditions are not possible, the contractor shall provide heavier gauge deck as required to provide the equivalent loading of the deck under a three span condition.
3. All deck supporting members shall be dry before welding.
4. Crimp seams before button punching or welding interlocking seams.
5. Yield stress of the 22 gauge steel deck shall be limited to a maximum of 50 ksi.

   STEEL FLOOR DECK
   a. Steel floor deck shall be 2" deep X 20 gauge minimum phosphatized/painted composite type "W" deck with interlocking side seams with the following properties:

	20 Gauge	18 Gauge
Minimum S (in3/ft)	0.361	0.510
Minimum I (in4/ft)	0.423	0.555

   Deck shall be galvanized (G60) when used above or below mechanical equipment rooms.
   b. Steel deck with 3 1/2" thick (5 1/2" overall) normal weight concrete slab shall have a minimum diaphragm shear capacity of ..... lbs/ft. for a 8'-0" deck
   c. span. Weld deck to supporting framing members with 5/8" diameter puddle welds at the following spacing (Closer spacings may be used to develop minimum shear requirements.):
      i. 12" o.c. to supports perpendicular to deck corrugations (4 welds per 36@ wide sheet).
      ii. 12" o.c. to all supports parallel to deck corrugations.
   d. Attach interlocking seams with 3/16"@ button punch at 18" o.c. or 1 1/2" top seam weld at 36" o.c. between adjacent pieces of deck. Closer spacings may be used to develop minimum shear requirements.
   e. Provide a 2-inch minimum bearing at supports.

WOOD

1. Materials:
   a. Framing Lumber shall be # 2 Douglas Fir-Larch or better unless noted otherwise.
   b. Wood sheathing shall be interior grade with exterior glue, span index ratio, unless noted otherwise,
      24/0 Walls (2 inch thick)
      32/16 Floors (3/4 inch thick)
      48/24 Roof (5/8 inch thick)
   c. Nails: Standard Common with the following properties:

Nail Size	Shank Diameter	Min. Penetration into Support Member
6d	0.113"	1.25"
8d	0.131"	1.50"
10d	0.148"	1.63"
12d	0.148"	1.63"
16d	0.162"	1.75"

   Fasteners other than common nails are not permitted without prior written approval from the engineer.
   d. Bolts shall be ASTM A307 with ASTM A563 heavy hex nuts and hardened washers, Grade A, unless noted otherwise.
   e. All laminated veneer lumber (LVL) shall be furnished by Trus-Joist Corporation or approved equal.
   f. All pre-fabricated wood joists shall be TJI as manufactured by Trus-Joist MacMillan Corp. or BCI as manufactured by Boise Cascade Corp. All required blocking bridging and bracing shall be provided by joist manufacturer and installed by contractor. All penetrations through the joists shall be done per manufacturers' recommendations and requirements.
2. All wood in contact with concrete, masonry or soil shall be pressure treated or be redwood.
3. General framing and carpentry shall be connected as per "Minimum Nailing Schedule" unless noted otherwise.
4. All framing anchors, post caps, hold downs, column bases, etc. shall be provided by Simpson Strong-Tie or approved equal.
5. Provide solid shaped blocking at least 2 in.(nominal) thick and full depth of joist at ends and at each support of joist. Provide approved bridging at a 8'-0" o.c. maximum between joist and supports. Solid blocking between joists shall be nailed to the wood plate at the top of the wall with one Simpson "A35" framing anchor per each piece of blocking. Fill all holes in the framing anchors with 8-d x 1-1/2" nails (12 nails per A35).
6. Built-up beams of 2X-member 12 in. or less in depth shall be spiked together with not less than 16-d spikes at twelve-inch (12 in.) centers, staggered. If the depth of beam is more than twelve inches (12 in.), the members shall be connected together with 1/2"@ bolts at 24 in. o.c. staggered. Bolts shall be placed 1/4 the depth of the member from the top and bottom of the member.
7. All walls shall have a minimum of two top plates. Splices in top plates shall be staggered a minimum of four feet from the nearest splice in adjoining top plate.
8. Provide a double joist under parallel partitions.

SPECIAL INSPECTIONS

Special inspection, as required by section 1701 of the UBC, shall be provided by an independent agency employed by the owner unless waived by the building official. The contractor shall coordinate and cooperate with the required inspections. Items requiring special inspection are:

1. Concrete placement (UBC Section 1701.5.1)
2. Bolts installed in concrete (UBC Section 1701.5.2)
3. Ductile Moment Resisting concrete frame (UBC Section 1701.5.3 & 1921.9)
4. Concrete reinforcing steel placement (UBC Section 1701.5.4)
5. Concrete post-tension strand placement and stressing (UBC 1701.5.4)
6. Structural masonry as required by the contract documents. See Masonry section of the General Structural Notes and Masonry Schedules for additional information. Special inspection shall be provided during preparation and taking of any required prisms or test specimens, at the start of laying units, after the placement of reinforcing steel, inspection of grout space prior each grouting operation, and during all grouting operations. (UBC Section 1701.5.7)

LEGEND OF MARKS AND ABBREVIATIONS

AB	ANCHOR BOLT(S)	INSUL	INSULATION
ALT	ALTERNATE	INT	INTERIOR
APPROX	APPROXIMATE	I.F.	INTERIOR FACE
ARCH	ARCHITECT(URAL)		
		JT	JOINT
BM	BEAM	JST	JOIST
BF-x	BRACED FRAME MARK		
BRG	BEARING	KLF	KIPS PER LINEAL FOOT
BTWN	BETWEEN	KSF	KIPS PER SQUARE FOOT
BLDG	BUILDING	K	KIP(S) = 1,000 POUNDS
BOT	BOTTOM		
		LF	LINEAL FOOT
CB-x	CONCRETE BEAM MARK	LBS	POUNDS
CC-x	CONCRETE COLUMN MARK		
CDP-x	CONCRETE DRILLED PIER MARK	MAS	MASONRY
CFW-x	CONCRETE FDN WALL MARK	MAX	MAXIMUM
CGB-x	CONC GRADE BEAM MARK	MC-x	MASONRY COLUMN MARK
C.J.	CONSTRUCTION OR CONTROL JOINT	MCJ	MASONRY CONTROL JOINT
CJ-x	CONCRETE JOIST MARK	MECH	MECHANICAL
CL-x	CONCRETE LINTEL MARK	MF-x	MOMENT FRAME MARK
CMU	CONCRETE MASONRY UNIT	MFR	MANUFACTURER
COL	COLUMN	MIN	MINIMUM
CONC	CONCRETE	MISC	MISCELLANEOUS
CONST	CONSTRUCTION	ML-x	MASONRY LINTEL MARK
CONT	CONTINUOUS	MP-x	MASONRY PIER MARK
CONTR	CONTRACTOR	MW-x	MASONRY WALL MARK
CP-x	CONCRETE PIER MARK	NIC	NOT IN CONTRACT
CRW-x	CONC RETAINING WALL MARK	NTS	NOT TO SCALE
CTR	CENTER		
CSW-x	CONC SHEAR WALL MARK	OPNG	OPENING
CW-x	CONCRETE WALL MARK	OPP	OPPOSITE
		O.C.	ON CENTER
DB	DECK BEARING	O.F.	OUTSIDE FACE
DBA	DEFORMED BAR ANCHOR		
DBE	DECK BEARING ELEVATION	PCF	POUNDS PER CUBIC FOOT
DBL	DOUBLE	PL OR }	PLATE
DET	DETAIL	PLF	POUNDS PER LINEAL FOOT
DIA	DIAMETER	PNL	PANEL
DIM	DIMENSION	PSF	POUNDS PER SQUARE FOOT
DN	DOWN	PSI	POUNDS PER SQUARE INCH
DWG	DRAWING	PT	POINT
DWL	DOWEL		
		REINF	REINFORCING
EA	EACH	R.D.	ROOF DRAIN
ELEV OR EL.	ELEVATION	REQ'D	REQUIRED
ELEC	ELECTRICAL		
EQUIP	EQUIPMENT	SBP-x	STEEL BASE PLATE MARK
EQ	EQUAL	SC-x	STEEL COLUMN MARK
EXIST	EXISTING	SCP-x	STEEL CAP PLATE MARK
EXP	EXPANSION	SCHED	SCHEDULE
EXT	EXTERIOR	SHT	SHEET
E.F.	EACH FACE	SI	SPECIAL INSPECTION
E.J.	EXPANSION JOINT	SOG	SLAB ON GRADE
E.W.	EACH WAY	STD	STANDARD
		STIFF	STIFFENER
FCx	CONTINUOUS FOOTING MARK	STL	STEEL
F.D.	FLOOR DRAIN	SQ	SQUARE
FDN	FOUNDATION	SIM	SIMILAR
F.F.	FINISH FLOOR	STR	STRUCTURAL
FIN	FINISH	STAG	STAGGERED
FL	FLOOR	SW-x	SHEARWALL MARK
FMx	MAT FOOTING MARK		
FRx	RECTANGULAR FOOTING MARK	T&B	TOP AND BOTTOM
FSx	SQUARE FOOTING MARK	TEMP	TEMPERATURE
FT	FOOT	THDS	THREADS
FTSx	THICKENED SLAB FOOTING MARK	T.O.	TOP OF
FTG	FOOTING	TOC	TOP OF CONCRETE
		TOD	TOP OF DECK
GA	GAUGE	TOF	TOP OF FOOTING
GALV	GALVANIZED	TOS	TOP OF STEEL
GLB	GLUE LAMINATED BEAM	TOW	TOP OF WALL
GR	GRADE	TYP	TYPICAL
GSN	GENERAL STRUCTURAL NOTES		
		UBC	UNIFORM BUILDING CODE
HB	HORIZONTAL BRIDGING	UNO	UNLESS NOTED OTHERWISE
HT	HEIGHT		
HORIZ	HORIZONTAL	VERT	VERTICAL
HSA	HEADED STUD ANCHOR		
		W/	WITH
ICBO	INTERNATIONAL CONFERENCE	WD-x	WOOD DIAPHRAGM MARK
	OF BUILDING OFFICIALS	WSW-x	WOOD SHEARWALL MARK
IN.	INCH	WWF	WELDED WIRE FABRIC
		WWM	WELDED WIRE MESH

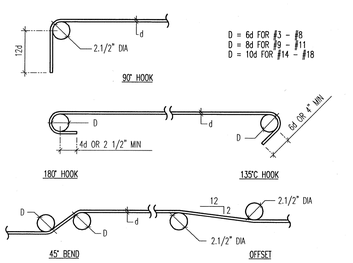

1 REINFORCING BENDS, HOOK, AND OFFSETS. NO SCALE

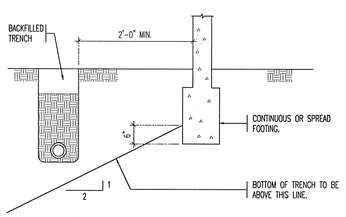

2 PIPE PARALLEL TO FOOTING. NO SCALE

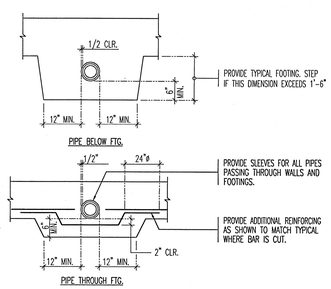

3 PIPE PERPENDICULAR TO FOOTING. NO SCALE

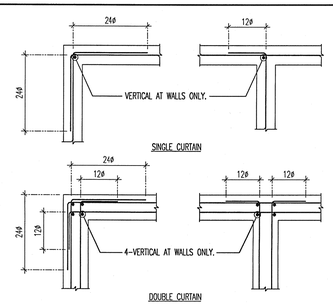

4 REINFORCING AT INTERSECTIONS OF WALLS AND FOOTINGS. NO SCALE

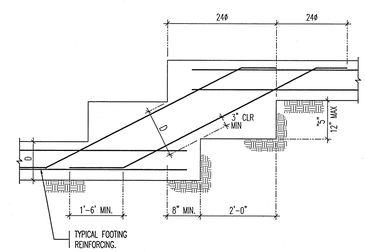

5 STEPPED FOOTING. NO SCALE

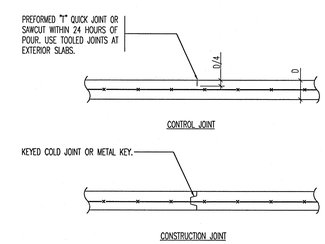

6 SLAB ON GRADE JOINT. NO SCALE
SPACE CONTROL AND OR CONSTRUCTION JOINTS AT 16'-0"cc. MAXIMUM EACH WAY U.N.O. ON PLANS. S.A.D. FOR LOCATIONS OF CONTROL JOINTS.

LICENSED CERTIFIED STRUCTURAL ENGINEER
No. 164133
RONALD H. DUNN
STATE OF UTAH

DUNN ASSOCIATES INC.
CONSULTING STRUCTURAL ENGINEERS
380 West 800 South Suite 100
Salt Lake City, Utah 84101
Telephone: (801) 575-8877
Telefax: (801) 575-8875
email: dunn@xr.netcom.com

PGA&W
PASKER GOULD AMES & WEAVER
ARCHITECTS PLANNERS
5263 SOUTH 300 WEST MURRAY, UTAH (801) 266-4669

DRAWN BY	CHECKED BY	JOB NO.	DATE
D.K.F.	C.A.	2111	JUNE, 1999

GENERAL NOTES
A NEW BUILDING FOR
TAYLOR - HUNT ELECTRIC
1747 S. 900 W. SALT LAKE CITY, UTAH

S
1.1

© PASKER GOULD AMES & WEAVER - 1999

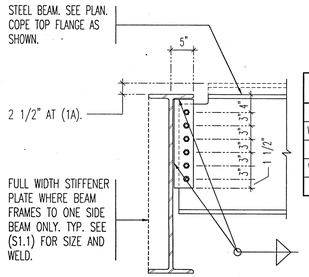

BEAM SIZE	PLATE THICKNESS	NUMBER OF 7/8"ø BOLTS	WELD SIZE
W8, W10	1/4"	2	3/16"
W12, W14	5/16"	3	1/4"
W16	3/8"	4	5/16"
W18, W21	3/8"	5	5/16"
W24	3/8"	6	5/16"

1 TYPICAL W.F. BEAM TO W.F. BEAM.

BEAMS TO 24" DEEP. UNO.

NO SCALE

WDMB-1

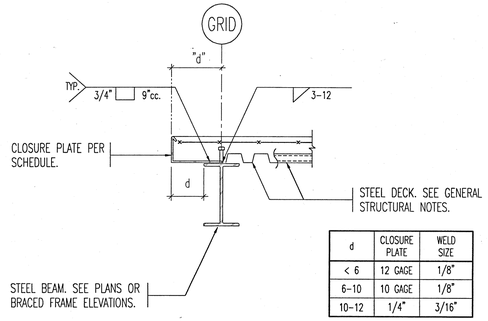

d	CLOSURE PLATE	WELD SIZE
< 6	12 GAGE	1/8"
6-10	10 GAGE	1/8"
10-12	1/4"	3/16"

2 DETAIL. (6"-12" OVERHANG).

NO SCALE

WBEDG-2

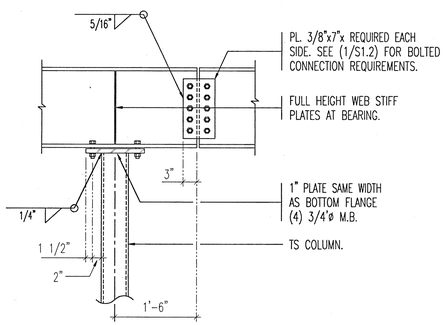

3 TYPICAL BEAM TO COLUMN CONNECTION

3/4" = 1'-0"

TSCWB1

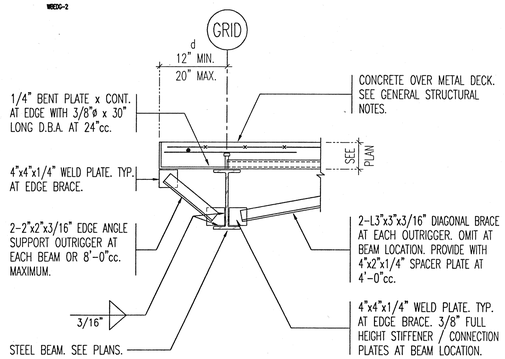

4 TYP. EDGE CONDITION AT FLOOR (OVER 12" OVERHANG)

NO SCALE

WBEDG-10(A)

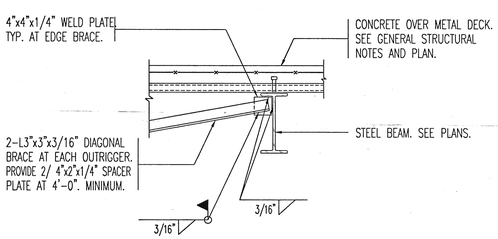

5 TYP. KICKER CONNECTION AT FLOOR

NO SCALE

WEKK-1

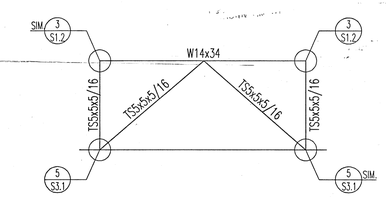

BF - 1 ELEVATION.

NO SCALE

FOOT-2000

FOOTING SCHEDULE

MARK	WIDTH	LENGTH	DEPTH	REINFORCING CROSSWISE				REINFORCING LENGTHWISE				REMARKS
				NO	SIZE	LENGTH	SPACING	NO	SIZE	LENGTH	SPACING	
FC2.0	2'-0"	CONT.	12"	-	-	-	-	3	#4	CONT.	EQ.	
FTS2.0	-	-	-	-	#4	1'-6"	24"	3	#4	CONT.	EQ.	
FS2.5	2'-6"	2'-6"	12"	3	#5	2'-0"	EQ.	3	#5	2'-0"	EQ.	
FS4.0	4'-0"	4'-0"	12"	4	#5	3'-6"	EQ.	4	#5	3'-6"	EQ.	
FS6.0	6'-0"	6'-0"	20"	7	#6	5'-6"	EQ.	7	#5	5'-6"	EQ.	AT (E) AND (1) PROVIDE TOP MAT ALSO.
FS7.0	7'-0"	7'-0"	20"	7	#7	6'-6"	EQ.	7	#7	6'-6"	EQ.	
FR6.0x9.0	6'-0"	9'-0"	20"	10	#7	5'-6"	EQ.	7	#7	8'-6"	EQ.	

CONCRETE FOOTING NOTES:

1. PLACE ALL FOOTING REINFORCING IN BOTTOM OF FOOTING WITH 3" CLEAR CONCRETE COVER, UNLESS NOTED OTHERWISE.
2. TOP REINFORCING, WHERE SPECIFIED, SHALL BE PLACED IN THE TOP OF THE FOOTING WITH 2" MINIMUM CONCRETE COVER.
3. IF FOOTINGS ARE EARTH FORMED, FOOTING WIDTH AND LENGTH SHALL BE BE 6" WIDER AND LONGER THAN SCHEDULED.
4. SEE GENERAL STRUCTURAL NOTES FOR ALL OTHER REQUIREMENTS.

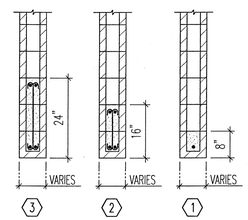

MBLSHED-1

MASONRY BEAM/LINTEL SCHEDULE

MARK	TYPE	MAX. SPAN	MIN. DEPTH	WIDTH	STEEL			STIRRUPS
					TOP	MIDDLE	BOTTOM	
MB1	1	3'-4"	8"	8"	(1) #7	-	(1) #7	-
MB2	2	5'-4"	16"	8'	(1) #7	-	(1) #7	#4 AT 8"cc.
MB3	3	8'-0"	24"	8"	(1) #7	-	(1) #7	#4 AT 8"cc.

NOTES:

1. LINTEL WIDTH AND MATERIAL TYPE SHALL BE THE SAME AS THE WALL IN WHICH THE LINTEL IS CONSTRUCTED.
2. GROUT MASONRY LINTELS MONOLITHICALLY WITH THE SUPPORT WALL OR COLUMN AT EACH END.
3. MASONRY LINTELS ML-1 THRU ML-4 SHALL BE USE OVER OPENINGS IN MASONRY WALLS WHEN A SPECIFIC MASONRY LINTEL IS NOT OTHERWISE SPECIFIED. WHEN A LINTEL IS SPECIFIED ON THE PLANS, THE MAXIMUM SPAN AS NOTED IN THIS SCHEDULE SHALL NOT APPLY. CONSULT THE STRUCTURAL ENGINEER FOR LINTELS NOT SPECIFIED ON THE PLANS WHICH HAVE A SPAN GREATER THAN 10'-0".
4. MASONRY LINTELS ML-1 THRU ML-4 SHALL NOT BE LOCATED DIRECTLY BELOW FLOOR OR ROOF BEAMS OR GIRDERS UNLESS NOTED OTHERWISE ON THE PLANS. JOISTS SHALL NOT BEAR ON ANY LINTEL LESS THAN 16" DEEP. CONSULT THE STRUCTURAL ENGINEER LINTELS NOT SHOWN ON THE PLANS WHICH ARE LOCATED DIRECTLY BELOW FLOOR OR ROOF BEAMS OR GIRDERS.
5. EXTEND ALL HORIZONTAL REINFORCING 48 BAR DIAMETERS MINIMUM BEYOND THE EDGE OF ALL OPENINGS. IF HORIZONTAL REINFORCING CANNOT EXTEND 48 BAR DIAMETERS BEYOND EDGE OF OPENING, PROVIDE 90° STANDARD HOOK.
6. SPLICE TOP BARS AT MIDSPAN OF LINTEL ONLY, AND BOTTOM BARS OVER SUPPORTS ONLY.
7. HORIZONTAL REINFORCING SHALL CONTINUE THRU MASONRY LINTELS. WHERE BOTH HORIZONTAL WALL REINFORCING AND LINTEL REINFORCING OCCUR IN THE SAME COURSE, USE THE LARGER REINFORCING.
8. DOWEL VERTICAL REINFORCING OF WALL ABOVE LINTEL INTO THE FULL DEPTH OF LINTEL OR 48 BAR DIAMETERS, WHICHEVER IS LESS.
9. SEE GENERAL STRUCTURAL NOTES FOR ALL OTHER REQUIREMENTS.

CSF-SHED

CONCRETE FOUNDATION WALL SCHEDULE

MARK	THICK	HORIZONTAL REINFORCING	VERTICAL REINFORCING	T AND B	WALL TYPE
CFW-1	8"	#4 AT 12"cc.	#4 AT 18"cc.	(1) #5	A
CFW-2	14"	#4 AT 12"cc. EACH FACE.	#4 AT 18"cc. EACH FACE.	(2) #5	C

NOTES:

1. SEE GENERAL STRUCTURAL NOTES FOR ALL REQUIREMENTS NOT NOTED IN SCHEDULE.

WALL TYPES:

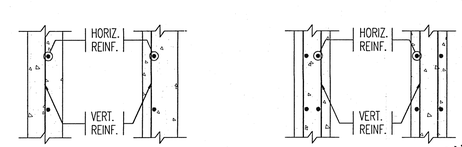

TYPE "A" TYPE "B" TYPE "C" TYPE "D"

MASONRY WALL SCHEDULE

MARK	THICK	VERT. REINF.		HORIZ. REINF.			SPECIAL INSPECTION REQUIRED	COMMENTS
		SIZE	SPACE	NO	SIZE	SPACE		
MW-1	8	#5	32"	1	#5	48"	NO	CMU
MW-2	8	#5	32"	1	#5	48"	YES	CMU

CMU. f'm = 1500 psi. MINIMUM GROUT COMPRESSIVE STRENGTH AT 28 DAYS = 2000 psi.

NOTE: - FOR ANY CMU. WALLS NOT SPECIFICALLY CALLED OUT IN PLANS, USE MW-1
- VERTICAL REINFORCING TO BE AT CENTERLINE OF WALL UNLESS OTHERWISE NOTED.
- SOLID GROUTING OF WALLS IS UNACCEPTABLE EXCEPT WHERE SPECIFICALLY NOTED.
- HORIZONTAL WALL REINFORCING CONTINUE THRU MASONRY LINTELS. WHERE BOTH HORIZONTAL WALL REINFORCING AND LINTEL REINFORCING OCCUR IN THE SAME COURSE, USE THE LARGER REINFORCING.

PASKER GOULD AMES & WEAVER
ARCHITECTS PLANNERS
5263 SOUTH 300 WEST MURRAY, UTAH (801) 266-4669

DRAWN BY	CHECKED BY	JOB NO.	DATE
D.K.P.	C.A.	2711	JUNE, 1999

SCHEDULES AND TYP. DETAILS

A NEW BUILDING FOR

TAYLOR - HUNT ELECTRIC

1747 S. 900 W. SALT LAKE CITY, UTAH

LICENSED CERTIFIED STRUCTURAL ENGINEER
No. 164133
RONALD H. DUNN
STATE OF UTAH

DUNN ASSOCIATES INC.
CONSULTING STRUCTURAL ENGINEERS
380 West 800 South Suite 100
Salt Lake City, Utah 84101
Telephone: (801) 575-8877
Telefax: (801) 575-8875
email: dunn@xmetcom.com

S
1.2

PASKER GOULD AMES & WEAVER - 1999

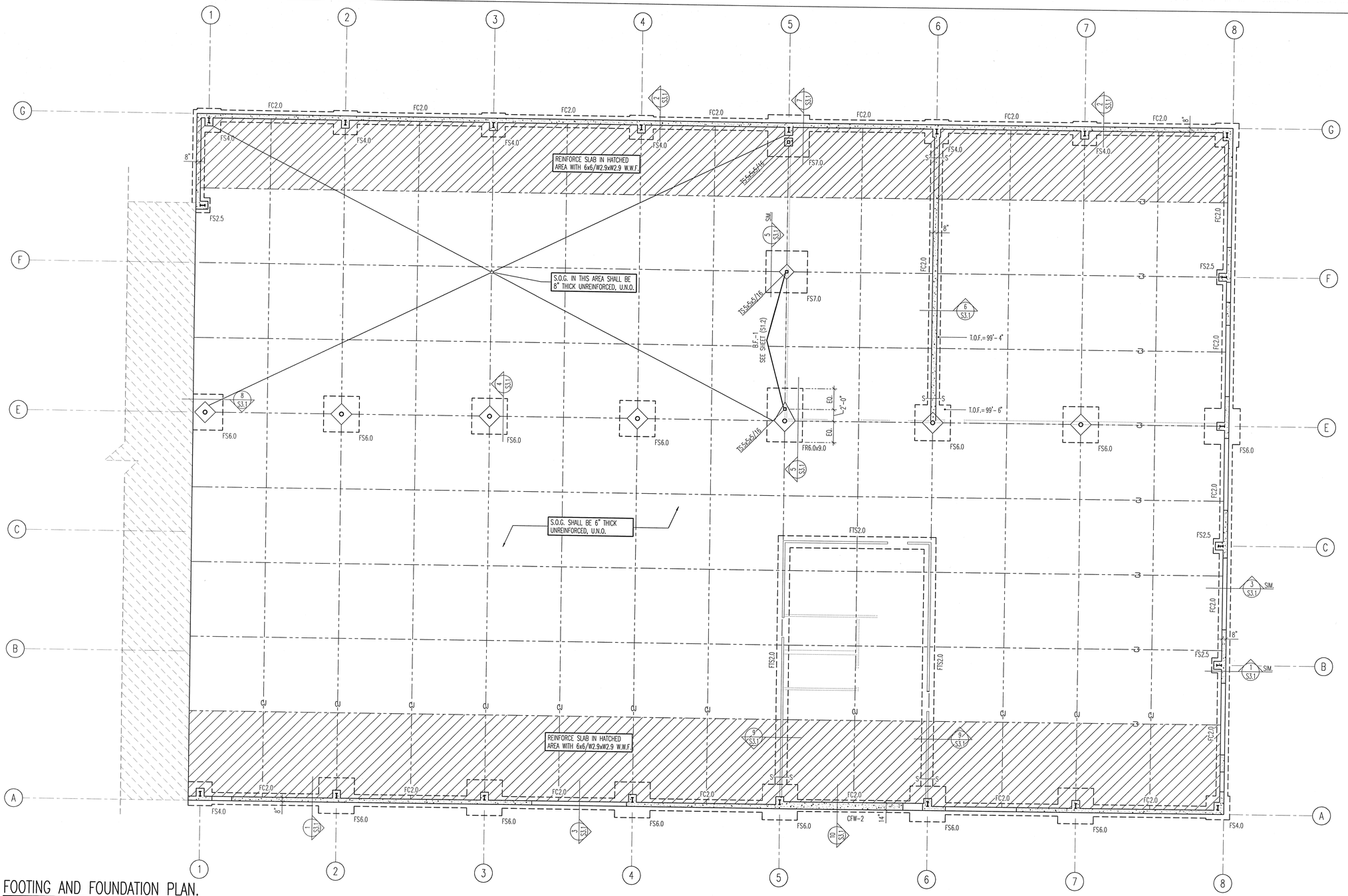

FOOTING AND FOUNDATION PLAN.

SCALE: 1/8" = 1'-0"

NOTES:

1. ALL 8" FOUNDATION WALLS ARE CFW-1 U.N.O.
2. COORDINATE LOCATIONS OF DEPRESSED SLABS, SLOPED SLABS AND FLOOR DRAINS WITH ARCHITECTURAL DRAWINGS.
3. S----S INDICAGTES FOOTING STEP. SEE DETAILS (5/S1.2
4. SEE ARCHITECTURAL DRAWINGS FOR ALL DIMENSIONS.
5. SEE DETAIL (6/S3.1) FOR S.O.G. CONTROL JOINTS AND CONSTRUCTION JOINTS.
6. TYPICAL EXTERIOR TOP OF FOOTING SHALL BE 98'-0" U.N.O.
   TYPICAL INTERIOR TOP OF FOOTING SHALL BE 99'-6" U.N.O.

FOOT-2000

FOOTING SCHEDULE

MARK	WIDTH	LENGTH	DEPTH	REINFORCING CROSSWISE				REINFORCING LENGTHWISE				REMARKS
				NO	SIZE	LENGTH	SPACING	NO	SIZE	LENGTH	SPACING	
FC2.0	2'-0"	CONT.	12"	–	–	–	–	3	#4	CONT.	EQ.	
FTS2.0	–	–	–	–	#4	1'-6"	24"	3	#4	CONT.	EQ.	
FS2.5	2'-6"	2'-6"	12"	3	#5	2'-0"	EQ.	3	#5	2'-0"	EQ.	
FS4.0	4'-0"	4'-0"	12"	4	#5	3'-6"	EQ.	4	#5	3'-6"	EQ.	
FS6.0	6'-0"	6'-0"	20"	7	#6	5'-6"	EQ.	7	#5	5'-6"	EQ.	AT (E) AND (1) PROVIDE TOP MAT ALSO.
FS7.0	7'-0"	7'-0"	20"	7	#7	6'-6"	EQ.	7	#7	6'-6"	EQ.	
FR6.0x9.0	6'-0"	9'-0"	20"	10	#7	5'-6"	EQ.	7	#7	8'-6"	EQ.	

CONCRETE FOOTING NOTES:

1. PLACE ALL FOOTING REINFORCING IN BOTTOM OF FOOTING WITH 3" CLEAR CONCRETE COVER, UNLESS NOTED OTHERWISE.
2. TOP REINFORCING, WHERE SPECIFIED, SHALL BE PLACED IN THE TOP OF THE FOOTING WITH 2" MINIMUM CONCRETE COVER.
3. IF FOOTINGS ARE EARTH FORMED, FOOTING WIDTH AND LENGTH SHALL BE BE 6" WIDER AND LONGER THAN SCHEDULED.
4. SEE GENERAL STRUCTURAL NOTES FOR ALL OTHER REQUIREMENTS.

LICENSED CERTIFIED STRUCTURAL ENGINEER
No. 164133
RONALD H. DUNN
STATE OF UTAH

DUNN ASSOCIATES INC.
CONSULTING STRUCTURAL ENGINEERS
380 West 800 South Suite 100
Salt Lake City, Utah 84101
Telephone: (801) 575-8877
Telefax: (801) 575-8875
email: dunn@xr.netcom.com

PGA&W

PASKER GOULD AMES & WEAVER
ARCHITECTS PLANNERS
5263 SOUTH 300 WEST MURRAY, UTAH (801) 266-4669

DRAWN BY	CHECKED BY	JOB NO.	DATE
D.K.P.	C.A.	2171	JUNE, 1999

FOOTING AND FOUNDATION PLAN
A NEW BUILDING FOR
TAYLOR - HUNT ELECTRIC
1747 S. 900 W. SALT LAKE CITY, UTAH

S
2.1

© PASKER GOULD AMES & WEAVER – 1999

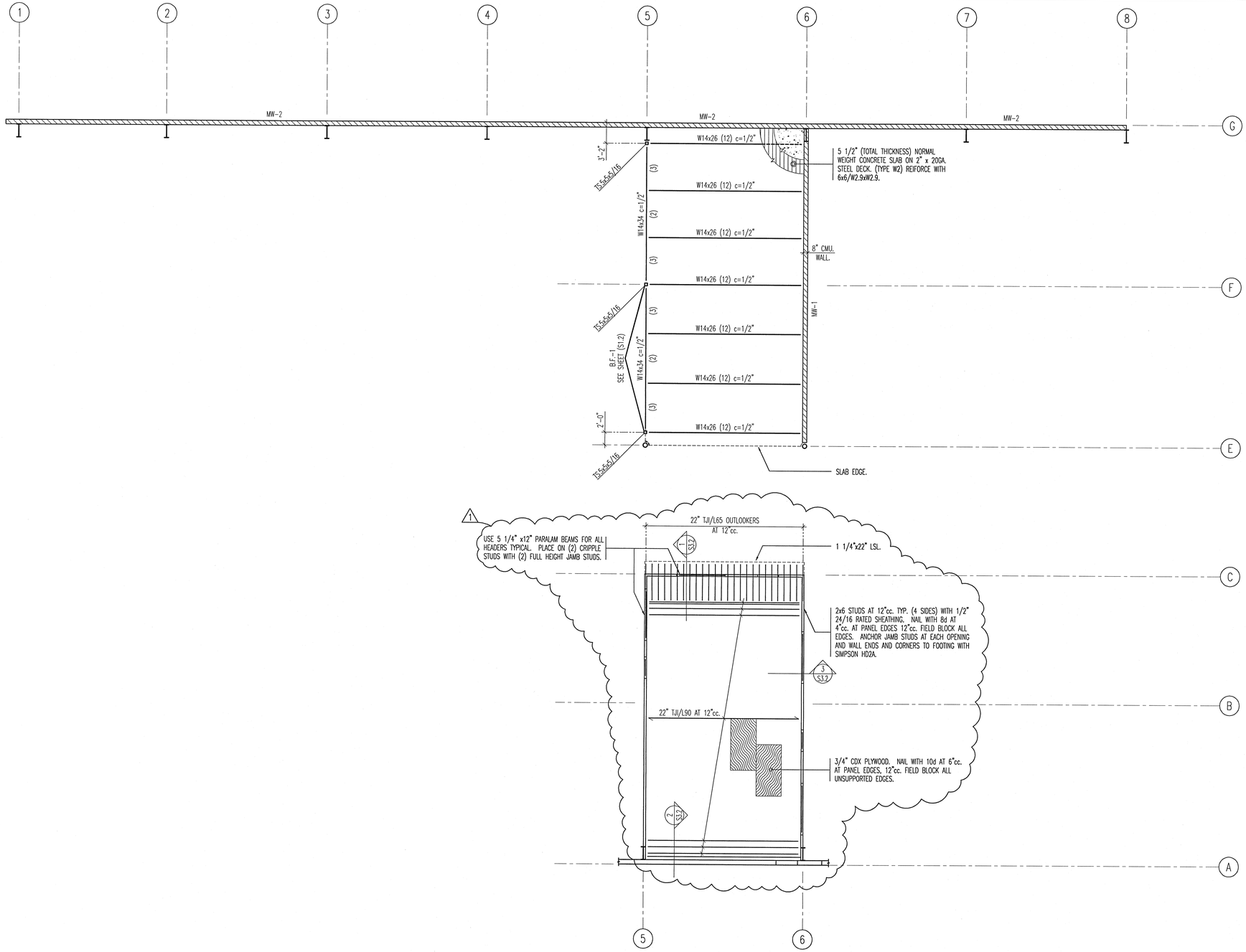

MEZZANINE FRAMING PLAN.

SCALE: 1/8" = 1'-0"

PASKER GOULD AMES & WEAVER
ARCHITECTS PLANNERS
5263 SOUTH 300 WEST MURRAY, UTAH (801) 266-4669

DRAWN BY	CHECKED BY	JOB NO.	DATE
D.K.P.	C.A.	2171	JUNE, 1999

MEZZANINE FRAMING PLAN.
A NEW BUILDING FOR
TAYLOR - HUNT ELECTRIC
1747 S. 900 W. SALT LAKE CITY, UTAH

LICENSED CERTIFIED STRUCTURAL ENGINEER
No. 164133
RONALD H. DUNN
STATE OF UTAH

DUNN ASSOCIATES INC.
380 West 800 South Suite 100
Salt Lake City, Utah 84101
Telephone: (801) 575-8877
Telefax: (801) 575-8875
email: dunn@ix.netcom.com
CONSULTING STRUCTURAL ENGINEERS

S
2.2

© PASKER GOULD AMES & WEAVER - 1999

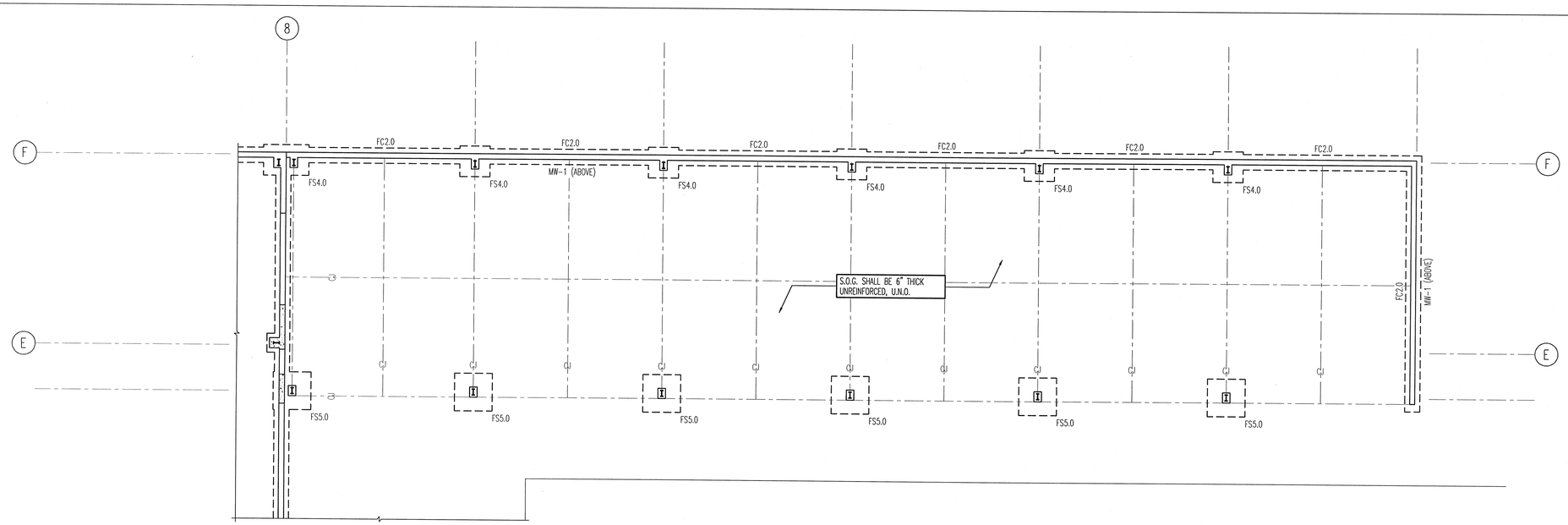

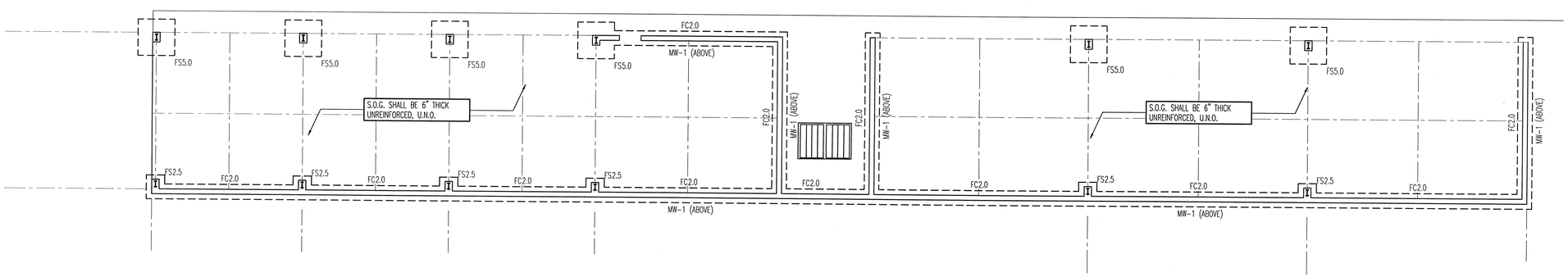

FOOTING AND FOUNDATION PLAN.

SCALE: 1/8" = 1'-0"

NOTES:
1. ALL 8" FOUNDATION WALLS ARE CFW-1 U.N.O.
2. COORDINATE LOCATIONS OF DEPRESSED SLABS, SLOPED SLABS AND FLOOR DRAINS WITH ARCHITECTURAL DRAWINGS.
3. S----S INDICAGTES FOOTING STEP. SEE DETAILS (5/S1.2
4. SEE ARCHITECTURAL DRAWINGS FOR ALL DIMENSIONS.
5. SEE DETAIL (6/S3.1) FOR S.O.G. CONTROL JOINTS AND CONSTRUCTION JOINTS.
6. TYPICAL EXTERIOR TOP OF FOOTING SHALL BE 98'-0" U.N.O.

FWF-2000

FOOTING SCHEDULE

MARK	WIDTH	LENGTH	DEPTH	REINFORCING CROSSWISE				REINFORCING LENGTHWISE				REMARKS
				NO	SIZE	LENGTH	SPACING	NO	SIZE	LENGTH	SPACING	
FC2.0	2'-0"	CONT.	12"	–	–	–	–	3	#4	CONT.	EQ.	
FTS2.0	–	–	–	–	#4	1'-6"	24"	3	#4	CONT.	EQ.	
FS2.5	2'-6"	2'-6"	12"	3	#5	2'-0"	EQ.	3	#5	2'-0"	EQ.	
FS4.0	4'-0"	4'-0"	12"	4	#5	3'-6"	EQ.	4	#5	3'-6"	EQ.	
FS6.0	6'-0"	6'-0"	20"	7	#6	5'-6"	EQ.	7	#5	5'-6"	EQ.	AT (E) AND (1) PROVIDE TOP MAT ALSO.
FS7.0	7'-0"	7'-0"	20"	7	#7	6'-6"	EQ.	7	#7	6'-6"	EQ.	
FR6.0x9.0	6'-0"	9'-0"	20"	10	#7	5'-6"	EQ.	7	#7	8'-6"	EQ.	

CONCRETE FOOTING NOTES:
1. PLACE ALL FOOTING REINFORCING IN BOTTOM OF FOOTING WITH 3" CLEAR CONCRETE COVER, UNLESS NOTED OTHERWISE.
2. TOP REINFORCING, WHERE SPECIFIED, SHALL BE PLACED IN THE TOP OF THE FOOTING WITH 2" MINIMUM CONCRETE COVER.
3. IF FOOTINGS ARE EARTH FORMED, FOOTING WIDTH AND LENGTH SHALL BE BE 6" WIDER AND LONGER THAN SCHEDULED.
4. SEE GENERAL STRUCTURAL NOTES FOR ALL OTHER REQUIREMENTS.

LICENSED CERTIFIED STRUCTURAL ENGINEER
No. 164133
RONALD H. DUNN
STATE OF UTAH

DUNN ASSOCIATES INC.
CONSULTING STRUCTURAL ENGINEERS
380 West 800 South Suite 100
Salt Lake City, Utah 84101
Telephone: (801) 575-8877
Telefax: (801) 575-8875
email: dunn@ix.netcom.com

PASKER GOULD AMES & WEAVER
ARCHITECTS PLANNERS
5263 SOUTH 300 WEST MURRAY, UTAH (801) 266-4669

DRAWN BY	CHECKED BY	JOB NO.	DATE
D.K.P.	C.A.	2711	JUNE, 1999

FOOTING AND FOUNDATION PLAN
A NEW BUILDING FOR
TAYLOR - HUNT ELECTRIC
1747 S. 900 W. SALT LAKE CITY, UTAH

S
2.3

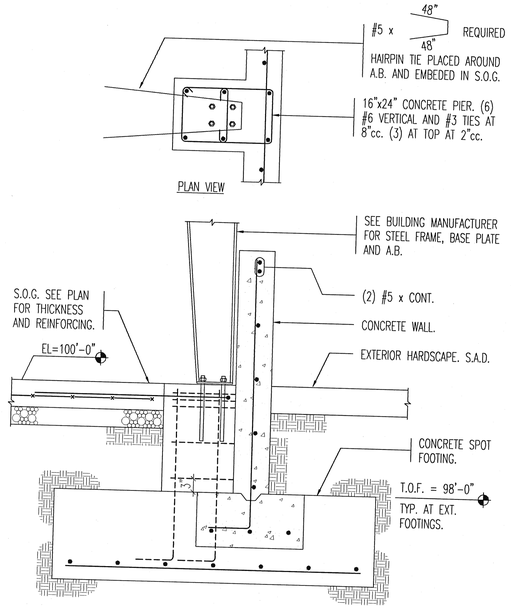

1 TYPICAL CONCRETE PIER DETAIL.
3/4" = 1'-0"

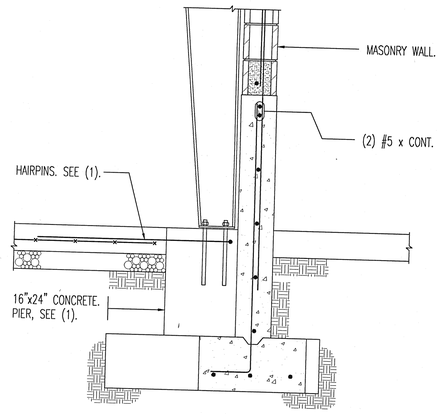

2 EXTERIOR MASONRY WALL DETAIL.
FOR SIMILAR NOTES AND DETAILS NOT SHOWN HERE SEE (1).
3/4" = 1'-0"

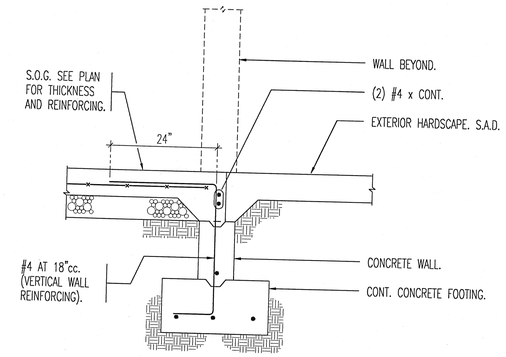

3 TYPICAL EXTERIOR DOOR DETAIL.
3/4" = 1'-0"

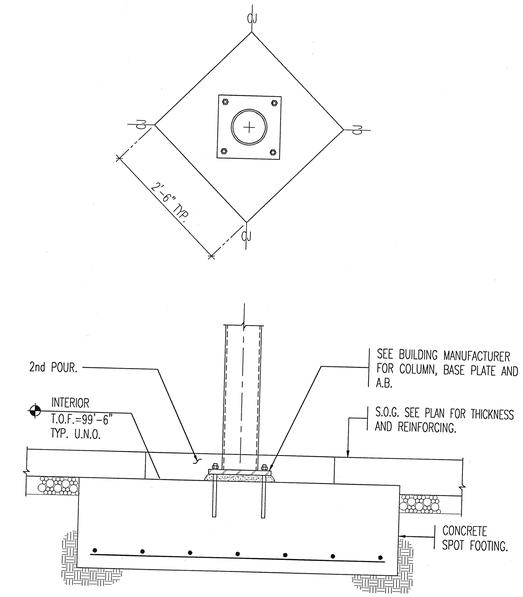

4 TYPICAL INTERIOR COLUMN DETAIL.
3/4" = 1'-0"

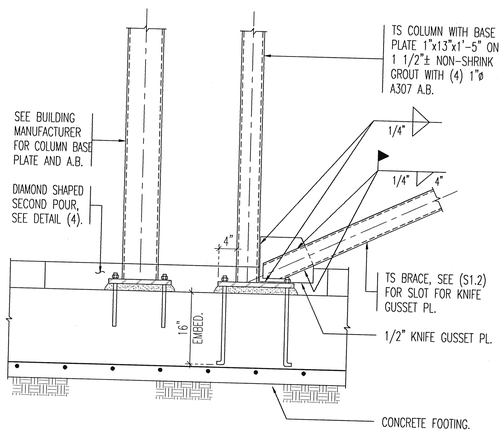

5 COMBINED FOOTING DETAIL.
3/4" = 1'-0"

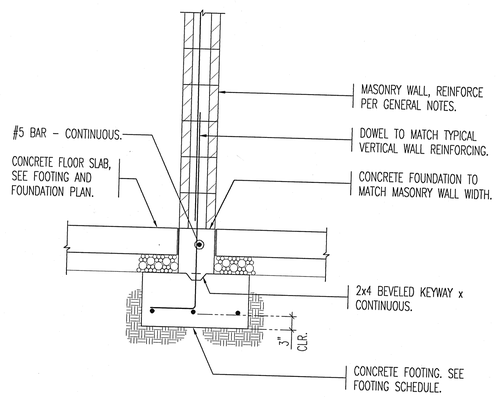

5 TYPICAL 8" & 10" INTERIOR MASONRY WALL ON CONCRETE CURB.
3/4" = 1'-0"

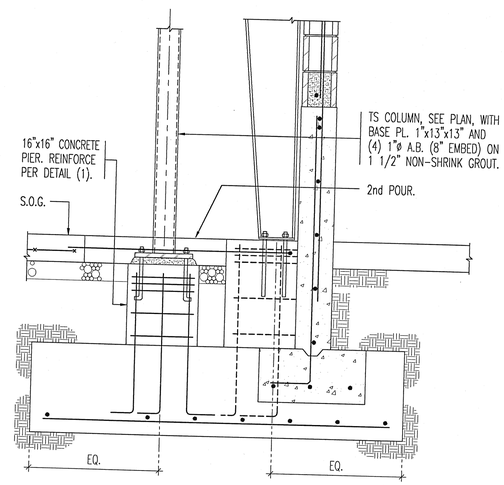

7 TYPICAL CONCRETE PIER DETAIL.
FOR SIMILAR NOTES AND DETAILS NOT SHOWN HERE SEE (2).
3/4" = 1'-0"

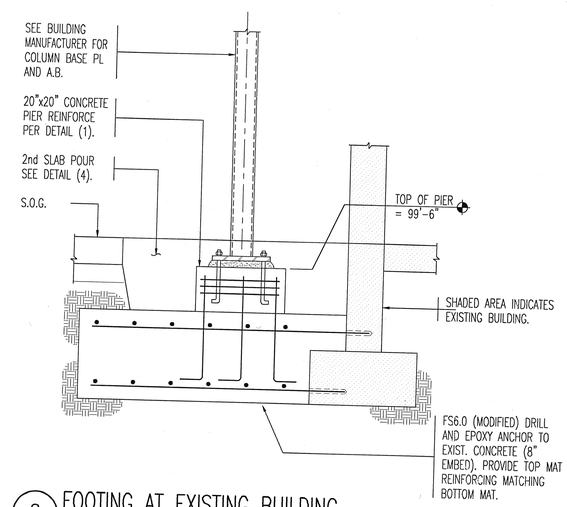

8 FOOTING AT EXISTING BUILDING.
3/4" = 1'-0"

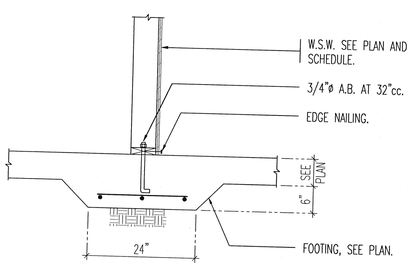

9 INTERIOR WOOD SHEAR WALL.
3/4" = 1'-0"

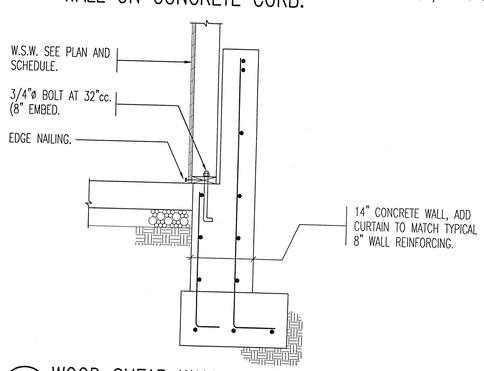

10 WOOD SHEAR WALL DETAIL.
3/4" = 1'-0"

LICENSED CERTIFIED STRUCTURAL ENGINEER
No. 164133
RONALD H. DUNN
STATE OF UTAH

DUNN ASSOCIATES INC.
CONSULTING STRUCTURAL ENGINEERS
380 West 800 South Suite 100
Salt Lake City, Utah 84101
Telephone: (801) 575-8877
Telefax: (801) 575-8875
email: dunn@ix.netcom.com

PGA&W
PASKER GOULD AMES & WEAVER
ARCHITECTS PLANNERS
5263 SOUTH 300 WEST
MURRAY, UTAH (801) 266-4669

DRAWN BY	CHECKED BY	JOB NO.	DATE
DKP.	CA.	2111	JUNE, 1999

FOOTING AND FOUNDATION DETAILS.
A NEW BUILDING FOR
TAYLOR - HUNT ELECTRIC
1741 S. 900 W. SALT LAKE CITY, UTAH

S
3.1

© PASKER GOULD AMES & WEAVER - 1999

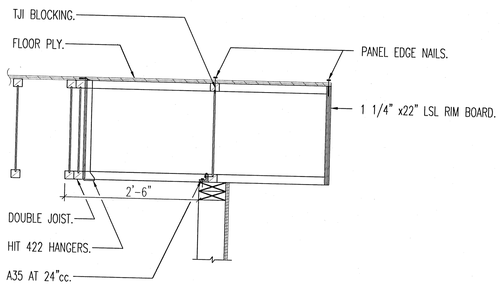

1 DETAIL.
3/4" = 1'-0"

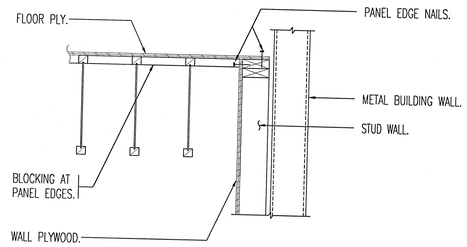

2 DETAIL.
3/4" = 1'-0"

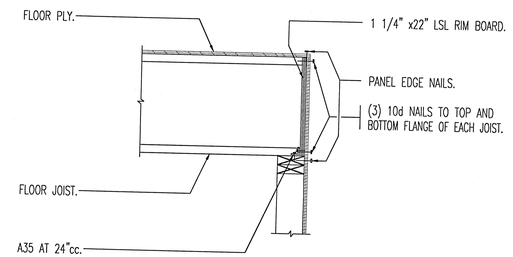

3 DETAIL.
3/4" = 1'-0"

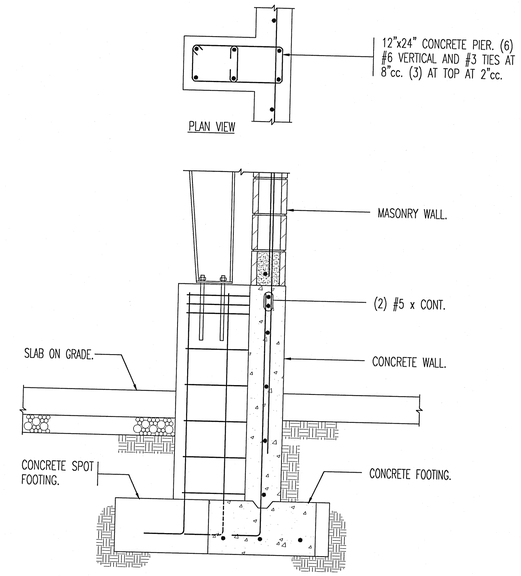

4 EXTERIOR MASONRY WALL DETAIL.
3/4" = 1'-0"

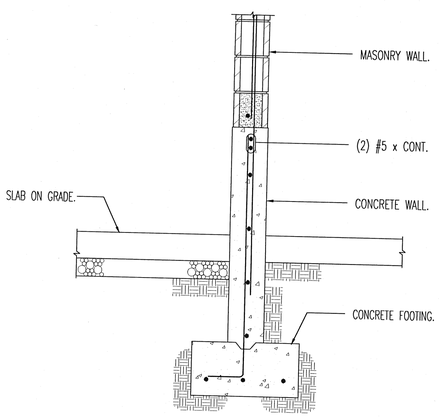

5 FOOTING DETAIL.
3/4" = 1'-0"

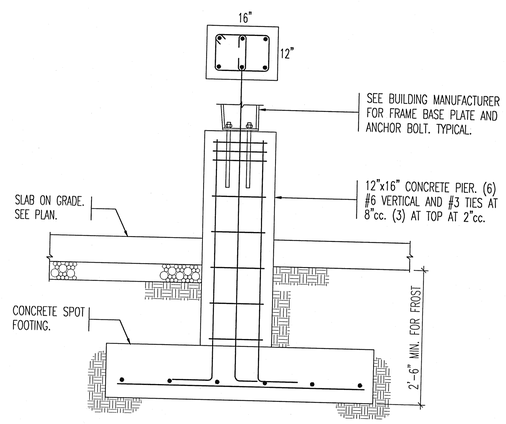

6 CONCRETE PIER DETAIL.
3/4" = 1'-0"

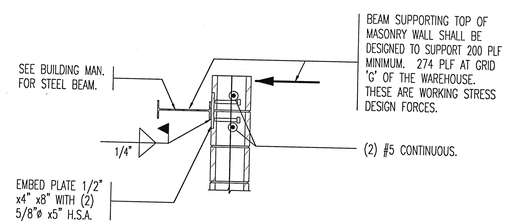

7 MASONRY WALL SUPPORT
3/4" = 1'-0"

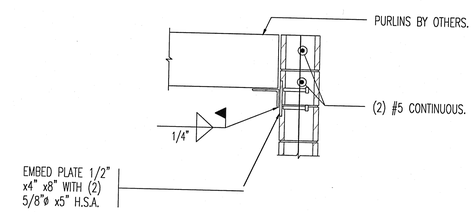

8 LEDGER DETAIL
3/4" = 1'-0"

PASKER GOULD AMES & WEAVER
ARCHITECTS PLANNERS
5263 SOUTH 300 WEST MURRAY, UTAH (801) 266-4669

DRAWN BY	CHECKED BY	JOB NO.	DATE
DKP	CA	2711	JUNE, 1998

DETAILS.
A NEW BUILDING FOR
TAYLOR - HUNT ELECTRIC
1747 S. 900 W. SALT LAKE CITY, UTAH

LICENSED CERTIFIED STRUCTURAL ENGINEER
No. 164133
RONALD H. DUNN
STATE OF UTAH

DUNN ASSOCIATES INC.
380 West 800 South Suite 100
Salt Lake City, Utah 84101
Telephone: (801) 575-8877
Telefax: (801) 575-8875
email: dunn@ix.netcom.com
CONSULTING STRUCTURAL ENGINEERS

S
3.2

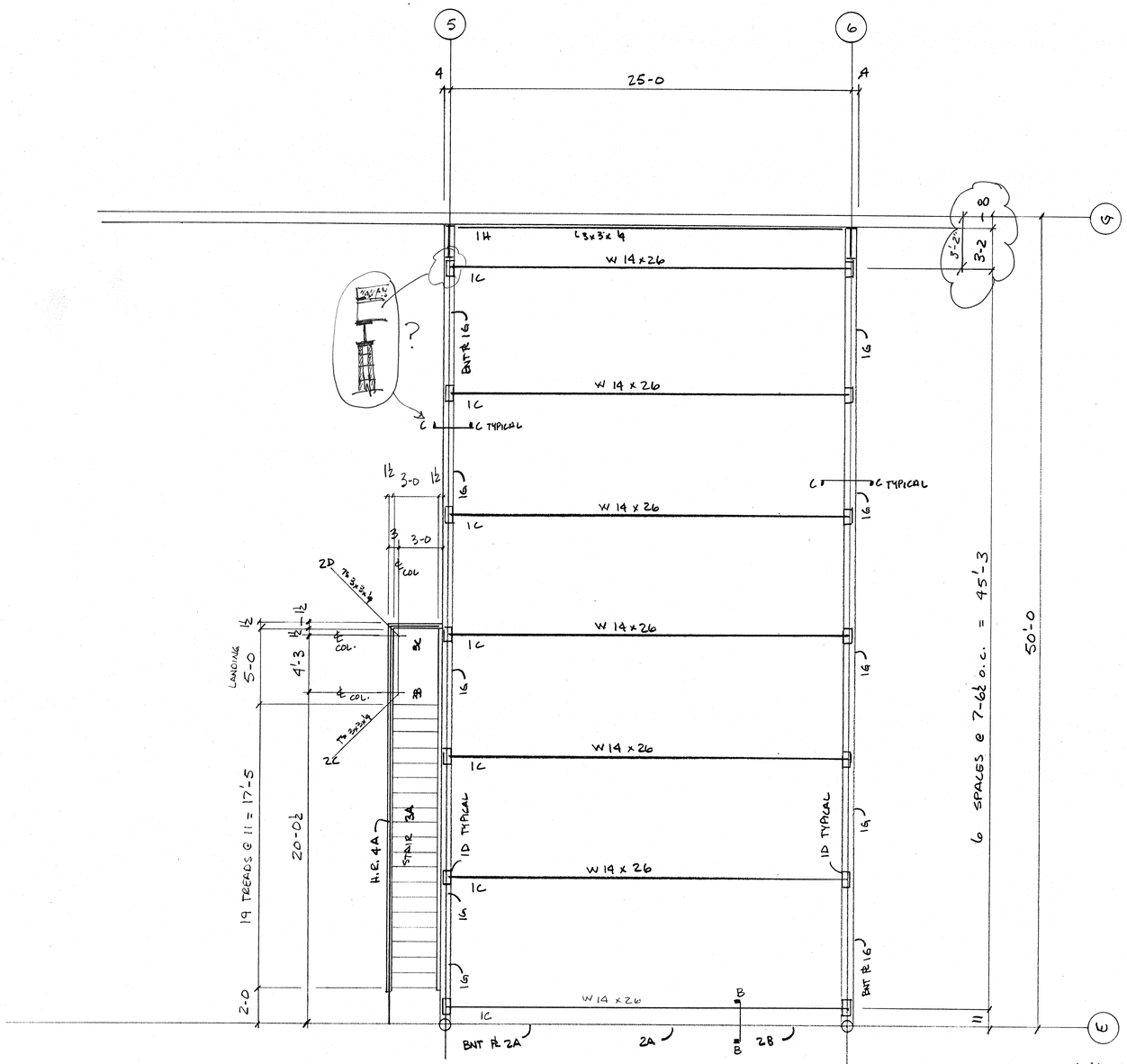

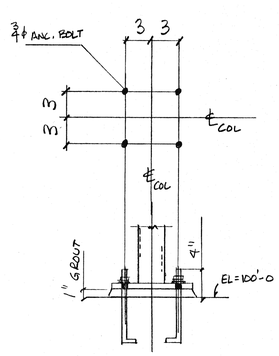

SECTION A

TYPICAL @ COLUMNS

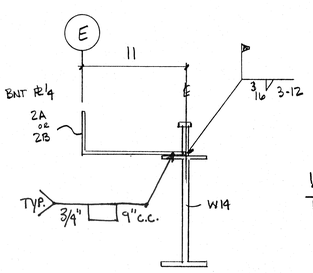

SECTION B

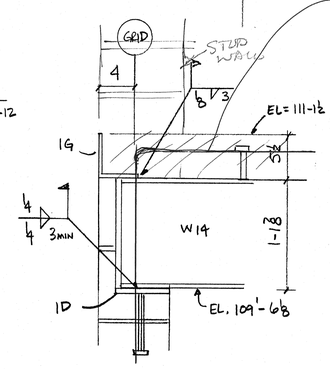

SECTION C

BEND TYP. MAS. WALL VERT REINF. INTO SLAB (@32" O.C.). EXTEND 26" INTO SLAB.

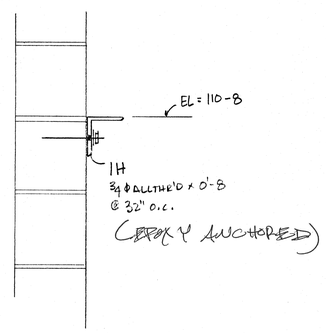

OFFICE SET

RECEIVED
JUL 26 1999
DUHN ASSOCIATES, INC.
CONSULTING STRUCTURAL ENGINEERS

☐ No Corrections Noted ☐ Rejected
☒ Corrections Noted ☐ Revise and Resubmit

DUHN ASSOCIATES, INC.

This review is only for general conformance with the design concept of the project and general compliance with the information given in the Contract Documents. Corrections or comments made on the shop drawings during this review do not relieve contractor from compliance with the requirements of the plans and specifications. Approval of a specific item shall not include approval of an assembly of which the item is a component. Contractor is responsible for: dimensions to be confirmed and correlated at the jobsite; information that pertains solely to the fabrication processes or to the means, methods, techniques, sequences and procedures of construction; coordination of his or her Work with that of all other trades; and for performing all work in a safe and satisfactory manner.

Date 7/27/99 REVIEWED By RM

FOR APPROVAL ONLY

NOT TO BE USED FOR FABRICATION OR FIELD USE

UNLESS NOTED TO THE CONTRARY BY THE APPROVER, REQUESTS FOR VERIFICATION ARE ASSUMED APPROVED AS SHOWN. AMFAB STEEL SPECIALTIES INC. IS NOT RESPONSIBLE FOR ERRORS, DISCREPANCIES AND OMISSIONS IN THE CONTRACT DRAWINGS AND SPECIFICATIONS.

AMFAB

Steel Specialties

787 South 950 West
Woods Cross
Utah 84087
801.298.2900
801.298.3278 Fax

ITEM

ELECTRICAL NOTES

JOB NAME TAYLOR HUNT ELECTRIC

LOCATION 1747 SOUTH 900 WEST SALT LAKE CITY UTAH

CONTRACTOR UTAH COMMERCIAL CONTRACTORS

Scale	NTS
Drawn	DB
Job #	19134
Sheet	E1

PANEL EM3

PANEL - EM3

VOLT: 120 / 208 MIN. AIC 10,000
PHASE: 3 WIRE 4

MAIN LUGS: 100
STYLE: BOLT IN
MOUNTING: SURFACE
FEED: BOTTOM

NOTES: NAMEPLATE, GROUND BAR, ISOLATED GROUND BAR

CIR.	POLE	AMP	K.W.	DESCRIPTION	CIR.	POLE	AMP	K.W.	DESCRIPTION
1	1	20	1.2	VEHICLE REPAIR LIGHTING	2	1	20		SPARE
3	1	20	1.2	PRE-FAB, WIRE PREP EM LIGHTS	4	1	20		SPARE
5	1	20	0.8	WAREHOUSE OFFICE LIGHTS	6	1	20		SPARE
7	1	20	1.6	WAREHOUSE OFFICE UPS	8	1	20		SPARE
9	1	20	0.5	VEHICLE REPAIR EMERGENCY OUTLET	10	1	20		SPARE
11	1	20	1	WIRE SPOOLER	12	1	20		SPARE
13	1	20	1	OVERHEAD DOOR MOTOR (2)	14	1	20		SPARE
15	1	20	1	OVERHEAD DOOR MOTOR (2)	16	1	20		SPARE
17	1	20		SPARE	18	1	20		SPARE
19	1	20		SPARE	20	1	20		SPARE

SUBTOTAL	8.30	0.00
TOTAL CONNECTED LOAD IN K.W.		8.30
25 % LIGHTING LOAD IN K.W.		0.00
TOTAL CALCULATED LOAD IN K.W.		8.30
TOTAL CALCULATED LOAD AMPS		23.07
DIVERSITY MULTIPLIER	1	23.07

PANEL UPS1

PANEL - UPS1

VOLT: 120 / 208 MIN. AIC 10,000
PHASE: 3 WIRE 4

MAIN BREAKER: 100 AMP
STYLE: BOLT IN
MOUNTING: SURFACE
FEED BOTTOM

NOTES: NAMEPLATE, GROUND BAR, ISOLATED GROUND BAR

CIR.	POLE	AMP	K.W.	DESCRIPTION	CIR.	POLE	AMP	K.W.	DESCRIPTION
1	1	20	1.2	COMPUTER OUTLETS LEVEL ONE	2	1	20	0.5	FIRE ALARM
3	1	20	1.2	COMPUTER OUTLETS LEVEL ONE	4	1	20	0.5	SECURITY SYSTEM
5	1	20	1.2	COMPUTER OUTLETS LEVEL ONE	6	1	20	1	PHONE SYSTEM
7	1	20	1.2	COMPUTER OUTLETS LEVEL ONE	8	1	20		SPARE
9	1	20	1.2	COMPUTER OUTLETS LEVEL ONE	10	1	20		SPARE
11	1	20	1.2	COMPUTER OUTLETS LEVEL ONE	12	1	20		SPARE
13	1	20	1.2	COMPUTER OUTLETS LEVEL TWO	14	1	20		SPARE
15	1	20	1.2	COMPUTER OUTLETS LEVEL TWO	16	1	20		SPARE
17	1	20	1.2	COMPUTER OUTLETS LEVEL TWO	18	1	20		SPARE
19	1	20	1.2	COMPUTER OUTLETS LEVEL TWO	20	1	20		SPARE
21	1	20	1.2	COMPUTER OUTLETS LEVEL TWO	22	1	20		SPARE
23	1	20	1.2	COMPUTER OUTLETS LEVEL TWO	24	1	20		SPARE
25	1	20	1	PLOTTER	26	1	20		SPARE
27	1	20	1	PLOTTER	28	1	20		SPARE
29	1	20	1	PLOTTER	30	1	20		SPARE

SUBTOTAL	17.40	2.00
TOTAL CONNECTED LOAD IN K.W.		19.40
25 % LIGHTING LOAD IN K.W.		0.00
TOTAL CALCULATED LOAD IN K.W.		19.40
TOTAL CALCULATED LOAD AMPS		53.91
DIVERSITY MULTIPLIER	0.9	48.52

DEVICE LEGEND

SYMBOL	DESCRIPTION
	POWER DISTRIBUTION PANEL
	DISCONNECT SWITCH
UH	UNIT HEATER
C	CORD REEL
	MOTOR
EF	EXHAUST FAN
	PUSHBUTTON SWITCH
T	THERMOSTAT
TEL	TELEPHONE WALL JACK
$	SINGLE POLE SWITCH
$3	THREE WAY SWITCH
	DUPLEX CONVENIENCE RECEPTACLE
	DUPLEX CONVENIENCE RECEPTACLE WITH GFCI PROTECTION
WP	WEATHER PROOF CONVENIENCE RECEPTACLE WITH "NRTL" LISTED COVER
	SINGLE, SPECIAL PURPOSE RECEPTACLE
	DOUBLE DUPLEX CONVENIENCE RECEPTACLE

FIXTURE LEGEND

SYMBOL	DESCRIPTION
	4' FLOURESCENT STRIP LIGHTING
	6' FLOURESCENT STRIP LIGHTING
	FIXTURE- SURFACE MOUNTED
	OUTDOOR WALLPACK
	FIXTURE- OUTDOOR SURFACE MOUNTED
PC	PHOTO CONTROL SENSOR
	FIXTURE- FLOURESCENT SURFACE MOUNTED
	FIXTURE- WALL MOUNTED
	EXIT LIGHTING FIXTURE

FIXTURE SCHEDULE

TYPE	MANUFAC.	CATALOG #	LAMP		MOUNTING
T1	METALUX	2GP332A125-120-ACRYLIC LENSE	F32 T8	4	GRID
T2	METALUX	2GP332UA125-120-ACRYLIC LENSE	F32U T8	2	GRID
T3	METALUX	2EP3GUAX332S36I-120-EB81 PARABOLIC	F32 T8	3	GRID
T4	METALUX	BIU 232 120 WITHOUT BAFFLE	F32 T8	2	WALL @ +84"
T5	METALUX	WS240A120	F32 T8	2	SURFACE
T6	HALO	H7T-418P W/T-BAR HANGARS, EYEBALL	65R30FL	1	RECESSED
T7	HALO	H7T-310PW/T-BAR HANGARS, DOWN LIGHT	65R30FL	1	RECESSED
T8	FAILSAFE	HUD 100M 120	100 MHC	1	SURFACE
T9	LUMARK	MHWL-250MH-120	250 MH	1	WALL @ +18"
T10	METALUX	SS232-120	F32 T8	2	SEE NOTE 4
T11	METALUX	IA296 HO 120 LE3	F96T12HO	2	SEE NOTE 4
T12	METALUX	IA248 HO 120 LE3	F48T12HO	2	SEE NOTE 4
T13	METALUX	8TSS232-120	F96T12	2	SEE NOTE 4
T14	METALUX	VT2 296HO DR100 120 LE3	F96T12HO	2	SURFACE
T15	KELLY	K-1040-GUARD	150 PAR38	1	WALL
T16	LUMARK	MHSS-SA18-M-400-120	400SMH	1	SEE NOTE 4
T17	LUMARK	MHSS-SA18-M-400-120-EM	400 SMH	1	SEE NOTE 4
T18					
EM	SURE-LITE	AA-1	INCLUDED	2	WALL/COL. @ +12"
EM/NL	IOTA	I-80	N/A		FIXTURE CHANNEL
EX1	SURE-LITE	CCX-40-G-WH 120	INCLUDED	2	WALL/CEILING

NOTES:

1- ALL FLOURESCENT FIXTURES EXCEPT WHERE NOTED LE3 TO HAVE ELECTRONIC BALLAST WITH LESS THAN 20% TOTAL HARMONIC DISTORTION.
2- FIXTURES MARKED "EM/NL" SHALL HAVE AN IOTA I-80 OR EQUAL BATTERY PACK FIELD INSTALLED.
3- FIXTURES MAY BE EQUALS AS MANUFACTURED BY LITHONIA OR HUBBELL.
4- FIXTURE MUST BE CHAIN HUNG FLUSH WITH BOTTOM OF TRUSSES OR GIRDERS.
5- FIXTURE TYPES T-16 & T-17 TO BE PENDANT MOUNTED FROM DECK, UTILIZE APPELTON HOUSING IF PENDANT LENGTH EXCEEDS 24". BOTTOM OF FIXTURE TO BE EVEN WITH BOTTOM OF JOIST. FIXTURES TO HAVE 400 WATT SUPER METAL HALIDE HIGH OUTPUT LAMPS.

EQUIPMENT SCHEDULE

TAG	EQUIPMENT	VOLTAGE/PHASE/AMPS	CONNECTION
1	AIR COMPRESSOR	230/1/15	30/3/F/3R/250 V-HARDWIRE
2	WIRE SPOOLER	120/1/10	DUPLEX OUTLET
3	WIRE STRIPPER	208/3/10	20 AMP OUTLET
4	MIG WELDER	230/3/30	50 AMP OUTLET
5	SUMP PUMP	120/1/5	20 AMP OUTLET
6			
7			
8	LINCOLN WELDER	230/1/40	50 AMP OUTLET
9	VEHICLE LIFT	FEILD VERIFY	30/3/F/1/250 V HARDWIRE
10	OVERHEAD DOOR MOTOR	120/1/10	SINGLE POLE SWITCH-HARDWIRE
11	PADDLE FAN	120/1/2	DUPLEX OUTLET-CORD & PLUG

REFERENCE SHEET-2

PHASE I CONSTRUCTION

REV. #	DATE	REVISION
A	6-10-99	PRIMARY SUBMITTAL

HUNT ELECTRIC, INC.
DESIGN - BUILD SERVICES
2420 SOUTH 2570 WEST
SALT LAKE CITY, UTAH 84119
(801) 978-2600
FAX (801) 978-0304
TOLL FREE 1-800-584-6965

PROJECT NAME/ADRESS
TAYLOR-HUNT ELECTRIC
900 WEST OFFICE
1747 SO. 900 WEST, SALT LAKE CITY

DRAWN BY: RYAN COWLEY	SCALE: NONE	PRINT DATE: 6-10-99	
CHECKED BY:	CONSTRUCTION MANAGER:		
APPROVED BY:	PROJECT MANAGER: GRANT MARCHANT		
DESIGNER/ENGINEER:			

DRAWING TITLE	DRAWING #	REV. #
SCHEDULE 2	E-1.1	A
PROJECT # 8001	FILE 900W/E-1	

PANEL MDP

PANEL - MDP

VOLT: 120 / 208 MIN. AIC 50,000
PHASE: 3 WIRE 4

MAIN LUGS: 1200 AMP
STYLE: FUSIBLE- BUSSMAN LPN STYLE FUSES
MOUNTING: PANELBOARD
FEED: BOTTOM

NOTES: NAMEPLATE, GROUND BAR, SERVICE ENTRANCE LABEL

CIR.	POLE	AMP	K.W.	DESCRIPTION	CIR.	POLE	AMP	K.W.	DESCRIPTION
1	3	400	79	PANEL EM1	4	3	400	133	PANEL P4
2	3	175	22	ELEVATOR 20 HP	5	3	200	38	PANEL P1, P2
3	3	400		SPARE	6	3	400	107	PANEL P3

SUBTOTAL 101.00

TOTAL CONNECTED LOAD IN K.W.		278.00
25 % LIGHTING LOAD IN K.W.		379.00
TOTAL CALCULATED LOAD IN K.W.		0.00
TOTAL CALCULATED LOAD AMPS		379.00
DIVERSITY MULTIPLIER		1053.25
	0.7	737.27

PANEL P1

PANEL - P1

VOLT: 120 / 208 MIN. AIC 10,000
PHASE: 3 WIRE 4

MAIN LUGS: 225
STYLE: BOLT IN
MOUNTING: SURFACE
FEED: BOTTOM

NOTES: NAMEPLATE, GROUND BAR
SUB FEED LUGS

CIR.	POLE	AMP	K.W.	DESCRIPTION	CIR.	POLE	AMP	K.W.	DESCRIPTION
1	1	20	1	OFFICE LIGHTING LEVEL ONE	2	1	20	1	OFFICE CONVENIENCE POWER LEVEL ONE
3	1	20	1	OFFICE LIGHTING LEVEL ONE	4	1	20	1	OFFICE CONVENIENCE POWER LEVEL ONE
5	1	20	1	OFFICE LIGHTING LEVEL ONE	6	1	20	1	OFFICE CONVENIENCE POWER LEVEL ONE
7	1	20		SPARE	8	1	20	1	OFFICE CONVENIENCE POWER LEVEL ONE
9	1	20		SPARE	10	1	20	1	OFFICE CONVENIENCE POWER LEVEL ONE
11	1	20		SPARE	12	1	20	1	OFFICE CONVENIENCE POWER LEVEL ONE
13	1	20		SPARE	14	1	20	1	OFFICE CONVENIENCE POWER LEVEL ONE
15	1	20		SPARE	16	1	20	1	OFFICE CONVENIENCE POWER LEVEL ONE
17	1	20		SPARE	18	1	20	1	OFFICE CONVENIENCE POWER LEVEL ONE
19	1	20		SPARE	20	1	20	1	OFFICE CONVENIENCE POWER LEVEL ONE
21	1	20		SPARE	22	1	20	1	OFFICE CONVENIENCE POWER LEVEL ONE
23	1	20		SPARE	24	1	20	1	OFFICE CONVENIENCE POWER LEVEL ONE
25	1	20		SPARE	26	1	20	1	OFFICE CONVENIENCE POWER LEVEL ONE
27	1	20		SPARE	28	1	20	1	OFFICE CONVENIENCE POWER LEVEL ONE
29	1	20		SPARE	30	1	20	1	OFFICE CONVENIENCE POWER LEVEL ONE
31	1	20		SPARE	32	1	20	1	OFFICE CONVENIENCE POWER LEVEL ONE
33	1	20		SPARE	34	1	20		SPARE
35	1	20		SPARE	36	1	20		SPARE
37	1	20		SPARE	38	1	20		SPARE
39	1	20		SPARE	40	1	20		SPARE
41	1	20		SPARE	42	1	20		SPARE

SUBTOTAL 3.00

TOTAL CONNECTED LOAD IN K.W.		16.00
25 % LIGHTING LOAD IN K.W.		19.00
TOTAL CALCULATED LOAD IN K.W.		0.00
TOTAL CALCULATED LOAD AMPS		19.00
DIVERSITY MULTIPLIER		52.80
	1	52.80

PANEL P2

PANEL - P2

VOLT: 120 / 208 MIN. AIC 10,000
PHASE: 3 WIRE 4

MAIN LUGS: 225
STYLE: BOLT IN
MOUNTING: SURFACE
FEED: BOTTOM

NOTES: NAMEPLATE, GROUND BAR

CIR.	POLE	AMP	K.W.	DESCRIPTION	CIR.	POLE	AMP	K.W.	DESCRIPTION
1	1	20	1	OFFICE LIGHTING LEVEL TWO	2	1	20	1	OFFICE CONVENIENCE POWER LEVEL TWO
3	1	20	1	OFFICE LIGHTING LEVEL TWO	4	1	20	1	OFFICE CONVENIENCE POWER LEVEL TWO
5	1	20	1	OFFICE LIGHTING LEVEL TWO	6	1	20	1	OFFICE CONVENIENCE POWER LEVEL TWO
7	1	20		SPARE	8	1	20	1	OFFICE CONVENIENCE POWER LEVEL TWO
9	1	20		SPARE	10	1	20	1	OFFICE CONVENIENCE POWER LEVEL TWO
11	1	20		SPARE	12	1	20	1	OFFICE CONVENIENCE POWER LEVEL TWO
13	1	20		SPARE	14	1	20	1	OFFICE CONVENIENCE POWER LEVEL TWO
15	1	20		SPARE	16	1	20	1	OFFICE CONVENIENCE POWER LEVEL TWO
17	1	20		SPARE	18	1	20	1	OFFICE CONVENIENCE POWER LEVEL TWO
19	1	20		SPARE	20	1	20	1	OFFICE CONVENIENCE POWER LEVEL TWO
21	1	20		SPARE	22	1	20	1	OFFICE CONVENIENCE POWER LEVEL TWO
23	1	20		SPARE	24	1	20	1	OFFICE CONVENIENCE POWER LEVEL TWO
25	1	20		SPARE	26	1	20	1	OFFICE CONVENIENCE POWER LEVEL TWO
27	1	20		SPARE	28	1	20	1	OFFICE CONVENIENCE POWER LEVEL TWO
29	1	20		SPARE	30	1	20	1	OFFICE CONVENIENCE POWER LEVEL TWO
31	1	20		SPARE	32	1	20	1	OFFICE CONVENIENCE POWER LEVEL TWO
33	1	20		SPARE	34	1	20		SPARE
35	1	20		SPARE	36	1	20		SPARE
37	1	20		SPARE	38	1	20		SPARE
39	1	20		SPARE	40	1	20		SPARE
41	1	20		SPARE	42	1	20		SPARE

SUBTOTAL 3.00

TOTAL CONNECTED LOAD IN K.W.		16.00
25 % LIGHTING LOAD IN K.W.		19.00
TOTAL CALCULATED LOAD IN K.W.		0.00
TOTAL CALCULATED LOAD AMPS		19.00
DIVERSITY MULTIPLIER		52.80
	1	52.80

PANEL P3

PANEL - P3

VOLT: 120 / 208 MIN. AIC 10,000
PHASE: 3 WIRE 4

MAIN LUGS: 400
STYLE: BOLT IN
MOUNTING: SURFACE
FEED: BOTTOM

NOTES: NAMEPLATE, GROUND BAR

CIR.	POLE	AMP	K.W.	DESCRIPTION	CIR.	POLE	AMP	K.W.	DESCRIPTION
1	3	40	10	RTU 5 TON	2	3	40	10	RTU 5 TON
3				RTU 5 TON	4				RTU 5 TON
5				RTU 5 TON	6				RTU 5 TON
7	3	40	10	RTU 5 TON	8	3	40	10	RTU 5 TON
9				RTU 5 TON	10				RTU 5 TON
11				RTU 5 TON	12				RTU 5 TON
13	3	30	8	RTU 4 TON	14	3	30	8	RTU 4 TON
15				RTU 4 TON	16				RTU 4 TON
17				RTU 4 TON	18				RTU 4 TON
19	3	30	8	RTU 4 TON	20	3	30	8	RTU 4 TON
21				RTU 4 TON	22				RTU 4 TON
23				RTU 4 TON	24				RTU 4 TON
25	3	30	8	RTU 4 TON	26	3	30	8	RTU 4 TON
27				RTU 4 TON	28				RTU 4 TON
29				RTU 4 TON	30				RTU 4 TON
31	3	30	8	RTU 4 TON	32	3	30	8	RTU 4 TON
33				RTU 4 TON	34				RTU 4 TON
35				RTU 4 TON	36				RTU 4 TON
37	1	20	1	EXHAUST FAN	38	1	20		SPARE
39	1	20	1	EXHAUST FAN	40	1	20		SPARE
41	1	20	1	EXHAUST FAN	42	1	20		SPARE

SUBTOTAL 55.00

TOTAL CONNECTED LOAD IN K.W.		52.00
25 % LIGHTING LOAD IN K.W.		107.00
TOTAL CALCULATED LOAD IN K.W.		0.00
TOTAL CALCULATED LOAD AMPS		107.00
DIVERSITY MULTIPLIER		297.35
	1	297.35

PANEL P4

PANEL - P4

VOLT: 120 / 208 MIN. AIC 10,000
PHASE: 3 WIRE 4

MAIN LUGS: 400
STYLE: BOLT IN
MOUNTING: SURFACE
FEED: BOTTOM

NOTES: NAMEPLATE, GROUND BAR

CIR.	POLE	AMP	K.W.	DESCRIPTION	CIR.	POLE	AMP	K.W.	DESCRIPTION
1	1	20	1.2	EXISTING LIGHTING	2	2	30	3.5	AIR COMPRESSOR
3	1	20	1.2	EXISTING LIGHTING	4				AIR COMPRESSOR
5	1	20	1.2	EXISTING LIGHTING	6	2	50	8	WELDER
7	1	20	1.2	EXISTING LIGHTING	8				WELDER
9	1	20	1.2	EXISTING LIGHTING	10	3	60	19	MIG WELDER
11	1	20	1.2	EXISTING LIGHTING	12				EXISTING OUTLETS
13	1	20	1.2	EXISTING LIGHTING	14				EXISTING OUTLETS
15	1	20	1	PRE-FAB CONVENIENCE OUTLETS	16	1	20	1	EXISTING OUTLETS
17	1	20	1	PRE-FAB CONVENIENCE OUTLETS	18	1	20	1	EXISTING OUTLETS
19	1	20	1	PRE-FAB CONVENIENCE OUTLETS	20	1	20	1	EXISTING OUTLETS
21	1	20	1	PRE-FAB CONVENIENCE OUTLETS	22	1	20	1	EXISTING OUTLETS
23	1	20	1	PRE-FAB CONVENIENCE OUTLETS	24	1	20	1	EXISTING OUTLETS
25	1	20	1	PRE-FAB CONVENIENCE OUTLETS	26	1	20	1	EXISTING OUTLETS
27	1	20		SPARE	28	1	20	1	EXISTING OUTLETS
29	1	20		SPARE	30	1	20	1	EXISTING OUTLETS
31	1	20		SPARE	32	1	20	1	EXISTING OUTLETS
33	1	20		SPARE	34	1	20	1	EXISTING UNIT HEATER
35	1	20		SPARE	36	1	20	1	EXISTING UNIT HEATER
37	1	20		SPARE	38	3	225	83	PANEL P5
39	1	20		SPARE	40				PANEL P5
41	1	20		SPARE	42				PANEL P5

SUBTOTAL 14.40

TOTAL CONNECTED LOAD IN K.W.		124.50
25 % LIGHTING LOAD IN K.W.		138.90
TOTAL CALCULATED LOAD IN K.W.		0.00
TOTAL CALCULATED LOAD AMPS		138.90
DIVERSITY MULTIPLIER		386.00
	0.8	308.80

PANEL P5

PANEL - P5

VOLT: 120 / 208 MIN. AIC 10,000
PHASE: 3 WIRE 4

MAIN LUGS: 225
STYLE: BOLT IN
MOUNTING: SURFACE
FEED: BOTTOM

NOTES: NAMEPLATE, GROUND BAR
SUB FEED LUGS

CIR.	POLE	AMP	K.W.	DESCRIPTION	CIR.	POLE	AMP	K.W.	DESCRIPTION
1	1	20	1.5	VEHICLE REPAIR LIGHTING	2	2	30	3.5	AIR COMPRESSOR
3	1	20	1.3	VEHICLE REPAIR LIGHTING	4				AIR COMPRESSOR
5	1	20	1.6	EXTERIOR WALL PACKS	6	2	50	3	WELDER
7	1	20	0.9	EXTERIOR WALL PACKS	8				WELDER
9	1	20	1.35	SHIPPING/RECEIVING HIGH BAY LIGHTS	10	2	50	3	WELDER
11	1	20	1.35	SHIPPING/RECEIVING HIGH BAY LIGHTS	12				WELDER
13	1	20	1.8	WIRE PREP HIGHBAY LIGHTS	14	2	50	3	WELDER
15	1	20	1.35	PRE-FAB HIGHBAY LIGHTS	16				WELDER
17	1	20	1.35	PRE-FAB HIGHBAY LIGHTS	18	3	30	8	VEHICLE LIFT
19	1	20	1.35	PRE-FAB HIGHBAY LIGHTS	20				VEHICLE LIFT
21	1	20	1.35	BREAK, SECURED STORAGE HIGH BAY LIGHTS	22				VEHICLE LIFT
23	1	20	1.3	MEZZANINE & TOOL CRIB LIGHTS	24	1	20	1	VEHICLE REPAIR OUTLETS
25	1	20	1.9	MEZZANINE & SUPPLIES LIGHTS	26	1	20	1	VEHICLE REPAIR OUTLETS
27	1	20	1.3	WAREHOUSE OFFICE LIGHTS	28	1	20	1	VEHICLE REPAIR OUTLETS
29	1	20		SPARE	30	1	20	1	VEHICLE REPAIR OUTLETS
31	1	20	1	WAREHOUSE OFFICE CONVENIENCE OUTLETS	32	1	20	1	VEHICLE REPAIR OUTLETS
33	1	20	1	WAREHOUSE OFFICE CONVENIENCE OUTLETS	34	1	20	1	VEHICLE REPAIR OUTLETS
35	1	20	1	WAREHOUSE OFFICE CONVENIENCE OUTLETS	36	1	20		SPARE
37	1	20	1	WAREHOUSE OFFICE CONVENIENCE OUTLETS	38	1	20		SPARE
39	1	20	1	WAREHOUSE OFFICE CONVENIENCE OUTLETS	40	1	20		SPARE
41	1	20	1	WAREHOUSE OFFICE CONVENIENCE OUTLETS	42	1	20		SPARE

SUBTOTAL 25.70

TOTAL CONNECTED LOAD IN K.W.		26.50
25 % LIGHTING LOAD IN K.W.		52.20
TOTAL CALCULATED LOAD IN K.W.		5.00
TOTAL CALCULATED LOAD AMPS		57.20
DIVERSITY MULTIPLIER		158.96
	0.8	127.17

PANEL P6

PANEL - P6

VOLT: 120 / 208 MIN. AIC 10,000
PHASE: 3 WIRE 4

MAIN LUGS: 225
STYLE: BOLT IN
MOUNTING: SURFACE
FEED: BOTTOM

NOTES: NAMEPLATE, GROUND BAR

CIR.	POLE	AMP	K.W.	DESCRIPTION	CIR.	POLE	AMP	K.W.	DESCRIPTION
1	1	20	1	WAREHOUSE CONVENIENCE OUTLETS	2	1	20		SPARE
3	1	20	1	WAREHOUSE CONVENIENCE OUTLETS	4	1	20		SPARE
5	1	20	1	WAREHOUSE CONVENIENCE OUTLETS	6	1	20	1	PADDLE FANS
7	1	20	1	WAREHOUSE CONVENIENCE OUTLETS	8	1	20	1	PADDLE FANS
9	1	20	1	WIRE SPOOLER	10	1	20	1	UNIT HEATERS
11	3	20	3	WIRE STRIPPER	12	1	20	1	UNIT HEATERS
13				WIRE STRIPPER	14	3	40	10	RTU 5 TON
15				WIRE STRIPPER	16				RTU 5 TON
17	1	20		SPARE	18				RTU 5 TON
19	1	20		SPARE	20	1	20		SPARE
21	1	20		SPARE	22	1	20		SPARE
23	1	20		SPARE	24	1	20		SPARE
25	1	20		SPARE	26	1	20		SPARE
27	1	20		SPARE	28	1	20		SPARE
29	1	20		SPARE	30	1	20		SPARE
31	1	20		SPARE	32	1	20	1	HEAVY EQUIPMENT CONVENIENCE OUTLETS/HEATERS
33	1	20		SPARE	34	1	20	1	HEAVY EQUIPMENT CONVENIENCE OUTLETS/HEATERS
35	1	20		SPARE	36	1	20	1	HEAVY EQUIPMENT CONVENIENCE OUTLETS/HEATERS
37	1	20		SPARE	38	1	20	1	CONDUIT YARD CONVENIENCE OULETS
39	1	20		SPARE	40	1	20	1	CONDUIT YARD CONVENIENCE OULETS
41	1	20		SPARE	42	1	20	1	CONDUIT YARD CONVENIENCE OULETS

SUBTOTAL 8.00

TOTAL CONNECTED LOAD IN K.W.		20.00
25 % LIGHTING LOAD IN K.W.		28.00
TOTAL CALCULATED LOAD IN K.W.		0.00
TOTAL CALCULATED LOAD AMPS		28.00
DIVERSITY MULTIPLIER		77.81
	0.7	54.47

PANEL EM1

PANEL - EM2

VOLT: 120 / 208 MIN. AIC 10,000
PHASE: 3 WIRE 4

MAIN LUGS: 100
STYLE: BOLT IN
MOUNTING: SURFACE
FEED: BOTTOM

NOTES: NAMEPLATE, GROUND BAR, ISOLATED GROUND BAR
SUB FEED LUGS

CIR.	POLE	AMP	K.W.	DESCRIPTION	CIR.	POLE	AMP	K.W.	DESCRIPTION
1	1	20	1	PREFAB CONVENIENCE OUTLET	2	1	20		SPARE
3	1	20	1	PREFAB CONVENIENCE OUTLET	4	1	20		SPARE
5	1	20		SPARE	6	1	20		SPARE
7	1	20		SPARE	8	1	20		SPARE
9	1	20		SPARE	10	1	20		SPARE
11	1	20		SPARE	12	1	20		SPARE
13	1	20		SPARE	14	1	20		SPARE
15	1	20		SPARE	16	1	20		SPARE
17	1	20		SPARE	18	1	20		SPARE
19	1	20		SPARE	20	1	20		SPARE

SUBTOTAL 2.00

TOTAL CONNECTED LOAD IN K.W.		0.00
25 % LIGHTING LOAD IN K.W.		2.00
TOTAL CALCULATED LOAD IN K.W.		0.00
TOTAL CALCULATED LOAD AMPS		2.00
DIVERSITY MULTIPLIER		5.56
	1	5.56

PANEL EM2

PANEL - EM2

VOLT: 120 / 208 MIN. AIC 10,000
PHASE: 3 WIRE 4

MAIN LUGS: 100
STYLE: BOLT IN
MOUNTING: SURFACE
FEED: BOTTOM

NOTES: NAMEPLATE, GROUND BAR, ISOLATED GROUND BAR
SUB FEED LUGS

CIR.	POLE	AMP	K.W.	DESCRIPTION	CIR.	POLE	AMP	K.W.	DESCRIPTION
1	1	20	1	PREFAB CONVENIENCE OUTLET	2	1	20		SPARE
3	1	20	1	PREFAB CONVENIENCE OUTLET	4	1	20		SPARE
5	1	20		SPARE	6	1	20		SPARE
7	1	20		SPARE	8	1	20		SPARE
9	1	20		SPARE	10	1	20		SPARE
11	1	20		SPARE	12	1	20		SPARE
13	1	20		SPARE	14	1	20		SPARE
15	1	20		SPARE	16	1	20		SPARE
17	1	20		SPARE	18	1	20		SPARE
19	1	20		SPARE	20	1	20		SPARE

SUBTOTAL 2.00

TOTAL CONNECTED LOAD IN K.W.		0.00
25 % LIGHTING LOAD IN K.W.		2.00
TOTAL CALCULATED LOAD IN K.W.		0.00
TOTAL CALCULATED LOAD AMPS		2.00
DIVERSITY MULTIPLIER		5.56
	1	5.56

REFERENCE SHEET-1

PHASE I CONSTRUCTION

REV. #	DATE	REVISION
A	6-10-99	PRIMARY SUBMITTAL

HUNT ELECTRIC, INC.
DESIGN - BUILD SERVICES
2420 SOUTH 2570 WEST
SALT LAKE CITY, UTAH 84119
(801) 978-2600
FAX (801) 978-0304
TOLL FREE 1-800-584-6965

PROJECT NAME/ADRESS
TAYLOR-HUNT ELECTRIC
900 WEST OFFICE
1747 SO. 900 WEST, SALT LAKE CITY

DRAWN BY: RYAN COWLEY	SCALE: NONE	PRINT DATE: 6-10-99	
CHECKED BY:	CONSTRUCTION MANAGER:		
APPROVED BY:	PROJECT MANAGER: GRANT MARCHANT		
DESIGNER/ENGINEER:			

DRAWING TITLE	DRAWING #	REV. #
SCHEDULE 1	E-1	A
PROJECT # 8001	FILE 900W/E-1	

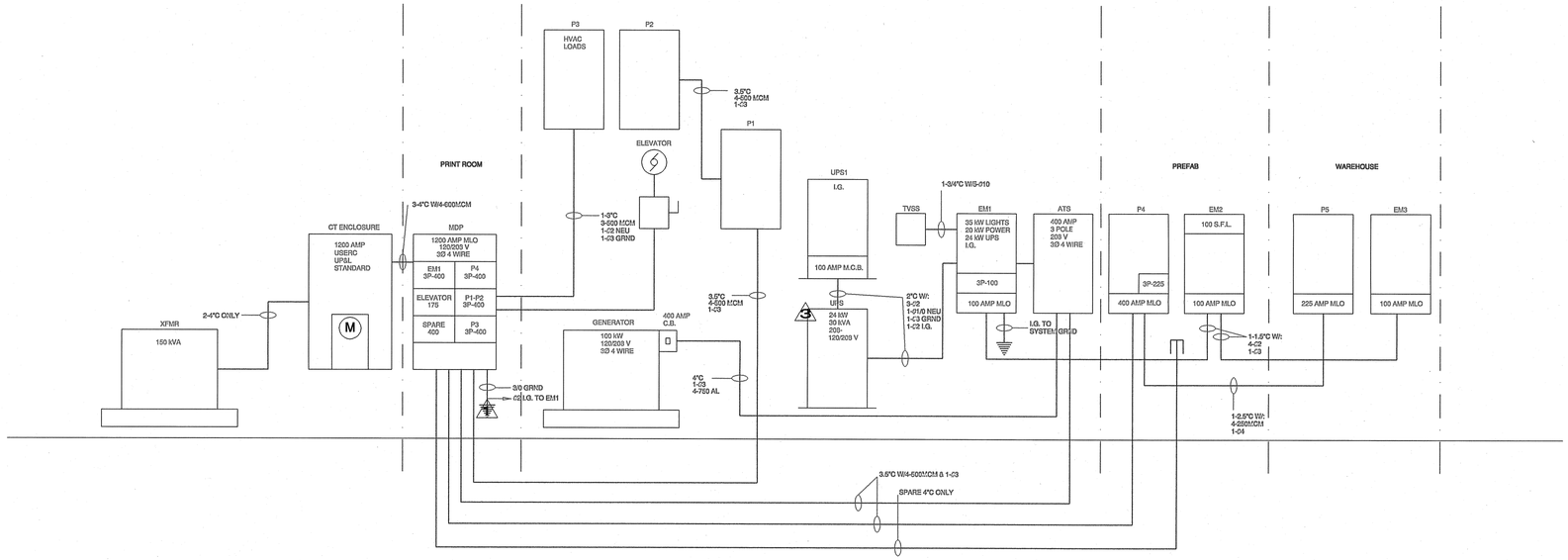

PROPOSED ELECTRICAL

RISER DIAGRAM

NO SCALE

WORK NOTES:

1. 2-3/4" GROUND RODS, WATER MAIN, BLDG. STEEL, UFER GRND.
2. 9,000 BTU HEAT REJECTION
3. SERVICE

OFFICE 15,000 SQ FT X 12 WATTS PER SQ FT = 180,000
WAREHOUSE 30,000 SQ FT X 3 WATTS PER SQ FT = 90,000
TOTAL 270,000 OR 750 AMPS

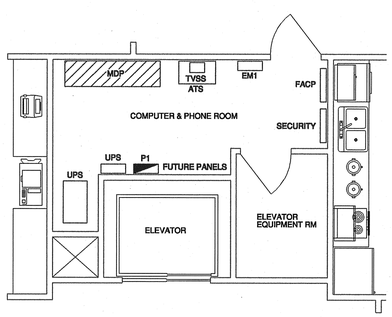

EQUIPMENT ROOM

LAYOUT DETAIL

SCALE: 1/4"=1'-0"

REV. #	DATE	REVISION
A	6-10-99	PRIMARY SUBMITTAL

HUNT ELECTRIC, INC.
DESIGN - BUILD SERVICES

2420 SOUTH 2570 WEST
SALT LAKE CITY, UTAH 84119
(801) 978-2600
FAX (801) 978-0304
TOLL FREE 1-800-584-6965

DRAWN BY: RYAN COWLEY
SCALE: SEE ABOVE
PRINT DATE: 6-10-99
CHECKED BY:
CONSTRUCTION MANAGER:
APPROVED BY:
PROJECT MANAGER: GRANT MARCHANT
DESIGNER/ENGINEER:

PROJECT NAME/ADRESS
TAYLOR-HUNT ELECTRIC
900 WEST OFFICE
1747 SO. 900 WEST, SALT LAKE CITY

DRAWING TITLE: DETAIL
DRAWING #: E-2
REV. #: A
PROJECT #: 8001
FILE: 900W/E-2

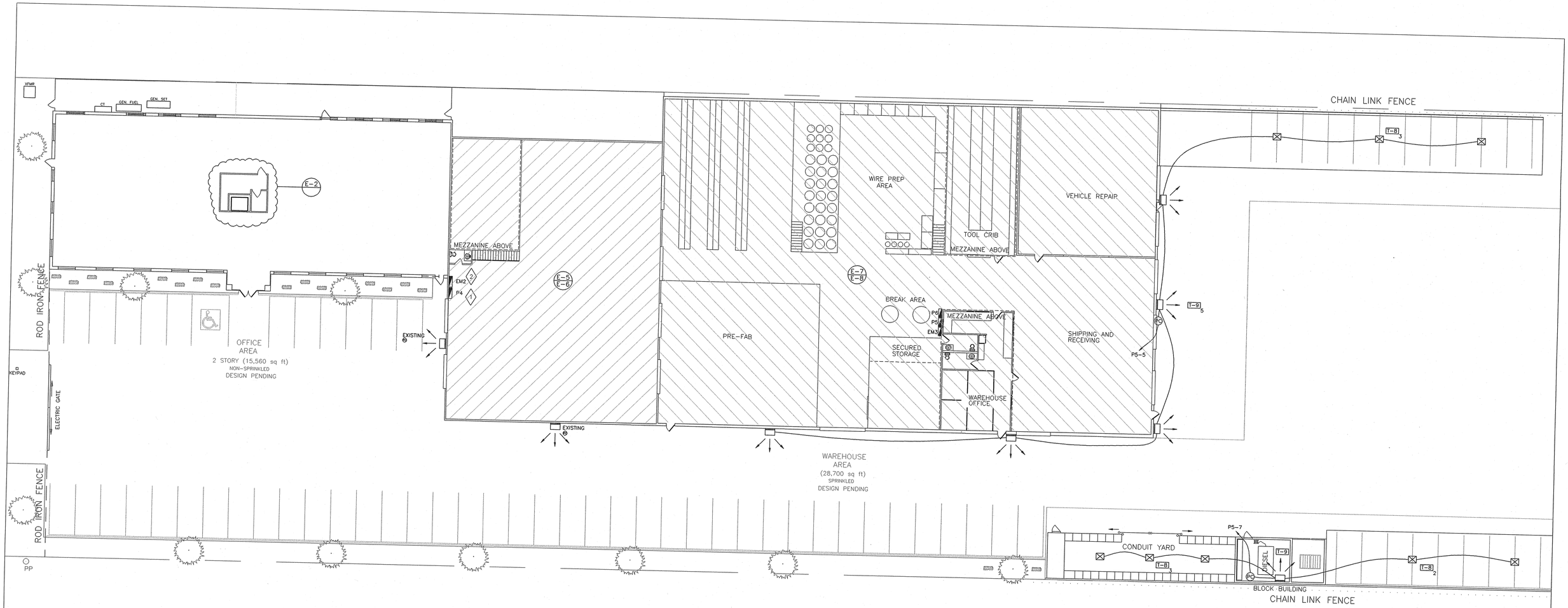

WORK NOTES:

1. RE-FEED EXISTING CIRCUITS FROM NEW PANEL P4
2. RE-FEED EXISTING FLOURESCENT LIGHTS TO PANEL EM2
3. CONNECT TO ADJACENT DUPLEX OUTLET
4. ALL SWITCHES FED BY GENERATOR POWER SHALL BE RED
5. (E-#/E-#) SEE CORRESPONDING SHEET FOR DETAIL
6. SEE SHEET E-1 FOR SCHEDULES

SITE LIGHTING

PHASE I CONSTRUCTION

SCALE:1"=16'-0"

REV. #	DATE	REVISION
A	6-10-99	PRIMARY SUBMITTAL

HUNT ELECTRIC, INC.
DESIGN - BUILD SERVICES
2420 SOUTH 2570 WEST
SALT LAKE CITY, UTAH 84119
(801) 978-2600
FAX (801) 978-0304
TOLL FREE 1-800-584-6965

DRAWN BY: RYAN COWLEY	SCALE: 1"=16'	PRINT DATE: 6-10-99	
CHECKED BY:	CONSTRUCTION MANAGER:		
APPROVED BY:	PROJECT MANAGER: GRANT MARCHANT		
DESIGNER/ENGINEER:			

PROJECT NAME/ADRESS

TAYLOR-HUNT ELECTRIC
900 WEST OFFICE

1747 SO. 900 WEST, SALT LAKE CITY

DRAWING TITLE	DRAWING #	REV. #
SITE LIGHT	E-3	A
PROJECT # 8001	FILE 900W/E-3 4	

REGISTERED PROFESSIONAL ENGINEER
AKBAR KHINKHAH
#03028
STATE OF UTAH
6/11/99

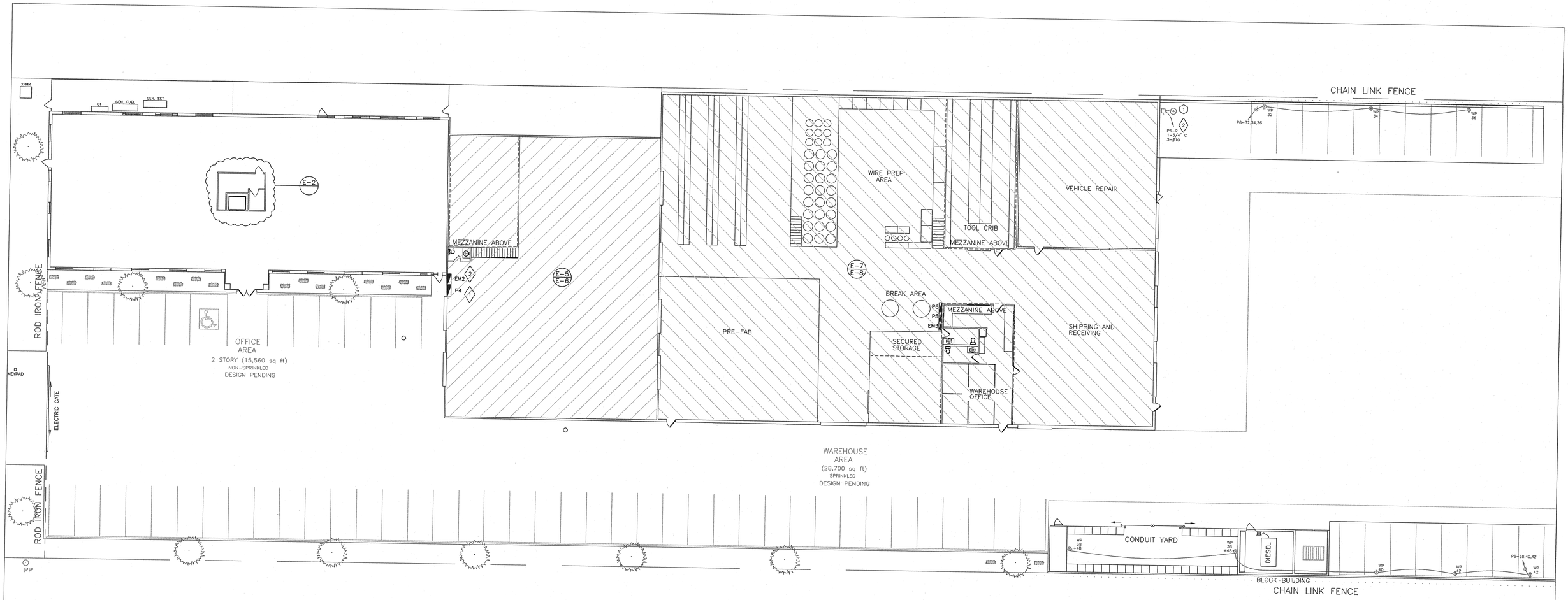

WORK NOTES:

1. CORD REEL, FIELD VERIFY LOCATION
2. INSTALL BOOSTING TRANSFORMER TO ACHIEVE 230 V
3. ALL OUTLETS IN PREFAB, WAREHOUSE, VEHICLE REPAIR, COVERED PARKING, ETC. SHALL BE INSTALLED AT +48"
4. ALL OUTLETS CONNECTED TO GENERATOR POWER SHALL BE RED
5. SEE SHEET E-8 FOR DEVICES ATTATCHED TO BLDG.
6. (E-#/E-#) SEE CORRESPONDING SHEET FOR DETAIL
7. SEE SHEET E-1 FOR SCHEDULES

REGISTERED PROFESSIONAL ENGINEER
AKBAR MATINKHAH
#08023
STATE OF UTAH
6/11/99

SITE POWER

PHASE I CONSTRUCTION

SCALE:1"=16'-0"

REV. #	DATE	REVISION
A	6-10-99	PRIMARY SUBMITTAL

HUNT ELECTRIC, INC.
DESIGN - BUILD SERVICES
2420 SOUTH 2570 WEST
SALT LAKE CITY, UTAH 84119
(801) 978-2600
FAX (801) 978-0304
TOLL FREE 1-800-584-6965

PROJECT NAME/ADRESS
TAYLOR-HUNT ELECTRIC
900 WEST OFFICE
1747 SO. 900 WEST, SALT LAKE CITY

DRAWN BY: RYAN COWLEY	SCALE: 1"=16'	PRINT DATE: 6-10-99	
CHECKED BY:	CONSTRUCTION MANAGER:		
APPROVED BY:	PROJECT MANAGER: GRANT MARCHANT		
DESIGNER/ENGINEER:			

DRAWING TITLE	DRAWING #	REV. #
SITE POWER	E-4	A
PROJECT # 8001	FILE 900W/E-3_4	

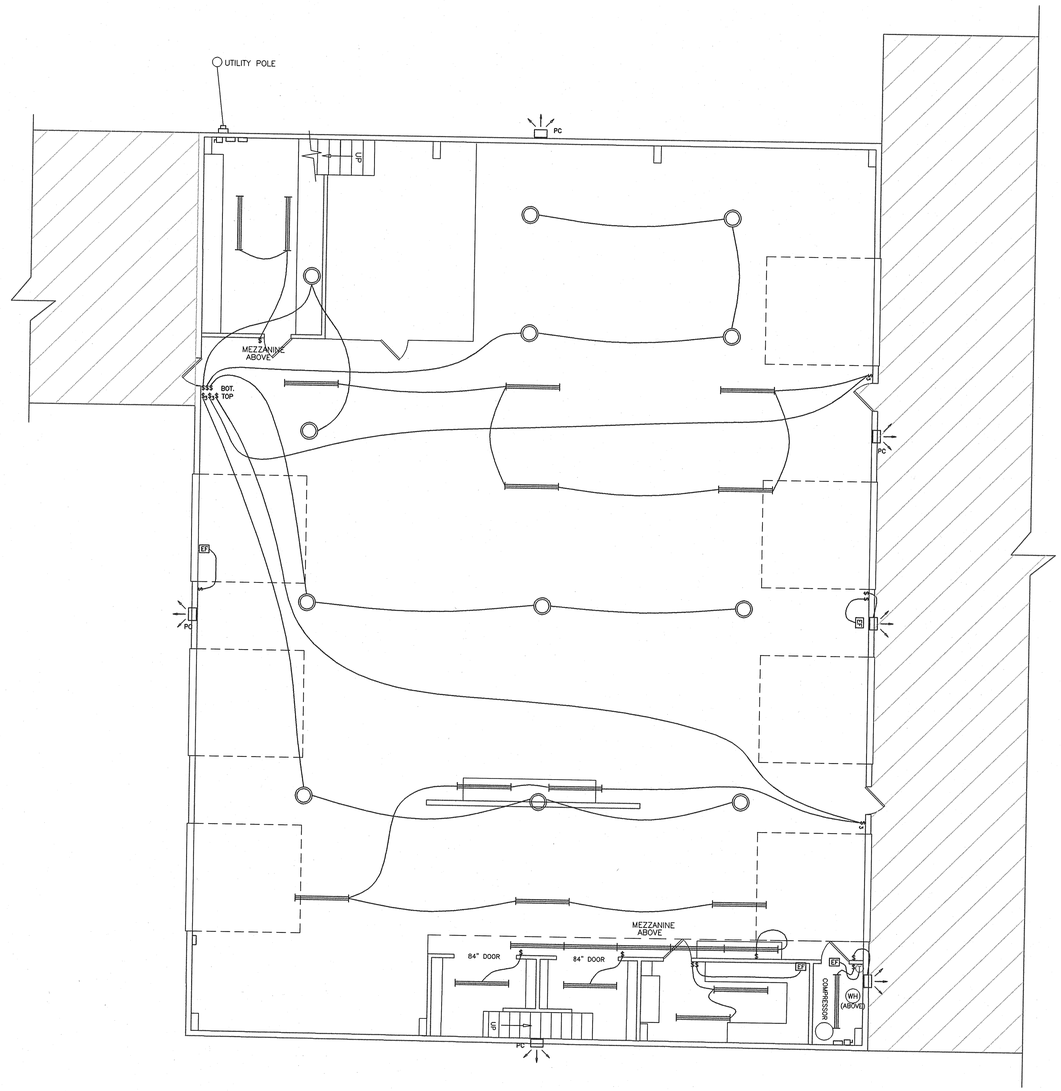

LIGHTING PLAN (EXISTING)

PHASE I CONSTRUCTION

SCALE: 1/8"=1'-0"

REV. #	DATE	REVISION
A	6-10-99	PRIMARY SUBMITTAL

HUNT ELECTRIC, INC.
DESIGN - BUILD SERVICES
2420 SOUTH 2570 WEST
SALT LAKE CITY, UTAH 84119
(801) 978-2600
FAX (801) 978-0304
TOLL FREE 1-800-584-6965

PROJECT NAME/ADRESS
TAYLOR-HUNT ELECTRIC
900 WEST OFFICE
1747 SO. 900 WEST, SALT LAKE CITY

DRAWN BY: RYAN COWLEY	SCALE: 1/8"=1'-0"	PRINT DATE: 6-10-99	DRAWING TITLE: LIGHTING
CHECKED BY:	CONSTRUCTION MANAGER:		DRAWING #: E-5
APPROVED BY:	PROJECT MANAGER: GRANT MARCHANT		REV. #: A
DESIGNER/ENGINEER:			PROJECT #: 8001
			FILE: 900W/E-5_6

REGISTERED PROFESSIONAL ENGINEER
AKBAR MATINKHAH
#03023
STATE OF UTAH
6/11/99

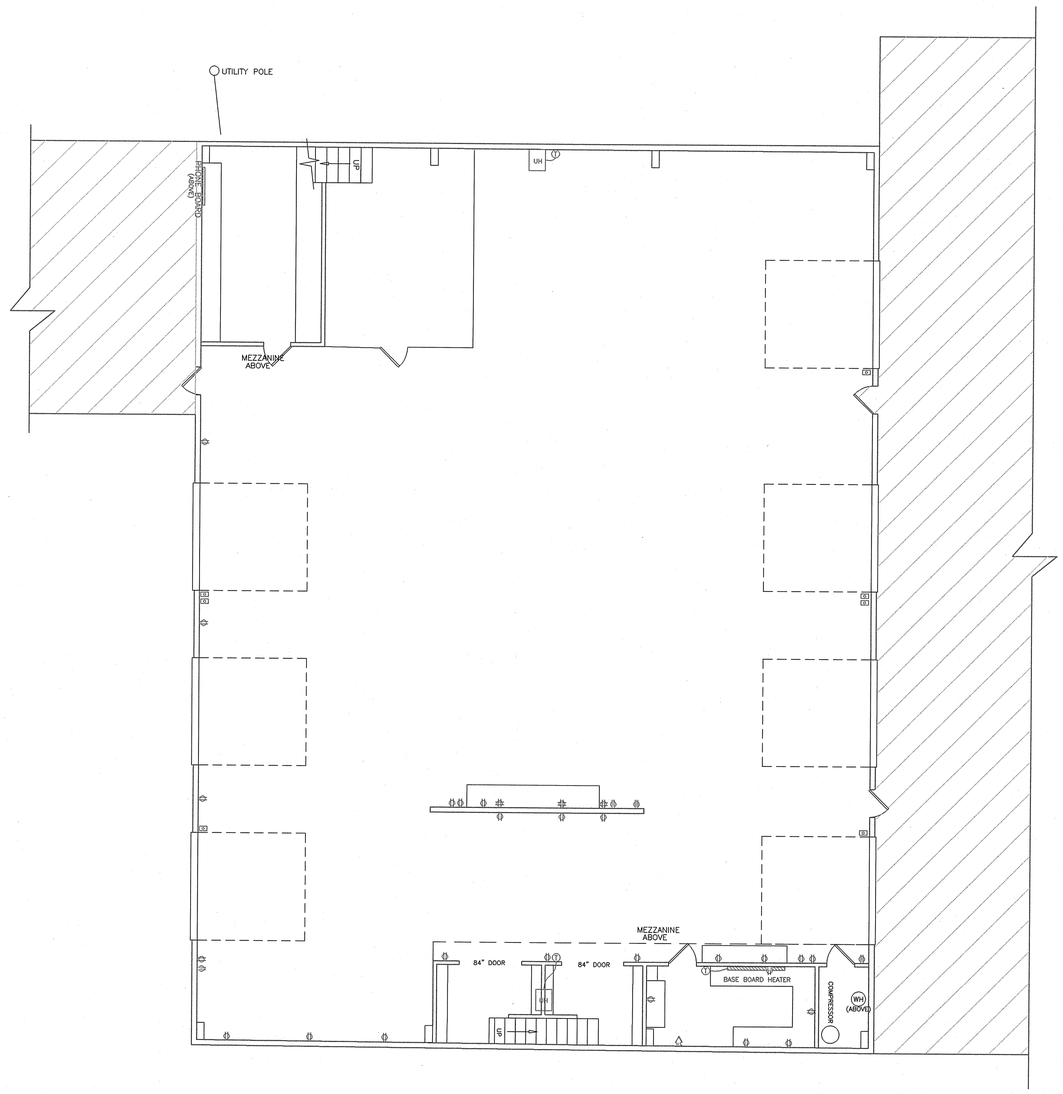

POWER PLAN (EXISTING)

PHASE I CONSTRUCTION

SCALE: 1/8"=1'0"

REV. #	DATE	REVISION
A	6-10-99	PRIMARY SUBMITTAL

HUNT ELECTRIC, INC.
DESIGN - BUILD SERVICES
2420 SOUTH 2570 WEST
SALT LAKE CITY, UTAH 84119
(801) 978-2600
FAX (801) 978-0304
TOLL FREE 1-800-584-6965

DRAWN BY: RYAN COWLEY	SCALE: 1/8"=1'-0"	PRINT DATE: 6-10-99	
CHECKED BY:	CONSTRUCTION MANAGER:		
APPROVED BY:	PROJECT MANAGER: GRANT MARCHANT		
DESIGNER/ENGINEER:			

PROJECT NAME/ADRESS
TAYLOR-HUNT ELECTRIC
900 WEST OFFICE
1747 SO. 900 WEST, SALT LAKE CITY

DRAWING TITLE	DRAWING #	REV. #
POWER	E-6	A
PROJECT # 8001	FILE 900W/E-5_6	

REGISTERED PROFESSIONAL ENGINEER
AKBAR MATINKHAH
#08023
STATE OF UTAH
6/11/99

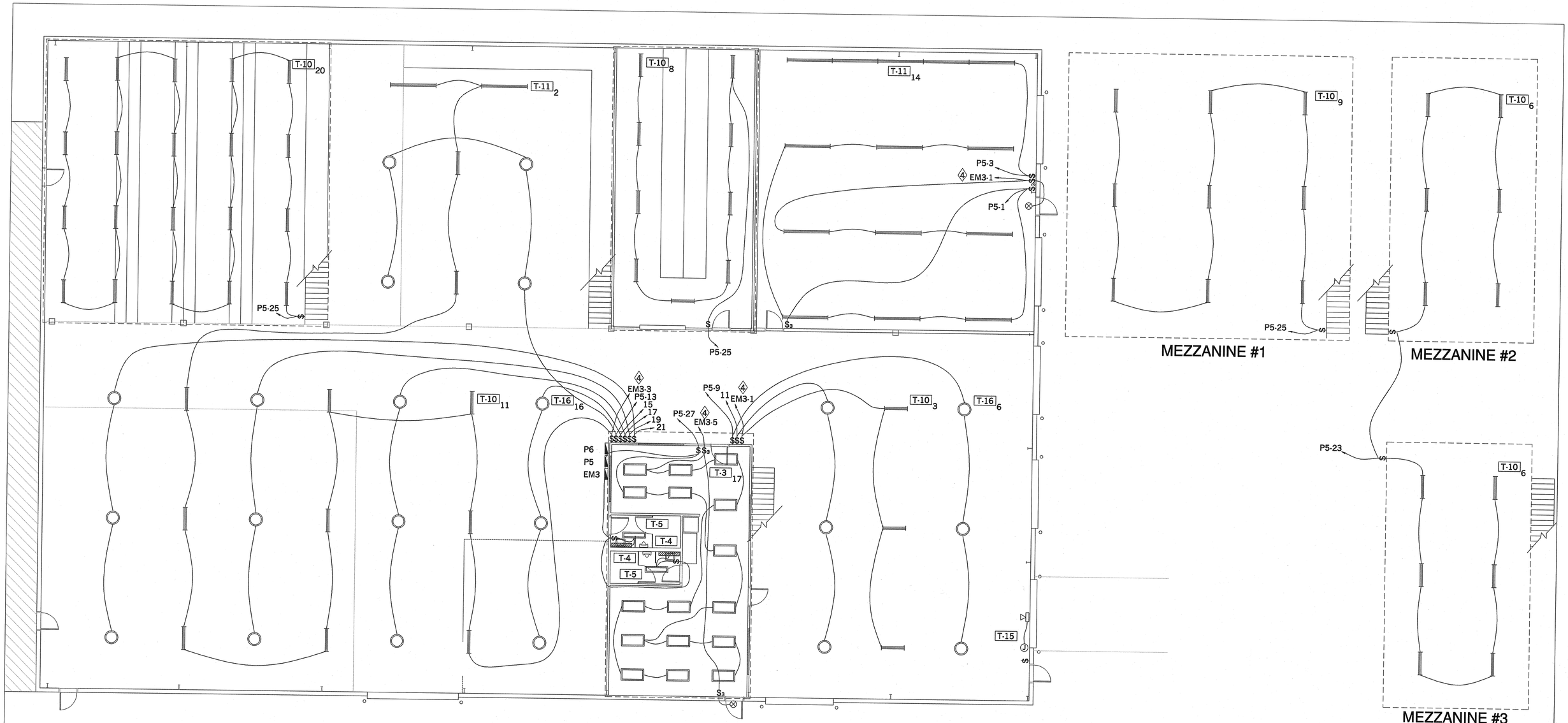

WORK NOTES:

1. RE-FEED EXISTING CIRCUITS FROM NEW PANEL P4
2. RE-FEED EXISTING FLOURESCENT LIGHTS TO PANEL EM2
3. CONNECT TO ADJACENT DUPLEX OUTLET
4. ALL SWITCHES FED BY GENERATOR POWER SHALL BE RED
5. SEE SHEET E-1 FOR EQUIPMENT, AND FIXTURE SCHEDULES

REGISTERED PROFESSIONAL ENGINEER AKBAR MATINKHAH #08023 STATE OF UTAH 6/10/99

LIGHTING PLAN

PHASE I CONSTRUCTION

SCALE:1/8"=1'-0"

REV. #	DATE	REVISION
A	6-10-99	PRIMARY SUBMITTAL

HUNT ELECTRIC, INC.
DESIGN - BUILD SERVICES
2420 SOUTH 2570 WEST
SALT LAKE CITY, UTAH 84119
(801) 978-2600
FAX (801) 978-0304
TOLL FREE 1-800-584-6965

DRAWN BY: RYAN COWLEY	SCALE: 1/8"=1'-0"	PRINT DATE: 6-10-99	
CHECKED BY:	CONSTRUCTION MANAGER:		
APPROVED BY:	PROJECT MANAGER: GRANT MARCHANT		
DESIGNER/ENGINEER:			

PROJECT NAME/ADRESS
TAYLOR-HUNT ELECTRIC
900 WEST OFFICE
1747 SO. 900 WEST, SALT LAKE CITY

DRAWING TITLE	DRAWING #	REV. #
LIGHTING	E-7	A
PROJECT # 8001	FILE 900W/E-7_8	

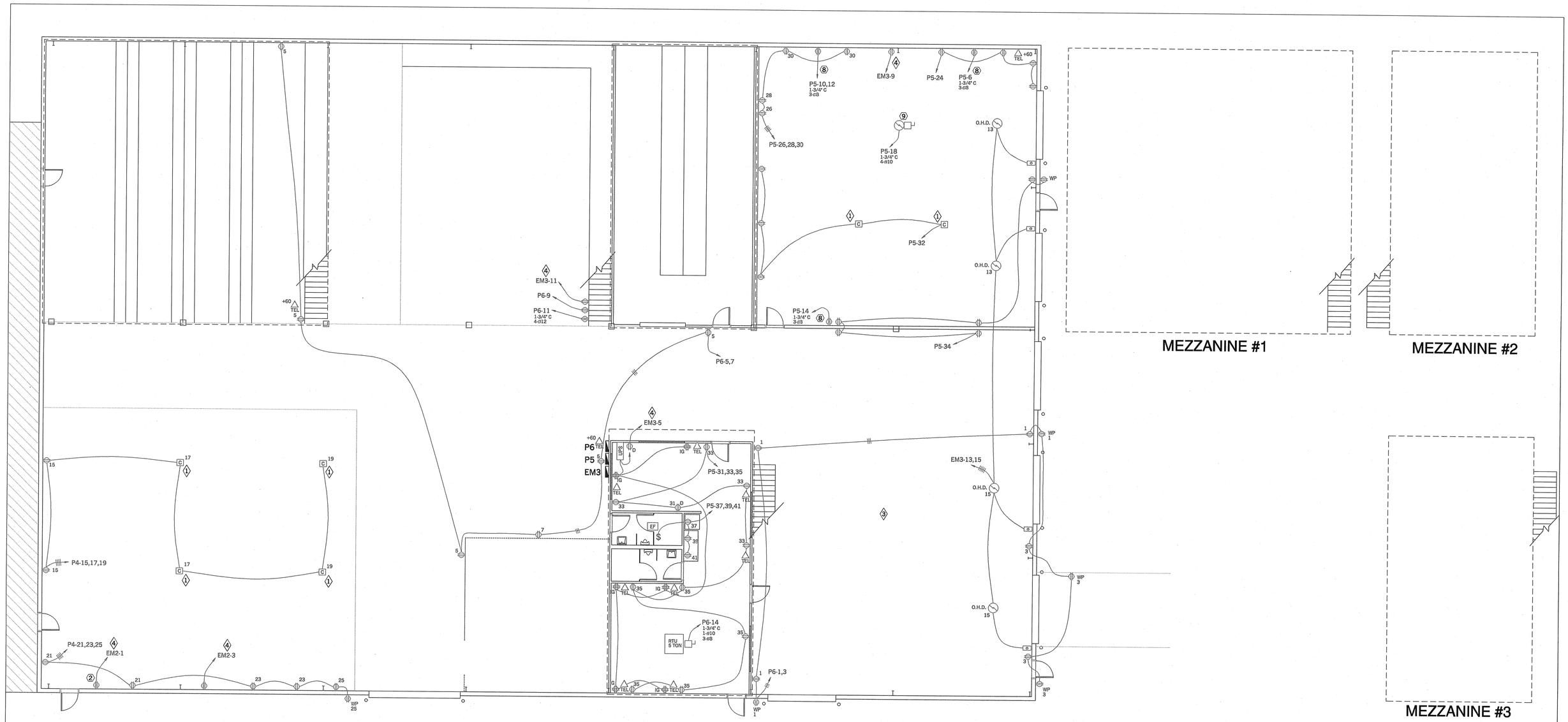

WORK NOTES:

1. CORD REEL, FIELD VERIFY LOCATION
2. INSTALL BOOSTING TRANSFORMER TO ACHIEVE 230 V
3. ALL OUTLETS IN PREFAB, WHSE, VEHICLE REPAIR, COVERED PARKING ETC, SHALL BE INSTALLED AT +48"
4. ALL OUTLETS CONNECTED TO GENERATOR POWER SHALL BE RED
5. SEE SHEET E-1 FOR EQUIPMENT, AND DEVICE SCHEDULES

REGISTERED PROFESSIONAL ENGINEER
AKBAR MATINKHAH
#03023
STATE OF UTAH
6/11/99

POWER PLAN

PHASE I CONSTRUCTION

SCALE:1/8"=1'-0"

REV. #	DATE	REVISION
A	6-10-99	PRIMARY SUBMITTAL

HUNT ELECTRIC, INC.
DESIGN - BUILD SERVICES
2420 SOUTH 2570 WEST
SALT LAKE CITY, UTAH 84119
(801) 978-2600
FAX (801) 978-0304
TOLL FREE 1-800-584-6965

PROJECT NAME/ADRESS
TAYLOR-HUNT ELECTRIC
900 WEST OFFICE
1747 SO. 900 WEST, SALT LAKE CITY

DRAWN BY: RYAN COWLEY	SCALE: 1/8"=1'-0"	PRINT DATE: 6-10-99	
CHECKED BY:	CONSTRUCTION MANAGER:		
APPROVED BY:	PROJECT MANAGER: GRANT MARCHANT		
DESIGNER/ENGINEER:			

DRAWING TITLE	DRAWING #	REV. #
POWER	E-8	A
PROJECT # 8001	FILE 900W/E-7_8	