A NEW BUILDING FOR:

TAYLOR - HUNT ELECTRIC
PHASE TWO

1747 SOUTH 900 WEST
SALT LAKE CITY, UTAH

INDEX TO DRAWINGS

TITLE
T-1 TITLE SHEET AND DRAWING INDEX
T-2 STANDARDS

CIVIL
C-1 SITE LAYOUT PLAN
C-2 UTILITY PLAN
C-3 GRADING & DRAINAGE PLAN
C-4 DETAILS

LANDSCAPING
L-1 LANDSCAPING PLAN
L-2 LANDSCAPE DETAILS

ARCHITECTURAL
A-1 FIRST FLOOR PLAN
A-1.1 SECOND FLOOR PLAN
A-2 EXTERIOR ELEVATIONS
A-3 BUILDING SECTIONS
A-3.1 BUILDING SECTIONS
A-4 WALL SECTIONS
A-4.1 WALL SECTIONS
A-4.2 WALL SECTIONS
A-5 ENLARGED PLANS & ELEVATIONS
A-6 ENLARGED STAIR PLANS
A-6.1 STAIR SECTIONS
A-6.2 STAIR SECTIONS & DETAILS
A-7 FINISH SCHEDULE
A-7.1 DOOR & WINDOW SCHEDULES
A-7.2 DETAILS
A-8 FIRST FLOOR REFLECTED CEILING PLAN
A-8.1 SECOND FLOOR REFLECTED CEILING PLAN
A-9 ROOF PLAN
A-9.1 ROOF DETAILS

STRUCTURAL
S-1.1 GENERAL STRUCTURAL NOTES
S-2.1 FOOTING AND FOUNDATION PLAN
S-2.2 FLOOR FRAMING PLAN
S-2.3 ROOF FRAMING PLAN
S-3.1 SCHEDULES
S-3.2 SCHEDULES
S-4.1 FOOTING AND FOUNDATION DETAILS
S-4.2 FOOTING AND FOUNDATION DETAILS
S-5.1 FLOOR FRAMING DETAILS
S-5.2 FLOOR FRAMING DETAILS
S-6.1 ROOF FRAMING DETAILS
S-6.2 ROOF FRAMING DETAILS

MECHANICAL
M-0.1 TITLE SHEET
M-2.1 FIRST FLOOR PLAN
M-2.2 SECOND FLOOR MECHANICAL PLAN
M-2.3 ROOF MECHANICAL PLAN
M-5.1 MECHANICAL DETAILS
M-7.1 MECHANICAL SCHEDULES

PLUMBING
P-2.1 FIRST FLOOR PLUMBING PLAN
P-2.2 SECOND FLOOR PLUMBING PLAN
P-2.3 ROOF PLUMBING PLAN
P-2.4 LARGE SCALE DRWINGS
P-5.1 PLUMBING DETAILS
P-7.1 PLUMBING SCHEDULES

ELECTRICAL
E-1.09 PANEL SCHEDULES
E-2.1 PANEL SCHEDULES
E-9 1st FLOOR POWER
E-9.1 1st FLOOR LIGHTING
E-10 2nd FLOOR POWER
E-10.1 2nd FLOOR LIGHTING

LEGEND

- EARTH
- POROUS FILL
- ASPHALT
- CONCRETE
- CONC. MAS. UNITS
- BRICK
- CAST STONE
- CERAMIC TILE
- WOOD (FINISH)
- WOOD (STUDS, NAILERS)
- WOOD (BLOCKING)
- PLYWOOD
- BATT INSULATION
- RIGID INSULATION
- ACOUSTIC TILE
- GYPSUM BOARD
- GLASS
- STEEL

3 / A-5 — DETAIL NUMBER, SHEET ON WHICH DETAIL APPEARS — DETAIL

A / A-3 — SECTION NUMBER, SHEET ON WHICH DETAIL APPEARS — BLDG. SECTION

1 / A-3 — SECTION NUMBER, SHEET ON WHICH DETAIL APPEARS — WALL SECTION

E-8 / A-4 — ELEVATION NUMBER, SHEET ON WHICH DETAIL APPEARS — ELEVATION

101 — ROOM NUMBER

10 — DOOR NUMBER

100'-0" — FINISH SPOT ELEVATION

ABBREVIATIONS

ALT.	ALTERNATE	H.C.	HOLLOW CORE
ALUM.	ALUMINUM	HDWD.	HARDWOOD
A.C.	ASPHALTIC CONCRETE	H.M.	HOLLOW METAL
A/C	AIR CONDITIONING	HT.	HEIGHT
BD.	BOARD	INT.	INTERIOR
BLK.	BLOCK	JT.	JOINT
BM.	BEAM	M.O.	MASONRY OPENING
BOT.	BOTTOM	N.I.C.	NOT IN CONTRACT
CLG.	CEILING	N.T.S.	NOT TO SCALE
CL.	CENTERLINE	O.C.	ON CENTER
C.I.	CAST IRON	O.D.	OVERFLOW DRAIN
CLR.	CLEAR	OPP.	OPPOSITE
COL.	COLUMN	P.L.	PROPERTY LINE
CONC.	CONCRETE	PLYWD.	PLYWOOD
CONTR.	CONTRACTOR	PROJ.	PROJECTION
DET.	DETAIL	P.T.	PRESSURE TREATED
D.S.	DOWN SPOUT	Q.T.	QUARRY TILE
E.D.F.	ELEC. DRINKING FTN.	R.D.	ROOF DRAIN
E.P.	ELEC. PANEL	RM.	ROOM
E.W.C.	ELEC. WATER COOLER	S.C.	SOLID CORE
F.D.	FLOOR DRAIN	S.D.	SCUPPER DRAIN
F.E.	FIRE EXTINGUISHER	SIM.	SIMILAR
FIN.	FINISH	S.O.	SCUPPER OVERFLOW
FLR.	FLOOR	SUSP.	SUSPENDED
F.O.C.	FACE OF CONCRETE	T.O.C.	TOP OF CONCRETE
F.O.M.	FACE OF MASONRY	TEMP.	TEMPERED
F.O.S.	FACE OF STUD	T.S.	TOP OF SHEATHING
F.S.	FLOOR SINK	T.O.P.	TOP OF PARAPET
FTG.	FOOTING	TYP.	TYPICAL
G.A.	GAUGE	W/	WITH
G.I.	GALVANIZED IRON	W.C.	WATER CLOSET
GL.	GLASS	WD.	WOOD
GYP.	GYPSUM	W.H.	WATER HEATER
F.R.P.	FIBERGLASS REINFORCED PANEL		
A.F.F.	ABOVE FINISHED FLOOR		

BUILDING SUMMARY

LEGAL JURISDICTION : SALT LAKE CITY

HANDICAPPED PROVIDED : 2 SPACES

PARKING PROVIDED : 48 SPACES

TOTAL : 50 SPACES

FOR PARKING : SEE PARKING C-1

BUILDING CODE: UBC 1997
OCCUPANCY: B
SEISMIC ZONE: III

CONSTRUCTION TYPE: II N

TOTAL SQ. FT : PHASE 2 ONLY

MAIN FLOOR:	7,858.5	SQ.FT.
UPPER FLOOR:	7,858.5	SQ.FT.
VESTIBULE:	83.0	SQ.FT.
TOTAL:	15,800	SQ.FT.

ALLOWABLE AREA INCREASE:
UBC 505.1.1 - SEPERATION ON TWO SIDES.
12,000 x 150% = 18,000 SQ.FT.

FIRE SPRINKLING:
NONE

DESIGN TEAM

OWNER: TAYLOR-HUNT ELECTRIC

CONTRACTOR: UTAH COMMERCIAL CONTRACTORS INC.
3598 SOUTH 500 WEST
SALT LAKE CITY, UTAH 84115
PHONE: (801) 262-3472 FAX: 262-3478

ARCHITECT: PASKER, GOULD, AMES & WEAVER INC.
5263 SOUTH 300 WEST
MURRAY, UTAH 84107
PHONE: (801) 266-4669 FAX: 262-6122

CIVIL ENGINEER: BUSH & GUDGEL ENGINEERS
555 SOUTH 300 EAST
SALT LAKE CITY, UTAH 84111
PHONE: (801) 364-1212

STRUCTURAL ENGINEER: DUNN & ASSOCIATES INC.
380 WEST 800 SOUTH
SALT LAKE CITY, UTAH 84101
PHONE: (801) 575-8877 FAX: 575-8875

ELECTRICAL ENGINEER: TAYLOR - HUNT ELECTRIC
2420 SOUTH 2570 WEST
WEST VALLEY CITY, UTAH 84119
PHONE: (801) 978-2600 FAX: 978-0304

MECHANICAL ENGINEER: CCI MECHANICAL INC.
758 SOUTH REDWOOD RD.
SALT LAKE CITY, UTAH 84104
PHONE: (801) 973-9000

Utah Commercial Contractors, Inc.

PASKER GOULD AMES & WEAVER
ARCHITECTS PLANNERS
5263 SOUTH 300 WEST
MURRAY, UTAH (801) 266-4669

DRAWN BY JAJ | CHECKED BY CLA | JOB NO. 2711 | DATE JULY 13, 1999

TITLE SHEET AND DRAWING INDEX
NEW BUILDING FOR
TAYLOR-HUNT ELECTRIC
1747 SOUTH 900 WEST, SALT LAKE CITY, UTAH

T 1

© PASKER GOULD AMES & WEAVER - 1999

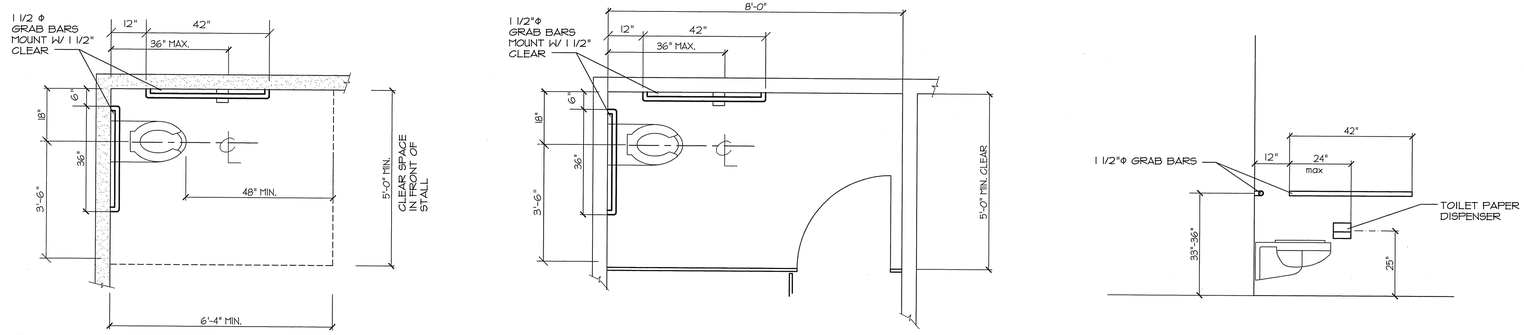

HANDICAPPED TOILET ROOM - TYPICAL MOUNTING STANDARDS

SCALE: 1/2" = 1'-0" | A

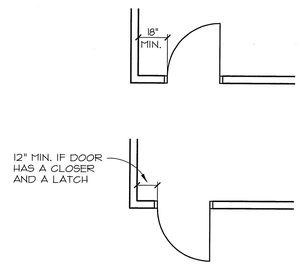

TYP. JAMB DIMENSIONS

SCALE: 1/4" = 1'-0" | B

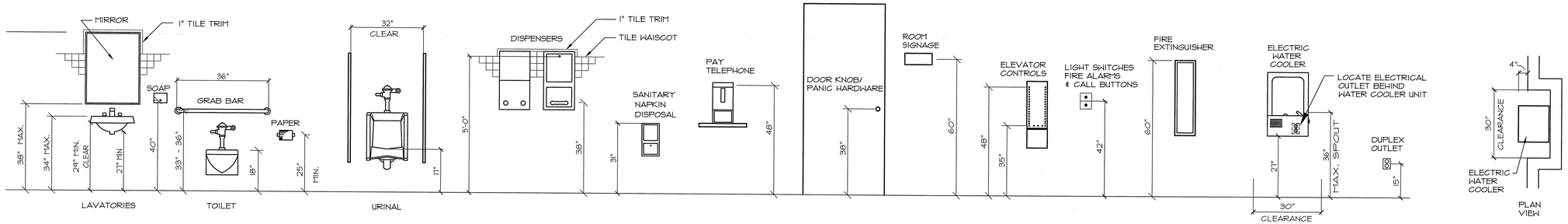

HANDICAPPED- TYPICAL MOUNTING STANDARDS

SCALE: 1/2" = 1'-0" | C

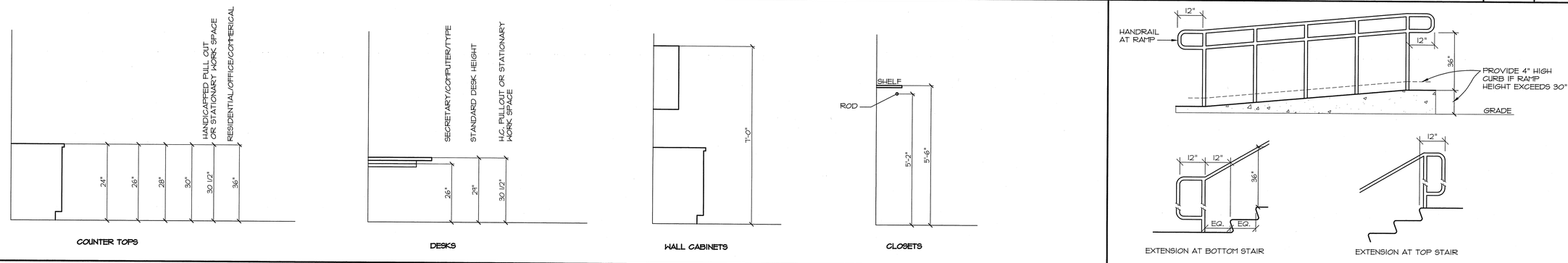

TYPICAL CABINET STANDARDS

SCALE: 1/2"=1'-0" | D

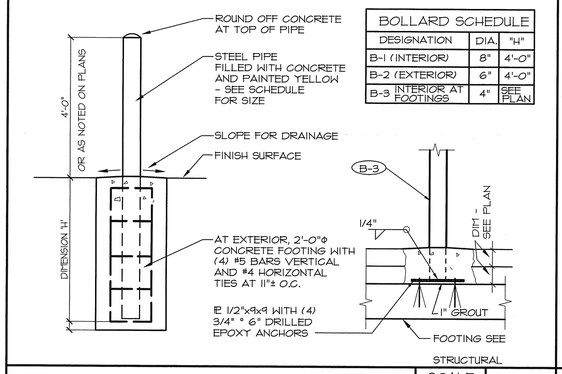

BOLLARD SCHEDULE		
DESIGNATION	DIA.	"H"
B-1 (INTERIOR)	8"	4'-0"
B-2 (EXTERIOR)	6"	4'-0"
B-3 INTERIOR AT FOOTINGS	4"	SEE PLAN

PIPE BOLLARD DETAIL

SCALE: 1/2" = 1'-0" | F

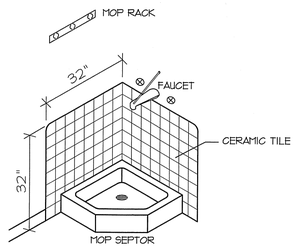

JANITOR MOP SINK

SCALE: N.T.S. | H

ITEM	FIRE RATING	GA FILE NO.
3 5/8 METAL STUDS WITH TYPE X GYP BD	1 HOUR	WP 1200
2 X 4 WOOD STUDS WITH TYPE X GYP BD	1 HOUR	WP 3510
3 3/8 METAL STUDS (2) LAYERS 5/8 TYPE X GYP BD	2 HOUR	WP 1711
2 X 4 WOOD STUDS (2) LAYERS TYPE X GYP BD	2 HOUR	WP 4135
FLOOR CEILING ASSEMBLY (TRUSS JOIST)	1 HOUR	FC 5515
FLOOR CEILING ASSEMBLY STEEL JOIST, CONC. METAL SLAB ACCOUSTICAL CEIL.	1 HOUR	UL G 252
ROOF CEILING ASSEMBLY METAL DECK ACCOUSTICAL CEIL.	1 HOUR	UL P 225

RESISTIVE CONSTRUCTION

SCALE: 1/2"=1'-0" | J

HANDRAIL ELEVATIONS

SCALE: 1/2" = 1'-0" | M

PASKER GOULD AMES & WEAVER
ARCHITECTS PLANNERS
5263 SOUTH 300 WEST MURRAY, UTAH (801) 266-4669

DRAWN BY JMJ
CHECKED BY CLA
JOB NO. 2711
DATE JULY 13, 1999

STANDARDS
NEW BUILDING FOR
TAYLOR-HUNT ELECTRIC
1747 SOUTH 900 WEST, SALT LAKE CITY, UTAH

T 2

© PASKER GOULD AMES & WEAVER - 1999

NOTE: MAX 10' TOOLED CONTROL JOINTS, EXPANSION JOINTS AT 50 FEET UNLESS OTHERWISE APPROVED.

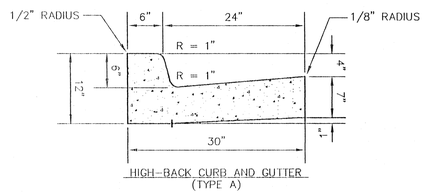

HIGH-BACK CURB AND GUTTER
(TYPE A)

NOTE: ALL CURB & GUTTER IS TO BE BEDDED WITH A MIN OF 4" OF UNTREATED BASE COURSE.

(A) CURB & GUTTER
NO SCALE

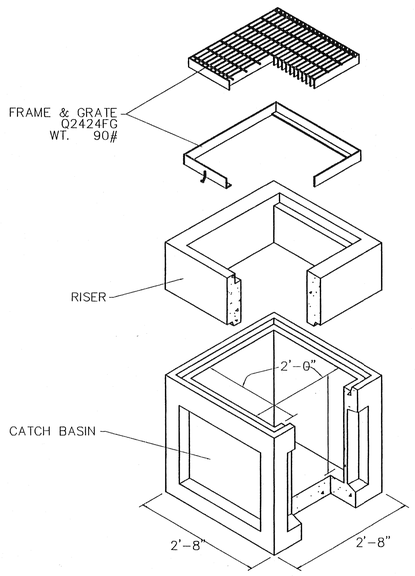

(D) 2' x 2' CATCH BASIN
NO SCALE

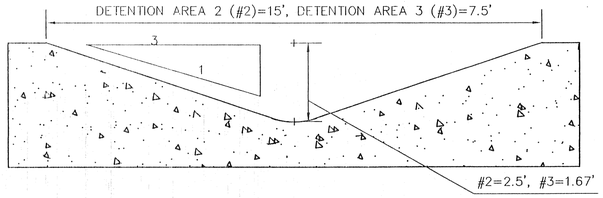

(B) STORAGE AREA DETAIL
NO SCALE

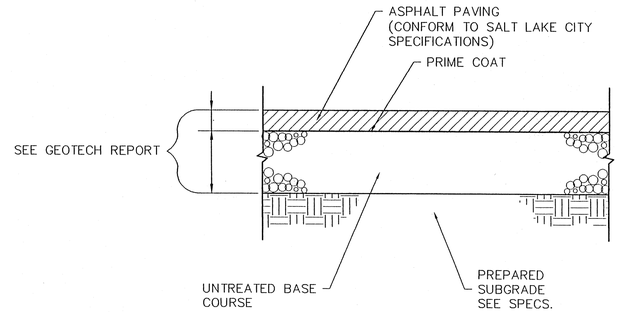

(F) ASPHALT PAVEMENT SECTION
NO SCALE

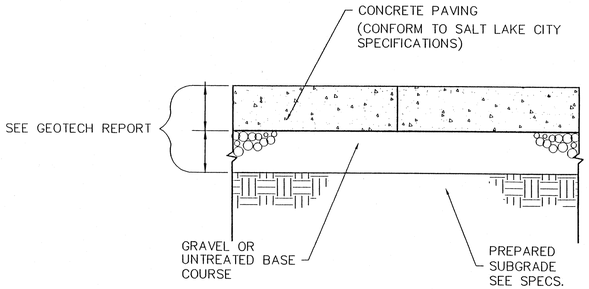

NOTE: PLACE CONTRACTION JOINTS EVERY 12' MAX. AT 1-1/2 INCH DEEP. PLACE EXPANSION JOINTS EVERY 36' MAX. WITH 1/2 INCH THICK, PREMOLDED, EXPANSION JOINT FILLER. PLACE JOINT FILLER BETWEEN THE CURB AND GUTTER AND SIDEWALK OR STRUCTURES.

(G) CONCRETE PAVEMENT SECTION
NO SCALE

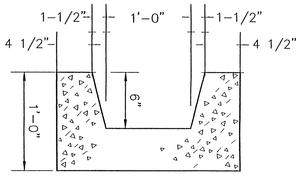

SECTION "A" – "A"

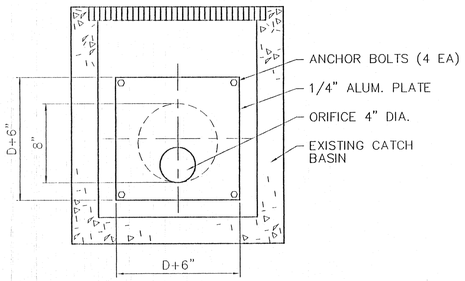

(C) ORIFICE DETAIL
NO SCALE

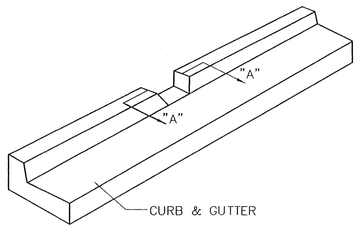

(E) CURB CUT
NO SCALE

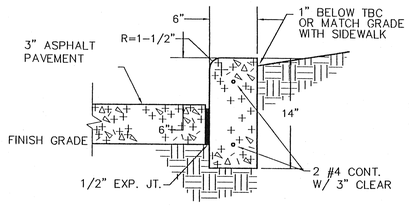

(H) 6" CONCRETE CURB
NO SCALE

APPROVED
WATER, SEWER & DRAINAGE
BY SLC PUBLIC UTILITIES
7-8-99

REGISTERED ARCHITECT
LICENSE NO.
113067
LOWELL A.
GOULD
STATE OF UTAH

No	Date	By	Revision
5	6/1/99	BKS	AS PER CITY CHANGES
4	5/21/98	BKS	AS PER MR HUNT AND THE CITY
3	4/7/98	JFW	CHANGED SITE PLAN PER RYAN
2	3/4/98	JFW	AS PER CITY CHANGES
1	2/15/98	BKS	AS PER CITY CHANGES

BUSH & GUDGELL, INC.
Engineers - Planners - Surveyors
555 South 300 East, Salt Lake City, Utah 84111
(801) 364-1212 Fax (801) 364-1225
Offices: St. George, Utah

Drawn : BKS Date : 10/12/98
Designer : JW
Checked :
Approved : JW
Scale : NO SCALE
Job No : 44106

DETAILS
HUNT ELECTRIC COMPANY
1747 SOUTH 900 WEST
SEC. 14, T.1S. R1.W., S.L.B. & M.

C
4

© PARKER GOULD AMES & WEAVER - 1999

C:\Ryan\DWG\45124-44106DTL.dwg Thu Jul 08 07:38:39 1999 PLOTTED FROM BRYAN STATION

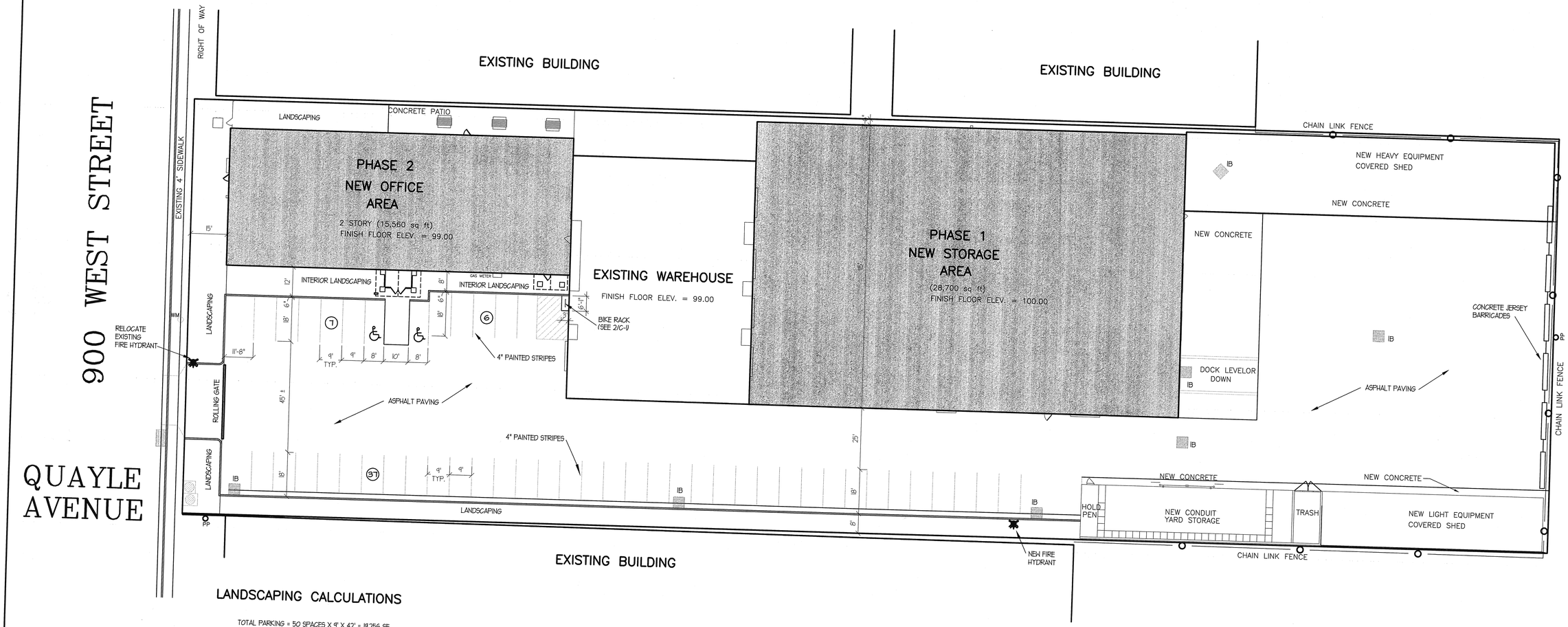

LANDSCAPING CALCULATIONS

TOTAL PARKING = 50 SPACES X 9' X 42' = 19,256 SF
5% X 18,522 SF = 962 SF INTERIOR LANDSCAPING REQUIRED

INTERIOR LANDSCAPING PROVIDED = 1,144 SF

TOTAL LANDSCAPING PROVIDED = 6,350 SF

PARKING CALCULATIONS

OFFICE AREA

1ST FLOOR 7,780 SF @ 3 PER 1000 = 23 SPACES
2ND FLOOR 7,780 SF @ 1/4 PER 1000 = 2 SPACES

STORE AREA

27,625 SF @ 2 PER 1000 FOR FIRST 10,000 = 20 SPACES
17,625 SF 1 PER 4000 = 5 SPACES

TOTAL SPACES REQUIRED = 50

TOTAL SPACES PROVIDED = 2 HANDICAPPED SPACES
48 REGULAR SPACES
TOTAL = 50 SPACES

SITE LAYOUT PLAN

SCALE: 1"=20'-0"

N

GRAPHIC SCALE

0 20 30 40 60 100

(IN FEET)
1 inch = 20 ft.

SEE CIVIL DRAWINGS FOR GRADING, UTILITIES, ETC.

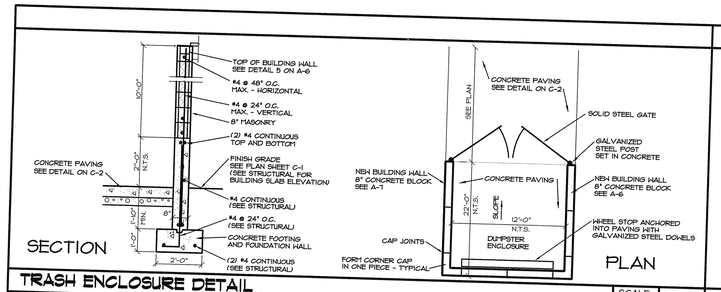

TRASH ENCLOSURE DETAIL — SCALE: NONE — 1

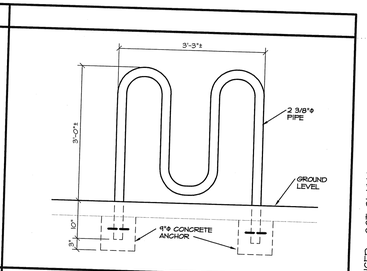

BIKE RACK DETAIL — SCALE: NONE — 2

PGA&W

PASKER GOULD AMES & WEAVER
ARCHITECTS
PLANNERS
5263 SOUTH 300 WEST
MURRAY, UTAH (801) 266-4669

DRAWN BY JWJ
CHECKED BY CLA
JOB NO. 2171
DATE OCT. 20, 1999

SITE LAYOUT PLAN
NEW BUILDING FOR
TAYLOR-HUNT ELECTRIC
1747 SOUTH 900 WEST, SALT LAKE CITY, UTAH

REVISED OCT. 21, 1999

C
1

GRAPHIC SCALE

20 0 10 20 40 80

(IN FEET)
1 inch = 20 ft.

NORTH

900 WEST STREET

QUAYLE AVENUE

EXISTING BUILDING

EXISTING BUILDING

CHAIN LINK FENCE

3 SIDED HEAVY EQUIPMENT COVERED PARKING

NEW CONCRETE SEE DETAIL G/3

NEW CONCRETE

OFFICE AREA
2 STORY (15,560 sq ft)
FINISH FLOOR ELEV. = 100.00

EXISTING WAREHOUSE AREA
FINISH FLOOR ELEV. = 100.00

NEW WAREHOUSE AREA
(28,700 sq ft)
FINISH FLOOR ELEV. = 101.00

CONCRETE PATIO

ROOF DRAIN

RIVET 3' OFFSET

NEW GAS LINE

ABANDON EXISTING 50' CURB CUT

EXISTING GAS LINE

EXISTING 6" SEWER

EXISTING 1" WATERLINE USED FOR IRRIGATION. (OWNER CONVERT TO LAWN SERVICE AND INSTALL BACKFLOW PREVENTOR)

INV: ±93.25

SEE MECHANICAL PLANS FOR CONTINUATION

CLEANOUT

INSTALL 6" CURBWALL

W FLARED END

RELOCATE HYDRANT NORTH

EXISTING HYDRANT

EXISTING CURB CUT

EXIST. INLET BOX. INV ELEV: 96.75 (CONTRACTOR TO VERIFY ELEVATION)

EXISTING 15" PIPE

INSTALL 35 LF 8" RCP PIPE @ 1.0%

INSTALL 1-1/2" WATER METER AND SERVICE LINE SEE STD. PLANS W-5 FOR SLC PUBLIC UTILITIES

INSTALL 100 LF 6"ø SANITARY SEWER @ 1.0%

INSTALL 70 LF 6" PVC @ 1.0%

INSTALL C.O. INV: ±94.35

1.5' MIN SEPERATION BETWEEN SEWER AND WATER LINE (WATER LINE ON TOP)

INSTALL 75 LF 6"ø SANITARY SEWER @ 1.0%

INSTALL SS C.O.

INSTALL C-900 360 L.F. 8" FIRE LINE 5' MIN. DEPTH FROM TOP PIPE TO FINISH GRADE

INSTALL 75 LF 6"ø SANITARY SEWER @ 1.0%

INSTALL 2'X2' CATCH BASIN RIM 99.24

INSTALL 2.5' CURB & GUTTER

INSTALL 116 LF 15"ø HDPE PIPE @ 0.5%

INSTALL 70 LF 15"ø HDPE PIPE @ 0.5%

INSTALL 1.5" WATER LINE

INSTALL 2'X2' CATCH BASIN RIM 98.50

INSTALL 72.5 LF 6"ø SANITARY SEWER @ 1.0%

1.5' MIN SEPERATION BETWEEN SEWER AND WATER LINE (WATER LINE ON TOP)

INSTALL 145 LF 15"ø HDPE PIPE @ 0.5%

INSTALL 6" (90° MIN.) C.O.

FIRE RISER SEE MECHANICAL DETAILS

INSTALL SS C.O. INV: ±96.61

ROOF DRAIN SEE MECHANICAL DRAWINGS FOR CONTINUATION.

CLEANOUT

INSTALL 46 LF OF 6" PVC @ 1.0%

INSTALL 2'X2' CATCH BASIN RIM ELV. 97.00 I.E. ELV. 95.00

INSTALL 25' OF 8" CI PIPE @ 0.5%

DOCK LEVELOR DOWN

INSTALL 92 LF 15"ø HDPE PIPE @ 0.5%

INSTALL 2'X2' CATCH BASIN RIM: 99.75

INSTALL 2'X2' CATCH BASIN RIM: 100.48

INSTALL 67 LF 15"ø HDPE PIPE @ 0.5%

INSTALL 2'X2' CATCH BASIN RIM ELV. 99.70

NEW CONCRETE

CONDUIT YARD

STORAGE

TRASH

NEW CONCRETE SEE DETAIL G/3

3 SIDED COVERED PARKING

CHAIN LINK FENCE

BLOCK BUILDING

INSTALL FIRE HYDRANT SEE STD. PLANS W-11 SLC PUBLIC UTILITIES

INSTALL 8"x6" FLG x MJ REDUCER

INSTALL 90° 8"x8"x6" MJ TEE W/ THRUST BLOCKING (SEE SLC STD. PLANS W-9)

NOTE: USE MEGALUG RESTRAINT JOINTS ON ALL FITTINGS

SAW CUT & REMOVE, INSTALL NEW FIRE LINE, AND WATER LINE REPLACE CONCRETE.

EXISTING 8" WATER LINE

RIVET 3' OFFSET

INSTALL 8" FIRE DETECTOR CHECK SEE STD PLANS W-19 FOR SLC PUBLIC UTILITIES

INSTALL 2'X2' CATCH BASIN RIM 99.07

LEGEND

99	EXISTING GRADE CONTOURS
GB	GRADE BREAK
TBC	TOP BACK OF CURB ELEVATION
TC	TOP OF CONCRETE ELEVATION
TO	TOP OF OIL ELEVATION
1.93%	DIRECTION & SLOPE OF ASPHALT/CONCRETE
	SAWCUT EXISTING PAVEMENT AND CONC.
W	WATER LINE

DISCLAIMER:
TOPOGRAPHIC AND UTILITY INFORMATION SHOWN ON THIS PLAT WAS RECEIVED FROM THE OWNER. BUSH AND GUDGELL ACCEPTS NO RESPONSIBILITY FOR THE ACCURACY OR COMPLETENESS OF THE INFORMATION. THE CONTRACTOR TAKES THE WHOLE RISK, RESPONSIBILITY AND EXPENSE WITH RESPECT TO THE LOCATION OF UTILITIES, AND IN WORKING WITH UTILITY OWNERS ABOUT LOCATING, MOVING, REPAIRING, AND MODIFYING UTILITIES. ALL UTILITY LOCATIONS SHOWN ON THE PLANS ARE APPROXIMATE AND ARE MARKED, IF AT ALL, ONLY FOR CONVENIENCE. BUSH & GUDGELL MAKES NO REPRESENTATION ABOUT THE LOCATION OF ANY SUCH UTILITIES AND THE CONTRACTOR IS ENCOURAGED TO CONTACT UTILITY COMPANIES AND OWNERS ABOUT THE LOCATION OF ALL UTILITIES THAT MAY BE IMPACTED BY OR IMPACT THE PROJECT WORK.

LICENSED PROFESSIONAL ENGINEER
7/7/99
No. 270304
JAMES F. WOODRUFF
STATE OF UTAH

APPROVED
WATER, SEWER & DRAINAGE
BY SLC PUBLIC UTILITIES
7-8-99

REGISTERED ARCHITECT
LICENSE NO.
113067
LOWELL A. GOULD
STATE OF UTAH

No	Date	By	Revision
6	10/8/99	BKS	AS PER CRAIG CHANGES
5	6/1/99	BKS	AS PER CITY CHANGES
4	5/25/99	JFW	AS PER CHRIS HUNT
3	4/6/99	JFW	MOVED FRONT OFFICE BUILDING
2	3/4/98	JFW	CHANGED SITE PLAN PER RYAN
1	2/15/99	BKS	AS PER CITY CHANGES

BUSH & GUDGELL, INC.
Engineers - Planners - Surveyors
555 South 300 East, Salt Lake City, Utah 84111
(801) 364-1212 Fax (801) 364-1225
Offices: St. George, Utah

Drawn : JFW Date : 4/6/99
Designer : JW
Checked : JW
Approved
Scale : 1" = 20'
Job No : 441.06

UTILITY PLAN
HUNT ELECTRIC COMPANY
1747 SOUTH 900 WEST
SEC. 14, T.1S. R1.W., S.L.B. & M.

C
2

© PASKER GOULD AMES & WEAVER - 1999

C:\Bryan\DWG\45124\C1.dwg Wed Jul 07 16:41:15 1999 PLOTTED FROM BRYAN STATION

GRAPHIC SCALE

20 0 10 20 40 60

(IN FEET)
1 inch = 20 ft.

NORTH

900 WEST STREET

QUAYLE AVENUE

EXISTING BUILDING

EXISTING BUILDING

100-YR DETENTION STORAGE AREA #2 (3' DEEP) ELV. 96.75 108' FEET LONG

OFFICE AREA 2 STORY (15,560 sq ft) FINISH FLOOR ELEV. = 100.00

SEE MECHANICAL PLANS FOR CONTINUATION

SEE MECHANICAL PLANS FOR CONTINUATION

CLEANOUT

CLEANOUT

EXISTING WAREHOUSE AREA FINISH FLOOR ELEV. = 100.00

NEW WAREHOUSE AREA (28,700 sq ft) FINISH FLOOR ELEV. = 101.00

ROOF DRAIN

SEE MECHANICAL PLANS

INSTALL 12" FLARED END SECTION IE: 96.50

EXIST. INLET BOX. INV ELEV: 96.75 CONTRACTOR TO (VERIFY ELEVATION)

EXISTING 15" PIPE SD

NEW 30' DRIVEWAY

INSTALL 58 LF 12" RCP PIPE @ 1.0%

INSTALL 35 LF 12" CI PIPE @ 1.0%

100-YR DETENTION STORAGE AREA #4 (9' DEEP) 99.25 ELV. 29' FEET RADIUS

ASPHALT PAVEMENT SEE DETAIL F/3

INSTALL 70 LF 6" PVC @ 1.0%

90 LF 6" PVC @ 1.0%

INSTALL 2'X2' CATCH BASIN RIM 98.50 NORTH I.E. 95.00 EAST I.E. 94.65 WEST I.E. 94.65

2'X2' CATCH BASIN DETAIL D/3

INSTALL 70 LF 15"ø HDPE PIPE @ 0.5%

INSTALL 116 LF 15"ø HDPE PIPE @ 0.5%

INSTALL 2.5' CURB & GUTTER SEE DETAIL A/3

INSTALL 2'X2' CATCH BASIN RIM 98.56 EAST I.E. 95.23 WEST I.E. 95.23

INSTALL 145 LF 15"ø HDPE PIPE @ 0.5%

46 LF OF 6" PVC @ 1.0%

CLEANOUT

INSTALL 67 LF 15"ø HDPE PIPE @ 0.5%

INSTALL 92 LF 15"ø HDPE PIPE @ 0.5%

INSTALL 25' OF 8" CI PIPE @ 0.5%

DOCK LEVELER "DOWN"

INSTALL 4"ø ORIFICE PLATE SEE DETAIL C/3

INSTALL 4"ø ORIFICE PLATE SEE DETAIL C/3

INSTALL 2'X2' CATCH BASIN RIM ELV. 97.00 I.E. ELV. 95.50 SEE DETAIL D/3

100-YR DETENTION STORAGE AREA #1 (6" DEEP) 100.25 ELV. 30' FEET RADIUS

INSTALL 2'X2' CATCH BASIN RIM: 99.75 NORTH I.E.: 96.75 SOUTH I.E.: 96.75

INSTALL 2'X2' CATCH BASIN RIM: 100.48 NORTH I.E.: 95.38 WEST I.E.: 96.29 EAST I.E.: 96.29

SEE DETAIL D/3

ASPHALT PAVEMENT SEE DETAIL F/3

CHAIN LINK FENCE

CHAIN LINK FENCE

CHAIN LINK FENCE

3 SIDED HEAVY-EQUIPMENT COVERED PARKING

NEW CONCRETE SEE DETAIL G/3

NEW CONCRETE

NEW CONCRETE

NEW CONCRETE SEE DETAIL G/3

3 SIDED COVERED PARKING

CONDUIT YARD

STORAGE BLOCK BUILDING

TRASH

HOLD PEN

INSTALL 4"ø ORIFICE PLATE SEE DETAIL C/3

CONSTRUCT CURBCUT SEE DETAIL E/3

INSTALL 2'X2' CATCH BASIN RIM 99.07 EAST I.E. 94.30 WEST I.E. 97.10 NORTH I.E. 95.92

DRAIN AREA BACK TO CATCH BASIN.

CONSTRUCT CURBCUT SEE DETAIL E/3

EXISTING BUILDING

100-YR DETENTION STORAGE AREA #3 (1.75' DEEP) ELV. 97.80 336' FEET LONG

INSTALL 2'X2' CATCH BASIN RIM 99.70 EAST I.E. 95.95 NORTH I.E. 96.70 WEST I.E. 95.95

CONSTRUCT CURBCUT SEE DETAIL E/3

NOTE: AFTER STORM PIPE SYSTEM IS FULL WATER CAN FLOW INTO DETENTION BASIN IN LANDSCAPED AREA.

DRAINAGE CALCULATIONS FOR NEW IMPROVEMENTS

Land Use	Area (s.f.)	Runoff (c)
Asphalt & Conc.	37,743	0.90
Roofs	31,552	0.85
Lawn/Landscape	5,188	0.15
Total Area	74,483 s.f.	1.71 acres

Allowable Outfall (0.20 cfs/acre)(1.71 acres) = 0.34 cfs
Weighted Runoff Coefficient (c)=0.83

Salt Lake City Drain Program 100 Year 24 Hour Storm

Interval (min.)	Rainfall (in.)	Storage (c.f.)	Outfall (c.f.)	Req. Storage (c.f.)
15	0.77	3935	308	3628
30	1.07	5502	616	4887
60	1.37	7018	1231	5787
120	1.52	7779	2462	5317
180	1.66	8507	3693	4814
360	2.01	10,328	7,387	2,941
720	2.50	12,826	14,773	0
1440	3.21	16,479	29,547	0
		Total Required Storage		5,787 c.f.

Use 58 LF 12"ø Pipe = [(3.14)(1)^2/4] x 58 = 46 c.f.
Use 490 LF 15"ø Pipe = [(3.14)(15"/12)^2/4] x 490 = 601 c.f.
Use 25 LF 8"ø Pipe = [(3.14)(8"/12)^2/4] x 25 = 9 c.f.
Detention Area #1 = [(3.14)(30')^2 x 0.50']/3 = 471 c.f.
Detention Area #2 = [(108)(3)(7.5)] = 2430 c.f.
Detention Area #3 = [(1.75)(3.5)(336)] = 2058 c.f.
Detention Area #4 = [(3.14)(29)^2 (0.75)] = 660 c.f.
Catch Basin Storage = (7*(2'x2'x4'deep)) = 112 c.f.
Total Storage Capacity = 46+601+9+471+2530+2058+661 = 6276 c.f.
Approximate Storage Capacity Available = 6276 c.f. > 5,787 c.f. Required
Design Orifice Diameter Q = 0.6 x A x (2x32.2x.99')^0.5
h = (99.07 – 97.10)/2 = 0.99'
Q = 0.34 c.f.s.
A = 0.077 s.f. = 11.03 square inches
11.03 = (3.14)(D)^2/4 , Dia. Orifice Plate = 3.74 in. use 4 inches

DISCLAIMER:
TOPOGRAPHIC AND UTILITY INFORMATION SHOWN ON THIS PLAT WAS RECEIVED FROM THE OWNER. BUSH AND GUDGELL ACCEPTS NO RESPONSIBILITY FOR THE ACCURACY OR COMPLETENESS OF THE INFORMATION. THE CONTRACTOR TAKES THE WHOLE RISK, RESPONSIBILITY AND EXPENSE WITH RESPECT TO THE LOCATION OF UTILITIES, AND IN WORKING WITH UTILITY OWNERS ABOUT LOCATING, MOVING, REPAIRING, AND MODIFYING UTILITIES. ALL UTILITY LOCATIONS SHOWN ON THE PLANS ARE APPROXIMATE AND ARE MARKED, IF AT ALL, ONLY FOR CONVENIENCE. BUSH & GUDGELL MAKES NO REPRESENTATION ABOUT THE LOCATION OF ANY SUCH UTILITIES AND THE CONTRACTOR IS ENCOURAGED TO CONTACT UTILITY COMPANIES AND OWNERS ABOUT THE LOCATION OF ALL UTILITIES THAT MAY BE IMPACTED BY OR IMPACT THE PROJECT WORK.

LEGEND

- 99 — EXISTING GRADE CONTOURS
- 100 — FINISH GRADE CONTOURS
- GB — GRADE BREAK
- NEW STORM DRAIN PIPE
- NEW CATCH BASIN
- TBC — TOP BACK OF CURB ELEVATION
- TC — TOP OF CONCRETE ELEVATION
- TO — TOP OF OIL ELEVATION
- 1.93% ⇒ DIRECTION & SLOPE OF ASPHALT/CONCRETE
- ASPHALT

APPROVED
WATER, SEWER & DRAINAGE
BY SLC PUBLIC UTILITIES
7-8-99

LICENSED PROFESSIONAL ENGINEER
4/7/99
No. 270304
JAMES F. WOODRUFF
STATE OF UTAH

REGISTERED ARCHITECT
LICENSE NO.
113087
LOWELL J. GOULD
STATE OF UTAH

No	Date	By	Revision
7	7/7/99	BKS	GRADE CHANGES
6	6/21/99	BKS	AS PER CITY CHANGES
5	6/7/99	BKS	AS PER CITY AND MR. HUNT
4	4/29/99	JFW	MOVED BUILDING
3	4/6/99	JFW	CHANGED SITE PLAN PER BUILDING
2	3/4/98	JFW	AS PER CITY CHANGES
1	2/15/98	BKS	AS PER CITY CHANGES

BUSH & GUDGELL, INC.
Engineers – Planners – Surveyors
555 South 300 East, Salt Lake City, Utah 84111
(801) 364-1212 Fax (801) 364-1225
Offices: St. George, Utah

GRADING & DRAINAGE PLAN
HUNT ELECTRIC COMPANY
1747 SOUTH 900 WEST
SEC. 14, T.1S. R1.W., S.L.B. & M.

Drawn : JFW Date : 4/6/99
Designer : JW
Checked : JW
Approved : JW Scale : 1"=20'
Job No : 44106

C
3

C:\Bryan\DWG\45124\45124gd.dwg Wed Jul 07 16:46:58 1999 PLOTTED FROM BRYAN STATION

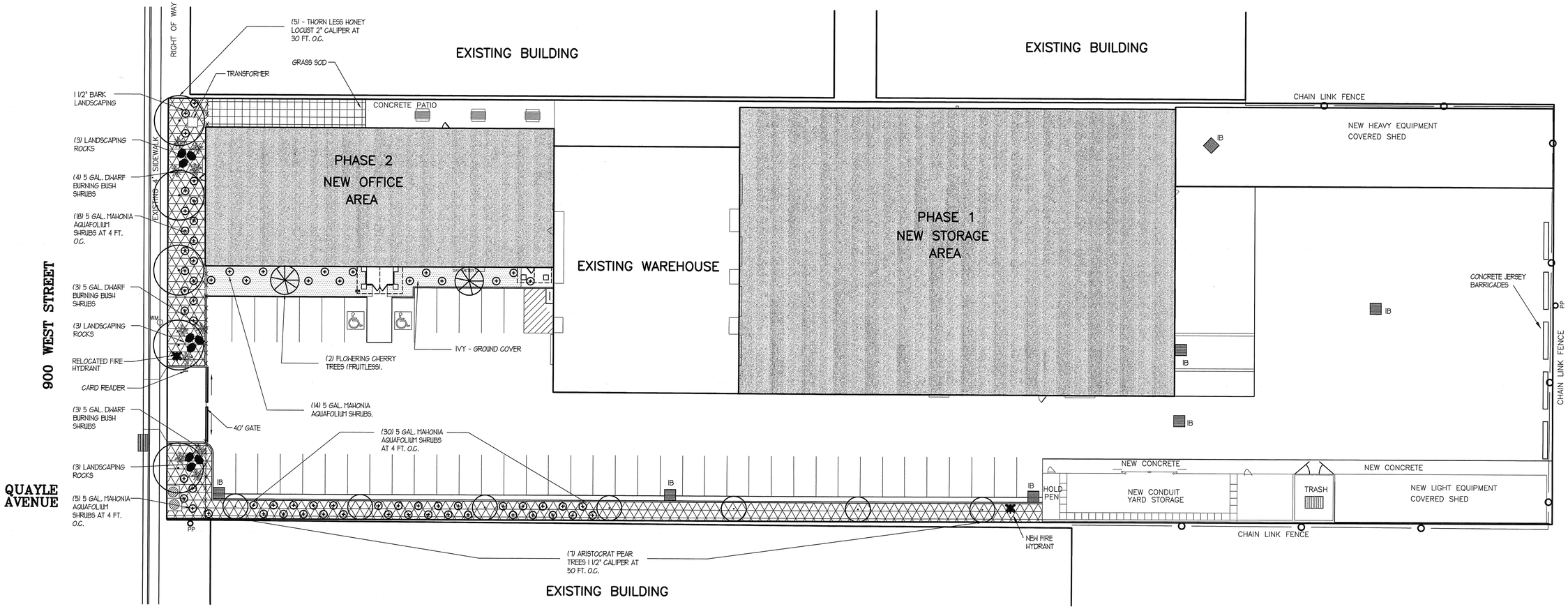

LANDSCAPING CALCULATIONS

INTERIOR LANDSCAPING PROVIDED = 1,040 SF

LANDSCAPING PLAN

SCALE: 1"=20'-0"

N

GRAPHIC SCALE

0 20 30 40 60 100

(IN FEET)
1 inch = 20 ft.

SEE CIVIL DRAWINGS FOR GRADING, UTILITIES, ETC.

LANDSCAPING LEGEND

- GRASS SOD AREAS
- IVY-GROUND COVERED AREAS
- 1 1/2" LANDSCAPING BARK
- THORN LESS HONEY LOCUST
- ARISTOCRAT PEAR
- FLOWERING CHERRY (FRUITLESS)
- MAHONIA AQUAFOLIUM (DWARF OREGON GRAPE)
- BURNING BUSH
- LANDSCAPING ROCK

NOTE : ALL LANDSCAPED AREAS TO HAVE AUTOMATIC SPRINKLER SYSTEM ON TIME CLOCK.

PASKER GOULD AMES & WEAVER
ARCHITECTS PLANNERS
5263 SOUTH 300 WEST
MURRAY, UTAH (801) 266-4669

DRAWN BY D.K.P.
CHECKED BY C.A.
JOB NO. 2711
DATE JUNE 15, 1999

LANDSCAPEING PLAN
A NEW BUILDING FOR
TAYLOR - HUNT ELECTRIC
1147 S. 900 W. SALT LAKE CITY, UTAH

L 1

© PASKER GOULD AMES & WEAVER - 1999

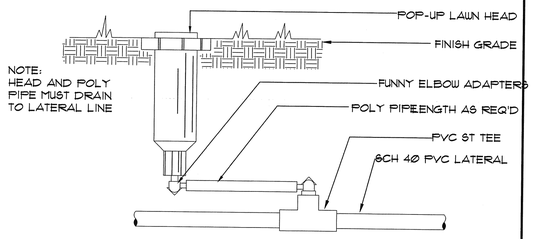

LAWN HEAD INSTALLATION DETAIL | SCALE: NONE | 1

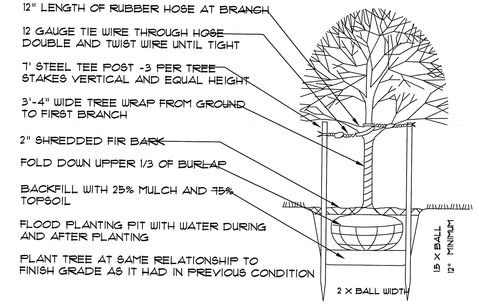

DECIDUOUS TREE PLANTING DETAIL | 2

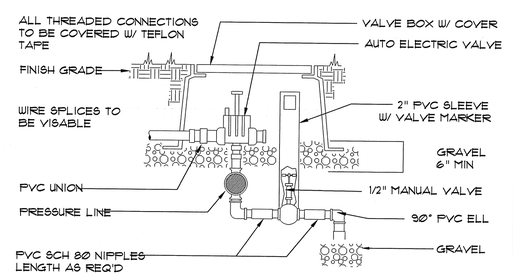

VALVE BOX & MANUAL DRAIN DETAIL | 3

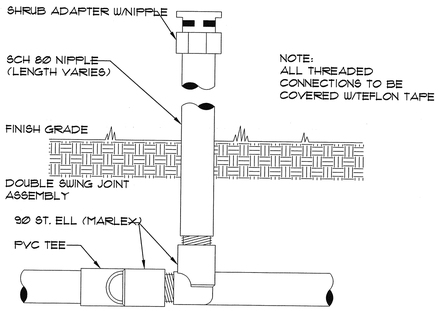

SHRUB HEAD INSTALLATION DETAIL | 4

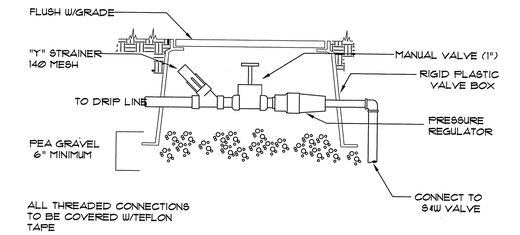

DRIP VALVE & BOX DETAIL | SCALE: NONE | 5

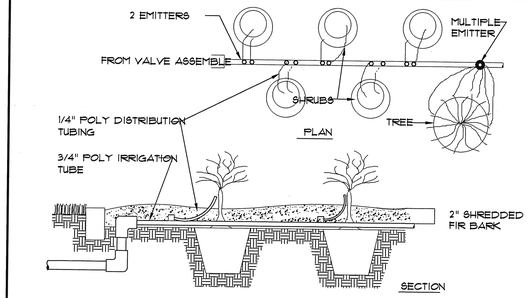

DRIP LINE & EMITTERS | SCALE: NONE | 6

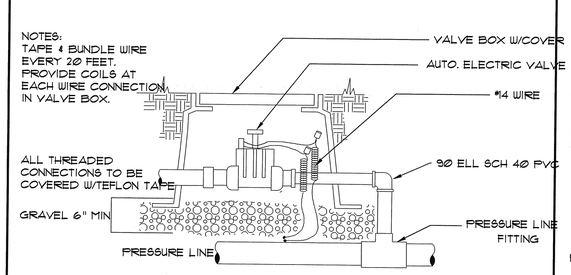

AUTOMATIC ELECTRIC VALVE DETAIL | 7

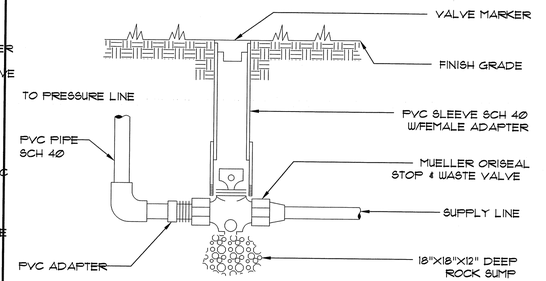

STOP AND WASTE CONNECTION | SCALE: NONE | 8

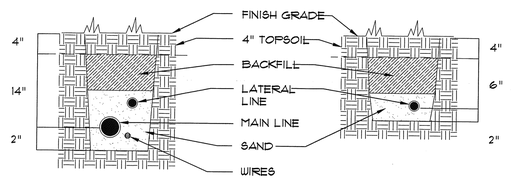

NOTES: USE EXCAVATED MATERIAL NOT TO EXCEED 2" ROCKS. BED ALL PVC PIPE IN 2" OF SAND MINIMUM ABOVE AND BELOW. LOCATE ALL TRENCHES 12" AWAY FROM WALKS & WALLS. SETTLE ALL TRENCHES W/WATER BEFORE GRADING.

TRENCH BACKFILL DETAIL | SCALE: NONE | 9

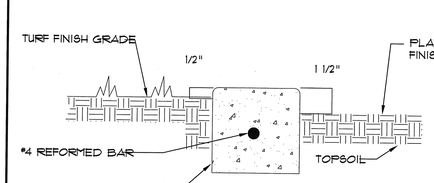

CONCRETE MOW STRIP | SCALE: NONE | 10

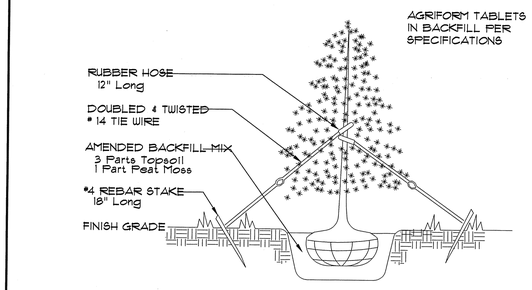

EVERGREEN TREE PLANTING DETAIL | 11

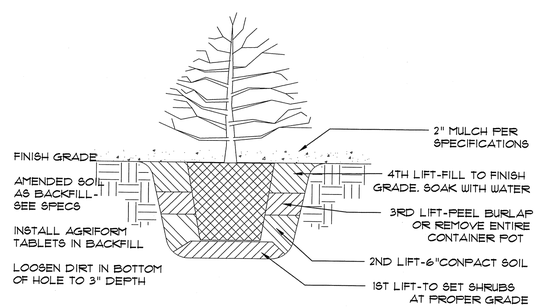

SHRUB PLANTING DETAIL | SCALE: NONE | 12

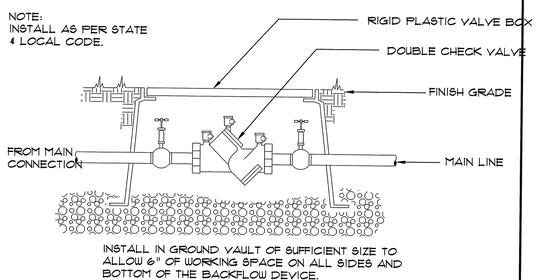

DOUBLE CHECK VALVE | SCALE: NONE | 13

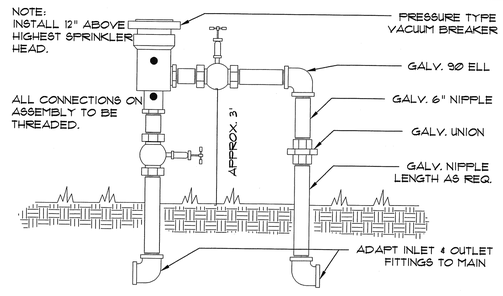

DOUBLE CHECK VALVE | SCALE: NONE | 14

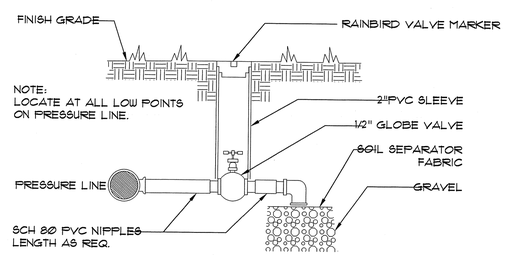

MANUAL DRAIN FOR PRESSURE LINE | 15

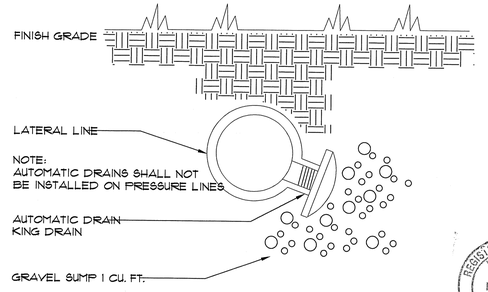

AUTOMATIC DRAIN FOR LATERAL LINE | 16

PASKER GOULD AMES & WEAVER
ARCHITECTS PLANNERS
5263 SOUTH 300 WEST MURRAY, UTAH (801) 266-4669

DRAWN BY DKP
CHECKED BY CA
JOB NO. 2111
DATE JUNE 15, 1999

LANDSCAPE DETAILS
A NEW BUILDING FOR
TAYLOR - HUNT ELECTRIC
1741 S. 900 W. SALT LAKE CITY, UTAH

REGISTERED ARCHITECT LICENSE NO. 113067 LOWELL A. GOULD STATE OF UTAH

L 2

© PASKER GOULD AMES & WEAVER - 1999

FIRST FLOOR PLAN

SCALE: 1/8" = 1'-0"

NORTH

WALL TYPES

WALLS

SOUND BATT INSULATION
2 HR. FIRE RATED

PGA&W

PASKER GOULD AMES & WEAVER
ARCHITECTS PLANNERS

5263 SOUTH 300 WEST MURRAY, UTAH (801) 266-4669

DRAWN BY	CHECKED BY	JOB NO.	DATE
JAJ	GLA	2111	OCT. 20, 1999

FIRST FLOOR PLAN

NEW BUILDING FOR

TAYLOR-HUNT ELECTRIC

1747 SOUTH 900 WEST, SALT LAKE CITY, UTAH

A
1

© PASKER GOULD AMES & WEAVER - 1999

SECOND FLOOR PLAN

SCALE: 1/8" = 1'-0"

NORTH

WALL TYPES

WALLS

SOUND BATT INSULATION

2 HR. FIRE RATED

PASKER GOULD AMES & WEAVER
ARCHITECTS PLANNERS
5263 SOUTH 300 WEST MURRAY, UTAH (801) 266-4669

DRAWN BY	CHECKED BY	JOB NO.	DATE
JWJ	GLA	2171	OCT. 20, 1999

SECOND FLOOR PLAN

NEW BUILDING FOR

TAYLOR-HUNT ELECTRIC

1747 SOUTH 900 WEST, SALT LAKE CITY, UTAH

A
1.1

© PASKER GOULD AMES & WEAVER - 1999

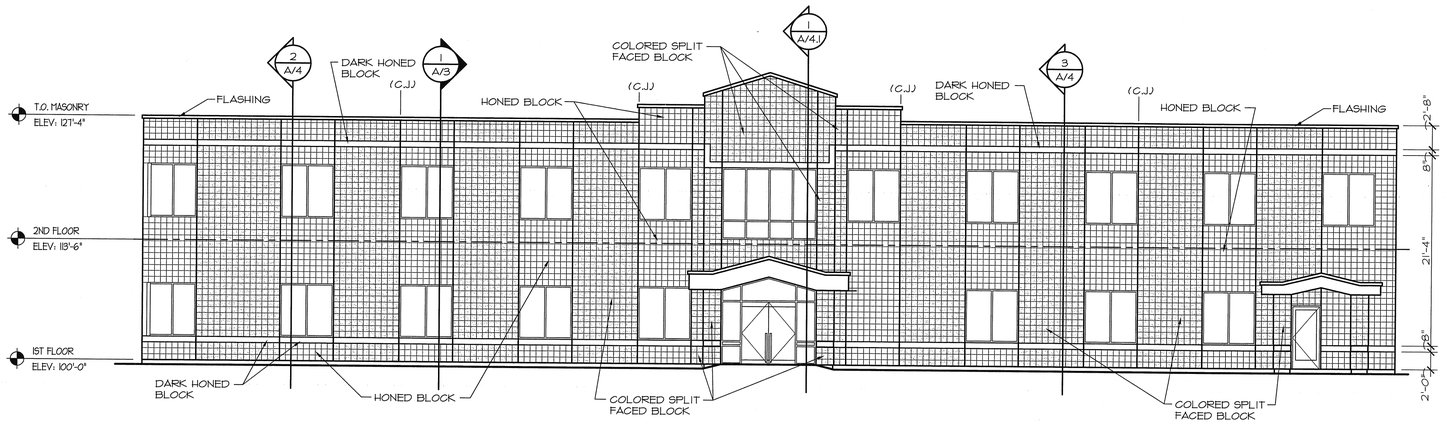

1/A2 SOUTH ELEVATION
SCALE: 1/8" = 1'-0"

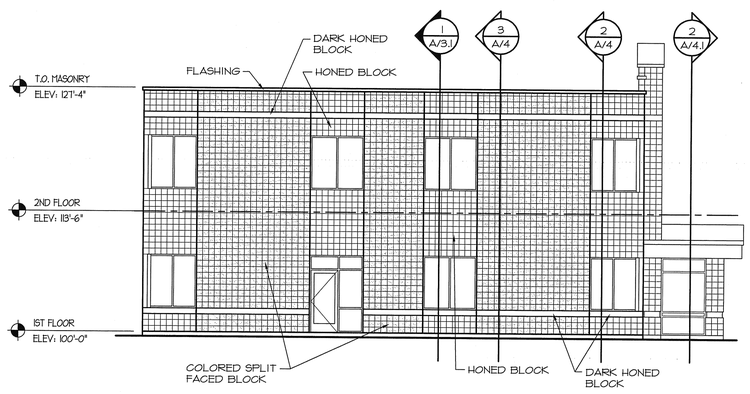

2/A2 WEST ELEVATION
SCALE: 1/8" = 1'-0"

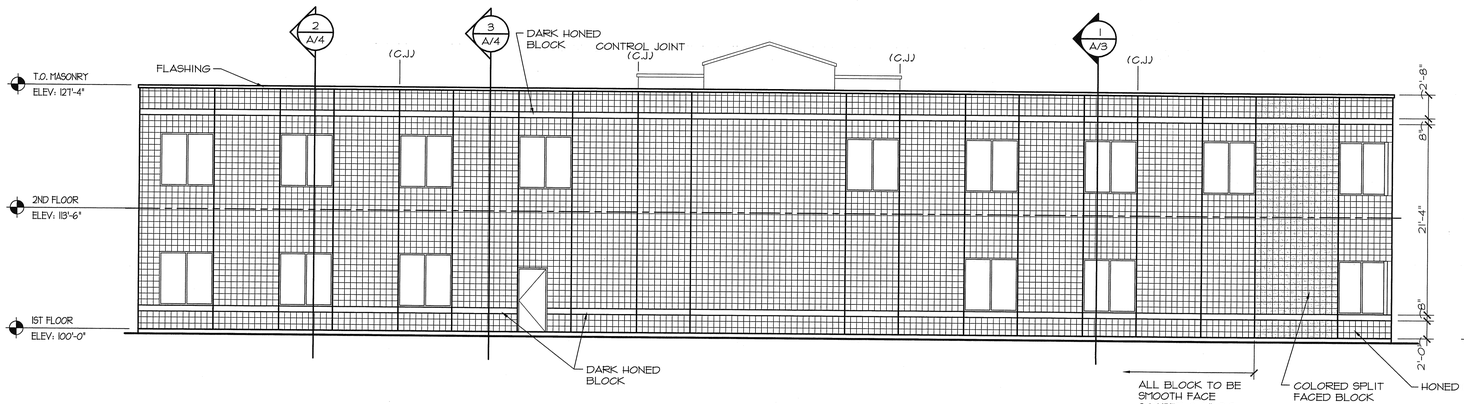

3/A2 NORTH ELEVATION
SCALE: 1/8" = 1'-0"

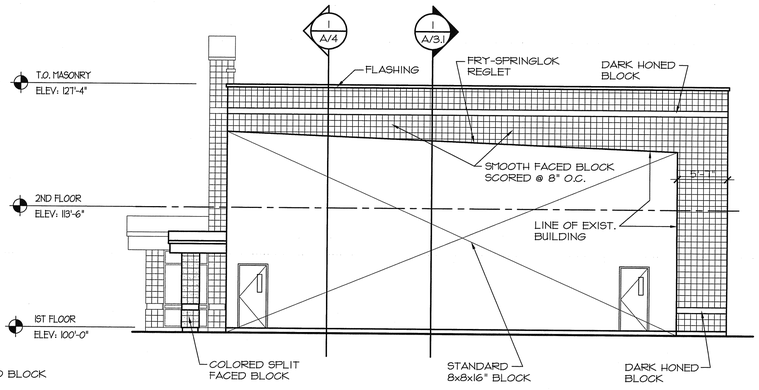

4/A2 EAST ELEVATION
SCALE: 1/8" = 1'-0"

PASKER GOULD AMES & WEAVER
ARCHITECTS PLANNERS
5263 SOUTH 300 WEST MURRAY, UTAH (801) 266-4669

DRAWN BY	CHECKED BY	JOB NO.	DATE
JWJ	CLA	2111	JULY 13, 1999

EXTERIOR ELEVATIONS

NEW BUILDING FOR

TAYLOR-HUNT ELECTRIC

1747 SOUTH 900 WEST, SALT LAKE CITY, UTAH

A
2

© PASKER GOULD AMES & WEAVER - 1999

1/A3 BUILDING SECTION

SCALE: 1/4 = 1'-0"

PASKER GOULD AMES & WEAVER
ARCHITECTS PLANNERS
5263 SOUTH 300 WEST MURRAY, UTAH (801) 266-4669

DRAWN BY JAJ
CHECKED BY GLA
JOB NO. 2171
DATE JULY 13, 1999

BUILDING SECTIONS
NEW BUILDING FOR
TAYLOR-HUNT ELECTRIC
1747 SOUTH 900 WEST, SALT LAKE CITY, UTAH

A
3

© PASKER GOULD AMES & WEAVER - 1999

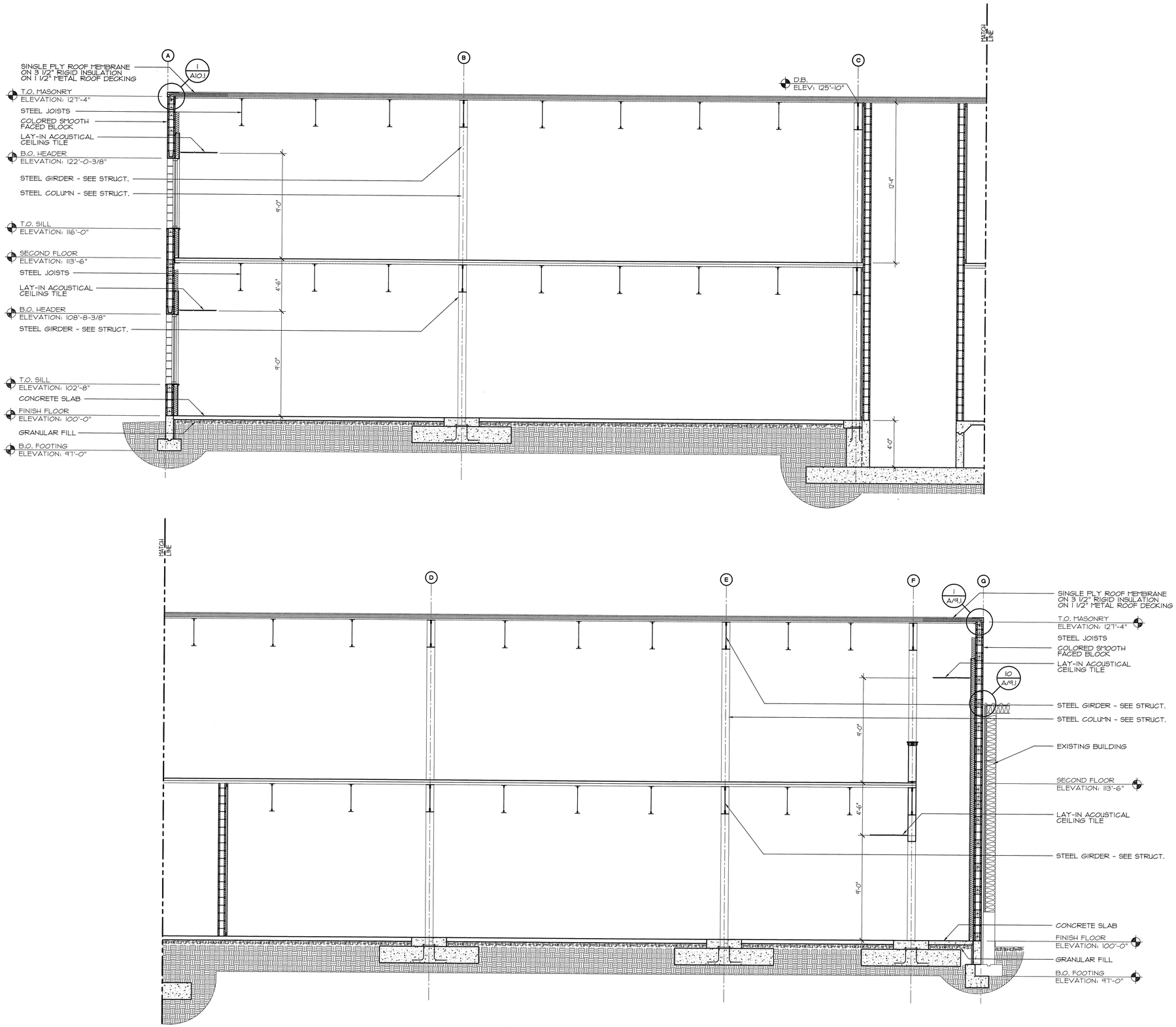

1 / A/3.1 BUILDING SECTION

SCALE: 1/4 = 1'-0"

PGA&W

PASKER GOULD AMES & WEAVER
ARCHITECTS PLANNERS
5263 SOUTH 300 WEST
MURRAY, UTAH (801) 266-4669

DRAWN BY	CHECKED BY	JOB NO.	DATE
JAJ	GLA	2711	JULY 13, 1999

BUILDING SECTIONS
NEW BUILDING FOR
TAYLOR-HUNT ELECTRIC
1747 SOUTH 900 WEST, SALT LAKE CITY, UTAH

A
3.1

© PASKER GOULD AMES & WEAVER - 1999

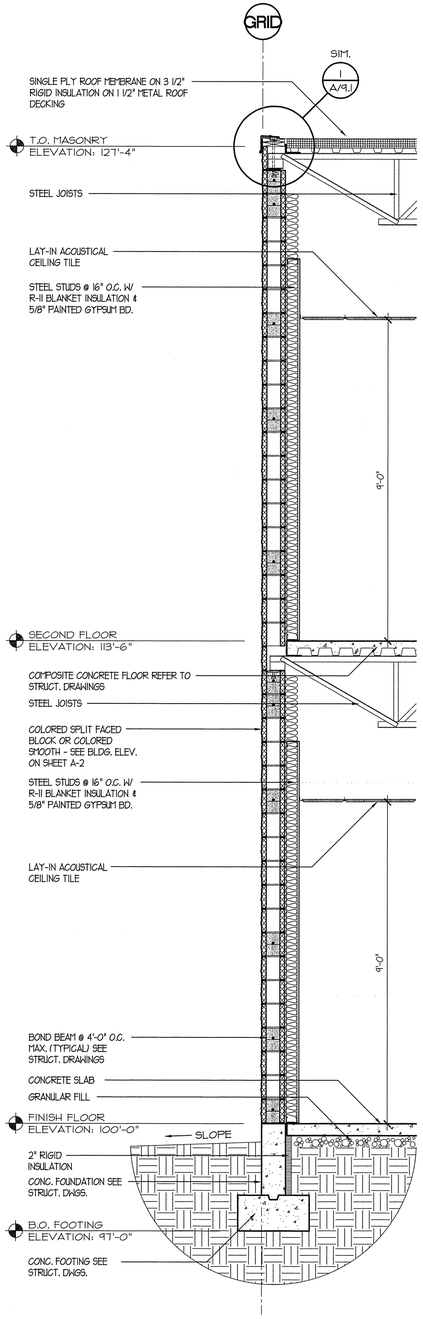

3/A/4 WALL SECTION
SCALE: 1/2 = 1'-0"

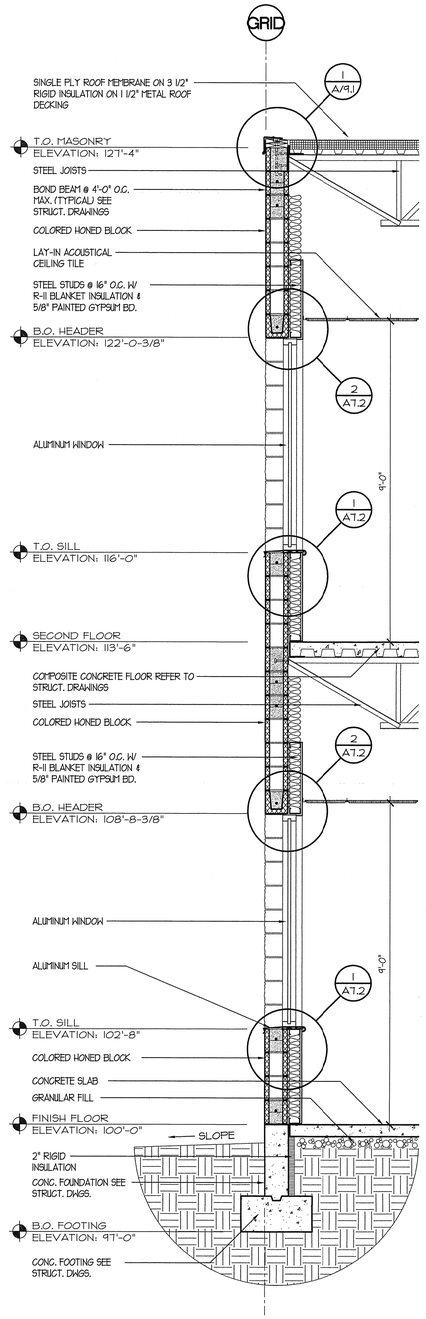

2/A/4 WALL SECTION
SCALE: 1/2 = 1'-0"

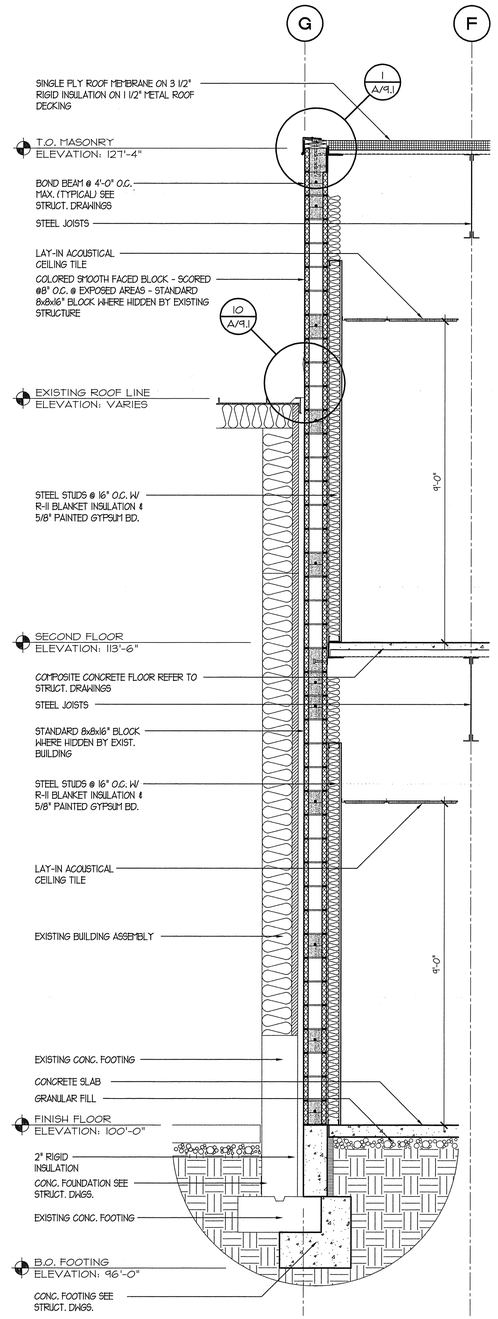

1/A/4 WALL SECTION
SCALE: 1/2 = 1'-0"

PASKER GOULD AMES & WEAVER
ARCHITECTS PLANNERS
5263 SOUTH 300 WEST MURRAY, UTAH (801) 266-4669

DRAWN BY	CHECKED BY	JOB NO.	DATE
JMJ	CLA	2111	JULY 13, 1999

WALL SECTIONS
NEW BUILDING FOR
TAYLOR-HUNT ELECTRIC
1747 SOUTH 900 WEST, SALT LAKE CITY, UTAH

A
4

© PASKER GOULD AMES & WEAVER - 1999

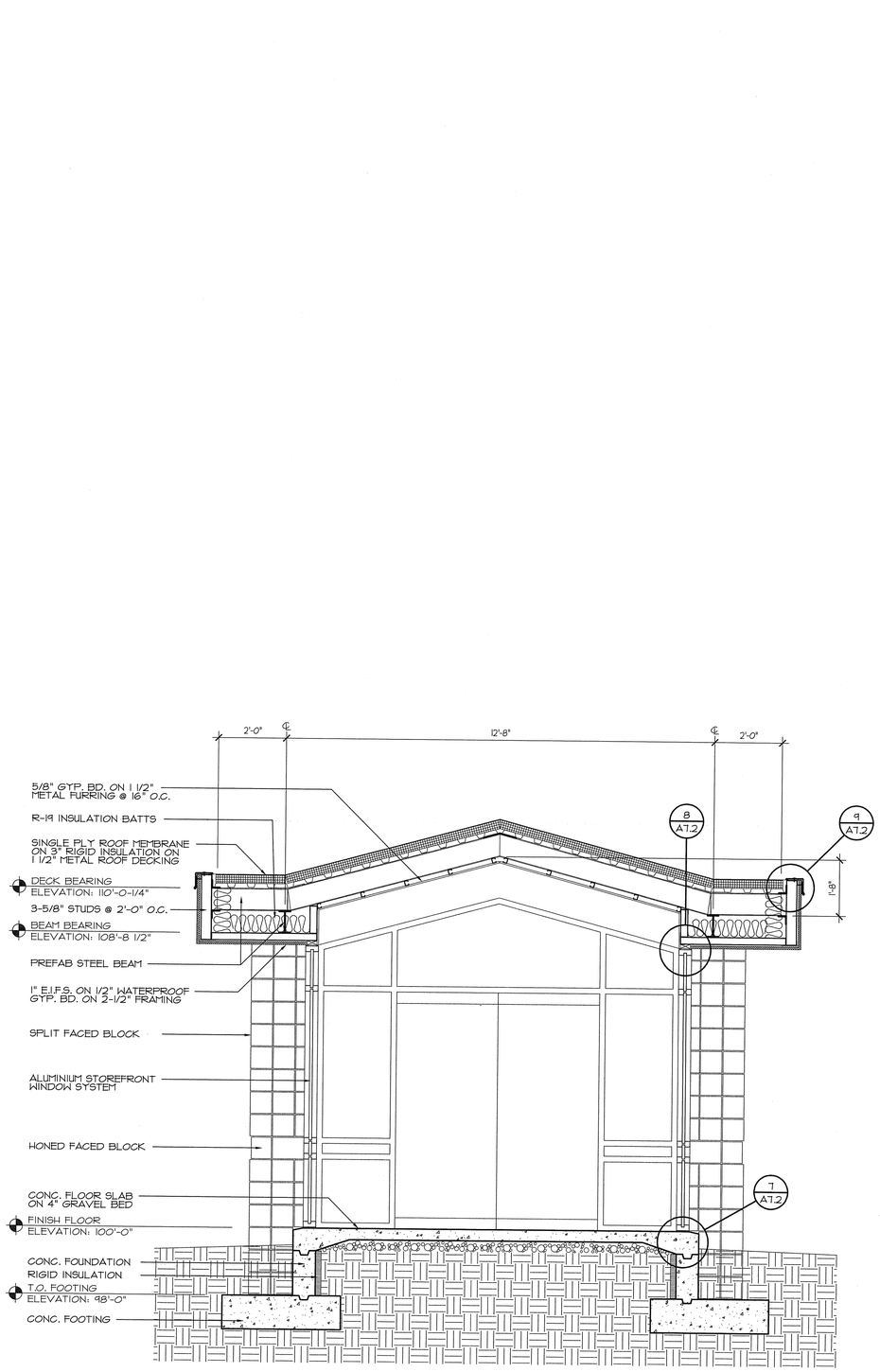

2 / A4.1 WALL SECTION

SCALE: 1/2 = 1'-0"

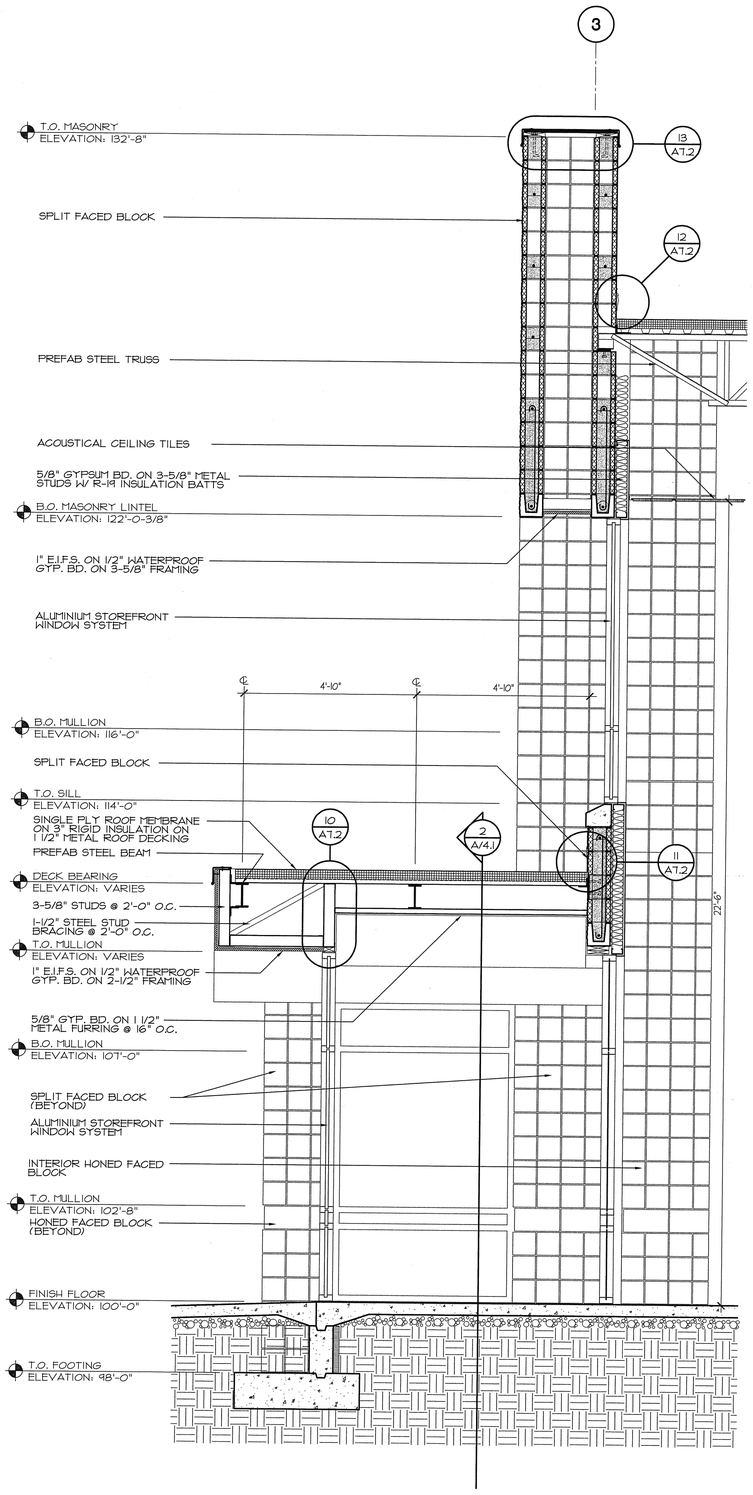

1 / A4.1 WALL SECTION

SCALE: 1/2 = 1'-0"

PGA&W

PASKER GOULD AMES & WEAVER
ARCHITECTS PLANNERS
5263 SOUTH 300 WEST MURRAY, UTAH (801) 266-4669

DRAWN BY	CHECKED BY	JOB NO.	DATE
JWJ	CLA	2111	JULY 13, 1999

WALL SECTIONS
NEW BUILDING FOR
TAYLOR-HUNT ELECTRIC
1747 SOUTH 900 WEST, SALT LAKE CITY, UTAH

A
4.1

© PASKER GOULD AMES & WEAVER - 1999

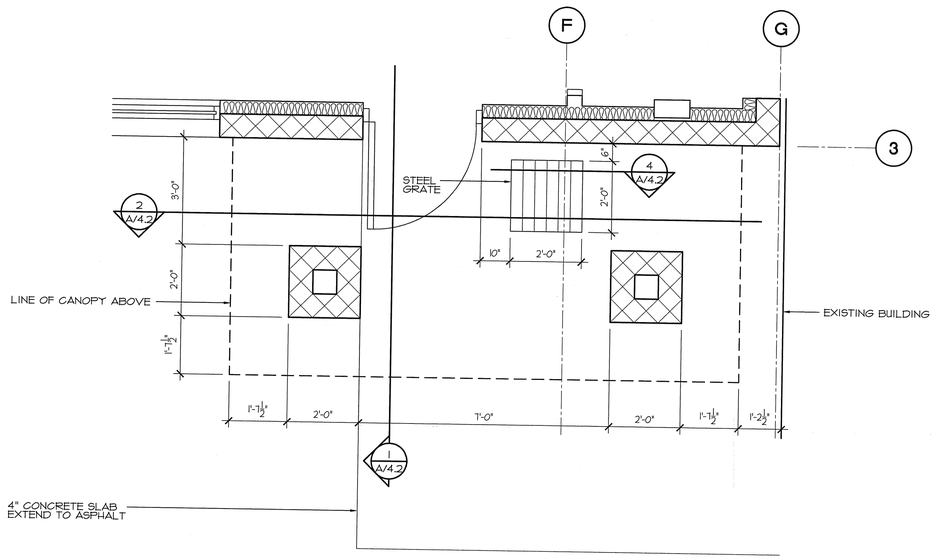

3 A/4.2 **ENLARGED CANOPY PLAN**
SCALE: 1/2 = 1'-0"

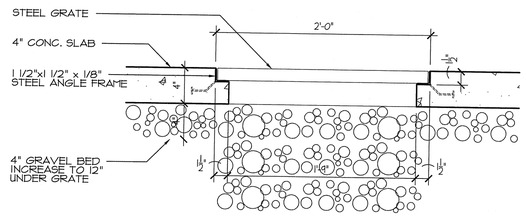

4 A/4.2 **SECTION THRU GRATE**
SCALE: 1 1/2 = 1'-0"

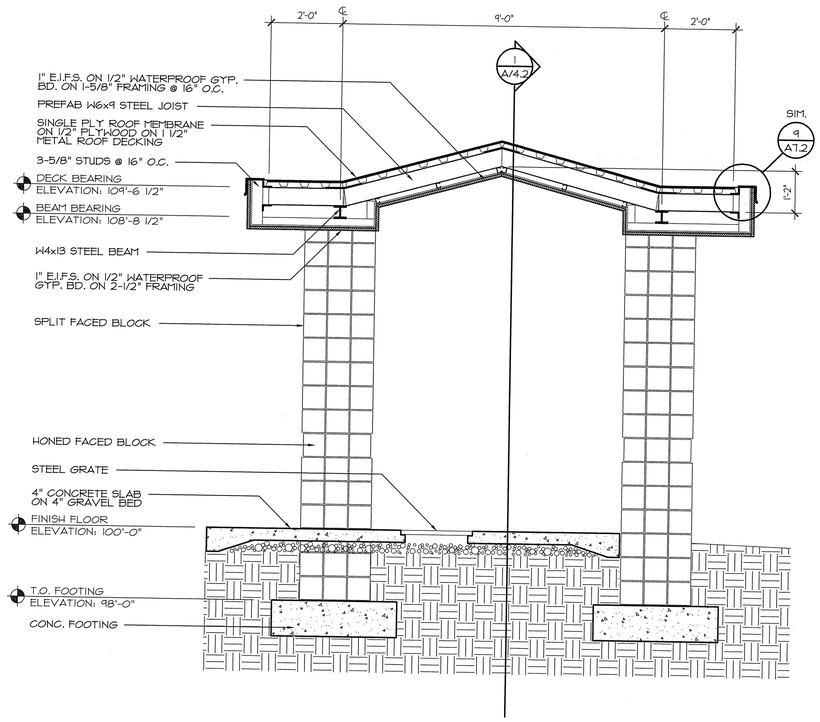

2 A/4.2 **WALL SECTION THRU CANOPY**
SCALE: 1/2 = 1'-0"

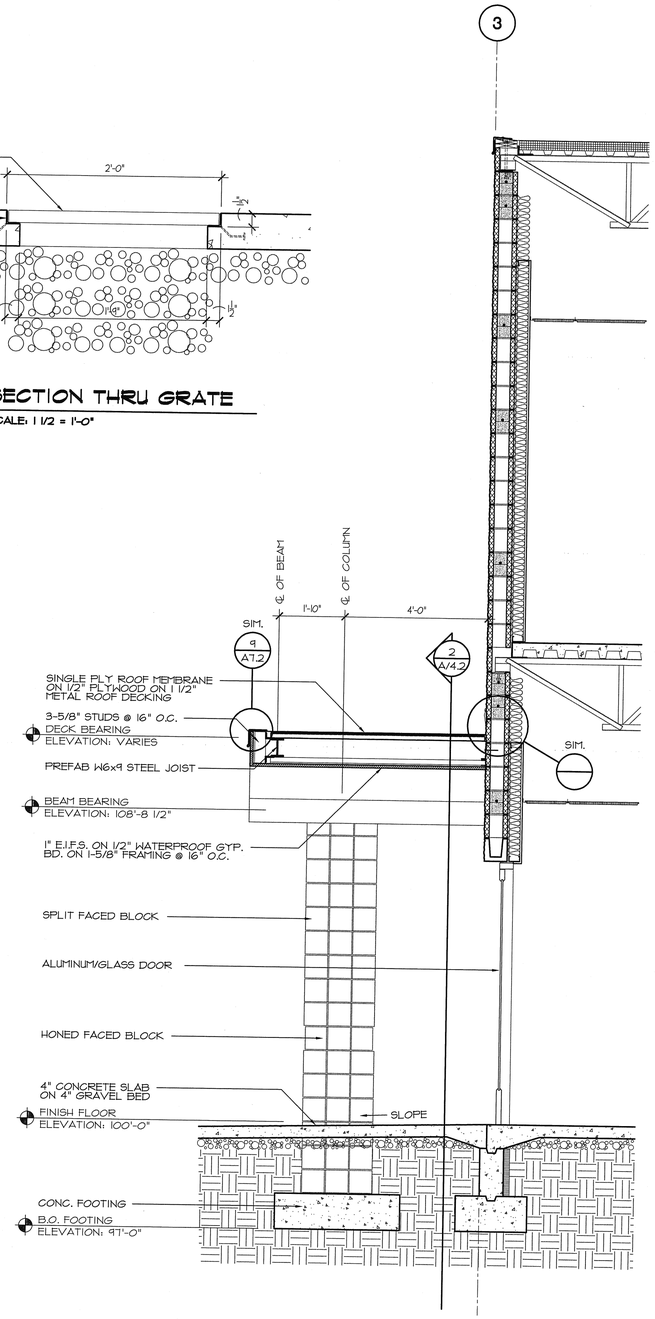

1 A/4.2 **WALL SECTION THRU CANOPY**
SCALE: 1/2 = 1'-0"

PASKER GOULD AMES & WEAVER
ARCHITECTS PLANNERS
5263 SOUTH 300 WEST MURRAY, UTAH (801) 266-4669

DRAWN BY JWJ
CHECKED BY CLA
JOB NO. 2171
DATE JULY 13, 1999

WALL SECTIONS
NEW BUILDING FOR
TAYLOR-HUNT ELECTRIC
1747 SOUTH 900 WEST, SALT LAKE CITY, UTAH

A
4.2

© PASKER GOULD AMES & WEAVER - 1999

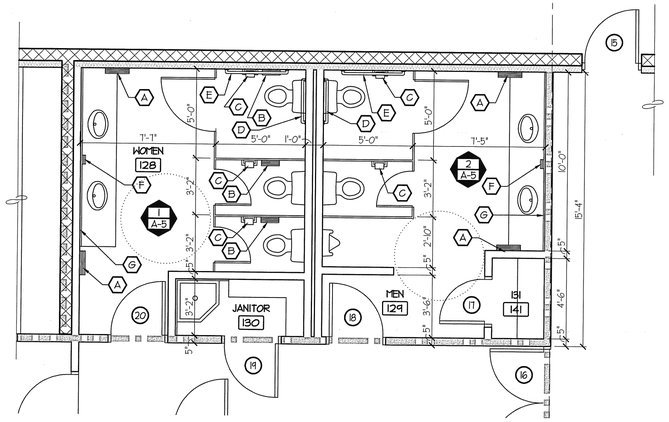

A A-5 ENLARGED BATHROOM PLAN
SCALE: 1/4 = 1'-0"

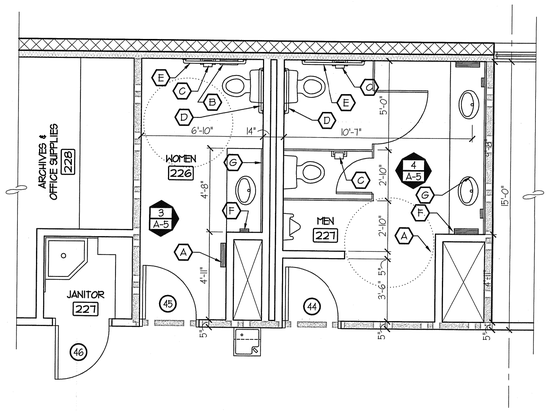

B A-5 ENLARGED BATHROOM PLAN
SCALE: 1/4 = 1'-0"

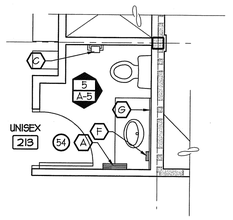

C A-5 ENLARGED BATHROOM PLAN
SCALE: 1/4 = 1'-0"

NORTH

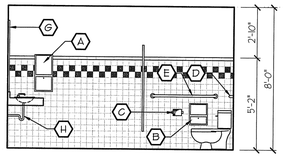

1 A5 WOMEN 128 NORTH ELEV.
SCALE: 1/4 = 1'-0"

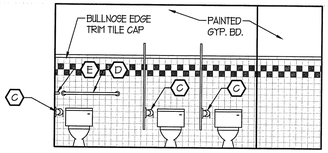

1 A5 WOMEN 128 EAST ELEV.
SCALE: 1/4 = 1'-0"

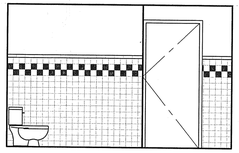

1 A5 WOMEN 128 SOUTH ELEV.
SCALE: 1/4 = 1'-0"

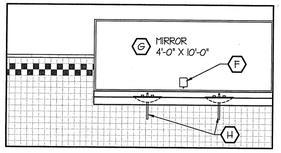

1 A5 WOMEN 128 WEST ELEV.
SCALE: 1/4 = 1'-0"

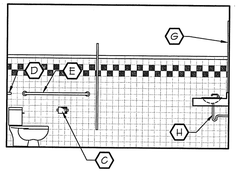

2 A5 MEN 129 NORTH ELEV.
SCALE: 1/4 = 1'-0"

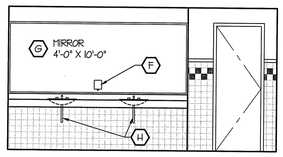

2 A5 MEN 129 EAST ELEV.
SCALE: 1/4 = 1'-0"

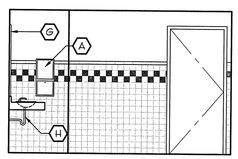

2 A5 MEN 129 SOUTH ELEV.
SCALE: 1/4 = 1'-0"

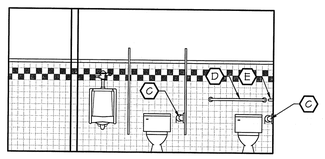

2 A5 MEN 129 WEST ELEV.
SCALE: 1/4 = 1'-0"

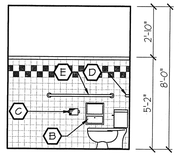

3 A5 WOMEN 226 NORTH ELEV.
SCALE: 1/4 = 1'-0"

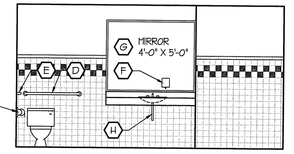

3 A5 WOMEN 226 EAST ELEV.
SCALE: 1/4 = 1'-0"

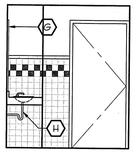

3 A5 WOMEN 226 SOUTH ELEV.
SCALE: 1/4 = 1'-0"

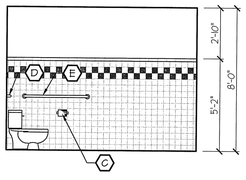

4 A5 MEN 225 NORTH ELEV.
SCALE: 1/4 = 1'-0"

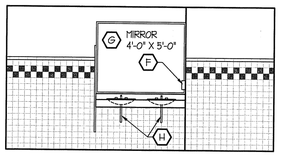

4 A5 MEN 225 EAST ELEV.
SCALE: 1/4 = 1'-0"

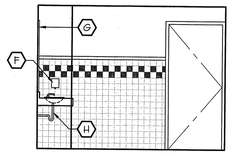

4 A5 MEN 225 SOUTH ELEV.
SCALE: 1/4 = 1'-0"

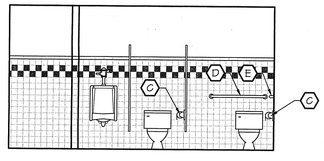

4 A5 MEN 225 WEST ELEV.
SCALE: 1/4 = 1'-0"

TOILET ACCESSORIES :

A	RECESSED MOUNTED PAPER TOWEL DISPENSER AND WASTE RECEPTACLE
B	SANITARY NAPKIN DISPOSAL
C	TOILET TISSUE DISPENSER
D	36" LONG HANDICAP GRAB BAR
E	42" LONG HANDICAP GRAB BAR
F	SURFACE MOUNTED SOAP DISPENSER
G	MIRROR (SEE INTERIOR ELEVATION FOR SIZE)
H	INSULATE DRAIN AND HOT WATER LINE
F.E.	INDICATES FINISHED END CASEWORK

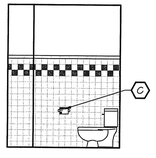

5 A5 UNISEX 213 NORTH ELEV.
SCALE: 1/4 = 1'-0"

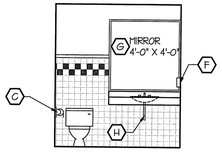

5 A5 UNISEX 213 EAST ELEV.
SCALE: 1/4 = 1'-0"

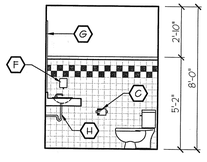

5 A5 UNISEX 213 SOUTH ELEV.
SCALE: 1/4 = 1'-0"

PGA&W

PASKER GOULD AMES & WEAVER
ARCHITECTS PLANNERS
5263 SOUTH 300 WEST MURRAY, UTAH (801) 266-4669

DRAWN BY	CHECKED BY	JOB NO.	DATE
JHJ	GLA	2171	JULY 13, 1999

ENLARGED PLANS & ELEVATIONS
NEW BUILDING FOR
TAYLOR-HUNT ELECTRIC
1747 SOUTH 900 WEST, SALT LAKE CITY, UTAH

A
5

Revised to Oct. 1999

© PASKER GOULD AMES & WEAVER - 1999

FIRST FLOOR PLAN

SCALE: 1/8" = 1'-0"

NORTH

PASKER GOULD AMES & WEAVER
ARCHITECTS PLANNERS
5263 SOUTH 300 WEST MURRAY, UTAH (801) 266-4669

DRAWN BY	CHECKED BY	JOB NO.	DATE
JAJ	CLA	2111	JULY 13, 1999

FURNITURE PLAN (FIRST FLOOR)

NEW BUILDING FOR

TAYLOR-HUNT ELECTRIC

1747 SOUTH 900 WEST, SALT LAKE CITY, UTAH

Rev. to oct. 1999

A
5.1

© PASKER GOULD AMES & WEAVER - 1999

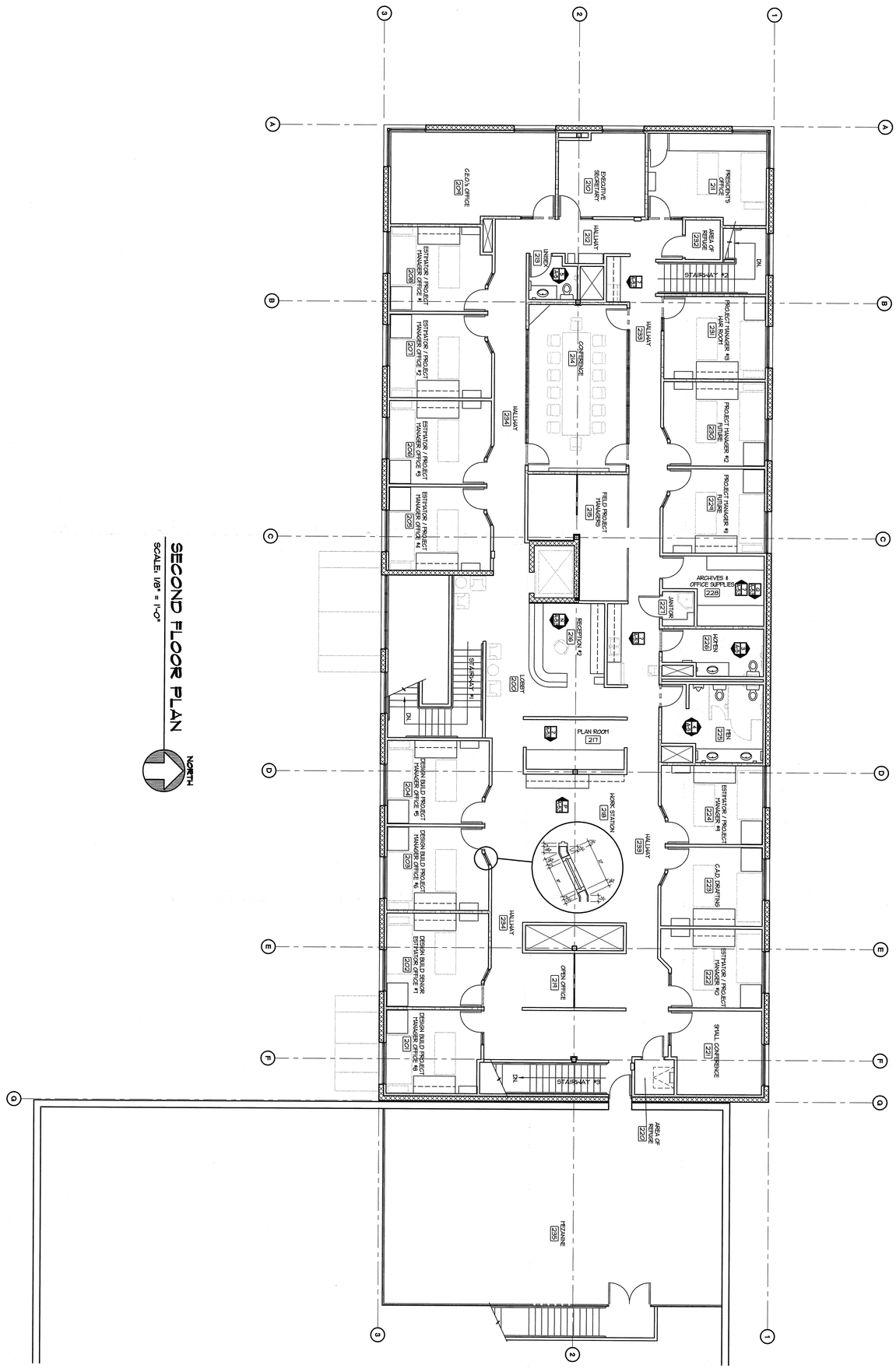

Rev. 26 OCT. 1999

A 5.2

FURNITURE PLAN (SECOND FLOOR)

NEW BUILDING FOR

TAYLOR-HUNT ELECTRIC

1747 SOUTH 900 WEST, SALT LAKE CITY, UTAH

DRAWN BY	JHJ
CHECKED BY	CLA
JOB NO.	2171
DATE	JULY 13, 1999

PASKER GOULD AMES & WEAVER

ARCHITECTS PLANNERS

5263 SOUTH 300 WEST MURRAY, UTAH (801) 266-4669

PGA&W

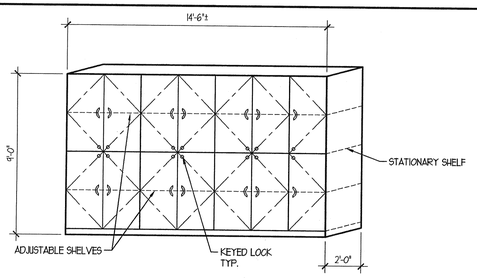

A A-53 **HATS & CLOTHING CABINET**
SCALE: 1/4 = 1'-0"

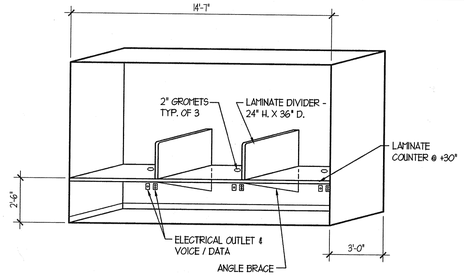

B A-53 **APPLICATIONS & TESTING CENTER 123 EAST ELEV.**
SCALE: 1/4 = 1'-0"

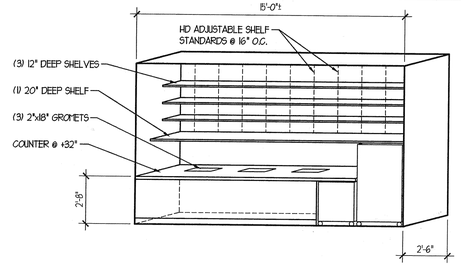

C A-53 **COMPUTER ROOM 136 WEST ELEV.**
SCALE: 1/4 = 1'-0"

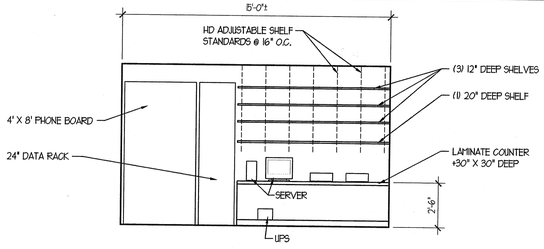

D A-53 **COMPUTER ROOM 136 EAST ELEV.**
SCALE: 1/4 = 1'-0"

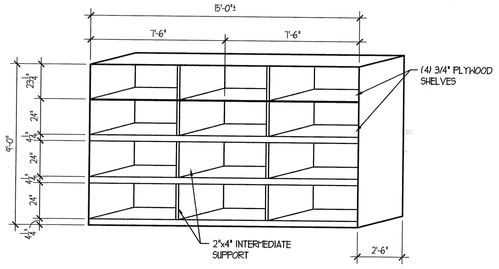

E/F A-53 **FILES 137 WEST ELEV. (EAST ELEV. SIM.)**
SCALE: 1/4 = 1'-0"

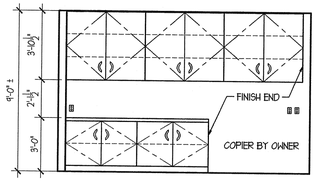

G A-53 **COPY CENTER 116 WEST ELEV.**
SCALE: 1/4 = 1'-0"

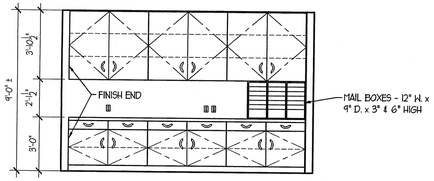

H A-53 **COPY CENTER 116 EAST ELEV.**
SCALE: 1/4 = 1'-0"

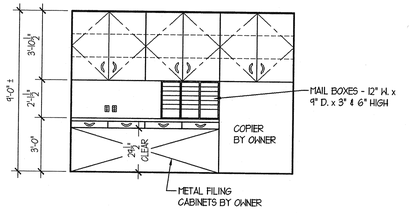

J A-53 **SERVICE BILLING AND DISPATCH 107 WEST ELEV.**
SCALE: 1/4 = 1'-0"

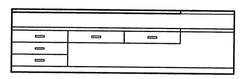

K A-53 **SERVICE BILLING AND DISPATCH 107 EAST ELEV.**
SCALE: 1/4 = 1'-0"

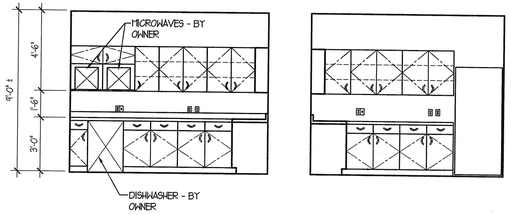

M A-53 **KITCHEN 112 SOUTH ELEV.**
SCALE: 1/4 = 1'-0"

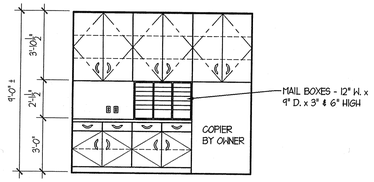

N A-53 **RECEPTION 216 NORTH ELEV.**
SCALE: 1/4 = 1'-0"

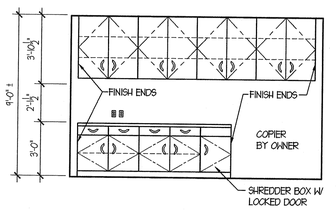

P A-53 **WORK STATION 219 WEST ELEV.**
SCALE: 1/4 = 1'-0"

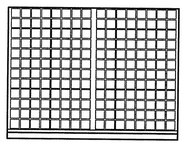

Q A-53 **ARCHIVES 232 EAST ELEV.**
SCALE: 1/4 = 1'-0"

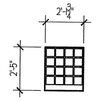

NOTE:
15 @ 36" DEEP
6 @ 30" DEEP

R A-53 **16 HOLE PLAN CUBBY UNIT**
SCALE: 1/4 = 1'-0"

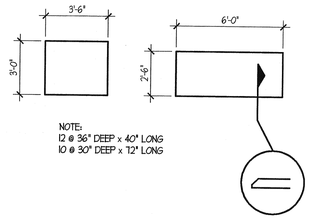

NOTE:
12 @ 36" DEEP x 40" LONG
10 @ 30" DEEP x 72" LONG

S A-53 **LAMINATE TOP**
SCALE: 1/4 = 1'-0"

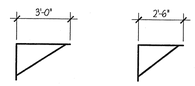

NOTE:
12 @ 36"
20 @ 30"

T A-53 **METAL WALL ANGLE SUPPORTS**
SCALE: 1/4 = 1'-0"

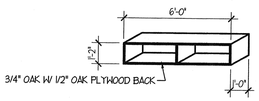

NOTE:
30 @ 72" WIDE x 14" HIGH x 12" DEEP

U A-53 **WALL MOUNT BOOK SHELVES**
SCALE: 1/4 = 1'-0"

PASKER GOULD AMES & WEAVER
ARCHITECTS PLANNERS
5263 SOUTH 300 WEST MURRAY, UTAH (801) 266-4669

DRAWN BY	CHECKED BY	JOB NO.	DATE
JHJ	CLA	2711	JULY 13, 1999

CABINETRY & MILLWORK
NEW BUILDING FOR
TAYLOR-HUNT ELECTRIC
1747 SOUTH 900 WEST, SALT LAKE CITY, UTAH

Rev. to oct. 1999

A
5.3

© PASKER GOULD AMES & WEAVER - 1999

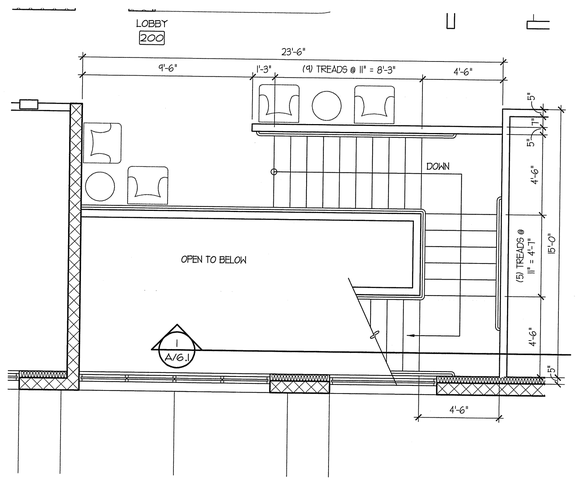

4 A-6 **SECOND FLOOR STAIR PLANS**
SCALE: 1/4" = 1'-0"

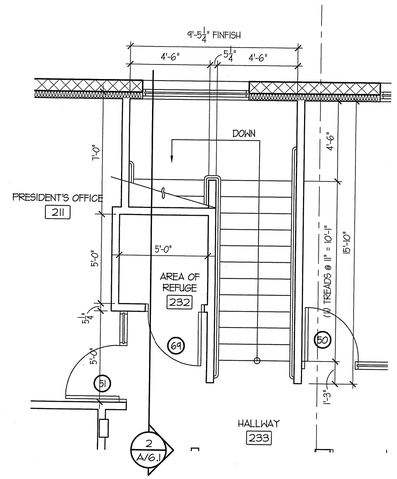

5 A-6 **SECOND FLOOR STAIR PLANS**
SCALE: 1/4" = 1'-0"

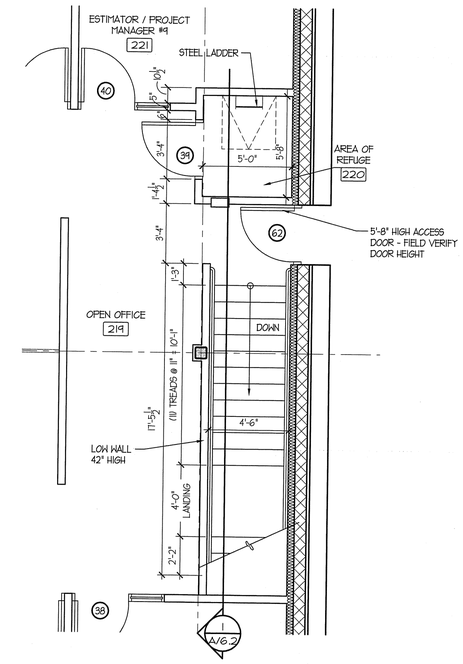

6 A-6 **SECOND FLOOR STAIR PLANS**
SCALE: 1/4" = 1'-0"

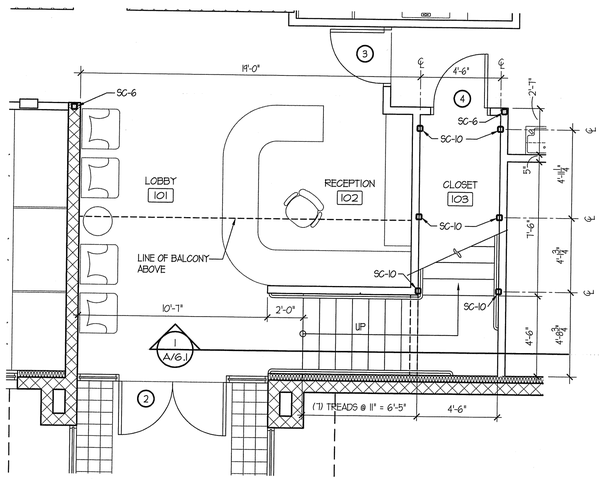

1 A-6 **FIRST FLOOR STAIR PLANS**
SCALE: 1/4" = 1'-0"

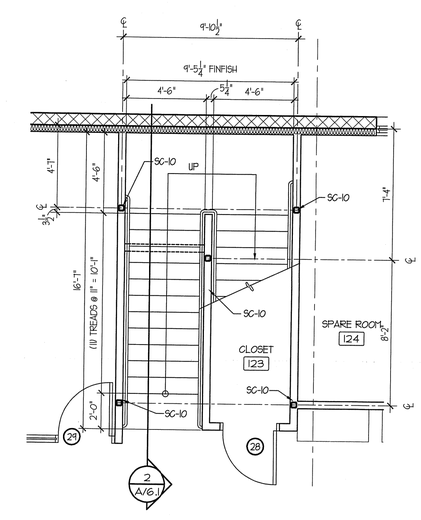

2 A-6 **FIRST FLOOR STAIR PLANS**
SCALE: 1/4" = 1'-0"

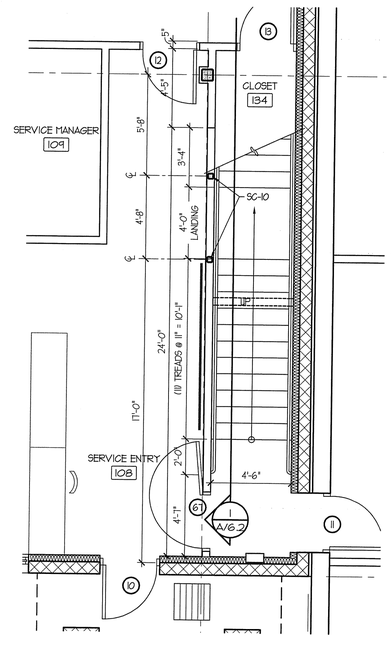

3 A-6 **FIRST FLOOR STAIR PLANS**
SCALE: 1/4" = 1'-0"

PGA&W

PASKER GOULD AMES & WEAVER
ARCHITECTS PLANNERS
5263 SOUTH 300 WEST
MURRAY, UTAH (801) 266-4669

DRAWN BY	CHECKED BY	JOB NO.	DATE
JWJ	GLA	2171	JULY 13, 1999

ENLARGED STAIR PLANS
NEW BUILDING FOR
TAYLOR-HUNT ELECTRIC
1747 SOUTH 900 WEST, SALT LAKE CITY, UTAH

A
6

© PASKER GOULD AMES & WEAVER - 1999

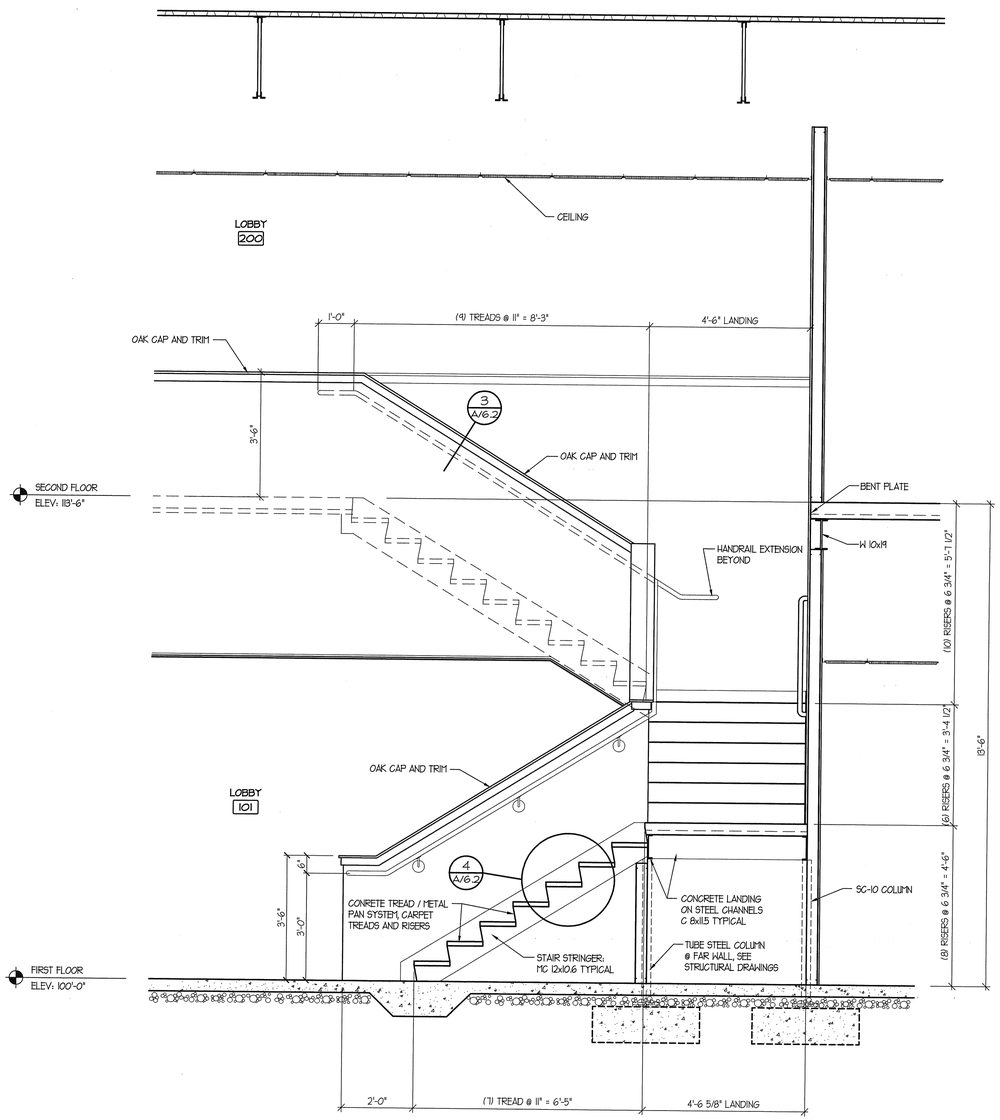

1 A6.1 **STAIR SECTION**

SCALE: 1/2" = 1'-0"

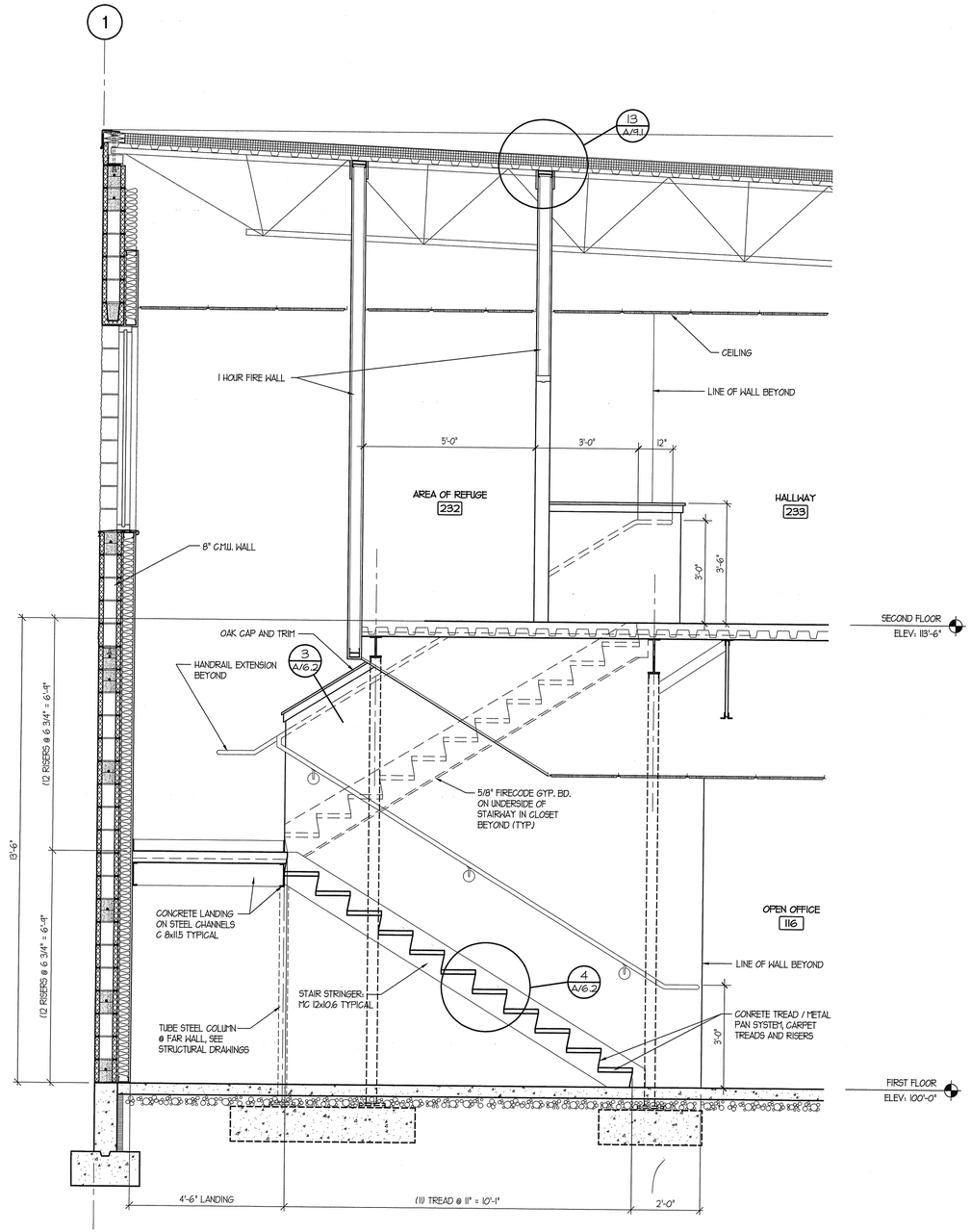

2 A6.1 **STAIR SECTION**

SCALE: 1/2" = 1'-0"

PASKER GOULD AMES & WEAVER
ARCHITECTS PLANNERS
5263 SOUTH 300 WEST MURRAY, UTAH (801) 266-4669

DRAWN BY	CHECKED BY	JOB NO.	DATE
JMJ	CLA	2171	JULY 19, 1999

STAIR SECTIONS
NEW BUILDING FOR
TAYLOR-HUNT ELECTRIC
1747 SOUTH 900 WEST, SALT LAKE CITY, UTAH

A
6.1

© PASKER GOULD AMES & WEAVER - 1999

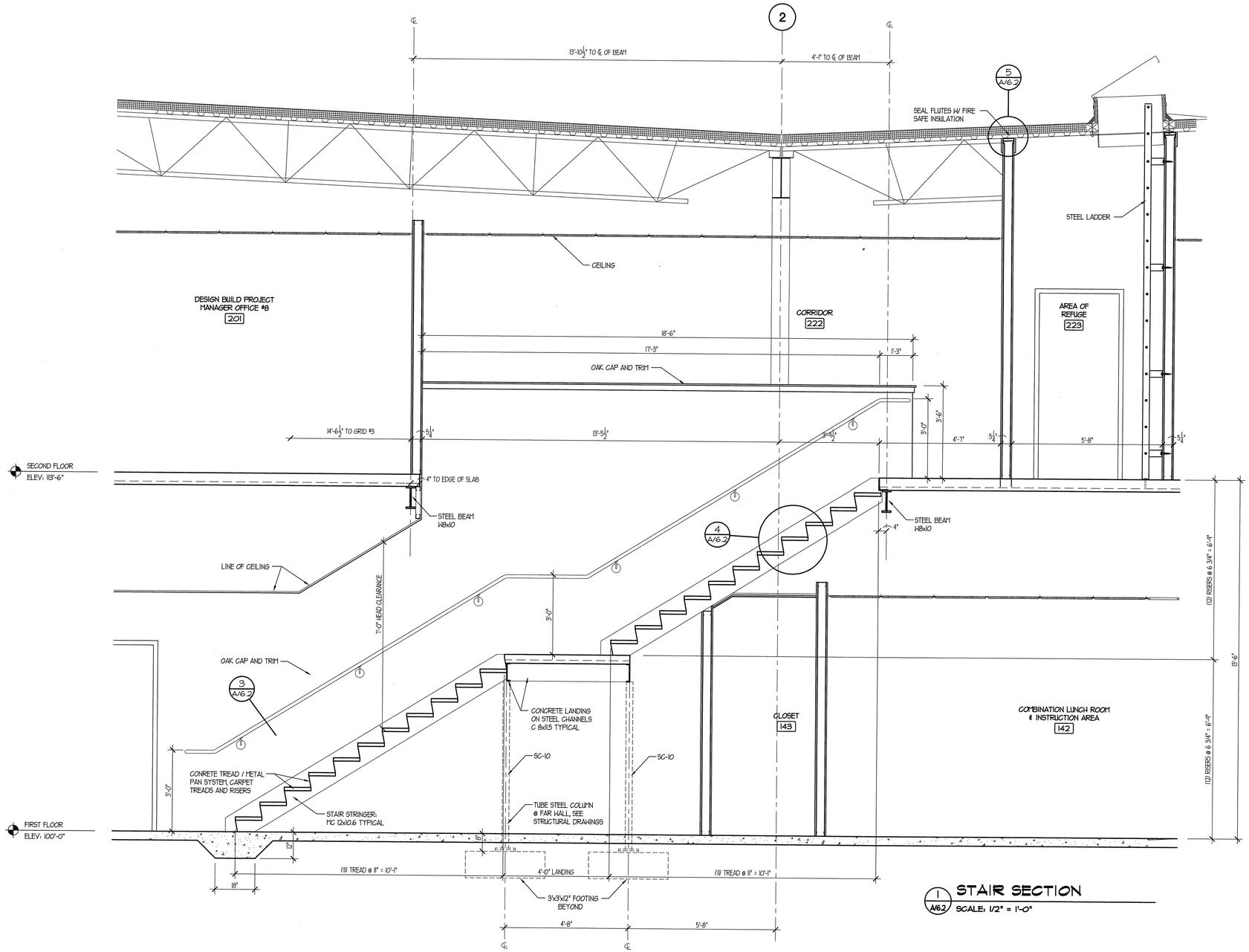

1 / A6.2 STAIR SECTION

SCALE: 1/2" = 1'-0"

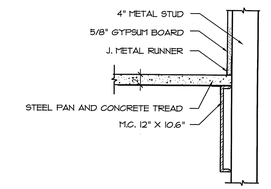

STAIR TREAD DETAIL — SCALE 1 1/2" = 1'-0" — 2

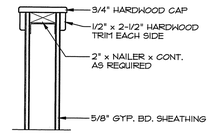

WALL CAP DETAIL — SCALE 1 1/2" = 1'-0" — 3

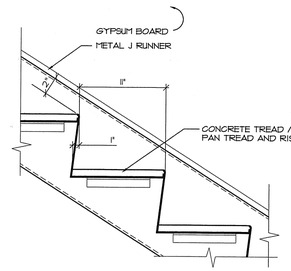

TREAD AND RISSER DETAIL — SCALE 1 1/2" = 1'-0" — 4

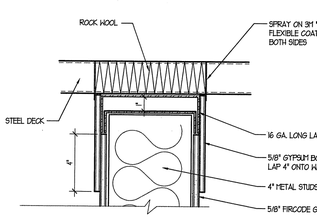

NOTE:
WHERE PARTITION FALLS IN LINE WITH A JOIST, ATTACH FLEX TRACK TO THE BOTTOM CHORD OF THE JOIST. ATTACH FURRING CHANNELS TO WEB MEMBERS OF JOIST AND SHEATH WITH 5/8" GYPSUM BOARD. LAP GYPSUM BOARD ON OVER THE FLEX TRACK, MIN. OF 4". DO NOT ATTACH GYPSUM BOARD TO FLEX TRACK.

FIRE TRACK DETAIL — SCALE 1 1/2" = 1'-0" — 5

PASKER GOULD AMES & WEAVER
ARCHITECTS PLANNERS
5263 SOUTH 300 WEST
MURRAY, UTAH (801) 266-4669

DRAWN BY JAJ | CHECKED BY CLA | JOB NO. 2171 | DATE JULY 13, 1999

STAIR SECTIONS & DETAILS
NEW BUILDING FOR
TAYLOR-HUNT ELECTRIC
1747 SOUTH 900 WEST, SALT LAKE CITY, UTAH

A
6.2

© PASKER GOULD AMES & WEAVER - 1999

* PRE-FINISHED NATURAL PLANE SLICED RED OAK. NOTE: FIELD VERIFY ALL OPENINGS SIZES. SIZES INDICATED ARE ROUGH OPENINGS.

FINISH SCHEDULE

ROOM NO.	ROOM NAME	FLOOR FINISH	WALLS WAINSCOT AND BASE												CEILING		REMARKS	ROOM
			NORTH	WAINSCOT	BASE	EAST	WAINSCOT	BASE	SOUTH	WAINSCOT	BASE	WEST	WAINSCOT	BASE	TYPE	HEIGHT		
100	ENTRY	PAVER TILE / WALK OFF MAT	WINDOW		PAVER TILE	WINDOW		PAVER TILE	WINDOW		PAVER TILE	WINDOW		PAVER TILE	GYPSUM BOARD	9'-0"		100
101	LOBBY	PAVER TILE	GYPSUM BOARD - PAINTED		PAVER TILE	GYPSUM BOARD - PAINTED		PAVER TILE	GYPSUM BOARD - PAINTED		PAVER TILE	EXPOSED CONCRETE - PAINTED		PAVER TILE	GYP. BD. / ACOUST. TILE - SEE SHEET A-8	22'-6" & 23'-6"	SEE SECTION FOR CEILING HEIGHTS	101
102	RECEPTION	PAVER TILE	GYPSUM BOARD - PAINTED		PAVER TILE	GYPSUM BOARD - PAINTED		PAVER TILE	GYPSUM BOARD - PAINTED		PAVER TILE	GYPSUM BOARD - PAINTED		PAVER TILE	ACOUSTICAL TILE	9'-0"		102
103	CLOSET	VYNIL TILE	GYPSUM BOARD - PAINTED		RESILIENT	GYPSUM BOARD - PAINTED		RESILIENT	GYPSUM BOARD - PAINTED		RESILIENT	GYPSUM BOARD - PAINTED		RESILIENT	ACOUSTICAL TILE	9'-0"		103
104	HALLWAY	VYNIL TILE	GYPSUM BOARD - PAINTED		RESILIENT	GYPSUM BOARD - PAINTED		RESILIENT	GYPSUM BOARD - PAINTED		RESILIENT	GYPSUM BOARD - PAINTED		RESILIENT	ACOUSTICAL TILE	9'-0"		104
105	MANPOWER & PRODUCTION	CARPET	GYPSUM BOARD - PAINTED		RESILIENT	GYPSUM BOARD - PAINTED		RESILIENT	GYPSUM BOARD - PAINTED		RESILIENT	GYPSUM BOARD - PAINTED		RESILIENT	ACOUSTICAL TILE	9'-0"		105
106	V.P. OF OPERATIONS	CARPET	GYPSUM BOARD - PAINTED		RESILIENT	GYPSUM BOARD - PAINTED		RESILIENT	GYPSUM BOARD - PAINTED		RESILIENT	GYPSUM BOARD - PAINTED		RESILIENT	ACOUSTICAL TILE	9'-0"		106
107	SERVICE BILLING & DISPATCH	VYNIL TILE	GYPSUM BOARD - PAINTED		RESILIENT	GYPSUM BOARD - PAINTED		RESILIENT	GYPSUM BOARD - PAINTED		RESILIENT	GYPSUM BOARD - PAINTED		RESILIENT	ACOUSTICAL TILE	9'-0"		107
108	SERVICE ENTRY	VYNIL TILE	GYPSUM BOARD - PAINTED		RESILIENT	GYPSUM BOARD - PAINTED		RESILIENT	GYPSUM BOARD - PAINTED		RESILIENT	GYPSUM BOARD - PAINTED		RESILIENT	ACOUSTICAL TILE	9'-0"		108
109	SERVICE MANAGER	CARPET	GYPSUM BOARD - PAINTED		RESILIENT	GYPSUM BOARD - PAINTED		RESILIENT	GYPSUM BOARD - PAINTED		RESILIENT	GYPSUM BOARD - PAINTED		RESILIENT	ACOUSTICAL TILE	9'-0"		109
110	ALCOVE	VYNIL TILE	GYPSUM BOARD - PAINTED		RESILIENT	GYPSUM BOARD - PAINTED		RESILIENT	GYPSUM BOARD - PAINTED		RESILIENT	GYPSUM BOARD - PAINTED		RESILIENT	ACOUSTICAL TILE	9'-0"		110
111	SERVICE MANAGER	CARPET	GYPSUM BOARD - PAINTED		RESILIENT	GYPSUM BOARD - PAINTED		RESILIENT	GYPSUM BOARD - PAINTED		RESILIENT	GYPSUM BOARD - PAINTED		RESILIENT	ACOUSTICAL TILE	9'-0"		111
112	KITCHEN	VYNIL TILE	GYPSUM BOARD - PAINTED		RESILIENT	GYPSUM BOARD - PAINTED		RESILIENT	GYPSUM BOARD - PAINTED		RESILIENT	GYPSUM BOARD - PAINTED		RESILIENT	ACOUSTICAL TILE	9'-0"		112
113	ELECTRICAL ROOM	SEALED CONCRETE	GYPSUM BOARD - PAINTED		RESILIENT	GYPSUM BOARD - PAINTED		RESILIENT	GYPSUM BOARD - PAINTED		RESILIENT	GYPSUM BOARD - PAINTED		RESILIENT	EXPOSED	-----		113
114	ELEVATOR EQUIPMENT	SEALED CONCRETE	EXPOSED CONCRETE - PAINTED		RESILIENT	EXPOSED CONCRETE - PAINTED		RESILIENT	EXPOSED CONCRETE - PAINTED		RESILIENT	EXPOSED CONCRETE - PAINTED		RESILIENT	GYPSUM BOARD	9'-0"		114
115	COPY CENTER	CARPET	GYPSUM BOARD - PAINTED		RESILIENT	GYPSUM BOARD - PAINTED		RESILIENT	GYPSUM BOARD - PAINTED		RESILIENT	GYPSUM BOARD - PAINTED		RESILIENT	ACOUSTICAL TILE	9'-0"		115
116	OPEN OFFICE	CARPET	GYPSUM BOARD - PAINTED		RESILIENT	GYPSUM BOARD - PAINTED		RESILIENT	GYPSUM BOARD - PAINTED		RESILIENT	GYPSUM BOARD - PAINTED		RESILIENT	ACOUSTICAL TILE	9'-0"		116
117	APPLICATIONS TESTING AREA	CARPET	GYPSUM BOARD - PAINTED		RESILIENT	EXPOSED CONCRETE - PAINTED		RESILIENT	GYPSUM BOARD - PAINTED		RESILIENT	GYPSUM BOARD - PAINTED		RESILIENT	ACOUSTICAL TILE	9'-0"		117
118	SMALL CONFERENCE	CARPET	GYPSUM BOARD - PAINTED		RESILIENT	GYPSUM BOARD - PAINTED		RESILIENT	GYPSUM BOARD - PAINTED		RESILIENT	GYPSUM BOARD - PAINTED		RESILIENT	ACOUSTICAL TILE	9'-0"		118
119	HUMAN RESOURCES	CARPET	GYPSUM BOARD - PAINTED		RESILIENT	GYPSUM BOARD - PAINTED		RESILIENT	GYPSUM BOARD - PAINTED		RESILIENT	GYPSUM BOARD - PAINTED		RESILIENT	ACOUSTICAL TILE	9'-0"		119
120	ACCOUNTING	CARPET	GYPSUM BOARD - PAINTED		RESILIENT	GYPSUM BOARD - PAINTED		RESILIENT	GYPSUM BOARD - PAINTED		RESILIENT	GYPSUM BOARD - PAINTED		RESILIENT	ACOUSTICAL TILE	9'-0"		120
121	EXECUTIVE VICE PRESIDENT	CARPET	GYPSUM BOARD - PAINTED		RESILIENT	GYPSUM BOARD - PAINTED		RESILIENT	GYPSUM BOARD - PAINTED		RESILIENT	GYPSUM BOARD - PAINTED		RESILIENT	ACOUSTICAL TILE	9'-0"		121
122	FINANCE AND CONTROL	CARPET	GYPSUM BOARD - PAINTED		RESILIENT	GYPSUM BOARD - PAINTED		RESILIENT	GYPSUM BOARD - PAINTED		RESILIENT	GYPSUM BOARD - PAINTED		RESILIENT	ACOUSTICAL TILE	9'-0"		122
123	CLOSET	VINYL TILE	GYPSUM BOARD - PAINTED		RESILIENT	GYPSUM BOARD - PAINTED		RESILIENT	GYPSUM BOARD - PAINTED		RESILIENT	GYPSUM BOARD - PAINTED		RESILIENT	ACOUSTICAL TILE	9'-0"		123
124	SPARE ROOM	CARPET	GYPSUM BOARD - PAINTED		RESILIENT	GYPSUM BOARD - PAINTED		RESILIENT	GYPSUM BOARD - PAINTED		RESILIENT	GYPSUM BOARD - PAINTED		RESILIENT	ACOUSTICAL TILE	9'-0"		124
125	SAFETY DIRECTOR	CARPET	GYPSUM BOARD - PAINTED		RESILIENT	GYPSUM BOARD - PAINTED		RESILIENT	GYPSUM BOARD - PAINTED		RESILIENT	GYPSUM BOARD - PAINTED		RESILIENT	ACOUSTICAL TILE	9'-0"		125
126	COMPUTER ROOM	VINYL TILE	GYPSUM BOARD - PAINTED		RESILIENT	GYPSUM BOARD - PAINTED		RESILIENT	GYPSUM BOARD - PAINTED		RESILIENT	GYPSUM BOARD - PAINTED		RESILIENT	ACOUSTICAL TILE	9'-0"		126
127	FILES	VINYL TILE	GYPSUM BOARD - PAINTED		RESILIENT	GYPSUM BOARD - PAINTED		RESILIENT	GYPSUM BOARD - PAINTED		RESILIENT	GYPSUM BOARD - PAINTED		RESILIENT	ACOUSTICAL TILE	9'-0"		127
128	WOMEN	VINYL TILE	GYPSUM BOARD - PAINTED	5' GLAZED TILE	RESILIENT	GYPSUM BOARD - PAINTED	5' GLAZED TILE	RESILIENT	GYPSUM BOARD - PAINTED	5' GLAZED TILE	RESILIENT	GYPSUM BOARD - PAINTED	5' GLAZED TILE	RESILIENT	GYPSUM BOARD	9'-0"		128
129	MEN	VINYL TILE	GYPSUM BOARD - PAINTED	5' GLAZED TILE	RESILIENT	GYPSUM BOARD - PAINTED	5' GLAZED TILE	RESILIENT	GYPSUM BOARD - PAINTED	5' GLAZED TILE	RESILIENT	GYPSUM BOARD - PAINTED	5' GLAZED TILE	RESILIENT	GYPSUM BOARD	9'-0"		129
130	JANITOR	VINYL TILE	GYPSUM BOARD - PAINTED	F.R.P.	RESILIENT	GYPSUM BOARD - PAINTED		RESILIENT	GYPSUM BOARD - PAINTED		RESILIENT	GYPSUM BOARD - PAINTED	F.R.P.	RESILIENT	GYPSUM BOARD	9'-0"		130
131	CLOSET	VINYL TILE	GYPSUM BOARD - PAINTED		RESILIENT	GYPSUM BOARD - PAINTED		RESILIENT	GYPSUM BOARD - PAINTED		RESILIENT	GYPSUM BOARD - PAINTED		RESILIENT	GYPSUM BOARD	9'-0"		131
132	HALLWAY	VINYL TILE	GYPSUM BOARD - PAINTED		RESILIENT	GYPSUM BOARD - PAINTED		RESILIENT	GYPSUM BOARD - PAINTED		RESILIENT	GYPSUM BOARD - PAINTED		RESILIENT	ACOUSTICAL TILE	9'-0"		132
133	LUNCH ROOM / INSTRUCTION	VINYL TILE	GYPSUM BOARD - PAINTED		RESILIENT	GYPSUM BOARD - PAINTED		RESILIENT	GYPSUM BOARD - PAINTED		RESILIENT	GYPSUM BOARD - PAINTED		RESILIENT	ACOUSTICAL TILE	10'-0"		133
134	CLOSET	VINYL TILE	GYPSUM BOARD - PAINTED		RESILIENT	GYPSUM BOARD - PAINTED		RESILIENT	GYPSUM BOARD - PAINTED		RESILIENT	GYPSUM BOARD - PAINTED		RESILIENT	GYPSUM BOARD	9'-0"		134
135	PLAN / STUDY	VINYL TILE	GYPSUM BOARD - PAINTED		RESILIENT	GYPSUM BOARD - PAINTED		RESILIENT	GYPSUM BOARD - PAINTED		RESILIENT	GYPSUM BOARD - PAINTED		RESILIENT	ACOUSTICAL TILE	9'-0"		135
136	PANEL SHOP	CARPET	GYPSUM BOARD - PAINTED		RESILIENT	GYPSUM BOARD - PAINTED		RESILIENT	GYPSUM BOARD - PAINTED		RESILIENT	GYPSUM BOARD - PAINTED		RESILIENT	ACOUSTICAL TILE	9'-0"		136
137	HALL	VINYL TILE	GYPSUM BOARD - PAINTED		RESILIENT	GYPSUM BOARD - PAINTED		RESILIENT	GYPSUM BOARD - PAINTED		RESILIENT	GYPSUM BOARD - PAINTED		RESILIENT	ACOUSTICAL TILE	9'-0"		137
138	ENGINEER	CARPET	GYPSUM BOARD - PAINTED		RESILIENT	GYPSUM BOARD - PAINTED		RESILIENT	GYPSUM BOARD - PAINTED		RESILIENT	GYPSUM BOARD - PAINTED		RESILIENT	ACOUSTICAL TILE	9'-0"		138
139	OPEN OFFICE	VINYL TILE	GYPSUM BOARD - PAINTED		RESILIENT	GYPSUM BOARD - PAINTED		RESILIENT	GYPSUM BOARD - PAINTED		RESILIENT	GYPSUM BOARD - PAINTED		RESILIENT	ACOUSTICAL TILE	9'-0"		139
200	LOBBY	CARPET	GYPSUM BOARD - PAINTED		RESILIENT	GYPSUM BOARD - PAINTED		RESILIENT	GYPSUM BOARD - PAINTED		RESILIENT	EXPOSED CONCRETE - PAINTED		RESILIENT	ACOUSTICAL TILE	9'-0"		200
201	PROJECT MANAGER OFFICE	CARPET	GYPSUM BOARD - PAINTED		RESILIENT	GYPSUM BOARD - PAINTED		RESILIENT	GYPSUM BOARD - PAINTED		RESILIENT	GYPSUM BOARD - PAINTED		RESILIENT	ACOUSTICAL TILE	9'-0"		201
202	SENIOR ESTIMATOR OFFICE	CARPET	GYPSUM BOARD - PAINTED		RESILIENT	GYPSUM BOARD - PAINTED		RESILIENT	GYPSUM BOARD - PAINTED		RESILIENT	GYPSUM BOARD - PAINTED		RESILIENT	ACOUSTICAL TILE	9'-0"		202
203	PROJECT MANAGER OFFICE	CARPET	GYPSUM BOARD - PAINTED		RESILIENT	GYPSUM BOARD - PAINTED		RESILIENT	GYPSUM BOARD - PAINTED		RESILIENT	GYPSUM BOARD - PAINTED		RESILIENT	ACOUSTICAL TILE	9'-0"		203
204	PROJECT MANAGER OFFICE	CARPET	GYPSUM BOARD - PAINTED		RESILIENT	GYPSUM BOARD - PAINTED		RESILIENT	GYPSUM BOARD - PAINTED		RESILIENT	GYPSUM BOARD - PAINTED		RESILIENT	ACOUSTICAL TILE	9'-0"		204
205	PROJECT MANAGER OFFICE	CARPET	GYPSUM BOARD - PAINTED		RESILIENT	EXPOSED CONCRETE - PAINTED		RESILIENT	GYPSUM BOARD - PAINTED		RESILIENT	GYPSUM BOARD - PAINTED		RESILIENT	ACOUSTICAL TILE	9'-0"		205
206	PROJECT MANAGER OFFICE	CARPET	GYPSUM BOARD - PAINTED		RESILIENT	GYPSUM BOARD - PAINTED		RESILIENT	GYPSUM BOARD - PAINTED		RESILIENT	GYPSUM BOARD - PAINTED		RESILIENT	ACOUSTICAL TILE	9'-0"		206
207	PROJECT MANAGER OFFICE	CARPET	GYPSUM BOARD - PAINTED		RESILIENT	GYPSUM BOARD - PAINTED		RESILIENT	GYPSUM BOARD - PAINTED		RESILIENT	GYPSUM BOARD - PAINTED		RESILIENT	ACOUSTICAL TILE	9'-0"		207
208	PROJECT MANAGER OFFICE	CARPET	GYPSUM BOARD - PAINTED		RESILIENT	GYPSUM BOARD - PAINTED		RESILIENT	GYPSUM BOARD - PAINTED		RESILIENT	GYPSUM BOARD - PAINTED		RESILIENT	ACOUSTICAL TILE	9'-0"		208
209	C.E.O.'S OFFICE	CARPET W/ BORDER	GYPSUM BOARD - PAINTED		HARDWOOD	GYPSUM BOARD - PAINTED		HARDWOOD	GYPSUM BOARD - PAINTED		HARDWOOD	GYPSUM BOARD - PAINTED		HARDWOOD	ACOUSTICAL TILE	9'-0"		209
210	EXECUTIVE SECRETARY	CARPET	GYPSUM BOARD - PAINTED		RESILIENT	GYPSUM BOARD - PAINTED		RESILIENT	GYPSUM BOARD - PAINTED		RESILIENT	GYPSUM BOARD - PAINTED		RESILIENT	ACOUSTICAL TILE	9'-0"		210
211	PRESIDENTS OFFICE	CARPET W/ BORDER	GYPSUM BOARD - PAINTED		HARDWOOD	GYPSUM BOARD - PAINTED		HARDWOOD	GYPSUM BOARD - PAINTED		HARDWOOD	GYPSUM BOARD - PAINTED		HARDWOOD	ACOUSTICAL TILE	9'-0"		211
212	HALLWAY	CARPET	GYPSUM BOARD - PAINTED		RESILIENT	GYPSUM BOARD - PAINTED		RESILIENT	GYPSUM BOARD - PAINTED		RESILIENT	GYPSUM BOARD - PAINTED		RESILIENT	ACOUSTICAL TILE	9'-0"		212
213	UNISEX REST ROOM	VINYL TILE	GYPSUM BOARD - PAINTED	5' GLAZED TILE	MOSAIC TILE	GYPSUM BOARD - PAINTED	5' GLAZED TILE	MOSAIC TILE	GYPSUM BOARD - PAINTED	5' GLAZED TILE	MOSAIC TILE	GYPSUM BOARD - PAINTED	5' GLAZED TILE	MOSAIC TILE	GYPSUM BOARD	9'-0"		213
214	CONFERENCE	CARPET W/ BORDER	GYPSUM BOARD - PAINTED		HARDWOOD	GYPSUM BOARD - PAINTED		HARDWOOD	GYPSUM BOARD - PAINTED		HARDWOOD	GYPSUM BOARD - PAINTED		HARDWOOD	GYP. BD. / ACOUST. TILE - SEE SHEET A-8.1	9'-0" & 10'-0"	SEE SECTION FOR CEILING HEIGHTS	214
215	FIELD PROJECT MANAGER	CARPET	GYPSUM BOARD - PAINTED		RESILIENT	GYPSUM BOARD - PAINTED		RESILIENT	GYPSUM BOARD - PAINTED		RESILIENT	GYPSUM BOARD - PAINTED		RESILIENT	ACOUSTICAL TILE	9'-0"		215
216	RECEPTION #2	CARPET	GYPSUM BOARD - PAINTED		RESILIENT	GYPSUM BOARD - PAINTED		RESILIENT	GYPSUM BOARD - PAINTED		RESILIENT	GYPSUM BOARD - PAINTED		RESILIENT	ACOUSTICAL TILE	9'-0"		216
217	PLAN ROOM	CARPET	GYPSUM BOARD - PAINTED		RESILIENT	GYPSUM BOARD - PAINTED		RESILIENT	GYPSUM BOARD - PAINTED		RESILIENT	GYPSUM BOARD - PAINTED		RESILIENT	ACOUSTICAL TILE	9'-0"		217
218	WORK STATION	CARPET	GYPSUM BOARD - PAINTED		RESILIENT	GYPSUM BOARD - PAINTED		RESILIENT	GYPSUM BOARD - PAINTED		RESILIENT	GYPSUM BOARD - PAINTED		RESILIENT	ACOUSTICAL TILE	9'-0"		218
219	OPEN OFFICE	CARPET	GYPSUM BOARD - PAINTED		RESILIENT	GYPSUM BOARD - PAINTED		RESILIENT	GYPSUM BOARD - PAINTED		RESILIENT	GYPSUM BOARD - PAINTED		RESILIENT	ACOUSTICAL TILE	9'-0"		219
220	AREA OF REFUSE	CARPET	GYPSUM BOARD - PAINTED		RESILIENT	GYPSUM BOARD - PAINTED		RESILIENT	GYPSUM BOARD - PAINTED		RESILIENT	GYPSUM BOARD - PAINTED		RESILIENT	EXPOSED	13'-0"		220
221	SMALL CONFERENCE	CARPET	GYPSUM BOARD - PAINTED		RESILIENT	GYPSUM BOARD - PAINTED		RESILIENT	GYPSUM BOARD - PAINTED		RESILIENT	GYPSUM BOARD - PAINTED		RESILIENT	ACOUSTICAL TILE	9'-0"		221
222	PROJECT MANAGER	CARPET	GYPSUM BOARD - PAINTED		RESILIENT	GYPSUM BOARD - PAINTED		RESILIENT	GYPSUM BOARD - PAINTED		RESILIENT	GYPSUM BOARD - PAINTED		RESILIENT	ACOUSTICAL TILE	9'-0"		222
223	CAD DRAFTING	CARPET	GYPSUM BOARD - PAINTED		RESILIENT	GYPSUM BOARD - PAINTED		RESILIENT	GYPSUM BOARD - PAINTED		RESILIENT	GYPSUM BOARD - PAINTED		RESILIENT	ACOUSTICAL TILE	9'-0"		223
224	PROJECT MANAGER	CARPET	GYPSUM BOARD - PAINTED		RESILIENT	GYPSUM BOARD - PAINTED		RESILIENT	GYPSUM BOARD - PAINTED		RESILIENT	GYPSUM BOARD - PAINTED		RESILIENT	ACOUSTICAL TILE	9'-0"		224
225	MEN	VINYL TILE	GYPSUM BOARD - PAINTED	5' GLAZED TILE	MOSAIC TILE	GYPSUM BOARD - PAINTED	5' GLAZED TILE	MOSAIC TILE	GYPSUM BOARD - PAINTED	5' GLAZED TILE	MOSAIC TILE	GYPSUM BOARD - PAINTED	5' GLAZED TILE	MOSAIC TILE	GYPSUM BOARD	9'-0"		225
226	WOMEN	VINYL TILE	GYPSUM BOARD - PAINTED	5' GLAZED TILE	MOSAIC TILE	GYPSUM BOARD - PAINTED	5' GLAZED TILE	MOSAIC TILE	GYPSUM BOARD - PAINTED	5' GLAZED TILE	MOSAIC TILE	GYPSUM BOARD - PAINTED	5' GLAZED TILE	MOSAIC TILE	GYPSUM BOARD	9'-0"		226
227	JANITOR	VINYL TILE	GYPSUM BOARD - PAINTED		RESILIENT	GYPSUM BOARD - PAINTED		RESILIENT	GYPSUM BOARD - PAINTED		RESILIENT	GYPSUM BOARD - PAINTED		RESILIENT	GYPSUM BOARD	9'-0"		227
228	ARCHIVES & OFFICE SUPPLIES	VINYL TILE	GYPSUM BOARD - PAINTED		RESILIENT	GYPSUM BOARD - PAINTED		RESILIENT	GYPSUM BOARD - PAINTED		RESILIENT	GYPSUM BOARD - PAINTED		RESILIENT	ACOUSTICAL TILE	9'-0"		228
229	PROJECT MANAGER FUTURE	CARPET	GYPSUM BOARD - PAINTED		RESILIENT	GYPSUM BOARD - PAINTED		RESILIENT	GYPSUM BOARD - PAINTED		RESILIENT	GYPSUM BOARD - PAINTED		RESILIENT	ACOUSTICAL TILE	9'-0"		229
230	PROJECT MANAGER FUTURE	CARPET	GYPSUM BOARD - PAINTED		RESILIENT	GYPSUM BOARD - PAINTED		RESILIENT	GYPSUM BOARD - PAINTED		RESILIENT	GYPSUM BOARD - PAINTED		RESILIENT	ACOUSTICAL TILE	9'-0"		230
231	PROJECT MANAGER HAIR ROOM	CARPET	GYPSUM BOARD - PAINTED		RESILIENT	GYPSUM BOARD - PAINTED		RESILIENT	GYPSUM BOARD - PAINTED		RESILIENT	GYPSUM BOARD - PAINTED		RESILIENT	ACOUSTICAL TILE	9'-0"		231
232	AREA OF REFUSE	CARPET	GYPSUM BOARD - PAINTED		RESILIENT	GYPSUM BOARD - PAINTED		RESILIENT	GYPSUM BOARD - PAINTED		RESILIENT	GYPSUM BOARD - PAINTED		RESILIENT	ACOUSTICAL TILE	9'-0"		232
233	HALLWAY	CARPET	GYPSUM BOARD - PAINTED		RESILIENT	GYPSUM BOARD - PAINTED		RESILIENT	GYPSUM BOARD - PAINTED		RESILIENT	GYPSUM BOARD - PAINTED		RESILIENT	ACOUSTICAL TILE	9'-0"		233
234	HALLWAY	CARPET	GYPSUM BOARD - PAINTED		RESILIENT	GYPSUM BOARD - PAINTED		RESILIENT	GYPSUM BOARD - PAINTED		RESILIENT	GYPSUM BOARD - PAINTED		RESILIENT	ACOUSTICAL TILE	9'-0"		234
235	MEZZANINE																	235

TAYLOR-HUNT ELECTRIC - OFFICE BUILDING

FINISHES

I. Painted Gypsum Board — Kwal Howell GN050 Plum Black White
Painted Steel Jambs — Kwal Howell 8715 D Moose Point

II. Carpet — Design Weave 07900 Paladian
Border (Choose One) a. Aladdin 989 Char Gray
b. Aladdin 930 Taupestone
c. Aladdin 898 Rich Walnut

III. Vinyl Comp. Tile a. Azrock V813 Sand Dune
b. Azrock VS 289 Toast Solid

IV. Porcelain Entry Tile — American Olean R-104 Conchos

V. Vinyl Base- Carpet — Flexco WF 037 Dark Beige
Top Set @ VCT — Flexco WF 065 Cappuccino

VI. Ceramic Tile Field — Dal Tile D-135 Almond
Accent Mens — Dal Tile D-42 Aegean
Accent Womens Dal Tile K-188 Wild Rose

VII. Cabinet Work — Red Oak Veneer Natural
Cabinet tops a. Formica 3177 Omega Granite
b. Formica 658 Fallstone Amer Granite
c. Formica 7230 Desert Erosion

VIII. Solid Core Doors — Red Oak Natural

PASKER GOULD AMES & WEAVER
ARCHITECTS PLANNERS
5263 SOUTH 300 WEST
MURRAY, UTAH (801) 266-4669

DRAWN BY JHJ
CHECKED BY CLA
JOB NO. 2711
DATE OCTOBER 20, 1999

FINISH SCHEDULE
NEW BUILDING FOR
TAYLOR-HUNT ELECTRIC
1741 SOUTH 900 WEST, SALT LAKE CITY, UTAH

REVISED OCT. 21, 1999

A
7

© PASKER GOULD AMES & WEAVER - 1999

DOOR SCHEDULE

DOOR NO.	DOOR SIZE	DOOR TYPE	DOOR MATERIAL	DOOR FINISH	DETAILS HEAD	DETAILS JAMB	DETAILS SILL	FRAME TYPE	FRAME MATERIAL	FRAME FINISH	RATING	HARDWARE GROUP	REMARKS	DOOR NO.
(1)	3'-0" x 7'-0" x 1 3/4"(PAIR)	D1	ALUM/GLASS	ANODIZED	-	-	-	E	ALUM.	ANODIZED	-	GROUP 1	-	(1)
(2)	3'-0" x 7'-0" x 1 3/4"(PAIR)	D1	ALUM/GLASS	ANODIZED	-	-	-	E	ALUM.	ANODIZED	-	GROUP 2	-	(2)
(3)	3'-0" x 7'-0" x 1 3/4"	D4	S.C. WOOD	PRE-FINISH *	3-A/T.2 SIM.	3-A/T.2	-	F1	STEEL	PAINT	-	GROUP 3	-	(3)
(4)	3'-0" x 7'-0" x 1 3/4"	D4	S.C. WOOD	PRE-FINISH *	3-A/T.2 SIM.	3-A/T.2	-	F1	STEEL	PAINT	-	GROUP 4	-	(4)
(5)	3'-0" x 7'-0" x 1 3/4"	D4	S.C. WOOD	PRE-FINISH *	3-A/T.2 SIM.	3-A/T.2	-	F3	STEEL	PAINT	-	GROUP 5	-	(5)
(6)	3'-0" x 7'-0" x 1 3/4"	D4	S.C. WOOD	PRE-FINISH *	3-A/T.2 SIM.	3-A/T.2	-	F3	STEEL	PAINT	-	GROUP 5	-	(6)
(7)	3'-0" x 7'-0" x 1 3/4"	D4	S.C. WOOD	PRE-FINISH *	3-A/T.2 SIM.	3-A/T.2	-	F3	STEEL	PAINT	-	GROUP 5	-	(7)
(8)	3'-0" x 7'-0" x 1 3/4"	D4	S.C. WOOD	PRE-FINISH *	3-A/T.2 SIM.	3-A/T.2	-	F3	STEEL	PAINT	-	GROUP 4	-	(8)
(9)	3'-0" x 7'-0" x 1 3/4"	D4	S.C. WOOD	PRE-FINISH *	3-A/T.2 SIM.	3-A/T.2	-	F3	STEEL	PAINT	-	GROUP 5	-	(9)
(10)	3'-0" x 7'-0" x 1 3/4"	D2	ALUM/GLASS	ANODIZED	4-A/T.2 SIM.	4-A/T.2	-	F1	ALUM.	ANODIZED	-	GROUP 6	-	(10)
(11)	3'-0" x 7'-0" x 1 3/4"	D6	S.C. WOOD	PRE-FINISH *	-	-	-	F1	STEEL	PAINT	1 1/2 HR.	GROUP 7	-	(11)
(12)	3'-0" x 7'-0" x 1 3/4"	D3	S.C. WOOD	PRE-FINISH *	3-A/T.2 SIM.	3-A/T.2	-	F1	STEEL	PAINT	-	GROUP 8	-	(12)
(13)	3'-0" x 7'-0" x 1 3/4"	D4	S.C. WOOD	PRE-FINISH *	3-A/T.2 SIM.	3-A/T.2	-	F1	STEEL	PAINT	-	GROUP 4	-	(13)
(14)	3'-0" x 7'-0" x 1 3/4"	D6	S.C. WOOD	PRE-FINISH *	-	-	-	F1	STEEL	PAINT	1 1/2 HR.	GROUP 7	-	(14)
(15)	3'-0" x 7'-0" x 1 3/4"	D4	H. METAL	PRE-FINISH *	4-A/T.2 SIM.	4-A/T.2	-	F1	STEEL	PAINT	-	GROUP 9	-	(15)
(16)	3'-0" x 7'-0" x 1 3/4"(PAIR)	D5	S.C. WOOD	PRE-FINISH *	3-A/T.2 SIM.	3-A/T.2	-	F2	STEEL	PAINT	-	GROUP 10	-	(16)
(17)	3'-0" x 7'-0" x 1 3/4"	D4	S.C. WOOD	PRE-FINISH *	3-A/T.2 SIM.	3-A/T.2	-	F1	STEEL	PAINT	-	GROUP 4	-	(17)
(18)	3'-0" x 7'-0" x 1 3/4"	D4	S.C. WOOD	PRE-FINISH *	3-A/T.2 SIM.	3-A/T.2	-	F1	STEEL	PAINT	-	GROUP 11	-	(18)
(19)	3'-0" x 7'-0" x 1 3/4"	D4	S.C. WOOD	PRE-FINISH *	3-A/T.2 SIM.	3-A/T.2	-	F1	STEEL	PAINT	-	GROUP 4	-	(19)
(20)	3'-0" x 7'-0" x 1 3/4"	D4	S.C. WOOD	PRE-FINISH *	3-A/T.2 SIM.	3-A/T.2	-	F1	STEEL	PAINT	-	GROUP 11	-	(20)
(21)	3'-0" x 7'-0" x 1 3/4"	D4	S.C. WOOD	PRE-FINISH *	3-A/T.2 SIM.	3-A/T.2	-	F1	STEEL	PAINT	-	GROUP 12	-	(21)
(22)	3'-0" x 7'-0" x 1 3/4"	D4	S.C. WOOD	PRE-FINISH *	3-A/T.2 SIM.	3-A/T.2	-	F1	STEEL	PAINT	-	GROUP 12	-	(22)
(23)	3'-0" x 7'-0" x 1 3/4"	D4	S.C. WOOD	PRE-FINISH *	3-A/T.2 SIM.	3-A/T.2	-	F1	STEEL	PAINT	-	GROUP 3	-	(23)
(24)	3'-0" x 7'-0" x 1 3/4"	D4	S.C. WOOD	PRE-FINISH *	3-A/T.2 SIM.	3-A/T.2	-	F1	STEEL	PAINT	-	GROUP 5	-	(24)
(25)	3'-0" x 7'-0" x 1 3/4"	D4	S.C. WOOD	PRE-FINISH *	3-A/T.2 SIM.	3-A/T.2	-	F1	STEEL	PAINT	-	GROUP 5	-	(25)
(26)	3'-0" x 7'-0" x 1 3/4"	D4	S.C. WOOD	PRE-FINISH *	3-A/T.2 SIM.	3-A/T.2	-	F3	STEEL	PAINT	-	GROUP 5	-	(26)
(27)	3'-0" x 7'-0" x 1 3/4"	D4	S.C. WOOD	PRE-FINISH *	3-A/T.2 SIM.	3-A/T.2	-	F3	STEEL	PAINT	-	GROUP 5	-	(27)
(28)	3'-0" x 7'-0" x 1 3/4"	D4	S.C. WOOD	PRE-FINISH *	3-A/T.2 SIM.	3-A/T.2	-	F1	STEEL	PAINT	-	GROUP 4	-	(28)
(29)	3'-0" x 7'-0" x 1 3/4"	D4	S.C. WOOD	PRE-FINISH *	3-A/T.2 SIM.	3-A/T.2	-	F3	STEEL	PAINT	-	GROUP 5	-	(29)
(30)	3'-0" x 7'-0" x 1 3/4"	D2	ALUM/GLASS	ANODIZED	4-A/T.2 SIM.	4-A/T.2	-	F	ALUM.	ANODIZED	-	GROUP 6	-	(30)
(31)	3'-0" x 7'-0" x 1 3/4"	D4	S.C. WOOD	PRE-FINISH *	3-A/T.2 SIM.	3-A/T.2	-	F3	STEEL	PAINT	-	GROUP 5	-	(31)
(32)	3'-0" x 7'-0" x 1 3/4"	D4	S.C. WOOD	PRE-FINISH *	3-A/T.2 SIM.	3-A/T.2	-	F3	STEEL	PAINT	-	GROUP 5	-	(32)
(33)	3'-0" x 7'-0" x 1 3/4"	D4	S.C. WOOD	PRE-FINISH *	3-A/T.2 SIM.	3-A/T.2	-	F3	STEEL	PAINT	-	GROUP 5	-	(33)
(34)	3'-0" x 7'-0" x 1 3/4"	D4	S.C. WOOD	PRE-FINISH *	3-A/T.2 SIM.	3-A/T.2	-	F3	STEEL	PAINT	-	GROUP 5	-	(34)
(35)	3'-0" x 7'-0" x 1 3/4"	D4	S.C. WOOD	PRE-FINISH *	3-A/T.2 SIM.	3-A/T.2	-	F3	STEEL	PAINT	-	GROUP 5	-	(35)
(36)	3'-0" x 7'-0" x 1 3/4"	D4	S.C. WOOD	PRE-FINISH *	3-A/T.2 SIM.	3-A/T.2	-	F3	STEEL	PAINT	-	GROUP 5	-	(36)
(37)	3'-0" x 7'-0" x 1 3/4"	D4	S.C. WOOD	PRE-FINISH *	3-A/T.2 SIM.	3-A/T.2	-	F3	STEEL	PAINT	-	GROUP 5	-	(37)
(38)	3'-0" x 7'-0" x 1 3/4"	D4	S.C. WOOD	PRE-FINISH *	3-A/T.2 SIM.	3-A/T.2	-	F3	STEEL	PAINT	-	GROUP 5	-	(38)
(39)	3'-0" x 7'-0" x 1 3/4"	D6	S.C. WOOD	PRE-FINISH *	3-A/T.2 SIM.	3-A/T.2	-	F1	STEEL	PAINT	20 MIN.	GROUP 8	-	(39)
(40)	3'-0" x 7'-0" x 1 3/4"	D4	S.C. WOOD	PRE-FINISH *	3-A/T.2 SIM.	3-A/T.2	-	F3	STEEL	PAINT	-	GROUP 5	-	(40)
(41)	3'-0" x 7'-0" x 1 3/4"	D4	S.C. WOOD	PRE-FINISH *	3-A/T.2 SIM.	3-A/T.2	-	F3	STEEL	PAINT	-	GROUP 5	-	(41)
(42)	3'-0" x 7'-0" x 1 3/4"	D4	S.C. WOOD	PRE-FINISH *	3-A/T.2 SIM.	3-A/T.2	-	F3	STEEL	PAINT	-	GROUP 5	-	(42)
(43)	3'-0" x 7'-0" x 1 3/4"	D4	S.C. WOOD	PRE-FINISH *	3-A/T.2 SIM.	3-A/T.2	-	F3	STEEL	PAINT	-	GROUP 5	-	(43)
(44)	3'-0" x 7'-0" x 1 3/4"	D4	S.C. WOOD	PRE-FINISH *	3-A/T.2 SIM.	3-A/T.2	-	F1	STEEL	PAINT	-	GROUP 11	-	(44)
(45)	3'-0" x 7'-0" x 1 3/4"	D4	S.C. WOOD	PRE-FINISH *	3-A/T.2 SIM.	3-A/T.2	-	F1	STEEL	PAINT	-	GROUP 13	-	(45)
(46)	3'-0" x 7'-0" x 1 3/4"	D4	S.C. WOOD	PRE-FINISH *	3-A/T.2 SIM.	3-A/T.2	-	F1	STEEL	PAINT	-	GROUP 4	-	(46)
(47)	3'-0" x 7'-0" x 1 3/4"	D4	S.C. WOOD	PRE-FINISH *	3-A/T.2 SIM.	3-A/T.2	-	F1	STEEL	PAINT	-	GROUP 5	-	(47)
(48)	3'-0" x 7'-0" x 1 3/4"	D4	S.C. WOOD	PRE-FINISH *	3-A/T.2 SIM.	3-A/T.2	-	F3	STEEL	PAINT	-	GROUP 5	-	(48)
(49)	3'-0" x 7'-0" x 1 3/4"	D4	S.C. WOOD	PRE-FINISH *	3-A/T.2 SIM.	3-A/T.2	-	F3	STEEL	PAINT	-	GROUP 5	-	(49)
(50)	3'-0" x 7'-0" x 1 3/4"	D4	S.C. WOOD	PRE-FINISH *	3-A/T.2 SIM.	3-A/T.2	-	F3	STEEL	PAINT	-	GROUP 5	-	(50)
(51)	3'-0" x 7'-0" x 1 3/4"	D4	S.C. WOOD	PRE-FINISH *	3-A/T.2 SIM.	3-A/T.2	-	F3	STEEL	PAINT	-	GROUP 5	-	(51)
(52)	3'-0" x 7'-0" x 1 3/4"	D4	S.C. WOOD	PRE-FINISH *	3-A/T.2 SIM.	3-A/T.2	-	F3	STEEL	PAINT	-	GROUP 5	-	(52)
(53)	3'-0" x 7'-0" x 1 3/4"	D4	S.C. WOOD	PRE-FINISH *	3-A/T.2 SIM.	3-A/T.2	-	F3	STEEL	PAINT	-	GROUP 5	-	(53)
(54)	3'-0" x 7'-0" x 1 3/4"	D4	S.C. WOOD	PRE-FINISH *	3-A/T.2 SIM.	3-A/T.2	-	F1	STEEL	PAINT	-	GROUP 13	-	(54)
(55)	3'-0" x 7'-0" x 1 3/4"	D4	S.C. WOOD	PRE-FINISH *	3-A/T.2 SIM.	3-A/T.2	-	F3	STEEL	PAINT	-	GROUP 5	-	(55)
(56)	3'-0" x 7'-0" x 1 3/4"	D4	S.C. WOOD	PRE-FINISH *	3-A/T.2 SIM.	3-A/T.2	-	F3	STEEL	PAINT	-	GROUP 5	-	(56)
(57)	3'-0" x 7'-0" x 1 3/4"	D4	S.C. WOOD	PRE-FINISH *	3-A/T.2 SIM.	3-A/T.2	-	F3	STEEL	PAINT	-	GROUP 5	-	(57)
(58)	3'-0" x 7'-0" x 1 3/4"	D4	S.C. WOOD	PRE-FINISH *	3-A/T.2 SIM.	3-A/T.2	-	F3	STEEL	PAINT	-	GROUP 5	-	(58)
(59)	3'-0" x 7'-0" x 1 3/4"	D4	S.C. WOOD	PRE-FINISH *	3-A/T.2 SIM.	3-A/T.2	-	F4	STEEL	PAINT	-	GROUP 4	-	(59)
(60)	3'-0" x 7'-0" x 1 3/4"	D4	S.C. WOOD	PRE-FINISH *	3-A/T.2 SIM.	3-A/T.2	-	F5	STEEL	PAINT	-	GROUP 4	-	(60)
(61)	3'-0" x 7'-0" x 1 3/4"	D4	S.C. WOOD	PRE-FINISH *	3-A/T.2 SIM.	3-A/T.2	-	F5	STEEL	PAINT	-	GROUP 4	-	(61)
(62)	3'-0" x 5'-8" x 1 3/4"	D4	S.C. WOOD	PRE-FINISH *	-	-	-	F1	STEEL	PAINT	1 1/2 HR.	GROUP 7	-	(62)
(63)	3'-0" x 7'-0" x 1 3/4"	D4	S.C. WOOD	PRE-FINISH *	3-A/T.2 SIM.	3-A/T.2	-	F1	STEEL	PAINT	-	GROUP 8	-	(63)
(64)	3'-0" x 7'-0" x 1 3/4"	D4	S.C. WOOD	PRE-FINISH *	3-A/T.2 SIM.	3-A/T.2	-	F1	STEEL	PAINT	-	GROUP 5	-	(64)
(65)	3'-0" x 7'-0" x 1 3/4"	D4	S.C. WOOD	PRE-FINISH *	3-A/T.2 SIM.	3-A/T.2	-	F1	STEEL	PAINT	-	GROUP 5	-	(65)
(66)	3'-0" x 7'-0" x 1 3/4"	D4	S.C. WOOD	PRE-FINISH *	3-A/T.2 SIM.	3-A/T.2	-	F1	STEEL	PAINT	60 MIN.	GROUP 7	-	(66)
(67)	3'-0" x 7'-0" x 1 3/4"	D6	S.C. WOOD	PRE-FINISH *	3-A/T.2 SIM.	3-A/T.2	-	F1	STEEL	PAINT	-	GROUP 3	-	(67)
(68)	3'-0" x 7'-0" x 1 3/4"	D4	S.C. WOOD	PRE-FINISH *	3-A/T.2 SIM.	3-A/T.2	-	F1	STEEL	PAINT	-	GROUP 5	-	(68)
(69)	3'-0" x 7'-0" x 1 3/4"	D6	S.C. WOOD	PRE-FINISH *	3-A/T.2 SIM.	3-A/T.2	-	F1	STEEL	PAINT	20 MIN.	GROUP 8	-	(69)

* PRE-FINISHED NATURAL PLANE SLICED RED OAK.

NOTE: FIELD VERIFY ALL OPENINGS SIZES. SIZES INDICATED ARE ROUGH OPENINGS.

DOOR HARDWARE SCHEDULE

A. The scheduled hardware groups contain items selected from the following manufacturers:
1. Hinges: Stanley
2. Locks: Yale
3. Closers: LCN
4. Trim: Ives
5. Threshold/Weatherstrip: Pemko

B. GROUP ONE: (Door 1)
Cylinders as required.
1 Sign 1 inch high letters on contrasting background, to read "THIS DOOR TO REMAIN UNLOCKED DURING BUSINESS HOURS".
Remaining hardware by door supplier

C. GROUP TWO: (Door 2)
All hardware by door supplier

D. GROUP THREE: (Doors 3, 23, 67)
3 Hinges FBB179 4-1/2 x 4-1/2
1 Lock FB54081LN
1 Closer 4041
1 Kickplate 148, Stainless steel, 8" x 1-1/2" LDW
1 Stop 301
3 Silencers

E. GROUP FOUR: (Doors 4, 8, 13, 17, 19, 28, 46, 59, 60, 69)
3 Hinges FBB179 4-1/2 x 4-1/2
1 Passage FB5401LN
1 Stop 301
3 Silencers

F. GROUP FIVE: (Doors 5, 6, 7, 9, 24, 25, 26, 27, 29, 31, 32, 33, 34, 35, 36, 37, 38, 40, 41, 42, 43, 47, 48, 49, 50, 51, 52, 53, 55, 56, 57, 58, 64, 65, 68)
3 Hinges FBB179 4-1/2 x 4-1/2
1 Lock FB5407LN
1 Stop 301
3 Silencers

G. GROUP SIX: (Doors 10, 30)
1 Lock FB5407LN
Remaining hardware by door supplier

H. GROUP SEVEN: (Doors 11, 14, 62, 66)
3 Hinges FBB179 4-1/2 x 4-1/2
1 Lock FB5407LN
1 Closer 4041
1 Kickplate 148, Stainless steel, 8" x 1-1/2" LDW
1 Stop 301
3 Silencers

I. GROUP EIGHT: (Doors 12, 39, 63, 69)
3 Hinges FBB179 4-1/2 x 4-1/2
1 Passage FB5401LN
1 Closer 4041
1 Kickplate 148, Stainless steel, 8" x 1-1/2" LDW
1 Stop 301
3 Silencers
1 set Smoke seals

J. GROUP NINE: (Door 15)
3 Hinges FBB179 4-1/2 x 4-1/2 N.R.P.
1 Lock FB5408LN
1 Closer 4041
1 Kickplate 148, Stainless steel, 8" x 1-1/2" LDW
1 Stop PBES
1 Threshold T104
1 Door Sweep 315CN
1 set Weatherstrip 303AV

K. GROUP TEN: (Door 16)
6 Hinges FBB179 4-1/2 x 4-1/2
4 Push/Pull Forms + Surfaces DT1021-2" US32D
2 Closer 4041
2 Kickplate 148, Stainless steel, 8" x 1-1/2" LDW
2 Stop 301
2 Silencers

L. GROUP ELEVEN: (Doors 18, 20, 44)
3 Hinges FBB179 4-1/2 x 4-1/2
1 Push Plate 140 4 x 16
1 Pull Plate 1250 3-1/2 x 15
1 Closer 4041
1 Kickplate 148, Stainless steel, 8" x 1-1/2" LDW
1 Stop 301
3 Silencers

M. GROUP THELVE: (Doors 21, 22)
3 Hinges FBB179 4-1/2 x 4-1/2 N.R.P.
1 Lock FB5408LN
1 Stop 301
3 Silencers

N. GROUP THIRTEEN: (Door 45, 54)
3 Hinges FBB179 4-1/2 x 4-1/2
1 Privacy FB5402LN
1 Stop 301
3 Silencers

WINDOW SCHEDULE

NO.	SIZE	FRAME MATERIAL & FINISH	GLASS TYPE	DETAILS HEAD	DETAILS JAMB	DETAILS SILL	REMARKS	NO.
(A)	SEE ELEV.	CLEAR ANODIZED ALUMINUM	SEE ELEV.	2/A1.2	2/A1.2	1/A1.2	STOREFRONT WINDOW	(A)
(B)	SEE ELEV.	CLEAR ANODIZED ALUMINUM	SEE ELEV.	2/A1.2	2/A1.2	------	STOREFRONT WINDOW	(B)
(C)	SEE ELEV.	CLEAR ANODIZED ALUMINUM	SEE ELEV.	2/A1.2	2/A1.2	------	STOREFRONT WINDOW	(C)
(D)	SEE ELEV.	CLEAR ANODIZED ALUMINUM	SEE ELEV.	2/A1.2	2/A1.2	1/A1.2	STOREFRONT WINDOW	(D)
(E)	SEE ELEV.	CLEAR ANODIZED ALUMINUM	SEE ELEV.	2/A1.2	2/A1.2	------	STOREFRONT WINDOW	(E)
(F)	SEE ELEV.	CLEAR ANODIZED ALUMINUM	SEE ELEV.	2/A1.2	2/A1.2	------	STOREFRONT WINDOW	(F)
(G)								(G)
(H)								(H)
(I)								(I)

GLAZING SCHEDULE

1. 1" CLEAR INSULATING GLASS
2. 1" CLEAR TEMPERED INSULATING GLASS
3. 1/4" CLEAR GLASS
4. 1/4" CLEAR TEMPERED GLASS
5. 1/2" CLEAR TEMPERED GLASS

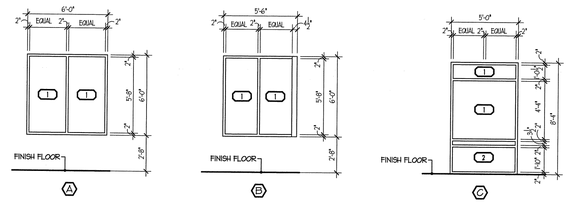

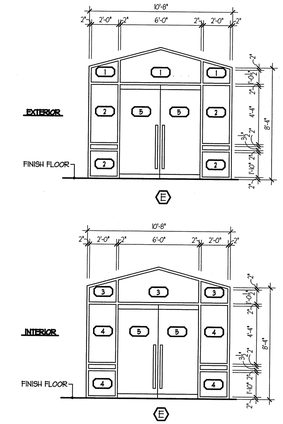

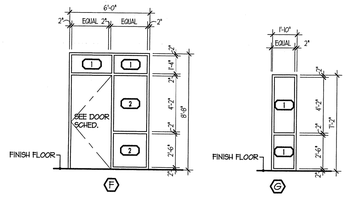

NOTE: FIELD VERIFY ALL OPENINGS SIZES.

WINDOW TYPES & EXTERIOR ALUMINUM ENTRANCES

SCALE: 1/4" = 1'-0"

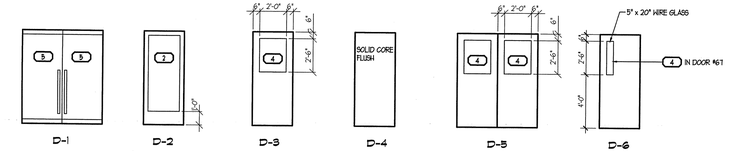

DOOR TYPES

SCALE: NONE

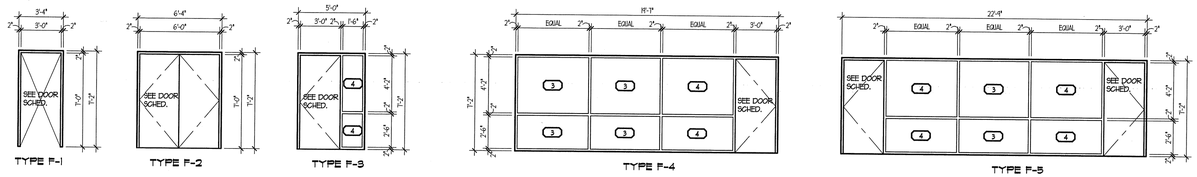

DOOR FRAME TYPES

SCALE: NONE

PASKER GOULD AMES & WEAVER
ARCHITECTS PLANNERS
5263 SOUTH 300 WEST MURRAY, UTAH (801) 266-4669

DRAWN BY	CHECKED BY	JOB NO.	DATE
JHJ	GLA	2171	OCT. 20, 1999

DOOR & WINDOW SCHEDULES
NEW BUILDING FOR
TAYLOR-HUNT ELECTRIC
1747 SOUTH 900 WEST, SALT LAKE CITY, UTAH

REVISED OCT. 21, 1999

A
7.1

© PASKER GOULD AMES & WEAVER - 1999

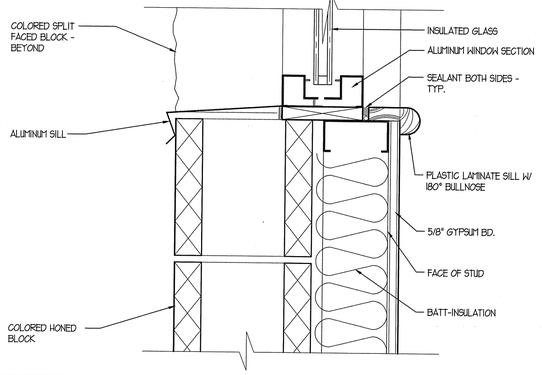

SILL DETAIL — SCALE 3"=1'-0" — 1

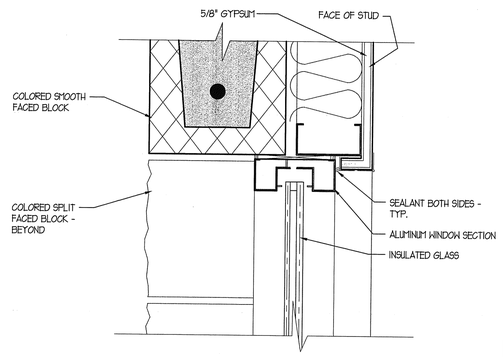

HEAD DETAIL (JAMB SIM.) — SCALE 3"=1'-0" — 2

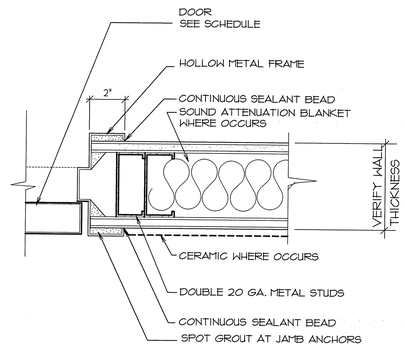

JAMB DETAIL (HEAD SIM.) — SCALE 3"=1'-0" — 3

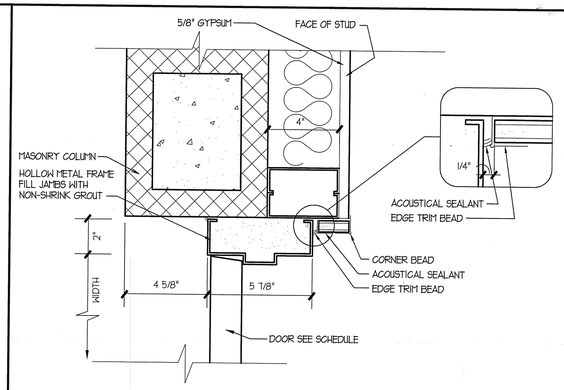

JAMB DETAIL (HEAD SIM.) — SCALE 3"=1'-0" — 4

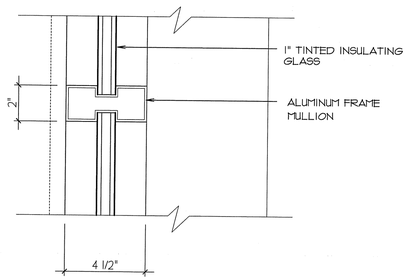

MULLION DETAIL — SCALE 3"=1'-0" — 5

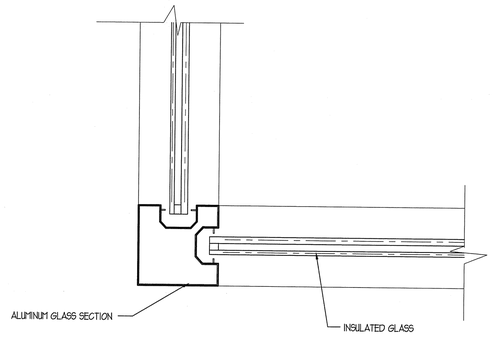

JAMB CORNER DETAIL — SCALE 3"=1'-0" — 6

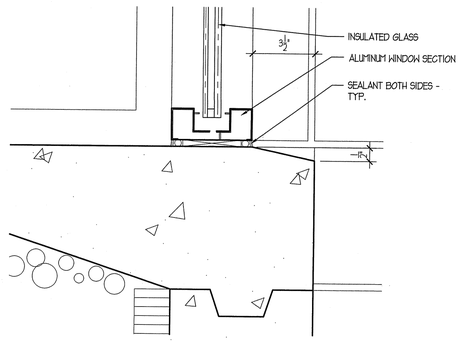

SILL DETAIL — SCALE 3"=1'-0" — 7

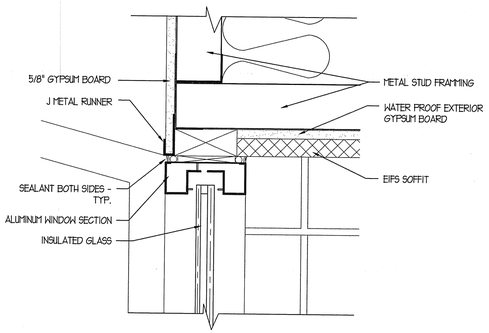

HEAD DETAIL (JAMB SIM.) — SCALE 3"=1'-0" — 8

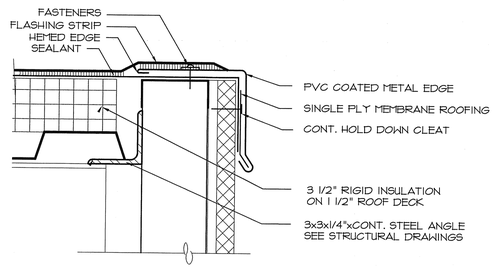

ROOF EDGE DETAIL — SCALE 3"=1'-0" — 9

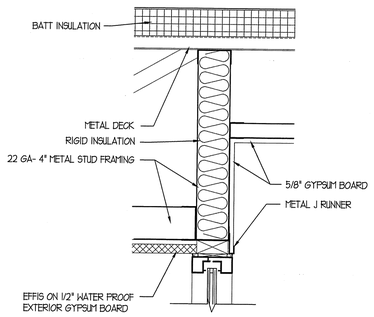

HEAD DETAIL — SCALE 1 1/2"=1'-0" — 10

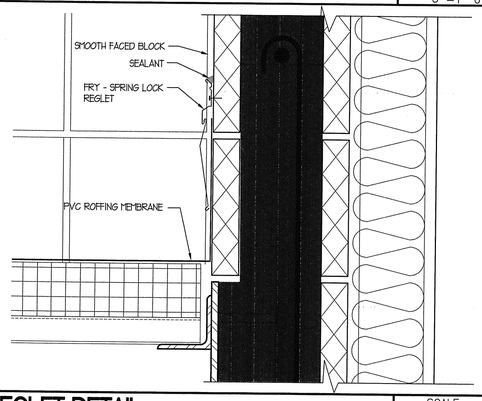

REGLET DETAIL — SCALE 3"=1'-0" — 11

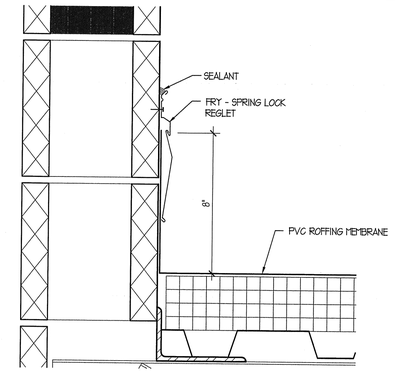

REGLET DETAIL — SCALE 3"=1'-0" — 12

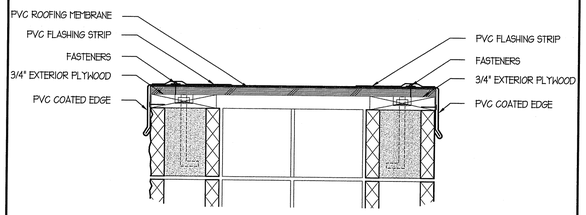

ROOF EDGE DETAIL — SCALE 1 1/2"=1'-0" — 13

PGA&W

PASKER GOULD AMES & WEAVER
ARCHITECTS PLANNERS
5263 SOUTH 300 WEST MURRAY, UTAH (801) 266-4669

DRAWN BY	CHECKED BY	JOB NO.	DATE
JWJ	CLA	2171	JULY 13, 1999

DETAILS
NEW BUILDING FOR
TAYLOR-HUNT ELECTRIC
1741 SOUTH 900 WEST, SALT LAKE CITY, UTAH

A
7.2

© PASKER GOULD AMES & WEAVER - 1999

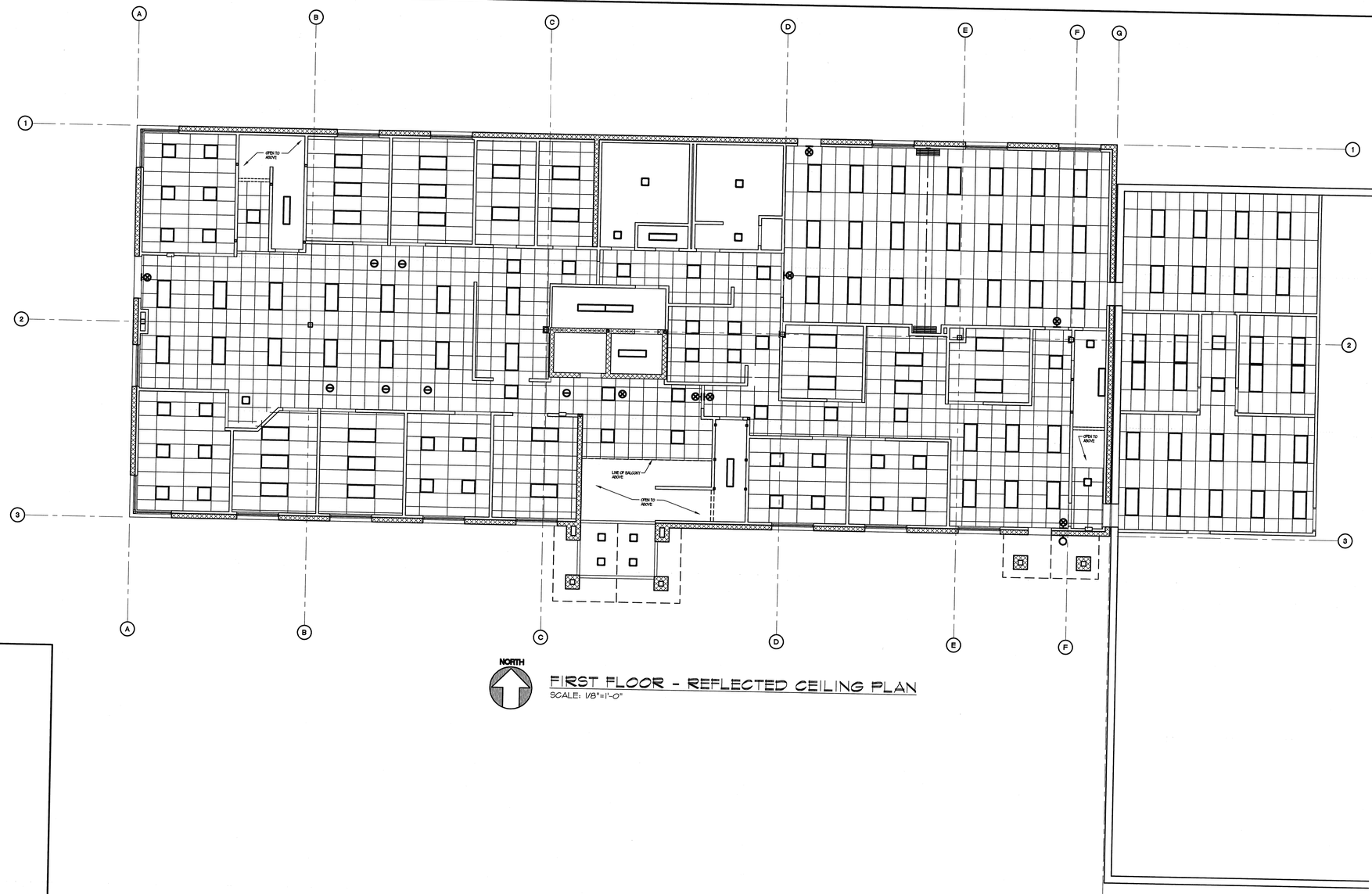

NORTH

FIRST FLOOR - REFLECTED CEILING PLAN

SCALE: 1/8"=1'-0"

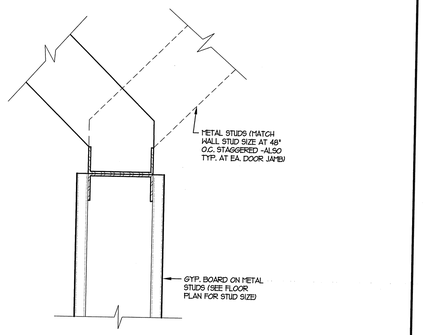

WALL BRACING

SCALE NONE =1'-0" | 1

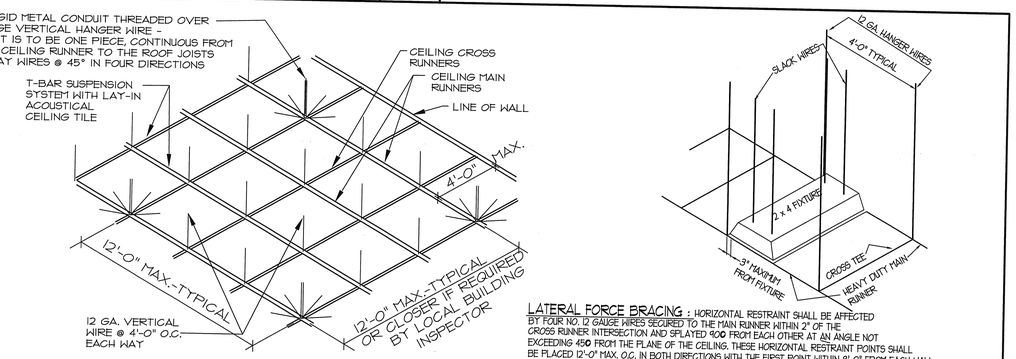

LATERAL FORCE BRACING : HORIZONTAL RESTRAINT SHALL BE AFFECTED BY FOUR NO. 12 GAUGE WIRES SECURED TO THE MAIN RUNNER WITHIN 2" OF THE CROSS RUNNER INTERSECTION AND SPLAYED 90Ø FROM EACH OTHER AT AN ANGLE NOT EXCEEDING 45Ø FROM THE PLANE OF THE CEILING. THESE HORIZONTAL RESTRAINT POINTS SHALL BE PLACED 12'-0" MAX. O.C. IN BOTH DIRECTIONS WITH THE FIRST POINT WITHIN 8'-0" FROM EACH WALL AT ONE CORNER OF ROOM AND NOT TO EXCEED 8'-0" MAX. FROM ANY WALL AT PERIMETER OF APPLICATION. ATTACHMENT OF THE RESTRAINT WIRES TO THE STRUCTURE ABOVE SHALL BE ADEQUATE FOR THE LOAD IMPOSED, 400 LB. MINIMUM.

ACCOUSTICAL TILE SUSPENSION DETAIL

SCALE 1" =1'-0" | 2

GENERAL NOTES

1. PROVIDE BRACING AT ALL CEILING SUSPENSION SYSTEMS - SEE SIM.I
2. ALL LIGHT FIXTURES SHALL BE CENTERED IN ALL AREAS UNLESS NOTED OTHERWISE.
3. SEE PAINT SCHEDULE FOR CEILING PAINTING.
4. ALL ACOUSTIC TILE SHALL BE CENTERED IN AREAS AND HORIZONTAL TO WALLS.
5. SEE ELECTRICAL FOR LIGHT FIXTURES.
6. SEE MECHANICAL FOR AIR GRILLS.
7. ALL CEILINGS 8'-0" A.F.F. UNLESS NOTED OTHERWISE.

CEILING - FINISH SCHEDULE

- CEILING SUSPENSION SYSTEM WITH GYPSUM BOARD AND ACOUSTICAL TILE - SIM.I
- CEMENT PLASTER
- GYPSUM BOARD - PAINTED
- CONTINUOUS VENT STRIP PATCH EXISTING
- 2' x 2' LAY-IN TILE - PATCH EXISTING
- REPLACE TILE TO PATCH EXISTING

CEILING LEGEND

1 2'x2' ACOUSTICAL PANEL CEILING SYSTEM

- 1'x4' SURFACE MOUNTED LIGHT FIXTURE SEE ELECTRICAL
- 2'x2' LAY-IN LIGHT FIXTURE SEE ELECTRICAL
- 2'x4' LAY-IN LIGHT FIXTURE SEE ELECTRICAL
- DOWNLIGHT SEE ELECTRICAL
- RETURN AIR GRILLE SEE MECHANICAL
- SUPPLY AIR DIFFUSER SEE MECHANICAL

2 E.I.F.S. SOFFIT

- E.I.F.S. SOFFIT

3 FIRE RATED WALLS

- ONE HOUR FIRE RATED SOLID GROUTED CONCRETE MASONRY SEE SHEET A/1-3 FOR PENETRATIONS
- ONE HOUR FIRE RATED GYP. BD. PATITION SEE SHEET A/1-3 FOR PENETRATIONS

PGA&W

PASKER GOULD AMES & WEAVER
ARCHITECTS PLANNERS
5263 SOUTH 300 WEST
MURRAY, UTAH (801) 266-4669

DRAWN BY	CHECKED BY	JOB NO.	DATE
JAJ	CLA	2171	OCT. 20, 1999

FIRST FLOOR - REFLECTED CEILING PLAN

NEW BUILDING FOR

TAYLOR-HUNT ELECTRIC

1147 SOUTH 900 WEST, SALT LAKE CITY, UTAH

REVISED OCT. 21, 1999

A/8

© PASKER GOULD AMES & WEAVER - 1999

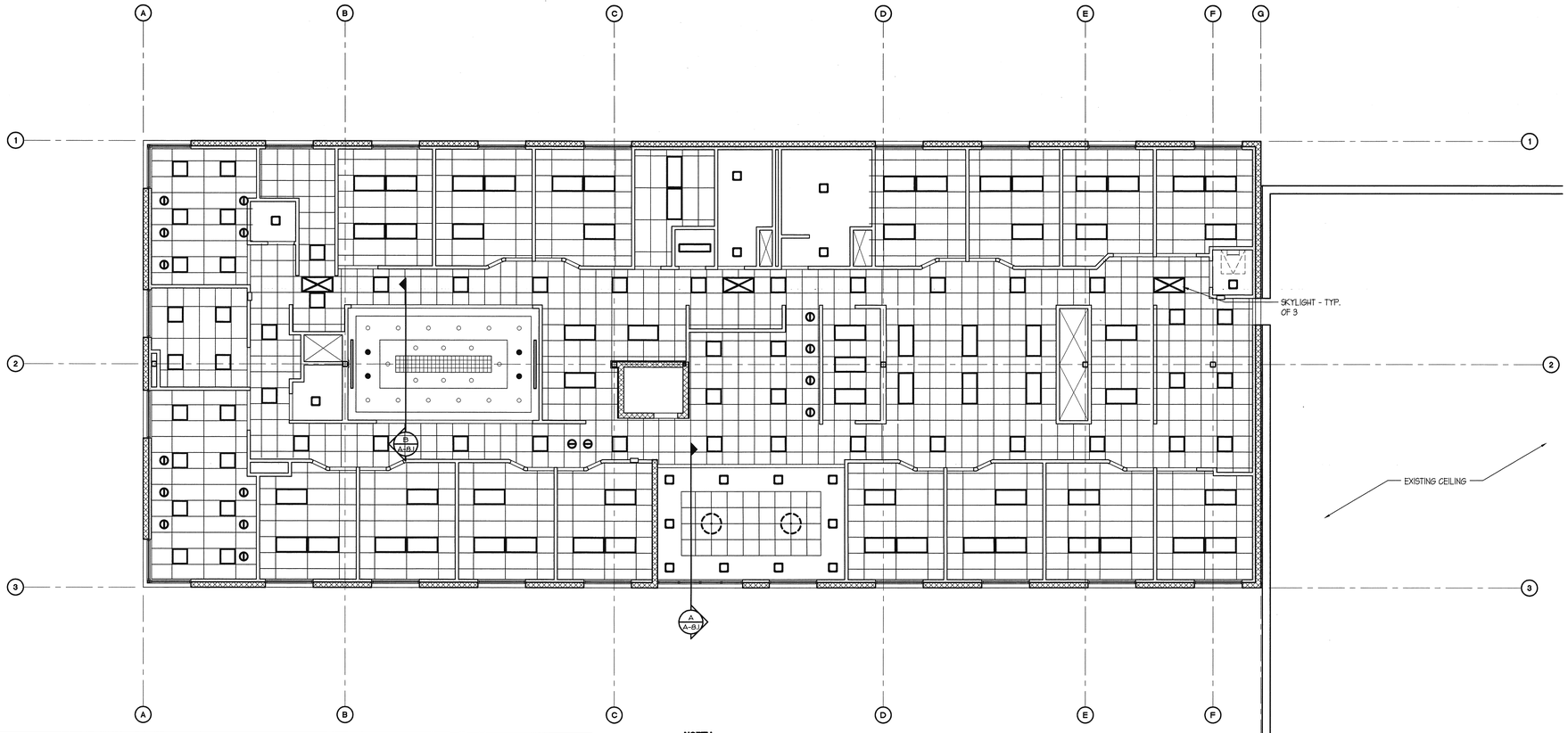

NORTH

SECOND FLOOR - REFLECTED CEILING PLAN

SCALE: 1/8"=1'-0"

GENERAL NOTES

1. PROVIDE SEISMIC BRACING AT ALL CEILING SUSPENSION SYSTEMS - SEE S-4A.2
2. ALL LIGHT FIXTURES SHALL BE CENTERED IN ALL AREAS UNLESS NOTED OTHERWISE.
3. SEE FINISH SCHEDULE FOR CEILING MATERIAL.
4. ALL ACOUSTIC TILE SHALL BE CENTERED IN AREAS AND WORKING TO WALLS.
5. SEE ELECTRICAL FOR LIGHT FIXTURES.
6. SEE MECHANICAL FOR AIR GRILLS.
7. ALL CEILINGS 8'-0" AFF. UNLESS NOTED OTHERWISE.

CEILING - FINISH SCHEDULE

- CEILING SUSPENSION SYSTEM WITH 2'x2' PANELS AND ACOUSTICAL TILE - S-4A.2
- CEMENT PLASTER
- GYPSUM BOARD - PAINTED
- CONTINUOUS VENT STRIP MATCH EXISTING
- 2' x 2' LAY-IN TILE - MATCH EXISTING
- REPLACE TILE TO MATCH EXISTING

CEILING LEGEND

(1) 2'x2' ACOUSTICAL PANEL CEILING SYSTEM

- 1'x4' SURFACE MOUNTED LIGHT FIXTURE SEE ELECTRICAL
- 2'x2' LAY-IN LIGHT FIXTURE SEE ELECTRICAL
- 2'x4' LAY-IN LIGHT FIXTURE SEE ELECTRICAL
- DOWNLIGHT SEE ELECTRICAL
- RETURN AIR GRILLE SEE MECHANICAL
- SUPPLY AIR DIFFUSER SEE MECHANICAL

(2) E.I.F.S. SOFFIT

- E.I.F.S. SOFFIT

(3) FIRE RATED WALLS

- ONE HOUR FIRE RATED SOLID GROUTED CONCETE MASONRY SEE SHEET A/1-3 FOR PENETRATIONS
- ONE HOUR FIRE RATED GYP. BD. PATITION SEE SHEET A/1-3 FOR PENETRATIONS

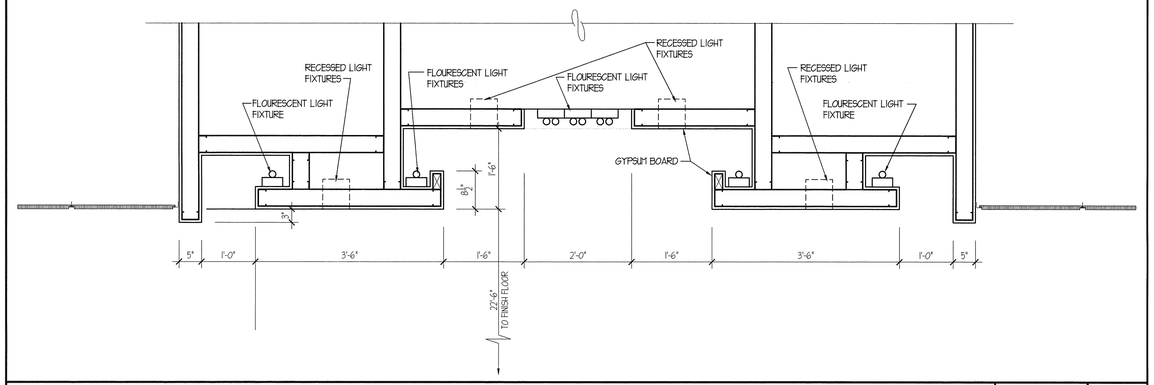

SECTION AT CONFERENCE RM. CEILING

SCALE 3/4"=1'-0" | B

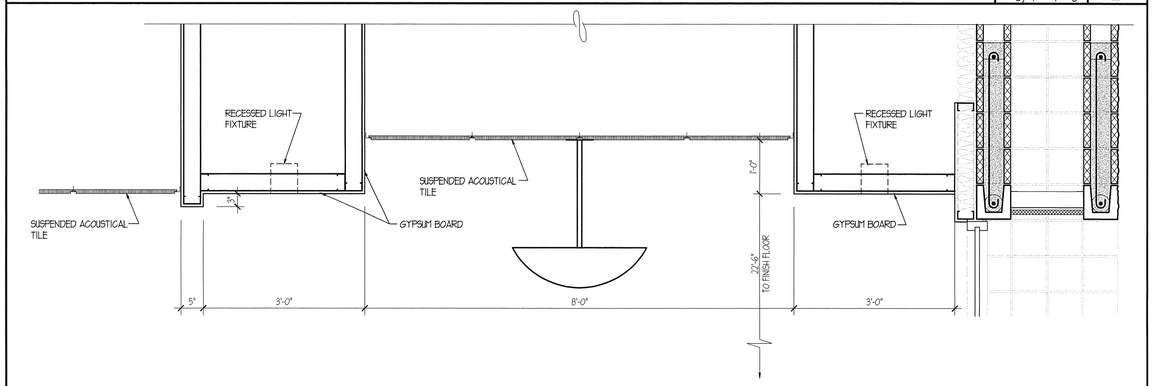

SECTION AT LOBBY CEILING

SCALE 3/4"=1'-0" | A

PASKER GOULD AMES & WEAVER
ARCHITECTS PLANNERS
5263 SOUTH 300 WEST
MURRAY, UTAH (801) 266-4669

DRAWN BY JAJ
CHECKED BY CLA
JOB NO. 2111
DATE OCT. 20, 1999

SECOND FLOOR - REFLECTED CEILING PLAN
NEW BUILDING FOR
TAYLOR-HUNT ELECTRIC
1747 SOUTH 900 WEST, SALT LAKE CITY, UTAH

REVISED OCT. 21, 1999

A
8.1

© PASKER GOULD AMES & WEAVER - 1999

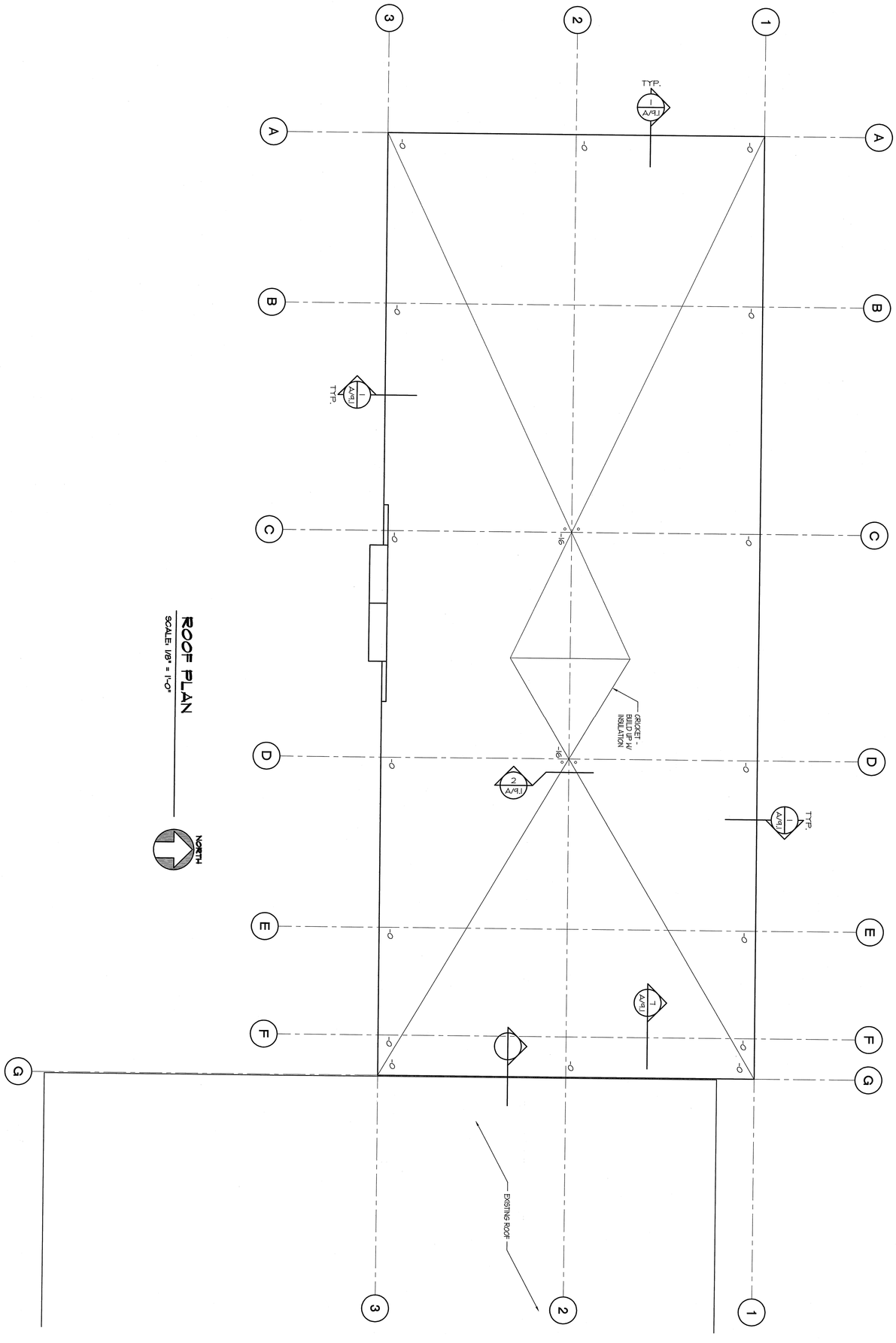

ROOF PLAN

SCALE: 1/8" = 1'-0"

NORTH

© COPYRIGHT 2000 PASKER GOULD AMES & WEAVER

A 9

ROOF PLAN

NEW BUILDING FOR

TAYLOR-HUNT ELECTRIC

1747 SOUTH 900 WEST, SALT LAKE CITY, UTAH

DRAWN BY	JHJ
CHECKED BY	CLA
JOB NO.	2171
DATE	JULY 13, 1999

PASKER GOULD AMES & WEAVER
ARCHITECTS PLANNERS
5263 SOUTH 300 WEST MURRAY, UTAH (801) 266-4669

PGA&W

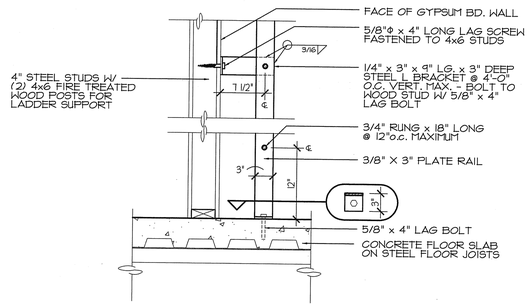

LADDER DETAIL

SCALE 1"=1'-0" | 9

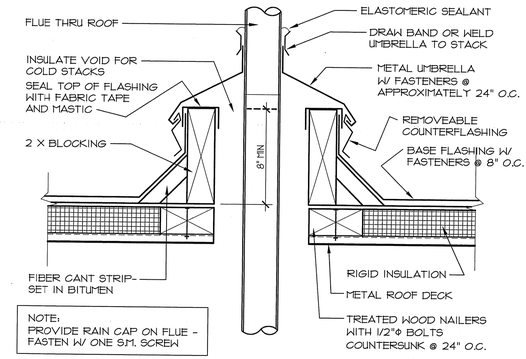

FLUE FLASHING DETAIL

SCALE NONE=1'-0" | 5

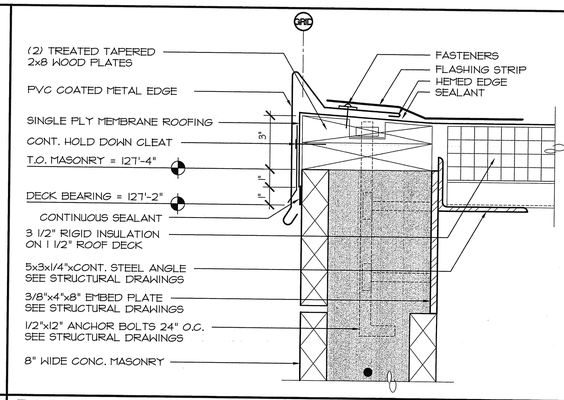

ROOF EDGE FLASHING DETAIL

SCALE 3"=1'-0" | 1

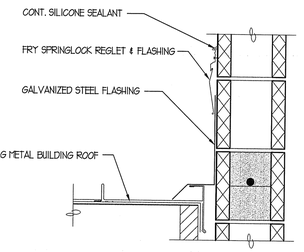

DETAIL

SCALE 1 1/2"=1'-0" | 10

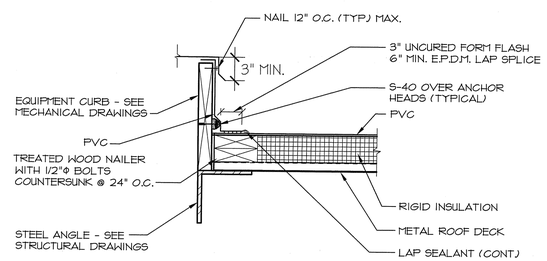

MECHANICAL CURB DETAIL

SCALE 1 1/2"=1'-0" | 6

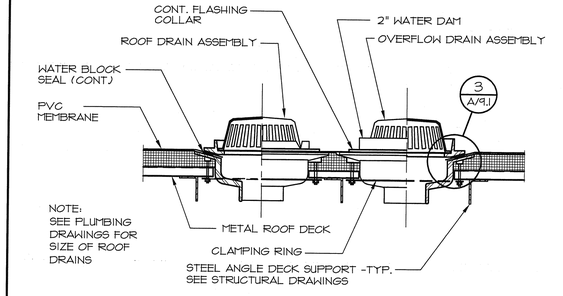

ROOF AND OVERFLOW DRAIN DETAIL

SCALE 3"=1'-0" | 2

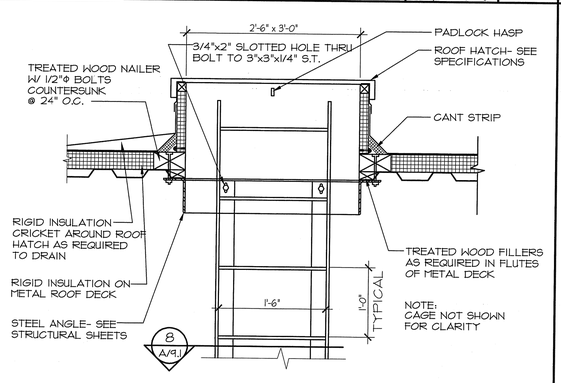

ROOF HATCH/LADDER DETAIL

SCALE NONE=1'-0" | 7

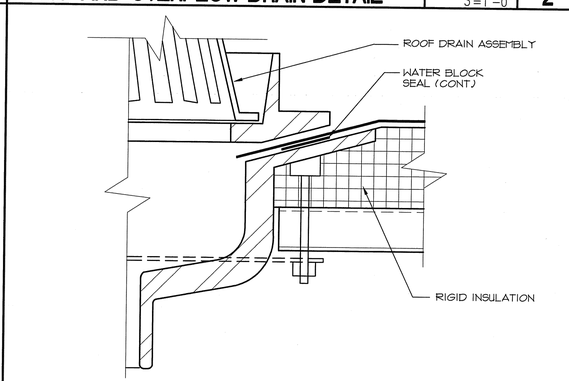

ROOF TO DRAIN DETAIL

SCALE 3"=1'-0" | 3

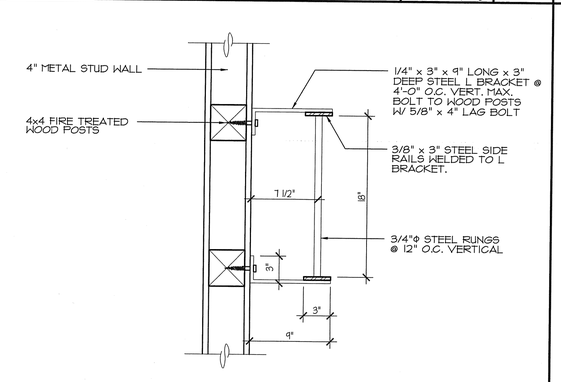

LADDER PLAN

SCALE 1 1/2"=1'-0" | 8

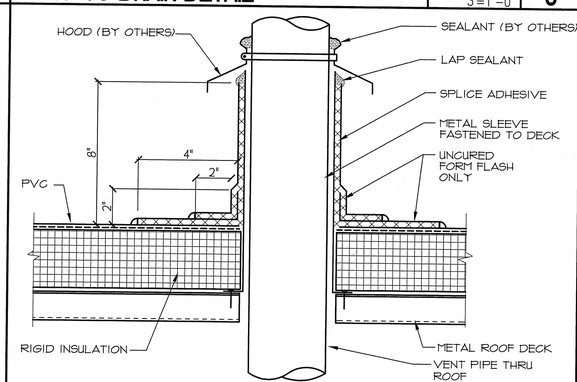

VENT PIPE FLASHING DETAIL

SCALE 3"=1'-0" | 4

PGA&W

PASKER GOULD AMES & WEAVER
ARCHITECTS PLANNERS
5263 SOUTH 300 WEST
MURRAY, UTAH (801) 266-4669

DRAWN BY JWJ
CHECKED BY CLA
JOB NO. 2171
DATE JULY 13, 1994

ROOF DETAILS
NEW BUILDING FOR
TAYLOR-HUNT ELECTRIC
1747 SOUTH 900 WEST,
SALT LAKE CITY, UTAH

A
9.1

© PASKER GOULD AMES & WEAVER - 1994

GENERAL

1. The structural notes are intended to complement the project specifications. Specific notes and details in the drawings shall govern over the structural notes and typical details.
2. Typical details and sections shall apply where specific details are not shown
3. The contractor shall verify all site conditions and dimensions. If actual conditions differ from those shown in the contract drawings, the contractor shall immediately notify the architect/engineer before proceeding with the fabrication or construction of any effected elements.
4. Omissions or conflicts between the contract drawings and/or specifications shall be brought to the attention of the architect/engineer before proceeding with any work involved. In case of conflict, follow the most stringent requirement as directed by the architect/engineer at no additional cost to the owner.
5. The contractor shall submit a written request to the architect/engineer before proceeding with any changes, substitutions or modifications. Any work done by the contractor before receiving written approval will be at the contractor's risk.
6. The contractor shall coordinate with all trades any items that are to be integrated into the structural system such as openings, penetrations, mechanical and electrical equipment, etc. Sizes and locations of mechanical and other equipment that differs from those shown on the contract drawings shall be reported to the architect/engineer.
7. The contractor shall provide adequate shoring and bracing as required for his method of erection. Shoring and bracing shall remain in place until final connections for the permanent members are completed. The building shall not be considered stable until all connections are completed. Walls shall not be considered self supporting and shall be braced until the floor/roof system is completed.
8. Site observations by Dunn Associates, Inc.'s field representative shall not be construed as approval of construction procedures nor special inspection.
9. Detailing and shop drawing production for structural elements will require information (including dimensions) contained in the architectural, structural and/or other consultants' drawings. The structural drawings shall be used in conjunction with the architectural and other consultant's drawings. Some dimensions and elements such as elevations, depressions, slopes, mechanical housekeeping pads, etc. may not be shown in the structural drawings.
10. Review of shop drawing submittals by Dunn Associates, Inc. is for general compliance only and is not intended for approval. The shop drawing review shall not relieve the contractor from the responsibility of completing the project according to the contract documents.
11. Shop drawings made from reproductions of the contract drawings will be rejected unless the contractor signs a release agreement prior to the shop drawings being reviewed.

BASIS OF DESIGN

1. Governing Building Code 1997 Uniform Building Code
2. Roof Snow Load — 30 psf plus Snow Drift
3. Floor Live Loads
   - Office — 80 psf + 20 psf Partition
   - Exist Facilities & Corridors — 100 psf
4. Seismic Loads
   - Seismic Zone 3 — Z = 0.3
   - Importance Factor — I = 1.00
   - Building Type — R = 4.5
   - Soil Profile Type — Ca = 0.36
   - W — Dead Loads of Structure
   - Base Shear — Vs = 2.5*Ca*W/R = 0.20W (Strength Design)
5. Wind Loads
   - Basic Wind Velocity — 70 mph
   - Exposure Type — C
   - Importance Factor — 1.00

FOUNDATION

1. Soils Report by AGRA Earth and Environmental, dated June 1, 1999.
2. Soil Bearing Pressure: 2000 psf, on natural material or structural fill extending down to suitable natural material.
3. Frost Protection: 30 inches minimum
4. Lateral Soil Pressure Fluid Equivalent Density.
   a. Active: . . . . 35 pcf (retaining walls)
   b. At Rest: . . . . 55 pcf (rigid foundation walls)
   c. Passive: . . . . 300 pcf
5. Coefficient of Friction . . . 0.45

EARTHWORK

1. Clearing: All surface vegetation, top soil, foundations, and any other deleterious materials shall be removed from all areas which will be loaded structurally.
2. Proof rolling: The natural undisturbed soil below all footings shall be proof rolled prior to placing concrete. Remove all soft spots and replace with compacted structural fill.
3. Compacted structural fill: All fill material shall be a well-graded granular material with a maximum size less than 4 inches and with not more than 20 percent passing a No. 200 sieve. It shall be compacted to 95 percent of the maximum laboratory density as determined by ASTM D 1557. All fill shall be tested.
4. Consult the project specifications for further earthwork requirements.

CONCRETE

1. Materials, unless noted otherwise:
   a. Normal weight aggregates — ASTM C 33
   b. Reinforcing Steel — ASTM 615 Grade 60 (Fy = 60 ksi)
   Use Grade 40 (Fy = 40 ksi) for field bent dowels with spacings indicated reduced by 1/3.
   c. Deformed Bar Anchors (DBA) — ASTM A496
   d. Headed Stud Anchors (HSA) — ASTM A108
   e. Anchor Bolts — ASTM A307 with ASTM A563 heavy hex nuts with hardened washers
   f. Admixtures:
   Air-entraining admixtures, comply with ASTM C 260 (when used).
   Calcium chloride shall not be added to the concrete mix.
   g. Type I/II cement complying with ASTM C-150 shall be used for all concrete.
   h. The water/cement ratio shall not exceed 0.50 for all concrete.
   i. The slump of all concrete shall be limited to 4" plus or minus 1".
   j. Provide air entraining as recommended by ACI 318.
   k. No aluminum conduit or product containing aluminum or any other material injurious to concrete shall be embedded in concrete.
2. Compressive strengths of concrete at 28 days shall be as follows:
   a. Footings . . . . 3000 psi
   b. Interior Slabs on Grade. . . . . 3000 psi
   c. Walls. . . . . 3000 psi
   d. Normal Weight concrete over Steel Deck . . . . . 3500 psi
   e. All Site Cast Concrete . . . . 4000 psi
3. 3-1/2" thick (5-1/2" overall) normal weight concrete slab shall be poured over the steel deck. Reinforce slab with 6" x 6" - W2.1/W2.1 welded wire fabric minimum, unless noted otherwise. Welded Wire Fabric shall be placed 1" to 1-1/2" below the top of the slab.
4. Only one grade or type of concrete shall be poured on the site at any given time.
5. The contractor shall be responsible for the design, detailing, care, placement and removal of all form work and shores.
   a. Supporting forms and shoring shall not be removed until structural members have acquired sufficient strength to safely support their own weight and any construction load to which they may be subjected. In no case, however, shall forms and shoring be removed in less than 24 hours after concrete placement.
6. Reinforcement shall have the following concrete cover:
   Cast-in-place Concrete: — Clear Cover
   a. Cast against and permanently exposed to earth . . . . 3"
   b. Formed concrete exposed to earth or weather:
   #6 thru #18 bars . . . . 2"
   #5 and smaller bars. . . . . 1-1/2"
   c. Concrete not exposed to weather or in contact with ground:
   Slabs, Walls, Joists; #11 bars and smaller . . . . 3/4"
   Beams, Columns: Primary Reinf., Ties, Stirrups, Spirals . . . . 1-1/2"
7. Construction Joints and Control Joints:
   a. Provide a formed and beveled 2 x 4 x continuous keyway in all horizontal and vertical construction joints including between top of footing and foundation walls. In addition, all joints shall be intentionally roughened to a full amplitude of approximately 1/4 inch.
   b. Control joints shall be installed in slabs on grade so the length to width ratio of the slab is no more than 1.25:1. Control joints shall be completed within 12 hours of concrete placement. Control joints may be installed by:
   Saw cut a depth of 1/4 the thickness of the slab
   Tooled joints a depth of 1/4 the thickness of the slab
   c. Install construction or control joints in slabs on grade at a spacing not to exceed 30 times the slab thickness in any direction for unreinforced slabs, unless noted otherwise. Construction joints shall not exceed a distance of 125'-0" o.c. in any direction.
8. Construction:
   a. Use chairs or other support devices recommended by the CRSI to support and tie reinforcement bars and WWF prior to placing concrete. WWF shall be continuously supported at 36" o.c. maximum. Reinforcing steel for slabs on grade shall be adequately supported on precast concrete units. Lifting the reinforcing off the grade during placement of concrete is not permitted
   b. Contractor shall coordinate placement of all openings, curbs, dowels, sleeves, conduits, bolts, inserts and other embedded items prior to concrete placement.
   c. All embeds and dowels shall be securely tied to form work or to adjacent reinforcing prior to the placement of concrete.
   d. No pipes, ducts, sleeves, etc shall be placed in structural concrete unless specifically detailed or approved by the structural engineer. Penetrations through walls, when approved, shall be built into the wall prior to concrete placement. Penetrations will not be allowed in footings or grade beams unless detailed. Piping shall be routed around these elements and footings stepped to avoid piping.
   e. Reinforcing Bars shall not be welded unless specifically shown on drawings. In such cases, use only AWS standards. Do not substitute reinforcing bars for DBAs or HSAs.
9. Detailing:
   a. Lap splice lengths shall be detailed to comply with the "Reinforcing Bar Lap Splice Schedule" contained within the contract drawings. Splices may be made with mechanical splices capable of 125% tension capacity of the bar being spliced. Mechanical splices shall be the positive connecting type coupler and shall meet all Uniform Building Code requirements. Use "Cadweld", "Lenton" Standard Couplers, "Bar-Lock" or equal with internal protector. If mechanical splices are used, splices or couplers on adjacent bars shall be staggered a minimum of 24" apart along the longitudinal axis of the reinforcing bars.
   b. At joints provide reinforcing dowels to match the member reinforcing, unless noted otherwise.
   c. At all discontinuous control or construction slab on grade joints, provide 2 - #4 x 48 inches.
   d. Provide corner bars at intersecting wall corners using the same bar size and spacing as the horizontal wall reinforcing.
   e. All vertical reinforcing shall be doweled to footings, or to the structure below with the same size and spacing as the vertical reinforcing for the element above. Dowels extending into footings shall terminate with a 90 degree standard hook and shall extend to within 4" of the bottom of the footing. Footing dowels (#8 bars and smaller) with hooks need not extend more than 20" into footings.
   f. Horizontal wall reinforcing shall terminate at ends of walls and openings into the far end of the jamb column with a 90 degree standard hook plus a 6 bar diameter extension. . Horizontal wall reinforcing shall be continuous through construction and control joints.
   g. Provide 2- #5 bars (or 1 - #7 bar in 10" walls and thinner) around all openings larger than 8 inches in any direction and smaller than 36 inches, unless noted otherwise. Extend reinforcing bars a minimum of 24" beyond the corner of the openings. Where 24" is not available, extend bars as far beyond the opening as possible and terminate them with a 90 standard hook. For larger unreinforced openings contact the engineer.
   h. Provide 2-#5 X 4'-0" diagonal bars (or 1 - #7 x 4'-0" bar in 10" walls and thinner) at the corners of all openings, unless noted otherwise. Diagonal bars shall be centered on the corner of the opening. All recesses in concrete walls that interrupt reinforcing steel shall be reinforced the same as an opening.

MASONRY

1. Materials, unless noted otherwise:
   a. Concrete Masonry Units (CMU): Lightweight Grade N, Type 1 (minimum unit strength of 2500 psi.) f'm = 1800 psi.
   b. Mortar: Use Type "S" (1800 psi minimum).
   c. Grout shall attain a minimum compressive strength of 2500 psi at 28 days.
   d. Reinforcing Steel — ASTM 615 Grade 60 (Fy = 60 ksi)
   e. Deformed Bar Anchors (DBA) — ASTM A496
   f. Headed Stud Anchors (HSA) — ASTM A108
   g. Anchor Bolts — ASTM A307 with ASTM A563 heavy hex nuts hardened washers
2. Reinforcement shall have the following cover:
   a. Reinforcement shall have a minimum coverage of one bar diameter over all the bars, but not less than 3/4". When masonry is exposed to soil, minimum coverage shall be 1 1/2".
3. Construction Requirements:
   a. All units shall be laid with full mortar beds on the face shells. All head joints shall be filled solidly with mortar for a distance in from the face of the units not less than the thickness of the longitudinal face shells. Cells which are to be grouted shall have full head joints.
   b. Masonry walls, beams and columns shall be constructed with running bond, unless noted otherwise.
   c. All cells containing reinforcement, embeds, anchor bolts, etc. shall be filled solid with grout. Grout shall be placed by mechanical vibration during placing and revibrated after excess moisture has been absorbed but before workability is lost. Puddling of grout is not allowed.
   d. Where walls are not grouted solid, each grout pour shall terminate flush with the top of the uppermost unit except at cells with vertical reinforcing where the grout shall be 1-1/2 inches below top of unit to provide construction key.
   e. Grout pours shall be limited to 4'-0" unless high lift grouting procedures are followed.
   f. Vertical cells to be filled with grout shall have vertical alignment sufficient to maintain a clear, unobstructed vertical cell measuring not less than 2 inches by 3 inches. All steel reinforcement shall be secured against displacement prior to grouting by wire positioners or other suitable devices at intervals not exceeding 200 bar diameters or 10 feet maximum, or at bar splice locations. Vertical reinforcing shall be located at the center of the wall unless noted otherwise
   g. Reinforcing Bars shall not be welded unless specifically shown on drawings. In such cases, use only AWS standards. Do not substitute reinforcing bars for DBAs or HSAs.
   h. Control Joints: Spacing shall not exceed 40'-0". See architectural drawings for locations.
   i. Grout all beam and joist pockets solid after installation of beams and joists.
   j. Embed channels and plates shall be placed so as to create a flush surface with the face of the wall.
   k. Anchor bolts and headed stud anchors shall be set in a grouted cell. Anchor bolts and headed stud anchors shall have 1" grout surrounding the shank at its penetration. Grout shall be flush with the face or top of the masonry.
4. Detailing Requirements:
   a. Lap all masonry reinforcing a minimum of 48 bar diameters with a minimum lap of 24". Joint reinforcement shall lap a minimum of 6".
   b. All vertical reinforcing shall be doweled to the foundation wall, footing (structure below) and to the structure below with the same size dowel, spacing (and in the same core) as the vertical wall reinforcing above.
   c. Corner Bars: Horizontal reinforcement shall be continuous at all corners and at intersecting walls. Provide corner bars with the required lap splice length.
   d. Wall Openings 24" wide and wider: For unscheduled openings, provide reinforcing on all side per detail ------. Also, for all openings provide horizontal bar at bottom of opening per detail ------. Vertical bars shall extend from floor level below to the floor or roof level above. Horizontal bars for all openings shall extend a minimum of 48 bar diameters beyond the corners of the opening. Where a 48 bar diameter extension is not possible, extend bars as far beyond opening as possible and terminate the bar(s) with a 90 degree standard ACI hook.
   e. Horizontal wall reinforcing shall be continuous through joining concrete walls, masonry walls, columns, and pilasters. Provide a key between the wall and the column or pilaster. Horizontal wall reinforcing shall be placed inside the column vertical reinforcing.
   f. Horizontal wall reinforcing shall terminate at each side of control joints except at floor and roof level beams and at top of parapets.
   g. All masonry column ties shall terminate with 135 degree hooks plus a 6 bar diameter extension (4" minimum).
5. Masonry Strength Verification:
   a. Masonry strength, f'm shall be verified using the "Unit Strength Method" per UBC Section 2105.3.4 and as described below:
   i. Prior to construction, the masonry units shall be tested for strength and a letter of certification for the grout strength shall be provided.
   ii During construction, the masonry units, grout and mortar shall be tested for every 5,000 square feet of masonry constructed.
   b. The contractor has the option of using the "Masonry Prism Test Method" or the "Masonry Prism Test Record Method" per UBC Section 2105.3.2 and 2105.3.3 in lieu of the "Unit Strength Method."

STRUCTURAL STEEL

1. Material:
   a. Wide Flange Sections — ASTM A572 (50KSI)
   b. Other shapes & Plates — ASTM A36
   c. Pipe Columns — ASTM A53, Types E or S, Grade B.
   d. Steel Tubes — ASTM A500 Grade B (46KSI)
   e. Deformed Bar Anchors (DBA) — ASTM A496
   f. Headed Stud Anchors (HSA) — ASTM A108
   g. Anchor Bolts — ASTM A307 with ASTM A563 heavy hex nuts and hardened washers Grade A
   h. Bolted Connections: — ASTM A325
2. Fabrication and construction shall comply with the latest edition of the following Codes and Standards:
   a. American Institute of Steel Construction (AISC), "Specification for the Design, Fabrication and Erection of Structural Steel for Buildings," with "Commentary".
   b. AISC "Code of Standard Practice" excluding the following: Section 1.5.1, Section 3.3 (first and last sentence), Section 3.4, Section 4.2, Section 4.2.1, Section 4.2.2, Section 6.3.2, Section 7.5.4, and Section 7.11.5.
   c. AISC "Specification for Structural Joints Using ASTM A325 or A490 Bolts"
   d. American Welding Society (AWS), Structural Welding Code (specific items do not apply when they conflict with the AISC requirements).
3. Welding:
   a All welding and cutting shall be performed by AWS certified welders.
   b. Use E-70 XX or as noted otherwise. E60 XX may be used for welding steel floor and roof decks.
   c. All intersecting steel shapes which are not bolted shall be connected by a fillet weld all around, unless noted otherwise. Where fillet weld sizes are not shown they shall be 1/16" less than the thinnest of the connected parts for thicknesses 1/4" and larger. Fillet welds on plates less than 1/4" shall be of the same size as the thinnest of the connected part.
   d. Reinforcing Bars: Do not weld rebar except as specifically detailed in the drawings. In such cases, use only AWS standards. Do not substitute reinforcing bars for deformed bar anchors (DBAs), machine bolts, or headed stud anchors(HSAs).
   e. Do not weld anchor bolts, including "tack" welds.
   f. Headed Stud Anchors (HSAs) welding and deformed bar anchor welding shall conform to the manufacturer's specifications.
4. Bolted Connections:
   a. Use ASTM A325N bolts for all steel to steel connections, unless noted otherwise. Tighten bolts by the turn of the nut, calibrated wrench, or direct tension indicator method. Alternate fastener designs as defined by AISC shall be submitted to the engineer for review and acceptability prior to installation.
   b. Use hardened washers beneath the turned element of all bolts or nuts. Use hardened beveled washers, to compensate for the lack of parallelism, where the outer face of the bolted parts has a slope greater than one in twenty with respect to the plane normal to the bolt axis. At oversized holes hardened washers or plates shall conform with ASTM F-436 and shall completely cover the slot after installation.
   c. Where a steel to steel beam connection is not shown, provide a standard AISC framed connection for one half the total uniform load capacity of the beam for the span and steel specified.
   d. Bolts, nuts and washers shall not be reused.
5. Provide full depth web stiffener plates at each side of all beams at all bearing points. Stiffener plates shall be the thickness called out below unless noted otherwise and shall be welded both sides with fillet welds all around:

FLANGE WIDTH	STIFFENER THICKNESS	WELD SIZE
Less than 8 1/4"	1/4"	3/16"
8 1/4" to 12 1/4"	3/8"	1/4"
12 1/4" to 16 1/2"	1/2"	5/16"
16 1/2" to 20 3/4"	5/8"	3/8"

OPEN WEB STEEL JOISTS AND GIRDERS

1. All open web steel joists and girders shall be fabricated and erected in accordance with the latest edition of Steel Joist Institute (SJI), "Standard Specifications and Code of Standard Practice".
2. Joists or girders with slopes greater than 1/2 inch per foot shall be designed to meet or exceed the load capacities, listed in the SJI load tables, of the joist or girder sizes indicated on the framing plan, as if the joists or girders were installed level.
3. Provide special bearing ends to accommodate slopes from sloped joists, sloped girders or sloped bearing conditions.
4. Modifications to any joist or girder, including holes through the top and bottom chords, without the written consent and direction from the manufacturer is not allowed.

METAL DECKING

1. Steel deck shall comply with the latest requirements of the Steel Deck Institute.
2. All deck shall be 3-span continuous minimum. In areas where 3-span conditions are not possible, the contractor shall provide heavier gauge deck as required to provide the equivalent loading of the deck under a three span condition.
3. Steel roof deck shall not be used to support loads from plumbing, HVAC ducts, light fixtures, architectural elements or equipment of any kind, unless specifically noted.
4. All deck supporting members shall be dry before welding.
5. Crimp seams before button punching or welding interlocking seams
6. Yield stress of the 22 gauge steel deck shall be limited to a maximum of 50 ksi.
7. Where deck is to receive sprayed-on fire proofing, painted deck shall be coated with special paint which will allow the sprayed-on fire proofing to adhere to the painted deck.

Steel Floor Deck:

a. Steel floor deck shall be 2" deep X 22 gauge minimum phosphatized/painted composite type "W" deck with interlocking side seams with the following properties:

	22 Gauge	20 Gauge	18 Gauge
Minimum S (in3/ft) =	0.283	0.361	0.510
Minimum I (in4/ft) =	0.340	0.423	0.555

Deck shall be galvanized (G60) when used above or below mechanical equipment rooms

b. Steel deck with 3 1/2" thick (5 1/2" overall) normal weight concrete slab shall have a minimum diaphragm shear capacity of 2200 lbs/ft. for a 7'-0" deck span.
c. Weld deck to supporting framing members with 5/8" diameter puddle welds at the following spacing (Closer spacings may be used to develop minimum shear requirements.):
   i. 12" o.c. to supports perpendicular to deck corrugations (4 welds per 36" wide sheet).
   ii. 12" o.c. to all supports parallel to deck corrugations.
d Attach interlocking seams with 3/16" diameter button punch at 18" o.c. or 1 1/2" top seam weld at 36" o.c. between adjacent pieces of deck. Closer spacings may be used to develop minimum shear requirements.
e. Provide 2 inch minimum bearing at supports.

Steel Roof Deck:

a. Steel roof deck shall be 1 1/2" deep X 22 Gauge minimum painted, type "B" wide rib deck with interlocking side seams with the following properties:

	22 Gauge	20 Gauge	18 Gauge
Minimum S (in 3/ft)=	0.178	0.234	0.322
Minimum I (in 4/ft)=	0.172	0.213	0.296

b. Minimum allowable deck diaphragm shear values shall be 680 lb/ft. for a 7'-0" deck span.
c. Weld steel roof deck to supporting framing members with 5/8" diameter puddle welds at the following spacings (Closer spacings may be used to develop minimum shear requirements.):
   i. 6" o.c. to all supports perpendicular to deck corrugations (7 welds per 36" sheet).
   ii. 6" o.c. to all supports parallel to deck corrugations.
d. Attach interlocking seams with 1 1/2" long top seam welds at 12" o.c. maximum between adjacent pieces of decking. Closer spacings may be used to develop minimum shear requirements.
e. Provide a 2 inch minimum bearing and a 6 inch lap at the splice points.

SPECIAL INSPECTIONS

Special inspection, as required by section 1701 of the UBC, shall be provided by an independent agency employed by the owner unless waived by the building official. The contractor shall coordinate and cooperate with the required inspections. Items requiring special inspection are:

1. Structural welding, including steel deck (UBC 1701.5.5)
2. High Strength bolted connections (UBC Section 1701.5.6)

LEGEND OF MARKS AND ABBREVIATIONS

AB	ANCHOR BOLT(S)
ALT	ALTERNATE
APPROX	APPROXIMATE
ARCH	ARCHITECT(URAL)
ABV	ABOVE
BM	BEAM
BF-x	BRACED FRAME MARK
BRG	BEARING
BTWN	BETWEEN
BLDG	BUILDING
BOT	BOTTOM
BLW	BELOW
CB-x	CONCRETE BEAM MARK
CC-x	CONCRETE COLUMN MARK
CDP-x	CONCRETE DRILLED PIER MARK
CFW-x	CONCRETE FDN WALL MARK
CGB-x	CONC GRADE BEAM MARK
C.J.	CONSTRUCTION OR CONTROL JOINT
CJ-x	CONCRETE JOIST MARK
CL-x	CONCRETE LINTEL MARK
CMU	CONCRETE MASONRY UNIT
COL	COLUMN
CONC	CONCRETE
CONST	CONSTRUCTION
CONT	CONTINUOUS
CONTR	CONTRACTOR
CP-x	CONCRETE PIER MARK
CRW-x	CONC RETAINING WALL MARK
CTR	CENTER
CSW-x	CONC SHEAR WALL MARK
CW-x	CONCRETE WALL MARK
DB	DECK BEARING
DBA	DEFORMED BAR ANCHOR
DBE	DECK BEARING ELEVATION
DBL	DOUBLE
DET	DETAIL
DIA	DIAMETER
DIM	DIMENSION
DN	DOWN
DWG	DRAWING
DWL	DOWEL
EA	EACH
ELEV OR EL.	ELEVATION
ELEC	ELECTRICAL
EQUIP	EQUIPMENT
EQ	EQUAL
EXIST	EXISTING
EXP	EXPANSION
EXT	EXTERIOR
E.F.	EACH FACE
E.J.	EXPANSION JOINT
E.W.	EACH WAY
FCx	CONTINUOUS FOOTING MARK
F.D.	FLOOR DRAIN
FDN	FOUNDATION
F.F.	FINISH FLOOR
FIN	FINISH
FL	FLOOR
FMx	MAT FOOTING MARK
FRx	RECTANGULAR FOOTING MARK
FSx	SQUARE FOOTING MARK
FT	FOOT
FTSx	THICKENED SLAB FOOTING MARK
FTG	FOOTING
GA	GAUGE
GALV	GALVANIZED
GLB	GLUE LAMINATED BEAM
GR	GRADE
GSN	GENERAL STRUCTURAL NOTES
HB	HORIZONTAL BRIDGING
HT	HEIGHT
HORIZ	HORIZONTAL
HSA	HEADED STUD ANCHOR
ICBO	INTERNATIONAL CONFERENCE OF BUILDING OFFICIALS
IN.	INCH
INSUL	INSULATION
INT	INTERIOR
I.F.	INTERIOR FACE
JT	JOINT
JST	JOIST
KLF	KIPS PER LINEAL FOOT
KSF	KIPS PER SQUARE FOOT
K	KIP(S) = 1,000 POUNDS
LF	LINEAL FOOT
LBS	POUNDS
MAS	MASONRY
MAX	MAXIMUM
MC-x	MASONRY COLUMN MARK
MCJ	MASONRY CONTROL JOINT
MECH	MECHANICAL
MF-x	MOMENT FRAME MARK
MFR	MANUFACTURER
MIN	MINIMUM
MISC	MISCELLANEOUS
ML-x	MASONRY LINTEL MARK
MP-x	MASONRY PIER MARK
MW-x	MASONRY WALL MARK
NIC	NOT IN CONTRACT
NTS	NOT TO SCALE
OPNG	OPENING
OPP	OPPOSITE
O.C.	ON CENTER
O.F.	OUTSIDE FACE
PCF	POUNDS PER CUBIC FOOT
PL	PLATE
PLF	POUNDS PER LINEAL FOOT
PNL	PANEL
PSF	POUNDS PER SQUARE FOOT
PSI	POUNDS PER SQUARE INCH
PT	POINT
REINF	REINFORCING
R.D.	ROOF DRAIN
REQ'D	REQUIRED
SBP-x	STEEL BASE PLATE MARK
SC-x	STEEL COLUMN MARK
SCP-x	STEEL CAP PLATE MARK
SCHED	SCHEDULE
SHT	SHEET
SI	SPECIAL INSPECTION
SOG	SLAB ON GRADE
STD	STANDARD
STIFF	STIFFENER
STL	STEEL
SQ	SQUARE
SIM	SIMILAR
STR	STRUCTURAL
STAG	STAGGERED
SW-x	SHEARWALL MARK
T&B	TOP AND BOTTOM
TEMP	TEMPERATURE
THDS	THREADS
T.O.	TOP OF
TOC	TOP OF CONCRETE
TOD	TOP OF DECK
TOF	TOP OF FOOTING
TOS	TOP OF STEEL
TOW	TOP OF WALL
TYP	TYPICAL
UBC	UNIFORM BUILDING CODE
UNO	UNLESS NOTED OTHERWISE
VERT	VERTICAL
W/	WITH
WD-x	WOOD DIAPHRAGM MARK
WSW-x	WOOD SHEARWALL MARK
WWF	WELDED WIRE FABRIC
WWM	WELDED WIRE MESH

LICENSED CERTIFIED STRUCTURAL ENGINEER
No. 164133
RONALD H. DUNN
STATE OF UTAH

DUNN ASSOCIATES INC.
380 West 800 South Suite 100
Salt Lake City, Utah 84101
Telephone: (801) 575-8877
Telefax: (801) 575-8875
email: dunn@ix.netcom.com
CONSULTING STRUCTURAL ENGINEERS

PGA&W

PASKER GOULD AMES & WEAVER
ARCHITECTS PLANNERS
5263 SOUTH 300 WEST MURRAY, UTAH (801) 266-4669

DRAWN BY J. MILLER
CHECKED BY D. BARKER
JOB NO. 99-071
DATE July 13, 1999

GENERAL STRUCTURAL NOTES
NEW BUILDING FOR
TAYLOR-HUNT ELECTRIC
1747 SOUTH 900 WEST, SALT LAKE CITY, UTAH

S 1.1

© PASKER GOULD AMES & WEAVER - 1999

PLOT SCALE: paper PLOT NAME: z:\1999\99071\99071s11.dwg

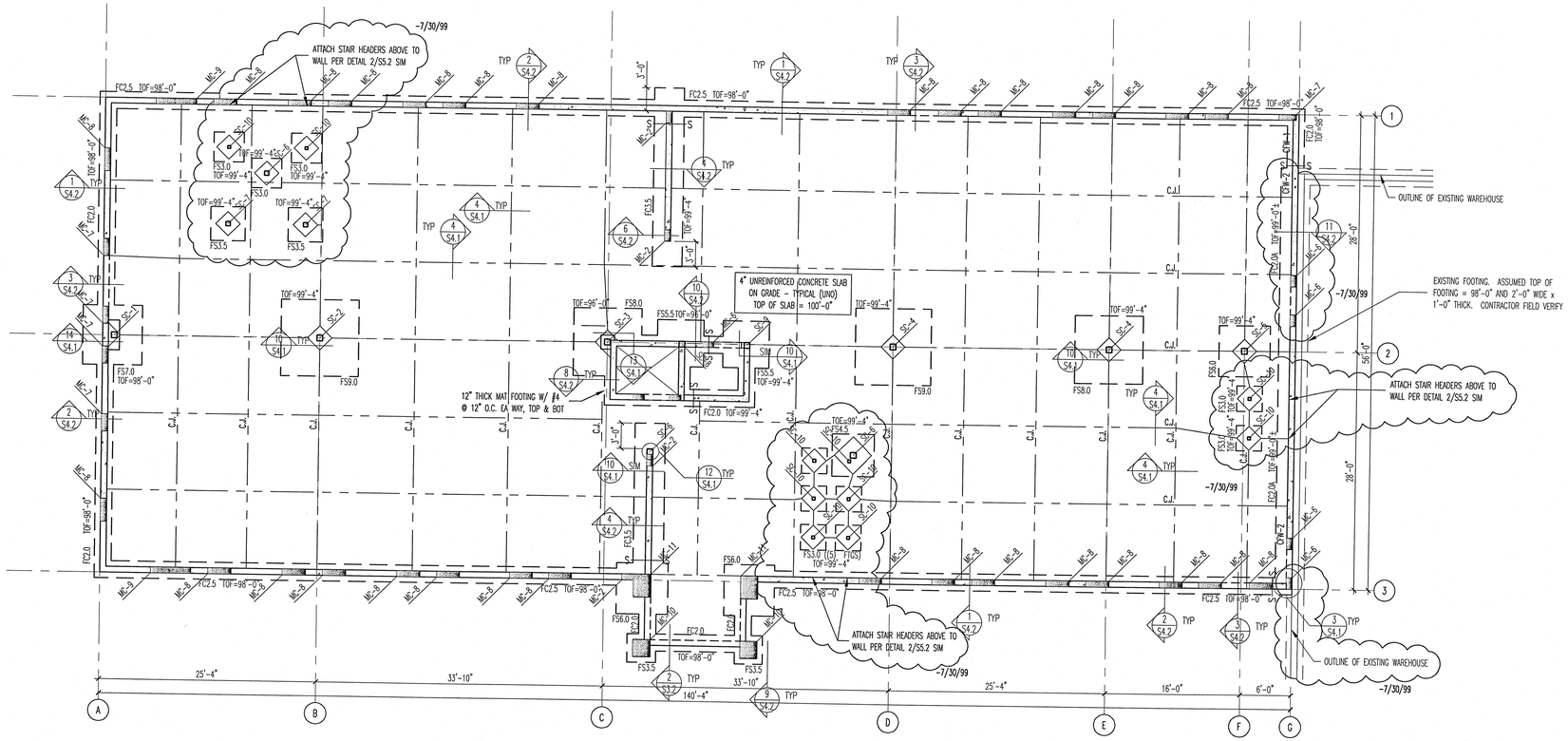

1 FOOTING AND FOUNDATION PLAN

1/8" = 1'-0" NORTH

FOOTING AND FOUNDATION PLAN NOTES:

1. ALL FOUNDATION WALLS ARE TYPE CFW-1 (UNLESS NOTED OTHERWISE).
2. SEE FLOOR AND ROOF FRAMING PLANS FOR MASONRY WALL DESIGNATIONS.
3. COORDINATE LOCATIONS OF DEPRESSED SLAB, SLOPED SLABS, AND FLOOR DRAINS WITH ARCHITECTURAL AND MECHANICAL DRAWINGS.
4. S——S INDICATES FOOTING STEP. SEE DETAILS 1/S4.1 AND 2/S4.1.
5. SEE DETAIL 4/S4.1 FOR TYPICAL CONSTRUCTION AND CONTROL JOINTS IN CONCRETE FLOOR SLAB.
6. SEE DETAIL 6/S4.1 FOR REINFORCING AT DISCONTINUOUS FLOOR SLAB JOINTS.
7. SEE DETAIL 7/S4.1 FOR REINFORCING AROUND MISCELLANEOUS OPENINGS IN MASONRY WALLS.
8. SEE DETAIL 8/S4.1 FOR REINFORCING AROUND RECESSES IN MASONRY WALLS.
9. SEE DETAIL 9/S4.1 FOR MASONRY CONTROL JOINTS.
10. SEE ARCHITECTURAL DRAWINGS FOR DIMENSIONS TO ALL STEEL COLUMNS.

PGA&W

PASKER GOULD AMES & WEAVER
ARCHITECTS PLANNERS
5263 SOUTH 300 WEST MURRAY, UTAH (801) 266-4669

DRAWN BY J. MILLER
CHECKED BY D. BARKER
JOB NO. 99-071
DATE July 13, 1999

FOOTING AND FOUNDATION PLAN
NEW BUILDING FOR
TAYLOR-HUNT ELECTRIC
1747 SOUTH 900 WEST, SALT LAKE CITY, UTAH

LICENSED CERTIFIED STRUCTURAL ENGINEER No. 164133 RONALD H. DUNN STATE OF UTAH

DUNN ASSOCIATES INC.
380 West 800 South Suite 100
Salt Lake City, Utah 84101
Telephone: (801) 575-8877
Telefax: (801) 575-8875
email: dunn@ia.netcom.com
CONSULTING STRUCTURAL ENGINEERS

S
2.1

© PASKER GOULD AMES & WEAVER - 1999

PLOT SCALE: paper PLOT NAME: z:\PRH\PROJECTS\2.dwg

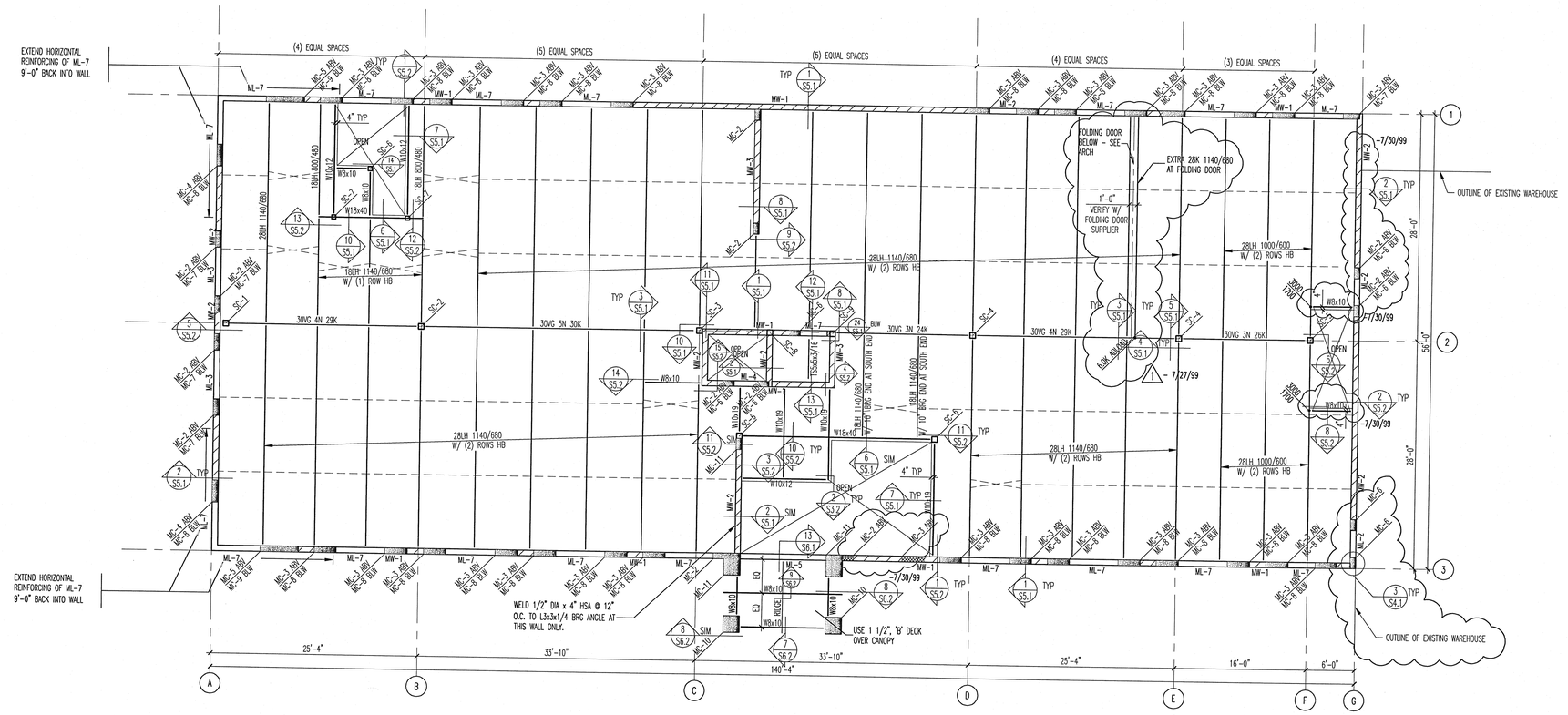

1 FLOOR FRAMING PLAN

1/8" = 1'-0"

NORTH

FLOOR FRAMING NOTES:

1. SEE DETAIL 7/S4.1 FOR REINFORCING AROUND MISCELLANEOUS OPENINGS IN MASONRY WALLS.
2. SEE DETAIL 8/S4.1 FOR REINFORCING AROUND RECESSES IN MASONRY WALLS.
3. SEE DETAIL 9/S4.1 FOR MASONRY CONTROL JOINTS.
4. OPEN WEB STEEL JOISTS AND JOIST GIRDERS SHALL BE DESIGNED BY THE MANUFACTURER TO SUPPORT THE MECHANICAL AND LATERAL LOADS SHOWN ON THE FLOOR FRAMING PLANS IN ADDITION TO THE UNIFORM AND POINT LOADS SHOWN.
5. FLOOR JOISTS SHALL BE CAMBERED FOR DEAD LOAD.
6. SEE DETAIL 9/S5.1 FOR MISCELLANEOUS FLOOR OPENINGS.

PLOT SCALE: 2.00' PLOT DATE: 2:\PROJECTS\PROTO\S2.2.dwg

PGA&W

PASKER GOULD AMES & WEAVER
ARCHITECTS PLANNERS
5263 SOUTH 300 WEST
MURRAY, UTAH (801) 266-4669

DRAWN BY J. MILLER
CHECKED BY D. BARKER
JOB NO. 98-011
DATE July 13, 1999

FLOOR FRAMING PLAN
NEW BUILDING FOR
TAYLOR-HUNT ELECTRIC
1747 SOUTH 900 WEST, SALT LAKE CITY, UTAH

LICENSED CERTIFIED STRUCTURAL ENGINEER
No. 164133
RONALD H. DUNN
STATE OF UTAH

DUNN ASSOCIATES INC.
280 West 800 South Suite 100
Salt Lake City, Utah 84101
Telephone: (801) 575-8077
Telefax: (801) 575-8075
email: dunn@xmission.com

CONSULTING STRUCTURAL ENGINEERS

S
2.2

© PASKER GOULD AMES & WEAVER - 1999

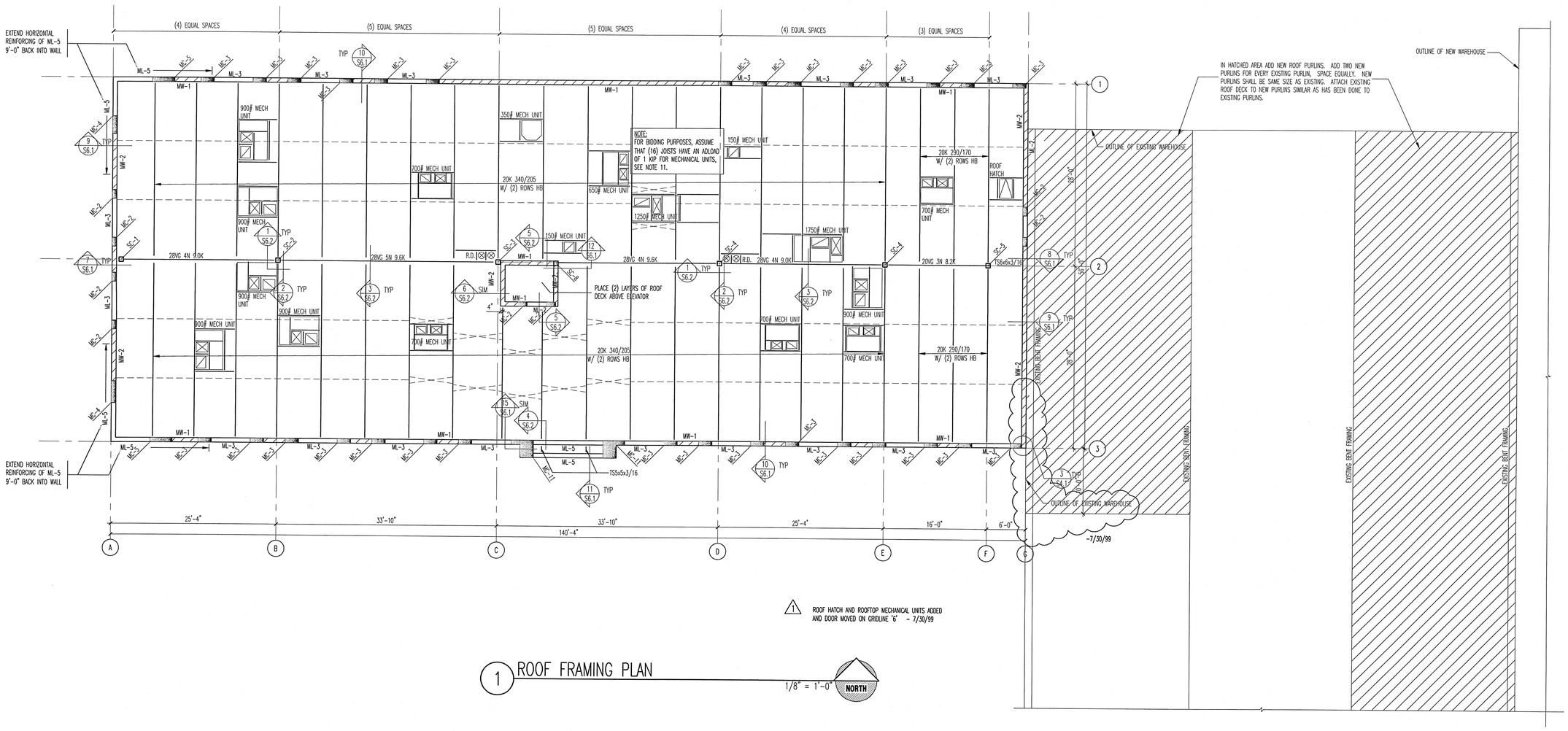

1 ROOF HATCH AND ROOFTOP MECHANICAL UNITS ADDED AND DOOR MOVED ON GRIDLINE '6' - 7/30/99

1 ROOF FRAMING PLAN

1/8" = 1'-0" NORTH

ROOF FRAMING DESIGN LOADS:

ROOF LOADS	JOIST	GIRDER
SINGLE PLY ROOFING	1.0 psf	1.0 psf
INSULATION	2.0 psf	2.0 psf
STEEL DECK	2.2 psf	2.2 psf
STEEL JOISTS	3.0 psf	3.0 psf
STEEL GIRDERS	0.0 psf	2.5 psf
ELECTRICAL	1.0 psf	1.0 psf
MECHANICAL	2.0 psf	2.0 psf
SPRINKLERS	4.0 psf	1.5 psf
COLLATERAL	4.8 psf	4.8 psf
SNOW LOAD	30 psf	30 psf
TOTAL LOAD	50 psf	50 psf

NOTES TO ROOF FRAMING PLAN:

1. ALL JOISTS SHALL AHVE 5" DEEP BEARING ENDS.
2. BOTTOM CHORD BRACING SHALL BE APPLIED AT THE JOIST NEAREST MID-SPAN AND AT THE FIRST JOIST EACH SIDE OF EACH STEEL COLUMN.
3. HORIZONTAL AND CROSS BRIDGING SHALL BE SIZED AND SUPPLIED BY THE JOIST MANUFACTURER. CONNECT TO WALLS AS INDICATED IN DETAIL 9/S6.1.
4. VERIFY SIZE, WEIGHT, LOCATION AND CONFIGURATION OF ALL ROOF TOP EQUIPMENT WITH ARCHITECT AND MECHANICAL ENGINEER. PROVIDE STEEL FRAMES FOR SUPPORT OF ROOF TOP EQUIPMENT AS INDICATED IN DETAIL 5/S6.1. COORDINATE OPENINGS WITH MECHANICAL, ELECTRICAL, AND GENERAL CONTRACTORS.
5. ALL ROOF OPENINGS WHICH ARE MORE THAN 12" x 12" SHALL BE FRAMED AS INDICATED IN DETAILS 1/S6.1 AND 6/S6.1. FOR OPENINGS WHICH ARE CUT LESS THAN TWO FLUTES OF STEEL DECK, SEE DETAIL 2/S6.1. THIS NOTE REFERS TO ANY AND ALL OPENINGS INCLUDING ROOF DRAINS, ROOF HATCHES, OPENINGS FOR MECHANICAL UNITS AND OTHER MISCELLANEOUS OPENINGS.
6. SEE ARCHITECTURAL FOR ROOF SLOPES AND DRAINS.
7. OPEN WEB STEEL JOISTS AND JOIST GIRDERS SHALL BE DESIGNED BY THE MANUFACTURER TO SUPPORT THE MECHANICAL AND LATERAL LOADS SHOWN ON THE ROOF FRAMING PLANS IN ADDITION TO THE UNIFORM AND POINT LOADS SHOWN.
8. WHERE SKYLIGHTS OR MECHANICAL UNITS INTERRUPT HORIZONTAL BRIDGING PROVIDE CROSS BRIDGING AT JOIST SPACES ON EACH SIDE. TYPICAL.
9. ALL LOADS SUPPORTED BY OPEN WEB STEEL JOISTS AND GIRDERS SHALL BE LOCATED WITHIN 6" OF JOIST OR GIRDER PANEL POINT OR THE JOIST OR GIRDER SHALL BE REINFORCED PER DETAIL 3/S6.1.
10. FOR MECHANICAL UNITS HUNG BELOW JOISTS SEE DETAIL 4/S6.1.
11. JOISTS SUPPLIER ADD WEIGHT OF MECHANICAL UNITS INTO JOISTS AS ADLOAD AND ADD ADLOAD TO THE PANEL POINTS OF THE JOIST GIRDERS.
12. SEE DETAIL 7/S6.1 FOR REINFORCING AROUND MISCELLANEOUS OPENINGS IN MASONRY WALLS.
13. SEE DETAIL 8/S4.1 FOR REINFORCING AROUND RECESSES IN MASONRY WALLS.
14. SEE DETAIL 9/S4.1 FOR MASONRY CONTROL JOINTS.

1 -7/30/99

LICENSED IDENTIFIED STRUCTURAL ENGINEER
No. 164133
RONALD H. DUNN
STATE OF UTAH

DUNN ASSOCIATES INC.
CONSULTING STRUCTURAL ENGINEERS
260 West 800 South Suite 100
Salt Lake City, Utah 84101
Telephone: (801) 575-8877
Telefax: (801) 575-8875
email: dunn@ix.netcom.com

PGA&W
PASKER GOULD AMES & WEAVER
ARCHITECTS PLANNERS
5263 SOUTH 300 WEST
MURRAY, UTAH (801) 266-4669

DRAWN BY J. MILLER
CHECKED BY D. BARKER
JOB NO. 99-011
DATE July 19, 1999

ROOF FRAMING PLAN
NEW BUILDING FOR
TAYLOR-HUNT ELECTRIC
1147 SOUTH 900 WEST, SALT LAKE CITY, UTAH

S
2.3

© PASKER GOULD AMES & WEAVER - 1999

PLOT SCALE: 1.000
PLOT MODE: 1 (MONOCHROME.CTB)
N:\PROJECTS\99011\DWG\S2.3.dwg

FOOTING SCHEDULE

MARK	WIDTH	LENGTH	DEPTH	REINFORCING CROSSWISE NO	SIZE	LENGTH	SPACING	REINFORCING LENGTHWISE NO	SIZE	LENGTH	SPACING	REMARKS
FC2.0	2'-0"	CONT.	12"	–	–	–	–	3	#4	CONT.	EQ.	
FC2.0A	2'-0"	CONT.	24"	–	#5	2'-3"	14"	3	#4	CONT.	EQ.	TOP
				–	#5	1'-7"	14"	2	#4	CONT.	EQ.	BOTTOM
FC2.5	2'-6"	CONT.	12"	–	#5	2'-0"	14"	3	#5	CONT.	EQ.	
FC3.0	3'-0"	CONT.	12"	–	#5	2'-6"	14"	3	#5	CONT.	EQ.	
FC3.5	3'-6"	CONT.	18"	–	#5	3'-0"	18"	4	#6	CONT.	EQ.	TOP & BOTTOM
FS3.0	3'-0"	3'-0"	12"	3	#5	2'-6"	EQ.	3	#5	2'-6"	EQ.	
FS3.5	3'-6"	3'-6"	12"	3	#5	3'-0"	EQ.	3	#5	3'-0"	EQ.	
FS4.0	4'-0"	4'-0"	12"	4	#5	3'-6"	EQ.	4	#5	3'-6"	EQ.	
FS4.5	4'-6"	4'-6"	12"	4	#5	4'-0"	EQ.	4	#5	4'-0"	EQ.	
FS5.0	5'-0"	5'-0"	12"	5	#5	4'-6"	EQ.	5	#5	4'-6"	EQ.	
FS5.5	5'-6"	5'-6"	12"	5	#5	5'-0"	EQ.	5	#5	5'-0"	EQ.	
FS6.0	6'-0"	6'-0"	13"	6	#5	5'-6"	EQ.	6	#5	5'-6"	EQ.	
FS6.5	6'-6"	6'-6"	14"	7	#5	6'-0"	EQ.	7	#5	6'-0"	EQ.	
FS7.0	7'-0"	7'-0"	15"	8	#5	6'-6"	EQ.	8	#5	6'-6"	EQ.	
FS7.5	7'-6"	7'-6"	15"	7	#6	7'-0"	EQ.	7	#6	7'-0"	EQ.	
FS8.0	8'-0"	8'-0"	16"	7	#6	7'-6"	EQ.	7	#6	7'-6"	EQ.	
FS8.5	8'-6"	8'-6"	17"	8	#6	8'-0"	EQ.	8	#6	8'-0"	EQ.	
FS9.0	9'-0"	9'-0"	18"	9	#6	8'-6"	EQ.	9	#6	8'-6"	EQ.	

FOOT-2000

CONCRETE FOOTING NOTES:

1. PLACE ALL FOOTING REINFORCING IN BOTTOM OF FOOTING WITH 3" CLEAR CONCRETE COVER, UNLESS NOTED OTHERWISE.
2. TOP REINFORCING, WHERE SPECIFIED, SHALL BE PLACED IN THE TOP OF THE FOOTING WITH 2" MINIMUM CONCRETE COVER.
3. IF FOOTINGS ARE EARTH FORMED, FOOTING WIDTH AND LENGTH SHALL BE 6" WIDER AND LONGER THAN SCHEDULED.
4. SEE GENERAL STRUCTURAL NOTES FOR ALL OTHER REQUIREMENTS.

MASONRY WALL SCHEDULE

WALL MARK	THICKNESS	MATERIALS	REINFORCING VERTICAL	HORIZONTAL	JOINTS	SPECIAL INSPECTION REQ'D	COMMENTS
MW-1	8"	CMU	#5 @ 32" O.C.	#5 @ 48" O.C.	NONE	NO	2nd FLOOR TO ROOF
		SOLID GROUTED CMU	#6 @ 32" O.C.	#5 @ 48" O.C.	NONE	NO	FTG TO 2nd FLOOR
MW-2	8"	CMU	#5 @ 32" O.C.	#5 @ 48" O.C.	NONE	NO	2nd FLOOR TO ROOF
		SOLID GROUTED CMU	#5 @ 32" O.C.	#5 @ 48" O.C.	NONE	NO	FTG TO 2nd FLOOR
MW-3	8"	SOLID GROUTED CMU	#5 @ 32" O.C.	#5 @ 48" O.C.	NONE	NO	

MASONRY WALL NOTES:

1. COORDINATE WITH ARCHITECTURAL DRAWINGS, MASONRY WALL FINISHES, TYPES OF MATERIAL, COURSING, ETC.
2. DO NOT SOLID GROUT WALLS UNLESS NOTED OTHERWISE.
3. HORIZONTAL WALL REINFORCING SHALL BE PLACED BETWEEN VERTICAL MASONRY COLUMN REINFORCING BARS.
4. HORIZONTAL WALL REINFORCING SHALL CONTINUE THRU MASONRY LINTELS. WHERE BOTH HORIZONTAL WALL REINFORCING AND LINTEL REINFORCING OCCUR IN THE SAME COURSE, USE THE LARGER REINFORCING.
5. MASONRY WALLS NOT DESIGNATED ON THE PLANS SHALL BE REINFORCED AS FOLLOWS:

THICKNESS	VERTICAL REINFORCING	HORIZONTAL REINFORCING
6"	#5 BARS @ 32" O.C.	#4 BARS @ 48" O.C.
8"	#5 BARS @ 32" O.C.	#5 BARS @ 48" O.C.
10"	#6 BARS @ 32" O.C.	#6 BARS @ 48" O.C.
12"	#6 BARS @ 32" O.C.	(2) #5 BARS @ 48" O.C.

6. SEE GENERAL STRUCTURAL NOTES FOR ALL OTHER REQUIREMENTS.

CONCRETE FOUNDATION WALL SCHEDULE

WALL MARK	THICKNESS	REINFORCING VERTICAL	HORIZONTAL	TOP & BOTTOM	WALL TYPE
CFW-1	8"	#4 @ 18" O.C.	#4 @ 16" O.C.	(1) #5	'A'
CFW-2	8"	#4 @ 16" O.C.	T&B ONLY	(1) #5	'A'

-7/30/99

CONCRETE FOUNDATION WALL NOTES:

1. SEE GENERAL STRUCTURAL NOTES FOR ALL REQUIREMENTS NOT NOTED IN SCHEDULE.
2. CONCRETE FOUNDATION WALLS NOT DESIGNATED ON THE PLANS SHALL BE REINFORCED AS FOLLOWS:

THICKNESS	VERTICAL REINFORCING	HORIZONTAL REINFORCING
6"	#4 BARS @ 18" O.C.	#4 BARS @ 16" O.C.
8"	#4 BARS @ 18" O.C.	#4 BARS @ 12" O.C.
10"	#4 BARS @ 16" O.C.	#5 BARS @ 15" O.C.
12"	#4 BARS @ 18" O.C. EA. FACE	#4 BARS @ 16" O.C. EA. FACE

a. PLACE STEEL IN THE CENTER OF THE WALL (EXCEPT RETAINING WALLS). WALLS THICKER THAN 10" SHALL HAVE TWO CURTAINS OF REINFORCEMENT (PLACED NEAR EACH FACE OF THE WALL), UNLESS NOTED OTHERWISE ON THE STRUCTURAL DRAWINGS.
b. FOR WALLS 10" AND THINNER (ONE) #7 X CONTINUOUS HORIZONTAL BAR SHALL BE PLACED AT THE BOTTOM OF THE WALL (NEAR THE FOOTING), AT EACH FLOOR LEVEL, AT THE ROOF LEVEL, AND AT THE TOP OF THE WALL. FOR WALLS THICKER THAN 10" (2) #5 BARS SHALL BE PLACED AT THESE LOCATIONS.

WALL REINFORCEMENT PLACEMENT TYPES:

TYPE "A" TYPE "B" TYPE "C" TYPE "D"

REINFORCING BAR LAP SPLICE SCHEDULE

BAR SIZE	f'c = 3000 PSI REGULAR CLASS A	B	TOP CLASS A	B	f'c = 4000 PSI REGULAR CLASS A	B	TOP CLASS A	B	f'c = 5000 PSI REGULAR CLASS A	B	TOP CLASS A	B	f'c = 6000 PSI REGULAR CLASS A	B	TOP CLASS A	B
#3	13"	17"	17"	21"	12"	16"	16"	21"	12"	16"	16"	21"	12"	16"	16"	21"
#4	17"	22"	22"	28"	15"	19"	19"	25"	13"	17"	17"	22"	12"	16"	16"	21"
#5	21"	27"	27"	35"	18"	24"	24"	31"	16"	21"	21"	27"	15"	19"	19"	25"
#6	27"	36"	36"	46"	24"	31"	31"	40"	21"	28"	28"	36"	20"	25"	25"	33"
#7	37"	48"	48"	63"	32"	42"	42"	54"	29"	38"	38"	49"	27"	34"	34"	44"
#8	49"	64"	64"	82"	42"	55"	55"	71"	38"	49"	49"	64"	35"	45"	45"	58"
#9	62"	80"	80"	104"	54"	70"	70"	90"	48"	62"	62"	81"	44"	57"	57"	74"
#10	78"	102"	102"	132"	68"	88"	88"	115"	61"	79"	79"	102"	56"	72"	72"	94"
#11	96"	125"	125"	162"	83"	108"	108"	141"	76"	97"	97"	126"	68"	88"	88"	115"

NOTES:

1. THESE NOTES SHALL BE USED FOR ALL SPLICES, UNLESS NOTED OTHERWISE.
2. CLASS 'A' SPLICES MAY BE USED ONLY IN CASES WHERE 50% OR LESS OF THE BARS ARE SPLICED WITHIN THE LAP SPLICE LENGTH.
3. CLASS 'B' SPLICES SHALL BE USED FOR ALL SPLICES UNLESS THE REQUIREMENTS OF NOTE #2 ABOVE ARE MET.
4. TIES AND STIRRUPS SHALL NOT BE SPLICED.
5.
 a. FOR BUNDLED BARS OF THREE OR LESS, LAP SPLICE LENGTHS SHALL BE MULTIPLIED BY 1.2.
 b. FOR BUNDLED BARS OF FOUR OR MORE, LAP SPLICE LENGTHS SHALL BE MULTIPLIED BY 1.33.
 c. INDIVIDUAL BAR SPLICES WITHIN A BUNDLE SHALL NOT OVERLAP.
 d. ENTIRE BUNDLES SHALL NOT BE LAP SPLICED.
6. FOR ALL LIGHTWEIGHT CONCRETE, LAP LENGTHS SHALL BE MULTIPLIED BY 1.3.
7. FOR ALL EPOXY COATED BARS, LAP LENGTHS SHALL BE MULTIPLIED BY 1.3 FOR TOP BARS AND 1.5 FOR REGULAR BARS.
8. TOP BARS ARE CLASSIFIED AS HORIZONTAL BARS WHERE 12", OR MORE, OF FRESH CONCRETE IS CAST BELOW THE REINFORCING BAR.

NON-BEARING MASONRY OR CONCRETE WALL BRACING NOTES

1. ALL NONBEARING WALLS AND PARTITIONS SHALL BE BRACED AT THE TOP TO RESIST LATERAL FORCES.
2. WALL AND PARTITIONS MAY BE BRACED BY INTERSECTING WALLS PROVIDED THAT THE WALLS OR PARTITIONS THAT SUPPORT THE WALL ARE EQUAL TO OR GREATER IN HEIGHT THAN THE WALL WHICH THEY BRACE. THE LENGTH OF THE MASONRY SUPPORT WALL SHALL BE 4'-0" MINIMUM. THE MAXIMUM LENGTH OF WALL WHICH MAY BE BRACED WITH OTHER WALLS IS SIXTEEN FEET (16'-0") FOR MASONRY WALLS.
3. WALLS WHICH DO NOT MEET THE REQUIREMENTS OF NOTE #2 SHALL BE BRACED ACCORDING TO THE FOLLOWING RULE.
 A. WALLS AND PARTITIONS THAT ARE TERMINATED JUST ABOVE THE CEILING SHALL BE BRACED ACCORDING TO THIS DETAIL. SPACING OF BRACES SHALL NOT EXCEED 8'-0" FROM ANOTHER BRACE OR INTERSECTING WALL. SEE BRACE SCHEDULE FOR CORRECT SIZE AND MAXIMUM LENGTH.

NONBEARING MASONRY OR CONCRETE WALL BRACE SCHEDULE

BRACE SIZE	MAX LENGTH "L"
L-2.1/2x2.1/2x3/16	8'-0"
L-3x3x3/16	9'-6"
L-3.1/2x3.1/2x1/4	11'-0"
L-4x4x1/4	13'-0"
L-5x5x5/16	16'-3"
L-6x6x5/16	19'-9"

1 NON-BEARING MASONRY OR CONCRETE WALL BEARING
NO SCALE
99071S31

MASONRY COLUMN SCHEDULE

COLUMN MARK	COLUMN SIZE	REINFORCING VERTICAL	TIES	COMMENTS
MC-1	8"x16"	(2) #5	NONE	
MC-2	8"x16"	(4) #5	#2 @ 8" O.C.	
MC-3	8"x24"	(6) #5	(2) #2 @ 8" O.C.	
MC-4	8"x32"	(8) #5	(2) #2 @ 8" O.C.	
MC-5	8"x40"	(10) #5	(3) #2 @ 8" O.C.	
MC-6	8"x16"	(4) #6	#2 @ 8" O.C.	
MC-7	8"x24"	(6) #6	(2) #2 @ 8" O.C.	
MC-8	8"x32"	(8) #6	(2) #2 @ 8" O.C.	
MC-9	8"x56"	(14) #6	(4) #2 @ 8" O.C.	
MC-10	24"x24"	(8) #6	(2) #4 @ 24" O.C.	
MC-11	24"x32"	(10) #6	(2) #4 @ 24" O.C.	

MASONRY COLUMN NOTES:

1. THE CENTERLINE OF VERTICAL BARS SHALL BE LOCATED 2 1/2" FROM THE FACE OF THE MASONRY. HORIZONTAL WALL REINFORCEMENT SHALL BE LOCATED TO THE INSIDE OF VERTICAL BARS.
2. UNLESS NOTED OTHERWISE, VERTICAL REINFORCING AND TIES SHALL EXTEND TO FULL WALL HEIGHT.
3. VERTICAL MASONRY COLUMN REINFORCING SHALL EXTEND INTO THE FOOTING AND TERMINATE WITH A STANDARD 90° HOOK. FOR CONCRETE FOUNDATION WALLS OVER 5'-0" TALL, VERTICAL COLUMN REINFORCING REINFORCING SHALL DOWEL 4'-0" MINIMUM INTO THE FOUNDATION WALL.
4. IN CONCRETE FOUNDATION WALLS, VERTICAL MASONRY COLUMN REINFORCING SHALL BE TIED WITH THE SAME TIE SIZE, SPACING, AND CONFIGURATION AS MASONRY COLUMNS ABOVE.
5. SEE GENERAL STRUCTURAL NOTES FOR ALL OTHER REQUIREMENTS.

COLUMN CONFIGURATION SCHEMATIC FOR 8", 10", AND 12" MASONRY COLUMNS

MASONRY LINTEL SCHEDULE

LINTEL MARK	LINTEL DEPTH	LINTEL SPAN MAXIMUM	REINFORCING HORIZONTAL	STIRRUPS	COMMENTS
ML-1	8"	3'-4"	(1) #7 BAR	NONE	
ML-2	16"	5'-4"	(1) #7 BAR CONT TOP & BOTTOM	#4 @ 8" O.C.	
ML-3	24"	8'-0"	(1) #7 BAR CONT TOP & BOTTOM	#4 @ 8" O.C.	
ML-4	32"	10'-0"	(1) #7 BAR CONT TOP & BOTTOM	#4 @ 8" O.C.	
ML-5	40"	–	(1) #7 CONT TOP & BOTTOM	#4 @ 8" O.C.	
ML-6	48"	–	(1) #7 CONT TOP & BOTTOM	#4 @ 8" O.C.	
ML-7	56"	–	(2) #7 CONT TOP & BOTTOM	#4 @ 8" O.C.	

MASONRY LINTEL NOTES:

1. LINTEL WIDTH AND MATERIAL TYPE SHALL BE THE SAME AS THE WALL IN WHICH THE LINTEL IS CONSTRUCTED.
2. GROUT MASONRY LINTELS MONOLITHICALLY WITH THE SUPPORT WALL OR COLUMN AT EACH END.
3. MASONRY LINTELS ML-1 THRU ML-4 SHALL BE USED OVER OPENINGS IN MASONRY WALLS WHEN A SPECIFIC MASONRY LINTEL IS NOT OTHERWISE SPECIFIED. WHEN A LINTEL IS SPECIFIED ON THE PLANS, THE MAXIMUM SPAN AS NOTED IN THIS SCHEDULE SHALL NOT APPLY. CONSULT THE STRUCTURAL ENGINEER FOR LINTELS NOT SPECIFIED ON THE PLANS WHICH HAVE A SPAN GREATER THAN 10'-0".
4. MASONRY LINTELS ML-1 THRU ML-4 SHALL NOT BE LOCATED DIRECTLY BELOW FLOOR OR ROOF BEAMS OR GIRDERS UNLESS NOTED OTHERWISE ON THE PLANS. JOISTS SHALL NOT BEAR ON ANY LINTEL LESS THAN 16" DEEP. CONSULT THE STRUCTURAL ENGINEER FOR LINTELS NOT SHOWN ON THE PLANS WHICH ARE LOCATED DIRECTLY BELOW FLOOR OR ROOF BEAMS OR GIRDERS.
5. EXTEND ALL HORIZONTAL REINFORCING 48 BAR DIAMETERS MINIMUM BEYOND THE EDGE OF ALL OPENINGS. IF HORIZONTAL REINFORCING CANNOT EXTEND 48 BAR DIAMETERS BEYOND EDGE OF OPENING, PROVIDE 90° STANDARD HOOK.
6. SPLICE TOP BARS AT MIDSPAN OF LINTEL ONLY AND BOTTOM BARS OVER SUPPORTS ONLY.
7. HORIZONTAL WALL REINFORCING SHALL CONTINUE THRU MASONRY LINTELS. WHERE BOTH HORIZONTAL WALL REINFORCING AND LINTEL REINFORCING OCCUR IN THE SAME COURSE, USE THE LARGER REINFORCING.
8. DOWEL VERTICAL REINFORCING OF WALL ABOVE LINTEL INTO THE FULL DEPTH OF LINTEL OR 48 BAR DIAMETERS, WHICHEVER IS LESS.
9. SEE GENERAL STRUCTURAL NOTES FOR ALL OTHER REQUIREMENTS.

ML-1 ML-2 ML-3 ML-4 ML-5 ML-6 ML-7

LICENSED CERTIFIED STRUCTURAL ENGINEER
No. 164133
RONALD H. DUNN
STATE OF UTAH

DUNN ASSOCIATES INC.
380 West 800 South Suite 100
Salt Lake City, Utah 84101
Telephone: (801) 575-8877
Telefax: (801) 575-8875
email: dunn@ix.netcom.com
CONSULTING STRUCTURAL ENGINEERS

PGA&W
PASKER GOULD AMES & WEAVER
ARCHITECTS PLANNERS
5263 SOUTH 300 WEST MURRAY, UTAH (801) 266-4669

DRAWN BY J. MILLER
CHECKED BY D. BARKER
JOB NO. 99-071
DATE July 13, 1999

SCHEDULES
NEW BUILDING FOR
TAYLOR-HUNT ELECTRIC
1747 SOUTH 900 WEST, SALT LAKE CITY, UTAH

S
3.1

© PASKER GOULD AMES & WEAVER - 1999

PLOT NAME: z:#99\99071\99071s31.dwg
PLOT SCALE: paper

STEEL COLUMN SCHEDULE

COLUMN MARK	SIZE	STEEL BASE PLATE	STEEL CAP PLATE	REMARKS
SC-1	TS8x6x5/16	7/8" (SBP-2)	3/4" (SCP-2)	
SC-2	TS8x8x3/8	1" (SBP-1)	3/4" (SCP-1)	
SC-3	TS8x8x5/16	1" (SBP-2)	3/4" (SCP-2)	
SC-4	TS8x6x5/16	7/8" (SBP-1)	3/4" (SCP-1)	
SC-5	TS8x8x1/4	3/4" (SBP-1)	3/4" (SCP-1)	
SC-6	TS3 1/2x3 1/2x1/4	3/4" (SBP-1)	3/4" (SCP-2)	
SC-7	TS3 1/2x3 1/2x1/4	3/4" (SBP-1)	3/4" (SCP-1)	
SC-8	TS4x4x3/16	3/4" (SBP-2)	3/4" (SCP-2)	
SC-9	TS4x4x3/16	3/4" (SBP-1)	3/4" (SCP-2)	
SC-10	TS3 1/2x3 1/2x1/4	3/4" (SBP-2)	1/2" CLOSURE PL	

STEEL COLUMN NOTES:

1. UNLESS NOTED OTHERWISE, ALL COLUMNS SHALL BE INSTALLED W/ (4) 3/4" DIA ANCHOR BOLTS W/ 3" MINIMUM HOOKS. PROJECT ANCHOR BOLTS 3" MINIMUM ABOVE THE TOP OF THE BASE PLATE. EMBEDMENT SHALL BE 9" MINIMUM. ALL BOLTS SHALL BE INSTALLED WITH HARDENED WASHERS BENEATH THE NUT. ANY BOLT HOLES LARGER THAN THE BOLT DIAMETER PLUS 5/16" SHALL HAVE 5/16" PLATE WASHERS INSTALLED BENEATH THE HARDENED WASHERS.
2. ALL BOLT CAP PLATES SHALL BE 3/4" DIA A325N BOLTS, TYPICAL UNLESS NOTED OTHERWISE.
3. ANCHOR BOLTS SHALL NOT BE WELDED (INCLUDING TACK WELDS).
4. SEE GENERAL STRUCTURAL NOTES FOR ALL OTHER REQUIREMENTS.
5. SEE DETAILS 12/S4.1 & 24/S5.1 FOR ALL COLUMNS EMBEDDED IN MASONRY WALLS.

STEEL COLUMN BASE PLATE TYPES:

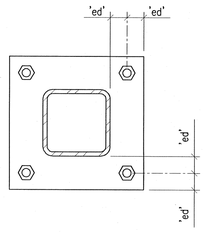

BASE PLATE SBP-1

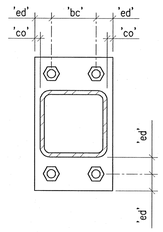

BASE PLATE SBP-2

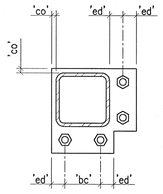

BASE PLATE SBP-3

STEEL COLUMN CAP PLATE TYPES:

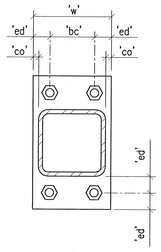

CAP PLATE SCP-1

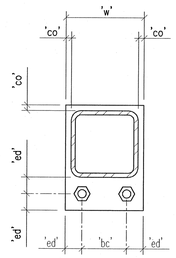

CAP PLATE SCP-2

CAP PLATE LEGEND:

'co' = 1/2" MINIMUM
'ed' = 1 1/2" MINIMUM
'bc' = BEAM OR GIRDER CAGE
'w' = BEAM OR GIRDER CAGE + 3"
OR
BEAM OR GIRDER + 1"
OR
COLUMN WIDTH + 1"
WHICHEVER IS GREATER

A-325 BOLT SCHEDULE

MAXIMUM BEAM SIZE IN EACH BEAM DEPTH GROUP	A-325N BOLTS	
	No. PER BEAM	SIZE
W8x	2	3/4"
W10x	2	3/4"

① BEAM WEB CONNECTION PLATES. THICKNESS EQUALS THE BEAM WEB THICKNESS PLUS 1/8" (3/8" MIN.)

② FILLET WELDS SHALL BE AS FOLLOWS:
ONE SIDE: PLATE THICKNESS MINUS 1/16" (1/4" MIN.)
TWO SIDES: 1/2 PLATE THICKNESS PLUS 1/16" (1/4" MIN.) EACH SIDE

③ THICKNESS EQUALS BEAM FLANGE THICKNESS OF BEAM FRAMING INTO COLUMN WEB (3/8" MIN.)

④ BOLT EDGE DISTANCE SHALL BE 1.1/2" MIN. AT ALL EDGES. BOLT SPACING SHALL BE 3" MIN.

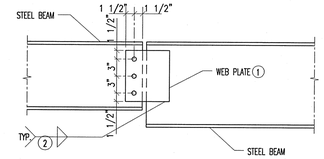

BEAM TO PARALLEL BEAM WEB PLATE CONNECTION

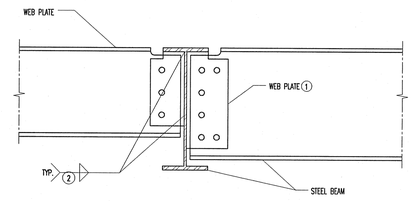

BEAM TO BEAM WEB PLATE CONNECTION

① BOLTED WEB PLATE CONNECTIONS W/ BOLT SCHEDULE (SINGLE SHEAR).

NO SCALE

A-325 BOLT SCHEDULE

MAXIMUM BEAM SIZE IN EACH BEAM DEPTH GROUP	A-325N BOLTS	
	No. PER BEAM	SIZE
W8x	2	3/4"
W10x	2	3/4"

① BEAM WEB CONNECTION PLATES. THICKNESS EQUALS THE BEAM WEB THICKNESS PLUS 1/8" (3/8" MIN.)

② FILLET WELDS SHALL BE AS FOLLOWS:
ONE SIDE: PLATE THICKNESS MINUS 1/16" (1/4" MIN.)
TWO SIDES: 1/2 PLATE THICKNESS PLUS 1/16" (1/4" MIN.) EACH SIDE

③ THICKNESS EQUALS BEAM FLANGE THICKNESS OF BEAM FRAMING INTO COLUMN WEB (3/8" MIN.)

④ BOLT EDGE DISTANCE SHALL BE 1.1/2" MIN. AT ALL EDGES. BOLT SPACING SHALL BE 3" MIN.

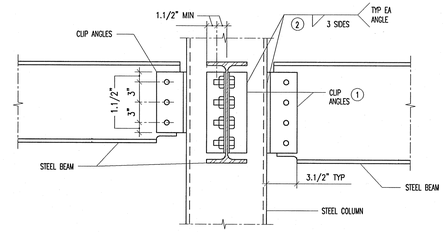

BEAM TO COLUMN CLIP ANGLE CONNECTION

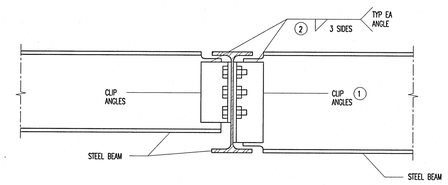

BEAM TO BEAM CLIP ANGLE CONNECTION

② TYPICAL BOLTED CLIP ANGLE CONNECTIONS W/ BOLT SCHEDULE (DOUBLE SHEAR)

NO SCALE

PGA&W

PASKER GOULD AMES & WEAVER
ARCHITECTS PLANNERS
5263 SOUTH 300 WEST
MURRAY, UTAH (801) 266-4669

DRAWN BY J. MILLER
CHECKED BY D. BARKER
JOB NO. 98-011
DATE July 19, 1999

SCHEDULES

NEW BUILDING FOR
TAYLOR-HUNT ELECTRIC
1747 SOUTH 900 WEST, SALT LAKE CITY, UTAH

S
3.2

LICENSED CERTIFIED STRUCTURAL ENGINEER
No. 164133
RONALD H. DUNN
STATE OF UTAH

DUNN ASSOCIATES INC.
CONSULTING STRUCTURAL ENGINEERS
260 West 800 South Suite 130
Salt Lake City, Utah 84101
Telephone: (801) 575-8877
Telefax: (801) 575-8875
email: dunn@slc.uswest.com

© PASKER GOULD AMES & WEAVER - 1999

PLOT NAME: J:\PROJECTS\98\98011\ts02.dwg
PLOT SCALE: 1.0000

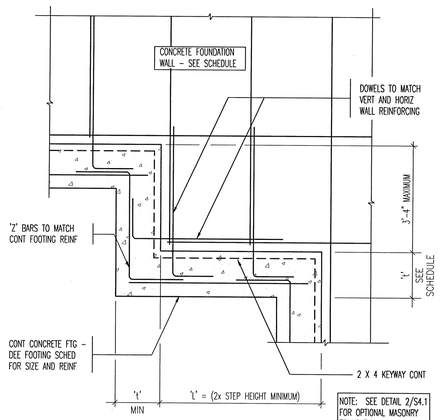

1 TYPICAL FOOTING STEP DETAIL

NO SCALE

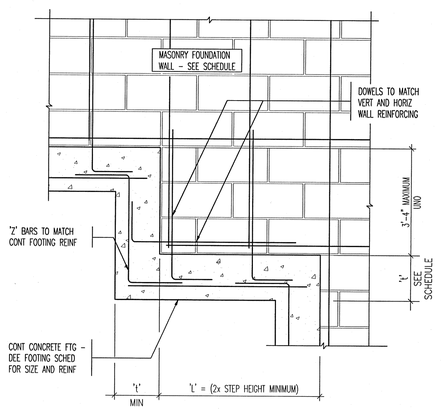

2 TYPICAL FOOTING AT MASONRY FOUNDATION WALL (OPTIONAL)

NO SCALE

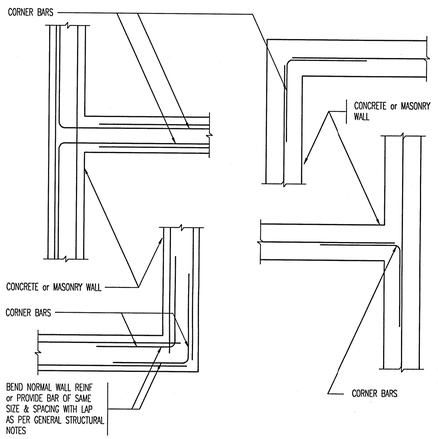

3 TYPICAL CORNER WALL REINFORCING - PLAN VIEW

NO SCALE

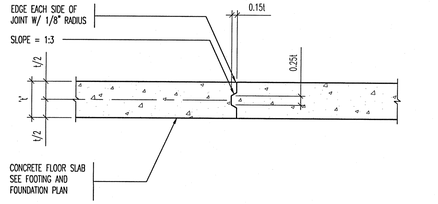

CONSTRUCTION JOINT DETAIL

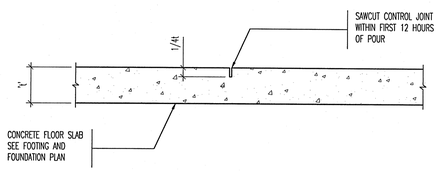

4 CONTROL JOINT DETAIL

NO SCALE

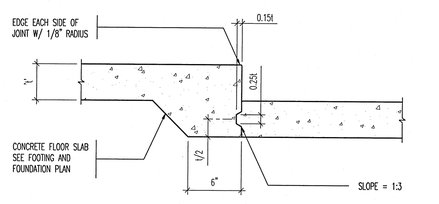

CONSTRUCTION JOINT DETAIL

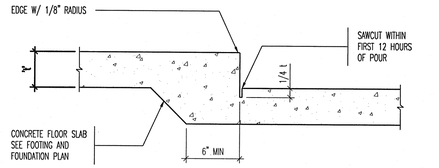

5 CONTROL JOINT DETAIL

NO SCALE

LOCATIONS REQUIRING ADDITIONAL SLAB REINFORCING STEEL:

(2) #4 x 4'-0" BARS @ EACH CORNER OF RECESSED SLABS WHERE CONTROL OR CONSTRUCTION JOINTS DO NOT EXTEND BEYOND CORNER

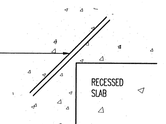

PLAN

(2) #4 x 4'-0" BARS WHERE CONTROL OR CONSTRUCTION JOINTS INTERSECT BUT DO NOT CONTINUE BEYOND INTERSECTION

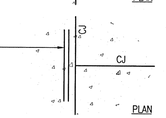

PLAN

(2) #4 x 4'-0"BARS WHERE CONTROL OR CONSTRUCTION JOINTS DO NOT EXTEND FROM CORNERS OF FLOOR SLAB BLOCKOUTS @ BUILDING COLUMNS

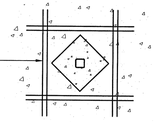

PLAN

6 DETAIL

NO SCALE

ADDITIONAL VERTICAL REINF ADJACENT TO OPENINGS:
WHERE OPENING WIDTH IS LESS THAN 3'-0":
USE (2) #5 BARS FOR 8" WALLS.
WHERE OPENING WIDTH IS GREATER THAN 3'-0" BUT LESS THAN 6'-0":
USE MC-3 @ 8" WALLS.
WHERE OPENING WIDTHS ARE GREATER THAN 6'-0" BUT LESS THAN 10":
USE MC-7 @ 8" WALLS.

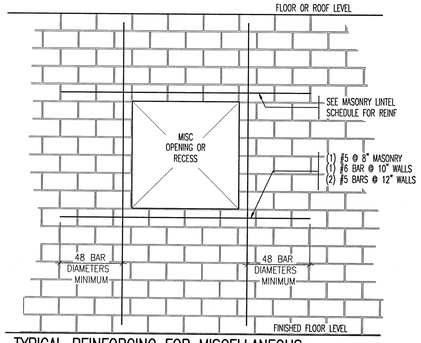

7 TYPICAL REINFORCING FOR MISCELLANEOUS MASONRY OPENINGS AND RECESSES

NO SCALE

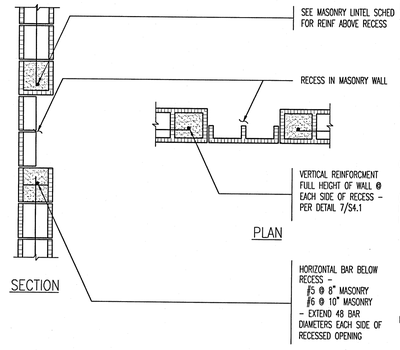

8 TYPICAL MASONRY WALL RECESS FOR 8" AND 10" WALLS

NO SCALE

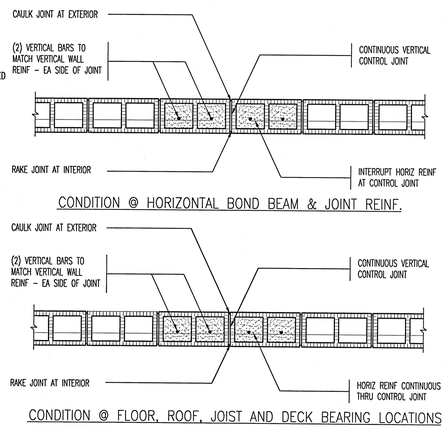

CONDITION @ HORIZONTAL BOND BEAM & JOINT REINF.

CONDITION @ FLOOR, ROOF, JOIST AND DECK BEARING LOCATIONS

9 CONTROL JOINT DETAIL FOR 8" AND 10" MASONRY WALLS

NO SCALE

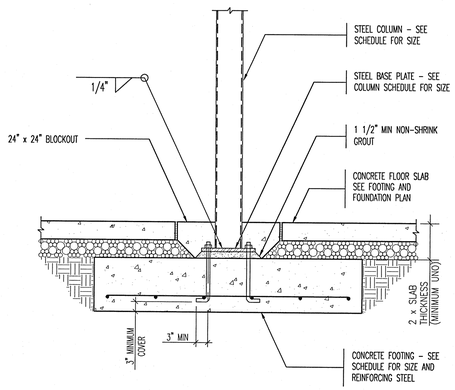

10 TYPICAL INTERIOR COLUMN TO FOOTING DETAIL

NO SCALE

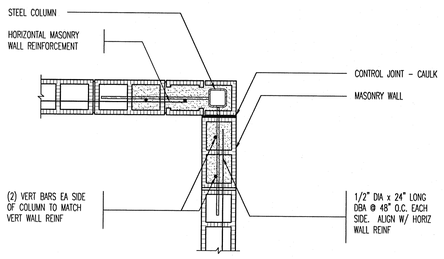

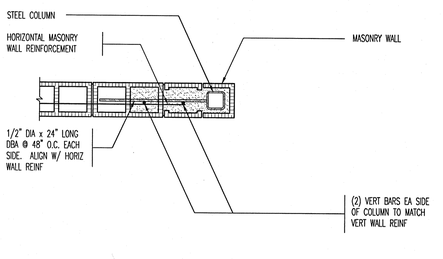

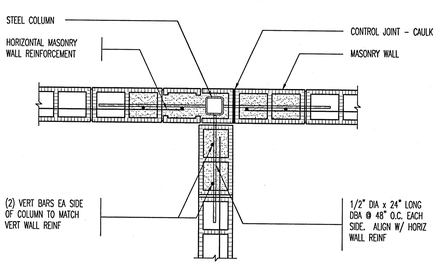

11 TYPICAL STEEL COLUMN IN MASONRY WALL

99071541

NO SCALE

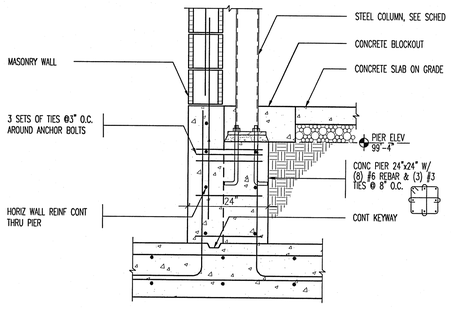

12 COLUMN DETAIL AT ELEVATOR PIT

99071a41

NO SCALE

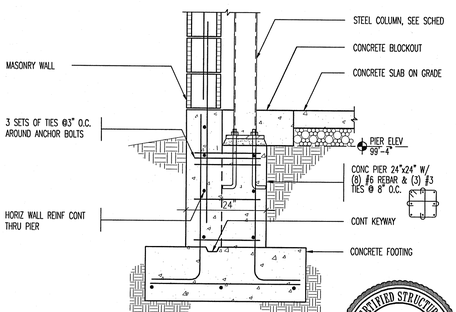

13 COLUMN DETAIL

99071a41

NO SCALE

LICENSED CERTIFIED STRUCTURAL ENGINEER
No. 164133
RONALD H. DUNN
STATE OF UTAH

DUNN ASSOCIATES INC.
360 West 800 South Suite 100
Salt Lake City, Utah 84101
Telephone: (801) 575-8977
Telefax: (801) 575-8978
email: dunn@xmission.com
CONSULTING STRUCTURAL ENGINEERS

PASKER GOULD AMES & WEAVER
ARCHITECTS PLANNERS
5263 SOUTH 300 WEST
MURRAY, UTAH (801) 266-4669

DRAWN BY J. MILLER
CHECKED BY D. BARKER
JOB NO. 99-011
DATE July 19, 1999

FOOTING AND FOUNDATION DETAILS
NEW BUILDING FOR
TAYLOR-HUNT ELECTRIC
1747 SOUTH 400 WEST, SALT LAKE CITY, UTAH

S
4.1

© PASKER GOULD AMES & WEAVER - 1999

PLOT NAME: z:\####\#0711#01\dwg\s4.1.dwg
PLOT SCALE: .pc#

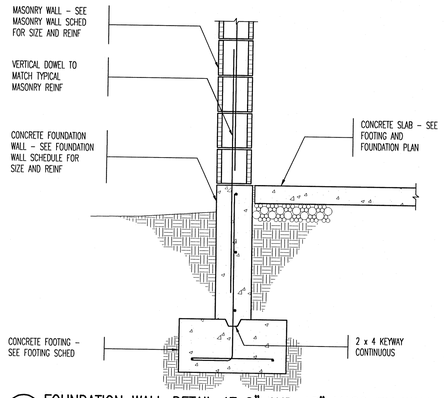

1 FOUNDATION WALL DETAIL AT 8" AND 10" MASONRY WALL
99071542 NO SCALE

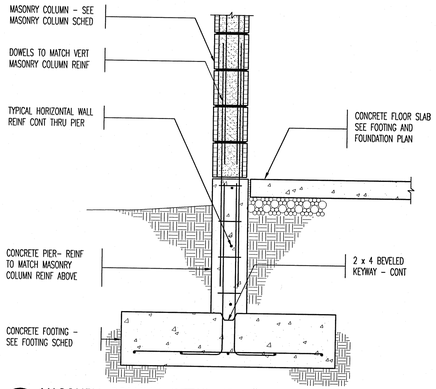

2 MASONRY COLUMN DETAIL AT 8" AND 10" MASONRY WALL
99071542 NO SCALE

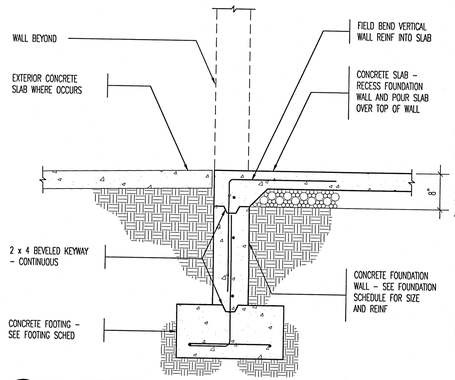

3 FOUNDATION WALL OPENINGS AT 8" AND 10" MASONRY WALLS
99071542 NO SCALE

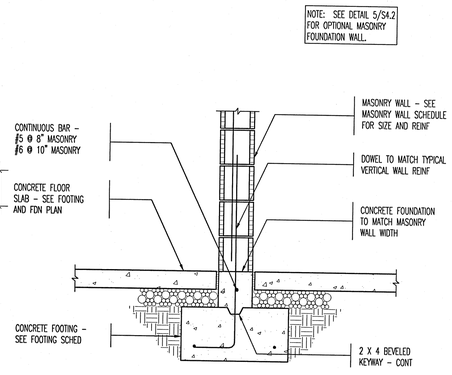

4 TYPICAL 8" AND 10" INTERIOR MASONRY WALL ON CONCRETE CURB
99071542 NO SCALE

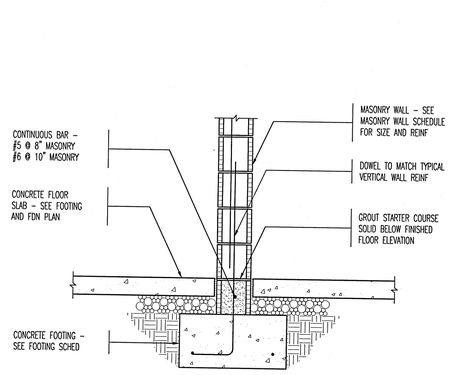

5 TYPICAL 8" AND 10" INTERIOR MASONRY WALL ON CONCRETE CURB (OPTIONAL)
99071542 NO SCALE

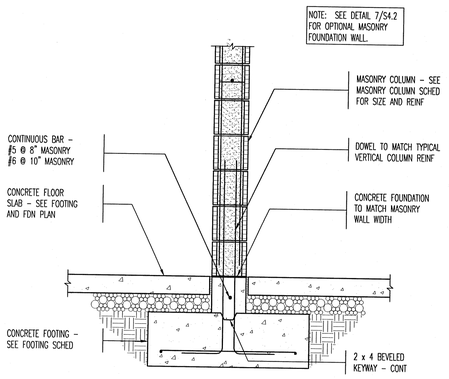

6 TYPICAL 8" AND 10" INTERIOR MASONRY COLUMN ON CONCRETE CURB
99071542 NO SCALE

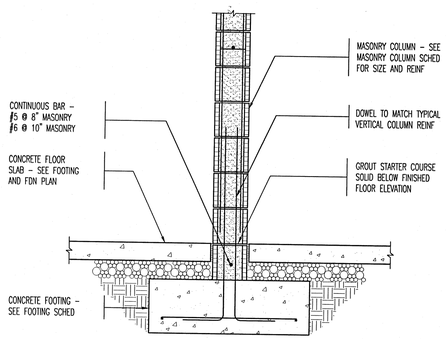

7 TYPICAL 8" AND 10" INTERIOR MASONRY COLUMN ON CONCRETE CURB (OPTIONAL)
99071542 NO SCALE

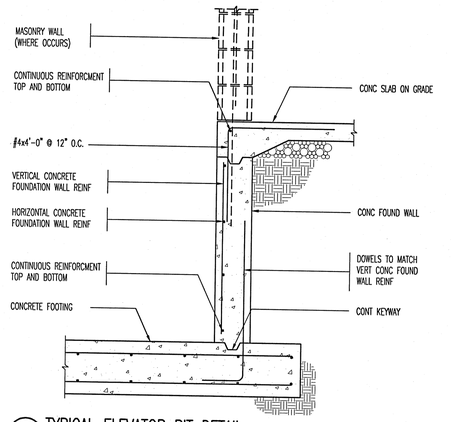

8 TYPICAL ELEVATOR PIT DETAIL
99071542 NO SCALE

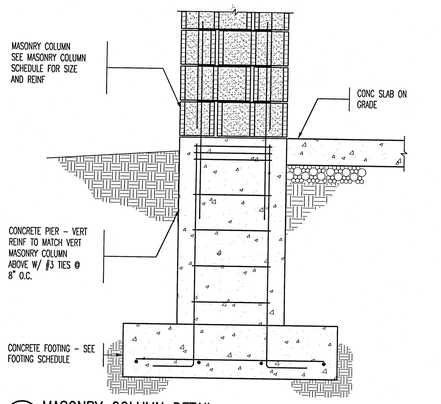

9 MASONRY COLUMN DETAIL
99071542 NO SCALE

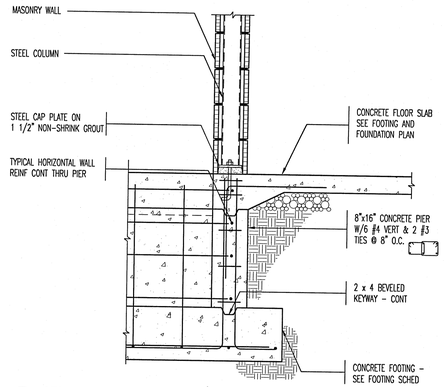

10 STEEL COLUMN IN MASONRY WALL
99071542 NO SCALE

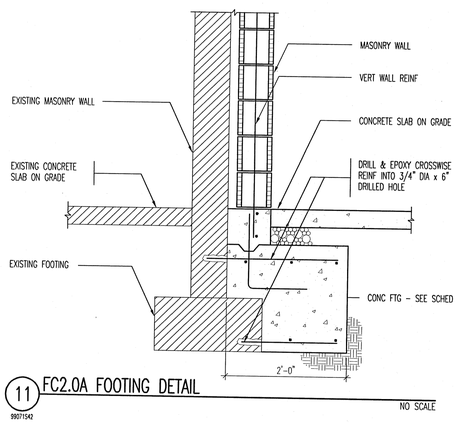

11 FC2.0A FOOTING DETAIL
99071542 NO SCALE

PASKER GOULD AMES & WEAVER
ARCHITECTS PLANNERS
5263 SOUTH 300 WEST
MURRAY, UTAH (801) 266-4669

DRAWN BY J. MILLER
CHECKED BY D. BARKER
JOB NO. 94-071
DATE July 13, 1994

FOOTING AND FOUNDATION DETAILS
NEW BUILDING FOR
TAYLOR-HUNT ELECTRIC
1747 SOUTH 900 WEST, SALT LAKE CITY, UTAH

LICENSED CERTIFIED STRUCTURAL ENGINEER
No. 164133
RONALD H. DUNN
STATE OF UTAH

DUNN ASSOCIATES INC.
380 West 800 South Suite 100
Salt Lake City, Utah 84101
Telephone: (801) 575-8877
Telefax: (801) 575-8875
e-mail: dunn@xmission.com
CONSULTING STRUCTURAL ENGINEERS

S
4.2

© PASKER GOULD AMES & WEAVER - 1999

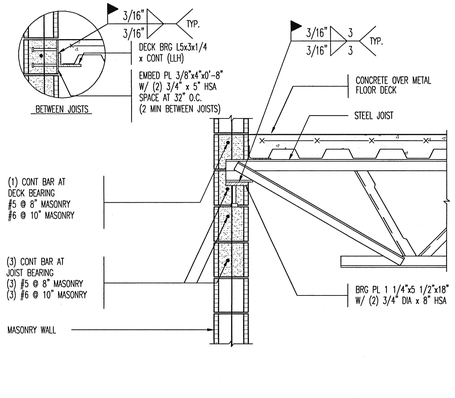

1 TYPICAL 'LH' JOIST/DECK BEARING AT MASONRY WALL
NO SCALE

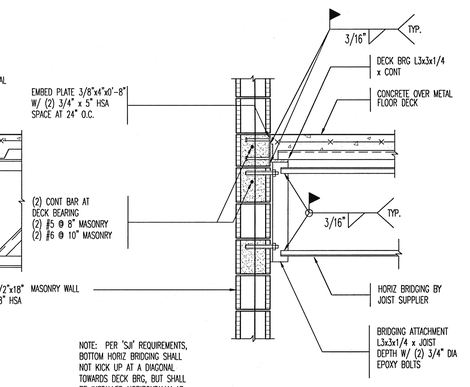

2 TYPICAL DECK BEARING AT MASONRY WALL WITH BRIDGING ATTACHMENT
NO SCALE

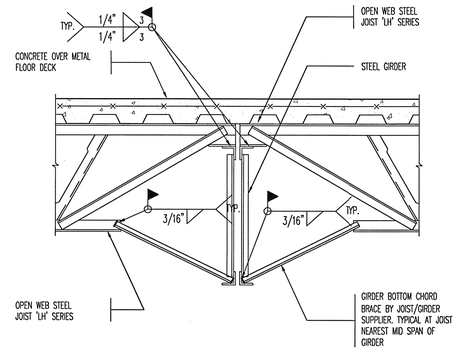

3 TYPICAL JOIST BEARING AT GIRDER
NO SCALE

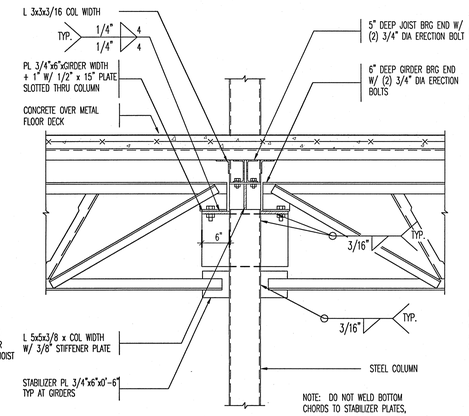

4 TYPICAL 'LH' JOIST AND GIRDER BEARING ON INTERIOR STEEL COLUMN
NO SCALE

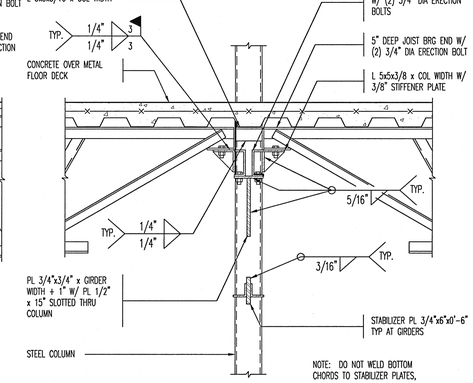

5 TYPICAL JOIST AND GIRDER BEARING ON INTERIOR STEEL COLUMN
NO SCALE

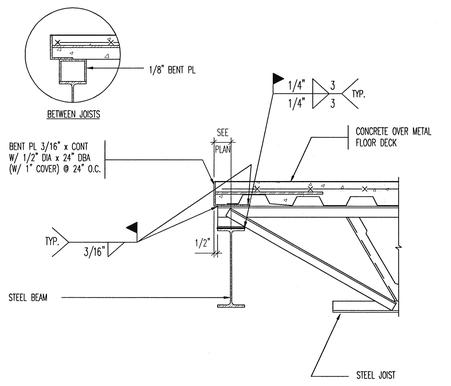

6 TYPICAL JOIST BEARING AT GIRDER
NO SCALE

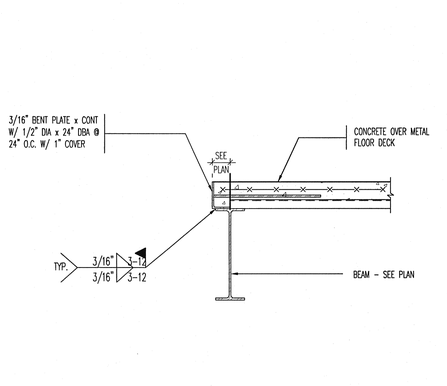

7 TYPICAL EDGE BEAM DETAIL
NO SCALE

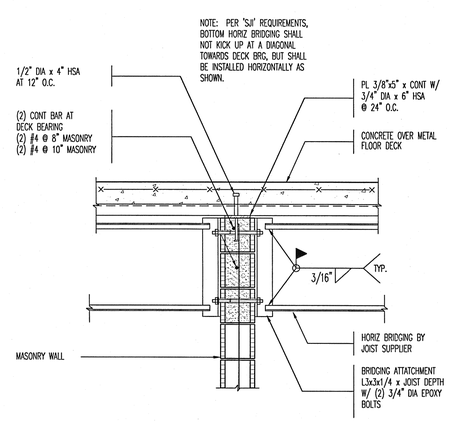

8 TYPICAL DECK BEARING AT MASONRY WALL WITH BRIDGING ATTACHMENT
NO SCALE

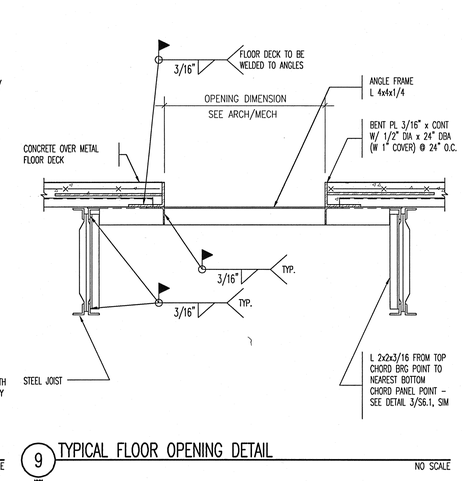

9 TYPICAL FLOOR OPENING DETAIL
NO SCALE

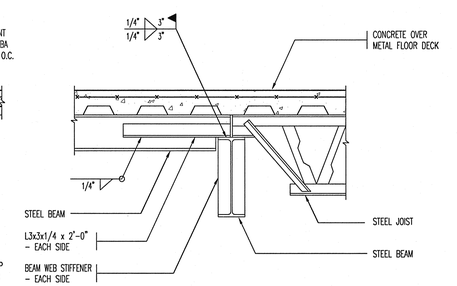

10 DETAIL
NO SCALE

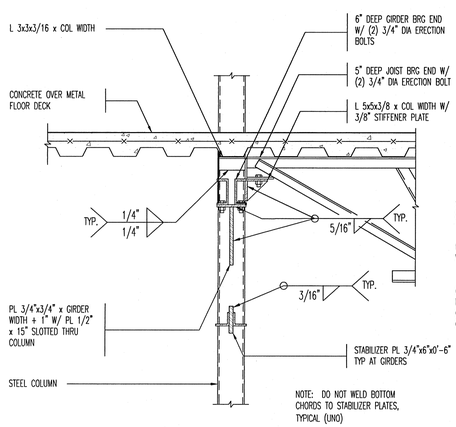

11 TYPICAL JOIST AND GIRDER BEARING ON INTERIOR STEEL COLUMN
NO SCALE

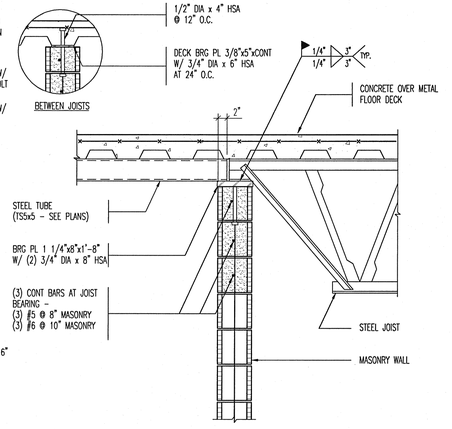

12 TYPICAL 'LH' JOIST/DECK BEARING AT MASONRY WALL
NO SCALE

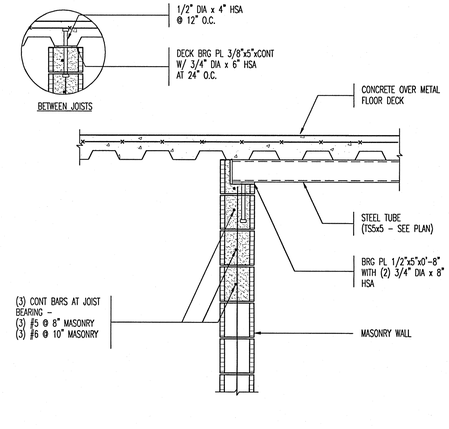

13 DECK BEARING AT MASONRY WALL
NO SCALE

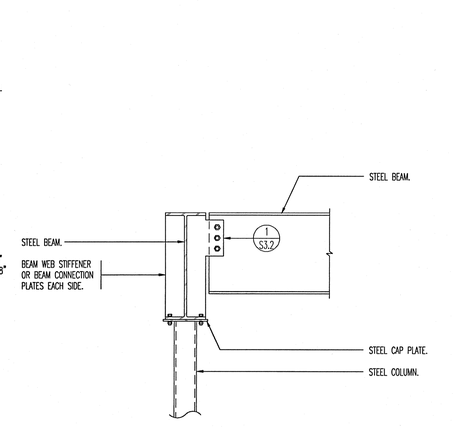

14 TYPICAL FLOOR OPENING DETAIL
NO SCALE

PLOT DATE: 7/19/99 10:17:05 AM
PLOT NAME: p:\999\dwg\s51.dwg
PLOT SCALE: paper

PGA&W

PASKER GOULD AMES & WEAVER
ARCHITECTS PLANNERS
5263 SOUTH 300 WEST
MURRAY, UTAH (801) 266-4669

DRAWN BY	CHECKED BY	JOB NO.	DATE
J. MILLER	D. BARKER	99-011	July 19, 1999

FLOOR FRAMING DETAILS
NEW BUILDING FOR
TAYLOR-HUNT ELECTRIC
1747 SOUTH 900 WEST, SALT LAKE CITY, UTAH

LICENSED CERTIFIED STRUCTURAL ENGINEER
No. 164133
RONALD H. DUNN
STATE OF UTAH

DUNN ASSOCIATES INC.
CONSULTING STRUCTURAL ENGINEERS
350 West 800 South Suite 100
Salt Lake City, Utah 84101
Telephone: (801) 575-8877
Telefax: (801) 575-8878
email: dunn@lx.netcom.com

S
5.1

© PASKER GOULD AMES & WEAVER - 1999

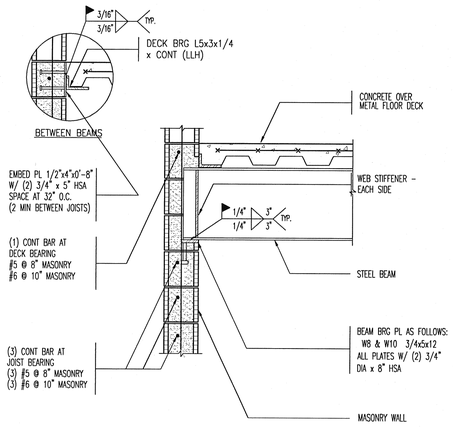

1 99071552 **TYPICAL STEEL BEAM/DECK BEARING AT 8" AND 10" MASONRY WALL** NO SCALE

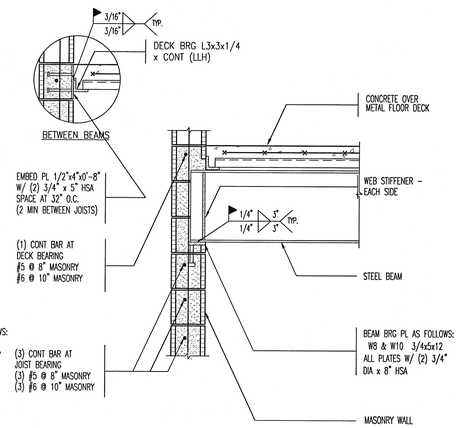

2 99071552 **TYPICAL STEEL BEAM/DECK BEARING AT 8" AND 10" MASONRY WALL** NO SCALE

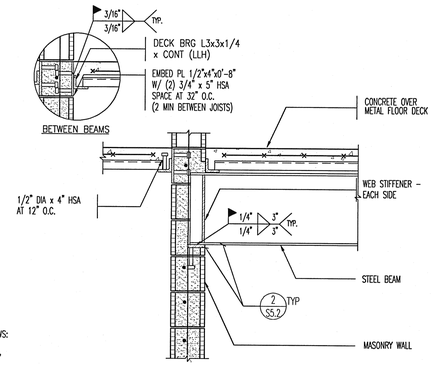

3 99071552 **TYPICAL STEEL BEAM/DECK BEARING AT 8" AND 10" MASONRY WALL** NO SCALE

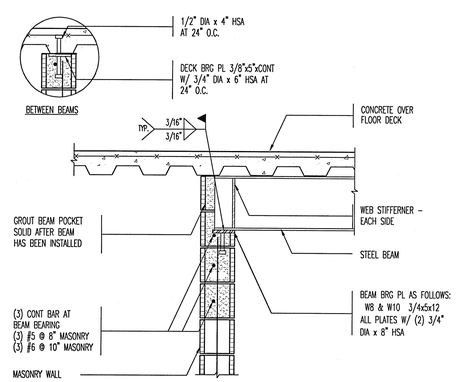

4 99071552 **TYPICAL BEAM/DECK BEARING AT 8" AND 10" MASONRY WALL** NO SCALE

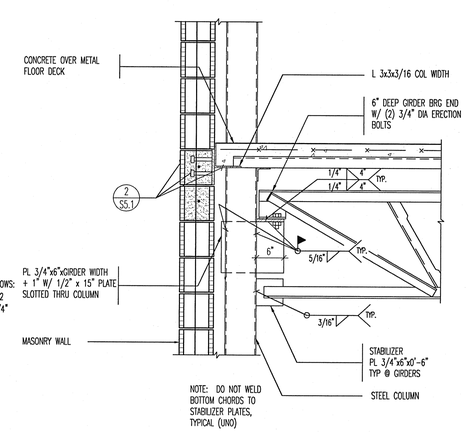

5 99071552 **TYPICAL 'LH' JOIST AND GIRDER BEARING ON EXTERIOR STEEL COLUMN** NO SCALE

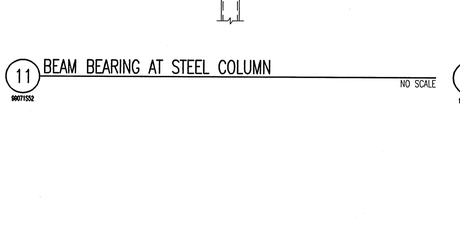

6 99071552 **TYPICAL 'LH' JOIST AND GIRDER BEARING ON EXTERIOR STEEL COLUMN** NO SCALE

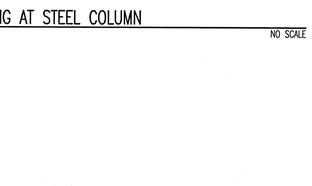

7 99071552 **TYPICAL JOIST EDGE DETAIL** NO SCALE

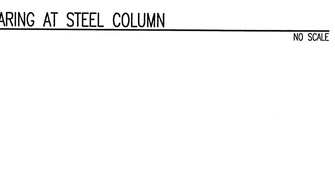

8 99071552 **STEEL BEAM TO STEEL JOIST** NO SCALE

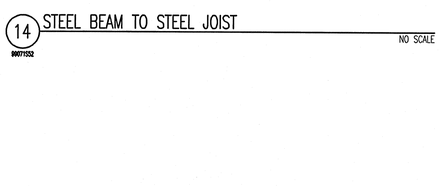

9 99071552 **JOIST BEARING AT MASONRY WALL** NO SCALE

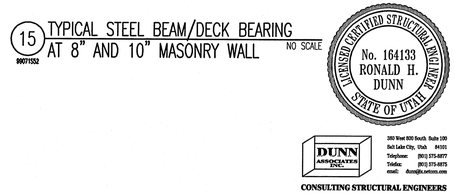

10 99071552 **BEAM BEARING AT CANTILEVER** NO SCALE

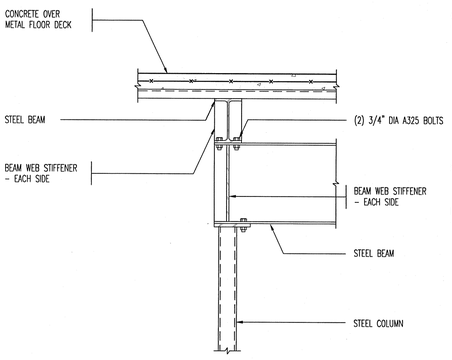

11 99071552 **BEAM BEARING AT STEEL COLUMN** NO SCALE

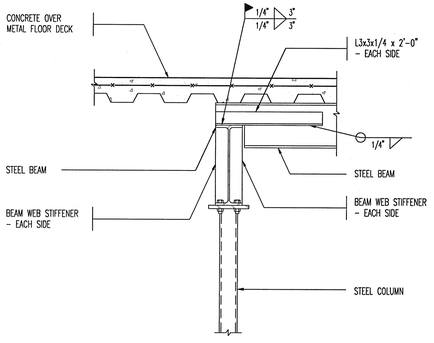

12 99071552 **BEAM BEARING AT STEEL COLUMN** NO SCALE

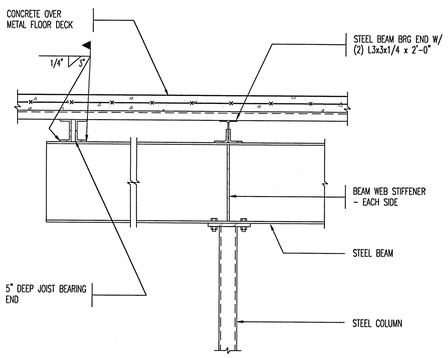

13 99071552 **BEAM BEARING AT STEEL COLUMN** NO SCALE

14 99071552 **STEEL BEAM TO STEEL JOIST** NO SCALE

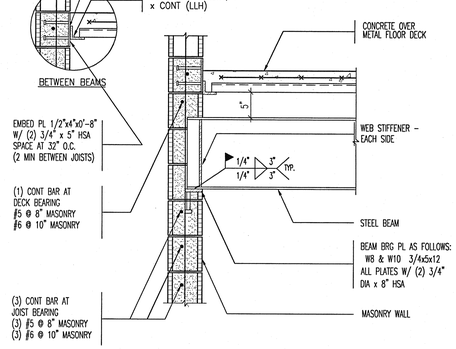

15 99071552 **TYPICAL STEEL BEAM/DECK BEARING AT 8" AND 10" MASONRY WALL** NO SCALE

LICENSED CERTIFIED STRUCTURAL ENGINEER
No. 164133
RONALD H. DUNN
STATE OF UTAH

DUNN ASSOCIATES PLLC
280 West 800 South Suite 100
Salt Lake City, Utah 84101
Telephone: (801) 575-8877
Telefax: (801) 575-8875
email: dunn@slk.infonet.com
CONSULTING STRUCTURAL ENGINEERS

PGA&W
PASKER GOULD AMES & WEAVER
ARCHITECTS PLANNERS
5263 SOUTH 300 WEST MURRAY, UTAH (801) 266-4669

DRAWN BY J. MILLER
CHECKED BY D. BARKER
JOB NO. 99-011
DATE July 13, 1999

FLOOR FRAMING DETAILS
NEW BUILDING FOR
TAYLOR-HUNT ELECTRIC
1747 SOUTH 900 WEST, SALT LAKE CITY, UTAH

S
5.2

© PASKER GOULD AMES & WEAVER - 1999

PLOT SCALE: 1.0000' = 1'-0"
PLOT NAME: J:\PROJECTS\99\TS52.dwg

SEE TYPICAL ROOF TOP MECHANICAL UNIT SUPPORT DETAIL FOR FRAMES BENEATH MECHANICAL UNITS.

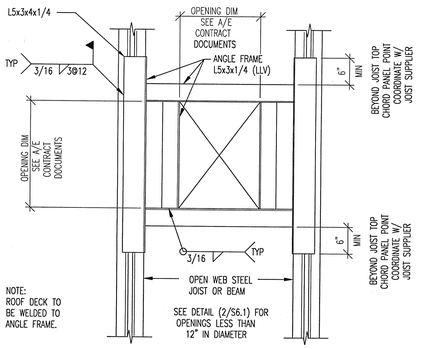

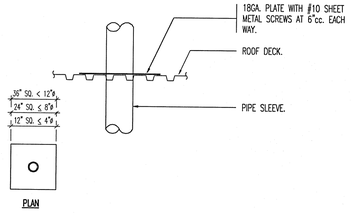

NOTE:
WHERE CONCENTRATED LOADS ON OPEN WEB JOISTS ARE LOCATED MORE THAN 6" FROM THE PANEL WORK POINTS AT EITHER THE TOP OR BOTTOM CHORD, ADDITIONAL DIAGONAL WEB MEMBERS SHALL BE FURNISHED AND INSTALLED AT THE LOCATION OF THE CONCENTRATED LOAD BY THE CONTRACTOR.

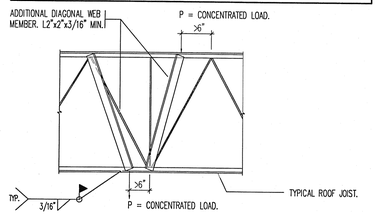

WHERE MECHANICAL UNIT WEIGHS LESS THAN 300#, USE "UNISTRUT" TO SUPPORT THE UNIT INSTEAD OF (2) L5"x3"x1/4" (LLV).

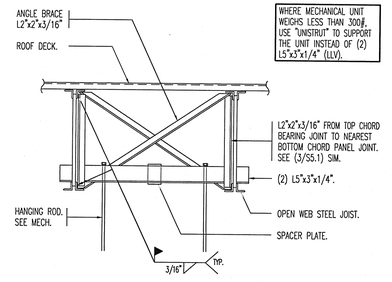

WHERE THE MECHANICAL UNIT WEIGHS LESS THAN 700#, THE L6x4x5/16 SUPPORT ANGLES MAY BE CHANGED TO L5x3x1/4.

SOLID BLOCK THE FLUTES OF THE STEEL DECK BENEATH THE CURB OF THE MECHANICAL UNIT. THIS MAY BE DONE WITH A TS 1 1/2x1 1/2x3/16"x6" LONG, TACK WELDED TO THE STEEL DECK OR WITH SOLID BLOCKING CONNECTED TO THE STEEL DECK.

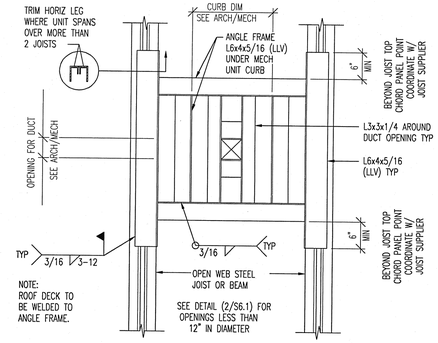

1 TYPICAL ROOF OPENING DETAIL (PLAN VIEW)
xxx — NO SCALE

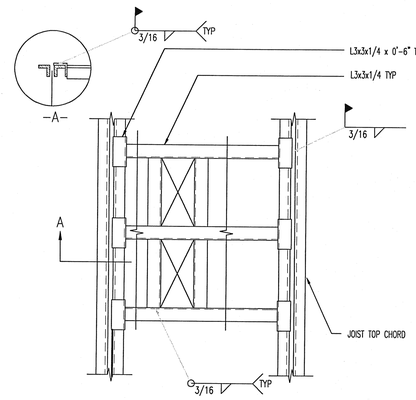

2 TYPICAL PIPE SLEEVE HOLE THRU ROOF DECK.
xxx — NO SCALE

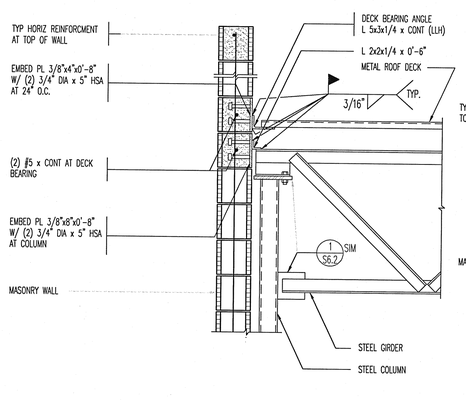

3 TYPICAL "K" JOIST REINFORCING DETAIL.
xxx — NO SCALE

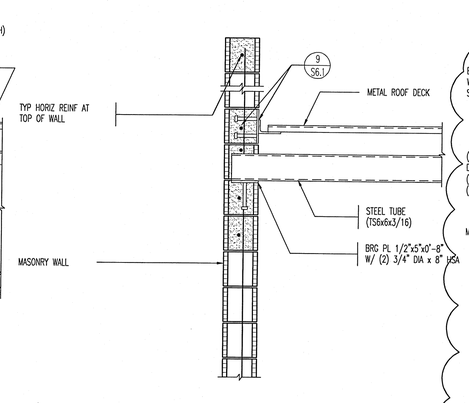

4 TYPICAL HANGING MECHANICAL UNIT SUPPORT DETAIL.
xxx — NO SCALE

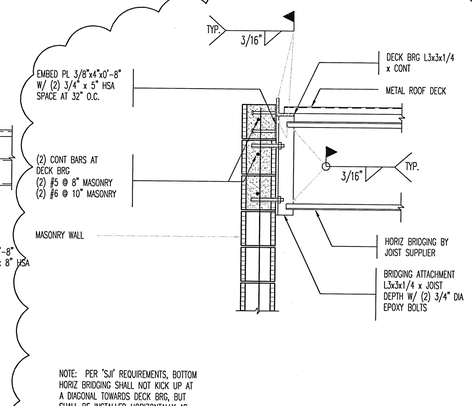

NOTE: PER "SJI" REQUIREMENTS, BOTTOM HORIZ BRIDGING SHALL NOT KICK UP AT A DIAGONAL TOWARDS DECK BRG, BUT SHALL BE INSTALLED HORIZONTALLY AS SHOWN.

5 TYPICAL ROOF TOP MECH. UNIT SUPPORT DETAIL (PLAN VIEW)
xxx — NO SCALE

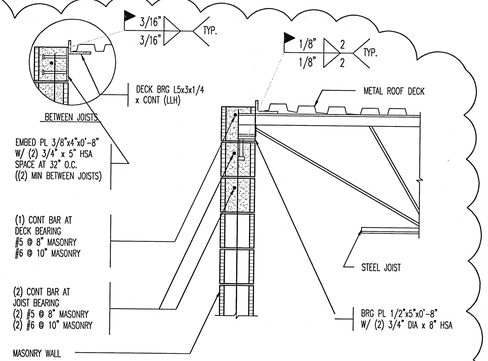

6 TYPICAL ROOF DRAIN SUPPORT AND CURB (PLAN VIEW)
xxx — NO SCALE

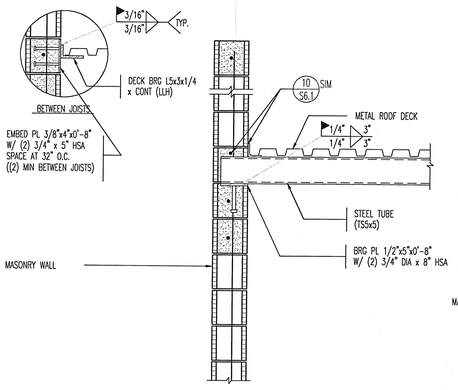

7 TYPICAL DECK BEARING AT MASONRY WALL
xxx — NO SCALE

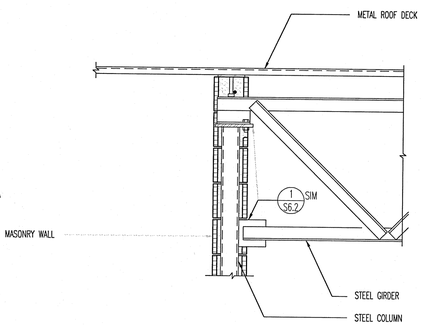

8 STEEL TUBE TO MASONRY WALL
99071561 — NO SCALE

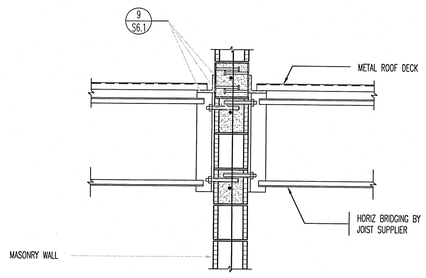

NOTE: PER "SJI" REQUIREMENTS, BOTTOM HORIZ BRIDGING SHALL NOT KICK UP AT A DIAGONAL TOWARDS DECK BRG, BUT SHALL BE INSTALLED HORIZONTALLY AS SHOWN.

9 TYPICAL DECK BEARING AT 8" AND 10" MASONRY WALL WITH BRIDGING
99071561 — NO SCALE

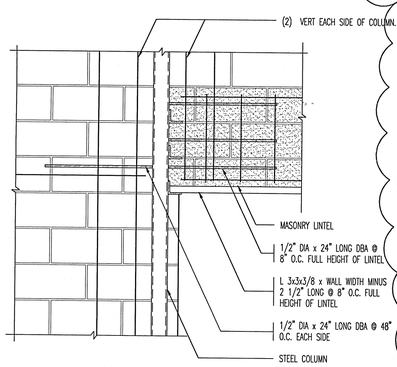

10 JOIST BEARING AT 8" AND 10" MASONRY WALL
xxx — NO SCALE

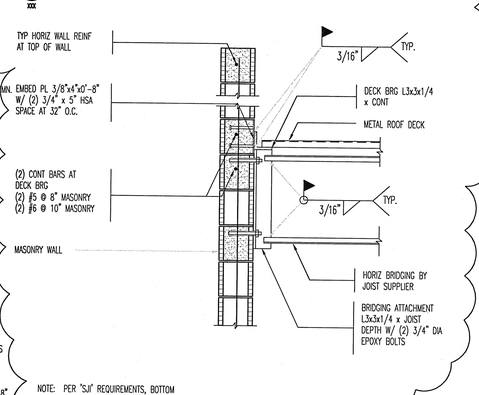

NOTE: PER "SJI" REQUIREMENTS, BOTTOM HORIZ BRIDGING SHALL NOT KICK UP AT A DIAGONAL TOWARDS DECK BRG, BUT SHALL BE INSTALLED HORIZONTALLY AS SHOWN.

11 STEEL TUBE TO MASONRY WALL
99071561 — NO SCALE

12 TYPICAL DECK BEARING AT MASONRY WALL/STEEL COLUMN
xxx — NO SCALE

13 TYPICAL DECK BEARING AT 8" AND 10" MASONRY WALL WITH BRIDGING
99071561 — NO SCALE

14 TYPICAL MASONRY LINTEL BEARING AT STEEL COLUMN
99071561 — NO SCALE

15 TYPICAL DECK BEARING AT 8" AND 10" MASONRY WALL WITH BRIDGING
99071561 — NO SCALE

1 REVISIONS - 7/27/99

LICENSED CERTIFIED STRUCTURAL ENGINEER
No. 164133
RONALD H. DUNN
STATE OF UTAH

DUNN ASSOCIATES INC.
380 West 800 South Suite 100
Salt Lake City, Utah 84101
Telephone: (801) 575-8877
Telefax: (801) 575-8875
email: dunn@slkinternet.com
CONSULTING STRUCTURAL ENGINEERS

PASKER GOULD AMES & WEAVER
ARCHITECTS PLANNERS
5263 SOUTH 300 WEST
MURRAY, UTAH (801) 266-4669

DRAWN BY J. MILLER
CHECKED BY D. BARKER
JOB NO. 99-071
DATE July 13, 1999

ROOF FRAMING DETAILS
NEW BUILDING FOR
TAYLOR-HUNT ELECTRIC
1147 SOUTH 900 WEST, SALT LAKE CITY, UTAH

S
6.1

© PASKER GOULD AMES & WEAVER - 1999

PLOT SCALE: 1=1
PLOT NAME: p:\PRINT\DETAILS\dtg

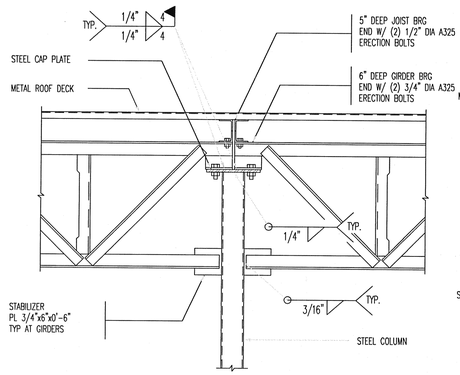

NOTE: DO NOT WELD BOTTOM CHORDS TO STABILIZER PLATE (UNO).

1 TYPICAL 'K' JOIST AND GIRDER BEARING AT INTERIOR STEEL COLUMN

xxx

NO SCALE

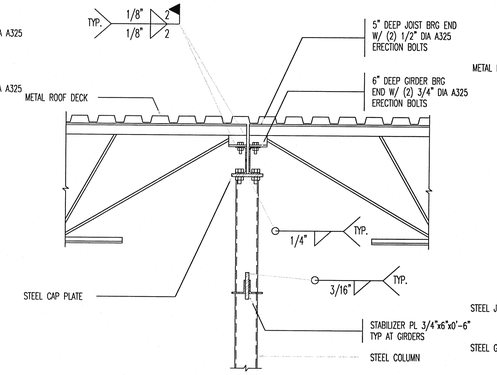

NOTE: DO NOT WELD BOTTOM CHORDS TO STABILIZER PLATE (UNO).

2 TYPICAL 'K' JOIST AND GIRDER BEARING AT INTERIOR STEEL COLUMN

xxx

NO SCALE

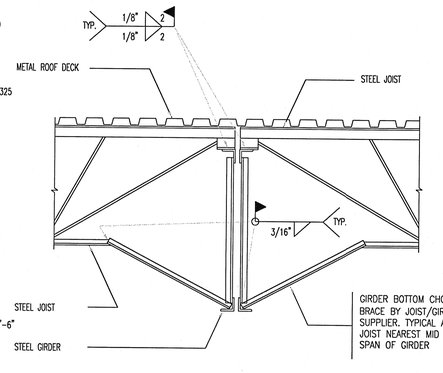

3 TYPICAL JOIST BEARING AT GIRDER

xxx

NO SCALE

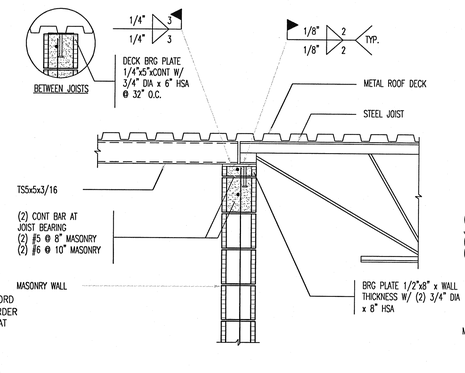

4 TYPICAL 'K' JOIST/DECK BEARING AT INTERIOR MASONRY WALL

xxx

NO SCALE

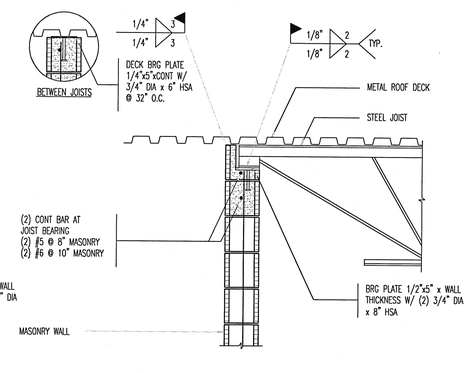

5 TYPICAL 'K' JOIST/DECK BEARING AT MASONRY WALL

xxx

NO SCALE

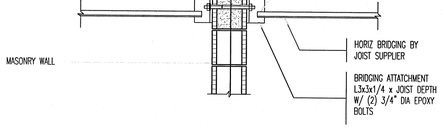

6 TYPICAL DECK BEARING AT MASONRY WALL WITH BRIDGING ATTACHMENT

xxx

NO SCALE

7 DECK BEARING AT STEEL BEAM

99071582

NO SCALE

8 CANOPY FRAMING DETAIL

99071582

NO SCALE

9 CANOPY FRAMING DETAIL

99071582

NO SCALE

PLOT SCALE: pspf
PLOT NAME: J:\PROJECTS\99071582.dwg

PGA&W

PASKER GOULD AMES & WEAVER
ARCHITECTS PLANNERS
5263 SOUTH 300 WEST
MURRAY, UTAH (801) 266-4669

DRAWN BY J. MILLER
CHECKED BY D. BARKER
JOB NO. 99-071
DATE July 13, 1999

ROOF FRAMING DETAILS
NEW BUILDING FOR
TAYLOR-HUNT ELECTRIC
1747 SOUTH 900 WEST, SALT LAKE CITY, UTAH

LICENSED CERTIFIED STRUCTURAL ENGINEER
No. 164133
RONALD H. DUNN
STATE OF UTAH

DUNN ASSOCIATES INC
CONSULTING STRUCTURAL ENGINEERS
360 West 800 South Suite 100
Salt Lake City, Utah 84101
Telephone: (801) 575-8877
Telefax: (801) 575-8875
email: dunn@c.net.com

S
6.2

© PASKER GOULD AMES & WEAVER - 1999