State of Utah

GARY R. HERBERT
Governor

GREGORY S. BELL
Lt. Governor

Department of Administrative Services
KIMBERLY K. HOOD
Executive Director

Division of Facilities Construction and Management
DAVID G. BUXTON
Director

ADDENDUM NO. 4

Date: April 28, 2011

To: Shortlisted Contractors

From: Matthias Mueller - Project Manager

Reference: Residential Halls Buildings 2 and 3
Weber State University – Ogden, Utah
DFCM Project No. 10176810 and 11008810

Subject: **Addendum No. 4**

Pages	Addendum Cover Page	1	page
	Revised Cost Proposal Form	3	pages
	Architect's Addendum No. 4	128	pages
	Total	132	pages

Note: This Addendum shall be included as part of the Contract Documents. Items in this Addendum apply to all drawings and specification sections whether referenced or not involving the portion of the work added, deleted, modified, or otherwise addressed in the Addendum. Acknowledge receipt of this Addendum in the space provided on the Bid Form. Failure to do so may subject the Bidder to Disqualification.

While we contend that SB220 should only be potentially applicable to a contract issued after the effective date of said bill, this is to clarify that for purposes of this contract, regardless of the execution or effective dates of this contract, the status of Utah Law and remedies available to the State of Utah and DFCM, as it relates to any matter referred to or affected by said SB220, shall be the Utah law in effect at the time of the issuance of this Addendum.

4.1 SCHEDULE CHANGES: There are no Project Schedule changes**.**

4.2 GENERAL ITEMS:

4.2.1 Revised Cost Proposal Form is attached incorporating five additive alternates.

4.2.2 See attached Architect's Addendum No. 4 dated April 28, 2011.

COST PROPOSAL FORM – REVISED
PER ADDENDUM NO. 4 DATED APRIL 28, 2011

NAME OF PROPOSER _____ DATE _____

To the Division of Facilities Construction and Management
4110 State Office Building
Salt Lake City, Utah 84114

The undersigned, responsive to the "Notice to Contractors" and in accordance with the "Request for Proposals" for the **RESIDENTIAL HALLS BUILDINGS 2 AND 3 - WEBER STATE UNIVERSITY OGDEN, UTAH - DFCM PROJECT NOS. 10176810 (BUILDING 2) AND 11008810 (BUILDING 3)** having examined the Contract Documents and the site of the proposed Work and being familiar with all of the conditions surrounding the construction of the proposed Project, including the availability of labor, hereby proposes to furnish all labor, materials and supplies as required for the Work in accordance with the Contract Documents as specified and within the time set forth and at the price stated below. This price is to cover all expenses incurred in performing the Work required under the Contract Documents of which this bid is a part:

I/We acknowledge receipt of the following Addenda: _____

BASE BID: For all work shown on the Drawings and described in the Specifications and Contract Documents to construct Residential Life Buildings 2 and 3, I/we agree to perform for the sum of:

_____ DOLLARS ($_____)
(In case of discrepancy, written amount shall govern)

ADDITIVE ALTERNATE NO. 1: For all work shown on the Drawings and described in the Specifications and Contract Documents to revise Storage 116 to Suite 116 in Building 2, I/we agree to perform for the sum of:

_____ DOLLARS ($_____)
(In case of discrepancy, written amount shall govern)

ADDITIVE ALTERNATE NO. 2: For all work shown on the Drawings and described in the Specifications and Contract Documents to add cabinets near shower rooms in Building 2, I/we agree to perform for the sum of:

_____ DOLLARS ($_____)
(In case of discrepancy, written amount shall govern)

ADDITIVE ALTERNATE NO. 3: For all work shown on the Drawings and described in the Specifications and Contract Documents to overlay paving East Parking Lot for Building 2, I/we agree to perform for the sum of:

_____ DOLLARS ($_____)
(In case of discrepancy, written amount shall govern)

ADDITIVE ALTERNATE NO. 4: For all work shown on the Drawings and described in the Specifications and Contract Documents to add solar water collector panels and associated support beams and pumps for Building 2, I/we agree to perform for the sum of:

_____ DOLLARS ($_____)
(In case of discrepancy, written amount shall govern)

ADDITIVE ALTERNATE NO. 5: For all work shown on the Drawings and described in the Specifications and Contract Documents to add solar water collector panels and associated support beams and pumps for Building 3, I/we agree to perform for the sum of:

_____ DOLLARS ($_____)
(In case of discrepancy, written amount shall govern)

PRICE BREAKDOWN: (Base Bid Amount only)

Building 2 **$_____** **Building 3** **$_____**

I/We guarantee that the Work will be Substantially Complete by _____ ***(specific date to be provided by contractor),*** should I/we be the successful proposer, and agree to pay liquidated damages in the amount of **$2,000.00** per day per building for each day after expiration of the Contract Time as stated in Article 3 of the Contractor's Agreement. Liquidated damages in the amount stated above shall be assessed for each day's delay that Building 3 begins after its scheduled start day.

This bid shall be good for 45 days after bid opening.

Enclosed is a 5% bid bond, as required, in the sum of _____

The undersigned Contractor's License Number for Utah is _____._____

Upon receipt of notice of award of this bid, the undersigned agrees to execute the contract within ten (10) days, unless a shorter time is specified in the Contract Documents, and deliver acceptable Performance and Payment bonds in the prescribed form in the amount of 100% of the Contract Sum for faithful performance of the contract. The Bid Bond attached, in the amount not less than five percent (5%) of the above bid sum, shall become the property of the Division of Facilities Construction and Management as liquidated damages for delay and additional expense caused thereby in the event that the contract is not executed and/or acceptable l00% Performance and Payment bonds are not delivered within the time set forth.

Type of Organization: _____
(Corporation, Partnership, Individual, etc.)

Any request and information related to Utah Preference Laws
_____

Respectfully submitted,

_____
Name of Proposer

ADDRESS:

_____

_____

_____
Authorized Signature

MHTN ARCHITECTS

Addendum No. 4 Issued: 4/28/11

Addendum No. Four
for the
Weber State University
Residential Life Phase II - Buildings 2 and 3
DFCM Project Nos. 10176810 and 11008810
MHTN Project No. 2010543

All Contractors submitting proposals on the above captioned project shall be governed by the following addendum, changes and explanations to the Request for Proposals for Construction Services documents dated March 15, 2011, Construction Documents dated April 14, 2011, Addendum No. 1 dated April 5, 2011, Addendum No. 2 dated April 25, 2011 and Addendum No. 3 dated April 26, 2011 and shall submit information in accordance therewith:

For Clarification, the following questions, comments, revisions are addressed:

Changes to the Building 2 Project Manual:

A4.1 SECTION 012200 – UNIT PRICES

A. Paragraph 3.1.C, revise to read, "Unit Price 3: Mechanical: Electronic Controls and Heat Pumps"

B. Paragraph 3.1, add paragraph 3.1.E, "Unit Price 5: Architectural: Door Locksets at Bedrooms/Suite Entry"

C. Revise the first sentence of the second paragraph of the Architectural, Mechanical and Electrical Cost Breakdown Forms to read, "The General Contractor, will provide this form complete, to the Owner with their Subcontractor List and Subcontractor Bid Bonds."

D. Replace the Electrical Cost Breakdown Form with the attached Electrical Cost Breakdown Form. See Electrical Addendum No. 4.

A4.2 SECTION 033000 – CAST-IN-PLACE CONCRETE

A. Paragraph 2.12.A.2, revise to read, "Maximum Water-Cementitious Materials Ratio: Per the structural drawings."

B. Paragraph 2.12.B.2, revise to read, "Maximum Water-Cementitious Materials Ratio: Per the structural drawings."

A4.3 SECTION 323230 - Boulders

A. Article 2.1, add paragraph 2.1.A.2, Dolomite Boulder Seating

a. Size Range: 7-10' x 3-5' x 3-5'.

b. Characteristics: Reasonably smooth/ straight plane on the seat surface

Changes to the Building 2 Drawings:

A4.4 Sheet GI001

A. Add Sheet "SF705 - Details" to the Index to drawings under the "Structural" heading. See Structural Addendum No. 4.

A4.5 Sheet GI002

A. Add “Raised Paver/Pedestal System” as a deferred submittal under Access Floors on the Non-Structural Components Checklist.

A4.6 Sheet AS401

A. Revise keynote 4 to read “Concrete Cheek Wall – see A1/AS501 and B1/SF501."

B. Revise keynote 11 to read “Accessible Ramp – see C4/AS502 and Civil."

A4.7 Sheet AS501

A. Revise Detail A1/AS501. See attached AD04_A01

A4.8 Sheet AS502

A. Revise Details A1, A2, A3, A4 and A5/AS502. See attached AD04_A02, AD04_A03, AD04_A04, AD04_A05 and AD04_A06.

A4.9 Sheet AS503

A. Revise Detail D5/AS503. See attached AD04_A07

A4.10 Sheet LI101

A. Revise the irrigation layout. See attached AD04_L05

A4.11 Sheet LP101

A. Revise keynote 15 to read “Not Used."

B. Revise keynote 34 to read “Not Used."

C. Revise plan keynotes as per AD04-L01 and L02.

D. Revise the tree layout as per AD04-L03

A4.12 Sheet LP102

A. Revise keynote 15 to read “Not Used."

B. Revise keynote 34 to read “Not Used."

C. Revise the shrub layout as per AD04-L04

A4.13 Sheet LP103

A. Revise keynote 15 to read “Not Used."

B. Revise keynote 34 to read “Not Used."

A4.14 Sheet AE102B

A. Delete field color brick veneer between Grid T and Grid XX. Replace brick veneer with composite metal panel system. Revise exterior wall studs along grid 5.9 to be 8″ structural studs. See Structural Addendum No. 4.

A4.15 Sheet AE103B

A. Delete field color brick veneer between Grid T and Grid XX. Replace brick veneer with composite metal panel system. Revise exterior wall studs along grid 5.9 to be 8″ structural studs. See Structural Addendum No. 4.

A4.16 Sheet AF103

A. Provide Accent Paint at locations shown on the attached Sheet AF103.

A4.17 Sheet AE202

A. Revise Elevation 2 to delete field color brick veneer between Grid T and Grid S as shown. Replace brick veneer with composite metal panel system as shown on the attached Sheet AE202.

A4.18 Sheet AE304

A. Revise Section 2 to show 8″ structural stud framing as shown on the attached Sheet AE304.

A4.19 Sheet AE503

A. Revise Details D1, D3, and D4/AE503 to include callouts for the topping slab. See attached Sheet AE503.

A4.20 Sheet AE504

A. Revise Details C1 and D1/AE505 to indicate 3/4″ Stainless Steel Bar Grating and 2 3/4″ x 3/8″ Stainless Steel Plate Supports. See attached Sheet AE507.

A4.21 Sheet AE505

A. Revise stud framing below curtain wall in Detail D4/AE505 to include stud framing connection to structural steel as shown in attached AD04_A08.

A4.22 Sheet AE506

A. Revise Detail E1/AE506 to show Grid 5.9 and 8″ structural stud framing. See attached AD04_A09.

A4.23 Sheet AE508

A. Revise Detail C1/AE508 to show 8″ structural stud framing. See attached AD04_A10.

A4.24 Sheet AE605

A. Add "W6 - Accent Paint" to West Wall of Room 101 Lobby. See Floor Pattern Plans for extents of accent paint.

A4.25 Sheet AE606

A. Add "W6 - Accent Paint" to South Wall of Room 123 Fitness

B. Add "W6 - Accent Paint" to North, East, South and West Walls of Room 136 Laundry. See Floor Pattern Plans for extents of accent paint.

C. Add "W6 - Accent Paint" to South and West Walls of Room 137 Reception. See Floor Pattern Plans for extents of accent paint.

A4.26 Sheet AE607

A. Remove "F10 - Resilient Athletic Flooring" floor finish from Room 201 Lounge.

A4.27 Sheet AE610

A. Remove "W6 - Accent Paint" from West Wall of Room 336 Group Study. Add "W6 - Accent Paint" to South Wall of Room 336 Group Study.

A4.28 Sheet AE612

A. Update Window Types 18, 19, and 20 to show dimensions as shown in attached AD04_A11

A4.29 Civil

A. See attached Building 2 Civil Addendum No. 4 from GBE

A4.30 Structural

A. See attached Building 2 Structural Addendum No. 4 from ARW

A4.31 Mechanical

A. See attached Building 2 Mechanical Addendum No. 4 from CEA

A4.32 Electrical

A. See attached Building 2 Electrical Addendum No. 4 from ECE

Changes to the Building 3 Project Manual:

A4.33 SECTION 012200 – UNIT PRICES

A. Paragraph 3.1.C, revise to read, "Unit Price 3: Mechanical: Electronic Controls and Heat Pumps"

B. Paragraph 3.1, add paragraph 3.1.E, "Unit Price 5: Architectural: Door Locksets at Bedrooms/Suite Entry"

C. Revise the first sentence of the second paragraph of the Architectural, Mechanical and Electrical Cost Breakdown Forms to read, "The General Contractor, will provide this form complete, to the Owner with their Subcontractor List and Subcontractor Bid Bonds."

D. Replace the Electrical Cost Breakdown Form with the attached Electrical Cost Breakdown Form. See Electrical Addendum No. 4.

A4.34 SECTION 033000 – CAST-IN-PLACE CONCRETE

A. Paragraph 2.12.A.2, revise to read, "Maximum Water-Cementitious Materials Ratio: Per the structural drawings."

B. Paragraph 2.12.B.2, revise to read, "Maximum Water-Cementitious Materials Ratio: Per the structural drawings."

Changes to the Building 3 Drawings:

A4.35 Sheet GI001

A. Index to Drawings: The following sheets were included in the documents, but were not in the index:

1. Add Sheet CS-102 ADA Accessibility Plan Bldg. 2 and 3
2. Add Sheet AE601 Partition Types

A4.36 Sheet AS401

A. Revise keynote 4 to read “Concrete Cheek Wall – see A1/AS501 and B1/SF501."

B. Revise keynote 11 to read “Accessible Ramp – see C4/AS502 and Civil."

A4.37 Sheet LI101

A. Revise the keynote 15, between the two south pods on the plan, to be an 18.

B. Revise the irrigation layout as per AD04-L06.

A4.38 Sheet AE501

A. Revise Detail C1/AE501. See attached AD04_A12

A4.39 Sheet AE608

A. Revise Lounge Floor Pattern Plan A3/AE608 to show accent color 2 on the south wall of Lounge 100R, Lounge 200R and Lounge 300R.

B. Revise Lounge Floor Pattern Plan A5/AE608 to show accent color 2 on the south wall of Lounge 100F, Lounge 200F and Lounge 300F.

A4.40 Civil

A. See attached Building 3 Civil Addendum No. 4 from GBE

A4.41 Structural

A. See attached Building 3 Structural Addendum No. 4 from ARW

A4.42 Mechanical

A. See attached Building 3 Mechanical Addendum No. 4 from CEA

A4.43 Electrical

A. See attached Building 3 Electrical Addendum No. 4 from ECE

Building 2 Attachments:

AD04_L01
AD04_L02 (11 x 17)
AD04_L03 thru AD04_L05
AD04_A01 thru AD04_A07
AD04_A08 (11 x 17)
AD04_A09 (11 x 17)
AD04_A10
AD04_A11 (11 x 17)
Sheet AF103 (30 x 42)
Sheet AE202 (30 x 42)
Sheet AE304 (30 x 42)
Sheet AE503 (30 x 42)
Sheet AE504 (30 x 42)
Building 2 Civil Addendum No. 4 (4 pages)
Building 2 Structural Addendum No. 4 [10 (8-1/2 x 11) + 6 (30 x 42) = 16 pages]
Building 2 Mechanical Addendum No. 4 (21 pages)
Building 2 Electrical Addendum No. 4 (18 pages)

Building 3 Attachments:

AD04_L06
AD04_A12
Building 3 Civil Addendum No. 4 (1 page)
Building 3 Structural Addendum No. 4 (13 pages)
Building 3 Mechanical Addendum No. 4 (20 pages)
Building 3 Electrical Addendum No. 4 (7 pages)

End of Addendum No. 3

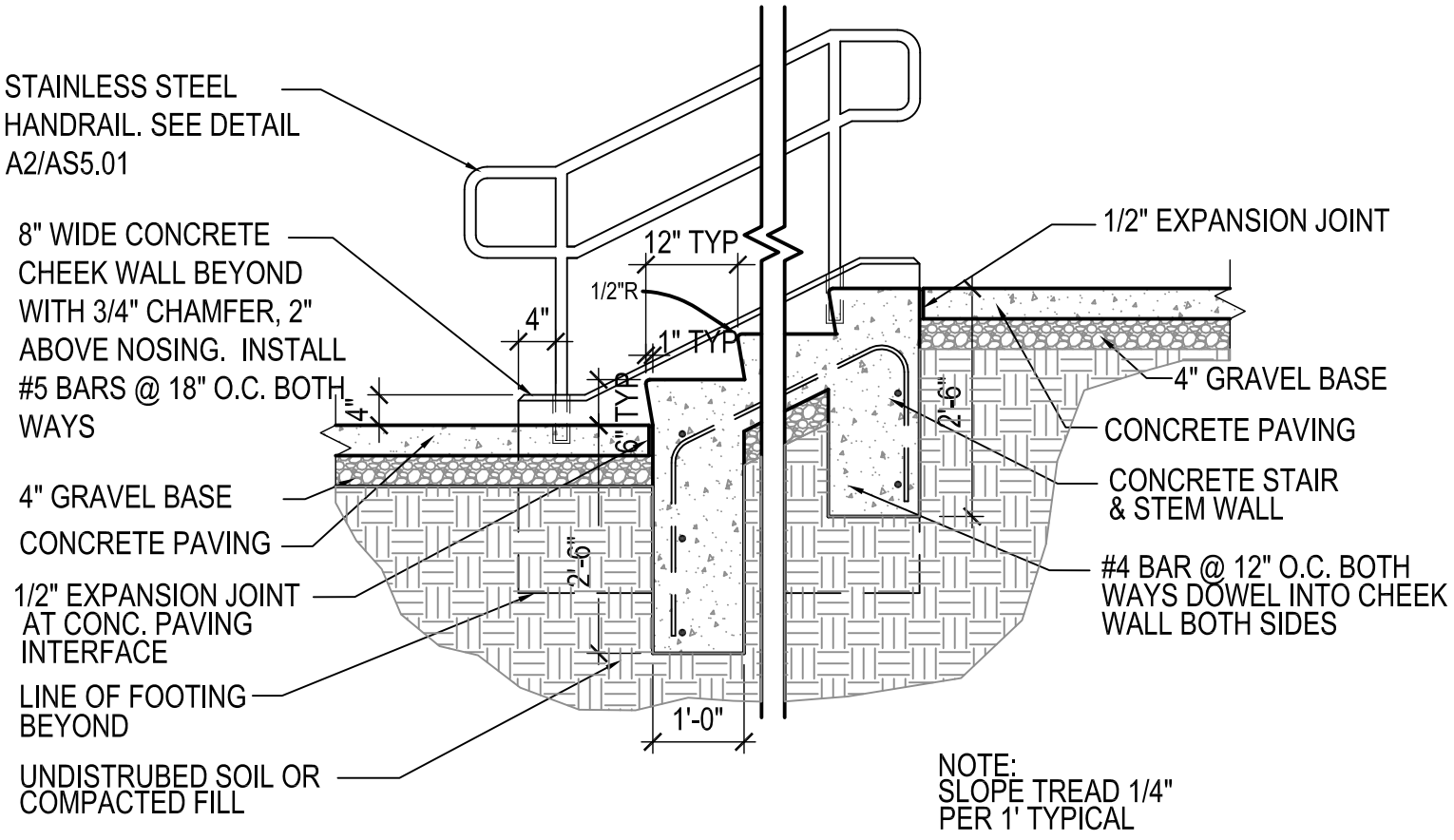

A1 STAIR CHEEK WALL DETAIL

1/2" = 1'-0"

321319.13–02

MHTN Architects, Inc.
420 East South Temple
Suite 100
Salt Lake City, Utah 84111
TEL 801.595.6700
FAX 801.595.6717
www.mhtn.com

Project Name: Weber State University
Residential Life - Phase II - BLDG - 2

Project No: 2010543.00

Date: 28 APRIL 2011

Sheet No.
AD04-A01

Sheet Reference
AS501

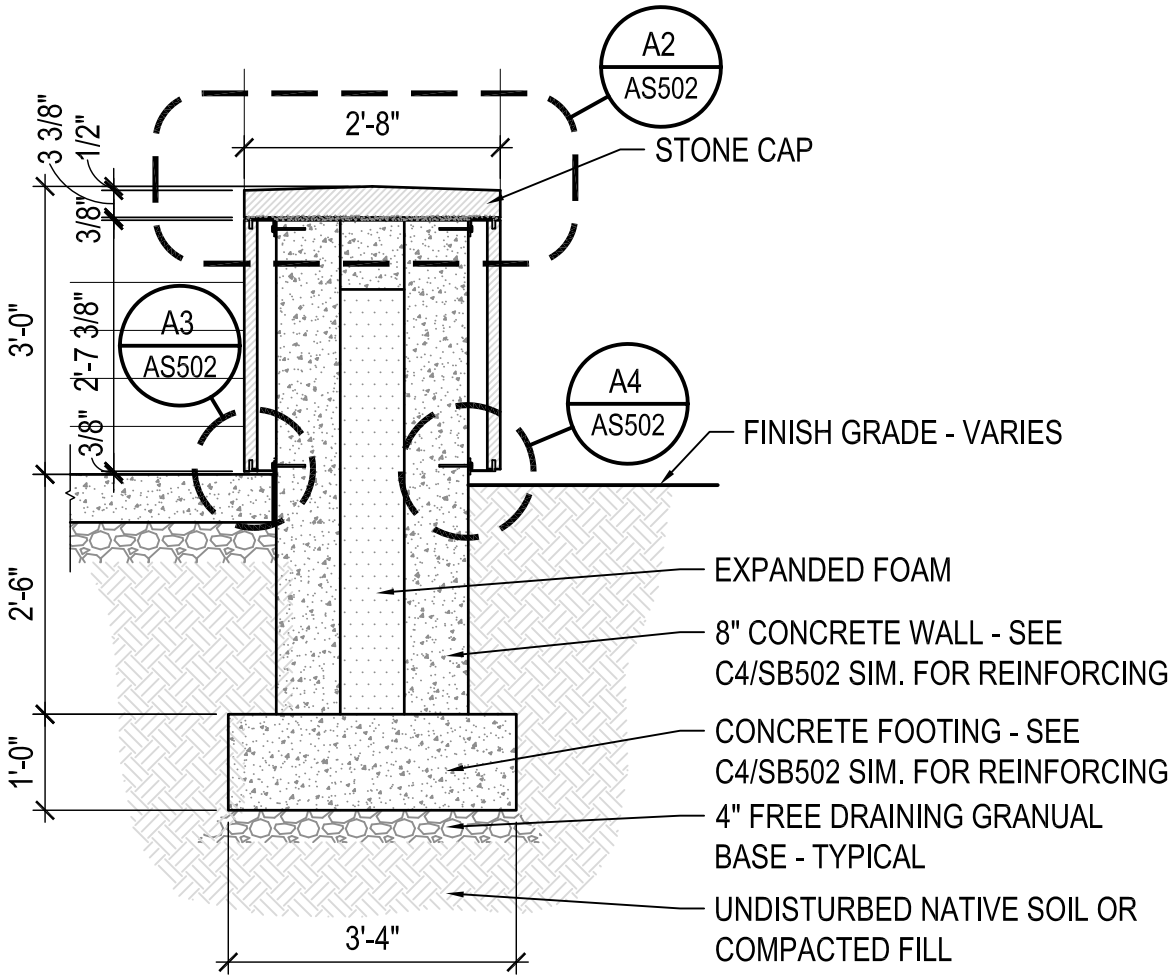

A-DTXX00

MHTN Architects, Inc.
420 East South Temple
Suite 100
Salt Lake City, Utah 84111
TEL 801.595.6700
FAX 801.595.6717
www.mhtn.com

Project Name: Weber State University
Residential Life - Phase II - BLDG - 2

Project No: 2010543.00

Date: 28 APRIL 2011

Sheet No.
AD04-A02

Sheet Reference
AS502

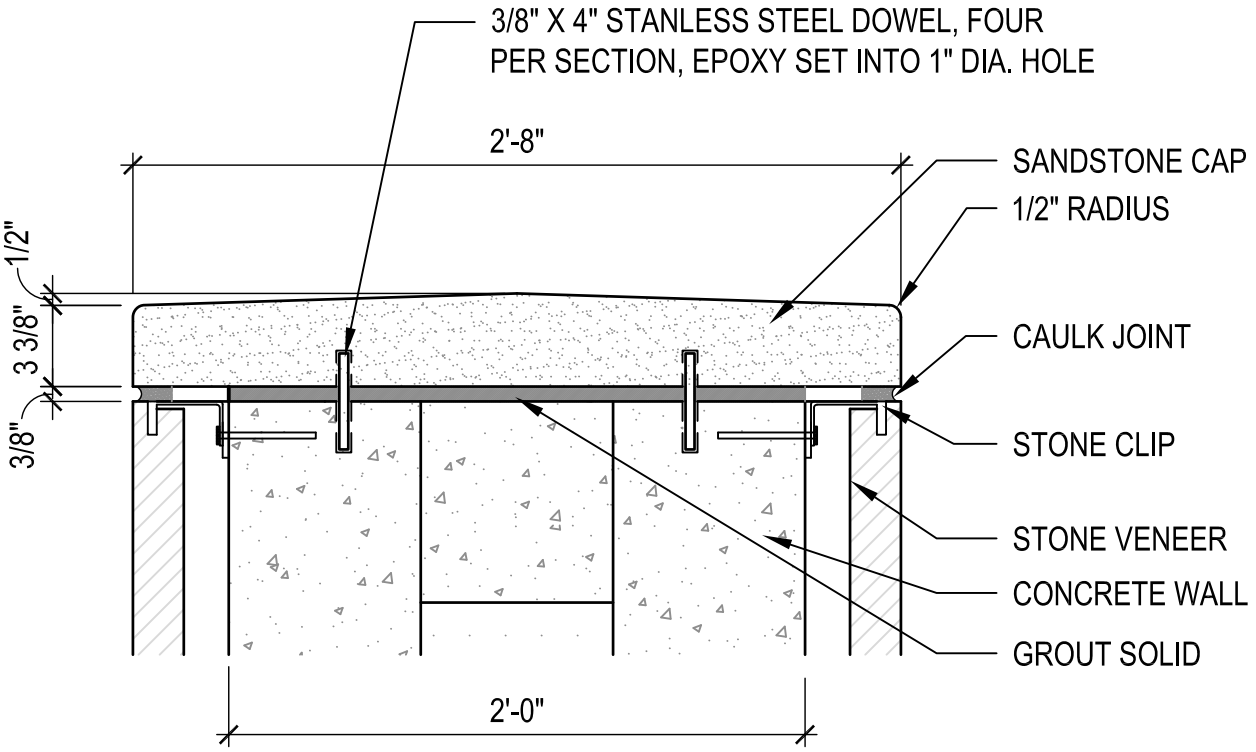

A2 STONE CAP

1–1/2" = 1'–0"

A-DTXX00

MHTN Architects, Inc.
420 East South Temple
Suite 100
Salt Lake City, Utah 84111
TEL 801.595.6700
FAX 801.595.6717
www.mhtn.com

Project Name: Weber State University
Residential Life - Phase II - BLDG - 2

Project No: 2010543.00

Date: 28 APRIL 2011

Sheet No.
AD04-A03

Sheet Reference
AS502

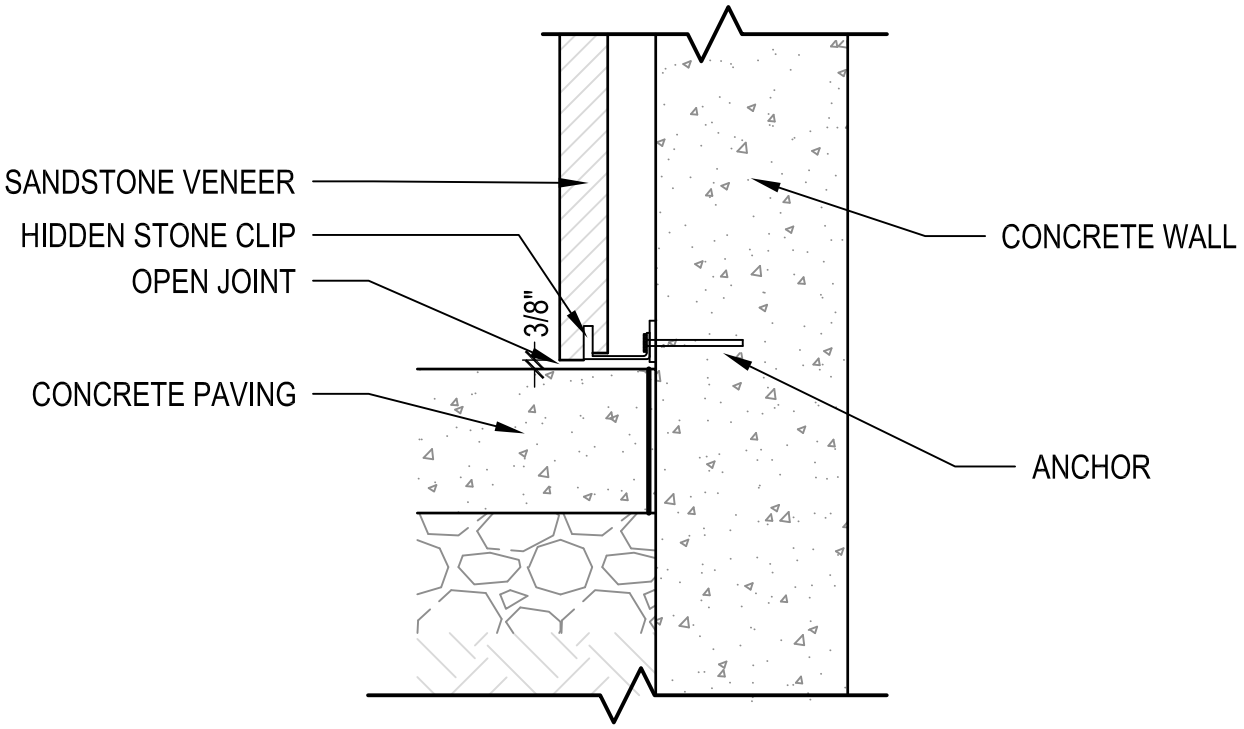

A3 BOTTOM CLIP AT PAVEMENT

1–1/2" = 1'–0"

A-DTXX00

MHTN Architects, Inc.
420 East South Temple
Suite 100
Salt Lake City, Utah 84111
TEL 801.595.6700
FAX 801.595.6717
www.mhtn.com

Project Name: Weber State University
Residential Life - Phase II - BLDG - 2

Project No: 2010543.00

Date: 28 APRIL 2011

Sheet No.
AD04-A04

Sheet Reference
AS502

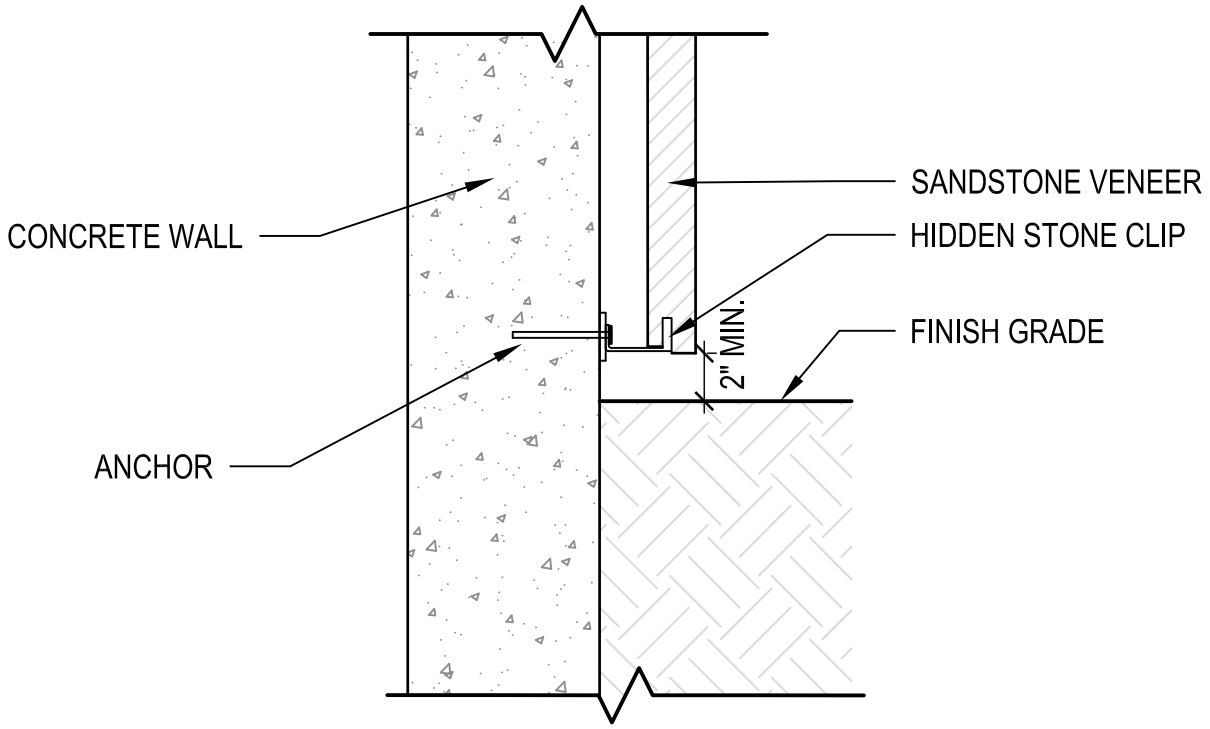

A4 BOTTOM CLIP AT LANDSCAPE

1–1/2" = 1'–0"

A-DTXX00

MHTN Architects, Inc.
420 East South Temple
Suite 100
Salt Lake City, Utah 84111
TEL 801.595.6700
FAX 801.595.6717
www.mhtn.com

Project Name:	Weber State University Residential Life - Phase II - BLDG - 2
Project No:	2010543.00
Date:	28 APRIL 2011

Sheet No.
AD04-A05

Sheet Reference
AS502

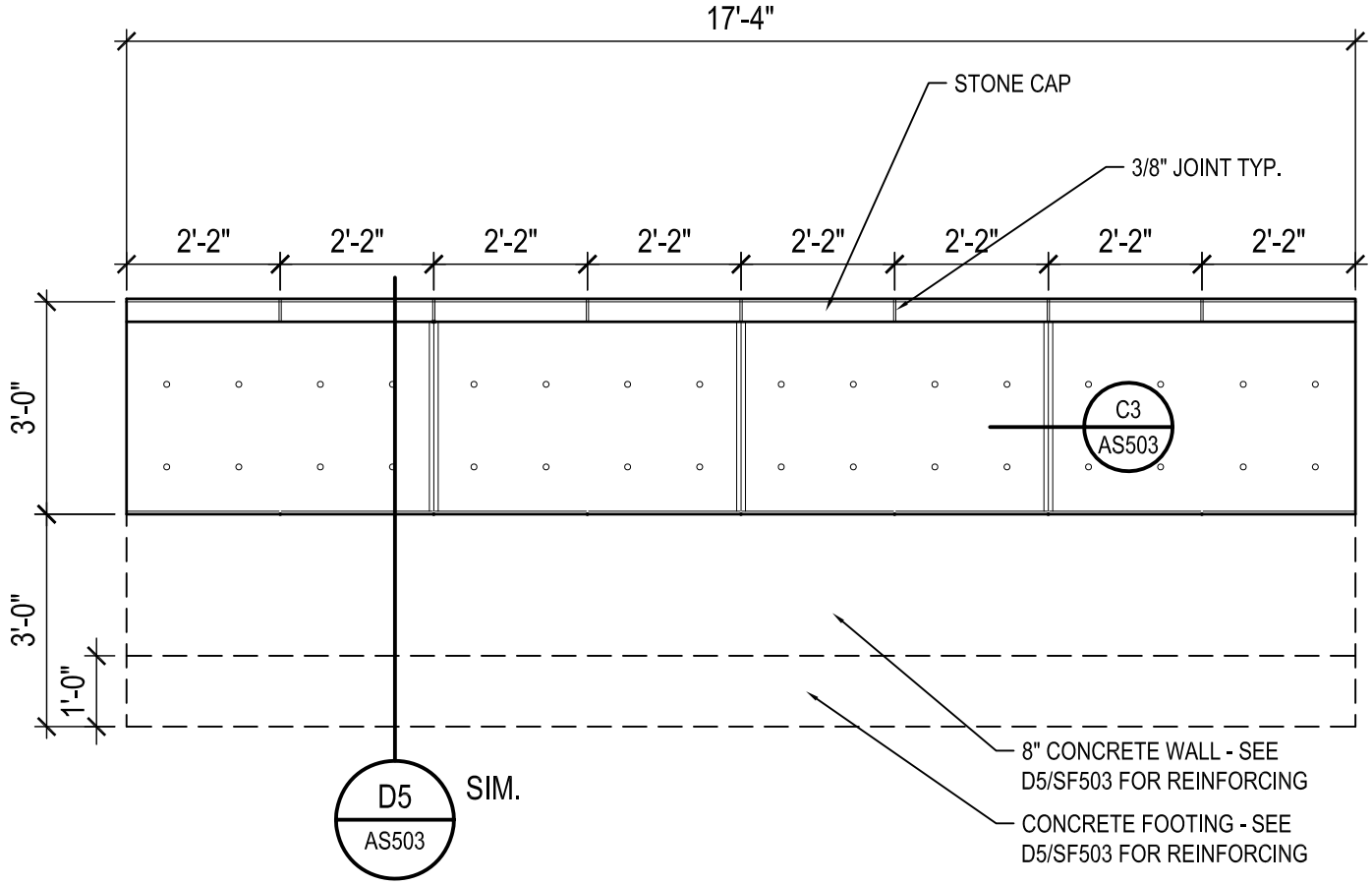

A5 WALL ELEVATION AT BIKE RACK

3/8" = 1'-0"

A-DTXX00

MHTN Architects, Inc.
420 East South Temple
Suite 100
Salt Lake City, Utah 84111
TEL 801.595.6700
FAX 801.595.6717
www.mhtn.com

Project Name: Weber State University
Residential Life - Phase II - BLDG - 2

Project No: 2010543.00

Date: 28 APRIL 2011

Sheet No.
AD04-A06

Sheet Reference
AS502

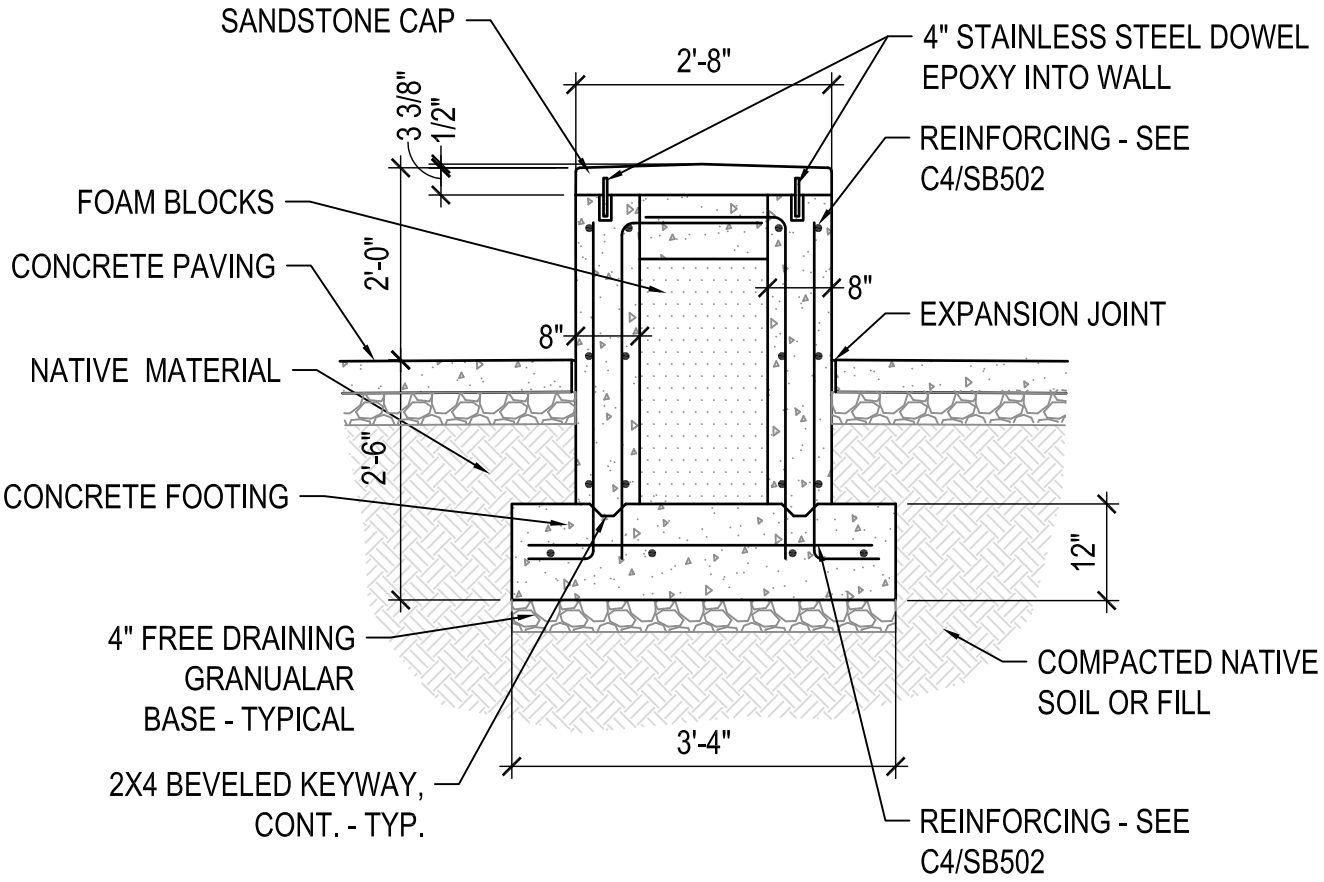

D5 CONCRETE WALL SECTION

1/2" = 1'-0"

A-DTXX00

MHTN Architects, Inc.
420 East South Temple
Suite 100
Salt Lake City, Utah 84111
TEL 801.595.6700
FAX 801.595.6717
www.mhtn.com

Project Name: Weber State University
Residential Life - Phase II - BLDG - 2

Project No: 2010543.00

Date: 28 APRIL 2011

Sheet No.
AD04-A07

Sheet Reference
AS503

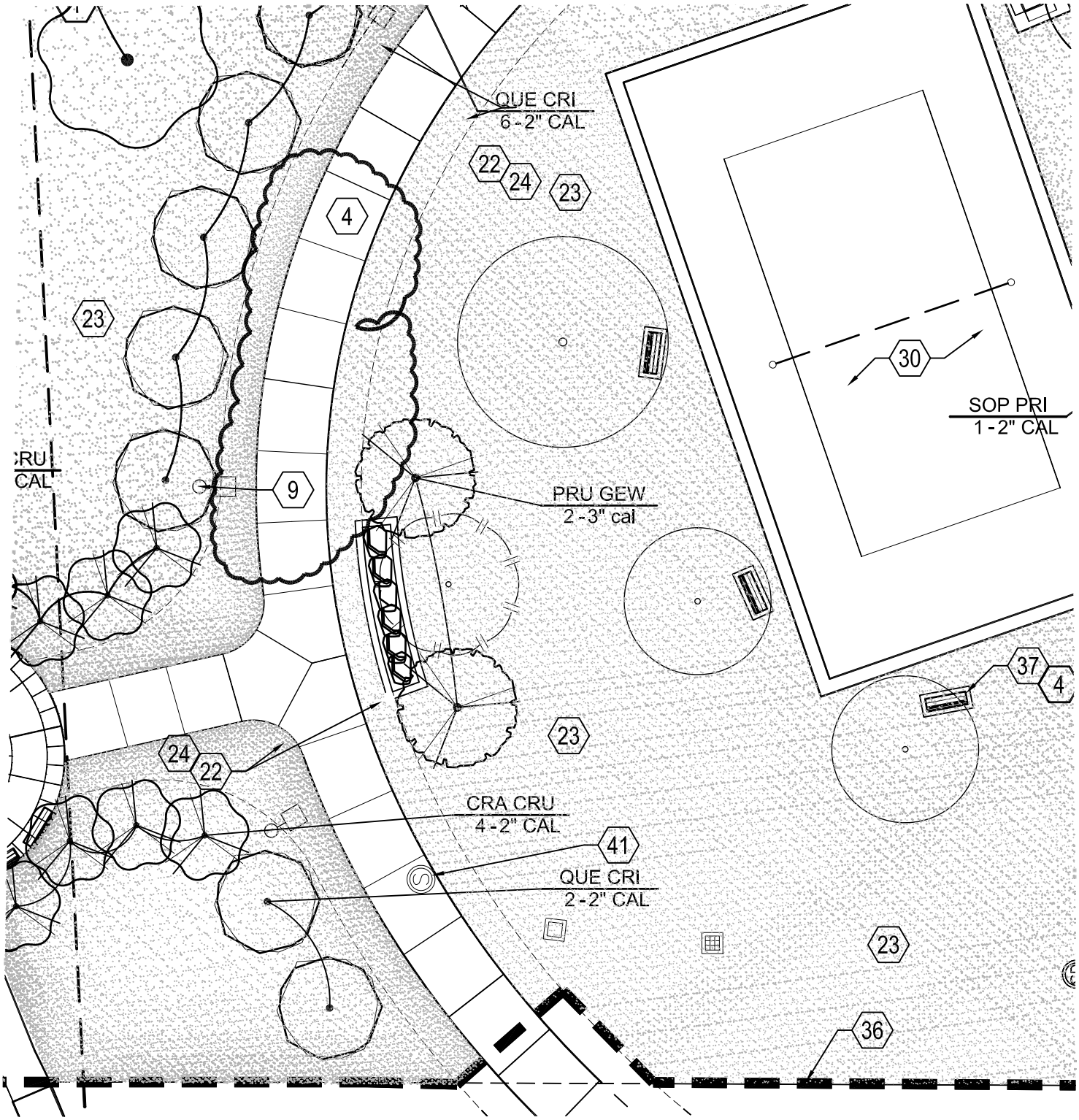

TREE PLANTING PLAN BUILDING - 2

N

0 10' 20' 40'

SCALE: 1"= 20'-0"

MHTN Architects, Inc.
420 East South Temple
Suite 100
Salt Lake City, Utah 84111
TEL 801.595.6700
FAX 801.595.6717
www.mhtn.com

Project Name: Weber State University
Residential Life - Phase II - BLDG - 2

Project No: 2010543.00

Date: 28 APRIL 2011

Sheet No.
AD04-L01

Sheet Reference
LP101

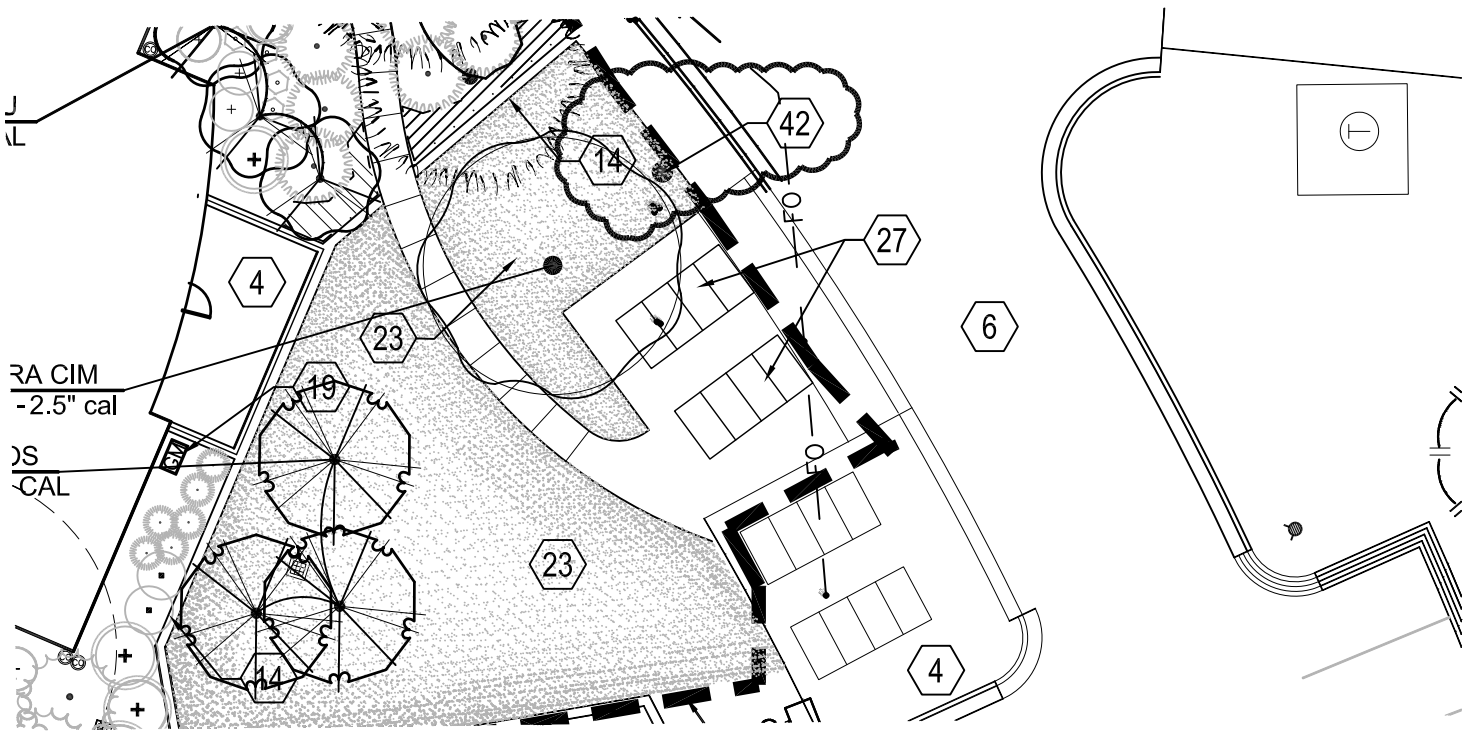

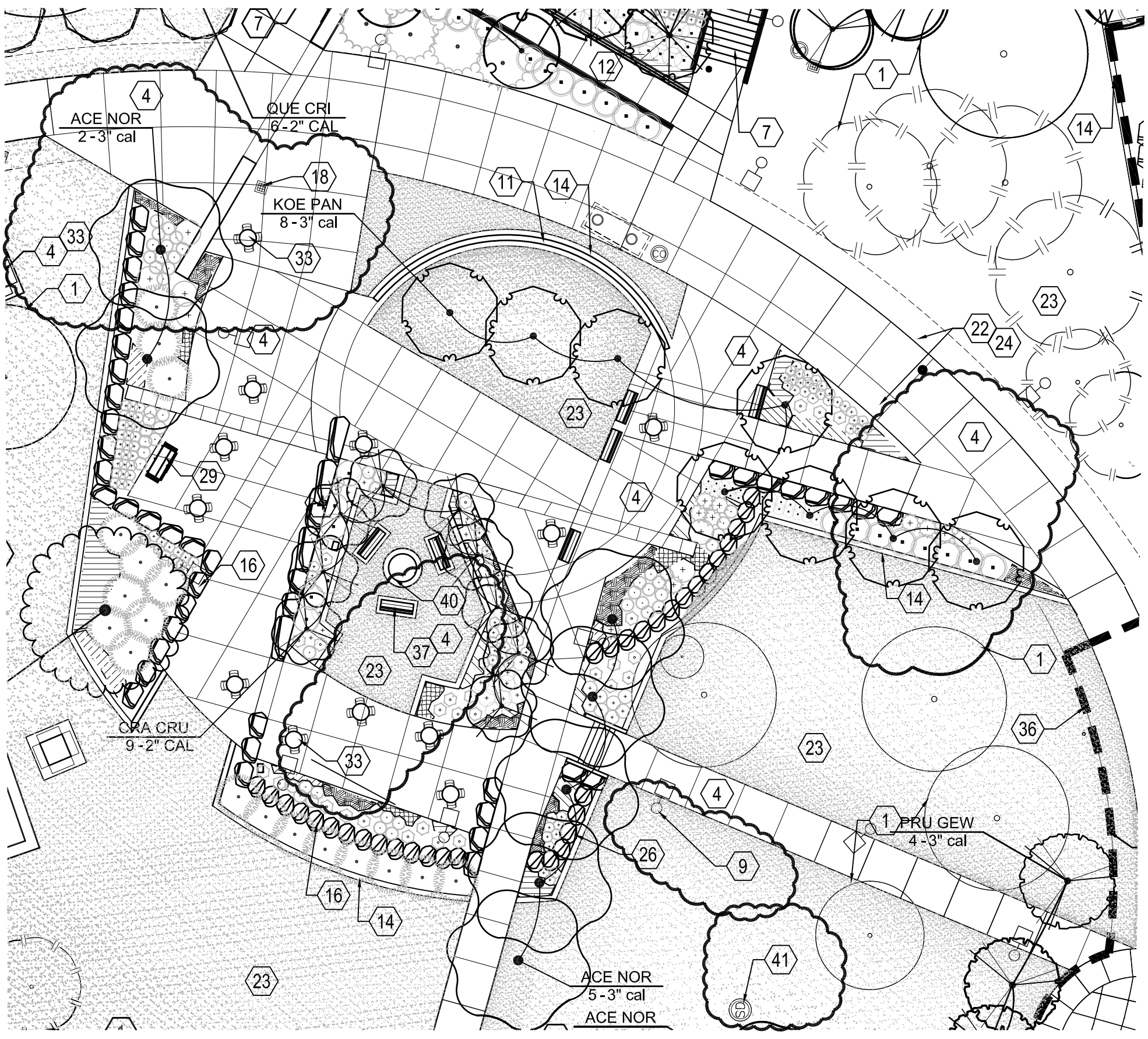

TREE PLANTING PLAN BUILDING - 2

0 10' 20' 40'

SCALE: 1"= 20'-0"

N

MHTN Architects, Inc.
420 East South Temple
Suite 100
Salt Lake City, Utah 84111
TEL 801.595.6700
FAX 801.595.6717
www.mhtn.com

Project Name:	Weber State University Residential Life - Phase II - BLDG - 2
Project No:	2010543.00
Date:	28 APRIL 2011

Sheet No.
AD04-L02
Sheet Reference
LP101

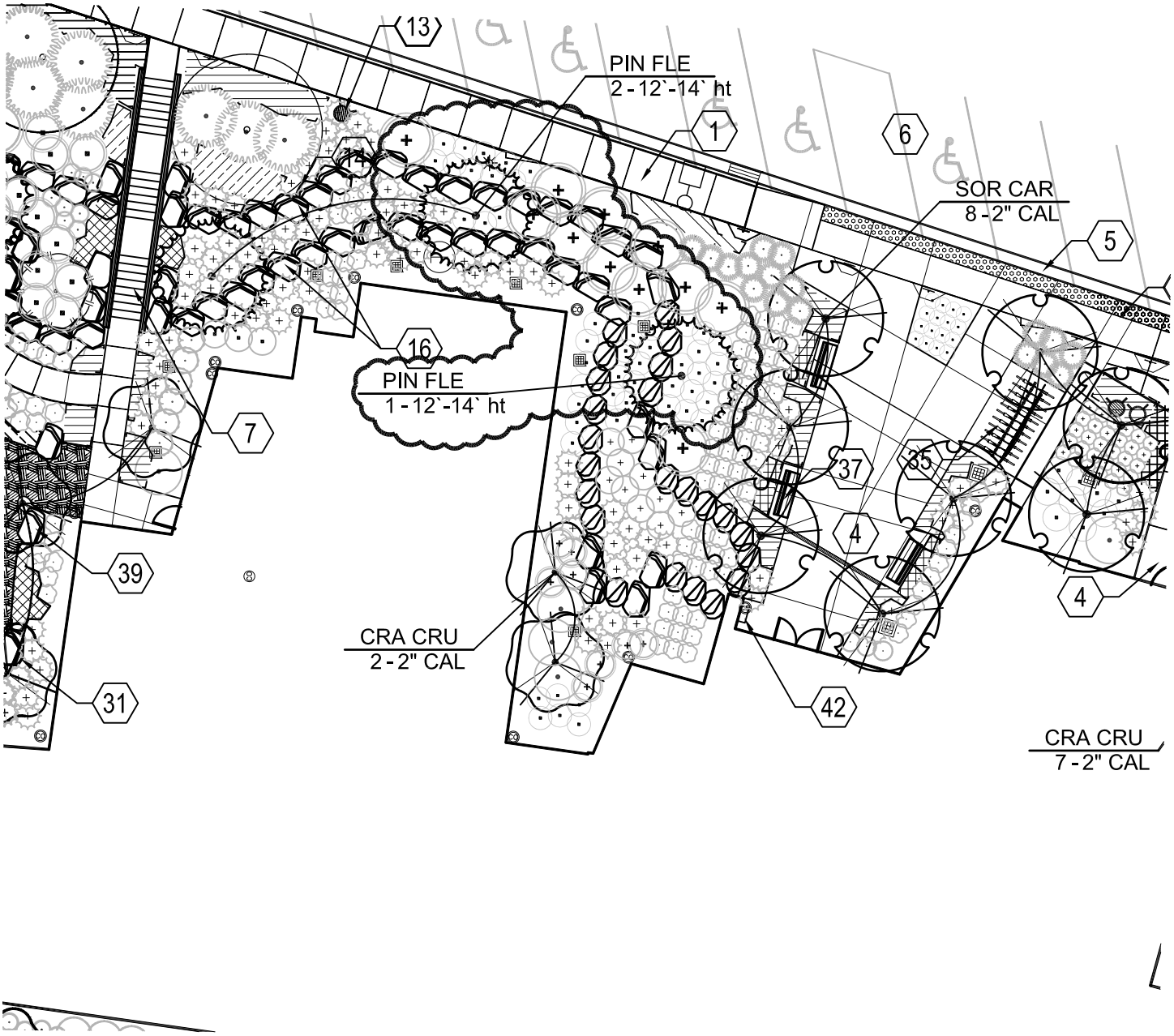

TREE PLANTING PLAN BUILDING - 2

0 10' 20' 40'

SCALE: 1"= 20'-0"

MHTN Architects, Inc.
420 East South Temple
Suite 100
Salt Lake City, Utah 84111
TEL 801.595.6700
FAX 801.595.6717
www.mhtn.com

Project Name: Weber State University
Residential Life - Phase II - BLDG - 2

Project No: 2010543.00

Date: 28 APRIL 2011

Sheet No.
AD04-L03

Sheet Reference
LP101

SHRUB PLANTING PLAN BUILDING - 2

N

0 5' 10' 20'

SCALE: 1"= 10'-0"

MHTN Architects, Inc.
420 East South Temple
Suite 100
Salt Lake City, Utah 84111
TEL 801.595.6700
FAX 801.595.6717
www.mhtn.com

Project Name: Weber State University
Residential Life - Phase II - BLDG - 2

Project No: 2010543.00

Date: 28 APRIL 2011

Sheet No.
AD04-L04

Sheet Reference
LP102

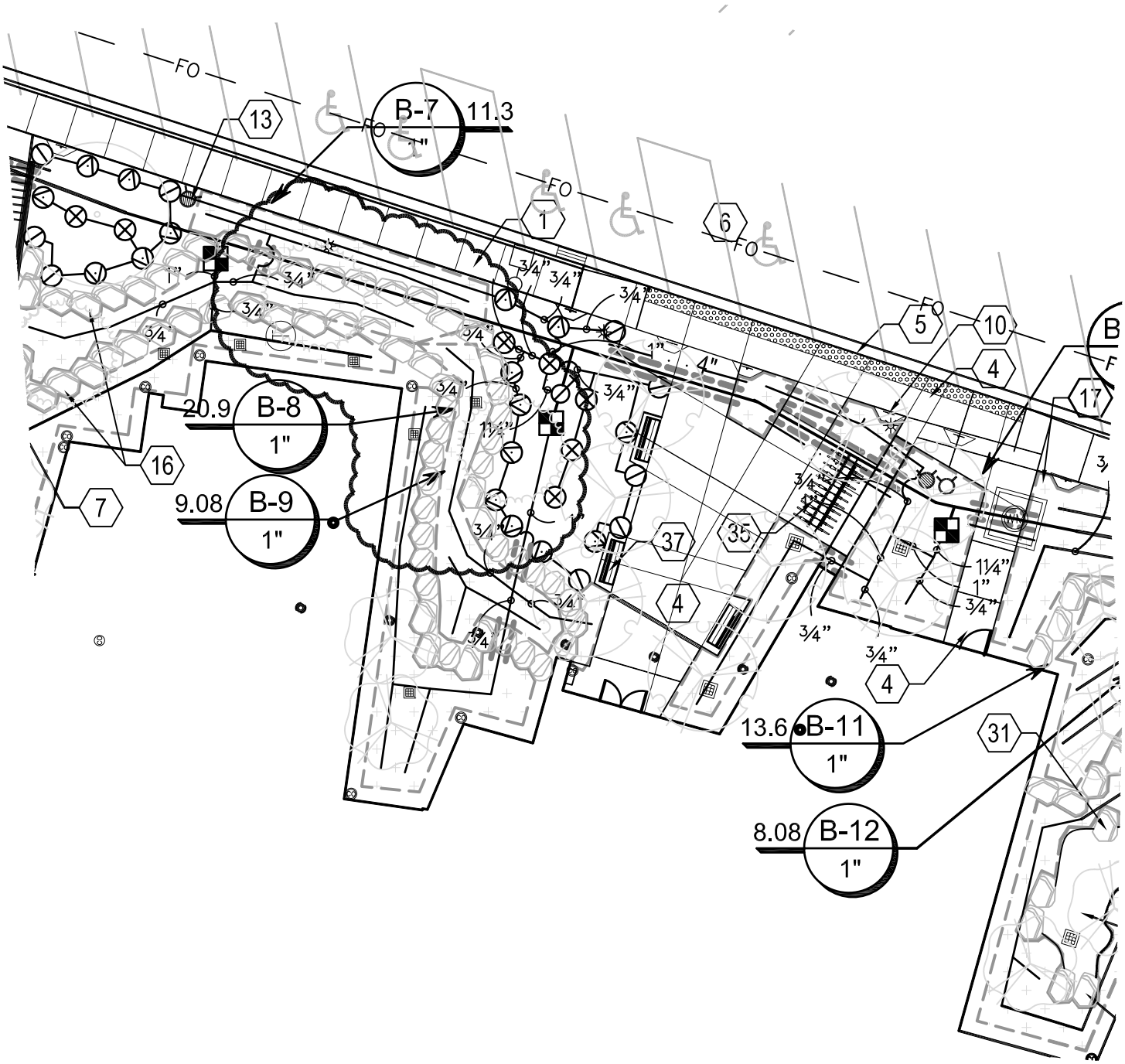

A1 IRRIGATION PLAN BUILDING - 2

0 10' 20' 40'

SCALE: 1"= 20'-0"

N

MHTN Architects, Inc.
420 East South Temple
Suite 100
Salt Lake City, Utah 84111
TEL 801.595.6700
FAX 801.595.6717
www.mhtn.com

Project Name: Weber State University
Residential Life - Phase II - BLDG - 2

Project No: 2010543.00

Date: 28 APRIL 2011

Sheet No.
AD04-L05

Sheet Reference
LI101

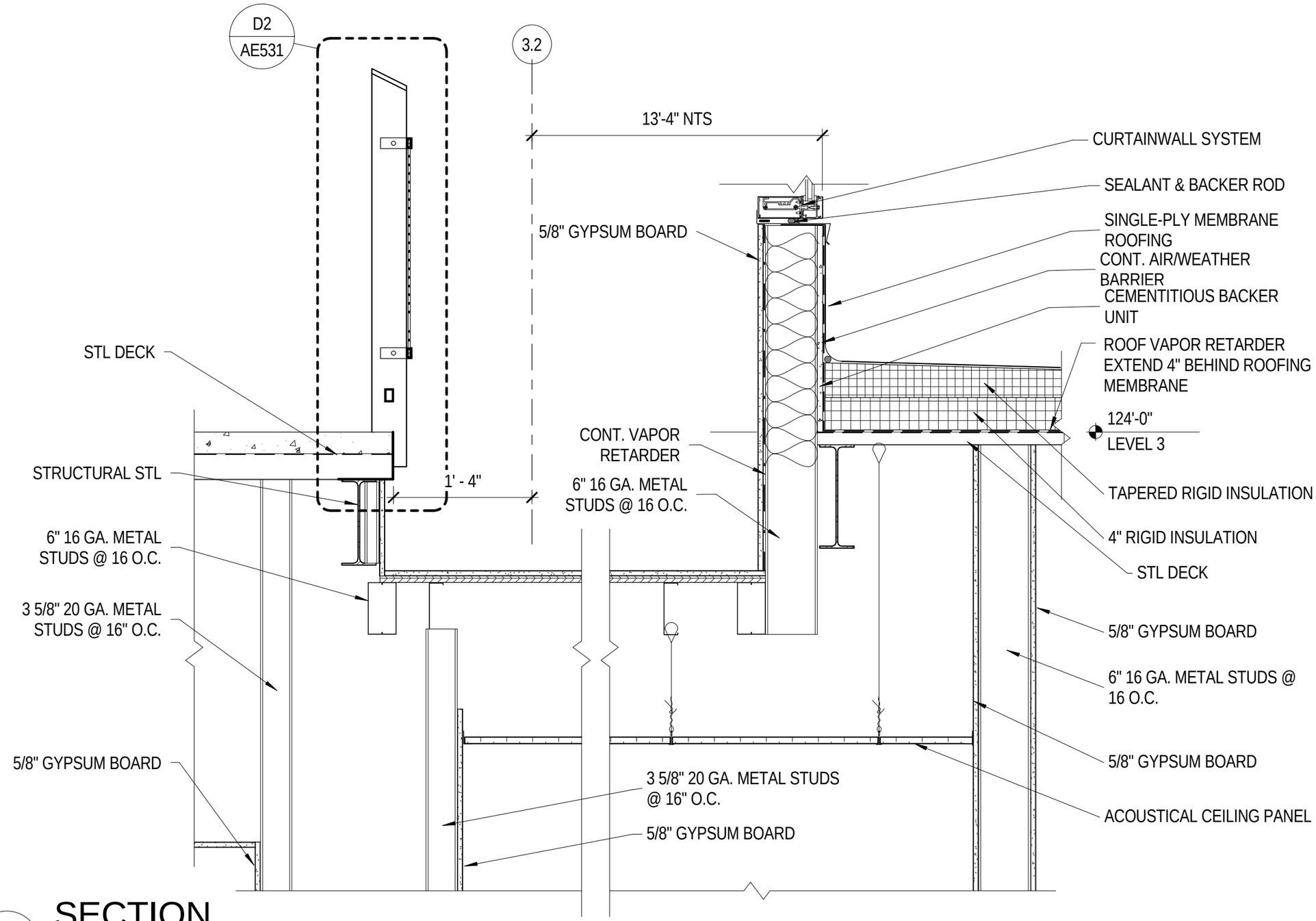

D4 SECTION

SCALE: 1" = 1'-0"

MHTN Architects, Inc.
420 East South Temple
Suite 100
Salt Lake City, Utah 84111
TEL 801.595.6700
FAX 801.595.6717
www.mhtn.com

WEBER STATE UNIVERSITY
RESIDENTIAL LIFE PHASE II - BLDG 2

PROJECT NO. 2010543

DATE: 04/28/11

SHEET NUMBER
AD04-A08

SHEET REFERENCE
AE505

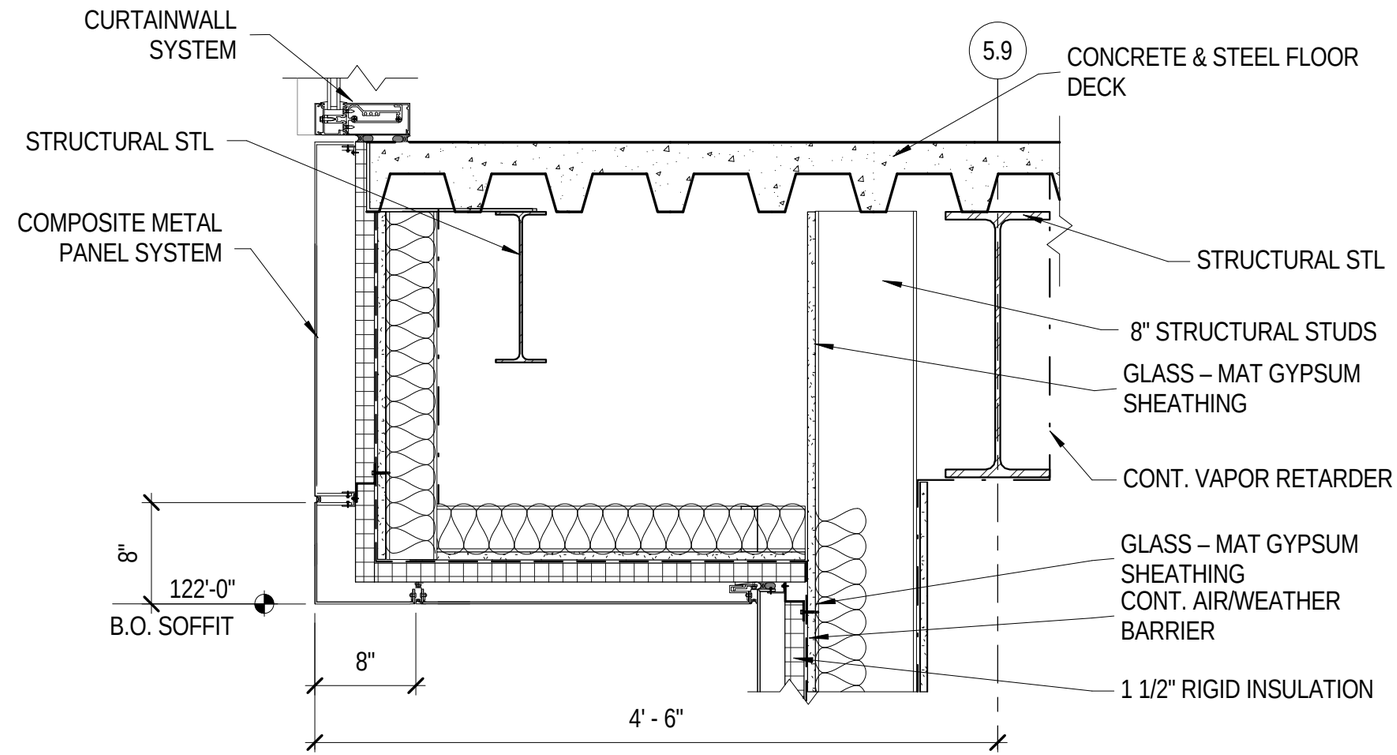

E1

SECTION

SCALE: 1" = 1'-0"

MHTN Architects, Inc.
420 East South Temple
Suite 100
Salt Lake City, Utah 84111
TEL 801.595.6700
FAX 801.595.6717
www.mhtn.com

WEBER STATE UNIVERSITY
RESIDENTIAL LIFE PHASE II - BLDG 2

PROJECT NO. 2010543

DATE: 04/28/11

SHEET NUMBER
AD04-A09

SHEET REFERENCE
AE506

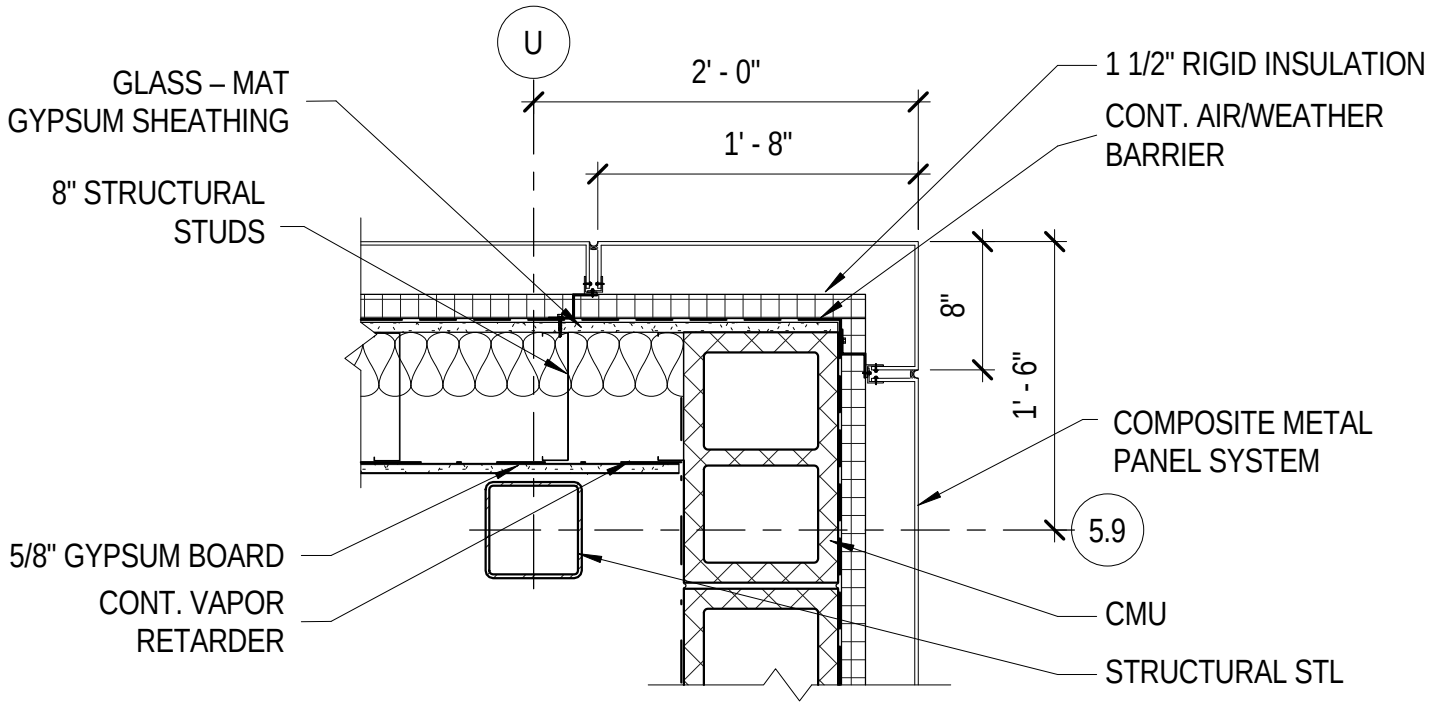

C1 DETAIL

SCALE: 1" = 1'-0"

MHTN Architects, Inc.
420 East South Temple
Suite 100
Salt Lake City, Utah 84111
TEL 801.595.6700
FAX 801.595.6717
www.mhtn.com

WEBER STATE UNIVERSITY
RESIDENTIAL LIFE PHASE II - BLDG 2

PROJECT NO. 2010543

DATE: 04/28/11

SHEET NUMBER
AD04-A10

SHEET REFERENCE
AE508

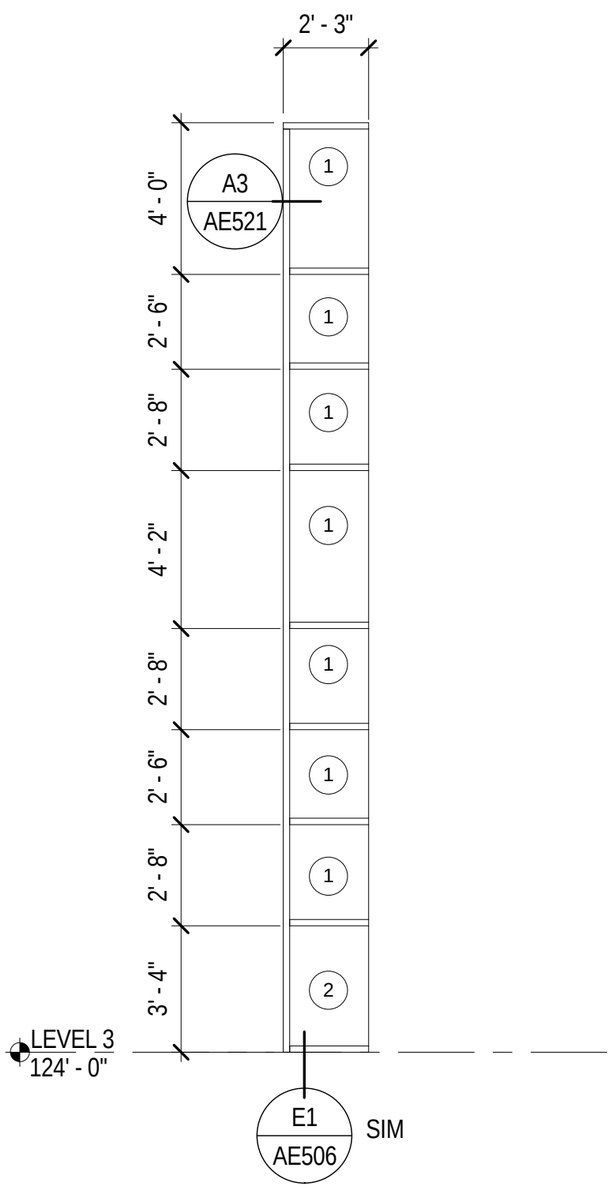

WINDOW TYPE 18

ALUM. CURTAINWALL
PROVIDE ROLLER SHADES

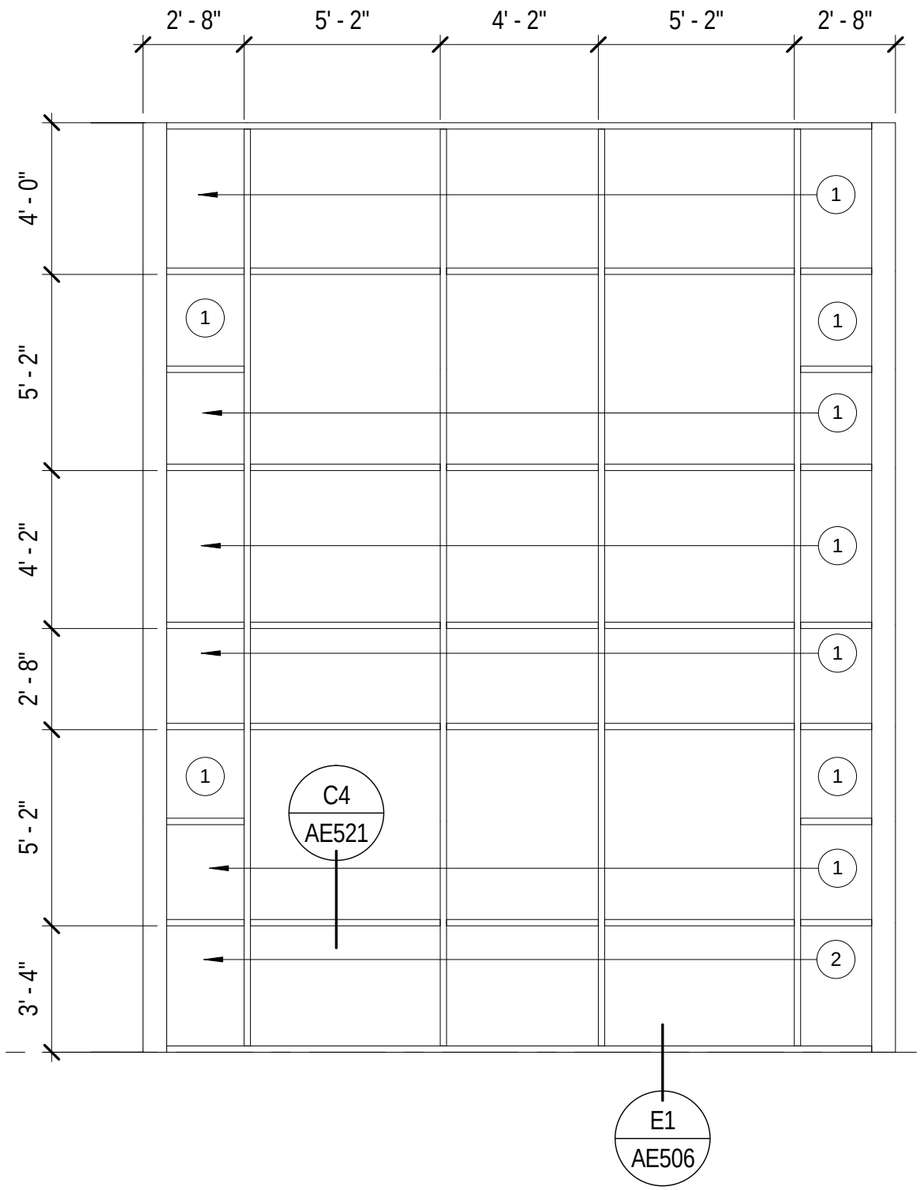

WINDOW TYPE 19

ALUM. CURTAINWALL
PROVIDE ROLLER SHADES

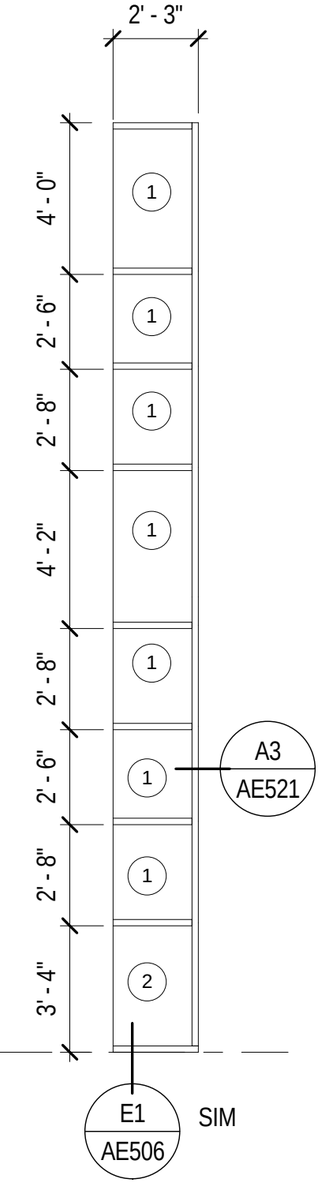

WINDOW TYPE 20

ALUM. CURTAINWALL
PROVIDE ROLLER SHADES

MHTN Architects, Inc.
420 East South Temple
Suite 100
Salt Lake City, Utah 84111
TEL 801.595.6700
FAX 801.595.6717
www.mhtn.com

WEBER STATE UNIVERSITY
RESIDENTIAL LIFE PHASE II - BLDG 2

PROJECT NO. 2010543

DATE: 04/28/11

SHEET NUMBER
AD04-A11

SHEET REFERENCE
AE612

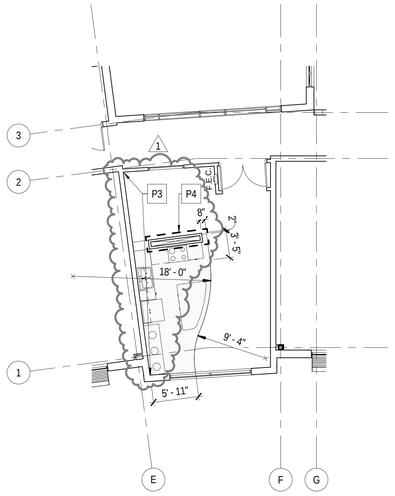

2 NORTH KITCHENETTE FLOOR PATTERN PLAN

SCALE: 1/8" = 1'-0"

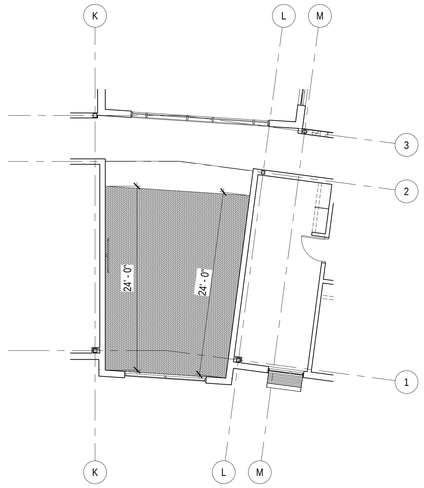

3 NORTH LOUNGE FLOOR PATTERN PLAN

SCALE: 1/8" = 1'-0"

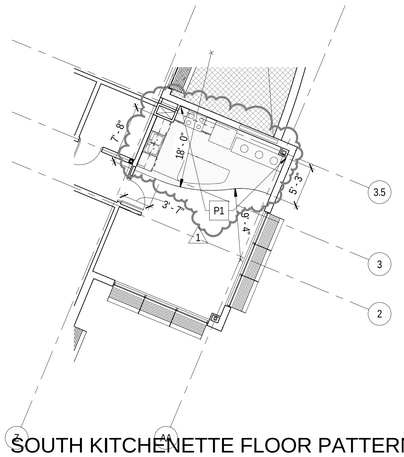

4 SOUTH KITCHENETTE FLOOR PATTERN PLAN - LEVELS 2 & 3

SCALE: 1/8" = 1'-0"

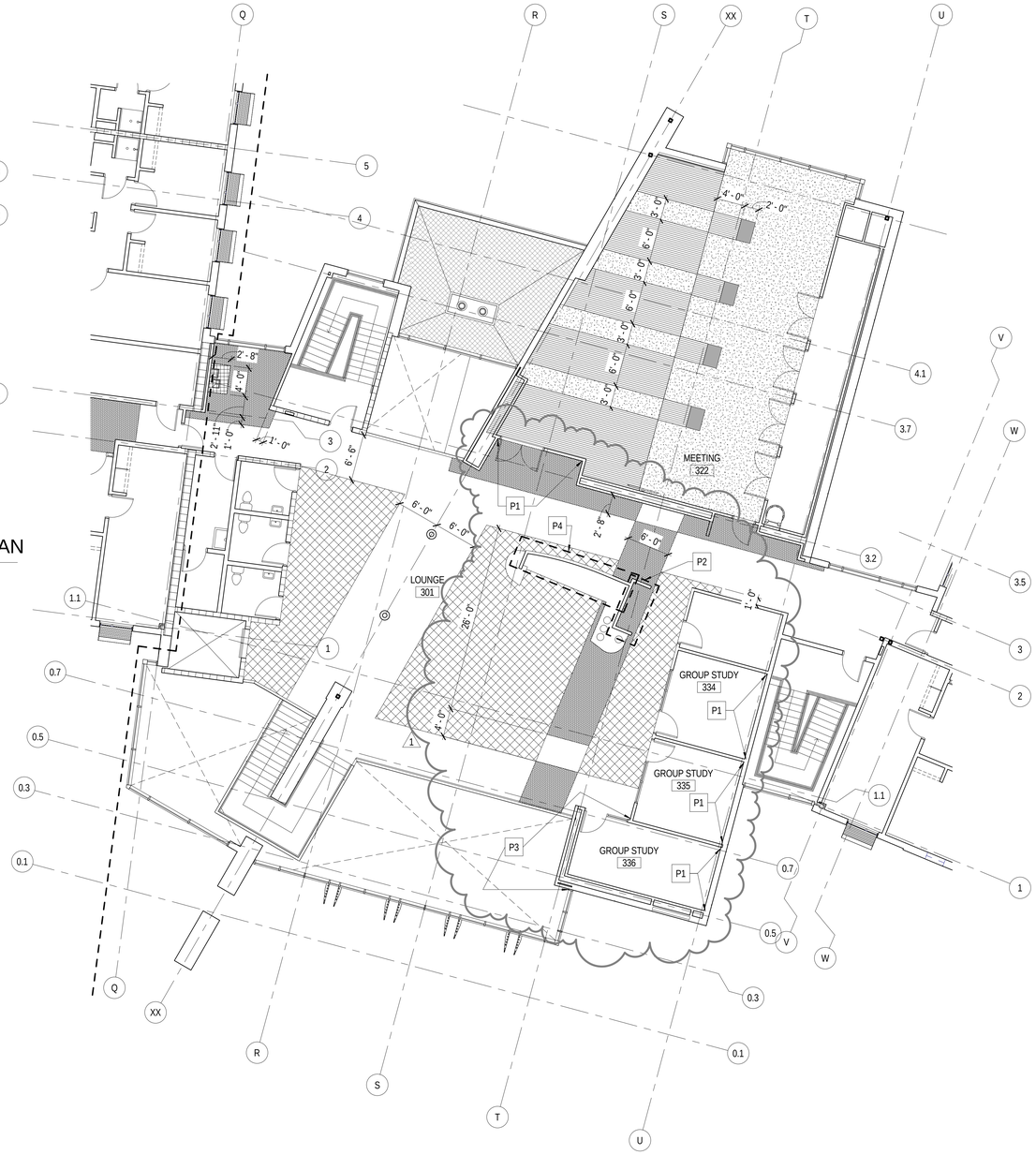

1 LEVEL 3 COMMONS FLOOR PATTERN PLAN

SCALE: 1/8" = 1'-0"

PAINT LEGEND

P1	ACCENT PAINT 1
P2	ACCENT PAINT 2
P3	ACCENT PAINT 3
P4	ACCENT PAINT 4

FLOOR PATTERN LEGEND

- RESILIENT ATHLETIC FLOORING COLOR A
- RESILIENT ATHLETIC FLOORING COLOR B
- RESILIENT ATHLETIC FLOORING COLOR C
- RESILIENT TERRAZZO TILE A
- RESILIENT TERRAZZO TILE B
- RESILIENT TERRAZZO TILE C
- RESILIENT TERRAZZO TILE D
- CARPET TILE A
- CARPET TILE B
- CARPET TILE C
- WALK-OFF MAT

C:\Users\Matthew\Documents\A11_2010543 WSU RESIDENTIAL LIFE BUILDING II_CENTRAL_MatthewC.rvt
4/28/2011 9:57:13 AM

MHTN ARCHITECTS
MHTN Architects, Inc.
420 East South Temple
Suite 100
Salt Lake City, Utah 84111
Telephone (801) 595-6700
Telefax (801) 595-6717
www.mhtn.com

WEBER STATE UNIVERSITY
RESIDENTIAL LIFE PHASE II - BLDG 2

DFCM PROJECT NUMBER: 10176810

WEBER STATE UNIVERSITY
OGDEN, UTAH 84408

SEAL

MHTN PROJECT NO. 2010543

DRAWN BY: Author CHECKED BY: Checker

ISSUED:

NO.	DATE	DESCRIPTION
01	14 APR 2011	CONSTRUCTION DOCUMENTS

CONTRACTOR TO VERIFY DRAWINGS IN FIELD USE REFLECT LAST REVISION DATE:

NO.	DATE	DESCRIPTION
1	28 APRIL 2011	ADDENDUM 04

SHEET NAME

FLOOR PATTERN PLANS

CONSTRUCTION DOCUMENTS
14 APRIL 2011

SHEET NUMBER

AF103

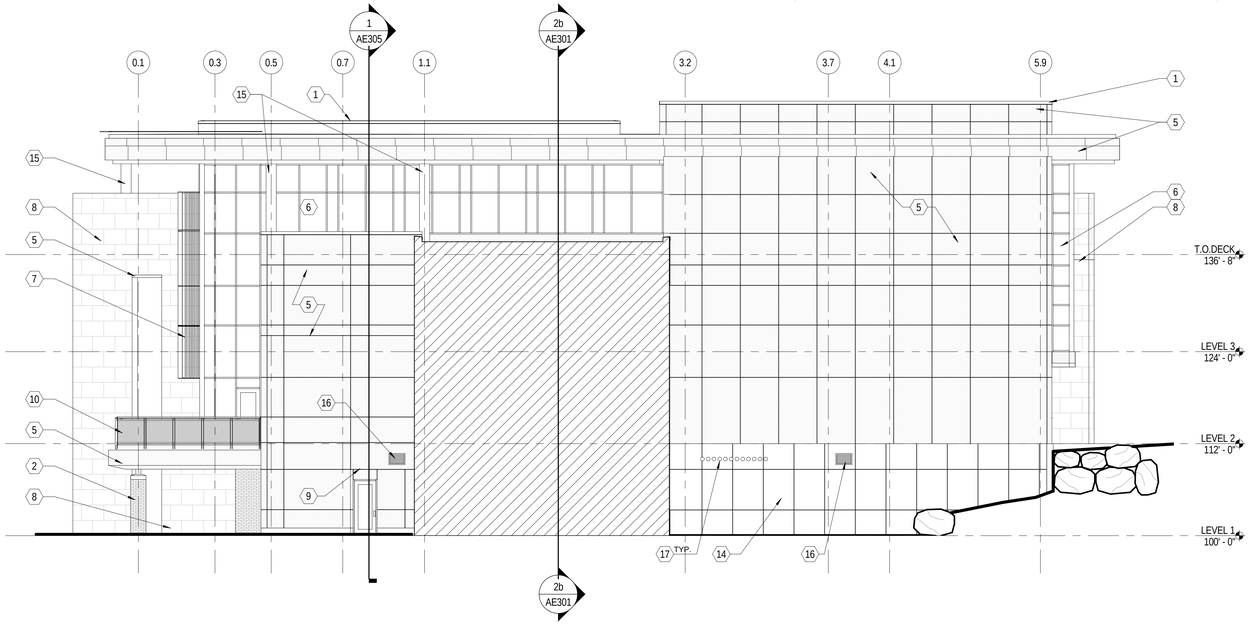

1 SOUTH ELEVATION - GRID 'U'

SCALE: 1/8" = 1'-0"

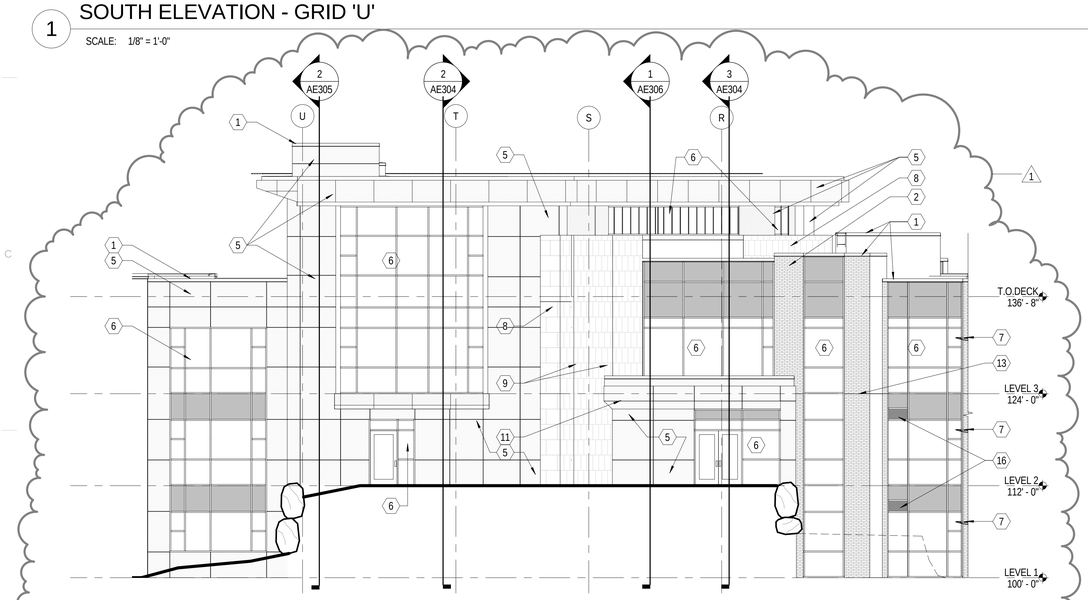

2 EAST ELEVATION - GRID '6'

SCALE: 1/8" = 1'-0"

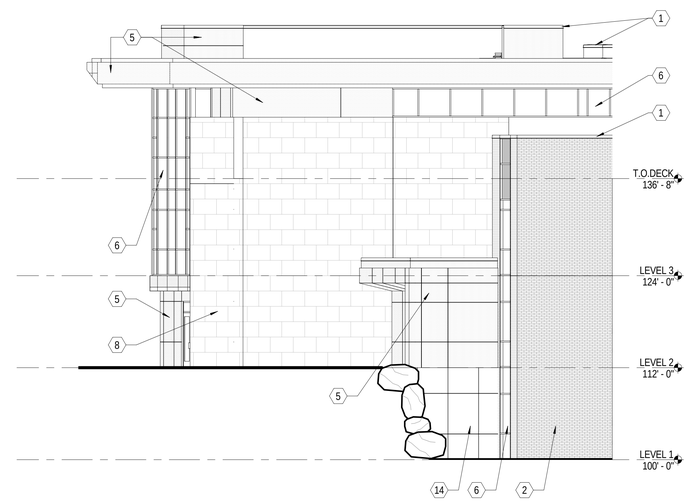

3 NORTH ELEVATION - GRID '5.9'

SCALE: 1/8" = 1'-0"

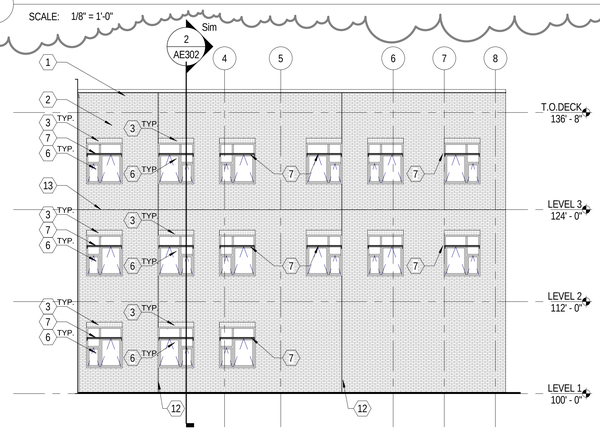

4 SOUTH ELEVATION - GRID 'Q'

SCALE: 1/8" = 1'-0"

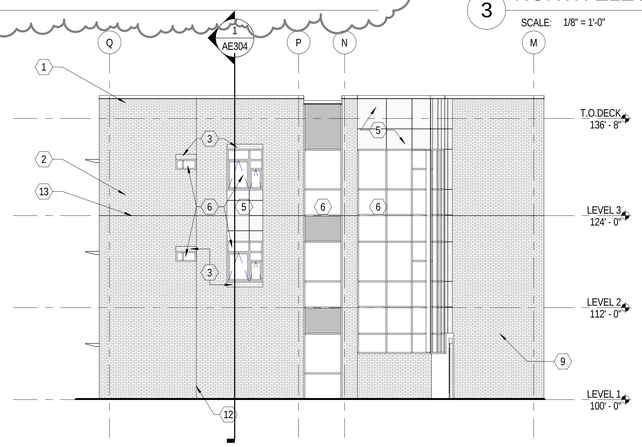

5 EAST ELEVATION - GRID '8'

SCALE: 1/8" = 1'-0"

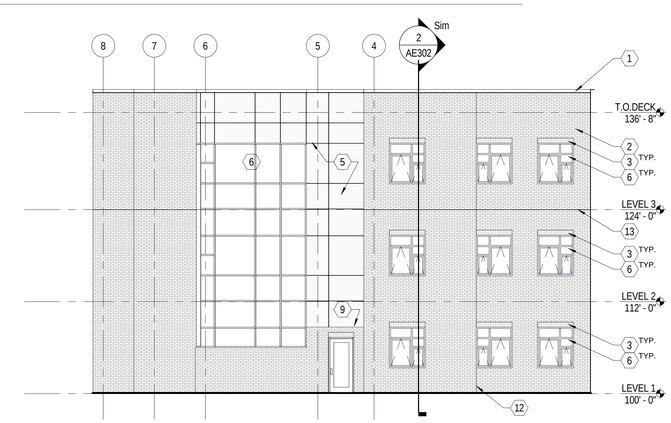

6 NORTH ELEVATION - GRID 'M'

SCALE: 1/8" = 1'-0"

GENERAL NOTES

1. CONTINUE ALL MATERIALS AND PATTERNS TO SURFACES NOT SHOWN IN ELEVATION.

2. NOT ALL ROOFTOP EQUIP. IS SHOWN, RE: MECHANICAL DRAWINGS AND ARCHITECTURAL ROOF PLAN.

3. DIMENSIONS SHOWN FOR MASONRY COURSING ARE NOMINAL U.N.O.

4. SEE WINDOW TYPE DRAWINGS FOR ADDITIONAL INFORMATION REGARDING WINDOW SYSTEMS AND GLAZING.

5. ALL EXPOSED METAL FABRICATIONS SHALL BE PRE-FINISHED

6. SEE STRUCTURAL DRAWINGS FOR LOCATIONS OF STEPS IN CONCRETE FOUNDATIONS.

7. SEE LANDSCAPE, CIVIL, & STRUCTURAL PLANS FOR INFORMATION REGARDING SITE WALLS AND RETAINING WALLS.

8. SEE D5/AE508 FOR MASONRY VENEER REINFORCEMENT DETAIL

9. METAL PANEL WIDTH NOT TO EXCEED 10'-0"

KEYNOTES

1. PRE-FINISHED METAL COPING
2. FIELD COLOR BRICK VENEER
3. SOLDIER COURSE ACCENT BRICK VENEER
4. STACK BOND ACCENT BRICK VENEER
5. COMPOSITE METAL PANEL SYSTEM
6. SCHEDULED WINDOW SYSTEM
7. PRE-MANUFACTURED SUNSHADE SYSTEM
8. SANDSTONE VENEER
9. WALL-MOUNTED CAN LIGHT @ 9'-0" A.F.F.
10. GUARDRAIL
11. ENTRY CANOPY
12. MASONRY CONTROL JOINT
13. MASONRY LINTEL ANGLE
14. CONCRETE
15. COMPOSITE METAL COLUMN COVER
16. LOUVER
17. DRYER VENT

MHTN
ARCHITECTS
MHTN Architects, Inc.
420 East South Temple
Suite 100
Salt Lake City, Utah 84111
Telephone (801) 595-6700
Telefax (801) 595-6717
www.mhtn.com

WEBER STATE UNIVERSITY
RESIDENTIAL LIFE PHASE II - BLDG 2
DFCM PROJECT NUMBER: 10176810

WEBER STATE UNIVERSITY
OGDEN, UTAH 84408

SEAL

MHTN PROJECT NO. 2010543

DRAWN BY: MC CHECKED BY: MG

ISSUED:

NO.	DATE	DESCRIPTION
01	14 APR 2011	CONSTRUCTION DOCUMENTS

CONTRACTOR TO VERIFY DRAWINGS IN FIELD USE REFLECT LAST REVISION DATE.

NO.	DATE	DESCRIPTION
1	28 APRIL 2011	ADDENDUM 04

SHEET NAME

EXTERIOR ELEVATIONS

CONSTRUCTION DOCUMENTS
14 APRIL 2011

SHEET NUMBER

AE202

C:\Users\Matthew\Documents\A11_2010543 WSU RESIDENTIAL LIFE BUILDING II_CENTRAL_MatthewC.rvt
4/28/2011 9:54:48 AM

C:\Users\MatthewC\Documents\A11_2010543 WSU RESIDENTIAL LIFE BUILDING II_CENTRAL_MatthewC.rvt
2/28/2011 5:02:24 AM

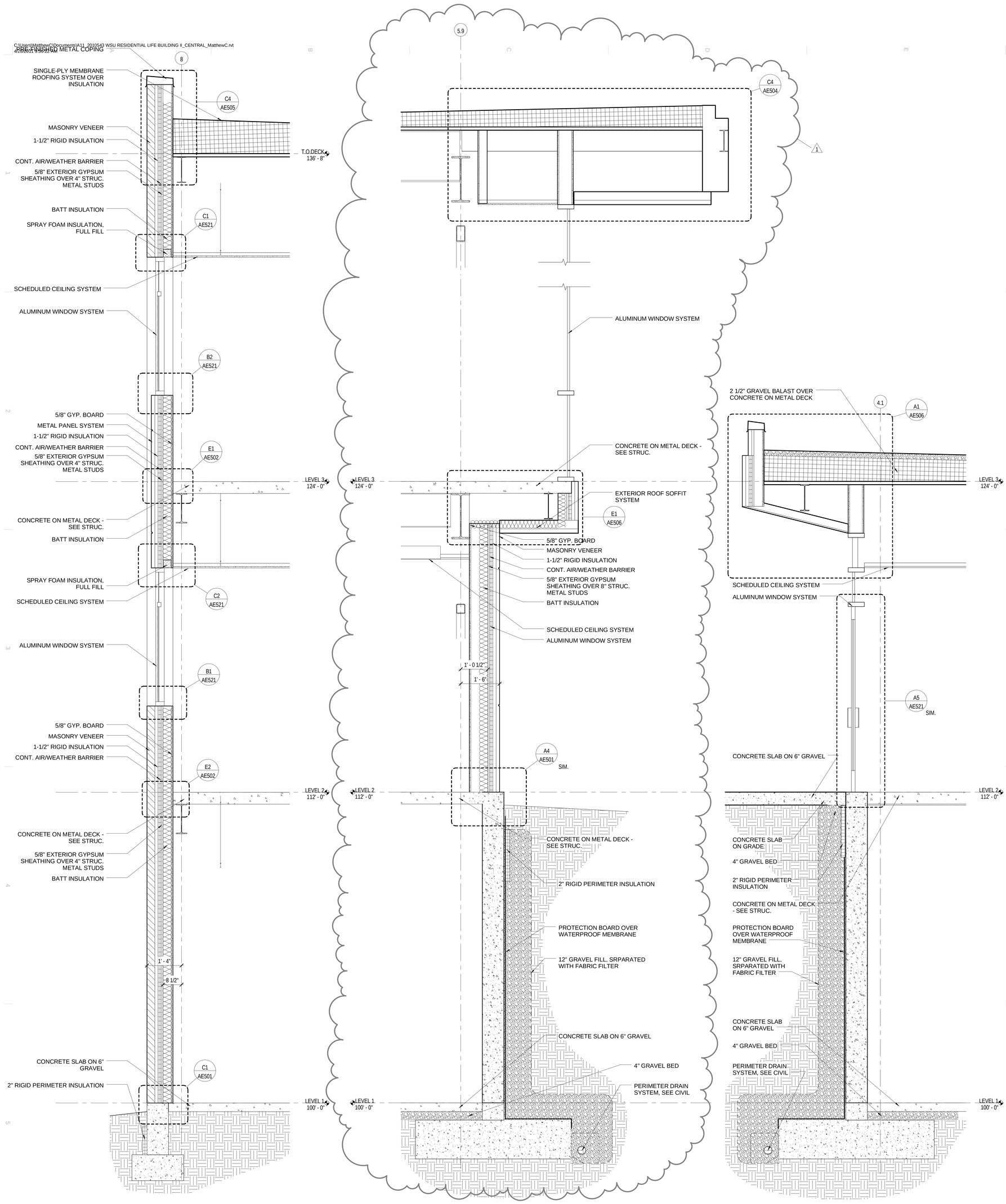

1 WALL SECTION
SCALE: 3/4" = 1'-0"

2 WALL SECTION
SCALE: 3/4" = 1'-0"

3 WALL SECTION
SCALE: 3/4" = 1'-0"

WEBER STATE UNIVERSITY
RESIDENTIAL LIFE PHASE II - BLDG 2

DFCM PROJECT NUMBER: 10176810

WEBER STATE UNIVERSITY
OGDEN, UTAH 84408

MHTN ARCHITECTS
MHTN Architects, Inc.
40 W. 200 South Temple
Suite 100
Salt Lake City, Utah 84111
Telephone (801) 532-1700
Telefax (801) 595-9217
www.mhtn.com

MHTN PROJECT NO. 2010543
DRAWN BY: MAJ / CHECKED BY: MC

ISSUED:

NO.	DATE	DESCRIPTION
0	14 APR 2011	CONSTRUCTION DOCUMENTS

REVISIONS:

NO.	DATE	DESCRIPTION
1	28 APRIL 2011	ADDENDUM #1

SEAL

SHEET NAME
WALL SECTIONS

CONSTRUCTION DOCUMENTS
14 APRIL 2011
SHEET NUMBER
AE304

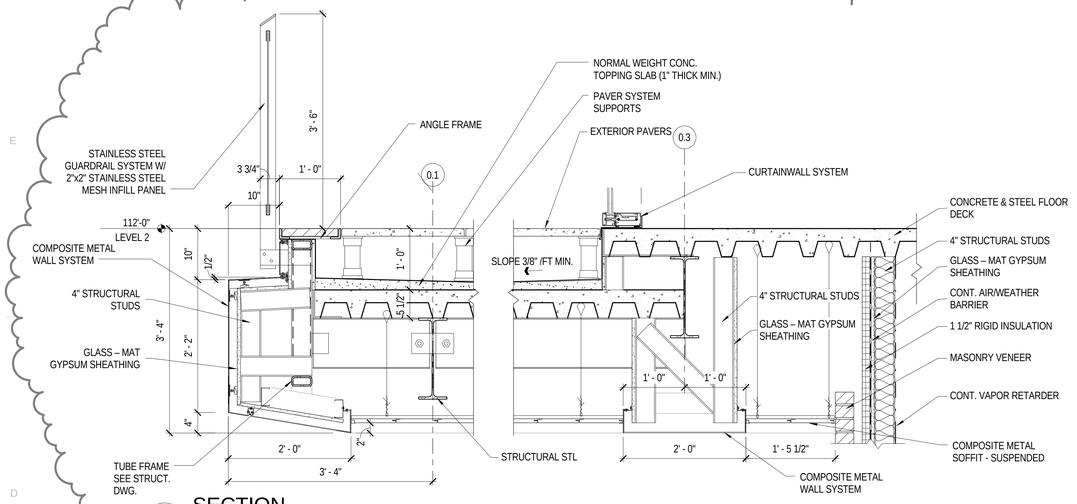

D1 SECTION

SCALE: 1" = 1'-0"

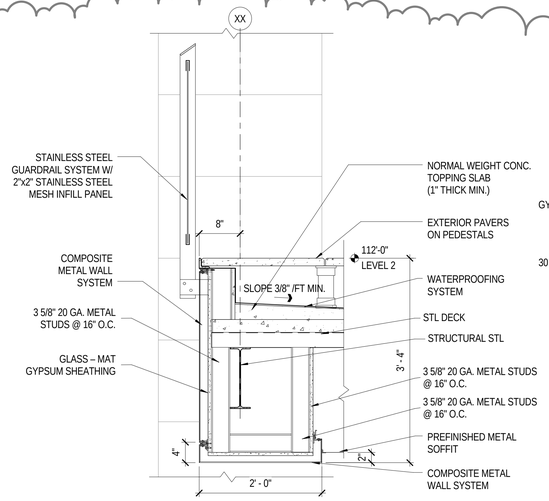

D3 SECTION

SCALE: 1" = 1'-0"

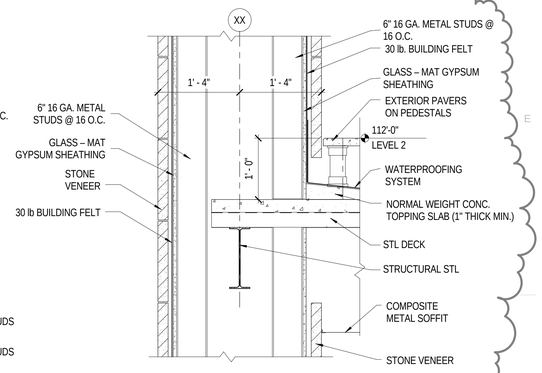

D4 SECTION

SCALE: 1" = 1'-0"

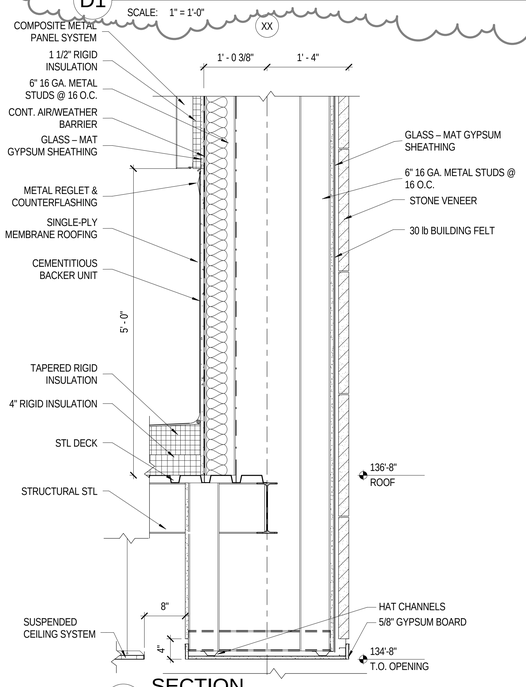

B1 SECTION

SCALE: 1" = 1'-0"

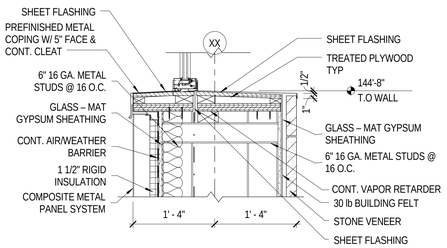

C3 SECTION

SCALE: 1" = 1'-0"

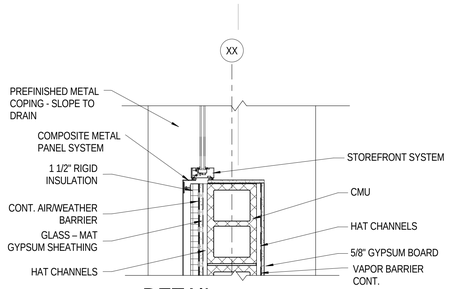

C4 DETAIL

SCALE: 1" = 1'-0"

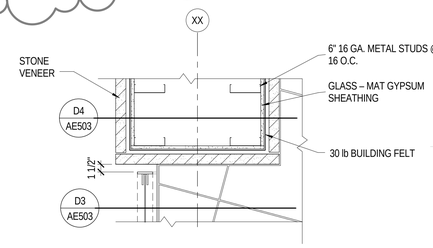

E5 DETAIL

SCALE: 1" = 1'-0"

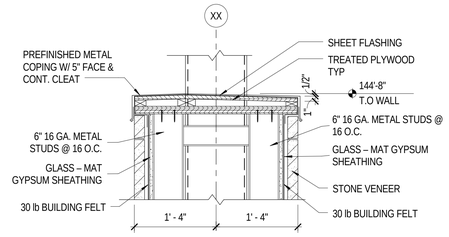

B3 SECTION

SCALE: 1" = 1'-0"

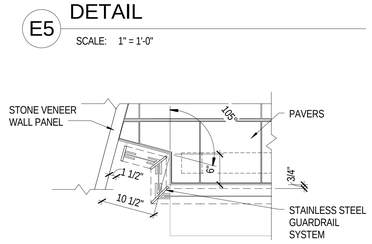

C5 DETAIL

SCALE: 1" = 1'-0"

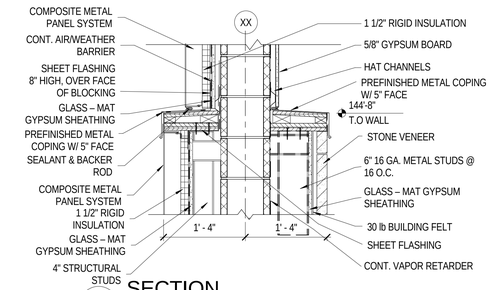

B4 SECTION

SCALE: 1" = 1'-0"

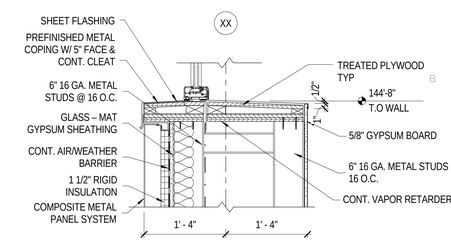

B5 SECTION

SCALE: 1" = 1'-0"

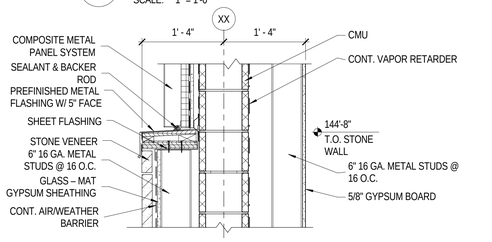

A4 SECTION

SCALE: 1" = 1'-0"

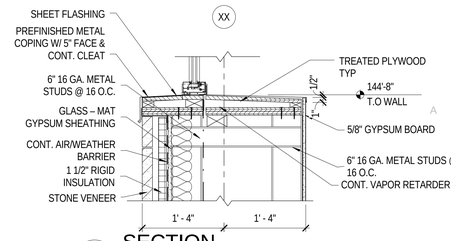

A5 SECTION

SCALE: 1" = 1'-0"

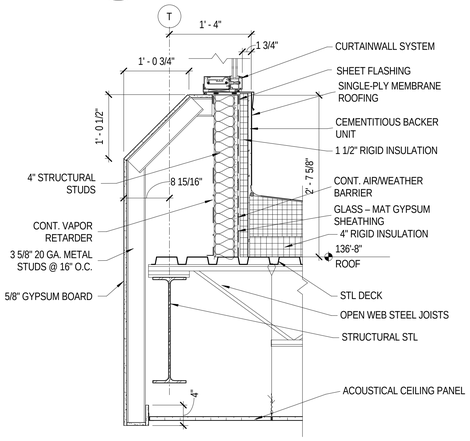

A1 SECTION

SCALE: 1" = 1'-0"

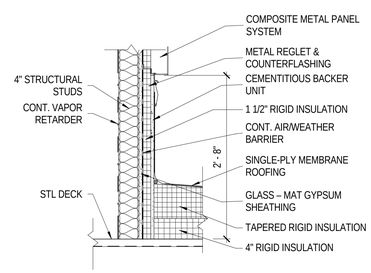

A2 SECTION

SCALE: 1" = 1'-0"

MHTN ARCHITECTS
MHTN Architects, Inc.
420 East South Temple
Suite 100
Salt Lake City, Utah 84111
Telephone (801) 595-6700
Telefax (801) 595-6717
www.mhtn.com

WEBER STATE UNIVERSITY
RESIDENTIAL LIFE PHASE II - BLDG 2

DFCM PROJECT NUMBER: 10176810

WEBER STATE UNIVERSITY
OGDEN, UTAH 84408

SEAL

MHTN PROJECT NO. 2010543

DRAWN BY: PWN CHECKED BY: MG

ISSUED

NO.	DATE	DESCRIPTION
01	14 APR 2011	CONSTRUCTION DOCUMENTS

CONTRACTOR TO VERIFY DRAWINGS IN FIELD USE REFLECT LAST REVISION DATE.

NO.	DATE	DESCRIPTION
1	28 APRIL 2011	ADDENDUM 04

SHEET NAME

EXTERIOR DETAILS

CONSTRUCTION DOCUMENTS
14 APRIL 2011

SHEET NUMBER

AE503

C:\Users\MatthewC\Documents\411_2010543 WSU RESIDENTIAL LIFE BUILDING II_CENTRAL_MatthewC.rvt
4/28/2011 9:57:42 AM

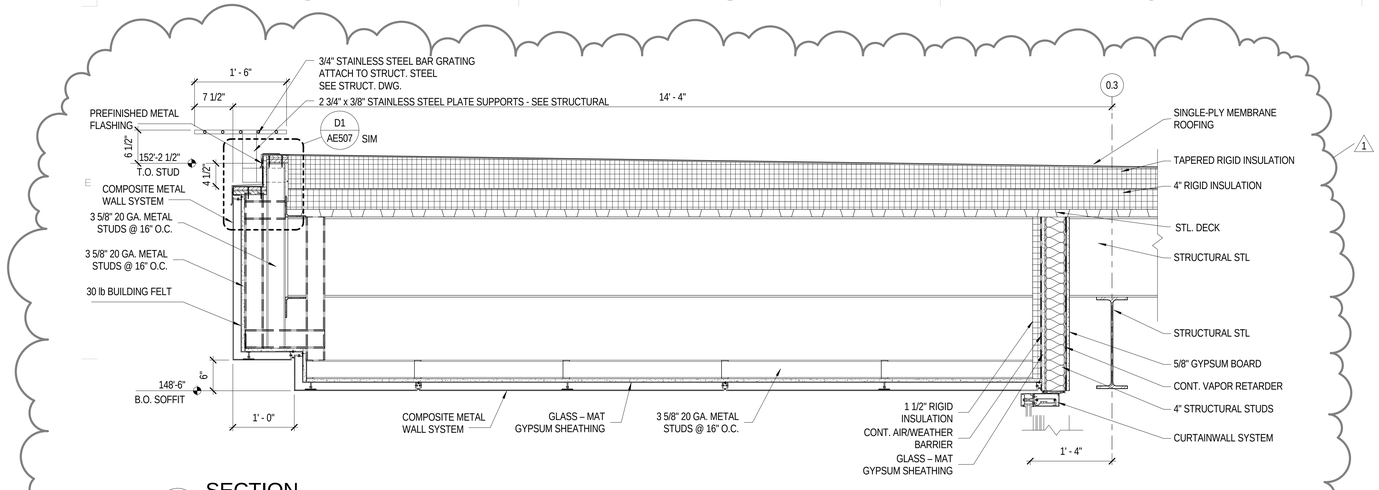

D1 SECTION

SCALE: 1" = 1'-0"

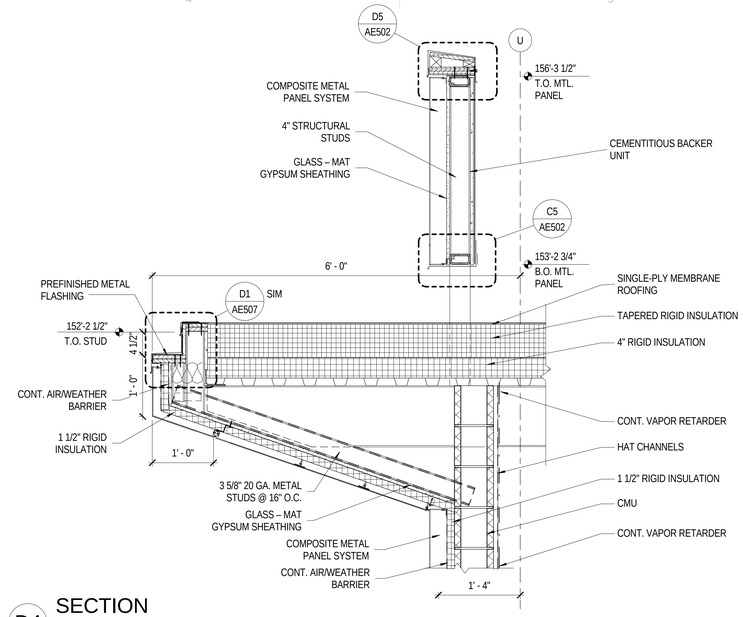

D4 SECTION

SCALE: 1" = 1'-0"

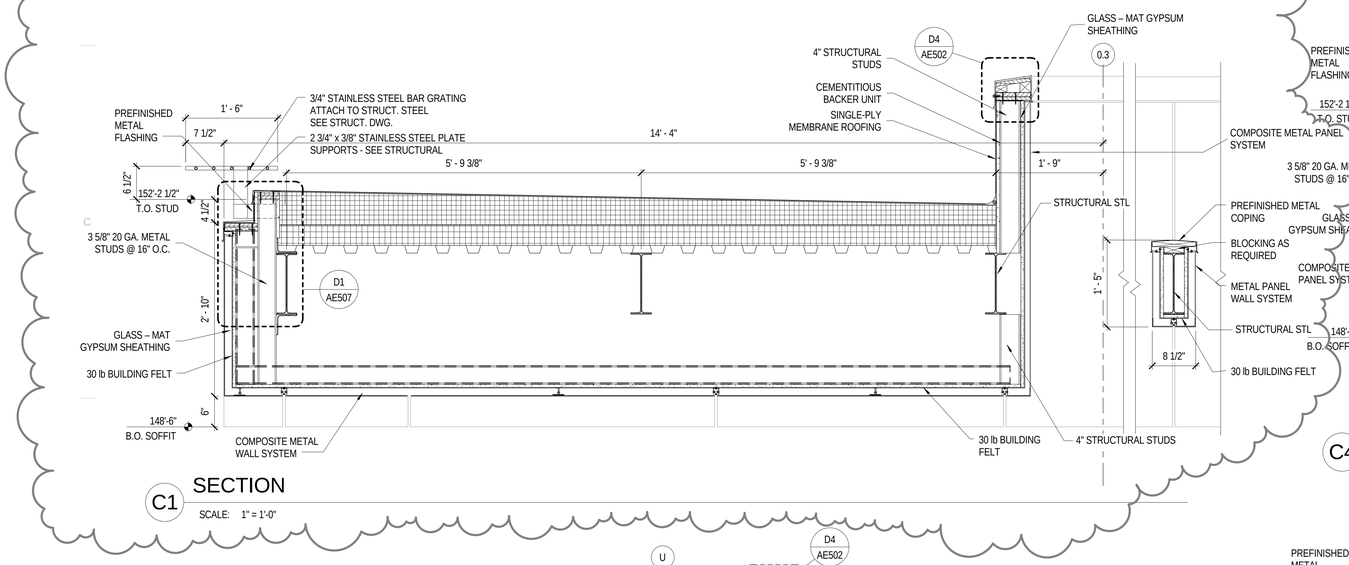

C1 SECTION

SCALE: 1" = 1'-0"

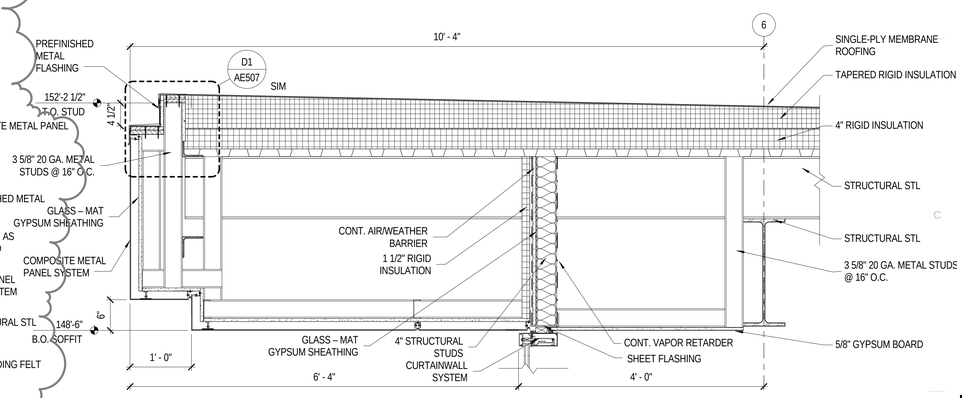

C4 SECTION

SCALE: 1" = 1'-0"

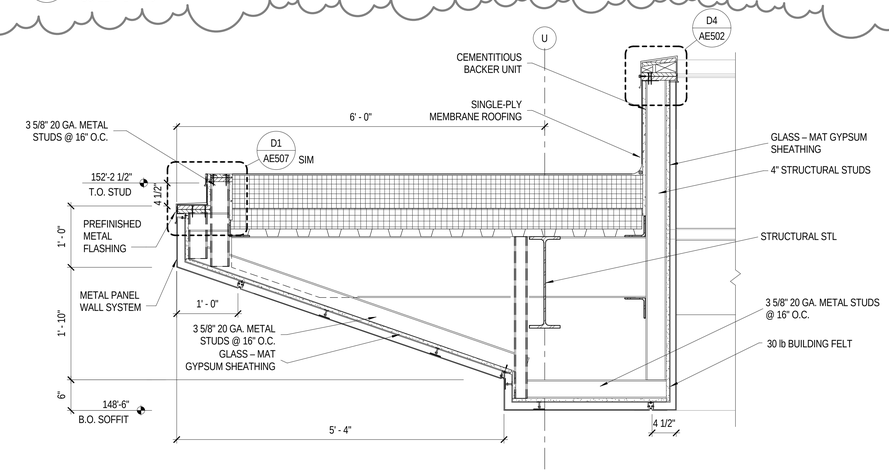

A1 SECTION

SCALE: 1" = 1'-0"

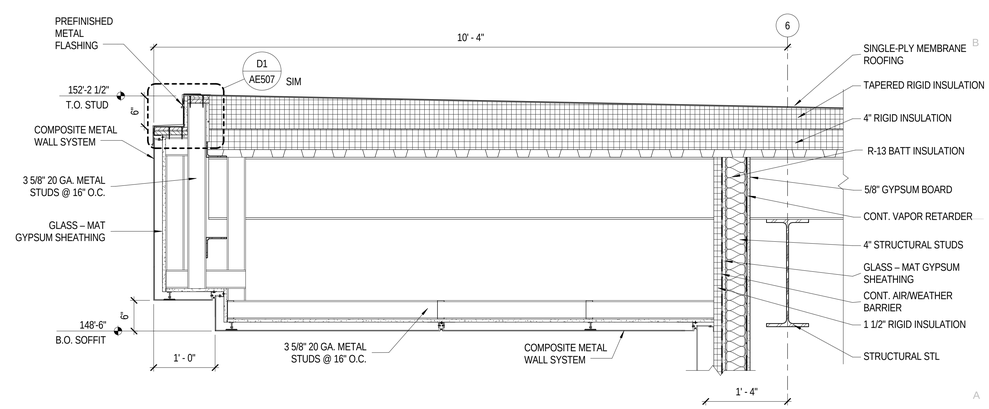

A3 SECTION

SCALE: 1" = 1'-0"

MHTN ARCHITECTS

MHTN Architects, Inc.
420 East South Temple
Suite 100
Salt Lake City, Utah 84111
Telephone (801) 595-6700
Telefax (801) 595-6717
www.mhtn.com

WEBER STATE UNIVERSITY
RESIDENTIAL LIFE PHASE II - BLDG 2

DFCM PROJECT NUMBER: 10176810

WEBER STATE UNIVERSITY
OGDEN, UTAH 84408

SEAL

MHTN PROJECT NO. 2010543

DRAWN BY: PWN CHECKED BY: MG

ISSUED:

NO.	DATE	DESCRIPTION
01	14 APR 2011	CONSTRUCTION DOCUMENTS

CONTRACTOR TO VERIFY DRAWINGS IN FIELD USE REFLECT LAST REVISION DATE:

NO.	DATE	DESCRIPTION
1	28 APRIL 2011	ADDENDUM 04

SHEET NAME

EXTERIOR DETAILS

CONSTRUCTION DOCUMENTS
14 APRIL 2011

SHEET NUMBER

AE504

C:\Users\Matthew\C\Documents\A11_2010543 WSU RESIDENTIAL LIFE BUILDING II_CENTRAL_MatthewC.rvt
4/28/2011 9:58:08 AM

GREAT BASIN ENGINEERING INC

WSU NEW RESIDENTIAL LIFE – BUILDING 2

ADDENDUM - 04

DATE OF ISSUE: 04.28.11

ARCHITECT PROJECT #:2010543.00

DESCRIPTION: Changes to Building Two Grading, Site and Demolition Sheets – Drawing Changes

CHANGES TO SPECIFICATIONS:

Addendum 04

1. None.

CHANGES TO DRAWINGS:

Addendum 04

1. CD-001: Demolish existing tree, previously numbered 68. Extended upper boulder retaining wall. See attached drawing ADD04-C1.
2. CS-102: Added callouts that depict the number and location of stalls for fuel efficient vehicles, maintenance vehicles and visitor parking. See attached drawing ADD04-C2.
3. CG-202: Adjusted grades for the added boulder retaining wall. See attached drawing ADD04-C3.

ATTACHMENTS:

Addendum 04

Sheet #: ADD04-C1, ADD04-C2, ADD04-C3.

TEL (801) 394-4515 • FAX (801) 392-7544 • 5746 South 1475 East • Ogden, Utah 84403 • www.greatbasinengineering.com

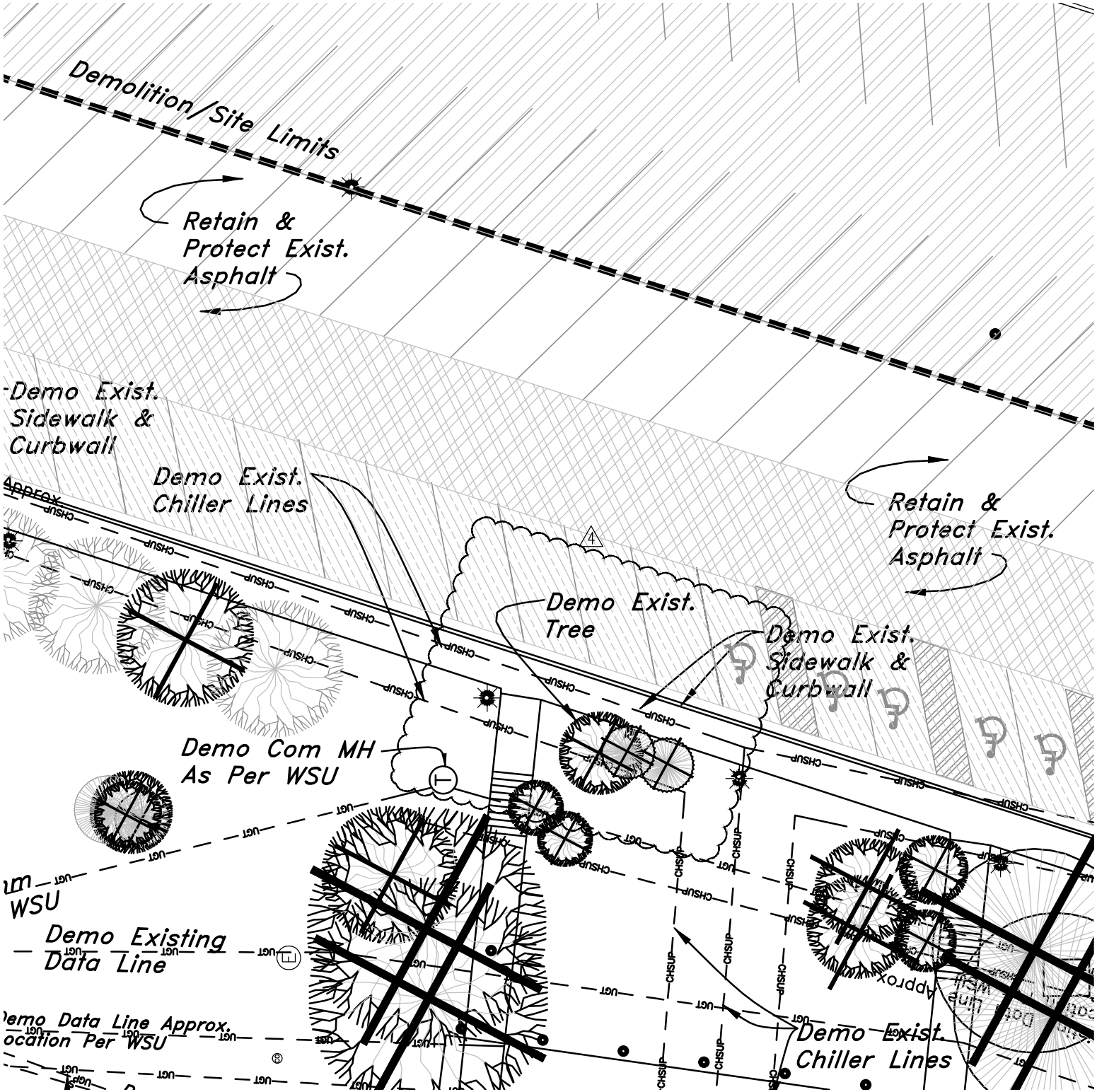

Sheet No.
ADD04-C1
Sheet Reference
CD-001

Project Name: WEBER STATE UNIVERSITY
NEW RESIDENTIAL LIFE BUILDING 2

Project No: 2010543.00
Date: 28 APRIL 2011

MHTN ARCHITECTS
420 East South Temple
Suite 100
Salt Lake City, Utah 84111
Telephone (801) 595-6700
Telefax (801) 595-6717
www.mhtn.com

MHTN
ARCHITECTS
420 East South Temple
Suite 100
Salt Lake City, Utah 84111
Telephone (801) 595-6700
Telefax (801) 595-6717
www.mhtn.com

Project Name: WEBER STATE UNIVERSITY
NEW RESIDENTIAL LIFE BUILDING 2

Project No: 2010543.00

Date: 28 APRIL 2011

Sheet No.

ADD04-C2

Sheet Reference

CS-102

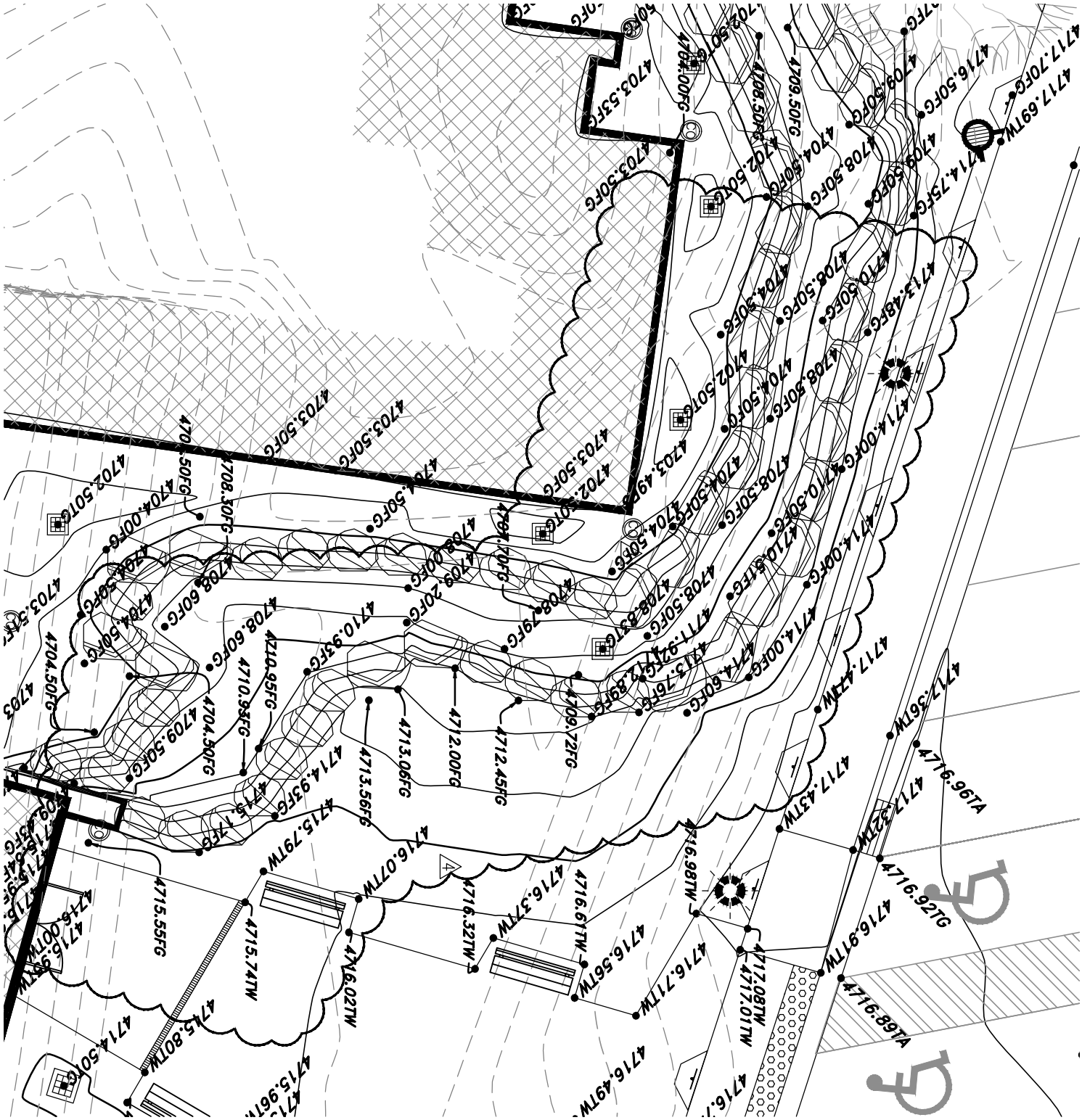

MHTN ARCHITECTS
420 East South Temple
Suite 100
Salt Lake City, Utah 84111
Telephone (801) 595-6700
Telefax (801) 595-6717
www.mhtn.com

Project Name: WEBER STATE UNIVERSITY
NEW RESIDENTIAL LIFE BUILDING 2

Project No: 2010543.00

Date: 28 APRIL 2011

Sheet No.

ADD04-C3

Sheet Reference

CG-202

ADDENDUM #4

Project: WSU Res. Life Phase 2 Building 2 **Project No.:** 10613
Location: Ogden, Utah **Date:** 28 April 2011
Addendum by: Jeremy Achter, S.E.

Sheet SG601
-A typo was corrected in the Lateral Force Resisting Element Key Plan. Please see the attached sheet AD04_S01.

Sheet SB101B
-A top of foundation callout was added to the plan. Please see the attached sheet AD04_S02.

Sheet SF102B
-A new sheet SF102B has been provided with clouded changes. Please see the attached revised sheet.

Sheet SF104B
-A steel channel was added to the roof to support the metal stud wall above. Please see the attached sheet AD04_S03.

Sheet SF105
-A new sheet SF105 has been provided with clouded changes. Please see the attached revised sheet.

Sheet SF201
-A new sheet SF201 has been provided with clouded changes. Please see the attached revised sheet.

Sheet SF302
-A new sheet SF302 has been provided with clouded changes. Please see the attached revised sheet.

Sheet SF502
-Detail B5 has been revised to add additional bars to the floor level bond beam at this particular location. Please see the attached sheet AD04_S04.

Sheet SF504
-Detail A3/SF504 has been revised. Please see the attached sheet AD04_S05.

Sheet SF504
-Detail A4 has been revised. Please see the attached sheet AD04_S06.

Sheet SF701

-A detail call out has been added to the elevation. Please see the attached sheet AD04_S07.

Sheet SF702

-A new sheet SF702 has been provided with clouded changes. Please see the attached revised sheet.

Sheet SF704

-Detail C1 has been revised. Please see the attached sheet AD04_S08.

Sheet SF705

-A new sheet SF705 has been created. Please see the attached sheet.

Filing:(x) project file () other
WSU Res. Life Phase 2 Bldg 2_Struct ADD04_042711

LATERAL FORCE RESISTING ELEMENT KEY PLAN L

ESTABLISHED PER 2009 IBC SECTION 1705.2

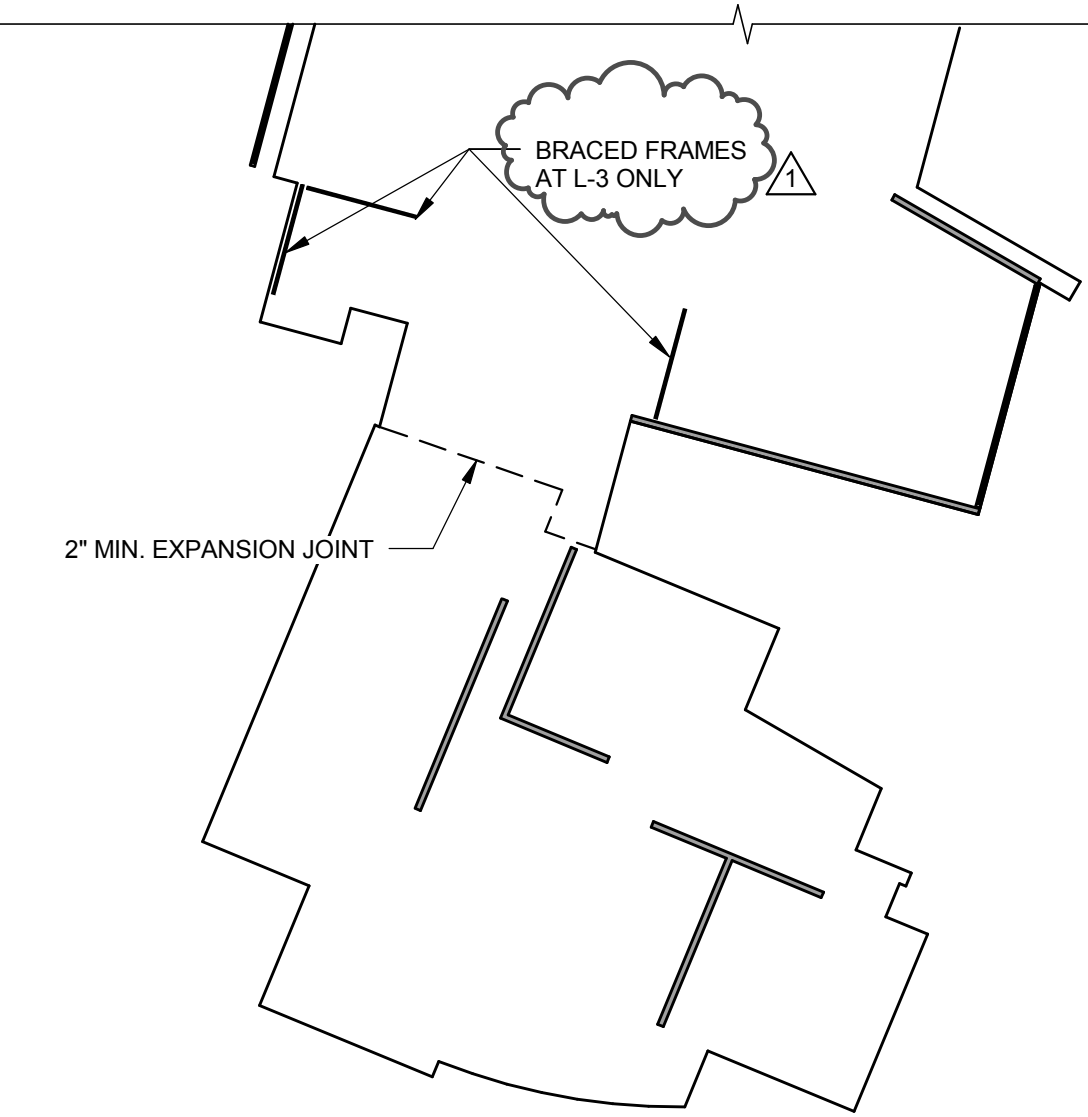

= SHEAR WALL

= BRACED FRAMES

KEY PLAN

©2007 MHTN ARCHITECTS, INC.

Drawings, written material, and design concepts shall not be used or reproduced in whole or part in any form or format without prior written consent of MHTN Architects, Inc.

Do not scale drawings. Use given dimensions only. If not shown, verify correct dimensions with the Architect. Contractor shall check and verify all dimensions and conditions at job site.

MHTN Architects, Inc.
420 East South Temple
Suite 100
Salt Lake City, Utah 84111
TEL 801.595.6700
FAX 801.595.6717
www.mhtn.com

WEBER STATE UNIVERSITY
RESIDENTIAL LIFE PHASE II - BLDG 2

PROJECT NO. 2010543

DATE: 04/28/2011

SHEET NUMBER
AD04_S01

SHEET REFERENCE
SG601

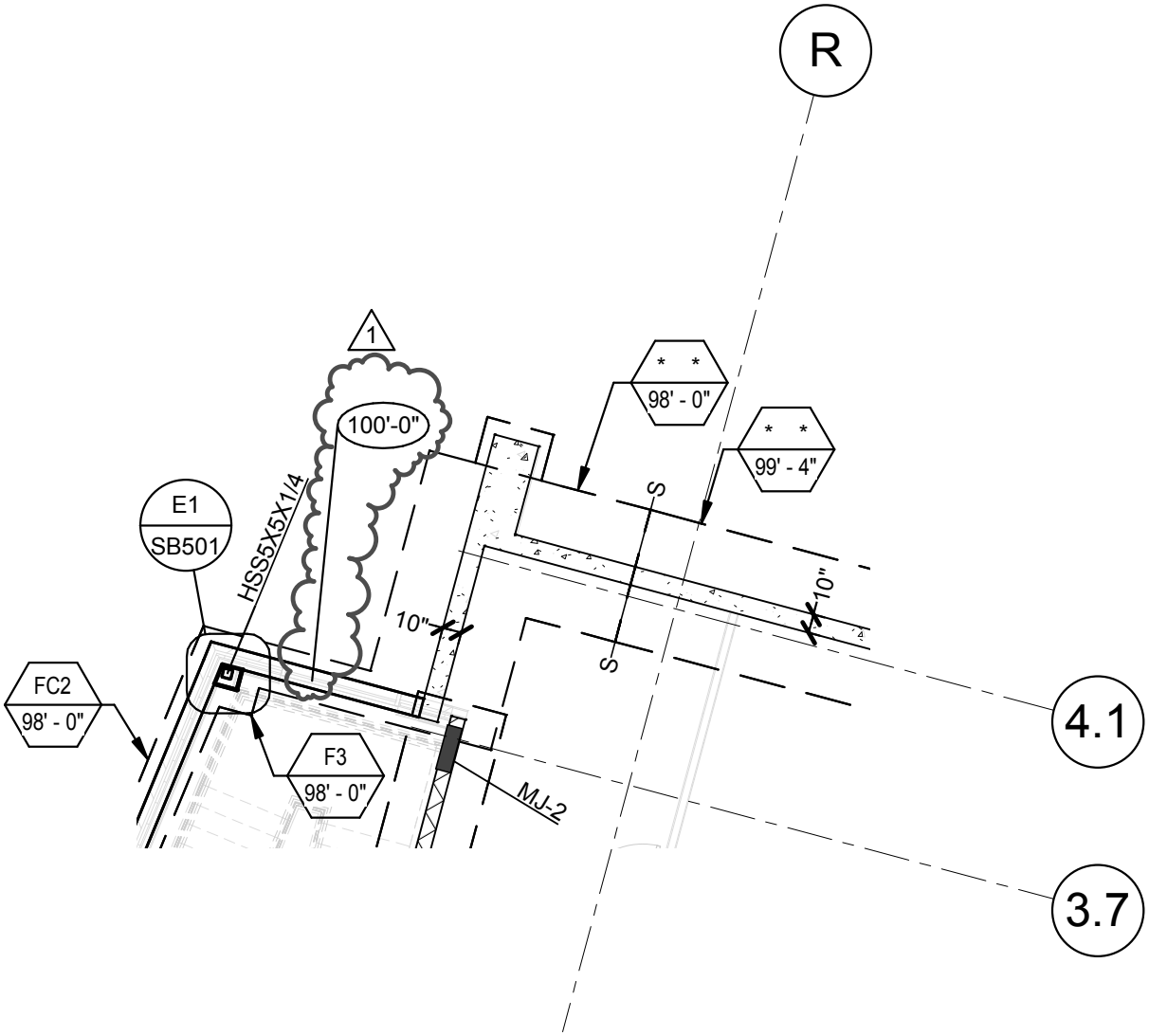

FOOTING & FOUNDATION PLAN - AREA B

SCALE : NONE

A
SB101B

©2007 MHTN ARCHITECTS, INC.

Drawings, written material, and design concepts shall not be used or reproduced in whole or part in any form or format without prior written consent of MHTN Architects, Inc.

Do not scale drawings. Use given dimensions only. If not shown, verify correct dimensions with the Architect. Contractor shall check and verify all dimensions and conditions at job site.

MHTN Architects, Inc.
420 East South Temple
Suite 100
Salt Lake City, Utah 84111
TEL 801.595.6700
FAX 801.595.6717
www.mhtn.com

WEBER STATE UNIVERSITY
RESIDENTIAL LIFE PHASE II - BLDG 2

PROJECT NO. 2010543

DATE: 04/28/2011

SHEET NUMBER
AD04_S02

SHEET REFERENCE
SB101B

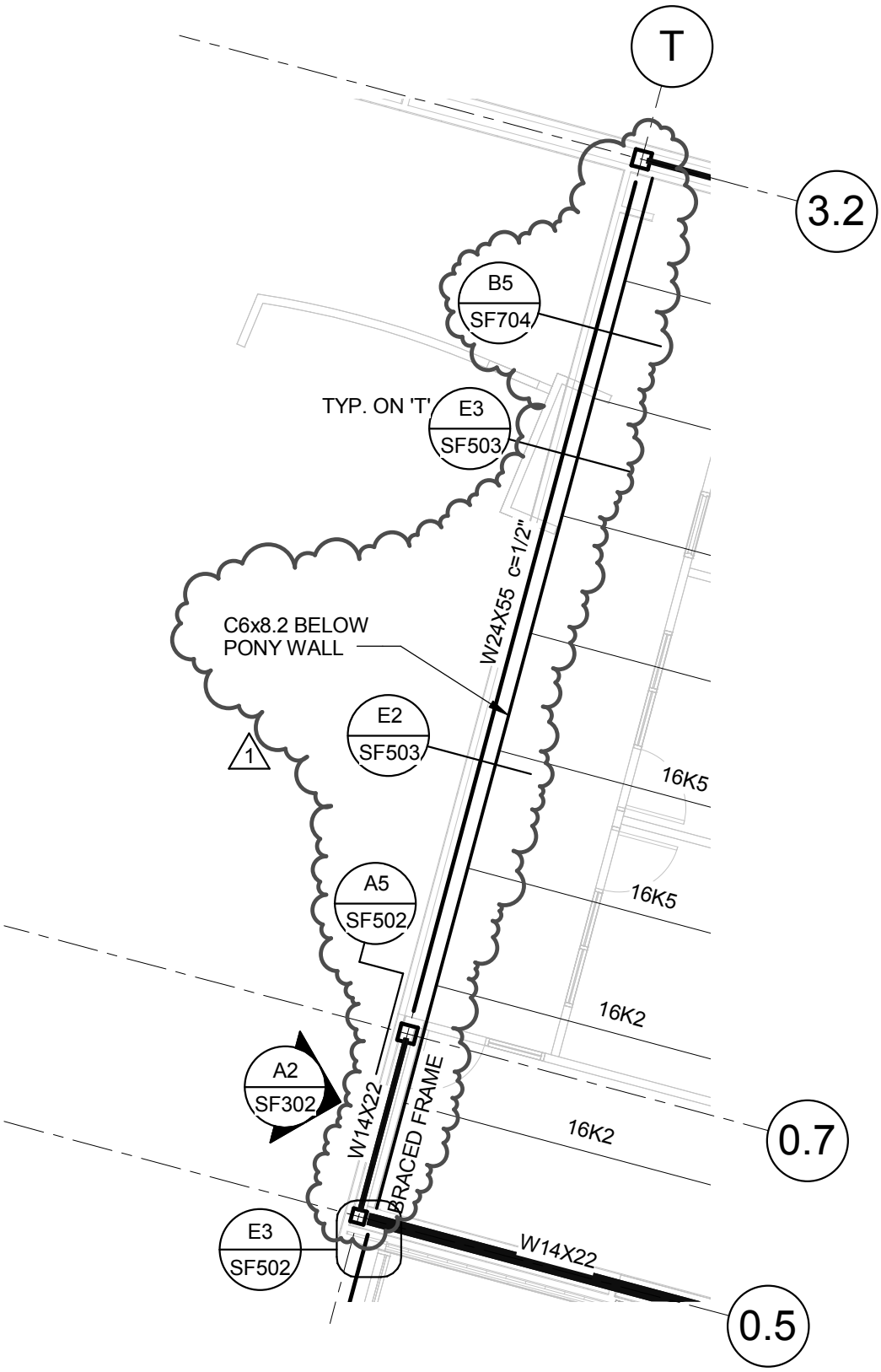

LOW ROOF FRAMING PLAN - AREA B

A
SF104B

SCALE : NONE

©2007 MHTN ARCHITECTS, INC.

Drawings, written material, and design concepts shall not be used or reproduced in whole or part in any form or format without prior written consent of MHTN Architects, Inc.

Do not scale drawings. Use given dimensions only. If not shown, verify correct dimensions with the Architect. Contractor shall check and verify all dimensions and conditions at job site.

MHTN Architects, Inc.
420 East South Temple
Suite 100
Salt Lake City, Utah 84111
TEL 801.595.6700
FAX 801.595.6717
www.mhtn.com

WEBER STATE UNIVERSITY
RESIDENTIAL LIFE PHASE II - BLDG 2

PROJECT NO. 2010543

DATE: 04/28/2011

SHEET NUMBER
AD04_S03

SHEET REFERENCE
SF104B

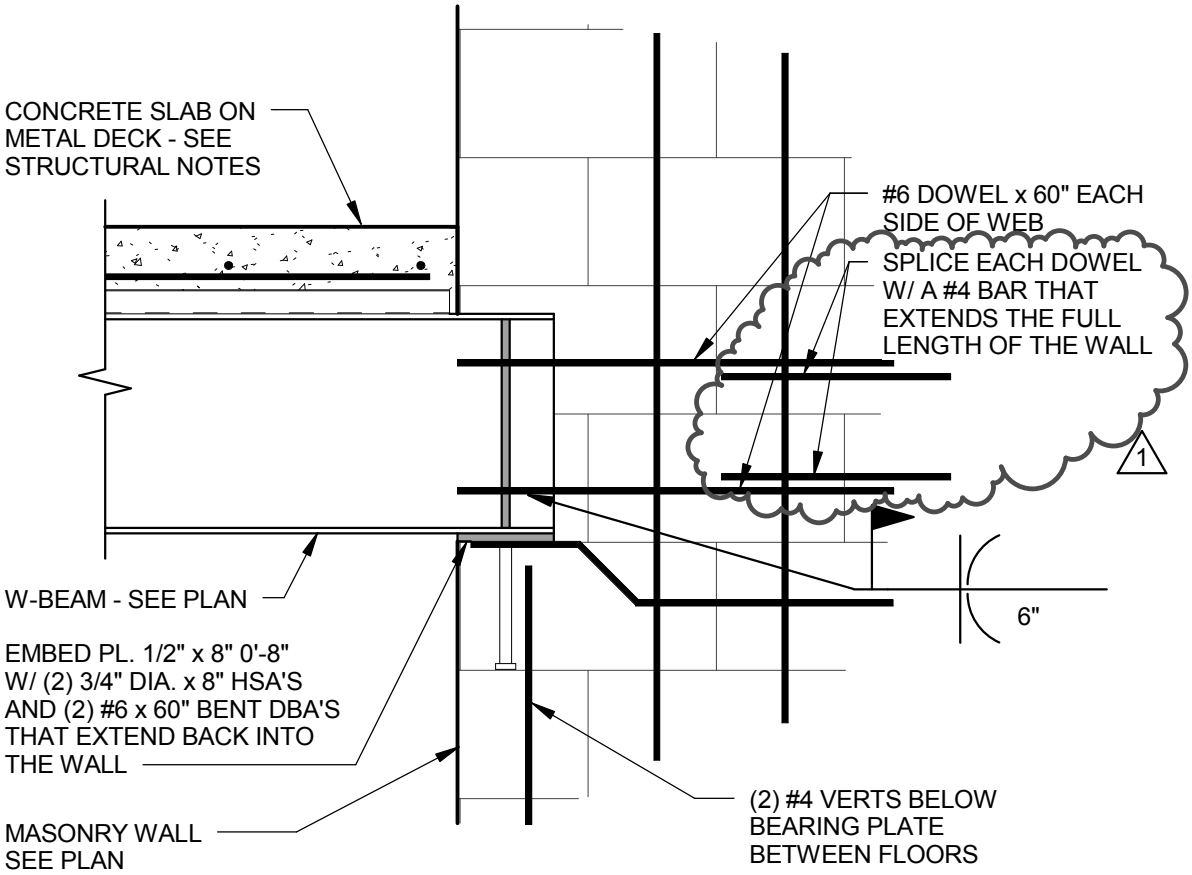

DETAIL

SCALE : NONE

B5
SF502

©2007 MHTN ARCHITECTS, INC.

Drawings, written material, and design concepts shall not be used or reproduced in whole or part in any form or format without prior written consent of MHTN Architects, Inc.

Do not scale drawings. Use given dimensions only. If not shown, verify correct dimensions with the Architect. Contractor shall check and verify all dimensions and conditions at job site.

MHTN Architects, Inc.
420 East South Temple
Suite 100
Salt Lake City, Utah 84111
TEL 801.595.6700
FAX 801.595.6717
www.mhtn.com

WEBER STATE UNIVERSITY
RESIDENTIAL LIFE PHASE II - BLDG 2

PROJECT NO. 2010543

DATE: 04/28/2011

SHEET NUMBER
AD04_S04

SHEET REFERENCE
SF502

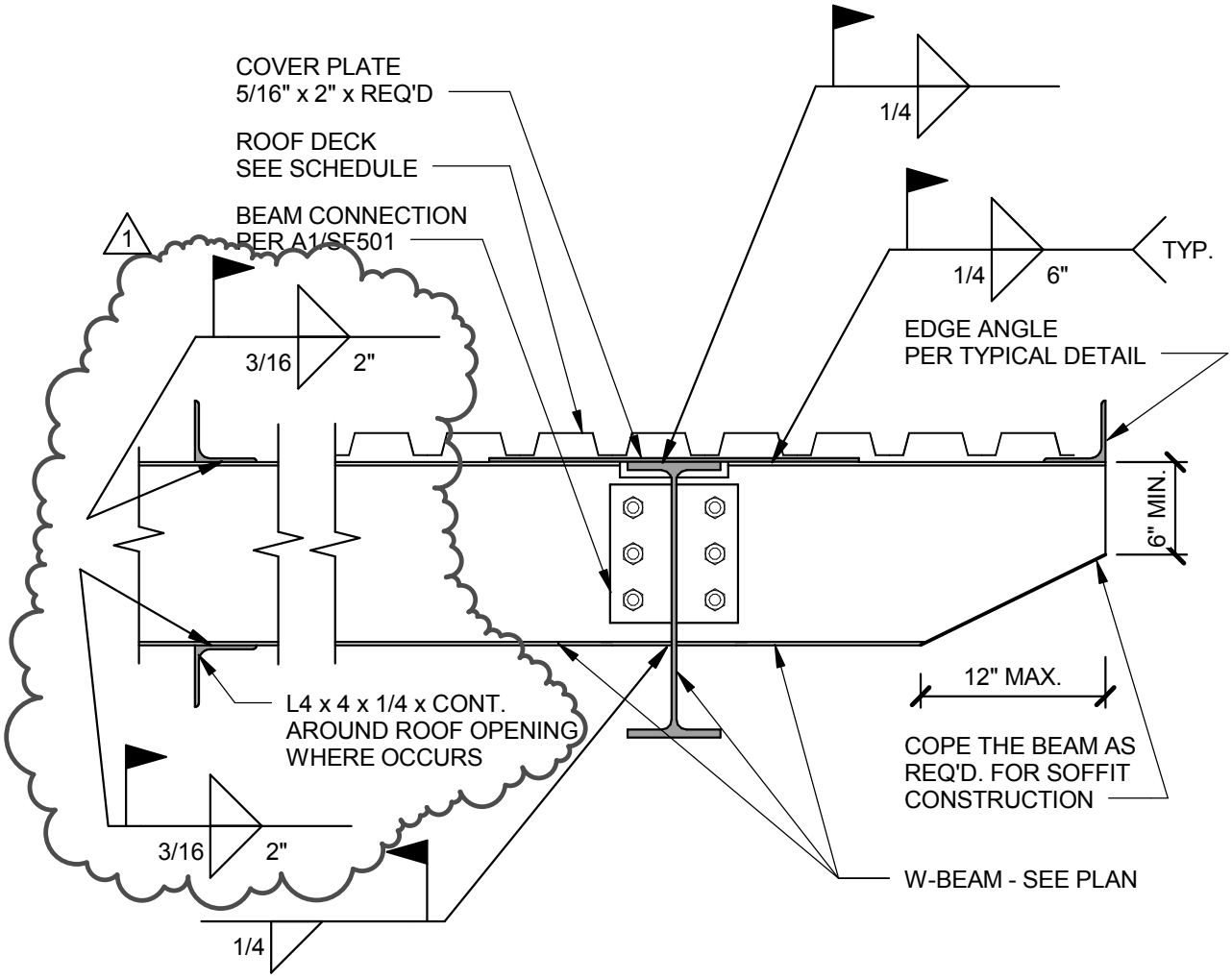

DETAIL

SCALE : NONE

A3
SF504

©2007 MHTN ARCHITECTS, INC.

Drawings, written material, and design concepts shall not be used or reproduced in whole or part in any form or format without prior written consent of MHTN Architects, Inc.

Do not scale drawings. Use given dimensions only. If not shown, verify correct dimensions with the Architect. Contractor shall check and verify all dimensions and conditions at job site.

MHTN Architects, Inc.
420 East South Temple
Suite 100
Salt Lake City, Utah 84111
TEL 801.595.6700
FAX 801.595.6717
www.mhtn.com

WEBER STATE UNIVERSITY
RESIDENTIAL LIFE PHASE II - BLDG 2

PROJECT NO. 2010543

DATE: 04/28/2011

SHEET NUMBER
AD04_S05

SHEET REFERENCE
SF504

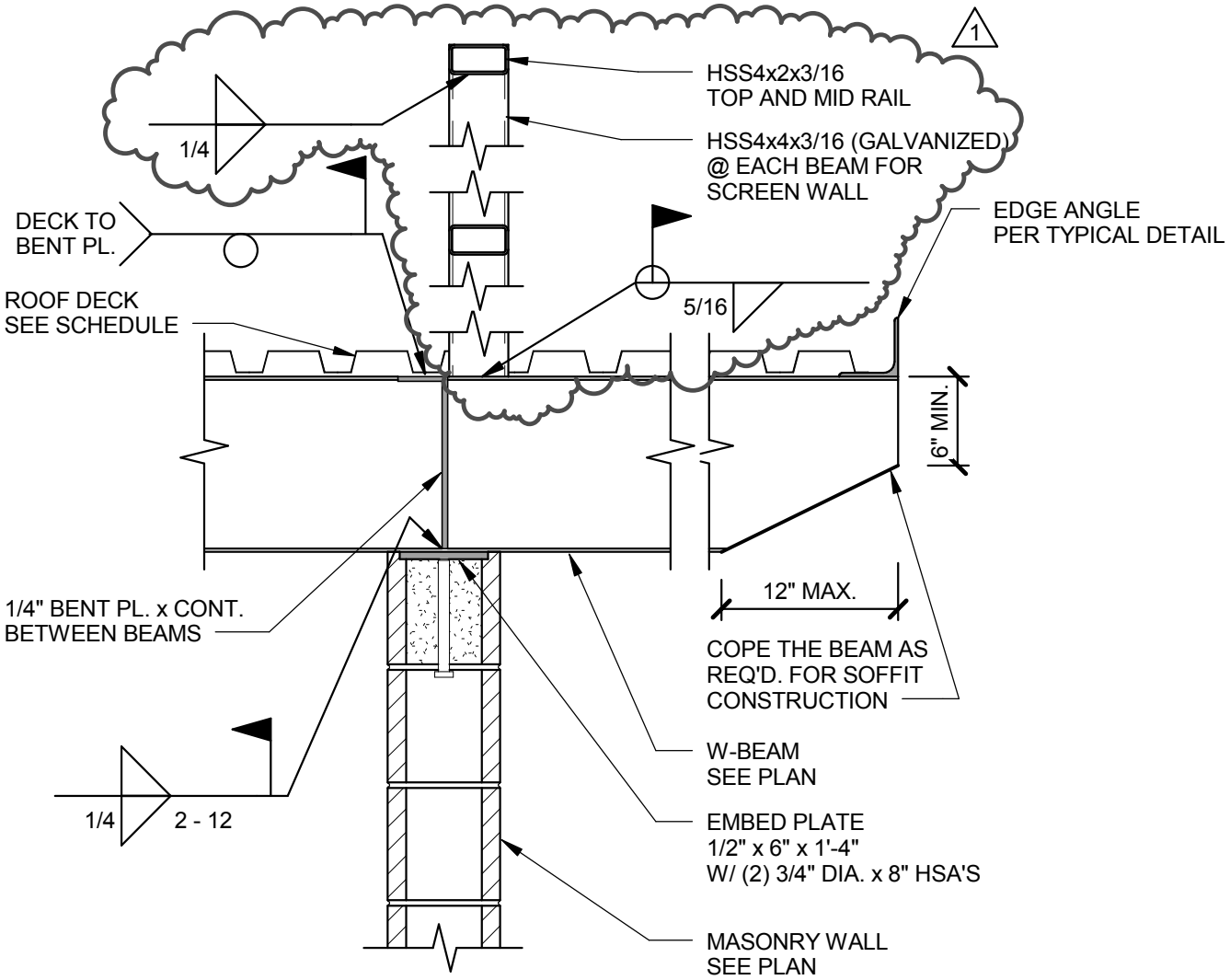

DETAIL

SCALE : NONE

A4
SF504

©2007 MHTN ARCHITECTS, INC.

Drawings, written material, and design concepts shall not be used or reproduced in whole or part in any form or format without prior written consent of MHTN Architects, Inc.

Do not scale drawings. Use given dimensions only. If not shown, verify correct dimensions with the Architect. Contractor shall check and verify all dimensions and conditions at job site.

MHTN Architects, Inc.
420 East South Temple
Suite 100
Salt Lake City, Utah 84111
TEL 801.595.6700
FAX 801.595.6717
www.mhtn.com

WEBER STATE UNIVERSITY
RESIDENTIAL LIFE PHASE II - BLDG 2

PROJECT NO. 2010543

DATE: 04/28/2011

SHEET NUMBER
AD04_S06

SHEET REFERENCE
SF504

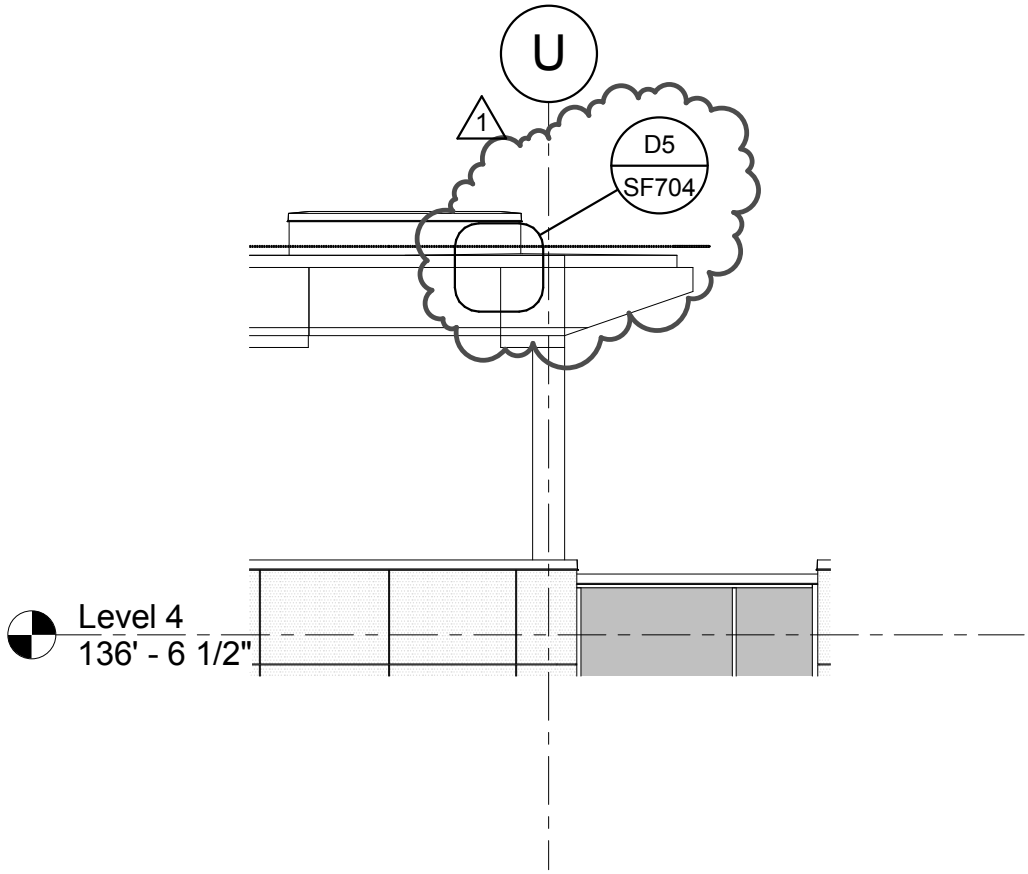

WEST ELEVATION - POD B

SCALE : NONE

B
SF701

©2007 MHTN ARCHITECTS, INC.

Drawings, written material, and design concepts shall not be used or reproduced in whole or part in any form or format without prior written consent of MHTN Architects, Inc.

Do not scale drawings. Use given dimensions only. If not shown, verify correct dimensions with the Architect. Contractor shall check and verify all dimensions and conditions at job site.

MHTN Architects, Inc.
420 East South Temple
Suite 100
Salt Lake City, Utah 84111
TEL 801.595.6700
FAX 801.595.6717
www.mhtn.com

WEBER STATE UNIVERSITY
RESIDENTIAL LIFE PHASE II - BLDG 2

PROJECT NO. 2010543

DATE: 04/28/2011

SHEET NUMBER
AD04_S07

SHEET REFERENCE
SF701

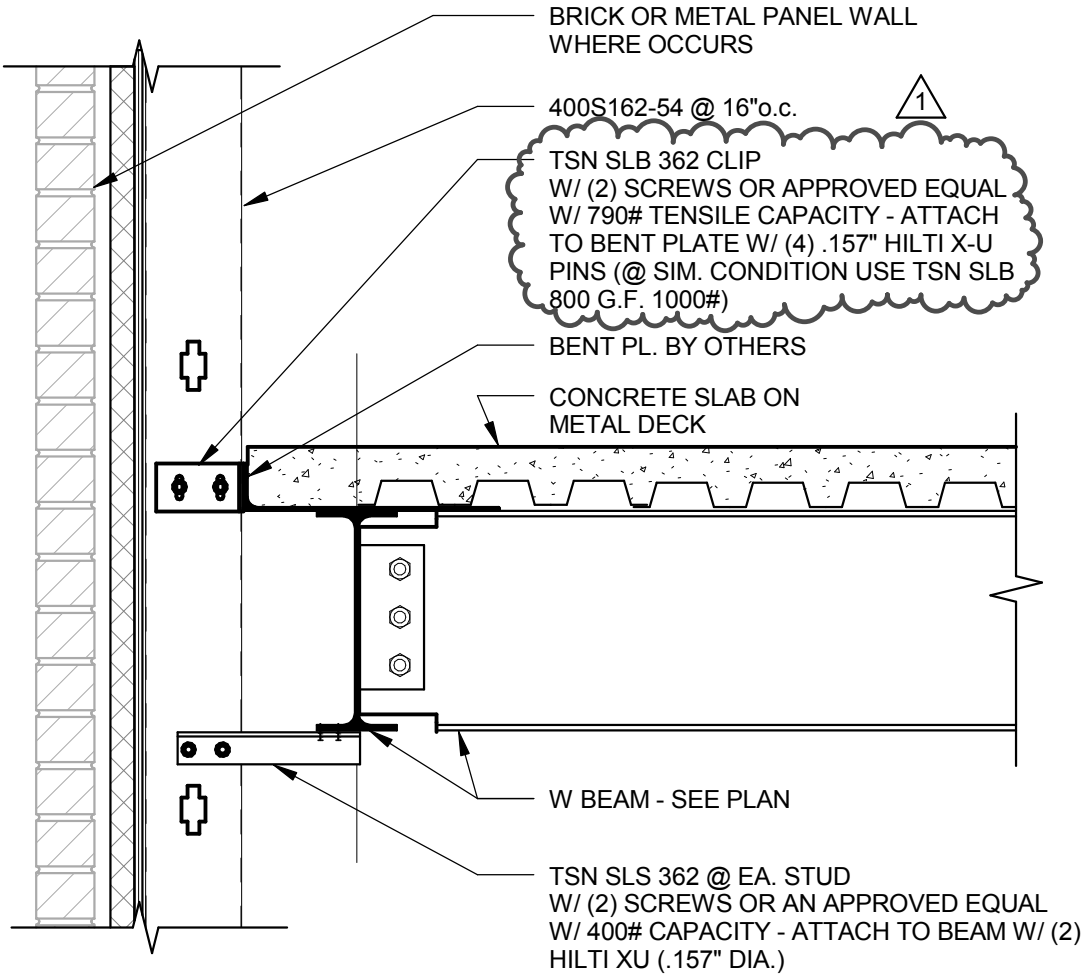

DETAIL

SCALE : NONE

C1
SF704

©2007 MHTN ARCHITECTS, INC.

Drawings, written material, and design concepts shall not be used or reproduced in whole or part in any form or format without prior written consent of MHTN Architects, Inc.

Do not scale drawings. Use given dimensions only. If not shown, verify correct dimensions with the Architect. Contractor shall check and verify all dimensions and conditions at job site.

MHTN Architects, Inc.
420 East South Temple
Suite 100
Salt Lake City, Utah 84111
TEL 801.595.6700
FAX 801.595.6717
www.mhtn.com

WEBER STATE UNIVERSITY
RESIDENTIAL LIFE PHASE II - BLDG 2

PROJECT NO. 2010543

DATE: 04/28/2011

SHEET NUMBER
AD04_S08

SHEET REFERENCE
SF704

SECOND FLOOR FRAMING PLAN - AREA B

SCALE : 1/8" = 1'-0"

SEE SHEET SF102A FOR FLOOR FRAMING NOTES

A
SF102B

NORTH

KEY PLAN

MHTN ARCHITECTS
MHTN Architects, Inc.
420 East South Temple
Suite 100
Salt Lake City, Utah 84111
Telephone (801) 595-6700
Telefax (801) 595-6717
www.mhtn.com

ARW ENGINEERS
structural consultants
1594 W. Park Gr. Ogden, Utah 84404
ph. 801.782.6008 fx. 801.782.4656

WEBER STATE UNIVERSITY
RESIDENTIAL LIFE PHASE II - BLDG 2

DFCM PROJECT NUMBER: 10176810

WEBER STATE UNIVERSITY
OGDEN, UTAH 84408

SEAL

MHTN PROJECT NO. 2010543

DRAWN BY: BLP CHECKED BY: JLA

ISSUED:

NO.	DATE	DESCRIPTION
01	04/14/2011	FOR CONSTRUCTION

CONTRACTOR TO VERIFY DRAWINGS IN FIELD USE REFLECT LAST REVISION DATE:

NO.	DATE	DESCRIPTION
1	04/28/2011	ADDENDUM NO. 4

SHEET NAME

SECOND FLOOR FRAMING PLAN

CONSTRUCTION DOCUMENTS
14 APRIL 2011

SHEET NUMBER

SF102B

X:\DRAWINGS 2010\10813 - WSU Housing Bldg 2\S - 10813 - WSU Res Life Bldg II (2011)_benjaminlp.rvt
4/28/2011 9:34:06 AM

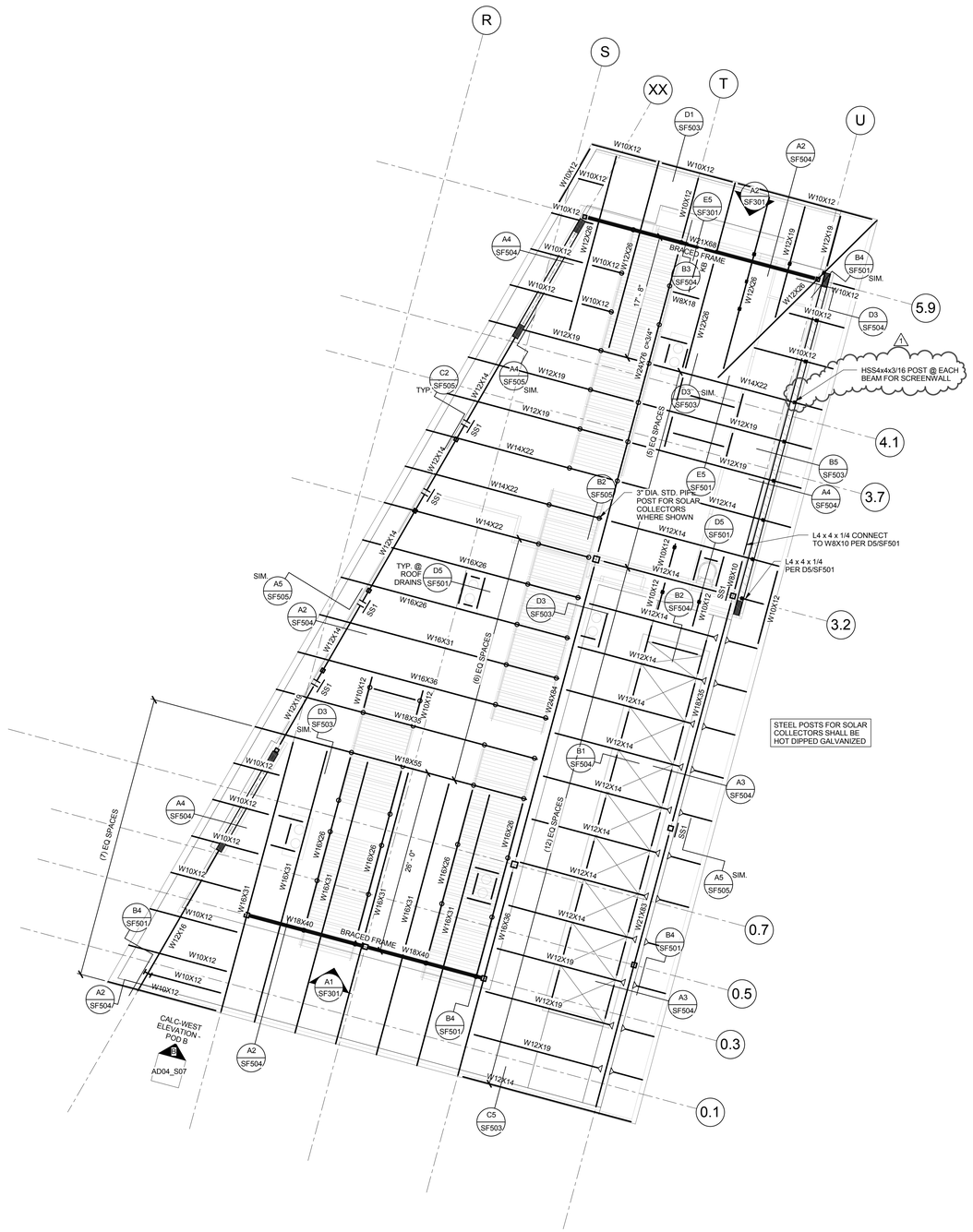

HIGH ROOF

SCALE : 1/8" = 1'-0"

1 SF105

NORTH

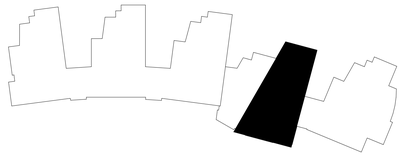

KEY PLAN

MHTN ARCHITECTS

MHTN Architects, Inc.
420 East South Temple
Suite 100
Salt Lake City, Utah 84111
Telephone (801) 595-6700
Telefax (801) 595-6717
www.mhtn.com

ARW ENGINEERS
structural consultants
1594 W. Park Gr. Ogden, Utah 84404
ph. 801.782.6008 fx. 801.782.4656

WEBER STATE UNIVERSITY
RESIDENTIAL LIFE PHASE II - BLDG 2

DFCM PROJECT NUMBER: 10176810

WEBER STATE UNIVERSITY
OGDEN, UTAH 84408

SEAL

MHTN PROJECT NO. 2010543

DRAWN BY: Author CHECKED BY: Checker

ISSUED:

NO.	DATE	DESCRIPTION
01	04/14/2011	FOR CONSTRUCTION

CONTRACTOR TO VERIFY DRAWINGS IN FIELD USE REFLECT LAST REVISION DATE.

NO.	DATE	DESCRIPTION
1	04/28/2011	ADDENDUM NO. 4

SHEET NAME

HIGH ROOF PLAN

CONSTRUCTION DOCUMENTS
14 APRIL 2011

SHEET NUMBER

SF105

X:\DRAWINGS 2010\10813 - WSU Housing Bldg 2S - 10813 - WSU Res Life Bldg II (2011)_benjamnp.rvt
4/28/2011 9:34:08 AM

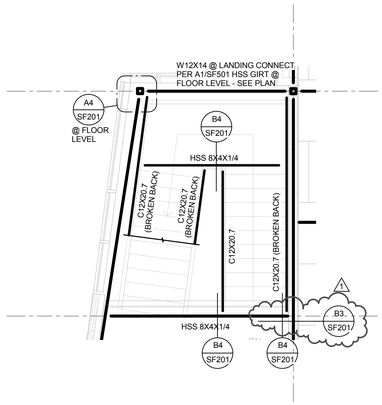

3RD FLOOR STAIR FRAMING PLAN — A / SF201

SCALE : NONE

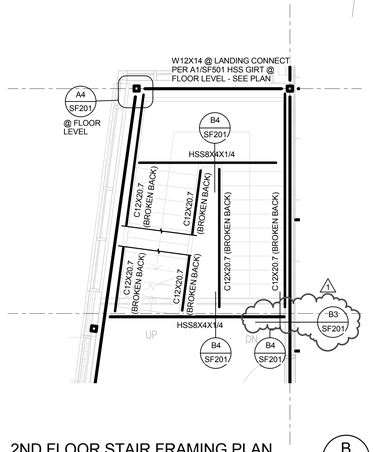

2ND FLOOR STAIR FRAMING PLAN — B / SF201

SCALE : NONE

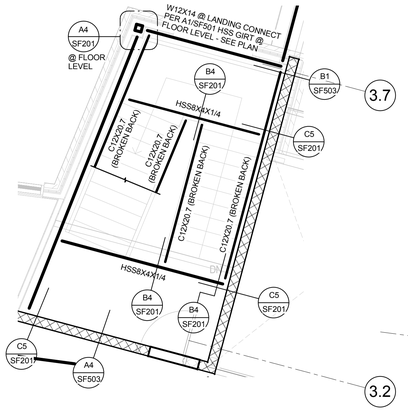

3RD FLOOR STAIR FRAMING PLAN — C / SF201

SCALE : NONE

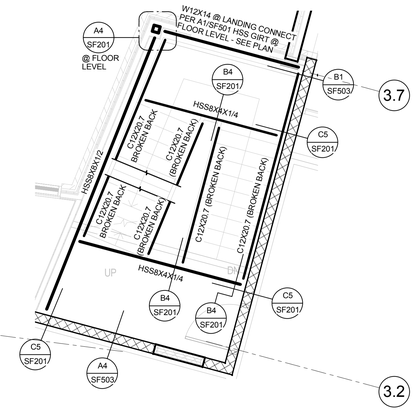

2ND FLOOR STAIR FRAMING PLAN — D / SF201

SCALE : NONE

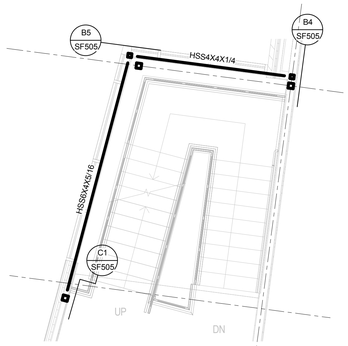

LEVEL 1 WALL GIRTS @ STAIRS 199B, C, D, & E — F / SF201

SCALE : NONE

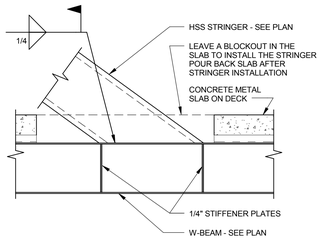

DETAIL — C1 / SF201

SCALE : NONE

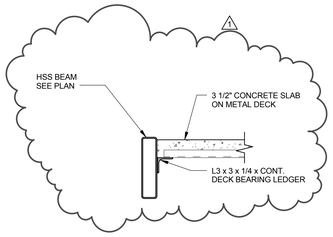

DETAIL — C2 / SF201

SCALE : NONE

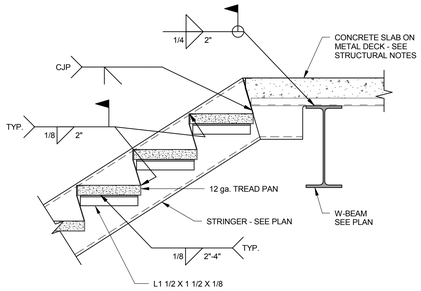

DETAIL — C3 / SF201

SCALE : NONE

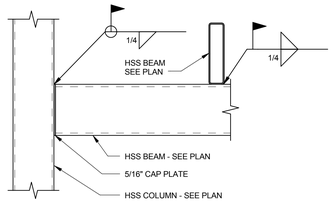

DETAIL — C4 / SF201

SCALE : NONE

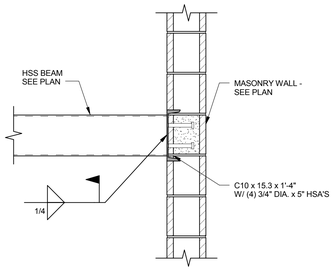

DETAIL — C5 / SF201

SCALE : NONE

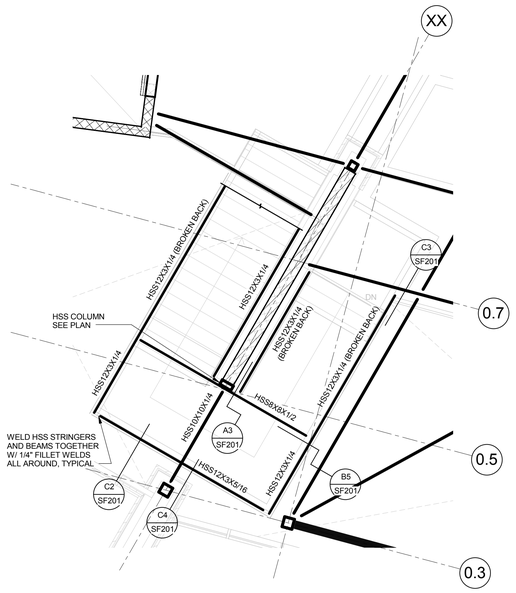

3RD FLOOR STAIR FRAMING PLAN — E / SF201

SCALE : NONE

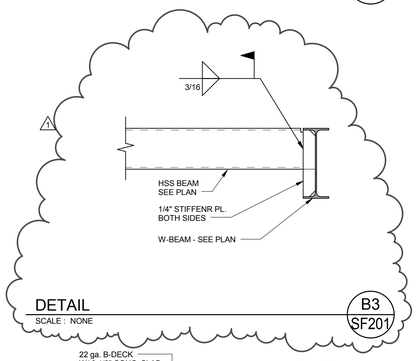

DETAIL — B3 / SF201

SCALE : NONE

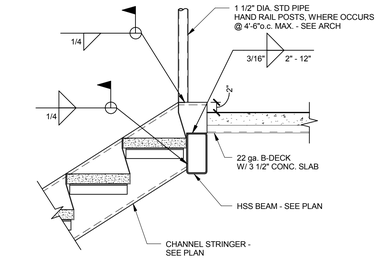

DETAIL — B4 / SF201

SCALE : NONE

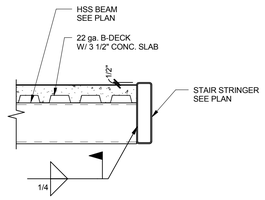

DETAIL — B5 / SF201

SCALE : NONE

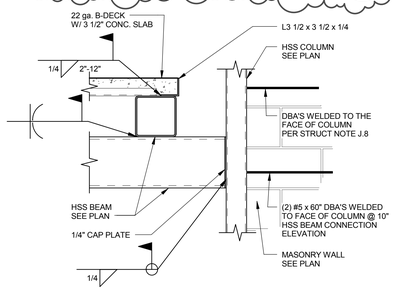

DETAIL — A3 / SF201

SCALE : NONE

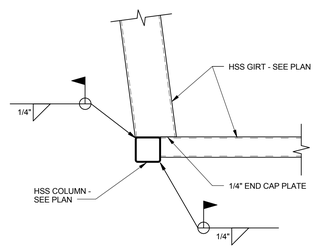

DETAIL — A4 / SF201

SCALE : NONE

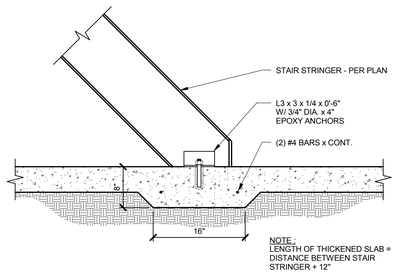

DETAIL — A5 / SF201

SCALE : NONE

MHTN ARCHITECTS
MHTN Architects, Inc.
420 East South Temple
Suite 100
Salt Lake City, Utah 84111
Telephone (801) 595-6700
Telefax (801) 595-6717
www.mhtn.com

ARW ENGINEERS
structural consultants
1594 W. Park Cir. Ogden, Utah 84404
ph. 801.782.6008 fx. 801.782.4656

WEBER STATE UNIVERSITY
RESIDENTIAL LIFE PHASE II - BLDG 2

DFCM PROJECT NUMBER: 10176810

WEBER STATE UNIVERSITY
OGDEN, UTAH 84408

SEAL

MHTN PROJECT NO. 2010543

DRAWN BY: Author CHECKED BY: Checker

ISSUED:

NO.	DATE	DESCRIPTION
01	04/14/2011	FOR CONSTRUCTION

CONTRACTOR TO VERIFY DRAWINGS IN FIELD USE REFLECT LAST REVISION DATE:

NO.	DATE	DESCRIPTION
1	04/28/2011	ADDENDUM NO. 4

SHEET NAME

STAIR FRAMING

CONSTRUCTION DOCUMENTS
14 APRIL 2011

SHEET NUMBER

SF201

X:\DRAWINGS 2010\10613 - WSU Housing Bldg 2\S - 10613 - WSU Res Life Bldg II (2011)_benjaminp.rvt
4/28/2011 9:34:11 AM

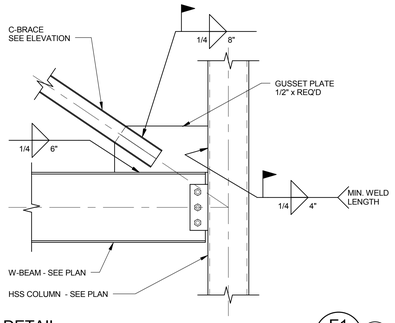

DETAIL
SCALE : NONE
E1 SF302 L

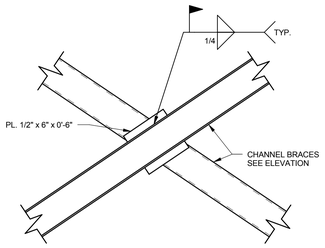

DETAIL
SCALE : NONE
E2 SF302 L

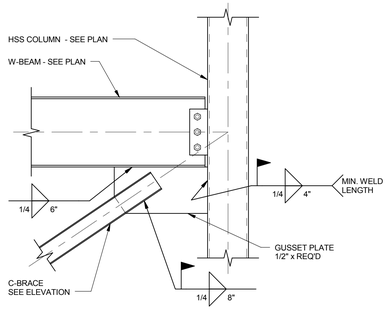

DETAIL
SCALE : NONE
E3 SF302 L

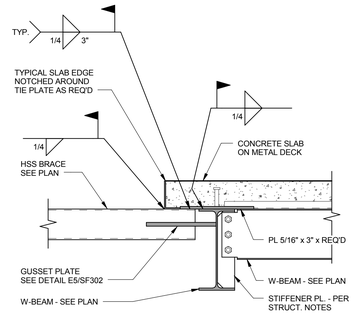

DETAIL
SCALE : NONE
E4 SF302 L

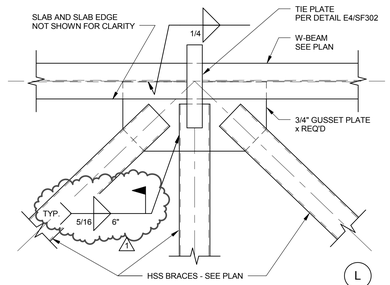

DETAIL
SCALE : NONE
E5 SF302 L

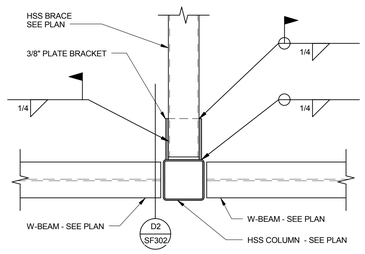

DETAIL
SCALE : NONE
D1 SF302 L

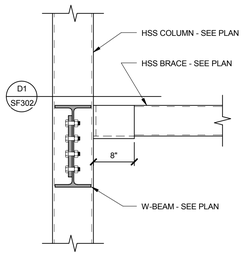

DETAIL
SCALE : NONE
D2 SF302 L

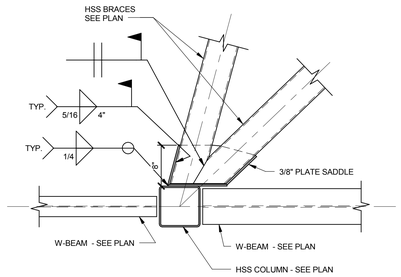

DETAIL
SCALE : NONE
D3 SF302 L

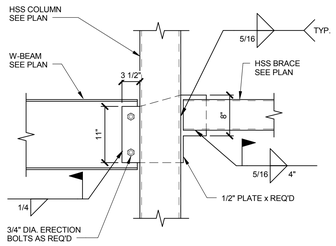

DETAIL
SCALE : NONE
D4 SF302 L

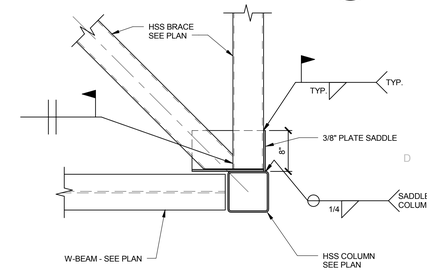

DETAIL
SCALE : NONE
D5 SF302 L

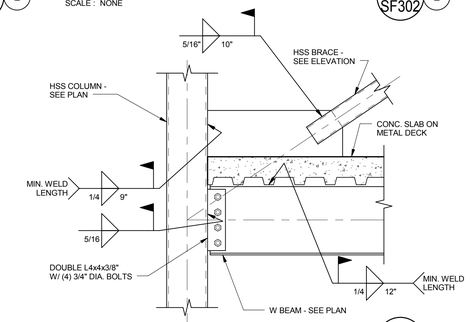

DETAIL
SCALE : NONE
C4 SF302 L

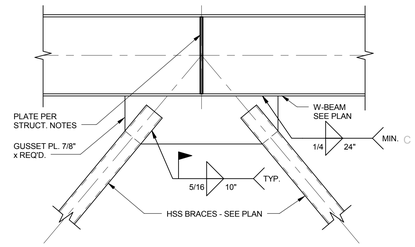

DETAIL
SCALE : NONE
C5 SF302 L

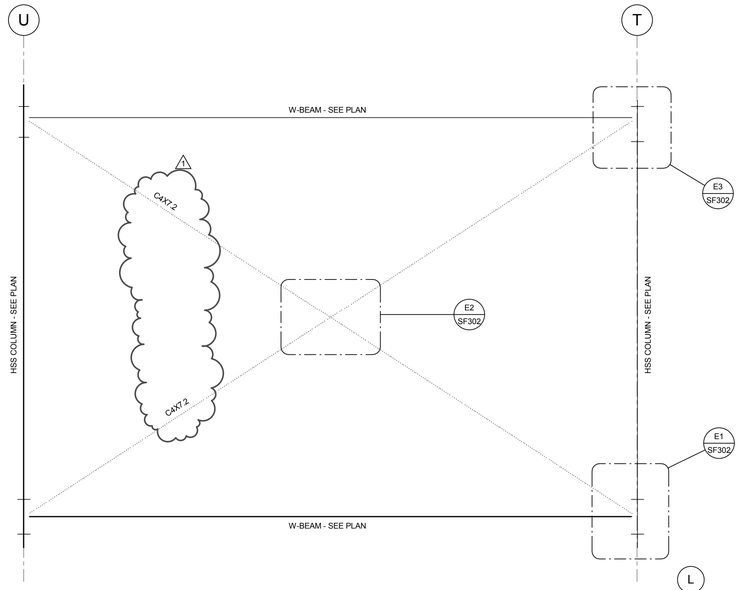

ELEVATION
SCALE : 1/2" = 1'-0"
A1 SF302 L

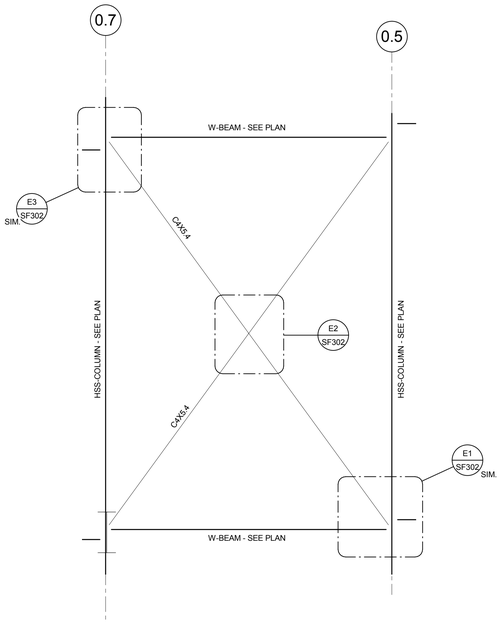

ELEVATION
SCALE : 1/2" = 1'-0"
A2 SF302 L

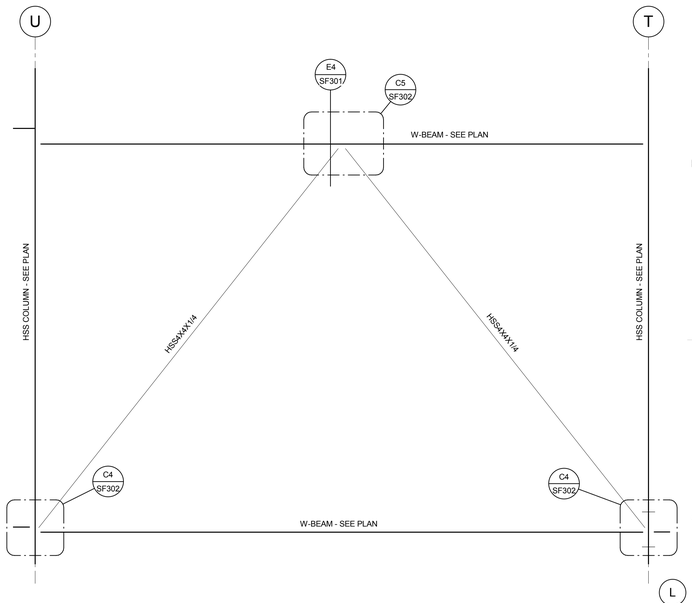

ELEVATION
SCALE : 1/2" = 1'-0"
A3 SF302 L

MHTN
ARCHITECTS
MHTN Architects, Inc.
420 East South Temple
Suite 100
Salt Lake City, Utah 84111
Telephone (801) 595-6700
Telefax (801) 595-6717
www.mhtn.com

ARW
ENGINEERS
structural consultants
1094 W. Park Gr. Ogden, Utah 84404
ph. 801.782.8098 fx. 801.782.4656

WEBER STATE UNIVERSITY
RESIDENTIAL LIFE PHASE II - BLDG 2
DFCM PROJECT NUMBER: 10176810

WEBER STATE UNIVERSITY
OGDEN, UTAH 84408

SEAL

MHTN PROJECT NO. 2010543

DRAWN BY: Author CHECKED BY: Checker

ISSUED:

NO.	DATE	DESCRIPTION
01	04/14/2011	FOR CONSTRUCTION

CONTRACTOR TO VERIFY DRAWINGS IN FIELD USE REFLECT LAST REVISION DATE:

NO.	DATE	DESCRIPTION
1	04/28/2011	ADDENDUM NO. 4

SHEET NAME
BRACED FRAME ELEVATIONS

CONSTRUCTION DOCUMENTS
14 APRIL 2011

SHEET NUMBER
SF302

X:\DRAWINGS 2010\10813 - WSU Housing Bldg 2S - 10813 - WSU Res Life Bldg II (2011)_benjamirnp.rvt
4/28/2011 9:34:15 AM

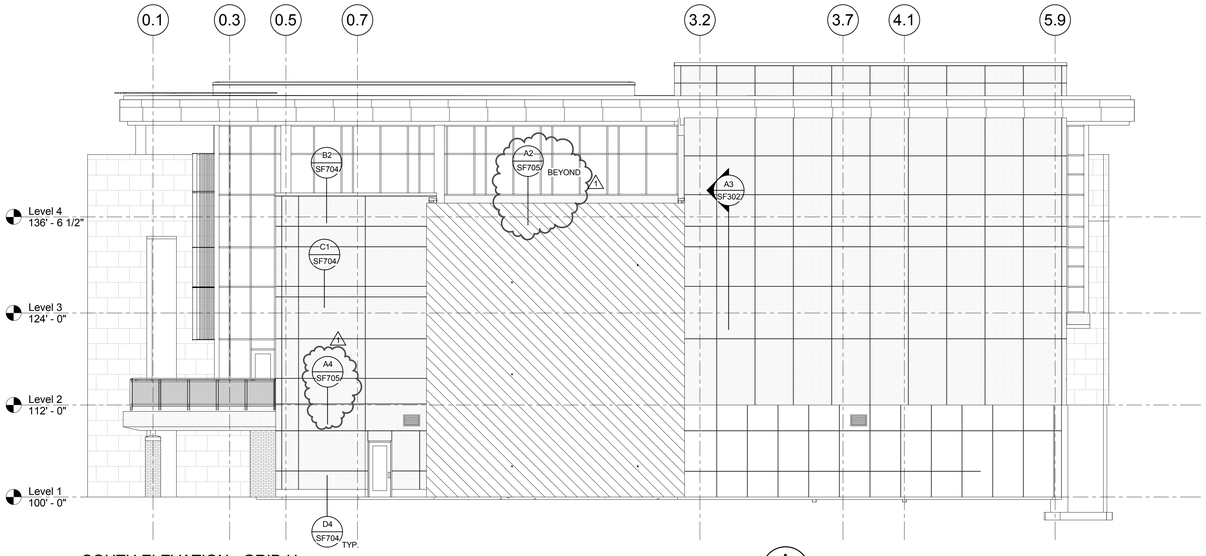

SOUTH ELEVATION - GRID U

SCALE : 1/8" = 1'-0"

A SF702

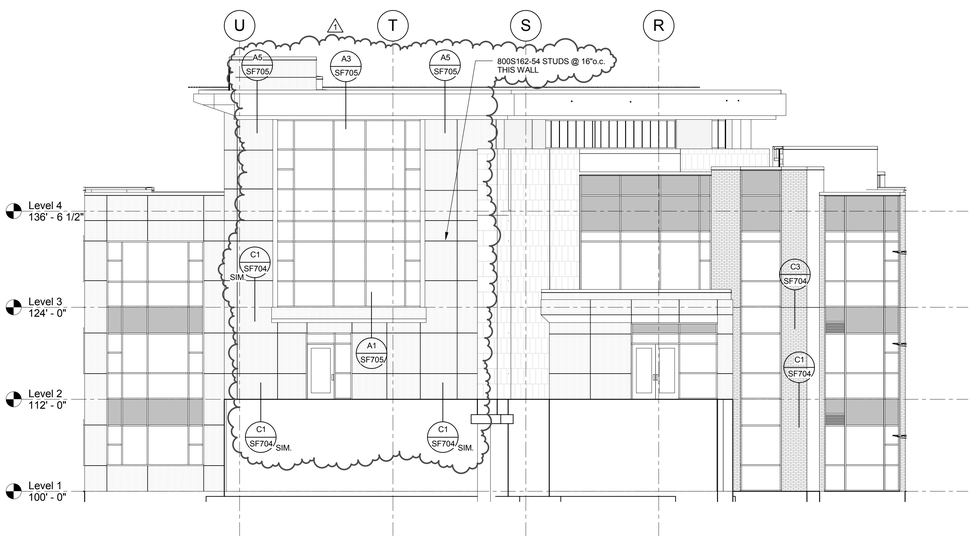

EAST ELEVATION - GRID 6

SCALE : 1/8" = 1'-0"

B SF702

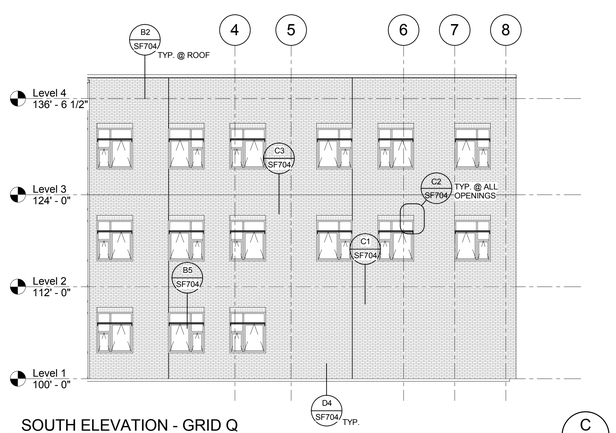

SOUTH ELEVATION - GRID Q

SCALE : NONE

C SF702

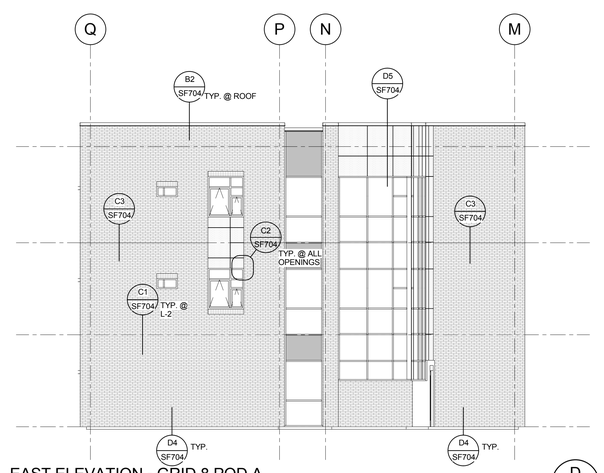

EAST ELEVATION - GRID 8 POD A

SCALE : 1/8" = 1'-0"

D SF702

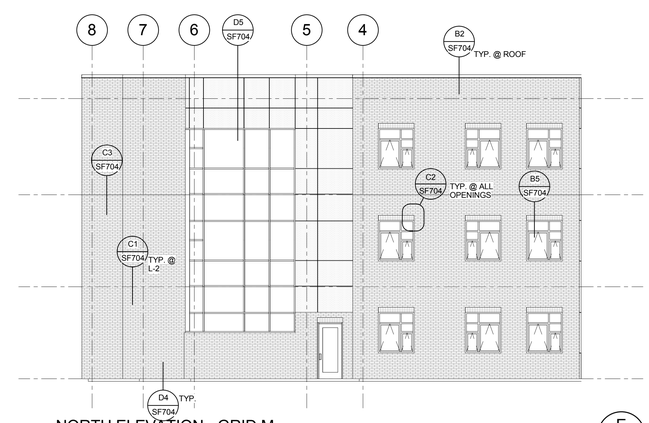

NORTH ELEVATION - GRID M

SCALE : 1/8" = 1'-0"

E SF702

X:\DRAWINGS 2010\10613 - WSU Housing Bldg 2\S - 10613 - WSU Res Life Bldg II (2011)_benjaminp.rvt
4/28/2011 9:34:28 AM

MHTN
ARCHITECTS
MHTN Architects, Inc.
420 East South Temple
Suite 100
Salt Lake City, Utah 84111
Telephone (801) 595-6700
Telefax (801) 595-6717
www.mhtn.com

ARW
ENGINEERS
structural consultants
1934 W. Park Cir. Ogden, Utah 84404
ph. 801.782.6098 fx. 801.782.4656

WEBER STATE UNIVERSITY
RESIDENTIAL LIFE PHASE II - BLDG 2

DFCM PROJECT NUMBER: 10176810

WEBER STATE UNIVERSITY
OGDEN, UTAH 84408

SEAL

MHTN PROJECT NO: 2010543

DRAWN BY: Author CHECKED BY: Checker

ISSUED:

NO.	DATE	DESCRIPTION
01	04/14/2011	FOR CONSTRUCTION

CONTRACTOR TO VERIFY DRAWINGS IN FIELD USE REFLECT LAST REVISION DATE.

NO.	DATE	DESCRIPTION
1	04/28/2011	ADDENDUM NO. 4

SHEET NAME

ELEVATIONS

CONSTRUCTION DOCUMENTS
14 APRIL 2011

SHEET NUMBER

SF702

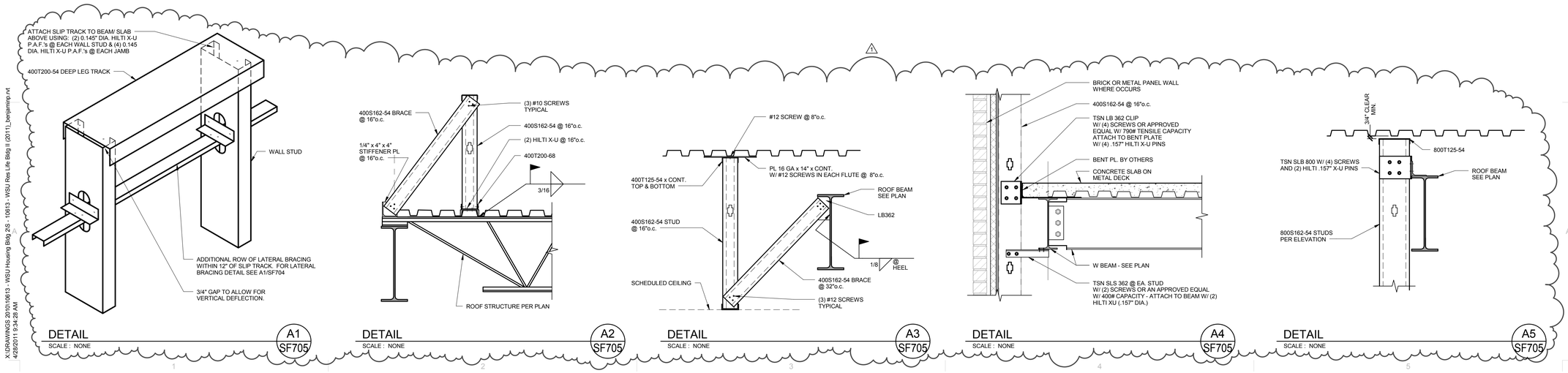

DETAIL A1 SF705
SCALE : NONE

DETAIL A2 SF705
SCALE : NONE

DETAIL A3 SF705
SCALE : NONE

DETAIL A4 SF705
SCALE : NONE

DETAIL A5 SF705
SCALE : NONE

X:\DRAWINGS 2010\10613 - WSU Housing Bldg 2\S - 10613 - WSU Res Life Bldg II (2011)_benjamnp.rvt
4/28/2011 9:34:28 AM

MHTN
ARCHITECTS
MHTN Architects, Inc.
420 East South Temple
Suite 100
Salt Lake City, Utah 84111
Telephone (801) 595-6700
Telefax (801) 595-6717
www.mhtn.com

ENGINEERS
structural consultants
1594 W. Park Cir. Ogden, Utah 84404
ph. 801.782.6008 fx. 801.782.4656

WEBER STATE UNIVERSITY
RESIDENTIAL LIFE PHASE II - BLDG 2
DFCM PROJECT NUMBER: 10176810

WEBER STATE UNIVERSITY
OGDEN, UTAH 84408

SEAL

MHTN PROJECT NO. 2010543

DRAWN BY: Author CHECKED BY: Checker

ISSUED:

NO.	DATE	DESCRIPTION
01	04/14/2011	FOR CONSTRUCTION

CONTRACTOR TO VERIFY DRAWINGS IN FIELD USE REFLECT LAST REVISION DATE:

NO.	DATE	DESCRIPTION
1	04/28/2011	ADDENDUM NO. 4

SHEET NAME
DETAILS

CONSTRUCTION DOCUMENTS
14 APRIL 2011

SHEET NUMBER
SF705

Colvin Engineering Associates, Inc.
HIGH PERFORMANCE DESIGN

MECHANICAL ADDENDUM NO. 4

WSU Residential Life Phase II Prg/Design Bldg. 2

CEA PROJECT NO. 2010-074.00

April 28, 2011

All contractors submitting proposals for this project shall be governed by the following addendum, changes, and explanations to the bidding documents. Bids shall be submitted in accordance with the following:

Item No.	Add, Delete or Clarify	Specification Section or Drawing No.	Reference / Description:
1	ADD	MH101	Thermostat & Co2 Sensor Detail 1
2	CLARIFY	MH101B	Clarify HP 29 to 30 & HP 3 to 23
3	CLARIFY	MH102B	Clarify Diffuser Callout
4	CLARIFY	MH103B	Clarifying callout HP 87 Diffuser Callout Room 33A Locate VFD 9, Show 8x8 EX air up to EF14
5	ADD	MH104B	Add FSD in duct
6	ADD	MHB302	Add main Mechanical Room
7	CLARIFY	MH401	Labeled HP 21 & 22
8	ADD	MH402	Add FSD & Motorized damper to MA Duct
9	CLARIFY	MH503	Detail 1 – Show Circuit balancing value & P/T plugs
10	CLARIFY	MH601	Clarified pump P8 & P9 Model # Clarified inner air temp. on mau
11	CLARIFY	MH602	Clarified EF-5 Voltage & Phase
12	ADD	MP401	Add isolation valves to hot water return
13	ADD	PL101B	Add connect water to refrig.
14	CLARIFY	PL301	Clarify Alt. #4
15	CLARIFY	PL402	Change Waste pipe from 3”x4” to match other sheets Add Garbage Disposal
16	CLARIFY	PL502	Detail #5 Clarify Alt #4
17	CLARIFY	238146	The selected General Contractor, will provide this form complete, to the owner with Sub-Contractors list and bid bonds.
18	CLARIFY	230900	The selected General Contractor, will provide this form complete, to the owner with Sub-Contractors list and bid bonds.
19	CLARIFY	PL601	Clarify Alt#3 to Alt #4

PRODUCT SUBSTITUTIONS / PRIOR APPROVALS

HVAC / Energy Efficient Solutions / CFD Modeling / Air Pollution Control
244 West 300 North, Suite 200 / Salt Lake City, Utah 84103-1147 / 801.322.2400 / FAX 801.322.2416

Product Type	Alternate Manufacturers
Expansion Tanks	Patterson Pump Company
Pump Suction Diffusers	Patterson Pump Company
Flexible Connectors	Patterson Pump Company
HVAC Pumps	Patterson Pump Company
Boilers	Fulton
Unit Heater	Sigma Corporation
Cabinet Unit Heater	Sigma Corporation
Variable Frequency Drives	Cerus Industries
Plate & Frame Heat Exchanger	APV
Flex Duct	Quietflex
Airflow Measuring Stations	Ebtron, Paragon Controls
Centrifugal Fans	Greenheck
AL29-4C Boiler Flues	Van Packer, ProTech Systems
Electric Radiant Ceiling Panels	Q-Mark
Ductless Split Systems	Daikin AC
Makeup Air Units	Greenheck
Heat Pumps	McQuay, Mammoth, Addison
Expansion Joints	Twin City Hose
Cassette Style Ductless Splits	Sanyo
Lined Prefabricated Chimney	Ampco
Heat pumps	Florida Heat Pumps

The above named alternate equipment manufacturers stand approved in name only. Approval here in no way relieves the supplier from complying with all other engineering, weight spatial, and quality requirements of equipment indicated in the contract documents. Contractors using products from the above named alternate manufacturers shall refer to Specification Section 15010 for detailed contractor responsibilities related to the use of alternate brands not used as the Basis of Design.

END OF ADDENDUM NO. 4

HVAC / Energy Efficient Solutions / CFD Modeling / Air Pollution Control
244 West 300 North, Suite 200 / Salt Lake City, Utah 84103-1147 / 801.322.2400 / FAX 801.322.2416

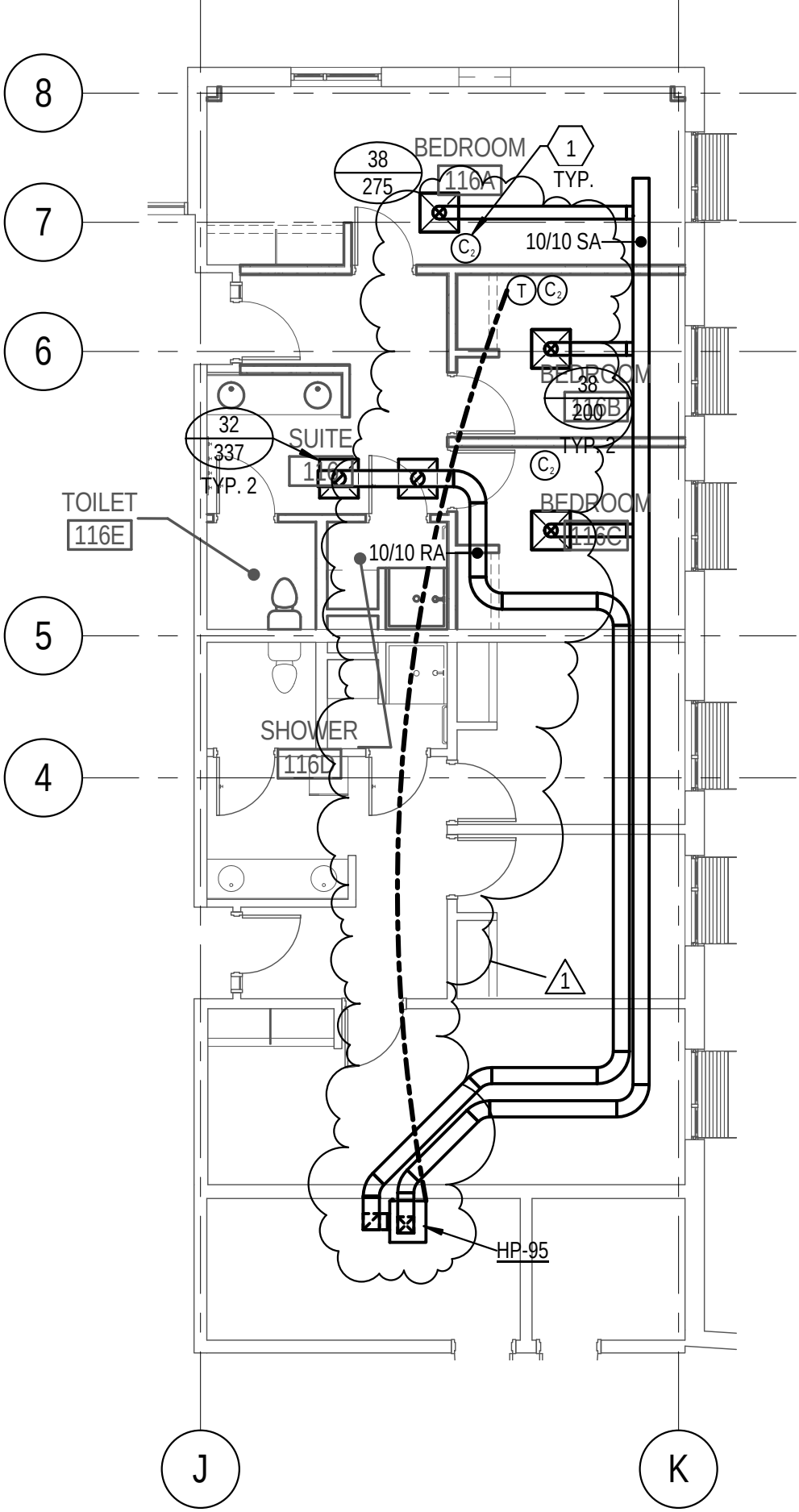

MHTN Architects, Inc.
420 East South Temple
Suite 100
Salt Lake City, Utah 84111
TEL 801.595.6700
FAX 801.595.6717
www.mhtn.com

WEBER STATE UNIVERSITY
RESIDENTIAL LIFE PHASE II - BLDG 2

PROJECT NO. 10176810

DATE: 04/28/11

SHEET NUMBER
ADD 4.0

SHEET REFERENCE
MH101

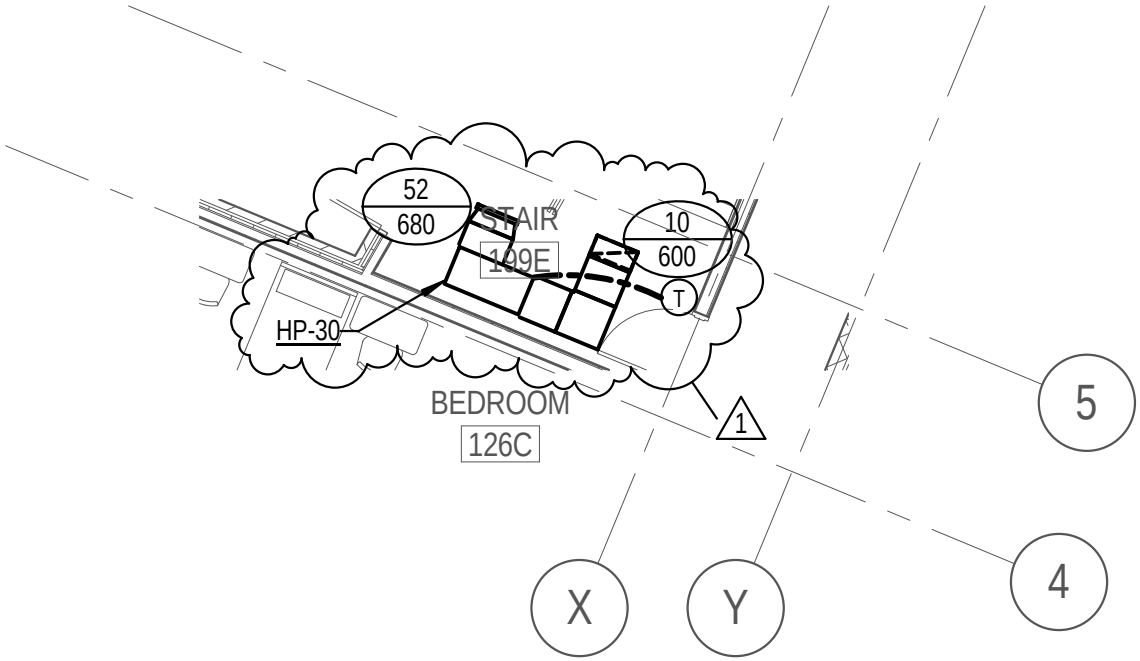

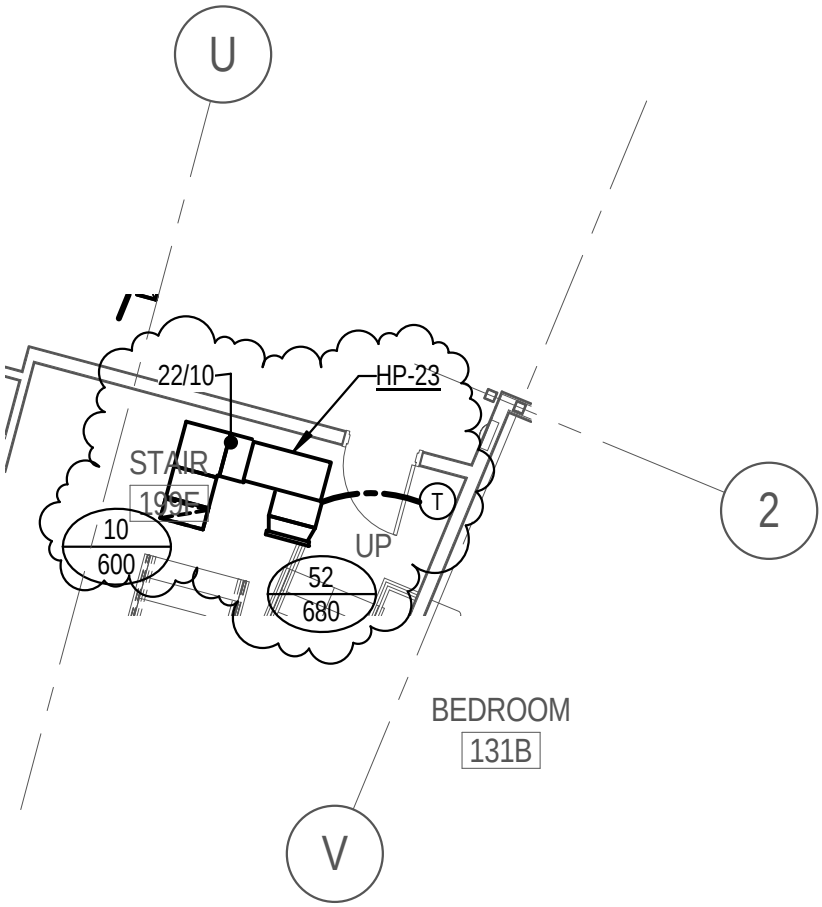

MHTN Architects, Inc.
420 East South Temple
Suite 100
Salt Lake City, Utah 84111
TEL 801.595.6700
FAX 801.595.6717
www.mhtn.com

WEBER STATE UNIVERSITY
RESIDENTIAL LIFE PHASE II - BLDG 2

PROJECT NO. 10176810

DATE: 04/28/11

SHEET NUMBER
ADD 4.1

SHEET REFERENCE
MH101 B

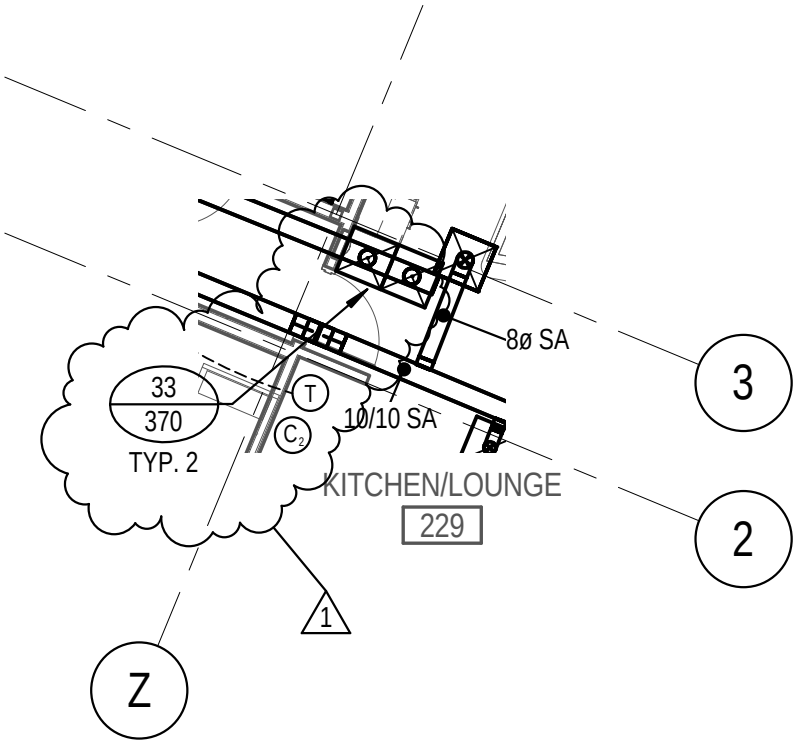

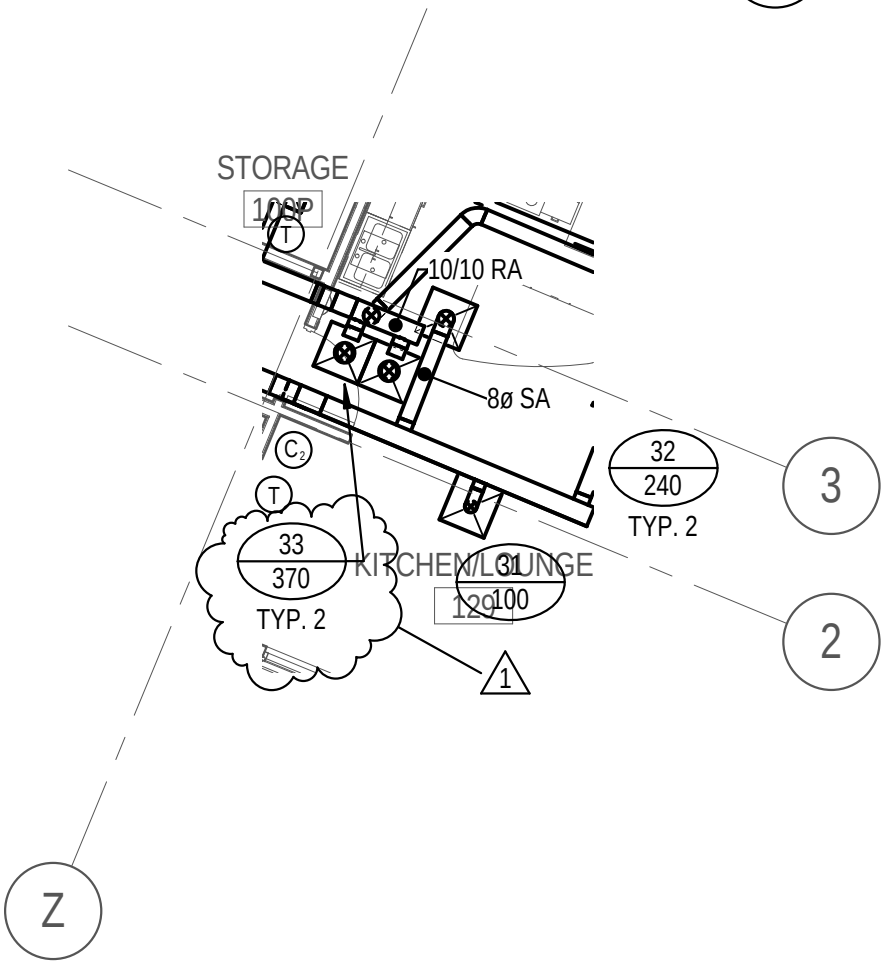

MHTN Architects, Inc.
420 East South Temple
Suite 100
Salt Lake City, Utah 84111
TEL 801.595.6700
FAX 801.595.6717
www.mhtn.com

WEBER STATE UNIVERSITY
RESIDENTIAL LIFE PHASE II - BLDG 2

PROJECT NO. 10176810

DATE: 04/28/11

SHEET NUMBER
ADD 4.2

SHEET REFERENCE
MH102 B

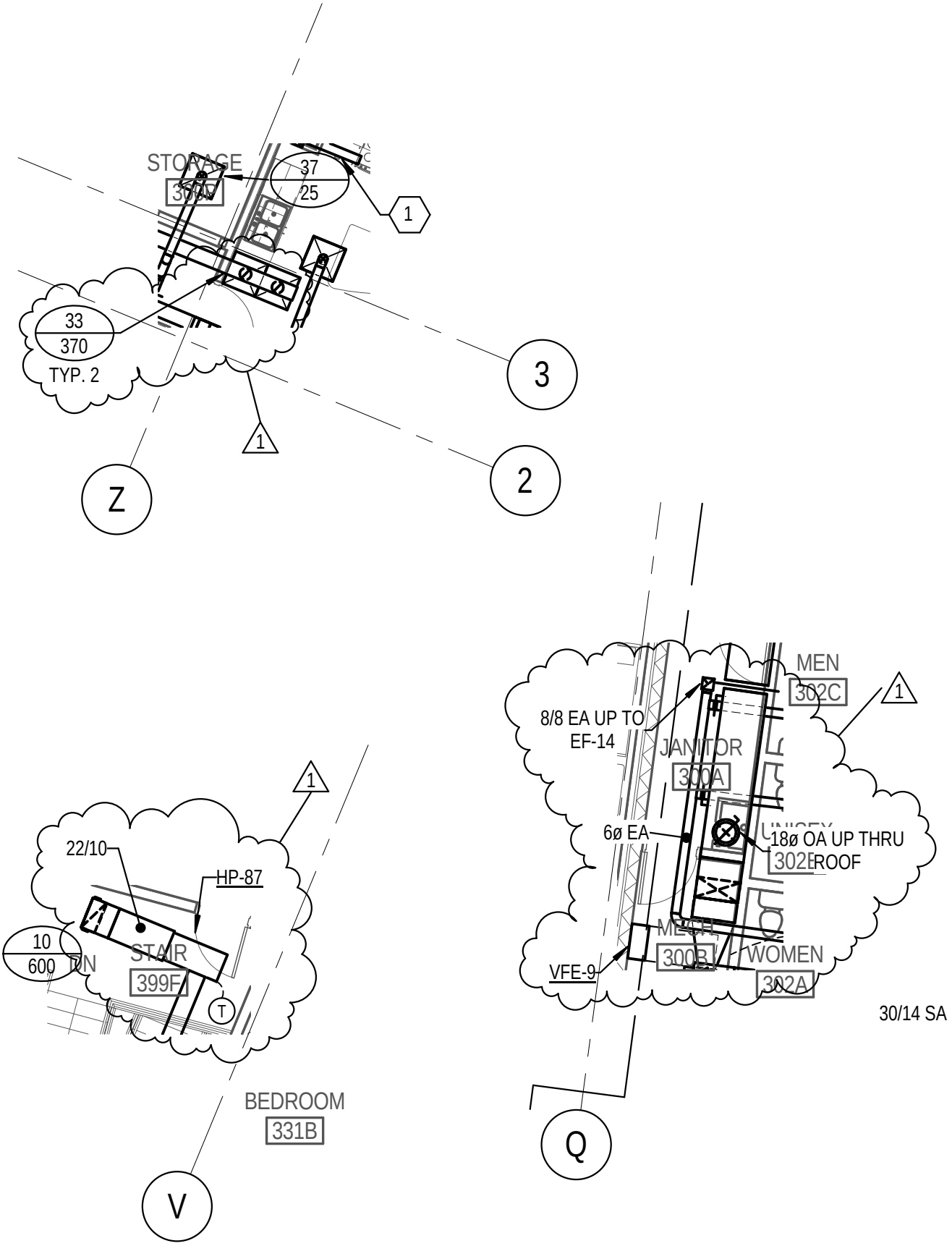

MHTN Architects, Inc.
420 East South Temple
Suite 100
Salt Lake City, Utah 84111
TEL 801.595.6700
FAX 801.595.6717
www.mhtn.com

WEBER STATE UNIVERSITY
RESIDENTIAL LIFE PHASE II - BLDG 2

PROJECT NO. 10176810

DATE: 04/28/11

SHEET NUMBER
ADD 4.3

SHEET REFERENCE
MH103 B

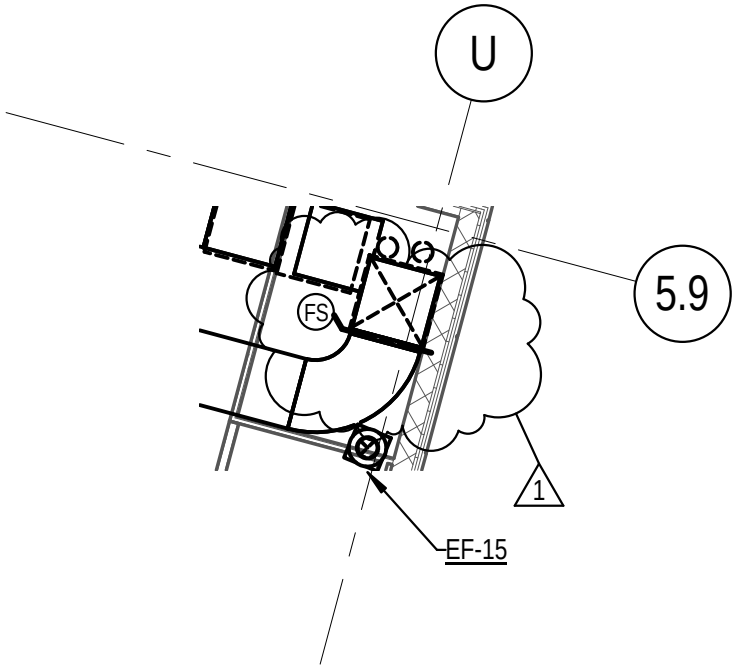

MHTN Architects, Inc.
420 East South Temple
Suite 100
Salt Lake City, Utah 84111
TEL 801.595.6700
FAX 801.595.6717
www.mhtn.com

WEBER STATE UNIVERSITY
RESIDENTIAL LIFE PHASE II - BLDG 2

PROJECT NO. 10176810

DATE: 04/28/11

SHEET NUMBER
ADD 4.4

SHEET REFERENCE
MH104 B

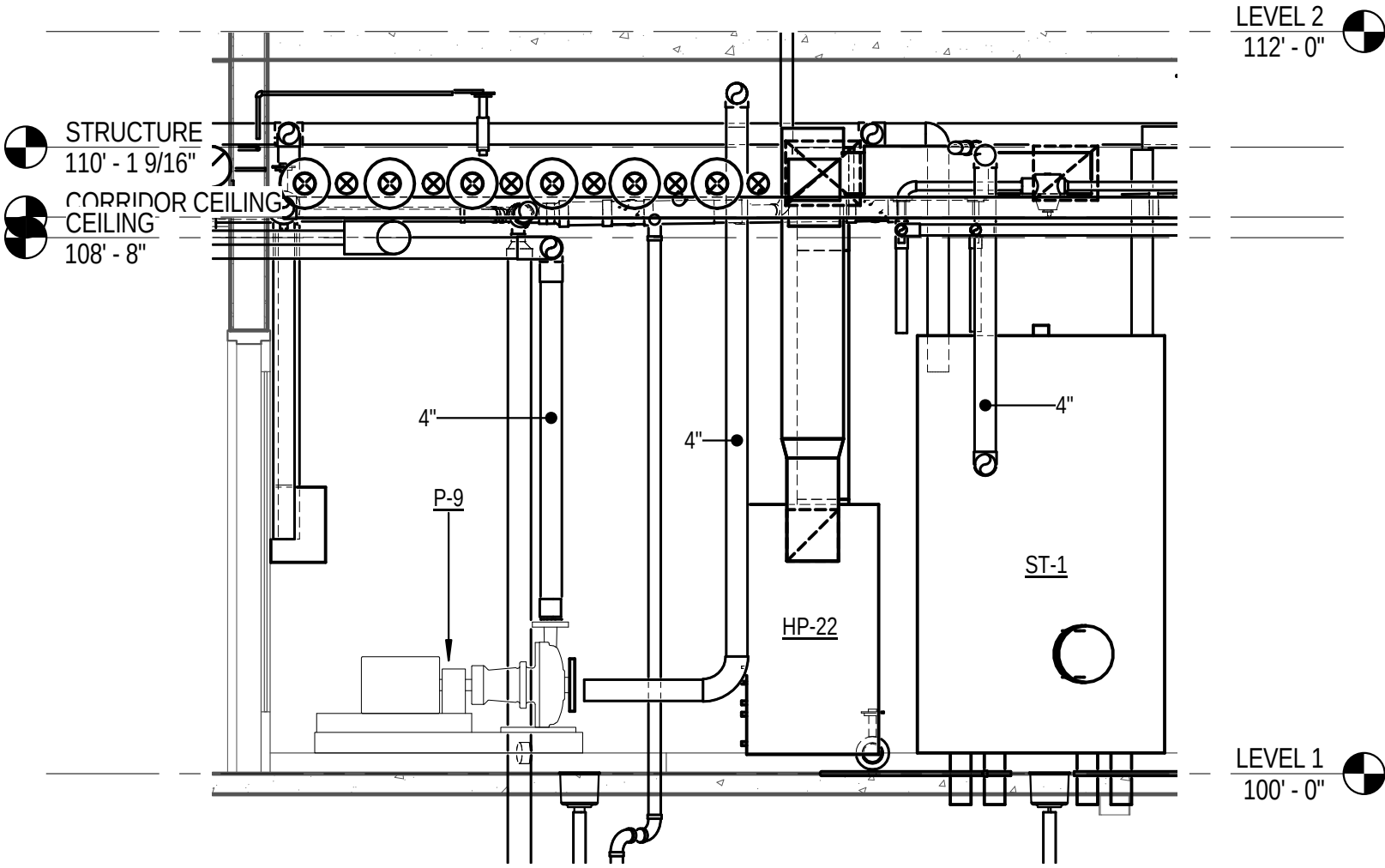

MHTN Architects, Inc.
420 East South Temple
Suite 100
Salt Lake City, Utah 84111
TEL 801.595.6700
FAX 801.595.6717
www.mhtn.com

WEBER STATE UNIVERSITY
RESIDENTIAL LIFE PHASE II - BLDG 2

PROJECT NO. 10176810

DATE: 04/28/11

SHEET NUMBER
ADD 4.5

SHEET REFERENCE
MH302

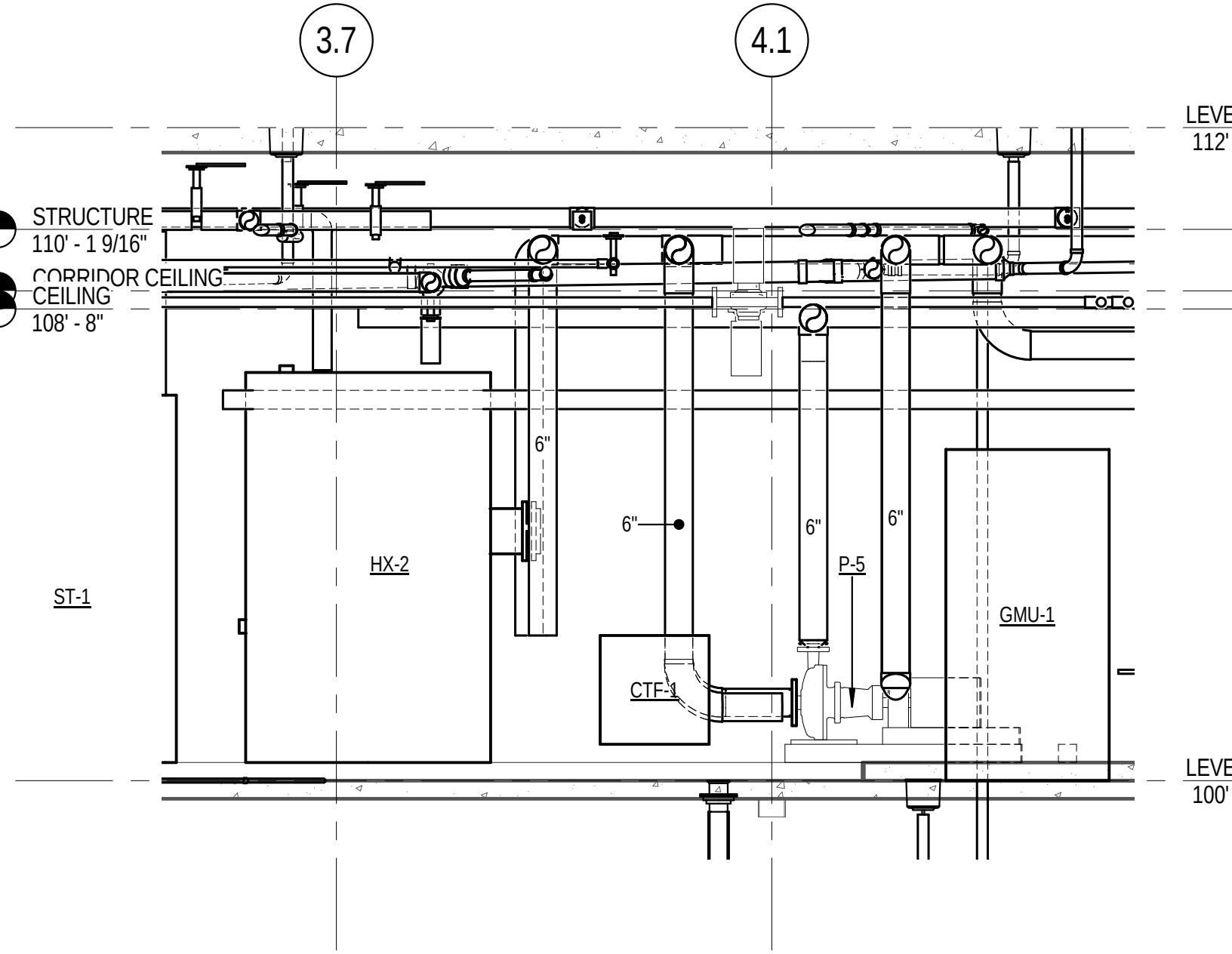

MHTN Architects, Inc.
420 East South Temple
Suite 100
Salt Lake City, Utah 84111
TEL 801.595.6700
FAX 801.595.6717
www.mhtn.com

WEBER STATE UNIVERSITY
RESIDENTIAL LIFE PHASE II - BLDG 2

PROJECT NO. 10176810

DATE: 04/28/11

SHEET NUMBER
ADD 4.6

SHEET REFERENCE
MH302

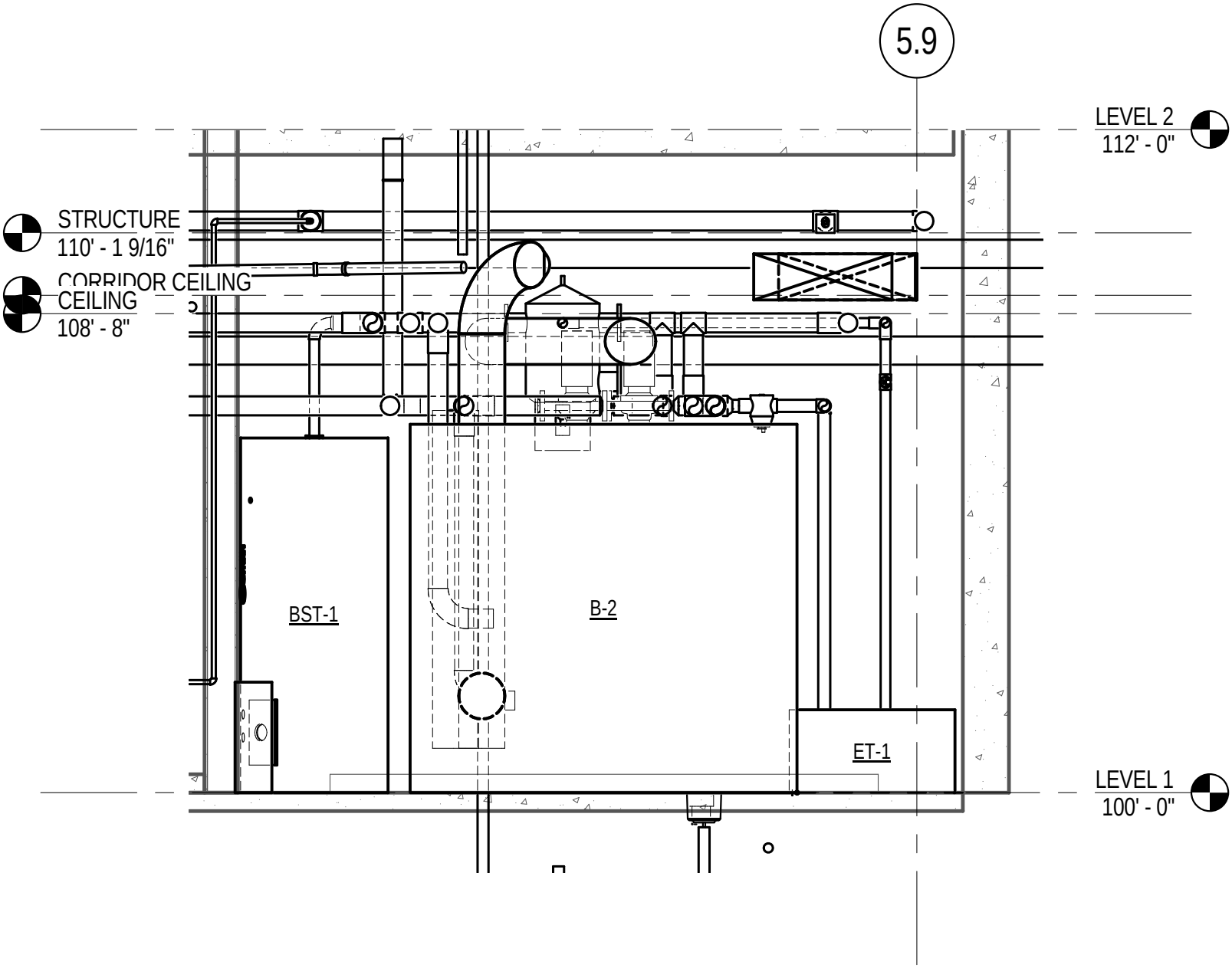

MHTN Architects, Inc.
420 East South Temple
Suite 100
Salt Lake City, Utah 84111
TEL 801.595.6700
FAX 801.595.6717
www.mhtn.com

WEBER STATE UNIVERSITY
RESIDENTIAL LIFE PHASE II - BLDG 2

PROJECT NO. 10176810

DATE: 04/28/11

SHEET NUMBER
ADD 4.7

SHEET REFERENCE
MH302

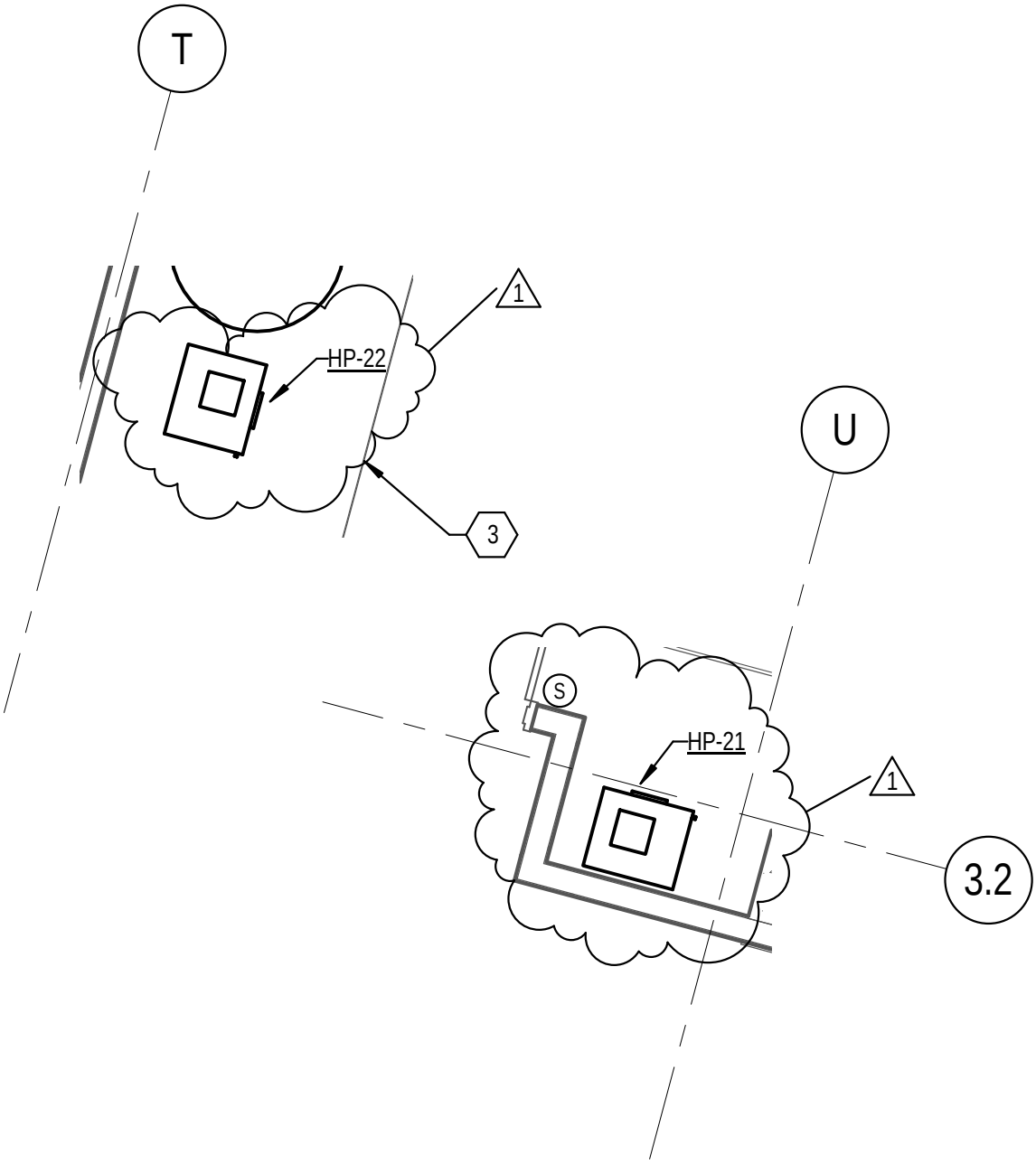

MHTN Architects, Inc.
420 East South Temple
Suite 100
Salt Lake City, Utah 84111
TEL 801.595.6700
FAX 801.595.6717
www.mhtn.com

WEBER STATE UNIVERSITY
RESIDENTIAL LIFE PHASE II - BLDG 2

PROJECT NO. 10176810

DATE: 04/28/11

SHEET NUMBER
ADD 4.8

SHEET REFERENCE
MH401

KEYED NOTES

5. GREESE DUCT ACCESS DOOR.
6. PROVIDE DUCT ACCESS DOOR FOR FIRE/SMOKE DAMPER.

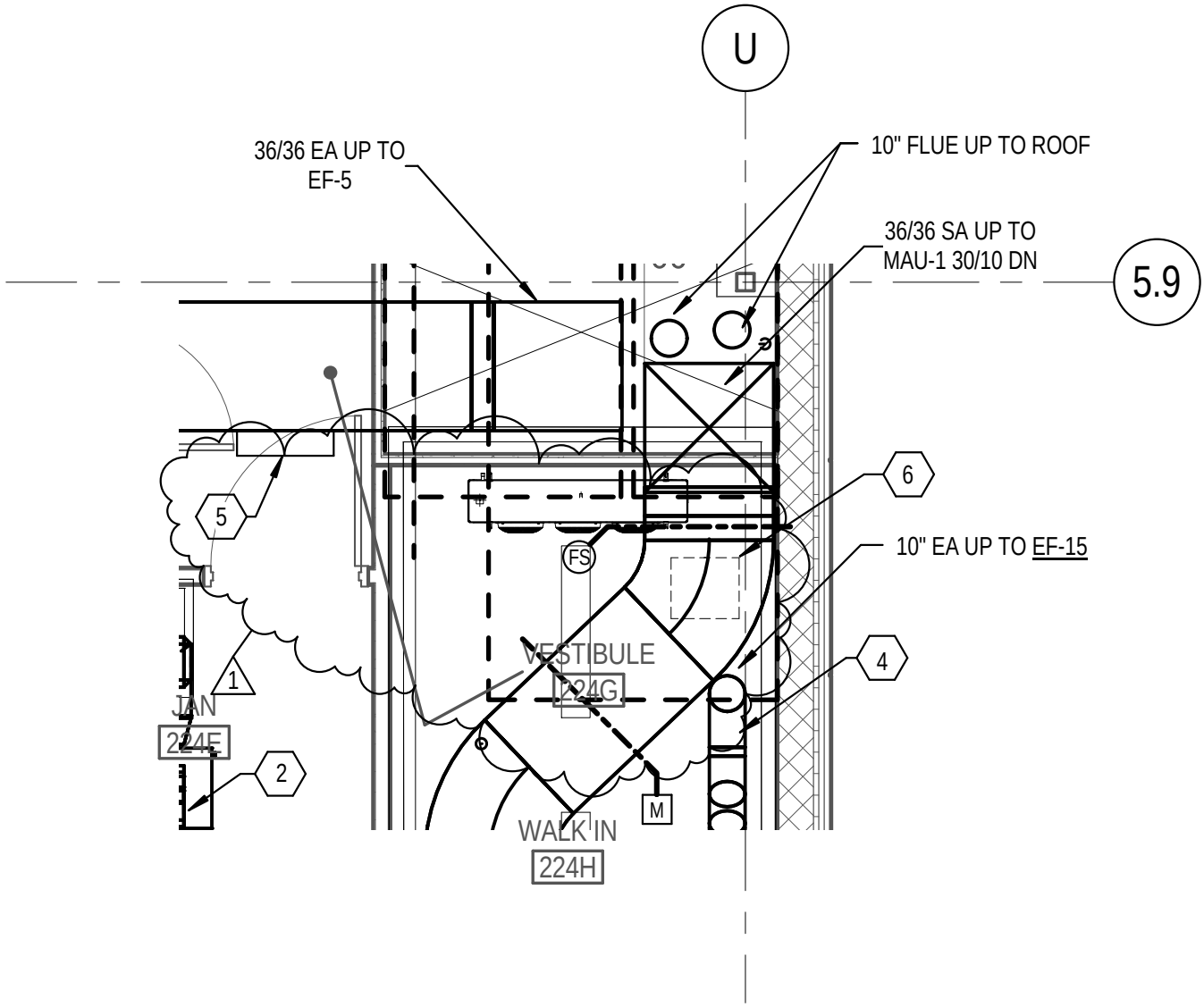

MHTN Architects, Inc.
420 East South Temple
Suite 100
Salt Lake City, Utah 84111
TEL 801.595.6700
FAX 801.595.6717
www.mhtn.com

WEBER STATE UNIVERSITY
RESIDENTIAL LIFE PHASE II - BLDG 2

PROJECT NO. 10176810

DATE: 04/28/11

SHEET NUMBER
ADD 4.9

SHEET REFERENCE
MH402

KEYED NOTES

8. CONNECT 1/2" COLD WATER TO REFRIG AS REQUIRED.

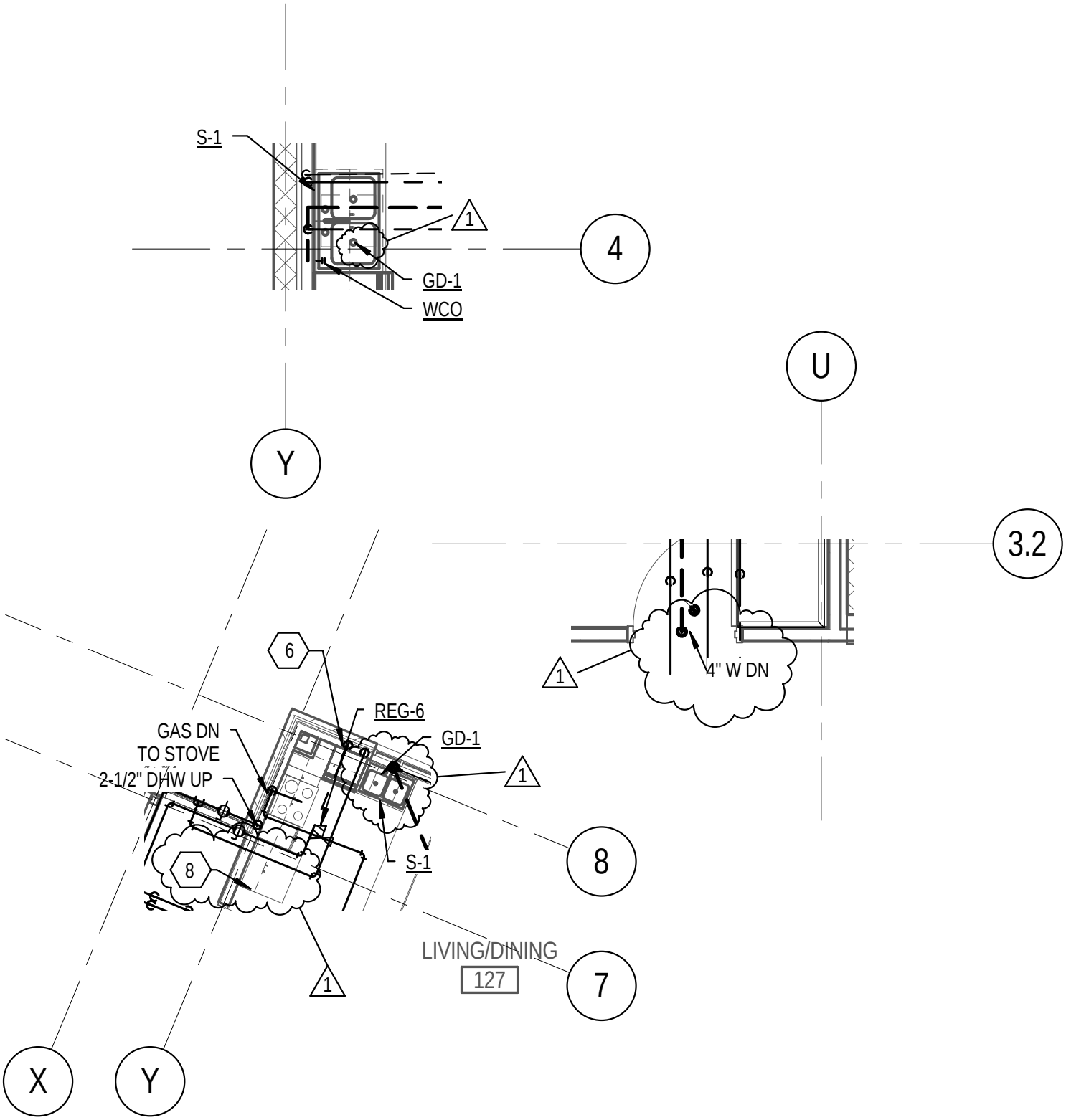

MHTN Architects, Inc.
420 East South Temple
Suite 100
Salt Lake City, Utah 84111
TEL 801.595.6700
FAX 801.595.6717
www.mhtn.com

WEBER STATE UNIVERSITY
RESIDENTIAL LIFE PHASE II - BLDG 2

PROJECT NO. 10176810

DATE: 04/28/11

SHEET NUMBER
ADD 4.10

SHEET REFERENCE
PL402

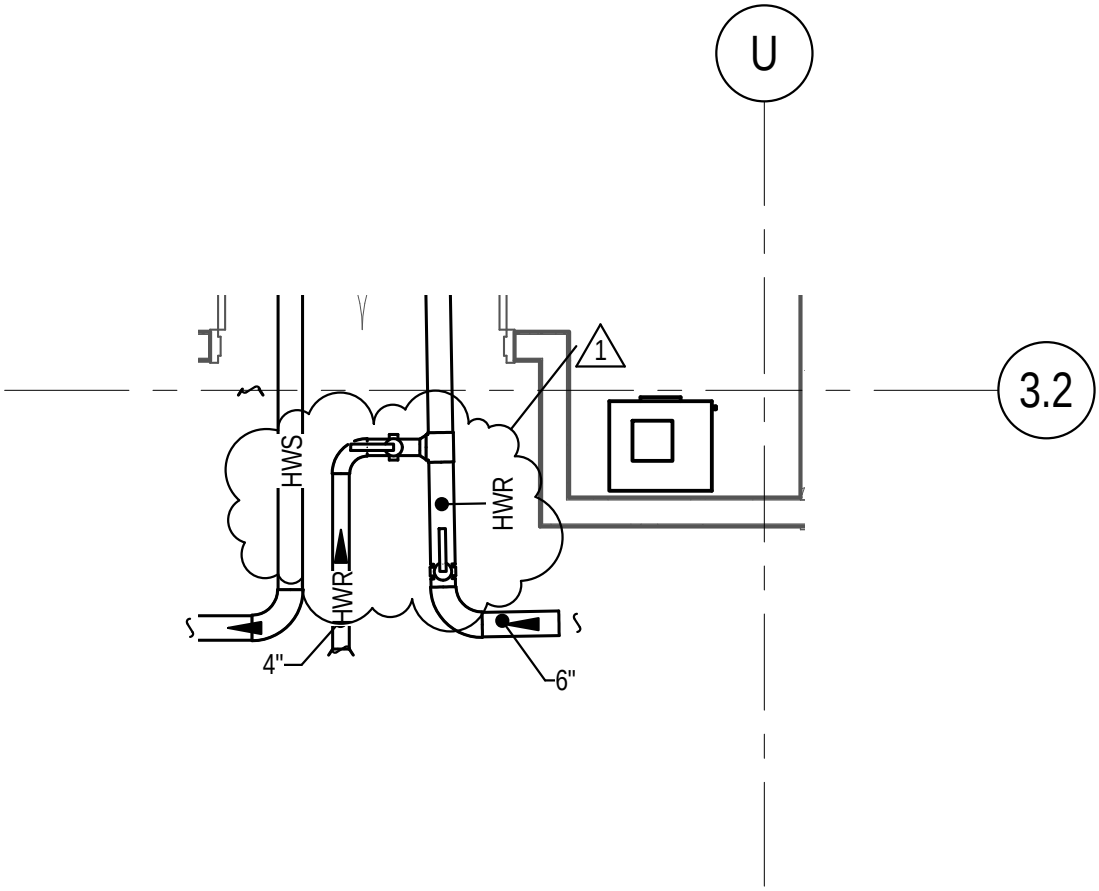

MHTN Architects, Inc.
420 East South Temple
Suite 100
Salt Lake City, Utah 84111
TEL 801.595.6700
FAX 801.595.6717
www.mhtn.com

WEBER STATE UNIVERSITY
RESIDENTIAL LIFE PHASE II - BLDG 2

PROJECT NO. 10176810

DATE: 04/28/11

SHEET NUMBER
ADD 4.11

SHEET REFERENCE
MP401

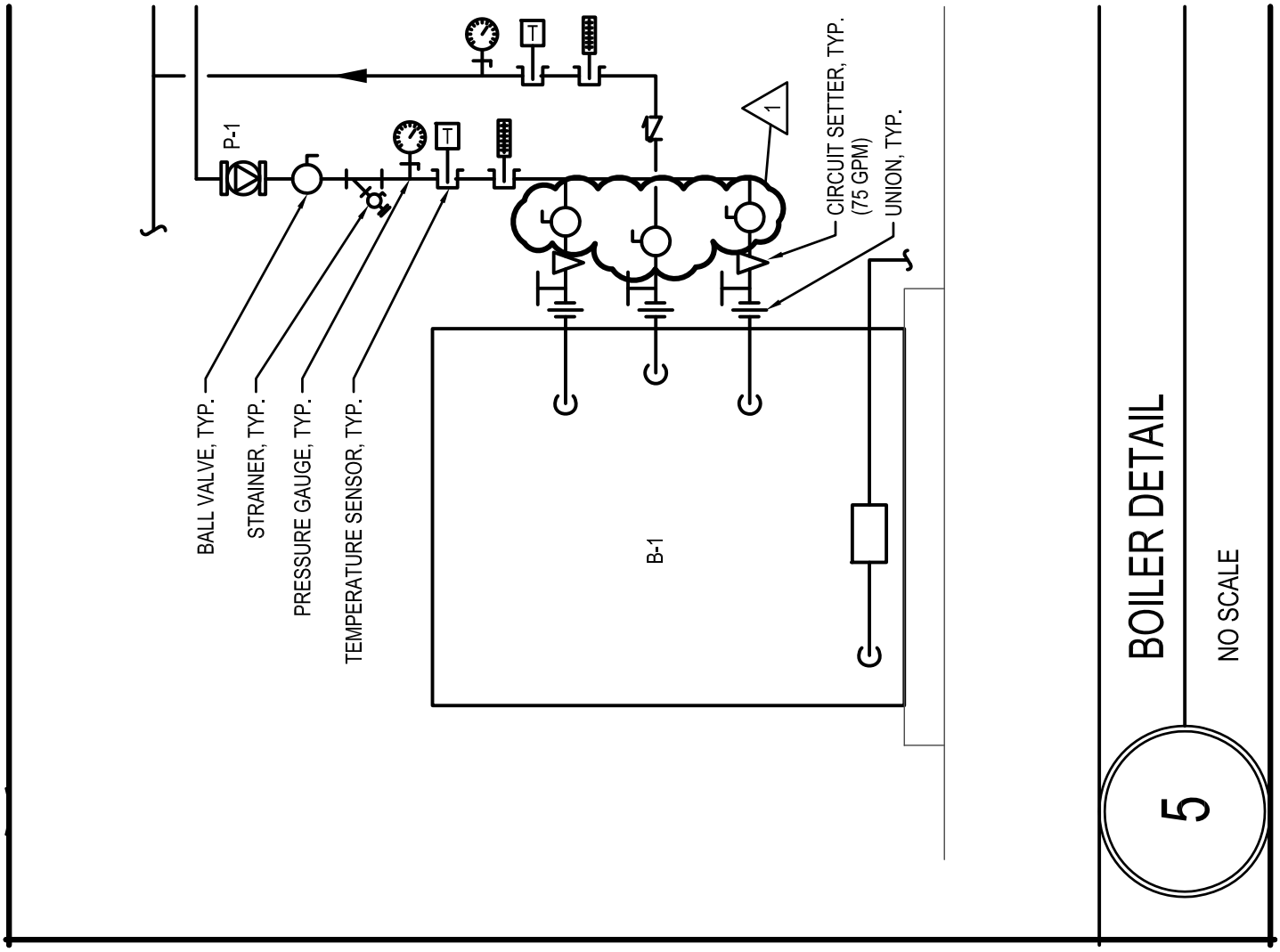

MHTN Architects, Inc.
420 East South Temple
Suite 100
Salt Lake City, Utah 84111
TEL 801.595.6700
FAX 801.595.6717
www.mhtn.com

WEBER STATE UNIVERSITY
RESIDENTIAL LIFE PHASE II - BLDG 3

PROJECT NO. 10176810

DATE: 04/28/11

SHEET NUMBER
ADD 4.12

SHEET REFERENCE
MH503

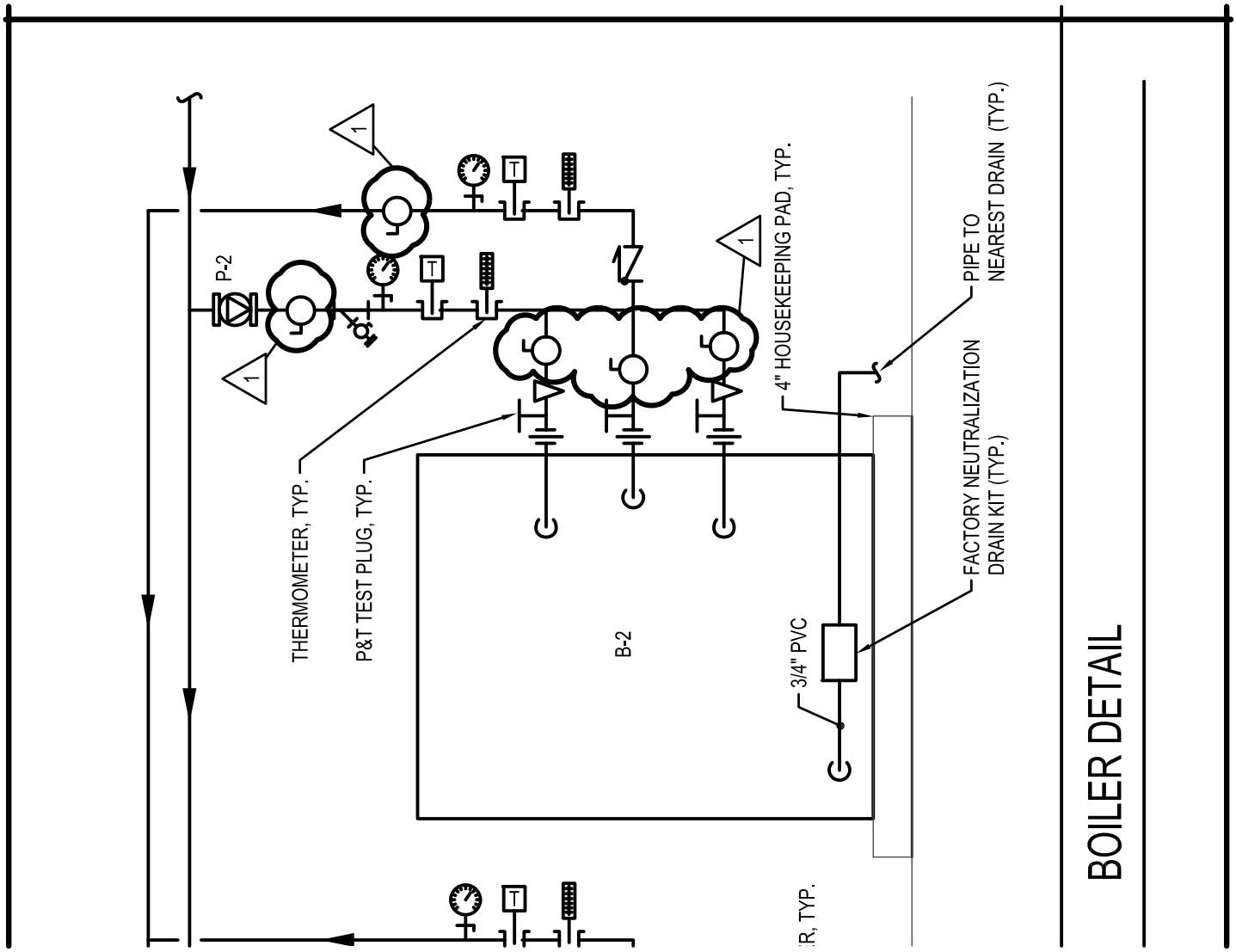

MHTN Architects, Inc.
420 East South Temple
Suite 100
Salt Lake City, Utah 84111
TEL 801.595.6700
FAX 801.595.6717
www.mhtn.com

WEBER STATE UNIVERSITY
RESIDENTIAL LIFE PHASE II - BLDG 3

PROJECT NO. 10176810

DATE: 04/28/11

SHEET NUMBER
ADD 4.13

SHEET REFERENCE
MH503

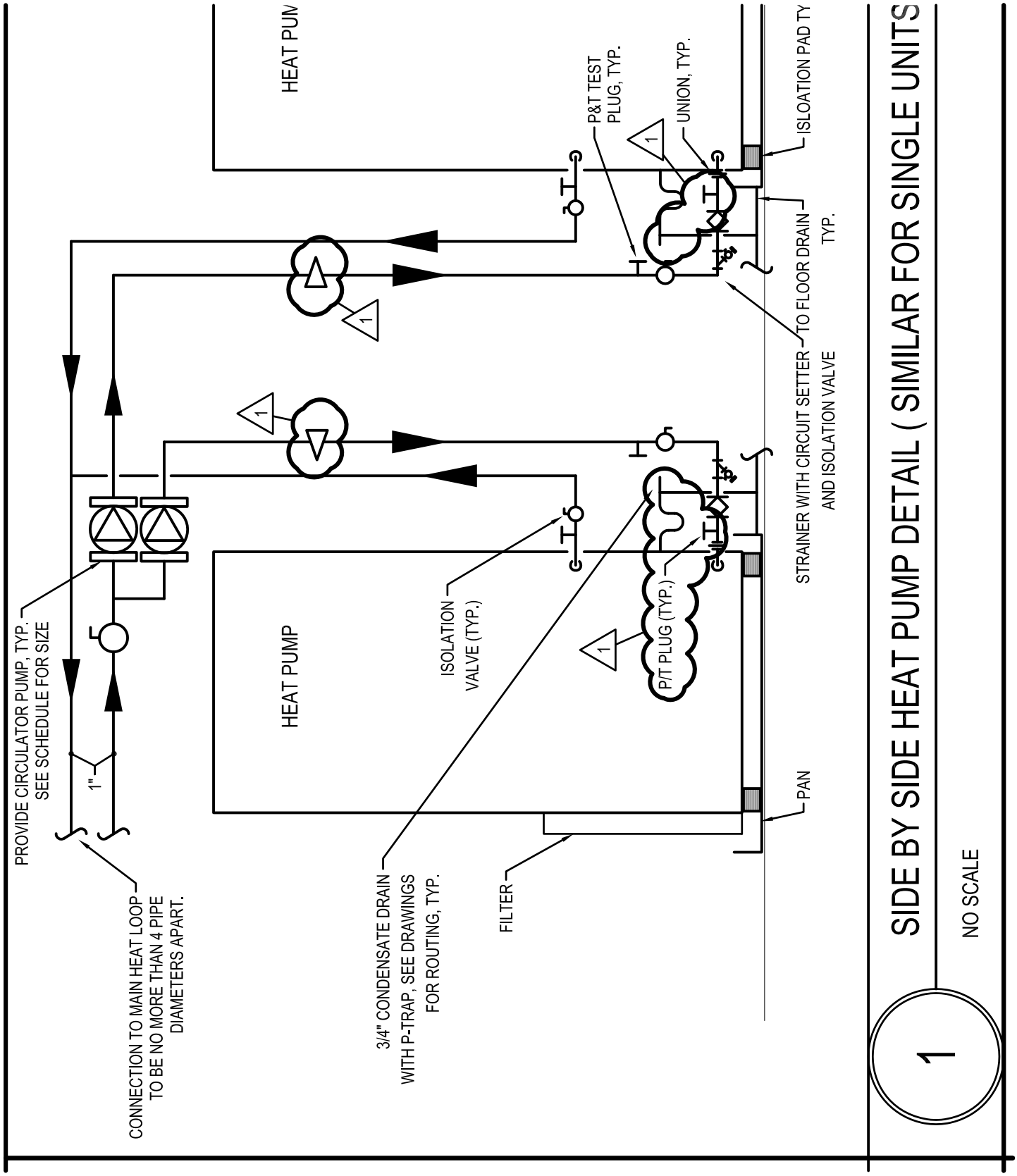

SIDE BY SIDE HEAT PUMP DETAIL (SIMILAR FOR SINGLE UNITS

1

NO SCALE

MHTN Architects, Inc.
420 East South Temple
Suite 100
Salt Lake City, Utah 84111
TEL 801.595.6700
FAX 801.595.6717
www.mhtn.com

WEBER STATE UNIVERSITY
RESIDENTIAL LIFE PHASE II - BLDG 3

PROJECT NO. 10176810

DATE: 04/28/11

SHEET NUMBER
ADD 4.14

SHEET REFERENCE
MH503

MAKE-UP AIR UNIT SCHEDULE (MAU)

PLAN CODE	COOLING				SIZE				FILTER
	TOTAL MBH	SENSIBLE MBH	LAT DB	EAT DB/WB	LENGTH (IN)	WIDTH (IN)	HEIGHT (IN)	WEIGHT (LBS)	MERV
MAU-1	333	333	54	96/62	156	101	98	6000	11

1

PUMP SCHEDULE

PLAN CODE	MIN. EFF. (%)	FLUID	MOTOR 1			PUMP & MOTOR WT (LB)	MANUFACTURER & MODEL NO.
			LOAD (BHP)	SIZE (HP)	VOLTAGE & PHASE		
P-8	60	FW	7.0	10	208/3	600	B&G BASE MNT. 1510 SERIES 2AC 2 3 4
P-9	60	FW	7.0	10	208/3	600	B&G BASE MNT. 1510 SERIES 2AC 2 3 4 1
P-10	60	FW	1.25	1.5	208/3	225	B&G INLINE 80 SERIES 3 X 3 X 7B 5

MHTN Architects, Inc.
420 East South Temple
Suite 100
Salt Lake City, Utah 84111
TEL 801.595.6700
FAX 801.595.6717
www.mhtn.com

WEBER STATE UNIVERSITY
RESIDENTIAL LIFE PHASE II - BLDG 3

PROJECT NO. 10176810

DATE: 04/28/11

SHEET NUMBER
ADD 4.15

SHEET REFERENCE
MH601

EXHAUST FAN SCHEDULE (1)

PLAN CODE	MOTOR (1)			SONES	DAMPER (GRAVITY OR MOTOR)	METHOD OF CONTROL SYSTEM
	B.H.P./ INPUT WATTS	H.P.	VOLTAGE & PHASE			
EF-1	0.192	1/4	115/1	10.6	GRAVITY DAMPER	BLDG CONTROL SYSTEM
EF-2	0.192	1/4	115/1	10.6	GRAVITY DAMPER	BLDG CONTROL SYSTEM
EF-3	0.192	1/4	115/1	10.6	GRAVITY DAMPER	BLDG CONTROL SYSTEM
EF-4	0.202	1/4	115/1	11.1	GRAVITY DAMPER	BLDG CONTROL SYSTEM
EF-5 TYPE II	NA	5	208/3	NA (1)	GRAVITY DAMPER	BLDG CONTROL SYSTEM
EF-6 TYPE I	NA	1/8	115/1	11.0	GRAVITY DAMPER	BLDG CONTROL SYSTEM

MHTN Architects, Inc.
420 East South Temple
Suite 100
Salt Lake City, Utah 84111
TEL 801.595.6700
FAX 801.595.6717
www.mhtn.com

WEBER STATE UNIVERSITY
RESIDENTIAL LIFE PHASE II - BLDG 3

PROJECT NO. 10176810

DATE: 04/28/11

SHEET NUMBER
ADD 4.16

SHEET REFERENCE
MH602

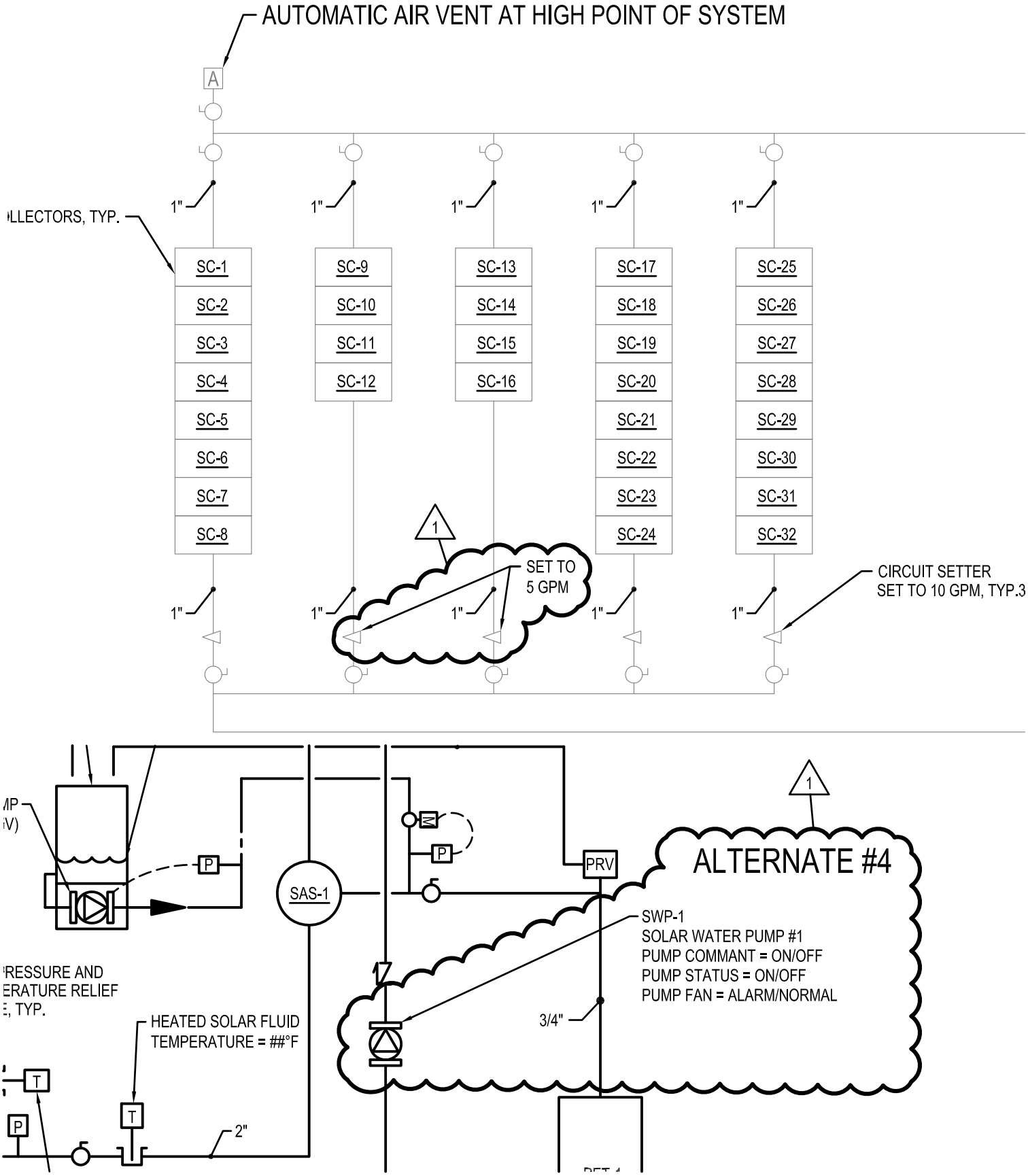

1 SOLAR WATER HEATING SCHEMATIC

SCALE: NONE

MHTN Architects, Inc.
420 East South Temple
Suite 100
Salt Lake City, Utah 84111
TEL 801.595.6700
FAX 801.595.6717
www.mhtn.com

WEBER STATE UNIVERSITY
RESIDENTIAL LIFE PHASE II - BLDG 3

PROJECT NO. 10176810

DATE: 04/28/11

SHEET NUMBER
ADD 4.17

SHEET REFERENCE
PL301

MHTN Architects, Inc.
420 East South Temple
Suite 100
Salt Lake City, Utah 84111
TEL 801.595.6700
FAX 801.595.6717
www.mhtn.com

WEBER STATE UNIVERSITY
RESIDENTIAL LIFE PHASE II - BLDG 3
PROJECT NO. 10176810
DATE: 04/28/11

SHEET NUMBER
ADD 4.18
SHEET REFERENCE
PL502

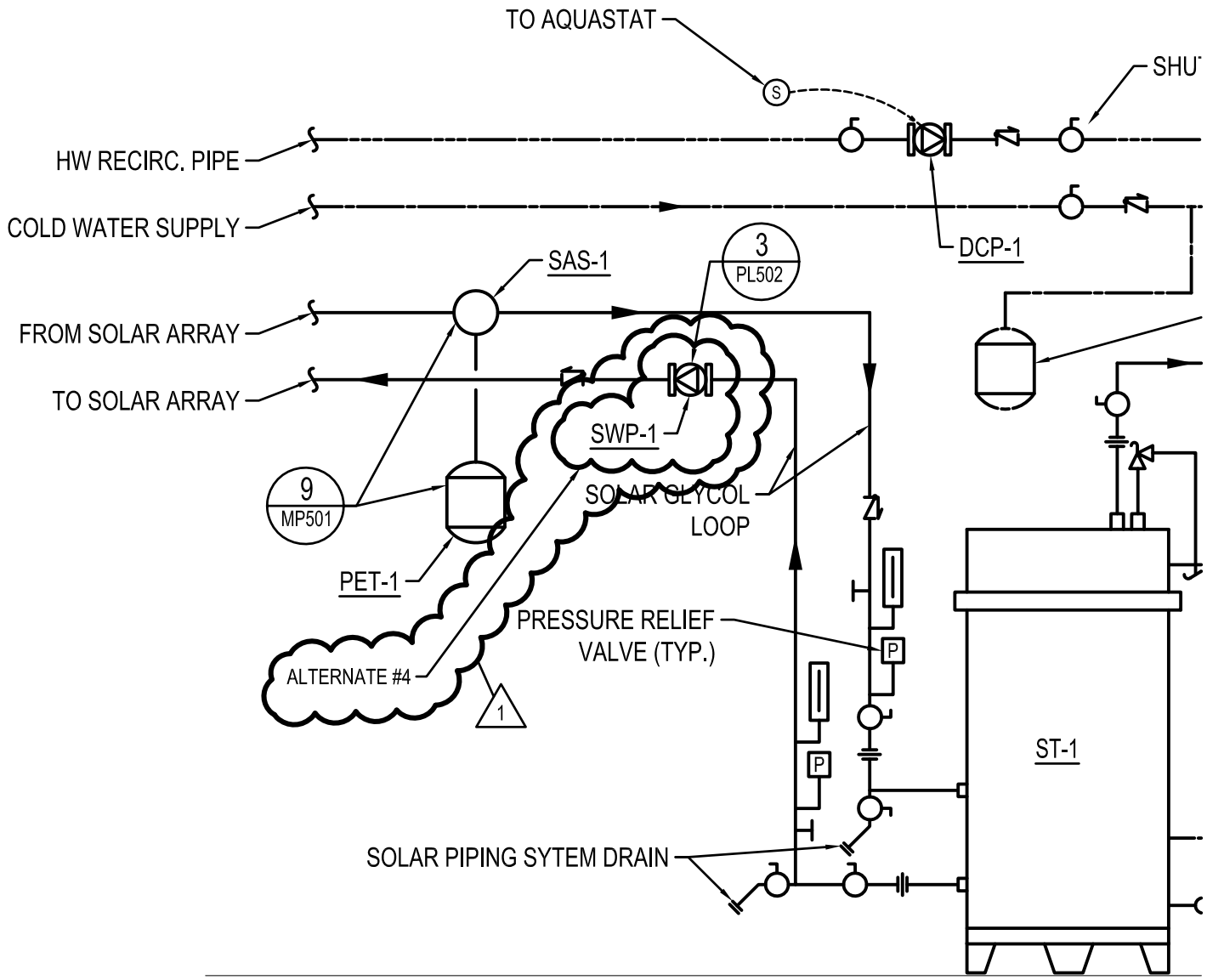

5

SOLAR WATER STORAGE TANK AND DOMESTIC WATER HE

NO SCALE

ECE
ELECTRICAL CONSULTING ENGINEERS

Addendum No. Four
for the
Weber State University Residential Life Phase 2 Building 2
Construction Documents
DFCM Project No. 10176810

All Contractors submitting proposals on the above captioned project shall be governed by the following addendum, changes and explanations to the bidding documents dated 14 April, 2011 and shall submit their bids in accordance therewith:

CHANGES TO THE DRAWINGS: IN ORDER AS FOLLOWS:

E1.1 SHEET EE001

1. Light Fixture Schedule:
   a. Fixture Type T-9 and T-21, the color, shape and size will be selected by the architect.
   b. Fixture Type T-9, WAC Lighting and MP Lighting are approved manufacturers.
   c. Fixture Type T-10, custom color is to be selected by the architect.
   d. Fixture Type T-10, Invue and FC Lighting are approved manufacturers.
   e. Fixture Type T-11, Halo and Lithonia are approved manufacturers.
   f. Fixture Type T-12, Portfolio is an approved manufacturer.
   g. Fixture Type T-13 has changed to an exterior wall mounted light fixture, Bega cat.# 4425P.537. Visa and Winona are also approved manufactures.
   h. Fixture Type T-15 has changed to an outdoor LED rope light fixture with remote transformer, Tivoli cat.# FLT-05-02-WA-**-12-W-PSU-MT-60-1-4-12-D. Barron, Moda and WAC Lighting are approved manufacturers.
   i. Fixture Type T-16, Atlantic is an approved manufacturer.
   j. Fixture Type T-17, Halo is an approved manufacturer.
   k. Fixture Type T-19, Metalux is an approved manufacturer.
   l. Fixture Type T-20, Corelite is an approved manufacturer.
   m. Fixture Type T-21, LBL and Contech are approved manufacturers.
   n. Fixture Type T-22, Corelite is an approved manufacturer.
   o. Fixture Type T-23, Peachtree, Solera and Gotham are approved manufacturers.
   p. Fixture Type T-24, Peachtree, Solera and Gotham are approved manufacturers.
   q. Fixture Type T-25, Corelite is an approved manufacturer.

E1.2 SHEET EE002

2. Revise reference note #8 as follows:
   a. Extend the existing branch circuit to (3) new 20A, 1-pole spare circuit breakers in side building #2 panel 1P5. Provide additional conduit, conductors, etc., for a complete installation. Coordinate the outages required with the Owner.

E1.3 SHEET EE005

1. Refer to the attached revised detail for changes to anchor bolts for pole mounted light fixtures. See attached **AD04-01 & AD04-02.**

E1.4 SHEET EE006

1. Refer to the attached details for revisions to the Mechanical Equipment Schedules. See attached **AD04-3 & AD04-04.**

www.eceonline.com

801 521 8007 801 521 8057 FAX

939 SOUTH WEST TEMPLE SALT LAKE CITY UTAH 84101

ELECTRICAL CONSULTING ENGINEERS

E1.5 SHEET EE008

1. Circuit 1PC-4,6 shall be for Heat Pump HP-5.
2. Circuit 1PD-7,9 shall be for Heat Pump HP-3.
3. Circuit 1PG-7,9 shall be for Heat Pump HP-11.

E1.6 SHEET EE009

1. Circuit 1PO-12,14 shall be for Heat Pump HP-28.
2. Circuit 1PN-7 shall be spare 20A, 1-pole circuit breaker.
3. Circuit 1PN-9 shall be spare 20A, 1-pole circuit breaker.
4. Circuit 1PQ-7,9 shall be for Heat Pump HP-26 and shall be 20A, 2-pole circuit breaker.
5. Circuit 1PP-7,9 shall be for Heat Pump HP-27 and shall be 30A, 2-pole circuit breaker.

E1.7 SHEET EE010

1. Circuit 1P1-29 shall be a 20A, 1-pole spare circuit breaker.
2. Circuit 1P2-13 shall be a 20A, 1-pole spare circuit breaker.
3. Circuit 1P2-23,25 shall be 30A, 2-pole circuit breaker.
4. Circuit 1P4-23 shall be a 20A, 1-pole spare circuit breaker.
5. Circuit 1P4-16,18 shall be for Heat Pump HP-10

E1.8 SHEET EE011

1. Circuit M-1,3,5 shall be a 100A, 3-pole circuit breaker.
2. Circuit M-2,4,6 shall be a 100A, 3-pole circuit breaker.
3. Circuit M-25 shall be a spare 20A, 1-pole circuit breaker.

E1.9 SHEET EE012

1. Circuit 2PE-7,9 shall be for Heat Pump HP-33 and shall be a 20A, 2-pole circuit breaker.
2. Circuit 2PD-7,9 shall be for Heat Pump HP-26 and shall be a 30A, 2-pole circuit breaker.

E1.10 SHEET EE013

1. Circuit 2PN-7,9 shall be for Heat Pump HP-47 and shall be a 30A, 2-pole circuit breaker.
2. Circuit 2PM-7,9 shall be for Heat Pump HP-46 and shall be a 20A, 2-pole circuit breaker.
3. Circuit 2PQ-8 shall be spare 20A, 1-pole circuit breaker.
4. Circuit 2PQ-10 shall be spare 20A, 1-pole circuit breaker.

E1.11 SHEET EE014

1. Circuit 2P4-14,16 shall be for Heat Pump HP-34 and shall be a 60A, 2-pole circuit breaker.
2. Circuit 2PT-7,9 shall be for Heat Pump HP-55 and shall be a 20A, 2-pole circuit breaker.
3. Circuit 2PS-7,9 shall be for Heat Pump HP-57 and shall be a 30A, 2-pole circuit breaker.
4. Circuit 2P1-5 shall be spare 20A, 1-pole circuit breaker.
5. Circuit 2P1-6 shall be spare 20A, 1-pole circuit breaker.
6. Circuit 2P3-41, 43 shall be for Heat Pump HP-58 and shall be a 30A, 2-pole circuit breaker.

www.eceonline.com

801 521 8007 801 521 8057 FAX

939 SOUTH WEST TEMPLE SALT LAKE CITY UTAH 84101

ECE
ELECTRICAL CONSULTING ENGINEERS

E1.12 SHEET EE015

1. Circuit 3PA-10 shall be spare 20A, 1-pole circuit breaker.
2. Circuit 3PA-12 shall be spare 20A, 1-pole circuit breaker.
3. Circuit 3PD-7,9 shall be for Heat Pump HP-64 and shall be a 30A, 2-pole circuit breaker.
4. Circuit 3PE-7,9 shall be for Heat Pump HP-61 and shall be a 20A, 2-pole circuit breaker.
5. Circuit 3PF-10 shall be spare 20A, 1-pole circuit breaker.
6. Circuit 3PF-12 shall be spare 20A, 1-pole circuit breaker.
7. Circuit 3P1-7,9 shall be for Heat Pump Hp-71 and shall be a 30A, 2-pole circuit breaker.

E1.13 SHEET EE015

1. Circuit 3PJ-10,12 shall be for Heat Pump HP-68 and shall be a 20A, 2-pole circuit breaker.
2. Circuit 3PQ-10 shall be spare 20A, 1-pole circuit breaker.
3. Circuit 3PQ-12 shall be spare 20A, 1-pole circuit breaker.
4. Circuit 3PR-7,9 shall be for Heat Pump HP-91 and shall be a 20A, 2-pole circuit breaker.

E1.14 SHEET EE016

1. Circuit 1P5-4,6 shall be for Heat Pump HP-29 and shall be a 30A, 2-pole circuit breaker
2. Circuits 9,10,11, 13, and 15 through 42 shall be spare 20A, 1-pole circuit breakers.
3. Circuit 3PS-7,9 shall be for Heat Pump HP-92 and shall be a 30A, 2-pole circuit breaker.
4. Circuits 3PT-7,9 shall be for Heat Pump HP-90 and shall be a 20A, 2-pole circuit breaker.

E1.15 SHEET EE017

1. Circuit 3P5-1,3 shall be for Heat pump HP-93 and shall be a 30A, 2-pole circuit breaker.
2. Circuits 16, 17, & 20 shall be spare 20A, 1- pole circuit breakers.
3. Change panel 3P4 to a 54 circuit breaker space panel. Circuits 42, 44, 46 through 54 shall be spare 20A, 1-pole circuit breakers.
4. Circuit 3P4-19,21 shall be for Heat Pump HP-69.
5. Circuit 3P4-43,45 shall be for Heat Pump HP-62 and shall be a 30A, 2-pole circuit breaker.

E1.16 SHEET ES101

1. Furnish and install an LED rope light at the fire pit. Refer to detail C4 on AS501 for location. LED Rope light fixture shall have LED every 2” on center (Tivoli #FTL-05-02-WH-**-12-W-PSU with 60W universal voltage power supply Tivoli MT-60-1-4-12-D or approved equal from Barron, Moda or WAC. Tie to circuit 1P3-34 through the time clock for the exterior light fixtures. Provide mounting clips and hardware suitable for exterior locations and to mount in approximat 6’-6” radius under the Sandstone cap of the fire ring. Provide conduit, conductors, weather-proof j-boxes etc., for a complete installation.
2. Tie the fire pit gas valve to the fire alarm system for automatic shut down upon fire alarm in the building. Provide relays, wiring, programming etc., as required. Coordinate the location of the gas valves with the fire pit supplier.
3. In the (2) 4” voice/data conduits from building #1 to the new building #2 install MaxCell (4”-3-cell) fabric innerduct.

www.eceonline.com

801 521 8007 801 521 8057 FAX

939 SOUTH WEST TEMPLE SALT LAKE CITY UTAH 84101

ECE
ELECTRICAL CONSULTING ENGINEERS

E1.17 SHEET EL101A

1. Change Special note #1 as follows:
    a. "In the Suites and Restrooms install outlets and light switches above counters at 46" to center of device."
2. Suite 112:
    a. Tie light fixtures to circuit 1PD-8.
    b. Delete wire between motion sensor in Suite 112 and motion sensor in Bedroom 112C.
3. Kitchen/Lounge 109:
    a. Furnish and install (2) two single pole light switches on the wall just inside the double doors. One to control the 2'x2' light fixtures and one to control the kitchen lights similar to level two kitchen/lounge 209.
4. Suite 115:
    a. Provide power to the light fixture in Shower 115D from Bedroom 115A lighting circuit.
5. Add Alternate Level 1 Floor Plan Area A:
    a. Furnish and install a single pole light switch on the wall above the sink on the right side to control the wall mounted vanity light fixture.
    b. Provide a power pack in hallway and each bedroom. Motion sensor requires an external power pack.
    c. Tie lighting circuit in hallway to lighting circuit in the bedrooms.
6. Building Storage 113, 116, 119:
    a. Change T-5 2'x4' lay-in light fixtures to T-7 strip light fixtures chain hung from the ceiling deck.
7. Reference Note #4:
    a. Remove the word "integral" from reference note #4. An external power pack is required for these motion sensors.
8. Typical Lighting Circuiting:
    a. Refer to the attached drawing for typical circuiting for dorm room lighting. See attached **AD04-05.**
9. Hall 100:
    a. Furnish and install a new ultrasonic ceiling mounted motion sensor (ref. note #1) in the corridor just below the exit sign above Kitchen/Lounge 109. Tie to the motion sensor to the left.
    b. Delete the wire between the T-4 fixture and the T-19 fixture just above Bedroom 108B. These fixtures are on different switching zones. Tie the power packs for the two zones together for power.
    c. Furnish and install a new ultrasonic ceiling mounted motion sensor (ref. note #1) in the corridor just below the exit sign above Lounge 106. Tie to the motion sensor to the right.

E1.18 SHEET EL101B

1. Change Special note #1 as follows:
    a. "In the Suites and Restrooms install outlets and light switches above counters at 46" to center of device."
2. Lounge 101:
    a. Delete T-17 light fixtures on the left wall.
    b. Delete the wire between the motion sensor just above Men 102C and the motion sensor to the right of Men 102C. Provide an addition power pack to control the type T-3 light fixtures just above Men 102C. Tie new power pack to the power pack just outside Unisex 102B for power.
    c. Delete the power pack to the right of Stair 199A.
    d. Tie the motion sensor to the right of Men 102C to the motion sensor to the right of Stair 199A.
    e. Tie the (4) four type T-3 light fixtures to the right of Stair 199A to the type T-3 light fixture just below it.

www.eceonline.com

801 521 8007 801 521 8057 FAX

939 SOUTH WEST TEMPLE SALT LAKE CITY UTAH 84101

ECE
ELECTRICAL CONSULTING ENGINEERS

   f. Furnish and install a new power pack next to the motion sensor just below Fitness 123. Tie power pack to light fixture and motion sensor next to it. Tie power pack to the power pack just outside of Unisex 102B for power.
   g. Delete the wire between the type T-3 light fixture just below the double door into Fitness 123 and the type T-3 light fixture to the left of it. There should now be (3) three separate lighting zones for Lounge 101.
3. Heat Pump Closet:
   a. Furnish and install a type T-8 light fixture and single pole light switch in Heat Pump Closet above Mail Room 137C. Tie light fixture to Office/Hotel 134 lighting circuit.
4. Fitness 123:
   a. Furnish and install (2) two ceiling mounted dual technology motion sensors (ref. note #4) and power pack in Fitness 123 to control the light fixtures. Tie light switch to power pack for override control. Mount one motion sensor 10 feet of the bottom wall centered in the room and one 10 feet from the top wall centered in the room (approximately 22 feet apart).
5. Mechanical 124:
   a. Tie emergency lighting circuit in Mechanical 124 to the emergency lighting circuit in Fitness 123.
6. Laundry Room 136:
   a. Tie homerun in Laundry Room 136 to circuit 1P2-13.
   b. Furnish and install a power pack in Laundry Room 136. Tie motion sensor to power pack. Tie light fixtures to power pack.
7. Reference Note #4:
   a. Remove the word "integral" from reference note #4. An external power pack is required for these motion sensors.
8. Living/Dining 127:
   a. Change T-6 light fixture to type T-1.

9. Dining/Living 128:
   a. Furnish and install a power pack in the living room and power pack in the dining room to control the light fixtures. Tie motion sensor to power pack. Tie light fixtures to power pack.
10. Bathroom 127B, 128C:
   a. Furnish and install a type T-11 light fixture in ceiling above the shower. Install an additional single pole light switch next to the wall mounted motion sensor to control the new T-11 fixture. Tie to same circuit as the wall mounted vanity light fixture.
11. Stair 199F:
   a. Provide GTD transfer switch for T-4 light fixture in top left corner. Light fixture is to turn on upon commercial power failure.
12. Kitchen/Lounge 129:
   a. Furnish and install a dual technology motion sensor (ref. note #4) and power pack to control the light fixtures. Tie switch to power pack. Tie light fixtures to power pack.
   b. Tie light fixtures to the lighting circuit in the corridor just outside Kitchen/Lounge 129.
13. Exterior Columns:
   a. Change the (3) three T-17 light fixtures on the exterior columns on the bottom side of the building to new type T-13.
14. Typical Lighting Circuiting:
   a. Refer to the attached drawing for typical circuiting for dorm room lighting. See attached **AD04-05.**

www.eceonline.com

801 521 8007 801 521 8057 FAX

939 SOUTH WEST TEMPLE SALT LAKE CITY UTAH 84101

ECE
ELECTRICAL CONSULTING ENGINEERS

15. Vestibule 101A:
    a. Furnish and install a power pack in the vestibule to control the light fixtures. Ceiling mounted motion sensor requires an external power pack.

E1.19 SHEET EL102A

1. Change Special note #1 as follows:
    a. "In the Suites and Restrooms install outlets and light switches above counters at 46" to center of device."
2. Lounge 206:
    a. Downlight fixtures in Lounge 206 are to be type T-12. Tie downlights to power pack.
3. Hall 200:
    a. Tie emergency light fixture in Hall 200 just below Bathroom 218D to the emergency light fixture in Hall 200 just above Lounge 206.
4. Bedroom 207A:
    a. Tie light fixtures in Bedroom 207A to power pack.
5. Reference Note #1:
    a. Remove the word "integral" from reference note #1. An external power pack is required for these motion sensors.
6. Typical Lighting Circuiting:
    a. Refer to the attached drawing for typical circuiting for dorm room lighting. See attached **AD04-05.**
7. Hall 200:
    a. Furnish and install a new ultrasonic ceiling mounted motion sensor (ref. note #5) in the corridor just below the exit sign above Kitchen/Lounge 209. Tie to the motion sensor to the left.
    b. Delete the wire between the T-4 fixture and the T-19 fixture just above Bedroom 208B. These fixtures are on different switching zones. Tie the power packs for the two zones together for power.
    c. Furnish and install a new ultrasonic ceiling mounted motion sensor (ref. note #5) in the corridor just below the exit sign above Lounge 206. Tie to the motion sensor to the right.

E1.20 SHEET EL102B

1. Change Special note #1 as follows:
    a. "In the Suites and Restrooms install outlets and light switches above counters at 46" to center of device."
2. Janitor 200A:
    a. Change type T-7 light fixture to type T-5.
3. Lounge 201:
    a. Delete type T-17 light fixtures on left side.
    b. Tie commercial circuit in Lounge 201 to circuit 2P3-32.
4. C-Store 222:
    a. Furnish and install (2) two single pole light switches in C-Store 222 on the wall just inside the door to control the light fixtures. One to control the type T-12 downlights and one to control the type T-3 and T-4 lay-in fixtures.
    b. Furnish and install (2) two dual technology motion sensors and power pack in C-Store 222. Install one by the T-4 light fixture just inside the door. Install the other in between the two T-4 light fixtures in the center at the bottom of the room. Tie light fixtures and switch to power pack.
5. Prep Kitchen 224, Short Order Cook 224B:
    a. Provide .178 thick lens for the lay-in fixtures in the kitchen areas. Invert lens so smooth side is facing down.
    b. Change type T-3 light fixture shown as 2'x4' on left side of Prep Kitchen 224 to type T-5.
    c.

www.eceonline.com
801 521 8007 801 521 8057 FAX

939 SOUTH WEST TEMPLE SALT LAKE CITY UTAH 84101

ECE
ELECTRICAL CONSULTING ENGINEERS

6. Jan 224E:
    a. Change the type T-3 2'x2' light fixture in Jan 224E to a 2'x2' that matches type T-5. Provide (2) 17 w T8 lamps and .175 inverted prismatic lens with regressed door.
7. Uniforms 224F:
    a. Wall mounted motion sensor is covered by the reference note. Provide wall mounted motion sensor (ref. note #2).
8. Vestibule 201B:
    a. Change the (3) three type T-3 light fixtures shown as 2'x4' to type T-4.
9. Kitchen/Lounge 229:
    a. Furnish and install another single pole light switch to control the lay-in light fixtures. Gang together with light switch already shown.
    b. Furnish and install a dual technology motion sensor (ref. note #1) and power pack to control the light fixtures. Tie switch to power pack. Tie light fixtures to power pack.
10. Short Order Cook 224B:
    a. Furnish and install (5) five type T-17 light fixtures equally spaced 3' apart over the counter in the order window. Furnish and install a single pole light switch next to the door ganged together with the 3-way switch already shown on the left wall to control the new type T-17 fixtures. Tie new fixtures to the unswitched lighting circuit in Short Order Cook 224B.
11. Reference Note #1:
    a. Remove the word "integral" from reference note #1. An external power pack is required for these motion sensors.
12. Typical Lighting Circuiting:
    b. Refer to the attached drawing for typical circuiting for dorm room lighting. See attached **AD04-05.**
13. Vestibule 201A:
    a. Furnish and install a power pack in the vestibule to control the light fixtures separately from the lights outside the vestibule. Tie the new power pack to the power pack just above Men 202C for power.

E1.21 SHEET EL103A

1. Change Special note #1 as follows:
    a. “In the Suites and Restrooms install outlets and light switches above counters at 46” to center of device.”
2. Center Vertical Cooridor:
    a. Tie corridor light fixtures to power pack just outside of Toilet 315E.
3. Right Vertical Cooridor:
    a. Tie corridor light fixtures to power pack just outside of Toilet 318D.
4. Reference Note #1:
    a. Remove the word "integral" from reference note #1. An external power pack is required for these motion sensors.
5. Exit signs:
    a. Tie all exit signs to the nearest unswitched emergency lighting circuit.
6. Typical Lighting Circuiting:
    a. Refer to the attached drawing for typical circuiting for dorm room lighting. See attached **AD04-05.**
7. Hall 300:
    a. Furnish and install a new ultrasonic ceiling mounted motion sensor (ref. note #3) in the corridor just below the exit sign above Kitchen/Lounge 309. Tie to the motion sensor to the left.
    b. Delete the wire between the T-4 fixture and the T-19 fixture just above Bedroom 308B. These fixtures are on different switching zones. Tie the power packs for the two zones together for power.
    c. Furnish and install a new ultrasonic ceiling mounted motion sensor (ref. note #3) in the corridor just below the exit sign above Lounge 306. Tie to the motion sensor to the right.

www.eceonline.com

801 521 8007 801 521 8057 FAX

939 SOUTH WEST TEMPLE SALT LAKE CITY UTAH 84101

ELECTRICAL CONSULTING ENGINEERS

E1.22 SHEET EL103B

1. Change Special note #1 as follows:
    a. “In the Suites and Restrooms install outlets and light switches above counters at 46” to center of device.”
2. Janitor 300A:
    a. Change type T-7 light fixture to type T-5.
3. Lounge 301:
    a. Do not tie the power from the two circuits together. Tie the low voltage from the two power packs together so that both circuits switch with the same motion sensors. See manufacturer wiring diagrams for wiring information.
    b. Furnish and install a new ultrasonic ceiling mounted motion sensor (ref. note #4) on the ceiling above the 2-story open area to detect motion on the floor below. Tie to motion sensor just outside Unisex 302B.
    c. Delete the wire between the motion sensor just above Men 302C and the motion sensor just outside Unisex 302B. Provide an addition power pack to control the type T-3 light fixtures above outside Unisex 302B. Tie new power pack to the power pack above Men 302C for power.
4. Furniture Storage 322A:
    a. Furnish and install a single pole light switch on the outside of the room on the bottom side just below the last double door to control the light fixtures in the storage room.

5. Meeting 322:
    a. Furnish and install a GTD transfer switch (Note #3) on the left 4 foot section of the bottom type T-25 light fixture near the door. Tie transfer switch to the nearest unswitched emergency lighting circuit and to the switched commercial lighting circuit in the room. Light fixture section is to remain on upon commercial power failure.
6. Meeting 322:
    a. Furnish and install a GTD transfer switch (Note #3) on the center 4 foot section of the bottom center type T-25 light fixture. Tie transfer switch to the nearest unswitched emergency lighting circuit and to the switched commercial lighting circuit in the room. Light fixture section is to remain on upon commercial power failure.
7. Meeting 322:
    a. Furnish and install a GTD transfer switch (Note #3) on the center 4 foot section of the top center type T-25 light fixture. Tie transfer switch to the nearest unswitched emergency lighting circuit and to the switched commercial lighting circuit in the room. Light fixture section is to remain on upon commercial power failure.
8. Meeting 322:
    a. Furnish and install a GTD transfer switch (Note #3) on the right 4 foot section of the top type T-25 light fixture near the window. Tie transfer switch to the nearest unswitched emergency lighting circuit and to the switched commercial lighting circuit in the room. Light fixture section is to remain on upon commercial power failure.
9. Suite 331:
    a. Tie lighting circuit in Suite 331 to circuit 3PQ-8.
10. Suite 330:
    a. Tie lighting circuit in Suite 331 to circuit 3PP-8.
11. Kitchen/Lounge 329:
    a. Furnish and install a dual technology motion sensor (ref. note #1) and power pack to control the light fixtures. Tie switch to power pack. Tie light fixtures to power pack.
12. Reference note #1:
    a. Remove the word "integral" from reference note #1. An external power pack is required for these motion sensors.

www.eceonline.com

801 521 8007 801 521 8057 FAX

939 SOUTH WEST TEMPLE SALT LAKE CITY UTAH 84101

ECE
ELECTRICAL CONSULTING ENGINEERS

13. Reference Note #7:
    a. Reference Note #7 has been modified to read: "Mount type T-18 light fixtures on the Wind Gert in the approximate location shown. Mount at approximately 8'-6" above the third level floor. Coordinate exact height and location with architect. Run Beldon cable in 3/4" conduit from light fixtures to controller in IDF room 333. Coordinate exact cable type with manufacturer. Manufacturer representative is to commission light fixtures and controller and train the owner on proper operation."
14. Typical Lighting Circuiting:
    a. Refer to the attached drawing for typical circuiting for dorm room lighting. See attached **AD04-05.**

E1.23 SHEET EP101A

1. Change Special note #1 as follows:
    a. “In the Suites and Restrooms install outlets and light switches above counters at 46” to center of device.”
2. Heat Pump in Stair 199E shall be HP-29 type.

E1.24 SHEET EP101B

1. Change Special note #1 as follows:
    a. “In the Suites and Restrooms install outlets and light switches above counters at 46” to center of device.”
2. Furnish and install switched duplex GFI outlet below the sink in Living/Dining 127-1 for disposal. Tie to circuit 1PP-16 through a toggle switch installed adjacent to the sink at 46” AFF. Coordinate the exact locations with the Architect prior to installation.
3. Furnish and install switched duplex GFI outlet below the sink in Living/Dining 128 for disposal. Tie to circuit 1PO-13 through a toggle switch installed adjacent to the sink at 46” AFF. Coordinate the exact locations with the Architect prior to installation.

E1.25 SHEET EP102A

1. Change Special note #1 as follows:
    a. “In the Suites and Restrooms install outlets and light switches above counters at 46” to center of device.”

E1.26 SHEET EP102B

1. Change Special note #1 as follows:
    a. “In the Suites and Restrooms install outlets and light switches above counters at 46” to center of device.”

E1.27 SHEET EP103A

1. Change Special note #1 as follows:
    a. “In the Suites and Restrooms install outlets and light switches above counters at 46” to center of device.”

E1.28 SHEET EP103B

1. Change Special note #1 as follows:
    a. “In the Suites and Restrooms install outlets and light switches above counters at 46” to center of device.”

E1.29 SHEET EP104A

1. Tie exhaust fan EF-9 to circuit 3P3-40.

www.eceonline.com

801 521 8007 801 521 8057 FAX

939 SOUTH WEST TEMPLE SALT LAKE CITY UTAH 84101

ECE
ELECTRICAL CONSULTING ENGINEERS

E1.30 SHEET EP401

1. Delete P-11 located in the Boiler Room and the associated conduit, conductors, etc.,
2. Relocate P-10 from the Mechanical Room to the Boiler Room. Refer to Mechanical Sheet MH401 for location.
3. Renumber the VFD's on the south wall of the Mechanical Room as indicated on MH401.
4. Tie HP-3 to circuit 1PD-7,9.
5. Tie HP-5 to circuit 1PC-7,9.
6. Tie HP-10 to circuit 1P4-16,18.
7. Tie HP-11 to circuit 1PG-7,9.
8. Tie HP-26 to circuit 1PQ-7,9.
9. Tie HP-27 to circuit 1PP-7,9.
10. Tie HP-28 to circuit 1PO-12,14.
11. Tie HP-29 to circuit 1P5-4,6.

E1.31 SHEET EP402

1. Tie HP-33 to circuit 2PE-7,9.
2. Tie HP-36 to circuit 2PD-7,9.
3. Tie HP-34 to circuit 2P4-14,16.
4. Tie HP-39 to circuit 2PJ-7,9.
5. Tie HP-42 to circuit 2PI-5,7.
6. The Heat Pump located on the west side of Mech/Elec 200G is HP-40. Tie HP-40 to circuit 2P4-15,17.
7. Tie HP-46 to circuit 2PM-7,9.
8. Tie HP-47 to circuit 2PN-7,9.
9. Tie HP-55 to circuit 2PT-7,9.
10. Tie HP-57 to circuit 2PS-7,9.
11. Tie HP-58 to circuit 2P3-41,43.

E1.32 SHEET EP403

1. Tie HP-61 to circuit 3PE-7,9.
2. Tie HP-64 to circuit 3PD-7,9.
3. Tie HP-62 to circuit 3P4-43,44.
4. Tie HP-68 to circuit 3PJ-7,9.
5. Tie HP-71 to circuit 3PI-7,9.
6. Tie HP-69 to circuit 3P4-19,21.
7. Tie HP-76 to circuit 3PM-7,9.
8. Tie HP-77 to circuit 3PN-7,9.
9. Tie HP-90 to circuit 3PT-7,9.
10. Tie HP-91 to circuit 3PR-7,9.
11. Tie HP-92 to circuit 3PS-7,9.
12. Tie HP-93 to circuit 3P5-1,3.

E1.33 SHEET EY101A

1. Refer to sheet MH101A for locations and quantities of the fire/smoke dampers. Divide the fire/smoke dampers equally between circuits 1P1-41, & 1P1-41.

E1.34 SHEET EY101B

1. Refer to sheet MH101B for locations and quantities of the fire/smoke dampers. Tie to a spare 20A, 1-pole spare circuit breaker in panel 1P3.
2. Furnish and install monitor modules for the Tamper and Flow switches located in the Boiler room 124A for the fire riser floor zone valve and tamper switch assembly shown on FP101B.

E1.35 SHEET EY102A

1. Refer to sheet MH102A for locations and quantities of the fire/smoke dampers. Divide the fire/smoke dampers equally between circuits 2P4-9 & 2P4-12.

www.eceonline.com
801 521 8007 801 521 8057 FAX
939 SOUTH WEST TEMPLE SALT LAKE CITY UTAH 84101

ELECTRICAL CONSULTING ENGINEERS

E1.36 SHEET EY102B

1. Refer to sheet MH102B for locations and quantities of the fire/smoke dampers. Tie to a spare 20A, 1-pole spare circuit breaker in panel 2P3.
2. Furnish and install monitor modules for the Tamper and Flow switches located in the Mechanical Chase east of Walk-In 224H for the fire riser floor zone valve and tamper switch assembly shown on FP102B.

E1.37 SHEET EY103A

1. Refer to sheet MH103A for locations and quantities of the fire/smoke dampers. Divide the fire/smoke dampers equally between circuits 3P4-44 & 3P4-46.

E1.38 SHEET EY103B

1. Refer to sheet MH103B for locations and quantities of the fire/smoke dampers. Tie to a spare 20A, 1-pole spare circuit breaker in panel 3P3.
2. Furnish and install monitor modules for the Tamper and Flow switches located in Chase 531 for the fire riser floor zone valve and tamper switch assembly shown on FP103B.

END OF ADDENDUM No. 4

www.eceonline.com

801 521 8007 801 521 8057 FAX

939 SOUTH WEST TEMPLE SALT LAKE CITY UTAH 84101

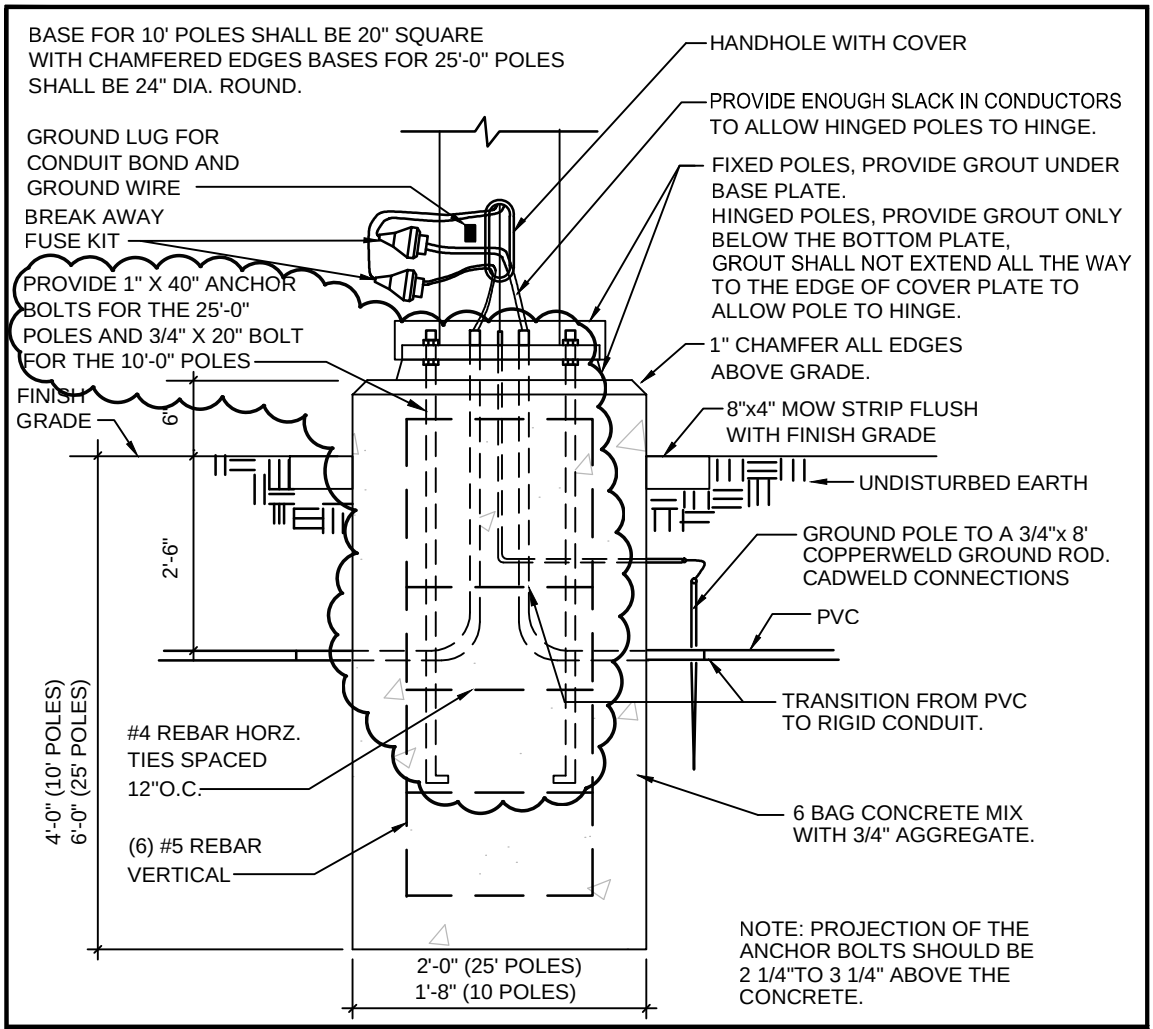

SCALE:

N.T.S.

POLE BASE DETAIL

MHTN Architects. Inc.
420 East South Temple
Suite 100
Salt Lake City, Utah 84111
TEL 801.595.6700
FAX 801.595.6717
www.mhtn.com

WEBER STATE UNIVERSITY
RESIDENTIAL LIFE PHASE 2 BUILDING 2

ECE PROJECT NO. 4007-2

DATE: 04-28-2011

SHEET NUMBER
AD04-E01

SHEET REFERENCE
EE005

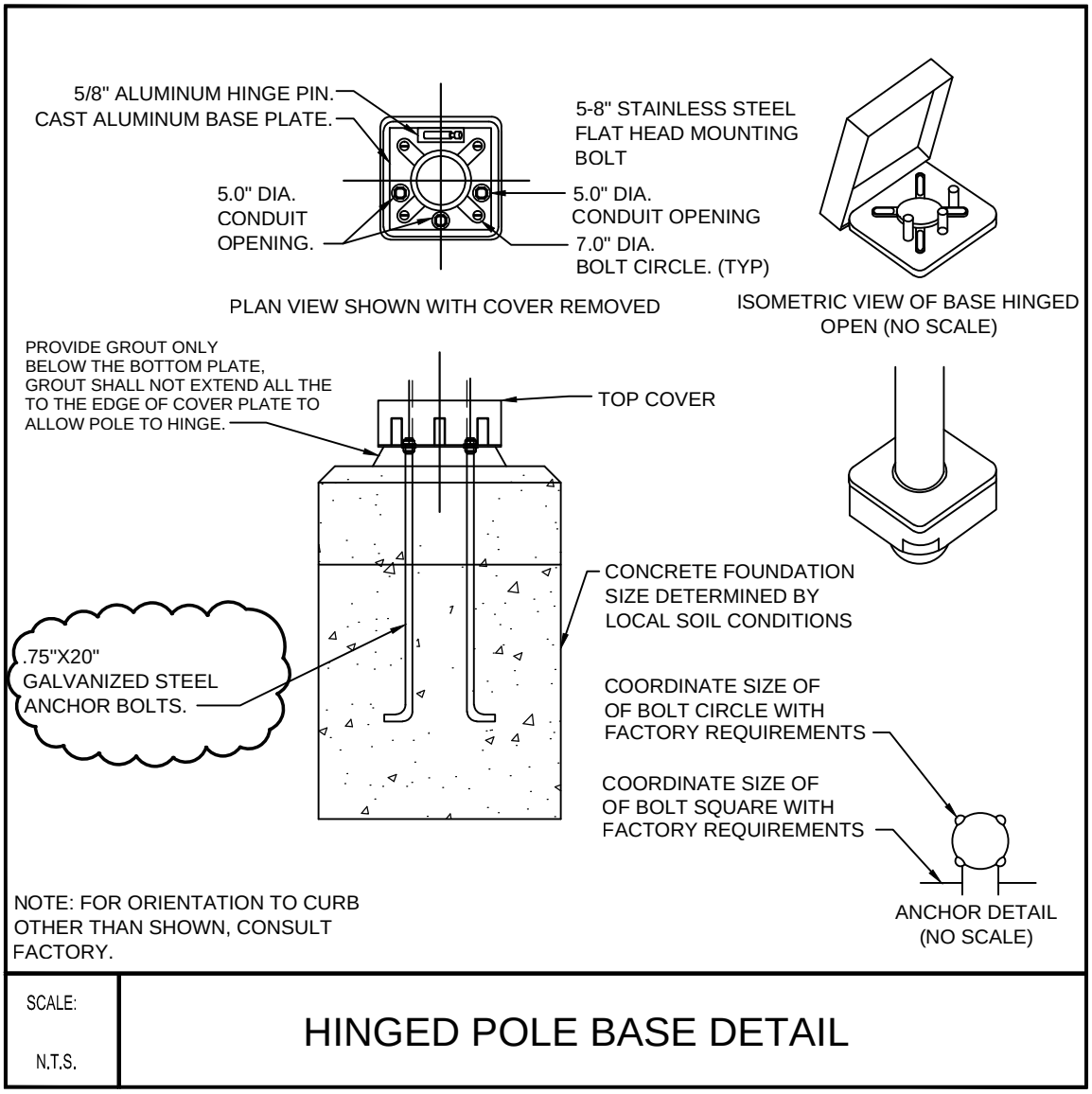

SCALE: N.T.S.

HINGED POLE BASE DETAIL

MHTN Architects. Inc.
420 East South Temple
Suite 100
Salt Lake City, Utah 84111
TEL 801.595.6700
FAX 801.595.6717
www.mhtn.com

WEBER STATE UNIVERSITY
RESIDENTIAL LIFE PHASE 2 BUILDING 2

ECE PROJECT NO. 4007-2

DATE: 04-28-2011

SHEET NUMBER
AD04-E02

SHEET REFERENCE
EE005

PUMP	PUMP	EXHAUST FAN	EXHAUST FAN	HEAT PUMP	CIRCULATION PUMP	HEAT PUMP	CIRCULATION PUMP	HEAT PUMP	CIRCULATION PUMP	HEAT PUMP	CIRCULATION PUMP	HEAT PUMP	CIRCULATION PUMP
P-4	P-5 1	EF-6,8	EF-7,9, 14 1	HP-2,3,7,8,9,13, 14,15,24,26,32, 33,37,38,39,43, 44,45,53,55,60, 61,66,67,73,74, 84,88,110		HP-1,5,6,11,12, 16,17,25,30,31, 35,41,46,50,54, 56,63,65,68,70, 72,75,76,78,89, 90,91,94,96,98		HP-4,10,19,34, 40,51,62,69,81, 82,85,86,97, 100,108		HP-18,80,99		HP-20,52,101	
20HP	20HP	1/8HP	1/6HP	--	.08HP		.08HP		.08HP		.08HP		.08HP
208	208	120	120	208	120	208	120	208	120	208	120	208	120
3	3	1	1	1	1	1	1	1	1	1	1	1	1
62.1	62.1	3	4.4	8.60	--	11.70	--	31.70	--	7.00	--	20.30	--
3#2	3#2	2#12	2#12	2#12	2#12	2#12	2#12	2#6	2#12	2#12	2#12	2#8	2#12
1#6	1#6	1#12	1#12	1#12	1#12	1#12	1#12	1#10	1#12	1#12	1#12	1#10	1#12
1-1/4"	1-1/4"	3/4"	3/4"	3/4"	3/4"	3/4"	3/4"	3/4"	3/4"	3/4"	3/4"	3/4"	3/4"
100	100	--	--	--	--		--		--		--		--
80	80	--	--	--	--		--		--		--		--
--	--	--	--	--	--		--		--		--		--
--	--	--	--	--	--		--		--		--		--
3	3	2	6	6	2	6	2	6	2	6	2	6	2

MHTN Architects. Inc.
420 East South Temple
Suite 100
Salt Lake City, Utah 84111
TEL 801.595.6700
FAX 801.595.6717
www.mhtn.com

WEBER STATE UNIVERSITY
RESIDENTIAL LIFE PHASE 2 BUILDING 2

ECE PROJECT NO. 4007-2

DATE: 04-28-2011

SHEET NUMBER
AD04-E03

SHEET REFERENCE
EE006

HEAT PUMP	CIRCULATION PUMP	HEAT PUMP	CIRCULATION PUMP	HEAT PUMP	CIRCULATION PUMP	HEAT PUMP	CIRCULATION PUMP	HEAT PUMP	CIRCULATION PUMP	HEAT PUMP	CIRCULATION PUMP
HP-21,22,23,27, 28,36,42,47,57, 59,64,71,77,87, 92,95,102,103		HP-29,58,93, 104		HP-48,105		HP-49,79, 106,107		HP-109		HP-83,109 1	
	.08HP		.08HP		.08HP		.08HP		.08HP		.08HP
208	120	208	120	208	120	208	120	208	120	208	120
1	1	1	1	1	1	1	1	1	1	1	1
14.90	--	16.20	--	21.50	--	33.10	--	35.2	--	26.80	--
2#10	2#12	2#10	2#12	2#8	2#12	2#8	2#12	2#6	2#12	2#8	2#12
1#12	1#12	1#10	1#12	1#10	1#12	1#10	1#12	1#10	1#12	1#10	1#12
3/4"	3/4"	3/4"	3/4"	3/4"	3/4"	3/4"	3/4"	3/4"	3/4"	3/4"	3/4"
	--		--		--		--		--		--
	--		--		--		--		--		--
	--		--		--		--		--		--
	--		--		--		--		--		--
6	2	6	2	6	2	6	2	6	2	6	2

MHTN Architects. Inc.
420 East South Temple
Suite 100
Salt Lake City, Utah 84111
TEL 801.595.6700
FAX 801.595.6717
www.mhtn.com

WEBER STATE UNIVERSITY
RESIDENTIAL LIFE PHASE 2 BUILDING 2

ECE PROJECT NO. 4007-2

DATE: 04-28-2011

SHEET NUMBER
AD04-E04

SHEET REFERENCE
EE006

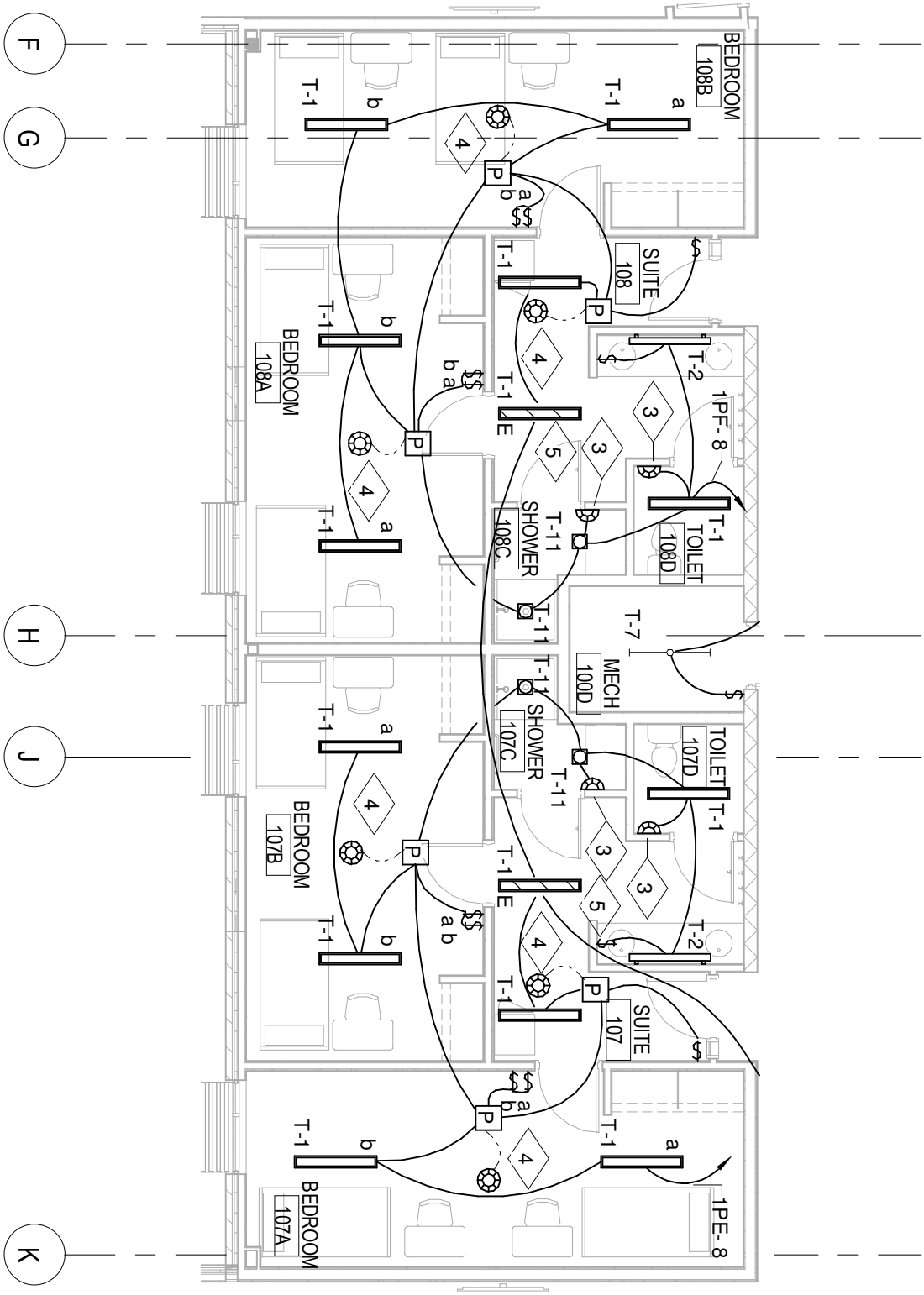

1 TYPICAL DORM ROOM LIGHTING
1/8" = 1'-0"

LINE VOLTAGE POWER WIRES

LOW VOLTAGE CONTROL WIRES

MHTN Architects, Inc.
420 East South Temple
Suite 100
Salt Lake City, Utah 84111
TEL 801.595.6700
FAX 801.595.6717
www.mhtn.com

WEBER STATE UNIVERSITY
RESIDENTIAL LIFE PHASE 2 BUILDING 2

ECE PROJECT NO. 4007-2

DATE: 04-28-2011

SHEET NUMBER
AD04-E05

SHEET REFERENCE
EL101A

ELECTRICAL COST BREAKDOWN FORM

The General Contract bid will be tabulated using the Column "Base Bid" total along with all other electrical work. (All other electrical items not specifically listed on this form are to be bid as specified, as listed on the Drawings, or as approved in the Addendum to the contract documents.) Prices shall be as quoted to the Contractor by the vendor, exclude sales tax.

The General Contractor, will provide this form complete, to the Owner with subcontractor list and subcontractor bid bonds. Prices shall be verified by a copy of the quotation on request.

Vendors not specifically pre-listed under alternate Columns A, B, C, D or "E" on this form may be submitted as a substitute by the Contractor for consideration by the Owner following procedures noted in the specification. If a column does not have a vendor pre-listed and a substitute has been pre-approved, the Electrical Contractor may indicate the vendor providing the price in the "other" column. Electrical items not specifically listed on this form, in the Specification, on the Drawings or as approved in the Addendum to the contract documents, cannot be listed on the Electrical Bid Breakdown.

The Owner is obligated to use items in Column "Base Bid". The Owner may elect to pick and choose from among alternative offerings in Columns A, B, C, D and "E" via change order. The contract shall be adjusted without markup for any price differential between the price listed in Column "Base Bid" and that listed in any selected alternative column. The Owner reserves the right to accept or reject any of the Equipment or System items anytime within ninety (90) days after signing a contract.

Item	Specification Section	Base Bid	A	B	C	D	E
	260536 Cable Tray	$	Mono Systems $	Cooper B-Line $	MP Huskey $	PW Industries $	
	260923 Lighting Control Devices	Watt Stopper $					
	260923 Lighting Control Relay Panel	Watt Stopper $					
	264313 Surge Protective Devices (SPD's)	$	Current Technology $	Liebert Corp $	United Power $	Intermatic $	Square-D $
	262816 Enclosed Switches and Circuit Breakers 262413 Switchboards 262416 Panelboards	$	Cutler-Hammer $	Siemens $	GE $	Square-D $	

ELECTRICAL COST BREAKDOWN FORM

	262713 Electricity Metering	Lucid Design $					
	265100 Interior Lighting Package T-1	$	JRC $	Quantum Ltg. $			
	265100 Interior Lighting Package T-2	$	JRC $	Quantum Ltg. $	Light Source $	Layton Sales $	
	265100 Interior Lighting Package T-3, T-4, T-5, T-7, T-8, T-10, T-11, T-12, T-15, T-19, T-20, T-22, T-23, T-24, T-25, EX-1 & EX-2	$	JRC $	Quantum Ltg. $	Light Source $	Layton Sales $	
	265100 Interior Lighting Package T-9	$	JRC $	Quantum Ltg. $	Light Source $	Layton Sales $	
	265100 Interior Lighting Package T-18	$	JRC $	Quantum Ltg. $	Light Source $	Layton Sales $	Steven Sales $
	265100 Interior Lighting Package T-21	$	JRC $				
	265100 Interior Lighting Package T-13, T-16 & T-17	$	JRC $	Quantum Ltg. $	Light Source $	Layton Sales $	Steven Sales $
	265600 Exterior Lighting Package T-6 & T14	JRC $					
	Emergency Call Stations	Code Blue $					

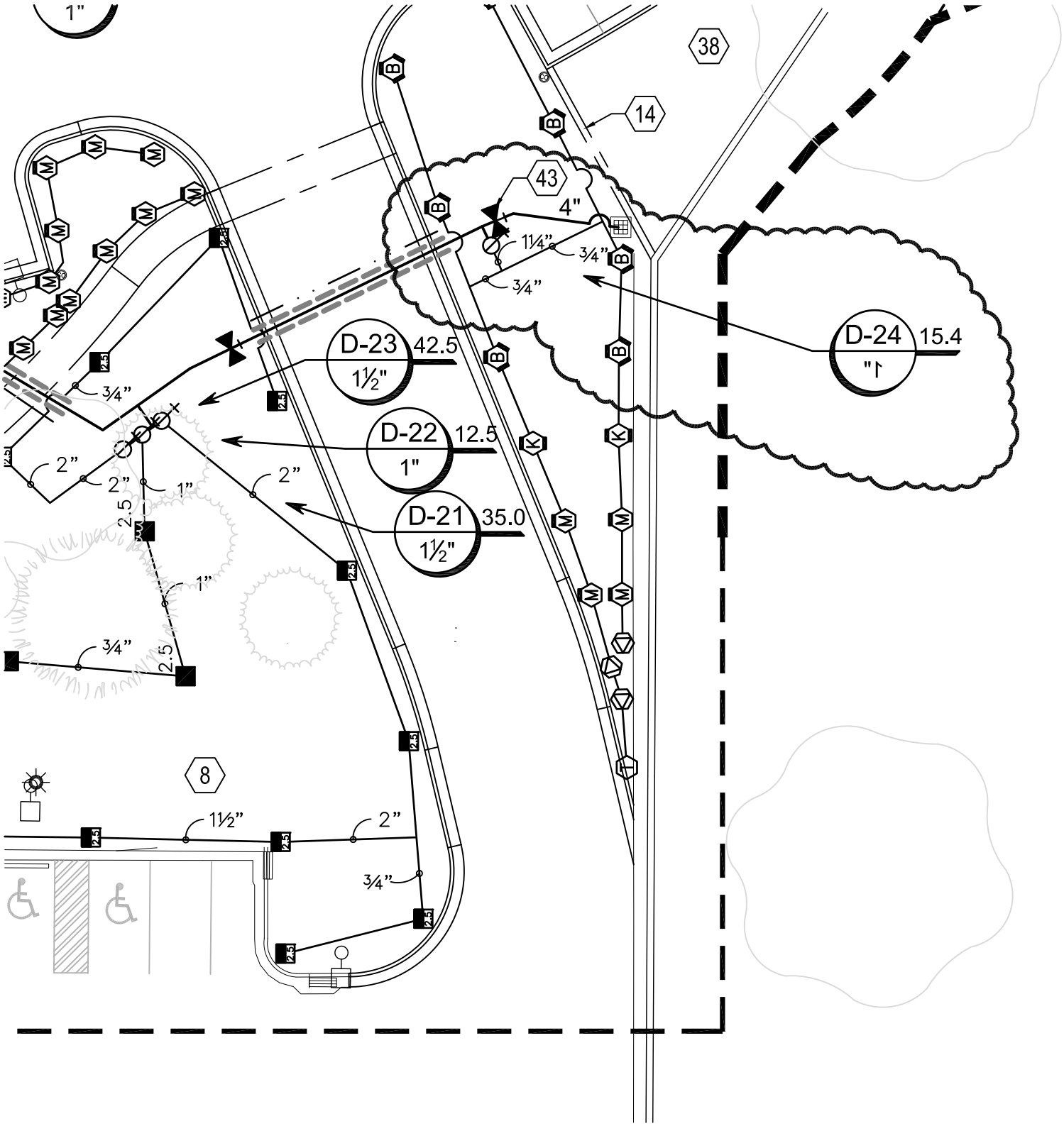

IRRIGATION PLAN BUILDING - 3

0 10' 20' 40'

SCALE: 1" = 20'-0"

N

MHTN Architects, Inc.
420 East South Temple
Suite 100
Salt Lake City, Utah 84111
TEL 801.595.6700
FAX 801.595.6717
www.mhtn.com

Project Name: Weber State University
Residential Life - Phase II - BLDG - 3

Project No: 2010543.00

Date: 28 APRIL 2011

Sheet No.
AD04-L06

Sheet Reference
LI101

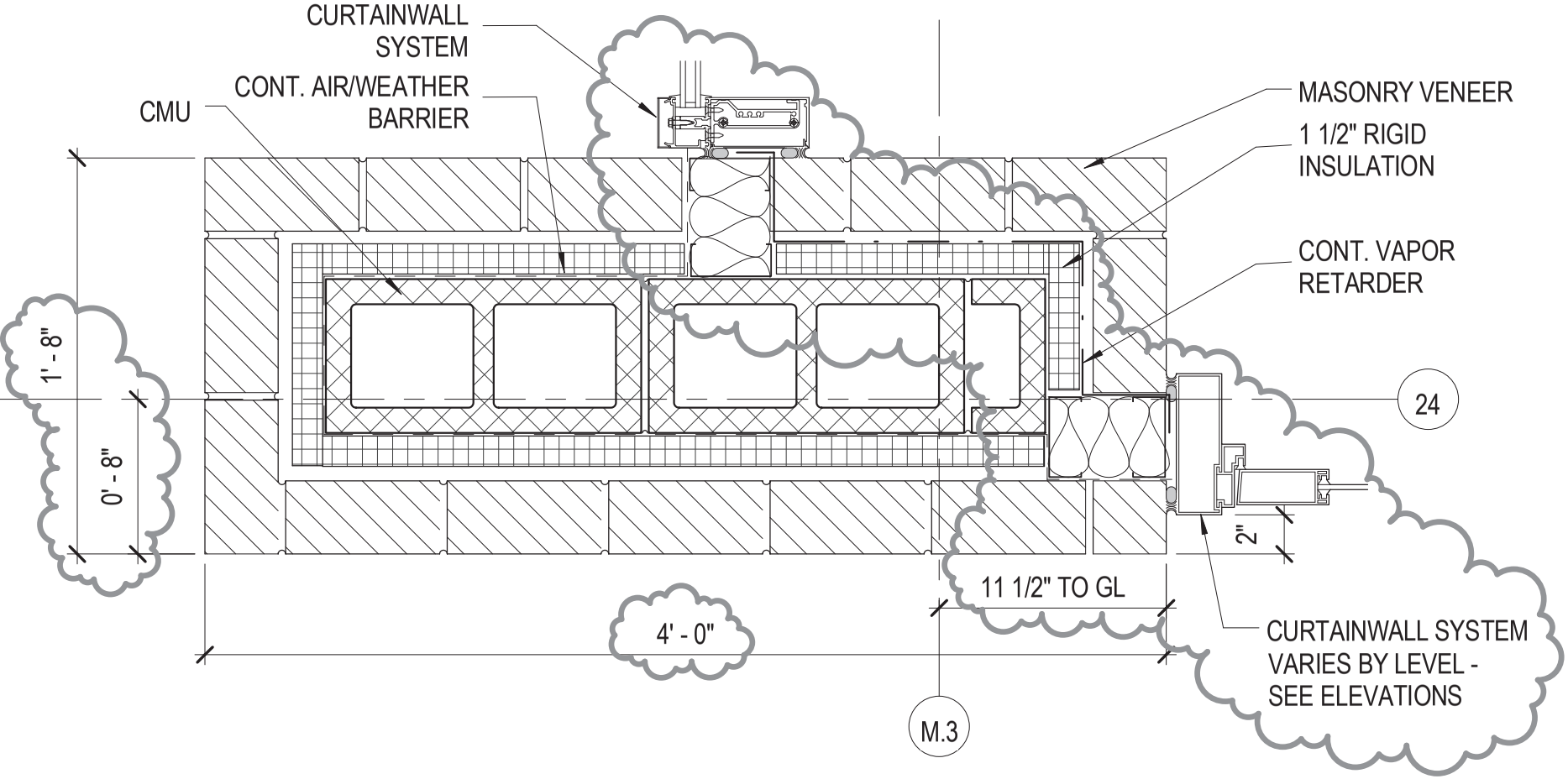

C1

DETAIL

SCALE: 1 1/2" = 1'-0"

SHEET NUMBER
AD04_A12
SHEET REFERENCE
AE501

WEBER STATE UNIVERSITY
RESIDENTIAL LIFE PHASE II - BLDG 3
PROJECT NO. 2010543
DATE: 28 APRIL 2011

MHTN Architects, Inc.
420 East South Temple
Suite 100
Salt Lake City, Utah 84111
TEL 801.595.6700
FAX 801.595.6717
www.mhtn.com

GREAT BASIN ENGINEERING INC

WSU NEW RESIDENTIAL LIFE – BUILDING 3

ADDENDUM - 04

DATE OF ISSUE: 04.28.11

ARCHITECT PROJECT #:2010543.00

DESCRIPTION: Changes to Building Three Grading and Site - Drawing Changes

CHANGES TO SPECIFICATIONS:

Addendum 04

1. None.

CHANGES TO DRAWINGS:

Addendum 04

1. CS-101: The note to construct a 6' retaining wall was changed to construct retaining wall. Refer to the grading plan for top of wall and finish grade elevations.
2. CG- 201 and CG-202: In the General Grading notes number 18 was changed to read "The recommendations in the following Geotechnical Engineering Report by GSH Geotechnical Consultant, Inc. are included in the requirements of grading and site preparation. The report is titled "Report Geotechnical Study Proposed Residential Life Housing Building, Approximately 4100 South 1350 East South End of Weber State University Campus Ogden, Utah This Geotechnical Eng. is to perform all inspections, etc. noted above. Job No.: 0149-015-10 Dated: December 15, 2010
3. CU-301 and CU-302: The note on drawings that reads "Water Main Lines, Fire Lines and Irrigation Lines will be AWWA C900 Class 150 Pipe" will be changed to "Water Main Lines, Fire Lines and Irrigation Lines will be Class 350 Ductile Iron Pipe".

ATTACHMENTS:

TEL (801) 394-4515 • FAX (801) 392-7544 • 5746 South 1475 East • Ogden, Utah 84403 • www.greatbasinengineering.com

ADDENDUM #4

Project: WSU Res. Life Phase 2 Building 3 **Project No.:** 10613.a
Location: Ogden, Utah **Date:** 28 April 2011
Addendum by: Jeremy Achter, S.E.

Sheet SG001
-Note M.17 has been deleted from the structural notes.

Sheet SG601
-The masonry shear wall schedule has been modified. Please see the attached sheet AD04_S01.

Sheet SB101
-Footing and foundation note 12 has been revised. Delete the reference to the architectural plans.

Sheet SB101
-The canopy column sizes have been changed. Please see the attached sheet AD04_S02.

Sheet SF102
-This sheet has been revised. Please see the attached sheet AD04_S03.

Sheet SF103
-This sheet has been revised. Please see the attached sheet AD04_S04.

Sheet SF104
-A detail call out has been added to the plan SF104. Please see the attached sheet AD04_S05.

Sheet SF201
-C/SF201 has been revised. Please see the attached sheet AD04_S06.

Sheet SF201
-Detail E5/SF201 is a new detail. Please see the attached sheet AD04_S07.

Sheet SF502
-Detail C3/SF502 has been deleted from the drawings.

Sheet SF502
-Detail E2/SF502 has been revised. Please see the attached sheet AD04_S08.

Sheet SF503

-Detail C2/SF503 has been revised. Please see the attached sheet AD04_S09.

Sheet SF503

-Detail D5/SF503 is a new detail. Please see the attached sheet AD04_S10.

Sheet SF704

-Detail A3/SF704 has been revised. Please see the attached sheet AD04_S11.

Filing:(x) project file () other
WSU Res. Life Phase 2 Bldg 3_Struct ADD04_042811

MASONRY WALL SCHEDULE (L)

MARK	THICK.	VERT. REINF. SIZE	VERT. REINF. SPACE	HORIZ. REINF. NO.	HORIZ. REINF. SIZE	HORIZ. REINF. SPACE	BOND BEAM REINF. @ ROOF	BOND BEAM REINF. @ FLOOR	1 COMMENTS
MW-1	8"	#5	32"	(2)	#4	48"	(2) #4	(2) #4	
MW-2	10"	(2) #5	8"	(2)	#5	24"	(2) #5	(2) #5	SOLID GROUT SEE NOTES 6, 7
MW-3	8"	#5	32"	(2)	#4	24"	(2) #4	(2) #4	SEE NOTE 6
MW-4	10"	(2) #5	8"	(2)	#4	48"	(2) #4	(2) #4	SOLID GROUT SEE NOTE 7
MW-5	8"	#5	32"	(2)	#4	16"	(2) #4	(2) #4	

NOTES

1. FOR ANY CMU WALLS NOT SPECIFICALLY CALLED OUT IN PLANS, USE MW1
2. VERT. REINFORCING TO BE @ CL. OF WALL UNLESS OTHERWISE NOTED.
3. ALL MASONRY WALLS SHALL BE GROUTED SOLID.
4. SEE STRUCTURAL NOTES FOR ADDITIONAL INFORMATION.
5. WALL MARKS SHOWN ON PLAN OCCUR ABOVE THE LEVEL ON WHICH THEY ARE SHOWN.
6. HORIZ. BOND BEAM REINFORCING SHALL BE HOOKED AROUND VERTICAL END OF WALL REINFORCING. THIS NOTE ONLY APPLIES WHERE SPECIFICALLY NOTED ABOVE.
7. VERTICAL REINFORCING IN 10" WALLS SHALL BE PLACED IN (2) MATS, 2" FROM EACH FACE OF WALL AS SHOWN IN THE JAMB SCHEDULE.

MHTN Architects, Inc.
420 East South Temple
Suite 100
Salt Lake City, Utah 84111
TEL 801.595.6700
FAX 801.595.6717
www.mhtn.com

WEBER STATE UNIVERSITY
RESIDENTIAL LIFE PHASE II - BLDG 3
PROJECT NO. 2010543
DATE: 04/28/2011

SHEET NUMBER
AD04_S01
SHEET REFERENCE
SG601

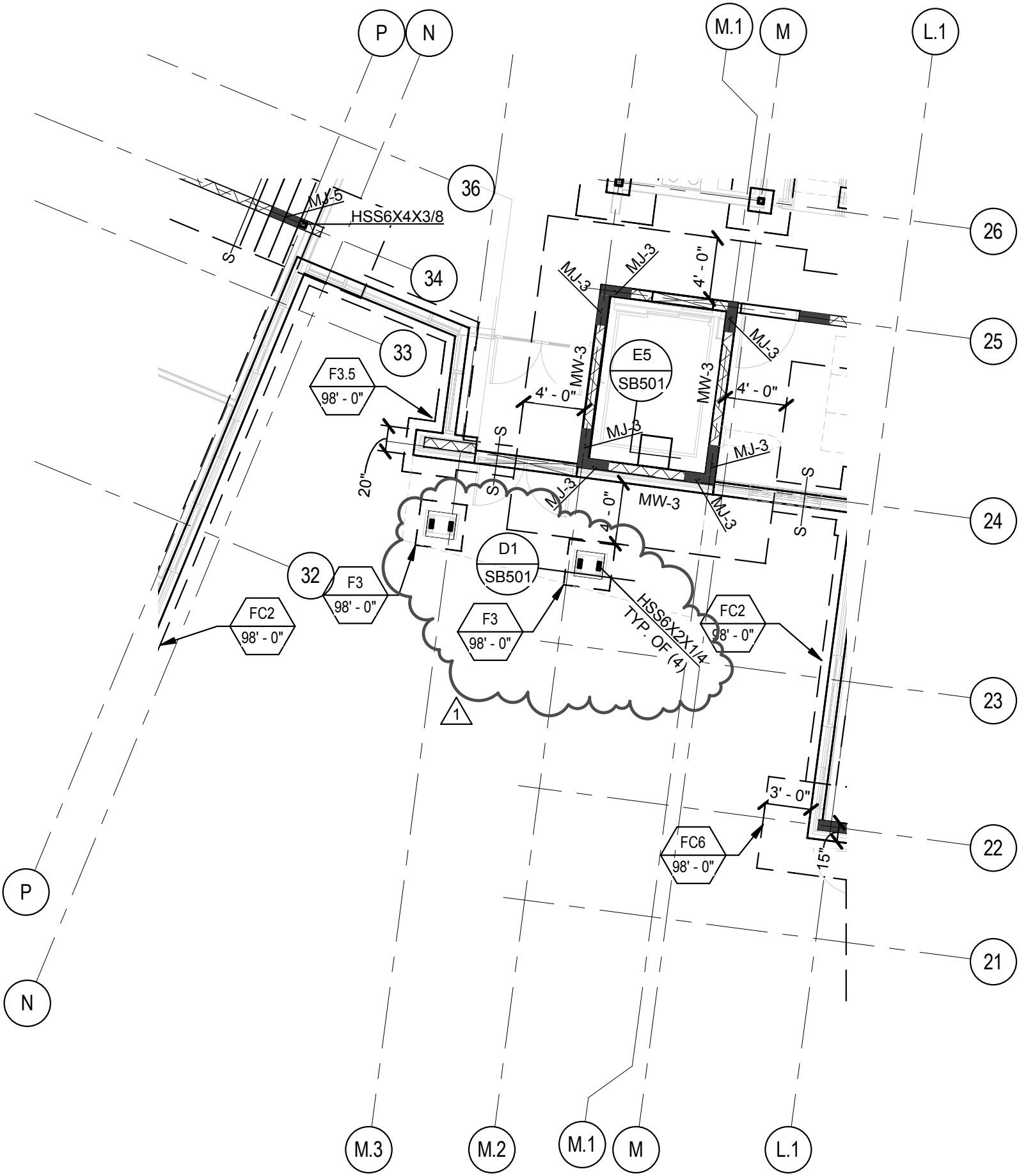

MHTN Architects, Inc.
420 East South Temple
Suite 100
Salt Lake City, Utah 84111
TEL 801.595.6700
FAX 801.595.6717
www.mhtn.com

WEBER STATE UNIVERSITY
RESIDENTIAL LIFE PHASE II - BLDG 3

PROJECT NO. 2010543

DATE: 04/28/2011

SHEET NUMBER
AD04_S02

SHEET REFERENCE
SB101

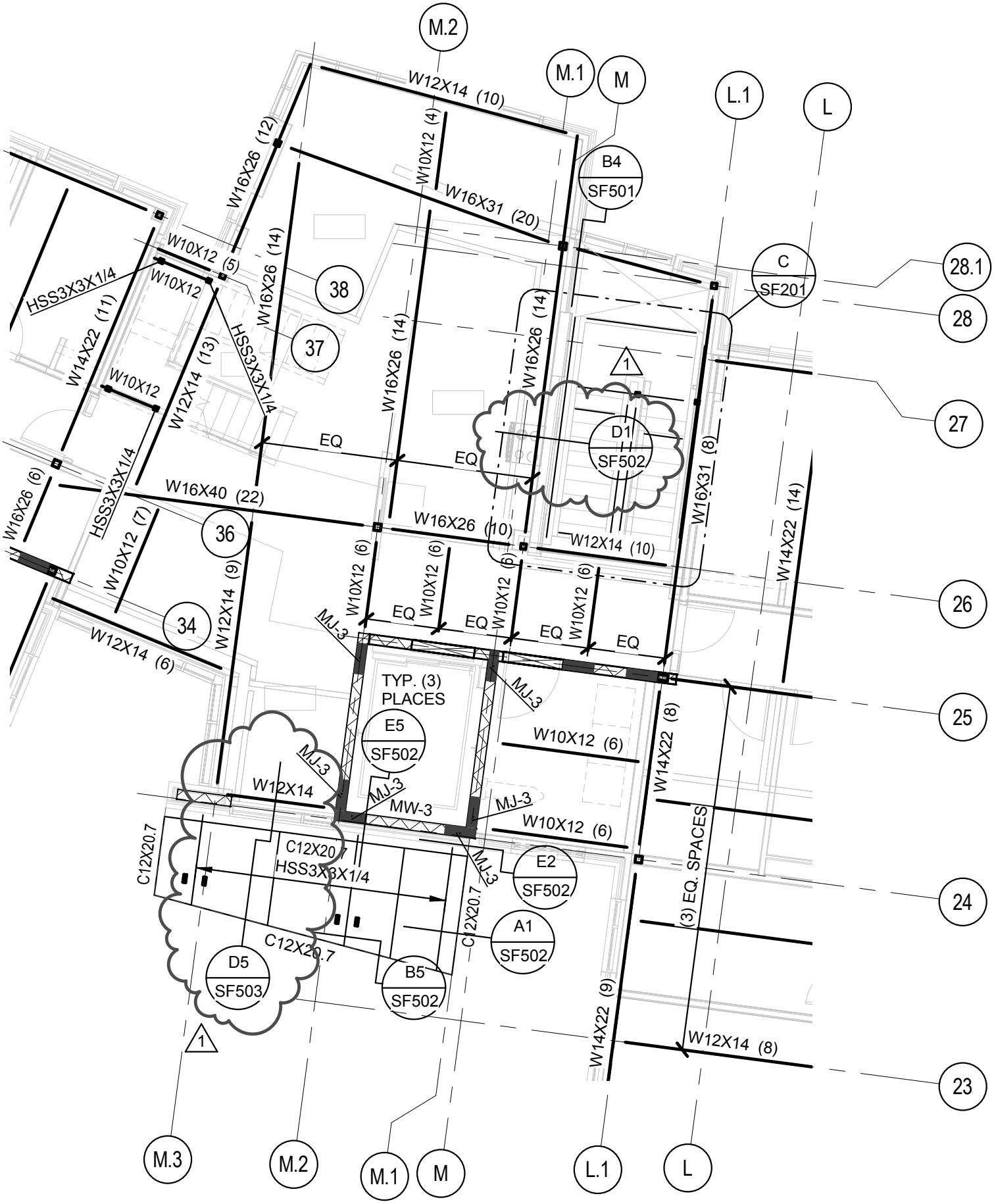

MHTN Architects, Inc.
420 East South Temple
Suite 100
Salt Lake City, Utah 84111
TEL 801.595.6700
FAX 801.595.6717
www.mhtn.com

WEBER STATE UNIVERSITY
RESIDENTIAL LIFE PHASE II - BLDG 3

PROJECT NO. 2010543

DATE: 04/28/2011

SHEET NUMBER
AD04_S03

SHEET REFERENCE
SF102

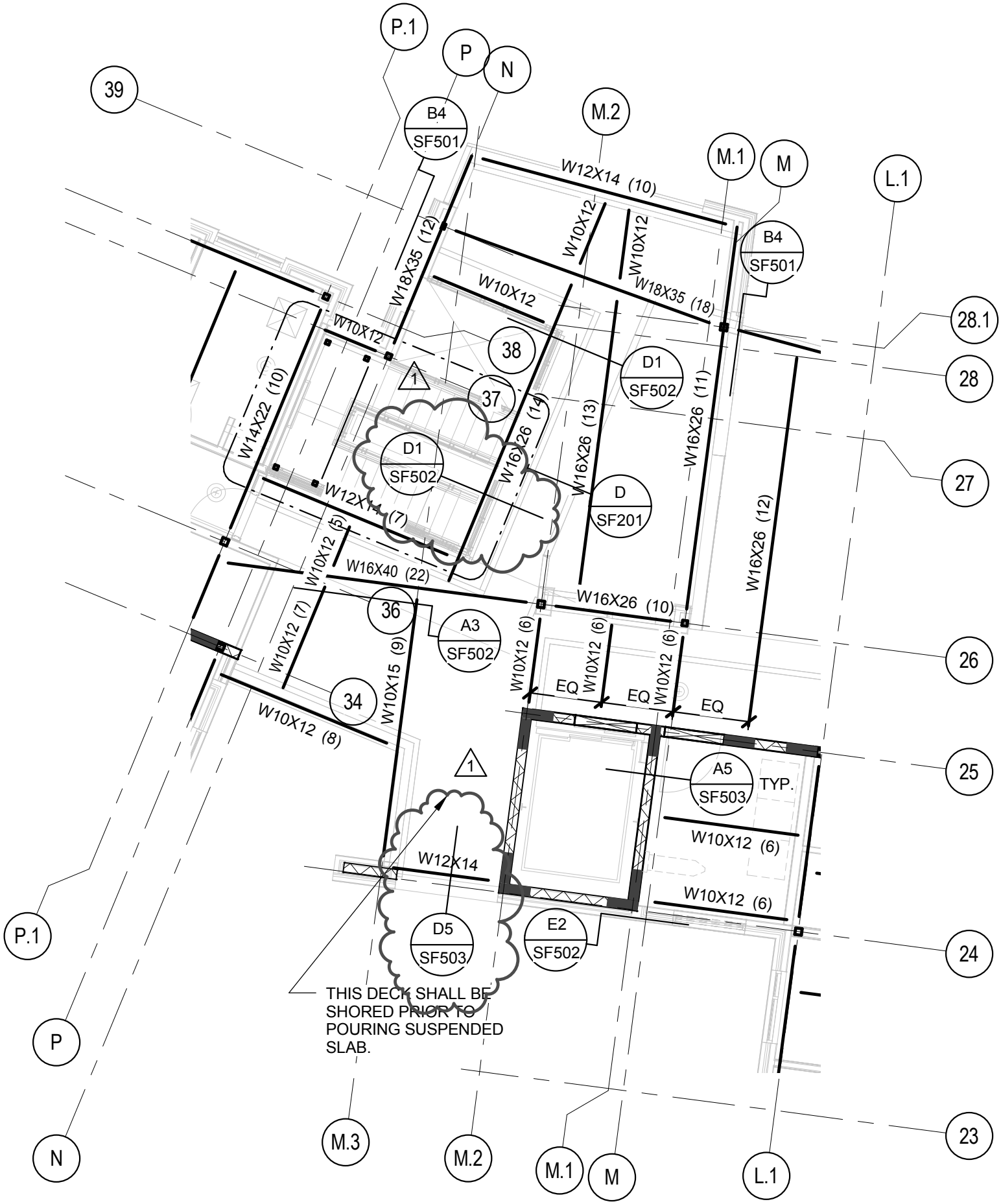

MHTN Architects, Inc.
420 East South Temple
Suite 100
Salt Lake City, Utah 84111
TEL 801.595.6700
FAX 801.595.6717
www.mhtn.com

WEBER STATE UNIVERSITY
RESIDENTIAL LIFE PHASE II - BLDG 3

PROJECT NO. 2010543

DATE: 04/28/2011

SHEET NUMBER
AD04_S04

SHEET REFERENCE
SF103

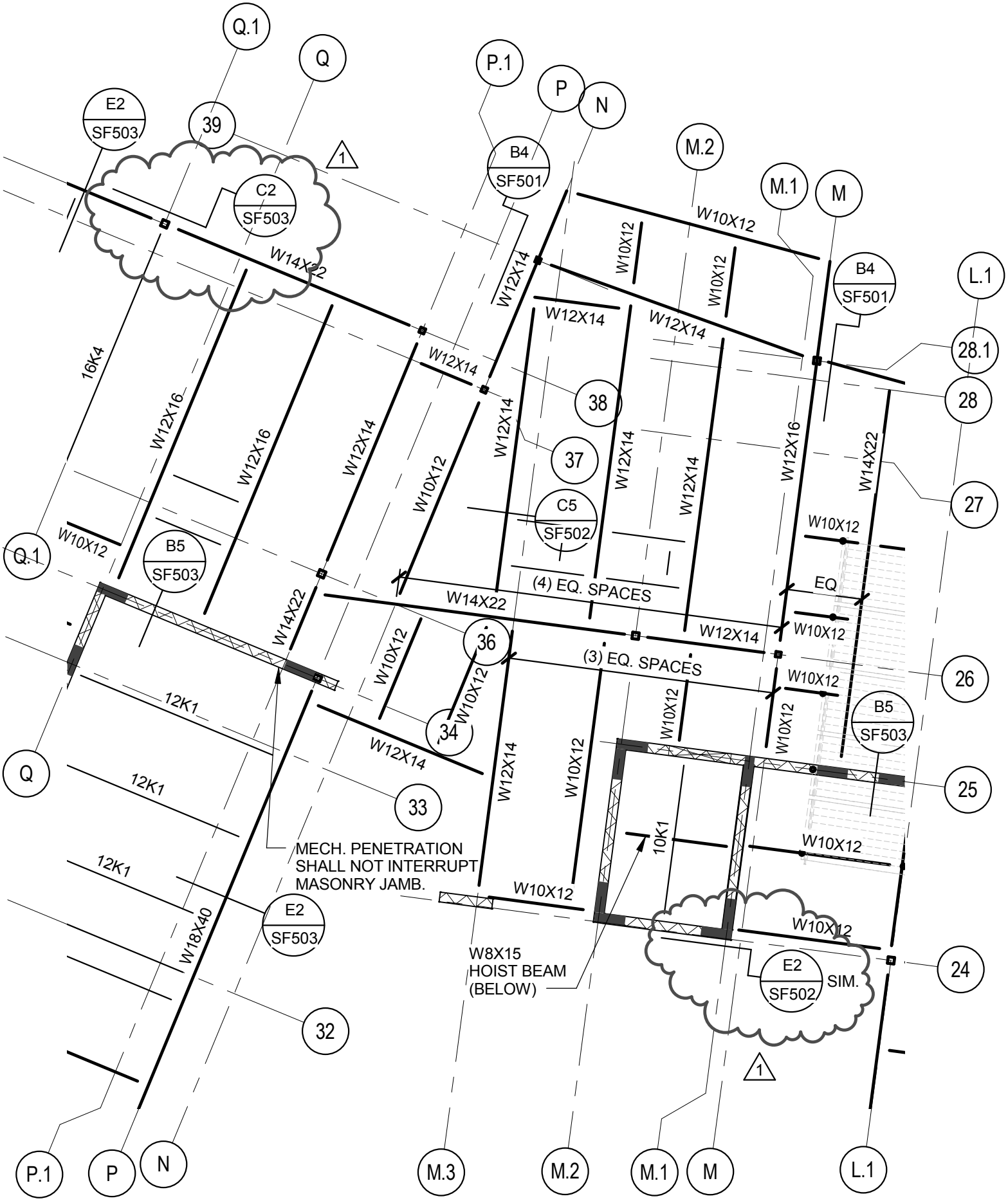

MHTN Architects, Inc.
420 East South Temple
Suite 100
Salt Lake City, Utah 84111
TEL 801.595.6700
FAX 801.595.6717
www.mhtn.com

WEBER STATE UNIVERSITY
RESIDENTIAL LIFE PHASE II - BLDG 3

PROJECT NO. 2010543

DATE: 04/28/2011

SHEET NUMBER
AD04_S05

SHEET REFERENCE
SF104

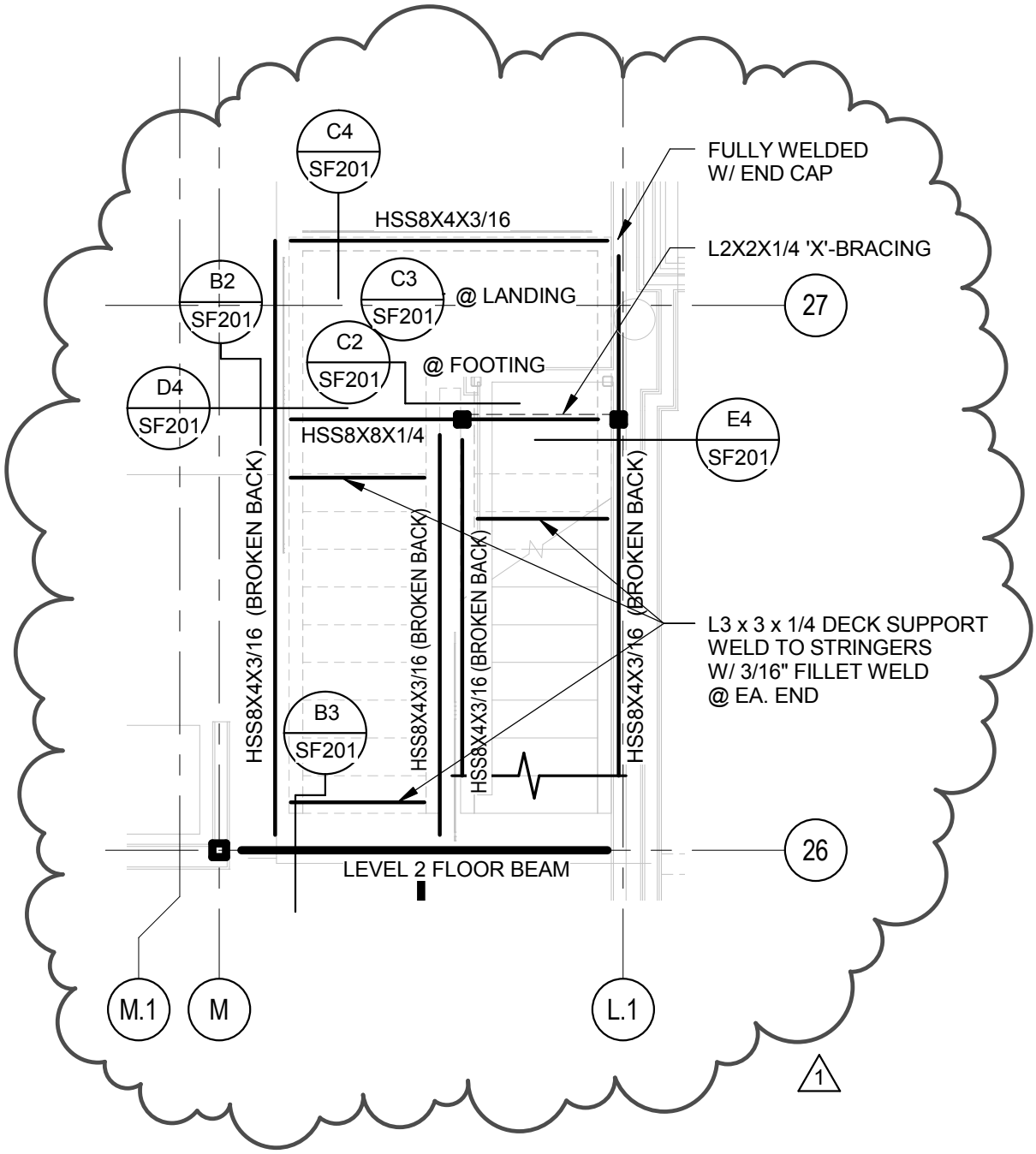

LEVEL 2 CENTER STAIR PLAN

SCALE : NONE

C
SF201

MHTN Architects, Inc.
420 East South Temple
Suite 100
Salt Lake City, Utah 84111
TEL 801.595.6700
FAX 801.595.6717
www.mhtn.com

WEBER STATE UNIVERSITY
RESIDENTIAL LIFE PHASE II - BLDG 3

PROJECT NO. 2010543

DATE:

SHEET NUMBER
AD04_S06

SHEET REFERENCE
SF201

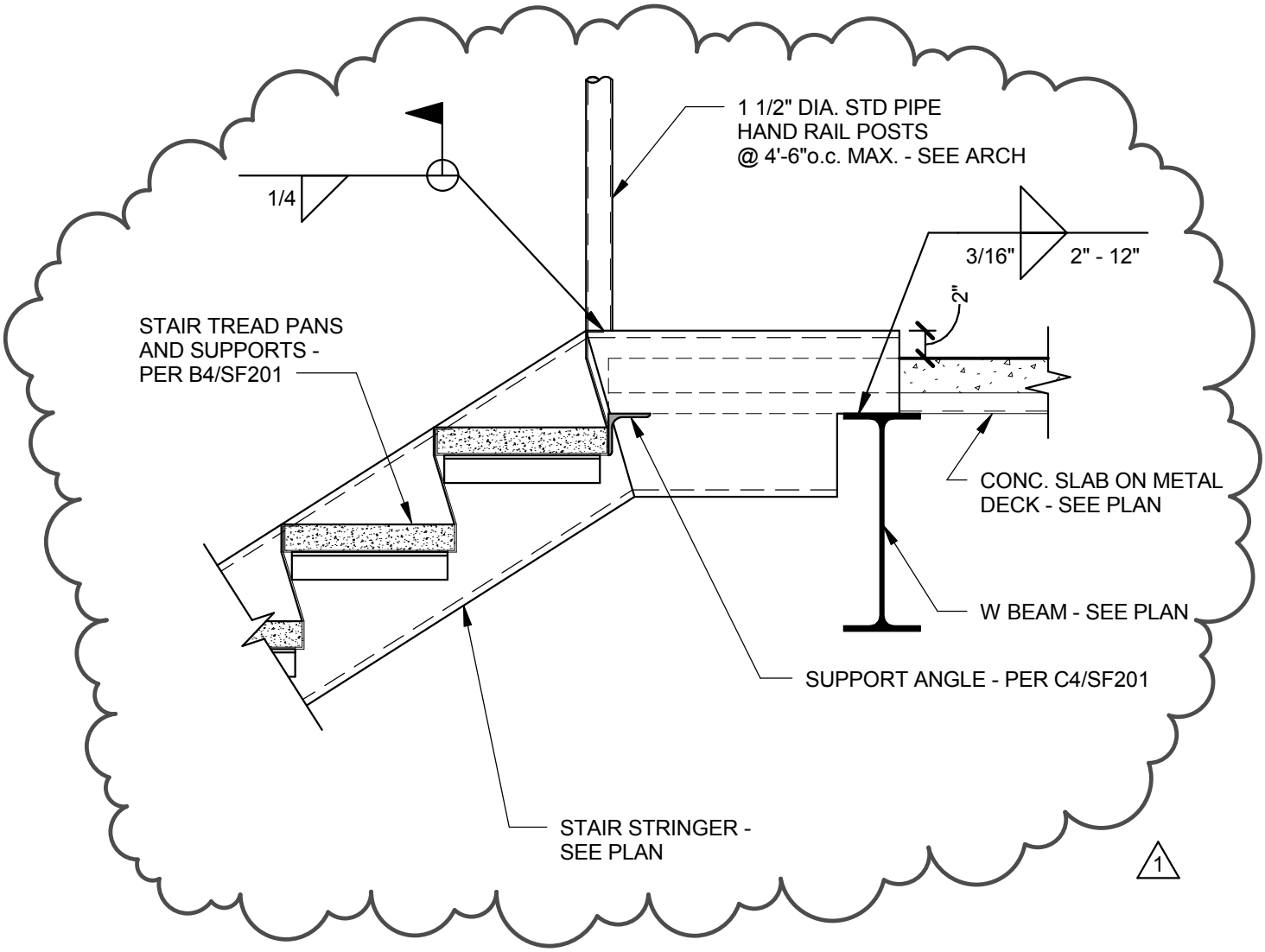

DETAIL

SCALE : NONE

E5
SF201

MHTN Architects, Inc.
420 East South Temple
Suite 100
Salt Lake City, Utah 84111
TEL 801.595.6700
FAX 801.595.6717
www.mhtn.com

WEBER STATE UNIVERSITY
RESIDENTIAL LIFE PHASE II - BLDG 3

PROJECT NO. 2010543

DATE: 04/28/2011

SHEET NUMBER
AD04_S07

SHEET REFERENCE
SF201

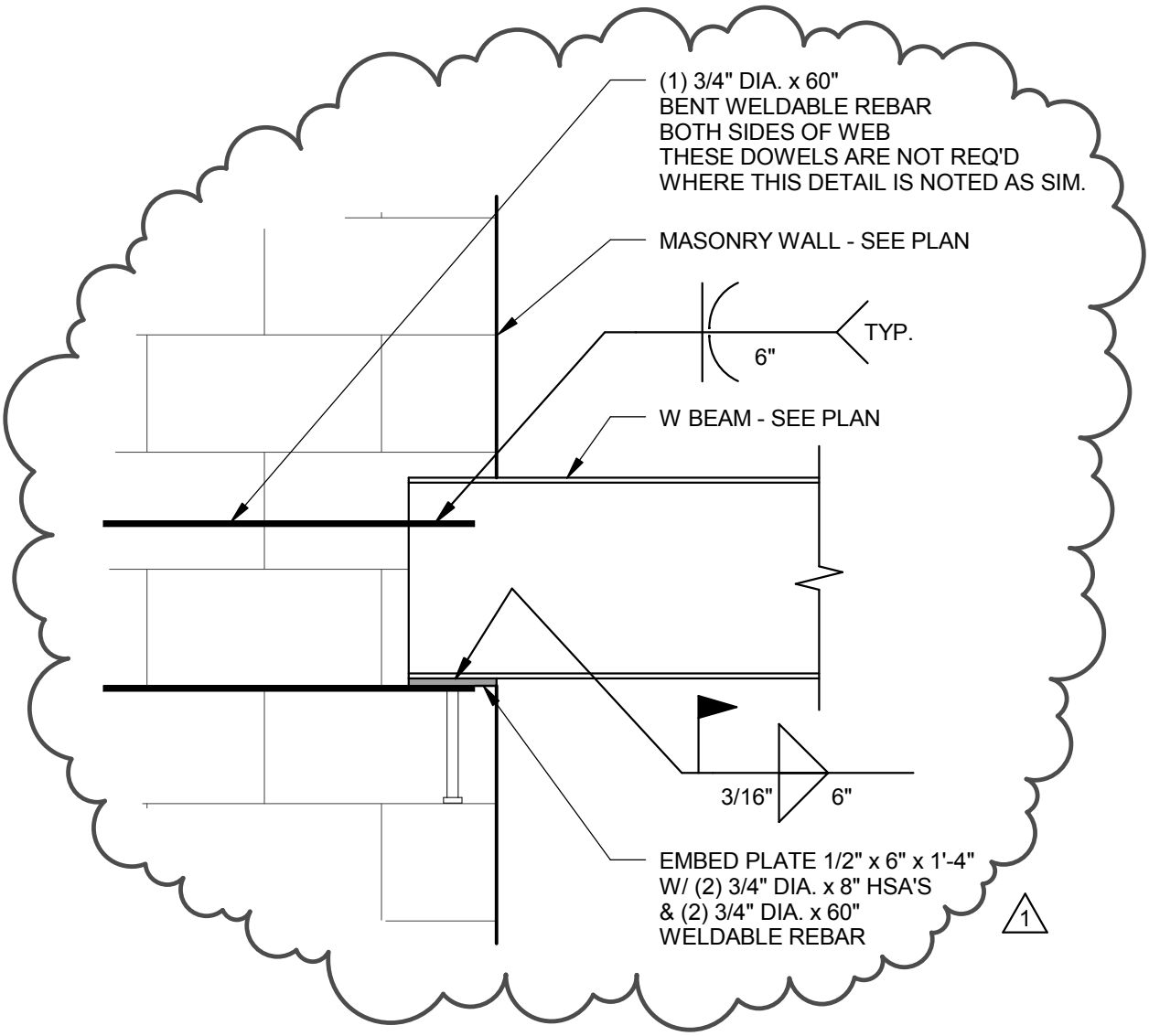

DETAIL

SCALE : NONE

E2
SF502

MHTN Architects, Inc.
420 East South Temple
Suite 100
Salt Lake City, Utah 84111
TEL 801.595.6700
FAX 801.595.6717
www.mhtn.com

WEBER STATE UNIVERSITY
RESIDENTIAL LIFE PHASE II - BLDG 3

PROJECT NO. 2010543

DATE: 04/28/2011

SHEET NUMBER
AD04_S08

SHEET REFERENCE
SF502

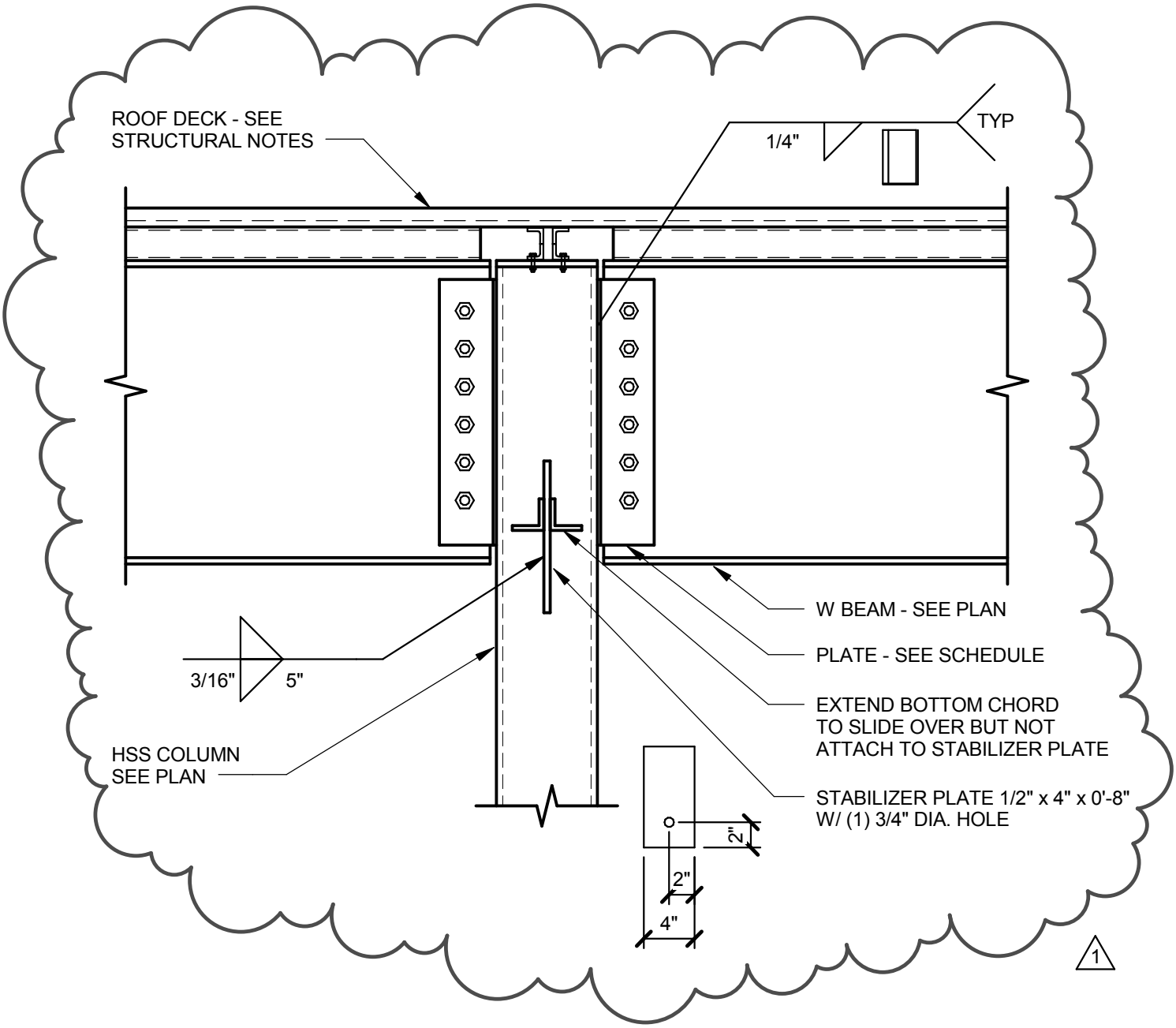

DETAIL

SCALE : NONE

C2
SF503

MHTN Architects, Inc.
420 East South Temple
Suite 100
Salt Lake City, Utah 84111
TEL 801.595.6700
FAX 801.595.6717
www.mhtn.com

WEBER STATE UNIVERSITY
RESIDENTIAL LIFE PHASE II - BLDG 3

PROJECT NO. 2010543

DATE: 04/28/2011

SHEET NUMBER
AD04_S09

SHEET REFERENCE
SF503

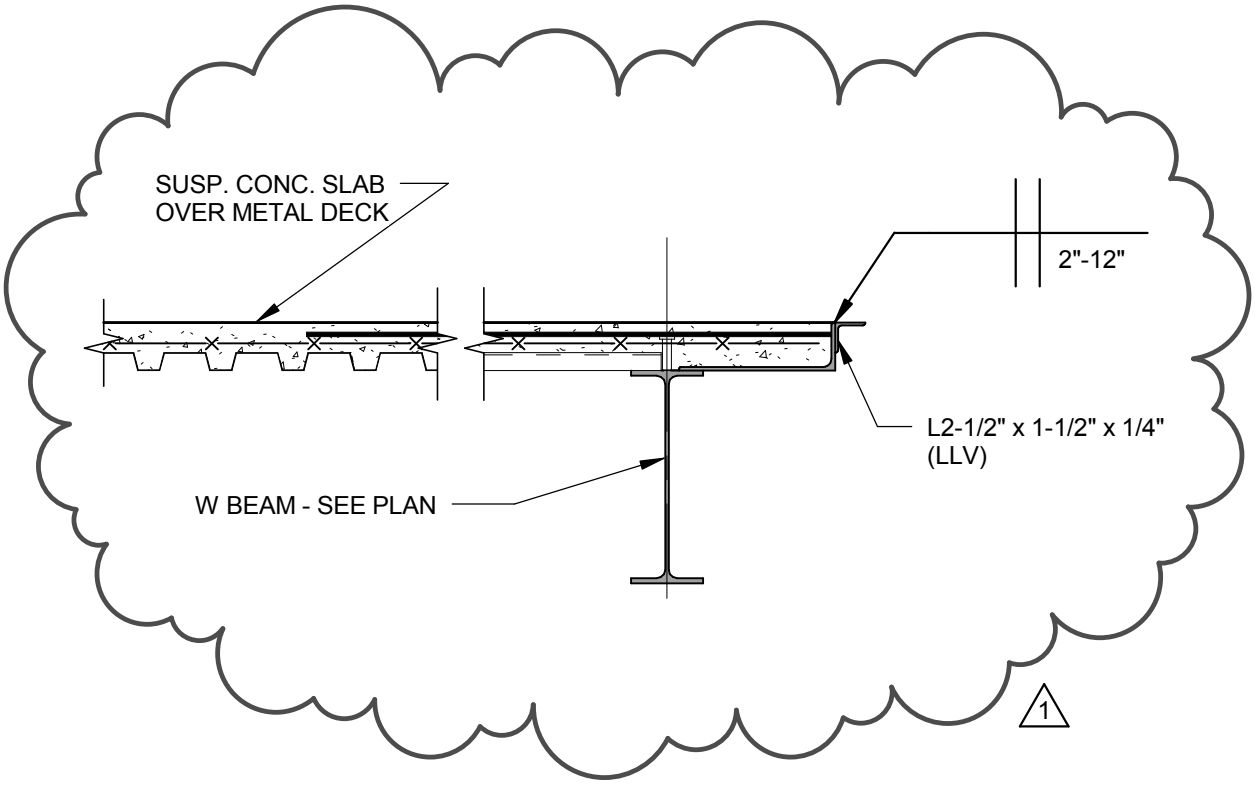

DETAIL

SCALE : NONE

D5
SF503

MHTN Architects, Inc.
420 East South Temple
Suite 100
Salt Lake City, Utah 84111
TEL 801.595.6700
FAX 801.595.6717
www.mhtn.com

WEBER STATE UNIVERSITY
RESIDENTIAL LIFE PHASE II - BLDG 3

PROJECT NO. 2010543

DATE: 04/28/2011

SHEET NUMBER
AD04_S10

SHEET REFERENCE
SF503

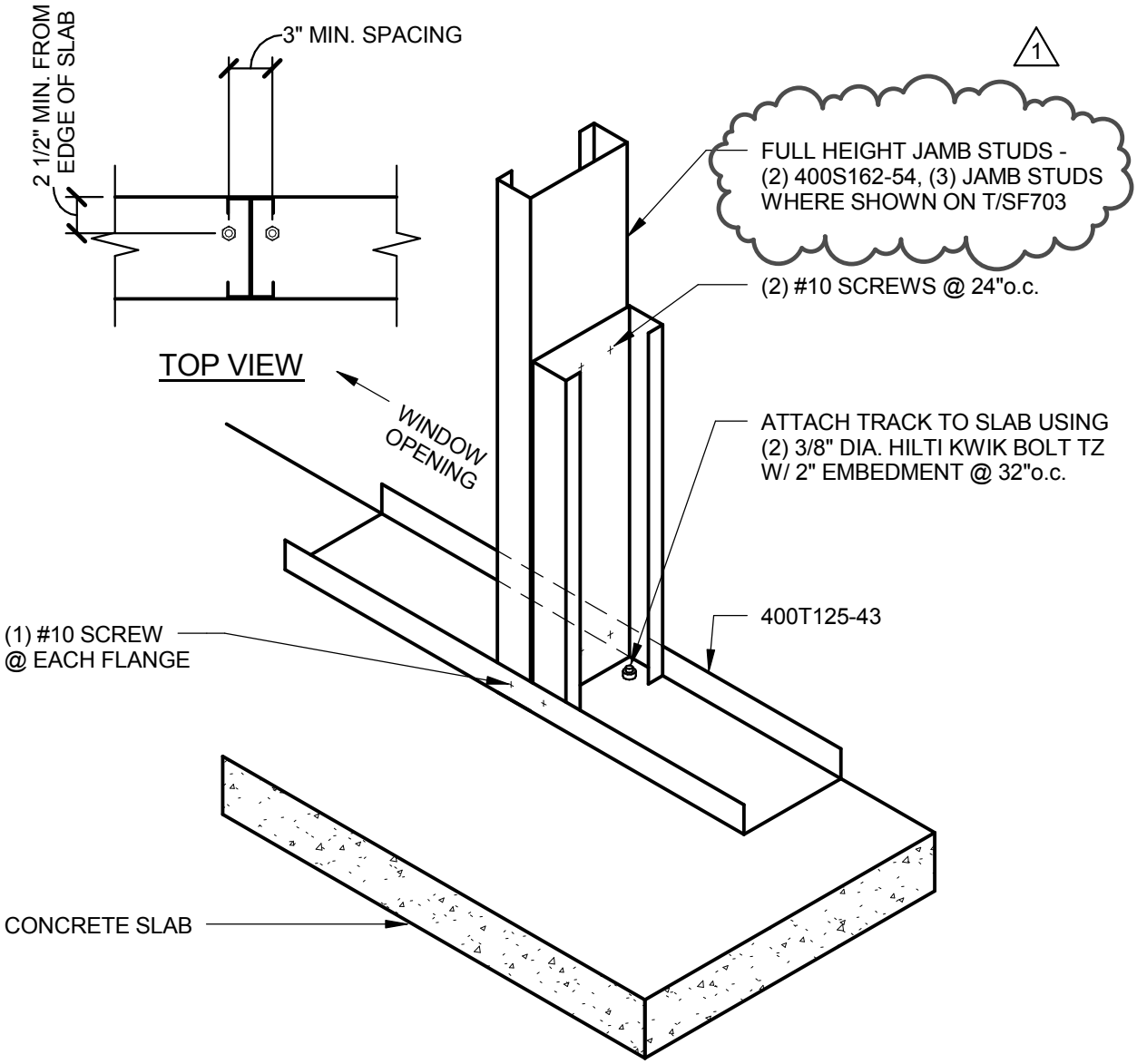

TYPICAL WINDOW JAMB ANCHORAGE

SCALE : NONE

A3
SF704

MHTN Architects, Inc.
420 East South Temple
Suite 100
Salt Lake City, Utah 84111
TEL 801.595.6700
FAX 801.595.6717
www.mhtn.com

WEBER STATE UNIVERSITY
RESIDENTIAL LIFE PHASE II - BLDG 3

PROJECT NO. 2010543

DATE: 04/28/2011

SHEET NUMBER
AD04_S11

SHEET REFERENCE
SF704

Colvin Engineering Associates, Inc.
HIGH PERFORMANCE DESIGN

MECHANICAL ADDENDUM NO. 4

WSU Residential Life Phase II Prg/Design Bldg. 3

CEA PROJECT NO. 2010-074.00

April 28, 2011

All contractors submitting proposals for this project shall be governed by the following addendum, changes, and explanations to the bidding documents. Bids shall be submitted in accordance with the following:

Item No.	Add, Delete or Clarify	Specification Section or Drawing No.	Reference / Description:
1	ADD	MH101	Added Dampers & Duct
2	ADD	MH102	Added Dampers & Duct
3	CLARIFY	MH103	Added Dampers & Duct. Clarify Grill Callout
4	CLARIFY	MH301	Add Exhaust Diagram & Enlarge Mechanical Room
5	CLARIFY	PL401	Clarify Plumbing Callouts & Sizes
6	CLARIFY	238146	The selected General Contractor, will provide this form complete, to the owner with Sub-Contractors list and bid bonds.
7	CLARIFY	230900	The selected General Contractor, will provide this form complete, to the owner with Sub-Contractors list and bid bonds.

PRODUCT SUBSTITUTIONS / PRIOR APPROVALS

Product Type	Alternate Manufacturers
Expansion Tanks	Patterson Pump Company
Pump Suction Diffusers	Patterson Pump Company
Flexible Connectors	Patterson Pump Company
HVAC Pumps	Patterson Pump Company
Boilers	Fulton
Unit Heater	Sigma Corporation
Cabinet Unit Heater	Sigma Corporation
Variable Frequency Drives	Cerus Industries
Plate & Frame Heat Exchanger	APV
Flex Duct	Quietflex
Airflow Measuring Stations	Ebtron, Paragon Controls
Centrifugal Fans	Greenheck
AL29-4C Boiler Flues	Van Packer, ProTech Systems
Electric Radiant Ceiling Panels	Q-Mark

HVAC / Energy Efficient Solutions / CFD Modeling / Air Pollution Control
244 West 300 North, Suite 200 / Salt Lake City, Utah 84103-1147 / 801.322.2400 / FAX 801.322.2416

Ductless Split Systems	Daikin AC
Makeup Air Units	Greenheck
Heat Pumps	McQuay, Mammoth, Addison
Expansion Joints	Twin City Hose
Cassette Style Ductless Splits	Sanyo
Lined Prefabricated Chimney	Ampco
Heat Pumps	Florida Heat Pumps

The above named alternate equipment manufacturers stand approved in name only. Approval here in no way relieves the supplier from complying with all other engineering, weight spatial, and quality requirements of equipment indicated in the contract documents. Contractors using products from the above named alternate manufacturers shall refer to Specification Section 15010 for detailed contractor responsibilities related to the use of alternate brands not used as the Basis of Design.

END OF ADDENDUM NO. 4

HVAC / Energy Efficient Solutions / CFD Modeling / Air Pollution Control
244 West 300 North, Suite 200 / Salt Lake City, Utah 84103-1147 / 801.322.2400 / FAX 801.322.2416

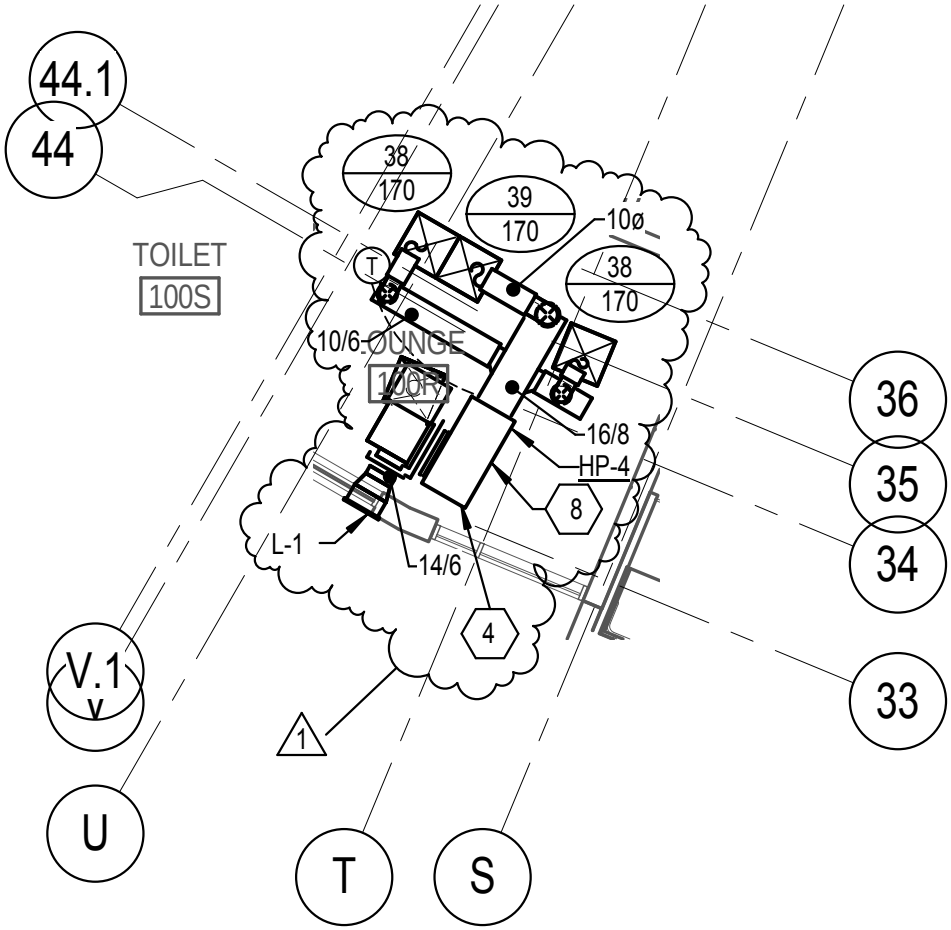

MHTN Architects, Inc.
420 East South Temple
Suite 100
Salt Lake City, Utah 84111
TEL 801.595.6700
FAX 801.595.6717
www.mhtn.com

WEBER STATE UNIVERSITY
RESIDENTIAL LIFE PHASE II - BLDG 3

PROJECT NO. 11008810

DATE: 04/28/11

SHEET NUMBER
ADD 4.0

SHEET REFERENCE
MH101

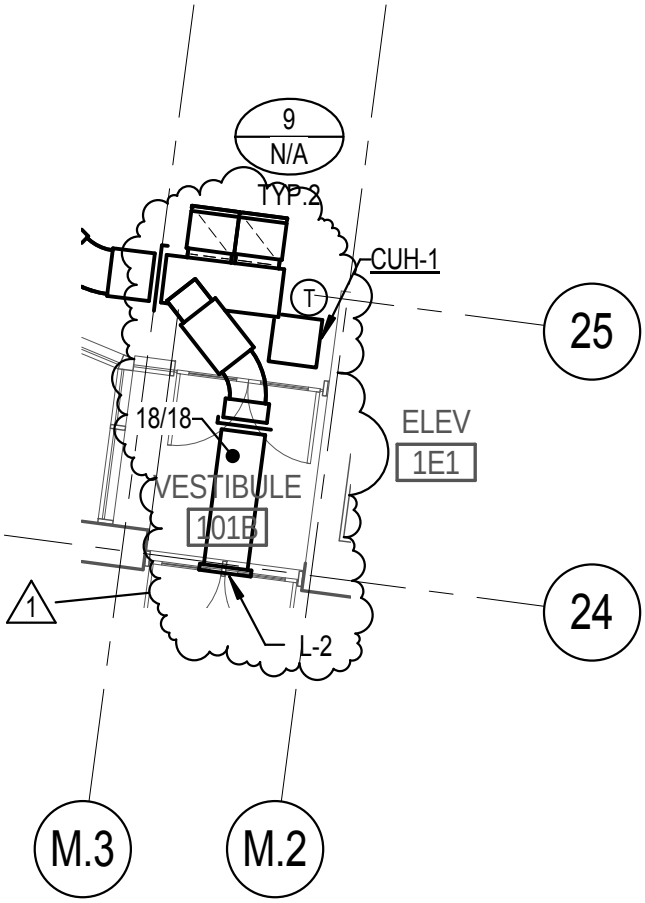

MHTN Architects, Inc.
420 East South Temple
Suite 100
Salt Lake City, Utah 84111
TEL 801.595.6700
FAX 801.595.6717
www.mhtn.com

WEBER STATE UNIVERSITY
RESIDENTIAL LIFE PHASE II - BLDG 3

PROJECT NO. 11008810

DATE: 04/28/11

SHEET NUMBER
ADD 4.1

SHEET REFERENCE
MH101

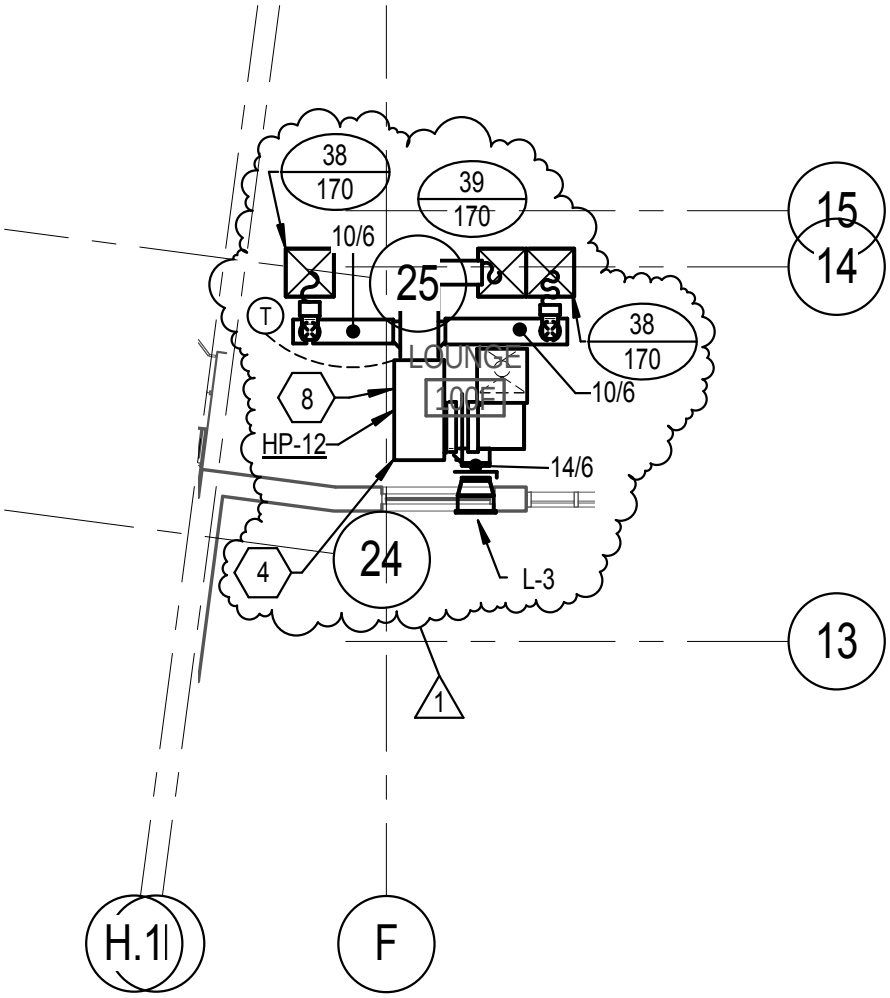

MHTN Architects, Inc.
420 East South Temple
Suite 100
Salt Lake City, Utah 84111
TEL 801.595.6700
FAX 801.595.6717
www.mhtn.com

WEBER STATE UNIVERSITY
RESIDENTIAL LIFE PHASE II - BLDG 3

PROJECT NO. 11008810

DATE: 04/28/11

SHEET NUMBER
ADD 4.2

SHEET REFERENCE
MH101

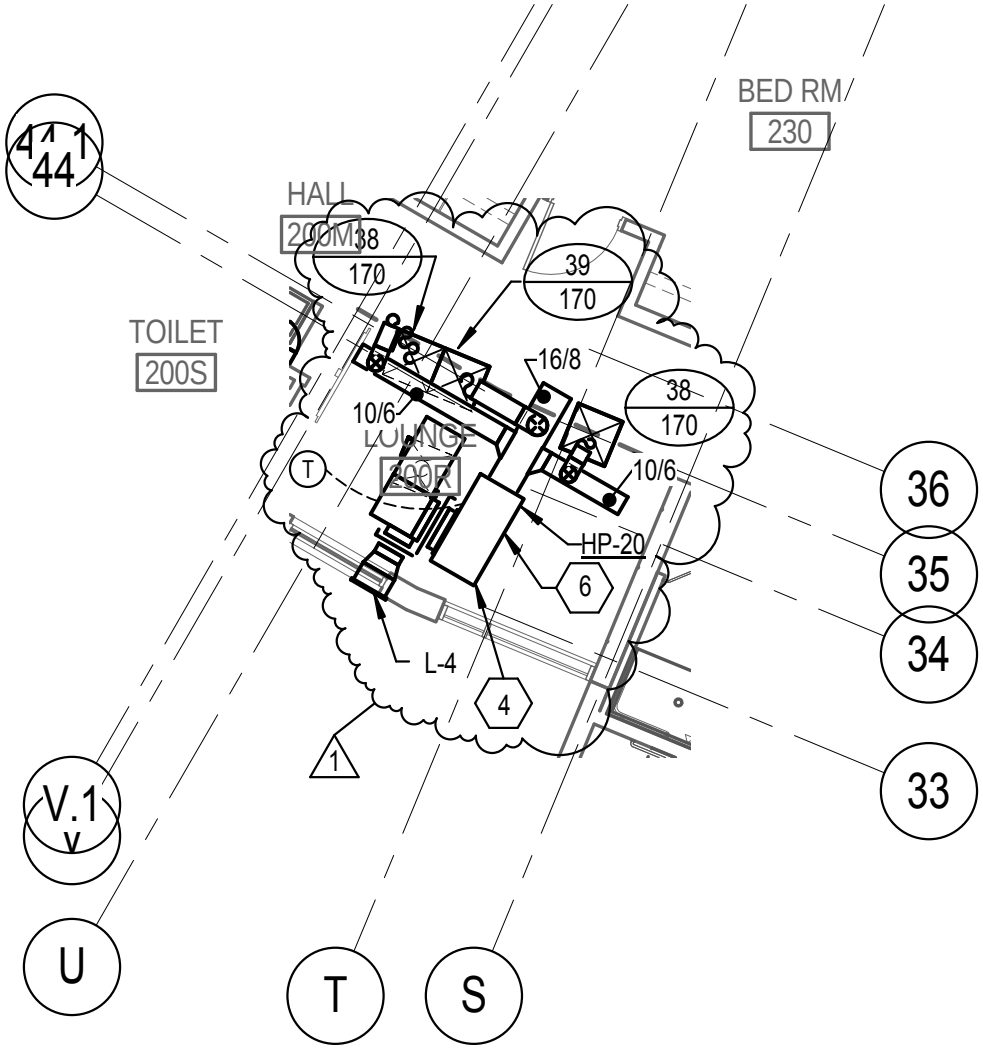

MHTN Architects, Inc.
420 East South Temple
Suite 100
Salt Lake City, Utah 84111
TEL 801.595.6700
FAX 801.595.6717
www.mhtn.com

WEBER STATE UNIVERSITY
RESIDENTIAL LIFE PHASE II - BLDG 3

PROJECT NO. 11008810

DATE: 04/27/11

SHEET NUMBER
ADD 4.3

SHEET REFERENCE
MH102

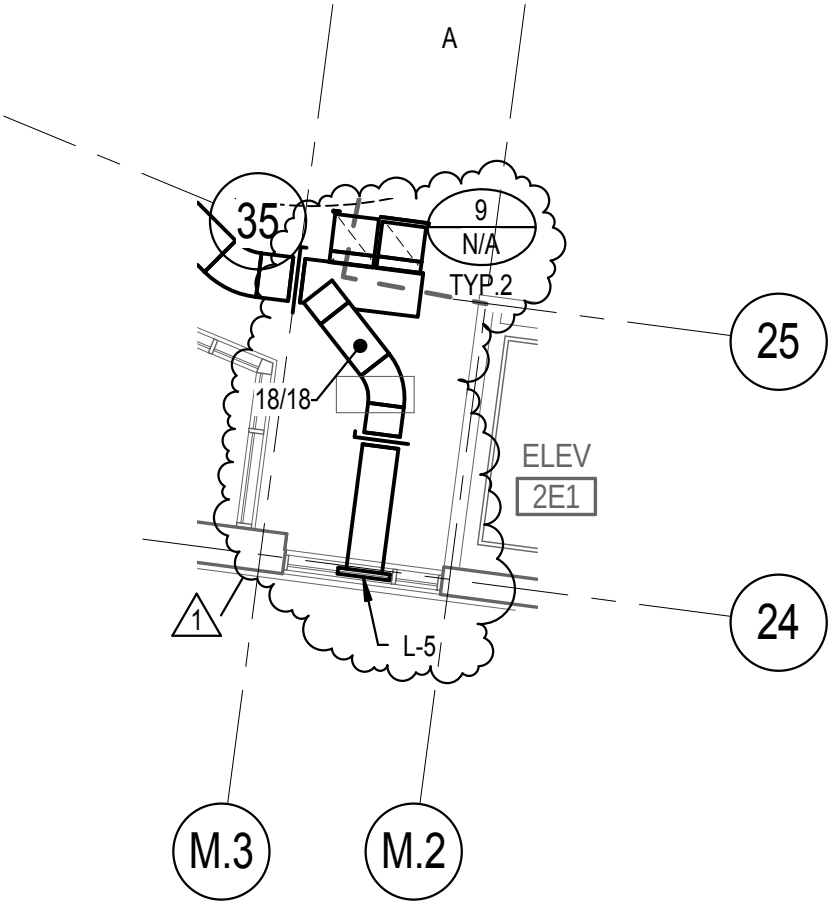

MHTN Architects, Inc.
420 East South Temple
Suite 100
Salt Lake City, Utah 84111
TEL 801.595.6700
FAX 801.595.6717
www.mhtn.com

WEBER STATE UNIVERSITY
RESIDENTIAL LIFE PHASE II - BLDG 3

PROJECT NO. 11008810

DATE: 04/28/11

SHEET NUMBER
ADD 4.4

SHEET REFERENCE
MH102

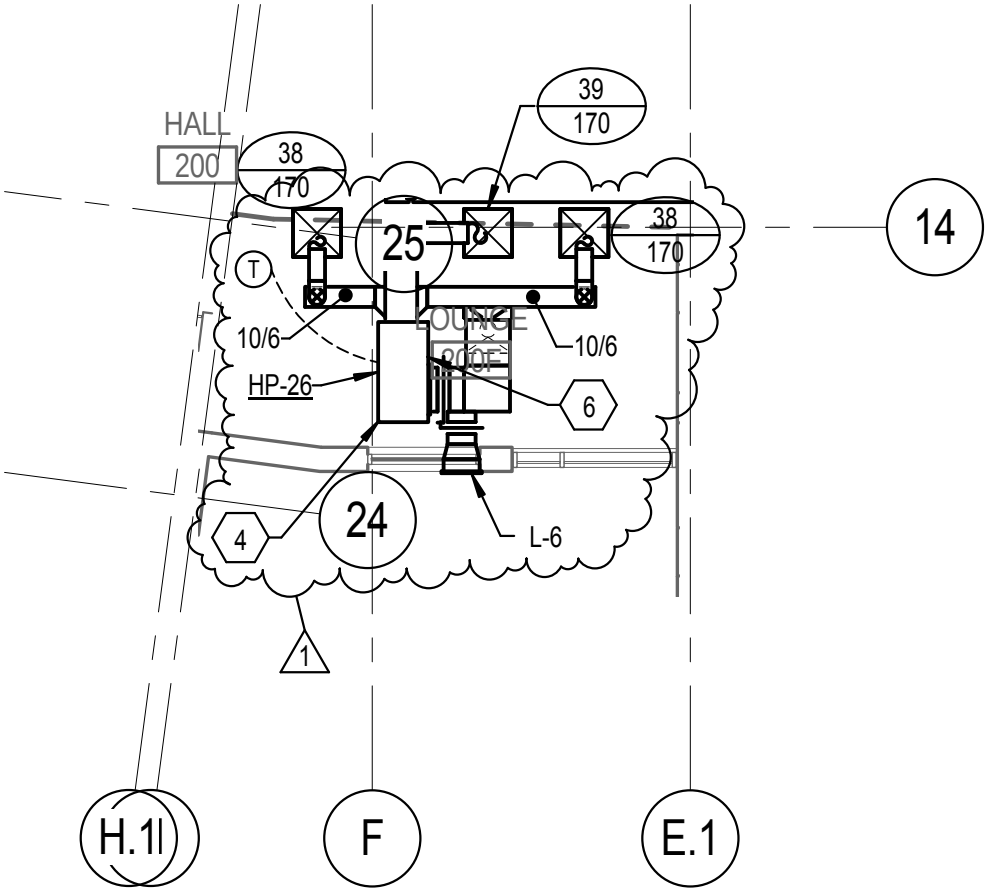

MHTN Architects, Inc.
420 East South Temple
Suite 100
Salt Lake City, Utah 84111
TEL 801.595.6700
FAX 801.595.6717
www.mhtn.com

WEBER STATE UNIVERSITY
RESIDENTIAL LIFE PHASE II - BLDG 3

PROJECT NO. 11008810

DATE: 04/28/11

SHEET NUMBER
ADD 4.5

SHEET REFERENCE
MH102

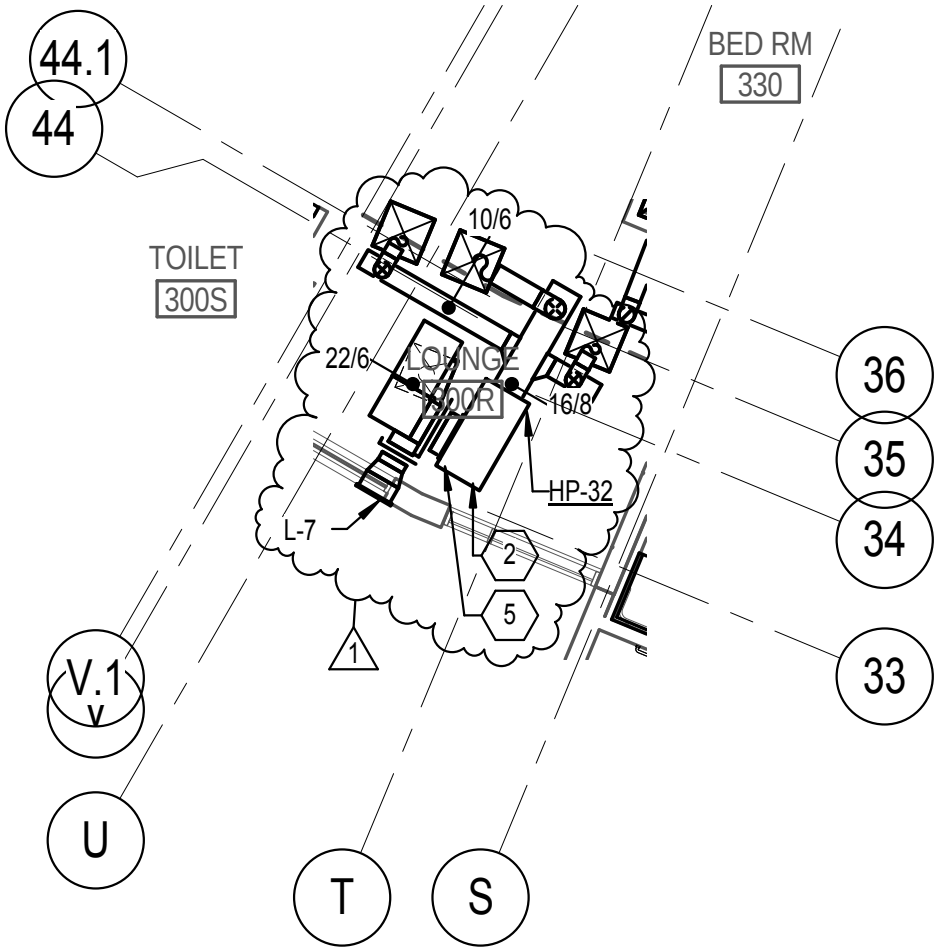

MHTN Architects, Inc.
420 East South Temple
Suite 100
Salt Lake City, Utah 84111
TEL 801.595.6700
FAX 801.595.6717
www.mhtn.com

WEBER STATE UNIVERSITY
RESIDENTIAL LIFE PHASE II - BLDG 3

PROJECT NO. 11008810

DATE: 04/28/11

SHEET NUMBER
ADD 4.6

SHEET REFERENCE
MH103

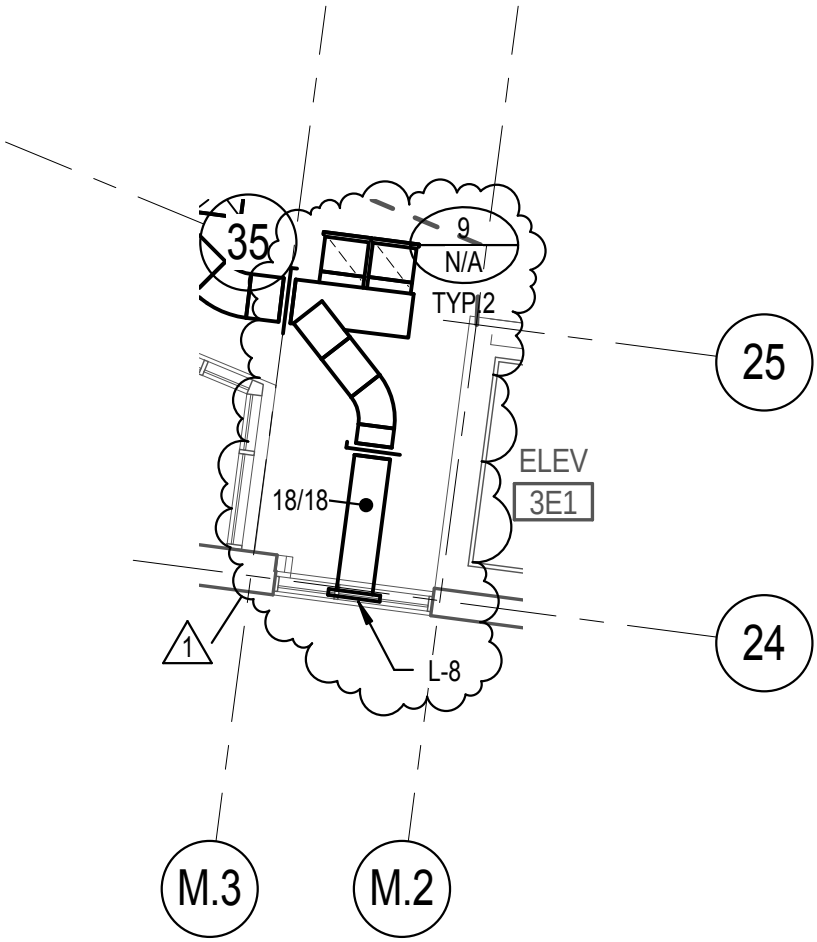

MHTN Architects, Inc.
420 East South Temple
Suite 100
Salt Lake City, Utah 84111
TEL 801.595.6700
FAX 801.595.6717
www.mhtn.com

WEBER STATE UNIVERSITY
RESIDENTIAL LIFE PHASE II - BLDG 3

PROJECT NO. 11008810

DATE: 04/28/11

SHEET NUMBER
ADD 4.7

SHEET REFERENCE
MH103

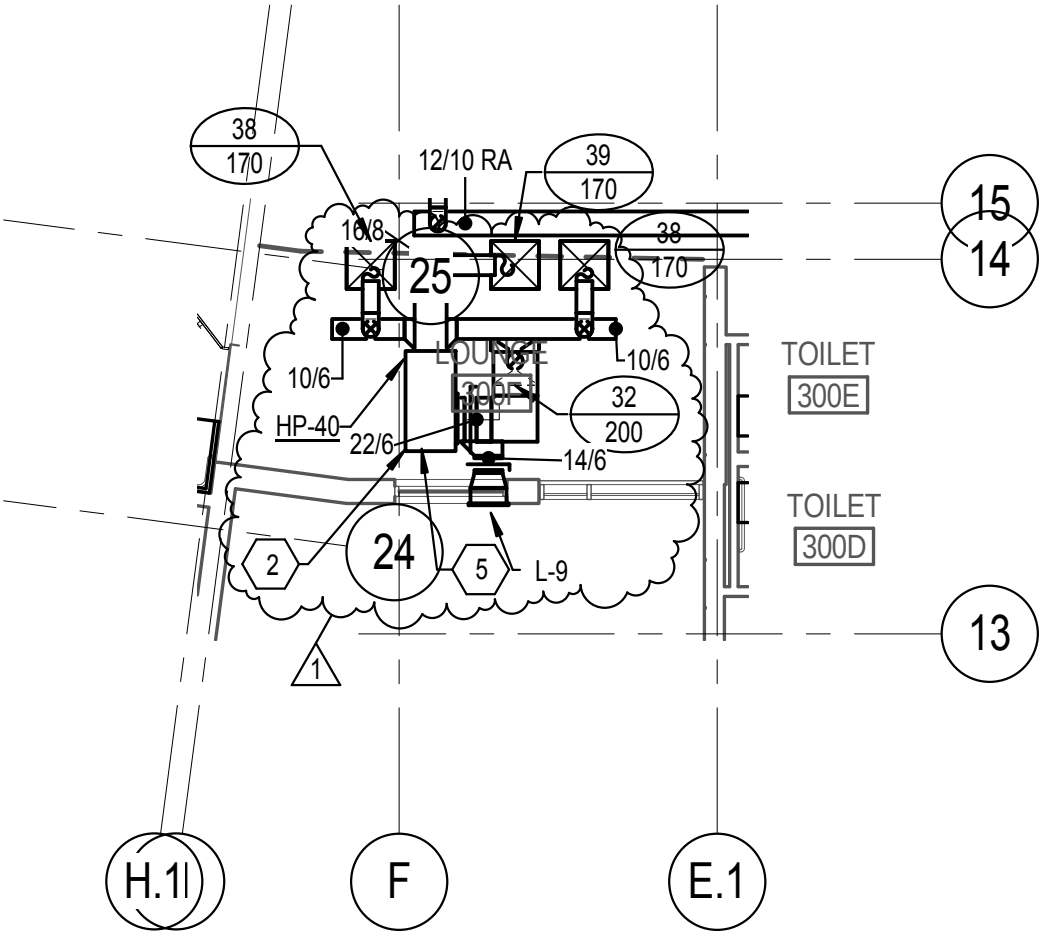

MHTN Architects, Inc.
420 East South Temple
Suite 100
Salt Lake City, Utah 84111
TEL 801.595.6700
FAX 801.595.6717
www.mhtn.com

WEBER STATE UNIVERSITY
RESIDENTIAL LIFE PHASE II - BLDG 3

PROJECT NO. 11008810

DATE: 04/28/11

SHEET NUMBER
ADD 4.8

SHEET REFERENCE
MH103

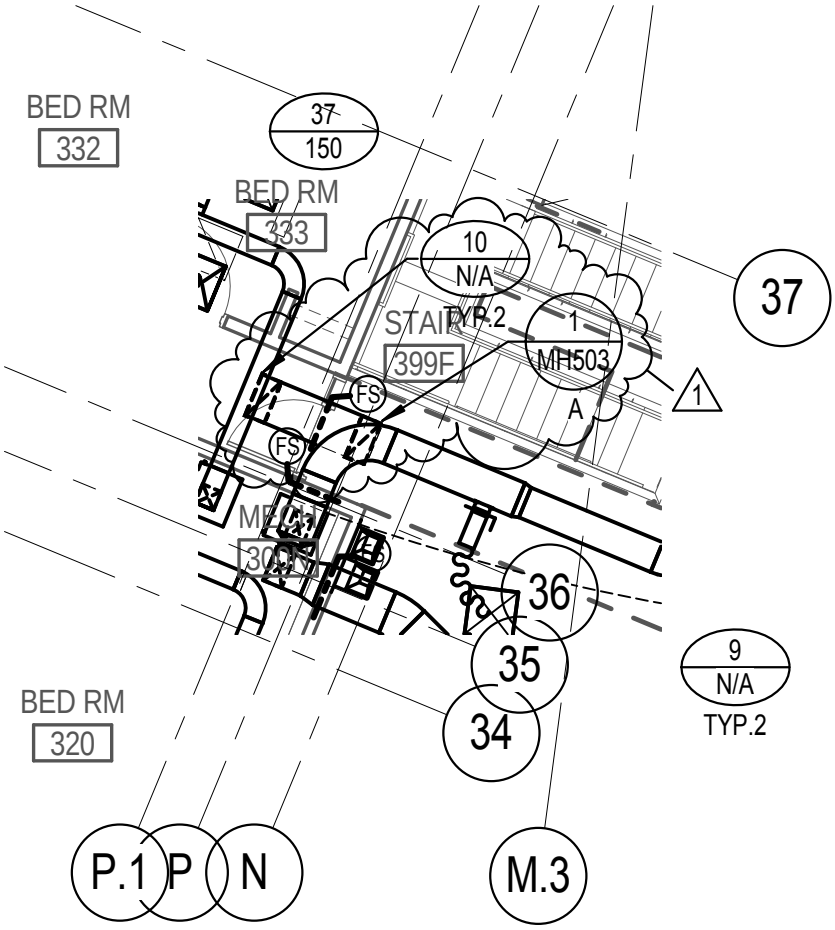

MHTN Architects, Inc.
420 East South Temple
Suite 100
Salt Lake City, Utah 84111
TEL 801.595.6700
FAX 801.595.6717
www.mhtn.com

WEBER STATE UNIVERSITY
RESIDENTIAL LIFE PHASE II - BLDG 3

PROJECT NO. 11008810

DATE: 04/28/11

SHEET NUMBER
ADD 4.9

SHEET REFERENCE
MH103

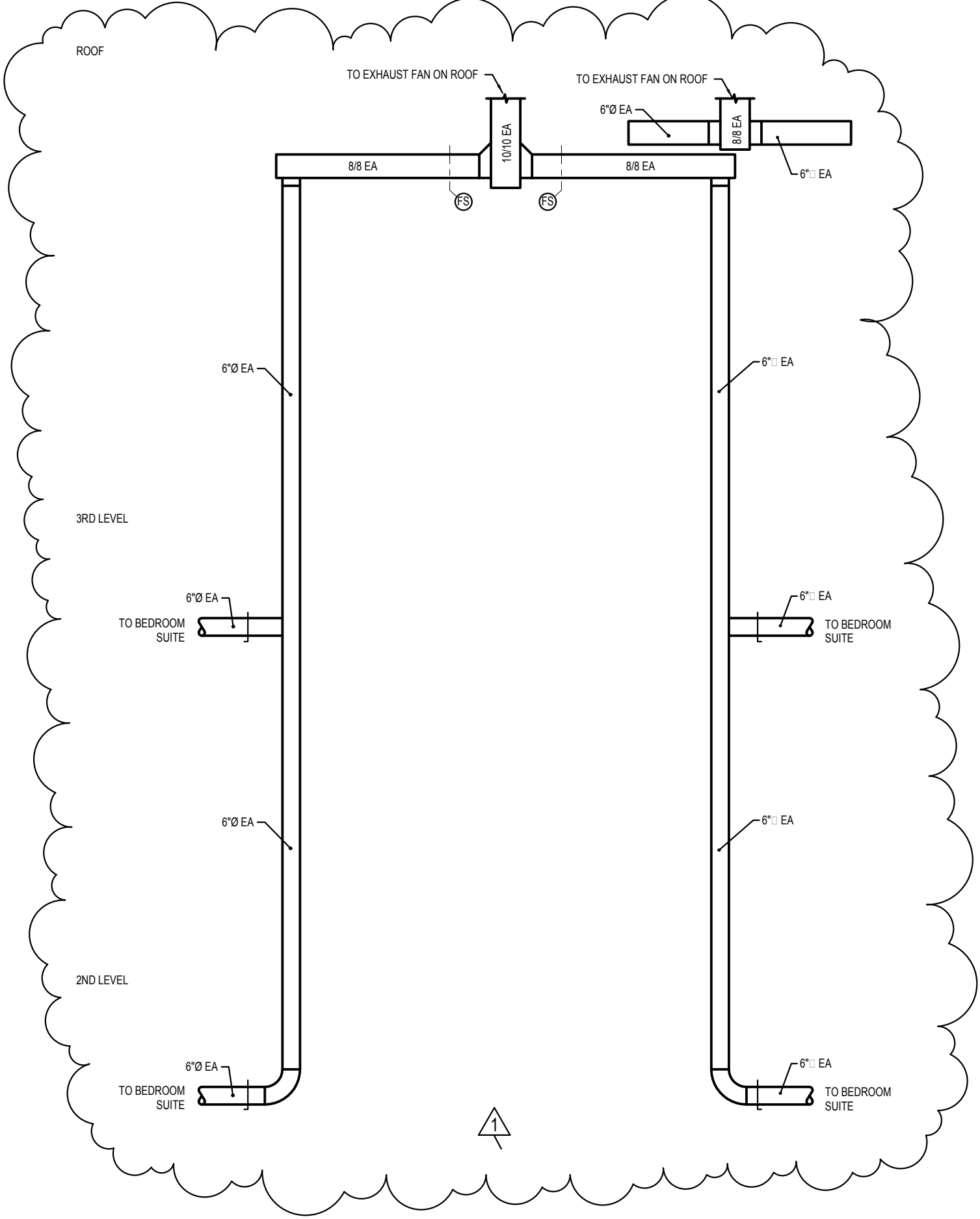

MHTN Architects, Inc.
420 East South Temple
Suite 100
Salt Lake City, Utah 84111
TEL 801.595.6700
FAX 801.595.6717
www.mhtn.com

WEBER STATE UNIVERSITY
RESIDENTIAL LIFE PHASE II - BLDG 3

PROJECT NO. 11008810

DATE: 04/28/11

SHEET NUMBER
ADD 4.10

SHEET REFERENCE
MH301

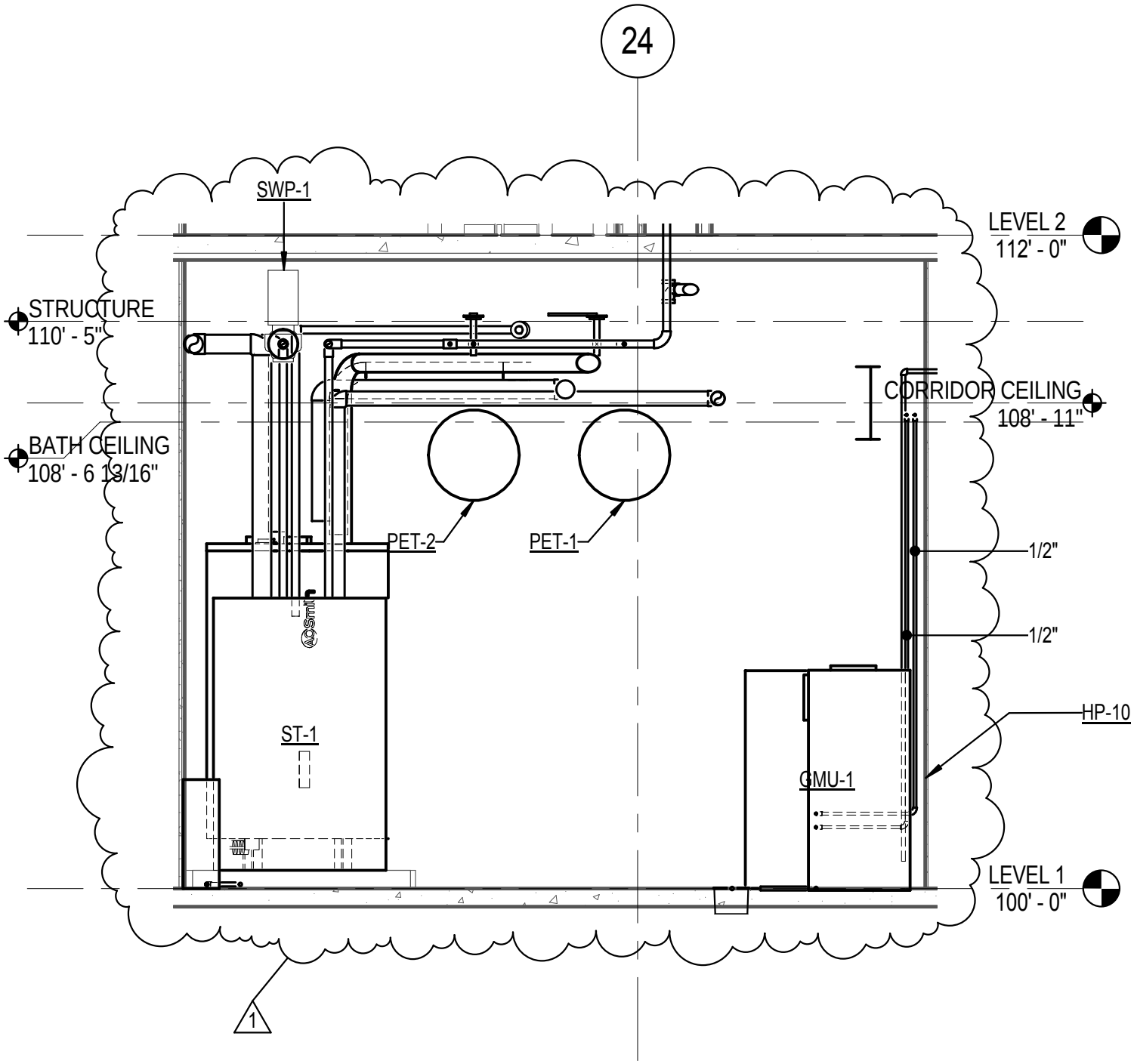

MHTN Architects, Inc.
420 East South Temple
Suite 100
Salt Lake City, Utah 84111
TEL 801.595.6700
FAX 801.595.6717
www.mhtn.com

WEBER STATE UNIVERSITY
RESIDENTIAL LIFE PHASE II - BLDG 3

PROJECT NO. 11008810

DATE: 04/28/11

SHEET NUMBER
ADD 4.11

SHEET REFERENCE
MH301

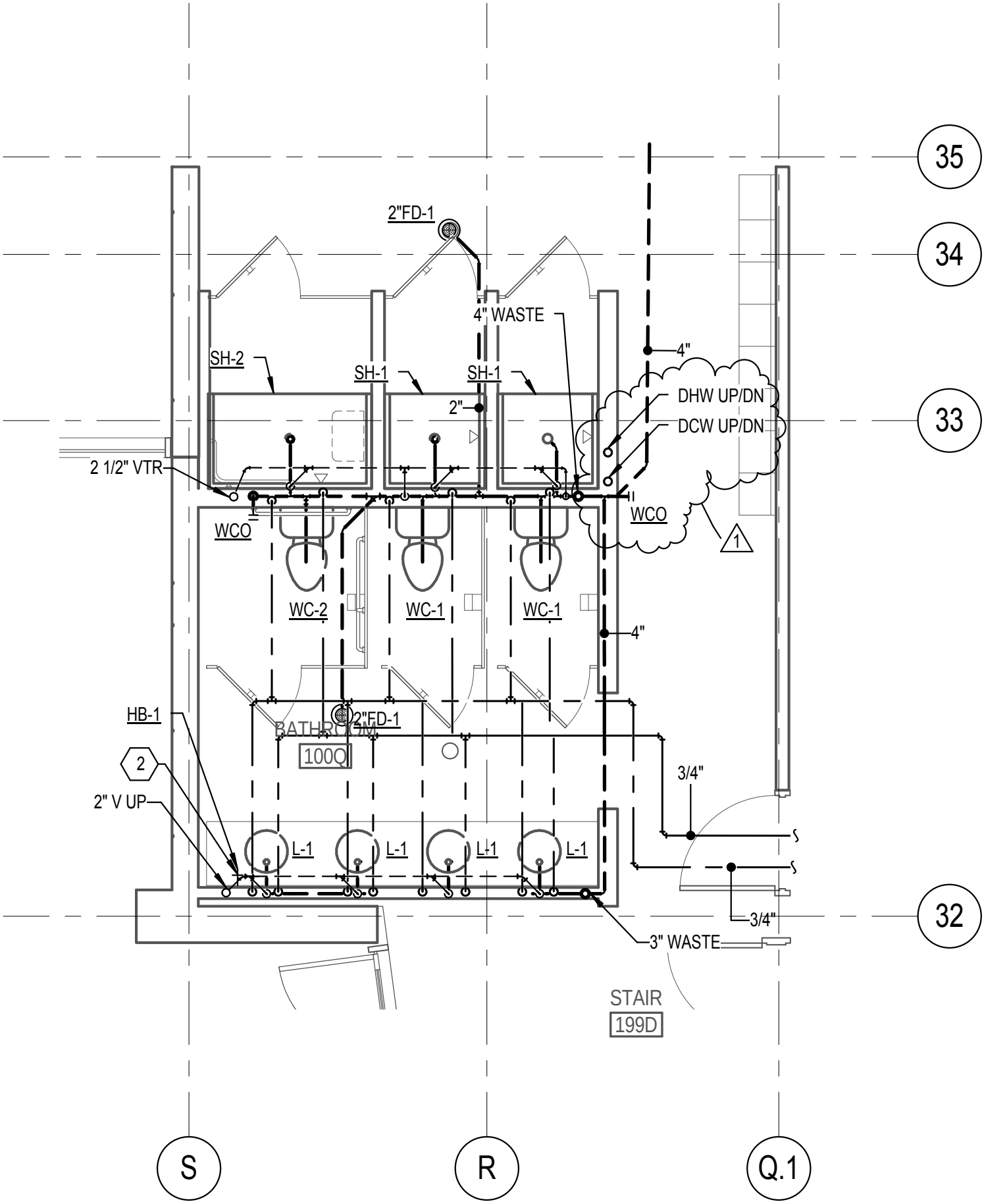

MHTN Architects, Inc.
420 East South Temple
Suite 100
Salt Lake City, Utah 84111
TEL 801.595.6700
FAX 801.595.6717
www.mhtn.com

WEBER STATE UNIVERSITY
RESIDENTIAL LIFE PHASE II - BLDG 3

PROJECT NO. 11008810

DATE: 04/28/11

SHEET NUMBER
ADD 4.12

SHEET REFERENCE
PL401

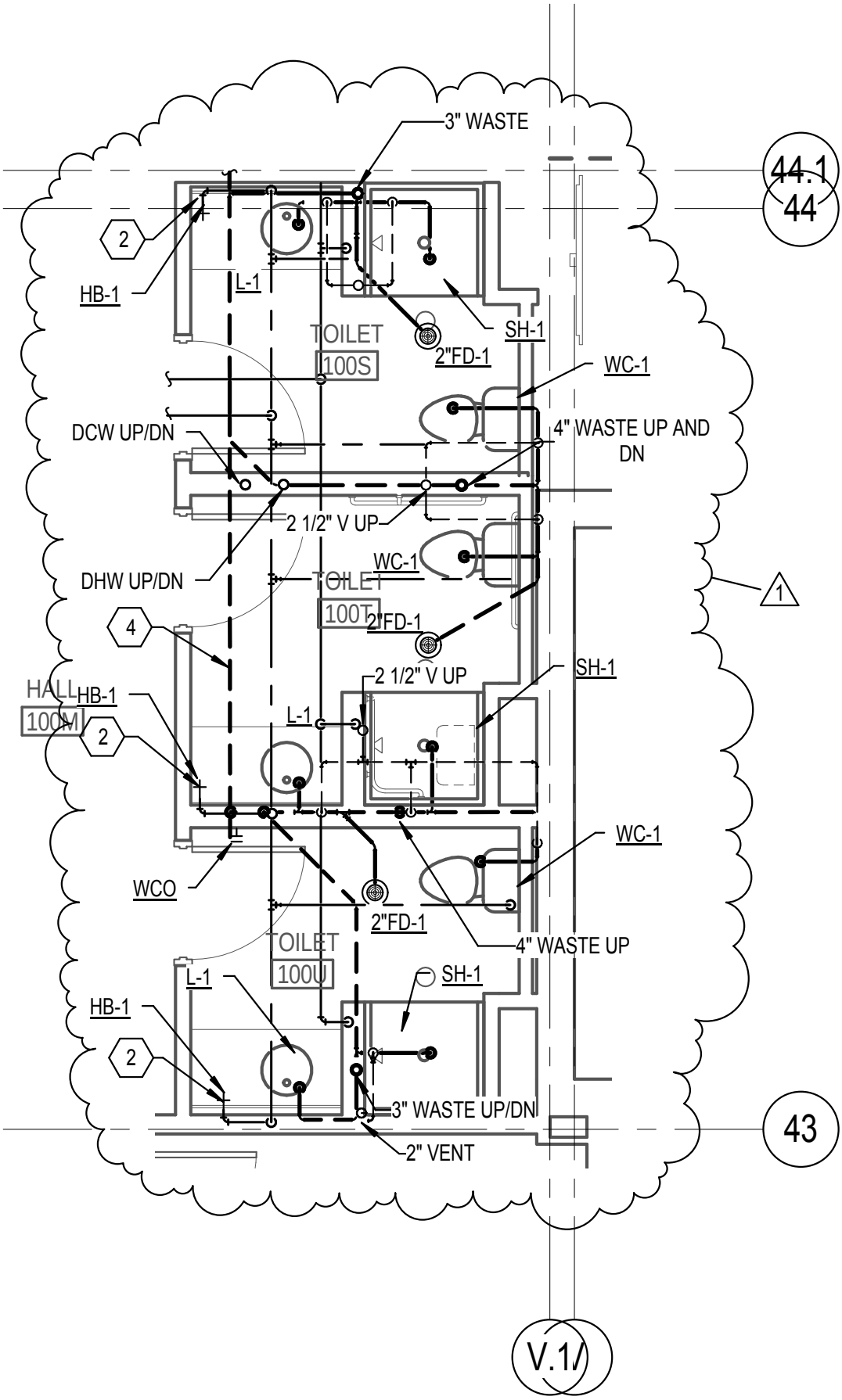

MHTN Architects, Inc.
420 East South Temple
Suite 100
Salt Lake City, Utah 84111
TEL 801.595.6700
FAX 801.595.6717
www.mhtn.com

WEBER STATE UNIVERSITY
RESIDENTIAL LIFE PHASE II - BLDG 3

PROJECT NO. 11008810

DATE: 04/28/11

SHEET NUMBER
ADD 4.13

SHEET REFERENCE
PL401

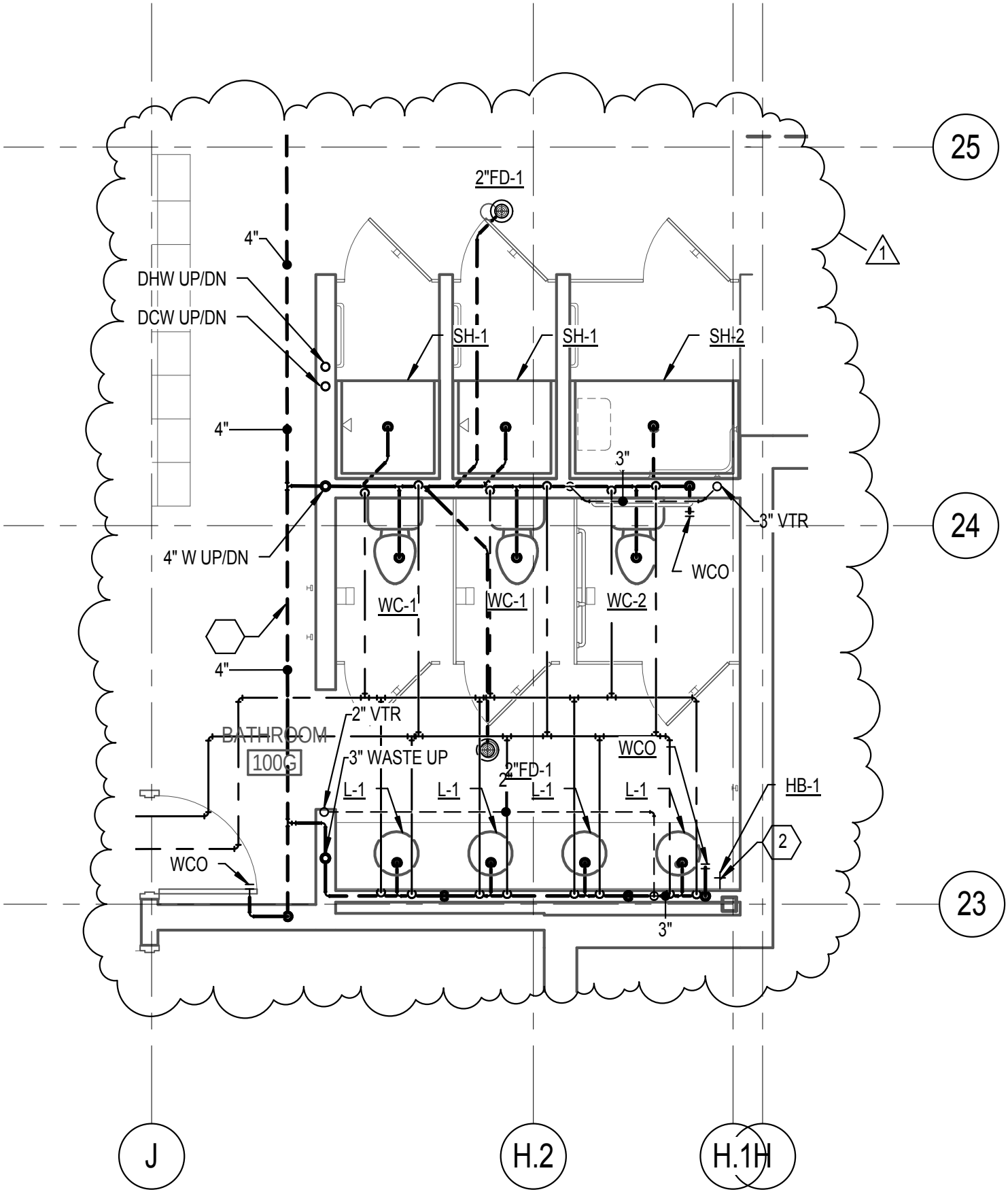

MHTN Architects, Inc.
420 East South Temple
Suite 100
Salt Lake City, Utah 84111
TEL 801.595.6700
FAX 801.595.6717
www.mhtn.com

WEBER STATE UNIVERSITY
RESIDENTIAL LIFE PHASE II - BLDG 3

PROJECT NO. 11008810

DATE: 04/28/11

SHEET NUMBER
ADD 4.14

SHEET REFERENCE
PL401

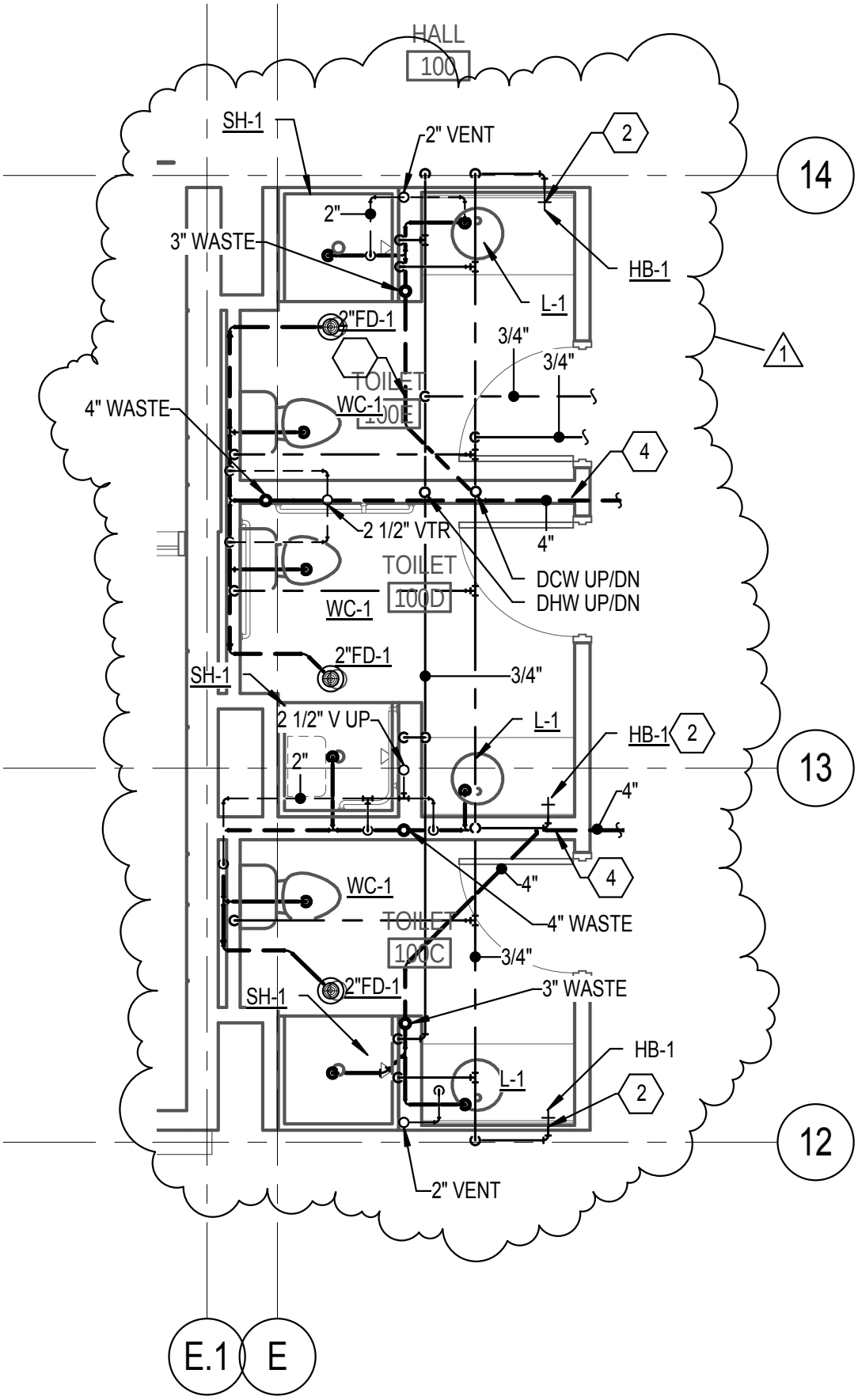

MHTN Architects, Inc.
420 East South Temple
Suite 100
Salt Lake City, Utah 84111
TEL 801.595.6700
FAX 801.595.6717
www.mhtn.com

WEBER STATE UNIVERSITY
RESIDENTIAL LIFE PHASE II - BLDG 3

PROJECT NO. 11008810

DATE: 04/28/11

SHEET NUMBER
ADD 4.15

SHEET REFERENCE
PL401

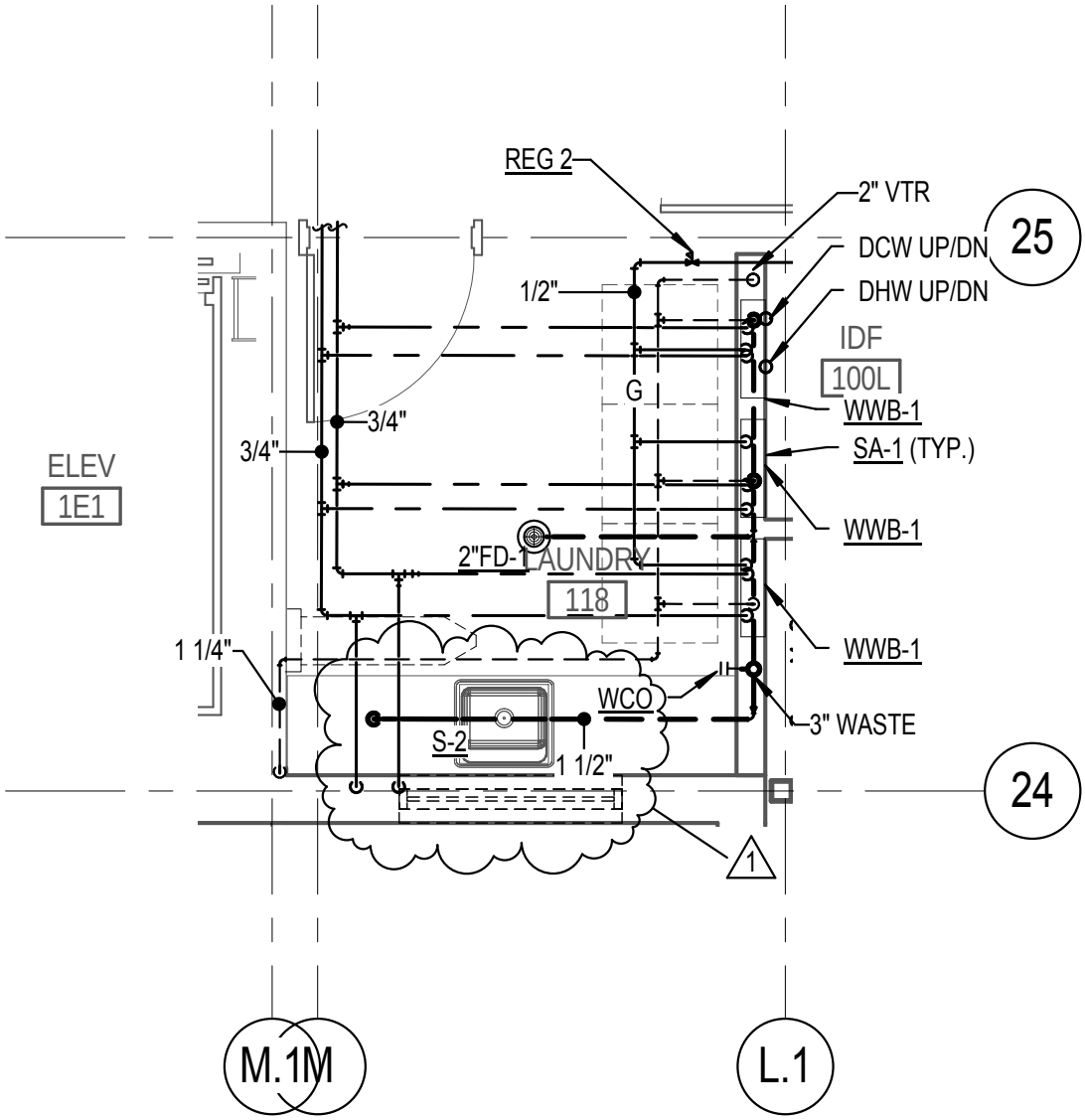

MHTN Architects, Inc.
420 East South Temple
Suite 100
Salt Lake City, Utah 84111
TEL 801.595.6700
FAX 801.595.6717
www.mhtn.com

WEBER STATE UNIVERSITY
RESIDENTIAL LIFE PHASE II - BLDG 3

PROJECT NO. 11008810

DATE: 04/28/11

SHEET NUMBER
ADD 4.16

SHEET REFERENCE
PL401

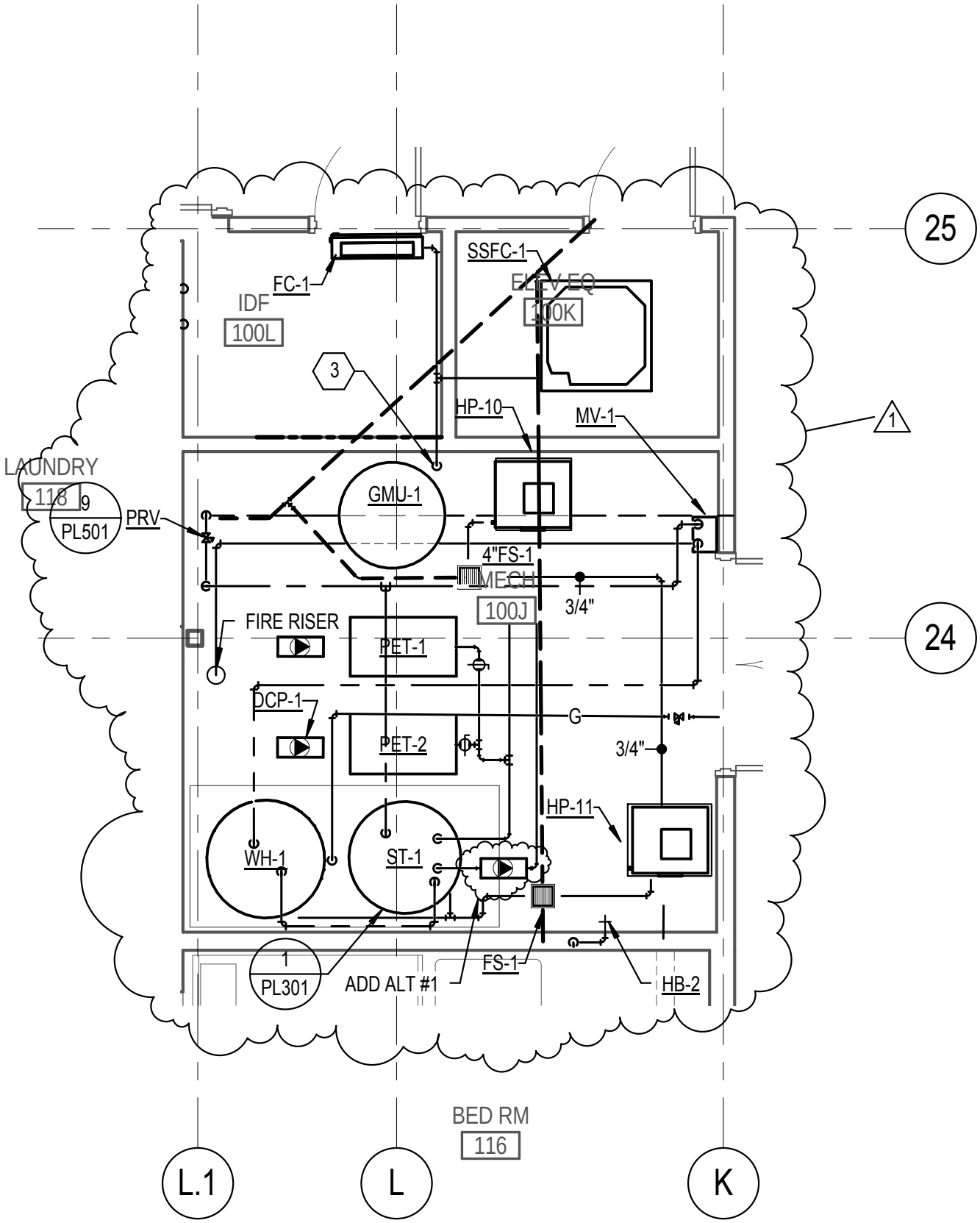

MHTN Architects, Inc.
420 East South Temple
Suite 100
Salt Lake City, Utah 84111
TEL 801.595.6700
FAX 801.595.6717
www.mhtn.com

WEBER STATE UNIVERSITY
RESIDENTIAL LIFE PHASE II - BLDG 3

PROJECT NO. 11008810

DATE: 04/28/11

SHEET NUMBER
ADD 4.17

SHEET REFERENCE
PL401

ECE
ELECTRICAL CONSULTING ENGINEERS

Addendum No. Four
for the
Weber State University Residential Life Phase 2 Building 3
Construction Documents
DFCM Project No. 11008810

All Contractors submitting proposals on the above captioned project shall be governed by the following addendum, changes and explanations to the bidding documents dated 14 April, 2011 and shall submit their bids in accordance therewith:

CHANGES TO THE DRAWINGS: IN ORDER AS FOLLOWS:

E1.1 SHEET EE001

1. Light Fixture Schedule:
   a. Note #2 at the end of the fixture schedule is to read "All fluorescent lamps shall have a 4100 degree color temperature unless indicated otherwise.
   b. Fixture type T-8 has been deleted.
   c. Fixture type T-10, custom color is to be selected by the architect.
   d. Fixture Type T-11, Halo, Prescolite and Lithonia are approved manufacturers.
   e. Fixture Type T-12, Portfolio is an approved manufacturer.
   f. Fixture type T-15 has been deleted.
   g. Fixture Type T-16, Atlantic is an approved manufacturer.
   h. Fixture Type T-17, Metalux is an approved manufacturer.
   i. Fixture Type T-18, WAC Lighting and Delray are approved manufacturers.
   j. Fixture Type T-19, Architectural Lighting Works and Axis are approved manufacturers.

E1.2 SHEET EE005

1. Refer to the attached revised detail for changes to anchor bolts for pole mounted light fixtures. See attached **AD04-01 & AD04-02.**

E1.3 SHEET EE008

1. Circuit 1PA-23 shall be spare 20A, 1-pole circuit breaker.
2. Circuit 1PA-25 shall be spare 20A, 1-pole circuit breaker.
3. Circuit 1PB-20 shall be spare 20A, 1-pole circuit breaker.
4. Circuit 1PB-22 shall be spare 20A, 1-pole circuit breaker.
5. Circuit 1P2-15,17 shall be for Heat Pump HP-7 and shall be 40A, 2-pole circuit breaker.

E1.4 SHEET EE010

1. Circuit 2PB-20 shall be spare 20A, 1-pole circuit breaker.
2. Circuit 2PB-22 shall be spare 20A, 1-pole circuit breaker.
3. Circuit 2P2-25,27 shall be for Heat Pump HP-23 and shall be 40A, 2-pole circuit breaker.

E1.5 SHEET EE011

1. Circuit 3PB-16 shall be spare 20A, 1-pole circuit breaker.
2. Circuit 3PB-18 shall be spare 20A, 1-pole circuit breaker.
3. Circuit 3P2-34,36 shall be for Heat Pump HP-36 and shall be 40A, 2-pole circuit breaker.

www.eceonline.com
801 521 8007 801 521 8057 FAX

939 SOUTH WEST TEMPLE SALT LAKE CITY UTAH 84101

ECE
ELECTRICAL CONSULTING ENGINEERS

E1.6 SHEET ES101

1. In the (2) 4" voice/data conduits from building #1 to the new building #3 install MaxCell (4"-3-cell) fabric innerduct.

E1.7 SHEET EL101

1. Toilet 100S, 100T, 100U:
   a. Change type T-2 wall mounted light fixtures to type T-13.
2. Bed Room 104
   a. Tie light fixtures to power pack.
3. Bathroom 100G:
   a. Tie emergency light fixtures in bathroom to the unswitched emergency lighting circuit in the corridor.
   b. Tie light fixtures to power pack.
4. Electrical Room 100H:
   a. Change type T-1 light fixture to type T-7.
5. Toilet 100C, 100D, 100E:
   a. Change type T-2 wall mounted light fixtures to type T-13.
6. Vestibule 101A, 101B:
   a. Change type T-12 downlight fixtures to type T-16.
7. Lobby 101:
   a. Change type T-12 downlight fixtures to type T-16.

E1.8 SHEET EL102

1. Toilet 200S, 200T, 200U:
   a. Change type T-2 wall mounted light fixtures to type T-13.
2. Hall 200M
   a. Tie light fixtures in top horizontal corridor to the power pack on the left side.
3. Bathroom 200Q:
   a. Tie emergency light fixtures in bathroom to the unswitched emergency lighting circuit in the corridor.
4. Bathroom 200G:
   a. Tie emergency light fixtures in bathroom to the unswitched emergency lighting circuit in the corridor.
5. Toilet 200C, 200D, 200E:
   a. Change type T-2 wall mounted light fixtures to type T-13.

E1.9 SHEET EL103

1. Toilet 300S, 300T, 300U:
   a. Change type T-2 wall mounted light fixtures to type T-13.
2. Laundry 318:
   a. Delete circuit homerun. Homerun is already shown in Lounge 301.
3. Bathroom 300Q:
   a. Tie emergency light fixtures in bathroom to the unswitched emergency lighting circuit in the corridor.
   b. Tie light fixtures to power pack.
4. Bathroom 300G:
   a. Tie emergency light fixtures in bathroom to the unswitched emergency lighting circuit in the corridor.
   b. Tie light fixtures to power pack.
5. Toilet 300C, 300D, 300E:
   a. Change type T-2 wall mounted light fixtures to type T-13.

www.eceonline.com

801 521 8007 801 521 8057 FAX

939 SOUTH WEST TEMPLE SALT LAKE CITY UTAH 84101

ELECTRICAL CONSULTING ENGINEERS

E1.10 SHEET EP101

1. Tie HP-7 to circuit 1P2-15,17.

E1.11 SHEET EP102

1. Tie HP-23 to circuit 2P2-25,27.

E1.12 SHEET EP103

1. Tie HP-36 to circuit 3P2-34,36.

END OF ADDENDUM No. 4

www.eceonline.com

801 521 8007 801 521 8057 FAX

939 SOUTH WEST TEMPLE SALT LAKE CITY UTAH 84101

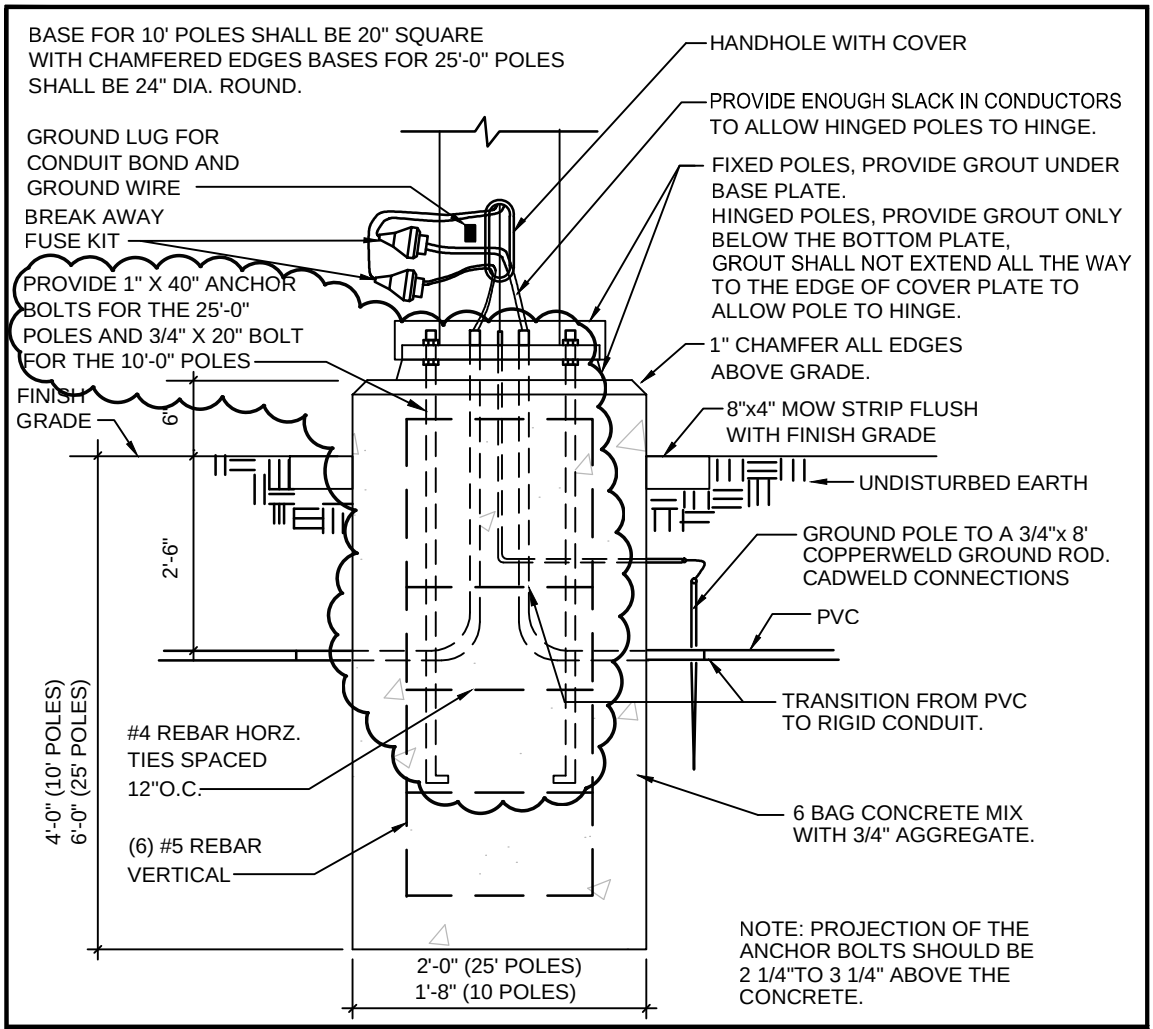

SCALE:

N.T.S.

POLE BASE DETAIL

MHTN Architects. Inc.
420 East South Temple
Suite 100
Salt Lake City, Utah 84111
TEL 801.595.6700
FAX 801.595.6717
www.mhtn.com

WEBER STATE UNIVERSITY
RESIDENTIAL LIFE PHASE 2 BUILDING 3

ECE PROJECT NO. 4007-3

DATE: 04-21-2011

SHEET NUMBER
AD04-E01

SHEET REFERENCE
EE005

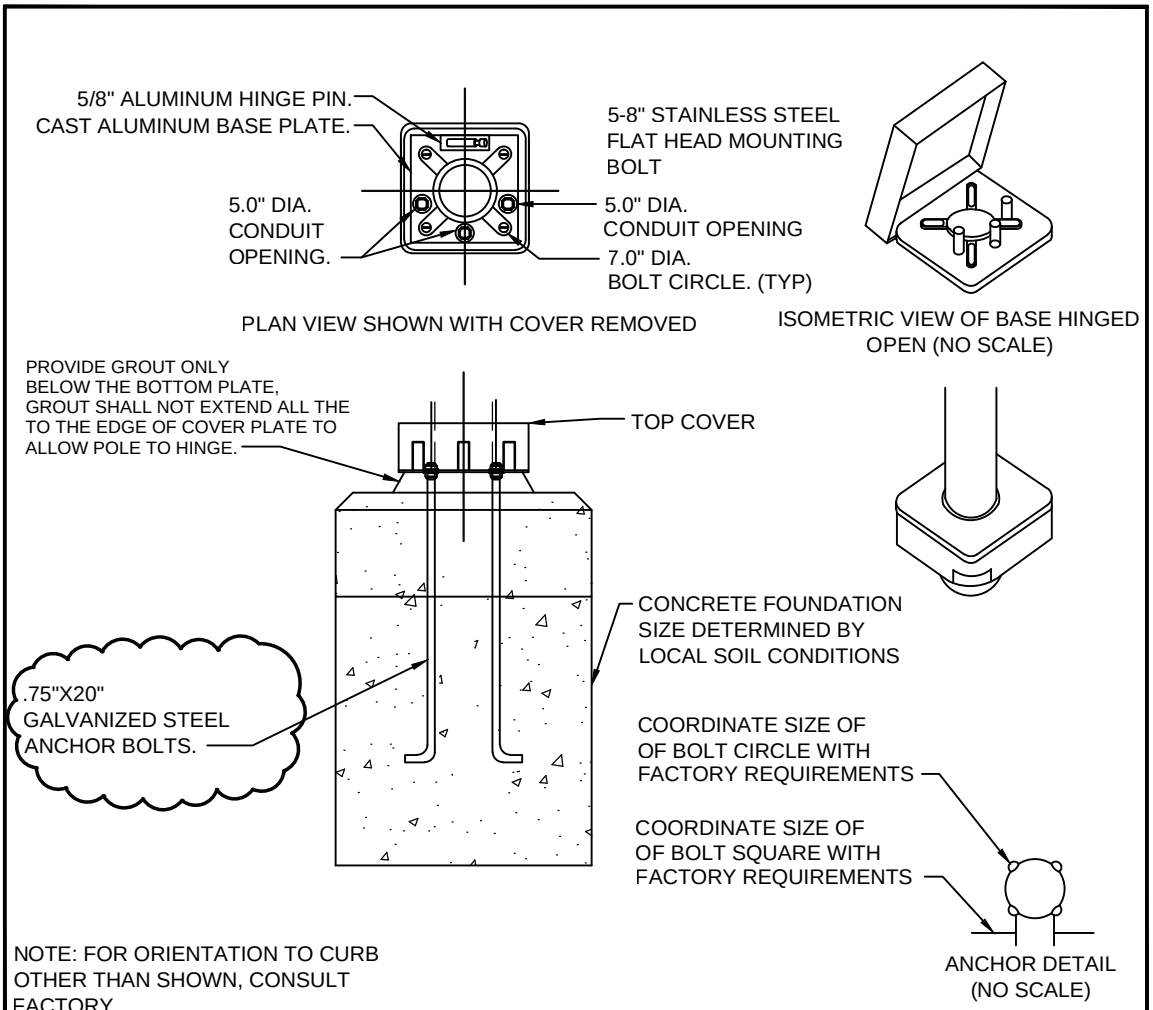

NOTE: FOR ORIENTATION TO CURB OTHER THAN SHOWN, CONSULT FACTORY.

SCALE: N.T.S.

HINGED POLE BASE DETAIL

MHTN Architects. Inc.
420 East South Temple
Suite 100
Salt Lake City, Utah 84111
TEL 801.595.6700
FAX 801.595.6717
www.mhtn.com

WEBER STATE UNIVERSITY
RESIDENTIAL LIFE PHASE 2 BUILDING 3

ECE PROJECT NO. 4007-3

DATE: 04-21-2011

SHEET NUMBER
AD04-E02

SHEET REFERENCE
EE005

ELECTRICAL COST BREAKDOWN FORM

The General Contract bid will be tabulated using the Column "Base Bid" total along with all other electrical work. (All other electrical items not specifically listed on this form are to be bid as specified, as listed on the Drawings, or as approved in the Addendum to the contract documents.) Prices shall be as quoted to the Contractor by the vendor, exclude sales tax.

The General Contractor, will provide this form complete, to the Owner with the subcontractor list and subcontractor bid bonds. Prices shall be verified by a copy of the quotation on request.

Vendors not specifically pre-listed under alternate Columns A, B, C, D or "E" on this form may be submitted as a substitute by the Contractor for consideration by the Owner following procedures noted in the specification. If a column does not have a vendor pre-listed and a substitute has been pre-approved, the Electrical Contractor may indicate the vendor providing the price in the "other" column. Electrical items not specifically listed on this form, in the Specification, on the Drawings or as approved in the Addendum to the contract documents, cannot be listed on the Electrical Bid Breakdown.

The Owner is obligated to use items in Column "Base Bid". The Owner may elect to pick and choose from among alternative offerings in Columns A, B, C, D and "E" via change order. The contract shall be adjusted without markup for any price differential between the price listed in Column "Base Bid" and that listed in any selected alternative column. The Owner reserves the right to accept or reject any of the Equipment or System items anytime within ninety (90) days after signing a contract.

Item	Specification Section	Base Bid	A	B	C	D	E
	260536 Cable Tray	$	Mono Systems $	Cooper B-Line $	MP Huskey $	PW Industries $	
	260923 Lighting Control Devices	Watt Stopper $					
	260923 Lighting Control Relay Panel	Watt Stopper $					
	264313 Surge Protective Devices (SPD's)	$	Current Technology $	Liebert Corp $	United Power $	Intermatic $	Square-D $

ELECTRICAL COST BREAKDOWN FORM

	262816 Enclosed Switches and Circuit Breakers 262413 Switchboards 262416 Panelboards	$	Cutler-Hammer $	Siemens $	GE $	Square-D $	
	262713 Electricity Metering	Lucid Design $					
	265100 Interior Lighting Package T-1	$	JRC $	Quantum Ltg. $			
	265100 Interior Lighting Package T-2 & T-13	$	JRC $	Quantum Ltg. $	Light Source $	Layton Sales $	
	265100 Interior Lighting Package T-3, T-4, T-5, T-7, T-9, T-10, T-11, T-12 & T-17	$	JRC $	Quantum Ltg. $	Light Source $	Layton Sales $	
	265100 Interior Lighting Package T-16 & T-18	$	JRC $				
	265100 Interior Lighting Package EX-1 & EX-2	$	JRC $	Quantum Ltg. $	Light Source $	Layton Sales $	Steven Sales $
	265600 Exterior Lighting Package T-6 & T14	JRC $					
	Emergency Call Stations	Code Blue $					