WEBER STATE UNIVERSITY
RESIDENTIAL LIFE PHASE II - BLDG 2

DFCM PROJECT NUMBER: 10176810

WEBER STATE UNIVERSITY
OGDEN, UTAH 84408
CONSTRUCTION DOCUMENTS
17 MAY 2011

MHTN ARCHITECTS
MHTN Architects, Inc.
420 East South Temple
Suite 100
Salt Lake City, Utah 84111
Telephone (801) 595-6700
Telefax (801) 595-6717
www.mhtn.com

ABBREVIATIONS

AC	AIR CONDITIONING
AFF	ABOVE FINISH FLOOR
ALT	ALTERNATE
ALUM	ALUMINUM
APPROX	APPROXIMATE
ARCH	ARCHITECTURAL
BD	BOARD
BLDG	BUILDING
BLKG	BLOCKING
BO	BOTTOM OF
BOT	BOTTOM
BRG	BEARING
BYD	BEYOND
CB	CATCH BASIN
CIP	CAST-IN-PLACE
CJ	CONTROL JOINT
CL	CENTER LINE
CLG	CEILING
CMU	CONCRETE MASONRY UNIT
CO	CLEANOUT
COL	COLUMN
COMM	COMMUNICATION
CONC	CONCRETE
CONF	CONFERENCE
CONST	CONSTRUCTION
CONT	CONTINUOUS
CONTR	CONTRACTOR
COORD	COORDINATE
CORR	CORRIDOR
CSK	COUNTER SUNK
CTR	CENTER
DEMO	DEMOLITION
DIA	DIAMETER
DIAG	DIAGONAL
DIM	DIMENSION
DN	DOWN
DR	DOOR
DS	DOWNSPOUT
DTL	DETAIL
DWG	DRAWING
EIFS	EXTERIOR INSULATION AND FINISH SYSTEM
EL	ELEVATION
ELEC	ELECTRICAL
ELEV	ELEVATOR
EQ	EQUAL
EQUIP	EQUIPMENT
EWC	ELECTRICAL WATER COOLER
EXP	EXPANSION
FD	FLOOR DRAIN
FEC	FIRE EXTINGUISHER CABINET
FIN	FINISH
FIN FLR	FINISH FLOOR
FLR	FLOOR
FT	FEET
GA	GAUGE/GAGE
GI	GALVANIZED IRON
GLU-LAM	GLUE LAMINATED
GYP BD	GYPSUM BOARD
HC	HANDICAPPED
HVAC	HEATING, VENTILATION, AIR CONDITIONING
ID	INSIDE DIAMETER
INT	INTERIOR
ISO	ISOMETRIC
JAN	JANITOR
JST	JOIST
JT	JOINT
KD	KNOCK DOWN
KOP	KNOCKOUT PANEL
LAB	LABORATORY
LAV	LAVATORY
MAINT	MAINTENANCE
MAX	MAXIMUM
MECH	MECHANICAL
MEZZ	MEZZANINE
MFR	MANUFACTURER
MH	MANHOLE
MIN	MINIMUM
MISC	MISCELLANEOUS
MO	MASONRY OPENING
NIC	NOT IN CONTRACT
NO	NUMBER
NOM	NOMINAL
NTS	NOT TO SCALE
OA	OVERALL
OC	ON CENTER
OD	OUTSIDE DIAMETER
OH	OVER HEAD
OH DR	OVERHEAD DOOR
OPP	OPPOSITE
PERP	PERPENDICULAR
PL	PLATE
PL	PROPERTY LINE
PL GL	PLATE GLASS
PLAM	PLASTIC LAMINATE
PLBG	PLUMBING
PLYWD	PLYWOOD
PR	PAIR
PREFAB	PREFABRICATED
QTY	QUANTITY
RD	ROOF DRAIN
REINF	REINFORCED / REINFORCING
REQD	REQUIRE / REQUIRED
RFG	REFRIGERATOR
RM	ROOM
RO	ROUGH OPENING
RTD	RATED
RTU	ROOF TOP UNIT
RV	ROOF VENT
SCHED	SCHEDULE
SIM	SIMILAR
SPEC	SPECIFICATION
SQ	SQUARE
STD	STANDARD
STL	STEEL
STRUC	STRUCTURAL
SUSP CLG	SUSPENDED CEILING
THK	THICKNESS
TO	TOP OF
TOB	TOP OF BEAM
TOS	TOP OF SLAB, TOP OF STRUCTURE
TOW	TOP OF WALL
TYP	TYPICAL
UNO	UNLESS NOTED OTHERWISE
VCT	VINYL COMPOSITION TILE
VERT	VERTICAL
VEST	VESTIBULE
VTR	VENT THROUGH ROOF
W/	WITH
W/O	WITHOUT
WC	WATER CLOSET
WD	WOOD
WF	WIDE FLANGE
WH	WATER HEATER
WWF	WELDED WIRE FABRIC
XFMR	Transformer

GENERAL SYMBOLS

SEE PLUMBING, MECHANICAL AND ELECTRICAL FOR DISCIPLINE SYMBOLS

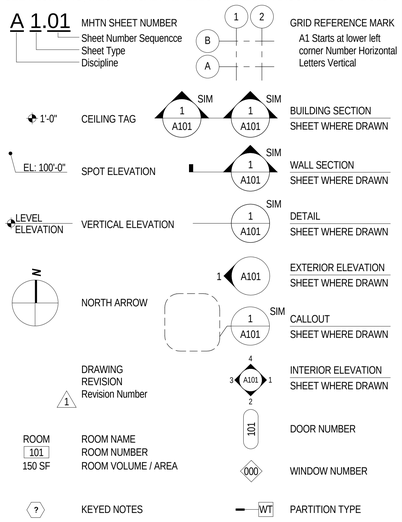

MATERIALS

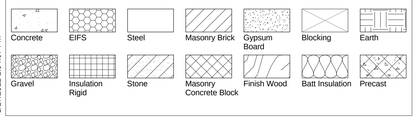

INDEX TO DRAWINGS

GENERAL
GI001 COVER SHEET
GI002 CODE INFORMATION

CIVIL
CD-001 DEMOLITION PLAN - BLDG. 2
CD-002 POST DEMOLITION PLAN - BLDG. 2
CS-101 SITE PLAN BLDG. 2
CS-102 SITE PLAN BLDG. 2
CS-103 ADA ACCESSIBILITY PLAN
CG-200 OVERALL GRADING PLAN BLDG. 2
CG-201 ENLARGED GRADING PLAN BLDG. 2
CG-202 ENLARGED GRADING PLAN BLDG. 2
CG-203 ENLARGED GRADING PLAN BLDG. 2
CG-204 ENLARGED GRADING PLAN BLDG. 2
CG-205 ENLARGED GRADING PLAN BLDG. 2
CU-301 UTILITY PLAN - BLDG 2
CU-302 ENLARGED UTILITY PLAN - BLDG 2
CU-303 ENLARGED UTILITY PLAN - BLDG 2
CS-401 DETAILS BLDG 2
CS-402 DETAILS BLDG 2
CS-403 DETAILS BLDG 2
CW-501 SWPP PLAN DEMOLITION PHASE BLDG 2
CW-502 SWPP PLAN CONSTRUCTION PHASE BLDG 2
CW-503 SWPP PLAN FINISH GRADING PHASE BLDG 2

LANDSCAPE
LI101 IRRIGATION PLAN
LI501 IRRIGATION NOTES AND LEGEND
LI502 IRRIGATION DETAILS
LP101 TREE PLANTING PLAN
LP102 SHRUB PLANTING PLAN
LP103 SHRUB PLANTING PLAN
LP104 SHRUB PLANTING PLAN
LP501 PLANTING NOTES AND LEGEND
AS401 ENLARGED ENTRY/PLAZA PLAN
AS501 SITE DETAILS
AS502 SITE DETAILS
AS503 SITE DETAILS

STRUCTURAL
SG001 STRUCTURAL NOTES
SG601 SCHEDULES
SB101A FOOTING & FOUNDATION PLAN-AREA A
SB101B FOOTING & FOUNDATION PLAN-AREA B
SB501 DETAILS
SB502 DETAILS
SF102A SECOND FLOOR FRAMING PLAN-AREA A
SF102B SECOND FLOOR FRAMING PLAN-AREA B
SF103A THIRD FLOOR FRAMING PLAN-AREA A
SF103B THIRD FLOOR FRAMING PLAN-AREA B
SF104A ROOF FRAMING PLAN-AREA A
SF104B ROOF FRAMING PLAN-AREA B
SF105 HIGH ROOF PLAN
SF106 HIGH ROOF (ADD ALTERNATE)
SF201 STAIR FRAMING
SF301 BRACED FRAME ELEVATIONS
SF302 BRACED FRAME ELEVATIONS
SF303 ELEVATIONS
SF501 DETAILS
SF502 DETAILS
SF503 DETAILS
SF504 DETAILS
SF505 DETAILS
SF701 ELEVATIONS
SF702 ELEVATIONS
SF704 DETAILS
SF705 DETAILS
SF901 SCHEMATIC REFERENCE

ARCHITECTURAL
AE001 FIRST FLOOR LIFE SAFETY PLAN
AE002 SECOND FLOOR LIFE SAFETY PLAN
AE003 THIRD FLOOR LIFE SAFETY PLAN
AE004 ADD ALTERNATE
AE005 ADD ALTERNATE
AE006 UL RATINGS
AE007 UL RATINGS
AE008 UL RATINGS
AE009 UL RATINGS
AE010 UL RATINGS
AE101A LEVEL ONE FLOOR PLAN - AREA 'A'
AE101B LEVEL ONE FLOOR PLAN - AREA 'B'
AE102A LEVEL TWO FLOOR PLAN - AREA 'A'
AE102B LEVEL TWO FLOOR PLAN - AREA 'B'
AE103A LEVEL THREE FLOOR PLAN - AREA 'A'
AE103B LEVEL THREE FLOOR PLAN - AREA 'B'
AE104A ROOF PLAN AREA 'A'
AE104B ROOF PLAN AREA 'B'
AE104C HIGH ROOF PLAN
AC101A LEVEL ONE REFLECTED CLG PLAN - AREA 'A'
AC101B LEVEL ONE REFLECTED CLG PLAN - AREA 'B'
AC102A LEVEL TWO REFLECTED CLG PLAN - AREA 'A'
AC102B LEVEL TWO REFLECTED CLG PLAN - AREA 'B'
AC103A LEVEL THREE REFLECTED CLG PLAN - ARE 'A'
AC103B LEVEL THREE REFLECTED CLG PLAN - AREA 'B'
AF101 FLOOR PATTERN PLANS
AF102 FLOOR PATTERN PLANS
AF103 FLOOR PATTERN PLANS
AE201 EXTERIOR ELEVATIONS
AE202 EXTERIOR ELEVATIONS
AE203 EXTERIOR ELEVATIONS
AE301 BUILDING SECTIONS
AE302 WALL SECTIONS
AE303 WALL SECTIONS
AE304 WALL SECTIONS
AE305 WALL SECTIONS
AE306 WALL SECTIONS
AE401 STAIR PLANS & SECTIONS
AE402 STAIR PLANS & SECTIONS
AE403 ELEVATOR PLANS & SECTIONS
AE410 TYPICAL MOUNTING HEIGHTS
AE411 ENLARGED TOILET/SUITE PLANS
AE412 ENLARGED TOILET/SUITE PLANS
AE415 INTERIOR ELEVATIONS
AE416 INTERIOR ELEVATIONS
AE417 INTERIOR ELEVATIONS
AE501 EXTERIOR DETAILS
AE502 EXTERIOR DETAILS
AE503 EXTERIOR DETAILS
AE504 EXTERIOR DETAILS
AE505 EXTERIOR DETAILS
AE506 EXTERIOR DETAILS
AE507 EXTERIOR DETAILS
AE508 EXTERIOR DETAILS
AE510 ROOF DETAILS
AE521 DOOR & WINDOW DETAILS
AE531 VERTICAL CIRCULATION DETAILS
AE551 CEILING DETAILS
AE601 PARTITION TYPES
AE603 DOOR SCHEDULE LEVEL 1 AND 2
AE604 DOOR SCHEDULE LEVEL 3
AE605 FINISH SCHEDULE LEVEL 1
AE606 FINISH SCHEDULE LEVEL 1 CONT.
AE607 FINISH SCHEDULE LEVEL 2
AE608 FINISH SCHEDULE LEVEL 2 CONT.
AE609 FINISH SCHEDULE LEVEL 3
AE610 FINISH SCHEDULE LEVEL 3 CONT.
AE611 WINDOW SCHEDULE
AE612 WINDOW SCHEDULE
AE613 WINDOW SCHEDULE

MECHANICAL
MH001 LEGEND & ABBREVIATIONS
FP101A LEVEL ONE FIRE PROTECTION PLAN - AREA 'A'
FP101B LEVEL ONE FIRE PROTECTION PLAN - AREA 'B'
FP102A LEVEL TWO FIRE PROTECTION PLAN - AREA 'A'
FP102B LEVEL TWO FIRE PROTECTION PLAN - AREA 'B'
FP103A LEVEL THREE FIRE PROTECTION PLAN - AREA 'A'
FP103B LEVEL THREE FIRE PROTECTION PLAN - AREA 'B'
MH101 LEVEL ONE ADD ALTERNATE
MH101A LEVEL ONE MECHANICAL PLAN - AREA 'A'
MH101B LEVEL ONE MECHANICAL PLAN - AREA 'B'
MH102A LEVEL TWO MECHANICAL PLAN - AREA 'A'
MH102B LEVEL TWO MECHANICAL PLAN - AREA 'B'
MH103A LEVEL THREE MECHANICAL PLAN - AREA 'A'
MH103B LEVEL THREE MECHANICAL PLAN - AREA 'B'
MH104A ROOF MECHANICAL PLAN - AREA 'A'
MH104B ROOF MECHANICAL PLAN - AREA 'B'
MH301 MECHANICAL SCHEMATICS
MH302 MECHANICAL SECTIONS
MH401 ENLARGED MECHANICAL PLANS
MH402 KITCHEN MECHANICAL FLOOR PLAN
MH501 MECHANICAL DETAILS
MH502 MECHANICAL DETAILS
MH503 MECHANICAL DETAILS
MH504 MECHANICAL DETAILS
MH505 MECHANICAL DETAILS
MH506 MECHANICAL DETAILS
MH601 MECHANICAL SCHEDULES
MH602 MECHANICAL SCHEDULES
MH603 MECHANICAL SCHEDULES
MH604 MECHANICAL SCHEDULES
MH605 MECHANICAL SCHEDULES
MP101A LEVEL ONE MECH PIPING PLAN - AREA 'A'
MP101B LEVEL ONE MECH PIPING PLAN - AREA 'B'
MP102A LEVEL TWO MECH PIPING PLAN - AREA 'A'
MP102B LEVEL TWO MECH PIPING PLAN - AREA 'B'
MP103A LEVEL THREE MECH PIPING PLAN - AREA 'A'
MP103B LEVEL THREE MECH PIPING PLAN - AREA 'B'
MP201 MECHANICAL PIPING OVERALL SITE PLAN
MP301 MECHANICAL PIPING SCHEMATIC
MP401 ENLARGED MECHANICAL PIPING PLANS

PLUMBING
PL101A LEVEL ONE PLUMBING PLAN - AREA 'A'
PL101B LEVEL ONE PLUMBING PLAN - AREA 'B'
PL102A LEVEL TWO PLUMBING PLAN - AREA 'A'
PL102B LEVEL TWO PLUMBING PLAN - AREA 'B'
PL103A LEVEL THREE PLUMBING PLAN - AREA 'A'
PL103B LEVEL THREE PLUMBING PLAN - AREA 'B'
PL104A ROOF PLUMBING PLAN - AREA 'A'
PL104B ROOF PLUMBING PLAN - AREA 'B'
PL301 SOLAR WATER HEATING SCHEMATIC
PL401 ENLARGED PLUMBING PLANS
PL402 ENLARGED PLUMBING PLANS
PL501 PLUMBING DETAILS
PL502 PLUMBING DETAILS
PL601 PLUMBING SCHEDULES

ELECTRICAL
EE001 GENERAL NOTES, DETAILS & SCHEDULES
EE002 POWER SINGLE LINE DIAGRAM
EE003 EMERGENCY POWER SINGLE LINE DIAGRAM
EE004 DETAILS
EE005 DETAILS
EE006 DETAILS
EE007 FIRE ALARM RISER DIAGRAM
EE008 PANEL SCHEDULES 1ST FLOOR
EE009 PANEL SCHEDULES 1ST FLOOR
EE010 PANEL SCHEDULES 1ST FLOOR
EE011 PANEL SCHEDULES 2ND FLOOR
EE012 PANEL SCHEDULES 2ND FLOOR
EE013 PANEL SCHEDULES 2ND FLOOR
EE014 PANEL SCHEDULES 3RD FLOOR
EE015 PANEL SCHEDULES 3RD FLOOR
EE016 PANEL SCHEDULES 3RD FLOOR
EE017 PANEL SCHEDULES 3RD FLOOR
EE018 PANEL SCHEDULES 3RD FLOOR
ED5101 DEMOLITION SITE PLAN ELECTRICAL
ES101 SITE PLAN ELECTRICAL
ES102 ENLARGED CHILLER/ELECTRICAL BUILDING PLAN - ELECTRICAL
EL101A FIRST FLOOR AREA A - LIGHTING
EL101B FIRST FLOOR AREA B - LIGHTING
EL102A SECOND FLOOR AREA A - LIGHTING
EL102B SECOND FLOOR AREA B - LIGHTING
EL103A THIRD FLOOR AREA A - LIGHTING
EL103B THIRD FLOOR AREA B - LIGHTING
EP100 UNDERGROUND CONDUIT
EP101A FIRST FLOOR AREA A - POWER
EP101B FIRST FLOOR AREA B - POWER
EP102A SECOND FLOOR AREA A - POWER
EP102B SECOND FLOOR AREA B - POWER
EP103A THIRD FLOOR AREA A - POWER
EP103B THIRD FLOOR AREA B - POWER
EP104A ROOF AREA A - POWER
EP104B ROOF AREA B - POWER
EP401 ENLARGED FIRST FLOOR AREA B - POWER
EP402 ENLARGED SECOND FLOOR AREA B - POWER
EP403 THIRD FLOOR ENLARGED PLANS - POWER
EP404 ENLARGED KITCHEN PLAN
EY101A FIRST FLOOR AREA A - SYSTEMS
EY101B FIRST FLOOR AREA B - SYSTEMS
EY102A SECOND FLOOR AREA A - SYSTEMS
EY102B SECOND FLOOR AREA B - SYSTEMS
EY103A THIRD FLOOR AREA A - SYSTEMS
EY103B THIRD FLOOR AREA B - SYSTEMS

VICINITY MAP

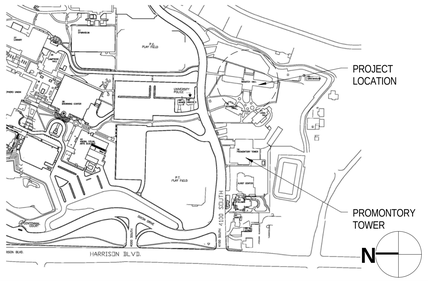

APPROVALS

WSU, TITLE	DATE:
WSU, TITLE	DATE:
WSU, TITLE	DATE:
DFCM, TITLE	DATE:

CONSULTANTS

SEAL	SEAL	SEAL	SEAL
CIVIL	**STRUCTURAL**	**MECHANICAL**	**ELECTRICAL**
GREAT BASIN ENGINEERING 5746 SOUTH 1475 EAST, SUITE 200 OGDEN, UT 84404 Phone: (801) 394-4515 Fax: (801) 392-7544	ARW ENGINEERS 1594 PARK CIRCLE OGDEN, UT 84404 Phone: (801) 782-6008 Fax: (801) 782-4656	COLVIN ENGINEERING 244 WEST 300 NORTH, SUITE 200 SALT LAKE CITY, UT 84103 Phone: (801) 322-2400 Fax: (801) 322-2416	E.C.E. LLC 939 S. WEST TEMPLE SALT LAKE CITY, UT 84101 Phone: (801) 521-8007 Fax: (801) 521-8057

WEBER STATE UNIVERSITY
RESIDENTIAL LIFE PHASE II - BLDG 2
DFCM PROJECT NUMBER: 10176810
WEBER STATE UNIVERSITY
OGDEN, UTAH 84408

SEAL

MHTN PROJECT NO. 2010543
DRAWN BY: MC CHECKED BY: MG

ISSUED:

NO.	DATE	DESCRIPTION
1	17 MAY 2011	CONSTRUCTION DOCUMENTS

REVISIONS: CONTRACTOR TO VERIFY DRAWINGS IN FIELD USE REFLECT LAST REVISION DATE.

NO.	DATE	DESCRIPTION

SHEET NAME
COVER SHEET

CONSTRUCTION DOCUMENTS
17 MAY 2011

SHEET NUMBER
GI001

C:\Users\prestonm\Documents\A11_2010543 WSU RESIDENTIAL LIFE BUILDING II_CENTRAL_prestonm.rvt
5/17/2011 1:04:07 PM

SPECIAL INSPECTION AND TESTING UNDER THE PROVISIONS OF IBC 1704 AND FOR MISCELLANEOUS AREAS

Indicate required Special inspections for project by checking the appropriate boxes and provide specific instructions as to the inspection requirements and the expectations of the architect, engineer and owner:

FABRICATORS (IBC 1704.2)

☐ Approved Fabricator	Fabricators Name:
☐ Unapproved Fabricator	Fabricators Name:

In-plant inspections
X Steel Construction X Welding

STEEL (IBC 1704.3 and Table 1704.3)

Item			Detailed Instructions and Frequencies
Pre-Fab Construction (1704.2)			Special inspection is not required where the work is done on the premises of a fabricator registered and approved by DFCM to perform such work without special inspection, provided the fabricator complies with the IBC. Inspection of prefabricated construction shall be the same as if the material used in the construction took place on site. Special inspection will not be required during prefabrication if the approved agency certifies the construction and furnishes evidence of compliance.
High Strength Bolting(1704.3.3)	☐ Continuous	X Periodic	Verify high strength bolts, nuts, and washers conform to the ASTM specifications noted in the structural notes.
WELDING (1704.3.1)			All welding inspections shall be in compliance with AWS D1.1. The basis for welding inspector qualifications shall be AWS D1.1.
Details (1704.3.2)			The special inspector shall perform an inspection of the steel frame to verify compliance with the details shown on the approved construction documents, such as bracing, stiffening, member locations, and proper location of joint details at each location.
Complete penetration groove welds	X Continuous	☐ Periodic	Test all CJP welds ultrasonically or by using another approved method and in compliance with the requirements of AWS D1.1
Multipass fillet welds	X Continuous	☐ Periodic	All welds shall be visually inspected. All materials, welding procedures, and qualifications of welders shall be verified prior to the start of the work.
Single-pass fillet welds > 5/16"	X Continuous	☐ Periodic	All welds shall be visually inspected. All materials, welding procedures, and qualifications of welders shall be verified prior to the start of the work.
Single-pass fillet welds ≤ 5/16"	☐ Continuous	X Periodic	All welds shall be visually inspected. All materials, welding procedures, and qualifications of welders shall be verified prior to the start of the work.
Floor & roof deck welds	☐ Continuous	X Periodic	All welds shall be visually inspected. All materials, welding procedures, and qualifications of welders shall be verified prior to the start of the work.
Welding of Anchors and studs	☐ Continuous	X Periodic	All welds shall be visually inspected. All materials, welding procedures, and qualifications of welders shall be verified prior to the start of the work.
Welding stairs/railing systems	☐ Continuous	X Periodic	All welds shall be visually inspected. All materials, welding procedures, and qualifications of welders shall be verified prior to the start of the work.
Light gauge metal framing welding	☐ Continuous	X Periodic	All welds shall be visually inspected. All materials, welding procedures, and qualifications of welders shall be verified prior to the start of the work.

Page 1 of 3

Reinforcing steel (1708.3)	☐ Continuous	X Periodic	

SOILS CONSTRUCTION (IBC 1704.7)

Item			Detailed Instructions and Frequencies
Site preparation	☐ Continuous	X Periodic	Per the approved soils report.
Structural fill material	☐ Continuous	X Periodic	Per the approved soils report.
Structural fill lift thickness	☐ Continuous	X Periodic	Special inspection is not required during placement of controlled fill having a total depth of 12 inches or less.
Structural fill soil densities	X Continuous	☐ Periodic	Per the approved soils report.
Backfill soils materials	☐ Continuous	X Periodic	Per the approved soils report.
Backfill soil densities	☐ Continuous	X Periodic	Per the approved soils report.

SPRAYED FIRE-RESISTANT MATERIALS (IBC 1704.10)

Item			Detailed Instructions and Frequencies
Structural member surface conditions	☐ Continuous	X Periodic	
Material application	☐ Continuous	X Periodic	
Material thickness	☐ Continuous	X Periodic	
Material density	☐ Continuous	☐ Periodic	
Bonding strength	☐ Continuous	☐ Periodic	

MASTIC AND INTUMESCENT FIRE-RESISTANT COATINGS (IBC 1704.11)

Item			Detailed Instructions and Frequencies
Material and installation	☐ Continuous	X Periodic	

EXTERIOR INSULATION AND FINISH SYSTEMS (EIFS) (IBC 1704.12)

Item			Detailed Instructions and Frequencies
Material and installation	☐ Continuous	☐ Periodic	

ALTERNITIVE CONSTRUCTION METHODS OR MATERIALS (IBC 1704.13)

Item			Detailed Instructions and Frequencies
Material and installation	☐ Continuous	☐ Periodic	

EPOXY (IBC 1704.13)

Item			Detailed Instructions and Frequencies
Material and installation (specify locations)	X Continuous	☐ Periodic	Special inspection for epoxies shall be in accordance with an approved ICC evaluation report.

SMOKE CONTROL (IBC 1704.14)

Item			Detailed Instructions and Frequencies
Material	☐ Continuous	☐ Periodic	
Installation	☐ Continuous	☐ Periodic	

Special inspection for seismic resistance (IBC 1707)

Item			Detailed Instructions and Frequencies
Storage racks & access floors (1707.6)	☐ Continuous	☐ Periodic	
Architectural components (1707.7)	☐ Continuous	X Periodic	
Mechanical & electrical items (1707.8)	☐ Continuous	X Periodic	

Page 3 of 3

Floor and roof deck mechanical fasteners and side seam screws	☐ Continuous	X Periodic	Prior to roofing or concrete pour
Material Verification of steel deck reports	☐ Continuous	X Periodic	Verify steel identification marking conforming to AISC 360 and manufacturers certified test

CONCRETE CONSTRUCTION (IBC 1704.4 and Table 1704.4)

Item			Detailed Instructions and Frequencies
Materials (1704.4.1)	☐ Continuous	☐ Periodic	
Steel placement	☐ Continuous	X Periodic	Prior to concrete pour
Reinforcing steel welding	X Continuous	X Periodic	Periodic special inspection is allowed for verification of the weldability of reinforcing steel other than ASTM A706 in accordance with ANSI/AWS D1.4.
Bolts prior & during placement	X Continuous	☐ Periodic	
Use of required design mix	☐ Continuous	X Periodic	Prior to concrete pour
Concrete sampling for strength test, slump, air content, and temperature of concrete	☐ Continuous	X Periodic	
Concrete placement	X Continuous	☐ Periodic	Perform air, slump, and temp tests when concrete samples are cast.
Curing temperature and techniques	☐ Continuous	X Periodic	

MASONRY CONSTRUCTION (IBC 1704.5 and Table 1704.5.1)

Item			Detailed Instructions and Frequencies
As masonry construction begins:			
Site prepared mortar	☐ Continuous	X Periodic	
Construction of mortar joints	☐ Continuous	X Periodic	
Location of reinforcement, connectors	☐ Continuous	X Periodic	Prior to grout pour
Inspection program verify:			
Size and location of structural elements	☐ Continuous	X Periodic	Prior to grout pour
Type, size and location of anchors	☐ Continuous	X Periodic	Prior to grout pour
Size, grade and type of reinforcement	☐ Continuous	X Periodic	Prior to grout pour
Welding of reinforcement	X Continuous	☐ Periodic	Periodic special inspection is allowed for verification of the weldability of reinforcing steel other than ASTM A706 in accordance with ANSI/AWS D1.4.
Cold and hot weather protection	☐ Continuous	X Periodic	
Verification of f'm	☐ Continuous	X Periodic	Per IBC
Prior to grouting verify			
Clean grout space	☐ Continuous	X Periodic	Prior to grout pour
Placement of reinforcement	☐ Continuous	X Periodic	Prior to grout pour
Grout mix	☐ Continuous	X Periodic	Prior to grout pour
Mortar joints	☐ Continuous	X Periodic	Prior to grout pour
Grout placement	X Continuous	☐ Periodic	
Grout and mortar specimens and prisms	X Continuous	☐ Periodic	
Construction and submittal compliance verification	☐ Continuous	X Periodic	Prior to grout pour
Engineered masonry – Cat. I-III 1708.1.3	☐ Continuous	X Periodic	Per table 1708.1.2

Page 2 of 3

Designated systems verification (1707.9)	☐ Continuous	☐ Periodic	

MISCELLANEOUS AREAS Detailed Instructions and Frequencies
These inspections are recommended by the Architect/Engineer and approved by DFCM.

Suspended Ceiling Grid Clips	☐ Continuous	X Periodic	
Suspended Ceiling wire spacing (Seismic)	☐ Continuous	X Periodic	
Soils backfill (specify locations and frequency)	☐ Continuous	X Periodic	
Soils for curb and gutter (specify locations and frequency)	☐ Continuous	X Periodic	
Soils for parking lots (specify locations and frequency)	☐ Continuous	X Periodic	
Soils for utility trench backfill	☐ Continuous	X Periodic	
Reinforcement for slab on grade sidewalks and drive approaches (specify locations and frequency)	☐ Continuous	X Periodic	
Concrete testing for slab on grade sidewalks and drive approaches (specify locations and frequency)	☐ Continuous	X Periodic	
Masonry Veneer (specify locations and frequency)	☐ Continuous	X Periodic	Mortar Prisms, Ties / Seismic
Asphalt inspection (specify locations and frequency)	☐ Continuous	X Periodic	
Asphalt testing (specify locations and frequency)	☐ Continuous	X Periodic	
Inspection of seismic resistance (specify locations and frequency)	☐ Continuous	☐ Periodic	
Steam and water line welding (specify locations and frequency)	☐ Continuous	☐ Periodic	
Seismic supports for duct work and sealing of joints for duct work	☐ Continuous	X Periodic	
Seismic supports for electrical raceways, cable trays and lights	☐ Continuous	X Periodic	
Seismic supports for plumbing lines including gas, water and steam and condensation	☐ Continuous	X Periodic	
Seismic bracing for mechanical units both on slab and suspended	☐ Continuous	X Periodic	
	☐ Continuous	☐ Periodic	
	☐ Continuous	☐ Periodic	
	☐ Continuous	☐ Periodic	
	☐ Continuous	☐ Periodic	
	☐ Continuous	☐ Periodic	
	☐ Continuous	☐ Periodic	
	☐ Continuous	☐ Periodic	
	☐ Continuous	☐ Periodic	
	☐ Continuous	☐ Periodic	
	☐ Continuous	☐ Periodic	
	☐ Continuous	☐ Periodic	
	☐ Continuous	☐ Periodic	
	☐ Continuous	☐ Periodic	

Page 4 of 3

Special Inspectors Shall:

- Be approved by the Building Official prior to performing any duties;
- Provide proof of licensure as a special inspector by the State of Utah for each type of inspection;
- Inspection reports are to meet the requirements of IBC 1704.1.2 and DFCM standards;
- Inspection reports are to be submitted to the code consultant, architect, DFCM project manager, and the State of Utah Building Official within 48 hrs. of inspections;
- A final inspection report shall be submitted following completion of the project documenting the types of special inspections performed and a statement indicating that the structure is in compliance with the drawings, specifications and applicable codes. IBC 1704.1.2
- All construction that has failed inspection shall be subject to removal and replacement.

LIST OF DEFERRED SUBMITTALS

SUBMITTAL	NOTES
1 - ALUMINUM CURTAIN WALL ENGINEERING	
2 - HANDRAIL & GUARDRAIL ENGINEERING	
3 - COLD FORMED FRAMING SUBSTITUTIONS	ENGINEERING HAS BEEN PROVIDED IN DOCUMENTS. ANY CONTRACTOR SUBSTITUTIONS WILL REQUIRE ENGINEERING SUBMITTAL.
3A - COLD FORMED FRAMING EXTERIOR SOFFIT CONSTRUCTION ENGINEERING	
4 - EXTERIOR METAL WALL PANEL ATTACHMENT ENGINEERING	
5 - MECHANICAL/PLUMBING SEISMIC SUPPORT ENGINEERING	
6 - FIRE SPRINKLER ENGINEERING & SHOP DRAWINGS	
7 - ELECTRICAL SEISMIC SUPPORT ENGINEERING	
8 - FIRE ALARM SUBMITTAL	
9 - SOLAR WATER COLLECTOR PANEL ATTACHMENT	
10 - OPEN WEB STEEL JOISTS AND GIRDERS	
11 - UL ASSEMBLIES FOR PENETRATIONS OF RATED CONSTRUCTION	
12 - BUCKLING RESTRAINED BRACE DESIGN	
13 - RAISED PAVER AND PEDESTAL SYSTEM	
14 - ITEMS FROM NON-STRUCTURAL COMPONENT CHECKLIST	

CODE ANALYSIS

APPLICABLE CODES

	Year		Year
International Building Code	2009	National Electrical Code	2008
International Mechanical Code	2009	Uniform Code for Building Conservation	N/A
International Plumbing Code	2009	ADA Accessibility Guidelines	1994
International Fire Code	2009		
International Energy Conservation Code	2009		

A. Occupancy and Group: R-2 RESIDENTIAL, A-2 ASSEMBLY, B BUSINESS, A-3 ASSEMBLY, S-1 STORAGE

Change in Use: Yes ____ No X Mixed Occupancy: Yes X No ____
Special Use and Occupancy (e.g. High Rise, Covered Mall): N/A

B. Seismic Design Category: D Design Wind Speed: 90 mph

C. Type of Construction (circle one):

I A I B II A (II B) III A III B IV HT V A V B

D. Fire Resistance Rating Requirements for the Exterior Walls based on the fire separation distance (in hours):
North: 0 South: 0 East: 0 West: 0

E. Mixed Occupancies: YES Nonseparated Uses: YES

F: Sprinklers:
Required: YES Provided: YES Type of Sprinkler System: WET PIPE PER SECTION 903.3.1.1

G: Group R-2: Number of Stories: 4 Building Height: 55'
Group A-2 Number of Stories: 2 Building Height: 55'

Increase Per 504.2

Group R-2: Number of Stories: 5 Building Height: 75'
Group A-2: Number of Stories: 3 Building Height: 75'
Actual: Number of Stories: 3 Building Height: 52'

H: Actual Area per Floor:

1) Level One Area (square feet): 28,900
R-2 = 25,045 B = 1,812 S-1 = 2,043

2) Level Two Area (square feet): 30,680
R-2 = 22,160 A-2 = 8,520

3) Level Three Area (square feet): 28,900
R-2 = 22,160 A-2 = 5,157 A-3 = 1,583

Total 88,480

I: Tabular Area: (TABLE 503): R-2= 16,000 A-2 = 9,5000
(square feet):

J: Area Modifications:

a) Area Modicifation General (IBC 2009 - 506.1):

R-2 Occupancy (Primary)

$$A_a = 16{,}000\,(A_t) + \left[16{,}000\,(A_t) \times 0.57\,(I_f)\right] + \left[16{,}000\,(A_t) \times 2\,(I_s)\right]$$

a) A_t = Allowable Area of the Main Occupancy = 16,000 sf (Table 503)

b) I_f = Area Increase for Frontage (IBC 2009 - 506.2)

$$= 100\left[\frac{1574'\,(F)}{1690'\,(P)} - 0.25\right]\frac{25\,(W)}{30} = 0.57$$

c) I_s = Area Increase for Sprinklers per Section506.3;(2)

$$= 16{,}000 + \left[9{,}120\right] + \left[32{,}000\right] = 57{,}120 \text{ (Group R-2)}$$

A-2 Occupancy (Secondary)

$$A_a = 9{,}500\,(A_t) + \left[9{,}500\,(A_t) \times 0.57\,(I_f)\right] + \left[9{,}500\,(A_t) \times 2\,(I_s)\right]$$

a) A_t = Allowable Area of the Main Occupancy = 9,500 sf (Table 503)

b) I_f = Area Increase for Frontage (IBC 2009 - 506.2)

$$= 100\left[\frac{1574'\,(F)}{1690'\,(P)} - 0.25\right]\frac{25\,(W)}{30} = 0.57$$

c) I_s = Area Increase for Sprinklers per Section506.3;(2)

$$= 9{,}500 + \left[5{,}415\right] + \left[19{,}000\right] = 33{,}915 \text{ (Group A-2)}$$

b) Sum of the Ratio Calculations for Mixed Occupancies: (IBC 2009-508.4.2

$$\frac{\text{Actual Area}}{\text{Allowable Area}} \leq 1 \qquad \frac{30{,}680}{33{,}915} = .9$$

c) Total Allowable Area for:
1) One Story: NA
2) Two Story: A_a(2) NA
3) Three Story: A_a(3) 33,915 sf / floor; 101,745 sf (Total)

d) Unlimited Area Building: Yes ____ No X Code Section: NA

K. Fire Resistance Rating Requirements for Building Elements (hours).

Element	Hours	Assembly Listing	Element	Hours	Assembly Listing
Exterior Bearing Walls	0		Floors - Ceiling Floors	.5	N759, X790
Interior Bearing Walls	0		Roofs - Ceiling Roofs	0	
Exterior Non-Bearing Walls	0		Exterior Doors and Windows	0	
Structural Frame	0		Shaft Enclosures	1	U469, U905
Partitions - Permanent	0		Fire Walls	0	
Fire Barriers	1	U419, U905	Fire Partitions	.5	U419, U905
			Smoke Partitions	0	

NONSTRUCTURAL COMPONENT CHECKLIST

ITEM DESCRIPTION	*NOT REQUIRED*	*ON CONST. DOCUMENTS*	*DEFERRED SUBMITTAL*	*COMMENTS*
Architectural Components:				
Interior Nonstructural Walls & Partitions		X		All interior partitions extend to deck
Cantilever Elements *(i.e. parapets, etc.)*		X		See Sheets SF704
Exterior Nonstructural Wall Elements			X	
Veneer		X		See Sheet SG001 and AE508
Penthouses	X			
Ceilings *(i.e. suspended grid or hard-lid)*		X		See Sheet AE551
Cabinets *(i.e. storage cabinets, equip, etc.)*	X			
Access Floors			X	Raised Paver and Pedestal System at Balcony
Storage Racks	X			
Appendages & Ornamentations		X		See Structural Calcs and Sheets SF704 and AE506
Signs & Billboards	X			
Other:				
Other:				
MEP Components:				
Fire Sprinklers			X	
Mechanical Equipment *(i.e. HVAC, fans, air handlers, boilers, furnaces, tanks, chillers, water heaters, heat exchangers, evaporators, engines, turbines, pumps, compressors, MFR equipment, etc.)*			X	
Electrical Equipment *(i.e. generators, batteries, inverters, transformers, MCC, panel boards, switch gear, cabinets, etc.)*			X	
Elevator & Escalator Components			X	See Sheet AE403
Communication Equipment, Computers, Instrumentation, and Controls	X			
Roof-mounted Chimneys, Stacks, Cooling & Electrical Towers	X			
Lighting Fixtures			X	See Sheet EE004 and EE005
Vibration Isolated Components			X	See Sheets MH501 and MH502
Piping & Conduit Systems			X	See Sheets MH502 and EE004
Ductwork *(including in-line components)*			X	See Sheet MH502
Conveyors	X			
Cable Trays			X	See Sheet EE004
Other:				
Other:				

NOTES:

1. Deferred submittals for seismic restraint of nonstructural components must be submitted to the DFCM Building Official a minimum of two weeks prior to the planned installation in order to allow for plan review and forwarding to inspectors. In the event that the submittal is deficient additional time may become necessary.
2. If seismic restraints of non-structural components are installed prior to receiving DFCM approval they shall not be covered or concealed until receiving both plan review and inspection approval. Further, installers are proceeding at their own risk until plan review and inspection approval occurs.
3. The requirements for seismic restraint of nonstructural components cannot be satisfied by a general reference to Design Manuals. The design professional may utilize these manuals as a basis of their design, but must provide all supporting documentation to ensure that the design conforms to the requirements of ASCE 7-05, Chapter 13.
4. Submittals must include details of the proposed seismic restraint of nonstructural components. These details must show specific information relating to the materials, type, size, and locations of anchorages; materials used for bracing; attachment requirements of bracing to structure and component; and locations of transverse and longitudinal sway bracing and rod stiffeners. Submittals may also require structural calculations, engineering reports, test data, and/or specifications to ensure code compliance.

Revised: 02/15/2010

L. Design Occupant Load: 1329
Exit Width Required: 266" Exit Width Provided: 396"

M. Minimum Number of Required Plumbing Facilities:
a) Water Closets - Required (m) 27 (f) 27 Provided (m) 33 (f) 33
b) Lavatories - Required (m) 40 (f) 40 Provided (m) 59 (f) 60
Unisex per (1109.2.1): Required: 1 Provided: 1
c) Bath Tubs or Showers - Required 57 Provided 58
d) Drinking Fountains: 2 Service Sinks: 3

FOOTNOTES:

1) In case of conflict with the U.S. Department of Justice Federal Registers Parts I through V - ADA Guidelines and specific reference to the International Building Code Accessibility Chapters, the more restrictive requirement shall govern.

2) Additional Code Information shall be provided at the discretion of the Building Official for Complex Buildings. Including, but not limited to:
a) High Rise Requirements.
b) Atriums.
c) Performance Based Criteria.
d) Means or Egress Analysis.
e) Fire Assembly Locator Sheet.
f) Exterior and Interior Accessibility Route.
g) Fire Stopping, Including Tested Design Number.

MHTN ARCHITECTS
MHTN Architects, Inc.
420 East South Temple
Suite 100
Salt Lake City, Utah 84111
Telephone (801) 595-6700
Telefax (801) 595-6717
www.mhtn.com

WEBER STATE UNIVERSITY
RESIDENTIAL LIFE PHASE II - BLDG 2
DFCM PROJECT NUMBER: 10176810
WEBER STATE UNIVERSITY
OGDEN, UTAH 84408

SEAL

MHTN PROJECT NO. 2010543
DRAWN BY: MC CHECKED BY: MG

ISSUED:

NO.	DATE	DESCRIPTION
01	17 MAY 2011	CONSTRUCTION DOCUMENTS

CONTRACTOR TO VERIFY DRAWINGS IN FIELD USE REFLECT LAST REVISION DATE:

NO.	DATE	DESCRIPTION

SHEET NAME
CODE INFORMATION

CONSTRUCTION DOCUMENTS
17 MAY 2011

SHEET NUMBER
GI002

C:\Users\prestonm\Documents\A11_2010543 WSU RESIDENTIAL LIFE BUILDING II_CENTRAL_prestonm.rvt
5/17/2011 12:24:45 PM

Note: For Clarity, only Demolition Items and existing trees to be protected are Shown on this sheet. See CD-002 for items to remain after demolition. Coordinate and verify each tree to be removed prior to tree removal.

Scale: 1" = 30'

30 0 15 30 40 50 60

Graphic Scale

Legend

(Note: All items may not appear on drawing)

San. Sewer Manhole
Water Manhole
Storm Drain Manhole
Electrical Manhole
Catch Basins
Exist. Fire Hydrant
Fire Hydrant
Exist. Water Valve
Water Valve
Sanitary Sewer — S —
Culinary Water — W —
Gas Line — G —
Irrigation Line — IW —
Storm Drain — SD —
Telephone Line — T —
Secondary Waterline — SW —
Power Line — P —
Fire Line — F —
Land Drain — LD —
Power pole
Power pole w/guy
Light Pole
Fence
Flowline of ditch
Overhead Power line — OHP —
Corrugated Metal Pipe CMP
Concrete Pipe CP
Reinforced Concrete Pipe RCP
Ductile Iron DI
Polyvinyl Chloride PVC
Top of Asphalt TA
Edge of Asphalt EA
Centerline CL
Flowline FL
Finish Floor FF
Top of Curb TC
Top of Wall TWL
Top of Walk TW
Top of Concrete TCN
Natural Ground NG
Finish Grade FG
Fire Department Connection FDC
Finish Contour — 90 —
Exist. Contour — 90 —
Finish Grade 95.33TA
Exist. Grade 95.72TA
Ridge Line — R —
Direction of Flow
Existing Asphalt
New Asphalt
Heavy Duty Asphalt
Concrete
Open Face Curb & Gutter
Demo Tree

Project Benchmark:

Spike in Landscaping West of West Entrance to Wasatch Hall

Northing= 311609.7400
Easting= 1877807.1900
Elevation= 4698.795

General Demolition Notes:

1. Demolition and site clearing for this contract are to include all areas shown within demolition limits or by note.
2. Refer to site improvement plans for more details on limits of removal.
3. Retain and protect existing buildings, including all footings and foundations.
4. All utilities, sewer, water, gas, telephone and electrical services to be disconnected and capped according to city, county and utility company requirements, unless otherwise shown.
5. Clear and grub trees, shrubs, and vegetation within construction limits, disposal to be off-site except where noted otherwise.
6. DO NOT interrupt any services or disrupt the operation of any businesses shown outside the demolition limits.
7. If ASBESTOS is found, the Asbestos must be removed in a legal manner by a contractor licensed to handle asbestos materials. (Not a part of contract.)
8. Remove debris, rubbish, and other materials resulting from the demolition and site clearing operations from the site and dispose of in a legal manner.
9. The location and/or elevation of existing utilities as shown on these plans is based on records of the various utility companies, Weber State University Record Drawings, and, where possible, measurements taken in the field. The information is not to be relied upon as being exact or complete. Contractor shall contact authorities having jurisdiction for field locations. Contractor shall be responsible for protection of in place and relocated utilities during construction.
10. Stockpiles shall be graded to maintain slopes not greater than 3 horizontal to 1 vertical. Provide erosion control as needed to prevent sediment transport to adjacent drainage ways.
11. Contractor shall be responsible for disposal of all waste material. Disposal shall be at an approved site for such material. Burning onsite is not permitted.
12. Install traffic warning devices as needed in accordance with local standards.
13. Contractor shall obtain all permits necessary for demolition from City, County, State or Federal Agencies as required.

TREE DEMOLITION NOTE:
Coordinate with Owner and Specifications for Trees to be retained or removed. Trees with GREEN Caution Tape are to remain. Trees with RED Caution Tape are to be removed. These trees will also have 6' tall chain link fencing placed around them at the drip line (location must be approved by owner). The fencing will not be removed without written approval of from the architect and the owner. Any trees removed or damaged will be paid for by the contractor at the schedule of values shown in specifications.

CAUTION NOTICE TO CONTRACTOR
The contractor is specifically cautioned that the location and/or elevation of existing utilities as shown on these plans are based on records from WSU and, where possible, measurements taken in the field. The information is not to be relied on as being exact or complete. The contractor must call the utility owner at least 48 hours before any excavation to request exact field location of utilities. It shall be the responsibility of the contractor to relocate all existing utilities which conflict with the proposed improvements shown on the plans.

UTILITY LOCATION REQUIREMENTS
The contractor shall at his cost, provide GPS Coordinates for all utilities found during demolition, marked or not marked, all utility relocations, all utility connections, and all new utility lines. Coordinates will contain a Northing, Easting, Elevation, and Description. Coordinates will be based on the same coordinate system shown on these plans. Coordinates will be recorded at the following minimum locations, storm drain manholes top and flowline, catch basins top and flowline, inlet boxes top and flowline, cleanouts: water line angle points, valves, tees, elbows, and connections: chilled water supply and return lines angle points, valves, tees, elbows, and connections: gas line angle points, tees, elbows, valves, and connection points: sanitary sewer manholes top and flowline, cleanouts, tees, wyes, and connection points: electrical conduit runs, angle points, elbows, and connections: telephone and data, conduit runs, angle points, elbows, and connections: irrigation angle points, tees, elbows, valves, and connection points. All of these coordinates are to be inserted into a record drawing set of plans and provided to the owner and to the civil engineer. Additionally, all of these data points are to be provided to the owner and civil engineer on a weekly basis. Failure to record these data points will result in the contractor excavating, locating, providing the coordinates, and backfilling at no additional expense to the owner.

PRIVATE ENGINEER'S NOTICE TO CONTRACTORS

The Contractor agrees that he shall assume sole and complete responsibility for job site conditions during the course of construction of this project, including safety of all persons and property; that this requirement shall apply continuously and not be limited to normal working hours; and that the contractor shall defend, indemnify, and hold the owner and the engineer harmless from any and all liability, real or alleged, in connection with the performance of work on this project, excepting for liability arising from the sole negligence of the owner or the engineer.

ALL CONSTRUCTION TO CONFORM TO WSU STANDARDS AND SPECIFICATIONS

MHTN ARCHITECTS
MHTN Architects, Inc.
420 East South Temple
Suite 100
Salt Lake City, Utah 84111
Telephone (801) 595-6700
Telefax (801) 595-6717
www.mhtn.com

GREAT BASIN ENGINEERING INC
5746 South 1475 East Suite 200
Ogden, Utah 84403 Main (801)394-4515
S.L.C (801)521-0222 FAX 801-392-7544
WWW.GREATBASINENGINEERING.COM

WEBER STATE UNIVERSITY
RESIDENTIAL LIFE - PHASE II - BLDG. 2
DFCM PROJECT NUMBER: 10176810

WEBER STATE UNIVERSITY
OGDEN, UTAH 84408

SEAL:

MHTN PROJECT NO. 201043.00

DRAWN BY: BB CHECKED BY: DRW

ISSUED:

NO.	DATE	DESCRIPTION
1	05/17/2011	CONSTRUCTION DOCUMENTS

CONTRACTOR TO VERIFY DRAWINGS IN FIELD USE REFLECT LAST REVISION DATE.

NO.	DATE	DESCRIPTION

SHEET NAME

DEMOLITION PLAN
BLDG. 2

CONST. DOCUMENTS
MAY 17, 2011

SHEET NUMBER

CD-001

Scale: 1" = 30'

Graphic Scale

Legend

(Note: All items may not appear on drawing)

San. Sewer Manhole
Water Manhole
Storm Drain Manhole
Electrical Manhole
Catch Basins
Exist. Fire Hydrant
Fire Hydrant
Exist. Water Valve
Water Valve
Sanitary Sewer — S —
Culinary Water — W —
Gas Line — G —
Irrigation Line — IW —
Storm Drain — SD —
Telephone Line — T —
Secondary Waterline — SW —
Power Line — P —
Fire Line — F —
Land Drain — LD —
Power pole
Power pole w/guy
Light Pole
Fence
Flowline of ditch
Overhead Power line — OHP —
Corrugated Metal Pipe CMP
Concrete Pipe CP
Reinforced Concrete Pipe RCP
Ductile Iron DI
Polyvinyl Chloride PVC
Top of Asphalt TA
Edge of Asphalt EA
Centerline CL
Flowline FL
Finish Floor FF
Top of Curb TC
Top of Wall TWL
Top of Walk TW
Top of Concrete TCN
Natural Ground NG
Finish Grade FG
Fire Department Connection FDC
Finish Contour — 90 —
Exist. Contour — 90 —
Finish Grade 95.33TA
Exist. Grade 95.72TA
Ridge Line — R —
Direction of Flow
Existing Asphalt
New Asphalt
Heavy Duty Asphalt
Concrete
Open Face Curb & Gutter
Demo Tree

Project Benchmark:

Spike in Landscaping West of West Entrance to Wasatch Hall

Northing= 311609.7400
Easting= 1877807.1900
Elevation= 4698.795

General Demolition Notes:

1. Demolition and site clearing for this contract are to include all areas shown within demolition limits or by note.
2. Refer to site improvement plans for more details on limits of removal.
3. Retain and protect existing buildings, including all footings and foundations.
4. All utilities, sewer, water, gas, telephone and electrical services to be disconnected and capped according to city, county and utility company requirements, unless otherwise shown.
5. Clear and grub trees, shrubs, and vegetation within construction limits, disposal to be off-site except where noted otherwise.
6. DO NOT interrupt any services or disrupt the operation of any businesses shown outside the demolition limits.
7. If ASBESTOS is found, the Asbestos must be removed in a legal manner by a contractor licensed to handle asbestos materials. (Not a part of contract.)
8. Remove debris, rubbish, and other materials resulting from the demolition and site clearing operations from the site and dispose of in a legal manner.
9. The location and/or elevation of existing utilities as shown on these plans is based on records of the various utility companies, Weber State University Record Drawings, and, where possible, measurements taken in the field. The information is not to be relied upon as being exact or complete. Contractor shall contact authorities having jurisdiction for field locations. Contractor shall be responsible for protection of in place and relocated utilities during construction.
10. Stockpiles shall be graded to maintain slopes not greater than 3 horizontal to 1 vertical. Provide erosion control as needed to prevent sediment transport to adjacent drainage ways.
11. Contractor shall be responsible for disposal of all waste material. Disposal shall be at an approved site for such material. Burning onsite is not permitted.
12. Install traffic warning devices as needed in accordance with local standards.
13. Contractor shall obtain all permits necessary for demolition from City, County, State or Federal Agencies as required.

TREE DEMOLITION NOTE:
Coordinate with Owner and Specifications for Trees to be retained or removed. Trees with GREEN Caution Tape are to remain. Trees with RED Caution Tape are to be removed. These trees will also have 6" tall chain link fencing placed around them at the drip line (location must be approved by owner). The fencing will not be removed without written approval from the architect and the owner. Any trees removed or damaged will be paid for by the contractor at the schedule of values shown in specifications.

CAUTION NOTICE TO CONTRACTOR
The contractor is specifically cautioned that the location and/or elevation of existing utilities as shown on these plans are based on records from WSU and, where possible, measurements taken in the field. The information is not to be relied on as being exact or complete. The contractor must call the utility owner at least 48 hours before any excavation to request exact field location of utilities. It shall be the responsibility of the contractor to relocate all existing utilities which conflict with the proposed improvements shown on the plans.

UTILITY LOCATION REQUIREMENTS
The contractor shall at his cost, provide GPS Coordinates for all utilities found during demolition, marked or not marked, all utility relocations, all utility connections, and all new utility lines. Coordinates will contain a Northing, Easting, Elevation, and Description. Coordinates will be based on the same coordinate system shown on these plans. Coordinates will be recorded at the following minimum locations, storm drain manholes top and flowline, catch basins top and flowline, inlet boxes top and flowline, cleanouts: water line angle points, valves, tees, elbows, and connections: chilled water supply and return lines angle points, valves, tees, elbows, and connections: gas line angle points, tees, elbows, valves, and connection points: sanitary sewer manholes top and flowline, cleanouts, tees, wyes, and connection points: electrical conduit runs, angle points, elbows, and connections: telephone and data, conduit runs, angle points, elbows, and connections: irrigation angle points, tees, elbows, valves, and connection points. All of these coordinates are to be inserted into a record drawing set of plans and provided to the owner and to the civil engineer. Additionally, all of these data points are to be provided to the owner and civil engineer on a weekly basis. Failure to record these data points will result in the contractor excavating, locating, providing the coordinates, and backfilling at no additional expense to the owner.

PRIVATE ENGINEER'S NOTICE TO CONTRACTORS

The Contractor agrees that he shall assume sole and complete responsibility for job site conditions during the course of construction of this project, including safety of all persons and property; that this requirement shall apply continuously and not be limited to normal working hours; and that the contractor shall defend, indemnify, and hold the owner and the engineer harmless from any and all liability, real or alleged, in connection with the performance of work on this project, excepting for liability arising from the sole negligence of the owner or the engineer.

ALL CONSTRUCTION TO CONFORM TO WSU STANDARDS AND SPECIFICATIONS

MHTN ARCHITECTS
MHTN Architects, Inc.
420 East South Temple
Suite 100
Salt Lake City, Utah 84111
Telephone (801) 595-6700
Telefax (801) 595-6717
www.mhtn.com

GREAT BASIN ENGINEERING INC
5746 South 1475 East Suite 200
Ogden, Utah 84403 Main (801)394-4515
S.L.C. (801)521-0222 FAX 801-392-7544
WWW.GREATBASINENGINEERING.COM

WEBER STATE UNIVERSITY
RESIDENTIAL LIFE - PHASE II - BLDG. 2
DFCM PROJECT NUMBER: 10176810

WEBER STATE UNIVERSITY
OGDEN, UTAH 84408

SEAL:

MHTN PROJECT NO. 201043.00
DRAWN BY: BB CHECKED BY: DRW

ISSUED:

NO.	DATE	DESCRIPTION
1	05/17/2011	CONSTRUCTION DOCUMENTS

CONTRACTOR TO VERIFY DRAWINGS IN FIELD USE REFLECT LAST REVISION DATE:

NO.	DATE	DESCRIPTION

SHEET NAME
POST DEMOLITION PLAN - BLDG. 2

CONST. DOCUMENTS
MAY 17, 2011

SHEET NUMBER
CD-002

Scale: 1" = 30'

30 0 15 30 40 50 60

Graphic Scale

Legend

(Note: All items may not appear on drawing)

San. Sewer Manhole	S
Water Manhole	W
Storm Drain Manhole	D
Electrical Manhole	E
Catch Basins	
Exist. Fire Hydrant	
Fire Hydrant	
Exist. Water Valve	WV
Water Valve	WV
Sanitary Sewer	S
Culinary Water	W
Gas Line	G
Irrigation Line	IW
Storm Drain	SD
Telephone Line	T
Secondary Waterline	SW
Power Line	P
Fire Line	F
Land Drain	LD
Power pole	
Power pole w/guy	
Light Pole	
Fence	X X X
Flowline of ditch	
Overhead Power line	OHP
Corrugated Metal Pipe	CMP
Concrete Pipe	CP
Reinforced Concrete Pipe	RCP
Ductile Iron	DI
Polyvinyl Chloride	PVC
Top of Asphalt	TA
Edge of Asphalt	EA
Centerline	CL
Flowline	FL
Finish Floor	FF
Top of Curb	TC
Top of Wall	TWL
Top of Walk	TW
Top of Concrete	TCN
Natural Ground	NG
Finish Grade	FG
Fire Department Connection	FDC
Finish Contour	90
Exist. Contour	90
Finish Grade	95.33TA
Exist. Grade	95.72TA
Ridge Line	R
Direction of Flow	
Existing Asphalt	
New Asphalt	
Heavy Duty Asphalt	
Concrete	
Open Face Curb & Gutter	
Demo Tree	

TREE DEMOLITION NOTE:
Coordinate with Owner and Specifications for Trees to be retained or removed. Trees with GREEN Caution Tape are to remain. Trees with RED Caution Tape are to be removed. These trees will also have 6' tall chain link fencing placed around them at the drip line (location must be approved by owner). The fencing will not be removed without written approval of from the architect and the owner. Any trees removed or damaged will be paid for by the contractor at the schedule of values shown in specifications.

CAUTION NOTICE TO CONTRACTOR
The contractor is specifically cautioned that the location and/or elevation of existing utilities as shown on these plans are based on records from WSU and, where possible, measurements taken in the field. The information is not to be relied on as being exact or complete. The contractor must call the utility owner at least 48 hours before any excavation to request exact field location of utilities. It shall be the responsibility of the contractor to relocate all existing utilities which conflict with the proposed improvements shown on the plans.

UTILITY LOCATION REQUIREMENTS
The contractor shall at his cost, provide GPS Coordinates for all utilities found during demolition, marked or not marked, all utility relocations, all utility connections, and all new utility lines. Coordinates will contain a Northing, Easting, Elevation, and Description. Coordinates will be recorded at the following minimum locations, storm drain manholes top and flowline, catch basins top and flowline, inlet boxes top and flowline, cleanouts: water line angle points, valves, tees, elbows, and connections: chilled water supply and return lines angle points, valves, tees, elbows, and connections: gas line angle points, tees, elbows, valves, and connection points: sanitary sewer manholes top and flowline, cleanouts, tees, wyes, and connection points: electrical conduit runs, angle points, elbows, and connections: telephone and data, conduit runs, angle points, elbows, and connections: irrigation angle points, tees, elbows, valves, and connection points. All of these coordinates are to be inserted into a record drawing set of plans and provided to the owner and to the civil engineer. Additionally, all of these data points are to be provided to the owner and civil engineer on a weekly basis. Failure to record these data points will result in the contractor excavating, locating, providing the coordinates, and backfilling at no additional expense to the owner.

PRIVATE ENGINEER'S NOTICE TO CONTRACTORS
The Contractor agrees that he shall assume sole and complete responsibility for job site conditions during the course of construction of this project, including safety of all persons and property; that this requirement shall apply continuously and not be limited to normal working hours; and that the contractor shall defend, indemnify, and hold the owner and the engineer harmless from any and all liability, real or alleged, in connection with the performance of work on this project, excepting for liability arising from the sole negligence of the owner or the engineer.

ALL CONSTRUCTION TO CONFORM TO WSU STANDARDS AND SPECIFICATIONS

MHTN ARCHITECTS
MHTN Architects, Inc.
420 East South Temple
Suite 100
Salt Lake City, Utah 84111
Telephone (801) 595-6700
Telefax (801) 595-6717
www.mhtn.com

GREAT BASIN ENGINEERING INC
5746 South 1475 East Suite 200
Ogden, Utah 84403 Main (801)394-4515
S.L.C (801)521-0222 FAX 801-392-7544
WWW.GREATBASINENGINEERING.COM

WEBER STATE UNIVERSITY
RESIDENTIAL LIFE - PHASE II - BLDG. 2
DFCM PROJECT NUMBER: 10176810
WEBER STATE UNIVERSITY
OGDEN, UTAH 84408

SEAL

MHTN PROJECT NO. 201043.00

DRAWN BY: BB CHECKED BY: DRW

ISSUED:

NO.	DATE	DESCRIPTION
1	05/17/2011	CONSTRUCTION DOCUMENTS

CONTRACTOR TO VERIFY DRAWINGS IN FIELD USE REFLECT LAST REVISION DATE:

NO.	DATE	DESCRIPTION

SHEET NAME
SITE PLAN
BLDG. 2

CONST. DOCUMENTS
MAY 17, 2011

SHEET NUMBER
CS-101

Scale: 1" = 20'

20 0 10 20 25 30 35 40

Graphic Scale

Legend

(Note: All items may not appear on drawing)

San. Sewer Manhole	S
Water Manhole	W
Storm Drain Manhole	D
Electrical Manhole	E
Catch Basins	
Exist. Fire Hydrant	
Fire Hydrant	
Exist. Water Valve	WV
Water Valve	WV
Sanitary Sewer	S
Culinary Water	W
Gas Line	G
Irrigation Line	IW
Storm Drain	SD
Telephone Line	T
Secondary Waterline	SW
Power Line	P
Fire Line	F
Land Drain	LD
Power pole	
Power pole w/guy	
Light Pole	
Fence	X X X
Flowline of ditch	
Overhead Power line	OHP
Corrugated Metal Pipe	CMP
Concrete Pipe	CP
Reinforced Concrete Pipe	RCP
Ductile Iron	DI
Polyvinyl Chloride	PVC
Top of Asphalt	TA
Edge of Asphalt	EA
Centerline	CL
Flowline	FL
Finish Floor	FF
Top of Curb	TC
Top of Wall	TWL
Top of Walk	TW
Top of Concrete	TCN
Natural Ground	NG
Finish Grade	FG
Fire Department Connection	FDC
Finish Contour	90
Exist. Contour	90
Finish Grade	95.33TA
Exist. Grade	95.72TA
Ridge Line	R
Direction of Flow	
Existing Asphalt	
New Asphalt	
Heavy Duty Asphalt	
Concrete	
Open Face Curb & Gutter	
Demo Tree	

TREE DEMOLITION NOTE:
Coordinate with Owner and Specifications for Trees to be retained or removed. Trees with GREEN Caution Tape are to remain. Trees with RED Caution Tape are to be removed. These trees will also have 6' tall chain link fencing placed around them at the drip line (location must be approved by owner). The fencing will not be removed without written approval of from the architect and the owner. Any trees removed or damaged will be paid for by the contractor at the schedule of values shown in specifications.

CAUTION NOTICE TO CONTRACTOR
The contractor is specifically cautioned that the location and/or elevation of existing utilities as shown on these plans are based on records from WSU and, where possible, measurements taken in the field. The information is not to be relied on as being exact or complete. The contractor must call the utility owner at least 48 hours before any excavation to request exact field location of utilities. It shall be the responsibility of the contractor to relocate all existing utilities which conflict with the proposed improvements shown on the plans.

UTILITY LOCATION REQUIREMENTS
The contractor shall at his cost, provide GPS Coordinates for all utilities found during demolition, marked or not marked, all utility relocations, all utility connections, and all new utility lines. Coordinates will contain a Northing, Easting, Elevation, and Description. Coordinates will be recorded at the following minimum locations, storm drain manholes top and flowline, catch basins top and flowline, inlet boxes top and flowline, cleanouts: water line angle points, valves, tees, elbows, and connections: chilled water supply and return lines angle points, valves, tees, elbows, and connections: gas line angle points, tees, elbows, valves, and connection points: sanitary sewer manholes top and flowline, cleanouts, tees, wyes, and connection points: electrical conduit runs, angle points, elbows, and connections: telephone and data, conduit runs, angle points, elbows, and connections: irrigation angle points, tees, elbows, valves, and connection points. All of these coordinates are to be inserted into a record drawing set of plans and provided to the owner and to the civil engineer. Additionally, all of these data points are to be provided to the owner and civil engineer on a weekly basis. Failure to record these data points will result in the contractor excavating, locating, providing the coordinates, and backfilling at no additional expense to the owner.

PRIVATE ENGINEER'S NOTICE TO CONTRACTORS
The Contractor agrees that he shall assume sole and complete responsibility for job site conditions during the course of construction of this project, including safety of all persons and property: that this requirement shall apply continuously and not be limited to normal working hours; and that the contractor shall defend, indemnify, and hold the owner and the engineer harmless from any and all liability, real or alleged, in connection with the performance of work on this project, excepting for liability arising from the sole negligence of the owner or the engineer.

ALL CONSTRUCTION TO CONFORM TO WSU STANDARDS AND SPECIFICATIONS

MHTN ARCHITECTS
MHTN Architects, Inc.
420 East South Temple
Suite 100
Salt Lake City, Utah 84111
Telephone (801) 595-6700
Telefax (801) 595-6717
www.mhtn.com

GREAT BASIN ENGINEERING
5746 South 1475 East Suite 200
Ogden, Utah 84403 Main (801)394-4515
S.L.C (801)521-0222 FAX 801-392-7544
WWW.GREATBASINENGINEERING.COM

WEBER STATE UNIVERSITY
RESIDENTIAL LIFE - PHASE II - BLDG. 2
DFCM PROJECT NUMBER: 10176810

WEBER STATE UNIVERSITY
OGDEN, UTAH 84408

SEAL

MHTN PROJECT NO. 201043.00

DRAWN BY: BB CHECKED BY: DRW

ISSUED:

NO.	DATE	DESCRIPTION
1	05/17/2011	CONSTRUCTION DOCUMENTS

CONTRACTOR TO VERIFY DRAWINGS IN FIELD USE REFLECT LAST REVISION DATE

NO.	DATE	DESCRIPTION

SHEET NAME
SITE PLAN
BLDG. 2

CONST. DOCUMENTS
MAY 17, 2011

SHEET NUMBER
CS-102

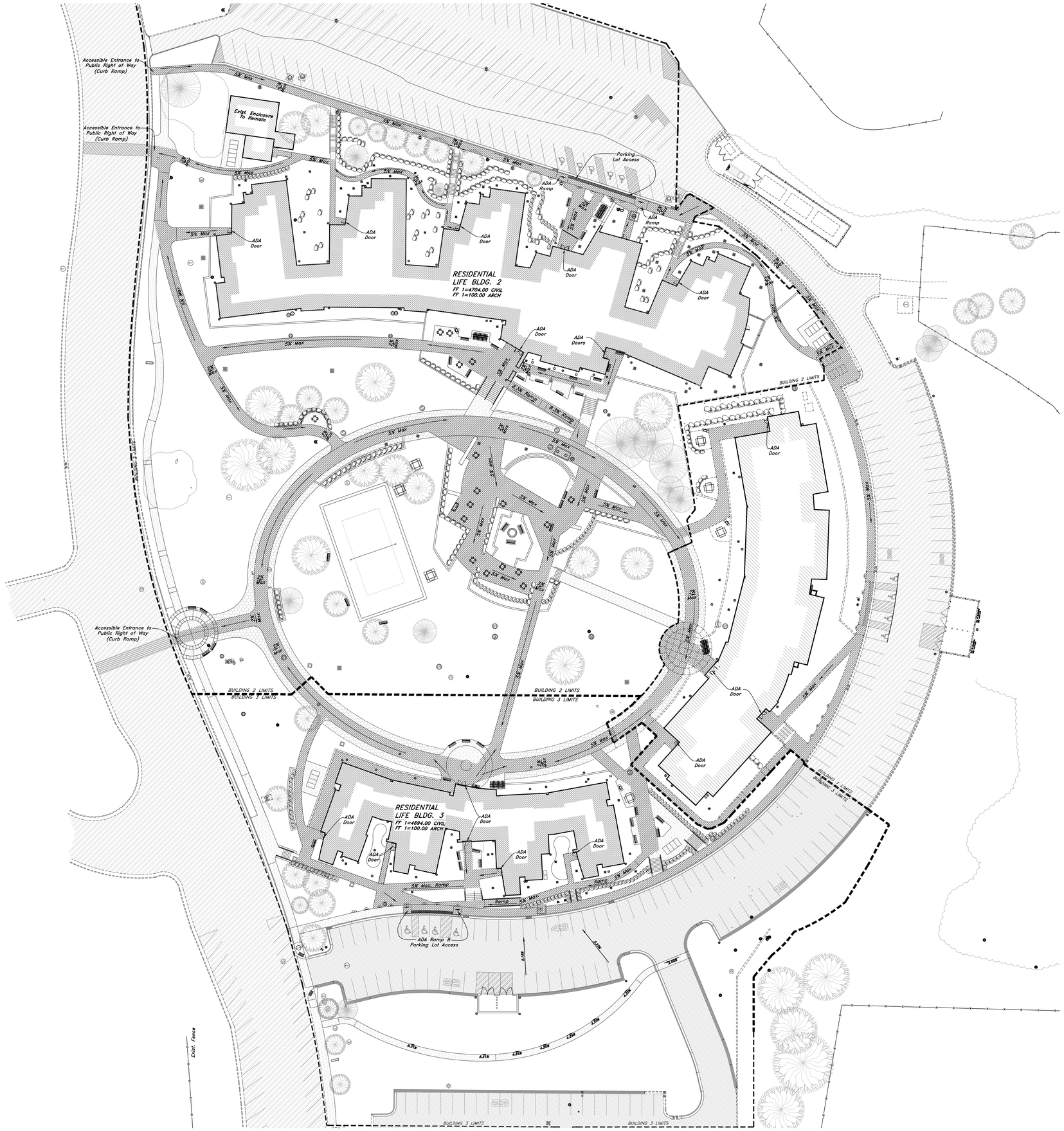

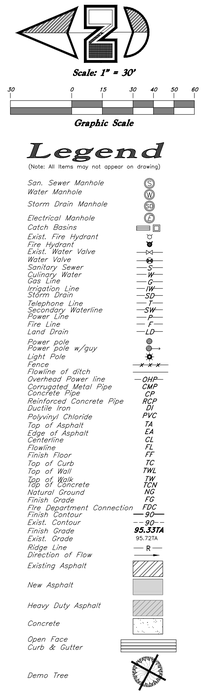

TREE DEMOLITION NOTE:
Trees with caution tape are to remain. These trees will also have 6' tall chain link fencing placed around them at the drip line (location must be approved by owner). The fencing will not be removed without written approval of from the architect and the owner. Any trees removed or damaged will be paid for by the contractor at the schedule of values shown in contract documents.

CAUTION NOTICE TO CONTRACTOR
The contractor is specifically cautioned that the location and/or elevation of existing utilities as shown on these plans are based on records from WSU and, where possible, measurements taken in the field. The information is not to be relied on as being exact or complete. The contractor must call the utility owner at least 48 hours before any excavation to request exact field location of utilities. It shall be the responsibility of the contractor to relocate all existing utilities which conflict with the proposed improvements shown on the plans.

UTILITY LOCATION REQUIREMENTS
The contractor shall at his cost, provide GPS Coordinates for all utilities found during demolition, marked or not marked, all utility relocations, all utility connections, and all new utility lines. Coordinates will contain a Northing, Easting, Elevation, and Description. Coordinates will be recorded at the following minimum locations, storm drain manholes top and flowline, catch basins top and flowline, inlet boxes top and flowline, cleanouts: water line angle points, valves, tees, elbows, and connections: chilled water supply and return lines angle points, valves, tees, elbows, and connections: gas line angle points, tees, elbows, valves, and connection points: sanitary sewer manholes top and flowline, cleanouts, tees, wyes, and connection points: electrical conduit runs, angle points, elbows, and connections: telephone and data, conduit runs, angle points, elbows, and connections: irrigation angle points, tees, elbows, valves, and connection points. All of these coordinates are to be inserted into a record drawing set of plans and provided to the owner and to the civil engineer. Additionally, all of these data points are to be provided to the owner and civil engineer on a weekly basis. Failure to record these data points will result in the contractor excavating, locating, providing the coordinates, and backfilling at no additional expense to the owner.

PRIVATE ENGINEER'S NOTICE TO CONTRACTORS
The Contractor agrees that he shall assume sole and complete responsibility for job site conditions during the course of construction of this project, including safety of all persons and property; that this requirement shall apply continuously and not be limited to normal working hours; and that the contractor shall defend, indemnify, and hold the owner and the engineer harmless from any and all liability, real or alleged, in connection with the performance of work on this project, excepting for liability arising from the sole negligence of the owner or the engineer.

ALL CONSTRUCTION TO CONFORM TO WSU STANDARDS AND SPECIFICATIONS

MHTN ARCHITECTS
MHTN Architects, Inc.
420 East South Temple
Suite 100
Salt Lake City, Utah 84111
Telephone (801) 595-6700
Telefax (801) 595-6717
www.mhtn.com

GREAT BASIN ENGINEERING INC
5746 South 1475 East Suite 200
Ogden, Utah 84403 Main (801)394-4515
S.L.C. (801)521-0222 FAX 801-392-7544
WWW.GREATBASINENGINEERING.COM

WEBER STATE UNIVERSITY
RESIDENTIAL LIFE - PHASE II - BLDG. 2
DFCM PROJECT NUMBER: 10176810
WEBER STATE UNIVERSITY
OGDEN, UTAH 84408

SEAL

MHTN PROJECT NO. 201043.00
DRAWN BY: BB CHECKED BY: DRW

ISSUED:

NO.	DATE	DESCRIPTION
1	05/17/2011	CONSTRUCTION DOCUMENTS

CONTRACTOR TO VERIFY DRAWINGS IN FIELD USE REFLECT LAST REVISION DATE.

NO.	DATE	DESCRIPTION

SHEET NAME
ADA ACCESSIBILITY PLAN BLDG. 2/3

CONST. DOCUMENTS
MAY 17, 2011

SHEET NUMBER
CS-103

Scale: 1" = 10'

10 0 5 10 15 20

Graphic Scale

Legend

(Note: All items may not appear on drawing)

San. Sewer Manhole	S
Water Manhole	W
Storm Drain Manhole	D
Electrical Manhole	E
Catch Basins	
Exist. Fire Hydrant	
Fire Hydrant	
Exist. Water Valve	
Water Valve	
Sanitary Sewer	S
Culinary Water	W
Gas Line	G
Irrigation Line	IW
Storm Drain	SD
Telephone Line	T
Secondary Waterline	SW
Power Line	P
Fire Line	F
Land Drain	LD
Power pole	
Power pole w/guy	
Light Pole	
Fence	
Flowline of ditch	
Overhead Power line	OHP
Corrugated Metal Pipe	CMP
Concrete Pipe	CP
Reinforced Concrete Pipe	RCP
Ductile Iron	DI
Polyvinyl Chloride	PVC
Top of Asphalt	TA
Edge of Asphalt	EA
Centerline	CL
Flowline	FL
Finish Floor	FF
Top of Curb	TC
Top of Wall	TWL
Top of Walk	TW
Top of Concrete	TCN
Natural Ground	NG
Finish Grade	FG
Fire Department Connection	FDC
Finish Contour	90
Exist. Contour	90
Finish Grade	95.33TA
Exist. Grade	95.72TA
Ridge Line	R
Direction of Flow	
Existing Asphalt	
New Asphalt	
Heavy Duty Asphalt	
Concrete	
Open Face Curb & Gutter	
Demo Tree	

General Grading Notes:

1. All work shall be in accordance with WSU Standards.
2. Cut slopes shall be no steeper than 1 horizontal to 1 vertical.
3. Fill slopes shall be no steeper than 1 horizontal to 1 vertical.
4. Fills shall be compacted per the recommendations of the geotechnical report prepared for the project and shall be certified by the geotechnical engineer.
5. Areas to receive fill shall be properly prepared and approved by the inspector and geotechnical Engineer prior to placing fill.
6. Fills shall be benched into competent material as per specifications and geotechnical report.
7. All trench backfill shall be tested and certified by the site geotechnical engineer per the grading code.
8. The geotechnical engineer shall perform periodic inspections and submit a complete report and map upon completion of the rough grading.
9. The final compaction report and certification from the geotechnical engineer shall contain the type of field testing performed. Each test shall be identified with the method of obtaining the in-place density, whether sand cone or drive ring and shall be so noted for each test. Sufficient maximum density determinations shall be performed to verify the accuracy of the maximum density curves used by the field technician.
10. Dust shall be controlled by watering.
11. The location and protection of all utilities is the responsibility of the permitee.
12. Approved protective measures and temporary drainage provisions must be used to protect adjoining areas during the grading project.
13. All public & University roadways must be cleared daily of all dirt, mud and debris deposited on them as a result of the grading operation. Cleaning is to be done to the satisfaction of the project manager, storm water manager, and owner.
14. The site shall be cleared and grubbed of all vegetation and deleterious matter prior to grading.
15. The contractor shall provide shoring in accordance with OSHA requirements for trench walls.
16. Aggregate base shall be compacted per the geotechnical report prepared for the project.
17. Elevations shown on this plan are finish grades. Rough grades are the subgrades of the improvements shown hereon.
18. The recommendations in the following Geotechnical Engineering Report by GSH Geotechnical Consultant, Inc. are included in the requirements of grading and site preparation. The report is titled "Report Geotechnical Study Proposed Residential Life Housing Building Approximately 4100 South 1350 East South End of Weber State University Campus Ogden, Utah" This Geotechnical Eng. is to perform all inspections, etc. noted above. Job No.: 0149-015-10 Dated: December 15, 2010
19. As part of the construction documents, owner has provided contractor with a topographic survey performed by manual or aerial means. Such survey was prepared for project design purposes and is provided to the contractor as a courtesy. It is expressly understood that such survey may not accurately reflect existing topographic conditions.
20. Erosion Control: Protect all inlet boxes, catch basins, etc. with straw bales or other approved method to strain the strom water during construction. Protect surrounding properties and streets from site runoff with sandbags and earth berms.

CAUTION NOTICE TO CONTRACTOR

The contractor is specifically cautioned that the location and/or elevation of existing utilities as shown on these plans are based on records from WSU and, where possible, measurements taken in the field. The information is not to be relied on as being exact or complete. The contractor must call the utility owner at least 48 hours before any excavation to request exact field location of utilities. It shall be the responsibility of the contractor to relocate all existing utilities which conflict with the proposed improvements shown on the plans.

UTILITY LOCATION REQUIREMENTS

The contractor shall at his cost, provide GPS Coordinates for all utilities found during demolition, marked or not marked, all utility relocations, all utility connections, and all new utility lines. Coordinates will contain a Northing, Easting, Elevation, and Description. Coordinates will be recorded at the following minimum locations, storm drain manholes top and flowline, catch basins top and flowline, inlet boxes top and flowline, cleanouts: water line angle points, valves, tees, elbows, and connections: chilled water supply and return lines angle points, valves, tees, elbows, and connections: gas line angle points, tees, elbows, valves, and connection points: sanitary sewer manholes top and flowline, cleanouts, tees, wyes, and connection points: electrical conduit runs, angle points, elbows, and connections: telephone and data, conduit runs, angle points, elbows, and connections: irrigation angle points, tees, elbows, valves, and connection points. All of these coordinates are to be inserted into a record drawing set of plans and provided to the owner and to the civil engineer. Additionally, all of these data points are to be provided to the owner and civil engineer on a weekly basis. Failure to record these data points will result in the contractor excavating, locating, providing the coordinates, and backfilling at no additional expense to the owner.

PRIVATE ENGINEER'S NOTICE TO CONTRACTORS

The Contractor agrees that he shall assume sole and complete responsibility for job site conditions during the course of construction of this project, including safety of all persons and property; that this requirement shall apply continuously and not be limited to normal working hours; and that the contractor shall defend, indemnify, and hold the owner and the engineer harmless from any and all liability, real or alleged, in connection with the performance of work on this project, excepting for liability arising from the sole negligence of the owner or the engineer.

ALL CONSTRUCTION TO CONFORM TO WSU STANDARDS AND SPECIFICATIONS

TREE DEMOLITION NOTE:
Coordinate with Owner and Specifications for Trees to be retained or removed. Trees with GREEN Caution Tape are to remain. Trees with RED Caution Tape are to be removed. These trees will also have 6' tall chain link fencing placed around them at the drip line (location must be approved by owner). The fencing will not be removed without written approval of from the architect and the owner. Any trees removed or damaged will be paid for by the contractor at the schedule of values shown in specifications.

MHTN
ARCHITECTS
MHTN Architects, Inc.
420 East South Temple
Suite 100
Salt Lake City, Utah 84111
Telephone (801) 595-6700
Telefax (801) 595-6717
www.mhtn.com

GREAT BASIN ENGINEERING INC
5746 South 1475 East Suite 200
Ogden, Utah 84403 Main (801)394-4515
S.L.C (801)521-0222 FAX 801-392-7544
WWW.GREATBASINENGINEERING.COM

WEBER STATE UNIVERSITY
RESIDENTIAL LIFE - PHASE II - BLDG. 2
DFCM PROJECT NUMBER: 10176810

WEBER STATE UNIVERSITY
OGDEN, UTAH 84408

SEAL

MHTN PROJECT NO. 201043.00

DRAWN BY: BB CHECKED BY: DRW

ISSUED:

NO:	DATE	DESCRIPTION
1	05/17/2011	CONSTRUCTION DOCUMENTS

CONTRACTOR TO VERIFY DRAWINGS IN FIELD USE REFLECT LAST REVISION DATE.

NO.	DATE	DESCRIPTION

SHEET NAME
OVERALL GRADING PLAN BLDG. 2
CONST. DOCUMENTS
MAY 17, 2011

SHEET NUMBER
CG-200

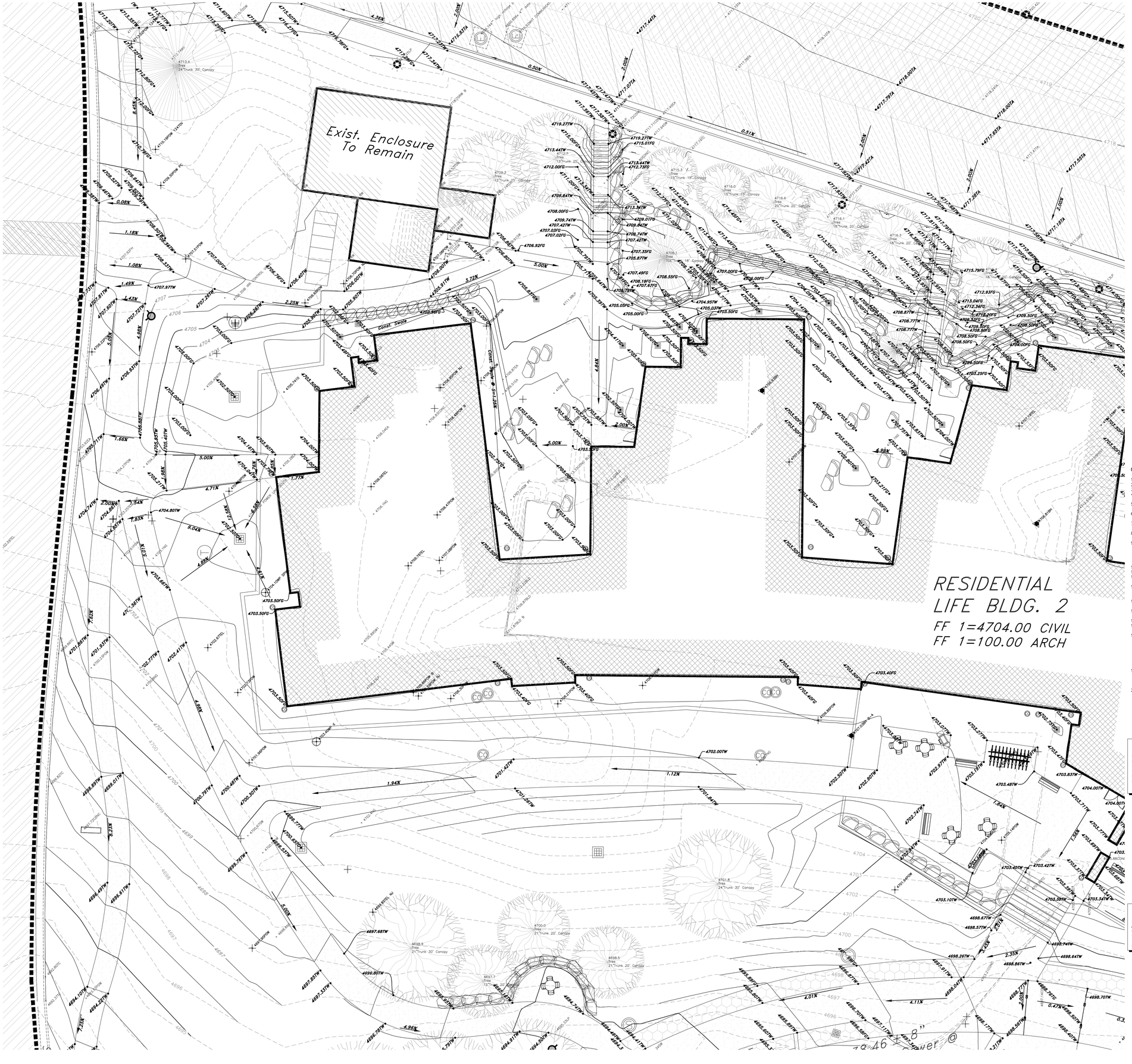

Scale: 1" = 10'

10 0 5 10 15 20

Graphic Scale

Legend

(Note: All items may not appear on drawing)

San. Sewer Manhole	S
Water Manhole	W
Storm Drain Manhole	D
Electrical Manhole	E
Catch Basins	
Exist. Fire Hydrant	
Fire Hydrant	
Exist. Water Valve	
Water Valve	
Sanitary Sewer	S
Culinary Water	W
Gas Line	G
Irrigation Line	IW
Storm Drain	SD
Telephone Line	T
Secondary Waterline	SW
Power Line	P
Fire Line	F
Land Drain	LD
Power pole	
Power pole w/guy	
Light Pole	
Fence	
Flowline of ditch	
Overhead Power line	OHP
Corrugated Metal Pipe	CMP
Concrete Pipe	CP
Reinforced Concrete Pipe	RCP
Ductile Iron	DI
Polyvinyl Chloride	PVC
Top of Asphalt	TA
Edge of Asphalt	EA
Centerline	CL
Flowline	FL
Finish Floor	FF
Top of Curb	TC
Top of Wall	TWL
Top of Walk	TW
Top of Concrete	TCN
Natural Ground	NG
Finish Grade	FG
Fire Department Connection	FDC
Finish Contour	90
Exist. Contour	90
Finish Grade	95.33TA
Exist. Grade	95.72TA
Ridge Line	R
Direction of Flow	
Existing Asphalt	
New Asphalt	
Heavy Duty Asphalt	
Concrete	
Open Face Curb & Gutter	
Demo Tree	

General Grading Notes:

1. All work shall be in accordance with WSU Standards.
2. Cut slopes shall be no steeper than 1 horizontal to 1 vertical.
3. Fill slopes shall be no steeper than 1 horizontal to 1 vertical.
4. Fills shall be compacted per the recommendations of the geotechnical report prepared for the project and shall be certified by the geotechnical engineer.
5. Areas to receive fill shall be properly prepared and approved by the inspector and geotechnical Engineer prior to placing fill.
6. Fills shall be benched into competent material as per specifications and geotechnical report.
7. All trench backfill shall be tested and certified by the site geotechnical engineer per the grading code.
8. The geotechnical engineer shall perform periodic inspections and submit a complete report and map upon completion of the rough grading.
9. The final compaction report and certification from the geotechnical engineer shall contain the type of field testing performed. Each test shall be identified with the method of obtaining the in-place density, whether sand cone or drive ring and shall be so noted for each test. Sufficient maximum density determinations shall be performed to verify the accuracy of the maximum density curves used by the field technician.
10. Dust shall be controlled by watering.
11. The location and protection of all utilities is the responsibility of the permitee.
12. Approved protective measures and temporary drainage provisions must be used to protect adjoining areas during the grading project.
13. All public & University roadways must be cleared daily of all dirt, mud and debris deposited on them as a result of the grading operation. Cleaning is to be done to the satisfaction of the project manager, storm water manager, and owner.
14. The site shall be cleared and grubbed of all vegetation and deleterious matter prior to grading.
15. The contractor shall provide shoring in accordance with OSHA requirements for trench walls.
16. Aggregate base shall be compacted per the geotechnical report prepared for the project.
17. Elevations shown on this plan are finish grades. Rough grades are the subgrades of the improvements shown hereon.
18. The recommendations in the following Geotechnical Engineering Report by GSH Geotechnical Consultant, Inc. are included in the requirements of grading and site preparation.
    The report is titled "Report Geotechnical Study Proposed Residential Life Housing Building Approximately 4100 South 1350 East South End of Weber State University Campus Ogden, Utah" This Geotechnical Eng. is to perform all inspections, etc. noted above.
    Job No.: 0149-015-10
    Dated: December 15, 2010
19. As part of the construction documents, owner has provided contractor with a topographic survey performed by manual or aerial means. Such survey was prepared for project design purposes and is provided to the contractor as a courtesy. It is expressly understood that such survey may not accurately reflect existing topographic conditions.
20. Erosion Control: Protect all inlet boxes, catch basins, etc. with straw bales or other approved method to strain the strom water during construction. Protect surrounding properties and streets from site runoff with sandbags and earth berms.

CAUTION NOTICE TO CONTRACTOR

The contractor is specifically cautioned that the location and/or elevation of existing utilities as shown on these plans are based on records from WSU and, where possible, measurements taken in the field. The information is not to be relied on as being exact or complete. The contractor must call the utility owner at least 48 hours before any excavation to request exact field location of utilities. It shall be the responsibility of the contractor to relocate all existing utilities which conflict with the proposed improvements shown on the plans.

UTILITY LOCATION REQUIREMENTS

The contractor shall at his cost, provide GPS Coordinates for all utilities found during demolition, marked or not marked, all utility relocations, all utility connections, and all new utility lines. Coordinates will contain a Northing, Easting, Elevation, and Description. Coordinates will be recorded at the following minimum locations, storm drain manholes top and flowline, catch basins top and flowline, inlet boxes top and flowline, cleanouts: water line angle points, valves, tees, elbows, and connections: chilled water supply and return lines angle points, valves, tees, elbows, and connections: gas line angle points, tees, elbows, valves, and connection points: sanitary sewer manholes top and flowline, cleanouts, tees, wyes, and connection points: electrical conduit runs, angle points, elbows, and connections: telephone and data, conduit runs, angle points, elbows, and connections: irrigation angle points, tees, elbows, valves, and connection points. All of these coordinates are to be inserted into a record drawing set of plans and provided to the owner and to the civil engineer. Additionally, all of these data points are to be provided to the owner and civil engineer on a weekly basis. Failure to record these data points will result in the contractor excavating, locating, providing the coordinates, and backfilling at no additional expense to the owner.

PRIVATE ENGINEER'S NOTICE TO CONTRACTORS

The Contractor agrees that he shall assume sole and complete responsibility for job site conditions during the course of construction of this project, including safety of all persons and property: that this requirement shall apply continuously and not be limited to normal working hours; and that the contractor shall defend, indemnify, and hold the owner and the engineer harmless from any and all liability, real or alleged, in connection with the performance of work on this project, excepting for liability arising from the sole negligence of the owner or the engineer.

ALL CONSTRUCTION TO CONFORM TO WSU STANDARDS AND SPECIFICATIONS

TREE DEMOLITION NOTE:
Coordinate with Owner and Specifications for Trees to be retained or removed. Trees with GREEN Caution Tape are to remain. Trees with RED Caution Tape are to be removed. These trees will also have 6' tall chain link fencing placed around them at the drip line (location must be approved by owner). The fencing will not be removed without written approval of from the architect and the owner. Any trees removed or damaged will be paid for by the contractor at the schedule of values shown in specifications.

MHTN ARCHITECTS
MHTN Architects, Inc.
420 East South Temple
Suite 100
Salt Lake City, Utah 84111
Telephone (801) 595-6700
Telefax (801) 595-6717
www.mhtn.com

GREAT BASIN ENGINEERING INC
5746 South 1475 East Suite 200
Ogden, Utah 84403 Main (801)394-4515
S.L.C (801)521-0222 FAX 801-392-7544
WWW.GREATBASINENGINEERING.COM

WEBER STATE UNIVERSITY
RESIDENTIAL LIFE - PHASE II - BLDG. 2
DFCM PROJECT NUMBER: 10176810

WEBER STATE UNIVERSITY
OGDEN, UTAH 84408

SEAL

MHTN PROJECT NO. 201043.00

DRAWN BY: BB CHECKED BY: DRW

ISSUED:

NO:	DATE:	DESCRIPTION:
1	05/17/2011	CONSTRUCTION DOCUMENTS

CONTRACTOR TO VERIFY DRAWINGS IN FIELD USE REFLECT LAST REVISION DATE:

NO.	DATE:	DESCRIPTION:

SHEET NAME

GRADING PLAN
BLDG. 2

CONST. DOCUMENTS
MAY 17, 2011

SHEET NUMBER

CG-201

Scale: 1" = 10'

Graphic Scale

Legend

(Note: All items may not appear on drawing)

- San. Sewer Manhole
- Water Manhole
- Storm Drain Manhole
- Electrical Manhole
- Catch Basins
- Exist. Fire Hydrant
- Fire Hydrant
- Exist. Water Valve
- Water Valve
- Sanitary Sewer — S —
- Culinary Water — W —
- Gas Line — G —
- Irrigation Line — IW —
- Storm Drain — SD —
- Telephone Line — T —
- Secondary Waterline — SW —
- Power Line — P —
- Fire Line — F —
- Land Drain — LD —
- Power pole
- Power pole w/guy
- Light Pole
- Fence — x — x — x —
- Flowline of ditch
- Overhead Power line — OHP —
- Corrugated Metal Pipe — CMP —
- Concrete Pipe — CP —
- Reinforced Concrete Pipe — RCP —
- Ductile Iron — DI —
- Polyvinyl Chloride — PVC —
- Top of Asphalt — TA —
- Edge of Asphalt — EA —
- Centerline — CL —
- Flowline — FL —
- Finish Floor — FF —
- Top of Curb — TC —
- Top of Wall — TW —
- Top of Walk — TW —
- Top of Concrete — TCN —
- Natural Ground — NG —
- Finish Grade — FG —
- Fire Department Connection — FDC —
- Finish Contour — 90 —
- Exist. Contour — 90 —
- Finish Grade — 95.33TA
- Exist. Grade — 95.72TA
- Ridge Line — R —
- Direction of Flow
- Existing Asphalt
- New Asphalt
- Heavy Duty Asphalt
- Concrete
- Open Face Curb & Gutter
- Demo Tree

Project Benchmark:

Spike in Landscaping West of West Entrance to Wasatch Hall

Northing= 311609.7400
Easting= 1877807.1900
Elevation= 4698.795

MHTN ARCHITECTS
MHTN Architects, Inc.
420 East South Temple
Suite 100
Salt Lake City, Utah 84111
Telephone (801) 595-6700
Telefax (801) 595-6717
www.mhtn.com

GREAT BASIN ENGINEERING INC
5746 South 1475 East Suite 200
Ogden, Utah 84403 Main (801)394-4515
S.L.C. (801)521-0222 FAX 801-392-7544
WWW.GREATBASINENGINEERING.COM

WEBER STATE UNIVERSITY
RESIDENTIAL LIFE - PHASE II - BLDG. 2
DFCM PROJECT NUMBER: 10176810

WEBER STATE UNIVERSITY
OGDEN, UTAH 84408

SEAL

No. 187515
04-19-11
David R. Waldron
STATE OF UTAH

MHTN PROJECT NO. 201043.00

DRAWN BY: BB CHECKED BY: DRW

ISSUED:

NO.	DATE	DESCRIPTION
1	05/17/2011	CONSTRUCTION DOCUMENTS

CONTRACTOR TO VERIFY DRAWINGS IN FIELD USE REFLECT LAST REVISION DATE

NO.	DATE	DESCRIPTION

SHEET NAME

GRADING PLAN
BLDG. 2

CONST. DOCUMENTS
MAY 17, 2011

SHEET NUMBER

CG-202

Scale: 1" = 10'

Graphic Scale

Legend

(Note: All items may not appear on drawing)

San. Sewer Manhole	S
Water Manhole	W
Storm Drain Manhole	D
Electrical Manhole	E
Catch Basins	
Exist. Fire Hydrant	
Fire Hydrant	
Exist. Water Valve	
Water Valve	
Sanitary Sewer	S
Culinary Water	W
Gas Line	G
Irrigation Line	IW
Storm Drain	SD
Telephone Line	T
Secondary Waterline	SW
Power Line	P
Fire Line	F
Land Drain	LD
Power pole	
Power pole w/guy	
Light Pole	
Fence	
Flowline of ditch	
Overhead Power line	OHP
Corrugated Metal Pipe	CMP
Concrete Pipe	CP
Reinforced Concrete Pipe	RCP
Ductile Iron	DI
Polyvinyl Chloride	PVC
Top of Asphalt	TA
Edge of Asphalt	EA
Centerline	CL
Flowline	FL
Finish Floor	FF
Top of Curb	TC
Top of Wall	TWL
Top of Walk	TW
Top Of Concrete	TCN
Natural Ground	NG
Finish Grade	FG
Fire Department Connection	FDC
Finish Contour	90
Exist. Contour	90
Finish Grade	95.33TA
Exist. Grade	95.72TA
Ridge Line	R
Direction of Flow	
Existing Asphalt	
New Asphalt	
Heavy Duty Asphalt	
Concrete	
Open Face Curb & Gutter	
Demo Tree	

Project Benchmark:

Spike in Landscaping West of West Entrance to Wasatch Hall

Northing= 311609.7400
Easting= 1877807.1900
Elevation= 4698.795

MHTN ARCHITECTS
MHTN Architects, Inc.
420 East South Temple
Suite 100
Salt Lake City, Utah 84111
Telephone (801) 595-6700
Telefax (801) 595-6717
www.mhtn.com

GREAT BASIN ENGINEERING INC
5746 South 1475 East Suite 200
Ogden, Utah 84403 Main (801)394-4515
S.L.C. (801)521-0222 FAX 801-392-7544
WWW.GREATBASINENGINEERING.COM

WEBER STATE UNIVERSITY
RESIDENTIAL LIFE - PHASE II - BLDG. 2
DFCM PROJECT NUMBER: 10176810

WEBER STATE UNIVERSITY
OGDEN, UTAH 84408

SEAL

MHTN PROJECT NO. 201043.00

DRAWN BY: BB CHECKED BY: DRW

ISSUED:

NO.	DATE	DESCRIPTION
1	05/17/2011	CONSTRUCTION DOCUMENTS

CONTRACTOR TO VERIFY DRAWINGS IN FIELD USE REFLECT LAST REVISION DATE.

NO.	DATE	DESCRIPTION

SHEET NAME

GRADING PLAN
BLDG. 2

CONST. DOCUMENTS
MAY 17, 2011

SHEET NUMBER

CG-203

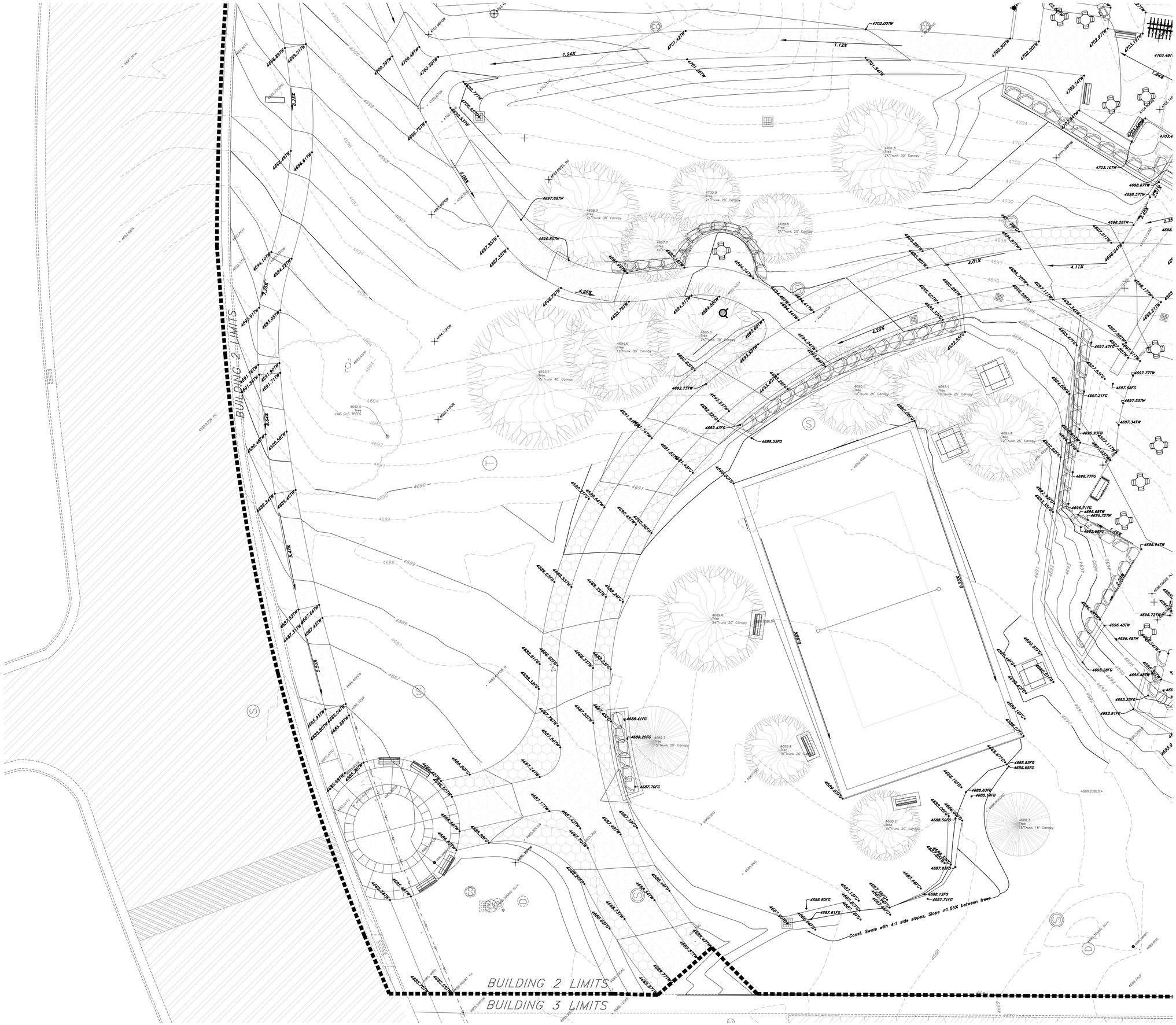

Scale: 1" = 10'

Graphic Scale

Legend

(Note: All items may not appear on drawing)

San. Sewer Manhole	S
Water Manhole	W
Storm Drain Manhole	D
Electrical Manhole	E
Catch Basins	
Exist. Fire Hydrant	
Fire Hydrant	
Exist. Water Valve	
Water Valve	
Sanitary Sewer	S
Culinary Water	W
Gas Line	G
Irrigation Line	IW
Storm Drain	SD
Telephone Line	T
Secondary Waterline	SW
Power Line	P
Fire Line	F
Land Drain	LD
Power pole	
Power pole w/guy	
Light Pole	
Fence	
Flowline of ditch	
Overhead Power line	OHP
Corrugated Metal Pipe	CMP
Concrete Pipe	CP
Reinforced Concrete Pipe	RCP
Ductile Iron	DI
Polyvinyl Chloride	PVC
Top of Asphalt	TA
Edge of Asphalt	EA
Centerline	CL
Flowline	FL
Finish Floor	FF
Top of Curb	TC
Top of Wall	TWL
Top of Walk	TW
Top Of Concrete	TCN
Natural Ground	NG
Finish Grade	FG
Fire Department Connection	FDC
Finish Contour	90
Exist. Contour	90
Finish Grade	95.33TA
Exist. Grade	95.72TA
Ridge Line	R
Direction of Flow	
Existing Asphalt	
New Asphalt	
Heavy Duty Asphalt	
Concrete	
Open Face Curb & Gutter	
Demo Tree	

Project Benchmark:

Spike in Landscaping West of West Entrance to Wasatch Hall

Northing= 311609.7400
Easting= 1877807.1900
Elevation= 4698.795

MHTN ARCHITECTS
MHTN Architects, Inc.
420 East South Temple
Suite 100
Salt Lake City, Utah 84111
Telephone (801) 595-6700
Telefax (801) 595-6717
www.mhtn.com

GREAT BASIN ENGINEERING INC
5746 South 1475 East Suite 200
Ogden, Utah 84403 Main (801)394-4515
S.L.C. (801)521-0222 FAX 801-392-7544
WWW.GREATBASINENGINEERING.COM

WEBER STATE UNIVERSITY
RESIDENTIAL LIFE - PHASE II - BLDG. 2

DFCM PROJECT NUMBER: 10176810

WEBER STATE UNIVERSITY
OGDEN, UTAH 84408

SEAL

MHTN PROJECT NO. 201043.00

DRAWN BY: BB CHECKED BY: DRW

ISSUED:

NO.	DATE	DESCRIPTION
1	05/17/2011	CONSTRUCTION DOCUMENTS

CONTRACTOR TO VERIFY DRAWINGS IN FIELD USE REFLECT LAST REVISION DATE.

NO.	DATE	DESCRIPTION

SHEET NAME

GRADING PLAN
BLDG. 2

CONST. DOCUMENTS
MAY 17, 2011

SHEET NUMBER

CG-204

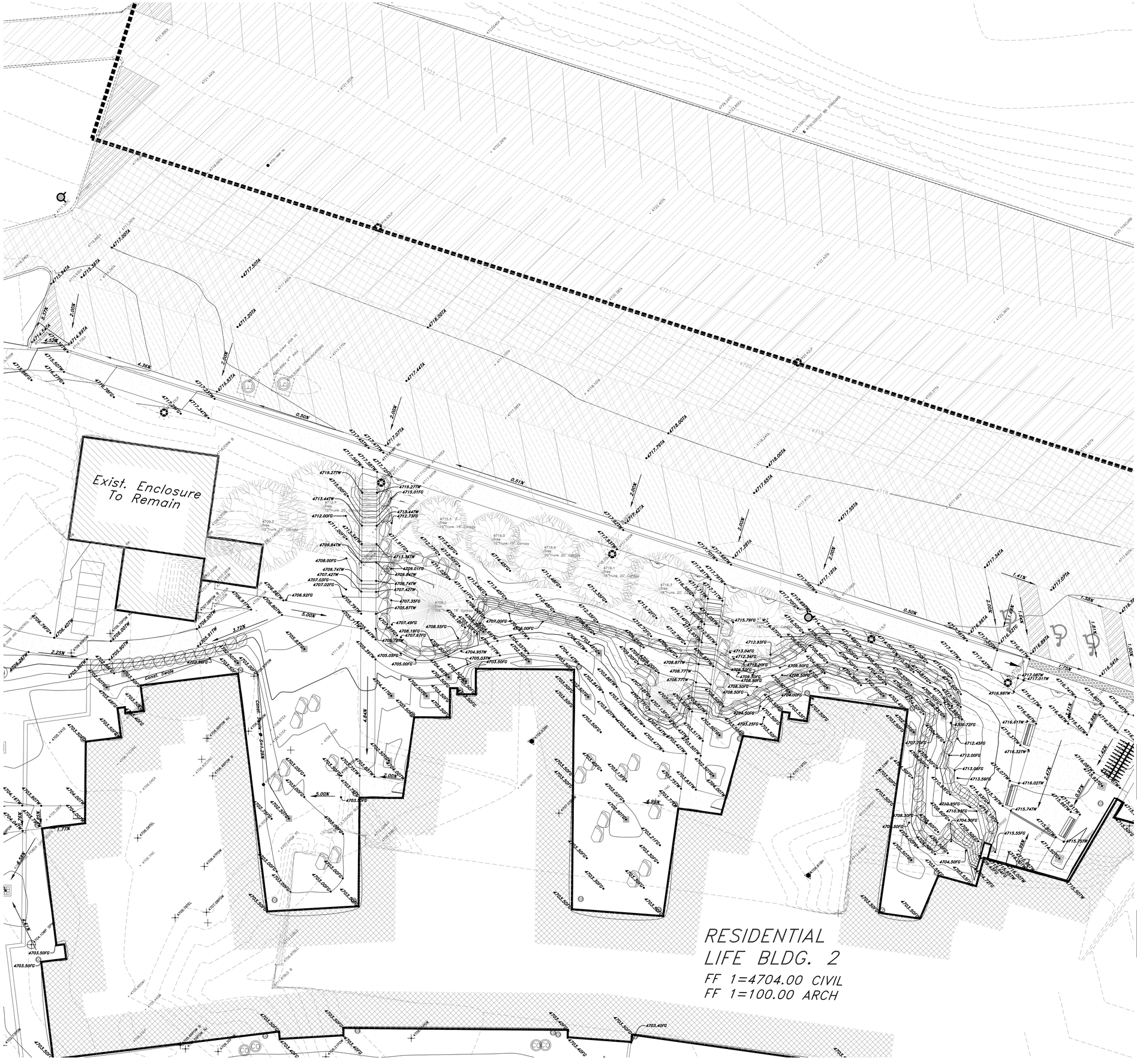

Scale: 1" = 10'

10 0 5 10 15 20

Graphic Scale

Legend

(Note: All items may not appear on drawing)

San. Sewer Manhole
Water Manhole
Storm Drain Manhole
Electrical Manhole
Catch Basins
Exist. Fire Hydrant
Fire Hydrant
Exist. Water Valve
Water Valve
Sanitary Sewer — S —
Culinary Water — W —
Gas Line — G —
Irrigation Line — IW —
Storm Drain — SD —
Telephone Line — T —
Secondary Waterline — SW —
Power Line — P —
Fire Line — F —
Land Drain — LD —
Power pole
Power pole w/guy
Light Pole
Fence — x — x — x —
Flowline of ditch
Overhead Power line — OHP —
Corrugated Metal Pipe CMP
Concrete Pipe CP
Reinforced Concrete Pipe RCP
Ductile Iron DI
Polyvinyl Chloride PVC
Top of Asphalt TA
Edge of Asphalt EA
Centerline CL
Flowline FL
Finish Floor FF
Top of Curb TC
Top of Wall TWL
Top of Walk TW
Top of Concrete TCN
Natural Ground NG
Finish Grade FG
Fire Department Connection FDC
Finish Contour — 90 —
Exist. Contour 90
Finish Grade 95.33TA
Exist. Grade 95.72TA
Ridge Line — R —
Direction of Flow
Existing Asphalt
New Asphalt
Heavy Duty Asphalt
Concrete
Open Face Curb & Gutter
Demo Tree

General Grading Notes:

1. All work shall be in accordance with WSU Standards.
2. Cut slopes shall be no steeper than 1 horizontal to 1 vertical.
3. Fill slopes shall be no steeper than 1 horizontal to 1 vertical.
4. Fills shall be compacted per the recommendations of the geotechnical report prepared for the project and shall be certified by the geotechnical engineer.
5. Areas to receive fill shall be properly prepared and approved by the inspector and geotechnical Engineer prior to placing fill.
6. Fills shall be benched into competent material as per specifications and geotechnical report.
7. All trench backfill shall be tested and certified by the site geotechnical engineer per the grading code.
8. The geotechnical engineer shall perform periodic inspections and submit a complete report and map upon completion of the rough grading.
9. The final compaction report and certification from the geotechnical engineer shall contain the type of field testing performed. Each test shall be identified with the method of obtaining the in-place density, whether sand cone or drive ring and shall be so noted for each test. Sufficient maximum density determinations shall be performed to verify the accuracy of the maximum density curves used by the field technician.
10. Dust shall be controlled by watering.
11. The location and protection of all utilities is the responsibility of the permitee.
12. Approved protective measures and temporary drainage provisions must be used to protect adjoining areas during the grading project.
13. All public & University roadways must be cleared daily of all dirt, mud and debris deposited on them as a result of the grading operation. Cleaning is to be done to the satisfaction of the project manager, storm water manager, and owner.
14. The site shall be cleared and grubbed of all vegetation and deleterious matter prior to grading.
15. The contractor shall provide shoring in accordance with OSHA requirements for trench walls.
16. Aggregate base shall be compacted per the geotechnical report prepared for the project.
17. Elevations shown on this plan are finish grades. Rough grades are the subgrades of the improvements shown hereon.
18. The recommendations in the following Geotechnical Engineering Report by GSH Geotechnical Consultant, Inc. are included in the requirements of grading and site preparation.
The report is titled "Report Geotechnical Study Proposed Residential Life Housing Building Approximately 4100 South 1350 East South End of Weber State University Campus Ogden, Utah" This Geotechnical Eng. is to perform all inspections, etc. noted above.
Job No.: 0149–015–10
Dated: December 15, 2010
19. As part of the construction documents, owner has provided contractor with a topographic survey performed by manual or aerial means. Such survey was prepared for project design purposes and is provided to the contractor as a courtesy. It is expressly understood that such survey may not accurately reflect existing topographic conditions.
20. Erosion Control: Protect all inlet boxes, catch basins, etc. with straw bales or other approved method to strain the strom water during construction. Protect surrounding properties and streets from site runoff with sandbags and earth berms.

CAUTION NOTICE TO CONTRACTOR

The contractor is specifically cautioned that the location and/or elevation of existing utilities as shown on these plans are based on records from WSU and, where possible, measurements taken in the field. The information is not to be relied on as being exact or complete. The contractor must call the utility owner at least 48 hours before any excavation to request exact field location of utilities. It shall be the responsibility of the contractor to relocate all existing utilities which conflict with the proposed improvements shown on the plans.

UTILITY LOCATION REQUIREMENTS

The contractor shall at his cost, provide GPS Coordinates for all utilities found during demolition, marked or not marked, all utility relocations, all utility connections, and all new utility lines. Coordinates will contain a Northing, Easting, Elevation, and Description. Coordinates will be recorded at the following minimum locations, storm drain manholes top and flowline, catch basins top and flowline, inlet boxes top and flowline, cleanouts: water line angle points, valves, tees, elbows, and connections: chilled water supply and return lines angle points, valves, tees, elbows, and connections: gas line angle points, tees, elbows, valves, and connection points: sanitary sewer manholes top and flowline, cleanouts, tees, wyes, and connection points: electrical conduit runs, angle points, elbows, and connections: telephone and data, conduit runs, angle points, elbows, and connections: irrigation angle points, tees, elbows, valves, and connection points. All of these coordinates are to be inserted into a record drawing set of plans and provided to the owner and to the civil engineer. Additionally, all of these data points are to be provided to the owner and civil engineer on a weekly basis. Failure to record these data points will result in the contractor excavating, locating, providing the coordinates, and backfilling at no additional expense to the owner.

PRIVATE ENGINEER'S NOTICE TO CONTRACTORS

The Contractor agrees that he shall assume sole and complete responsibility for job site conditions during the course of construction of this project, including safety of all persons and property: that this requirement shall apply continuously and not be limited to normal working hours; and that the contractor shall defend, indemnify, and hold the owner and the engineer harmless from any and all liability, real or alleged, in connection with the performance of work on this project, excepting for liability arising from the sole negligence of the owner or the engineer.

ALL CONSTRUCTION TO CONFORM TO WSU STANDARDS AND SPECIFICATIONS

TREE DEMOLITION NOTE:
Coordinate with Owner and Specifications for Trees to be retained or removed. Trees with GREEN Caution Tape are to remain. Trees with RED Caution Tape are to be removed. These trees will also have 6' tall chain link fencing placed around them at the drip line (location must be approved by owner). The fencing will not be removed without written approval of from the architect and the owner. Any trees removed or damaged will be paid for by the contractor at the schedule of values shown in specifications.

MHTN
ARCHITECTS
MHTN Architects, Inc.
420 East South Temple
Suite 100
Salt Lake City, Utah 84111
Telephone (801) 595-6700
Telefax (801) 595-6717
www.mhtn.com

GREAT BASIN ENGINEERING INC
5746 South 1475 East Suite 200
Ogden, Utah 84403 Main (801)394-4515
S.L.C (801)521-0222 FAX 801-392-7544
WWW.GREATBASINENGINEERING.COM

WEBER STATE UNIVERSITY
RESIDENTIAL LIFE - PHASE II - BLDG. 2
DFCM PROJECT NUMBER: 10176810

WEBER STATE UNIVERSITY
OGDEN, UTAH 84408

SEAL

MHTN PROJECT NO. 201043.00
DRAWN BY: BB CHECKED BY: DRW

ISSUED:

NO.	DATE	DESCRIPTION
1	05/17/2011	CONSTRUCTION DOCUMENTS

CONTRACTOR TO VERIFY DRAWINGS IN FIELD USE REFLECT LAST REVISION DATE:

NO.	DATE	DESCRIPTION

SHEET NAME
GRADING PLAN
BLDG. 2

CONST. DOCUMENTS
MAY 17, 2011

SHEET NUMBER
CG-205

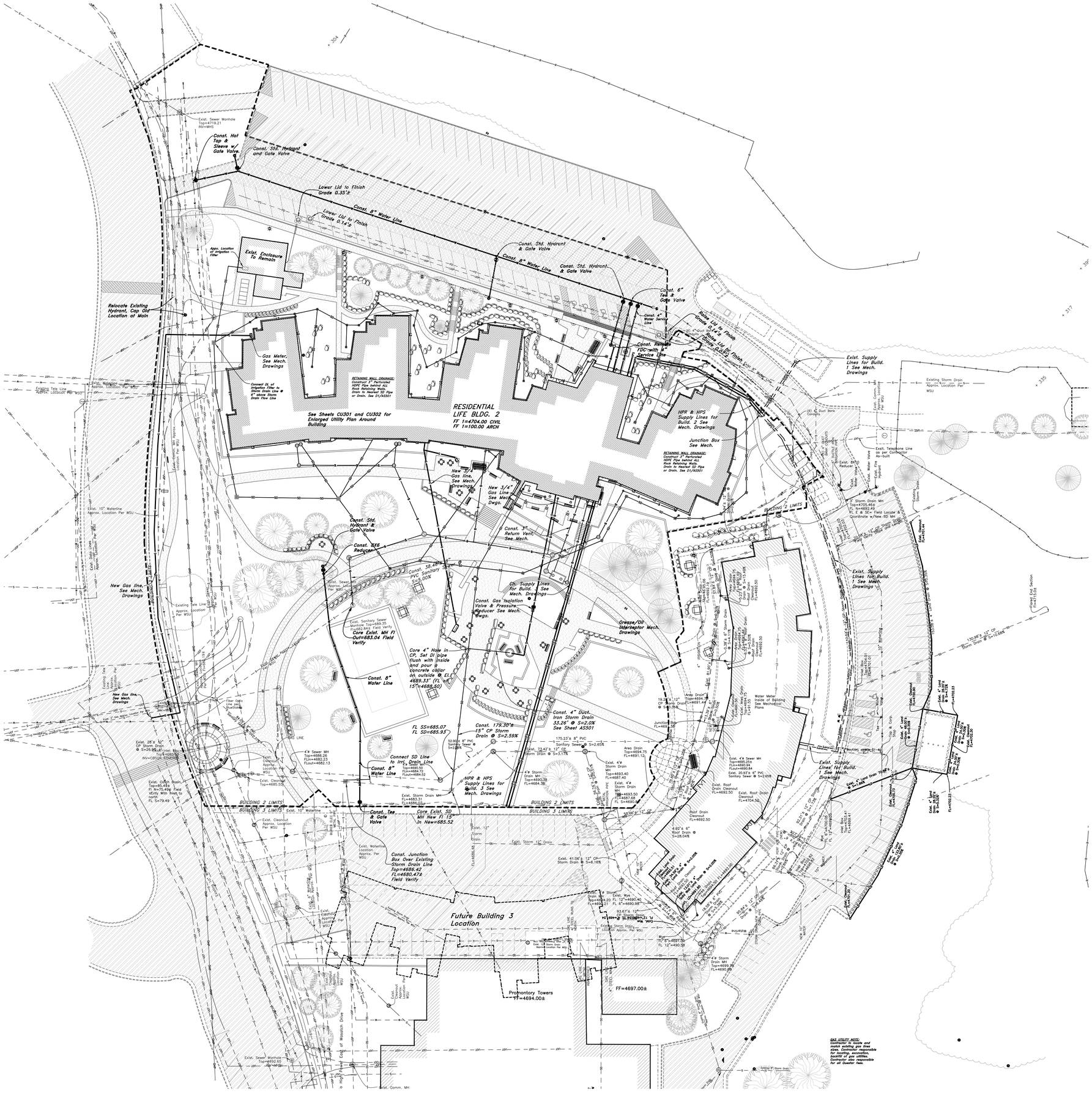

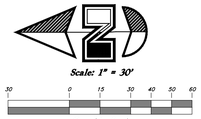

Legend

(Note: All items may not appear on drawing)

San. Sewer Manhole
Water Manhole
Storm Drain Manhole
Electrical Manhole
Catch Basins
Exist. Fire Hydrant
Fire Hydrant
Exist. Water Valve
Water Valve
Sanitary Sewer — S —
Culinary Water — W —
Gas Line — G —
Irrigation Line — IW —
Storm Drain — SD —
Telephone Line — T —
Secondary Waterline — SW —
Power Line — P —
Fire Line — F —
Land Drain — LD —
Power pole
Power Pole w/guy
Light Pole
Fence
Flowline of ditch
Overhead Power line — OHP —
Corrugated Metal Pipe CMP
Concrete Pipe CP
Reinforced Concrete Pipe RCP
Ductile Iron DI
Polyvinyl Chloride PVC
Top of Asphalt TA
Edge of Asphalt EA
Centerline CL
Flowline FL
Finish Floor FF
Top of Curb TC
Top of Wall TW
Top of Walk TW
Top of Concrete TCN
Natural Ground NG
Finish Grade FG
Fire Department Connection FDC
Finish Contour — 90 —
Exist. Contour — 90 —
Finish Grade 95.33TA
Exist. Grade 95.72TA
Ridge Line — R —
Direction of Flow
Existing Asphalt
New Asphalt
Heavy Duty Asphalt
Concrete
Open Face Curb & Gutter
Demo Tree

General Utility Notes:

1. Coordinate all utility connections to building with plumbing plans and building contractor.
2. Verify depth and location of all existing utilities prior to constructing any new utility lines. Notify Civil Engineer of any discrepancies or conflicts prior to any connections being made.
3. All catch basin and inlet box grates are to be bicycle proof.
4. Refer to the site electrical plan for details and locations of electrical lines, transformers and light poles.
5. Gas lines, telephone lines, and cable TV lines are not a part of these plans unless otherwise noted.
6. Water meters are to be installed inside the building per WSU standards and specifications. It will be the contractor's responsibility to install all items required.
7. Water lines, valves, fire hydrants, fittings etc. are to be constructed as shown. Contractor is responsible to construct any vertical adjustments necessary to clear sewer, storm drain or other utilities as necessary including valve boxes and hydrant spools to proper grade.
8. Field verify all existing and/or proposed Roof Drain/Roof Drain down spout connections to Storm Water System with Civil, Plumbing & Architectural plans. Notify Engineer of any discrepancies.
9. Coordinate with Landscape plan for New Maxlines, Controllers, and their locations

Utility Piping Materials:

All piping to be installed per manufacturers recommendations. Refer to project specifications for more detailed information regarding materials, installation, etc.

Culinary Service Laterals

1. 3/4"ø to 2"ø Pipe – Copper Tube ASTM B, Type K, Soft Temper
2. 2-1/2"ø to 3"ø Pipe – HDPE PW3408 Poly Pipe, DR9
3. Over 4"ø Pipe – AWWA C-900 Class 150 pipe

Irrigation Water Lines

1. AWWA C-900 Class 200 pipe.

Water Main Lines and Fire Lines

1. Class 350 ductile iron pipe.

Sanitary Sewer Lines

1. All exterior sewer piping to be Polyvinyl Chloride (PVC) sewer pipe, ASTM D 3034, Type PSM, SDR 35.
2. All sewer piping inside tunnel to be AWWA c-900 Class 150 pipe.

Storm Drain Lines

1. 10" Pipes or Smaller – Polyvinyl Chloride (PVC) sewer pipe, ASTM D3034, Type PSM, SDR 35.
2. 12" to 21" pipes – Concrete Pipe, ASTM C14, Class III up to 13' of cover. For greater than 13' feet of cover, use reinforced concrete pipe and classes listed below.
3. 24" pipes or larger – Reinforced Concrete Pipe, ASTM C76, Class III up to 13' of cover, Class IV for 13' to 21' of cover, Class V for 21' to 32' of cover, and Special Design for cover greater than 32 feet.

CAUTION NOTICE TO CONTRACTOR

The contractor is specifically cautioned that the location and/or elevation of existing utilities as shown on these plans are based on records from WSU and, where possible, measurements taken in the field. The information is not to be relied on as being exact or complete. The contractor must call the utility owner at least 48 hours before any excavation to request exact field location of utilities. It shall be the responsibility of the contractor to relocate all existing utilities which conflict with the proposed improvements shown on the plans.

UTILITY LOCATION REQUIREMENTS

The contractor shall at his cost, provide GPS Coordinates for all utilities found during demolition, marked or not marked, all utility relocations, all utility connections, and all new utility lines. Coordinates will contain a Northing, Easting, Elevation, and Description. Coordinates will be recorded at the following minimum locations, storm drain manholes top and flowline, catch basins top and flowline, inlet boxes top and flowline, cleanouts: water line angle points, valves, tees, elbows, and connections: chilled water supply and return lines angle points, valves, tees, elbows, and connections: gas line angle points, tees, elbows, valves, and connection points: sanitary sewer manholes top and flowline, cleanouts, tees, wyes, and connection points: electrical conduit runs, angle points, elbows, and connections: telephone and data, conduit runs, angle points, elbows, and connections: irrigation angle points, tees, elbows, valves, and connection points. All of these coordinates are to be inserted into a record drawing set of plans and provided to the owner and to the civil engineer. Additionally, all of these data points are to be provided to the owner and civil engineer on a weekly basis. Failure to record these data points will result in the contractor excavating, locating, providing the coordinates, and backfilling at no additional expense to the owner.

PRIVATE ENGINEER'S NOTICE TO CONTRACTORS

The Contractor agrees that he shall assume sole and complete responsibility for job site conditions during the course of construction of this project, including safety of all persons and property; that this requirement shall apply continuously and not be limited to normal working hours; and that the contractor shall defend, indemnify, and hold the owner and the engineer harmless from any and all liability, real or alleged, in connection with the performance of work on this project, excepting for liability arising from the sole negligence of the owner or the engineer.

ALL CONSTRUCTION TO CONFORM TO WSU STANDARDS AND SPECIFICATIONS

RETAINING WALL DRAINAGE:
Construct 3" Perforated HDPE Pipe behind ALL Rock Retaining Walls. Drain to Nearest SD Pipe or Drain. See D1/AS301

TREE DEMOLITION NOTE:
Coordinate with Owner and Specifications for Trees to be retained or removed. Trees with GREEN Caution Tape are to remain. Trees with RED Caution Tape are to be removed. These trees will also have 6' tall chain link fencing placed around them at the drip line (location must be approved by owner). The fencing will not be removed without written approval of from the architect and the owner. Any trees removed or damaged will be paid for by the contractor at the schedule of values shown in specifications.

MHTN ARCHITECTS
MHTN Architects, Inc.
420 East South Temple
Suite 100
Salt Lake City, Utah 84111
Telephone (801) 595-6700
Telefax (801) 595-6717
www.mhtn.com

GREAT BASIN ENGINEERING INC
5746 South 1475 East Suite 200
Ogden, Utah 84403 Main (801)394-4515
S.L.C (801)521-0222 FAX 801-392-7544
WWW.GREATBASINENGINEERING.COM

WEBER STATE UNIVERSITY
RESIDENTIAL LIFE - PHASE II - BLDG. 2
DFCM PROJECT NUMBER: 10176810

WEBER STATE UNIVERSITY
OGDEN, UTAH 84408

SEAL

MHTN PROJECT NO. 201043.00

DRAWN BY: BB CHECKED BY: DRW

ISSUED:

NO.	DATE	DESCRIPTION
1	05/17/2011	CONSTRUCTION DOCUMENTS

CONTRACTOR TO VERIFY DRAWINGS IN FIELD USE REFLECT LAST REVISION DATE:

NO.	DATE	DESCRIPTION

SHEET NAME

UTILITY PLAN
BLDG. 2

CONST. DOCUMENTS
MAY 17, 2011

SHEET NUMBER

CU-301

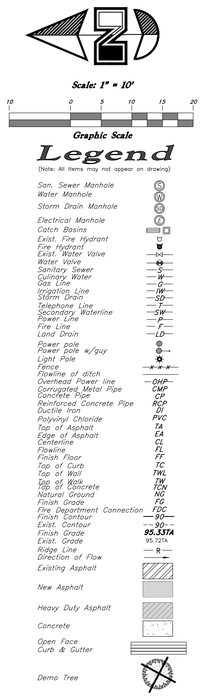

General Utility Notes:

1. Coordinate all utility connections to building with plumbing plans and building contractor.
2. Verify depth and location of all existing utilities prior to constructing any new utility lines. Notify Civil Engineer of any discrepancies or conflicts prior to any connections being made.
3. All catch basin and inlet box grates are to be bicycle proof.
4. Refer to the site electrical plan for details and locations of electrical lines, transformers and light poles.
5. Gas lines, telephone lines, and cable TV lines are not a part of these plans unless otherwise noted.
6. Water meters are to be installed inside the building per WSU standards and specifications. It will be the contractor's responsibility to install all items required.
7. Water lines, valves, fire hydrants, fittings etc. are to be constructed as shown. Contractor is responsible to construct any vertical adjustments necessary to clear sewer, storm drain or other utilities as necessary including valve boxes and hydrant spools to proper grade.
8. Field verify all existing and/or proposed Roof Drain/Roof Drain down spout connections to Storm Water System with Civil, Plumbing & Architectural plans. Notify Engineer of any discrepancies.
9. Coordinate with Landscape plan for New Maxlines, Controllers, and their locations

Utility Piping Materials:

All piping to be installed per manufacturers recommendations. Refer to project specifications for more detailed information regarding materials, installation, etc.

Culinary Service Laterals

1. 3/4"ø to 2"ø Pipe – Copper Tube ASTM B, Type K, Soft Temper
2. 2-1/2"ø to 3"ø Pipe – HDPE PW3408 Poly Pipe, DR9
3. Over 4"ø Pipe – AWWA C-900 Class 150 pipe

Irrigation Water Lines

1. AWWA C-900 Class 200 pipe.

Water Main Lines and Fire Lines

1. Class 350 ductile iron pipe.

Sanitary Sewer Lines

1. All exterior sewer piping to be Polyvinyl Chloride (PVC) sewer pipe, ASTM D 3034, Type PSM, SDR 35.
2. All sewer piping inside tunnel to be AWWA c-900 Class 150 pipe.

Storm Drain Lines

1. 10" Pipes or Smaller – Polyvinyl Chloride (PVC) sewer pipe, ASTM D3034, Type PSM, SDR 35
2. 12" to 21" pipes – Concrete Pipe, ASTM C14, Class III up to 13' of cover. For greater than 13' feet of cover, use reinforced concrete pipe and classes listed below.
3. 24" pipes or larger – Reinforced Concrete Pipe, ASTM C76, Class III up to 13' of cover, Class IV for 13' to 21' of cover, Class V for 21' to 32' of cover, and Special Design for cover greater than 32 feet.

CAUTION NOTICE TO CONTRACTOR

The contractor is specifically cautioned that the location and/or elevation of existing utilities as shown on these plans are based on records from WSU and, where possible, measurements taken in the field. The information is not to be relied on as being exact or complete. The contractor must call the utility owner at least 48 hours before any excavation to request exact field location of utilities. It shall be the responsibility of the contractor to relocate all existing utilities which conflict with the proposed improvements shown on the plans.

UTILITY LOCATION REQUIREMENTS

The contractor shall at his cost, provide GPS Coordinates for all utilities found during demolition, marked or not marked, all utility relocations, all utility connections, and all new utility lines. Coordinates will contain a Northing, Easting, Elevation, and Description. Coordinates will be recorded at the following minimum locations, storm drain manholes top and flowline, catch basins top and flowline, inlet boxes top and flowline, cleanouts: water line angle points, valves, tees, elbows, and connections: chilled water supply and return lines angle points, valves, tees, elbows, and connections: gas line angle points, tees, elbows, valves, and connection points: sanitary sewer manholes top and flowline, cleanouts, tees, wyes, and connection points: electrical conduit runs, angle points, elbows, and connections: telephone and data, conduit runs, angle points, elbows, and connections: irrigation angle points, tees, elbows, valves, and connection points. All of these coordinates are to be inserted into a record drawing set of plans and provided to the owner and to the civil engineer. Additionally, all of these data points are to be provided to the owner and civil engineer on a weekly basis. Failure to record these data points will result in the contractor excavating, locating, providing the coordinates, and backfilling at no additional expense to the owner.

PRIVATE ENGINEER'S NOTICE TO CONTRACTORS

The Contractor agrees that he shall assume sole and complete responsibility for job site conditions during the course of construction of this project, including safety of all persons and property; that this requirement shall apply continuously and not be limited to normal working hours; and that the contractor shall defend, indemnify, and hold the owner and the engineer harmless from any and all liability, real or alleged, in connection with the performance of work on this project, excepting for liability arising from the sole negligence of the owner or the engineer.

ALL CONSTRUCTION TO CONFORM TO WSU STANDARDS AND SPECIFICATIONS

TREE DEMOLITION NOTE:
Coordinate with Owner and Specifications for Trees to be retained or removed. Trees with GREEN Caution Tape are to remain. Trees with RED Caution Tape are to be removed. These trees will also have 6' tall chain link fencing placed around them at the drip line (location must be approved by owner). The fencing will not be removed without written approval of from the architect and the owner. Any trees removed or damaged will be paid for by the contractor at the schedule of values shown in specifications.

RETAINING WALL DRAINAGE:
Construct 3" Perforated HDPE Pipe behind ALL Rock Retaining Walls. Drain to Nearest SD Pipe or Drain. See D1/AS501

MHTN ARCHITECTS
MHTN Architects, Inc.
420 East South Temple
Suite 100
Salt Lake City, Utah 84111
Telephone (801) 595-6700
Telefax (801) 595-6717
www.mhtn.com

GREAT BASIN ENGINEERING INC
5746 South 1475 East Suite 200
Ogden, Utah 84403 Main (801)394-4515
S.L.C (801)521-0222 FAX 801-392-7544
WWW.GREATBASINENGINEERING.COM

WEBER STATE UNIVERSITY
RESIDENTIAL LIFE - PHASE II - BLDG. 2
DFCM PROJECT NUMBER: 10176810

WEBER STATE UNIVERSITY
OGDEN, UTAH 84408

SEAL

MHTN PROJECT NO. 201043.00

DRAWN BY: BB CHECKED BY: DRW

ISSUED:

NO:	DATE	DESCRIPTION
1	06/17/2011	CONSTRUCTION DOCUMENTS

CONTRACTOR TO VERIFY DRAWINGS IN FIELD USE REFLECT LAST REVISION DATE.

NO.	DATE	DESCRIPTION

SHEET NAME

UTILITY PLAN
BLDG. 2

CONST. DOCUMENTS
MAY 17, 2011

SHEET NUMBER

CU-302

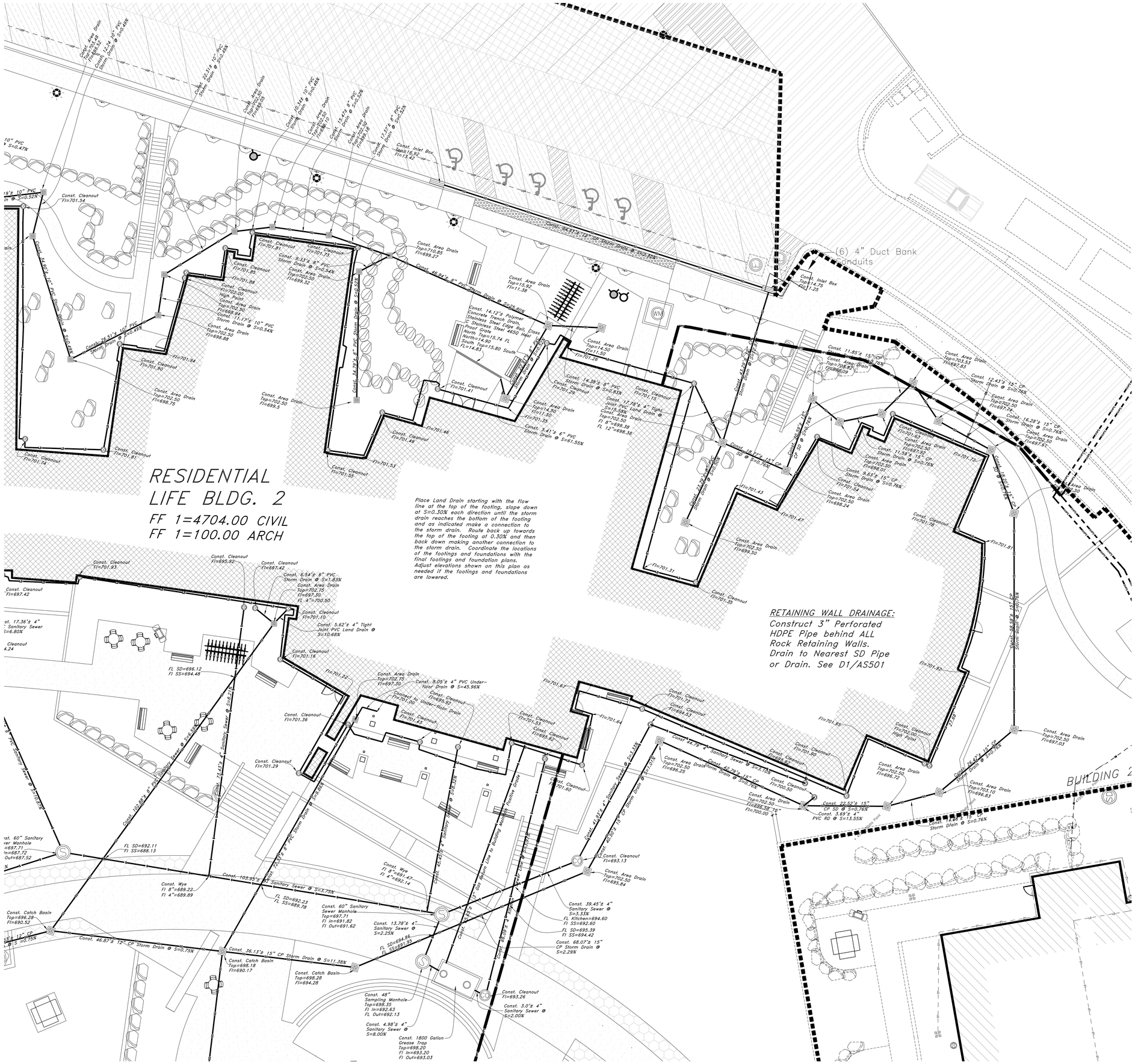

Scale: 1" = 10'

Graphic Scale

Legend

(Note: All items may not appear on drawing)

San. Sewer Manhole
Water Manhole
Storm Drain Manhole
Electrical Manhole
Catch Basins
Exist. Fire Hydrant
Fire Hydrant
Exist. Water Valve
Water Valve
Sanitary Sewer — S —
Culinary Water — W —
Gas Line — G —
Irrigation Line — IW —
Storm Drain — SD —
Telephone Line
Secondary Waterline — SW —
Power Line — P —
Fire Line — F —
Land Drain — LD —
Power pole
Power pole w/guy
Light Pole
Fence — x — x — x —
Flowline of ditch
Overhead Power line — OHP —
Corrugated Metal Pipe CMP
Concrete Pipe CP
Reinforced Concrete Pipe RCP
Ductile Iron DI
Polyvinyl Chloride PVC
Top of Asphalt TA
Edge of Asphalt EA
Centerline CL
Flowline FL
Finish Floor FF
Top of Curb TC
Top of Wall TWL
Top of Walk TW
Top of Concrete TCN
Natural Ground NG
Finish Grade FG
Fire Department Connection FDC
Finish Contour — 90 —
Exist. Contour — 90 —
Finish Grade 95.33TA
Exist. Grade 95.72TA
Ridge Line — R —
Direction of Flow
Existing Asphalt
New Asphalt
Heavy Duty Asphalt
Concrete
Open Face Curb & Gutter
Demo Tree

General Utility Notes:

1. Coordinate all utility connections to building with plumbing plans and building contractor.
2. Verify depth and location of all existing utilities prior to constructing any new utility lines. Notify Civil Engineer of any discrepancies or conflicts prior to any connections being made.
3. All catch basin and inlet box grates are to be bicycle proof.
4. Refer to the site electrical plan for details and locations of electrical lines, transformers and light poles.
5. Gas lines, telephone lines, and cable TV lines are not a part of these plans unless otherwise noted.
6. Water meters are to be installed inside the building per WSU standards and specifications. It will be the contractor's responsibility to install all items required.
7. Water lines, valves, fire hydrants, fittings etc. are to be constructed as shown. Contractor is responsible to construct any vertical adjustments necessary to clear sewer, storm drain or other utilities as necessary including valve boxes and hydrant spools to proper grade.
8. Field verify all existing and/or proposed Roof Drain/Roof Drain down spout connections to Storm Water System with Civil, Plumbing & Architectural plans. Notify Engineer of any discrepancies.
9. Coordinate with Landscape plan for New Maxlines, Controllers, and their locations

Utility Piping Materials:

All piping to be installed per manufacturers recommendations. Refer to project specifications for more detailed information regarding materials, installation, etc.

Culinary Service Laterals

1. 3/4"ø to 2"ø Pipe – Copper Tube ASTM B, Type K, Soft Temper
2. 2-1/2"ø to 3"ø Pipe – HDPE PW3408 Poly Pipe, DR9
3. Over 4"ø Pipe – AWWA C-900 Class 150 pipe

Irrigation Water Lines

1. AWWA C-900 Class 200 pipe.

Water Main Lines and Fire Lines

1. Class 350 ductile iron pipe.

Sanitary Sewer Lines

1. All exterior sewer piping to be Polyvinyl Chloride (PVC) sewer pipe, ASTM D 3034, Type PSM, SDR 35.
2. All sewer piping inside tunnel to be AWWA c-900 Class 150 pipe.

Storm Drain Lines

1. 10" Pipes or Smaller – Polyvinyl Chloride (PVC) sewer pipe, ASTM D3034, Type PSM, SDR 35
2. 12" to 21" pipes – Concrete Pipe, ASTM C14, Class III up to 13' of cover. For greater than 13' feet of cover, use reinforced concrete pipe and classes listed below.
3. 24" pipes or larger – Reinforced Concrete Pipe, ASTM C76, Class III up to 13' of cover, Class IV for 13' to 21' of cover, Class V for 21' to 32' of cover, and Special Design for cover greater than 32 feet.

CAUTION NOTICE TO CONTRACTOR

The contractor is specifically cautioned that the location and/or elevation of existing utilities as shown on these plans are based on records from WSU and, where possible, measurements taken in the field. The information is not to be relied on as being exact or complete. The contractor must call the utility owner at least 48 hours before any excavation to request exact field location of utilities. It shall be the responsibility of the contractor to relocate all existing utilities which conflict with the proposed improvements shown on the plans.

UTILITY LOCATION REQUIREMENTS

The contractor shall at his cost, provide GPS Coordinates for all utilities found during demolition, marked or not marked, all utility relocations, all utility connections, and all new utility lines. Coordinates will contain a Northing, Easting, Elevation, and Description. Coordinates will be recorded at the following minimum locations, storm drain manholes top and flowline, catch basins top and flowline, inlet boxes top and flowline, cleanouts: water line angle points, valves, tees, elbows, and connections: chilled water supply and return lines angle points, valves, tees, elbows, and connections: gas line angle points, tees, elbows, valves, and connection points: sanitary sewer manholes top and flowline, cleanouts, tees, wyes, and connection points: electrical conduit runs, angle points, elbows, and connections: telephone and data, conduit runs, angle points, elbows, and connections: irrigation angle points, tees, elbows, valves, and connection points. All of these coordinates are to be inserted into a record drawing set of plans and provided to the owner and to the civil engineer. Additionally, all of these data points are to be provided to the owner and civil engineer on a weekly basis. Failure to record these data points will result in the contractor excavating, locating, providing the coordinates, and backfilling at no additional expense to the owner.

PRIVATE ENGINEER'S NOTICE TO CONTRACTORS

The Contractor agrees that he shall assume sole and complete responsibility for job site conditions during the course of construction of this project, including safety of all persons and property; that this requirement shall apply continuously and not be limited to normal working hours; and that the contractor shall defend, indemnify, and hold the owner and the engineer harmless from any and all liability, real or alleged, in connection with the performance of work on this project, excepting for liability arising from the sole negligence of the owner or the engineer.

ALL CONSTRUCTION TO CONFORM TO WSU STANDARDS AND SPECIFICATIONS

TREE DEMOLITION NOTE:
Coordinate with Owner and Specifications for Trees to be retained or removed. Trees with GREEN Caution Tape are to remain. Trees with RED Caution Tape are to be removed. These trees will also have 6' tall chain link fencing placed around them at the drip line (location must be approved by owner). The fencing will not be removed without written approval of from the architect and the owner. Any trees removed or damaged will be paid for by the contractor at the schedule of values shown in specifications.

RETAINING WALL DRAINAGE:
Construct 3" Perforated HDPE Pipe behind ALL Rock Retaining Walls. Drain to Nearest SD Pipe or Drain. See D1/AS501

MHTN ARCHITECTS
MHTN Architects, Inc.
420 East South Temple
Suite 100
Salt Lake City, Utah 84111
Telephone (801) 595-6700
Telefax (801) 595-6717
www.mhtn.com

GREAT BASIN ENGINEERING INC
5746 South 1475 East Suite 200
Ogden, Utah 84403 Main (801)394-4515
S.L.C (801)521-0222 FAX 801-392-7544
WWW.GREATBASINENGINEERING.COM

WEBER STATE UNIVERSITY
RESIDENTIAL LIFE - PHASE II - BLDG. 2
DFCM PROJECT NUMBER: 10176810

WEBER STATE UNIVERSITY
OGDEN, UTAH 84408

SEAL

MHTN PROJECT NO. 201043.00

DRAWN BY: BB CHECKED BY: DRW

ISSUED:

NO.	DATE	DESCRIPTION
1	05/17/2011	CONSTRUCTION DOCUMENTS

CONTRACTOR TO VERIFY DRAWINGS IN FIELD USE REFLECT LAST REVISION DATE:

NO.	DATE	DESCRIPTION

SHEET NAME

UTILITY PLAN
BLDG. 2

CONST. DOCUMENTS
MAY 17, 2011

SHEET NUMBER

CU-303

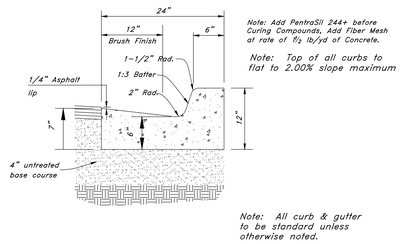

A1 24" Standard Curb & Gutter

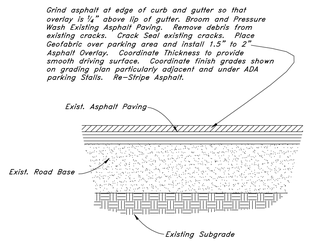

A2 Typical Pavement Section Overlay

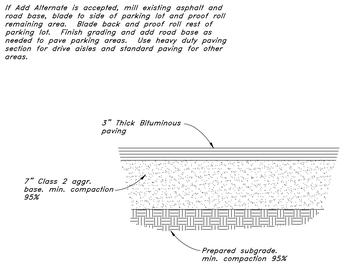

A3 Typical Pavement Section Parking Areas

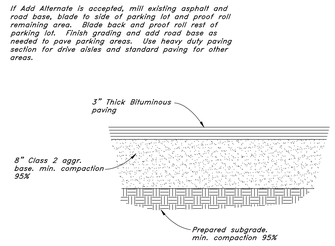

A4 Typical Pavement Section Heavy Duty Areas

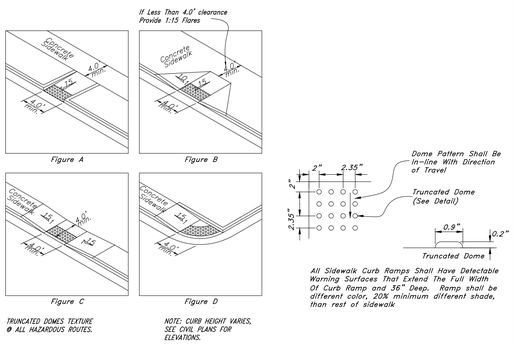

B1 Typical ADA Ramp Detail

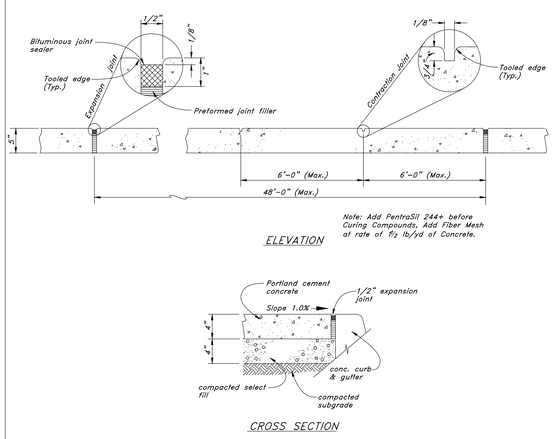

B2 Concrete Sidewalk

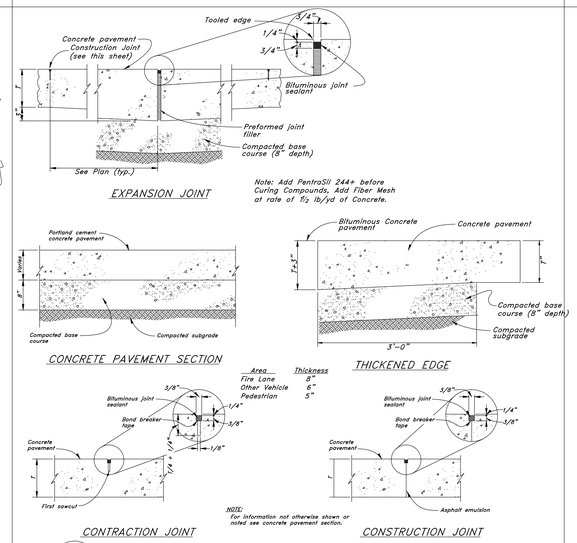

B3 Portland Cement Concrete Pavement

NOT TO SCALE

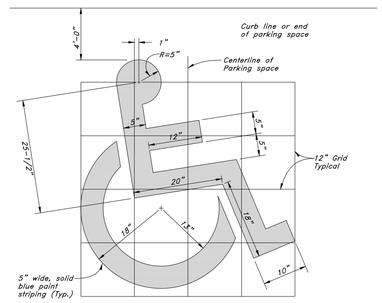

B4 Handicap Symbol

NOTE: Mount sign on same post, concrete base, and frog etc as Handicap Parking Sign Detail C2 This Sheet.

C1 Fuel Efficient Vehicle Parking Sign

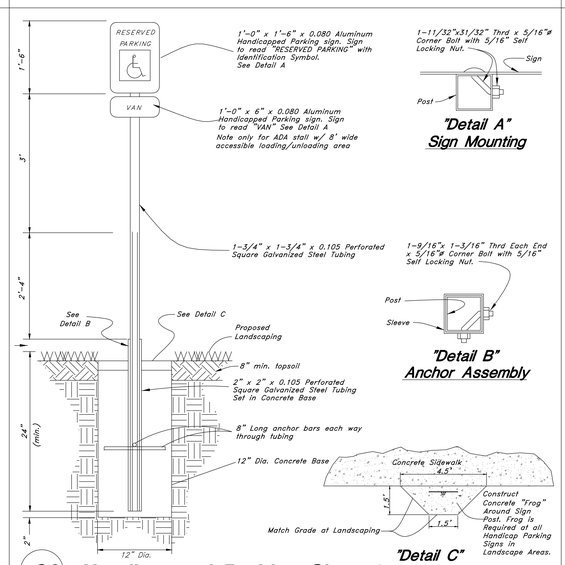

C2 Handicapped Parking Sign

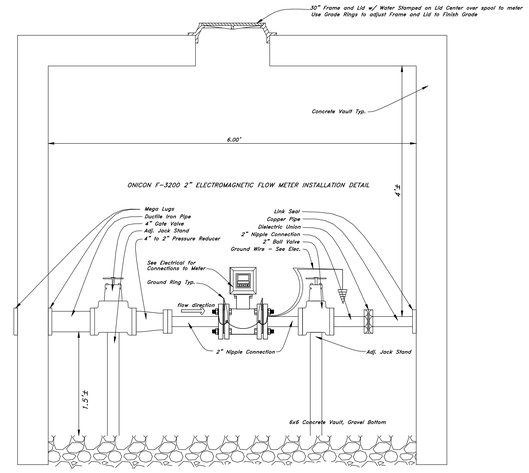

C3 2" Water Meter Detail

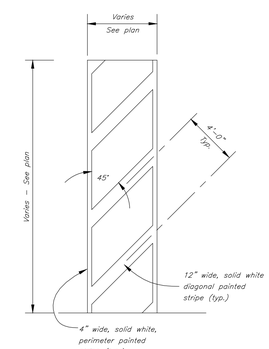

NO PARKING

C4 Striping

MHTN ARCHITECTS
MHTN Architects, Inc.
420 East South Temple
Suite 100
Salt Lake City, Utah 84111
Telephone (801) 595-6700
Telefax (801) 595-6717
www.mhtn.com

GREAT BASIN ENGINEERING INC
5746 SOUTH 1475 EAST - SUITE 200
OGDEN, UTAH 84403 MAIN (801)394-4515
S.L.C (801)521-0222 FAX 801-392-7544
WWW.GREATBASINENGINEERING.COM

WEBER STATE UNIVERSITY
RESIDENTIAL LIFE - PHASE II - BLDG. 2

DFCM PROJECT NUMBER: 10176810

WEBER STATE UNIVERSITY
OGDEN, UTAH 84408

SEAL

MHTN PROJECT NO. 201043.00

DRAWN BY: BB CHECKED BY: DRW

ISSUED:

NO.	DATE	DESCRIPTION
1	05/17/2011	CONSTRUCTION DOCUMENTS

CONTRACTOR TO VERIFY DRAWINGS IN FIELD USE REFLECT LAST REVISION DATE

NO.	DATE	DESCRIPTION

SHEET NAME

DETAILS BLDG. 2

CONST. DOCUMENTS
MAY 17, 2011

SHEET NUMBER

CS-401

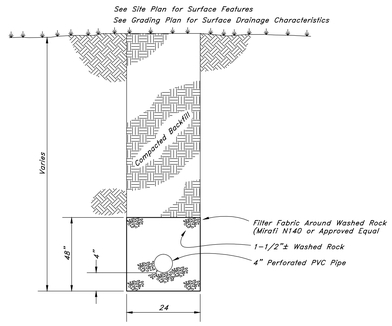

A1 LAND DRAIN CROSS SECTION

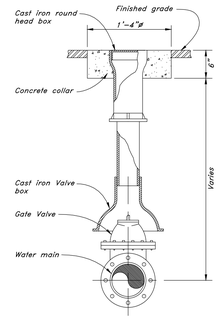

A2 GATE VALVE

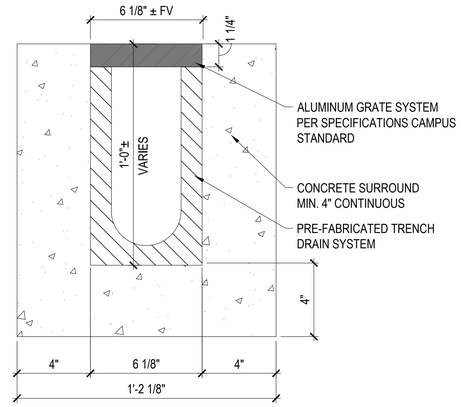

A3 TRENCH DRAIN

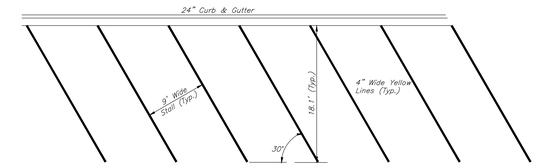

A4 PARKING LOT STRIPING

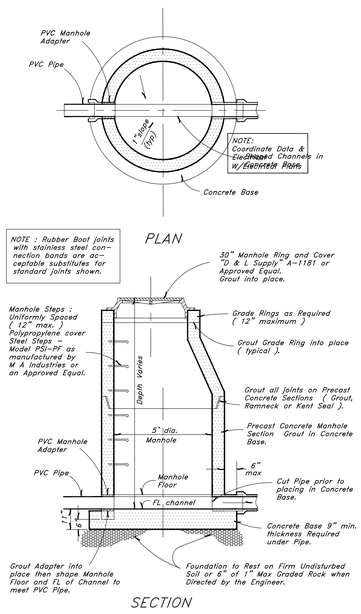

A1 Typical Manhole Detail

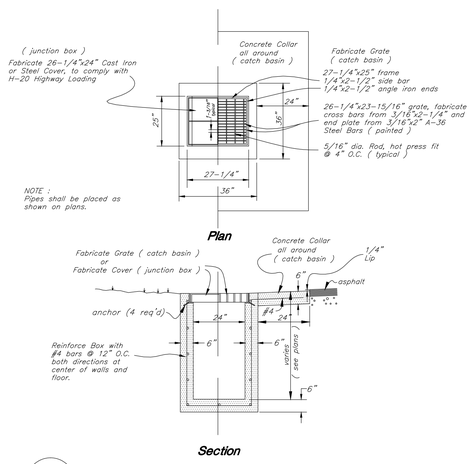

B2 CATCH BASIN JUNCTION BOX

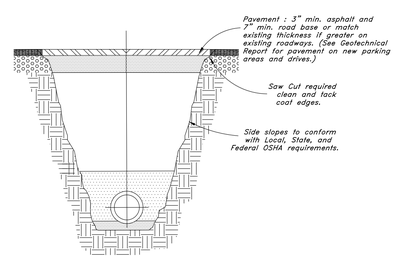

B3 Typical Trench Detail

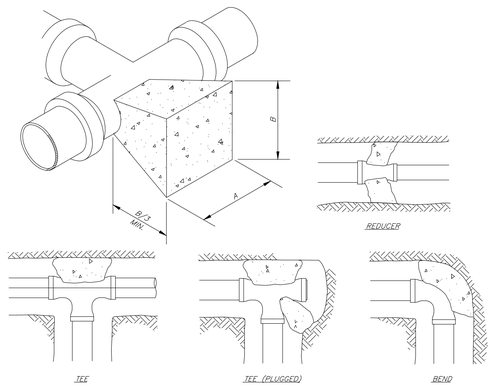

DIMENSIONS FOR THRUST BLOCKING										
FIT-ING SIZE	TEES & PLUGS		90° BEND		45° BEND & WYES		REDUCERS, 11 1/4" & 22 1/2" BENDS			
	A	B	A	B	A	B	A	B		
4"	1'7"	1'-2"	1'-9"	1'-6"	1'-8"	0'-10"	1'-7"	0'-6"		
6"	2'-0"	1'-11"	2'-5"	2'-2"	1'-10"	1'-7"	1'-9"	0'-10"		
8"	2'-8"	2'-6"	3'-2"	3'-0"	2'-5"	2'-1"	1'-9"	1'-6"		
10"	3'-4"	3'-3"	4'-0"	3'-10"	3'-10"	2'-9"	2'-2"	1'-11"		
12"	4'-0"	3'-10"	4'-8"	4'-8"	3'-8"	3'-3"	2'-7"	2'-3"		
14"	5'-5"	3'-10"	6'-6"	4'-11"	4'-9"	3'-5"	3'-5"	2'-5"		

NOTE: This table is based on 150 PSI Main Pressure
2000 PSF Soil Bearing Pressure

B4 Thrust Blocking Details

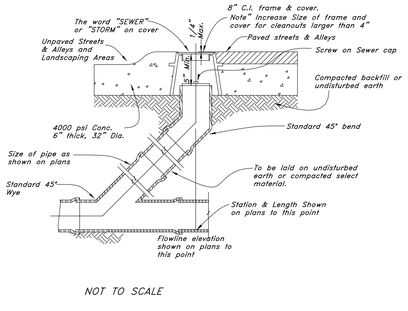

C1 Sewer, Storm, and Roof Drain Cleanout Detail

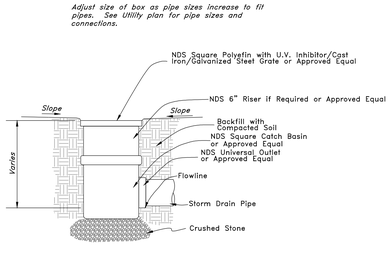

C2 Area Drain

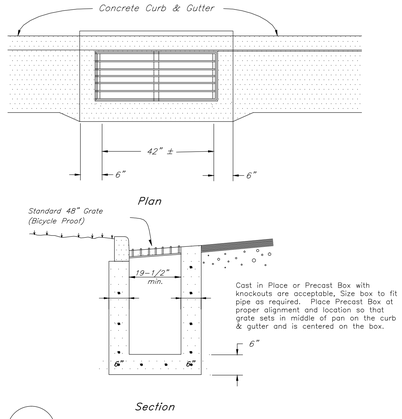

C3 Typical Catch Basin
in curb & gutter

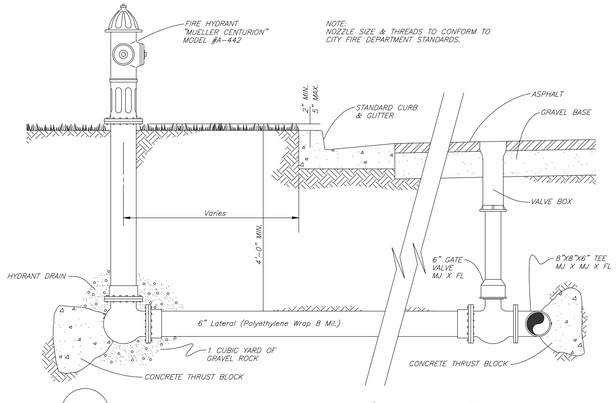

C4 Typical Fire Hydrant & Valve Connection

MHTN ARCHITECTS
MHTN Architects, Inc.
420 East South Temple
Suite 100
Salt Lake City, Utah 84111
Telephone (801) 595-6700
Telefax (801) 595-6717
www.mhtn.com

GREAT BASIN ENGINEERING INC
5746 SOUTH 1475 EAST - SUITE 200
OGDEN, UTAH 84403 MAIN (801)394-4515
S.L.C (801)521-0222 FAX 801-392-7544
WWW.GREATBASINENGINEERING.COM

WEBER STATE UNIVERSITY
RESIDENTIAL LIFE - PHASE II - BLDG. 2
DFCM PROJECT NUMBER: 10176810

WEBER STATE UNIVERSITY
OGDEN, UTAH 84408

SEAL

MHTN PROJECT NO. 201043.00

DRAWN BY: BB CHECKED BY: DRW

ISSUED:

NO.	DATE	DESCRIPTION
1	05/17/2011	CONSTRUCTION DOCUMENTS

CONTRACTOR TO VERIFY DRAWINGS IN FIELD USE REFLECT LAST REVISION DATE.

NO.	DATE	DESCRIPTION

SHEET NAME
DETAILS BLDG. 2

CONST. DOCUMENTS
MAY 17, 2011

SHEET NUMBER
CS-402

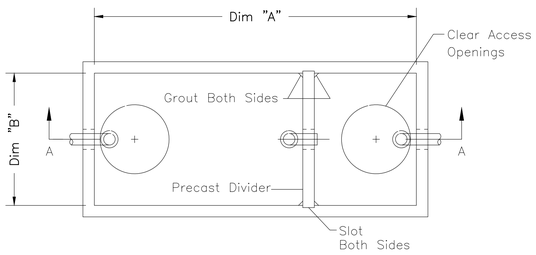

PLAN VIEW

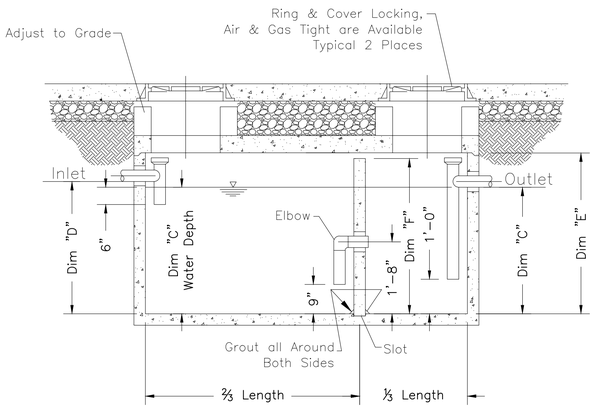

SECTION VIEW AA

Gallon Capacity		1375
	Dim "A"	12'-0"
	Dim "B"	6'-0"
Water Depth	Dim "C"	2'-8"
	Dim "D"	2'-10"
	Dim "E"	3'-6"
	Dim "F"	3'-4"
	Weight	27,740

C1 GREASE INTERCEPTOR

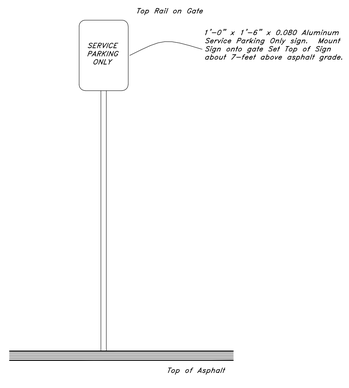

C2 SERVICE PARKING ONLY SIGN

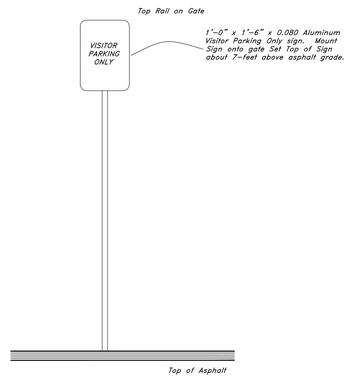

C3 VISITOR PARKING ONLY SIGN

MHTN ARCHITECTS
MHTN Architects, Inc.
420 East South Temple
Suite 100
Salt Lake City, Utah 84111
Telephone (801) 595-6700
Telefax (801) 595-6717
www.mhtn.com

GREAT BASIN ENGINEERING INC
5746 SOUTH 1475 EAST - SUITE 200
OGDEN, UTAH 84403 MAIN (801)394-4515
S.L.C (801)521-0222 FAX 801-392-7544
WWW.GREATBASINENGINEERING.COM

WEBER STATE UNIVERSITY
RESIDENTIAL LIFE - PHASE II - BLDG. 2
DFCM PROJECT NUMBER: 10176810

WEBER STATE UNIVERSITY
OGDEN, UTAH 84408

SEAL

MHTN PROJECT NO. 201043.00

DRAWN BY: BB CHECKED BY: DRW

ISSUED:

NO.	DATE	DESCRIPTION
1	05/17/2011	CONSTRUCTION DOCUMENTS

CONTRACTOR TO VERIFY DRAWINGS IN FIELD USE REFLECT LAST REVISION DATE.

NO.	DATE	DESCRIPTION

SHEET NAME
DETAILS BLDG. 2

CONST. DOCUMENTS
MAY 17, 2011

SHEET NUMBER
CS-403

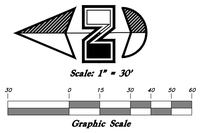

STORM WATER POLLUTION PREVENTION PLAN DEMOLITION PHASE

NOTES:

1. *Contractor to show location of Portable Toilets*
2. *Contractor should be familiar with SWPPP manual provided by Great Basin Engineering. The SWPPP manual is part of the SWPPP documents. A complete list of BMP's is included in the SWPPP manual.*
3. *Contractor is responsible to modify SWPPP items as necessary.*
4. *BMP's used for Demolition Phase:*
   - *Construction Road Stabilization*
   - *Equipment and Vehicle Washdown Area*
   - *Inlet Protection–Concrete Block or Excavated or Gravel or Silt Fence or Straw Bale*
   - *Material Storage*
   - *Preservation of Existing Vegetation*
   - *Stabilized Construction Entrance*
   - *Silt Fence*
   - *Vehicle and Equipment Cleaning*
   - *Vehicle and Equipment Fueling*

ALL CONSTRUCTION TO CONFORM TO WSU STANDARDS AND SPECIFICATIONS

MHTN ARCHITECTS

MHTN Architects, Inc.
420 East South Temple
Suite 100
Salt Lake City, Utah 84111
Telephone (801) 595-6700
Telefax (801) 595-6717
www.mhtn.com

GREAT BASIN ENGINEERING INC
5746 South 1475 East Suite 200
Ogden, Utah 84403 Main (801)394-4515
S.L.C (801)521-0222 Fax 801-392-7544
www.greatbasinengineering.com

WEBER STATE UNIVERSITY
RESIDENTIAL LIFE - PHASE II - BLDG. 2

DFCM PROJECT NUMBER: 10176810

WEBER STATE UNIVERSITY
OGDEN, UTAH 84408

SEAL

MHTN PROJECT NO. 201043.00

DRAWN BY: BB CHECKED BY: DRW

ISSUED:

NO.	DATE	DESCRIPTION
1	05/17/2011	CONSTRUCTION DOCUMENTS

CONTRACTOR TO VERIFY DRAWINGS IN FIELD USE REFLECT LAST REVISION DATE.

NO.	DATE	DESCRIPTION

SHEET NAME

SWPP PLAN
BLDG. 2

CONST. DOCUMENTS
MAY 17, 2011

SHEET NUMBER

CW-501

STORM WATER POLLUTION PREVENTION PLAN UTILITY CONSTRUCTION PHASE

NOTES:

1. Contractor to show location of Portable Toilets
2. Contractor should be familiar with SWPPP manual provided by Great Basin Engineering. The SWPPP manual is part of the SWPPP documents. A complete list of BMP's is included in the SWPPP manual.
3. Contractor is responsible to modify SWPPP items as necessary.
4. BMP's used for Utility Construction Phase:
   - Construction Road Stabilization
   - Concrete Waste Management
   - Equipment and Vehicle Washdown Area
   - Inlet Protection—Concrete Block or Excavated or Gravel or Silt Fence or Straw Bale
   - Material Storage
   - Preservation of Existing Vegetation
   - Stabilized Construction Entrance
   - Silt Fence
   - Temporary and Permanent Seeding
   - Vehicle and Equipment Cleaning
   - Vehicle and Equipment Fueling

TREE DEMOLITION NOTE:
Coordinate with Owner and Specifications for Trees to be retained or removed. Trees with GREEN Caution Tape are to remain. Trees with RED Caution Tape are to be removed. These trees will also have 6' tall chain link fencing placed around them at the drip line (location must be approved by owner). The fencing will not be removed without written approval of from the architect and the owner. Any trees removed or damaged will be paid for by the contractor at the schedule of values shown in specifications.

ALL CONSTRUCTION TO CONFORM TO WSU STANDARDS AND SPECIFICATIONS

MHTN ARCHITECTS
MHTN Architects, Inc.
420 East South Temple
Suite 100
Salt Lake City, Utah 84111
Telephone (801) 595-6700
Telefax (801) 595-6717
www.mhtn.com

GREAT BASIN ENGINEERING INC
5746 South 1475 East - Suite 200
Ogden, Utah 84403 Main (801)394-4515
S.L.C (801)521-0222 FAX 801-392-7544
WWW.GREATBASINENGINEERING.COM

WEBER STATE UNIVERSITY
RESIDENTIAL LIFE - PHASE II - BLDG. 2

DFCM PROJECT NUMBER: 10176810

WEBER STATE UNIVERSITY
OGDEN, UTAH 84408

Weber State University

SEAL

MHTN PROJECT NO. 201043.00

DRAWN BY: BB CHECKED BY: DRW

ISSUED:

NO.	DATE	DESCRIPTION
1	05/17/2011	CONSTRUCTION DOCUMENTS

CONTRACTOR TO VERIFY DRAWINGS IN FIELD USE REFLECT LAST REVISION DATE.

NO.	DATE	DESCRIPTION

SHEET NAME
SWPP PLAN
BLDG. 2

CONST. DOCUMENTS
MAY 17, 2011

SHEET NUMBER
CW-502

Scale: 1" = 10'

Graphic Scale

STORM WATER POLLUTION PREVENTION PLAN FINISH GRADING PHASE

NOTES:

1. Contractor to show location of Portable Toilets
2. Contractor should be familiar with SWPPP manual provided by Great Basin Engineering. The SWPPP manual is part of the SWPPP documents. A complete list of BMP's is included in the SWPPP manual.
3. Contractor is responsible to modify SWPPP items as necessary.
4. BMP's used for Finish Grading Phase:
   - Construction Road Stabilization
   - Concrete Waste Management
   - Equipment and Vehicle Washdown Area
   - Inlet Protection–Concrete Block or Excavated or Gravel or Silt Fence or Straw Bale
   - Material Storage
   - Preservation of Existing Vegetation
   - Stabilized Construction Entrance
   - Seeding and Planting
   - Silt Fence
   - Vehicle and Equipment Cleaning
   - Vehicle and Equipment Fueling

ALL CONSTRUCTION TO CONFORM TO WSU STANDARDS AND SPECIFICATIONS

MHTN ARCHITECTS
MHTN Architects, Inc.
420 East South Temple
Suite 100
Salt Lake City, Utah 84111
Telephone (801) 595-6700
Telefax (801) 595-6717
www.mhtn.com

GREAT BASIN ENGINEERING INC
5746 South 1475 East Suite 200
Ogden, Utah 84403 Main (801)394-4515
S.L.C (801)521-0222 FAX 801-392-7544
WWW.GREATBASINENGINEERING.COM

WEBER STATE UNIVERSITY
RESIDENTIAL LIFE - PHASE II - BLDG. 2

DFCM PROJECT NUMBER: 10176810

WEBER STATE UNIVERSITY
OGDEN, UTAH 84408

SEAL

MHTN PROJECT NO. 201043.00

DRAWN BY: BB CHECKED BY: DRW

ISSUED:

NO.	DATE	DESCRIPTION
1	05/17/2011	CONSTRUCTION DOCUMENTS

CONTRACTOR TO VERIFY DRAWINGS IN FIELD USE REFLECT LAST REVISION DATE.

NO.	DATE	DESCRIPTION

SHEET NAME

SWPP PLAN
BLDG. 2

CONST. DOCUMENTS
MAY 17, 2011

SHEET NUMBER

CW-503

IRRIGATION DEMOLITION

THIS CONTRACTOR SHALL BE REQURED TO MAINTAIN AND PROTECT THE EXISTING TREES TO REMAIN IN PLACE. ALL TRENCHING IN AND AROUND ALL EXISTING TREES SHALL BE APPROVED BY THE WSU PROJECT MANAGER PRIOR TO CONSTRUCTION. NO EXCEPTIONS. CONTRACTOR TO PROVIDE A WATERING SCHEDULE OF ALL EXISTING TREES. WSU TO APPROVE WATERING SCHEDULE TO APPROVE WATERING SCHEDULE PRIOR TO COMMENCEMENT OF CONSTRUCTION.

REMOVE AND REPLACE ALL IRRIGATION MAINLINE, HEADS, MANUAL VALVES, QUICK COUPLERS AND IRRIGATION EQUIPMENT LOCATED IN THIS ZONE.

IRRIGATION PLAN BUILDING - 2

0 10' 20' 40'

SCALE: 1" = 20'-0"

KEYNOTES

1. EXISTING TREE - COORDINATE WITH CAMPUS HORTICULTURIST FOR TREE PROTECTION PLAN DURRING IRRIGATION CONSTRUCTION
2. BUILDING
3. RETAINING WALL
4. CONCRETE PAVING
5. CURB & GUTTER
6. ASPHALT PAVING
7. CONCRETE STAIR
8. LANDSCAPE AREA
9. LIGHT POLE
10. ACCESSIBLE SIGN
11. CONCRETE WALL
12. ACCESSIBLE RAMP
13. FIRE HYDRANT
14. CONCRETE MOWSTRIP
15. NOT USED
16. BOULDER WALL
17. FDC LOCATION
18. CATCH BASIN
19. GAS METER
20. NOT USED
21. NOT USED
22. POUROS UNIT PAVERS - FIRE LANE
23. LAWN
24. NOT USED
25. APPROXIMATE EDGE OF EXISTING SOD
26. NOT USED
27. BIKE LOCKERS
28. NOT USED
29. GAS GRILL
30. SAND VOLLEYBALL COURT
31. BOULDER SEATING
32. NOT USED
33. TABLE
34. 6' HIGH ORNAMENTAL FENCE W/ (2) PAIR OF 8' WIDE GATES
35. BIKE RACK
36. CONSTRUCTION LIMIT LINE
37. BENCH
38. NATIVE SEED
39. CRUSHED AGGREGATE PAVING
40. FIRE PIT
41. CONCRETE FIRE LANE PAVING
42. CONNECT TO EXISTING 8" IRRIGATION LINE
43. CAP MAINLINE FOR FUTURE USE
44. CAP LATERAL LINE FOR FUTURE USE
45. IRRIGATION FILTER - SEE DETAILS
46. IRRIGATION CONTROLLER

IRRIGATION REMODEL NOTES

THIS CONTRACTOR SHALL BE RESPONSIBLE FOR FIELD VERIFICATION OF THE EXISTING SPRINKLER IRRIGATION SYSTEM IN TERMS OF FLOW CAPACITY, VALVE WIRING, VALVE AND HEAD LAYOUT AND CONTROLLER CAPACITY.

THIS CONTRACTOR SHALL BE RESPONSIBLE FOR THE COMPLETE REMODEL OF A SECTION OF THE EXISTING IRRIGATION SYSTEM AS SHOWN AND FOR PROVIDING FOR FULL COVERAGE OF ALL SYSTEM HEADS AND FOR THE FULL AND COMPLETE OPERATION OF BOTH THE NEW AND EXISTING SYSTEM IN THE AREAS BEING MODIFIED.

THIS CONTRACTOR SHALL COORDINATE ALL DEMOLITION WORK AND TIMES WITH THE OWNER.

MAINTAIN AND PROTECT AS MUCH OF THE EXISTING IRRIGATION SYSTEM AS POSSIBLE AND FEASIBLE AND STILL PROVIDE FOR FULL COVERAGE OF THE ENTIRE AREA. KEEP ALL LAWN AREA HEADS ON A SEPARATE CIRCUIT FROM SHRUB AREA HEADS.

THE EXISTING IRRIGATION SYSTEMS NOTED TO REMAIN IN USE SHALL BE PATCHED AND REPAIRED AS NECESSARY. MAINTAIN OPERATION OF THE EXISTING SYSTEM AS REQUIRED TO PROTECT EXISTING PLANT MATERIAL. CONTRACTOR SHALL BE RESPONSIBLE FOR DAMAGE OR DEATH OF EXISTING PLANT MATERIAL.

REPAIR DAMAGE TO EXISTING IRRIGATION SYSTEM AND LAWN RESULTING FROM CONSTRUCTION OPERATIONS.

MHTN ARCHITECTS

MHTN Architects, Inc.
420 East South Temple
Suite 100
Salt Lake City, Utah 84111
Telephone (801) 595-6700
Telefax (801) 595-6717
www.mhtn.com

WEBER STATE UNIVERSITY
RESIDENTIAL LIFE PHASE II - BLDG 2

DFCM PROJECT NUMBER: 10176810

WEBER STATE UNIVERSITY
OGDEN, UTAH 84408

SEAL

MHTN PROJECT NO. 2010543

DRAWN BY: RK CHECKED BY: MG

ISSUED:

NO.	DATE	DESCRIPTION
1	17 MAY 2011	CONSTRUCTION DOCUMENTS

CONTRACTOR TO VERIFY DRAWINGS IN FIELD USE REFLECT LAST REVISION DATE:

NO.	DATE	DESCRIPTION

SHEET NAME

IRRIGATION PLAN

CONSTRUCTION DOCUMENTS
17 MAY 2011

SHEET NUMBER

LI101

C:\Users\randyk\Documents\A11_2010543 WSU_RESIDENTIAL LIFE BUILDING III_CENTRAL_randyk.rvt
17/05/2010 5:23:45 AM

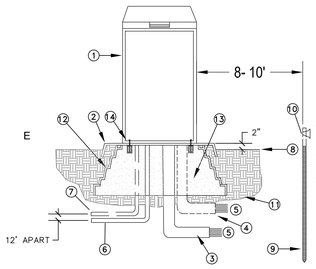

1. CONTROLLER AND CONTROLLER ENCLOSURE – SEE IRRIGATION EQUIPMENT SCHEDULE
2. QUICKPAD 3/16" MIN. THCKNESS ALUMINUM POWDER COATED PERFORMED PAD
3. PVC SWEEP ELL STATIONS 1-24
4. PVC SWEEP ELL STATIONS 25-40 (IF APPLICABLE)
5. DIRECT BURIAL CONTROL WIRES TO CONTROL VALVES
6. 110-VOLT SERVICE IN CONDUIT
7. EV-CAB-COM CABLE 1" CONDUIT
8. FINISH GRADE
9. 5/8" X 8' COPPER GROUND ROD
10. WELDED CONNECTION
11. UBGRADE COMPACTED TO 90%
12. PREFORMED PAD SUPPORT BASE
13. FILL INSIDE BASE WITH PEA GRAVEL
14. QUICKPAD FASTENING BRACKET (2)

H CONTROLLER & ENCLOSURE
NTS

NOTE:
THE ALUMINUM ENCLOSURE FOR THE FILTER SHALL BE A CUSTOM SIZED BACKFLOW ENCLOSURE. ENCLOSURE SHALL BE WEATHER AND VANDAL RESISTANT, MANUFACTURED OF MARINE GRADE ALUMINUM ALLOY 5052-H32 WITH A WALL THICKNESS OF A MINIMUM OF 1/8'. THE MOUNTING BASE SHALL BE STAINLESS STEEL. THE MAIN HOUSING SHALL BE OF SOLID SHEET CONSTRUCTION WITH A MINIMUM R-6 INSULATION ON THE TOP AND SIDES. THE ENCLOSURE SHALL HAVE MOUNTING BRACKETS AND A LOCKING MECHANISM TO MEET THE CAMPUS STANDARD ENCLOSURE.

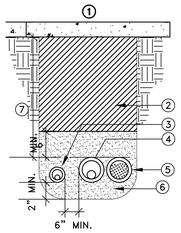

1. HARDSCAPE SURFACE – SEE CIVIL PLANS
2. BACKFILL MATERIAL – SEE NOTES
3. LATERAL LINE W/SLEEVE.
4. PRESSURE MAIN LINE SLEEVE
5. CONTROL WIRE SLEEVE (SAME SIZE AS MAIN LINE SLEEVE)
6. BEDDING MATERIAL – SEE NOTES
7. MINIMUM COVER:
   12" UNDER WALKS
   18" UNDER STREETS

NOTES:
- SLEEVES 4" AND SMALLER USE PVC SCH. 40 PIPE.
- SLEEVES >4" USE PVC CLASS 200 PIPE
- ALL SLEEVES SHALL BE TWO (2) TIMES LARGER THAN DIAMETER OF PIPE TO BE SLEEVED.
- INSTALL SLEEVES AT A DEPTH TO AVOID CONFLICT WITH OTHER UTILITIES AND MAINS.

I SLEEVING DETAIL
NTS

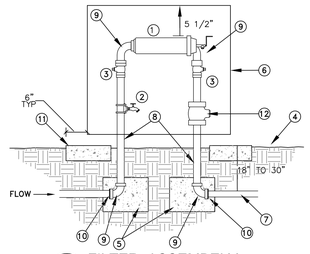

1. STEEL INLINE FILTER WITH WEAVEWIRE SCREEN (300 MICRON) SEE PLAN FOR SIZE
2. 3/4" BRASS HOSE BIB AND SADDLE
3. FL WAFER BUTTERFLY VALVE-SAME AS LINE SIZE
4. FINISH GRADE
5. CONCRETE THRUST BLOCKS (TYP.). WRAP PIPES W/ 10 MIL TAPE. CAST AGAINST UNDISTURBED SOIL
6. BACKFLOW ENCLOSURE – SEE IRRIGATION EQUIPMENT SCHEDULE (FILTER) (INSTALL PER MANUFACTURER'S SPECIFICATIONS)
7. FL CAST PIPE-SAME AS LINE SIZE
8. FL X PE, SPOOL LENGTH AS REQUIRED (TYP.)
9. FL ELL (TYP.)-SAME AS LINE SIZE
10. INSTA-FLANGE ADAPTER-SAME AS LINE SIZE
11. 4" THICK CONCRETE PAD (SIZE AS REQUIRED)
12. MASTER VALVE HYDROMETER

I FILTER ASSEMBLEY
NTS

THRUST BLOCKING INSTRUCTIONS

1. PROVIDE THRUST BLOCKS AT ALL CHANGES IN SIZE OR DIRECTION. BENDS, REDUCERS, PLUGS, AND THE OPPOSITE SIDE OF TEE BRANCHES ALL REQUIRE THRUST BLOCKS.
2. THE SIZES OF THE BLOCKS ARE DETERMINED BY THE WORKING PRESSURE, THE SIZE AND TYPE OF FITTING, AND SOIL CONDITIONS AT THE JOB SITE. TO CALCULATE THE AREA OF CONTACT WITH THE SOIL, FOLLOW THESE STEPS:
   CALCULATE THE THRUST BY SELECTING THRUST/100 BY SIZE AND TYPE OF FITTING FROM TABLE 1 AND MULTIPLYING THRUST/100 BY SYSTEM PRESSURE DIVIDED BY 100.
3. DIVIDE THE TOTAL THRUST BY BEARING CAPACITY OF THE SOIL IN EXCAVATION (FROM TABLE 2) TO DETERMINE THE AREA IN SQUARE FEET OF THRUST BLOCK REQUIRED TO BE IN CONTACT WITH THE UNDISTURBED SOIL.

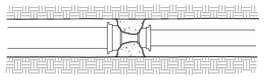

TABLE 1 – THRUST/100

Size	Tees, Plugs	90° Bends	45° Bends	22.5° Bends
2	363	513	259	141
2 1/2	531	751	379	207
3	788	1,114	562	307
4	1,302	1,841	928	508
6	2,822	3,990	2,012	1,101
8	4,783	6,763	3,410	1,865
10	7,430	10,506	5,297	2,898
12	10,452	14,778	7,452	4,076

FOR REDUCERS, SUBTRACT SMALL OPENING PLUG THRUST FROM LARGE OPENING PLUG THRUST TO CALCULATE THRUST/100.

TABLE 2 – SAFE BEARING LOAD

SOIL TYPE	LBS PER SQ FT*
Soft Clay	1,000
Sand	2,000
Sand & Gravel	3,000
Sand & Gravel cemented w/Clay	4,000
Hard Pan	10,000

*HARCO ASSUMES NO RESPONSIBILITY FOR THE ABOVE BEARING LOAD DATA. THE ENGINEER IS RESPONSIBLE FOR DETERMINING SAFE BEARING LOADS, AND WHEN DOUBT EXISTS, SOIL BEARING TESTS SHOULD BE SPECIFIED. THE BEARING LOADS GIVEN ARE FOR HORIZONTAL THRUSTS WHEN DEPTH OF COVER EXCEEDS 2 FEET.

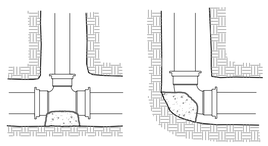

N THRUST BLOCKING INSTRUCTIONS
NTS

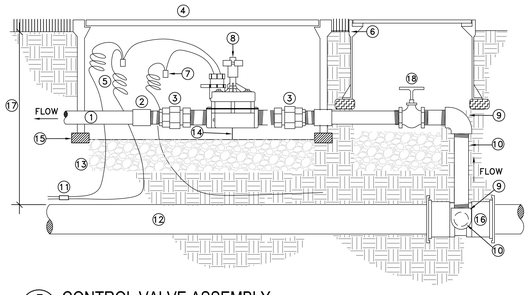

1. LATERAL LINE
2. PVC SCH. 80 FEMALE ADAPTER
3. PVC SCH. 80 UNION
4. GREEN PLASTIC VALVE BOX W/ BOLT LOCK (CARSON-BROOKS OR APPROVED EQUAL), SIZE AS REQUIRED
5. PROVIDE 12" EXPANSION LOOP AT EACH WIRE CONNECTOR IN BOX
6. FINISH GRADE
7. WATER TIGHT WIRE CONNECTORS (TYP.)
8. ELECTRIC CONTROL VALVE – SEE IRRIGATION EQUIPMENT SCHEDULE
9. SCH. 80 PVC ELL
10. SCH. 80 PVC TOE NIPPLE, LENGTH AS REQ'D
11. WIRES TO CONTROLLER, TAPE AND BUNDLE EVERY 10' – SEE TRENCH DETAIL
12. PVC MAIN LINE
13. 4" MIN. DEPTH PEA GRAVEL
14. 2" MIN. CLEARANCE REQUIRED
15. 2"x4" REDWOOD OR BRICK BLOCKING (TYP.)
16. DUCTILE IRON SERVICE TEE, SIZE AS REQ'D
17. DEPTH – SEE NOTES
18. GATE VALVE (LINE SIZE)

E CONTROL VALVE ASSEMBLY
NTS

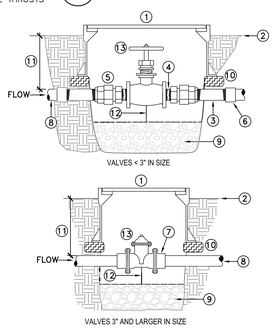

1. 10" ROUND PLASTIC VALVE BOX, W/ LOCK BOLT, CARSON-BROOKS 910 OR EQUAL, MARKED "G.V." WITH 2" WHITE LETTERS
2. FINISH GRADE
3. METAL NIPPLE, 12" MIN. LENGTH, PER BELOW:
   1" – 1 1/4" DIA. = GALVANIZED STEEL NIPPLE
   1 1/2" – 3" DIA. = DUCTILE IRON NIPPLE
4. 2" NIPPLE, DIA. AS REQUIRED
5. BRASS UNION (TYP.)
6. PVC SCH. 80 FEMALE ADAPTOR (TYP.)
7. BELL x FLANGE METAL ADAPTER (TYP.)
8. PVC MAINLINE
9. 4" MIN. DEPTH CLEAN PEA GRAVEL
10. 2"x4" REDWOOD OR BRICK BLOCKING (TYP.)
11. DEPTH – SEE NOTES
12. 2" MINIMUM CLEARANCE REQUIRED
13. GATE VALVE (LINE SIZE) – SEE EQUIPMENT SCHEDULE

NOTES:
VALVES > 2" ø SHALL HAVE 2" SQUARE OPERATING NUTS.
MEGA LUG FITTINGS MAY BE USED AS REQUIRED.

F ISOLATION GATE VALVE
NTS

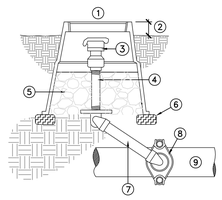

1. 10" ROUND GREEN PLASTIC VALVE BOX, CARSON-BROOKS 910 OR EQUAL
2. HEIGHT ABOVE FINISH GRADE: 1 1/2" IN TURF AREAS (SODDED); 1" IN TURF AREAS (SEEDED); 2" IN PLANTING AREAS
3. QUICK COUPLER VALVE – SEE EQUIPMENT SCHEDULE
4. BRASS NIPPLE, LENGTH AS REQUIRED
5. 6" MIN. DEPTH CLEAN PEA GRAVEL
6. REDWOOD OR BRICK BLOCKING, TYPICAL
7. 12" LASCO UNITIZED SWING JOINT W/ BRASS INSERT STABILIZER ELBOW, OR 12" SPEARS SWING JOINT RISER ASSEMBLY W/ BRASS FEMALE THREAD 90° ELL OUTLET
8. DUCTILE IRON SERVICE SADDLE W/ S.S. STRAP (SIDE MOUNTED, SIZE AS REQUIRED)
9. PVC MAIN LINE

C QUICK COUPLING VALVE
NTS

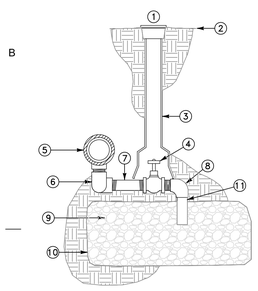

1. ADJUSTABLE CURB BOX W/ BOLT LID, CARSON-BROOKS 250 OR EQUAL
2. FINISH GRADE
3. ADJUST HEIGHT AS REQUIRED
4. 3/4" BRASS GLOBE VALVE W/ CROSS HANDLE – SEE IRRIGATION EQUIPMENT SCHEDULE
5. PVC MAINLINE & D. I. SERVICE TEE
6. (2)-FIPTxFIPT 90° ELL
   (2)-3/4" x CLOSE PVC NIPPLE
7. 3/4"x6" PVC NIPPLE
8. 3/4" 90° STREET ELL
9. 3/4" ROCK SUMP – 6 C.F. MIN. SIZE
10. FILTER FABRIC COVERING ROCK SUMP
11. 3/4" x 6" PVC NIPPLE

NOTE:
1) ALL PVC NIPPLES TO BE SCHEDULE 80.
2) PROVIDE VALVE KEY TO OWNER

D MANUAL DRAIN VALVE
NTS

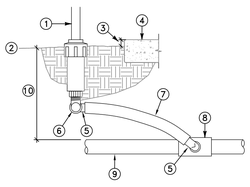

1. POP-UP SPRAY HEAD – SEE LEGEND
2. FINISH GRADE
3. 1" – 1 1/2"
4. NOTE: ALL SPRAY HEADS TO BE PLACED 2" CLEAR OF ALL HARDSCAPE SURFACES
5. SWING PIPE ELL WITH SPIRAL BARB FITTING (TYP.)
6. MARLEX STREET ELL
7. FLEXIBLE SWING PIPE, 12" MIN. LENGTH
8. PVC SCH 40 SxSxT TEE (OR ELL)
9. PVC LATERAL LINE, SIZE AS NOTED ON PLAN
10. DEPTH – SEE NOTES & TRENCH DETAIL

A POP-UP SPRAY SPRINKLER
NTS

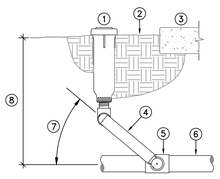

1. POP-UP ROTOR SPRINKLER – SEE LEGEND
2. FINISH GRADE
3. NOTE: ALL SPRAY HEADS TO BE PLACED 2" CLEAR OF ALL HARDSCAPE SURFACES
4. LASCO UNITIZED SWING JOINT OR SPEARS SWING JOINT RISER ASSEMBLY; 8" LENGTH; SIZE AS REQUIRED
5. PVC SCH 40 SxSxT TEE (OR ELL)
6. PVC LATERAL LINE, SIZE AS NOTED ON PLAN
7. SWING JOINT ARM INSTALLED AT ANGLE BETWEEN 30 AND 45 DRG. OF LATERAL PIPE
8. DEPTH – SEE NOTES & TRENCH DETAIL

B POP-UP GEAR DRIVE ROTOR SPRINKLER
NTS

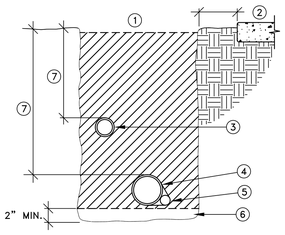

1. BACKFILL MATERIAL – SEE NOTES, COMPACT TO 90% MIN.
2. ADJACENT HARD SURFACE
3. NON-PRESSURE LATERAL LINE
4. PRESSURE MAIN LINE
5. DIRECT BURIAL, LOW VOLTAGE CONTROL WIRES; TAPE AND BUNDLE AT 10 FT. O.C.
6. BEDDING MATERIAL – SEE NOTES
7. PIPE DEPTHS – SEE NOTES

SEE SLEEVING DETAIL FOR TRENCHING IN PAVED AREAS.
NOTE:

H TRENCH DETAIL
NTS

IRRIGATION SCHEDULE

SYMBOL	MANUFACTURER/MODEL/DESCRIPTION
2Q 2H 4Q 4H 6Q 6H	Hunter INST-06-CV-R short radius nozzles Turf Spray, pressure regulated 6" popup with factory installed drain check valve and reclaimed body cap.
Q H F	Hunter INST-06-CV-R 5' radius Turf Spray, pressure regulated 6" popup with factory installed drain check valve and reclaimed body cap.
Q T H F	Hunter INST-06-CV-R 8' radius Turf Spray, pressure regulated 6" popup with factory installed drain check valve and reclaimed body cap.
Q T H F	Hunter INST-06-CV-R 10' radius Turf Spray, pressure regulated 6" popup with factory installed drain check valve and reclaimed body cap.
Q T H TT TQ F	Hunter INST-06-CV-R 12' radius Turf Spray, pressure regulated 6" popup with factory installed drain check valve and reclaimed body cap.
7 18 12 15 17	Hunter INST-06-CV-R ADJ Turf Spray, pressure regulated 6" popup with factory installed drain check valve and reclaimed body cap.
M O	Hunter MP1000 w/ MPR40-06-CV-R Turf Rotator, 6" pop-up with check valve, reclaimed body cap, MP Rotator nozzle. M=Maroon adj arc 90 to 210, L=Light Blue 210 to 270 arc, O=Olive 360 arc, on MPR40 6" pop-up body.
K G R	Hunter MP2000 w/ MPR40-06-CV-R Turf Rotator, 6" pop-up with check valve, reclaimed body cap, MP Rotator nozzle. K=Black adj arc 90-210, G=Green adj arc 210-270, R=Red 360 arc, on MPR40 6" popup body.
B Y A	Hunter MP3000 w/ MPR40-06-CV-R Turf Rotator, 6" pop-up with factory installed check valve, reclaimed body cap, MP Rotator nozzle. B=Blue adj arc 90-210, Y=Yellow adj arc 210-270, A=Gray 360 arc, on MPR40 6" pop-up body.
T	Hunter MP Corner w/ MPR40-06-CV-R Turf Rotator, 6" pop-up with factory installed check valve, reclaimed body cap, MP Rotator nozzle. T=Turquoise adj arc 45-105, on MPR40 6" pop-up body.
LST RST SST	Hunter MP Strip w/ MPR40-06-CV-R Turf Rotator, 6" popup with factory installed check valve, reclaimed body cap, MP Rotator nozzle. LST=Ivory left strip, SST=Brown side strip, RST=Copper right strip, on MPR40 6" pop-up body.

SYMBOL	MANUFACTURER/MODEL/DESCRIPTION	PSI	RADIUS
	Hunter I-20-6P-ADS-LA, 36S-LA Turf Rotor, 6" popup, adjustable and full circle, with check valve, stainless steel riser, low-angle nozzle	40	30'
2.5	Hunter I-20-6P-ADS-LA, 36S-LA Full Turf Rotor, 6" popup, adjustable and full circle, with check valve, stainless steel riser, low-angle nozzle	40	30'

SYMBOL	MANUFACTURER/MODEL
	RAINBIRD EFB-CP REMOTE CONTROL VALVE FOR DRIP ZONES. INSTALL WITH VALVE: 1" BALL VALVE, INLINE 1" DISC FILTER, 1" INLINE PRESSURE REGULATOR. - SEE DETAIL (WHERE TOTAL FLOW OF ZONE IS BELOW 5 GPM. INSTALL 1" PESB VALVE)
	Area to Receive Drip Emitters GPH IRRIGATION GPST05M Emitter Notes: 1 gal. plant to receive 2 PC6T-05 emitters. 5 gal. plant to receive 2 PC6T-05 emitters. 2" CAL plant to receive 6 PC6T-05 emitters. 2 1/2" CAL plant to receive 6 PC6T-05 emitters. 3" CAL plant to receive 6 PC6T-05 emitters. 12'-14' ht plant to receive 6 PC6T-05 emitters.

SYMBOL	MANUFACTURER/MODEL/DESCRIPTION
	RAINBIRD EFB-CP-PRS-D BRASS REMOTE CONTROL VALVE WITH PRS-D PRESSURE REGULATING MODULE SET TO ACHEIVE SPECIFIED PSI.
F	AMIAD 6" COMPACT STEEL FILTER STEEL INLINE FILTER ASSEMBLY WITH A BRUSHAWAY CLEANING SYSTEM AND WEAVEWIRE SCREEN (120 MESH 130 MICRON) WITH 2" AUTOMATIC FLUSH VALVE IN ALUMINUM ENCLOSURE. INCLUDE A NETAFIM LHM6FG1-PRMEL, 6" NORMALLY CLOSED, PRESSURE REDUCING HYDROMETER
	Irrigation Lateral Line: PVC Schedule 40
	Irrigation Mainline: PVC Class 200 SDR 21
	Pipe Sleeve: PVC Class 200 SDR 21 Typical pipe sleeve for irrigation pipe. Pipe sleeve size shall be twice the size of through pipes Extend sleeves 18 inches beyond edges of paving or construction.
	PVC PIPE CONDUIT- SIZE FOR THROUGH WIRES 2" MINIMUM
	Cap (as indicated for future use)
P.O.C.	Point of Connection to Existing 8" Pressure Irrigation Line
B C	SA2-RM4-36T+36T/ETHR/HWB/(2)PMR-CAC/FSB/LPP/EMP-18D SA2 - 18"W x 36"H x 24"D Double Door Strong Box with 2 DX2 36 Station Satellites ETHR - Ethernet communication Board HWB - Hardwire communication board for communication between the two satellites PMR-CAC - Permanent Mount ProMax receiver FSB- Flow Sensor Board LPP - Line Primary Protection EMP-18D - Quick Pad for Enclosure EV-GROUND-ROD -8' GROUNDING ROD WITH #8 COPPER WIRE
	Rain Bird 44LRC 1" Quick Coupler Valve, two piece body, locking cover
	NIBCO RESILIENT SEAT GATE VALVE, NON-RISING STEM SAME SIZE AS MAINLINE

Valve Callout
- Valve Number
- Valve GPM
- Valve Size

MHTN ARCHITECTS
MHTN Architects, Inc.
420 East South Temple
Suite 100
Salt Lake City, Utah 84111
Telephone (801) 595-6700
Telefax (801) 595-6717
www.mhtn.com

WEBER STATE UNIVERSITY
RESIDENTIAL LIFE PHASE II - BLDG 2
DFCM PROJECT NUMBER: 10176810
WEBER STATE UNIVERSITY
OGDEN, UTAH 84408

SEAL

MHTN PROJECT NO.
DRAWN BY: CHECKED BY:

ISSUED:

NO.	DATE	DESCRIPTION
1	17 MAY 2011	CONSTRUCTION DOCUMENTS

CONTRACTOR TO VERIFY DRAWINGS IN FIELD USE REFLECT LAST REVISION DATE.

NO.	DATE	DESCRIPTION

SHEET NAME
IRRIGATION NOTES AND LEGEND
CONSTRUCTION DOCUMENTS
17 MAY 2011

SHEET NUMBER
LI501

1. PLANTING BED MULCH, SEE PLANTING NOTES FOR DEPTH
2. FINISH GRADE
3. CARSON–BROOKS 1220 JUMBO SERIES VALVE BOX
4. 1" MAX DEPTH
5. PVC UNION
6. PVC SHC 40 COUPLING / BUSHING
7. BRASS BALL VALVE
8. WATERPROOF CONNECTORS
9. INLINE 1" DISC FILTER, ANGLED
10. REMOTE CONTROL VALVE
11. INLINE PRESSURE REGULATOR
12. 2"x4" REDWOOD OR BRICK BLOCKING
13. 4" MIN. DEPTH WASHED PEA GRAVEL
14. PVC SUPPLY HEADER
15. 12" POP UP HEAD – PRESSURE INDICATOR WITH CAP

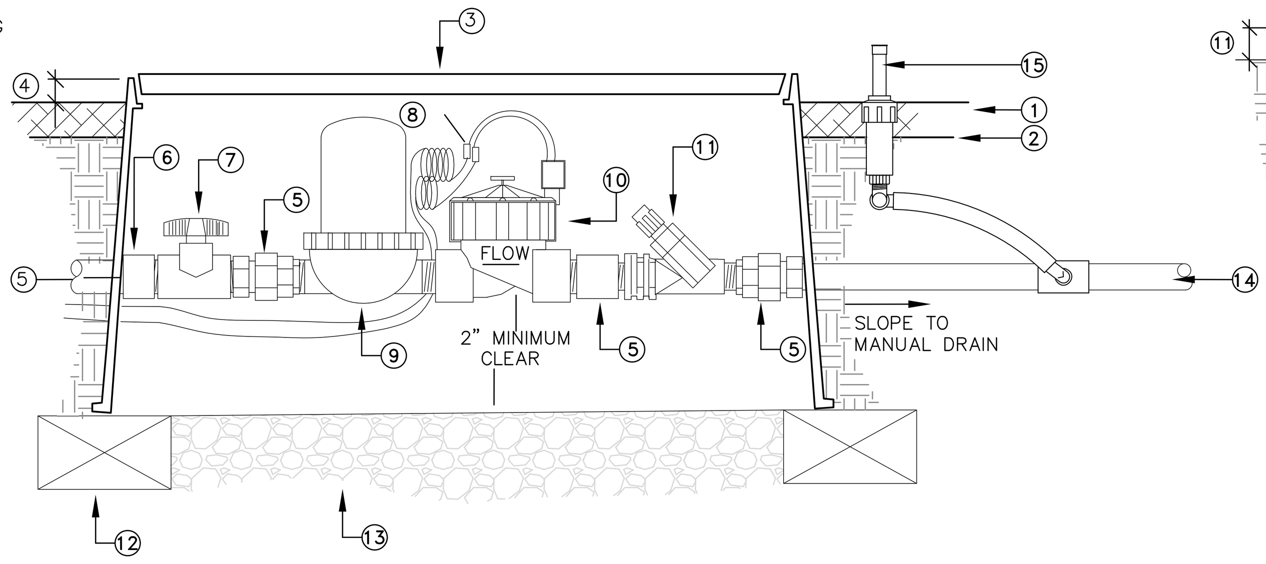

C DRIP ZONE REMOTE CONTROL VALVE
NTS

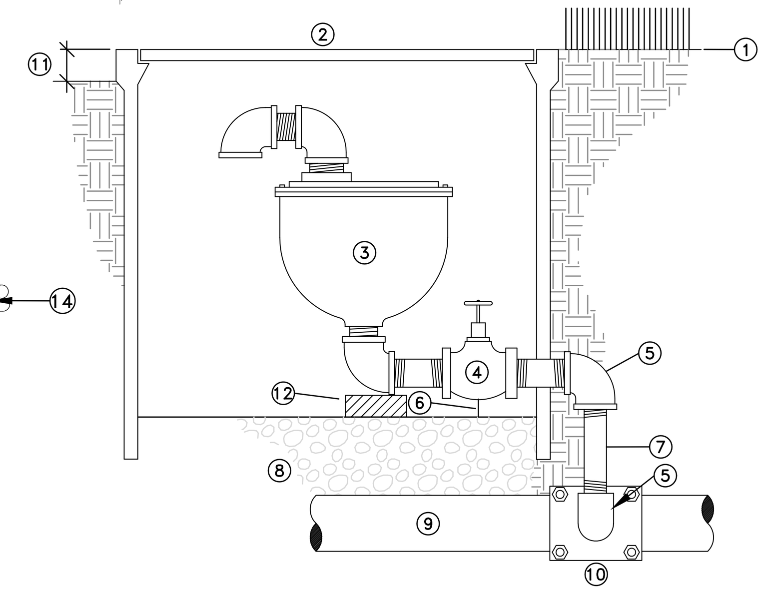

1. FINISH GRADE
2. JUMBO PLASTIC VALVE BOX W/ LOCK BOLT, AND EXTENSION. CARSON–BROOKS OR EQUAL.
3. COMBINATION AIR VALVE – SEE IRRIGATION EQUIPMENT SCHEDULE (INSTALL PER MANUFAC. SPECS.)
4. BRASS BALL VALVE, SIZE AS REQUIRED
5. 90° BRASS OR GALV. ELL (TYP.)
6. 2" MIN. CLEARANCE REQUIRED
7. BRASS OR GALV. NIPPLE, LENGTH AS REQUIRED (TYP.)
8. 6" MIN. DEPTH WASHED PEA GRAVEL
9. MAIN LINE
10. MJ OR SS DOUBLE STRAPPED SERVICE SADDLE
11. HEIGHT AT FINISHED GRADE OR AT 2" IN PLANTING BEDS
12. SUPPORT BLOCK FOR VALVE RECOMMENDED

J COMBINATION AIR VALVE ASSEMBLY
NTS

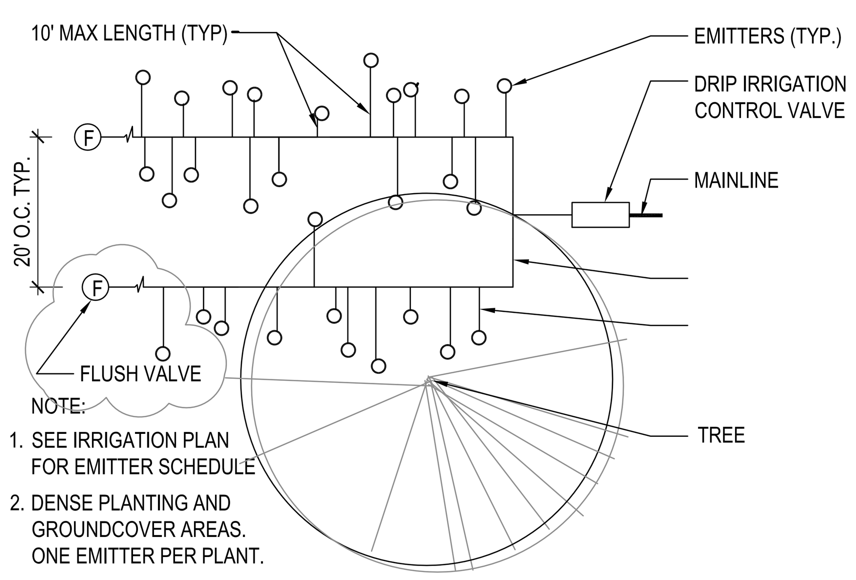

NOTE:
1. SEE IRRIGATION PLAN FOR EMITTER SCHEDULE
2. DENSE PLANTING AND GROUNDCOVER AREAS. ONE EMITTER PER PLANT.

C1 DRIP CIRCUIT DETAIL
1" = 1"
32 8413.16-02 I-dtir16

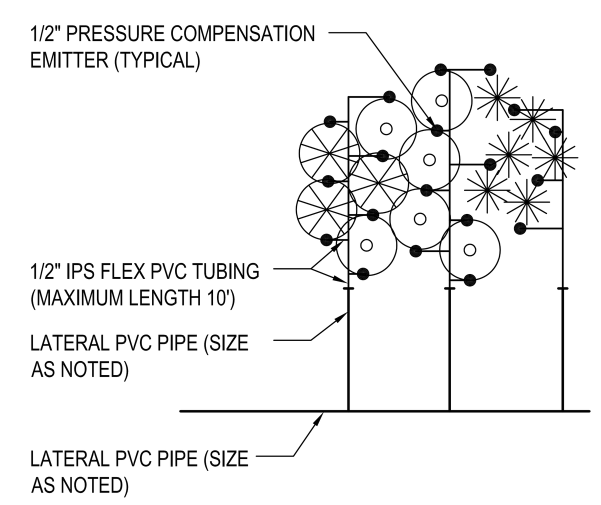

MULTIPLE SHRUB LAYOUT

C2 EMMITER LAYOUT DETAIL
1" = 1"
32 8413.16-03 I-dtir15

NOTE:
INSTALL EMITTERS ON THE UPHILL SIDE OF THE ROOTBALL AT SLOPE LOCATIONS. EQUALLY SPACE THE REQUIRED NUMBER OF EMITTERS AS PER DETAILS AND NOTES TO MEET THE PLANT WATER REQUIREMENTS AT MATURITY.

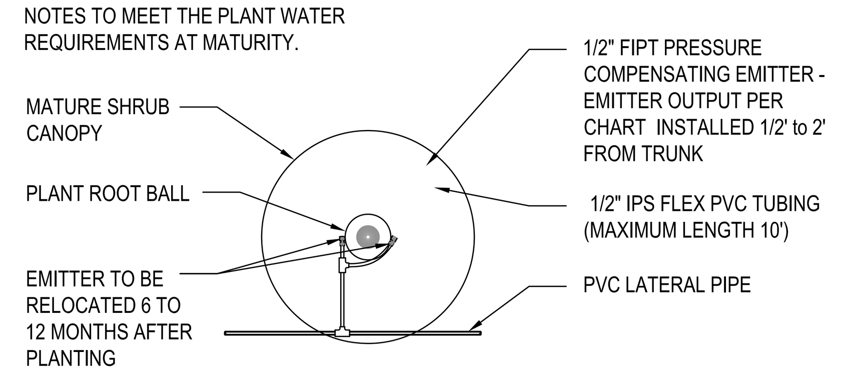

B1 SHRUB EMITTER PLACEMENT
1" = 1"
32 8413.13-22 I-dtir18

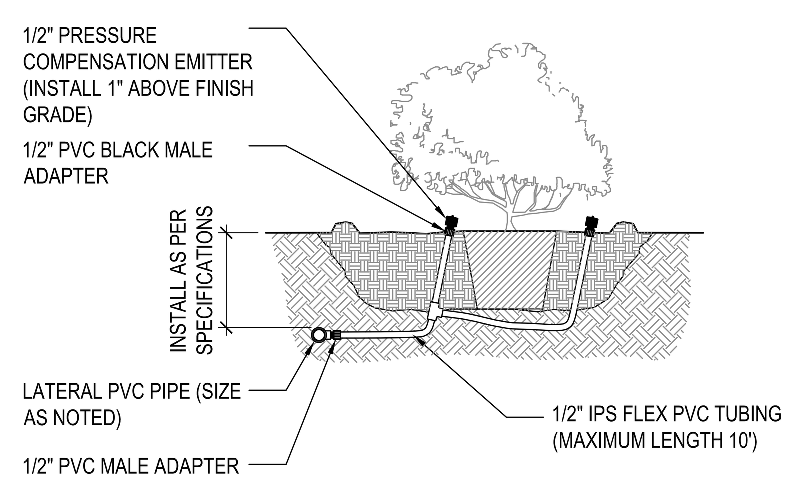

B2 EMMITER INSTALLATION DETAIL
1" = 1"
32 8413.16-04 I-dtir11

NOTE: INSTALL TWO EMITTERS AT EDGE OF ROOTBALL, AFTER EIGHT TO TWELVE MONTHS RELOCATE 2-1/2' FROM CENTER OF PLANT, SPACE ALL OTHER EMITTERS 2' APART. INSTALL EMITTERS ON THE UPHILL SIDE OF THE ROOTBALL AT SLOPE LOCATIONS. EQUALLY SPACE THE REQUIRED NUMBER OF EMITTERS AS PER DETAILS AND NOTES TO MEET THE PLANT WATER REQUIREMENTS AT MATURITY.

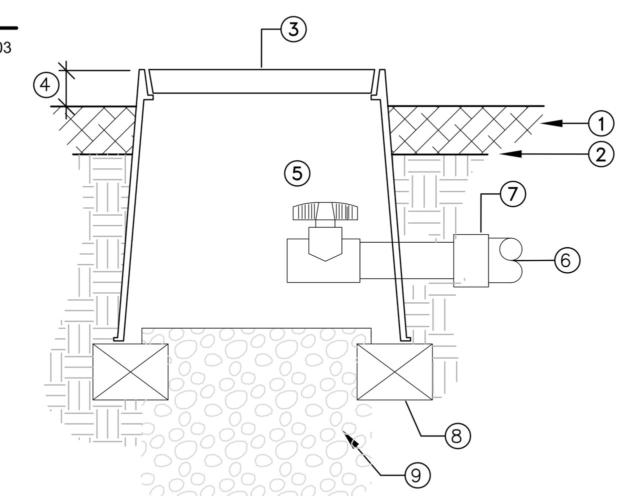

1. PLANTING BED MULCH SEE PLANTING NOTES FOR DEPTH
2. FINISH GRADE
3. PLASTIC VALVE BOX CARSON–BROOKS 809 OR EQUAL
4. 1" MAX. DEPTH
5. MANUAL FLUSHING VALVE
6. PVC EXHAUST HEADER
7. PVC REDUCER ADAPTER (S X 1/2") FPT (SIZE AS REQ'D)
8. (3) 2" X 4" REDWOOD OR BRICK BLOCKING
9. 1 C.F. WASHED PEA GRAVEL

G DRIP FLUSH VALVE (PLUMBED TO PVC)
NTS

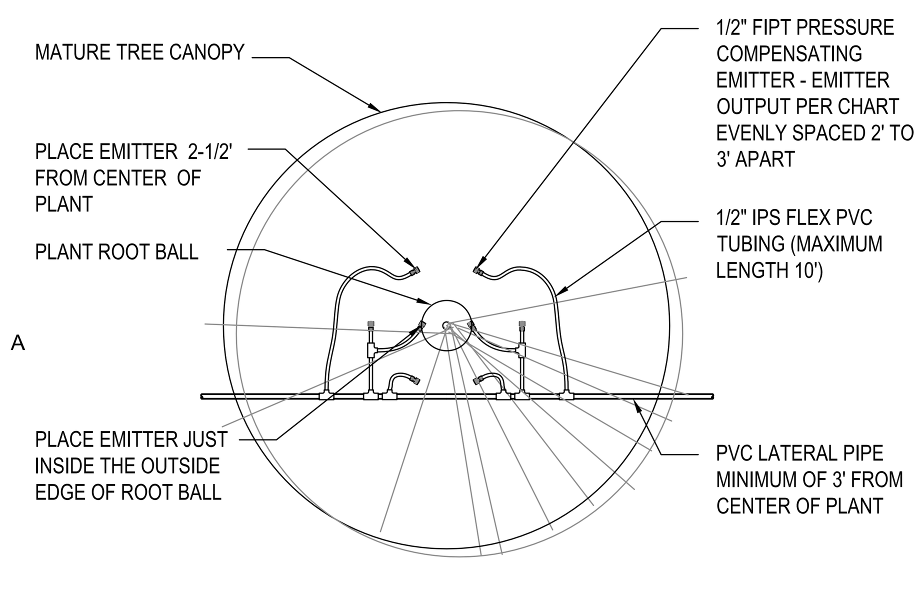

A1 TREE EMITTER PLACEMENT
1" = 1"
32 8413.56-02 I-dtir26

NOTE:
RUN ONE EXTRA WIRE FROM THE ADJACENT CONTROLLER TO EACH GROUP OF VALVES FOR FUTURE USE AND STUB INTO THE VALVE BOX.

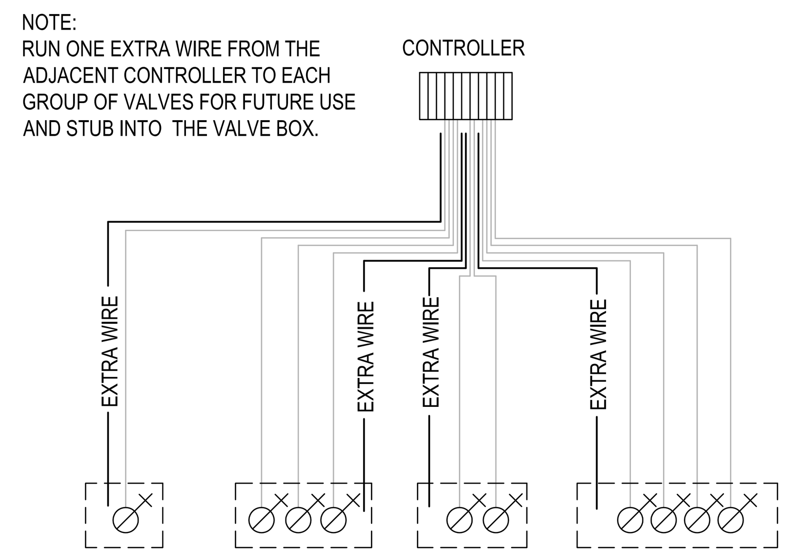

A3 SPARE WIRE DETAIL
NTS
LI501 I-dtir07

IRRIGATION NOTES

1. IRRIGATION PLAN IS DIAGRAMMATIC. ALL IRRIGATION EQUIPMENT SHALL BE LOCATED IN PLANTING AREAS ONLY, UNLESS NOTED OTHERWISE. REFER TO THE IRRIGATION LEGEND, DETAILS, AND SPECIFICATIONS FOR EQUIPMENT AND INSTALLATION. SPECIFICATIONS SHALL TAKE PRECEDENCE OVER INSTALLATION DETAILS.

2. LANDSCAPE CONTRACTOR SHALL VERIFY LOCATION OF IRRIGATION POINT OF CONNECTION (POC) AND THE STATIC WATER PRESSURE AT THAT LOCATION PRIOR TO BEGINNING ANY IRRIGATION WORK. IF THE LOCATION OR WATER PRESSURE IS DIFFERENT THAN THAT EXPRESSED BY THE LANDSCAPE ARCHITECT, OR IF THE PRESSURE APPEARS TO BE UNUSUALLY HIGH OR LOW, THE CONTRACTOR SHALL NOTIFY THE LANDSCAPE ARCHITECT IMMEDIATELY.

3. CONTRACTOR SHALL KEEP THE PREMISES CLEAN AND FREE OF EXCESS EQUIPMENT, MATERIALS AND RUBBISH INCIDENTAL TO WORK OF THIS SECTION.

4. PIPE FITTINGS SHALL BE AS FOLLOWS:
A. ALL RISERS AND EXPOSED FITTINGS SHALL BE P.V.C. SCHEDULE 80.
B. ALL UNDERGROUND FITTINGS SHALL BE P.V.C. SCHEDULE 40.
C. ALL MAIN LINE TWO AND HALF (2 ½) INCH OR GREATER SHALL USE DUCTILE IRON FITTINGS. ALL MAINLINE TWO (2) INCH OR SMALLER SHALL USE PVC FITTINGS.

5. IRRIGATION CONTROL WIRES SHALL CONFORM TO THE FOLLOWING:
A. ALL WIRE SHALL BE TYPE UF, 600 VOLT, SOLID COPPER , SINGLE CONDUCTOR WIRE. IT SHALL BE UL LISTED, DIRECT BURIAL TYPE, AND MINIMUM SIZE OF 14 GAUGE. ALL SPLICES AND CONNECTIONS SHALL BE WATER-TIGHT. ALL WIRES SHALL BE INSTALLED WITH TWO (2) FEET OF EXCESS WIRE (COILED) AT THE END OF EACH WIRE RUN, WIRE SPLICE, AND AT EACH CONTROLLER.
B. CONTROL WIRE SHALL BE BUNDLED EVERY 10' AND PLACED ADJACENT TO MAIN LINE.
C. ALL WIRE SPLICES SHALL BE LOCATED IN VALVE BOXES.

6. MANUAL DRAIN VALVES SHALL BE PLACED ON THE MAIN LINE AT ALL LOW SPOTS TO ENSURE COMPLETE DRAINAGE AND WINTERIZATION OF MAIN LINE. ALL MANUAL DRAINS SHALL BE PLACE IN SEPARATE VALVE BOXES PER INSTALLATION DETAILS.

7. CHECK VALVES SHALL BE USED WHERE INDICATED AND WHERE NECESSARY TO PREVENT WATER FLOW FROM LOWER ELEVATION HEADS WHEN SYSTEM IS TURNED OFF. INSTALL PER MANUFACTURE'S RECOMMENDATION, WITH A ONE (1) CU. FT. MIN. GRAVEL SUMP AROUND EACH DRAIN. .

8. ALL POP-UP SPRAY SPRINKLERS SHALL CONFORM TO THE FOLLOWING UNLESS SPECIFICALLY NOTED OTHERWISE ON THE PLANS:
A. SPRINKLERS LOCATED IN GRASS AREAS SHALL BE FOUR (4) INCHES IN HEIGHT.
B. SPRINKLERS LOCATED IN PLANTING BEDS SHALL BE TWELVE (12) INCHES IN HEIGHT.

9. DRIP IRRIGATION SHALL CONFORM TO THE FOLLOWING:
(DRIP LINES AT GRADE UNDER MULCH)
A. DRIP TUBING WITH PRESSURE COMPENSATING EMITTERS SHALL CONFORM TO THE FOLLOWING:
1. TUBING SHALL BE CONSTRUCTED OF HIGH QUALITY LINEAR, LOW DENSITY, UV-RESISTANT, POLYETHYLENE RESIN MATERIALS WITH INTERNAL, INTEGRAL DRIPPERS AT SPECIFIED INTERVALS.
2. DRIPPERS OR EMITTERS SHALL BE OF THE INDIVIDUAL, SELF-CLEANING, PRESSURE-COMPENSATING TYPE.

B. INLINE DRIP TUBING SHALL BE SPACED AT A DISTANCE EQUAL TO OR LESS THAN THE INLINE EMITTER SPACING. FOR SLOPE APPLICATIONS PLACE DRIP TUBING LATERALS PARALLEL TO THE SLOPE CONTOUR. WHEN SLOPES EXCEED 3% INCREASE THE RECOMMENDED LATERAL SPACING BY 25% ON THE LOWER 1/3 OF THE SLOPE.

C. ALL INSERT BARBED FITTINGS SHALL BE CONSTRUCTED OF MOLDED, UV-RESISTANT PLASTIC. EACH FITTING SHALL BE A MINIMUM OF TWO RIDGES OR BARBS PER OUTLET. ALL FITTINGS SHALL BE OF ONE MANUFACTURER AND SHALL BE AVAILABLE ON ONE OF THE FOLLOWING END CONFIGURATIONS:
1. BARBED INSERT FITTINGS
2. MALE PIPE THREADS (MPT) WITH BARBED INSERT FITTINGS
3. FEMALE PIPE THREADS (FPT) WITH BARBED INSERT FITTINGS

D. ALL DRIP TUBING SHALL BE SHALL BE HELD IN PLACE BY SOIL STAPLES AND SHALL CONFORM TO THE FOLLOWING:
1. SANDY SOIL - ONE STAPLE EVERY THREE (3') FEET AND TWO (2) STAPLES ON EACH CHANGE OF DIRECTION (TEE, ELBOW, OR CROSS)
2. LOAM SOIL - ONE STAPLE VERY FOUR (4') FEET AND TWO (2) STAPLES ON EACH CHANGE OF DIRECTION (TEE, ELBOW, OR CROSS)
3. CLAY SOIL - ONE STAPLE VERY FIVE (5') FEET AND TWO (2) STAPLES ON EACH CHANGE OF DIRECTION (TEE, ELBOW, OR CROSS)

E. REMOTE CONTROL VALVE ASSEMBLY SHALL CONTAIN THE FOLLOWING COMPONENTS:
1. PVC BALL VALVE
2. INLINE DISC OR SCREEN FILTER WITH 100 MICRON / 150 MESH FILTER ELEMENTS.
3. REMOTE CONTROL VALVE - CAPABLE OF OPERATING AT VERY LOW FLOWS
4. INLINE PRESSURE REGULATOR
ALL COMPONENTS SHALL BE INSTALLED ACCORDING TO MANUFACTURER'S RECOMMENDATIONS, AND LOCATED WITHIN A SINGLE VALVE BOX, ONE VALVE ASSEMBLY PER BOX.

F. PROVIDE THE FOLLOWING EQUIPMENT TO EACH VALVE CIRCUIT, LOCATED AND INSTALLED PER MANUFACTURER'S RECOMMENDATIONS:
1. LINE FLUSHING VALVE(S); MINIMUM OF ONE ON EACH EXHAUST HEADER AND ONE FOR EVERY 15 GPM IN THE CIRCUIT.
2. AIR/VACUUM RELIEF VALVE(S) AT ALL HIGH POINTS IN THE SYSTEM.
3. AUTOMATIC DRAINS AT ALL LOW POINTS ON THE SUPPLY AND EXHAUST HEADERS, WITH ONE LOCATED 2 FEET FROM THE CONTROL VALVE ASSEMBLY. THE DRAINS SHALL BE ANGLED DOWN AT 30 TO 45 DEGREES FROM HORIZONTAL .

G. INLINE DRIPPER TUBING SHALL BE INSTALLED AT FINISHED GRADE WITH SOIL STAPLES AND COVERED WITH THREE (3) INCHES OF SPECIFIED MULCH. SUPPLY AND EXHAUST HEADERS SHALL BE INSTALLED AT NORMAL LATERAL LINE DEPTHS.

H. INSTALLATION OF INLINE DRIP CIRCUITS SHALL GENERALLY CONFORM TO THE FOLLOWING STEPS:
1. ASSEMBLE AND INSTALL FILTER, REMOTE CONTROL VALVE AND PRESSURE REGULATING VALVE ASSEMBLY(S) IN ACCORDANCE WITH INSTALLATION DETAILS.
2. ASSEMBLE AND INSTALL SUPPLY HEADER(S) IN ACCORDANCE WITH INSTALLATION DETAILS. INCLUDE AUTOMATIC DRAIN AT LOW POINTS. TAPE OR PLUG ALL OPEN CONNECTIONS TO PREVENT DEBRIS CONTAMINATION.
3. INSTALL LATERAL DRIP LINES IN ACCORDANCE WITH DETAILS AND RELEVANT SPECIFICATIONS AND MANUFACTURER'S RECOMMENDATIONS. TAPE OR PLUG ALL OPEN ENDS WHILE INSTALLING TO PREVENT DEBRIS CONTAMINATION.
4. ASSEMBLE AND INSTALL EXHAUST HEADER(S) IN ACCORDANCE WITH INSTALLATION DETAILS. INCLUDE FLUSHING VALVE(S) AND AUTOMATIC DRAIN(S) AT LOW POINTS. TAPE OR PLUG ALL OPEN CONNECTIONS TO PREVENT DEBRIS CONTAMINATION.
5. INSTALL AIR/VACUUM RELIEF VALVE(S) AT THE ZONES HIGHEST POINT(S) IN ACCORDANCE WITH DETAILS.
6. THOROUGHLY FLUSH SUPPLY HEADER(S) AND CONNECT DRIP LATERAL LINES WHILE FLUSHING.
7. THOROUGHLY FLUSH DRIP LATERAL LINES AND CONNECT TO EXHAUST HEADER(S) AND ANY INTERCONNECTING DRIP LATERAL LINES WHILE FLUSHING.
8. THOROUGHLY FLUSH EXHAUST HEADER(S) AND INSTALL LINE FLUSHING VALVES IN ACCORDANCE WITH DETAILS.

10. ALL PRESSURE MAIN LINES SHALL HAVE EIGHTEEN (18) INCHES TO THIRTY (30) INCHES OF COVER, AND ALL LATERAL LINES SHALL HAVE EIGHT (8) INCHES TO FOURTEEN (14) INCHES OF COVER. TRENCH BEDDING AND BACKFILL MATERIAL SHALL BE EXISTING SITE SOIL FREE OF ROCKS, DEBRIS, ETC. GREATER THAN ONE (1) INCH IN ANY DIMENSION THAT MAY DAMAGE IRRIGATION PIPE OR EQUIPMENT. IN THE EVENT OF BACKFILL SETTLEMENT, CONTRACTOR SHALL PERFORM REQUIRED REPAIRS AT HIS OWN COST.

11. WHERE POSSIBLE, ALL AUTOMATIC VALVES SHALL BE LOCATED WITHIN SHRUB AREAS AND INSTALLED IN GREEN VALVE BOXES, ONE VALVE PER BOX, WITH FOUR (4) INCHES OF 3/4" GRAVEL BENEATH THE VALVE. NO VALVE MANIFOLDS SHALL BE ALLOWED. GATE VALVES SHALL BE LOCATED IN SEPARATE VALVE BOXES. WIRE SPLICES SHALL ALSO BE LOCATED IN SEPARATE VALVE BOXES.

12. ALL MAIN LINE AND LATERAL LINES SHALL BE SLEEVED WITH P.V.C. SCHEDULE 40 PIPE (4" AND UNDER) OR CLASS 200 (GREATER THAN 4") WHERE THEY PASS UNDER PAVED AREAS. SLEEVE SIZE SHALL BE TWICE THE DIAMETER OF THE LINE TO BE SLEEVED UNLESS OTHERWISE NOTED ON THE PLANS.

13. AUTOMATIC CONTROLLERS SHALL BE OF THE SIZE AND TYPE NOTED, AND INSTALLED WHERE INDICATED ON IRRIGATION PLAN. CONTROL WIRES SHALL BE SLEEVED IN ELECTRICAL CONDUIT TO MAINLINE. 120-VOLT ELECTRICAL SERVICE TO CONTROLLERS SHALL BE PROVIDED BY THE LANDSCAPE CONTRACTOR. COORDINATE THIS WORK WITH ELECTRICAL AND OTHER CONTRACTORS FOR THIS PROJECT.

14. A MASTER VALVE SHALL BE INSTALLED ALONG WITH APPROPRIATE FLOW SENSING EQUIPMENT TO ELIMINATE EXCESS SYSTEM FLOW SHOULD A VALVE STICK OPEN AFTER A CYCLE HAS BEEN COMPLETED OR A MAIN LINE BREAK OCCURS.

15. PRIOR TO BACKFILLING IRRIGATION TRENCHES:
A. ALL MAIN LINES IN THE SYSTEM SHALL BE CAPPED AND PRESSURE TESTED AT 125 P.S.I. FOR A PERIOD OF FOUR (4) HOURS. ANY LEAKS FOUND SHALL BE CORRECTED BY REMOVING THE LEAKING PIPE OR FITTINGS AND INSTALLING NEW MATERIAL IN ITS PLACE. REPEAT PRESSURE TEST TO ASSURE ABSENCE OF LEAKS.
B. THE CONTRACTOR SHALL NOT ALLOW NOR CAUSE ANY OF HIS WORK TO BE COVERED UNTIL IT HAS BEEN INSPECTED, TESTED AND APPROVED BY THE OWNER/OWNER'S AUTHORIZED REPRESENTATIVE.
C. WHERE MAIN LINE WILL BE ALLOWED TO SIT UNCOVERED FOR ANY LENGTH OF TIME IN THE TRENCH PRIOR TO TESTING, SHADE MAIN LINE WITH A THIN COVERING OF SOIL TO MINIMIZE WEATHER-RELATED EXPANSION OR CONTRACTION OF PIPE.

16. IRRIGATION CONTRACTOR SHALL ADJUST ALL HEADS TO PROVIDE A UNIFORM COVERAGE AND TO KEEP SPRAY OFF BUILDINGS, WALKWAYS, WALLS, PARKING AREAS, AND DRIVES.

17. WHEN THE SPRINKLER SYSTEM IS COMPLETED THE CONTRACTOR SHALL, IN THE PRESENCE OF THE OWNER/OWNER'S AUTHORIZED REPRESENTATIVE, PERFORM A COVERAGE TEST OF WATER PROVIDED TO THE PLANTING AREAS TO ENSURE IT IS CONSISTENT AND UNIFORM. THE CONTRACTOR SHALL FURNISH ALL MATERIALS AND PERFORM ALL WORK REQUIRED TO CORRECT ANY INADEQUACIES OF COVERAGE AT HIS OWN COST.

18. THE CONTRACTOR SHALL FURNISH TO THE OWNER A COMPLETE "AS BUILT" DRAWING ON MYLAR AND TWO PRINTS SHOWING EXACT LOCATIONS OF ALL ITEMS INSTALLED. THESE ARE TO BE DELIVERED ON OR BEFORE FINAL INSPECTION.

19.A REDUCED IRRIGATION PLAN INDICATING ALL SYSTEMS AND THEIR APPROPRIATE SEQUENCED VALVES SHALL BE LAMINATED IN MYLAR AND MOUNTED ON THE INSIDE COVER OF THE IRRIGATION CONTROLLER(S).

20. IRRIGATION CONTRACTOR SHALL MAINTAIN THE SYSTEM FOR THE DURATION OF THE MAINTENANCE PERIOD AND SHALL WATER ON A DAILY BASIS.

21. IRRIGATION CONTRACTOR SHALL GUARANTEE THE ENTIRE IRRIGATION SYSTEM TO BE FREE OF DEFECTS IN WORKMANSHIP AND MATERIALS FOR A PERIOD OF ONE (1) YEAR FROM FINAL ACCEPTANCE BY THE OWNER.
22. THE CONTRACTOR IS TO INSTALL TWO 12" SHRUB POP UP HEADS ON EACH DRIP ZONE WITH A CLOSED SET SCREW FOR NOTIFICATION OF DRIP SYSTEM OPERATION.

23. THE CONTRACTOR IS TO PROVIDE MAINLINE DRAINS AND QUICK COUPLERS AS REQUIRED TO DRAIN AND WINTERIZE THE SYSTEM USING COMPRESSED AIR.

24. SPACING OF ALL SMALL AREA HEADS SHALL BE 1' LESS THAN MANUFACTURE STANDARDS TO ASSURE SUCCESSFUL IRRIGATION WATER AUDIT. FOR EXAMPLE 15' SPRAY HEADS SHALL BE SPACED AT NO MORE THAN 14' APART.

25. THE IRRIGATION CONTROLLER ASSEMBLY SHALL BE CERTIFIED BY JOHN DEERE GREEN TECH. A PRE-CONSTRUCTION MEETING IS TO BE HELD WITH JOHN DEERE GREEN TECH PRIOR TO CONTROLLER INSTALLATION

26. ALL IRRIGATION EQUIPMENT INCLUDING THE CONTROLLER ASSEMBLY SHALL BE FULLY OPERABLE AND IN CONNECTION WITH THE UNIVERSITY CENTRAL CONTROL SYSTEM PRIOR TO FINAL INSPECTION.

27. CONTRACTOR TO CONTACT UNIVERSITY FACILITIES AT TIME OF BID AWARD TO OBTAIN A CONTROLLER NUMBER, SEQUENCE & FREQUENCY.

28. PROTECT TREE ROOTS OF THE EXISTING TREES DURING INSTALLATION OF IRRIGATION SYSTEM. DISCUSS METHODOLOGY WITH UNIVERSITY PERSONNEL.

MHTN ARCHITECTS
MHTN Architects, Inc.
420 East South Temple
Suite 100
Salt Lake City, Utah 84111
Telephone (801) 595-6700
Telefax (801) 595-6717
www.mhtn.com

WEBER STATE UNIVERSITY
RESIDENTIAL LIFE PHASE II - BLDG 2
DFCM PROJECT NUMBER: 10176810
WEBER STATE UNIVERSITY
OGDEN, UTAH 84408

SEAL

MHTN PROJECT NO.
DRAWN BY: CHECKED BY:

ISSUED:

NO.	DATE	DESCRIPTION
1	17 MAY 2011	CONSTRUCTION DOCUMENTS

CONTRACTOR TO VERIFY DRAWINGS IN FIELD USE REFLECT LAST REVISION DATE.

NO.	DATE	DESCRIPTION

SHEET NAME
IRRIGATION DETAILS

CONSTRUCTION DOCUMENTS
17 MAY 2011

SHEET NUMBER
LI502

TREE PLANTING PLAN BUILDING - 2

0 10' 20' 40'

SCALE: 1" = 20'-0"

KEYNOTES

1. EXISTING TREE - COORDINATE WITH CAMPUS HORTICULTURIST FOR TREE PROTECTION PLAN DURING LANDSCAPE OPERATIONS
2. EXISTING BUILDING
3. EXISTING RETAINING WALL
4. CONCRETE PAVING
5. CURB & GUTTER
6. ASPHALT PAVING
7. CONCRETE STAIR
8. LANDSCAPE AREA
9. LIGHT POLE - RE: ELEC
10. ACCESSIBLE SIGN
11. CONCRETE WALL
12. ACCESSIBLE RAMP
13. FIRE HYDRANT
14. CONCRETE MOWSTRIP
15. NOT USED
16. BOULDER WALL
17. FDC LOCATION
18. CATCH BASIN
19. GAS METER
20. ELECTRICAL TRANSFORMER
21. COOLING TOWER
22. POROUS UNIT PAVERS - FIRELANE
23. LAWN - SOD
24. LAWN - SEED
25. APPROXIMATE EDGE OF EXISTING SOD
26. PLANTING IN POCKETS OF BOULDER WALL TO BE FILLED WITH ROCK WALL PLANTING MIX.
27. BIKE LOCKERS
28. GENERATOR
29. GAS GRILL
30. SAND VOLLEYBALL COURT
31. BOULDER SEATING
32. BOLLARD
33. TABLE
34. NOT USED
35. BIKE RACK
36. CONSTRUCTION LIMIT LINE
37. BENCH
38. NATIVE SEED
39. CRUSHED AGGREGATE PAVING
40. FIRE PIT
41. UTILITY MANHOLE
42. EMERGENCY CALL STATION

NOTES:

1. PLANT ALL OPEN POCKETS IN BOULDER RETAINING WALLS WITH ROCK WALL PLANTING @ 6" O.C. PLANT DURING SPRING OR LATE FALL.

MHTN
ARCHITECTS
MHTN Architects, Inc.
420 East South Temple
Suite 100
Salt Lake City, Utah 84111
Telephone (801) 595-6700
Telefax (801) 595-6717
www.mhtn.com

WEBER STATE UNIVERSITY
RESIDENTIAL LIFE PHASE II - BLDG 2
DFCM PROJECT NUMBER: 10176810

WEBER STATE UNIVERSITY
OGDEN, UTAH 84408

SEAL

MHTN PROJECT NO. 2010543

DRAWN BY: RK CHECKED BY: MG

ISSUED:

NO.	DATE	DESCRIPTION
1	17 MAY 2011	CONSTRUCTION DOCUMENTS

CONTRACTOR TO VERIFY DRAWINGS IN FIELD USE REFLECT LAST REVISION DATE.

NO.	DATE	DESCRIPTION

SHEET NAME

TREE PLANTING PLAN

CONSTRUCTION DOCUMENTS
17 MAY 2011

SHEET NUMBER

LP101

C:\Users\randyk\Documents\A11_2010543 WSU_RESIDENTIAL LIFE BUILDING III_CENTRAL_randyk.rvt
1/12/2010 12:24:45 AM

SHRUB PLANTING PLAN BUILDING - 2

0 5' 10' 20'

SCALE: 1" = 10'-0"

C:\Users\mary.k\Documents\A11_2010543 WSU RESIDENTIAL LIFE BUILDING III_CENTRAL_mrejkArkt
11/29/2010 9:52:43 AM

KEYNOTES

1. EXISTING TREE - COORDINATE WITH CAMPUS HORTICULTURIST FOR TREE PROTECTION PLAN DURING LANDSCAPE OPERATIONS
2. EXISTING BUILDING
3. EXISTING RETAINING WALL
4. CONCRETE PAVING
5. CURB & GUTTER
6. ASPHALT PAVING
7. CONCRETE STAIR
8. LANDSCAPE AREA
9. LIGHT POLE - RE: ELEC
10. ACCESSIBLE SIGN
11. CONCRETE WALL
12. ACCESSIBLE RAMP
13. FIRE HYDRANT
14. CONCRETE MOWSTRIP
15. NOT USED
16. BOULDER WALL
17. FDC LOCATION
18. CATCH BASIN
19. GAS METER
20. ELECTRICAL TRANSFORMER
21. COOLING TOWER
22. POROUS UNIT PAVERS - FIRELANE
23. LAWN - SOD
24. LAWN - SEED
25. APPROXIMATE EDGE OF EXISTING SOD
26. PLANTING IN POCKETS OF BOULDER WALL TO BE FILLED WITH ROCK WALL PLANTING MIX.
27. BIKE LOCKERS
28. GENERATOR
29. GAS GRILL
30. SAND VOLLEYBALL COURT
31. BOULDER SEATING
32. BOLLARD
33. TABLE
34. NOT USED
35. BIKE RACK
36. CONSTRUCTION LIMIT LINE
37. BENCH
38. NATIVE SEED
39. CRUSHED AGGREGATE PAVING
40. FIRE PIT
41. UTILITY MANHOLE
42. EMERGENCY CALL STATION

NOTES:

1. PLANT ALL OPEN POCKETS IN BOULDER RETAINING WALLS WITH ROCK WALL PLANTING @ 6" O.C. PLANT DURING SPRING OR LATE FALL.

MHTN ARCHITECTS
MHTN Architects, Inc.
420 East South Temple
Suite 100
Salt Lake City, Utah 84111
Telephone (801) 595-6700
Telefax (801) 595-6717
www.mhtn.com

WEBER STATE UNIVERSITY
RESIDENTIAL LIFE PHASE II - BLDG 2
DFCM PROJECT NUMBER: 10176810

WEBER STATE UNIVERSITY
OGDEN, UTAH 84408

SEAL

MHTN PROJECT NO. 2010543

DRAWN BY: RK CHECKED BY: MG

ISSUED:

NO.	DATE	DESCRIPTION
1	17 MAY 2011	CONSTRUCTION DOCUMENTS

CONTRACTOR TO VERIFY DRAWINGS IN FIELD USE REFLECT LAST REVISION DATE:

NO.	DATE	DESCRIPTION

SHEET NAME
SHRUB PLANTING PLAN

CONSTRUCTION DOCUMENTS
17 MAY 2011

SHEET NUMBER
LP102

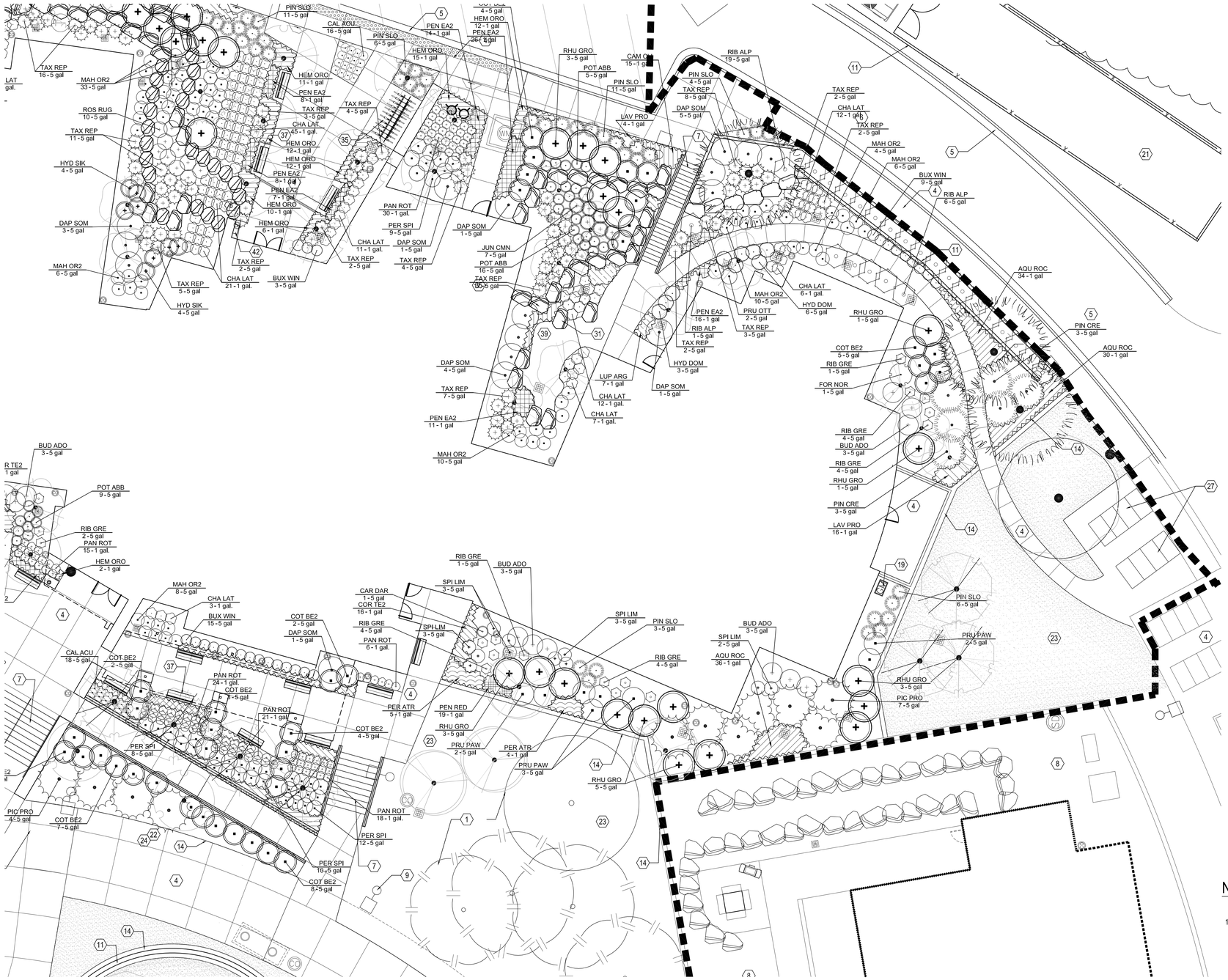

SHRUB PLANTING PLAN BUILDING - 2

0 5' 10' 20'

SCALE: 1" = 10'-0"

KEYNOTES

1. EXISTING TREE - COORDINATE WITH CAMPUS HORTICULTURIST FOR TREE PROTECTION PLAN DURING LANDSCAPE OPERATIONS
2. EXISTING BUILDING
3. EXISTING RETAINING WALL
4. CONCRETE PAVING
5. CURB & GUTTER
6. ASPHALT PAVING
7. CONCRETE STAIR
8. LANDSCAPE AREA
9. LIGHT POLE - RE: ELEC
10. ACCESSIBLE SIGN
11. CONCRETE WALL
12. ACCESSIBLE RAMP
13. FIRE HYDRANT
14. CONCRETE MOWSTRIP
15. NOT USED
16. BOULDER WALL
17. FDC LOCATION
18. CATCH BASIN
19. GAS METER
20. ELECTRICAL TRANSFORMER
21. COOLING TOWER
22. POROUS UNIT PAVERS - FIRELANE
23. LAWN - SOD
24. LAWN - SEED
25. APPROXIMATE EDGE OF EXISTING SOD
26. PLANTING IN POCKETS OF BOULDER WALL TO BE FILLED WITH ROCK WALL PLANTING MIX.
27. BIKE LOCKERS
28. GENERATOR
29. GAS GRILL
30. SAND VOLLEYBALL COURT
31. BOULDER SEATING
32. BOLLARD
33. TABLE
34. NOT USED
35. BIKE RACK
36. CONSTRUCTION LIMIT LINE
37. BENCH
38. NATIVE SEED
39. CRUSHED AGGREGATE PAVING
40. FIRE PIT
41. UTILITY MANHOLE
42. EMERGENCY CALL STATION

NOTES:

1. PLANT ALL OPEN POCKETS IN BOULDER RETAINING WALLS WITH ROCK WALL PLANTING @ 6" O.C. PLANT DURING SPRING OR LATE FALL.

MHTN ARCHITECTS
MHTN Architects, Inc.
420 East South Temple
Suite 100
Salt Lake City, Utah 84111
Telephone (801) 595-6700
Telefax (801) 595-6717
www.mhtn.com

WEBER STATE UNIVERSITY
RESIDENTIAL LIFE PHASE II - BLDG 2

DFCM PROJECT NUMBER: 10176810

WEBER STATE UNIVERSITY
OGDEN, UTAH 84408

SEAL

MHTN PROJECT NO. 2010543

DRAWN BY: RK CHECKED BY: MG

ISSUED:

NO.	DATE	DESCRIPTION
1	17 MAY 2011	CONSTRUCTION DOCUMENTS

CONTRACTOR TO VERIFY DRAWINGS IN FIELD USE REFLECT LAST REVISION DATE.

NO.	DATE	DESCRIPTION

SHEET NAME

SHRUB PLANTING PLAN

CONSTRUCTION DOCUMENTS
17 MAY 2011

SHEET NUMBER

LP103

C:\Users\randyk\Documents\A11_2010543 WSU RESIDENTIAL LIFE BUILDING III_CENTRAL_randyk.rvt
17/2/2010 9:23:45 AM

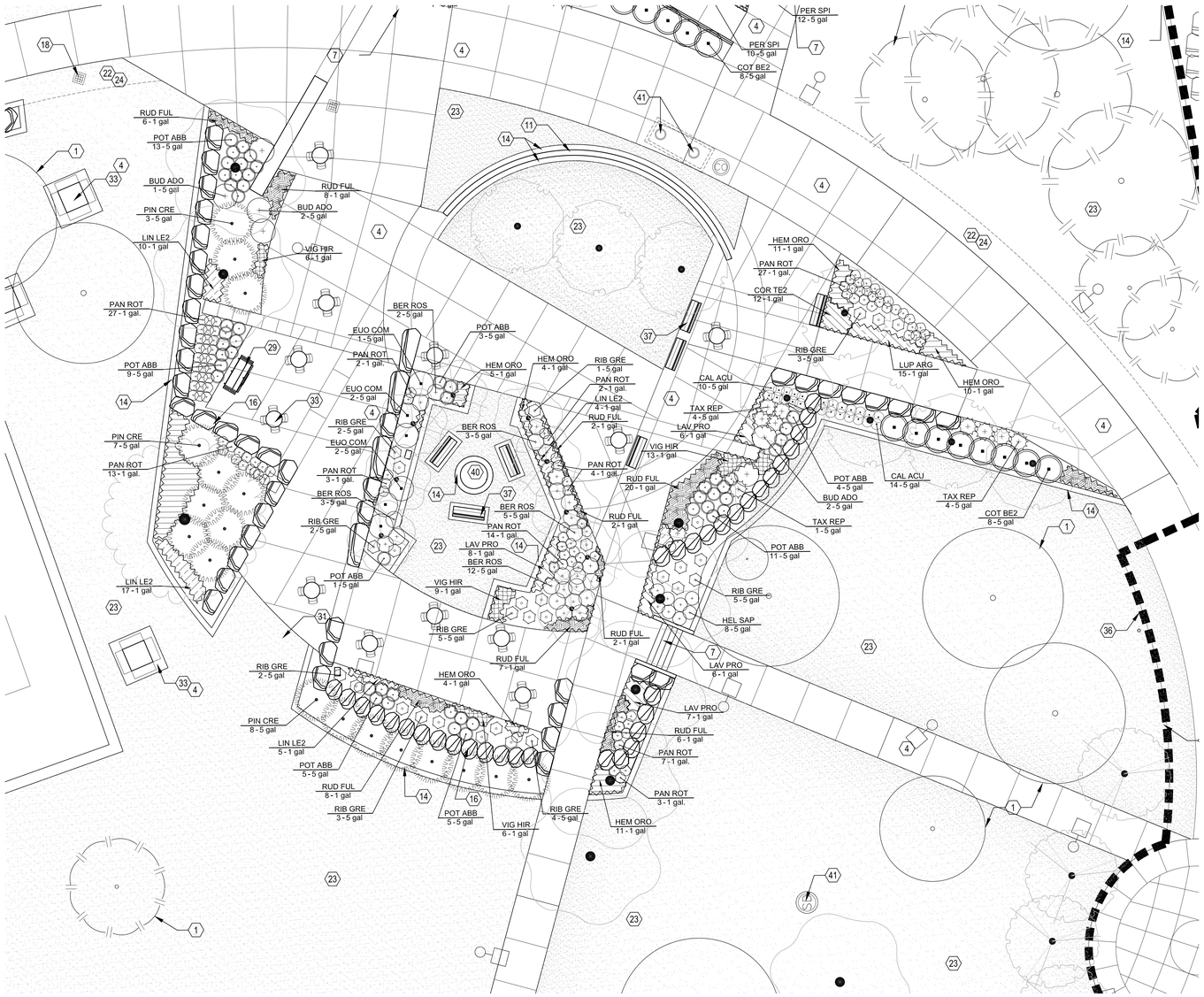

SHRUB PLANTING PLAN BUILDING - 2

0 5' 10' 20'

SCALE: 1" = 10'-0"

KEYNOTES

1. EXISTING TREE - COORDINATE WITH CAMPUS HORTICULTURIST FOR TREE PROTECTION PLAN DURING LANDSCAPE OPERATIONS
2. EXISTING BUILDING
3. EXISTING RETAINING WALL
4. CONCRETE PAVING
5. CURB & GUTTER
6. ASPHALT PAVING
7. CONCRETE STAIR
8. LANDSCAPE AREA
9. LIGHT POLE - RE: ELEC
10. ACCESSIBLE SIGN
11. CONCRETE WALL
12. ACCESSIBLE RAMP
13. FIRE HYDRANT
14. CONCRETE MOWSTRIP
15. NOT USED
16. BOULDER WALL
17. FDC LOCATION
18. CATCH BASIN
19. GAS METER
20. ELECTRICAL TRANSFORMER
21. COOLING TOWER
22. POROUS UNIT PAVERS - FIRELANE
23. LAWN - SOD
24. LAWN - SEED
25. APPROXIMATE EDGE OF EXISTING SOD
26. PLANTING IN POCKETS OF BOULDER WALL TO BE FILLED WITH ROCK WALL PLANTING MIX.
27. BIKE LOCKERS
28. GENERATOR
29. GAS GRILL
30. SAND VOLLEYBALL COURT
31. BOULDER SEATING
32. BOLLARD
33. TABLE
34. NOT USED
35. BIKE RACK
36. CONSTRUCTION LIMIT LINE
37. BENCH
38. NATIVE SEED
39. CRUSHED AGGREGATE PAVING
40. FIRE PIT
41. UTILITY MANHOLE
42. EMERGENCY CALL STATION

NOTES:

1. PLANT ALL OPEN POCKETS IN BOULDER RETAINING WALLS WITH ROCK WALL PLANTING @ 6" O.C. PLANT DURING SPRING OR LATE FALL.

MHTN ARCHITECTS
MHTN Architects, Inc.
420 East South Temple
Suite 100
Salt Lake City, Utah 84111
Telephone (801) 595-6700
Telefax (801) 595-6717
www.mhtn.com

WEBER STATE UNIVERSITY
RESIDENTIAL LIFE PHASE II - BLDG 2

DFCM PROJECT NUMBER: 10176810

WEBER STATE UNIVERSITY
OGDEN, UTAH 84408

SEAL

MHTN PROJECT NO. 2010543

DRAWN BY: RK CHECKED BY: MG

ISSUED:

NO.	DATE	DESCRIPTION
1	17 MAY 2011	CONSTRUCTION DOCUMENTS

CONTRACTOR TO VERIFY DRAWINGS IN FIELD USE REFLECT LAST REVISION DATE.

NO.	DATE	DESCRIPTION

SHEET NAME

SHRUB PLANTING PLAN

CONSTRUCTION DOCUMENTS
17 MAY 2011

SHEET NUMBER

LP104

C:\Users\randyk\Documents\A11_2010543 WSU RESIDENTIAL LIFE BUILDING III_CENTRAL_randyk.rvt
1/12/2010 9:23:45 AM

PLANT SCHEDULE

TREES	BOTANICAL NAME	COMMON NAME	CONT	REMARKS
ABI CON	Abies concolor	White Fir	12`-14` ht	B & B
ACE VAL	Acer rubrum `Sun Valley`	Sun Valley Red Maple	3" CAL	B & B
ACE NOR	Acer truncatum `Norwegian Sunset`	Maple	3" cal	B & B
CRA CRU	Crataegus crus-galli inermis `Crusader`	Crusader Cockspur Hawthorn	2" CAL	B & B
FRA CIM	Fraxinus pennsylvanica `Cimarron`	Cimmaron Ash	2.5" cal	B & B
KOE PAN	Koelreuteria paniculata	Golden Rain Tree	3" cal	36" BOX
LIR FAS	Liriodendron tulipifera `Fastigiata`	Tulip Tree	2" CAL	B & B
MAL ROS	Malus ioensis `Prairie Rose`	Prairie Rose Crab Apple	2.5" CAL	B & B
PIN FLE	Pinus flexilis `Vanderwolf`s Pyramid`	Vanderwolf`s Pyramid Limber Pine	12`-14` ht	B & B
PRU GEW	Prunus padus	May Day Tree	3" cal	B & B
QUE CRI	Quercus robur x Q. alba `Crimschmidt` TM	Crimson Spire Oak	2" CAL	B & B
SOP PRI	Sophora japonica `Princeton Upright`	Princeton Upright Scholartree	2" CAL	B & B
SOR CAR	Sorbus aucuparia Cardinal Royal	Cardinal Royal Mt Ash	2" CAL	B & B

SHRUBS	BOTANICAL NAME	COMMON NAME	CONT	REMARKS
BER ROS	Berberis thunbergii `Rose Glow`	Rosy Glow Barberry	5 gal	
BUD ADO	Buddleja davidii `Adonis Blue`	Butterfly Bush	5 gal	
BUX WIN	Buxus microphylla `Winter Gem`	Winter Gem Boxwood	5 gal	
CAL ACU	Calamagrostis acutifolia `Karl Foerster`	Foerster`s Reed Grass	5 gal	
CAR DAR	Caryopteris x clandonensis `Dark Knight`	Blue Mist Shrub	5 gal	
CHA LAT	Chasmanthium latifolium	Northern Sea Oats	1 gal.	
COT BE2	Cotoneaster dammeri `Coral Beauty`	Bearberry Cotoneaster	5 gal	
DAP SOM	Daphne x burkwoodii `Somerset`	Somerset Daphne	5 gal	
EUO COM	Euonymus alatus `Compactus`	Compact Burning Bush	5 gal	
FOR NOR	Forsythia `Northern Gold`	Northern Gold Forsythia	5 gal	
HEL SAP	Helictotrichon sempervirens `Sapphire`	Blue Oat Grass	5 gal	
HYD DOM	Hydrangea arborescens `White Dome`	Wild Hydrangea	5 gal	
HYD SIK	Hydrangea quercifolia `Sikes Dwarf`	Oakleaf Hydrangea	5 gal	
JUN CMN	Juniperus communis	Common Juniper	5 gal	
MAH OR2	Mahonia aquifolium `Compacta`	Compact Oragon Grape Holly	5 gal	
PAN ROT	Panicum virgatum `Rotstrahlbusch`	Rotstrahlbusch Switch Grass	1 gal.	
PER SPI	Perovskia atriplicifolia `Blue Spires`	Russian Sage	5 gal	
PIC PRO	Picea pungens glauca `Procumbens`	Prostrate Blue Colorado Spruce	5 gal	
PIN SLO	Pinus mugo mugo `Slowmound`	Slowmound Juniper	5 gal	
PIN CRE	Pinus sylvestris `Albyn Prostrata`	Creeping Scotch Pine	5 gal	
POT ABB	Potentilla fruticosa `Abbotswood`	Abbotswood Potentilla	5 gal	
PRU PAW	Prunus besseyi `Pawnee Buttes`	Sand Cherry	5 gal	
PRU OTT	Prunus laurocerasus `Otto Luyken`	Luykens Laurel	5 gal	
RHU GRO	Rhus aromatica `Gro-Low`	Gro-Low Fragrant Sumac	5 gal	
RIB GRE	Ribes alpinum `Green Mound`	Green Mound Alpine Currant	5 gal	
ROS RUG	Rosa rugosa	Rugosa Rose	5 gal	
SAL NAN	Salix purpurea `Nana`	Dwarf Arctic Willow	5 gal	
SPI LIM	Spiraea x bumalda `Limemound` TM	Limemound Spirea	5 gal	
TAX REP	Taxus baccata `Repandens`	Spreading English Yew	5 gal	

SHRUB AREAS	CODE	BOTANICAL NAME	COMMON NAME	CONT	REMARKS
	AQU ROC	Aquilegia caerulea `Rocky Mountain Blue`	Rocky Mountain Columbine	1 gal @ 18" oc	
	CAM CLI	Campanula carpatica `White Clips`	White Clips Bellflower	1 gal @ 18" oc	
	COR TE2	Coreopsis grandiflora `Tequila Sunrise`	Tickseed	1 gal @ 18" oc	
	HEM ORO	Hemerocallis x `Stella de Oro`	Stella de Oro Daylily	1 gal @ 18" oc	
	IRI RO2	Iris missouriensis `Rocky Mountain`	Western Blue Iris	1 gal @ 18" oc	
	LAV PRO	Lavandula x intermedia `Provence`	Provence Lavendin	1 gal @ 21" oc	
	LIN LE2	Linum lewisii	Lewis Flax	1 gal @ 18" oc	
	LUP ARG	Lupinus argenteus	Lupine	1 gal @ 18" oc	
	PEN WAS	Penstemon cyananthus	Wasatch penstemon	1 gal @ 18" oc	
	PEN EA2	Penstemon eatoni	Firecracker Penstemon	1 gal @ 18" oc	
	PEN RED	Penstemon mexicali `Red Rocks`	Penstemon	1 gal @ 12" oc	
	PER ATR	Perovskia atriplicifolia	Russian Sage	1 gal @ 36" oc	
	RUD FUL	Rudbeckia fulgida `Goldsturm`	Goldsturm Black-eyed Susan	1 gal @ 21" oc	
	VIG HIR	Viguiera hirta `Multiflora`	Showy Goldeneye	1 gal @ 18" oc	

GROUND COVERS	BOTANICAL NAME	COMMON NAME	CONT	REMARKS
	Aggregate Crushed 3/8" minus	Stabilized Crushed Aggregate	3" DEEP	
	Poa pratensis	Kentucky Bluegrass	SOD	

ROCK WALL PLANTING MIX

ROCK WALL MIX 4" POT @12" O.C.
30% -Ajuga reptans `Burgundy Glow` / Burgundy Glow Bugleweed
25% - Delosperma dyeri `Red Mountain` / Red Mountain Iceplant
10% - Phlox subulata `Atropurpurea` / Moss Phlox
15% - Sedum acre `Autumn Joy` / Goldmoss Stonecrop
20% - Thymus praecox `Albiflorus` / Mother Of Thyme

GENERAL PLANTING NOTES

PROTECT AND MAINTAIN THE EXISTING MATURE TREES NOTED AND NUMBERED TO REMAIN. COST OF TREE REPLACEMENT SHALL BE AS PER SPECIFICATIONS. PROTECT AS PER TREE PROTECTION REQUIREMENTS.

ALL PLANTS SHALL CONFORM TO THE MINIMUM STANDARDS OF HEIGHT, SIZE, CALIPER AND ETC. OF THE AMERICAN ASSOCIATIONS OF NURSERYMEN "AMERICAN STANDARDS FOR NURSERY STOCK".

THIS CONTRACTOR SHALL SPREAD TOPSOIL TO A DEPTH OF 6" IN ALL LAWN PLANTING AREAS AND 12" IN ALL SHRUB AND PERENNIAL BEDS.

THIS CONTRACTOR SHALL BE RESPONSIBLE FOR DISPOSING FROM THE SITE ALL SOIL EXCAVATED FROM TREE PITS.

ALL MOWSTRIPS ARE TO BE INSTALLED PRIOR TO THE INSTALLATION OF THE IRRIGATION SYSTEM SYSTEM AND THE LANDSCAPE PLANTING.

INSTALL 3" MIN. SHREDDED BARK MULCH IN ALL SHRUB PLANTING BEDS AFTER PLANT MATERIAL INSTALLATION.

THIS CONTRACTOR SHALL BE RESPONSIBLE FOR PROVIDING AND INSTALLING THE REQUIRED AMOUNT OF TOPSOIL TO COMPLETE THE PROJECT.

PROVIDE AND INSTALL WEED BARRIER FABRIC BELOW MULCH IN ALL SHRUB AREAS WITH THE EXCEPTION OF PERENNIAL AREAS.

PLANT ALL OPEN POCKETS IN THE BOULDER RETAINING WALLS WITH THE RETAINING WALL PLANTING MIX SPECIFIED. THIS INCLUDES THE AREAS IN THE FACE OF THE WALL AND THE AREAS ABOVE AND BELOW THE WALL FACE BETWEEN THE WALL AND THE MOWSTRIP.

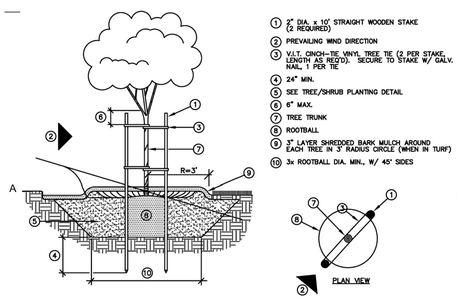

DOUBLE TREE STAKING

NTS

COPYRIGHT (c) 2004 by Bingham Engineering
THIS DRAWING IS BEING FURNISHED FOR USE AT WEBER STATE UNIVERSITY ONLY. IT SHALL NOT BE DUPLICATED, IN WHOLE OR IN PART, NOR USED FOR OTHER PURPOSES WITHOUT THE CONSENT OF BINGHAM ENGINEERING.

NOTE: HOLD BARK MULCH BACK 3" FROM BASE OF SHRUBS AND TREES

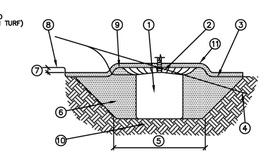

1 ROOTBALL
2 CROWN – 1"–2" ABOVE FINISH GRADE
3 FINISH GRADE
4 FINISH GRADE AT SLOPE (WHERE OCCURS)
5 3X ROOTBALL DIA. PLUS 45° SIDES
6 BACKFILL MIX (SEE NOTES)
7 2"
8 TOP OF PAVING
9 3" HIGH WATERING BASIN
10 UNDISTURBED SOIL
11 3" LAYER SHREDDED BARK MULCH AROUND EACH TREE IN 3' RADIUS CIRCLE (WHEN IN TURF)

TREE / SHRUB PLANTING

NTS

COPYRIGHT (c) 2004 by Bingham Engineering
THIS DRAWING IS BEING FURNISHED FOR USE AT WEBER STATE UNIVERSITY ONLY. IT SHALL NOT BE DUPLICATED, IN WHOLE OR IN PART, NOR USED FOR OTHER PURPOSES WITHOUT THE CONSENT OF BINGHAM ENGINEERING.

MHTN ARCHITECTS
MHTN Architects, Inc.
420 East South Temple
Suite 100
Salt Lake City, Utah 84111
Telephone (801) 595-6700
Telefax (801) 595-6717
www.mhtn.com

WEBER STATE UNIVERSITY
RESIDENTIAL LIFE PHASE II - BLDG 2
DFCM PROJECT NUMBER: 10176810
WEBER STATE UNIVERSITY
OGDEN, UTAH 84408

SEAL

MHTN PROJECT NO.
DRAWN BY: CHECKED BY:

ISSUED:

NO.	DATE	DESCRIPTION
1	17 MAY 2011	CONSTRUCTION DOCUMENTS

CONTRACTOR TO VERIFY DRAWINGS IN FIELD USE REFLECT LAST REVISION DATE.

NO.	DATE	DESCRIPTION

SHEET NAME
PLANTING NOTES AND LEGEND
CONSTRUCTION DOCUMENTS
17 MAY 2011

SHEET NUMBER
LP501

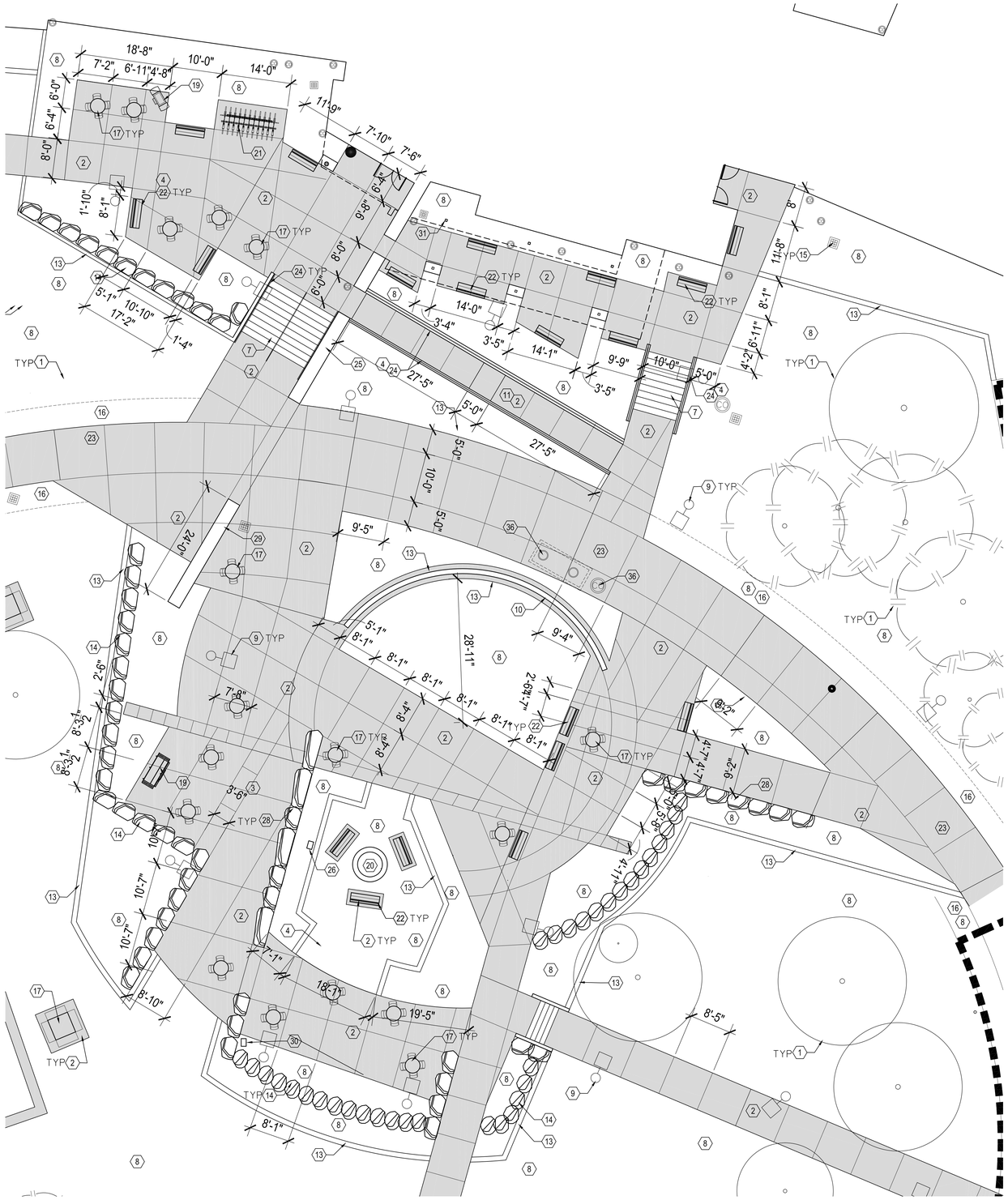

ENLARGED SITE PLAN - CENTRAL PLAZA

0 5' 10' 20'

SCALE: 1" = 10'-0"

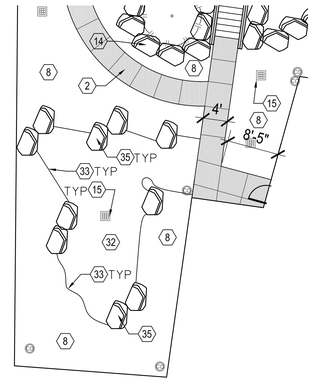

ENLARGED SITE PLAN - TYPICAL COURTYARD

0 5' 10' 20'

SCALE: 1" = 10'-0"

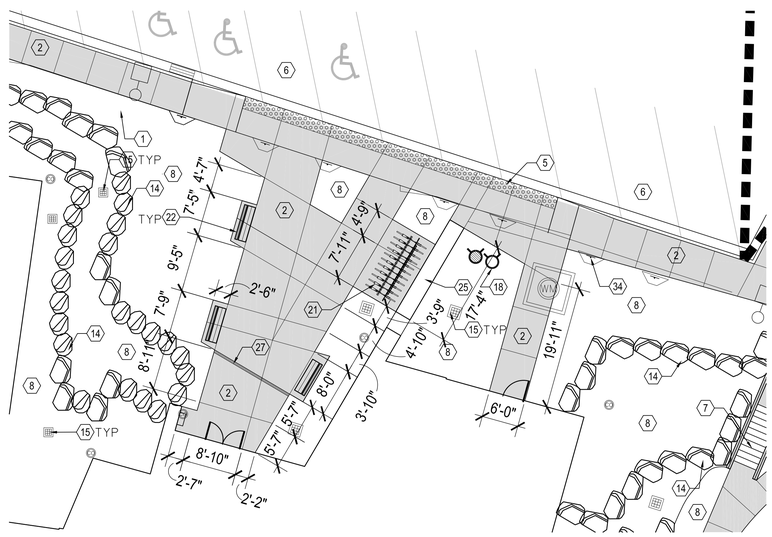

ENLARGED SITE PLAN - EAST ENTRANCE

0 5' 10' 20'

SCALE: 1" = 10'-0"

KEYNOTES

1. EXISTING TREE
2. CONCRETE PAVING
3. CONCRETE WALL
4. CONCRETE CHEEK WALL - SEE B1/SF501&A1/AS501
5. CURB AND GUTTER - SEE CIVIL
6. EXIST ASPHALT PAVING
7. CONCRETE STAIR - SEE A1/AS501
8. LANDSCAPE AREA
9. LIGHT POLE - RE: ELEC
10. CONCRETE SEAT WALL - SEE E5/AS503
11. ACCESSIBLE RAMP - SEE C4/AS502 & CIVIL
12. NOT USED
13. CONCRETE MOWSTRIP - SEE A4&A5/AS501
14. BOULDER WALL - SEE D1/AS501
15. CATCH BASIN
16. POROUS UNITS PAVERS - FIRE LANE - SEE B5/AS501
17. TABLE - BY WSU, NIC
18. FIRE DEPARTMENT CONNECTION
19. GAS GRILL - BY WSU, NIC
20. GAS FIRE PIT - SEE SPECS
21. BIKE RACK - BY WSU, NIC
22. BENCH - BY WSU, NIC
23. CONCRETE FIRELANE - SEE CIVIL
24. STAINLESS STEEL HANDRAIL - SEE A2/AS501
25. STONE FEATURE WALL - SEE A1/AS502
26. GAS REGULATOR
27. TRENCH DRAIN
28. DOLOMITE BOULDER SEATING
29. CONCRETE WALL W/STONE CAP
30. POWER PEDESTAL - SEE ELEC
31. BUILDING COLUMN
32. CRUSHED AGGREGATE PAVING - SEE B1/AS501
33. METAL EDGING - SEE B2/AS501
34. PARKING SIGNAGE - SEE CIVIL
35. BOULDER SEATING
36. UTILITY MANHOLE - SEE CIVIL
37. EMERGENCY CALL STATION. INSTALL 12" CONCRETE MOW STRIP AROUND STATION

MHTN ARCHITECTS

MHTN Architects, Inc.
420 East South Temple
Suite 100
Salt Lake City, Utah 84111
Telephone (801) 595-6700
Telefax (801) 595-6717
www.mhtn.com

WEBER STATE UNIVERSITY
RESIDENTIAL LIFE PHASE II - BLDG 2
DFCM PROJECT NUMBER: 10176810

WEBER STATE UNIVERSITY
OGDEN, UTAH 84408

SEAL

MHTN PROJECT NO. 2010543

DRAWN BY: RK CHECKED BY: MG

ISSUED:

NO.	DATE	DESCRIPTION
1	17 MAY 2011	CONSTRUCTION DOCUMENTS

CONTRACTOR TO VERIFY DRAWINGS IN FIELD USE REFLECT LAST REVISION DATE:

NO.	DATE	DESCRIPTION

SHEET NAME

ENLARGED ENTRY/ PLAZA PLAN

CONSTRUCTION DOCUMENTS

17 MAY 2011

SHEET NUMBER

AS401

C:\Users\rmyk\Documents\A11_2010543 WSU RESIDENTIAL LIFE BUILDING BL_CENTRAL_rmyk.rvt
11/26/2019 2:22:24 AM

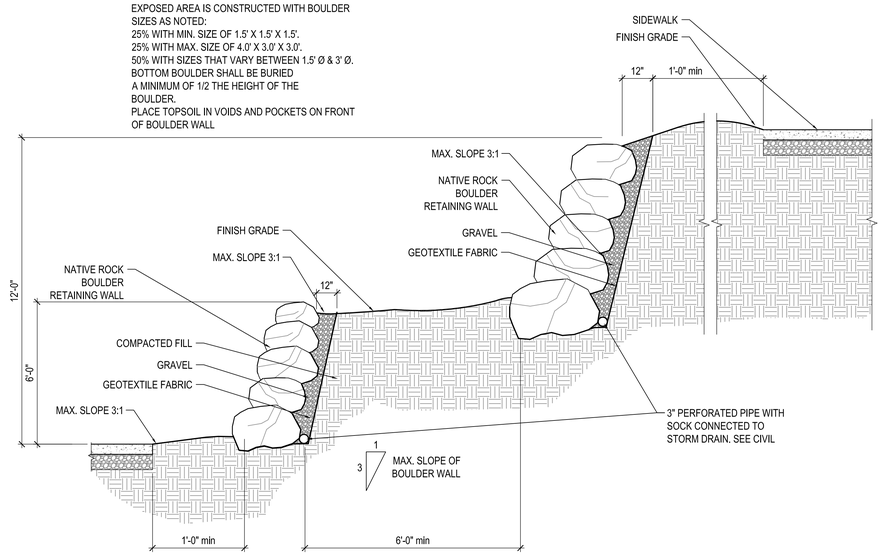

D1 BOULDER RETAINING WALL
1/2" = 1'-0"
044116-05

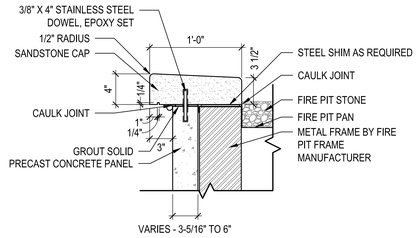

E3 FIRE PIT STONE CAP
1-1/2" = 1'-0"
A-DTXX00

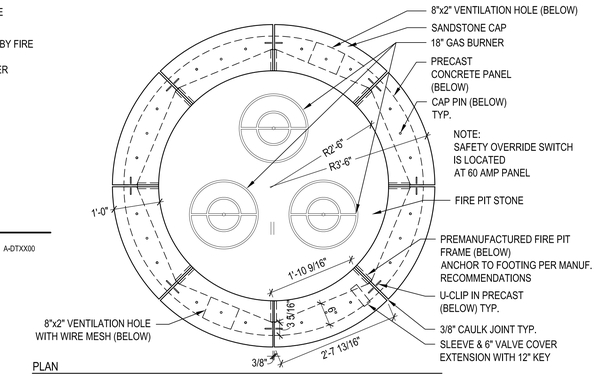

PLAN

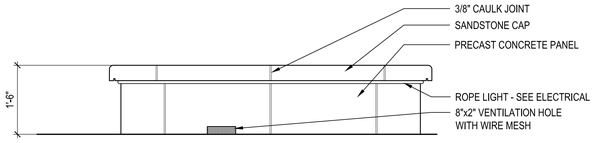

ELEVATION

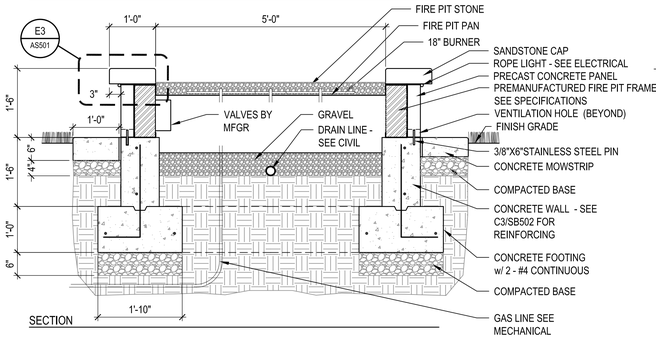

SECTION

C4 FIRE PIT
3/4" = 1'-0"
A-DTXX00

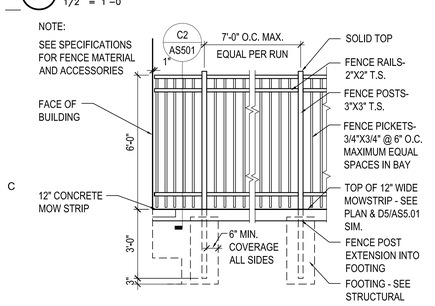

C1 ORNAMENTAL FENCE DETAIL ELEVATION
3/8" = 1'-0"
323119-07

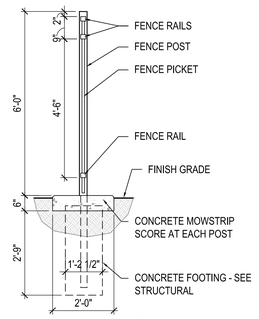

C2 ORNAMENTAL FENCE SECTION
1/2" = 1'-0"
323119-08

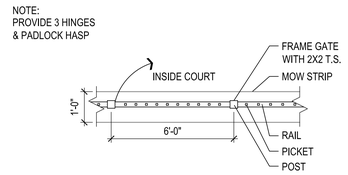

GATE AND FENCE PLAN

C3 ORNAMENTAL FENCE PLAN
1/2" = 1'-0"
323119-09

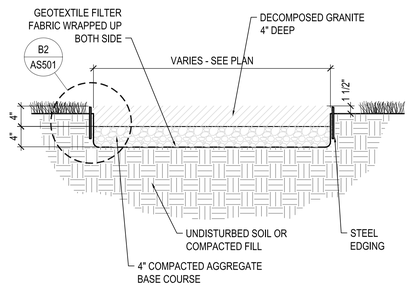

B1 DECOMPOSED GRANITE PATH
1" = 1'-0"
LDTSC01.DWG

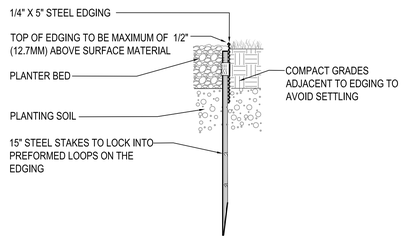

B2 STEEL EDGING
3" = 1'-0"
329413.23-01

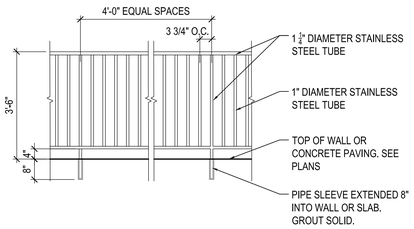

B3 GUARDRAIL DETAIL
1/2" = 1'-0"
A-DTSI-04

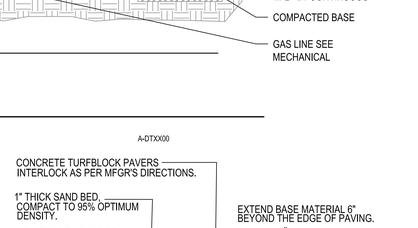

B5 POUROS UNIT PAVER AT FIRELANE
3" = 12"
02795-10001

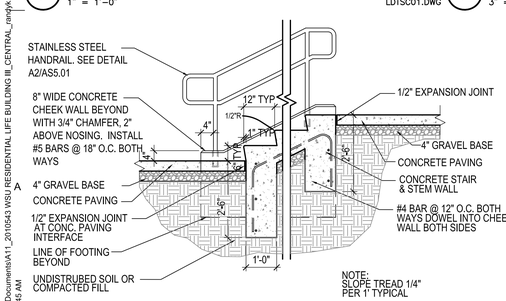

A1 STAIR CHEEK WALL DETAIL
1/2" = 1'-0"
321319.13-02

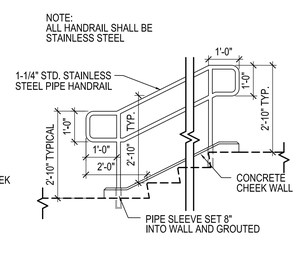

A2 HANDRAIL
1/2" = 1'-0"
055201-02

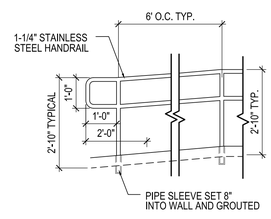

A3 HANDRAIL AT RAMP
1/2" = 1'-0"
055201-14

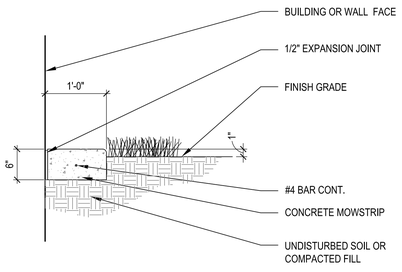

A4 12" CONCRETE MOWSTRIP AT WALL OR BLDG.
1" = 1'-0"
DETAIL-FILE

NOTE: PROVIDE 1/4" RADIUS FINISH AT ALL EDGES - TYPICAL.

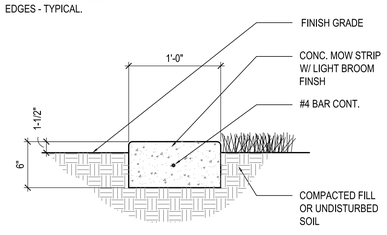

A5 12" CONCRETE MOWSTRIP
1 1/2" = 1'-0"
329413.19-01

MHTN ARCHITECTS
MHTN Architects, Inc.
420 East South Temple
Suite 100
Salt Lake City, Utah 84111
Telephone (801) 595-6700
Telefax (801) 595-6717
www.mhtn.com

WEBER STATE UNIVERSITY
RESIDENTIAL LIFE PHASE II - BLDG 2
DFCM PROJECT NUMBER: 10176810

WEBER STATE UNIVERSITY
OGDEN, UTAH 84408

SEAL

MHTN PROJECT NO. 2010543
DRAWN BY: RK CHECKED BY: MG

ISSUED:

NO.	DATE	DESCRIPTION
1	17 MAY 2011	CONSTRUCTION DOCUMENTS

CONTRACTOR TO VERIFY DRAWINGS IN FIELD USE REFLECT LAST REVISION DATE.

NO.	DATE	DESCRIPTION

SHEET NAME
SITE DETAILS

CONSTRUCTION DOCUMENTS
17 MAY 2011

SHEET NUMBER
AS501

C:\Users\rrandy\Documents\A11_2010543 WSU RESIDENTIAL LIFE BUILDING III_CENTRAL_rrandy.rvt
10/20/2010 8:22:40 AM

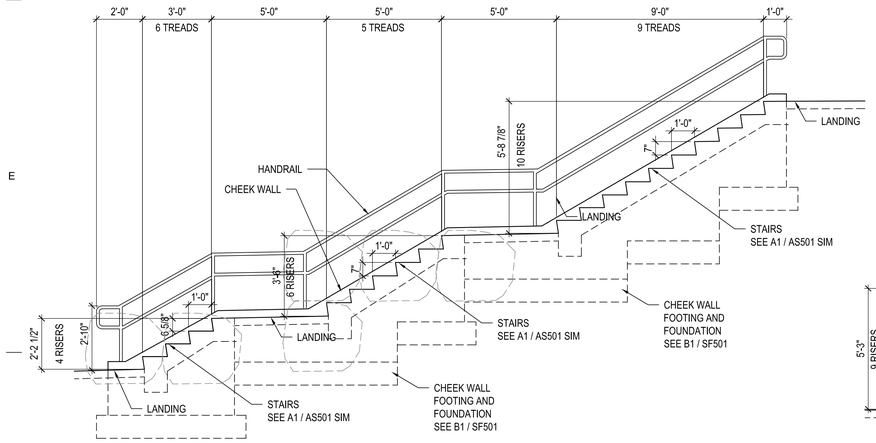

D1 STAIR SECTION
3/8" = 1'-0"

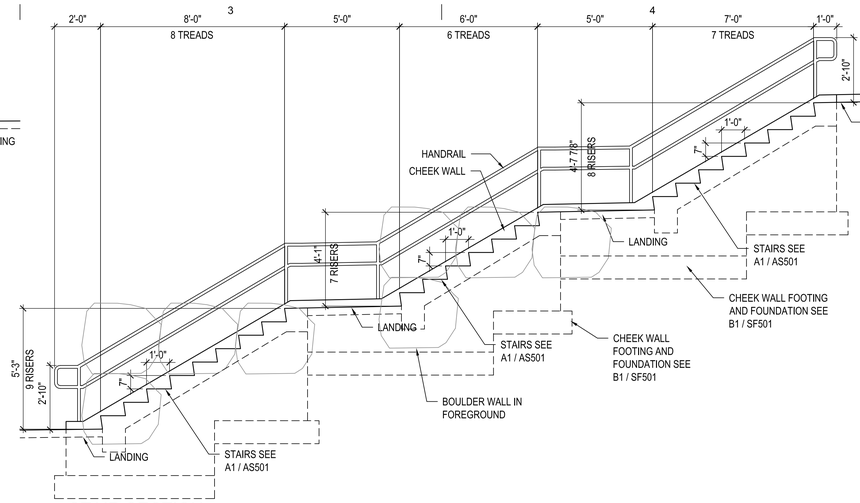

D3 STAIR SECTION
3/8" = 1'-0"

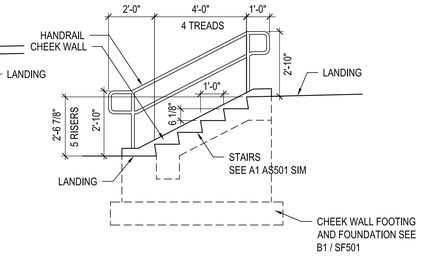

E5 STAIR SECTION
3/8" = 1'-0"

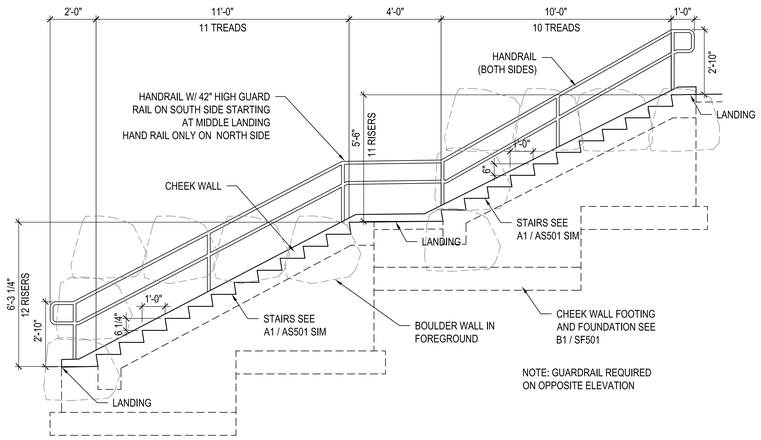

C1 STAIR SECTION
3/8" = 1'-0"

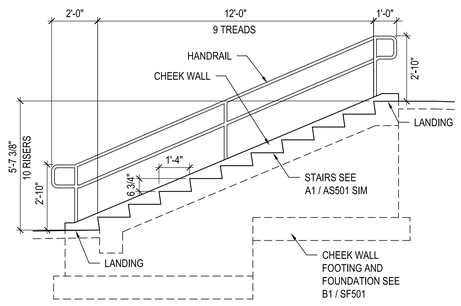

C3 STAIR SECTION
3/8" = 1'-0"

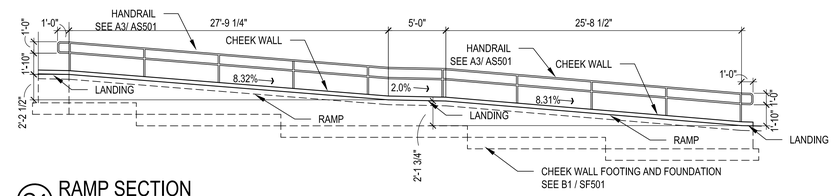

C4 RAMP SECTION
1/4" = 1'-0"

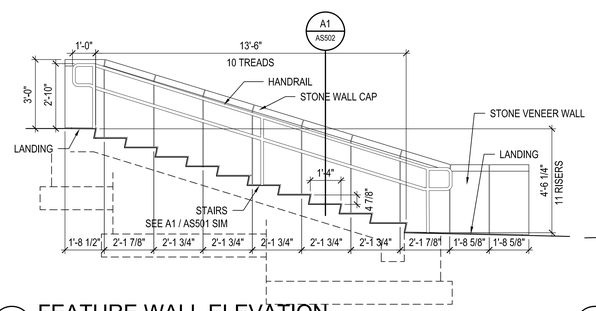

B1 FEATURE WALL ELEVATION
3/8" = 1'-0"

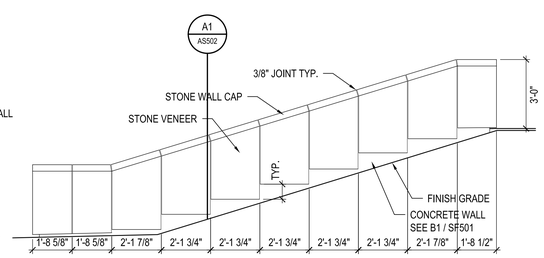

B2 FEATURE WALL ELEVATION
3/8" = 1'-0"

A-DTXX00

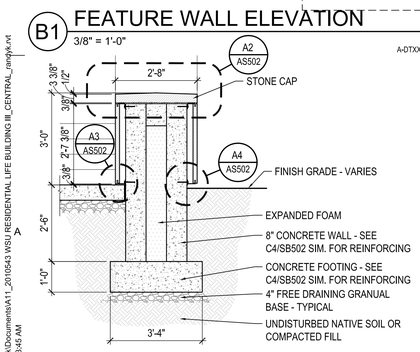

A1 STONE WALL
1/2" = 1'-0"

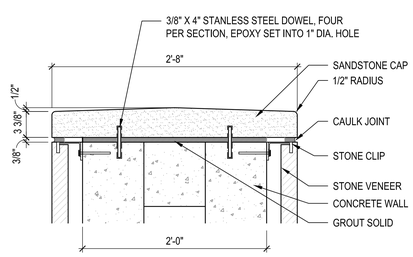

A2 STONE CAP
1-1/2" = 1'-0"

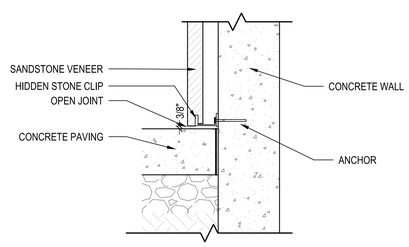

A3 BOTTOM CLIP AT PAVEMENT
1-1/2" = 1'-0"

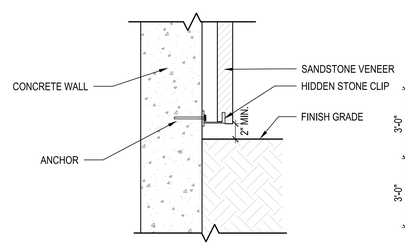

A4 BOTTOM CLIP AT LANDSCAPE
1-1/2" = 1'-0"

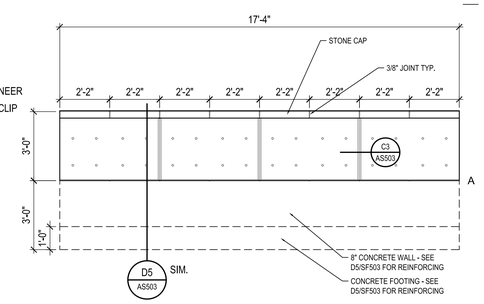

A5 WALL ELEVATION AT BIKE RACK
3/8" = 1'-0"

A-DTXX00

C:\Users\rmarq\AcDocuments\A11_2010543 WSU RESIDENTIAL LIFE BUILDING III_CENTRAL_rmarqAcrvt
11/26/2010 9:52:43 AM

MHTN
ARCHITECTS
MHTN Architects, Inc.
420 East South Temple
Suite 100
Salt Lake City, Utah 84111
Telephone (801) 595-6700
Telefax (801) 595-6717
www.mhtn.com

WEBER STATE UNIVERSITY
RESIDENTIAL LIFE PHASE II - BLDG 2
DFCM PROJECT NUMBER: 10176810

WEBER STATE UNIVERSITY
OGDEN, UTAH 84408

SEAL

MHTN PROJECT NO. 2010543

DRAWN BY: RK CHECKED BY: MG

ISSUED:

NO.	DATE	DESCRIPTION
1	17 MAY 2011	CONSTRUCTION DOCUMENTS

CONTRACTOR TO VERIFY DRAWINGS IN FIELD USE REFLECT LAST REVISION DATE:

NO.	DATE	DESCRIPTION

SHEET NAME
SITE DETAILS

CONSTRUCTION DOCUMENTS
17 MAY 2011

SHEET NUMBER
AS502

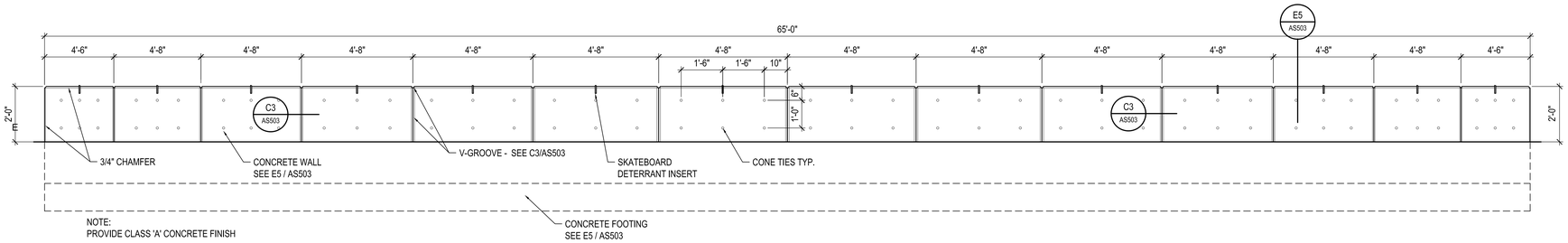

E1 CURVED CONCRETE WALL ELEVATION
1/2" = 1'-0"

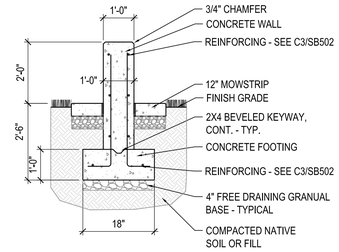

E5 CURVED CONCRETE WALL SECTION
1/2" = 1'-0"
A-DTXX00

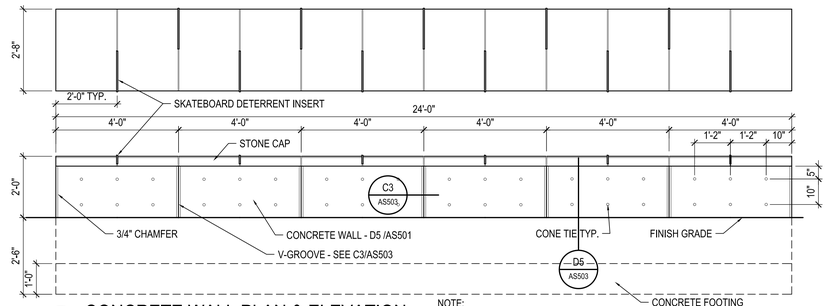

D3 CONCRETE WALL PLAN & ELEVATION
1/2" = 1'-0"
NOTE:
PROVIDE CLASS 'A' CONCRETE FINISH
A-DTXX00

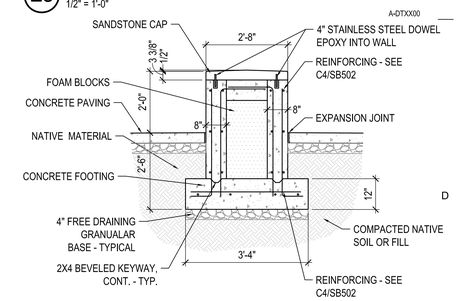

D5 CONCRETE WALL SECTION
1/2" = 1'-0"
A-DTXX00

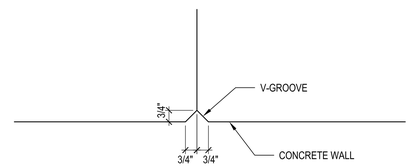

C3 V-GROOVE
3" = 1'-0"
A-DTXX00

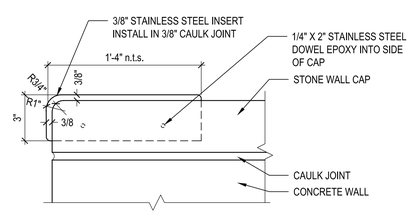

B3 SKATEBOARDING DETERRENT
3" = 1'-0"
A-DTXX00

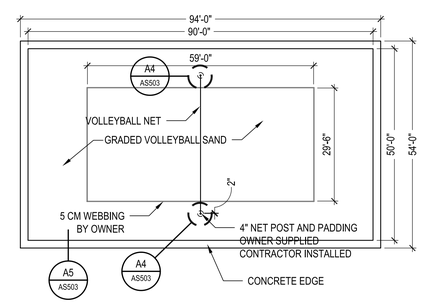

B5 SAND VOLLEYBALL COURT LAYOUT
1/16" = 1'-0"
A-DTXX00

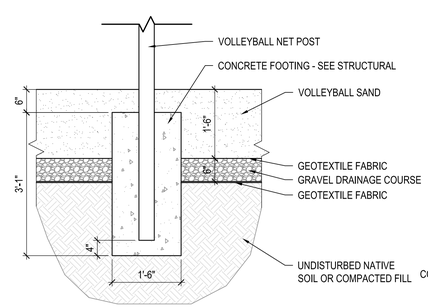

A4 SAND VOLLEYBALL NET POST
3/4" = 1'-0"
A-DTXX00

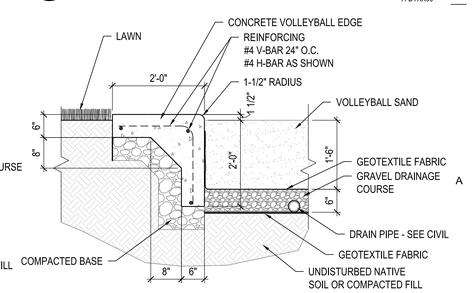

A5 SAND VOLLEYBALL COURT EDGE
3/4" = 1'-0"
A-DTXX00

MHTN
ARCHITECTS
MHTN Architects, Inc.
420 East South Temple
Suite 100
Salt Lake City, Utah 84111
Telephone (801) 595-6700
Telefax (801) 595-6717
www.mhtn.com

WEBER STATE UNIVERSITY
RESIDENTIAL LIFE PHASE II - BLDG 2
DFCM PROJECT NUMBER: 10176810

WEBER STATE UNIVERSITY
OGDEN, UTAH 84408

SEAL

MHTN PROJECT NO. 2010543
DRAWN BY: RK CHECKED BY: MG

ISSUED:

NO.	DATE	DESCRIPTION
1	17 MAY 2011	CONSTRUCTION DOCUMENTS

CONTRACTOR TO VERIFY DRAWINGS IN FIELD USE REFLECT LAST REVISION DATE

NO.	DATE	DESCRIPTION

SHEET NAME
SITE DETAILS

CONSTRUCTION DOCUMENTS
17 MAY 2011

SHEET NUMBER
AS503

C:\Users\rendyk\Documents\A11_2010543 WSU RESIDENTIAL LIFE BUILDING III_CENTRAL_rendyk.rvt
11/12/2010 9:25:54 AM

STRUCTURAL NOTES

A.GENERAL

1. THE STRUCTURAL NOTES ARE INTENDED TO COMPLEMENT THE PROJECT SPECIFICATIONS WHICH ARE PART OF THE CONSTRUCTION DOCUMENTS. SPECIFIC NOTES AND DETAILS ON THE DRAWINGS SHALL GOVERN OVER THE STRUCTURAL NOTES AND TYPICAL DETAILS.
2. THE ARCHITECTURAL DRAWINGS ARE THE PRIME CONTRACT DRAWINGS. THE STRUCTURAL DRAWINGS ARE SUPPLEMENTARY TO AND MUST BE USED IN CONJUNCTION WITH THE ARCHITECTURAL DRAWINGS AND OTHER CONSULTANTS DRAWINGS. ALL OMISSIONS OR CONFLICTS BETWEEN THE VARIOUS ELEMENTS OF THE WORKING DRAWINGS AND/OR SPECIFICATIONS SHALL BE BROUGHT TO THE ATTENTION OF THE ARCHITECT AND STRUCTURAL ENGINEER BEFORE PROCEEDING WITH ANY WORK INVOLVED. IN CASE OF CONFLICT, FOLLOW THE MOST STRINGENT REQUIREMENT AS DIRECTED BY THE ARCHITECT AT NO ADDITIONAL COST TO THE OWNER.
3. SEE SPECIFICATIONS FOR REQUIRED SUBMITTALS. SUBMITTALS SHALL BE MADE IN A TIMELY MANNER AS INDICATED IN SPECIFICATIONS. REVIEW OF SUBMITTALS BY ARW ENGINEERS IS FOR GENERAL COMPLIANCE ONLY AND IS NOT INTENDED AS APPROVAL. CONTRACTOR IS RESPONSIBLE FOR VERIFYING ALL SIZES, DIMENSIONS, AND ELEVATIONS ON SUBMITTALS AS RELATED TO DESIGN DOCUMENTS. PREPARATION OF SHOP DRAWINGS FOR STRUCTURAL ELEMENTS WILL REQUIRE INFORMATION (I.E. DIMENSIONS, ETC.) FOUND IN THE ARCHITECTURAL, STRUCTURAL, AND OTHER CONSULTANTS DRAWINGS.
4. THE CONTRACTOR SHALL VERIFY ALL CONDITIONS AND DIMENSIONS AT THE SITE. IF ACTUAL CONDITIONS DIFFER FROM THOSE SHOWN ON CONTRACT DOCUMENTS, CONTRACTOR SHALL NOTIFY ARCHITECT PRIOR TO FABRICATION OR CONSTRUCTION OF ANY AFFECTED ELEMENTS.
5. THE CONTRACTOR SHALL COORDINATE AND VERIFY ALL LOCATIONS AND SIZES OF MECHANICAL EQUIPMENT OR OTHER EQUIPMENT BEFORE FABRICATING AND ERECTING STRUCTURAL ELEMENTS. SIZES AND LOCATIONS THAT DIFFER FROM THOSE SHOWN ON THE CONTRACT DOCUMENTS SHALL BE REPORTED TO THE ARCHITECT.
6. THE CONTRACTOR SHALL SUBMIT A WRITTEN REQUEST TO THE ARCHITECT FOR ARCHITECT AND/OR ENGINEER APPROVAL BEFORE PROCEEDING WITH ANY CHANGES, MODIFICATIONS, OR SUBSTITUTIONS.
7. OBSERVATION VISITS TO THE SITE BY ARW ENGINEERS FIELD REPRESENTATIVES SHALL NEITHER BE CONSTRUED AS INSPECTION NOR APPROVAL OF CONSTRUCTION.
8. DURING AND AFTER CONSTRUCTION, BUILDER AND/OR OWNER SHALL KEEP LOADS ON STRUCTURE WITHIN THE LIMITS OF DESIGN LOADS AS NOTED IN THESE DOCUMENTS.
9. SUBJECT TO REVIEW AND APPROVAL BY THE ENGINEER, TYPICAL OR SIMILAR DETAILS AND SECTIONS SHALL APPLY WHERE SPECIFIC DETAILS ARE NOT SHOWN, TYPICAL OR SIMILAR DETAILS REFER TO THE CONDITION ADDRESSED AND ARE NOT NECESSARILY DETAILS LABELED "TYPICAL" OR "SIMILAR" IN THE PLANS AND DOCUMENTS.
10. DRAWINGS AND DETAILS HAVE BEEN PREPARED WITH THE INTENT TO VISUALLY REPRESENT INFORMATION PROVIDED IN SCALED FORM; HOWEVER CONTRACTOR/SUPPLIERS SHOULD NOT SCALE PLANS OR DETAILS FOR DIMENSIONAL INFORMATION.
11. THE CONTRACTOR SHALL PROVIDE ADEQUATE TEMPORARY SHORING AND BRACING FOR ALL STRUCTURAL ELEMENTS UNTIL THE ENTIRE STRUCTURAL SYSTEM IS COMPLETED. DESIGN OF ALL SHORING AND BRACING IS BY OTHERS AT NO ADDITIONAL COST TO THE OWNER.
12. ENGINEER SHALL NOT BE RESPONSIBLE FOR ACTIVITIES UNDER CONTROL OF THE CONTRACTOR SUCH AS CONSTRUCTION SITE SAFETY, MEANS, METHODS AND SEQUENCING OF CONSTRUCTION. ENGINEER SHALL NOT BE RESPONSIBLE FOR FABRICATION, ERECTION AND CONSTRUCTION REQUIREMENTS AS PRESCRIBED BY OSHA OR OTHER REGULATORY AGENCIES REGARDLESS OF INDICATIONS IN THESE DOCUMENTS.
13. NOTICE OF COPYRIGHT: THESE STRUCTURAL DRAWINGS ARE HEREBY COPYRIGHTED BY ARW ENGINEERS, ALL RIGHTS RESERVED. THESE DOCUMENTS DEFINE A STRUCTURE AND ARE INSTRUMENTS OF SERVICE, FOR ONE USE ONLY. REPRODUCTION AND DISTRIBUTION OF THESE DRAWINGS IS ONLY ALLOWED AS REQUIRED FOR REGULATORY AGENCIES AND FOR CONVEYANCE OF INFORMATION TO PARTIES INVOLVED IN THE CONSTRUCTION OF THIS PROJECT. THESE DOCUMENTS SHALL NOT BE REPRODUCED OR COPIED, IN PART OR WHOLE BY ANY PARTY FOR USE IN PREPARATION OF SHOP DRAWINGS OR OTHER SUBMITTALS.

B. STATEMENT OF SPECIAL INSPECTIONS AND SPECIAL INSPECTIONS

1. THE DESIGNATED SEISMIC/WIND SYSTEMS AND SEISMIC/WIND-FORCE-RESISTING SYSTEMS THAT ARE SUBJECT TO SPECIAL INSPECTIONS IN ACCORDANCE WITH IBC SECTION 1705.1 ARE IDENTIFIED ON THESE DOCUMENTS WITH A CIRCLE "L". ALL OTHER ITEMS REQUIRING SPECIAL INSPECTION ARE IDENTIFIED IN THE SPECIAL INSPECTION SCHEDULE IN THE GENERAL DRAWINGS.
2. SPECIAL INSPECTIONS AND TESTING ARE TO BE PROVIDED AS REQUIRED BY IBC SECTIONS 1704 THROUGH 1708 AND OTHER APPLICABLE SECTIONS OF THE IBC. THE TYPE AND FREQUENCY OF TESTING AND SPECIAL INSPECTIONS SHALL BE AS NOTED IN THE SPECIAL INSPECTION SCHEDULE, JOB SPECIFICATIONS, AND ACCORDANCE WITH IBC SECTION 110 AND CHAPTER 17. CONTRACTOR SHALL COORDINATE AND COOPERATE WITH REQUIRED INSPECTIONS.
3. ALL TESTING AND SPECIAL INSPECTION SHALL BE PROVIDED BY A QUALIFIED INDEPENDENT SPECIAL INSPECTION AGENCY IN ACCORDANCE WITH IBC 1704 AND AS OUTLINED IN THE JOB SPECIFICATIONS. REPORTS OF FINDINGS OR DISCREPANCIES SHALL BE NOTED AND FORWARDED TO THE CONTRACTOR, ARCHITECT, ENGINEERS, AND BUILDING OFFICIAL IN A TIMELY MANNER.
4. STRUCTURAL OBSERVATION VISITS SHALL BE PERFORMED BY A REPRESENTATIVE FROM ARW ENGINEERS IN ACCORDANCE WITH THE CONTRACT AS NEEDED TO OBSERVE THE CONSTRUCTION OF CRITICAL BUILDING ELEMENTS (I.E. FOOTINGS, BRACED FRAMES, MOMENT FRAMES, DRAG STRUTS AND THEIR CONNECTIONS, COLLECTORS, AND ROOF AND FLOOR DIAPHRAGMS). STRUCTURAL OBSERVATION REPORTS FOR EACH VISIT SHALL BE SENT DIRECTLY TO THE ARCHITECT FOR DISTRIBUTION TO THE CONTRACTOR AND BUILDING OFFICIAL. STRUCTURAL OBSERVATION VISITS SHALL NEITHER BE CONSTRUED AS SPECIAL INSPECTION NOR APPROVAL OF COMPLETED CONSTRUCTION.
5. IN ACCORDANCE WITH IBC 1709, THE CONTRACTOR SHALL SUBMIT A WRITTEN CONTRACTOR'S STATEMENT OF RESPONSIBILITY TO THE BUILDING OFFICIAL AND OWNER. THE STATEMENT SHALL BE SUBMITTED PRIOR TO THE CONSTRUCTION OF ANY SEISMIC/WIND-FORCE-RESISTING SYSTEM, DESIGNATED SEISMIC/WIND SYSTEM, OR COMPONENT IDENTIFIED IN THESE DOCUMENTS WITH A CIRCLE "L".

C.BASIS OF DESIGN

1. GOVERNING BUILDING CODE: INTERNATIONAL BUILDING CODE (IBC) 2009
   OCCUPANCY CATEGORY: 2
2. SUSPENDED FLOOR LOADS
   a. LIVE LOAD = 40 PSF (ROOMS). 100 PSF (PUBLIC AREAS)
   b. DEAD LOAD = 68 PSF
3. ROOF LOADS
   a. FLAT-ROOF SNOW LOAD, Pf: 32 PSF
      1) GROUND SNOW LOAD, Pg: 45.2 PSF
      2) SNOW EXPOSURE FACTOR, Ce: 1.0
      3) SNOW LOAD IMPORTANCE FACTOR, Is: 1.0
      4) THERMAL FACTOR, Ct: 1.0
   b. DEAD LOAD = 20 PSF
4. WIND DESIGN
   a. BASIC WIND SPEED (3 SECOND GUST): 90 MPH
   b. WIND IMPORTANCE FACTOR, IW: 1.0
   c. WIND EXPOSURE: C
   d. COMPONENT AND CLADDING DESIGN WIND PRESSURE SHALL BE AS REQUIRED PER ASCE 7-05.
5. SEISMIC DESIGN:
   a. SEISMIC IMPORTANCE FACTOR, IE: 1.0
   b. SITE CLASS: D
   c. MAPPED SPECTRAL RESPONSE ACCELERATIONS: SS = 1.395 , S1 = 0.582
   d. SPECTRAL RESPONSE COEFFICIENTS: SDS = 0.93 , SD1 = 0.582
   e. SEISMIC DESIGN CATEGORY: D
   f. BASIC SEISMIC-FORCE-RESISTING SYSTEM: SPECIAL REINFORCED MASONRY SHEARWALLS AT PODS AND BUCKLING RESTRAINED BRACED FRAMES AT THE COMMON AREA. ORDINARY CONCENTRIC BRACED FRAMES AT COMMON AREA SOUTH LOW ROOF.
   g. DESIGN BASE SHEAR: VN-S = 547K @ NORTH PODS - 252K @ COMMON - 192K @ SOUTH PODS
      VE-W = 547K @ NORTH PODS - 252K @ COMMON - 192K @ SOUTH PODS
   h. RESPONSE MODIFICATION FACTOR, R: 5.5 AT MASONRY SHEAR WALLS,
   i. ANALYSIS PROCEDURE: MODAL RESPONSE SPECTRUM ANALYSIS

D. FOUNDATION

1. DESIGN SOIL PRESSURE: 3000 PSF
2. SOILS REPORT BY: GSH GEOTECHNICAL CONSULTANTS, INC.
   REPORT #: 0149-015-10
   DATED: DECEMBER 15, 2010
3. SOIL PREPARATION UNDER FOOTINGS AND SLABS-ON-GRADE SHALL BE IN ACCORDANCE WITH THE SOILS REPORT.
4. TOP OF FOOTING ELEVATIONS SHOWN ON THE FOOTING AND FOUNDATION PLAN ARE BASED ON PRELIMINARY GRADING INFORMATION AND MUST BE VERIFIED PRIOR TO CONSTRUCTION. STEPS WHERE SHOWN ARE AT APPROXIMATE LOCATIONS. ALL EXTERIOR FOOTINGS MUST BEAR A MINIMUM OF 30 INCHES BELOW LOWEST ADJACENT FINAL GRADE.
5. ALL WALLS (EXCEPT CANTILEVERED RETAINING WALLS) SHALL BE ADEQUATELY BRACED AGAINST LATERAL MOVEMENT PRIOR TO BACKFILLING. DESIGN AND ERECTION OF BRACING/SHORING IS THE RESPONSIBILITY OF THE GENERAL CONTRACTOR. BRACING SHALL REMAIN IN PLACE UNTIL SUPPORTING STRUCTURAL ELEMENTS ARE IN PLACE AND HAVE ATTAINED FULL STRENGTH.
6. UNLESS NOTED OTHERWISE, ALL FOOTINGS AT COLUMNS TO BE CENTERED BELOW COLUMNS.
7. UNLESS NOTED OTHERWISE, ALL FOOTINGS SHALL HAVE VERTICAL FACES FORMED WITH STANDARD FORMING MATERIALS (WOOD, METAL, ETC.). WITH PRIOR APPROVAL OF ARCHITECT AND ENGINEER, CONCRETE FOR FOOTINGS CAN BE PLACED IN EXCAVATED "SOIL" FORMS PROVIDED THAT THE DIMENSIONS ARE INCREASED 3" ON EACH SIDE.

E. CONCRETE

1. ALL CONCRETE MIX DESIGNS SHALL COMPLY WITH THE PROJECT SPECIFICATIONS AND THE REQUIREMENTS LISTED BELOW:
   a. FOOTINGS, GRADE BEAMS, NON-RETAINING FOUNDATION WALLS:
      1. WHERE THE TOP OF THE ELEMENT IS EXPOSED OR LOCATED WITHIN 30" OF THE LOWEST ADJACENT GRADE:
      i. 28 DAY COMPRESSIVE STRENGTH: 4500 PSI
      ii. MAXIMUM W/C RATIO: 0.45
      iii. MAXIMUM AGGREGATE SIZE: 1"
      iv. AIR CONTENT: 6%
      2. WHERE THE TOP OF THE ELEMENT IS NOT EXPOSED OR LOCATED WITHIN 30" OF THE LOWEST ADJACENT GRADE:
      i. 28 DAY COMPRESSIVE STRENGTH: 3000 PSI
   b. RETAINING WALLS AND BASEMENT WALLS:
      1. 28 DAY COMPRESSIVE STRENGTH: 4000 PSI
      2. MAXIMUM W/C RATIO: 0.45
      3. MAXIMUM AGGREGATE SIZE: 1"
      4. AIR CONTENT: 6%
   c. INTERIOR SLABS ON GRADE:
      1. 28 DAY COMPRESSIVE STRENGTH: 3000 PSI
   d. INTERIOR SUSPENDED SLABS:
      1. 28 DAY COMPRESSIVE STRENGTH: 3000 PSI
   e. EXTERIOR SLABS (DOCKS, ETC.):
      1. 28 DAY COMPRESSIVE STRENGTH: 4500 PSI
      2. MAXIMUM W/C RATIO: 0.45
      3. MAXIMUM AGGREGATE SIZE: 1"
      4. MINIMUM AIR CONTENT: 6%
2. WATER USED IN MIXING CONCRETE SHALL CONFORM TO ASTM C1602.
3. NO PIPES, DUCTS, SLEEVES, ETC. SHALL BE PLACED IN STRUCTURAL CONCRETE UNLESS SPECIFICALLY DETAILED OR APPROVED BY THE STRUCTURAL ENGINEER. NO ALUMINUM PRODUCTS SHALL BE EMBEDDED IN CONCRETE. PENETRATIONS THRU STRUCTURAL CONCRETE ELEMENTS MUST BE APPROVED BY THE ENGINEER AND SHALL BE BUILT INTO THE ELEMENT PRIOR TO CONCRETE PLACEMENT.
4. REFER TO ARCHITECTURAL DRAWINGS FOR MOLDS, GROOVES, ORNAMENTS, ETC. TO BE CAST IN TO CONCRETE, AND FOR EXTENT AND LOCATION OF DEPRESSIONS, CURBS, RAMPS, ETC.
5. UNLESS NOTED OTHERWISE, MINIMUM REINFORCING IN ALL CONCRETE FOUNDATION WALLS SHALL BE AS FOLLOWS:

THICKNESS	TOP & BOTTOM BARS	VERTICAL	HORIZONTAL
10"	(2) #5	#4 AT 12"O.C.	#5 AT 12"O.C.
12"	(2) #5	#4 AT 18"O.C. EA FACE	#4 AT 16"O.C. EA FACE

6. UNLESS NOTED OTHERWISE, CONCRETE SLABS ON EARTH SHALL BE REINFORCED AS FOLLOWS:
   4" THICK - REINFORCED WITH FIBERMESH
7. UNLESS NOTED OTHERWISE, FOR OPENINGS LARGER THAN 12" IN ANY DIRECTION IN CONCRETE WALLS ADD (2) #5 BARS ALL SIDES IN ADDITION TO REGULAR WALL REINFORCING AND EXTEND 24" EACH WAY BEYOND OPENING. WHERE 24" IS NOT AVAILABLE, EXTEND BARS AS FAR AS POSSIBLE AND TERMINATE WITH A STANDARD HOOK.
8. CONSTRUCTION JOINTS NOT SHOWN ON THE PLANS SHALL BE MADE AND LOCATED SO AS TO NOT IMPAIR THE STRENGTH OF THE STRUCTURE AND AS APPROVED BY THE STRUCTURAL ENGINEER. PROVIDE 2 X 4 (SHAPED) KEYWAY IN ALL VERTICAL AND HORIZONTAL JOINTS UNLESS NOTED OR DETAILED OTHERWISE. ALL STEEL REINFORCING SHALL BE CONTINUOUS THROUGH COLD JOINTS UNLESS NOTED OTHERWISE. SEE TYPICAL DETAILS FOR COLD/CONSTRUCTION JOINTS FOR SLABS ON GRADE.

F. ANCHOR BOLTS/EMBEDDED BOLTS

1. ALL ANCHOR BOLTS SHALL HAVE ASTM A-563 HEAVY HEX NUT AND ASTM F-436 WASHERS AT STANDARD OR OVERSIZED HOLES PER AISC SPECIFICATION TABLE J3.3. WHERE HOLE SIZES DO NOT COMPLY WITH THE LIMITATIONS FOR OVERSIZED HOLES THE STRUCTURAL ENGINEER SHALL BE NOTIFIED TO DETERMINE STEEL PLATE WASHER REQUIREMENTS. ANCHOR BOLTS SHALL COMPLY WITH THE FOLLOWING:
   f. AT BRACED FRAMES & MOMENT RESISTING FRAMES - ASTM F1554 GRADE 105 HEADED BOLTS. (ASTM A449 THREADED ROD MAY BE USED WITH DOUBLE NUT AND WASHER.)
   g. AT ALL OTHER ANCHOR BOLTS (UNLESS NOTED OTHERWISE) - ASTM F1554 GRADE 36 HEADED BOLTS. (ASTM A36 THREADED ROD MAY BE USED WITH DOUBLE NUT AND WASHER.)
2. EMBEDDED BOLTS IN MASONRY SHALL BE (UNLESS NOTED OTHERWISE) ASTM A-307 GRADE HEADED BOLTS.
3. SEE TYPICAL ANCHOR BOLT DETAIL FOR DEFINITIONS OF EMBEDMENT LENGTH, ETC.
4. FURNISH TEMPLATES AND OTHER DEVICES AS NECESSARY FOR PRESETTING ALL BOLTS PRIOR TO PLACING CONCRETE AND/OR GROUT.
5. IF THREADED RODS ARE USED AS PERMITTED ABOVE, THEY SHALL BE CLEAR OF SOIL AND DIRT.
6. WHERE REQUIRED FOR ERECTION, HOLES LARGER THAN OVERSIZED MAY BE PERMITTED WITH THE USE OF STEEL PLATE WASHERS AT THE DISCRETION OF THE STRUCTURAL ENGINEER.

G.EPOXY ANCHORS

1. UNLESS NOTED OTHERWISE, ALL EPOXY ANCHORS INTO CONCRETE SHALL BE HILTI HIT-RE 500-SD OR SIMPSON SET-XP EPOXY ADHESIVE ANCHORS USED IN ACCORDANCE WITH A CURRENT ICC REPORT.
2. UNLESS NOTED OTHERWISE, ALL EPOXY ANCHORS INTO MASONRY SHALL BE HILTI HIT-HY150 EPOXY ADHESIVE ANCHORS USED IN ACCORDANCE WITH A CURRENT ICC REPORT.
3. ANCHORS SHALL BE INSTALLED IN ACCORDANCE WITH THE CURRENT ICC REPORT.
4. ALL MASONRY CELLS IN WHICH ANCHORS ARE INSTALLED SHALL BE SOLID GROUTED.

H. SUSPENDED CONCRETE SLABS / SLABS ON METAL DECK

1. UNLESS NOTED OTHERWISE, ALL CONCRETE SLABS ON METAL DECK SHALL BE 5 1/2" TOTAL THICKNESS NORMAL WEIGHT CONCRETE WITH A WEIGHT LESS THAN 150 POUNDS PER CUBIC FOOT, REINFORCED WITH FIBERMESH. WHERE THE SLAB CONSTRUCTION IS USED TO OBTAIN A UL FIRE RATING, THE PROPOSED FIBER MESH SHALL HAVE UL ACCEPTANCE AS AN APPROVED ALTERNATIVE TO WELDED WIRE FABRIC.
2. AROUND OPENINGS IN SUSPENDED CONCRETE SLABS, ADD REINFORCING BARS EQUIVALENT TO BARS CUT BY OPENING WITH HALF ON EACH SIDE OF OPENING. BARS PARALLEL TO PRINCIPAL REINFORCING SHALL RUN FULL LENGTH OF SPAN. BARS PARALLEL TO TEMPERATURE REINFORCING SHALL RUN 24" BEYOND OPENING.
3. ALL OPENINGS GREATER THAN 6" IN ANY DIRECTION IN CONCRETE FLOOR SLABS ON METAL DECK SHALL BE FRAMED ON 4 SIDES WITH STEEL ANGLES OR BENT PLATES (SEE TYPICAL DETAIL) UNLESS NOTED OTHERWISE.
4. EVERY EFFORT SHALL BE MADE TO PROVIDE A LEVEL FINISHED FLOOR WHILE MAINTAINING THE MINIMUM INDICATED SLAB THICKNESS.
5. CONTROL JOINTS IN SUSPENDED CONCRETE SLABS AND CONCRETE SLABS ON DECK SHALL NOT BE USED UNLESS SPECIFICALLY APPROVED AND DETAILED BY THE ENGINEER.
6. SEE TYPICAL DETAILS WHEN SLABS ARE MADE COMPOSITE WITH STEEL BEAMS.
7. ANY CONDUIT PLACED IN SLABS ON DECK SHALL BE SPACED NOT CLOSER THAN 18"O.C. CONDUIT LARGER THAN 3/4" DIAMETER SHALL BE PLACED IN DECK FLUTES, BUT MAY NOT BE PLACED IN FLUTES WITH REINFORCING STEEL OR HSA'S. A 1" MINIMUM CLEARANCE SHALL BE MAINTAINED BETWEEN THE CONDUIT AND THE DECK. NO CONDUIT LARGER THAN 1" DIAMETER OR 1/3 THE THICKNESS OF THE CONCRETE OVER THE DECK FLUTE SHALL BE PLACED IN SLABS ON DECK. CONDUIT CROSSOVERS ARE NOT ALLOWED.
8. WHERE CONDUIT IS CLUSTERED TOGETHER TO RISE ABOVE SLAB OR PENETRATE SLAB, PENETRATION IN SLAB MUST BE SUPPORTED AS NOTED IN NOTE J.7.d.
9. CONTRACTOR SHALL PROVIDE ALL TEMPORARY SHORING, BRACING, AND GUYING AS REQUIRED DURING ERECTION AND PLACEMENT OF SUSPENDED CONCRETE SLABS ON METAL DECK.

I. REINFORCING STEEL

1. REINFORCING BAR STRENGTH REQUIREMENTS:
   a. ALL REINFORCING BARS SHALL CONFORM TO ASTM STANDARD A-615 GRADE 60 AND ALL WELDED WIRE FABRIC SHALL CONFORM TO ASTM STANDARD A-185 AND SHALL BE SUPPLIED IN FLAT SHEETS. ADEQUATELY TIE AND SUPPORT ALL REINFORCING STEEL AS SPECIFIED BY ACI 315, TO MAINTAIN EXACT REQUIRED POSITION.
2. STEEL DISCONTINUOUS FIBER REINFORCEMENT SHALL BE DEFORMED AND CONFORM TO ASTM A820 AND SHALL HAVE A LENGTH TO DIAMETER RATIO NOT SMALLER THAN 50 AND NOT GREATER THAN 100.
3. HEADED DEFORMED BARS SHALL CONFORM TO ASTM A970. OBSTRUCTIONS OR INTERRUPTIONS OF THE BAR DEFORMATIONS, IF ANY, SHALL NOT EXTEND MORE THAN 2 BAR DIAMETERS FROM THE BEARING FACE OF THE HEAD.
4. ALL FIELD BENT DOWELS SHALL BE GRADE 40 WITH SPACING INDICATED REDUCED BY 1/3.
5. UNLESS NOTED OTHERWISE, REINFORCEMENT SHALL HAVE THE FOLLOWING CONCRETE COVERAGE:
   a. CAST AGAINST AND PERMANENTLY EXPOSED TO EARTH ….. 3"
   b. EXPOSED TO EARTH OR WEATHER:
      1) #6 & LARGER ….. 2"
      2) #5 & SMALLER …..1-1/2"
   c. NOT EXPOSED TO WEATHER OR EARTH:
      1) SLABS, WALLS, JOISTS, #11 & SMALLER ….. 3/4"
      2) BEAMS, COLUMNS: MAIN REINFORCING OR TIES ….. 1-1/2"
   d. SLAB ON GRADE:
      1) PLACE REINFORCING AT CENTER OF SLAB UNLESS INDICATED OTHERWISE.
6. EXCEPT WHERE NOTED ON PLANS OR DETAILS CONTINUOUS REINFORCEMENT SHALL BE SPLICED AT POINTS OF MINIMUM STRESS BY LAPPING PER THE REBAR LAP SCHEDULE.
7. REINFORCING STEEL MAY BE SPLICED WITH MECHANICAL COUPLERS THAT HAVE A TENSION CAPACITY OF AT LEAST 125% OF THE STRENGTH OF THE BAR. MECHANICAL COUPLERS SHALL BE A POSITIVE CONNECTING TYPE COUPLER, AND SHALL BE INSTALLED IN ACCORDANCE WITH AN APPROVED ICC RESEARCH REPORT. WHERE THESE ARE USED, SPLICES ON ADJACENT BARS SHALL BE STAGGERED AT LEAST 24 INCHES ALONG THE LENGTH OF THE BARS.
8. ALL VERTICAL REINFORCING IN STRUCTURAL ELEMENTS ABOVE SHALL BE SPLICED WITH MATCHING DOWELS EMBEDDED WITHIN THE FOOTINGS OR STRUCTURE BELOW. SPLICE LENGTHS SHALL COMPLY WITH REBAR LAP SCHEDULE. DOWELS INTO FOOTINGS SHALL TERMINATE WITH A STANDARD HOOK, AND SHALL EXTEND TO WITHIN 4" OF THE BOTTOM OF THE FOOTING, BUT NEED NOT EXTEND MORE THAN 20" INTO FOOTING. FOR MASONRY CONSTRUCTION SEE STRUCTURAL NOTE M.6.A.
9. DO NOT WELD REINFORCING EXCEPT AS NOTED ON PLANS, WHERE REINFORCING IS WELDED, USE ASTM A-706 REINFORCING.
10. REINFORCING BARS, TIES, AND TENDONS SHALL BE SUPPORTED BY NYLON CONES, PLASTIC-COATED TIE-WIRES, OR PLASTIC-COATED CHAIRS. REINFORCING IN FOOTINGS IS PERMITTED TO BE SUPPORTED ON CONCRETE DOBIES.
11. UNLESS NOTED OTHERWISE, HOOKS, STIRRUPS, TIES, AND OTHER BENDS IN REINFORCING STEEL SHALL MEET THE STANDARDS SET FORTH IN ACI 318/318R-08. UNLESS OTHERWISE PERMITTED BY THE ENGINEER, ALL REINFORCEMENT SHALL BE BENT COLD. REINFORCEMENT PARTIALLY EMBEDDED IN CONCRETE SHALL NOT BE FIELD BENT, EXCEPT AS SHOWN ON THESE DRAWINGS OR OTHERWISE PERMITTED BY THE ENGINEER.
12. UNLESS SPECIFICALLY NOTED AND/OR DETAILED IN THE STRUCTURAL DRAWINGS CONDUIT SHALL NOT BE IN CONTACT WITH REINFORCING STEEL.

J. STRUCTURAL STEEL

1. STRUCTURAL STEEL SHALL BE FABRICATED AND ERECTED IN ACCORDANCE WITH THE LATEST EDITION OF THE FOLLOWING:
   a. ANSI/AISC 360-05 "SPECIFICATION FOR STRUCTURAL STEEL BUILDINGS", WITH "COMMENTARY" AND "SUPPLEMENTS" AS REQUIRED BY BUILDING CODE.
   b. AISC 303-05 "CODE OF STANDARD PRACTICE FOR STEEL BUILDINGS AND BRIDGES" EXCLUDING THE FOLLOWING SECTIONS: 4.4, 4.4.1, AND 4.4.2.
   c. AISI "SPECIFICATIONS FOR THE DESIGN OF COLD-FORMED STEEL STRUCTURAL MEMBERS".
   d. AISC "SPECIFICATION FOR STRUCTURAL JOINTS USING ASTM A325 OR A490 BOLTS".
   e. AWS D1.1 AND 1.3, "STRUCTURAL WELDING CODE" (EXCEPT SPECIFIC ITEMS DO NOT APPLY IF THEY CONFLICT WITH AISC).
   f. ANSI/AISC 341-05 "SEISMIC PROVISIONS FOR STRUCTURAL STEEL BUILDINGS".
2. STRUCTURAL STEEL SHALL COMPLY WITH THE FOLLOWING:
   a. WIDE FLANGE SHAPES - ASTM A992
   b. OTHER SHAPES AND PLATES - ASTM A-36 (UNO)
   c. TUBES (TS) AND HOLLOW STRUCTURAL SECTIONS (HSS) - ASTM A-500, GRADE B (FY = 46 KSI)
   d. PIPE COLUMNS - ASTM A-53, GRADE B TYPE E OR S
   e. DEFORMED BAR ANCHORS (DBA) - ASTM A-496, WELDED IN ACCORDANCE WITH AWS D1.1
   f. HEADED STUD ANCHORS (HSA) - ASTM A-108, GRADE 1015 STEEL AND WELDED IN ACCORDANCE WITH AWS D1.1 FOR TYPE "B". USE 3/4" DIAMETER STUDS, UNLESS NOTED OTHERWISE.
   g. THREADED ROD - ASTM A-449.
3. CONNECTIONS SHALL COMPLY WITH THE STRUCTURAL DRAWINGS UNLESS WRITTEN APPROVAL TO CHANGE IS GIVEN BY THE STRUCTURAL ENGINEER.
4. ALL SHOP FABRICATIONS SHALL BE PERFORMED BY AN APPROVED FABRICATOR IN ACCORDANCE WITH SECTIONS 1702 AND 1704 OF THE IBC OR WITH SHOP INSPECTION BY AN INDEPENDENT AGENCY IN ACCORDANCE WITH SECTION 1704.2 OF THE IBC.
5. WELDING
   a. ALL WELDING AND CUTTING SHALL BE PERFORMED BY AWS CERTIFIED WELDERS IN ACCORDANCE WITH ANSI/AWS D1.1 (LATEST EDITION).
   b. USE E-70XX ELECTRODES UNLESS NOTED OTHERWISE. E-60XX MAY BE USED FOR WELDING STEEL DECKS.
   c. ALL INTERSECTING STEEL SHAPES WHICH ARE NOT CONNECTED WITH BOLTS SHALL BE WELDED TOGETHER WITH A FILLET WELD ALL AROUND UNLESS NOTED OTHERWISE. WHERE WELD SIZES ARE NOT SHOWN USE THE FOLLOWING:
      1) WHERE ALL CONNECTED PARTS ARE THICKER THAN 1/4", WELD IS 1/16" LESS THAN THE THICKNESS OF THE THINNEST PART.
      2) WHERE ANY OF THE CONNECTED PARTS IS LESS THAN 1/4" THICK, WELD IS SAME AS THICKNESS OF THE THINNEST PART.
   d. WELDING OF HSA'S AND DBA'S SHALL CONFORM TO THE MANUFACTURER'S SPECIFICATIONS.
   e. WHEREVER POSSIBLE, WELDS SHALL BE SHOP WELDS. SPECIAL CONSIDERATIONS, SUCH AS ITEMS WHICH MAY NEED ADJUSTMENT AT THE SITE, REQUIRE THAT SOME WELDS BE FIELD WELDS. WHERE QUESTIONS OR DISCREPANCIES OCCUR THE CONTRACTOR SHALL COORDINATE THE WORK BETWEEN THE SHOP FABRICATOR AND THE STEEL ERECTOR.
6. BOLTING
   a. UNLESS NOTED OTHERWISE, ALL STRUCTURAL STEEL TO STEEL CONNECTIONS SHALL USE HIGH STRENGTH BOLTS CONFORMING TO ASTM A-325.
   b. UNLESS NOTED OTHERWISE, ALL BOLTING IS CLASSIFIED AS NON-SLIP CRITICAL BEARING TYPE CONNECTIONS WITH THREADS INCLUDED IN SHEAR PLANE. TIGHTEN BOLTS TO A SNUG TIGHT CONDITION, WITH ALL PLIES OF THE JOINT IN FIRM CONTACT.
   c. AT OVERSIZED AND SLOTTED HOLES, WASHERS SHALL CONFORM TO ASTM F-436 AND COMPLETELY COVER THE HOLE.
   d. WHERE A STEEL BEAM TO BEAM CONNECTION IS NOT SHOWN, PROVIDE AN AISC STANDARD FRAMED CONNECTION SIZED FOR 1/2 OF THE TOTAL LOAD CAPACITY OF THE BEAM FOR THE SPAN AND STEEL SPECIFIED.
7. METAL DECKING
   a. UNLESS NOTED OTHERWISE, METAL ROOF DECK SHALL BE 22 GAUGE TYPE B PAINTED STEEL DECK. SEE ROOF DECK SCHEDULE FOR ATTACHMENTS.
   b. UNLESS NOTED OTHERWISE, METAL FLOOR DECK SHALL BE 20 GAUGE TYPE W2 COMPOSITE, PAINTED, UNVENTED STEEL DECK. UNLESS NOTED OTHERWISE, ATTACH TO SUPPORTING STRUCTURE WITH 3/4" DIAMETER WELDS AT 24" MAXIMUM SPACING. ATTACH SIDE SEAMS WITH BUTTON PUNCH OR SIDE SEAM SCREWS AT 24" MAXIMUM SPACING. AN HSA FIELD-WELDED THROUGH THE DECK MAY SUBSTITUTE FOR A PUDDLE WELD.
   c. ALL DECK SHALL BE CONTINUOUS OVER 3-SPANS. WHERE NOT POSSIBLE, THE DECK SUPPLIER/CONTRACTOR SHALL PROVIDE HEAVIER GAUGE DECK AS NEEDED TO PROVIDE THE EQUIVALENT PERFORMANCE OF THE SPECIFIED DECK WITH 3-SPAN CONTINUITY.
   d. SEE TYPICAL DETAILS FOR SUPPORT OF DECK AT OPENINGS.
   e. PROVIDE L2"x2"x3/16" FOR DECK SUPPORT AT LOCATIONS WHERE COLUMNS EXTEND THROUGH DECK.
   f. PAINTED STEEL DECK SHALL CONFORM TO ASTM A1008 AND GALVANIZED STEEL DECK SHALL CONFORM TO A653 GRADE G60.
   g. BUILDING ELEMENTS MAY BE SUPPORTED BY HANGING DIRECTLY FROM METAL DECKING, PROVIDED THAT THE TOTAL WEIGHT PER CONNECTION IS LESS THAN 50 LBS AND THAT THE ATTACHMENT TO THE DECKING IS DISTRIBUTED ACROSS AT LEAST TWO RIBS AND SPACED AT LEAST 6 FEET APART IN ANY DIRECTION.
8. ALL COLUMNS ADJACENT TO OR EMBEDDED IN MASONRY SHALL HAVE (2) 1/2" DIAMETER X 24" LONG DBA EXTENDING EACH WAY AT ALL WALL BOND BEAMS.
9. PROVIDE FULL DEPTH WEB STIFFENER PLATES AT EACH SIDE OF STEEL BEAMS AT ALL BEARING (EXCEPT SECONDARY FRAMING) POINTS. STIFFENER PLATES SHALL BE THICKNESS SHOWN UNLESS NOTED OTHERWISE AND SHALL BE WELDED BOTH SIDES WITH FILLET WELDS ALL AROUND.

FLANGE WIDTH	STIFFENER THICKNESS	WELD THICKNESS
< 8 1/4"	1/4"	3/16"
8 1/4" < BF < 12 1/2"	3/8"	1/4"
12 1/2" < BF <18"	1/2"	5/16"

10. FABRICATORS AND SUPPLIERS SHALL COORDINATE PAINT/FINISHES WITH REQUIREMENTS FOR DIRECT APPLIED INSULATION, FIREPROOFING, ETC. AS NOTED IN THE PROJECT SPECIFICATIONS.
11. WHEN DETERMINING THE FIRE RESISTANCE OF ASSEMBLIES, USE THE FOLLOWING: STEEL ROOF MEMBERS ARE CONSIDERED UN-RESTRAINED AND STEEL FLOOR FRAMING MEMBERS ARE CONSIDERED RESTRAINED.
12. UNLESS NOTED OTHERWISE, ALL HORIZONTAL FRAMING MEMBERS SHALL BE ERECTED WITH THE NATURAL CROWN UP.

K. COLD-FORMED STEEL

1. LIGHT GAUGE STEEL FRAMING
   a. WHERE STEEL FRAMING SIZE DESIGNATORS ARE USED IN THE DRAWINGS, THEY SHALL FOLLOW THE CONVENTION ESTABLISHED BY THE STEEL STUD MANUFACTURERS' ASSOCIATION (SSMA) AND THE NORTH AMERICAN STEEL FRAMING ALLIANCE (NASFA). FRAMING MEMBERS PROVIDED SHALL COMPLY WITH THE DESIGNATIONS ACCORDING TO THIS CONVENTION.
   b. ALL EXTERIOR STUDS (AND/OR) FRAMING MEMBERS ALONG WITH ALL RUNNERS, BRIDGING, AND END-TRACKS SHALL BE OF THE DESIGNATION SHOWN ON THE PLANS. ALL OF THE ABOVE ELEMENTS SHALL BE FORMED FROM STEEL MEETING REQUIREMENTS OF ASTM A1011/A1011M-04. ALL COMPONENTS SHALL BE GALVANIZED. ALL COMPONENTS SHALL HAVE THE FOLLOWING YIELD STRESSES:

COMPONENT	BASE METAL THICKNESS	YIELD STRESS
STUDS, JOISTS & TRACKS	33 & 43 MILL	33,000 PSI
	54, 68 & 97 MILL	50,000 PSI
END CLOSURES & BRIDGING	33, 43, 54 & 68 MILL	33,000 PSI

   c. FOLLOW ALL MANUFACTURERS' RECOMMENDATIONS FOR THE USE OF THESE PRODUCTS.
   d. UNLESS NOTED OTHERWISE, ALL WELDED CONNECTIONS SHALL BE IN ACCORDANCE WITH AWS D1.3 AND THE STRUCTURAL DETAILS. ALL WELDS SHALL BE COMPLETED USING E60XX ELECTRODES.
2. CONNECTIONS, FASTENERS, AND ADHESIVE
   a. ALL SCREWS SHALL HAVE THE FOLLOWING MINIMUM PROPERTIES:

SCREW SIZE	SHANK DIAMETER
NO. 6	0.138"
NO. 8	0.164"
NO. 10	0.190"
NO. 12	0.216"

   b. UNLESS NOTED OTHERWISE, ALL FRAMING ANCHORS, CLIPS, ETC. TO BE PROVIDED BY TSN (THE STEEL NETWORK) OR APPROVED EQUAL.
   c. UNLESS NOTED OTHERWISE, ALL WALL BOTTOM TRACKS TO BE ANCHORED TO THE CONCRETE SLAB WITH (1) 3/8" DIAMETER HILTI KWIK BOLT AT 32" O.C. W/2" MINIMUM EMBEDMENT.
3. UNLESS NOTED OTHERWISE, ALL STEEL STUD WALLS SHALL BE CONTINUOUS BETWEEN TOP AND BOTTOM TRACKS WITH NO SPLICES.
4. UNLESS NOTED OTHERWISE, ALL BOX HEADER COMPONENTS SHALL BE CONTINUOUS WITH NO SPLICES BETWEEN BEARING SUPPORTS.
5. ALL TOP AND BOTTOM TRACKS OF BOX HEADERS SHALL BE CONTINUOUS.
6. UNLESS NOTED OTHERWISE, ALL WALLS SHALL CONSIST OF CONTINUOUS 400S162-54 STUDS SPACED AT 16"O.C. W/ 400T125-54 TRACKS. ATTACH TRACK TO STUDS W/ (1) #8 TEK SCREWS EACH SIDE OF STUD.
7. ALL INTERIOR, NON-BEARING, STEEL STUD WALLS THAT EXTEND ABOVE THE CEILING BUT DO NOT ATTACH TO THE FLOOR OR ROOF DIAPHRAGM (ABOVE), SHALL HAVE DIAGONAL BRACES AT 45 DEGREES (+/-). SEE TYPICAL DETAILS IN THE ARCHITECTURAL DRAWINGS.
8. AT ANY LOCATION WHERE BRICK VENEER OCCURS ABOVE THE THIRD FLOOR, A STEEL LEDGER ANGLE SHALL BE INSTALLED PER DETAIL E5/SF704.
9. ALL EXTERIOR WINDOWS AND DOORS AND MISCELLANEOUS WALL OPENINGS SHALL BE FRAMED W/ FULL-HEIGHT, CONTINUOUS DOUBLE JAMB STUDS AND BOX HEADERS PER THE DETAILS ON SHEET SF704.

L. OPEN WEB JOISTS AND GIRDERS

1. ALL OPEN WEB STEEL JOISTS AND GIRDERS SHALL BE FABRICATED AND ERECTED IN ACCORDANCE WITH THE LATEST EDITION OF "STANDARD SPECIFICATIONS AND CODE OF STANDARD PRACTICE" OF THE STEEL JOIST INSTITUTE.
2. CONCENTRATED POINT LOADS (NOT SPECIFICALLY SHOWN ON THE PLANS) OF LESS THAN 200 LBS FOR MECHANICAL UNITS. FIRE SPRINKLER MAINS, AND OTHER EQUIPMENT SUPPORTED FROM JOISTS SHALL BE SUPPORTED WITHIN 6" OF A CHORD PANEL POINT. SUPPORT BEYOND PANEL POINTS CAN BE PROVIDED BY ADDING (2) L2"'x2"x1/4" DIAGONALS TO THE NEAREST OPPOSITE CHORD PANEL POINT. LOADS SHALL BE SPACED AT LEAST 6 FEET APART WITH NO MORE THAN 2 PER JOIST. SEE JOIST FABRICATOR FOR ADDITIONAL REQUIREMENTS.
3. ANY BRACING REQUIRED FOR MISCELLANEOUS ITEMS (I.E. DUCTWORK, PIPING, ETC.) MUST CONNECT TO THE TOP CHORD OF THE JOIST OR GIRDER. BRACING TO THE BOTTOM CHORD IS NOT ALLOWED UNLESS SPECIFICALLY DETAILED THAT WAY ON THE PLANS.
4. PROVIDE SPECIAL BEARING ENDS AS REQUIRED AT SLOPED BEARING CONDITIONS. CONTRACTOR SHALL COORDINATE WITH OTHER STRUCTURAL ELEMENTS.
5. ALL JOISTS SHALL BE CAMBERED PER SJI SPECIFICATIONS, UNLESS NOTED OTHERWISE.
6. FIELD MODIFICATIONS (INCLUDING HOLES IN THE CHORD OR WEB MEMBERS) SHALL NOT BE MADE TO ANY JOIST OR GIRDER WITHOUT PRIOR APPROVAL BY THE MANUFACTURER.
7. FABRICATORS AND SUPPLIERS SHALL COORDINATE PAINT/FINISHES WITH REQUIREMENTS FOR DIRECT APPLIED INSULATION, FIREPROOFING, ETC. AS NOTED IN THE PROJECT SPECIFICATIONS.
8. JOIST BRIDGING SHALL BE PROVIDED AS REQUIRED BY THE JOIST MANUFACTURER AND SJI STANDARDS. BRIDGING WHERE SHOWN ON THE STRUCTURAL DRAWINGS IS A SCHEMATIC REPRESENTATION ONLY. SEE JOIST MANUFACTURER FOR BRIDGING SIZE, CONNECTIONS, TYPE AND QUANTITY.
9. WHERE ADDED LOADS ARE SHOWN ON THE JOISTS BUT NOT SPECIFICALLY DIMENSIONED, THE JOIST DESIGNER SHALL PLACE THOSE LOADS ON THE JOIST AT A LOCATION THAT RESULTS IN THE HIGHEST STRESS IN THE MEMBERS. THE DESIGNER MAY ASSUME THAT THE LOAD OCCURS WITHIN 10 FEET OF A SCALED DIMENSION.
10. FABRICATOR MUST SUBMIT A CERTIFICATE OF COMPLIANCE TO THE BUILDING OFFICIAL PER IBC 2206.5 STATING THAT WORK WAS PERFORMED IN ACCORDANCE WITH APPROVED CONSTRUCTION DOCUMENTS AND WITH SJI SPECIFICATIONS.
11. UNLESS NOTED OTHERWISE, ROOF JOISTS AND GIRDERS SHALL BE DESIGNED FOR A NET WIND UPLIFT OF 16 PSF.
12. ALL ROOF JOISTS BEARING ON EXTERIOR WALLS SHALL BE DESIGNED TO TRANSFER 3.75 KIPS (ULTIMATE) TOP CHORD AXIAL FORCE THROUGH THE BEARING SHOE.

M.MASONRY

1. ALL HOLLOW MASONRY UNITS SHALL CONFORM TO ASTM C-90 TYPE 1.
   f'm (MINIMUM) 1,500 PSI (UNLESS NOTED OTHERWISE IN THE WALL SCHEDULE ON SG601)
   MINIMUM UNIT STRENGTH 1,900 PSI WHERE f'm = 1500 PSI, 3750 PSI WHERE f'm = 2500 PSI (TESTED IN ACCORDANCE WITH ASTM C-140)
2. ALL GROUT (SITE MIXED OR PRE-MIXED) SHALL CONFORM TO ASTM C-476 OR SECTION 2.2A OF TMS 602-08/ACI 530.1-08/ASCE 6-08. GROUT SHALL BE PLACED WITH SUFFICIENT WATER FOR POURING WITHOUT SEGREGATION. DO NOT USE MORTAR FOR GROUT. MECHANICALLY VIBRATE ALL GROUT.
3. GROUT STOPS SHALL BE AN APPROVED PRODUCT DESIGNED AND MANUFACTURED FOR USE AS A GROUT STOP. GROUT STOP SUBMITTALS SHALL BE SUBMITTED TO THE ARCHITECT AND ENGINEER FOR REVIEW. OTHER GROUT STOP MATERIALS SUCH AS ASPHALT IMPREGNATED MATERIALS ARE NOT PERMITTED.
4. MORTAR SHALL BE TYPE S AND SHALL CONFORM TO ASTM C 270.
5. ALL MASONRY WORK SHALL CONFORM TO CHAPTER 21 OF THE IBC.
6. UNLESS NOTED OTHERWISE, MINIMUM REINFORCING IN ALL 8" MASONRY WALLS SHALL BE AS FOLLOWS:
   a. VERTICAL: # 5 BARS IN CELLS ADJACENT TO ALL OPENINGS, AT CORNERS AND AT A MAXIMUM SPACING OF 32" THROUGHOUT THE WALL. ALL VERTICAL REINFORCEMENT INCLUDING, BUT NOT LIMITED TO JAMBS, COLUMNS, AND WALL REINFORCING SHALL BE DOWELED INTO AND THROUGH THE FOUNDATION WALL AND INTO THE FOOTING BELOW UNLESS SPECIFICALLY DETAILED OTHERWISE.
   b. HORIZONTAL: (2) #4 BARS IN 8" DEEP "H" BLOCK BOND BEAM UNITS AT 48" O.C. AND AT FLOORS, ROOF AND TOP OF WALL. BOND BEAMS AT ROOF WILL SLOPE TO MATCH SLOPING ROOF.
7. ALL BLOCK CELLS CONTAINING REINFORCING, BOLTS, OR ANCHORS SHALL BE GROUTED SOLID.
8. PROVIDE (1) #5 (MINIMUM), IN GROUTED SPACE, ON ALL SIDES AND ADJACENT TO EVERY OPENING WHICH EXCEEDS 24" IN EITHER DIRECTION. HORIZONTAL BARS SHALL EXTEND 24" BEYOND THE CORNERS OF THE OPENING AND VERTICAL BARS SHALL EXTEND TO TOP OF WALL. VERTICAL REINFORCING SHALL BE PROVIDED AT ENDS, CORNERS AND EACH SIDE OF CONTROL JOINTS. SEE TYPICAL DETAILS FOR OPENINGS WHICH EXCEED 32" IN EITHER DIRECTION.
9. ALL MASONRY WALLS SHALL BE GROUTED SOLID.
10. WHERE WALLS ARE NOT GROUTED SOLID, EACH GROUT POUR SHALL TERMINATE FLUSH WITH THE TOP OF THE UPPERMOST UNIT EXCEPT AT CELLS WITH VERTICAL REINFORCING WHERE GROUT SHALL BE 1-1/2" BELOW TOP OF UNIT TO PROVIDE CONSTRUCTION KEY. WHERE WALLS ARE GROUTED SOLID, EACH GROUT POUR SHALL TERMINATE 1-1/2" BELOW TOP OF UNIT.
11. GROUT POURS SHALL NOT EXCEED 5'-0" UNLESS HIGH LIFT GROUTING PROCEDURES ARE FOLLOWED.
12. THE USE OF HIGH LIFT GROUTING PROCEDURES REQUIRE THE APPROVAL OF THE ARCHITECT AND ENGINEER AND SHALL NOT EXCEED THE MAXIMUM HEIGHTS GIVEN IN TABLE 1.19.1 OF TMS 402-08/ACI 530-08/ASCE 5-08. GROUT DEMONSTRATION PANELS, AS PRESCRIBED BY THE ARCHITECT AND ENGINEER, SHALL BE REQUIRED WHERE REQUESTED GROUTING PROCEDURES DO NOT MEET THE LIMITS OF TABLE 1.19.1. ADDITIONALLY, ALL HIGH LIFT GROUTING SHALL INCLUDE INSPECTION PROCEDURES NEEDED TO VERIFY GROUT PLACEMENT DURING CONSTRUCTION.
13. ALL MASONRY BEAMS SHALL BE BUILT INTEGRAL WITH SUPPORT. NO TOOTHING OR DOWELING PERMITTED. UNITS WITH ONE END OPEN SHALL BE USED FOR ALL MASONRY BEAMS.
14. PROVIDE VERTICAL CONTROL JOINTS AT MAXIMUM SPACINGS NOTED BELOW UNLESS NOTED OTHERWISE IN THE SPECIFICATIONS AND/OR ON ARCHITECTURAL ELEVATIONS AND AT ALL CHANGES IN WALL ELEVATION AND MASONRY THICKNESS. CONTROL JOINTS SHALL NOT BE LOCATED DIRECTLY OVER OR CLOSER THAN 24" TO WALL OPENINGS (DOORS, WINDOWS, MECHANICAL OPENINGS, ETC.), OR WITHIN MASONRY JAMBS.
   REINFORCED MASONRY: 40 FT
   VENEER: 30 FT AND AT INTERFACE BETWEEN VENEER SUPPORTED BY FOUNDATIONS AND SUSPENDED STRUCTURAL ELEMENTS.
15. HORIZONTAL REINFORCEMENT SHALL TERMINATE AT EACH SIDE OF CONTROL JOINTS EXCEPT AT FLOOR AND ROOF LEVEL BOND BEAMS AND AT TOP OF PARAPET.
16. CONTROL JOINTS SHALL BE PROVIDED AT THE MASONRY SIDE OF EMBEDDED STEEL COLUMNS TO CONTROL CRACKING OF FACE SHELLS.
17. EMBED CHANNELS AND PLATES TO BE PLACED SO AS TO CREATE FLUSH SURFACE WITH FACE OF MASONRY. FLANGES ON CHANNEL EMBEDS SHALL BE HORIZONTAL.
18. ALL VERTICAL REINFORCING SHALL BE SECURED IN PLACE PRIOR TO GROUTING USING WIRE POSITIONERS OR OTHER ACCEPTABLE DEVICES. REINFORCING SHALL BE SECURED AT BAR-SPLICE LOCATIONS AND AT A SPACING NOT MORE THAN 120 BAR DIAMETERS.
19. UNLESS NOTED OTHERWISE, MASONRY WALLS SHALL BE CONSTRUCTED UTILIZING COMMON RUNNING-BOND WITH FULLY MORTARED BED JOINTS AROUND GROUTED CELLS.
20. MASONRY VENEER SHALL BE ANCHORED USING THE DUR-O-WAL VENEER ANCHOR ASSEMBLY SYSTEM, OR AN APPROVED EQUAL. REGARDLESS OF BACK-UP SYSTEM, PROVIDE A CONTINUOUS HORIZONTAL 9 GAUGE WIRE AT 16"O.C. IN VENEER MORTAR JOINTS FOR ANCHOR ATTACHMENT. POSITIVE ANCHORAGE TO THE WIRE SHALL BE PROVIDED TO SUPPORT NOT MORE THAN 2 SQUARE FEET OF WALL, WITH A HORIZONTAL SPACING NOT EXCEEDING 18".
   a. METAL STUDS; USE DUR-O-WAL D/A 213 HEAVY DUTY ANCHORS OR AN APPROVED EQUAL. THE DUR-O-WAL ASSEMBLY SHALL BE ATTACHED TO WOOD STUDS USING A # 12 X 2" WOOD SCREWS OR TO METAL STUDS USING #10 SCREWS.
   b. BRICK AND BLOCK WALLS; USE DUR-O-WAL DUR-O-EYE D/A 515 ANCHORS OR AN APPROVED EQUAL, AT SPACINGS NOTED ABOVE. INSTALL A 2 WIRE 9 GAUGE LADUR TYPE JOINT REINFORCEMENT AT 16"O.C. IN THE BACK-UP WALL FOR ANCHORAGE ATTACHMENT.
   c. CONCRETE WALLS; USE DUR-O-WAL D/A 100-D/A 720 DOVE TAIL ANCHOR SYSTEM OR AN APPROVED EQUAL AT SPACINGS NOTED ABOVE.
22. ELECTRICAL CONDUIT SHALL NOT BE PLACED IN CELLS THAT CONTAIN REBAR. CONDUIT IS ALLOWED TO PASS THROUGH REINFORCED CELLS WHEN IT OCCURS PERPENDICULAR TO THE REBAR. CONDUIT SHALL NOT CONTACT REBAR AS IT PASSES. THERE SHALL BE 1" CLEAR BETWEEN CONDUIT AND REBAR.

N. DEFERRED SUBMITTALS

1. DEFERRED SUBMITTALS ARE COMPLETE PACKAGES TO BE SUBMITTED FOR REVIEW THAT INCLUDE DRAWINGS AND CALCULATIONS FOR ALL ELEMENTS AND CONNECTIONS OF ITEMS LISTED BELOW. DEFERRED SUBMITTALS SHALL BEAR THE STAMP AND SIGNATURE OF THE DESIGN PROFESSIONAL RESPONSIBLE FOR THE DESIGN.
2. DEFERRED SUBMITTAL COMPONENTS SHALL NOT BE INSTALLED UNTIL APPROVED BY THE BUILDING OFFICIAL.
3. DEFERRED SUBMITTALS SHALL INCLUDE, BUT ARE NOT LIMITED TO:
   a. OPEN WEB JOISTS & GIRDERS.
   b. BRB BRACES, GUSSET PLATES AND CONNECTIONS. THESE DESIGNS SHALL BE BASED UPON QUALIFIED CYCLIC TESTS IN ACCORDANCE WITH SECTION 16.2(C) OF AISC 341-05.
   c. RAISED PAVER SYSTEM AT THE SECOND FLOOR BALCONY.

LEGEND OF SYMBOLS AND ABBREVIATIONS

AB	=	ANCHOR BOLT
ABV	=	ABOVE
ARCH	=	ARCHITECT
BLW	=	BELOW
BN	=	BOUNDARY NAILING
CL	=	CENTER LINE
CMU	=	CONCRETE MASONRY UNIT
COL	=	COLUMN
CONC	=	CONCRETE
DBA	=	DEFORMED BAR ANCHOR
DBE	=	DECK BEARING ELEVATION
ELEV	=	ELEVATION
EN	=	EDGE NAILING
FDN	=	FOUNDATION
FTG	=	FOOTING
FFE	=	FINISHED FLOOR ELEVATION
HSA	=	HEADED STUD ANCHOR
JBE	=	JOIST BEARING ELEVATION
KB	=	KICKER BRACE
MIN	=	MINIMUM
MAX	=	MAXIMUM
MECH	=	MECHANICAL
MEZZ	=	MEZZANINE
OAE	=	OR APPROVED EQUAL
OPP	=	OPPOSITE
PL	=	PLATE
REINF	=	REINFORCING
REQ	=	REQUIRED
SIM	=	SIMILAR
TOF	=	TOP OF FOOTING
TOB	=	TOP OF BEAM ELEVATION
TOM	=	TOP OF MASONRY ELEVATION
TOC	=	TOP OF CONCRETE SLAB
TOG	=	TOP OF GIRDER ELEVATION
TOS	=	TOP OF STEEL ELEVATION
TYP	=	TYPICAL
UNO	=	UNLESS NOTED OTHERWISE
NS, FS	=	NEAR SIDE, FARSIDE

FOOTING MARK
TOP OF FOOTING ELEV.
SECTION MARK
SHEET NUMBER
TOP OF FOUNDATION WALL OR COLUMN PIER ELEV.
SHEAR WALL - SEE SCHEDULE
MIN. LENGTH OF SHEAR WALL
S — S FOOTING STEP
MASONRY WALL
DEPRESS FDN./WALL AND POUR FLOOR SLAB OVER
MASONRY BEAM
CONCRETE BEAM
WOOD BEAM
ELEVATION
L FRAMING ANGLE SEE TYPICAL DETAIL
C FRAMING CHANNEL SEE TYPICAL DETAIL
(L) ITEMS, DETAILS, & SYSTEMS WHICH ARE PART OF THE LATERAL FORCE RESISTING SYSTEM.
MOMENT RESISTING CONNECTIONS - SEE DETAIL
MOMENT RESISTING CANTILEVER CONNECTIONS - SEE DETAIL

STRUCTURAL SHEET INDEX

SHEET NUMBER	SHEET NAME
SG001	STRUCTURAL NOTES
SG601	SCHEDULES
SB101A	FOOTING & FOUNDATION PLAN
SB101B	FOOTING & FOUNDATION PLAN
SB501	DETAILS
SB502	DETAILS
SF102A	SECOND FLOOR FRAMING PLAN
SF102B	SECOND FLOOR FRAMING PLAN
SF103A	THIRD FLOOR FRAMING PLAN
SF103B	THIRD FLOOR FRAMING PLAN
SF104A	ROOF FRAMING PLAN
SF104B	ROOF FRAMING PLAN
SF105	HIGH ROOF PLAN
SF106	HIGH ROOF (ADD ALTERNATE #4)
SF201	STAIR FRAMING
SF301	BRACED FRAME ELEVATIONS
SF302	BRACED FRAME ELEVATIONS
SF303	ELEVATION
SF501	TYPICAL DETAILS
SF502	DETAILS
SF503	DETAILS
SF504	DETAILS
SF505	DETAILS
SF701	ELEVATIONS
SF702	ELEVATIONS
SF703	ELEVATIONS
SF704	DETAILS
SF705	DETAILS
SF901	SCHEMATIC REFERENCE

MHTN ARCHITECTS
MHTN Architects, Inc.
420 East South Temple
Suite 100
Salt Lake City, Utah 84111
Telephone (801) 595-6700
Telefax (801) 595-6717
www.mhtn.com

ARW ENGINEERS
structural consultants
1594 W. Park Cir. Ogden, Utah 84404
ph. 801.782.6008 fx. 801.782.4656

WEBER STATE UNIVERSITY
RESIDENTIAL LIFE PHASE II - BLDG 2
DFCM PROJECT NUMBER: 10176810

WEBER STATE UNIVERSITY
OGDEN, UTAH 84408

SEAL

MHTN PROJECT NO. 2010543
DRAWN BY: BLP CHECKED BY: JLA

ISSUED:

NO.	DATE	DESCRIPTION
01	05/17/2011	FOR CONSTRUCTION

CONTRACTOR TO VERIFY DRAWINGS IN FIELD USE REFLECT LAST REVISION DATE.

NO.	DATE	DESCRIPTION

SHEET NAME
STRUCTURAL NOTES

CONSTRUCTION DOCUMENTS
17 MAY 2011

SHEET NUMBER
SG001

X:\DRAWINGS 2010\10613 - WSU Housing Bldg 2\S - 10613 - WSU Res Life Bldg II (2011)_benjaminp.rvt
5/16/2011 1:57:16 PM

ROOF DECK SCHEDULE (L)

AREA	DECK			ATTACHMENT							MIN. SHEAR CAPACITY
				SUPPORTS		SIDE SEAMS			SUPPORTS PARALLEL TO FLUTES		
	DEPTH	TYPE	GA.	DIA. WELD	PATTERN	#12 TEK SCREWS	TOP SEAM WELD	PUNCH LOCK	DIA. WELD	SPA.	
A	1 1/2	B	22	3/4	36/7	---	---	24"	3/4"	16"	620 plf
B	1 1/2	B	20	3/4	36/7	---	---	6"	3/4"	12"	960 plf
C	1 1/2	B	22	3/4	36/7	---	---	24"	3/4"	8"	620 plf
D	1 1/2	B	20	3/4	36/7	---	---	18"	3/4"	18"	944 plf
E	1 1/2	B	22	3/4	36/7	---	---	6"	3/4"	12"	844 plf
F	1 1/2	B	20	3/4	36/7	---	---	4"	3/4"	24"	1338 plf
G	1 1/2	B	20	3/4	36/7	---	---	24"	3/4"	24"	722 plf

FASTENING PATTERNS

WELD PATTERN : 36/7

NOTES :
1. TOP SEAM WELDS SHALL BE 1-1/2" LONG AND SHALL BE ACCORDING TO SDI STANDARDS.
2. MIN. SHEAR CAPACITY IS THE CAPACITY REQUIRED FOR ALTERNATE SYSTEMS.
3. USE NESTABLE (OVERLAPPING) SIDE SEAMS AT SCREW ATTACHMENTS AND INTERLOCKING SIDE SEAMS AT WELDS.
4. ALL DECK WITH A PROFILE DEPTH OF 2" OR LESS SHALL HAVE NESTED OR TELESCOPED END LAPS.
5. SUBMIT CURRENT ICC APPROVAL FOR ALL DECKS.
6. OTHER PNUEMATIC FASTENING SYSTEMS MUST MEET MIN. SHEAR CAPACITY SHOWN IN SCHEDULE. ALL ALTERNATE SYSTEMS SHALL BE SUBMITTED TO ENGINEER FOR REVIEW & APPROVAL.

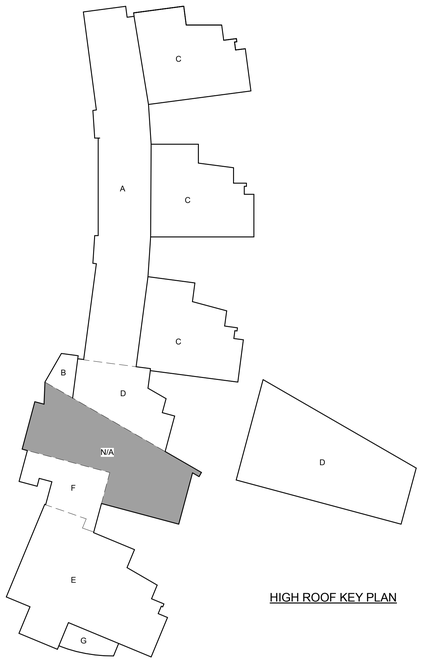

HIGH ROOF KEY PLAN

LOW ROOF KEY PLAN

FOOTING SCHEDULE (L)

MARK	WIDTH	LENGTH	THICK	LENGTHWISE REINF.		CROSSWISE REINF.			MIN. THICKNESS OF REPLACEMENT GRANULAR FILL	REMARKS
				NO.	SIZE	NO.	SIZE	SPA.		
FC2	2'-0"	CONT.	12"	(2)	#5	--	--	--	0 FEET	
FC2.5	2'-6"	CONT.	12"	(2)	#5	--	--	--	1 FEET	
FC3	3'-0"	CONT.	14"	(3)	#6	--	#3	24"	2 FEET	
FC3.5	3'-6"	CONT.	12"	(3)	#5	--	#3	24"	3 FEET	
FC4	4'-0"	CONT.	14"	(4)	#5	--	#3	24"	3 FEET	
FC4.5	4'-6"	CONT.	16"	(4)	#5	--	#3	24"	0 FEET	
FC5	5'-0"	CONT.	16"	(5)	#5	--	#3	24"	0 FEET	
FC5.5	5'-6"	CONT.	16"	(5)	#5	--	#3	24"	0 FEET	
FC6	6'-0"	CONT.	20"	(6)	#5	--	#5	16"	0 FEET	
FC7	7'-0"	CONT.	24"	(7)	#6	--	#5	10"	0 FEET	
FC7A	7'-0"	CONT.	24"	(7)	#7	--	#5	10"	0 FEET	
FC7B	7'-0"	CONT.	24"	(7)	#9	--	#5	10"	0 FEET	
F3	3'-0"	3'-0"	12"	(3)	#5	(3)	#5	--	0 FEET	
F3.5	3'-6"	3'-6"	12"	(3)	#5	(3)	#5	--	0 FEET	
F4	4'-0"	4'-0"	12"	(4)	#5	(4)	#5	--	0 FEET	
F4.5	4'-6"	4'-6"	12"	(4)	#5	(4)	#5	--	1 FEET	SEE B3/SF501
F5	5'-0"	5'-0"	12"	(5)	#5	(5)	#5	--	1 FEET	SEE B3/SF501
F5.5	5'-6"	5'-6"	12"	(5)	#6	(5)	#6	--	1 FEET	SEE B3/SF501
F6	6'-0"	6'-0"	14"	(6)	#6	(6)	#6	--	1 FEET	SEE B3/SF501
F6.5	6'-6"	6'-6"	14"	(6)	#6	(6)	#6	--	2 FEET	SEE B3/SF501
F7	7'-0"	7'-0"	16"	(7)	#6	(7)	#6	--	2 FEET	SEE B3/SF501
F7.5	7'-6"	7'-6"	16"	(7)	#7	(7)	#7	--	2 FEET	SEE B3/SF501
F8	8'-0"	8'-0"	18"	(8)	#7	(8)	#7	--	3 FEET	SEE B3/SF501
F8.5	8'-6"	8'-6"	18"	(8)	#7	(8)	#7	--	3 FEET	SEE B3/SF501
F9	9'-0"	9'-0"	20"	(9)	#7	(9)	#7	--	3.5 FEET	SEE B3/SF501
F9.5	9'-6"	9'-6"	20"	(10)	#7	(10)	#7	--	3.5 FEET	SEE B3/SF501
FS6	4'-6"	6'-0"	14"	(5)	#5	(6)	#4	--	1 FEET	SEE B3/SF501 REINF. T & B
FS7	5'-6"	7'-0"	14"	(6)	#5	(7)	#4	--	1 FEET	SEE B3/SF501 REINF. T & B

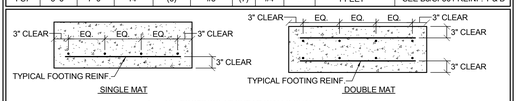

1. ALL FOOTINGS AT SHEAR WALLS SHALL HAVE A DOUBLE MAT OF REINFORCING.
2. REFERENCE THE SOILS REPORT FOR MORE INFORMATION.

LATERAL FORCE RESISTING ELEMENT KEY PLAN (L)

ESTABLISHED PER 2009 IBC SECTION 1705.2

ITEM	DESCRIPTION
SPECIAL INSPECTIONS & TESTING	REFER TO SPECIAL INSPECTION SCHEDULE
STRUCTURAL OBSERVATIONS	OBSERVATION VISITS SHALL BE PERFORMED AS NEEDED TO VERIFY THE CONSTRUCTION OF CRITICAL BUILDING ELEMENTS, SUCH AS: FOOTINGS, MOMENT FRAMES, COLLECTORS, AND FLOOR & ROOF DIAPHRAGMS. OBSERVATION REPORTS FOR EACH VISIT SHALL BE SENT DIRECTLY TO THE ARCHITECT FOR DISTRIBUTION TO THE CONTRACTOR AND BUILDING OFFICIAL.

DESIGNATED SIESMIC & MAIN WIND-FORCE-RESISTING SYSTEM

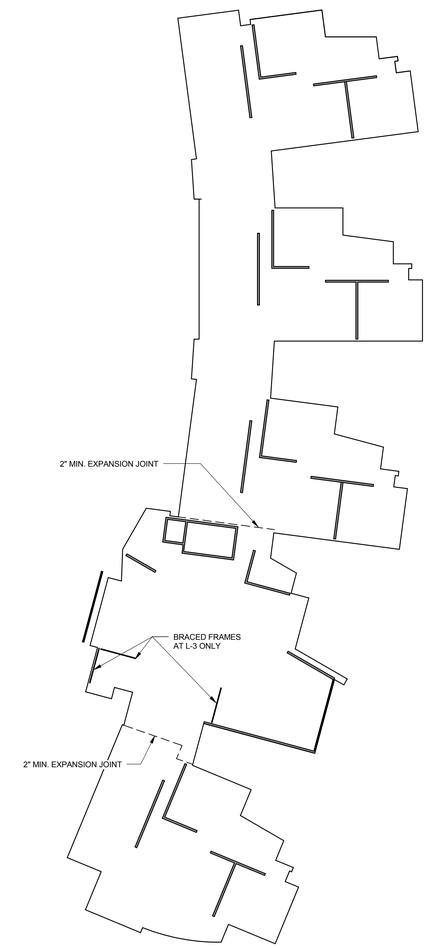

= SHEAR WALL

= BRACED FRAMES

KEY PLAN

TYPICAL MASONRY / JAMB REINFORCING SCHEDULE

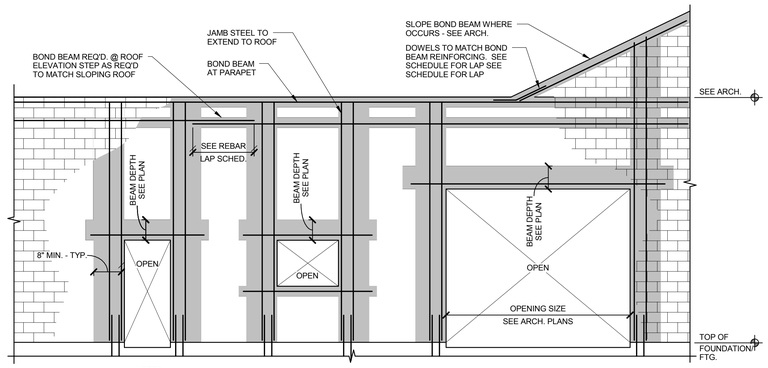

NOTES:
1. USE OPEN-END UNITS AT INTERSECTIONS OF BEAMS AND JAMBS.
2. TYPICAL HORIZONTAL BOND BEAMS MAY BE ADJUSTED UP OR DOWN BY ONE COURSE PROVIDED THE OVERALL NUMBER OF REQUIRED BOND BEAMS ARE INSTALLED.
3. TYPICAL HORIZONTAL AND VERTICAL WALL REINFORCING NOT SHOWN FOR CLARITY, SEE PLAN AND SCHEDULE FOR TYPICAL WALL REINFORCING.
4. JAMB REINFORCING SHOWN IS SCHEMATIC. SEE SCHEDULE & DETAILS FOR ACTUAL JAMB REINF.
5. ALL MASONRY SHALL CONFORM TO F'M = 2500 PSI PER THE STRUCTURAL NOTES.

MASONRY BEAM SCHEDULE (L)

MARK	NOMINAL THICKNESS	BOTTOM REINF.	TOP REINF.	VERTICAL REINF.	MIN. GROUT DEPTH	COMMENTS
MB-1	8"	(2) #5	(2) #5	N/A	N/A	
MB-2	8"	(4) #5	(4) #5	(2) #4 @ 8"	56"	'U' SHAPED BAR

NOTES:
1. WHERE SPECIFIC BEAMS ARE NOT NOTED ON THE PLANS USE MB-1
2. FIRST VERTICAL BAR TO BE WITHIN 8" OF END OF BEAM.
3. SEE TYPICAL ELEVATION - VIEW OF BEAM.
4. VERTICAL REINFORCING SHALL HAVE HOOKS TOP AND BOTTOM.

MASONRY JAMB SCHEDULE (L)

MARK	NOMINAL THICKNESS	VERTICAL REINF.	TIES	CONFIG.	COMMENTS
MJ-1	8"	(2) #5	N/A	A	
MJ-2	8"	(3) #5	N/A	A	
MJ-3	8"	(4) #5	N/A	B	
MJ-4	8"	(5) #5	N/A	B	
MJ-5	8"	(7) #5	N/A	D	
MJ-6	10"	(2) #5	N/A	A	
MJ-7	10"	(4) #5	N/A	B	
MJ-8	8"	(6) #5	N/A	B	

NOTES:
1. WHERE SPECIFIC JAMBS ARE NOT NOTED ON THE PLANS USE MJ-1 WHERE INDICATED BY THE FILLED REGION.
2. ALL VERT. REINFORCING SHALL HAVE MATCHING DOWELS CAST INTO FOUNDATIONS.
3. HORIZONTAL REINFORCING NOT SHOWN.
4. JAMBS TO BE GROUTED SOLID.
5. JAMB MARKS SHOWN ON THE PLAN OCCUR ABOVE THE LEVEL ON WHICH THEY ARE SHOWN.

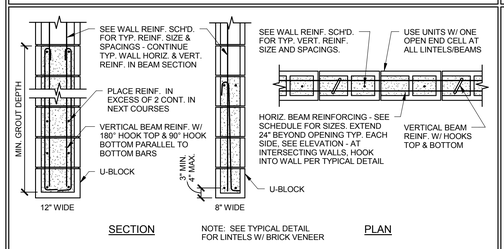

SECTION

NOTE: SEE TYPICAL DETAIL FOR LINTELS W/ BRICK VENEER

PLAN

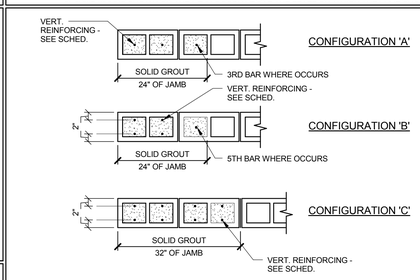

CONFIGURATION 'A'

CONFIGURATION 'B'

CONFIGURATION 'C'

CONFIGURATION 'D'

CONFIGURATION 'E'

MASONRY WALL SCHEDULE (L)

MARK	THICK.	VERT. REINF.		HORIZ. REINF.			BOND BEAM REINF.		COMMENTS
		SIZE	SPACE	NO.	SIZE	SPACE	@ ROOF	@ FLOOR	
MW-1	8"	#5	32"	(2)	#4	48"	(2) #4	(2) #4	
MW-2	8"	#5	32"	(2)	#4	16"	(2) #4	(2) #4	SEE NOTE 6
MW-3	8"	#5	32"	(2)	#4	24"	(2) #4	(2) #4	SEE NOTE 6
MW-4	8"	#5	32"	(2)	#4	16"	(2) #4	(2) #4	f'm = 2500 PSI - SEE NOTE 6
MW-5	8"	#5	32"	(2)	#4	48"	(2) #4	(2) #4	f'm = 2500 PSI - SEE NOTE 6
MW-6	10"	#5	16"	(2)	#5	48"	(2) #5	(2) #5	SEE NOTE 6
MW-7	8"	#5	32"	(2)	#4	16"	(2) #4	(2) #4	f'm = 2500 PSI - SEE NOTE 6

NOTES:
1. FOR ANY CMU WALLS NOT SPECIFICALLY CALLED OUT IN PLANS, USE MW1
2. VERT. REINFORCING TO BE @ CL. OF WALL UNLESS OTHERWISE NOTED.
3. ALL MASONRY WALLS SHALL BE SOLID GROUTED.
4. SEE STRUCTURAL NOTES FOR ADDITIONAL INFORMATION.
5. WALL MARKS SHOWN ON PLAN OCCUR ABOVE THE LEVEL ON WHICH THEY ARE SHOWN.
6. HORIZ. BOND BEAM REINFORCING SHALL BE HOOKED AROUND VERTICAL END OF WALL REINFORCING. THIS NOTE ONLY APPLIES WHERE SPECIFICALLY NOTED ABOVE.

2009 IBC REBAR LAP SPLICE SCHEDULE

FOR CONCRETE APPLICATIONS (ACI 318 - 08)

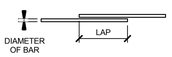

BAR SIZE		f'c = 3000 PSI				f'c = 4000 PSI			
		TYP. SPLICES		TOP BAR SPLICES		TYP. SPLICES		TOP BAR SPLICES	
NO.	DIA.	CLASS 'A'	CLASS 'B'	CLASS 'A'	CLASS 'B'	CLASS 'A'	CLASS 'B'	CLASS 'A'	CLASS 'B'
2	0.250	12"	16"	15"	19"	12"	16"	13"	17"
3	0.375	17"	22"	22"	28"	15"	19"	19"	25"
4	0.500	22"	29"	29"	38"	19"	25"	25"	33"
5	0.625	28"	36"	36"	47"	24"	31"	31"	41"
6	0.750	33"	43"	43"	56"	29"	37"	37"	49"
7	0.875	48"	63"	63"	81"	42"	54"	54"	71"
8	1.000	55"	72"	72"	93"	48"	62"	62"	81"
9	1.128	62"	80"	80"	105"	54"	70"	70"	91"
10	1.270	69"	89"	89"	116"	60"	78"	78"	101"
11	1.410	76"	98"	98"	128"	66"	85"	85"	111"

NOTES :
1. ALL LAP SPLICE LENGTHS ARE CLASS 'A' UNLESS NOTED OTHERWISE.
2. MECHANICAL COUPLERS MAY BE USED IN LIEU OF LAP SPLICES SHOWN. SEE STRUCTURAL NOTES FOR MINIMUM COUPLER CAPACITY. WHERE MECHANICAL COUPLERS ARE USED, STAGGER ADJACENT SPLICES A MINIMUM OF 24".
3. CONCRETE LAP LENGTHS SHALL BE INCREASED BY 20% WHERE EPOXY COATING IS USED.
4. TOP BAR IS ANY HORIZONTAL BAR WITH MORE THAN 12" OF FRESH CONCRETE CAST BELOW IT.

2009 IBC REBAR LAP SPLICE SCHEDULE

FOR MASONRY APPLICATIONS (ACI 530 - 08)

(POSSIBLE APPLICATIONS)

(1) BAR AT ℄ OF WALL (VERTICAL OR HORIZONTAL)				BARS AT EACH FACE OF WALL (VERTICAL OR HORIZONTAL)			
BAR SIZE		8" WALL	10" WALL	BAR SIZE		8" WALL	10" WALL
NO.	DIA.			NO.	DIA.		
2	0.250	12"	12"	2	0.250	12"	12"
3	0.375	12"	12"	3	0.375	12"	12"
4	0.500	16"	16"	4	0.500	22"	22"
5	0.625	20"	20"	5	0.625	36"	36"
6	0.750	33"	30"	6	0.750	54"	54"
7	0.875	46"	35"	7	0.875	63"	63"
8	1.000	MECH. COUPLER	MECH. COUPLER	8	1.000	MECH. COUPLER	MECH. COUPLER
9	1.128	MECH. COUPLER	MECH. COUPLER	9	1.128	MECH. COUPLER	MECH. COUPLER

NOTES:
1. MECHANICAL COUPLERS ARE REQUIRED FOR BARS IN MASONRY AS NOTED IN THE SCHEDULE.
2. MECHANICAL COUPLERS MAY BE USED IN LIEU OF LAP SPLICES SHOWN IN SCHEDULE.
3. SEE STRUCTURAL NOTES FOR MINIMUM COUPLER CAPACITIES.

MHTN ARCHITECTS
MHTN Architects, Inc.
420 East South Temple
Suite 100
Salt Lake City, Utah 84111
Telephone (801) 595-6700
Telefax (801) 595-6717
www.mhtn.com

ARW ENGINEERS
structural consultants
1594 W. Park Cir. Ogden, Utah 84404
ph. 801.782.6008 fx. 801.782.4656

WEBER STATE UNIVERSITY
RESIDENTIAL LIFE PHASE II - BLDG 2
DFCM PROJECT NUMBER: 10176810

WEBER STATE UNIVERSITY
OGDEN, UTAH 84408

SEAL

MHTN PROJECT NO. 2010543

DRAWN BY: Author CHECKED BY: Checker

ISSUED:

NO.	DATE	DESCRIPTION
01	05/17/2011	FOR CONSTRUCTION

CONTRACTOR TO VERIFY DRAWINGS IN FIELD USE REFLECT LAST REVISION DATE:

NO.	DATE	DESCRIPTION

SHEET NAME
SCHEDULES

CONSTRUCTION DOCUMENTS
17 MAY 2011

SHEET NUMBER
SG601

X:\DRAWINGS 2010\10613 - WSU Housing Bldg 2\S - 10613 - WSU Res Life Bldg II (2011)_benjaminp.xrf
5/16/2011 2:01:55 PM

FOOTING & FOUNDATION NOTES

1. SEE SHEET SG001FOR GENERAL STRUCTURAL NOTES.
2. ALL FOOTINGS SHALL BE PLACED ON SOIL WHICH HAS BEEN PREPARED PER THE SOILS REPORT FOR THE BEARING PRESSURE SHOWN IN THE STRUCTURAL NOTES.
3. ALL COLUMN FOOTINGS SHALL BE CENTERED BELOW COLUMNS U.N.O.
4. VERIFY ALL DIMENSIONS WITH DRAWINGS AND NOTIFY ENGINEER OF ANY DISCREPANCIES FOUND.
5. SEE SHEET SG001FOR FOOTING SCHEDULE.
6. PROVIDE DOWELS IN FOOTINGS / FOUNDATIONS TO MATCH VERTICAL WALL REINFORCING U.N.O.
7. SEE SHEET SB501FOR TYPICAL FOOTING AND FOUNDATION DETAILS.
8. ALL EXTERIOR WALL FOOTINGS TO BEAR A MINIMUM DIMENSION BELOW EXTERIOR GRADE AS NOTED IN GENERAL STRUCTURAL NOTES.
9. FOUNDATION WALLS ARE DESIGNED AND DETAILED FOR THE COMPLETED CONDITION. CONTRACTOR IS RESPONSIBLE FOR MEANS AND METHODS OF CONSTRUCTION. BACKFILLED WALLS SHALL BE ADEQUATELY BRACED DURING CONSTRUCTION AND BACKFILLING TO PRODUCE PLUMB AND TRUE FINISHED WALLS.
10. ALL ANCHORS, HOLD-DOWNS, ANCHOR BOLTS, DOWELS, EMBEDDED ITEMS, ETC. SHALL BE HELD IN PLACE PRIOR TO AND DURING CONCRETE AND/OR GROUT PLACEMENT.
11. COORDINATE ALL FOOTING DEPTHS (INTERIOR AND EXTERIOR) WITH DRAINS, CONDUITS, ETC. THAT MAY INTERFERE WITH FOOTINGS.
12. SEE B3/SB501 FOR TYPICAL FOOTING STEP REINFORCING.
13. REFER TO GEOTECHNICAL REPORT FOR BASEMENT WALL BACK FILL REQUIREMENTS. BACKFILL SHALL NOT BE COMPACTED AS STRUCTURAL FILL BUT AS LANDSCAPE FILL.
14. FOOTING SIZES INDICATED BY * * SHALL BE CONSTRUCTED PER DETAIL D5/SB501.

CONCRETE SLAB NOTES

1. SLAB ON GRADE SHALL BE 4" THICK CONCRETE U.N.O. SLAB SHALL BE UNDERLAIN BY FREE DRAINING MATERIAL AS PRESCRIBED IN THE SOILS REPORT.
2. SEE SHEET SB501 FOR CONTROL AND CONSTRUCTION JOINT INFORMATION.

MHTN ARCHITECTS
MHTN Architects, Inc.
420 East South Temple
Suite 100
Salt Lake City, Utah 84111
Telephone (801) 595-6700
Telefax (801) 595-6717
www.mhtn.com

ARW ENGINEERS
structural consultants
1094 W. Park Gr. Ogden, Utah 84404
ph. 801.782.6008 fx. 801.782.4656

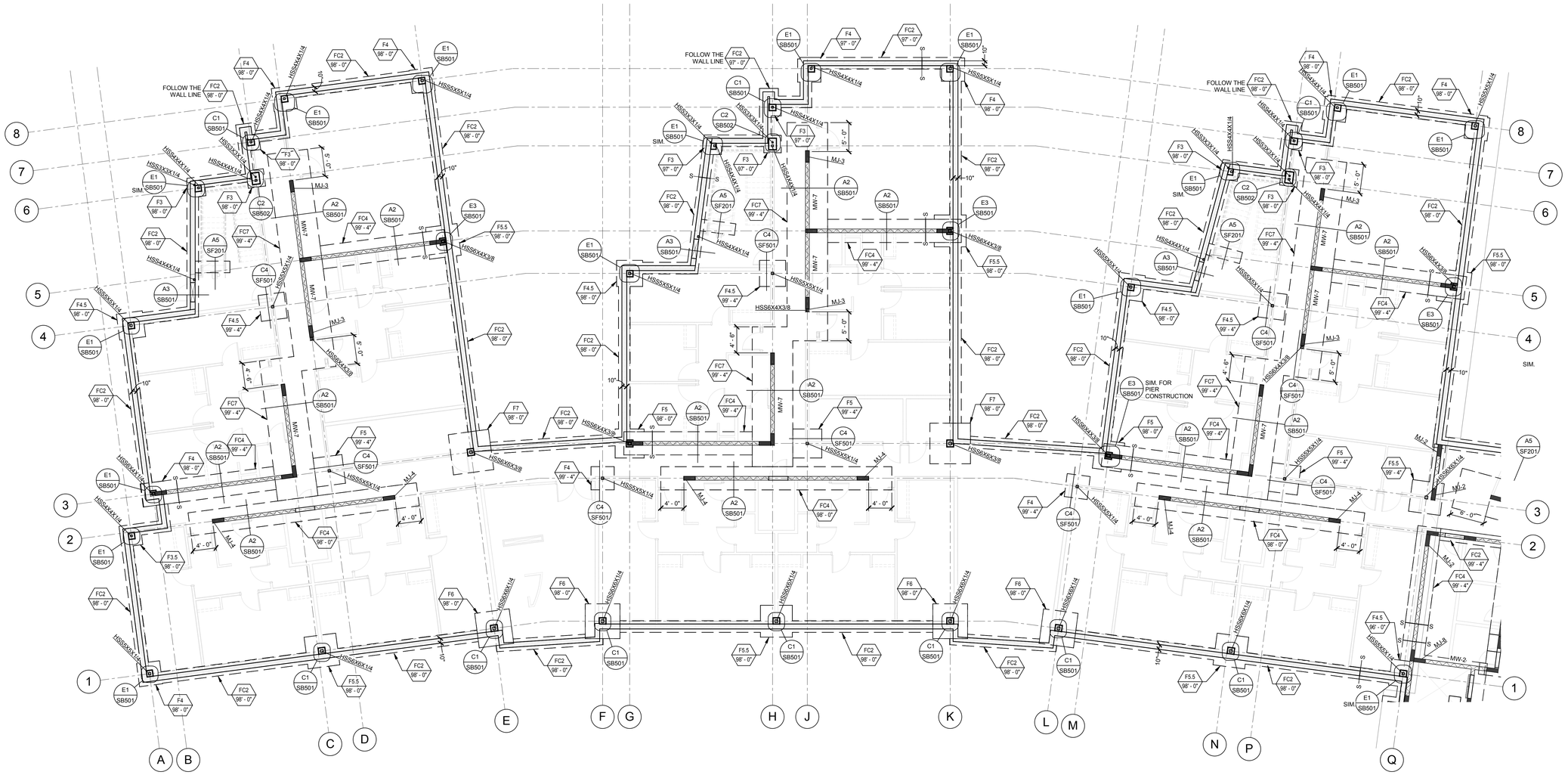

FOOTING & FOUNDATION PLAN - AREA A

SCALE : 1/8" = 1'-0"

A SB101A

NORTH

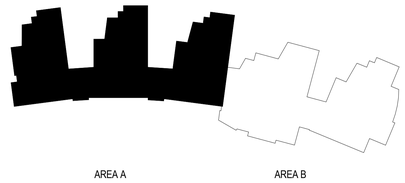

KEY PLAN

WEBER STATE UNIVERSITY
RESIDENTIAL LIFE PHASE II - BLDG 2

DFCM PROJECT NUMBER: 10176810

WEBER STATE UNIVERSITY
OGDEN, UTAH 84408

SEAL

MHTN PROJECT NO: 2010543

DRAWN BY: BLP CHECKED BY: JLA

ISSUED:

NO.	DATE	DESCRIPTION
01	05/17/2011	FOR CONSTRUCTION

CONTRACTOR TO VERIFY DRAWINGS IN FIELD USE REFLECT LAST REVISION DATE:

NO.	DATE	DESCRIPTION

SHEET NAME

FOOTING & FOUNDATION PLAN

CONSTRUCTION DOCUMENTS

17 MAY 2011

SHEET NUMBER

SB101A

X:\DRAWINGS 2010\10613 - WSU Housing Bldg 2\S - 10613 - WSU Res Life Bldg II (2011)_benjaminp.rvt
5/16/2011 1:56:01 PM

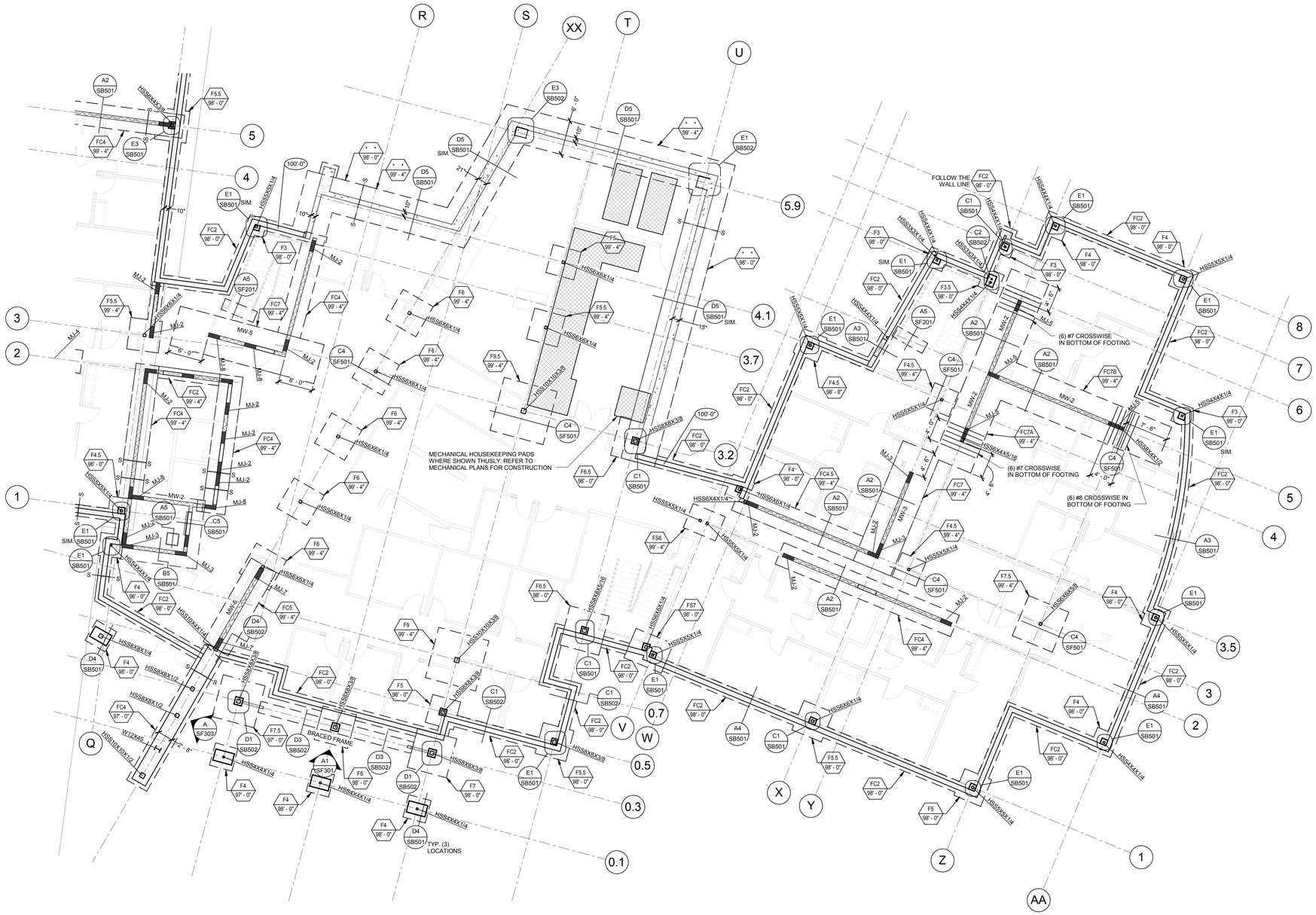

FOOTING & FOUNDATION PLAN - AREA B

SCALE : 1/8" = 1'-0"

SEE SHEET SB101A FOR FOOTING AND FOUNDATON NOTES

A
SB101B

NORTH

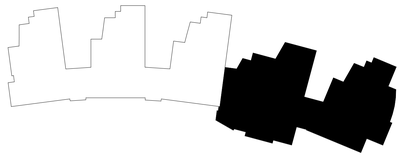

KEY PLAN

MHTN
ARCHITECTS
MHTN Architects, Inc.
420 East South Temple
Suite 100
Salt Lake City, Utah 84111
Telephone (801) 595-6700
Telefax (801) 595-6717
www.mhtn.com

ENGINEERS
structural consultants
1594 W. Park Cir. Ogden, Utah 84404
ph. 801.782.6068 fx. 801.782.4656

WEBER STATE UNIVERSITY
RESIDENTIAL LIFE PHASE II - BLDG 2

DFCM PROJECT NUMBER: 10176810

WEBER STATE UNIVERSITY
OGDEN, UTAH 84408

SEAL

MHTN PROJECT NO: 2010543

DRAWN BY: BLP CHECKED BY: JLA

ISSUED:

NO.	DATE	DESCRIPTION
01	05/17/2011	FOR CONSTRUCTION

CONTRACTOR TO VERIFY DRAWINGS IN FIELD USE REFLECT LAST REVISION DATE.

NO.	DATE	DESCRIPTION

SHEET NAME

FOOTING & FOUNDATION PLAN

CONSTRUCTION DOCUMENTS

17 MAY 2011

SHEET NUMBER

SB101B

X:\DRAWINGS 2010\10613 - WSU Housing Bldg 2\S - 10613 - WSU Res Life Bldg II (2011)_benjaminp.rvt
5/16/2011 1:56:02 PM

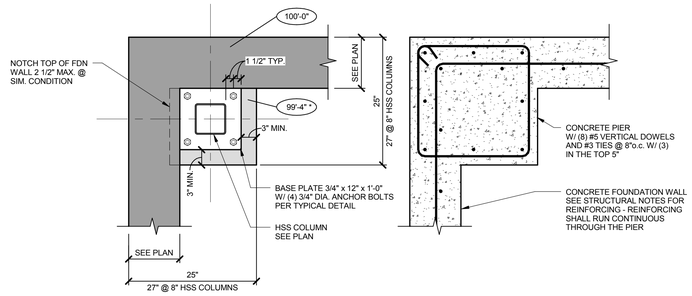

DETAIL
SCALE : NONE
E1 SB501

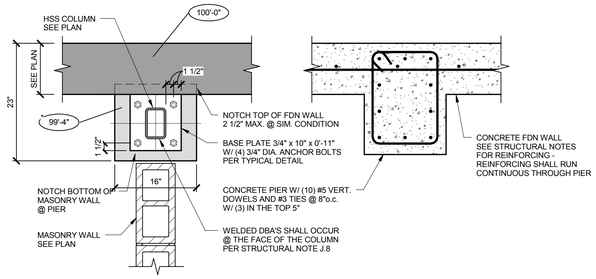

DETAIL
SCALE : NONE
E3 SB501

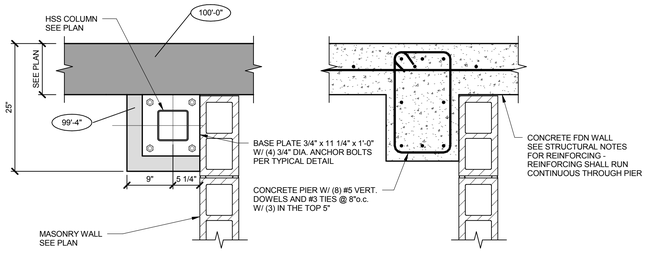

DETAIL
SCALE : NONE
D1 SB501

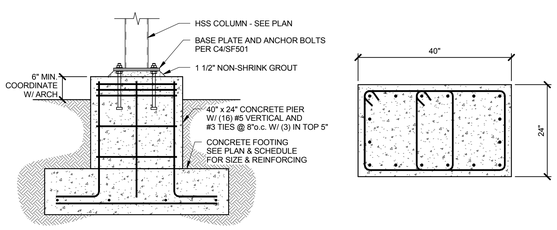

DETAIL
SCALE : NONE
D4 SB501

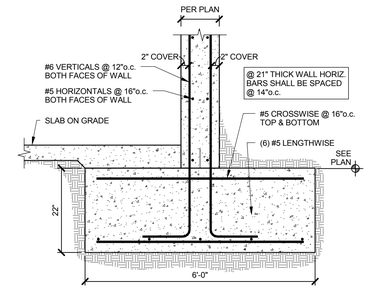

DETAIL
SCALE : NONE
D5 SB501

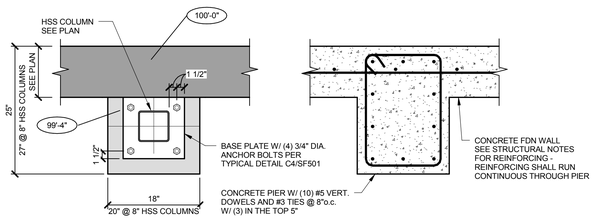

DETAIL
SCALE : NONE
C1 SB501

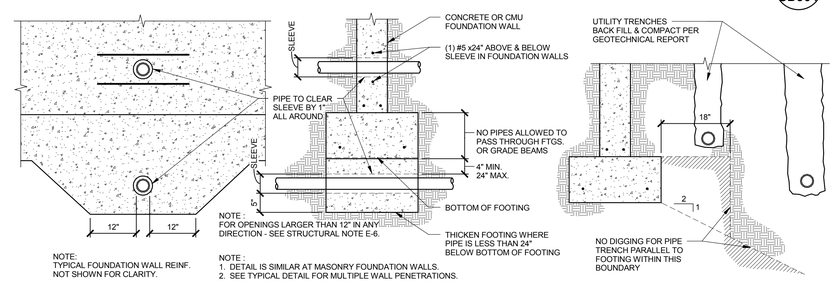

TYPICAL ALLOWABLE PIPING LOCATIONS @ FOOTING DETAIL
SCALE : NONE
C3 SB501

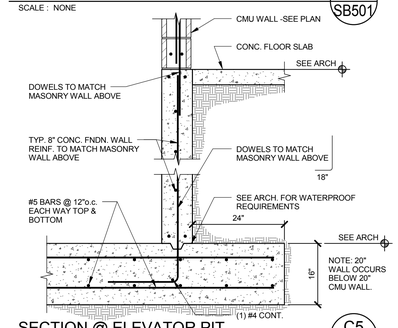

SECTION @ ELEVATOR PIT
SCALE : NONE
C5 SB501

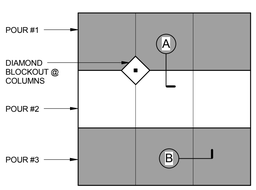

NOTES:
1. JOINTS SHALL OCCUR AT MAIN COLUMN/GRID LINES W/ 10'-0" MAX. SPACING BETWEEN JOINTS @ 4" SLABS; 12'-0" MAX. @ 5" SLABS, & 15'-0" MAX. @ 6" SLABS.
2. SEE PLAN FOR SLAB THICKNESS 'T' AND REINFORCING SIZE AND SPACING.

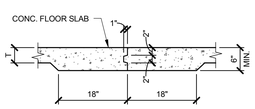

NOTE: THICKENING OF SLAB NOT REQUIRED FOR SLABS WITH T = 6" OR GREATER

T = SLAB THICKNESS

(OPTION 1)

CONSTRUCTION JOINT
SCALE : NONE
A

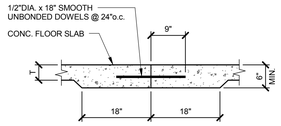

NOTE: THICKENING OF SLAB NOT REQUIRED FOR SLABS WITH T = 6" OR GREATER

T = SLAB THICKNESS

(OPTION 2)

CONSTRUCTION JOINT
SCALE : NONE
A

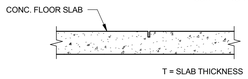

T = SLAB THICKNESS

CONTROL JOINT
SCALE : NONE
B

TYPICAL CONCRETE SLAB JOINTS
SCALE : NONE
B1 SB501

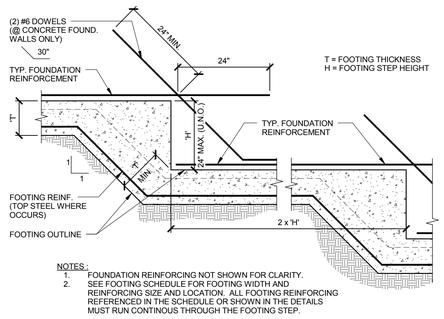

NOTES:
1. FOUNDATION REINFORCING NOT SHOWN FOR CLARITY.
2. SEE FOOTING SCHEDULE FOR FOOTING WIDTH AND REINFORCING SIZE AND LOCATION. ALL FOOTING REINFORCING REFERENCED IN THE SCHEDULE OR SHOWN IN THE DETAILS MUST RUN CONTINOUS THROUGH THE FOOTING STEP.

TYPICAL STEPPED FOOTING
SCALE : NONE
B3 SB501

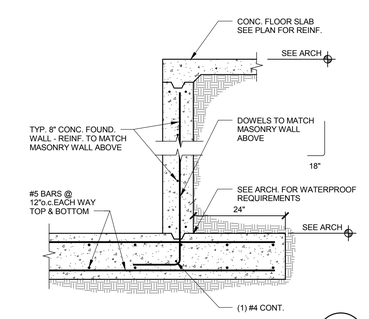

DETAIL
SCALE : NONE
B5 SB501

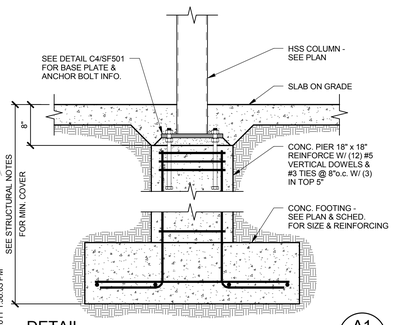

DETAIL
SCALE : NONE
A1 SB501

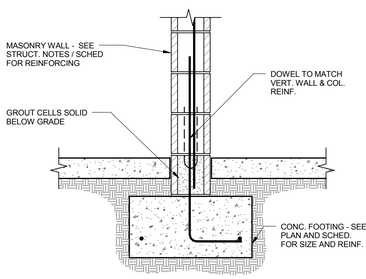

DETAIL
SCALE : NONE
A2 SB501 L

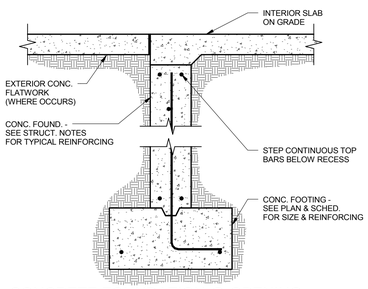

CONCRETE FOUNDATION @ OPENING
DETAIL
SCALE : NONE
A3 SB501

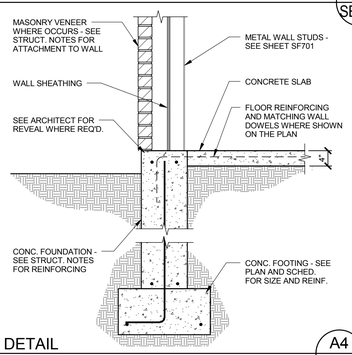

DETAIL
SCALE : NONE
A4 SB501

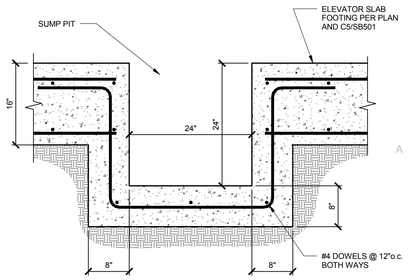

DETAIL
SCALE : NONE
A5 SB501

X:\DRAWINGS 2010\10613 - WSU Housing Bldg 2\S - 10613 - WSU Rees Life Bldg II (2011)_benjaminp.rvt
5/16/2011 1:56:03 PM

MHTN ARCHITECTS
MHTN Architects, Inc.
420 East South Temple
Suite 100
Salt Lake City, Utah 84111
Telephone (801) 595-6700
Telefax (801) 595-6717
www.mhtn.com

ARW ENGINEERS
structural consultants
1094 W. Park Gr. Ogden, Utah 84404
ph. 801.782.6068 fx. 801.782.4656

WEBER STATE UNIVERSITY
RESIDENTIAL LIFE PHASE II - BLDG 2
DFCM PROJECT NUMBER: 10176810

WEBER STATE UNIVERSITY
OGDEN, UTAH 84408

SEAL

MHTN PROJECT NO. 2010543
DRAWN BY: Author CHECKED BY: Checker

ISSUED:

NO.	DATE	DESCRIPTION
01	05/17/2011	FOR CONSTRUCTION

CONTRACTOR TO VERIFY DRAWINGS IN FIELD USE REFLECT LAST REVISION DATE.

NO.	DATE	DESCRIPTION

SHEET NAME
DETAILS

CONSTRUCTION DOCUMENTS
17 MAY 2011

SHEET NUMBER
SB501

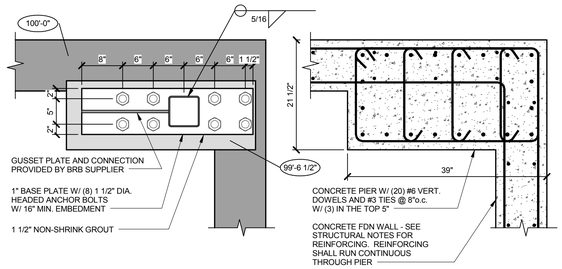

DETAIL
SCALE : NONE
E1 / SB502 L

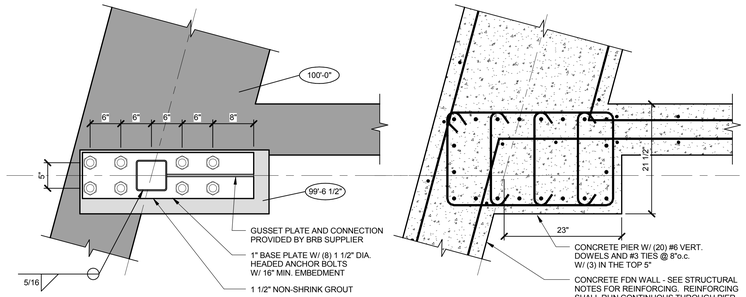

DETAIL
SCALE : NONE
E3 / SB502 L

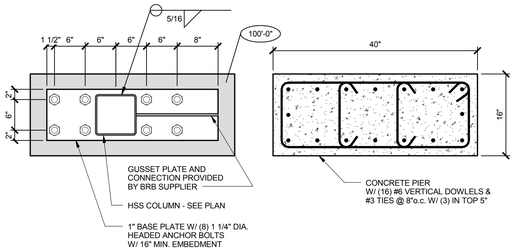

DETAIL
SCALE : NONE
D1 / SB502 L

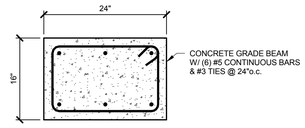

DETAIL
SCALE : NONE
D3 / SB502

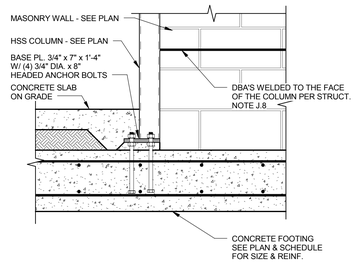

DETAIL
SCALE : NONE
D4 / SB502

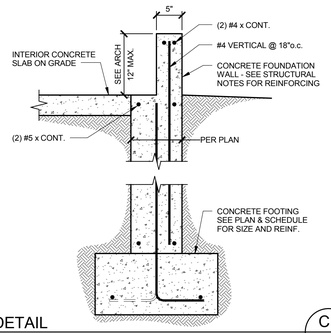

DETAIL
SCALE : NONE
C1 / SB502

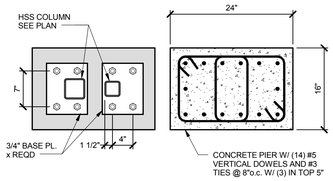

DETAIL
SCALE : NONE
C2 / SB502

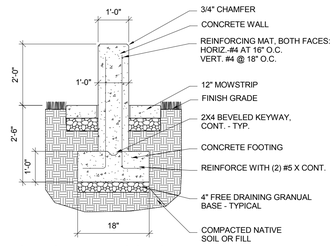

TYPICAL CURVED CONCRETE WALL SECTION
SCALE : NONE
C3 / SB502

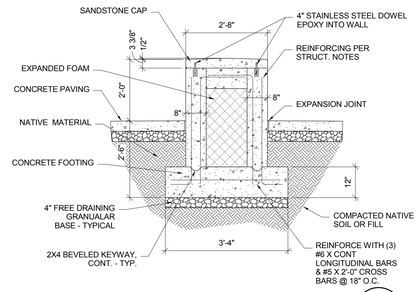

TYPICAL CONCRETE WALL SECTION
SCALE : NONE
C4 / SB502

MHTN ARCHITECTS
MHTN Architects, Inc.
420 East South Temple
Suite 100
Salt Lake City, Utah 84111
Telephone (801) 595-6700
Telefax (801) 595-6717
www.mhtn.com

ARW ENGINEERS
structural consultants
1094 W. Park Gr. Ogden, Utah 84404
ph. 801.782.6008 fx. 801.782.4656

WEBER STATE UNIVERSITY
RESIDENTIAL LIFE PHASE II - BLDG 2
DFCM PROJECT NUMBER: 10176810

WEBER STATE UNIVERSITY
OGDEN, UTAH 84408

SEAL

MHTN PROJECT NO. 2010543
DRAWN BY: Author CHECKED BY: Checker

ISSUED:

NO.	DATE	DESCRIPTION
01	05/17/2011	FOR CONSTRUCTION

CONTRACTOR TO VERIFY DRAWINGS IN FIELD USE REFLECT LAST REVISION DATE:

NO.	DATE	DESCRIPTION

SHEET NAME
DETAILS

CONSTRUCTION DOCUMENTS
17 MAY 2011

SHEET NUMBER
SB502

X:\DRAWINGS 2010\10613 - WSU Housing Bldg 2\S - 10613 - WSU Res Life Bldg II (2011)_benjaminp.rvt
5/16/2011 1:56:04 PM

FLOOR FRAMING NOTES :

1. SEE SHEET SG001 FOR GENERAL STRUCTURAL NOTES
2. CONCRETE FLOOR SLABS TO BE 5 1/2" THICK ON 20 GAUGE "W2" DECK REINFORCED WITH FIBERMESH UNLESS NOTED OTHERWISE.
3. ( ) DENOTES NUMBER OF 3/4" DIAMETER X 4" LONG HSA ALONG BEAM TOP FLANGE. REFER TO B5/SF501.
4. C = DENOTES AMOUNT OF CAMBER IN WF BEAM AT MIDSPAN.
5. PROVIDE TYPICAL SLAB CLOSURE AT ALL OPENINGS AND SLAB EDGES AS PER TYPICAL DETAILS.
6. WHERE STEEL FLOOR DECK RUNS PERPENDICULAR TO BEAMS WITH HSA, HSA SHALL BE FIELD WELDED TO BEAMS THRU DECK MATERIAL.
7. WHERE STEEL FLOOR DECK RUNS PARALLEL TO BEAMS WITH HSA, A 2-1/2" X CONTINUOUS EXPOSED BEAM FLANGE SURFACE IS REQUIRED FOR CONCRETE COVER OF HSA.
8. DO NOT PROVIDE CONTROL JOINTS IN SUSPENDED CONCRETE SLABS.
9. CONSTRUCTION JOINTS IN SLABS ON DECK SHALL NOT BE CLOSER THAN 12" TO HSA.
10. AT NON-COMPOSITE BEAMS AND JOISTS AND WHERE HSA'S ARE SPACED AT MORE THAN 12" O.C., WELD DECK TO SUPPORT WITH 3/4" DIAMETER PUDDLE WELDS AT 12" O.C.
11. WHERE BEAMS ATTACH TO THE ENDS OF MASONRY WALLS , DETAIL B3/SF502 IS THE TYPICAL DETAIL UNLESS NOTED OTHERWISE.

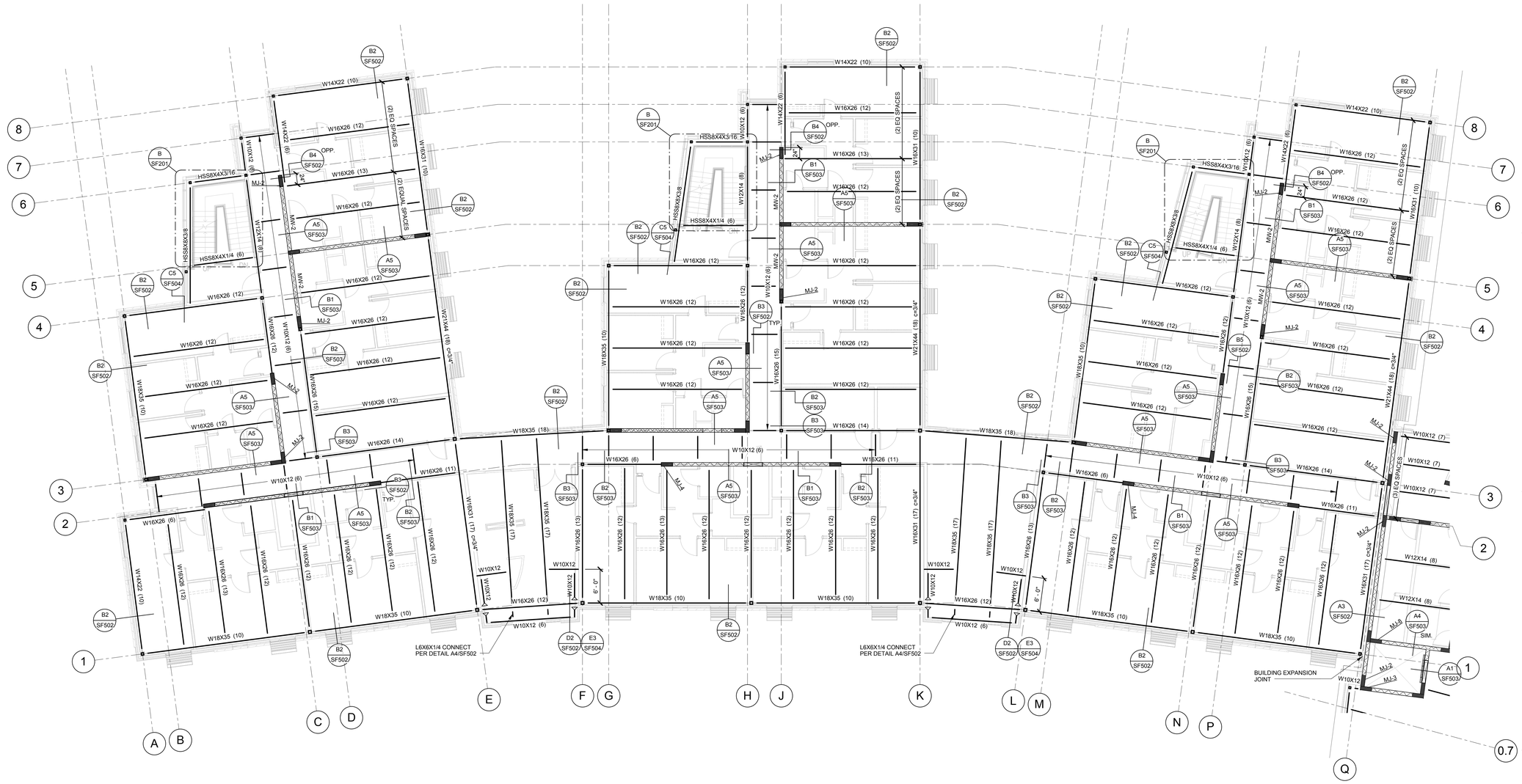

SECOND FLOOR FRAMING PLAN - AREA A

SCALE : 1/8" = 1'-0"

A SF102A

NORTH

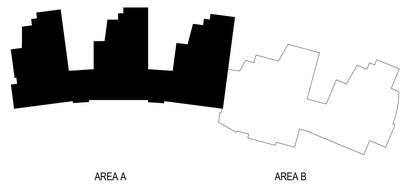

KEY PLAN

MHTN ARCHITECTS

MHTN Architects, Inc.
420 East South Temple
Suite 100
Salt Lake City, Utah 84111
Telephone (801) 595-6700
Telefax (801) 595-6717
www.mhtn.com

ARW ENGINEERS
structural consultants
1094 W. Park Cir. Ogden, Utah 84404
ph. 801.782.6008 fx. 801.782.4656

WEBER STATE UNIVERSITY
RESIDENTIAL LIFE PHASE II - BLDG 2

DFCM PROJECT NUMBER: 10176810

WEBER STATE UNIVERSITY
OGDEN, UTAH 84408

SEAL

M-HTN PROJECT NO 2010543

DRAWN BY: BLP CHECKED BY: JLA

ISSUED:

NO	DATE	DESCRIPTION
01	05/17/2011	FOR CONSTRUCTION

CONTRACTOR TO VERIFY DRAWINGS IN FIELD USE REFLECT LAST REVISION DATE.

NO	DATE	DESCRIPTION

SHEET NAME

SECOND FLOOR FRAMING PLAN

CONSTRUCTION DOCUMENTS
17 MAY 2011

SHEET NUMBER

SF102A

X:\DRAWINGS 2010\10613 - WSU Housing Bldg 2\S - 10613 - WSU Res Life Bldg II (2011)_benjaminjp.rvt
5/16/2011 1:56:05 PM

SECOND FLOOR FRAMING PLAN - AREA B

SCALE : 1/8" = 1'-0"

SEE SHEET SF102A FOR FLOOR FRAMING NOTES

A SF102B

NORTH

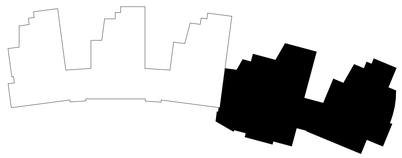

KEY PLAN

MHTN ARCHITECTS
MHTN Architects, Inc.
420 East South Temple
Suite 100
Salt Lake City, Utah 84111
Telephone (801) 595-6700
Telefax (801) 595-6717
www.mhtn.com

ARW ENGINEERS
structural consultants
1094 W. Park Gr. Ogden, Utah 84404
ph. 801.782.8008 fx. 801.782.4656

WEBER STATE UNIVERSITY
RESIDENTIAL LIFE PHASE II - BLDG 2

DFCM PROJECT NUMBER: 10176810

WEBER STATE UNIVERSITY
OGDEN, UTAH 84408

SEAL

MHTN PROJECT NO. 2010543

DRAWN BY: BLP CHECKED BY: JLA

ISSUED:

NO.	DATE	DESCRIPTION
01	05/17/2011	FOR CONSTRUCTION

CONTRACTOR TO VERIFY DRAWINGS IN FIELD USE REFLECT LAST REVISION DATE:

NO.	DATE	DESCRIPTION

SHEET NAME

SECOND FLOOR FRAMING PLAN

CONSTRUCTION DOCUMENTS
17 MAY 2011

SHEET NUMBER

SF102B

X:\DRAWINGS 2010\10613 - WSU Housing Bldg 2\S - 10613 - WSU Res Life Bldg II (2011)_benjaminlp.rvt
5/16/2011 1:56:05 PM

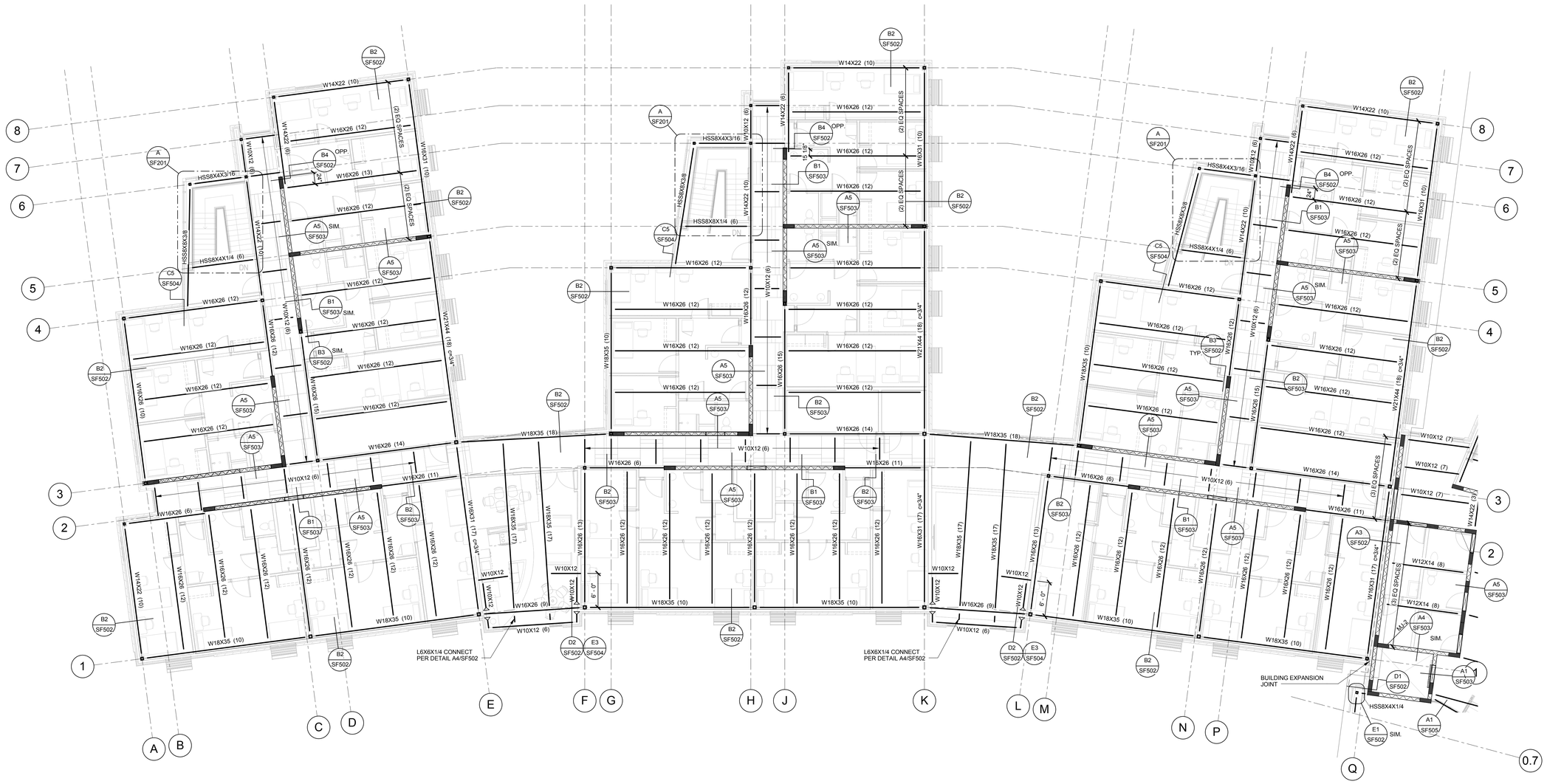

THIRD FLOOR FRAMING PLAN - AREA A

SCALE : 1/8" = 1'-0"

SEE SHEET SF102A FOR FLOOR FRAMING NOTES

A SF103A

NORTH

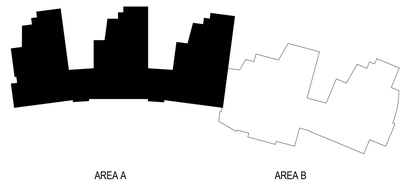

KEY PLAN

MHTN
ARCHITECTS
MHTN Architects, Inc.
420 East South Temple
Suite 100
Salt Lake City, Utah 84111
Telephone (801) 595-6700
Telefax (801) 595-6717
www.mhtn.com

ARW
ENGINEERS
structural consultants
1934 W. Park Cir. Ogden, Utah 84404
ph. 801.782.8098 fx. 801.782.4656

WEBER STATE UNIVERSITY
RESIDENTIAL LIFE PHASE II - BLDG 2

DFCM PROJECT NUMBER: 10176810

WEBER STATE UNIVERSITY
OGDEN, UTAH 84408

SEAL

MHTN PROJECT NO 2010543

DRAWN BY: BLP CHECKED BY: JLA

ISSUED:

NO.	DATE	DESCRIPTION
01	05/17/2011	FOR CONSTRUCTION

CONTRACTOR TO VERIFY DRAWINGS IN FIELD USE REFLECT LAST REVISION DATE:

NO.	DATE	DESCRIPTION

SHEET NAME

THIRD FLOOR FRAMING PLAN

CONSTRUCTION DOCUMENTS
17 MAY 2011

SHEET NUMBER

SF103A

X:\DRAWINGS 2010\10613 - WSU Housing Bldg 2\S - 10613 - WSU Res Life Bldg II (2011)_benjaminp.rvt
5/16/2011 1:56:06 PM

THIRD FLOOR FRAMING PLAN - AREA B

SCALE : 1/8" = 1'-0"

SEE SHEET SF102A FOR FLOOR FRAMING NOTES

1 SF103B

NORTH

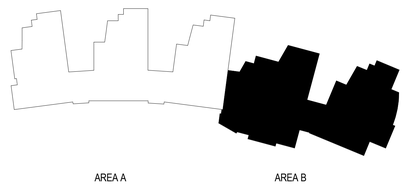

KEY PLAN

MHTN
ARCHITECTS
MHTN Architects, Inc.
420 East South Temple
Suite 100
Salt Lake City, Utah 84111
Telephone (801) 595-6700
Telefax (801) 595-6717
www.mhtn.com

ARW
ENGINEERS
structural consultants
1594 W. Park Cir. Ogden, Utah 84404
ph. 801.782.8008 fx. 801.782.4656

WEBER STATE UNIVERSITY
RESIDENTIAL LIFE PHASE II - BLDG 2

DFCM PROJECT NUMBER: 10176810

WEBER STATE UNIVERSITY
OGDEN, UTAH 84408

SEAL

MHTN PROJECT NO. 2010543

DRAWN BY: BLP CHECKED BY: JLA

ISSUED:

NO.	DATE	DESCRIPTION
01	05/17/2011	FOR CONSTRUCTION

CONTRACTOR TO VERIFY DRAWINGS IN FIELD USE REFLECT LAST REVISION DATE:

NO.	DATE	DESCRIPTION

SHEET NAME

THIRD FLOOR FRAMING PLAN

CONSTRUCTION DOCUMENTS
17 MAY 2011

SHEET NUMBER

SF103B

X:\DRAWINGS 2010\10613 - WSU Housing Bldg 2\S - 10613 - WSU Res Life Bldg II (2011)_benjaminp.rvt
5/16/2011 1:56:07 PM

MHTN
ARCHITECTS
MHTN Architects, Inc.
420 East South Temple
Suite 100
Salt Lake City, Utah 84111
Telephone (801) 595-6700
Telefax (801) 595-6717
www.mhtn.com

ARW
ENGINEERS
structural consultants
1094 W. Park Gr. Ogden, Utah 84404
ph. 801.782.6008 fx. 801.782.4656

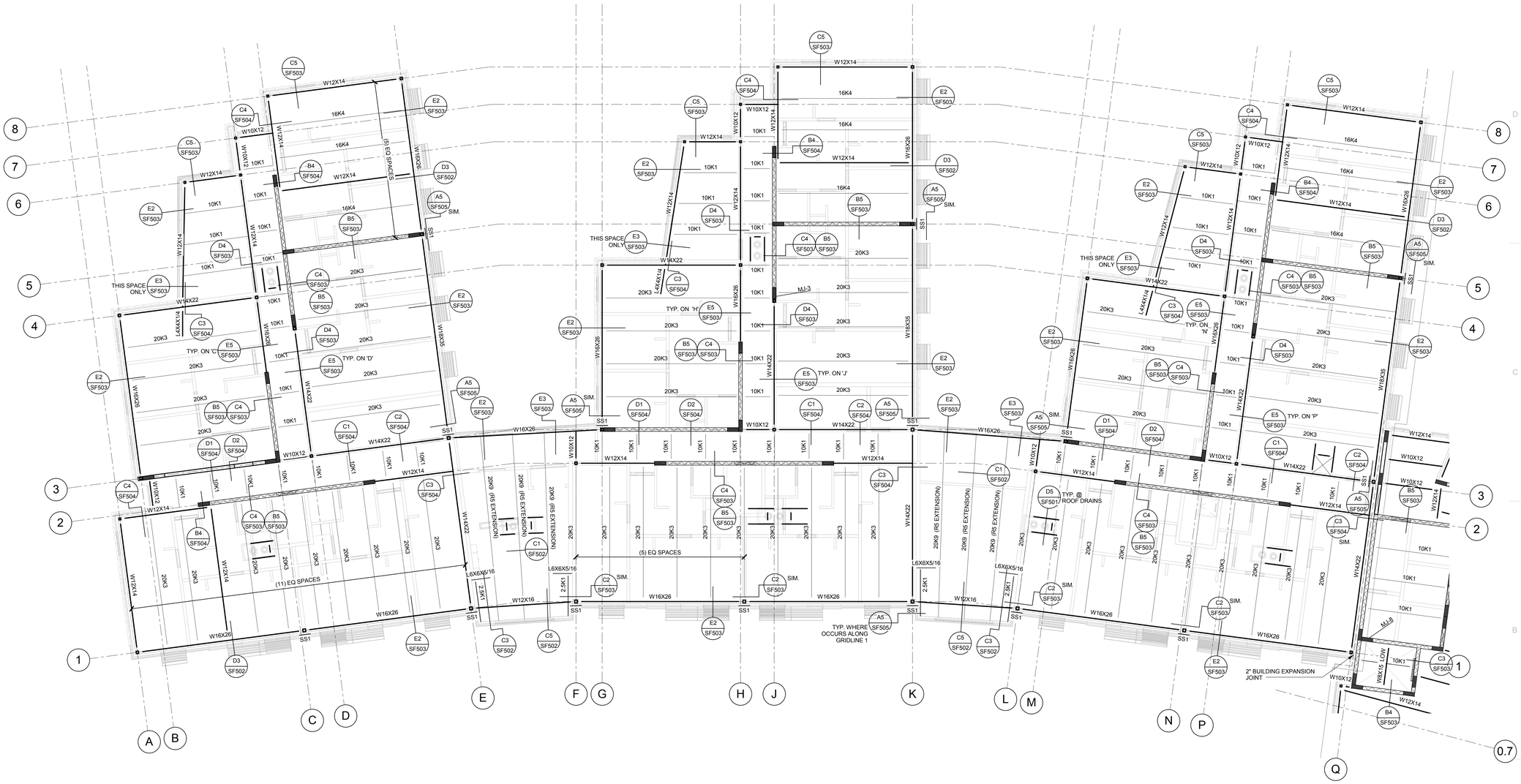

ROOF FRAMING PLAN - AREA A
SCALE : 1/8" = 1'-0"

A
SF104A

NORTH

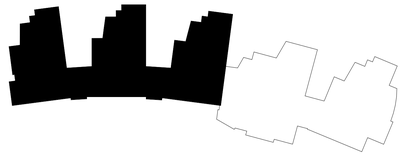

KEY PLAN

WEBER STATE UNIVERSITY
RESIDENTIAL LIFE PHASE II - BLDG 2
DFCM PROJECT NUMBER: 10176810

WEBER STATE UNIVERSITY
OGDEN, UTAH 84408

SEAL

MHTN PROJECT NO. 2010543

DRAWN BY: BLP CHECKED BY: JLA

ISSUED:

NO.	DATE	DESCRIPTION
01	05/17/2011	FOR CONSTRUCTION

CONTRACTOR TO VERIFY DRAWINGS IN FIELD USE REFLECT LAST REVISION DATE:

NO.	DATE	DESCRIPTION

SHEET NAME
ROOF FRAMING PLAN

CONSTRUCTION DOCUMENTS
17 MAY 2011

SHEET NUMBER
SF104A

X:\DRAWINGS 2010\10613 - WSU Housing Bldg 2\S - 10613 - WSU Res Life Bldg II (2011)_benjaminp.rvt
5/16/2011 1:56:08 PM

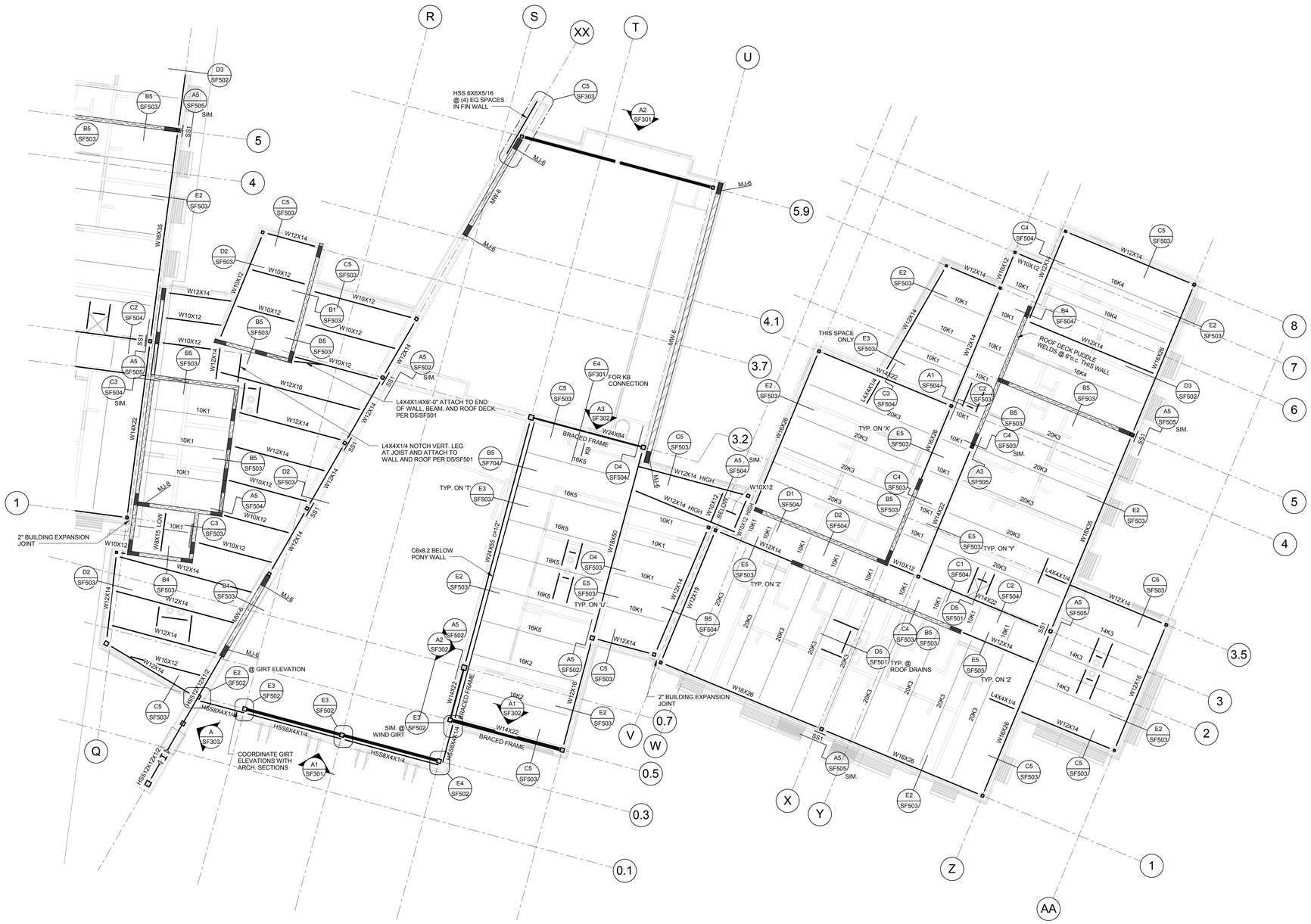

LOW ROOF FRAMING PLAN - AREA B

SCALE : 1/8" = 1'-0"

A
SF104B

NORTH

KEY PLAN

MHTN
ARCHITECTS
MHTN Architects, Inc.
420 East South Temple
Suite 100
Salt Lake City, Utah 84111
Telephone (801) 595-6700
Telefax (801) 595-6717
www.mhtn.com

ARW
ENGINEERS
structural consultants
1094 W. Park Cir. Ogden, Utah 84404
ph. 801.782.6008 fx. 801.782.4656

WEBER STATE UNIVERSITY
RESIDENTIAL LIFE PHASE II - BLDG 2

DFCM PROJECT NUMBER: 10176810

WEBER STATE UNIVERSITY
OGDEN, UTAH 84408

SEAL

MHTN PROJECT NO. 2010543

DRAWN BY: BLP CHECKED BY: JLA

ISSUED:

NO.	DATE	DESCRIPTION
01	05/17/2011	FOR CONSTRUCTION

CONTRACTOR TO VERIFY DRAWINGS IN FIELD USE REFLECT LAST REVISION DATE:

NO.	DATE	DESCRIPTION

SHEET NAME

ROOF FRAMING PLAN

CONSTRUCTION DOCUMENTS
17 MAY 2011

SHEET NUMBER

SF104B

X:\DRAWINGS 2010\10613 - WSU Housing Bldg 2\S - 10613 - WSU Res Life Bldg II (2011)_benjaminp.rvt
5/16/2011 1:56:09 PM

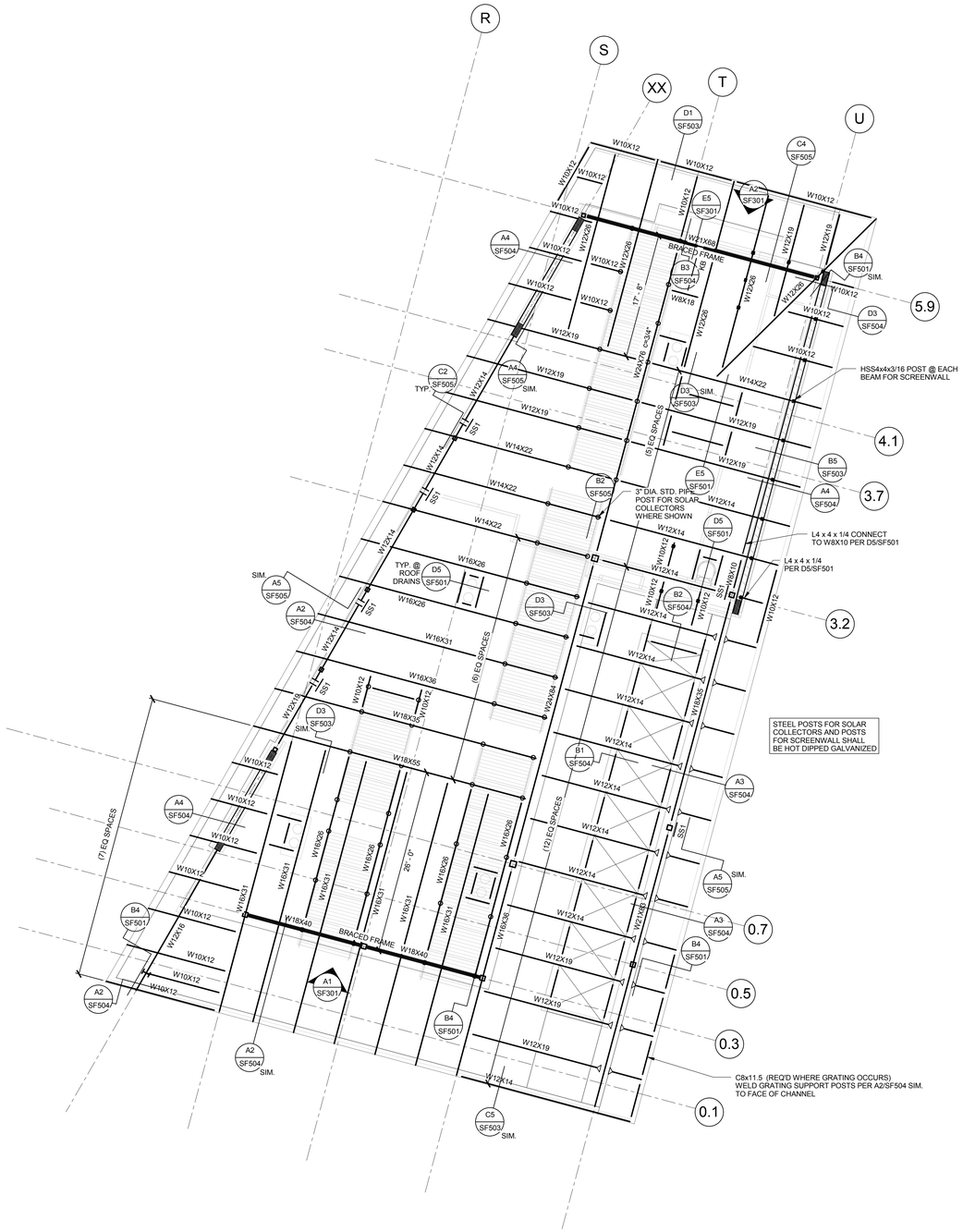

HIGH ROOF

SCALE : 1/8" = 1'-0"

1 SF105

NORTH

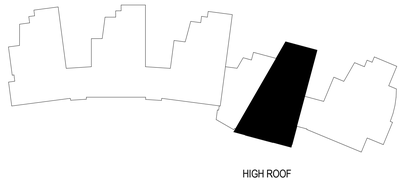

KEY PLAN

X:\DRAWINGS 2010\10813 - WSU Housing Bldg 2S - 10813 - WSU Res Life Bldg II (2011)_benjamnp.rvt
5/16/2011 11:56:09 PM

MHTN
ARCHITECTS
MHTN Architects, Inc.
420 East South Temple
Suite 100
Salt Lake City, Utah 84111
Telephone (801) 595-6700
Telefax (801) 595-6717
www.mhtn.com

ENGINEERS
structural consultants
1594 W. Park Gr. Ogden, Utah 84404
ph. 801.782.6008 fx. 801.782.4656

WEBER STATE UNIVERSITY
RESIDENTIAL LIFE PHASE II - BLDG 2

DFCM PROJECT NUMBER: 10176810

WEBER STATE UNIVERSITY
OGDEN, UTAH 84408

SEAL

MHTN PROJECT NO. 2010543

DRAWN BY: Author CHECKED BY: Checker

ISSUED:

NO.	DATE	DESCRIPTION
01	05/17/2011	FOR CONSTRUCTION

CONTRACTOR TO VERIFY DRAWINGS IN FIELD USE REFLECT LAST REVISION DATE:

NO.	DATE	DESCRIPTION

SHEET NAME

HIGH ROOF PLAN

CONSTRUCTION DOCUMENTS
17 MAY 2011

SHEET NUMBER

SF105

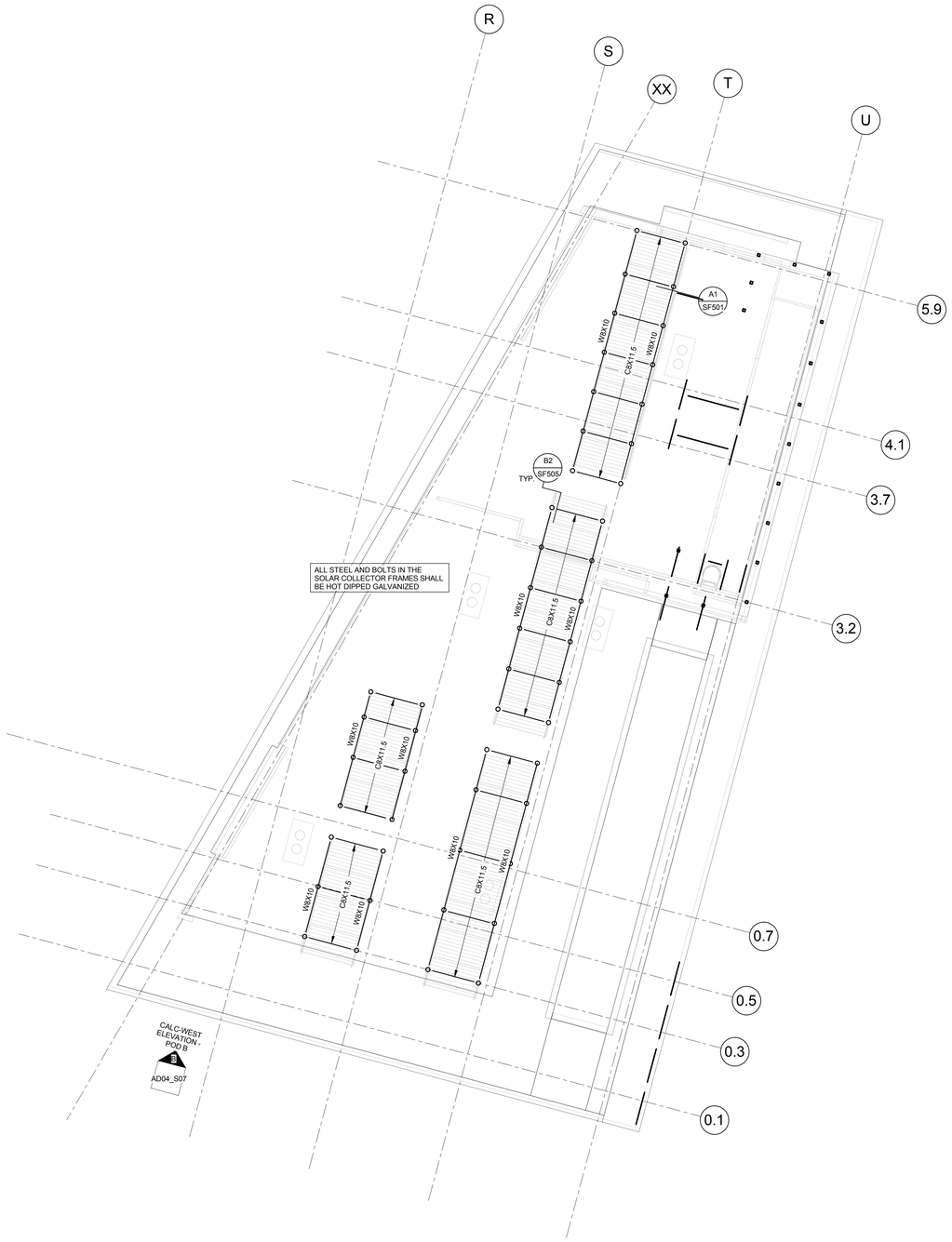

HIGH ROOF (ADD ALTERNATE) 1 SF106
SCALE : NONE

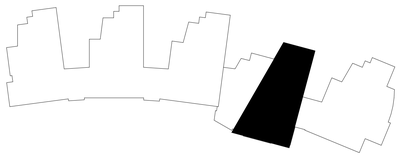

KEY PLAN

MHTN
ARCHITECTS
MHTN Architects, Inc.
420 East South Temple
Suite 100
Salt Lake City, Utah 84111
Telephone (801) 595-6700
Telefax (801) 595-6717
www.mhtn.com

ARW
ENGINEERS
structural consultants
1594 W. Park Cir. Ogden, Utah 84404
ph. 801.782.6008 fx. 801.782.4656

WEBER STATE UNIVERSITY
RESIDENTIAL LIFE PHASE II - BLDG 2
DFCM PROJECT NUMBER: 10176810

WEBER STATE UNIVERSITY
OGDEN, UTAH 84408

SEAL

MHTN PROJECT NO: 2010543

DRAWN BY: Author CHECKED BY: Checker

ISSUED:

NO.	DATE	DESCRIPTION
01	05/17/2011	FOR CONSTRUCTION

CONTRACTOR TO VERIFY DRAWINGS IN FIELD USE REFLECT LAST REVISION DATE:

NO.	DATE	DESCRIPTION

SHEET NAME
HIGH ROOF (ADD ALTERNATE #4)

CONSTRUCTION DOCUMENTS
17 MAY 2011

SHEET NUMBER
SF106

X:\DRAWINGS 2010\10613 - WSU Housing Bldg 2\S - 10613 - WSU Res Life Bldg II (2011)_benjaminp.rvt
5/16/2011 1:56:09 PM

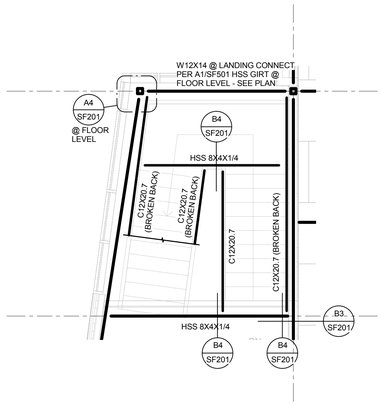

3RD FLOOR STAIR FRAMING PLAN — A / SF201

SCALE : NONE

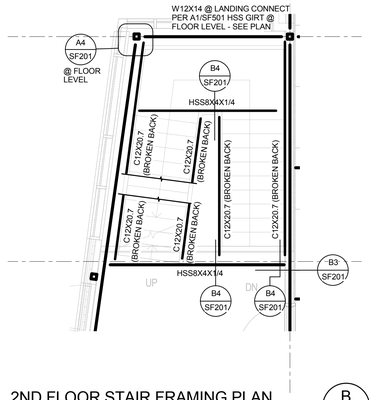

2ND FLOOR STAIR FRAMING PLAN — B / SF201

SCALE : NONE

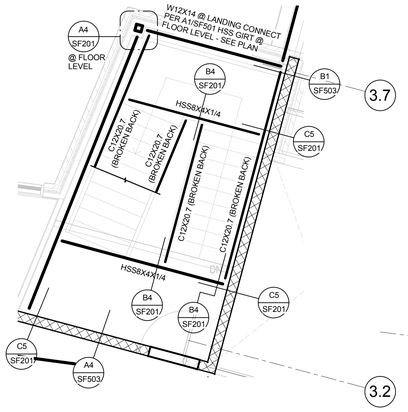

3RD FLOOR STAIR FRAMING PLAN — C / SF201

SCALE : NONE

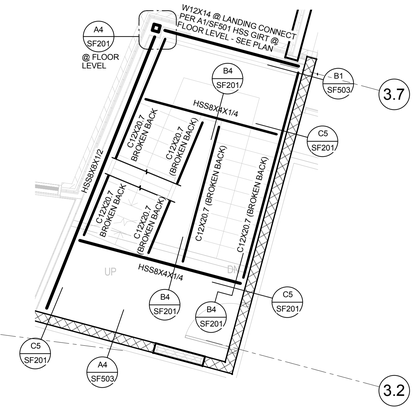

2ND FLOOR STAIR FRAMING PLAN — D / SF201

SCALE : NONE

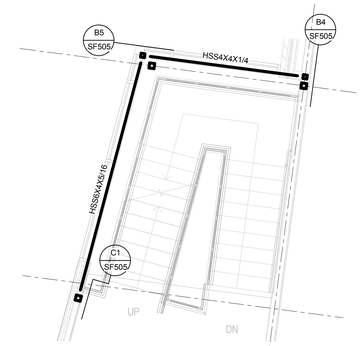

LEVEL 1 WALL GIRTS @ STAIRS 199B, C, D, & E — F / SF201

SCALE : NONE

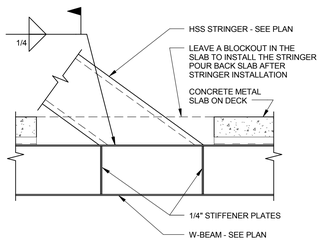

DETAIL — C1 / SF201

SCALE : NONE

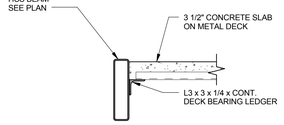

DETAIL — C2 / SF201

SCALE : NONE

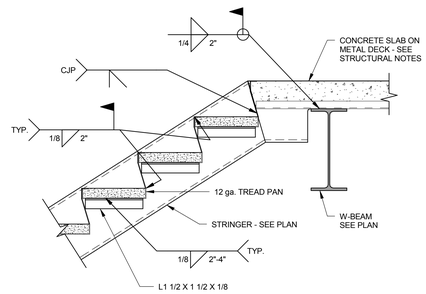

DETAIL — C3 / SF201

SCALE : NONE

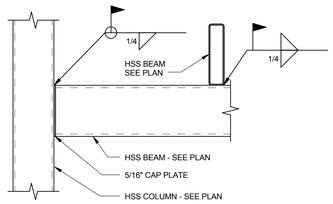

DETAIL — C4 / SF201

SCALE : NONE

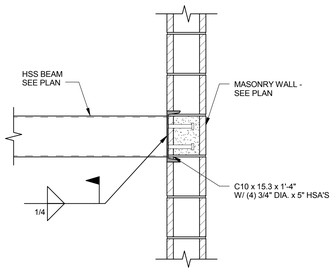

DETAIL — C5 / SF201

SCALE : NONE

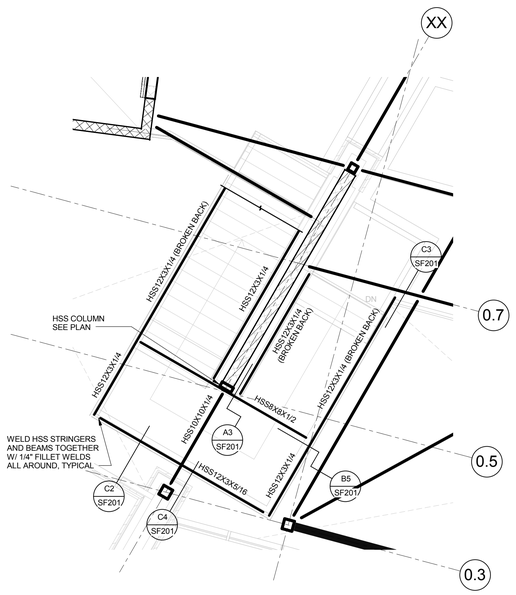

3RD FLOOR STAIR FRAMING PLAN — E / SF201

SCALE : NONE

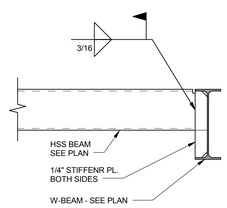

DETAIL — B3 / SF201

SCALE : NONE

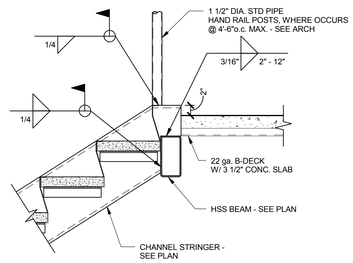

DETAIL — B4 / SF201

SCALE : NONE

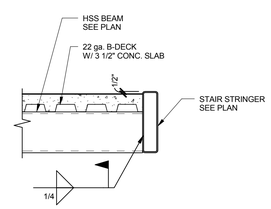

DETAIL — B5 / SF201

SCALE : NONE

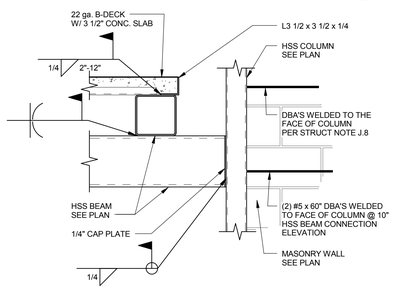

DETAIL — A3 / SF201

SCALE : NONE

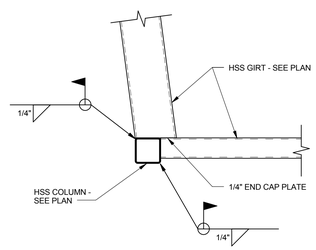

DETAIL — A4 / SF201

SCALE : NONE

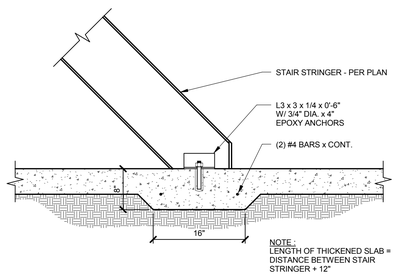

DETAIL — A5 / SF201

SCALE : NONE

MHTN ARCHITECTS
MHTN Architects, Inc.
420 East South Temple
Suite 100
Salt Lake City, Utah 84111
Telephone (801) 595-6700
Telefax (801) 595-6717
www.mhtn.com

ARW ENGINEERS
structural consultants
1594 W. Park Cir. Ogden, Utah 84404
ph. 801.782.6008 fx. 801.782.4656

WEBER STATE UNIVERSITY
RESIDENTIAL LIFE PHASE II - BLDG 2

DFCM PROJECT NUMBER: 10176810

WEBER STATE UNIVERSITY
OGDEN, UTAH 84408

SEAL

MHTN PROJECT NO. 2010543

DRAWN BY: Author CHECKED BY: Checker

ISSUED:

NO.	DATE	DESCRIPTION
01	05/17/2011	FOR CONSTRUCTION

CONTRACTOR TO VERIFY DRAWINGS IN FIELD USE REFLECT LAST REVISION DATE:

NO.	DATE	DESCRIPTION

SHEET NAME

STAIR FRAMING

CONSTRUCTION DOCUMENTS
17 MAY 2011

SHEET NUMBER

SF201

X:\DRAWINGS 2010\10613 - WSU Housing Bldg 2\S - 10613 - WSU Res Life Bldg II (2011)_benjaminp.rvt
5/16/2011 1:56:10 PM

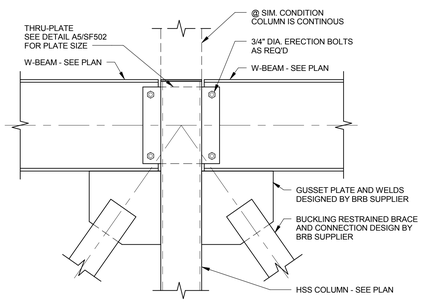

DETAIL
SCALE : NONE
E1 SF301 L

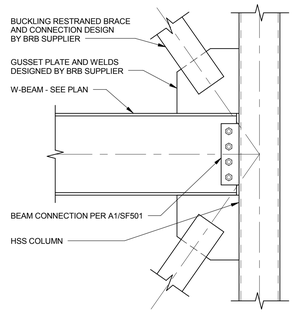

DETAIL
SCALE : NONE
E2 SF301 L

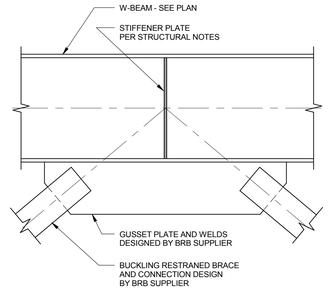

DETAIL
SCALE : NONE
E3 SF301 L

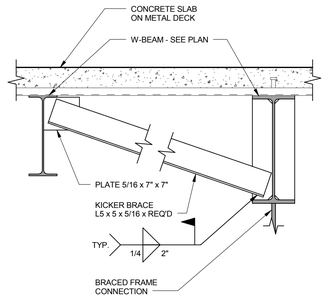

DETAIL
SCALE : NONE
E4 SF301 L

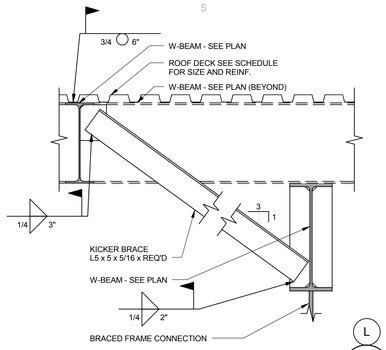

DETAIL
SCALE : NONE
E5 SF301 L

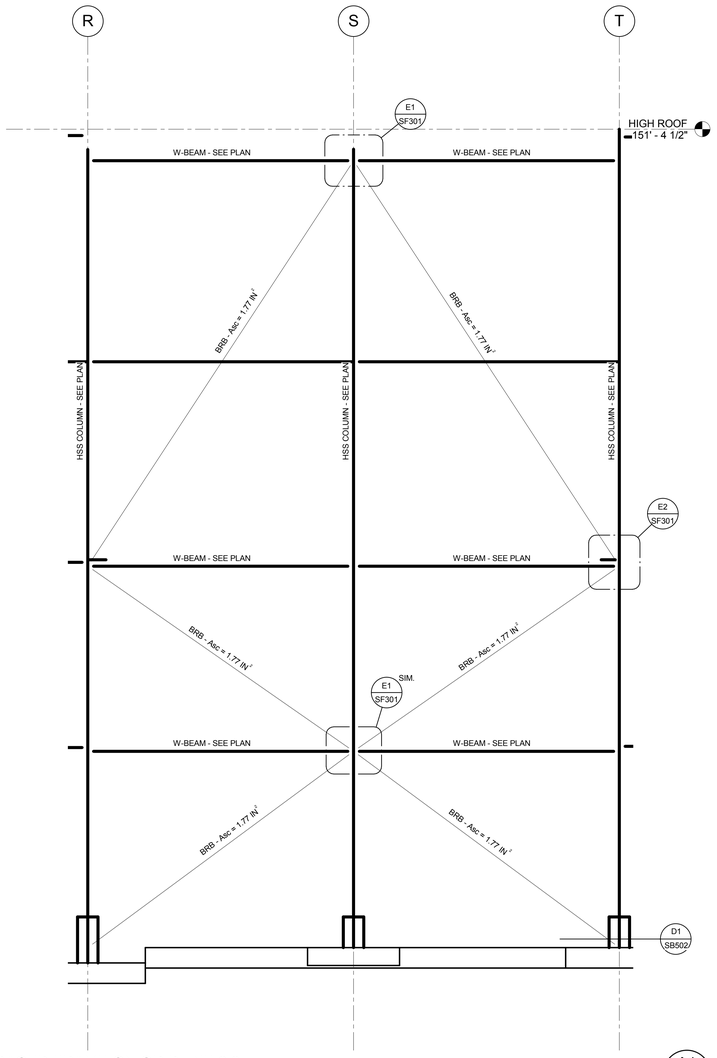

BRACED FRAME ON GRIDLINE 0.3
SCALE : 1/4" = 1'-0"
A1 SF301 L

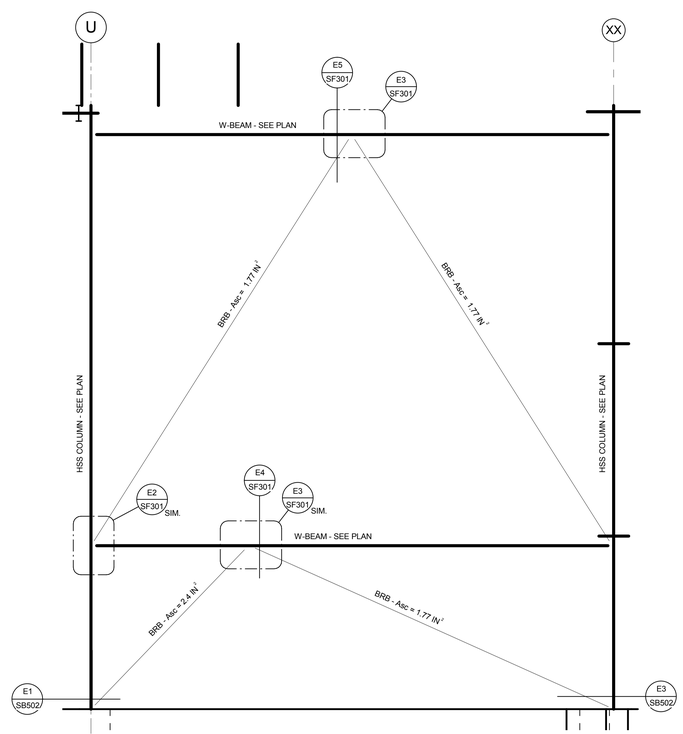

BRACED FRAME ON GRIDLINE 5.9
SCALE : 1/4" = 1'-0"
A2 SF301 L

BRACED FRAME NOTES:

1. DESIGN OF GUSSET PLATES AND THEIR CONNECTIONS TO COLUMNS, BEAMS, AND BASE PLATES SHALL BE PROVIDED BY THE BRB SUPPLIER.
2. BUCKLING RESTRAINED BRACES AND GUSSET PLATES ARE PROTECTED ZONES. NO ATTACHMENTS OF ANY KIND SHALL BE MADE TO THESE ELEMENTS. ATTACHMENTS INCLUDE; WELDS, SCREWS, POWDER ACTUATED FASTENERS, OR ANY OTHER ATTACHMENTS NOT SPECIFICALLY REVIEWED AND APPROVED BY THE STRUCTURAL ENGINEER.
3. THE Asc VALUE PROVIDED IS BASED ON AN Fy OF 38KSI.

MHTN
ARCHITECTS
MHTN Architects, Inc.
420 East South Temple
Suite 100
Salt Lake City, Utah 84111
Telephone (801) 595-6700
Telefax (801) 595-6717
www.mhtn.com

ARW ENGINEERS
structural consultants
1594 W. Park Cir. Ogden, Utah 84404
ph. 801.782.6008 fx. 801.782.4656

WEBER STATE UNIVERSITY
RESIDENTIAL LIFE PHASE II - BLDG 2
DFCM PROJECT NUMBER: 10176810

WEBER STATE UNIVERSITY
OGDEN, UTAH 84408

SEAL

MHTN PROJECT NO. 2010543

DRAWN BY: Author CHECKED BY: Checker

ISSUED:

NO.	DATE	DESCRIPTION
01	05/17/2011	FOR CONSTRUCTION

CONTRACTOR TO VERIFY DRAWINGS IN FIELD USE REFLECT LAST REVISION DATE:

NO.	DATE	DESCRIPTION

SHEET NAME
BRACED FRAME ELEVATIONS

CONSTRUCTION DOCUMENTS
17 MAY 2011

SHEET NUMBER
SF301

X:\DRAWINGS 2010\10613 - WSU Housing Bldg 2\S - 10613 - WSU Res Life Bldg II (2011)_benjaminp.rvt
5/16/2011 1:56:11 PM

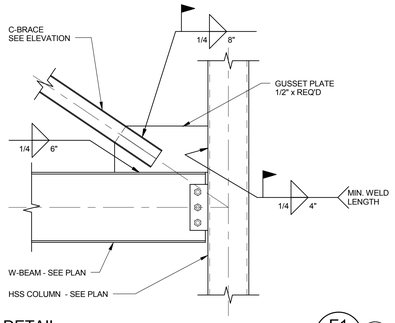

DETAIL E1/SF302 (L)
SCALE : NONE

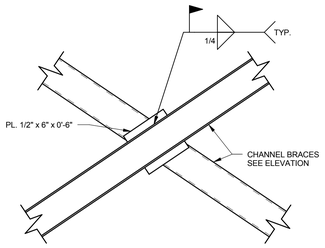

DETAIL E2/SF302 (L)
SCALE : NONE

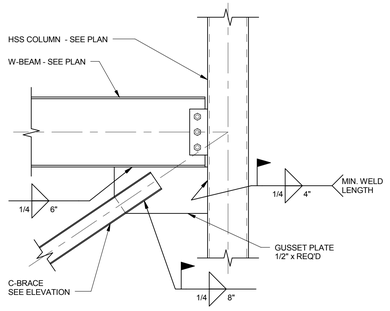

DETAIL E3/SF302 (L)
SCALE : NONE

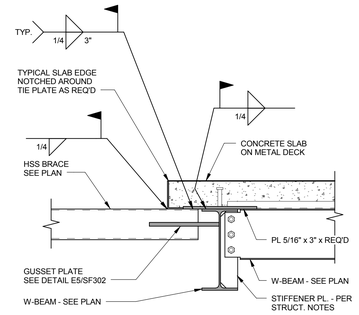

DETAIL E4/SF302 (L)
SCALE : NONE

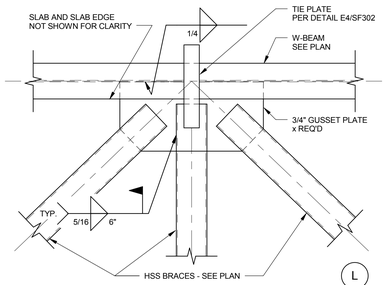

DETAIL E5/SF302 (L)
SCALE : NONE

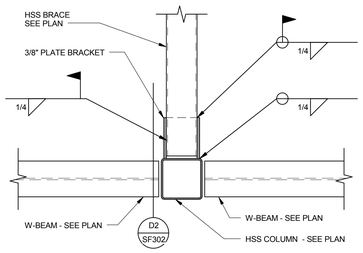

DETAIL D1/SF302 (L)
SCALE : NONE

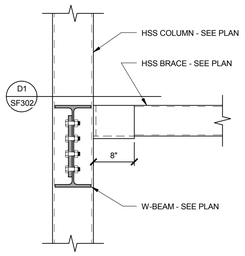

DETAIL D2/SF302 (L)
SCALE : NONE

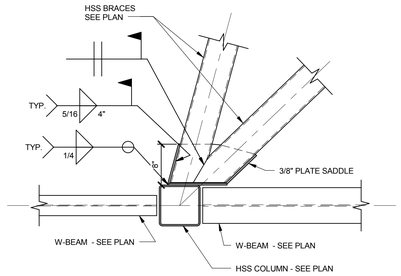

DETAIL D3/SF302 (L)
SCALE : NONE

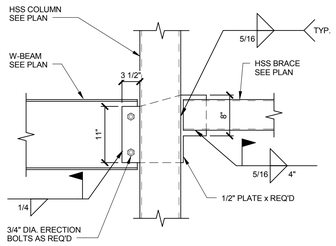

DETAIL D4/SF302 (L)
SCALE : NONE

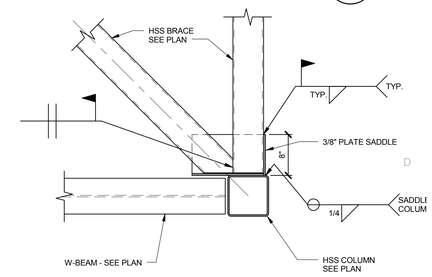

DETAIL D5/SF302 (L)
SCALE : NONE

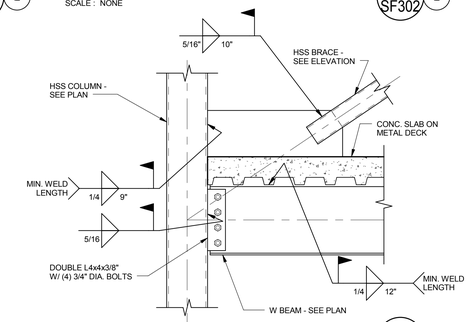

DETAIL C4/SF302 (L)
SCALE : NONE

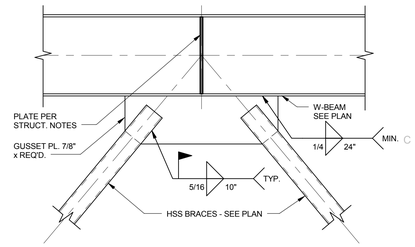

DETAIL C5/SF302 (L)
SCALE : NONE

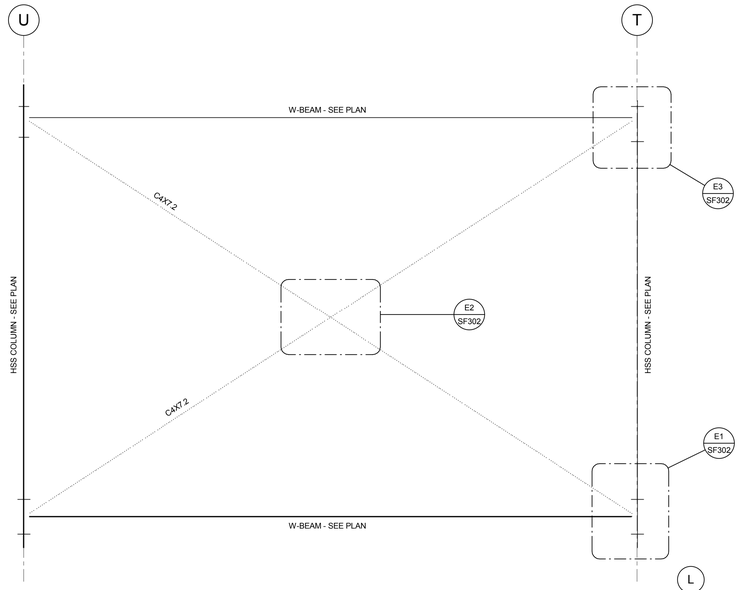

ELEVATION A1/SF302 (L)
SCALE : 1/2" = 1'-0"

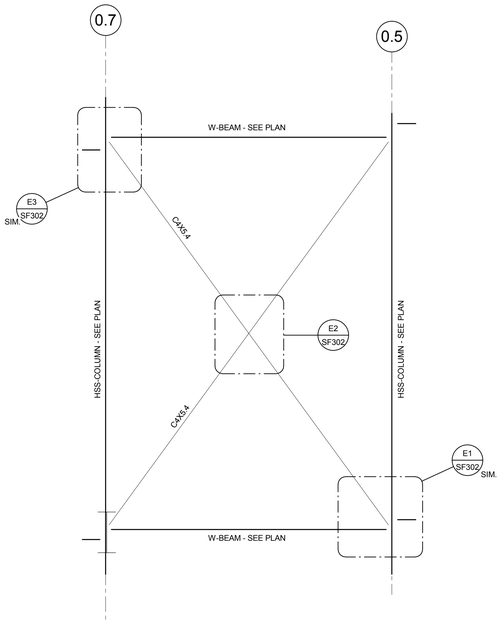

ELEVATION A2/SF302 (L)
SCALE : 1/2" = 1'-0"

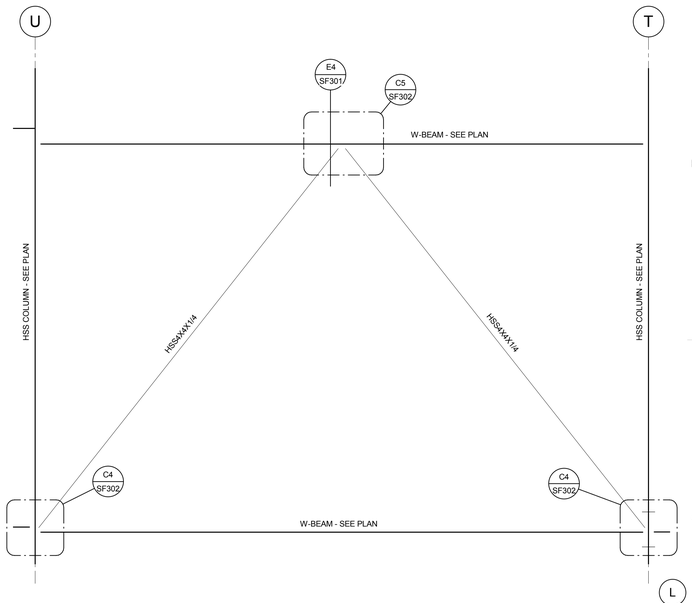

ELEVATION A3/SF302 (L)
SCALE : 1/2" = 1'-0"

MHTN
ARCHITECTS
MHTN Architects, Inc.
420 East South Temple
Suite 100
Salt Lake City, Utah 84111
Telephone (801) 595-6700
Telefax (801) 595-6717
www.mhtn.com

ENGINEERS
structural consultants
1094 W. Park Gr. Ogden, Utah 84404
ph. 801.782.8098 fx. 801.782.4656

WEBER STATE UNIVERSITY
RESIDENTIAL LIFE PHASE II - BLDG 2
DFCM PROJECT NUMBER: 10176810

WEBER STATE UNIVERSITY
OGDEN, UTAH 84408

SEAL

MHTN PROJECT NO. 2010543

DRAWN BY: Author CHECKED BY: Checker

ISSUED:

NO.	DATE	DESCRIPTION
01	05/17/2011	FOR CONSTRUCTION

CONTRACTOR TO VERIFY DRAWINGS IN FIELD USE REFLECT LAST REVISION DATE:

NO.	DATE	DESCRIPTION

SHEET NAME
BRACED FRAME ELEVATIONS

CONSTRUCTION DOCUMENTS
17 MAY 2011

SHEET NUMBER
SF302

X:\DRAWINGS 2010\10813 - WSU Housing Bldg 2S - 10813 - WSU Res Life Bldg II (2011)_benjamirnp.rvt
5/16/2011 1:56:16 PM

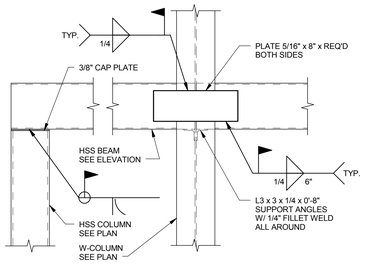

DETAIL
SCALE : NONE
E1 SF303

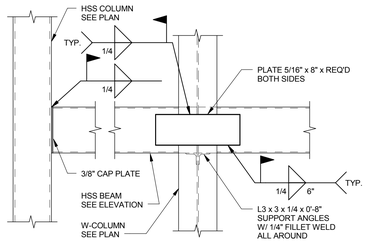

DETAIL
SCALE : NONE
E2 SF303

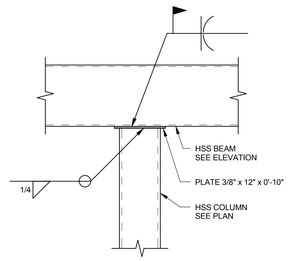

DETAIL
SCALE : NONE
E3 SF303

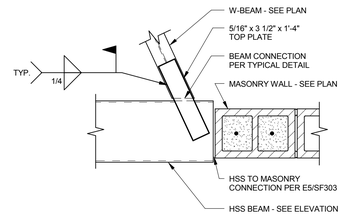

DETAIL
SCALE : NONE
E4 SF303

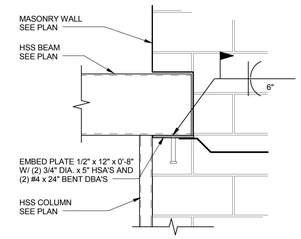

DETAIL
SCALE : NONE
E5 SF303

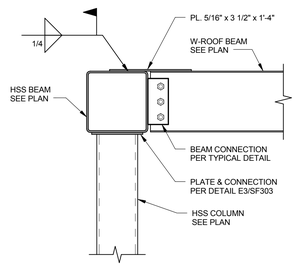

DETAIL
SCALE : NONE
D1 SF303

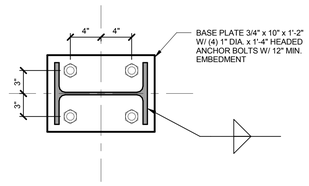

DETAIL
SCALE : NONE
D2 SF303

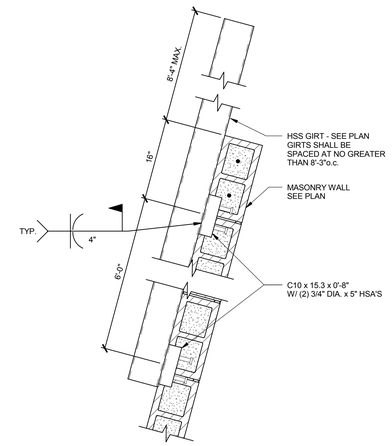

DETAIL
SCALE : NONE
C5 SF303

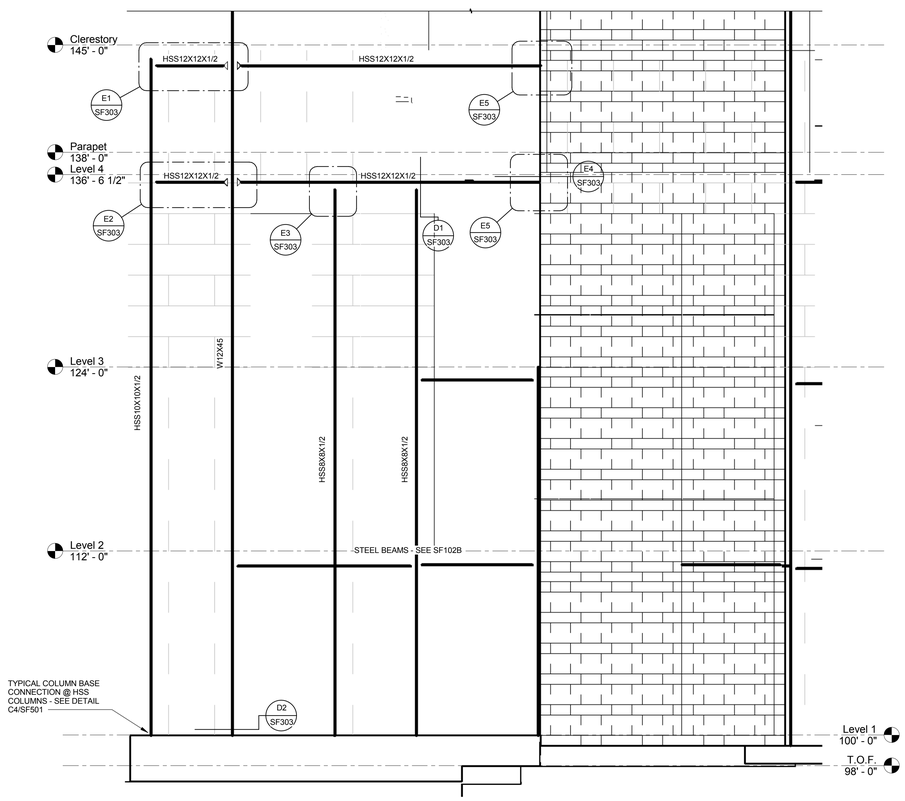

WEST FEATURE WALL ELEVATION
SCALE : 1/4" = 1'-0"
A SF303

X:\DRAWINGS 2010\10613 - WSU Housing Bldg 2\S - 10613 - WSU Res Life Bldg II (2011)_benjaminp.rvt
5/16/2011 1:56:19 PM

MHTN
ARCHITECTS
MHTN Architects, Inc.
420 East South Temple
Suite 100
Salt Lake City, Utah 84111
Telephone (801) 595-6700
Telefax (801) 595-6717
www.mhtn.com

ENGINEERS
structural consultants
1094 W. Park Cir. Ogden, Utah 84404
ph. 801.782.6008 fx. 801.782.4656

WEBER STATE UNIVERSITY
RESIDENTIAL LIFE PHASE II - BLDG 2
DFCM PROJECT NUMBER: 10176810

WEBER STATE UNIVERSITY
OGDEN, UTAH 84408

SEAL

MHTN PROJECT NO. 2010543

DRAWN BY: Author CHECKED BY: Checker

ISSUED:

NO.	DATE	DESCRIPTION
01	05/17/2011	FOR CONSTRUCTION

CONTRACTOR TO VERIFY DRAWINGS IN FIELD USE REFLECT LAST REVISION DATE.

NO.	DATE	DESCRIPTION

SHEET NAME
ELEVATION

CONSTRUCTION DOCUMENTS
17 MAY 2011

SHEET NUMBER
SF303

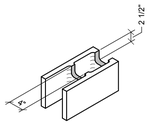

TYPICAL 8" OPEN-END BOND BEAM CMU
(FOR USE IN CMU LINTELS)

TYPICAL 8" OPEN-END CMU
(FOR USE IN ALL CMU LINTELS, U.N.O.)

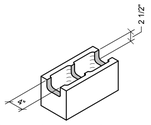

TYPICAL 8" BOND BEAM CMU ("H" BLOCK)
(FOR USE IN ALL BOND BEAMS, U.N.O.)

NOTES:
1. ALL 8" OPEN-END AND BOND-BEAM CMU UNITS SHALL MEET THE MINIMUM DIMENSIONS SHOWN.
2. STANDARD 8" CMU UNITS MAY BE CUT, CHIPPED, OR MODIFIED TO CREATE OPEN-END OR BOND BEAM UNITS, PROVIDED THE FINAL CONFIGURATION MEETS THE MINIMUM DIMENSION SHOWN.

TYPICAL CMU BLOCK
SCALE : NONE
E1 / SF501

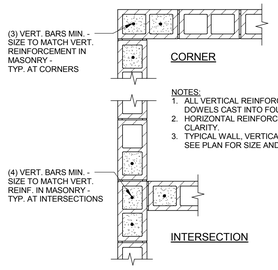

NOTES:
1. ALL VERTICAL REINFORCING SHALL HAVE MATCHING DOWELS CAST INTO FOUNDATIONS / FOOTINGS.
2. HORIZONTAL REINFORCEMENT NOT SHOWN FOR CLARITY.
3. TYPICAL WALL, VERTICAL REINFORCING NOT SHOWN - SEE PLAN FOR SIZE AND SPACING

TYPICAL VERTICAL REINFORCING DETAIL
SCALE : NONE
D1 / SF501

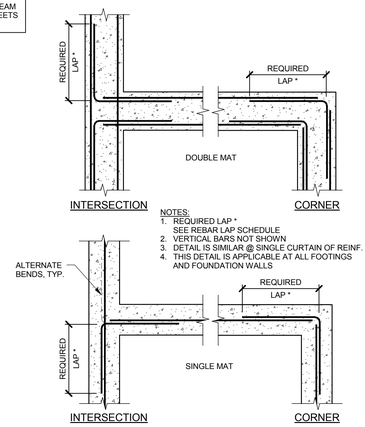

NOTES:
1. REQUIRED LAP * SEE REBAR LAP SCHEDULE
2. VERTICAL BARS NOT SHOWN
3. DETAIL IS SIMILAR @ SINGLE CURTAIN OF REINF.
4. THIS DETAIL IS APPLICABLE AT ALL FOOTINGS AND FOUNDATION WALLS

TYP REINF. @ INTERSECTIONS IN CONC. DETAIL
SCALE : NONE
D2 / SF501

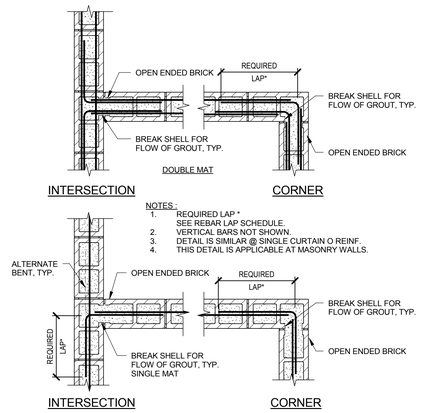

NOTES :
1. REQUIRED LAP * SEE REBAR LAP SCHEDULE.
2. VERTICAL BARS NOT SHOWN.
3. DETAIL IS SIMILAR @ SINGLE CURTAIN O REINF.
4. THIS DETAIL IS APPLICABLE AT MASONRY WALLS.

TYP. REINF. AT INTERSECTIONS IN MASONRY DETAIL
SCALE : NONE
D3 / SF501

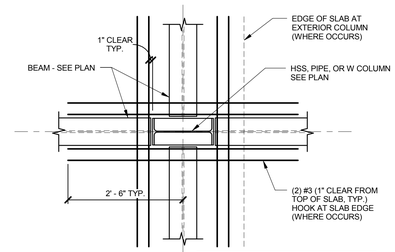

NOTE:
1. METAL DECK NOT SHOWN FOR CLARITY.
2. SEE STRUCTURAL NOTES FOR SUPPORT OF METAL DECK @ COLUMNS.

TYP. ADDED REINF. IN SUSPENDED SLAB OPENINGS @ COLUMNS
SCALE : NONE
E4 / SF501

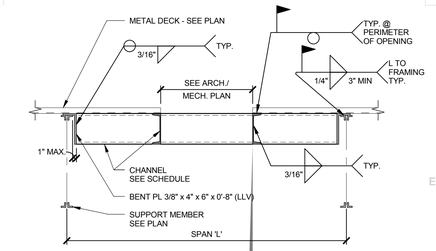

SPAN	CHANNEL
L ≤ 6'-0"	C6 x 8.2
L ≤ 8'-0"	C6 x 8.2
L ≤ 10'-0"	C8 x 11.5

NOTES:
1. THIS DETAIL APPLIES TO ROOF OPENINGS LARGER THAN 18" IN EITHER DIRECTION.
2. WHERE THERE IS NO OPENING IN ROOF, PLACE FRAME UNDER CURB.

TYPICAL FRAMING @ ROOF OPENINGS @ ROOFTOP EQUIPMENT
SCALE : NONE
E5 / SF501

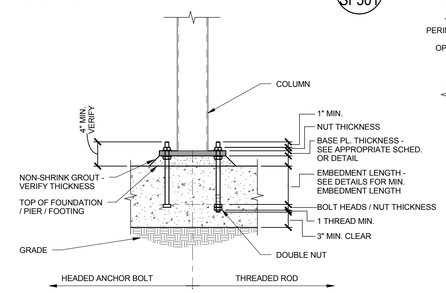

TYPICAL ANCHOR BOLT EMBEDMENT DETAIL
SCALE : NONE
D4 / SF501

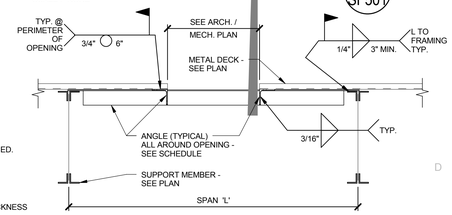

SPAN	ANGLE SIZE
L < 6'-0"	L 4 x 4 x 1/4
L < 8'-0"	L 4 x 4 x 3/8
L < 10'-0"	L 5 x 5 x 3/8

NOTES :
1. THIS DETAIL APPLIES TO ROOF OPENINGS LARGER THAN 18" IN EITHER DIRECTION. WHERE THERE IS NO OPENING IN ROOF, PLACE FRAME UNDER CURB.

TYP. FRAMING @ ROOF OPN'GS & ROOFTOP EQUIPMENT DETAIL
SCALE : NONE
D5 / SF501

NOTES:
1. PROVIDE 3/4" DEEP VERTICAL CONTROL JOINT AT 15'-0" MAXIMUM SPACING. CONTINUE ALL HORIZONTAL REINFORCING THROUGH JOINT. PROVIDE MATCHING MASONRY (WHERE OCCURS) CONTROL JOINT.
2. PROVIDE EXPANSION JOINTS @ 48'-0"o.c. MAX. SPACING.

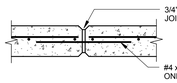

NOTE: JOINT IN FOOTING NOT REQUIRED.

3. EXTEND HORIZONTAL REINFORCING AROUND CORNERS OR ADD CORNER BARS AND LAP EACH WAY. SEE REBAR LAP SCHEDULE.
4. ALLOW CONCRETE TO REACH 100% OF DESIGN STRENGTH (f'c) PRIOR TO BACKFILLING.
5. PROVIDE 2"DIA. PVC PIPE WEEP HOLES @ 12'-0" WITH NON-FERROUS SCREEN AND GRAVEL BACKING. CONTINUOUS PERFORATED FOUNDATION DRAIN LINE TIED TO STORM DRAIN SYSTEM IS AN ACCEPTABLE ALTERNATE TO WEEP HOLES.
6. PROVIDE FILTER FABRIC BETWEEN GRANULAR BACKFILL AND BACK SIDE OF WALL. FILTER FABRIC TO BE FREE DRAINING WITHOUT ALLOWING INFILTRATION OF FINE SOILS.
7. EVERY OTHER VERTICAL BAR MAY BE DISCONTINUED AT 'H'/2 ABOVE FOOTING FOR 8'-0" AND 10'-0" HIGH WALLS, 1/3 OF VERTICAL BARS MAY BE DISCONTINUED AT 0.2'H' + 30 BAR DIAMETERS AND 0.4'H' + 30 BAR DIAMETERS ABOVE FOOTING. SPACING OF VERTICAL BARS SHALL BE 18" MAX. FOR 11'-0" THRU 14'-0" HIGH WALLS.

DIMENSION 'H'	DIMENSION				BAR TYPE 'H'		BAR TYPE 'V'		BAR TYPE 'C'		BAR TYPE 'T'	
	'T'	'A'	'B'	'W'	SIZE	SPACING	SIZE	SPACING	SIZE	NUMBER	SIZE	SPACING
H ≤ 3'-0"	12"	8"	6"	24"	#4	12"o.c.	#4	16"o.c.	#5	---	---	---
3'-0" - 5'-0"	12"	8"	9"	36"	#4	12"o.c.	#4	16"o.c.	#4	(3)	#4	16"o.c.
5'-0" - 7'-6"	12"	8"	18"	48"	#4	12"o.c.	#5	16"o.c.	#4	(5)	#5	16"o.c.

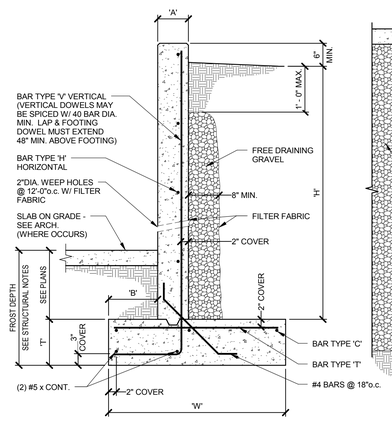

TYPICAL SITE RETAINING WALL DETAIL
SCALE : NONE
B1 / SF501

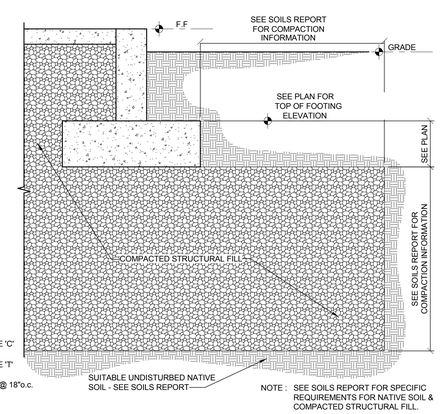

NOTE : SEE SOILS REPORT FOR SPECIFIC REQUIREMENTS FOR NATIVE SOIL & COMPACTED STRUCTURAL FILL.

TYPICAL STRUCTURAL FILL DETAIL
SCALE : NONE
B3 / SF501

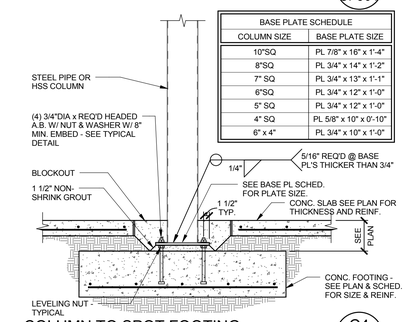

BASE PLATE SCHEDULE	
COLUMN SIZE	BASE PLATE SIZE
10"SQ	PL 7/8" x 16" x 1'-4"
8"SQ	PL 3/4" x 14" x 1'-2"
7" SQ	PL 3/4" x 13" x 1'-1"
6"SQ	PL 3/4" x 12" x 1'-0"
5" SQ	PL 3/4" x 12" x 1'-0"
4" SQ	PL 5/8" x 10" x 0'-10"
6" x 4"	PL 3/4" x 10" x 1'-0"

COLUMN TO SPOT FOOTING
SCALE : NONE
C4 / SF501

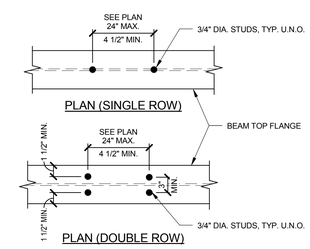

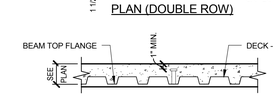

NOTE:
1. SEE STRUCTURAL NOTES FOR ADDITIONAL SHEAR CONNECTION INFORMATION

TYP. SHEAR STUD CONNECTION DETAIL
SCALE : NONE
B5 / SF501

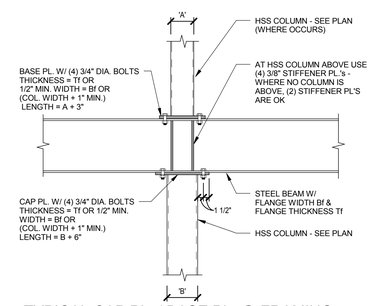

TYPICAL CAP PL. / BASE PL. @ FRAMING CONNECTIONS
SCALE : NONE
B4 / SF501

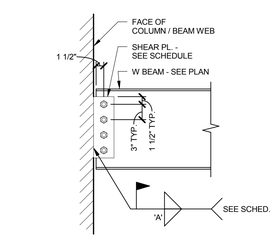

CONNECTION SCHEDULE					
BEAM DEPTH	SHEAR PLATE	BOLTS		WELD 'A'	COMMENTS
		No.	SIZE		
W8 x, W10 x	PL. 1/4" x 4"	2	3/4" DIA.	1/4"	
W12 x	PL. 5/16" x 4"	3	3/4" DIA.	1/4"	
W14 x	PL. 5/16" x 4"	3	3/4" DIA.	1/4"	
W16 x	PL. 3/8" x 4"	4	3/4" DIA.	1/4"	
W18 x	PL. 3/8" x 4"	5	3/4" DIA.	1/4"	
W21 x	PL. 3/8" x 4"	6	3/4" DIA.	1/4"	
W24 x	PL. 3/8" x 4"	7	3/4" DIA.	1/4"	

TYPICAL BEAM CONNECTIONS DETAIL
SCALE : NONE
A1 / SF501

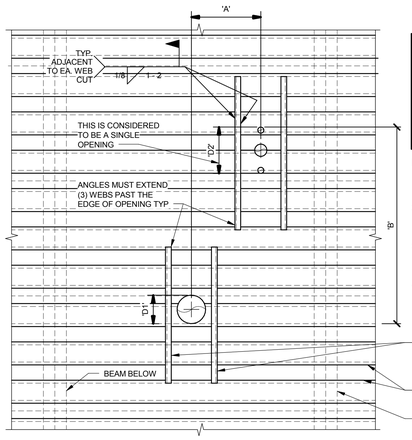

USE THIS DETAIL FOR HOLES CUTTING NO MORE THAN (3) ADJACENT WEBS FOR 6" AND 8" MODULE DECK, (2) ADJACENT WEBS FOR 12" MODULE DECK.

PRIOR TO CONCRETE POUR. SMALL OPENINGS SHOULD BE BLOCKED OUT AND FLOOR DEOK LEFT INTACT. HOLES LESS THAN 6" IN DIAMETER AND CUTTING NO MORE THAN 1 WEB NEED NO REINFORCING. AFTER THE CONCRETE HAS CURED, THE BLOCKOUT CAN BE REMOVED AND THE FLOOR DECK IN THE AREA OF THE HOLE REMOVED.

NOTES:

1. ANGLES SHALL BE PLACED EITHER ON TOP OF THE DECK. OR ATTACHED TO THE UNDERSIDE OF THE DECK.
2. IF DIMENSION "A" IS GREATER THAN 4D1, 4D2, OR 32" WHICHEVER IS LARGER, THEN THERE IS NO RESTRICTION ON DIMENSION "B"
3. IF DIMENSION "B" IS GREATER THAN 4D1, 4D2, OR 32" WHICHEVER IS LARGER, THEN THERE IS NO RESTRICTION ON DIMENSION "A"
4. IF DIMENSIONS "A" AND "B" ARE LESS THAN 4D1, 4D2, OR 32" WHICHEVER IS LARGER, THE OPENING GROUP WILL BE CONSIDERED AS A SINGLE HOLE, AND MUST BE REINFORCED AS REQUIRED FOR THE LARGER OPENING SEE 8/S-201

TYP. DECK REINFORCEMENT @ SMALL OPENINGS
SCALE : NONE
A3 / SF501

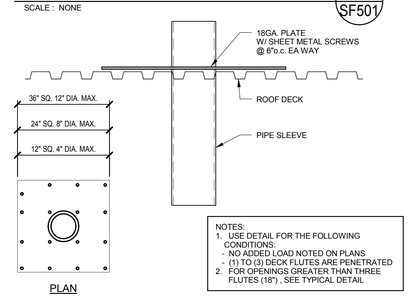

NOTES:
1. USE DETAIL FOR THE FOLLOWING CONDITIONS:
   - NO ADDED LOAD NOTED ON PLANS
   - (1) TO (3) DECK FLUTES ARE PENETRATED
2. FOR OPENINGS GREATER THAN THREE FLUTES (18") , SEE TYPICAL DETAIL

TYP. FRAMING @ SMALL ROOF OPENINGS DETAIL
SCALE : NONE
A4 / SF501

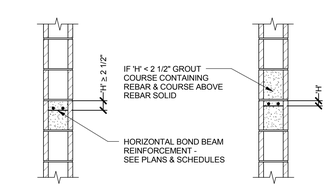

TYPICAL BOND BEAM GROUTING

ALTERNATE BOND BEAM GROUTING
WHEN 'H' ≤ 2 1/2"

TYP. BOND BEAM GROUTING
SCALE : NONE
A5 / SF501 (L)

MHTN ARCHITECTS
MHTN Architects, Inc.
420 East South Temple
Suite 100
Salt Lake City, Utah 84111
Telephone (801) 595-6700
Telefax (801) 595-6717
www.mhtn.com

ARW ENGINEERS
structural consultants
1094 W. Park Cir. Ogden, Utah 84404
ph. 801.782.6098 fx. 801.782.4656

WEBER STATE UNIVERSITY
RESIDENTIAL LIFE PHASE II - BLDG 2
DFCM PROJECT NUMBER: 10176810

WEBER STATE UNIVERSITY
OGDEN, UTAH 84408

SEAL

MHTN PROJECT NO. 2010543
DRAWN BY: Author CHECKED BY: Checker

ISSUED:

NO	DATE	DESCRIPTION
01	05/17/2011	FOR CONSTRUCTION

CONTRACTOR TO VERIFY DRAWINGS IN FIELD USE REFLECT LAST REVISION DATE.

NO	DATE	DESCRIPTION

SHEET NAME
TYPICAL DETAILS

CONSTRUCTION DOCUMENTS
17 MAY 2011

SHEET NUMBER
SF501

X:\DRAWINGS 2010\10613 - WSU Housing Bldg 2\S - 10613 - WSU Res Life Bldg II (2011)_benjamirop.rvt
5/16/2011 1:56:21 PM

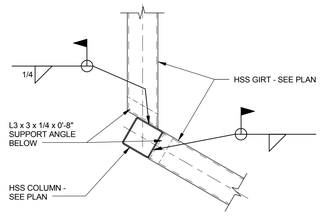

DETAIL E1 / SF502
SCALE : NONE

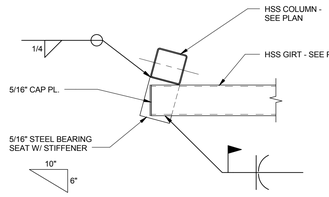

DETAIL E2 / SF502
SCALE : NONE

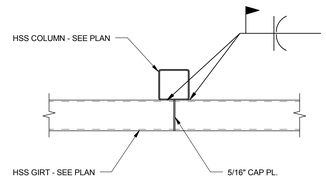

DETAIL E3 / SF502
SCALE : NONE

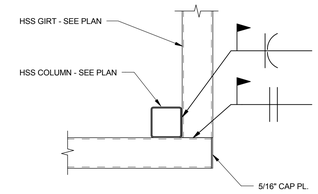

DETAIL E4 / SF502
SCALE : NONE

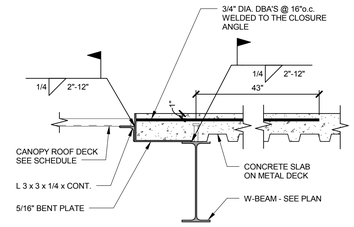

DETAIL E5 / SF502
SCALE : NONE

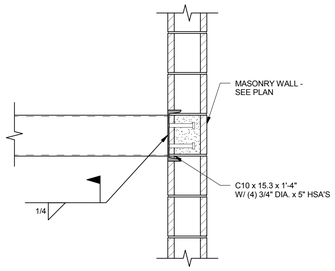

DETAIL D1 / SF502
SCALE : NONE

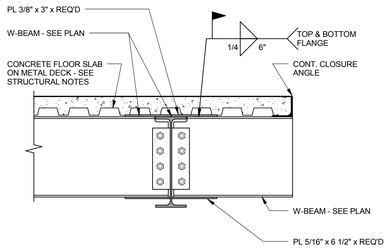

DETAIL D2 / SF502
SCALE : NONE

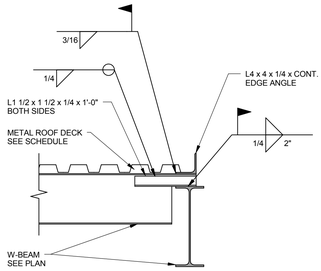

DETAIL D3 / SF502
SCALE : NONE

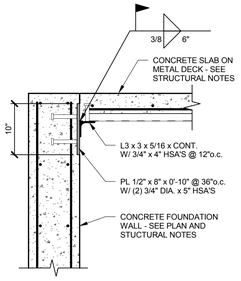

DETAIL D4 / SF502
SCALE : NONE

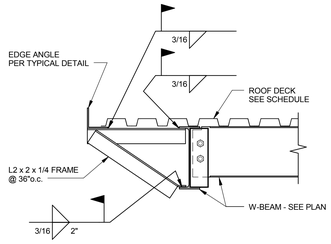

DETAIL D5 / SF502
SCALE : NONE

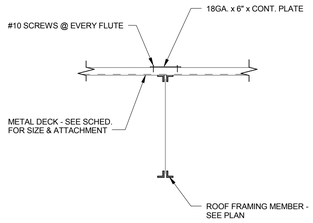

DETAIL C1 / SF502
SCALE : NONE

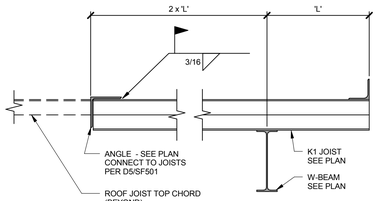

DETAIL C3 / SF502
SCALE : NONE

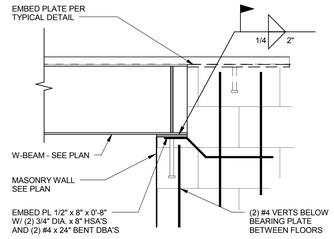

DETAIL C4 / SF502
SCALE : NONE

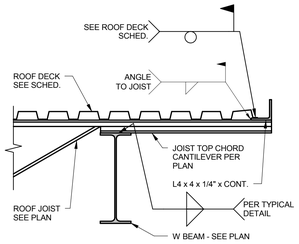

DETAIL C5 / SF502
SCALE : NONE

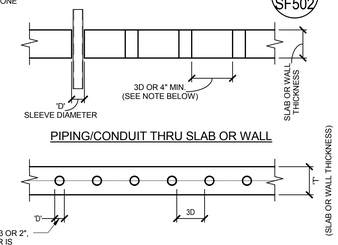

PIPING/CONDUIT THRU SLAB OR WALL

PIPING/CONDUIT IN SLAB OR WALL

TYP. PIPING/CONDUIT AT SLAB OR WALL
SCALE : NONE
B1 / SF502

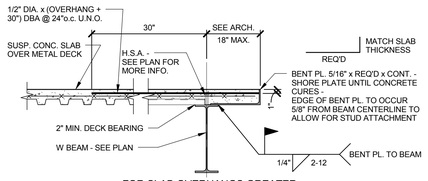

FOR SLAB OVERHANGS GREATER THAN 2 1/2" BUT LESS THAN 16"

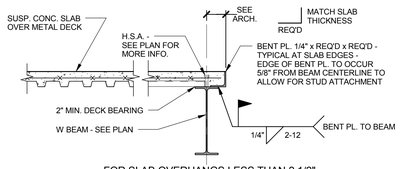

FOR SLAB OVERHANGS LESS THAN 2 1/2"

DECK EDGE ON BEAM
SCALE : NONE
B2 / SF502

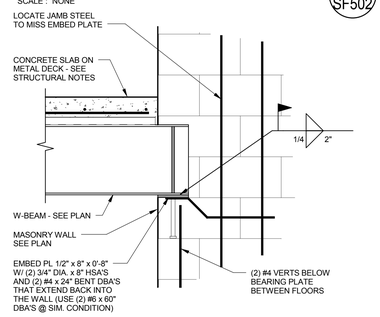

DETAIL B3 / SF502
SCALE : NONE

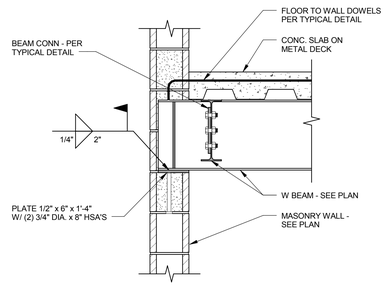

DETAIL B4 / SF502
SCALE : NONE

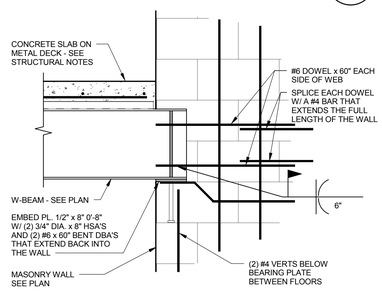

DETAIL B5 / SF502 (L)
SCALE : NONE

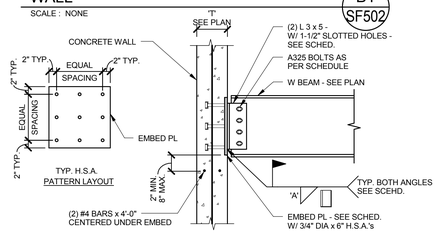

BEAM SIZE	ANGLE SIZE (EA. SIDE)	WELD 'A'	BOLTS	EMBED PLATE	# OF H.S.A.	H.S.A. PATTERN
W12x, C12x	3 x 5 x 5/16	1/4"	(3) 3/4"DIA	1/2" x 12" x 1'-4"	6	
W14x	3 x 5 x 5/16	1/4"	(3) 3/4"DIA	1/2" x 15" x 1'-4"	9	
W16x	3 x 5 x 5/16	1/4"	(4) 3/4"DIA	3/4" x 15" x 2'-0"	12	

DETAIL A1 / SF502
SCALE : NONE

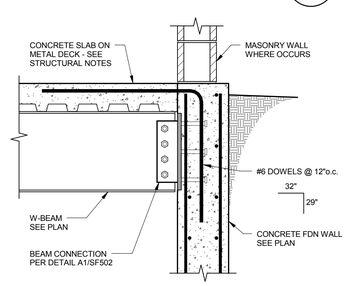

DETAIL A2 / SF502 (L)
SCALE : NONE

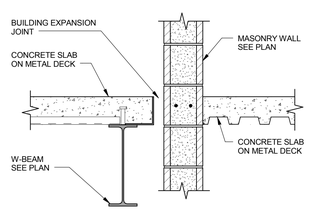

DETAIL A3 / SF502
SCALE : NONE

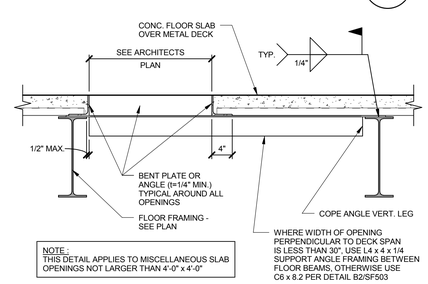

NOTE:
THIS DETAIL APPLIES TO MISCELLANEOUS SLAB OPENINGS NOT LARGER THAN 4'-0" x 4'-0"

TYP. FRAMING @ FLOOR OPENING
SCALE : NONE
A4 / SF502

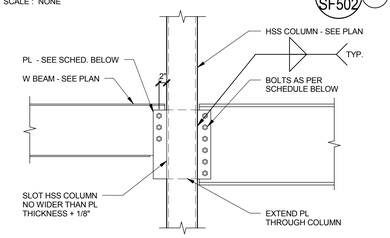

BEAM SIZE	PLATE SIZE	BOLTS	WELD
W12	3/8"	(3) 3/4" DIA.	5/16
W14	3/8"	(3) 3/4" DIA.	5/16
W18	3/8"	(5) 3/4" DIA.	5/16
W21	3/8"	(6) 3/4" DIA.	5/16

DETAIL A5 / SF502
SCALE : NONE

MHTN ARCHITECTS
MHTN Architects, Inc.
420 East South Temple
Suite 100
Salt Lake City, Utah 84111
Telephone (801) 595-6700
Telefax (801) 595-6717
www.mhtn.com

ARW ENGINEERS
structural consultants
1094 W. Park Cir. Ogden, Utah 84404
ph. 801.782.8068 fx. 801.782.4656

WEBER STATE UNIVERSITY
RESIDENTIAL LIFE PHASE II - BLDG 2
DFCM PROJECT NUMBER: 10176810

WEBER STATE UNIVERSITY
OGDEN, UTAH 84408

SEAL

M+TN PROJECT NO. 2010543

DRAWN BY: Author CHECKED BY: Checker

ISSUED:

NO.	DATE	DESCRIPTION
01	05/17/2011	FOR CONSTRUCTION

CONTRACTOR TO VERIFY DRAWINGS IN FIELD USE REFLECT LAST REVISION DATE.

NO.	DATE	DESCRIPTION

SHEET NAME
DETAILS

CONSTRUCTION DOCUMENTS
17 MAY 2011

SHEET NUMBER
SF502

X:\DRAWINGS 2010\10613 - WSU Housing Bldg 2\S - 10613 - WSU Res Life Bldg II (2011)_benjamirp.rvt
5/16/2011 1:56:22 PM

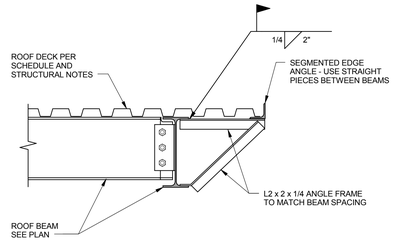

DETAIL
SCALE : NONE
E1 / SF503

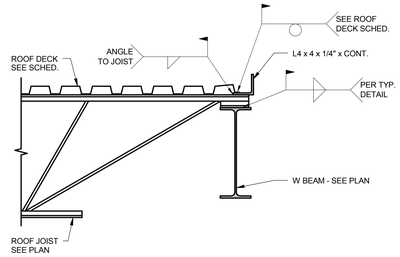

DETAIL
SCALE : NONE
E2 / SF503

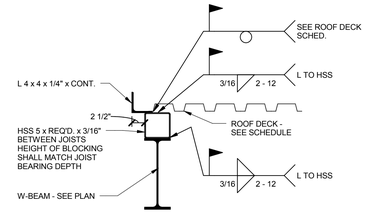

DETAIL
SCALE : NONE
E3 / SF503 (L)

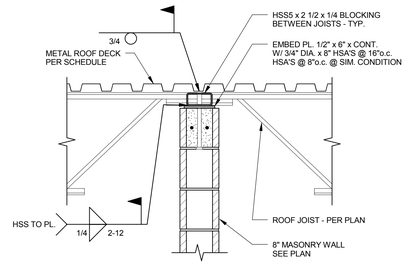

DETAIL
SCALE : NONE
E4 / SF503 (L)

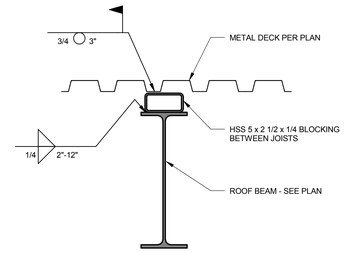

DETAIL
SCALE : NONE
E5 / SF503 (L)

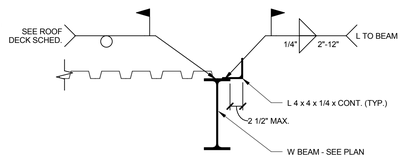

DETAIL
SCALE : NONE
D1 / SF503

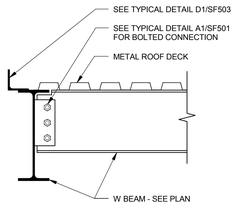

DETAIL
SCALE : NONE
D2 / SF503

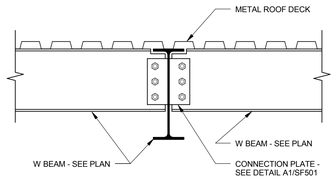

DETAIL
SCALE : NONE
D3 / SF503

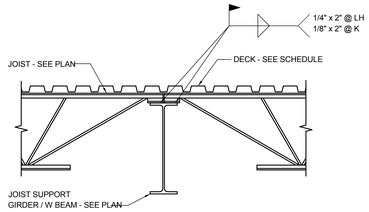

DETAIL
SCALE : NONE
D4 / SF503

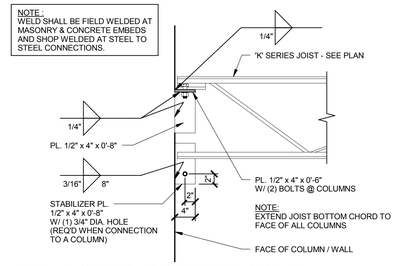

TYP. 'K SERIES JOIST BEARING SEAT (U.N.O.)
SCALE : NONE
D5 / SF503

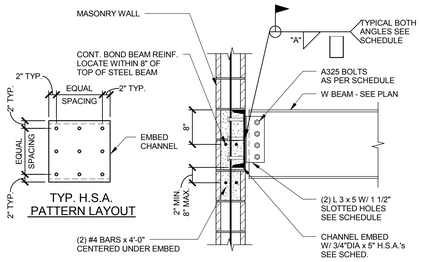

BEAM SIZE	ANGLE SIZE (EA. SIDE)	WELD 'A'	BOLTS	EMBED CHANNEL	# OF H.S.A.	H.S.A. PATTERN
W6, W8, C8	3 x 5 x 1/4" x 0'-4"	3/16"	(2) 3/4" DIA.	C8 x 13.75 x 0'-8"	4	∷
W10	3 x 5 x 5/16" x 0'-7"	1/4"	(2) 3/4" DIA.	C12 x 30 x 1'-4"	6	⁝⁝
W12, C12	3 x 5 x 5/16" x 0'-9"	1/4"	(3) 3/4" DIA.	C12 x 30 x 1'-4"	6	⁝⁝
W14	3 x 5 x 5/16" x 0'-10"	1/4"	(3) 3/4" DIA.	C15 x 33.9 x 1'-4"	9	⁝⁝⁝
W16	3 x 5 x 5/16" x 1'-0"	1/4"	(4) 3/4" DIA.	C15 x 33.9 x 2'-0"	12	⁝⁝⁝⁝
W18	3 x 5 x 5/16" x 1'-3"	1/4"	(5) 3/4" DIA.	(2) C12 x 20.7 x 2'-0"	12	⁝⁝⁝⁝

1. AT THE CONTRACTORS OPTION, (2) C8 x 13.7 MAY BE SUBSTITUTED FOR THE C15 x 33.9. HSA PATTERN SHALL BE RECONFIGURED & EQUALLY DISTRIBUTED BETWEEN THE TWO CHANNELS.
2. DOUBLE CHANNELS SHALL BE WELDED TOGETHER WITH A 2" STITCH WELD EVERY 4" AT THE FLANGE TOE.

DETAIL
SCALE : NONE
B1 / SF503

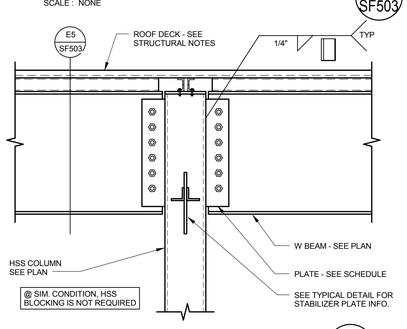

DETAIL
SCALE : NONE
C2 / SF503

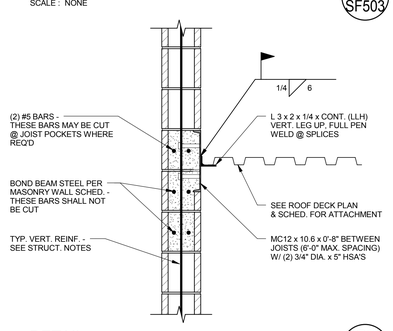

DETAIL
SCALE : NONE
C3 / SF503

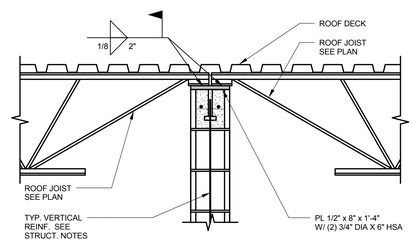

DETAIL
SCALE : NONE
C4 / SF503

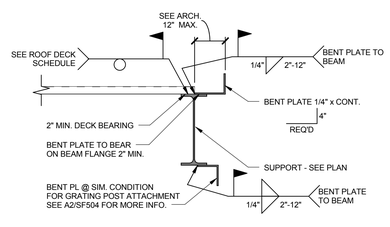

DETAIL
SCALE : NONE
C5 / SF503

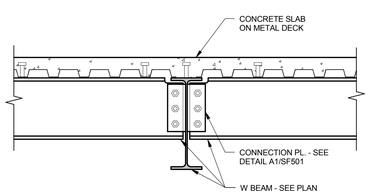

DETAIL
SCALE : NONE
B2 / SF503

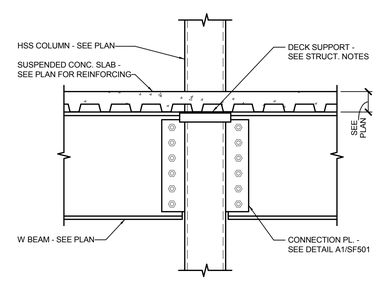

DETAIL
SCALE : NONE
B3 / SF503

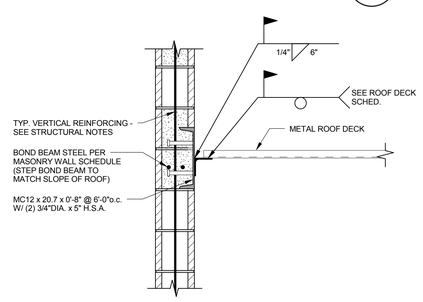

DETAIL
SCALE : NONE
B4 / SF503 (L)

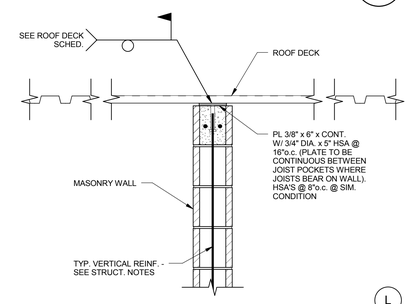

DETAIL
SCALE : NONE
B5 / SF503 (L)

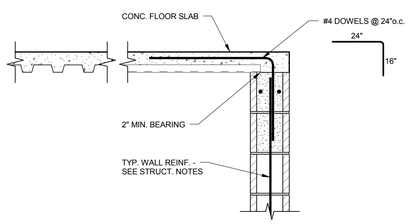

DETAIL
SCALE : NONE
A1 / SF503

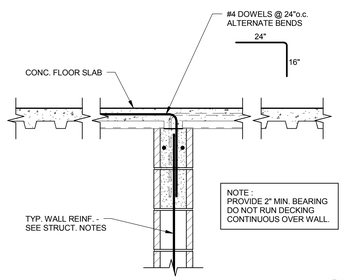

DETAIL
SCALE : NONE
A2 / SF503

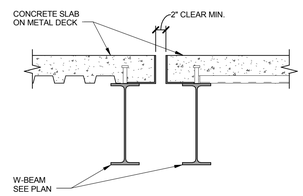

DETAIL
SCALE : NONE
A3 / SF503

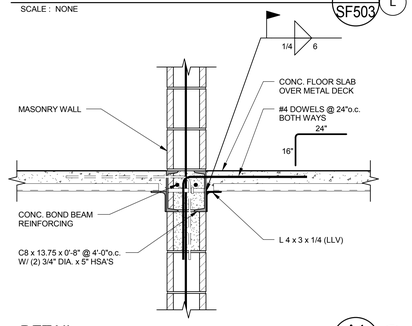

DETAIL
SCALE : NONE
A4 / SF503 (L)

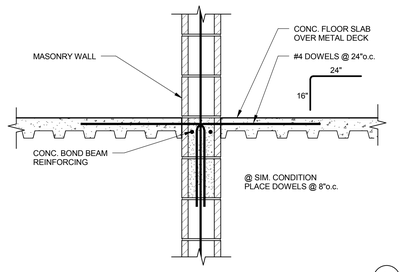

DETAIL
SCALE : NONE
A5 / SF503 (L)

MHTN
ARCHITECTS
MHTN Architects, Inc.
420 East South Temple
Suite 100
Salt Lake City, Utah 84111
Telephone (801) 595-6700
Telefax (801) 595-6717
www.mhtn.com

ARW
ENGINEERS
structural consultants
1094 W. Park Cir. Ogden, Utah 84404
ph. 801.782.6008 fx. 801.782.4656

WEBER STATE UNIVERSITY
RESIDENTIAL LIFE PHASE II - BLDG 2
DFCM PROJECT NUMBER: 10176810

WEBER STATE UNIVERSITY
OGDEN, UTAH 84408

SEAL

MHTN PROJECT NO. 2010543

DRAWN BY: Author CHECKED BY: Checker

ISSUED:

NO.	DATE	DESCRIPTION
01	05/17/2011	FOR CONSTRUCTION

CONTRACTOR TO VERIFY DRAWINGS IN FIELD USE REFLECT LAST REVISION DATE.

NO.	DATE	DESCRIPTION

SHEET NAME
DETAILS

CONSTRUCTION DOCUMENTS
17 MAY 2011

SHEET NUMBER
SF503

X:\DRAWINGS 2010\10613 - WSU Housing Bldg 2\S - 10613 - WSU Res Life Bldg II (2011)_benjaminrp.rvt
5/16/2011 1:56:23 PM

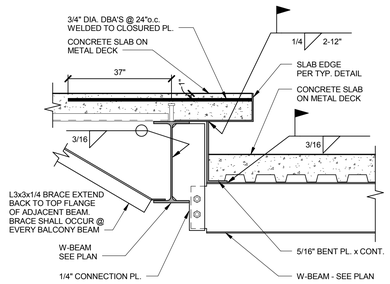

DETAIL
SCALE : NONE
E1 SF504

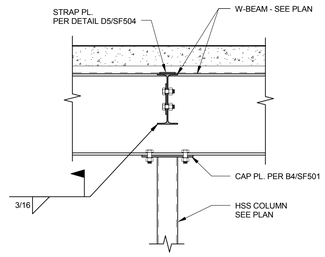

DETAIL
SCALE : NONE
E2 SF504

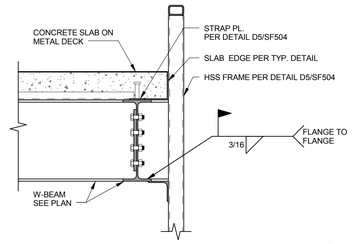

DETAIL
SCALE : NONE
E3 SF504

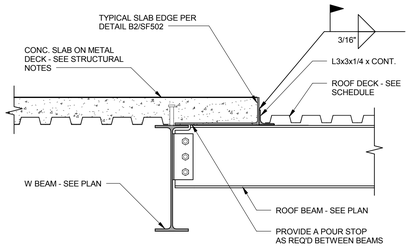

DETAIL
SCALE : NONE
E4 SF504

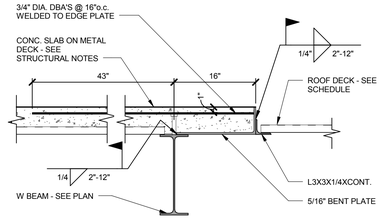

DETAIL
SCALE : NONE
E5 SF504

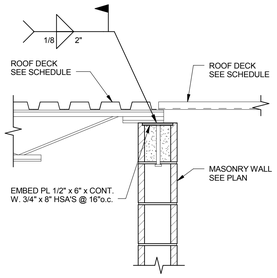

DETAIL
SCALE : NONE
D1 SF504

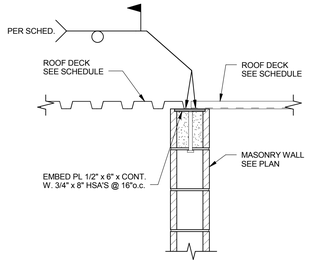

DETAIL
SCALE : NONE
D2 SF504

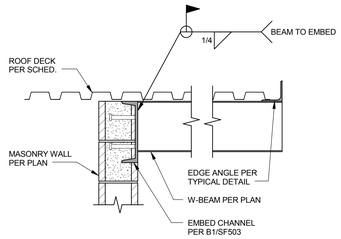

DETAIL
SCALE : NONE
D3 SF504

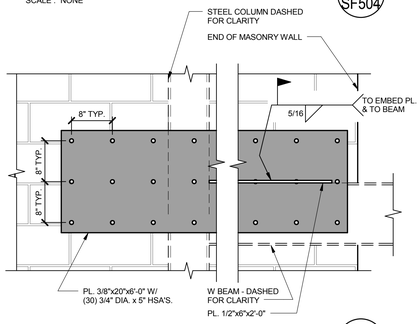

DETAIL
SCALE : NONE
D4 SF504 L

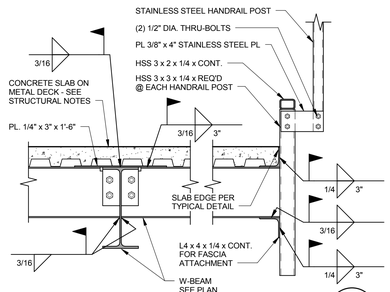

DETAIL
SCALE : NONE
D5 SF504

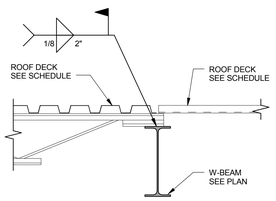

DETAIL
SCALE : NONE
C1 SF504

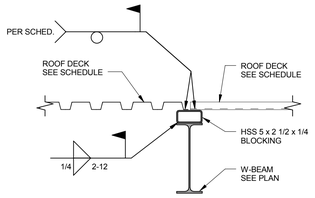

DETAIL
SCALE : NONE
C2 SF504

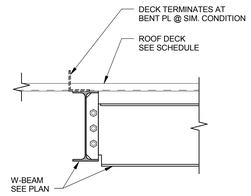

DETAIL
SCALE : NONE
C3 SF504

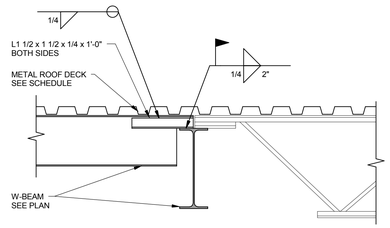

DETAIL
SCALE : NONE
C4 SF504

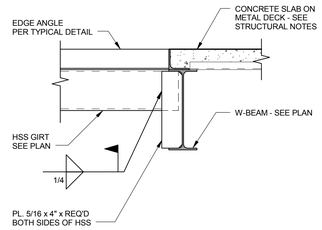

DETAIL
SCALE : NONE
C5 SF504

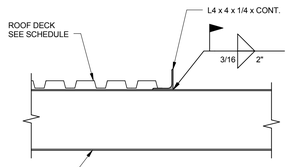

DETAIL
SCALE : NONE
B1 SF504

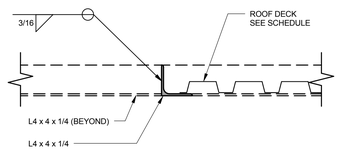

DETAIL
SCALE : NONE
B2 SF504

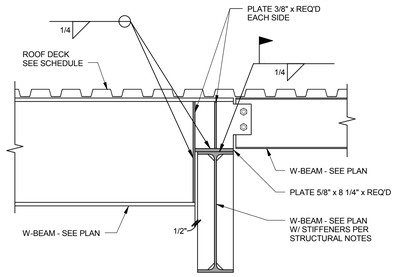

DETAIL
SCALE : NONE
B3 SF504

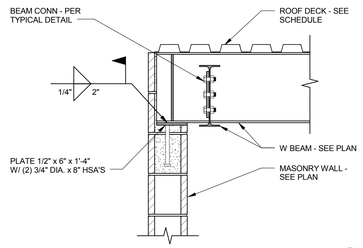

DETAIL
SCALE : NONE
B4 SF504

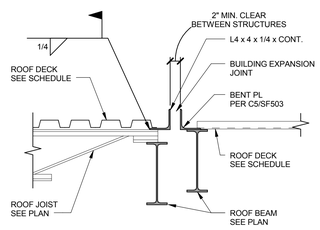

DETAIL
SCALE : NONE
B5 SF504

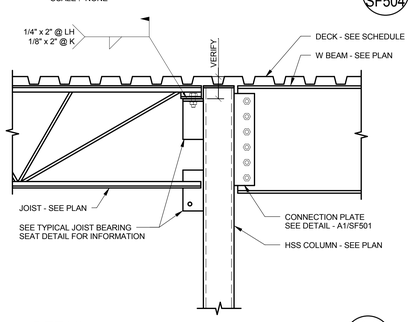

DETAIL
SCALE : NONE
A1 SF504

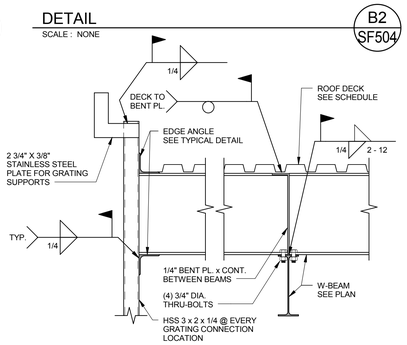

DETAIL
SCALE : NONE
A2 SF504

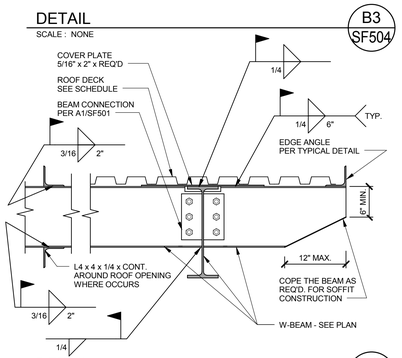

DETAIL
SCALE : NONE
A3 SF504

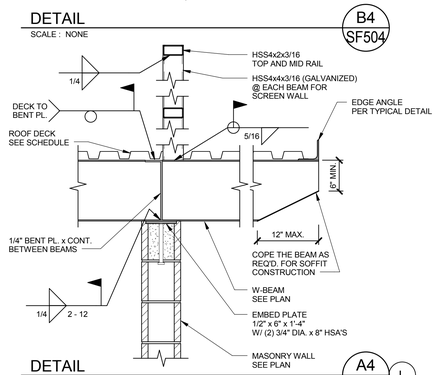

DETAIL
SCALE : NONE
A4 SF504 L

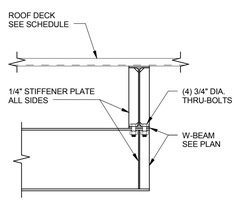

DETAIL
SCALE : NONE
A5 SF504

X:\DRAWINGS 2010\10613 - WSU Housing Bldg 2\S - 10613 - WSU Res Life Bldg II (2011)_benjaminp.rvt
5/16/2011 1:56:25 PM

MHTN
ARCHITECTS
MHTN Architects, Inc.
420 East South Temple
Suite 100
Salt Lake City, Utah 84111
Telephone (801) 595-6700
Telefax (801) 595-6717
www.mhtn.com

ARW
ENGINEERS
structural consultants
1094 W. Park Cir. Ogden, Utah 84404
ph. 801.782.8008 fx. 801.782.4656

WEBER STATE UNIVERSITY
RESIDENTIAL LIFE PHASE II - BLDG 2
DFCM PROJECT NUMBER: 10176810

WEBER STATE UNIVERSITY
OGDEN, UTAH 84408

SEAL

MHTN PROJECT NO. 2010543

DRAWN BY: Author CHECKED BY: Checker

ISSUED:

NO.	DATE	DESCRIPTION
01	05/17/2011	FOR CONSTRUCTION

CONTRACTOR TO VERIFY DRAWINGS IN FIELD USE REFLECT LAST REVISION DATE.

NO.	DATE	DESCRIPTION

SHEET NAME
DETAILS

CONSTRUCTION DOCUMENTS
17 MAY 2011

SHEET NUMBER
SF504

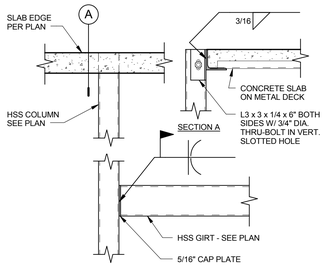

DETAIL C1 SF505
SCALE : NONE

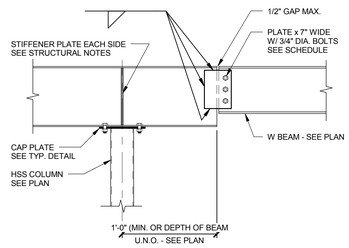

DETAIL C2 SF505
SCALE : NONE

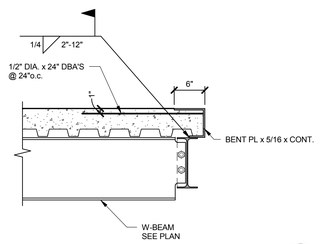

DETAIL C3 SF505
SCALE : NONE

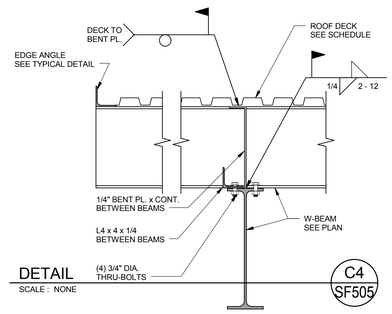

DETAIL C4 SF505
SCALE : NONE

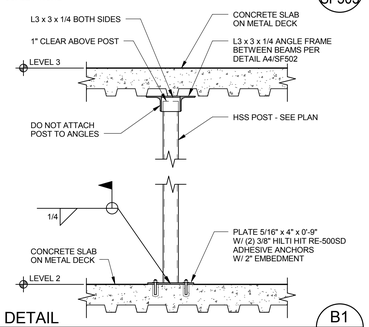

DETAIL B1 SF505
SCALE : NONE

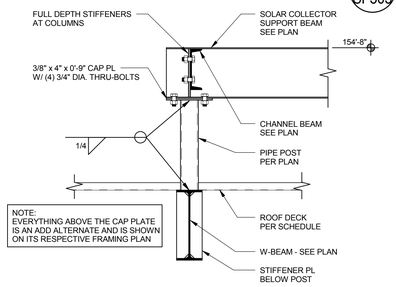

DETAIL B2 SF505
SCALE : NONE

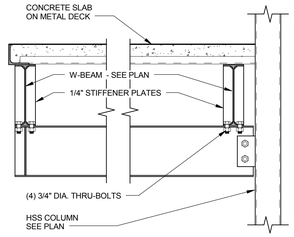

DETAIL B3 SF505
SCALE : NONE

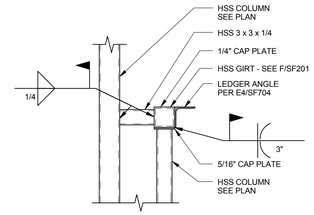

DETAIL B4 SF505
SCALE : NONE

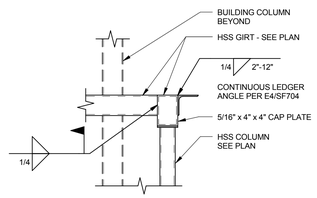

DETAIL B5 SF505
SCALE : NONE

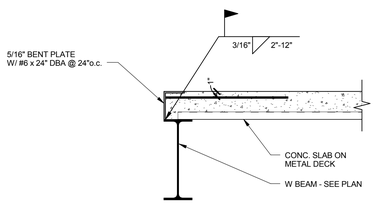

DETAIL A1 SF505
SCALE : NONE

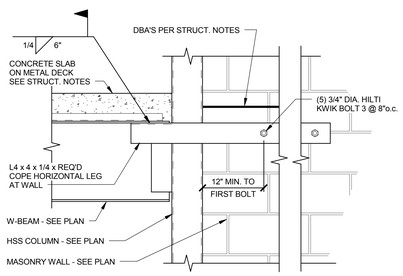

DETAIL A2 SF505 L
SCALE : NONE

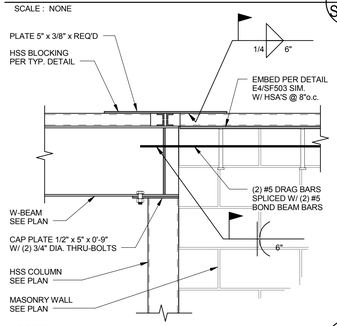

DETAIL A3 SF505 L
SCALE : NONE

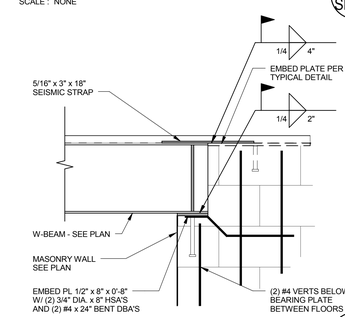

DETAIL A4 SF505
SCALE : NONE

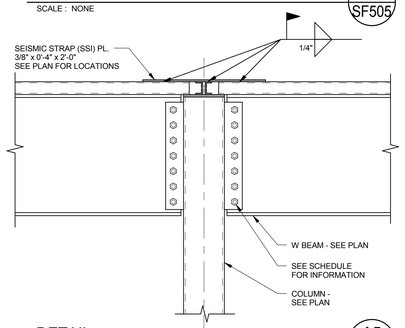

DETAIL A5 SF505 L
SCALE : NONE

X:\DRAWINGS 2010\10613 - WSU Housing Bldg 2\S - 10613 - WSU Res Life Bldg II (2011)_benjamirop.rvt
5/16/2011 1:56:26 PM

MHTN
ARCHITECTS
MHTN Architects, Inc.
420 East South Temple
Suite 100
Salt Lake City, Utah 84111
Telephone (801) 595-6700
Telefax (801) 595-6717
www.mhtn.com

ENGINEERS
structural consultants
1594 W. Park Cir. Ogden, Utah 84404
ph. 801.782.6008 fx. 801.782.4656

WEBER STATE UNIVERSITY
RESIDENTIAL LIFE PHASE II - BLDG 2
DFCM PROJECT NUMBER: 10176810

WEBER STATE UNIVERSITY
OGDEN, UTAH 84408

SEAL

MHTN PROJECT NO: 2010543

DRAWN BY: BLP CHECKED BY: JLA

ISSUED:

NO	DATE	DESCRIPTION
01	05/17/2011	FOR CONSTRUCTION

CONTRACTOR TO VERIFY DRAWINGS IN FIELD USE REFLECT LAST REVISION DATE.

NO	DATE	DESCRIPTION

SHEET NAME
DETAILS

CONSTRUCTION DOCUMENTS
17 MAY 2011

SHEET NUMBER
SF505

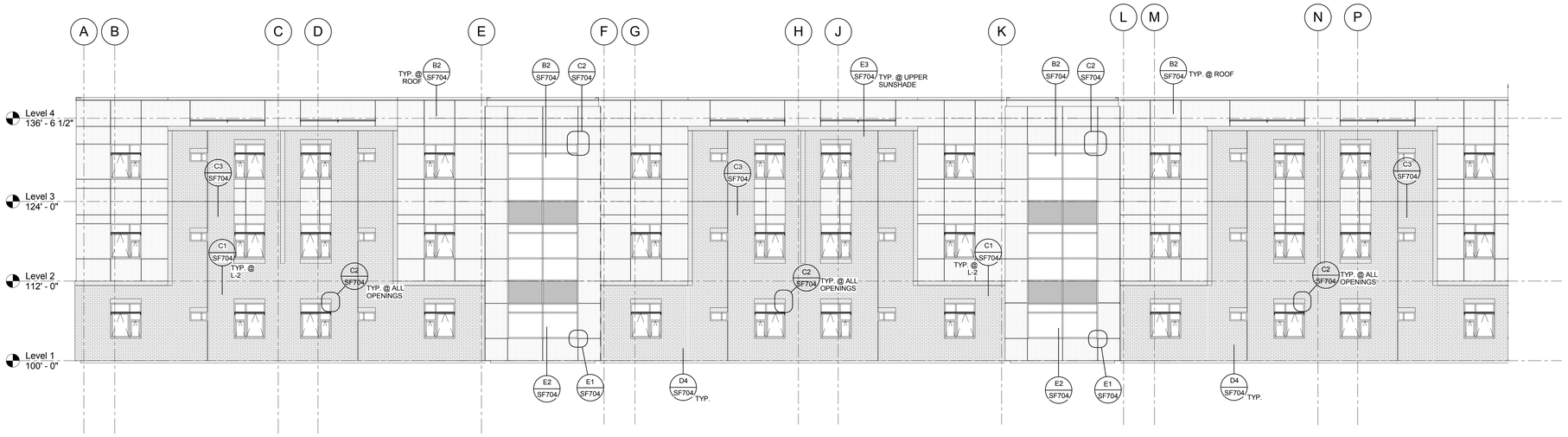

WEST ELEVATION - POD A

SCALE : 1/8" = 1'-0"

A SF701

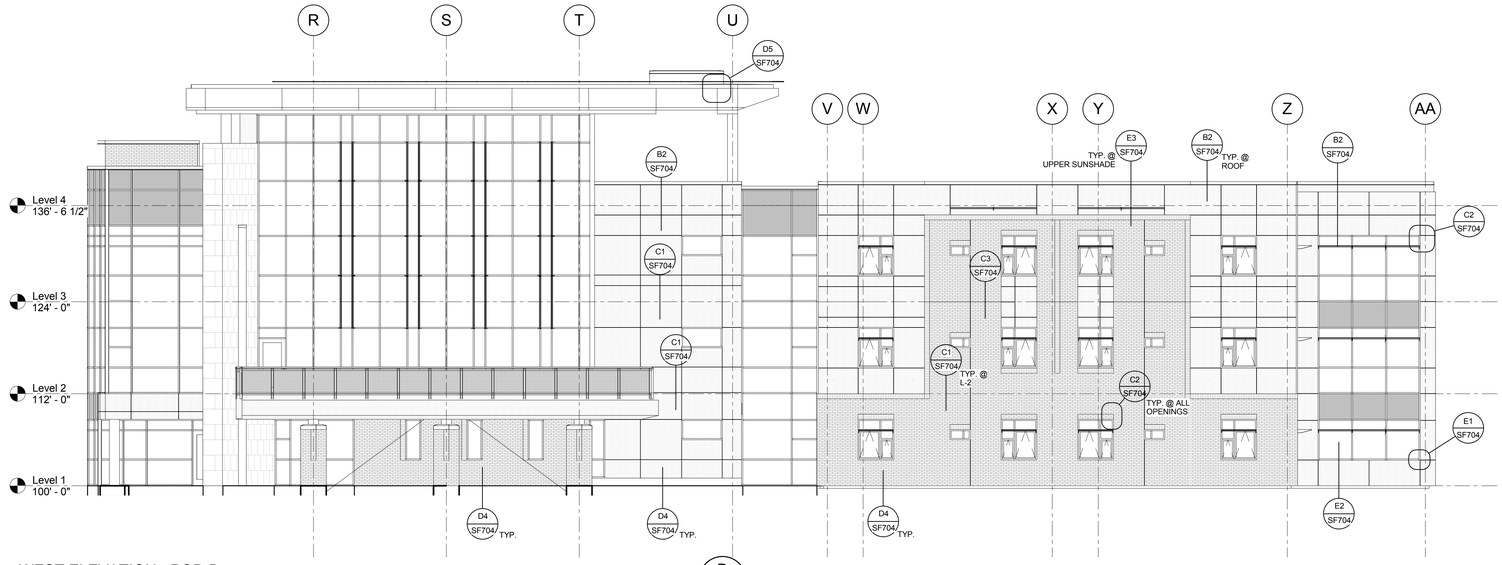

WEST ELEVATION - POD B

SCALE : 1/8" = 1'-0"

B SF701

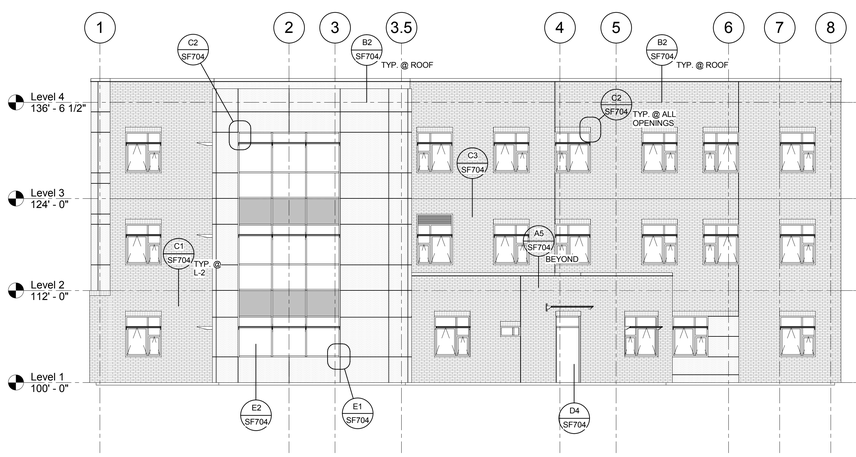

SOUTH ELEVATION - GRID AA

SCALE : 1/8" = 1'-0"

C SF701

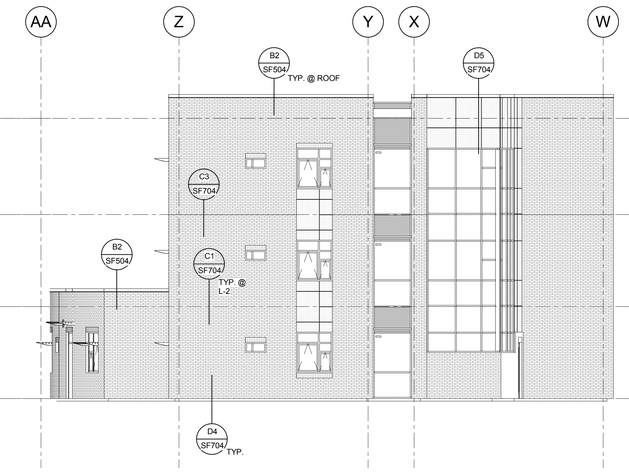

EAST ELEVATION - GRID 8

SCALE : 1/8" = 1'-0"

D SF701

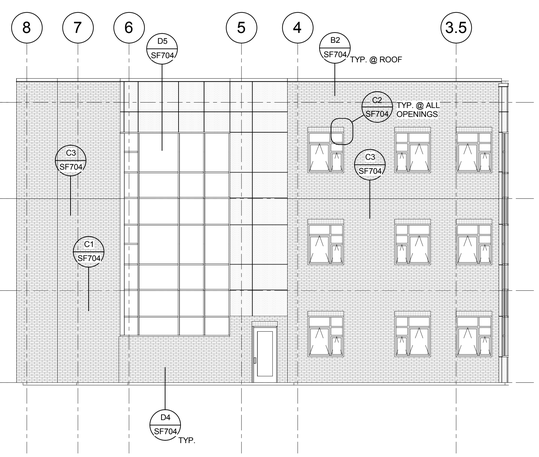

NORTH ELEVATION - GRID W

SCALE : 1/8" = 1'-0"

E SF701

X:\DRAWINGS 2010\10613 - WSU Housing Bldg 2S - 10613 - WSU Res Life Bldg II (2011)_benjamin.rvt
5/16/2011 11:56:54 PM

MHTN
ARCHITECTS
MHTN Architects, Inc.
420 East South Temple
Suite 100
Salt Lake City, Utah 84111
Telephone (801) 595-6700
Telefax (801) 595-6717
www.mhtn.com

ARW
ENGINEERS
structural consultants
1094 W. Park Cir. Ogden, Utah 84404
ph. 801.782.8008 fx. 801.782.4656

WEBER STATE UNIVERSITY
RESIDENTIAL LIFE PHASE II - BLDG 2

DFCM PROJECT NUMBER: 10176810

WEBER STATE UNIVERSITY
OGDEN, UTAH 84408

SEAL

MHTN PROJECT NO. 2010543

DRAWN BY: BLP CHECKED BY: JLA

ISSUED:

NO.	DATE	DESCRIPTION
01	05/17/2011	FOR CONSTRUCTION

CONTRACTOR TO VERIFY DRAWINGS IN FIELD USE REFLECT LAST REVISION DATE:

NO.	DATE	DESCRIPTION

SHEET NAME

ELEVATIONS

CONSTRUCTION DOCUMENTS
17 MAY 2011

SHEET NUMBER

SF701

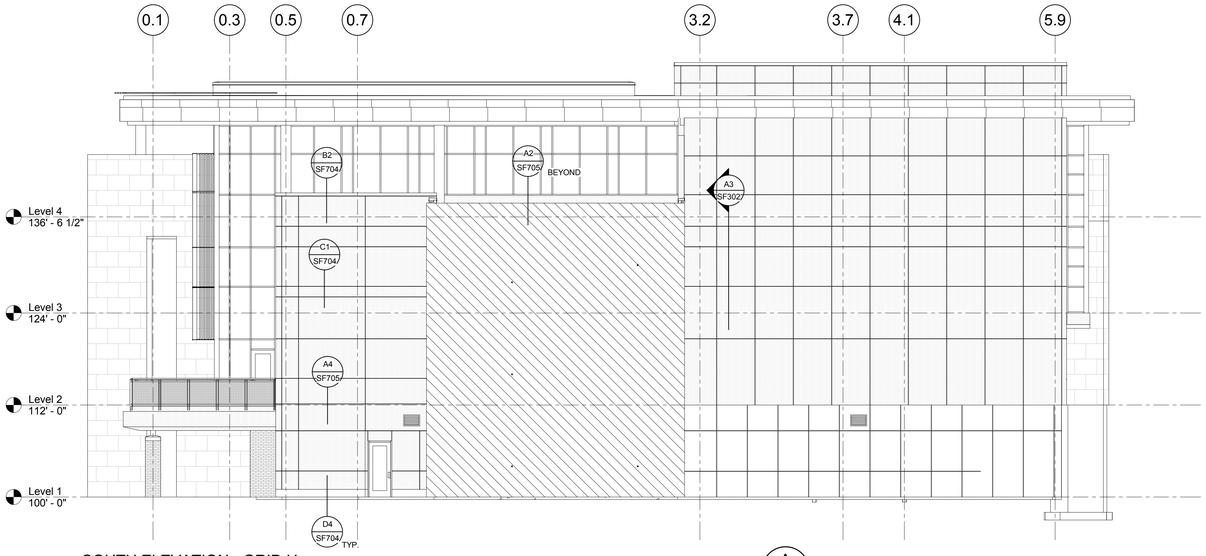

SOUTH ELEVATION - GRID U

SCALE : 1/8" = 1'-0"

A SF702

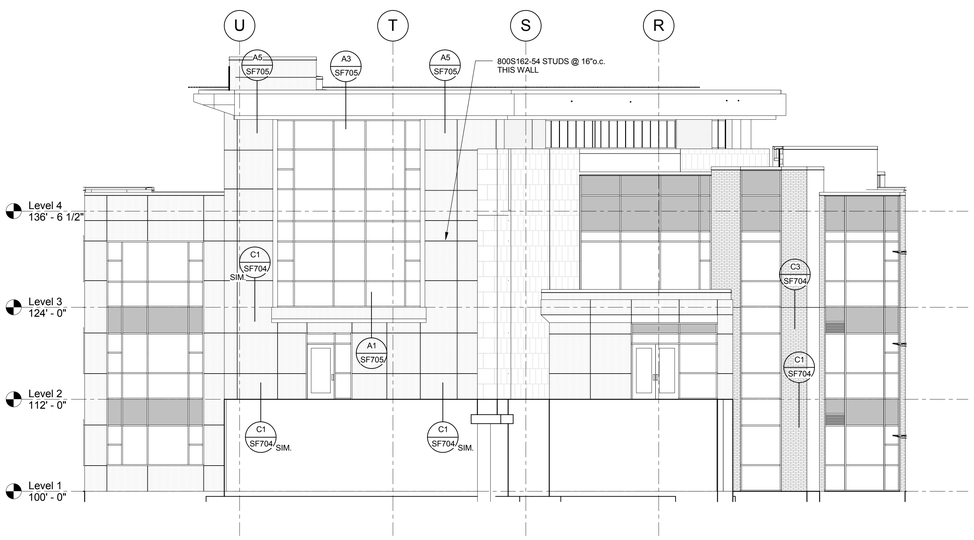

EAST ELEVATION - GRID 6

SCALE : 1/8" = 1'-0"

B SF702

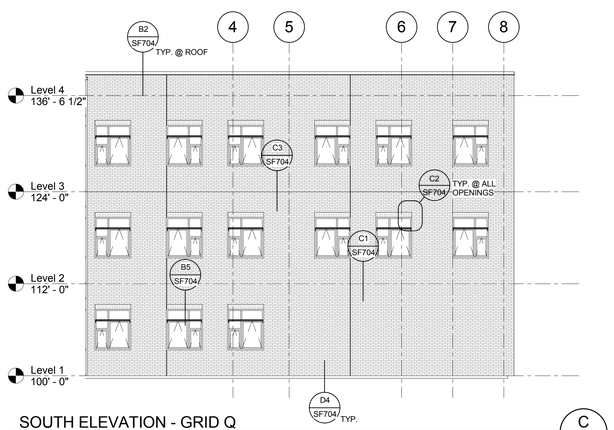

SOUTH ELEVATION - GRID Q

SCALE : NONE

C SF702

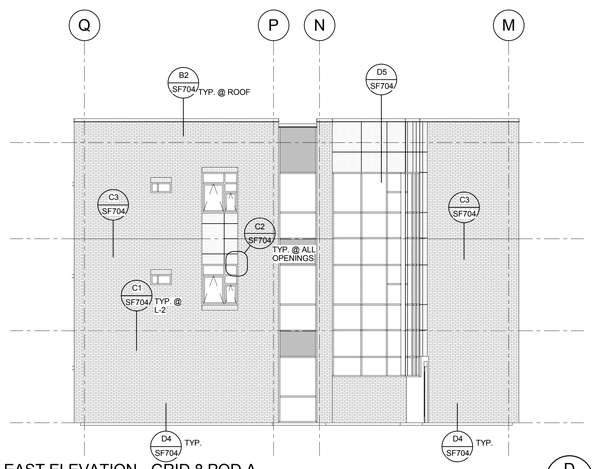

EAST ELEVATION - GRID 8 POD A

SCALE : 1/8" = 1'-0"

D SF702

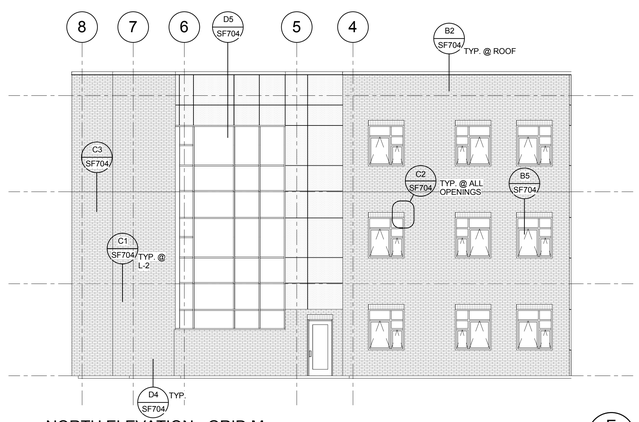

NORTH ELEVATION - GRID M

SCALE : 1/8" = 1'-0"

E SF702

X:\DRAWINGS 2010\10613 - WSU Housing Bldg 2\S - 10613 - WSU Res Life Bldg II (2011)_benjaminp.rvt
5/16/2011 1:57:04 PM

MHTN
ARCHITECTS
MHTN Architects, Inc.
420 East South Temple
Suite 100
Salt Lake City, Utah 84111
Telephone (801) 595-6700
Telefax (801) 595-6717
www.mhtn.com

ARW
ENGINEERS
structural consultants
1934 W. Park Cir. Ogden, Utah 84404
ph. 801.782.6098 fx. 801.782.4656

WEBER STATE UNIVERSITY
RESIDENTIAL LIFE PHASE II - BLDG 2

DFCM PROJECT NUMBER: 10176810

WEBER STATE UNIVERSITY
OGDEN, UTAH 84408

SEAL

MHTN PROJECT NO: 2010543

DRAWN BY: Author CHECKED BY: Checker

ISSUED:

NO.	DATE	DESCRIPTION
01	05/17/2011	FOR CONSTRUCTION

CONTRACTOR TO VERIFY DRAWINGS IN FIELD USE REFLECT LAST REVISION DATE.

NO.	DATE	DESCRIPTION

SHEET NAME

ELEVATIONS

CONSTRUCTION DOCUMENTS
17 MAY 2011

SHEET NUMBER

SF702

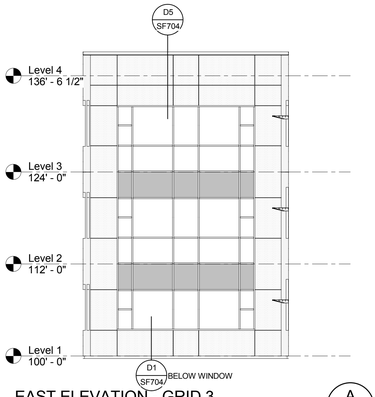

EAST ELEVATION - GRID 3

SCALE : 1/8" = 1'-0"

A
SF703

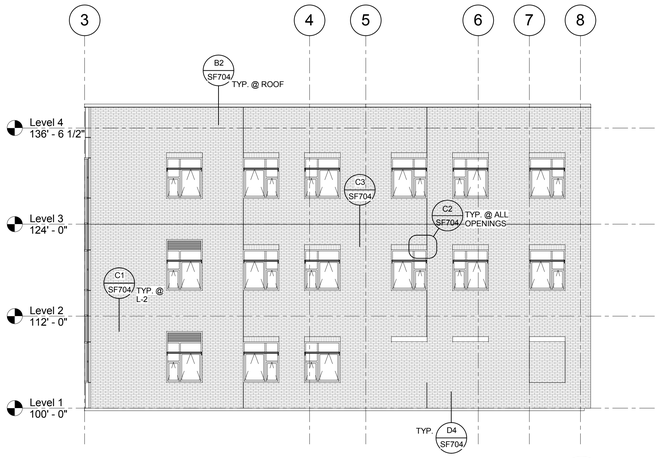

SOUTH ELEVATION - GRID K

SCALE : 1/8" = 1'-0"

B
SF703

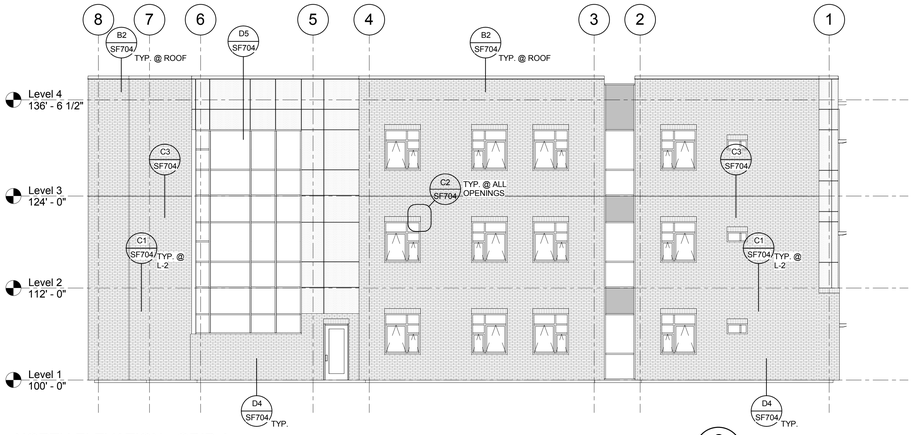

NORTH ELEVATION - GRID A

SCALE : 1/8" = 1'-0"

C
SF703

MHTN
ARCHITECTS
MHTN Architects, Inc.
420 East South Temple
Suite 100
Salt Lake City, Utah 84111
Telephone (801) 595-6700
Telefax (801) 595-6717
www.mhtn.com

ENGINEERS
structural consultants
1934 W. Park Gr. Ogden, Utah 84404
ph. 801.782.6008 fx. 801.782.4656

WEBER STATE UNIVERSITY
RESIDENTIAL LIFE PHASE II - BLDG 2
DFCM PROJECT NUMBER: 10176810

WEBER STATE UNIVERSITY
OGDEN, UTAH 84408

SEAL

MHTN PROJECT NO: 2010543

DRAWN BY: Author CHECKED BY: Checker

ISSUED:

NO	DATE	DESCRIPTION
01	05/17/2011	FOR CONSTRUCTION

CONTRACTOR TO VERIFY DRAWINGS IN FIELD USE REFLECT LAST REVISION DATE.

NO	DATE	DESCRIPTION

SHEET NAME
ELEVATIONS

CONSTRUCTION DOCUMENTS
17 MAY 2011

SHEET NUMBER
SF703

X:\DRAWINGS 2010\10613 - WSU Housing Bldg 2\S - 10613 - WSU Res Life Bldg II (2011)_benjaminrp.rvt
5/16/2011 1:57:07 PM

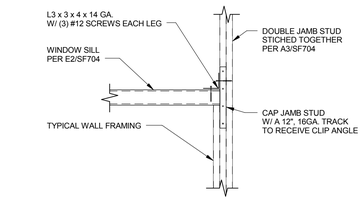

DETAIL — E1 / SF704
SCALE : NONE

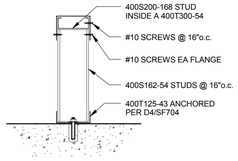

DETAIL — E2 / SF704
SCALE : NONE

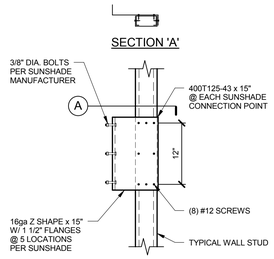

DETAIL — E3 / SF704
SCALE : NONE

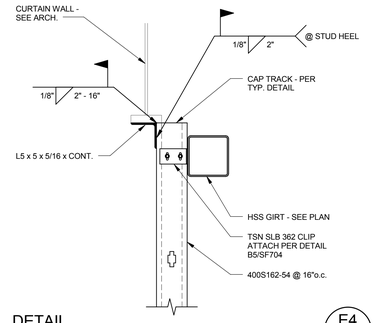

DETAIL — E4 / SF704
SCALE : NONE

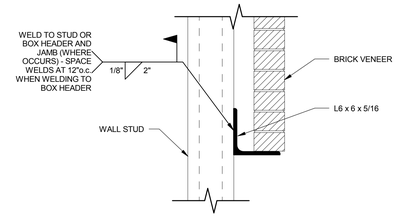

NOTE:
PROVIDE 1" BEARING FOR EACH FOOT OF SPAN @ EACH END. (MIN. OF 6" BEARING @ EACH END)

TYPICAL STEEL LINTEL DETAIL — E5 / SF704
SCALE : NONE

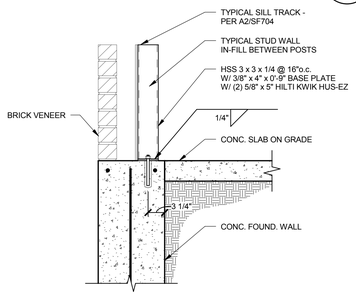

DETAIL — D1 / SF704
SCALE : NONE

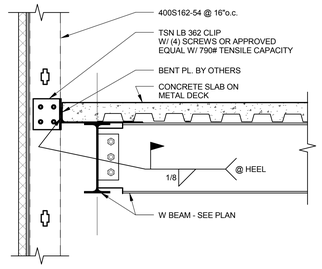

DETAIL — D3 / SF704
SCALE : NONE

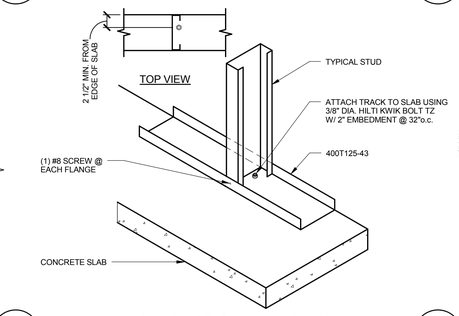

TYPICAL BASE OF WALL DETAIL — D4 / SF704
SCALE : NONE

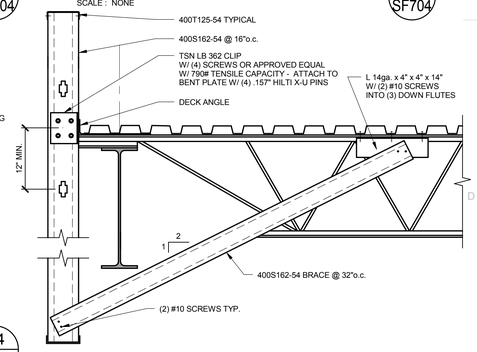

DETAIL — D5 / SF704
SCALE : NONE

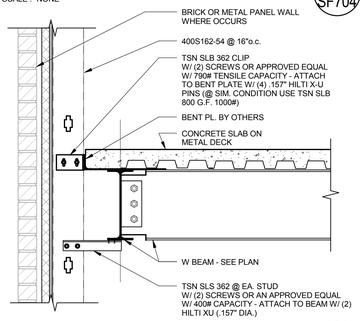

DETAIL — C1 / SF704
SCALE : NONE

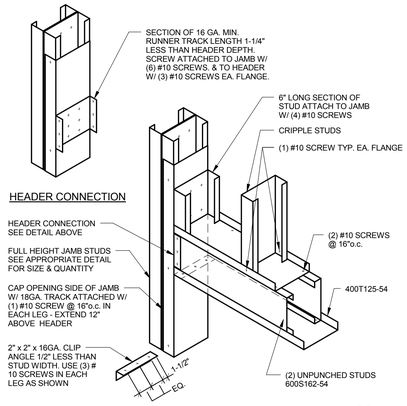

TYPICAL HEADER DETAIL — C2 / SF704
SCALE : NONE

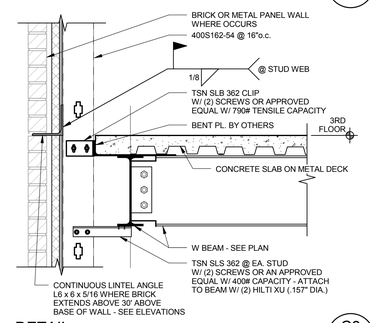

DETAIL — C3 / SF704
SCALE : NONE

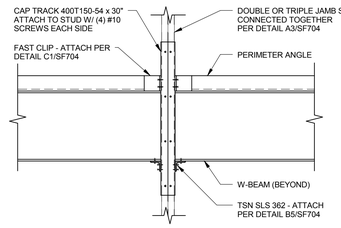

TYPICAL JAMB STUD ATTACHMENT DETAIL — C4 / SF704
SCALE : NONE

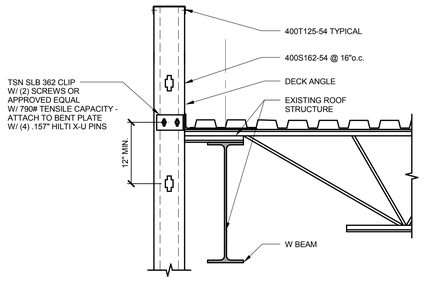

DETAIL — B2 / SF704
SCALE : NONE

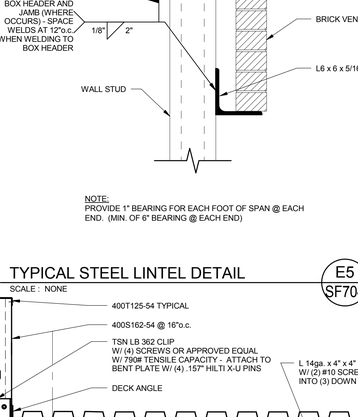

DETAIL — B5 / SF704
SCALE : NONE

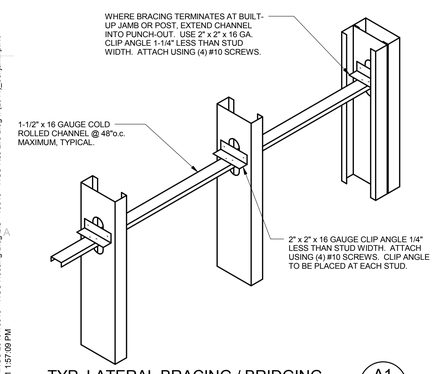

TYP. LATERAL BRACING / BRIDGING — A1 / SF704
SCALE : NONE

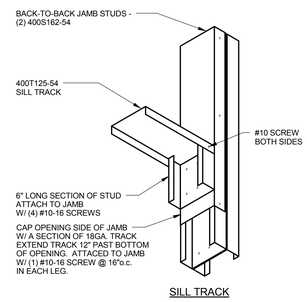

TYPICAL SILL DETAIL — A2 / SF704
SCALE : NONE

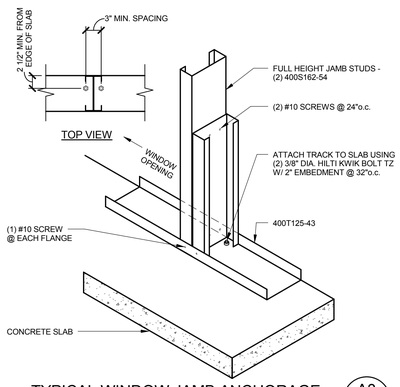

TYPICAL WINDOW JAMB ANCHORAGE — A3 / SF704
SCALE : NONE

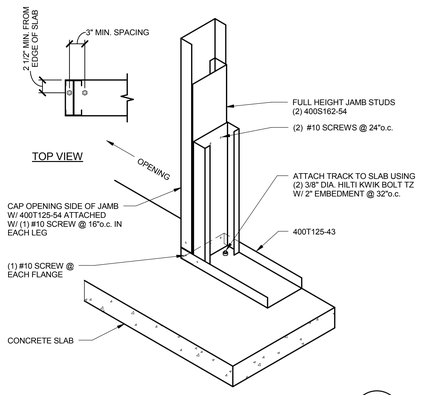

TYPICAL DOOR JAMB ANCHORAGE — A4 / SF704
SCALE : NONE

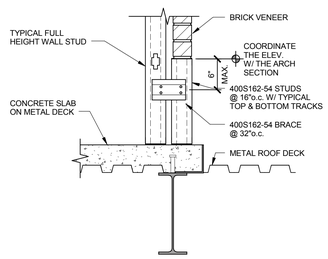

DETAIL — A5 / SF704
SCALE : NONE

X:\DRAWINGS 2010\10613 - WSU Housing Bldg 2\S - 10613 - WSU Res Life Bldg II (2011)_benjaminp.rvt
5/16/2011 1:57:09 PM

MHTN
ARCHITECTS
MHTN Architects, Inc.
420 East South Temple
Suite 100
Salt Lake City, Utah 84111
Telephone (801) 595-6700
Telefax (801) 595-6717
www.mhtn.com

ARW
ENGINEERS
structural consultants
1094 W. Park Gr. Ogden, Utah 84404
ph. 801.782.8008 fx. 801.782.4656

WEBER STATE UNIVERSITY
RESIDENTIAL LIFE PHASE II - BLDG 2
DFCM PROJECT NUMBER: 10176810

WEBER STATE UNIVERSITY
OGDEN, UTAH 84408

SEAL

M+TN PROJECT NO. 2010543

DRAWN BY: J. RHODES CHECKED BY: J. ACHTER

ISSUED:

NO	DATE	DESCRIPTION
01	05/17/2011	FOR CONSTRUCTION

CONTRACTOR TO VERIFY DRAWINGS IN FIELD USE REFLECT LAST REVISION DATE.

NO	DATE	DESCRIPTION

SHEET NAME
DETAILS

CONSTRUCTION DOCUMENTS
17 MAY 2011

SHEET NUMBER
SF704

DETAIL
SCALE : NONE
A1 SF705

DETAIL
SCALE : NONE
A2 SF705

DETAIL
SCALE : NONE
A3 SF705

DETAIL
SCALE : NONE
A4 SF705

DETAIL
SCALE : NONE
A5 SF705

X:\DRAWINGS 2010\10613 - WSU Housing Bldg 2\S - 10613 - WSU Res Life Bldg II (2011)_benjaminp.rvt
5/16/2011 11:57:09 PM

MHTN
ARCHITECTS
MHTN Architects, Inc.
420 East South Temple
Suite 100
Salt Lake City, Utah 84111
Telephone (801) 595-6700
Telefax (801) 595-6717
www.mhtn.com

ENGINEERS
structural consultants
1594 W. Park Cir. Ogden, Utah 84404
ph. 801.782.6008 fx. 801.782.4656

WEBER STATE UNIVERSITY
RESIDENTIAL LIFE PHASE II - BLDG 2
DFCM PROJECT NUMBER: 10176810

WEBER STATE UNIVERSITY
OGDEN, UTAH 84408

SEAL

MHTN PROJECT NO. 2010543
DRAWN BY: Author CHECKED BY: Checker

ISSUED:

NO.	DATE	DESCRIPTION
01	05/17/2011	FOR CONSTRUCTION

CONTRACTOR TO VERIFY DRAWINGS IN FIELD USE REFLECT LAST REVISION DATE:

NO.	DATE	DESCRIPTION

SHEET NAME
DETAILS

CONSTRUCTION DOCUMENTS
17 MAY 2011

SHEET NUMBER
SF705

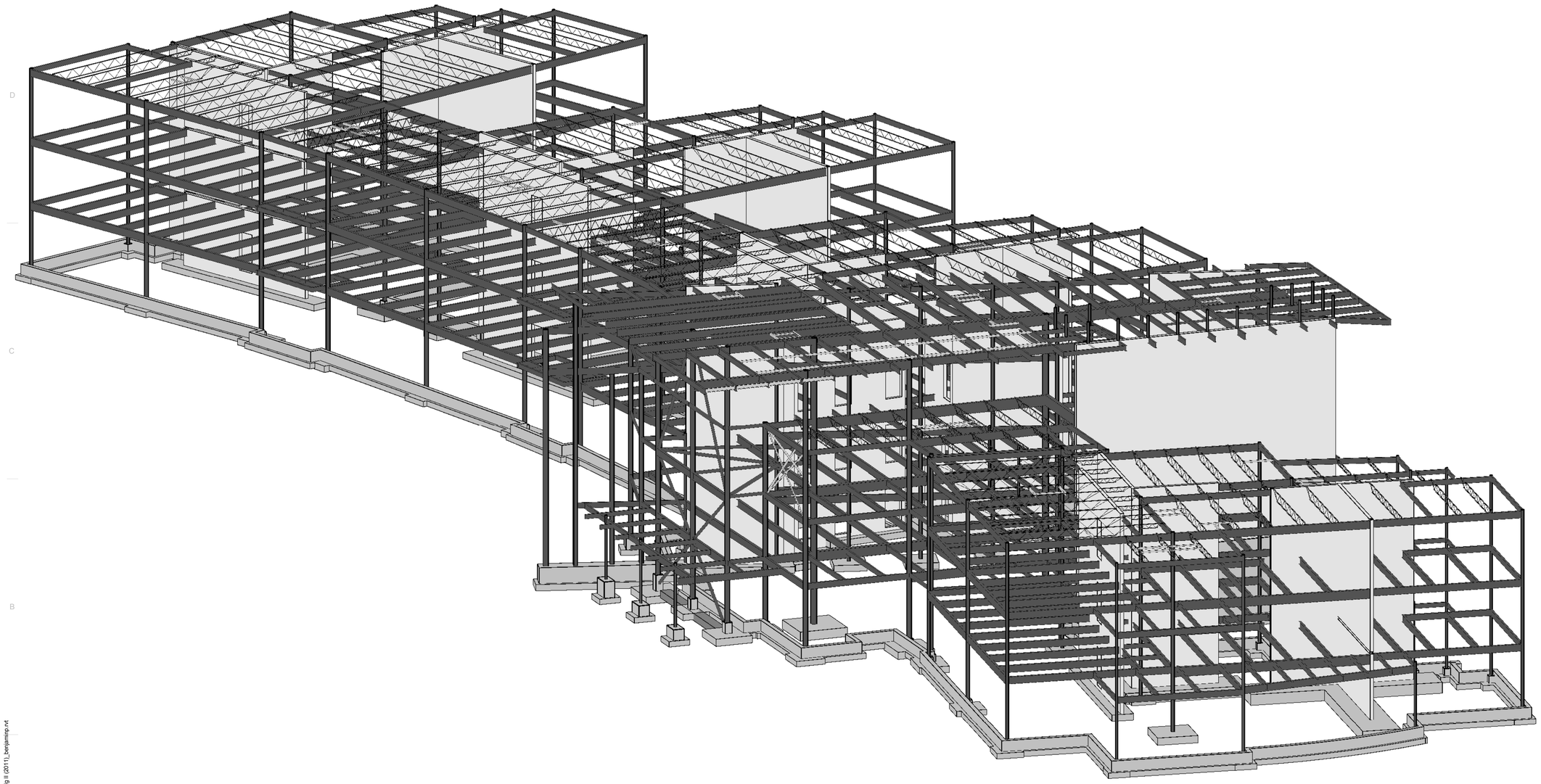

NOTE: THIS VIEW REPRESENTS A SCHEMATIC RENDERING ONLY AND IS NOT INTENDED TO CONVEY CONSTRUCTION INFORMATION. ALL CONSTRUCTION SHALL COMPLY WITH SPECIFIC NOTES AND DETAILS WITHIN THE STRUCTURAL DRAWINGS.

MHTN
ARCHITECTS
MHTN Architects, Inc.
420 East South Temple
Suite 100
Salt Lake City, Utah 84111
Telephone (801) 595-6700
Telefax (801) 595-6717
www.mhtn.com

A R W
ENGINEERS
structural consultants
1594 W. Park Cir. Ogden, Utah 84404
ph. 801.782.6098 fx. 801.782.4656

WEBER STATE UNIVERSITY
RESIDENTIAL LIFE PHASE II - BLDG 2

DFCM PROJECT NUMBER: 10176810

WEBER STATE UNIVERSITY
OGDEN, UTAH 84408

SEAL

MHTN PROJECT NO. 2010543

DRAWN BY: BLP CHECKED BY: JLA

ISSUED:

NO.	DATE	DESCRIPTION
01	05/17/2011	FOR CONSTRUCTION

CONTRACTOR TO VERIFY DRAWINGS IN FIELD USE REFLECT LAST REVISION DATE.

NO.	DATE	DESCRIPTION

SHEET NAME

SCHEMATIC REFERENCE

CONSTRUCTION DOCUMENTS
17 MAY 2011

SHEET NUMBER

SF901

X:\DRAWINGS 2010\10613 - WSU Housing Bldg 2\S - 10613 - WSU Res Life Bldg II (2011)_benjaminp.rvt
5/16/2011 1:57:16 PM

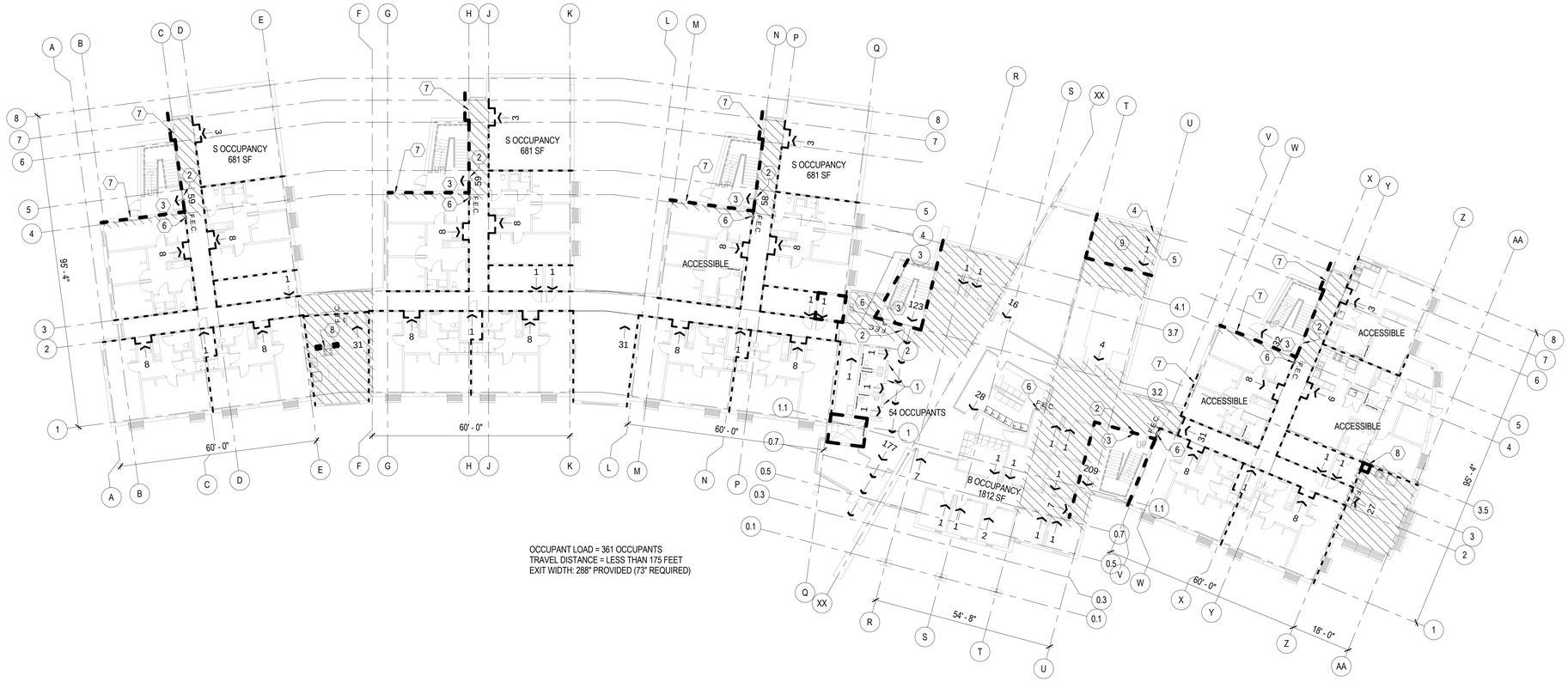

LEVEL 1 LIFE SAFETY PLAN

0 8' - 0" 16' - 0" 32' - 0"

SCALE: 1/16" = 1'-0"

REQUIREMENTS ACCORDING TO IBC TABLE 1107.6.1.1

57 TOTAL UNITS (58 WITH ADD. ALTERNATE 01):

MINIMUM REQUIRED NUMBER OF ACCESSIBLE UNITS WITHOUT ROLL-IN SHOWERS:	3
PROVIDED NUMBER OF ACCESSIBLE UNITS WITHOUT ROLL-IN SHOWERS:	3
MINIMUM REQUIRED NUMBER OF ACCESSIBLE UNITS WITH ROLL-IN SHOWERS:	3
PROVIDED NUMBER OF ACCESSIBLE UNITS WITH ROLL-IN SHOWERS:	5
TOTAL NUMBER OF REQUIRED ACCESSIBLE UNITS:	6
TOTAL NUMBER OF PROVIDED ACCESSIBLE UNITS:	8

EVERY UNIT WHICH IS NOT AN ACCESSIBLE UNIT (TYPE A) SHALL BE A TYPE B UNIT

UNITS PER FLOOR:	LEVEL ONE:	17 TOTAL UNITS (18 WITH ADD. ALT. 01)
	LEVEL TWO:	20 TOTAL UNITS
	LEVEL THREE:	20 TOTAL UNITS

KEYNOTES

1. TOILET ROOM SIGN
   MOUNTING HEIGHT & LOCATION: REFER TO A1/AE410
   VERBAGE: INTERNATIONAL SYMBOL FOR ACCESSIBILITY INDICATING
   MEN
   WOMEN
   UNISEX, WHERE OCCURS
   BRAILLE
2. STAIRWAY SIGN
   MOUNTING HEIGHT & LOCATION: REFER TO A1/AE410
   VERBAGE: INTERNATIONAL SYMBOL FOR STAIRS
   BRAILLE
3. STAIRWAY FLOOR SIGN
   MOUNTING HEIGHT & LOCATION: REFER TO A1/AE410
   VERBAGE: FLOOR LEVEL
   LEVEL OF EXIT DISCHARGE FOR EAST STAIR LEVEL 1
   LEVEL OF EXIT DISCHARGE FOR WEST STAIR LEVEL 1
   BRAILLE
4. FIRE RISER VALVE
5. FIRE RISER
6. FIRE EXTINGUISHER & CABINET
7. EXTEND 1-HR FIRE RATED WALLS (10 FEET MINIMUM HORIZONTALLY & VERTICALLY) (SEE ALSO GA FILE NO. WP 8007 WHICH REFERENCES UL# U465)
8. 1-HOUR FIRE RATED SHAFT
9. 1-HOUR FIRE RATED LID ASSEMBLY BELOW MECHANICAL SHAFT - CONSTRUCT @ 8'-0" MIN. A.F.F.

LIFE SAFETY LEGEND

- ONE HOUR RATED FIRE BARRIER - SEE UL ASSEMBLIES U419, U465, U469, U905, HW-D-0001, HW-D-0049 AND HW-D-0119
- THIRTY MINUTE RATED FIRE PARTITION - SEE UL ASSEMBLIES U419, U905, HW-D-0001 AND HW-D-0049
- STRUCTURAL STEEL IN THIS AREA TO RECEIVE FIRESPRAY PROVIDE 1 HOUR PROTECTION REFER TO UL# N759 (FIRESPRAY NOT REQUIRED AT METAL DECK) AND UL# X790 AT PERIMETER COLUMNS

GENERAL NOTES

1. BUILDING & SITE SHALL COMPLY WITH IBC & ADAAG FOR ACCESSIBLE ROUTES, ENTRANCES, & CLEARANCES AT DOORS
2. ALL INTERIOR PARTITIONS TERMINATE AT THE UNDERSIDE OF DECK
3. REFER TO FLOOR PLANS FOR PARTITION TYPE DESIGNATIONS
4. COORDINATE WITH STRUCTURAL FOR SHEAR WALL REQUIREMENTS
5. FILL ALL ANNULAR SPACE OF ALL PENETRATIONS THROUGH DECK WITH FIRE SAFING MATERIAL

MHTN
ARCHITECTS
MHTN Architects, Inc.
420 East South Temple
Suite 100
Salt Lake City, Utah 84111
Telephone (801) 595-6700
Telefax (801) 595-6717
www.mhtn.com

WEBER STATE UNIVERSITY
RESIDENTIAL LIFE PHASE II - BLDG 2
DFCM PROJECT NUMBER: 10176810

WEBER STATE UNIVERSITY
OGDEN, UTAH 84408

SEAL

MHTN PROJECT NO. 2010543

DRAWN BY: MC CHECKED BY: MG

ISSUED:

NO.	DATE	DESCRIPTION
01	17 MAY 2011	CONSTRUCTION DOCUMENTS

CONTRACTOR TO VERIFY DRAWINGS IN FIELD USE REFLECT LAST REVISION DATE

NO.	DATE	DESCRIPTION

SHEET NAME

FIRST FLOOR LIFE SAFETY PLAN

CONSTRUCTION DOCUMENTS

17 MAY 2011

SHEET NUMBER

AE001

C:\Users\prestonm\Documents\A11_2010543 WSU RESIDENTIAL LIFE BUILDING II_CENTRAL_prestonm.rvt
5/17/2011 12:17:26 PM

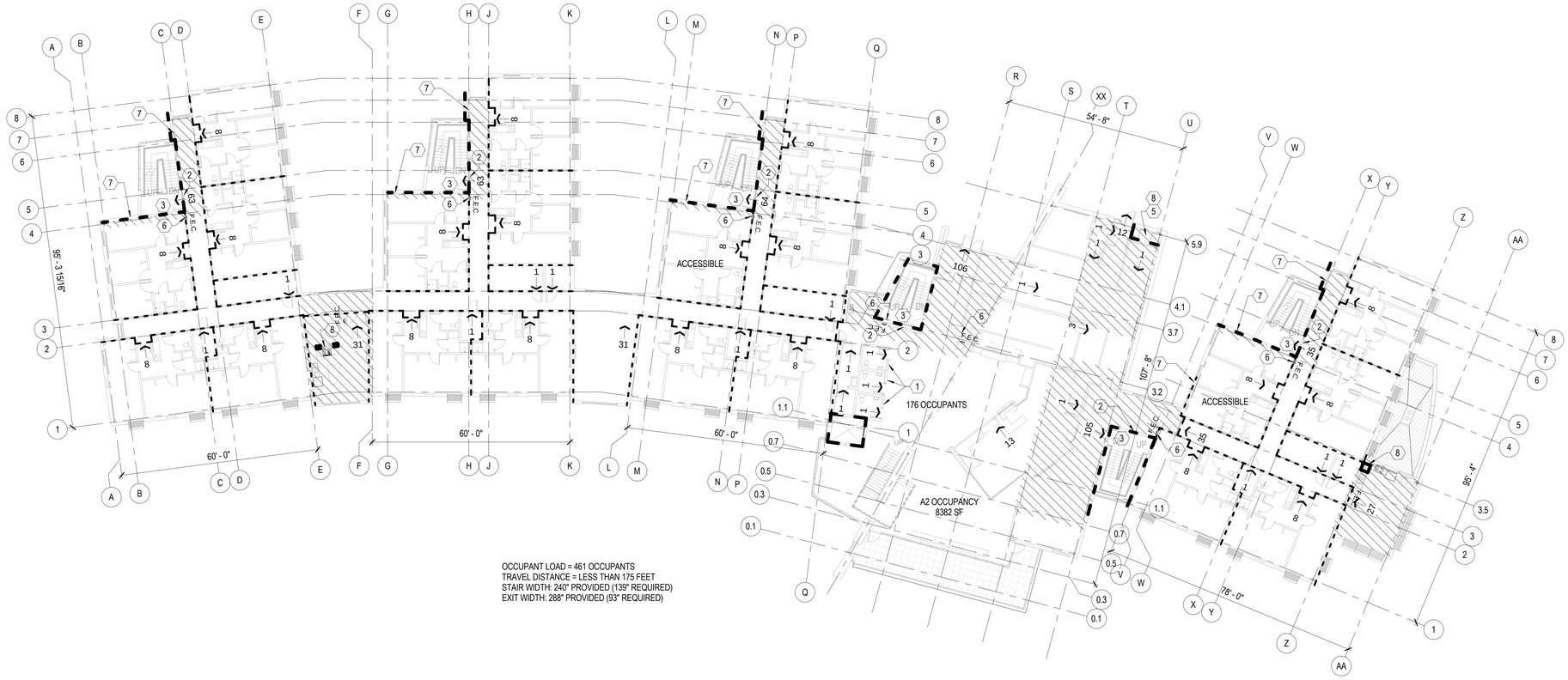

OCCUPANT LOAD = 461 OCCUPANTS
TRAVEL DISTANCE = LESS THAN 175 FEET
STAIR WIDTH: 240" PROVIDED (139" REQUIRED)
EXIT WIDTH: 288" PROVIDED (93" REQUIRED)

LEVEL 2 LIFE SAFETY PLAN

0 8' - 0" 16' - 0" 32' - 0"

SCALE: 1/16" = 1'-0"

REQUIREMENTS ACCORDING TO IBC TABLE 1107.6.1.1

57 TOTAL UNITS (58 WITH ADD. ALTERNATE 01):

MINIMUM REQUIRED NUMBER OF ACCESSIBLE UNITS WITHOUT ROLL-IN SHOWERS:	3
PROVIDED NUMBER OF ACCESSIBLE UNITS WITHOUT ROLL-IN SHOWERS:	3
MINIMUM REQUIRED NUMBER OF ACCESSIBLE UNITS WITH ROLL-IN SHOWERS:	3
PROVIDED NUMBER OF ACCESSIBLE UNITS WITH ROLL-IN SHOWERS:	5
TOTAL NUMBER OF REQUIRED ACCESSIBLE UNITS:	6
TOTAL NUMBER OF PROVIDED ACCESSIBLE UNITS:	8

EVERY UNIT WHICH IS NOT AN ACCESSIBLE UNIT (TYPE A) SHALL BE A TYPE B UNIT

UNITS PER FLOOR:		
	LEVEL ONE:	17 TOTAL UNITS (18 WITH ADD. ALT. 01)
	LEVEL TWO:	20 TOTAL UNITS
	LEVEL THREE:	20 TOTAL UNITS

KEYNOTES

1. TOILET ROOM SIGN
   MOUNTING HEIGHT & LOCATION: REFER TO A1/AE410
   VERBAGE: INTERNATIONAL SYMBOL FOR ACCESSIBILITY INDICATING
   MEN
   WOMEN
   UNISEX, WHERE OCCURS
   BRAILLE
2. STAIRWAY SIGN
   MOUNTING HEIGHT & LOCATION: REFER TO A1/AE410
   VERBAGE: INTERNATIONAL SYMBOL FOR STAIRS
   BRAILLE
3. STAIRWAY FLOOR SIGN
   MOUNTING HEIGHT & LOCATION: REFER TO A1/AE410
   VERBAGE: FLOOR LEVEL
   LEVEL OF EXIT DISCHARGE FOR EAST STAIR LEVEL 1
   LEVEL OF EXIT DISCHARGE FOR WEST STAIR LEVEL 1
   BRAILLE
4. FIRE RISER VALVE
5. FIRE RISER
6. FIRE EXTINGUISHER & CABINET
7. EXTEND 1-HR FIRE RATED WALLS (10 FEET MINIMUM HORIZONTALLY & VERTICALLY) (SEE ALSO GA FILE NO. WP 8007 WHICH REFERENCES UL# U465)
8. 1-HOUR FIRE RATED SHAFT
9. 1-HOUR FIRE RATED LID ASSEMBLY BELOW MECHANICAL SHAFT - CONSTRUCT @ 8'-0" MIN. A.F.F.

LIFE SAFETY LEGEND

- ONE HOUR RATED FIRE BARRIER - SEE UL ASSEMBLIES U419, U465, U469, U905, HW-D-0001, HW-D-0049 AND HW-D-0119
- THIRTY MINUTE RATED FIRE PARTITION - SEE UL ASSEMBLIES U419, U905, HW-D-0001 AND HW-D-0049
- STRUCTURAL STEEL IN THIS AREA TO RECEIVE FIRESPRAY PROVIDE 1 HOUR PROTECTION REFER TO UL# N759 (FIRESPRAY NOT REQUIRED AT METAL DECK) AND UL# X790 AT PERIMETER COLUMNS

GENERAL NOTES

1. BUILDING & SITE SHALL COMPLY WITH IBC & ADAAG FOR ACCESSIBLE ROUTES, ENTRANCES, & CLEARANCES AT DOORS
2. ALL INTERIOR PARTITIONS TERMINATE AT THE UNDERSIDE OF DECK
3. REFER TO FLOOR PLANS FOR PARTITION TYPE DESIGNATIONS
4. COORDINATE WITH STRUCTURAL FOR SHEAR WALL REQUIREMENTS
5. FILL ALL ANNULAR SPACE OF ALL PENETRATIONS THROUGH DECK WITH FIRE SAFING MATERIAL

MHTN ARCHITECTS
MHTN Architects, Inc.
420 East South Temple
Suite 100
Salt Lake City, Utah 84111
Telephone (801) 595-6700
Telefax (801) 595-6717
www.mhtn.com

WEBER STATE UNIVERSITY
RESIDENTIAL LIFE PHASE II - BLDG 2
DFCM PROJECT NUMBER: 10176810
WEBER STATE UNIVERSITY
OGDEN, UTAH 84408

SEAL

MHTN PROJECT NO. 2010543
DRAWN BY: MC CHECKED BY: MG

ISSUED:

NO.	DATE	DESCRIPTION
01	17 MAY 2011	CONSTRUCTION DOCUMENTS

CONTRACTOR TO VERIFY DRAWINGS IN FIELD USE REFLECT LAST REVISION DATE:

NO.	DATE	DESCRIPTION

SHEET NAME
SECOND FLOOR LIFE SAFETY PLAN
CONSTRUCTION DOCUMENTS
17 MAY 2011

SHEET NUMBER
AE002

C:\Users\prestonm\Documents\A11_2010543 WSU RESIDENTIAL LIFE BUILDING II_CENTRAL_prestonm.rvt
5/17/2011 12:17:31 PM

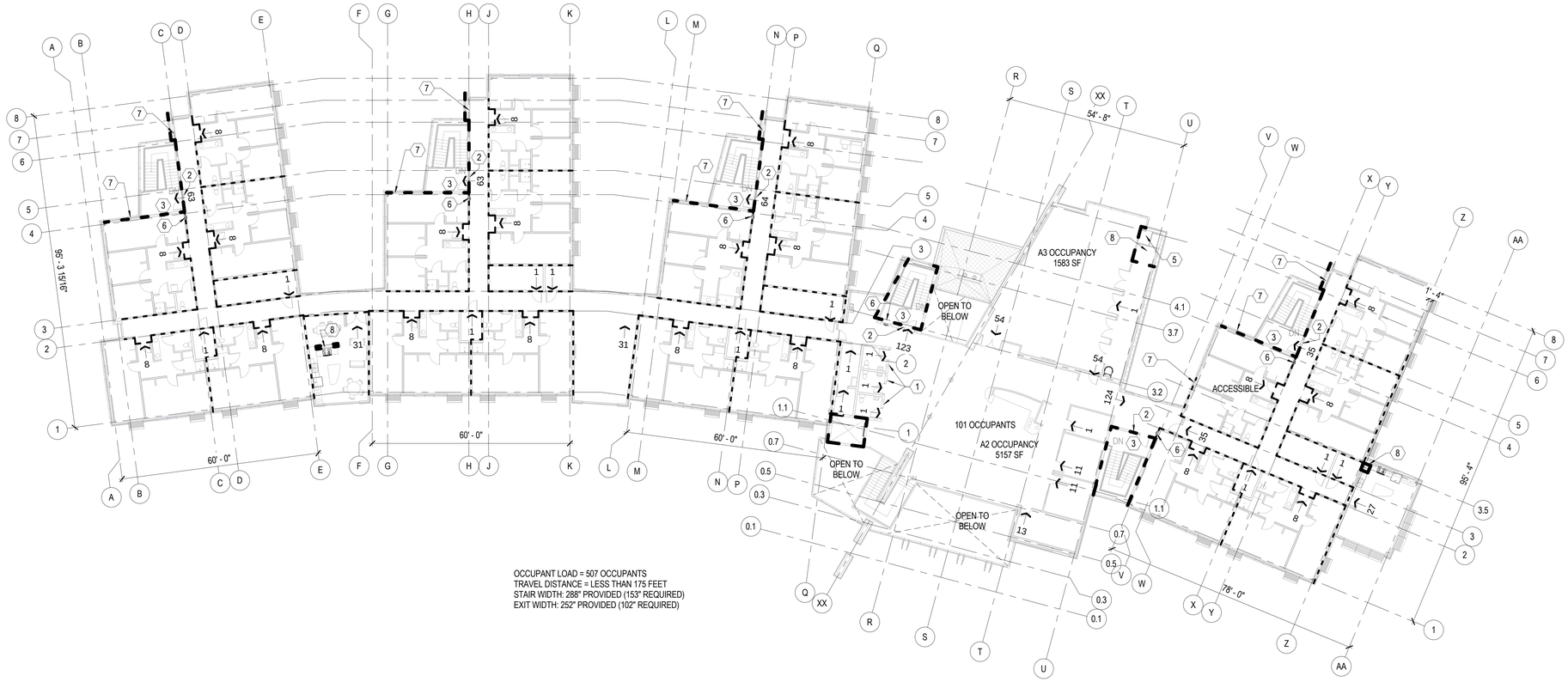

OCCUPANT LOAD = 507 OCCUPANTS
TRAVEL DISTANCE = LESS THAN 175 FEET
STAIR WIDTH: 288" PROVIDED (153" REQUIRED)
EXIT WIDTH: 252" PROVIDED (102" REQUIRED)

LEVEL 3 LIFE SAFETY PLAN

0 8' - 0" 16' - 0" 32' - 0"

SCALE: 1/16" = 1'-0"

REQUIREMENTS ACCORDING TO IBC TABLE 1107.6.1.1

57 TOTAL UNITS (58 WITH ADD. ALTERNATE 01):

MINIMUM REQUIRED NUMBER OF ACCESSIBLE UNITS WITHOUT ROLL-IN SHOWERS:	3
PROVIDED NUMBER OF ACCESSIBLE UNITS WITHOUT ROLL-IN SHOWERS:	3
MINIMUM REQUIRED NUMBER OF ACCESSIBLE UNITS WITH ROLL-IN SHOWERS:	3
PROVIDED NUMBER OF ACCESSIBLE UNITS WITH ROLL-IN SHOWERS:	5
TOTAL NUMBER OF REQUIRED ACCESSIBLE UNITS:	6
TOTAL NUMBER OF PROVIDED ACCESSIBLE UNITS:	8

EVERY UNIT WHICH IS NOT AN ACCESSIBLE UNIT (TYPE A) SHALL BE A TYPE B UNIT

UNITS PER FLOOR:	LEVEL ONE:	17 TOTAL UNITS (18 WITH ADD. ALT. 01)
	LEVEL TWO:	20 TOTAL UNITS
	LEVEL THREE:	20 TOTAL UNITS

KEYNOTES

1. TOILET ROOM SIGN
   MOUNTING HEIGHT & LOCATION: REFER TO A1/AE410
   VERBAGE: INTERNATIONAL SYMBOL FOR ACCESSIBILITY INDICATING
   MEN
   WOMEN
   UNISEX, WHERE OCCURS
   BRAILLE

2. STAIRWAY SIGN
   MOUNTING HEIGHT & LOCATION: REFER TO A1/AE410
   VERBAGE: INTERNATIONAL SYMBOL FOR STAIRS
   BRAILLE

3. STAIRWAY FLOOR SIGN
   MOUNTING HEIGHT & LOCATION: REFER TO A1/AE410
   VERBAGE: FLOOR LEVEL
   LEVEL OF EXIT DISCHARGE FOR EAST STAIR LEVEL 1
   LEVEL OF EXIT DISCHARGE FOR WEST STAIR LEVEL 1
   BRAILLE

4. FIRE RISER VALVE

5. FIRE RISER

6. FIRE EXTINGUISHER & CABINET

7. EXTEND 1-HR FIRE RATED WALLS (10 FEET MINIMUM HORIZONTALLY & VERTICALLY) (SEE ALSO GA FILE NO. WP 8007 WHICH REFERENCES UL# U465)

8. 1-HOUR FIRE RATED SHAFT

9. 1-HOUR FIRE RATED LID ASSEMBLY BELOW MECHANICAL SHAFT - CONSTRUCT @ 8'-0" MIN. A.F.F.

LIFE SAFETY LEGEND

- ONE HOUR RATED FIRE BARRIER - SEE UL ASSEMBLIES U419, U465, U469, U905, HW-D-0001, HW-D-0049 AND HW-D-0119
- THIRTY MINUTE RATED FIRE PARTITION - SEE UL ASSEMBLIES U419, U905, HW-D-0001 AND HW-D-0049
- STRUCTURAL STEEL IN THIS AREA TO RECEIVE FIRESPRAY PROVIDE 1 HOUR PROTECTION REFER TO UL# N759 (FIRESPRAY NOT REQUIRED AT METAL DECK) AND UL# X790 AT PERIMETER COLUMNS

GENERAL NOTES

1. BUILDING & SITE SHALL COMPLY WITH IBC & ADAAG FOR ACCESSIBLE ROUTES, ENTRANCES, & CLEARANCES AT DOORS
2. ALL INTERIOR PARTITIONS TERMINATE AT THE UNDERSIDE OF DECK
3. REFER TO FLOOR PLANS FOR PARTITION TYPE DESIGNATIONS
4. COORDINATE WITH STRUCTURAL FOR SHEAR WALL REQUIREMENTS
5. FILL ALL ANNULAR SPACE OF ALL PENETRATIONS THROUGH DECK WITH FIRE SAFING MATERIAL

MHTN ARCHITECTS
MHTN Architects, Inc.
420 East South Temple
Suite 100
Salt Lake City, Utah 84111
Telephone (801) 595-6700
Telefax (801) 595-6717
www.mhtn.com

WEBER STATE UNIVERSITY
RESIDENTIAL LIFE PHASE II - BLDG 2
DFCM PROJECT NUMBER: 10176810
WEBER STATE UNIVERSITY
OGDEN, UTAH 84408

SEAL

MHTN PROJECT NO. 2010543
DRAWN BY: MC CHECKED BY: MG

ISSUED:

NO.	DATE	DESCRIPTION
01	17 MAY 2011	CONSTRUCTION DOCUMENTS

CONTRACTOR TO VERIFY DRAWINGS IN FIELD USE REFLECT LAST REVISION DATE

NO.	DATE	DESCRIPTION

SHEET NAME
THIRD FLOOR LIFE SAFETY PLAN
CONSTRUCTION DOCUMENTS
17 MAY 2011

SHEET NUMBER
AE003

C:\Users\prestonm\Documents\A11_2010543 WSU RESIDENTIAL LIFE BUILDING II_CENTRAL_prestonm.rvt
5/17/2011 12:17:40 PM

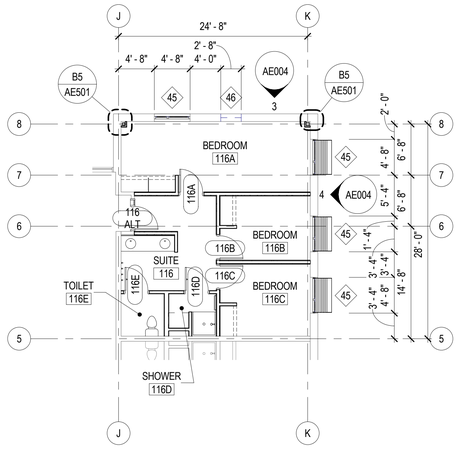

1 LEVEL 1 FLOOR PLAN - ADD ALTERNATE #1

SCALE: 1/8" = 1'-0"

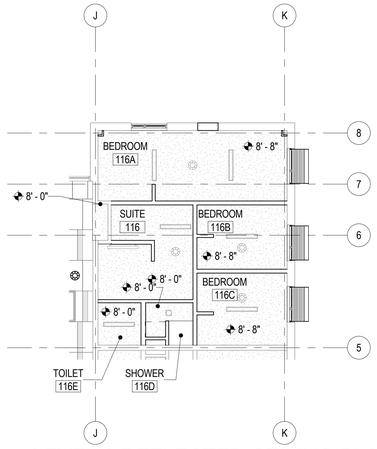

2 LEVEL 1 REFLECTED CEILING PLAN - ADD ALTERNATE #1

SCALE: 1/8" = 1'-0"

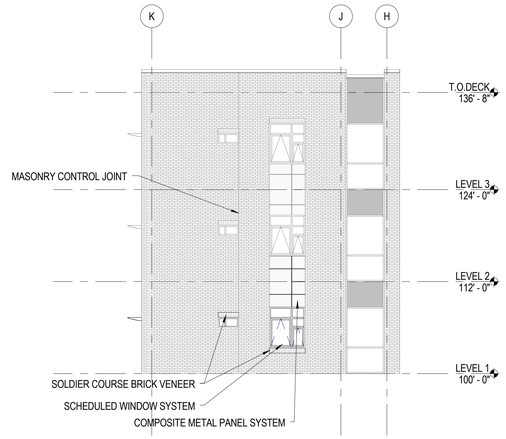

3 EAST ELEVATION - ADD ALTERNATE #1

SCALE: 1/8" = 1'-0"

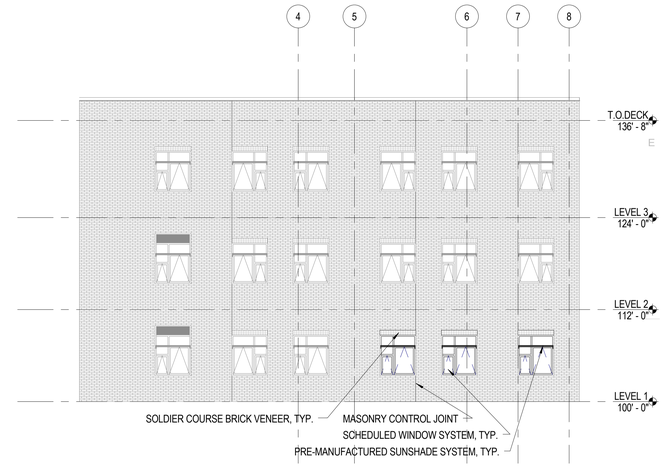

4 SOUTH ELEVATION - ADD ALTERNATE #1

SCALE: 1/8" = 1'-0"

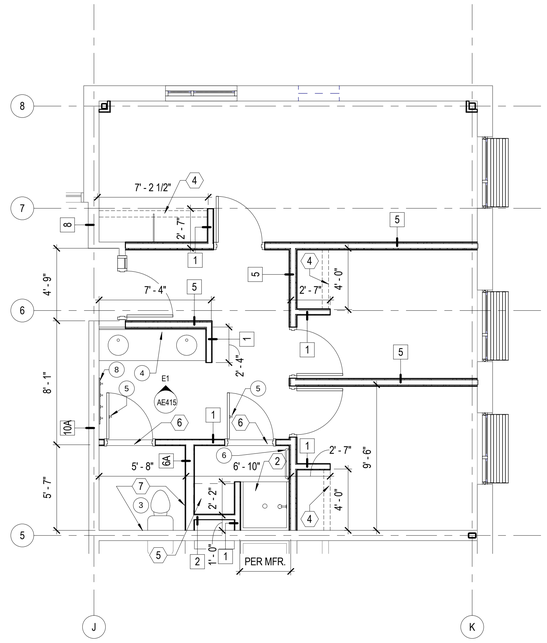

5 ADD ALTERNATE #1 SUITE PLAN

SCALE: 1/4" = 1'-0"

GENERAL NOTES

1. PLAN DIMENSIONS ARE TO FACE OF STUD, CMU, BRICK OR CONCRETE U.N.O.
2. REFER TO LIFE SAFETY PLANS FOR LOCATION OF FIRE RATED WALLS AND OTHER CODE AND LIFE SAFETY REQUIREMENTS.
3. ALL TOILET ROOMS/SHOWERS SHALL HAVE SOLID WOOD BLOCKING (2X6 MIN) FOR FUTURE GRAB BARS AND ADA WALL MOUNTED ACCESSORIES.
4. REFER TO SHEET AE410 FOR TYPICAL ACCESSIBLE MOUNTING HEIGHT REQUIREMENTS AND CLEARANCE.
5. SEE FINISH SCHEDULE / PLANS FOR DESIGNATION OF FINISHES.
6. PROVIDE INSULATION AT ALL EXPOSED PIPING BENEATH SINKS.

KEYNOTES

2 36" x 36" x 96" SEAMLESS SHOWER ENCLOSURE WITH RECESSED SOAP DISH, SHOWER CURTAIN & ROD @ 6'-6"

4 14" DEEP, FIXED SHELF (3/4" PLYWOOD W/ P.LAM & 3MM PVC EDGE) & CLOSET ROD @ 64" AFF TO CL OF ROD

5 FIXED SHELF CABINET, SEE E2/AE415

6 STONE THRESHOLD

7 SOLID WOOD (2X6 MIN) BLOCKING IN WALL FOR FUTURE INSTALLATION OF GRAB BARS

ACCESSORY SCHEDULE

1 GRAB BAR (42'', 36'', & 16'')

2 GRAB BAR (SHOWER 48" & 24")

3 TOILET TISSUE DISPENSER

4 MIRROR (SEE ELEVATIONS)

5 ROBE HOOK, ON DOOR

6 TOWEL BAR (24")

7 FOLD DOWN SEAT W/ FOLDING LEGS

8 TOWEL HOOKS (4) ON 6" x 36" SOLID SURFACE MOUNTING

9 SANITARY NAPKIN DISPOSAL

LEVEL 1 DOOR AND FRAME SCHEDULE - ADD ALTERNATE #1

DOOR #	DOOR TYPE	DOOR LEAVES	DOOR WIDTH	DOOR HEIGHT	DOOR THICKNESS	DOOR MATERIAL	FRAME TYPE	FRAME DEPTH	FRAME MATERIAL	JAMB DETAIL	HEAD DETAIL	ELECTRICAL	FIRE RATING (IN MIN.)	HARDWARE GROUP	REMARKS	DOOR #
116 ALT	A		3' - 0"	7' - 0"	1 3/4"	WD	2		HM	E3/AE521	E1/AE521		20 MIN	R-1		116 ALT
116A	A		3' - 0"	7' - 0"	1 3/4"	WD	1		HM	E3/AE521	E1/AE521			R-4	1" UNDERCUT	116A
116B	A		3' - 0"	7' - 0"	1 3/4"	WD	1		HM	E3/AE521	E1/AE521			R-4	1" UNDERCUT	116B
116C	A		3' - 0"	7' - 0"	1 3/4"	WD	1		HM	E3/AE521	E1/AE521			R-4	1" UNDERCUT	116C
116D	A		3' - 0"	7' - 0"	1 3/4"	WD	1		HM	E3/AE521	E1/AE521			R-3		116D
116E	A		3' - 0"	7' - 0"	1 3/4"	WD	1		HM	E3/AE521	E1/AE521			R-3		116E

Grand total: 6

FINISH SCHEDULE - LEVEL 1 ADD ALTERNATE #1

RM #	ROOM NAME	FLOOR F1 CARPET TILE A	FLOOR F4 LINOLEUM SHEET FLOORING	BASE B1 RUBBER BASE	BASE B2 4" INTEGRAL LINOLEUM BASE TO MATCH F4 W/ TOP CAP	NORTH WALL W1 PAINTED GYP. BD.-ABUSE RESISTANT	NORTH WALL W3 CMU	EAST WALL W1 PAINTED GYP. BD.-ABUSE RESISTANT	EAST WALL W3 CMU	SOUTH WALL W1 PAINTED GYP. BD.-ABUSE RESISTANT	SOUTH WALL W3 CMU	WEST WALL W1 PAINTED GYP. BD.-ABUSE RESISTANT	WEST WALL W3 CMU	CEILING C1 PAINTED GYP. BD.-ABUSE RESISTANT	REMARKS	RM #
116	SUITE	F1	F4	B1	B2	W1		W1		W1	W3	W1		C1		116
116A	BEDROOM	F1		B1		W1		W1		W1		W1		C1		116A
116B	BEDROOM	F1		B1		W1		W1		W1		W1		C1		116B
116C	BEDROOM	F1		B1		W1		W1		W1		W1		C1		116C
116D	SHOWER		F4		B2	W1		W1		W1		W1		C1		116D
116E	TOILET		F4		B2	W1		W1		W1		W1		C1		116E

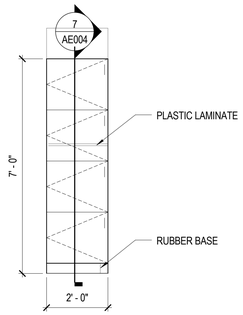

6 CABINET ELEVATION - ADD ALTERNATE #2

SCALE: 1/2" = 1'-0"

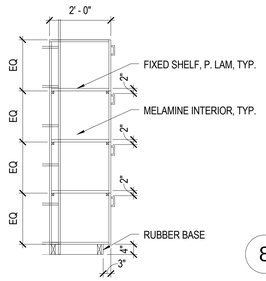

7 SECTION

SCALE: 1/2" = 1'-0"

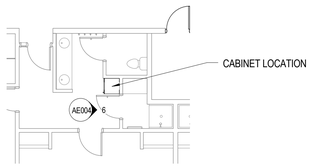

8 TYP. PLAN - ADD ALT. #2

SCALE: 1/8" = 1'-0"

SUITES: 104, 105, 107, 108, 110, 111, 130, 131, 204, 205, 207, 208, 210, 211, 230, 231, 304, 305, 307, 308, 310, 311, 330, 331.

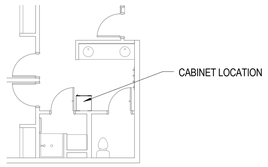

9 TYP. PLAN - ADD ALT. #2

SCALE: 1/8" = 1'-0"

SUITES: 112, 115, 126, 212, 215, 226, 312, 315, 326.

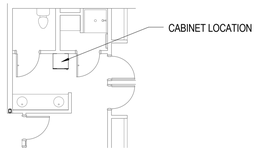

10 TYP. PLAN - ADD ALT. #2

SCALE: 1/8" = 1'-0"

SUITES: 114, 116, 117, 120, 213, 214, 216, 217, 219, 220, 227, 228, 313, 314, 316, 317, 319, 320, 327, 328.

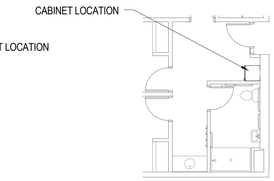

11 TYP. PLAN - ADD ALT. #2

SCALE: 1/8" = 1'-0"

SUITES: 118, 218, 318.

MHTN ARCHITECTS
MHTN Architects, Inc.
420 East South Temple
Suite 100
Salt Lake City, Utah 84111
Telephone (801) 595-6700
Telefax (801) 595-6717
www.mhtn.com

WEBER STATE UNIVERSITY
RESIDENTIAL LIFE PHASE II - BLDG 2

DFCM PROJECT NUMBER: 10176810

WEBER STATE UNIVERSITY
OGDEN, UTAH 84408

SEAL

MHTN PROJECT NO. 2010543

DRAWN BY: Author CHECKED BY: Checker

ISSUED:

NO.	DATE	DESCRIPTION
01	17 MAY 2011	CONSTRUCTION DOCUMENTS

CONTRACTOR TO VERIFY DRAWINGS IN FIELD USE REFLECT LAST REVISION DATE.

NO.	DATE	DESCRIPTION

SHEET NAME

ADD ALTERNATE

CONSTRUCTION DOCUMENTS
17 MAY 2011

SHEET NUMBER

AE004

C:\Users\prestonm\Documents\A11_2010543 WSU RESIDENTIAL LIFE BUILDING II_CENTRAL_prestonm.rvt
5/17/2011 12:17:50 PM

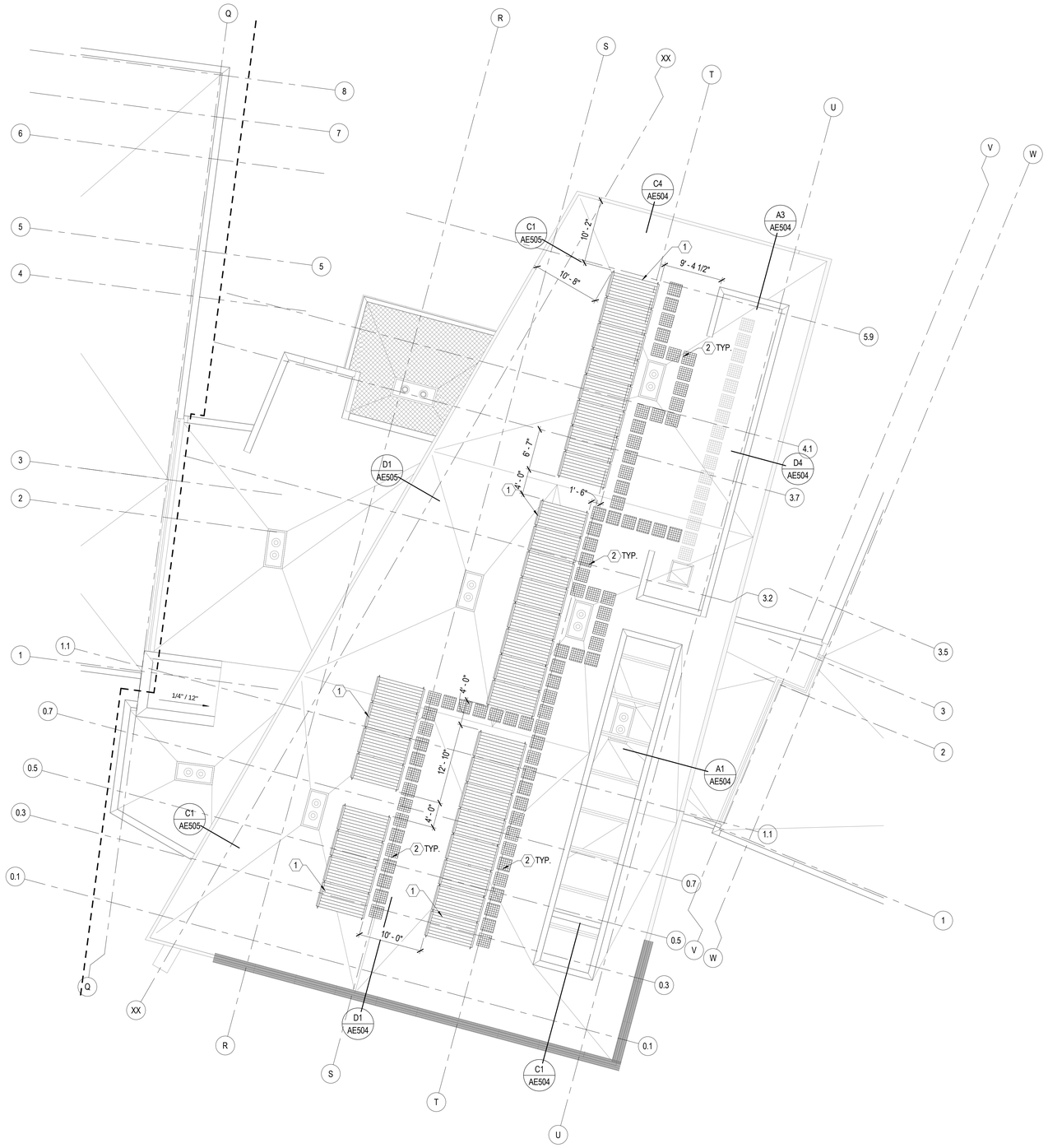

HIGH ROOF PLAN - ADD ALTERNATE #4

0 4' - 0" 8' - 0" 16' - 0"

SCALE: 1/8" = 1'-0"

LEGEND

- ROOF DRAIN SUMP
- WALK PADS
- GRAVEL BALAST

KEYNOTES

1. SOLAR COLLECTOR - SEE STRUCTURAL/MECHANICAL/PLUMBING - SEE SUPPORT FLASHING DETAIL A4/AE510
2. WALKWAY PADS

GENERAL ROOF NOTES

1. ALL ELEVATIONS ARE TO TOP OF DECK U.N.O. AND ARE RELATIVE TO A DATUM ELEVATION OF 100'-0". ROOF SLOPES ARE CONSTANT FROM RIDGE/PARAPET TO SUMP

2. ROOFING SYSTEM SHALL HAVE A LONG TERM THERMAL RESISTANCE EQUAL TO R=35 MIN.

3. PROVIDE TAPERED INSULATION WITH A MINUMUM SLOPE OF 1/4" PER FOOT IN THE VALLEYS TO THE ROOF DRAINS. MAINTAIN 12" EXPOSED PARAPET HEIGHT ABOVE ROOF SYSTEM & CRICKETS. DESIGN OF THE CRICKETS/SADDLES SHALL BE VERIFIED BY THE TAPERED INSULATION MANUFACTURER

4. AT ALL ROOF TOP EQUIPMENT PROVIDE TAPERED CRICKETS AT 3/8" PER FOOT MIN.

5. REFER TO THE STRUCTURAL, MECHANICAL AND ELECTRICAL DRAWINGS FOR PIPE QUANTITIES AND LOCATIONS. SEE DETAIL A4/AE510.

6. REFER TO THE MECHANICAL DRAWINGS FOR QUANTITIES AND SIZES OF ROOF PENETRATIONS AND MECHANICAL EQUIPMENT. SEE DETAIL A5/AE510 FOR CURB DETAIL.

7. REFER TO THE STRUCTURAL DRAWINGS FOR TYPICAL ROOF OPENING FRAMING.

8. ROOFING MEMBRANE SEAMS SHALL NOT RUN THROUGH DRAIN SUMPS.

MHTN
ARCHITECTS
MHTN Architects, Inc.
420 East South Temple
Suite 100
Salt Lake City, Utah 84111
Telephone (801) 595-6700
Telefax (801) 595-6717
www.mhtn.com

WEBER STATE UNIVERSITY
RESIDENTIAL LIFE PHASE II - BLDG 2
DFCM PROJECT NUMBER: 10176810

WEBER STATE UNIVERSITY
OGDEN, UTAH 84408

SEAL

MHTN PROJECT NO. 2010543

DRAWN BY: Author CHECKED BY: Checker

ISSUED:

NO.	DATE	DESCRIPTION
01	17 MAY 2011	CONSTRUCTION DOCUMENTS

CONTRACTOR TO VERIFY DRAWINGS IN FIELD USE REFLECT LAST REVISION DATE:

NO.	DATE	DESCRIPTION

SHEET NAME
ADD ALTERNATE

CONSTRUCTION DOCUMENTS
17 MAY 2011

SHEET NUMBER
AE005

C:\Users\prestonm\Documents\A11_2010543 WSU RESIDENTIAL LIFE BUILDING II_CENTRAL_prestonm.rvt
5/17/2011 12:17:54 PM

ONLINE CERTIFICATIONS DIRECTORY

BXUV.U419
Fire Resistance Ratings - ANSI/UL 263

Page Bottom

Design/System/Construction/Assembly Usage Disclaimer

- Authorities Having Jurisdiction should be consulted in all cases as to the particular requirements covering the installation and use of UL Listed or Classified products, equipment, system, devices, and materials.
- Authorities Having Jurisdiction should be consulted before construction.
- Fire resistance assemblies and products are developed by the design submitter and have been investigated by UL for compliance with applicable requirements. The published information cannot always address every construction nuance encountered in the field.
- When field issues arise, it is recommended the first contact for assistance be the technical service staff provided by the product manufacturer noted for the design. Users of fire resistance assemblies are advised to consult the general Guide Information for each product category and each group of assemblies. The Guide Information includes specifics concerning alternate materials and alternate methods of construction.
- Only products which bear UL's Mark are considered as Classified, Listed, or Recognized.

Fire Resistance Ratings - ANSI/UL 263

See General Information for Fire Resistance Ratings - ANSI/UL 263

Design No. U419

November 02, 2009

Nonbearing Wall Ratings — 1, 2, 3 or 4 Hr (See Items 4 & 5)

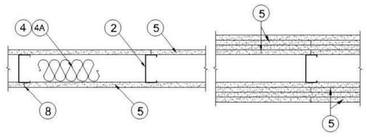

1. **Floor and Ceiling Runners** — (Not shown) — For use with Item 2 - Channel shaped, fabricated from min 25 MSG corrosion-protected steel, min depth to accommodate stud size, with min 1-1/4 in. long legs, attached to floor and ceiling with fasteners 24 in. OC max.

1A. **Framing Members* - Floor and Ceiling Runners** — Not shown - In lieu of Item 1 — For use with Item 2A, proprietary channel shaped, min. 3-5/8 in. deep, fabricated from min. 0.015 in. (min bare metal thickness) galvanized steel, attached to floor and ceiling with fasteners 24 in. OC max. Effective thickness is 0.034 in.

CLARKWESTERN BUILDING SYSTEMS INC — UltraSTEEL®

DIETRICH INDUSTRIES INC — UltraSTEEL®.

1B. **Framing Members* - Floor and Ceiling Runners** — (Not shown - In lieu of Item 1) — For use with Item 2A, proprietary channel shaped, min. 2-1/2 in. deep, fabricated from min. 0.015 in. (min bare metal thickness) galvanized

steel, attached to floor and ceiling fasteners 24 in. OC. max. Effective thickness is 0.034 in.

CLARKWESTERN BUILDING SYSTEMS INC — UltraSTEEL®

DIETRICH INDUSTRIES INC — UltraSTEEL®.

1C. **Framing Members* - Floor and Ceiling Runner** — Not shown - In lieu of Item 1 — For use with Item 2C, proprietary channel shaped runners, 3-5/8 in. deep attached to floor and ceiling with fasteners 24 in. OC max.

CALIFORNIA EXPANDED METAL PRODUCTS CO — ViperTrack™

CRACO MFG INC — SmartTrack™

MARINO\WARE A DIV OF WARE INDUSTRIES

INC — Viper25™ Track

1D. **Framing Members* - Floor and Ceiling Runner** — Not shown - In lieu of Item 1 — For use with Item 2D, proprietary channel shaped runners, 1-1/4 in. wide by 3-5/8 in. deep fabricated from min 0.020 in. thick galv steel, attached to floor and ceiling with fasteners spaced 24 in. OC max.

MARINO\WARE A DIV OF WARE INDUSTRIES

INC — Viper20S™ Track, Viper20D™ Track

1E. **Framing Members*— Floor and Ceiling Runners** — (Not shown) — In lieu of Item 1 - Channel shaped, attached to floor and ceiling with fasteners 24 in. OC. max.

SCAPCO STEEL STUD MANUFACTURING CO — Type SUPREME Framing System

1F. **Floor and Ceiling Runners** — (Not shown)—For use with Item 2B- Channel shaped, fabricated from min 20 MSG corrosion-protected or galv steel, min depth to accommodate stud size, with min 1 in. long legs, attached to floor and ceiling with fasteners spaced max 24 in. OC.

1G. **Framing Members*— Floor and Ceiling Runners** — (Not shown, As an alternate to Item 1) — For use with Item 2F, channel shaped, fabricated from min. 0.015 in. (min bare metal thickness) galvanized steel, attached to floor and ceiling with fasteners 24 in. OC. max.

CLARKWESTERN BUILDING SYSTEMS INC — CW ProTRAK

DIETRICH INDUSTRIES INC — DIETRICH ProTRAK

DMFCWBS L L C — ProTRAK

2. **Steel Studs** — Channel shaped, fabricated from min 25 MSG corrosion-protected steel, min depth as indicated under Item 5, spaced a max of 24 in. OC. Studs to be cut 3/8 to 3/4 in. less than assembly height.

2A. **Framing Members* - Steel Studs** — In lieu of Item 2 - Proprietary channel shaped studs, min. depth as indicated under Item 5, fabricated from min. 0.015 in. (min bare metal thickness) galvanized steel, spaced a max of 24 in. OC. Studs to be cut 3/4 in. less than assembly height. Allowable use of studs is shown in the table below. For direct attachment of gypsum board only. Effective thickness is 0.034 in.

CLARKWESTERN BUILDING SYSTEMS INC — UltraSTEEL®

DIETRICH INDUSTRIES INC — UltraSTEEL®.

2B. **Steel Studs** — (As an alternate to Item 2, For use with Items 5B & 5E) Channel shaped, fabricated from min 20 MSG corrosion-protected or galv steel, 3-1/2 in. min depth, spaced a max of 16 in. OC. Studs friction-fit into floor and ceiling

runners. Studs to be cut 5/8 to 3/4 in. less than assembly height.

2C. **Framing Members* - Steel Studs** — (As an alternate to Item 2, For use with Item 5C) - Proprietary channel shaped studs, 3-5/8 in. deep spaced a max of 24 in. OC. Studs to be cut 3/4 in less than the assembly height and installed with a ½ in. gap between the end of the stud and track at the bottom of the wall. For direct attachment of gypsum board only.

CALIFORNIA EXPANDED METAL PRODUCTS CO — ViperStud ™

CRACO MFG INC — SmartStud™

MARINO\WARE A DIV OF WARE INDUSTRIES

INC — Viper25™

2D. **Framing Members* - Metal Studs** — Not shown - In lieu of Item 2 — For use with Item 1D, proprietary channel shaped steel studs, min depth as indicated under Item 5, spaced a max of 24 in. OC, fabricated from min 0.020 in. thick galv steel. Studs cut 3/8 in. to 3/4 in. less in lengths than assembly heights.

MARINO\WARE A DIV OF WARE INDUSTRIES

INC — Viper20S™, Viper20D™

2E. **Framing Members*— Steel Studs** — In lieu of Item 2 - For Use with Item 1E- Channel shaped studs, min depth as indicated under Item 5, spaced a max of 24 in. OC. Studs to be cut 3/4 in. less than assembly height.

SCAPCO STEEL STUD MANUFACTURING CO — Type SUPREME Framing System

2F. **Framing Members*— Steel Studs** — (Not shown, As an alternate to Item 2) —For use with Item 1G, channel shaped studs, min depth as indicated under Item 5F, fabricated from min. 0.015 in. (min bare metal thickness) galvanized steel, spaced a max of 24 in. OC. Studs to be cut 3/4 in. less than assembly height.

CLARKWESTERN BUILDING SYSTEMS INC — CW ProSTUD

DIETRICH INDUSTRIES INC — DIETRICH ProSTUD

DMFCWBS L L C — ProSTUD

3. **Wood Structural Panel Sheathing** — (Optional, For use with Item 5 Only.)- (Not Shown) - 4 ft wide, 7/16 in. thick oriented strand board (OSB) or 15/32 in. thick structural 1 sheathing (plywood) complying with DOC PS1 or PS2, or APA Standard PRP-108, manufactured with exterior glue, applied horizontally or vertically to the steel studs. Vertical joints centered on studs, and staggered one stud space from wallboard joints. Attached to studs with flat-head self-drilling tapping screws with a min. head diam. of 0.292 in. at maximum 6 in. OC. in the perimeter and 12 in. OC. in the field. When used, fastener lengths for gypsum panels increased by min. 1/2 in.

4. **Batts and Blankets*** — (Required as indicated under Item 5) — Mineral wool batts, friction fitted between studs and runners. Min nom thickness as indicated under Item 5. See **Batts and Blankets (BKNV or BZ3Z) Categories** for names of Classified companies.

4A. **Batts and Blankets*** — (Optional) — Placed in stud cavities, any glass fiber or mineral wool insulation bearing the UL Classification Marking as to Surface Burning Characteristics and/or Fire Resistance. See **Batts and Blankets (BKNV or BZ3Z) Categories** for names of Classified companies.

5. **Gypsum Board*** — Gypsum panels with beveled, square or tapered edges, applied vertically or horizontally. Vertical joints centered over studs and staggered one stud cavity on opposite sides of studs. Vertical joints in adjacent layers (multilayer systems) staggered one stud cavity. Horizontal joints need not be backed by steel framing. Horizontal edge joints and horizontal butt joints on opposite sides of studs need not be staggered. Horizontal edge joints and horizontal butt joints in adjacent layers (multilayer systems) staggered a min of 12 in. The thickness and number of layers for the 1 hr, 2 hr, 3 hr and 4 hr ratings are as follows:

Gypsum Board Protection on Each Side of Wall

	Min Stud	Min Stud	No. of Layers	Min Thkns of

Rating, Hr	Depth, in. Items 2 & 2E	Depth, in. Item 2A	& Thkns of Panel	Insulation (Item 4)
1	3-1/2	3-5/8	1 layer, 5/8 in. thick	Optional
1	2-1/2	3-5/8	1 layer, 1/2 in. thick	1-1/2 in.
1	1-5/8	3-5/8	1 layer, 3/4 in. thick	Optional
2	1-5/8	2-1/2	2 layers, 1/2 in. thick	Optional
2	1-5/8	2-1/2	2 layers, 5/8 in. thick	Optional
2	3-1/2	3-5/8	1 layer, 3/4 in. thick	3 in.
3	1-5/8	2-1/2	3 layers, 1/2 in. thick	Optional
3	1-5/8	2-1/2	2 layers, 3/4 in. thick	Optional
3	1-5/8	2-1/2	3 layers, 5/8 in. thick	Optional
4	1-5/8	2-1/2	4 layers, 5/8 in. thick	Optional
4	1-5/8	2-1/2	4 layers, 1/2 in. thick	Optional
4	2-1/2	2-1/2	2 layers, 3/4 in. thick	2 in.

CANADIAN GYPSUM COMPANY — 1/2 in. thick Type C, IP-X2 or IPC-AR; WRC, 5/8 in. thick Type AR, C, IP-AR, IP-X1, IP-X2, IPC-AR, SCX, SHX, WRX or WRC; 3/4 in. thick Types IP-X3 or ULTRACODE

UNITED STATES GYPSUM CO — 1/2 in. thick Type C, IP-X2, IPC-AR or WRC; 5/8 in. thick Type SCX, SHX, WRX, IP-X1, AR, C, WRC, FRX-G, IP-AR, IP-X2, IPC-AR ; 3/4 in. thick Types IP-X3 or ULTRACODE

USG MEXICO S A DE C V — 1/2 in. thick Type C, IP-X2, IPC-AR or WRC; 5/8 in. thick Type AR, C, IP-AR, IP-X1, IP-X2, IPC-AR, SCX, SHX, WRX or WRC; 3/4 in. thick Types IP-X3 or ULTRACODE

When Item 7B, Steel Framing Members*, is used, Nonbearing Wall Rating is limited to 1 Hr. Min. stud depth is 3-1/2 in., min. thickness of insulation (Item 4) is 3 in., and two layers of gypsum board panels (1/2 in. or 5/8 in. thick) shall be attached to furring channels as described in Item 6. One layer of gypsum board panels (1/2 in. or 5/8 in. thick) attached to opposite side of stud without furring channels as described in Item 6.

5A. **Gypsum Board*** — (As an alternate to Item 5) — 5/8 in. thick, 24 to 54 in. wide, applied horizontally as the outer layer to one side of the assembly. Secured as described in Item 6.

CANADIAN GYPSUM COMPANY — Type SHX.

UNITED STATES GYPSUM CO — Type FRX-G, SHX.

USG MEXICO S A DE C V — Type SHX.

5B. **Gypsum Board*** — (Not Shown) - As an alternate to Item 5 when used as the base layer on one or both sides of wall when 5/8 in or ½ in. thick products are specified. For direct attachment only to steel studs Item 2B, (not to be used with Item 3) - Nom 5/8 in. or ½ in. may be used as alternate to all 5/8 in. or ½ in. shown in Item 5, Wallboard Protection on Each Side of Wall table. Nom 5/8 in. or ½ in. thick lead backed gypsum panels with beveled, square or tapered edges, applied vertically. Vertical joints centered over studs and staggered min 1 stud cavity on opposite sides of studs. Gypsum board secured to 20 MSG steel studs Item 2B with 1-1/4 in. long Type S-12 steel screws spaced 8 in. OC at perimeter and 12 in. OC in the field. To be used with Lead Batten Strips (see Item 11) or Lead Discs or Tabs (see Item 12).

RAY-BAR ENGINEERING CORP — Type RB-LBG

5C. **Gypsum Board*** — (For Use With Item 2C) Rating Limited to 1 Hour. 5/8 in. thick, 48 in. wide, Gypsum panels with beveled, square or tapered edges, applied vertically or horizontally. (Vertical Application) - The gypsum board is to be installed on each side of the studs with 1 in. long Type S coated steel screws spaced 8 in. OC starting 4 in. from the edge of the board at the vertical edges and 12 in. OC starting 6 in. from the edge of the board at the center of each board. Gypsum boards are to be secured to the top and bottom track with screws spaced 8 in. OC starting 4 in. from the board edge. Fasteners shall not penetrate through both the stud and the track at the same time. Vertical joints are to be centered over studs and staggered one stud cavity on opposite sides of studs. (Horizontal Application) - The gypsum board is to be installed on each side of the studs with 1 in. long Type S coated steel screws spaced 8 in. OC starting 4 in. from the edge of the board at the vertical edges and 12 in. OC starting 6 in. from the edge of the board at the center of each board. Gypsum

boards are to be secured to the top and bottom track with screws spaced 8 in. OC starting 4 in. from the board edge. Fasteners shall not penetrate through both the stud and the track at the same time. All horizontal joints are to be backed as outlined under section VI of Volume 1 in the Fire Resistive Directory.

CANADIAN GYPSUM COMPANY — Type SCX.

UNITED STATES GYPSUM CO — Type SCX.

USG MEXICO S A DE C V — Type SCX.

5D. **Gypsum Board*** — (As an alternate to Item 5) — 5/8 in. thick, 48 in. wide, applied vertically or horizontally. Secured as described in Item 6. For use with Items 1 and 2 only.

UNITED STATES GYPSUM CO — Type USGX.

5E. **Gypsum Board*** — (Not Shown) - (As an alternate to Item 5 when used as the base layer on one or both sides of wall when 1/2 in. or 5/8 in thick products are specified, For direct attachment only to steel studs Item 2B, not to be used with Item 3). Nominal 5/8 in. thick lead backed gypsum panels with beveled, square or tapered edges, applied vertically. Vertical joints centered over studs and staggered min 1 stud cavity on opposite sides of studs. Wallboard secured to studs with 1-1/4 in. long Type S-12 (or No. 6 by 1-1/4 in. long bugle head fine driller) steel screws spaced 8 in. OC at perimeter and 12 in. OC in the field.

NEW ENGLAND LEAD BURNING CO INC, DBA

NELCO — Nelco

5F. **Gypsum Board*** — (As an alternate to Item 5) — For use with Items 1G and 2F, Gypsum panels with beveled, square or tapered edges, applied vertically or horizontally, as specified in the table below. Vertical joints centered over studs and staggered one stud cavity on opposite sides of studs. Vertical joints in adjacent layers (multilayer systems) staggered one stud cavity. Horizontal joints need not be backed by steel framing. Horizontal edge joints and horizontal butt joints on opposite sides of studs need not be staggered. Horizontal edge joints and horizontal butt joints in adjacent layers (multilayer systems) staggered a min of 12 in. The thickness and number of layers for the 1 hr, 2 hr, 3 hr and 4 hr ratings are as follows:

Gypsum Board Protection on Each Side of Wall

Rating, Hr	Min Stud Depth, in. Item 2F	No. of Layers & Thickness of Panel	Min Thkns of Insulation (Item 4)
1	3-1/2	1 layer, 5/8 in. thick Applied Vertically Only	Optional
1	2-1/2	1 layer, 1/2 in. thick, Applied Vertically Only	1-1/2 in.
1	1-5/8	1 layer, 3/4 in. thick, Applied Vertically Only	Optional
2	1-5/8	2 layers, 1/2 in. thick	Optional
2	1-5/8	2 layers, 5/8 in. thick	Optional
2	3-1/2	1 layer, 3/4 in. thick	3 in.
3	1-5/8	3 layers, 1/2 in. thick	Optional
3	1-5/8	2 layers, 3/4 in. thick	Optional
3	1-5/8	3 layers, 5/8 in. thick	Optional
4	1-5/8	4 layers, 5/8 in. thick	Optional
4	1-5/8	4 layers, 1/2 in. thick	Optional
4	2-1/2	2 layers, 3/4 in. thick	2 in.

CANADIAN GYPSUM COMPANY — 1/2 in. thick Type C, IP-X2 or IPC-AR; WRC, 5/8 in. thick Type AR, C, IP-AR, IP-X1, IP-X2, IPC-AR, SCX, SHX, or WRC; 3/4 in. thick Types IP-X3 or ULTRACODE

UNITED STATES GYPSUM CO — 1/2 in. thick Type C, IP-X2, IPC-AR or WRC; 5/8 in. thick Type SCX, SHX, IP-X1, AR, C, WRC, FRX-G, IP-AR, IP-X2, IPC-AR ; 3/4 in. thick Types IP-X3 or ULTRACODE

USG MEXICO S A DE C V — 1/2 in. thick Type C, IP-X2, IPC-AR or WRC; 5/8 in. thick Type AR, C, IP-AR, IP-X1, IP-X2, IPC-AR, SCX, SHX, WRC or; 3/4 in. thick Types IP-X3 or ULTRACODE

6. **Fasteners** — (Not shown) — For use with Items 2 and 2F - Type S or S-12 steel screws used to attach panels to studs (Item 2) or furring channels (Item 7). **Single layer systems:** 1 in. long for 1/2 and 5/8 in. thick panels or 1-1/4 in. long for 3/4 in. thick panels, spaced 8 in. OC when panels are applied horizontally, or 8 in. OC along vertical and bottom edges and 12 in. OC in the field when panels are applied vertically. **Two layer systems:** First layer- 1 in. long for 1/2 and 5/8 in. thick panels or 1-1/4 in. long for 3/4 in. thick panels, spaced 16 in. OC. Second layer- 1-5/8 in. long for 1/2 in., 5/8 in. thick panels or 2-1/4 in. long for 3/4 in. thick panels, spaced 16 in. OC with screws offset 8 in. from first layer. **Three-layer systems:** First layer- 1 in. long for 1/2 in., 5/8 in. thick panels, spaced 24 in. OC. Second layer- 1-5/8 in. long for 1/2 in., 5/8 in. thick panels, spaced 24 in. OC. Third layer- 2-1/4 in. long for 1/2 in., 5/8 in. thick panels or 2-5/8 in. long for 5/8 in. thick panels, spaced 12 in. OC. Screws offset min 6 in. from layer below. **Four-layer systems:** First layer- 1 in. long for 1/2 in., 5/8 in. thick panels, spaced 24 in. OC. Second layer- 1-5/8 in. long for 1/2 in., 5/8 in. thick panels, spaced 24 in. OC. Third layer- 2-1/4 in. long for 1/2 in. thick panels or 2-5/8 in. long for 5/8 in. thick panels, spaced 24 in. OC. Fourth layer- 2-5/8 in. long for 1/2 in. thick panels or 3 in. long for 5/8 in. thick panels, spaced 12 in. OC. Screws offset min 6 in. from layer below.

6A. **Fasteners** — (Not shown) —For use with Item 2A - Type S or S-12 steel screws used to attach panels to studs (Item 2A). **Single layer systems:** 1 in. long for 1/2 and 5/8 in. thick panels or 1-1/4 in. long for 3/4 in. thick panels, spaced 8-1/2 in. OC with additional screws 1 in. and 2-1/2 in. from edges of the board when panels are horizontally, or 8 in. OC along vertical and bottom edges and 12 in. OC in the field when panels are applied vertically. **Two layer systems applied vertically:** First layer- 1 in. long for 1/2 and 5/8 in. thick panels or 1-1/4 in. long for 3/4 in. thick panels, spaced 16 in. OC. Second layer- 1-5/8 in. long for 1/2 in., 5/8 in. thick panels or 2-1/4 in. long for 3/4 in. thick panels, spaced 16 in. OC with screws offset 8 in. from first layer. **Two layer systems applied horizontally:** First layer- 1 in. long for 1/2 and 5/8 in. thick panels or 1-1/4 in. long for 3/4 in. thick panels, spaced 16 in. OC starting 8 in. from each edge of the board with an additional screw placed 1-1/4 in. from each edge of the board. Second layer- 1-5/8 in. long for 1/2 in., 5/8 in. thick panels or 2-1/4 in. long for 3/4 in. thick panels, spaced 16 in. OC starting 8 in. from each edge of the board with an additional screw placed 1-1/4 in. from each edge of the board with screws offset 8 in. from first layer. **Three-layer systems:** First layer- 1 in. long for 1/2 in., 5/8 in. thick panels, spaced 24 in. OC. Second layer- 1-5/8 in. long for 1/2 in., 5/8 in. thick panels, spaced 24 in. OC. Third layer- 2-1/4 in. long for 1/2 in., 5/8 in. thick panels or 2-5/8 in. long for 5/8 in. thick panels, spaced 12 in. OC. Screws offset min 6 in. from layer below. For all layers, an additional screw shall be placed 1-1/4 in. from each edge of the board. **Four-layer systems:** First layer- 1 in. long for 1/2 in., 5/8 in. thick panels, spaced 24 in. OC. Second layer- 1-5/8 in. long for 1/2 in., 5/8 in. thick panels, spaced 24 in. OC. Third layer- 2-1/4 in. long for 1/2 in. thick panels or 2-5/8 in. long for 5/8 in. thick panels, spaced 24 in. OC. Fourth layer- 2-5/8 in. long for 1/2 in. thick panels or 3 in. long for 5/8 in. thick panels, spaced 12 in. OC. Screws offset min 6 in. from layer below. For all layers, an additional screw shall be placed 1-1/4 in. from each edge of the board.

7. **Furring Channels** — (Optional, not shown, for single or double layer systems) — Resilient furring channels fabricated from min 25 MSG corrosion-protected steel, spaced vertically a max of 24 in. OC. Flange portion attached to each intersecting stud with 1/2 in. long Type S-12 steel screws. Not for use with Item 5A and 5E.

7A. **Framing Members*** — (Not Shown) — (Optional on one or both sides, not shown, for single or double layer systems) — As an alternate to Item 7, furring channels and Steel Framing Members as described below:

a. **Furring Channels** — Formed of No. 25 MSG galv steel. 2-3/8 in. wide by 7/8 in. deep, spaced max. 24 in. OC perpendicular to studs. Channels secured to studs as described in Item 6. Gypsum board attached to furring channels as described in Item 6. Not for use with Item 5A and 5E.

b. **Steel Framing Members*** — Used to attach furring channels (Item 7Aa) to studs (Item 2). Clips spaced max. 48 in. OC. RSIC-1 clips secured to stud with No. 8 x 1-1/2 in. minimum self-drilling, S-12 steel screw through the center grommet. RSIC-V clips secured to studs with No. 8 x 9/16 in. minimum self-drilling, S-12 steel screw through the center hole. Furring channels are friction fitted into clips.

PAC INTERNATIONAL INC — Types RSIC-1, RSIC-V.

7B. **Framing Members*** — (Optional, Not Shown) — As an alternate to Item 7, for single or double layer systems, furring channels and Steel Framing Members on only one side of studs as described below:

a. **Furring Channels** — Formed of No. 25 MSG galv steel, spaced 24 in. OC perpendicular to studs. Channels secured to studs as described in Item 6. Batts and Blankets placed in stud cavity as described in Item 5. Two layers of gypsum board attached to furring channels as described in Item 5. Not for use with Item 5A and 5E.

b. **Steel Framing Members*** — Used to attach furring channels (Item 7Ba) to one side of studs (Item 2) only. Clips spaced 48 in. OC., and secured to studs with two No. 8 x 2-1/2 in. coarse drywall screws, one through the hole at each end of the clip. Furring channels are friction fitted into clips.

KINETICS NOISE CONTROL INC — Type Isomax

7C. **Framing Members*** — Optional - Not Shown - Used as an alternate method to attach resilient channels (Item 7).

Clips attached at each intersection of the resilient channel and the steel studs (Item 2). Resilient channels are friction fitted into clips, and then clips are secured to the steel stud with min. 1 in. long Type S-12 steel screws through the center hole of the clip and the resilient channel flange.

KEENE BUILDING PRODUCTS CO INC — Type RC Assurance.

8. **Joint Tape and Compound** — Vinyl or casein, dry or premixed joint compound applied in two coats to joints and screw heads of outer layers. Paper tape, nom 2 in. wide, embedded in first layer of compound over all joints of outer layer panels. Paper tape and joint compound may be omitted when gypsum panels are supplied with square edge.

9. **Siding, Brick or Stucco** — (Optional, not shown) — Aluminum, vinyl or steel siding, brick veneer or stucco, meeting the requirements of local code agencies, installed over gypsum panels. Brick veneer attached to studs with corrugated metal wall ties attached to each stud with steel screws, not more than each sixth course of brick.

10. **Caulking and Sealants*** — (Optional, not shown) — A bead of acoustical sealant applied around the partition perimeter for sound control.

UNITED STATES GYPSUM CO — Type AS

11. **Lead Batten Strips** — (Not Shown, For Use With Item 5B) - Lead batten strips, min 1-1/2 in. wide, max 10 ft long with a max thickness of 0.125 in. Strips placed on the interior face of studs and attached from the exterior face of the stud with two 1 in. long Type S-12 pan head steel screws, one at the top of the strip and one at the bottom of the strip. Lead batten strips to have a purity of 99.9% meeting the Federal specification QQ-L-201f, Grade "C". Lead batten strips required behind vertical joints of lead backed gypsum wallboard (Item 5B) and optional at remaining stud locations. Required behind vertical joints.

12. **Lead Discs or Tabs** — (Not Shown, For Use With Item 5B) - Used in lieu of or in addition to the lead batten strips (Item 11) or optional at other locations - Max 3/4 in. diam by max 0.125 in. thick lead discs compression fitted or adhered over steel screw heads or max 1/2 in. by 1-1/4 in. by max 0.125 in. thick lead tabs placed on gypsum boards (Item 5B) underneath screw locations prior to the installation of the screws. Lead discs or tabs to have a purity of 99.9% meeting the Federal specification QQ-L-201f, Grade "C".

13. **Lead Batten Strips** — (Not Shown, For Use With Item 5E) Lead batten strips, 2 in. wide, max 10 ft long with a max thickness of 0.142 in. Strips placed on the face of studs and attached to the stud with two min. 1 in. long min. Type S-8 pan head steel screws, one at the top of the strip and one at the bottom of the strip or with one min. 1 in. long min. Type S-8 pan head steel screw at the top of the strip. Lead batten strips to have a purity of 99.9% meeting the Federal specification QQ-L-201f, Grade "C". Lead batten strips required behind vertical joints of lead backed gypsum wallboard (Item 5E) and optional at remaining stud locations.

14. **Lead Tabs** — (Not Shown, For Use With Item 5E) 2 in. wide, 5 in. long with a max thickness of 0.142 in. Tabs friction-fit around front face of stud, the stud folded back flange, and the back face of the stud. Tabs required at each location where a screw (that secures the gypsum boards, (Item 5E) will penetrate the steel stud. Lead tabs to have a purity of 99.9% meeting the Federal specification QQ-L-201f, Grade "C". Lead tabs may be held in place with standard adhesive tape if necessary.

*Bearing the UL Classification Mark

Last Updated on 2009-11-02

Questions? Notice of Disclaimer Page Top

Copyright © 2009 Underwriters Laboratories Inc.®

The appearance of a company's name or product in this database does not in itself assure that products so identified have been manufactured under UL's Follow-Up Service. Only those products bearing the UL Mark should be considered to be Listed and covered under UL's Follow-Up Service. Always look for the Mark on the product.

UL permits the reproduction of the material contained in the Online Certification Directory subject to the following conditions: 1. The Guide Information, Designs and/or Listings (files) must be presented in their entirety and in a non-misleading manner, without any manipulation of the data (or drawings). 2. The statement "Reprinted from the Online Certifications Directory with permission from Underwriters Laboratories Inc." must appear adjacent to the extracted material. In addition, the reprinted material must include a copyright notice in the following format: "Copyright © 2009 Underwriters Laboratories Inc.®"

An independent organization working for a safer world with integrity, precision and knowledge.

MHTN ARCHITECTS
MHTN Architects, Inc.
420 East South Temple
Suite 100
Salt Lake City, Utah 84111
Telephone (801) 595-6700
Telefax (801) 595-6717
www.mhtn.com

WEBER STATE UNIVERSITY
RESIDENTIAL LIFE PHASE II - BLDG 2
DFCM PROJECT NUMBER: 10176810
WEBER STATE UNIVERSITY
OGDEN, UTAH 84408

SEAL

MHTN PROJECT NO. 2010543
DRAWN BY: MC CHECKED BY: MG

ISSUED:

NO.	DATE	DESCRIPTION
01	17 MAY 2011	CONSTRUCTION DOCUMENTS

CONTRACTOR TO VERIFY DRAWINGS IN FIELD USE REFLECT LAST REVISION DATE.

NO.	DATE	DESCRIPTION

SHEET NAME
UL RATINGS

CONSTRUCTION DOCUMENTS
17 MAY 2011

SHEET NUMBER
AE006

C:\Users\prestonm\Documents\A11_2010543 WSU RESIDENTIAL LIFE BUILDING II_CENTRAL_prestonm.rvt
5/17/2011 12:17:57 PM

ONLINE CERTIFICATIONS DIRECTORY

BXUV.X790
Fire Resistance Ratings - ANSI/UL 263

Page Bottom

Design/System/Construction/Assembly Usage Disclaimer

- Authorities Having Jurisdiction should be consulted in all cases as to the particular requirements covering the installation and use of UL Listed or Classified products, equipment, systems, devices, and materials.
- Authorities Having Jurisdiction should be consulted before construction.
- Fire resistance assemblies and products are developed by the design submitter and have been investigated by UL for compliance with applicable requirements. The published information cannot always address every construction nuance encountered in the field.
- When field issues arise, it is recommended the first contact for assistance be the technical service staff provided by the product manufacturer noted for the design. Users of fire resistance assemblies are advised to consult the general Guide Information for each product category and each group of assemblies. The Guide Information includes specifics concerning alternate materials and alternate methods of construction.
- Only products which bear UL's Mark are considered as Classified, Listed, or Recognized.

Fire Resistance Ratings - ANSI/UL 263

See General Information for Fire Resistance Ratings - ANSI/UL 263

Design No. X790

May 15, 2009

Ratings — 1, 1-1/2, 2, 3 and 4 Hr.

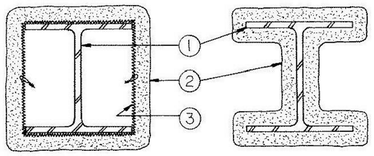

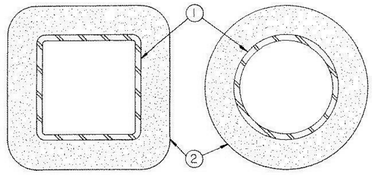

1. **Steel Column, Steel Pipe or Steel Tube** — Wide flange steel column (W) or steel circular pipe (SP) or steel square or rectangular tube (ST), min sizes as shown in the tables below.

2. **Spray-Applied Fire Resistive Materials*** — Applied by mixing with water and spraying in one or more coats to the thicknesses shown below, to steel surfaces which are clean and free of dirt, loose scale, and oil. Min average and min individual density of 15 and 14 pcf, respectively. For method of density determination, see Design Information Section, Sprayed Material.

The min thickness of Spray-Applied Fire Resistive Materials required for various fire resistance ratings of contour sprayed or boxed wide flange columns are shown in the table below:

Column Size	W/D	Min Thkns In.				
		1 Hr	1-1/2 Hr	2 Hr	3 Hr	4 Hr
W6x9	0.33	15/16	1-1/4	1-9/16	2-1/8	2-11/16
W6x12	0.43	13/16	1-1/8	1-7/16	2	2-9/16
W6x16	0.57	11/16	1	1-5/16	1-7/8	2-3/8
W8x28	0.68	5/8	15/16	1-1/4	1-13/16	2-5/16
W10x49	0.83	9/16	13/16	1-1/8	1-5/8	2-1/8
W12x106	1.46	3/8	9/16	13/16	1-1/4	1-11/16
W14x233	2.52	1/4	3/8	1/2	7/8	1-3/16
W14x730	6.68	1/4	1/4	1/4	3/8	1/2

As an alternate to the above table, the required thickness of Spray-Applied Fire Resistive Materials to be applied to all surfaces of the steel columns for all rating periods may be determined from the following equations:

$$h = \frac{R}{75\,(W/D) + 32}$$

(for column W/D range of 0.33 to 2.51)

$$h = \frac{R}{75\,(W/D) + 15}$$

(for column W/D range of 2.51 to 6.68)

Where:

h = Spray-Applied Fire Resistive Materials thickness in the range of 1/4 to 4-1/2 in. (rounded up to the nearest 1/16 in.)

R = Fire resistance rating period in minutes (60-240 mins.)

D = Heated perimeter of the steel column in inches.

W = Weight of the steel column in lbs per foot.

The thicknesses contained in the table below are applicable when the Spray-Applied Fire Resistive Materials applied to the column's flange tips are reduced to one-half that shown in the table below (for contour application):

Column Size In.	Min Thkns In.				
	1 Hr	1-1/2 Hr	2 Hr	3 Hr	4 Hr
W6x9	1	1-3/8	1-3/4	2-7/16	3-1/8
W6x12	7/8	1-1/4	1-5/8	2-5/16	3-1/16
W6x16	3/4	1-1/8	1-7/16	2-1/16	2-11/16
W8x28	11/16	1	1-3/16	1-15/16	2-1/2
W10x49	5/8	15/16	1-3/16	1-3/4	2-3/8
W12x106	3/8	5/8	7/8	1-3/8	1-13/16
W14x233	5/16	3/8	9/16	15/16	1-5/16
W14x730	5/16	5/16	5/16	7/16	5/8

The min thickness of Spray-Applied Fire Resistive Materials required for various fire resistance ratings of contour sprayed steel pipes or tubes are shown on the table below:

Min Column Size In.	A/P	1 Hr	1-1/2 Hr	Min Thkns In. 2 Hr	3 Hr	4 Hr
SP 4x0.237	0.22	11/16	1	1-3/8	2-1/16	2-3/4
ST 4x4x0.1875	0.18	3/4	1-1/16	1-7/16	2-1/16	2-11/16
ST 4x4x0.3125	0.29	1/2	13/16	1-1/8	1-3/4	2-5/16
ST 4x4x0.375	0.34	7/16	3/4	1	1-9/16	2-1/8
ST 4x4x0.5	0.44	3/8	9/16	7/8	1-3/8	1-7/8
ST 36x24x0.5	0.49	5/16	7/16	11/16	1-1/8	1-9/16

As an alternate to the table above, the required thickness of Spray-Applied Fire Resistive Materials to be applied to all surfaces of the steel pipes or tubes for all rating periods may be determined from the following equation:

$$h = \frac{R}{188\,(A/P) + 45}$$

Where:

h = Spray-Applied Fire Resistive Materials thickness in the range of 5/16 to 4-1/4 in. (rounded up to the nearest 1/16 in.)

R = Fire resistance rating in minutes (60-240 mins.)

A = Cross-sectional area of pipe or tube.

P = Heated perimeter of steel pipe or tube.

A/P = 0.18 to 0.49.

The A/P ratio of a circular pipe is determined by:

$$A/P = \frac{t\,(d - t)}{d}$$

Where:

d = the outer diameter of the pipe (in.)

t = the wall thickness of the pipe (in.)

The A/P ratio of a rectangular tube is determined by:

$$A/P = \frac{t\,(a + b - 2t)}{a + b}$$

Where:

a = the outer width of the tube (in.)

b = the outer length of the tube (in.)

t = the wall thickness of the tube (in.)

BERLIN CO LTD — Types 300, 300ES, 300N or SB.

ISOLATEK INTERNATIONAL — Type 300, Type 300ES, Type 300N or Type SB.

2A. **(As an alternate to Item 2) Spray-Applied Fire Resistive Materials*** — Applied by mixing with water and spraying in one or more coats to the thicknesses shown below, to steel surfaces which are clean and free of dirt, loose scale, and oil. Min average and min individual density of 17.5 and 16 pcf, respectively, for Type 300TW. Min average and min individual density of 22 and 19 pcf, respectively, for Type 400. For method of density determination, see Design Information Section, Sprayed Material.

The min thickness of Spray-Applied Fire Resistive Materials required for various fire resistance ratings is shown in Item 2.

ISOLATEK INTERNATIONAL — Type 300TW or Type 400

2B. **(As an alternate to Item 2 and 2A) — Spray-Applied Fire Resistive Materials*** — Prepared by mixing with water according to instructions on each bag of mixture and spray- or trowel-applied to steel surfaces which are free of dirt, oil or scale. Min average density of 17.5 pcf with min individual value of 17.0 pcf. For method of density determination, see Design Information Section, Sprayed Material.

The min thickness of Spray-Applied Fire Resistive Materials required for various fire resistance ratings is shown in Item 2.

ISOLATEK INTERNATIONAL — Type 280.

3. **Metal Lath —** (Optional for contour application) — 3.4 lb/sq yd galv or painted expanded steel lath. Lath shall be lapped 1 in. and tied together with No. 18 SWG galv steel wire spaced vertically 6 in. OC.

*Bearing the UL Classification Mark

Last Updated on 2009-05-15

Questions? Notice of Disclaimer Page Top

Copyright © 2010 Underwriters Laboratories Inc.®

The appearance of a company's name or product in this database does not in itself assure that products so identified have been manufactured under UL's Follow-Up Service. Only those products bearing the UL Mark should be considered to be Listed and covered under UL's Follow-Up Service. Always look for the Mark on the product.

UL permits the reproduction of the material contained in the Online Certification Directory subject to the following conditions: 1. The Guide Information, Designs and/or Listings (files) must be presented in their entirety and in a non-misleading manner, without any manipulation of the data (or drawings). 2. The statement "Reprinted from the Online Certifications Directory with permission from Underwriters Laboratories Inc." must appear adjacent to the extracted material. In addition, the reprinted material must include a copyright notice in the following format: "Copyright © 2010 Underwriters Laboratories Inc.®"

An independent organization working for a safer world with integrity, precision and knowledge.

ONLINE CERTIFICATIONS DIRECTORY

BXUV.U469
Fire Resistance Ratings - ANSI/UL 263

Page Bottom

Design/System/Construction/Assembly Usage Disclaimer

- Authorities Having Jurisdiction should be consulted in all cases as to the particular requirements covering the installation and use of UL Listed or Classified products, equipment, systems, devices, and materials.
- Authorities Having Jurisdiction should be consulted before construction.
- Fire resistance assemblies and products are developed by the design submitter and have been investigated by UL for compliance with applicable requirements. The published information cannot always address every construction nuance encountered in the field.
- When field issues arise, it is recommended the first contact for assistance be the technical service staff provided by the product manufacturer noted for the design. Users of fire resistance assemblies are advised to consult the general Guide Information for each product category and each group of assemblies. The Guide Information includes specifics concerning alternate materials and alternate methods of construction.
- Only products which bear UL's Mark are considered as Classified, Listed, or Recognized.

Fire Resistance Ratings - ANSI/UL 263

See General Information for Fire Resistance Ratings - ANSI/UL 263

Design No. U469

March 03, 2010

Assembly Rating — 1 HR

Nonbearing Wall

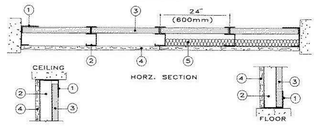

1. **Floor and Ceiling Runners** — "J" - shaped, 2-1/2 in. wide with unequal legs of 1 in. and 2 in. fabricated from 24 MSG galv steel (min 20 MSG steel required when Item 4A is used). Runners attached to structural supports with steel fasteners located not greater than 2 in. from ends and not greater than 24 in. OC.

2. **Steel Studs** — "C-H" shaped studs, 2-1/2 in. wide by 1-1/2 in. deep, fabricated from min 20 MSG galv steel (min 20 MSG steel required when Item 4A is used), spaced 24 in. or 600 mm OC. Vertically restrained walls require studs to be cut 3/8 in. less than floor to ceiling height.

3. **Gypsum Board*** — 1 in. thick gypsum wallboard liner panels, supplied in nominal 24 in. or 600 mm widths. Vertical edges inserted in "H" shaped section of "C-H" studs. Free edge of end panels attached to long leg of "J" runners with 1-5/8 in. long Type S head steel screws spaced not greater than 12 in. OC.

CANADIAN GYPSUM COMPANY — Type SLX.

UNITED STATES GYPSUM CO — Type SLX.

USG MEXICO S A DE C V — Type SLX.

4. **Gypsum Board*** — 5/8 in. thick, 4 ft or 1200 mm wide, applied vertically and attached to studs with 1 in. long Type S steel screws spaced 12 in. OC along the edges and in the field of the boards.

AMERICAN GYPSUM CO — Types AGX-1, AGX-C.

CERTAINTEED GYPSUM INC — ProRoc Type C.

CERTAINTEED GYPSUM CANADA INC — ProRoc Type C.

CANADIAN GYPSUM COMPANY — Types C, IP-X1, IP-X2, IPC-AR, SCX or WRC.

GEORGIA PACIFIC GYPSUM L L C — Types S, DAPC.

LAFARGE NORTH AMERICA INC — Types LGFC-C, LGFC-G/A, LGFC6A

PABCO BUILDING PRODUCTS L L C, DBA
PABCO GYPSUM — Type C, PG-11 or PG-C.

TEMPLE-INLAND — Type X, Veneer Plaster Base - Type X, Water Rated - Type X, Sheathing - Type X, Soffit - Type X, TG-C.

UNITED STATES GYPSUM CO — Types C, PRX-G, IP-X1, IP-X2, IPC-AR, SCX or WRC.

USG MEXICO S A DE C V — Types C, IP-X1, IP-X2, IPC-AR, SCX or WRC.

4A. **Gypsum Board*** — Not Shown - As an Alternate to Item 4. Nom 5/8 in. thick lead backed gypsum panels with beveled, square or tapered edges, applied vertically. Vertical joints centered over studs and staggered min 1 stud cavity on opposite sides of studs. Wallboard secured to studs with 1-1/4 in. long Type S-12 steel screws spaced 8 in. OC at perimeter and 12 in. OC in the field. Lead batten strips (Item 6) required behind vertical joints:

RAY-BAR ENGINEERING CORP — Type RB-LDG

5. **Batts and Blankets*** — (Optional) — Mineral wool batts partially or completely filling stud cavity.

THERMAFIBER INC — Type SAFB.

5A. **Fiber, Sprayed*** — As an alternate to Batts and Blankets (Item 5) — Spray applied cellulose material. The fiber is applied with water to completely fill the enclosed cavity in accordance with the application instructions supplied with the product. Nominal dry density of 3.0 lb/ft^3. Alternate application method: The fiber is applied with U.S. Greenfiber LLC Type AD200 hot melt adhesive at a nominal ratio of one part adhesive to 6.6 parts fiber to completely fill the enclosed cavity in accordance with the application instructions supplied with the product. Nominal dry density of 2.5 lb/ft^3.

U S GREENFIBER L L C — Cocoon2 Stabilized or Cocoon-FRM (Fire Rated Material)

5B. **Fiber, Sprayed*** — As an alternate to Batts and Blankets (Item 5) and Item 5A - Spray applied cellulose insulation material. The fiber is applied with water to interior surfaces in accordance with the application instructions supplied with the product. Applied to completely fill the enclosed cavity. Minimum dry density of 4.1 pounds per cubic ft.

NU-WOOL CO INC — Cellulose Insulation

5C. **Fiber, Sprayed*** — As an alternate to Batts and Blankets (Item 5) - Spray applied cellulose fiber. The fiber is applied with water to completely fill the enclosed cavity in accordance with the application instructions supplied with the product. The minimum dry density shall be 4.30 lb/ft^3.

INTERNATIONAL CELLULOSE CORP — Cellur-RL

6. **Lead Batten Strips** — For Use with Item 4A - (Not Shown) — Lead batten strips required behind vertical joints of lead backed gypsum wallboard (Item 4A) and optional at remaining stud locations. Strips, min 1-1/2 in. wide, max 10 ft long with a max thickness of 0.125 in. Strips placed on the interior face of studs and attached from the exterior face of the stud with two 1 in. long Type S-12 pan head steel screws, one at the top of the strip and one at the bottom of the strip. Lead batten strips to have a purity of 99.9% meeting the Federal specification QQ-L-201F, Grade "C".

6A. **Lead Discs or Tabs** — (Not Shown) - Used in lieu of or in addition to the lead batten strips (Item 6) or optional at other locations - Max 3/4 in diam by max 0.125 in. thick lead discs compression fitted or adhered over steel screw heads or max 1/2 in. by 1-1/4 in. by max 0.125 in. thick lead tabs placed on gypsum boards (Item 5) underneath screw locations prior to the installation of the screws. Lead discs or tabs to have a purity of 99.9% meeting the Federal specification QQ-L-201F, Grade "C".

*Bearing the UL Classification Mark

Last Updated on 2010-03-03

Questions? Notice of Disclaimer Page Top

Copyright © 2010 Underwriters Laboratories Inc.®

The appearance of a company's name or product in this database does not in itself assure that products so identified have been manufactured under UL's Follow-Up Service. Only those products bearing the UL Mark should be considered to be Listed and covered under UL's Follow-Up Service. Always look for the Mark on the product.

UL permits the reproduction of the material contained in the Online Certification Directory subject to the following conditions: 1. The Guide Information, Designs and/or Listings (files) must be presented in their entirety and in a non-misleading manner, without any manipulation of the data (or drawings). 2. The statement "Reprinted from the Online Certifications Directory with permission from Underwriters Laboratories Inc." must appear adjacent to the extracted material. In addition, the reprinted material must include a copyright notice in the following format: "Copyright © 2010 Underwriters Laboratories Inc.®"

An independent organization working for a safer world with integrity, precision and knowledge.

http://database.ul.com/cgi-bin/XYV/template/LISEXT/1FRAME/showpage.html?name=B... 3/17/2010

C:\Users\prestonm\Documents\A11_2010543 WSU RESIDENTIAL LIFE BUILDING II_CENTRAL_prestonm.rvt
5/17/2011 12:18:01 PM

MHTN ARCHITECTS
MHTN Architects, Inc.
420 East South Temple
Suite 100
Salt Lake City, Utah 84111
Telephone (801) 595-6700
Telefax (801) 595-6717
www.mhtn.com

WEBER STATE UNIVERSITY
RESIDENTIAL LIFE PHASE II - BLDG 2
DFCM PROJECT NUMBER: 10176810
WEBER STATE UNIVERSITY
OGDEN, UTAH 84408

SEAL

MHTN PROJECT NO. 2010543

DRAWN BY: MC CHECKED BY: MG

ISSUED:

NO.	DATE	DESCRIPTION
01	17 MAY 2011	CONSTRUCTION DOCUMENTS

CONTRACTOR TO VERIFY DRAWINGS IN FIELD USE REFLECT LAST REVISION DATE

NO.	DATE	DESCRIPTION

SHEET NAME
UL RATINGS

CONSTRUCTION DOCUMENTS
17 MAY 2011

SHEET NUMBER
AE007

ONLINE CERTIFICATIONS DIRECTORY

XHBN.HW-D-0049
Joint Systems

Page Bottom

Design/System/Construction/Assembly Usage Disclaimer

- Authorities Having Jurisdiction should be consulted in all cases as to the particular requirements covering the installation and use of UL Listed or Classified products, equipment, system, devices, and materials.
- Authorities Having Jurisdiction should be consulted before construction.
- Fire resistance assemblies and products are developed by the design submitter and have been investigated by UL for compliance with applicable requirements. The published information cannot always address every construction nuance encountered in the field.
- When field issues arise, it is recommended the first contact for assistance be the technical service staff provided by the product manufacturer noted for the design. Users of fire resistance assemblies are advised to consult the general Guide Information for each product category and each group of assemblies. The Guide Information includes specifics concerning alternate materials and alternate methods of construction.
- Only products which bear UL's Mark are considered as Classified, Listed, or Recognized.

Joint Systems

See General Information for Joint Systems

System No. HW-D-0049

December 23, 2009

Assembly Ratings — 1 and 2 Hr (See Items 2 and 3B)

Nominal Joint Width — 1 In.

Class II Movement Capabilities — 50% Compression Or Extension

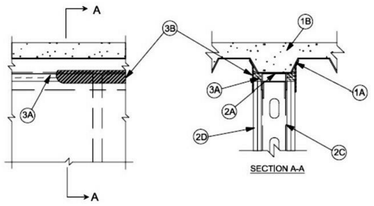

1. **Floor Assembly** — The fire-rated fluted steel deck/concrete floor assembly shall be constructed of the materials and in the manner described in the individual D700 or D900 Series Floor-Ceiling Design in the UL Fire Resistance Directory and shall include the following construction features:

A. **Steel Floor And Form Units* —** Max 3 in. (76 mm) deep galv steel fluted units.

B. **Concrete —** Min 2-1/2 in. (64 mm) thick reinforced concrete, as measured from the top plane of the floor units.

C. **Spray-Applied Fire Resistive Materials* —** (Optional) - (Not Shown)—Prior to or after the installation of the steel ceiling runners, Forming Material and Fill, Void or Cavity Material (Items 2A, 3A, 3B) the steel floor units may be sprayed with a min 5/16 in. (8 mm) to max 1-3/4 in. (44 mm) thickness of fire resistive material.

W R GRACE & CO - CONN — Type MK-6-HY

1A. **Roof Assembly —** (Not Shown) — As an alternate to the floor assembly, a fire rated fluted steel deck roof assembly may be used. The roof assembly shall be constructed of the materials and in the manner described in the individual P900 Series Roof-Ceiling Design in the UL Fire Resistance Directory. The hourly rating of the roof assembly shall be equal to or greater than the hourly rating of the wall assembly. The roof assembly shall include the following construction features:

A. **Steel Roof Deck —** Max 3 in. (76 mm) deep galv steel fluted roof deck.

B. **Roof Insulation —** Min 2-1/4 in. (57 mm) thick poured insulating concrete, as measured from the top plane of the floor units.

1B. **Roof Assembly —** As an alternate to Items 1 and 1A, a fire rated protected fluted steel deck roof assembly may be used. The roof assembly shall be constructed of the materials and in the manner described in the individual P700 Series Roof-Ceiling Design in the UL Fire Resistance Directory. The hourly rating of the roof assembly shall be equal to or greater than the hourly rating of the wall assembly. The roof assembly shall include the following construction features:

A. **Steel Roof Deck —** Max 3 in. (76 mm) deep galv steel fluted roof deck.

B. **Spray—Applied Fire Resistive Materials* —** (Not Shown)—Prior to or after the installation of the steel ceiling runners, Forming Material and Fill, Void or Cavity Material (Items 2A, 3A, 3B), the roof assembly shall be sprayed with the type and thickness of fire resistive material indicated in the individual P700 Series design.

2. **Wall Assembly —** The 2 hr fire rated gypsum board /steel stud wall assembly shall be constructed of the materials and in the manner described in the individual U400 or V400 Series Wall and Partition Design in the UL Fire Resistance Directory and shall include the following construction features:

A. **Steel Floor And Ceiling Runners —** Floor and ceiling runners of wall assembly shall consist of min 25 ga galv steel channels sized to accommodate steel studs (Item 2C). Flange height of ceiling runner shall be min 1/4 in. (6 mm) greater than max extended joint width. Ceiling runner installed parallel to direction of fluted steel deck, centered beneath valley, and secured with steel masonry anchors, steel fasteners or welds spaced max 24 in. (610 mm) OC. before or after optional spray-applied fire resistive material is used. The use of welds to secure the ceiling runner may only be used prior to the installation of the optional spray-applied material.

A1. **Light Gauge Framing*-Slotted Ceiling Runner —** As an alternate to the ceiling runner in Item 2A, slotted ceiling runner to consist of galv steel channel with slotted flanges sized to accommodate steel studs (Item 2C). Slotted ceiling runner installed parallel to direction of fluted steel deck, centered beneath valley, and secured with steel masonry anchors, steel fasteners or welds spaced max 24 in. (610 mm) OC. before or after optional spray-applied fire resistive material is used. The use of welds to secure the ceiling runner may only be used prior to the installation of the optional spray-applied material.

BRADY CONSTRUCTION INNOVATIONS INC,

DBA SLIPTRACK SYSTEMS — SLP-TRK

CALIFORNIA EXPANDED METAL PRODUCTS CO — CST

CLARKWESTERN BUILDING SYSTEMS INC — Type SLT, SLT-H

METAL-LITE INC — The System

SCAFCO STEEL STUD MANUFACTURING CO

STEELER INC — Steeler Slotted Ceiling Runner

A2. **Light Gauge Framing*-Vertical Deflection Ceiling Runner —** As an alternate to the ceiling runners in Items 2A and 2A1, vertical deflection ceiling runner to consist of galv steel channel with slotted vertical deflection clips mechanically fastened within runner. Slotted clips, provided with step bushings, for permanent fastening of steel studs. Flanges sized to accommodate steel studs (Item 2C). Vertical deflection ceiling runner installed parallel to direction of fluted steel deck, centered beneath deck, and secured with steel masonry anchors, steel fasteners or welds spaced max 24 in. (610 mm) OC. before or after optional spray-applied fire resistive material is used. The use of welds to secure the ceiling runner may only be used prior to the installation of the optional spray-applied material.

THE STEEL NETWORK INC — VertiTrack VTD250, VTD362, VTD400, VTD600 and VTD800

A3. **Light Gauge Framing* — Clipped Ceiling Runner —** As an alternate to the ceiling runner in Items 2A, 2A1 and 2A2, clipped runner to consist of galv steel channel with clips preformed in track flanges which positively engage the inside flange of the steel studs (Item 2C). Track sized to accommodate steel studs (Item 2C). Track flanges to be min 2-1/2 in. (64 mm). Clipped ceiling runner installed parallel to direction of fluted steel deck, centered beneath deck, and secured with steel masonry anchors, steel fasteners or welds spaced max 24 in. (610 mm) OC. before or after optional spray-applied fire resistive material is used. The use of welds to secure the ceiling runner may only be used prior to the installation of the optional spray-applied material.

TOTAL STEEL SOLUTIONS L L C — Snap Trak

A4. **Light Gauge Framing —Floor and Ceiling Runners —** As an alternate to the ceiling and floor runners in Item 2A, 2A1, 2A2 and 2A3, floor and ceiling runners to consist of galv steel channel sized to accommodate the **Light Gauge Framing* Slotted Stud** (Item 2C1) or **Light Gauge Framing* Slider C-Clip System** (Item 2C2). Floor and ceiling runners to be provided with min 1-1/4 in. (32 mm) and 3 in. (76 mm) flanges, respectively. Ceiling runner installed parallel to direction of fluted steel deck, centered beneath deck, and secured with steel masonry anchors, steel fasteners or welds spaced max 24 in. (610 mm) OC. before or after optional spray-applied fire resistive material is used. The use of welds to secure the ceiling runner may only be used prior to the installation of the optional spray-applied material.

STEELER INC — Floor and Ceiling Runners

A5. **Light Gauge Framing*- Notched Ceiling Runner —** As an alternate to the ceiling runners in Items 2A through 2A4, notched ceiling runners to consist of C-shaped galv steel channel with notched return flanges sized to accommodate steel studs (Item 2C). Notched ceiling runner installed parallel to direction of fluted steel deck, centered beneath valley, and secured with steel masonry anchors, steel fasteners or welds spaced max 24 in. (610 mm) OC. before or after optional spray-applied fire resistive materials) and top of ceiling runner with steel fasteners or welds. Clips spaced max 24 in. (610 mm) OC.

OLMAR SUPPLY INC — Type SCR

B. **Steel Attachment Clips —** (Optional - Not Shown) - When spray applied fireproofing is used ceiling runner may be secured to deck with Z-shaped clips formed from 1 in. (25 mm) wide strips of min 20 ga galv steel. Clips to be sized to extend through the thickness of the spray-applied fire-resistive material on the bottom of the steel deck with 2 in. (51 mm) long upper and lower legs. Legs of clips fastened perpendicular to valleys of steel deck (prior to application of spray-applied fire-resistive materials) and top of ceiling runner with steel fasteners or welds. Clips spaced max 24 in. (610 mm) OC.

C. **Studs —** Steel studs to be min 2-1/2 in. (64 mm) wide. Studs cut 1/2 to 3/4 in. (13 to 19 mm) less in length than assembly height with bottom resting in and resting on floor runner and with top nesting in ceiling runner without attachment. When slotted ceiling runner (Item 2A1) is used, steel studs secured to slotted ceiling runner with No. 8 by 1/2 in. (13 mm) long wafer head steel screws at midheight of slot on each side of wall. Stud spacing not to exceed 24 in. (610 mm) OC. When vertical deflection ceiling runner (Item 2A2) is used, steel studs secured to slotted vertical deflection clips, through the bushings, with steel screws at midheight of each slot. Stud spacing not to exceed 24 in. (610 mm) OC.

C1. **Light Gauge Framing* —Slotted Studs —** Slotted steel stud to be used in conjunction with **Light Gauge Framing* —Floor and Ceiling Runners** (Item 2A4). Slotted steel studs to be min 2-1/2 in. (64 mm) wide. Slotted steel studs cut 1 in. less in length than assembly height with bottom resting in and secured to both ceiling and floor runners. Ceiling runner secured to preformed slot within steel stud by means of No. 10 by 3/4 in. (19 mm) long low profile head steel screw. Floor runner attached to bottom of steel stud by means of No. 8 by 1/2 in. (13 mm) long pan head steel screw. Slotted steel stud spacing not to exceed 24 in. (610 mm) OC.

STEELER INC — Slotted Stud

C2. **Light Gauge Framing* —Slider C-Clip System —** As an alternate to the **Light Gauge Framing* —Slotted Steel Studs** (Item 2C1), a Slider C-Clip System consisting of a C shaped steel clip with a slotted opening and a steel stud to be used in conjunction with **Light Gauge Framing —Floor and Ceiling Runners** (Item 2A4). Steel clips and studs to be min 2-1/2 in. (64 mm) wide. Steel clip inserted into inside flange of steel stud without attachment. Total length of steel stud cut 1 in. (25 mm) less than assembly height with bottom of steel stud nesting in and secured to floor runner. Floor runner attached to bottom of steel stud by means of No. 8 by 1/2 in. (13 mm) long pan head steel screw. Ceiling runner secured to steel C-Clip by means of No. 10 by 3/4 in. (19 mm) long pan head steel screw located 3/8 in. (10 mm) below top of ceiling runner. Top row of gypsum board screws shall be centered within the preformed slot of the C-Clip. Steel stud and steel clips spacing not to exceed 24 in. (610 mm) OC.

STEELER INC — Slider C Clip System

D. **Gypsum Board* —** Gypsum board installed to a min total thickness of 5/8 in. (16 mm) and 1-1/4 in. (32 mm) on each side of wall for 1 and 2 hr rated assemblies respectively. Wall to be constructed as specified in the individual Wall and Partition Design in the UL Fire Resistance Directory, except that a nom 1 in. (25 mm) gap shall be maintained between the top of the gypsum board and the bottom of the steel floor units and the top row of screws shall be installed into the studs 3-1/2 (89 mm) to 4 in. (102 mm) below the lower surface of the floor. The hourly rating of the joint system is equal to the hourly fire rating of the wall.

3. **Joint System — Max separation between bottom of floor and top of wall at time of installation of joint system is 1 in. (25 mm). The joint system is designed to accommodate a max 50 percent compression or extension from its installed width.** The joint system consists of forming material and a fill material, as follows:

A. **Forming Material* —** Nom 5/8 in. (16 mm) and 1-1/4 in. (32 mm) wide strips of min 4 pcf (64 kg/m^3) mineral wool batt insulation for 1 and 2 hr rated assemblies respectively, cut to thickness, compressed 50 percent in thickness and firmly packed into the gap between the top of the gypsum board and bottom of the steel floor units on both sides of the wall. Adjoining lengths of strips to be tightly butted with butted seams spaced min 48 in. (1.2 m) apart along the length of the joint.

FIBREX INSULATIONS INC — FBX Safing Insulation

ROCK WOOL MANUFACTURING CO — Delta- Board

ROXUL INC — SAFE

THERMAFIBER INC — Type SAF

A1. **Forming Material* - Strips —** (Optional) - Nom 5/8 in. (16 mm) and 1-1/4 in. (32 mm) wide precut mineral wool strips for 1 and 2 hr rated assemblies respectively. The strips are compressed 50 percent in thickness and firmly packed into the gap between the top of the gypsum board and bottom of the steel floor units on both sides of the wall. Adjoining lengths of strips to be tightly butted with butted seams spaced min 48 in. (1.2 m) apart along the length of the joint.

HILTI CONSTRUCTION CHEMICALS, DIV OF

HILTI INC — CP 767 Speed Strips

B. **Fill, Void or Cavity Material* —** Min 1/16 in. (1.6 mm) dry thickness (min 1/8 in. or 3.2 mm wet thickness) of fill material sprayed or troweled on each side of the wall to completely cover mineral wool forming material and to overlap a min of 1/2 in. (13 mm) onto gypsum board and steel deck on both sides of wall. When spray-applied fire resistive material is applied to the steel floor and form units, the fill material is to overlap the gypsum board a min of 1/2 in. (13 mm) and the spray-applied fire resistive material a min of 2 in. (51 mm) on both sides of wall. When spray-applied fire resistive materials are used, the CP672 firestop spray shall overlap the wall a min 1/2 in. (13 mm) and overlap the spray-applied fire resistive material a min of 2 in. (51 mm) on both sides of the wall.

HILTI CONSTRUCTION CHEMICALS, DIV OF

HILTI INC — CP672 Firestop Spray

*Bearing the UL Classification Mark

Last Updated on 2009-12-23

Questions? Notice of Disclaimer Page Top

Copyright © 2010 Underwriters Laboratories Inc.®

The appearance of a company's name or product in this database does not in itself assure that products so identified have been manufactured under UL's Follow-Up Service. Only those products bearing the UL Mark should be considered to be Listed and covered under UL's Follow-Up Service. Always look for the Mark on the product.

UL permits the reproduction of the material contained in the Online Certification Directory subject to the following conditions: 1. The Guide Information, Designs and/or Listings (files) must be presented in their entirety and in a non-misleading manner, without any manipulation of the data (or drawings). 2. The statement "Reprinted from the Online Certifications Directory with permission from Underwriters Laboratories Inc." must appear adjacent to the extracted material. In addition, the reprinted material must include a copyright notice in the following format: "Copyright © 2010 Underwriters Laboratories Inc.®"

An independent organization working for a safer world with integrity, precision and knowledge.

ONLINE CERTIFICATIONS DIRECTORY

XHBN.HW-D-0001
Joint Systems

Page Bottom

Design/System/Construction/Assembly Usage Disclaimer

- Authorities Having Jurisdiction should be consulted in all cases as to the particular requirements covering the installation and use of UL Listed or Classified products, equipment, system, devices, and materials.
- Authorities Having Jurisdiction should be consulted before construction.
- Fire resistance assemblies and products are developed by the design submitter and have been investigated by UL for compliance with applicable requirements. The published information cannot always address every construction nuance encountered in the field.
- When field issues arise, it is recommended the first contact for assistance be the technical service staff provided by the product manufacturer noted for the design. Users of fire resistance assemblies are advised to consult the general Guide Information for each product category and each group of assemblies. The Guide Information includes specifics concerning alternate materials and alternate methods of construction.
- Only products which bear UL's Mark are considered as Classified, Listed, or Recognized.

Joint Systems

See General Information for Joint Systems

System No. HW-D-0001

October 16, 2009

Assembly Rating — 1 Hr

Nominal Joint Width — 5/8 in.

L Rating At Ambient — Less Than 1 CFM/Lin Ft

L Rating At 400°F — Less Than 1 CFM/Lin Ft

Class II and III Movement Capabilities— 50% Compression or Extension

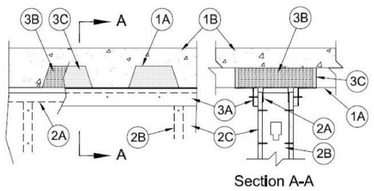

1. **Floor Assembly —** The fire-rated fluted steel deck/concrete floor assembly shall be constructed of the materials and in the manner described in the individual Floor-Ceiling Design in the UL Fire Resistance Directory and shall include the following construction features:

A. **Steel Floor and Form Units* —** Max 3 in. (76 mm) deep galv steel fluted floor units.

B. **Concrete —** Min 2 1/2 in. (64 mm) thick reinforced concrete, as measured from the top plane of the floor units.

1A. **Roof Assembly —** As an alternate to Item 1 Floor Assembly, the fire-rated roof assembly shall be constructed of the materials and in the manner described in the individual P700, P800 or P900 series Roof-Ceiling Designs in the UL Fire Resistance Directory and shall contain max 1-1/2 in. (38 mm) deep fluted galv steel deck. The hourly fire rating of the roof assembly shall be equal to or greater than the hourly fire rating of the wall assembly . In the case of spray-applied protection materials on the steel deck, the joint system shall be installed prior to the spray-applied protection material.

1B. **Floor Assembly —** As an alternate to Item 1 Floor Assembly, min 4-1/2 in. (114 mm) thick reinforced lightweight or normal weight (100-150 pcf or 1600-2400 kg/m^3) structural concrete.

2. **Wall Assembly —** The 1 hr fire-rated nonbearing gypsum board/steel stud wall assembly shall be constructed of the materials and in the manner described in the individual U400 or V400 Series Wall and Partition Designs in the UL Fire Resistance Directory and shall include the following construction features:

A. **Steel Floor And Ceiling Runners —** Floor and ceiling runners of wall assembly shall consist of min 25 ga galv steel channels sized to accommodate steel studs (Item 2B). Ceiling runner to be provided with 2 in. (51 mm) flanges. Ceiling runner installed perpendicular to direction of fluted steel deck and secured to valleys with steel masonry anchors or by welds spaced max 12 in. (305 mm) OC. Ceiling runner secured to concrete floor slab (Item 1B) with steel masonry anchors spaced max 24 in. (610 mm) OC.

A1. **Light Gauge Framing* — Clipped Ceiling Runner —** As an alternate to the ceiling runner in Item 2A, clipped runner to consist of galv steel channel with clips preformed in track flanges which positively engage the inside flange of the steel studs (Item 2B). Track sized to accommodate steel studs (Item 2B). Track flanges to be min 2-1/2 in. (64 mm). Clipped ceiling runner installed perpendicular to direction of fluted steel deck and secured to valleys with steel masonry anchors spaced max 12 in. (305 mm) OC. Clipped ceiling runner secured to concrete floor slab (Item 1B) with steel masonry anchors spaced max 24 in. (610 mm) OC.

TOTAL STEEL SOLUTIONS L L C — Snap Trak

A2. **Light Gauge Framing* - Notched Ceiling Runner —** As an alternate to the ceiling runners in Items 2A and 2A1, notched ceiling runners to consist of C-shaped galv steel channel with notched return flanges sized to accommodate steel studs (Item 2B). Notched ceiling runner installed perpendicular to direction of fluted steel deck and secured with steel masonry anchors spaced max 12 in. (305 mm) OC. Notched ceiling runner secured to concrete floor slab (Item 1B) with steel masonry anchors spaced max 24 in. (610 mm) OC.

OLMAR SUPPLY INC — Type SCR

B. **Studs —** Steel studs to be min 2 1/2 in. (64 mm) wide. Studs cut 5/8 to 1 in. (16 to 25 mm) less in length than assembly height with bottom nesting in and resting on floor runner and with top nesting in ceiling runner without attachment. Stud spacing not to exceed 24 in. (610 mm) OC.

C. **Gypsum Board* —** Gypsum board sheets installed to a min total thickness of 1/2 in. (13 mm) on each side of wall. Wall to be constructed as specified in the individual Wall and Partition Design in the UL Fire Resistance Directory except that a nom 5/8 in. (16 mm) gap shall be maintained between the top of the gypsum board and the bottom of the steel deck. The screws attaching gypsum board to studs (Item 2B) at the top of the wall shall be located 1 in. (25 mm) below the bottom of the ceiling runner (Item 2A).

3. **Joint System — The joint system is designed to accommodate a max 80 percent compression or extension from its installed width.** The joint system consists of a forming material and fill material in the flutes of the steel deck and a "slip track" detail consisting of restraining angles in combination with gypsum board on the vertical flanges. When the floor assembly consists of a flat concrete slab (Item 1B), the forming material (Item 3B) and fill material (3C) are not used. The components of the system are as follows:

A. **Restraining Angles —** Min 2 1/2 by 2 1/2 in. (64 by 64 mm) angles formed from min 25 ga galv steel with one leg lined with a 2 1/2 in. (64 mm) wide piece of gypsum board cut from the same gypsum board used for the wall (Item 2C). Gypsum board liner secured to steel angle with min 1 in. (25 mm) long self-drilling, self-tapping Type S bugle head steel screws spaced max 8 in. (203 mm) OC. along longitudinal centerline of steel angle. Screws installed through face of gypsum board such that excess screw length protrudes through leg of steel angle. Restraining angles installed along top of wall on each side of wall assembly with gypsum board liner against wall surface and with horizontal leg of steel angle against valleys of steel deck or bottom of floor slab.

Restraining angles secured to valleys of steel deck or to concrete floor slab with steel masonry anchors spaced max 12 in. (305 mm) OC.

B. **Forming Material* —** Min 4 pcf (64 kg/m^3) density mineral wool batt insulation firmly packed into flutes of steel deck across top of wall as a permanent form. Forming material to be recessed from edges of restraining angles on each side of wall to accommodate the required thickness of fill material.

THERMAFIBER INC — Type SAF

C. **Fill, Void or Cavity Material* —** Min 1/2 in. (13 mm) thickness of fill material applied within the recess of each steel deck flute, flush with the outside edge of the restraining angle on each side of the wall. Dry mix material mixed with water at a rate of 2.1 parts dry mix to 1 part water, by weight, in accordance with accompanying instructions.

UNITED STATES GYPSUM CO — Type FC

C1. **Fill, Void or Cavity Material* —** (Not Shown) — Two component fill material used as an alternate to Item 3B. Min 1/2 in. (13 mm) thickness of fill material applied within the recess of each steel deck flute, flush with the outside edge of the restraining angle on each side of the wall. Ready-mixed component mixed with accelerator component at a rate of 66 parts of ready-mixed component to 1 part of accelerator component by weight in accordance with the accompanying installation instructions.

UNITED STATES GYPSUM CO — Type RFC

C2. **Fill, Void or Cavity Material* —** (Not Shown) Min 1/8 in. (3 mm) wet thickness of fill material sprayed or brushed on each side of the wall to completely cover mineral wool and overlap a min of 1/2 in. (13 mm) onto restraining angle and steel deck or concrete floor slab.

UNITED STATES GYPSUM CO — USG Type-SA

*Bearing the UL Classification Mark

Last Updated on 2009-10-16

Questions? Notice of Disclaimer Page Top

Copyright © 2010 Underwriters Laboratories Inc.®

The appearance of a company's name or product in this database does not in itself assure that products so identified have been manufactured under UL's Follow-Up Service. Only those products bearing the UL Mark should be considered to be Listed and covered under UL's Follow-Up Service. Always look for the Mark on the product.

UL permits the reproduction of the material contained in the Online Certification Directory subject to the following conditions: 1. The Guide Information, Designs and/or Listings (files) must be presented in their entirety and in a non-misleading manner, without any manipulation of the data (or drawings). 2. The statement "Reprinted from the Online Certifications Directory with permission from Underwriters Laboratories Inc." must appear adjacent to the extracted material. In addition, the reprinted material must include a copyright notice in the following format: "Copyright © 2010 Underwriters Laboratories Inc.®"

An independent organization working for a safer world with integrity, precision and knowledge.

MHTN ARCHITECTS
MHTN Architects, Inc.
420 East South Temple
Suite 100
Salt Lake City, Utah 84111
Telephone (801) 595-6700
Telefax (801) 595-6717
www.mhtn.com

WEBER STATE UNIVERSITY
RESIDENTIAL LIFE PHASE II - BLDG 2
DFCM PROJECT NUMBER: 10176810

WEBER STATE UNIVERSITY
OGDEN, UTAH 84408

SEAL

MHTN PROJECT NO. 2010543

DRAWN BY: MC CHECKED BY: MG

ISSUED:

NO.	DATE	DESCRIPTION
01	17 MAY 2011	CONSTRUCTION DOCUMENTS

CONTRACTOR TO VERIFY DRAWINGS IN FIELD USE REFLECT LAST REVISION DATE:

NO.	DATE	DESCRIPTION

SHEET NAME

UL RATINGS

CONSTRUCTION DOCUMENTS
17 MAY 2011

SHEET NUMBER

AE008

C:\Users\prestonm\Documents\Art11_2010543 WSU RESIDENTIAL LIFE BUILDING II_CENTRAL_prestonm.rvt
5/17/2011 12:18:07 PM

ONLINE CERTIFICATIONS DIRECTORY

XHBN.HW-D-0119
Joint Systems

Page Bottom

Design/System/Construction/Assembly Usage Disclaimer

- Authorities Having Jurisdiction should be consulted in all cases as to the particular requirements covering the installation and use of UL Listed or Classified products, equipment, system, devices, and materials.
- Authorities Having Jurisdiction should be consulted before construction.
- Fire resistance assemblies and products are developed by the design submitter and have been investigated by UL for compliance with applicable requirements. The published information cannot always address every construction nuance encountered in the field.
- When field issues arise, it is recommended the first contact for assistance be the technical service staff provided by the product manufacturer noted for the design. Users of fire resistance assemblies are advised to consult the general Guide Information for each product category and each group of assemblies. The Guide Information includes specifics concerning alternate materials and alternate methods of construction.
- Only products which bear UL's Mark are considered as Classified, Listed, or Recognized.

Joint Systems

See General Information for Joint Systems

System No. HW-D-0119

March 04, 2010

Assembly Rating — 1, 2 and 3 Hr (See Item 2)

Nominal Joint Width — 1 In.

Class II and III Movement Capabilities — 100% Compression or Extension

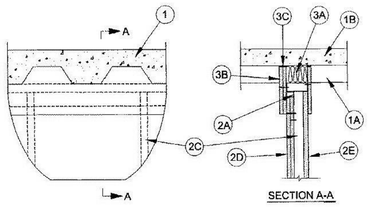

CONFIGURATION A

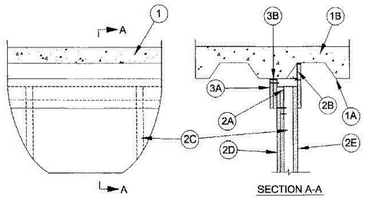

CONFIGURATION B

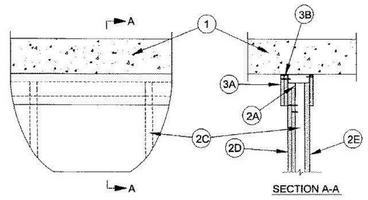

CONFIGURATION C

1. **Floor Assembly** — The fire-rated fluted steel deck/concrete floor assembly shall be constructed of the materials and in the manner described in the individual Floor-Ceiling Designs in the UL Fire Resistance Directory. The hourly fire rating of the floor assembly shall be equal to or greater than the hourly fire rating of the wall assembly. The floor assembly shall include the following construction features:

A. **Steel Floor and Form Units*** — Max 3 in. deep galv fluted floor units.

B. **Concrete** — Min 2-1/2 in. thick reinforced (100-150 pcf) concrete, as measured from the top plane of the floor units.

1A. **Roof Assembly** — As an alternate to Item 1, the fire-rated roof assembly shall be constructed of the materials and in the manner described in the individual P700, P800 or P900 Series Roof-Ceiling Designs in the UL Fire Resistance Directory and shall contain max 3 in. deep galv steel fluted roof units. The hourly fire rating of the roof assembly shall be equal to or greater than the hourly fire rating of the wall assembly. In the case of spray-applied protection materials on the steel roof units, the joint system shall be installed prior to the spray-applied protection material.

1B. **Floor Assembly** — As an alternate to Item 1, min 4-1/2 in. thick reinforced lightweight or normal weight (100-150 pcf) structural concrete.

2. **Shaft Wall Assembly** — The 1, 2 or 3 hr fire-rated gypsum board /steel stud shaft wall assembly shall be constructed of the materials and in the manner described in the individual U400 and V400-Series Wall and Partition Designs in the UL Fire Resistance Directory and shall include the following construction features:

A. **Light Gauge Framing* - (Deflection Trak** — Deflection trak of wall assembly shall consist of min No. 25 gauge galv steel channels sized to accommodate steel studs (Item 2C) and with offset legs to accommodate wall cladding (Item 3A). Deflection trak installed parallel or perpendicular to floor units. When installed perpendicular (Configuration A), deflection trak secured on both sides to valley of floor units with 1-1/2 in. long wafer spaced max 12 in. OC for 25 ga trak, 20 ga or heavier trak can be secured with steel fasteners spaced 12 in. OC. When installed parallel (Configuration B), deflection secured on one side to valley of floor units with 1-1/2 in. long wafer (25ga) or steel fasteners (20 ga or heavier) spaced max 12 in. OC. The other side of the deflection trak is secured to Z-Furring clips (Item 2B) with two No. 8 by 1/2 in. long steel tec screws. On concrete floor (Configuration C), min No. 20 gauge deflection trak attached to concrete at ceiling with steel fasteners spaced a max 12 in. OC

FIRE TRAK CORP — Cavity Shadowline

B. **Z-Furring - (Parallel Units)** — When trak is installed parallel to floor units, Z-Furring clips are attached to the bottom of the floor units within the crests two steel fasteners . Clip spacing not to

exceed 24 in. OC

FIRE TRAK CORP — Z-Furring Clips

C. **Studs —** Steel studs to be min 2-1/2 in. wide and as specified in the individual Wall and Partition Design in the UL Fire Resistance Directory. Studs cut 1-1/2 in. less in length than the assembly height with bottom nesting in and resting on floor runner and with top nesting in ceiling runner without attachment. Stud spacing not to exceed 24 in. OC.

D. **Gypsum Board* —** Gypsum board sheets installed and attached to studs and runners as specified in the individual Wall and Partition Design in the UL Fire Resistance Directory, except that a nominal 1 in. gap shall be maintained between top of the gypsum board and the bottom flange of the deflection trak. Top row of screws shall be installed into the studs 3 in. below the top edge of the gypsum board sheets.

E. **Gypsum Board* —** 1 in. thick gypsum board liner panels, supplied in nom 24 in. or 600 mm (for metric spacing) widths. Panels cut 1 in. less in length than floor to ceiling height. Gypsum board sheets installed and attached to studs and runners as specified in the individual Wall and Partition Design in the UL Fire Resistance Directory.

The hourly assembly rating of the joint system is equal to the fire rating of the wall.

Firestop Configuration A

3. **Joint System — Max separation between bottom flange of the deflection trak and top of wallboard (at the time of installation of the joint system) is 1 in. The joint system is designed to accommodate a max 100 percent compression or extension from its installed width.** The joint system consists of packing material (Item 3A), wall cladding (Item 3B) and a fill material (Item 3C) as follows:

A. **Packing Material —** Min 4 pcf density mineral wool batt insulation cut to the shape of the fluted deck, 25 percent larger than the area of the flutes and compressed into the flutes of the steel floor units above the ceiling runner as a permanent form.

B. **Wall Cladding —** Strips of the gypsum board material cut to the contour of the steel floor units and attached to the deflection trak on both sides of wall. The number of layers, board type and thickness and fastener type shall be as specified for the gypsum board in the individual Wall and Partition Design in the UL Fire Resistance Directory. Fasteners shall be max spaced 3 in. OC. The top of the wall cladding shall be recessed min 1/8 in. to max 1/2 in. from the steel floor units and overlap the gypsum board 4 in. on both sides of wall.

C. **Fill, Void or Cavity Material* —** Full depth of fill material installed on each side of the wall between the top of the wall cladding and the surface of the steel floor units, flush with each surface of the cladding.

A/D FIRE PROTECTION SYSTEMS INC — A/D FireBarrier Seal N/S, A/D FireBarrier Silicone

DAP PRODUCTS INC — DAP Firestop Sealant

EGS NELSON FIRESTOP — ES 1399 Sealant

FPT FLAMMADUR, DIV OF FIRE PROTECTION

TECHNOLOGIES INC — Acrylic Firestop Sealant Flammadur A10B

HILTI CONSTRUCTION CHEMICALS, DIV OF

HILTI INC — CP601S, CP606 , FS611A, FS-ONE Sealant

JOHNS MANVILLE INTERNATIONAL INC — Firetemp CI

3M COMPANY — FB 1000NS, FB 2000, FB 2000+, FD-150+, CP 25 WB+

NATIONAL GYPSUM CO — FS-90

NUCO INC — Self Seal GG-200

PASSIVE FIRE PROTECTION PARTNERS — 4100NS, 4800DW

RECTORSEAL — Metacaulk 835+, Metacaulk 1000, Biostop 500+ Caulk, Biotherm 100, FS3000, FS3001, FS3005

SPECIFIED TECHNOLOGIES INC — SpecSeal ES Sealant

TREMCO INC — TREMstop Acrylic

UNITED STATES GYPSUM CO — FC, RFC

Firestop Configuration B

3. **Joint System — Max separation between bottom flange of the deflection trak and top of wallboard (at the time of installation of the joint system) is 1 in. The joint system is designed to accommodate a max 100 percent compression or extension from its installed width.** The joint system consists of wall cladding (Item 3A) and a fill material (Item 3B) as follows:

A. **Wall Cladding —** Strips of the gypsum board material attached to the deflection trak on both sides of wall. The number of layers, board type and thickness and fastener type shall be as specified for the gypsum board in the individual Wall and Partition Design in the UL Fire Resistance Directory. Fasteners shall be max spaced 3 in. OC. The top of the wall cladding shall be recessed min 1/8 in. to max 1/2 in. from the steel floor units and overlap the gypsum board 4 in. on both sides of wall.

B. **Fill, Void or Cavity Material* —** Full depth of fill material installed on each side of the wall between the top of the wall cladding and the surface of the steel floor units, flush with each surface of the cladding.

A/D FIRE PROTECTION SYSTEMS INC — A/D FireBarrier Seal N/S, A/D FireBarrier Silicone

DAP PRODUCTS INC — DAP Firestop Sealant

EGS NELSON FIRESTOP — ES 1399 Sealant

FPT FLAMMADUR, DIV OF FIRE PROTECTION

TECHNOLOGIES INC — Acrylic Firestop Sealant Flammadur A10B

HILTI CONSTRUCTION CHEMICALS, DIV OF

HILTI INC — CP601S, CP606 , FS611A, FS-ONE Sealant

JOHNS MANVILLE INTERNATIONAL INC — Firetemp CI

3M COMPANY — FB 1000NS, FB 2000, FB 2000+, FD-150+, CP 25 WB+

NATIONAL GYPSUM CO — FS-90

NUCO INC — Self Seal GG-200

PASSIVE FIRE PROTECTION PARTNERS — 4100NS, 4800DW

RECTORSEAL — Metacaulk 835+, Metacaulk 1000, Biostop 500+ Caulk, Biotherm 100, FS3000, FS3001, FS3005

SPECIFIED TECHNOLOGIES INC — SpecSeal ES Sealant

TREMCO INC — TREMstop Acrylic

UNITED STATES GYPSUM CO — FC, RFC

Firestop Configuration C

3. **Joint System — Max separation between bottom flange of the deflection trak and top of wallboard (at the time of installation of the joint system) is 1 in. The joint system is designed to accommodate a max 100 percent compression or extension from its installed width.** The joint system consists of wall cladding (Item 3A) and a fill material (Item 3B) as follows:

A. **Wall Cladding —** Strips of the gypsum board material attached to the deflection trak on both sides of wall. The number of layers, board type and thickness and fastener type shall be as specified for the gypsum board in the individual Wall and Partition Design in the UL Fire Resistance Directory. Fasteners shall be max spaced 3 in. OC. The top of the wall cladding shall be recessed min 1/8 in. to max 1/2 in. from the bottom of the concrete floor and overlap the gypsum board 4 in. on both sides of wall.

B. **Fill, Void or Cavity Material* —** Full depth of fill material installed on each side of the wall between the top of the wall cladding and the surface of the steel floor units, flush with each surface of the cladding.

A/D FIRE PROTECTION SYSTEMS INC — A/D FireBarrier Seal N/S, A/D FireBarrier Silicone

DAP PRODUCTS INC — DAP Firestop Sealant

EGS NELSON FIRESTOP — ES 1399 Sealant

FPT FLAMMADUR, DIV OF FIRE PROTECTION

TECHNOLOGIES INC — Acrylic Firestop Sealant Flammadur A10B

HILTI CONSTRUCTION CHEMICALS, DIV OF

HILTI INC — CP601S, CP606 , FS611A, FS-ONE Sealant

JOHNS MANVILLE INTERNATIONAL INC — Firetemp CI

3M COMPANY — FB 1000NS, FB 2000, FB 2000+, FD-150+, CP 25 WB+

NATIONAL GYPSUM CO — FS-90

NUCO INC — Self Seal GG-200

PASSIVE FIRE PROTECTION PARTNERS — 4100NS, 4800DW

RECTORSEAL — Metacaulk 835+, Metacaulk 1000, Biostop 500+ Caulk, Biotherm 100, FS3000, FS3001, FS3005

SPECIFIED TECHNOLOGIES INC — SpecSeal ES Sealant

TREMCO INC — TREMstop Acrylic

UNITED STATES GYPSUM CO — FC, RFC

*Bearing the UL Classification Mark

Last Updated on 2010-03-04

Questions? Notice of Disclaimer Page Top

Copyright © 2010 Underwriters Laboratories Inc.®

The appearance of a company's name or product in this database does not in itself assure that products so identified have been manufactured under UL's Follow-Up Service. Only those products bearing the UL Mark should be considered to be Listed and covered under UL's Follow-Up Service. Always look for the Mark on the product.

UL permits the reproduction of the material contained in the Online Certification Directory subject to the following conditions: 1. The Guide Information, Designs and/or Listings (files) must be presented in their entirety and in a non-misleading manner, without any manipulation of the data (or drawings). 2. The statement "Reprinted from the Online Certifications Directory with permission from Underwriters Laboratories Inc." must appear adjacent to the extracted material. In addition, the reprinted material must include a copyright notice in the following format: "Copyright © 2010 Underwriters Laboratories Inc.®"

An independent organization working for a safer world with integrity, precision and knowledge.

MHTN ARCHITECTS
MHTN Architects, Inc.
420 East South Temple
Suite 100
Salt Lake City, Utah 84111
Telephone (801) 595-6700
Telefax (801) 595-6717
www.mhtn.com

WEBER STATE UNIVERSITY
RESIDENTIAL LIFE PHASE II - BLDG 2
DFCM PROJECT NUMBER: 10176810

WEBER STATE UNIVERSITY
OGDEN, UTAH 84408

SEAL

MHTN PROJECT NO. 2010543
DRAWN BY: MC CHECKED BY: MG

ISSUED:

NO.	DATE	DESCRIPTION
01	17 MAY 2011	CONSTRUCTION DOCUMENTS

CONTRACTOR TO VERIFY DRAWINGS IN FIELD-USE REFLECT LAST REVISION DATE.

NO.	DATE	DESCRIPTION

SHEET NAME
UL RATINGS

CONSTRUCTION DOCUMENTS
17 MAY 2011

SHEET NUMBER
AE009

C:\Users\prestonm\Documents\A11_2010543 WSU RESIDENTIAL LIFE BUILDING II_CENTRAL_prestonm.rvt
5/17/2011 12:18:11 PM

ONLINE CERTIFICATIONS DIRECTORY

BXUV.N759
Fire Resistance Ratings - ANSI/UL 263

Page Bottom

Design/System/Construction/Assembly Usage Disclaimer

- Authorities Having Jurisdiction should be consulted in all cases as to the particular requirements covering the installation and use of UL Listed or Classified products, equipment, systems, devices, and materials.
- Authorities Having Jurisdiction should be consulted before construction.
- Fire resistance assemblies and products are developed by the design submitter and have been investigated by UL for compliance with applicable requirements. The published information cannot always address every construction nuance encountered in the field.
- When field issues arise, it is recommended the first contact for assistance be the technical service staff provided by the product manufacturer noted for the design. Users of fire resistance assemblies are advised to consult the general Guide Information for each product category and each group of assemblies. The Guide Information includes specifics concerning alternate materials and alternate methods of construction.
- Only products which bear UL's Mark are considered as Classified, Listed, or Recognized.

Fire Resistance Ratings - ANSI/UL 263

See General Information for Fire Resistance Ratings - ANSI/UL 263

Design No. N759

May 15, 2009

Restrained Beam Rating — 1, 1-1/2, 2, 3 and 4 Hr. (See Item 8)

Unrestrained Beam Rating — 1, 1-1/2, 2, 3 and 4 Hr. (See Item 8)

Load Restricted for Canadian Applications — See Guide BXUV7

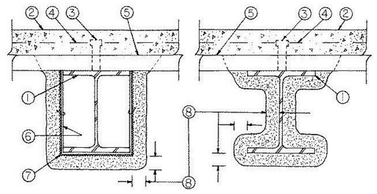

1. **Steel Beam** — W6x28 min size.

2. **Normal Weight or Lightweight Concrete** — Normal weight or lightweight concrete, 2-1/2 in. min thickness over the steel floor and form unit crests or min 3 in. thick slab with a compressive strength of 3500 psi and min dry unit weight of 110 pcf.

3. **Shear Connector —** (Optional) — Studs, 3/4 in. diam headed type or equivalent per AISC specification. Welded to the top flange of beam through the steel floor units.

4. **Welded Wire Fabric —** 6x6, W1.4 x W1.4.

5. **Steel Floor and Form Units —** 1-1/2 to 3 in. deep fluted, cellular or corrugated units in any combination, welded to beam (refer to Item 8).

6. **Lath Hangers —** (To be used with Item 7) — No. 6 SWG steel wire, spaced 27 in. OC max.

7. **Metal Lath —** (Optional) — 3.4 lb/sq yd expanded steel, tied to lath hangers with No. 18 SWG steel wire spaced 6 in. OC max.

8. **Spray-Applied Fire Resistive Materials* —** See tables below for appropriate thicknesses. Applied by mixing with water in accordance with instructions on each bag of materials and spraying in one or more coats to beam or lath surfaces which must be free of dirt, loose scale or oil. Surface of applied material may be lightly finished with a trowel. Crest areas above the beam shall be filled with Spray-Applied Fire Resistive Materials. Min average and min individual density of 15and 14 pcf, respectively.For method of density determination, see Design Information Section, Sprayed Material.

Fluted, Cellular and Corrugated Floor Units

	Min Thkns In.	
Rating Hr	Restrained Beam Rating Hr	Unrestrained Beam Rating Hr
1	5/16	5/16
1-1/2	7/16	9/16
2	9/16	13/16
2-1/2*	13/16	1-1/16
3	1	1-5/16
3-1/2*	1-1/4	1-9/16
4	1-7/16	1-13/16

Fluted Floor Units Only or Min 3 in. Thick Slab

	Min Thkns In.	
Rating Hr	Restrained Beam Rating Hr	Unrestrained Beam Rating Hr
1	5/16	5/16
1-1/2	3/8	1/2
2	9/16	11/16
2-1/2*	13/16	7/8
3	1	1-1/16
3-1/2*	1-3/16	1-1/4
4	1-7/16	1-1/2

* The 2-1/2 and 3-1/2 hour ratings are for use when mineral fiber boards, polystyrene insulation exceeding 5 pcf, or polyisocyanurate insulation areused over the concrete in D900 series designs as stated in the front of the Fire Resistance Directory - III. FLOOR-CEILINGS AND ROOF-CEILINGS, Item 21. Roof Insulation.

The thicknesses of Spray-Applied Fire Resistive Materials shown in the following table are applicable when the thickness applied to the beams' lower flange edges is reduced by one-half. The min thickness applied to the lower flange edges is 1/4 in.

Fluted, Cellular and Corrugated Floor Units

	Min Thkns In.	
Rating Hr	Restrained Beam Rating Hr	Unrestrained Beam Rating Hr
1	3/8	3/8
1-1/2	1/2	5/8
2	5/8	7/8
3	1-1/8	1-7/16
4	1-5/8	2

Fluted Floor Units Only or Min 3 in. Thick Slab

	Min Thkns In.	
Rating Hr	Restrained Beam Rating Hr	Unrestrained Beam Rating Hr
1	3/8	3/8
1-1/2	7/16	9/16
2	5/8	3/4
3	1-1/8	1-3/16
4	1-5/8	1-11/16

BERLIN CO LTD — Types 300, 300ES, 300N or SB.

ISOLATEK INTERNATIONAL — Type 300, Type 300ES, Type 300N or Type SB.

8A. **(As an alternate to Item 8 and 8B) Spray-Applied Fire Resistive Materials* —** See tables below for appropriate thicknesses. Applied by mixing with water in accordance with instructions on each bag of materials and spraying in one or more coats to beam or lath surfaces which must be free of dirt, loose scale or oil. Surface of applied material may be lightly finished with a trowel. Crest areas above the beam shall be filled with Spray-Applied Fire Resistive Materials. Min average and min individual density of 17.5 and 16 pcf, respectively, for Type 300TW. Min average and min individual density of 22 and 19 pcf, respectively, for Type 400. For method of density determination, see Design Information Section, Sprayed Material.

Fluted, Cellular and Corrugated Floor Units

	Min Thkns In.	
Rating Hr	Restrained Beam Rating Hr	Unrestrained Beam Rating Hr
1	5/16	5/16
1-1/2	7/16	9/16
2	9/16	13/16
2-1/2*	13/16	1-1/16
3	1	1-5/16
3-1/2*	1-1/4	1-9/16
4	1-7/16	1-13/16

Fluted Floor Units Only or Min 3 in. Thick Slab

	Min Thkns In.	
Rating Hr	Restrained Beam Rating Hr	Unrestrained Beam Rating Hr
1	5/16	5/16

1-1/2	3/8	1/2
2	9/16	11/16
2-1/2*	13/16	7/8
3	1	1-1/16
3-1/2*	1-3/16	1-1/4
4	1-7/16	1-1/2

* The 2-1/2 and 3-1/2 hour ratings are for use when mineral fiber boards, polystyrene insulation exceeding 5 pcf, or polyisocyanurate insulation areused over the concrete in D900 series designs as stated in the front of the Fire Resistance Directory - III. FLOOR-CEILINGS AND ROOF-CEILINGS, Item 21. Roof Insulation.

The thicknesses of Spray-Applied Fire Resistive Materials shown in the following table are applicable when the thickness applied to the beams' lower flange edges is reduced by one-half. The min thickness applied to the lower flange edges is 1/4 in.

Fluted, Cellular and Corrugated Floor Units

	Min Thkns In.	
Rating Hr	Restrained Beam Rating Hr	Unrestrained Beam Rating Hr
1	3/8	3/8
1-1/2	1/2	5/8
2	5/8	7/8
3	1-1/8	1-7/16
4	1-5/8	2

Fluted Floor Units Only or Min 3 in. Thick Slab

	Min Thkns In.	
Rating Hr	Restrained Beam Rating Hr	Unrestrained Beam Rating Hr
1	3/8	3/8
1-1/2	7/16	9/16
2	5/8	3/4
3	1-1/8	1-3/16
4	1-5/8	1-11/16

ISOLATEK INTERNATIONAL — Type 300TW, Type 400

8B. **(As an alternate to Item 8 and 8A) —** Spray-Applied Fire Resistive Materials* — Prepared by mixing with water according to instructions on each bag of mixture and spray or trowel applied to steel surfaces which are free of dirt, oil or scale. Min average density of 17.5 pcf with min individual value of 17.0 pcf. For method of density determination, see Design Information Section, Sprayed Material.

ISOLATEK INTERNATIONAL — Type 280.

*Bearing the UL Classification Mark

Last Updated on 2009-05-15

Questions? Notice of Disclaimer Page Top

Copyright © 2010 Underwriters Laboratories Inc.®

The appearance of a company's name or product in this database does not in itself assure that products so identified have been manufactured under UL's Follow-Up Service. Only those products bearing the UL Mark should be considered to be Listed and covered under UL's Follow-Up Service. Always look for the Mark on the product.

UL permits the reproduction of the material contained in the Online Certification Directory subject to the following conditions: 1. The Guide Information, Designs and/or Listings (files) must be presented in their entirety and in a non-misleading manner, without any manipulation of the data (or drawings). 2. The statement "Reprinted from the Online Certifications Directory with permission from Underwriters Laboratories Inc." must appear adjacent to the extracted material. In addition, the reprinted material must include a copyright notice in the following format: "Copyright © 2010 Underwriters Laboratories Inc.®"

An independent organization working for a safer world with integrity, precision and knowledge.

ONLINE CERTIFICATIONS DIRECTORY

BXUV.U905
Fire Resistance Ratings - ANSI/UL 263

Page Bottom

Design/System/Construction/Assembly Usage Disclaimer

- Authorities Having Jurisdiction should be consulted in all cases as to the particular requirements covering the installation and use of UL Listed or Classified products, equipment, systems, devices, and materials.
- Authorities Having Jurisdiction should be consulted before construction.
- Fire resistance assemblies and products are developed by the design submitter and have been investigated by UL for compliance with applicable requirements. The published information cannot always address every construction nuance encountered in the field.
- When field issues arise, it is recommended the first contact for assistance be the technical service staff provided by the product manufacturer noted for the design. Users of fire resistance assemblies are advised to consult the general Guide Information for each product category and each group of assemblies. The Guide Information includes specifics concerning alternate materials and alternate methods of construction.
- Only products which bear UL's Mark are considered as Classified, Listed, or Recognized.

Fire Resistance Ratings - ANSI/UL 263

See General Information for Fire Resistance Ratings - ANSI/UL 263

Design No. U905

March 17, 2004

Bearing Wall Rating — 2 HR.

Nonbearing Wall Rating — 2 HR.

Load Restricted for Canadian Applications — See Guide BXUV7

1. **Concrete Blocks* —** Various designs. Classification D-2 (2 hr).

See **Concrete Blocks** category for list of eligible manufacturers.

2. **Mortar —** Blocks laid in full bed of mortar, nom. 3/8 in. thick, of not less than 2-1/4 and not more than 3-1/2 parts of clean sharp sand to 1 part Portland cement (proportioned by volume) and not more than 50 percent hydrated lime (by cement volume). Vertical joints staggered.

3. **Portland Cement Stucco or Gypsum Plaster —** Add 1/2 hr to classification if used. Where combustible members are framed in wall, plaster or stucco must be applied on the face opposite framing to achieve a 1-hr. Classification of 1-1/2 hr. Attached to concrete blocks (Item 1).

4. **Loose Masonry Fill —** If all core spaces are filled with loose dry expanded slag, expanded clay or shale (Rotary Kiln Process), water repellant vermiculite masonry fill insulation, or silicone treated perlite loose fill insulation add 2 hr to classification.

5. **Foamed Plastic* —** (Optional-Not Shown) — 1-1/2 in. thick max, 4 ft. wide sheathing attached to concrete blocks (Item 1).

THE DOW CHEMICAL CO — Type Thermax

*Bearing the UL Classification Mark

Last Updated on 2004-03-17

Questions? Notice of Disclaimer Page Top

Copyright © 2010 Underwriters Laboratories Inc.®

The appearance of a company's name or product in this database does not in itself assure that products so identified have been manufactured under UL's Follow-Up Service. Only those products bearing the UL Mark should be considered to be Listed and covered under UL's Follow-Up Service. Always look for the Mark on the product.

UL permits the reproduction of the material contained in the Online Certification Directory subject to the following conditions: 1. The Guide Information, Designs and/or Listings (files) must be presented in their entirety and in a non-misleading manner, without any manipulation of the data (or drawings). 2. The statement "Reprinted from the Online Certifications Directory with permission from Underwriters Laboratories Inc." must appear adjacent to the extracted material. In addition, the reprinted material must include a copyright notice in the following format: "Copyright © 2010 Underwriters Laboratories Inc.®"

An independent organization working for a safer world with integrity, precision and knowledge.

GA FILE NO. WP 8007 | **PROPRIETARY*** | **1 HOUR FIRE**

GYPSUM WALLBOARD, GLASS MAT GYPSUM SUBSTRATE, STEEL STUDS

EXTERIOR SIDE: One layer ⅝" proprietary type X glass mat gypsum substrate (sheathing) applied parallel or at right angles to 3⅝" steel studs 24" o.c. with 1" Type S corrosion resistant screws 8" o.c. at vertical studs and 12" o.c. at perimeter runners. Joints caulked with flexible, non-hardening building sealant or covered with weather exposed cladding or finish system.

INTERIOR SIDE: One layer ⅝" proprietary type X glass mat gypsum substrate, glass mat water-resistant gypsum backing board, gypsum wallboard, water-resistant gypsum backing board, or gypsum veneer base applied parallel or at right angles to studs with 1" Type S drywall screws 8" o.c. at studs and 12" o.c. at floor and ceiling runners. **(NLB)**

PROPRIETARY GYPSUM PANEL PRODUCT

Temple-Inland - ⅝" GreenGlass Type X
- ⅝" Type X

Thickness: 4⅞"
Approx. Weight: 6 psf
Fire Test: UL R6937, 06NK17962, 2-17-07,
UL Design U465

GA FILE NO. CM 1452 | **GENERIC** | **1 HOUR FIRE**

GYPSUM WALLBOARD, STEEL STUDS

Base layer ½" type X gypsum wallboard applied without horizontal joints to 1⅝" steel studs located at each corner of TS4x4x0.188 tube steel column with 1" Type S drywall screws 24" o.c. **Face** layer ½" type X gypsum wallboard applied without horizontal joints to studs with 1¼" Type S drywall screws 12" o.c. Metal cornerbead applied to all corners with 1" drywall screws 12" o.c. in each flange. Joint compound ⅛" thick applied over corner bead.

Fire Test: UL NC505, 77NK1747; 6-13-77,
UL Design X528

MHTN ARCHITECTS
MHTN Architects, Inc.
420 East South Temple
Suite 100
Salt Lake City, Utah 84111
Telephone (801) 595-6700
Telefax (801) 595-6717
www.mhtn.com

WEBER STATE UNIVERSITY
RESIDENTIAL LIFE PHASE II - BLDG 2

DFCM PROJECT NUMBER: 10176810

WEBER STATE UNIVERSITY
OGDEN, UTAH 84408

SEAL

MHTN PROJECT NO. 2010543

DRAWN BY: MC CHECKED BY: MG

ISSUED:

NO.	DATE	DESCRIPTION
01	17 MAY 2011	CONSTRUCTION DOCUMENTS

CONTRACTOR TO VERIFY DRAWINGS IN FIELD USE REFLECT LAST REVISION DATE:

NO.	DATE	DESCRIPTION

SHEET NAME

UL RATINGS

CONSTRUCTION DOCUMENTS
17 MAY 2011

SHEET NUMBER

AE010

C:\Users\prestonm\Documents\A11_2010543 WSU RESIDENTIAL LIFE BUILDING II_CENTRAL_prestonm.rvt
5/17/2011 12:18:15 PM

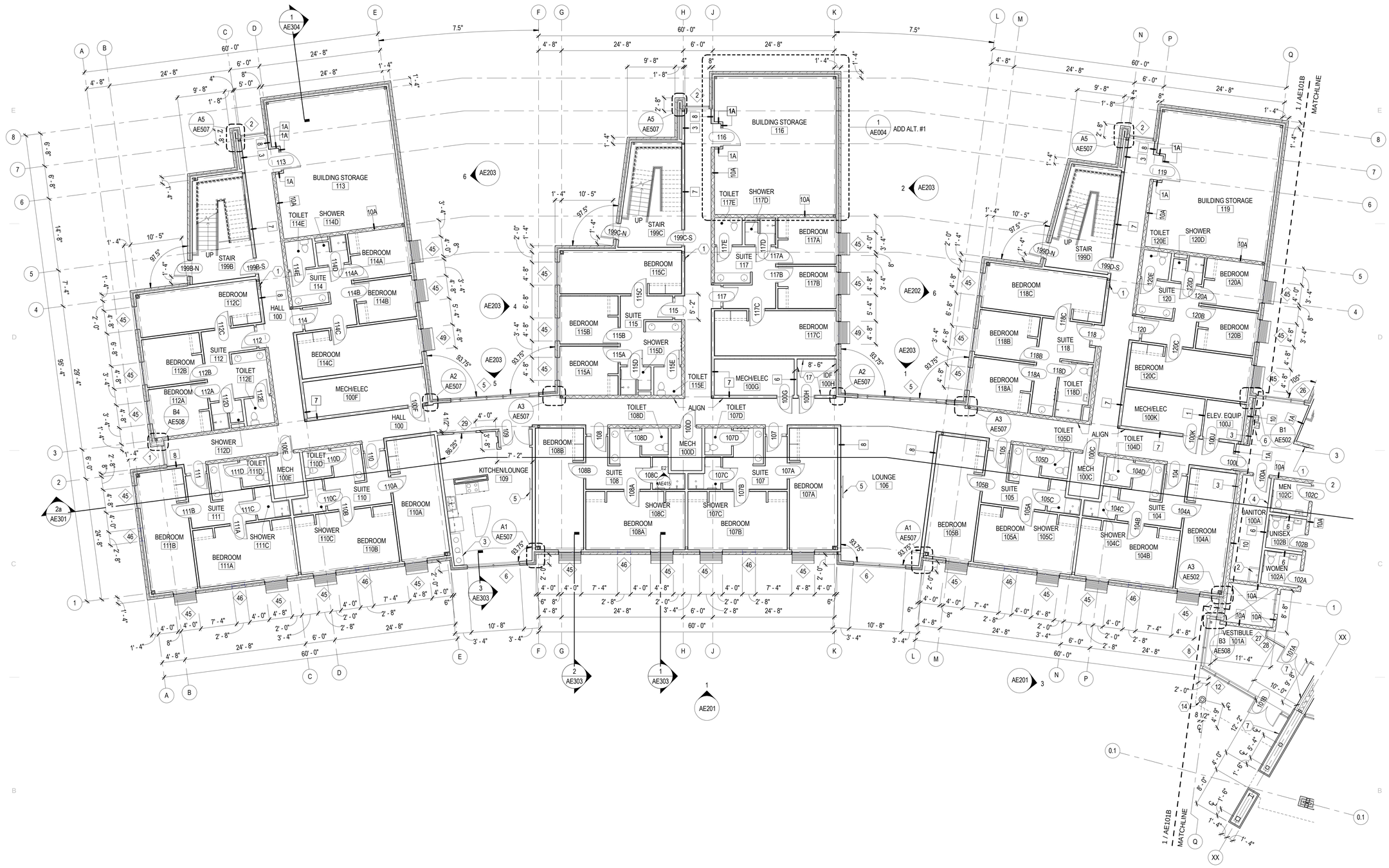

LEVEL 1 FLOOR PLAN AREA A

0 4'-0" 8'-0" 16'-0"

SCALE: 1/8" = 1'-0"

KEYNOTES

1. FIRE EXTINGUISHER CABINET
2. SERVICE SINK
3. RECYCLING STATION RE: E1/AE412
4. MOP HOLDER RACK AND SHELF (4'-0" LONG)
5. WALL MOUNT TV (NIC)
6. EWC
7. DOOR OPERATOR ACTUATOR
17. 3/4" FIRE RATED PLYWOOD, 36" AFF, 48" TALL

GENERAL PLAN NOTES

1. PLAN DIMENSIONS ARE TO FACE OF STUD, CMU, BRICK OR CONCRETE U.N.O.

2. REFER TO SHEETS AE001 AND GI002 FOR LOCATION OF FIRE RATED WALLS AND OTHER CODE AND LIFE SAFETY REQUIREMENTS.

3. SEE ENLARGED PLANS FOR PARTITION TYPE LOCATIONS - AE411 & AE412

4. PROVIDE SOLID WOOD BACKING (2X6 MIN) FOR WALL MOUNTED ITEMS, EQUIPMENT, TVS, CABINETS, AND FUTURE GRAB BARS, ETC. RE: ARCH, MECH & ELECT. SHEETS.

6. PROVIDE SOLID WOOD BLOCKING (2X6 MIN) AT ALL WALL STOPS AND MAGNETIC HOLD OPEN DEVICES.

7. RE: AE411, AE412 FOR ENLARGED PLANS OF SUITES, KITCHENS, & TOILETS

8. RE: AE611, AE612, & AE613 FOR WINDOW TYPES

KEYPLAN

MHTN ARCHITECTS
MHTN Architects, Inc.
420 East South Temple
Suite 100
Salt Lake City, Utah 84111
Telephone (801) 595-6700
Telefax (801) 595-6717
www.mhtn.com

WEBER STATE UNIVERSITY
RESIDENTIAL LIFE PHASE II - BLDG 2
DFCM PROJECT NUMBER: 10176810

WEBER STATE UNIVERSITY
OGDEN, UTAH 84408

SEAL

MHTN PROJECT NO. 2010543

DRAWN BY: MC CHECKED BY: MG

ISSUED:

NO.	DATE	DESCRIPTION
01	17 MAY 2011	CONSTRUCTION DOCUMENTS

CONTRACTOR TO VERIFY DRAWINGS IN FIELD USE REFLECT LAST REVISION DATE:

NO.	DATE	DESCRIPTION

SHEET NAME

LEVEL ONE FLOOR PLAN - AREA 'A'

CONSTRUCTION DOCUMENTS

17 MAY 2011

SHEET NUMBER

AE101A

C:\Users\prestonm\Documents\A11_2010543 WSU RESIDENTIAL LIFE BUILDING II_CENTRAL_prestonm.rvt
5/17/2011 12:18:21 PM

LEVEL 1 FLOOR PLAN AREA B

0 4' - 0" 8' - 0" 16' - 0"

SCALE: 1/8" = 1'-0"

KEYNOTES

1. FIRE EXTINGUISHER CABINET
2. SERVICE SINK
3. RECYCLING STATION RE: E1/AE412
4. MOP HOLDER RACK AND SHELF (4'-0" LONG)
5. WALL MOUNT TV (NIC)
6. EWC
7. DOOR OPERATOR ACTUATOR
8. WASHER (N.I.C.)
9. STACKED DRYER (N.I.C.)
10. DRYER (N.I.C.)
11. CONCRETE HOUSEKEEPING PADS
12. 1-HR CHASE ABOVE
13. IRONING BOARD CABINET
14. COMPOSITE METAL COLUMN COVER
15. GFRG COLUMN COVER
17. 3/4" FIRE RATED PLYWOOD, 36" AFF, 48" TALL
18. REAR-LOAD MAILBOXES - 10 COMPARTMENTS HIGH x 6 COMPARTMENTS WIDE

GENERAL PLAN NOTES

1. PLAN DIMENSIONS ARE TO FACE OF STUD, CMU, BRICK OR CONCRETE U.N.O.

2. REFER TO SHEETS AE001 AND GI002 FOR LOCATION OF FIRE RATED WALLS AND OTHER CODE AND LIFE SAFETY REQUIREMENTS.

3. SEE ENLARGED PLANS FOR PARTITION TYPE LOCATIONS - AE411 & AE412

4. PROVIDE SOLID WOOD BACKING (2X6 MIN) FOR WALL MOUNTED ITEMS, EQUIPMENT, TVS, CABINETS, AND FUTURE GRAB BARS, ETC. RE: ARCH, MECH & ELECT. SHEETS.

6. PROVIDE SOLID WOOD BLOCKING (2X6 MIN) AT ALL WALL STOPS AND MAGNETIC HOLD OPEN DEVICES.

7. RE: AE411, AE412 FOR ENLARGED PLANS OF SUITES, KITCHENS, & TOILETS

8. RE: AE611, AE612, & AE613 FOR WINDOW TYPES

N

KEYPLAN

MHTN
ARCHITECTS
MHTN Architects, Inc.
420 East South Temple
Suite 100
Salt Lake City, Utah 84111
Telephone (801) 595-6700
Telefax (801) 595-6717
www.mhtn.com

WEBER STATE UNIVERSITY
RESIDENTIAL LIFE PHASE II - BLDG 2

DFCM PROJECT NUMBER: 10176810

WEBER STATE UNIVERSITY
OGDEN, UTAH 84408

SEAL

MHTN PROJECT NO. 2010543

DRAWN BY: MC CHECKED BY: MG

ISSUED:

NO.	DATE	DESCRIPTION
01	17 MAY 2011	CONSTRUCTION DOCUMENTS

CONTRACTOR TO VERIFY DRAWINGS IN FIELD USE REFLECT LAST REVISION DATE.

NO.	DATE	DESCRIPTION

SHEET NAME

LEVEL ONE FLOOR PLAN - AREA 'B'

CONSTRUCTION DOCUMENTS

17 MAY 2011

SHEET NUMBER

AE101B

C:\Users\prestonm\Documents\A11_2010543 WSU RESIDENTIAL LIFE BUILDING II_CENTRAL_prestonm.rvt
5/17/2011 12:18:30 PM

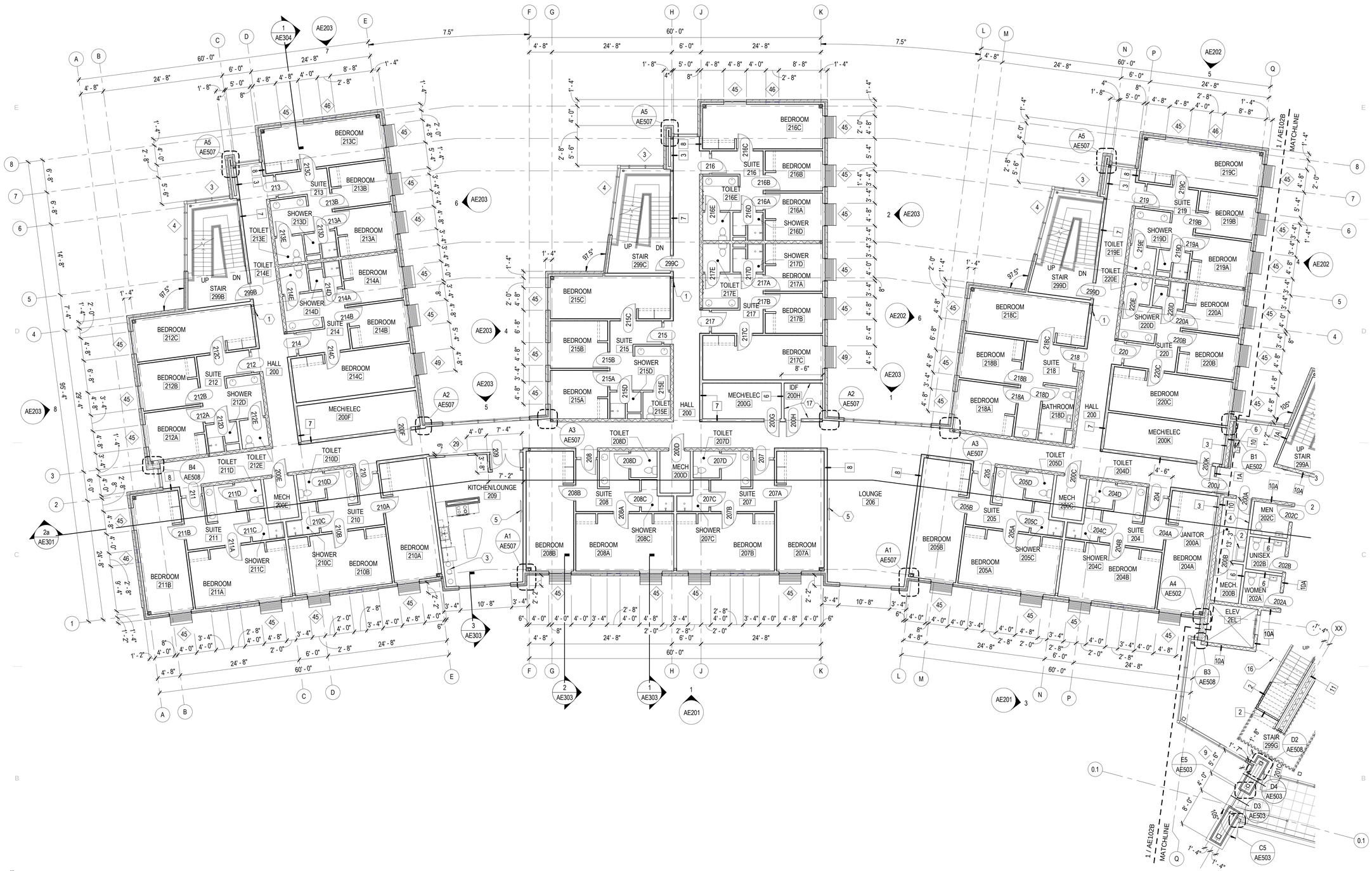

LEVEL 2 FLOOR PLAN AREA A

0 4' - 0" 8' - 0" 16' - 0"

SCALE: 1/8" = 1'-0"

KEYNOTES

1. FIRE EXTINGUISHER CABINET
2. SERVICE SINK
3. RECYCLING STATION RE: E1/AE412
4. MOP HOLDER RACK AND SHELF (4'-0" LONG)
5. WALL MOUNT TV (NIC)
6. EWC
17. 3/4" FIRE RATED PLYWOOD, 36" AFF, 48" TALL

GENERAL PLAN NOTES

1. PLAN DIMENSIONS ARE TO FACE OF STUD, CMU, BRICK OR CONCRETE U.N.O.
2. REFER TO SHEETS AE002 AND GI002 FOR LOCATION OF FIRE RATED WALLS AND OTHER CODE AND LIFE SAFETY REQUIREMENTS.
3. SEE ENLARGED PLANS FOR PARTITION TYPE LOCATIONS - AE411 & AE412
4. PROVIDE SOLID WOOD BACKING (2X6 MIN) FOR WALL MOUNTED ITEMS, EQUIPMENT, TVS, CABINETS, AND FUTURE GRAB BARS, ETC. RE: ARCH, MECH & ELECT. SHEETS.
6. PROVIDE SOLID WOOD BLOCKING (2X6 MIN) AT ALL WALL STOPS AND MAGNETIC HOLD OPEN DEVICES.
7. RE: AE411, AE412 FOR ENLARGED PLANS OF SUITES, KITCHENS, & TOILETS
8. RE: AE611, AE612, & AE613 FOR WINDOW TYPES

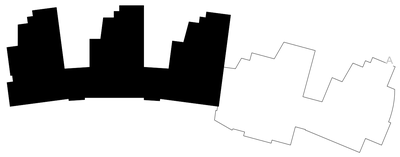

KEYPLAN

MHTN ARCHITECTS
MHTN Architects, Inc.
420 East South Temple
Suite 100
Salt Lake City, Utah 84111
Telephone (801) 595-6700
Telefax (801) 595-6717
www.mhtn.com

WEBER STATE UNIVERSITY
RESIDENTIAL LIFE PHASE II - BLDG 2

DFCM PROJECT NUMBER: 10176810

WEBER STATE UNIVERSITY
OGDEN, UTAH 84408

SEAL

MHTN PROJECT NO. 2010543

DRAWN BY: MC CHECKED BY: MG

ISSUED:

NO.	DATE	DESCRIPTION
01	17 MAY 2011	CONSTRUCTION DOCUMENTS

CONTRACTOR TO VERIFY DRAWINGS IN FIELD USE REFLECT LAST REVISION DATE.

NO.	DATE	DESCRIPTION

SHEET NAME

LEVEL TWO FLOOR PLAN - AREA 'A'

CONSTRUCTION DOCUMENTS

17 MAY 2011

SHEET NUMBER

AE102A

C:\Users\prestonm\Documents\A11_2010543 WSU RESIDENTIAL LIFE BUILDING II_CENTRAL_preston.rvt
5/17/2011 12:18:37 PM

LEVEL 2 FLOOR PLAN AREA B

0 4' - 0" 8' - 0" 16' - 0"

SCALE: 1/8" = 1'-0"

KEYNOTES

1. FIRE EXTINGUISHER CABINET
2. SERVICE SINK
3. RECYCLING STATION RE: E1/AE412
4. MOP HOLDER RACK AND SHELF (4'-0" LONG)
5. WALL MOUNT TV (NIC)
6. EWC
7. DOOR OPERATOR ACTUATOR
14. COMPOSITE METAL COLUMN COVER
15. GFRG COLUMN COVER
16. LINE OF STRUCTURE ABOVE
17. 3/4" FIRE RATED PLYWOOD, 36" AFF, 48" TALL

GENERAL PLAN NOTES

1. PLAN DIMENSIONS ARE TO FACE OF STUD, CMU, BRICK OR CONCRETE U.N.O.

2. REFER TO SHEETS AE002 AND GI002 FOR LOCATION OF FIRE RATED WALLS AND OTHER CODE AND LIFE SAFETY REQUIREMENTS.

3. SEE ENLARGED PLANS FOR PARTITION TYPE LOCATIONS - AE411 & AE412

4. PROVIDE SOLID WOOD BACKING (2X6 MIN) FOR WALL MOUNTED ITEMS, EQUIPMENT, TVS, CABINETS, AND FUTURE GRAB BARS, ETC. RE: ARCH, MECH & ELECT. SHEETS.

6. PROVIDE SOLID WOOD BLOCKING (2X6 MIN) AT ALL WALL STOPS AND MAGNETIC HOLD OPEN DEVICES.

7. RE: AE411, AE412 FOR ENLARGED PLANS OF SUITES, KITCHENS, & TOILETS

8. RE: AE611, AE612, & AE613 FOR WINDOW TYPES

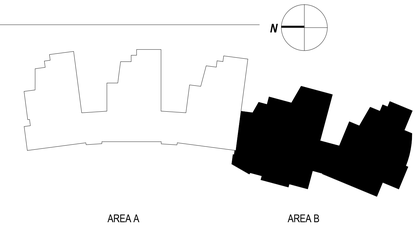

KEYPLAN

MHTN ARCHITECTS
MHTN Architects, Inc.
420 East South Temple
Suite 100
Salt Lake City, Utah 84111
Telephone (801) 595-6700
Telefax (801) 595-6717
www.mhtn.com

WEBER STATE UNIVERSITY
RESIDENTIAL LIFE PHASE II - BLDG 2

DFCM PROJECT NUMBER: 10176810

WEBER STATE UNIVERSITY
OGDEN, UTAH 84408

SEAL

MHTN PROJECT NO. 2010543

DRAWN BY: MC CHECKED BY: MG

ISSUED:

NO.	DATE	DESCRIPTION
01	17 MAY 2011	CONSTRUCTION DOCUMENTS

CONTRACTOR TO VERIFY DRAWINGS IN FIELD USE REFLECT LAST REVISION DATE.

NO.	DATE	DESCRIPTION

SHEET NAME

LEVEL TWO FLOOR PLAN - AREA 'B'

CONSTRUCTION DOCUMENTS

17 MAY 2011

SHEET NUMBER

AE102B

C:\Users\prestonm\Documents\A11_2010543 WSU RESIDENTIAL LIFE BUILDING II_CENTRAL_prestonm.rvt
5/17/2011 12:18:46 PM

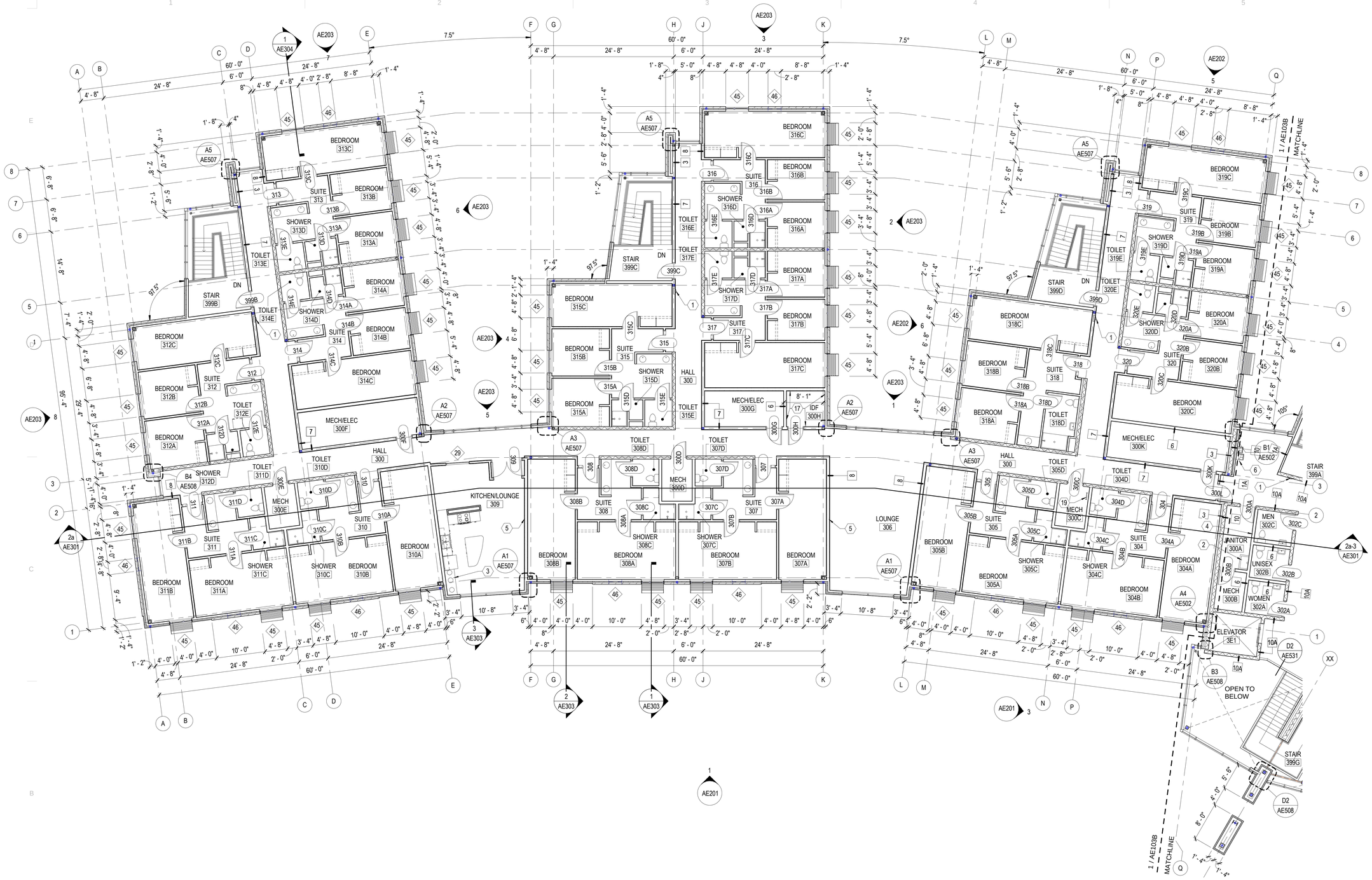

LEVEL THREE FLOOR PLAN AREA A

0 4' - 0" 8' - 0" 16' - 0"

SCALE: 1/8" = 1'-0"

KEYNOTES

1. FIRE EXTINGUISHER CABINET
2. SERVICE SINK
3. RECYCLING STATION RE: E1/AE412
4. MOP HOLDER RACK AND SHELF (4'-0" LONG)
5. WALL MOUNT TV (NIC)
6. EWC
17. 3/4" FIRE RATED PLYWOOD, 36" AFF, 48" TALL
19. ROOF ACCESS LADDER

GENERAL PLAN NOTES

1. PLAN DIMENSIONS ARE TO FACE OF STUD, CMU, BRICK OR CONCRETE U.N.O.

2. REFER TO SHEETS AE003 AND GI002 FOR LOCATION OF FIRE RATED WALLS AND OTHER CODE AND LIFE SAFETY REQUIREMENTS.

3. SEE ENLARGED PLANS FOR PARTITION TYPE LOCATIONS - AE411 & AE412

4. PROVIDE SOLID WOOD BACKING (2X6 MIN) FOR WALL MOUNTED ITEMS, EQUIPMENT, TVS, CABINETS, AND FUTURE GRAB BARS, ETC. RE: ARCH, MECH & ELECT. SHEETS.

6. PROVIDE SOLID WOOD BLOCKING (2X6 MIN) AT ALL WALL STOPS AND MAGNETIC HOLD OPEN DEVICES.

7. RE: AE411, AE412 FOR ENLARGED PLANS OF SUITES, KITCHENS, & TOILETS

8. RE: AE611, AE612, & AE613 FOR WINDOW TYPES

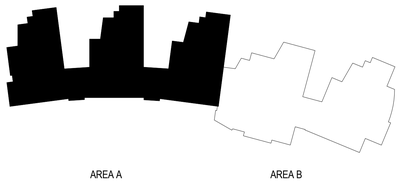

KEYPLAN

MHTN ARCHITECTS
MHTN Architects, Inc.
420 East South Temple
Suite 100
Salt Lake City, Utah 84111
Telephone (801) 595-6700
Telefax (801) 595-6717
www.mhtn.com

WEBER STATE UNIVERSITY
RESIDENTIAL LIFE PHASE II - BLDG 2

DFCM PROJECT NUMBER: 10176810

WEBER STATE UNIVERSITY
OGDEN, UTAH 84408

SEAL

MHTN PROJECT NO. 2010543

DRAWN BY: MC CHECKED BY: MG

ISSUED:

NO.	DATE	DESCRIPTION
01	17 MAY 2011	CONSTRUCTION DOCUMENTS

CONTRACTOR TO VERIFY DRAWINGS IN FIELD USE REFLECT LAST REVISION DATE.

NO.	DATE	DESCRIPTION

SHEET NAME

LEVEL THREE FLOOR PLAN - AREA 'A'

CONSTRUCTION DOCUMENTS

17 MAY 2011

SHEET NUMBER

AE103A

C:\Users\prestonm\Documents\A11_2010543 WSU RESIDENTIAL LIFE BUILDING II_CENTRAL_prestonm.rvt
5/17/2011 12:18:54 PM

LEVEL THREE FLOOR PLAN AREA B

0 4' - 0" 8' - 0" 16' - 0"

SCALE: 1/8" = 1'-0"

KEYNOTES

1. FIRE EXTINGUISHER CABINET
2. SERVICE SINK
3. RECYCLING STATION RE: E1/AE412
4. MOP HOLDER RACK AND SHELF (4'-0" LONG)
5. WALL MOUNT TV (NIC)
6. EWC
7. DOOR OPERATOR ACTUATOR
15. GFRG COLUMN COVER
17. 3/4" FIRE RATED PLYWOOD, 36" AFF, 48" TALL
19. ROOF ACCESS LADDER
20. ROOF ACCESS LADDER WITH SAFETY CAGE

GENERAL PLAN NOTES

1. PLAN DIMENSIONS ARE TO FACE OF STUD, CMU, BRICK OR CONCRETE U.N.O.

2. REFER TO SHEETS AE003 AND GI002 FOR LOCATION OF FIRE RATED WALLS AND OTHER CODE AND LIFE SAFETY REQUIREMENTS.

3. SEE ENLARGED PLANS FOR PARTITION TYPE LOCATIONS - AE411 & AE412

4. PROVIDE SOLID WOOD BACKING (2X6 MIN) FOR WALL MOUNTED ITEMS, EQUIPMENT, TVS, CABINETS, AND FUTURE GRAB BARS, ETC. RE: ARCH, MECH & ELECT. SHEETS.

6. PROVIDE SOLID WOOD BLOCKING (2X6 MIN) AT ALL WALL STOPS AND MAGNETIC HOLD OPEN DEVICES.

7. RE: AE411, AE412 FOR ENLARGED PLANS OF SUITES, KITCHENS, & TOILETS

8. RE: AE611, AE612, & AE613 FOR WINDOW TYPES

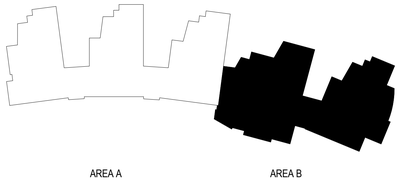

KEYPLAN

MHTN ARCHITECTS
MHTN Architects, Inc.
420 East South Temple
Suite 100
Salt Lake City, Utah 84111
Telephone (801) 595-6700
Telefax (801) 595-6717
www.mhtn.com

WEBER STATE UNIVERSITY
RESIDENTIAL LIFE PHASE II - BLDG 2

DFCM PROJECT NUMBER: 10176810

WEBER STATE UNIVERSITY
OGDEN, UTAH 84408

SEAL

MHTN PROJECT NO. 2010543

DRAWN BY: MC CHECKED BY: MG

ISSUED:

NO.	DATE	DESCRIPTION
01	17 MAY 2011	CONSTRUCTION DOCUMENTS

CONTRACTOR TO VERIFY DRAWINGS IN FIELD USE REFLECT LAST REVISION DATE:

NO.	DATE	DESCRIPTION

SHEET NAME

LEVEL THREE FLOOR PLAN - AREA 'B'

CONSTRUCTION DOCUMENTS

17 MAY 2011

SHEET NUMBER

AE103B

C:\Users\prestonm\Documents\A11_2010543 WSU RESIDENTIAL LIFE BUILDING II_CENTRAL_prestonm.rvt
5/17/2011 12:19:03 PM

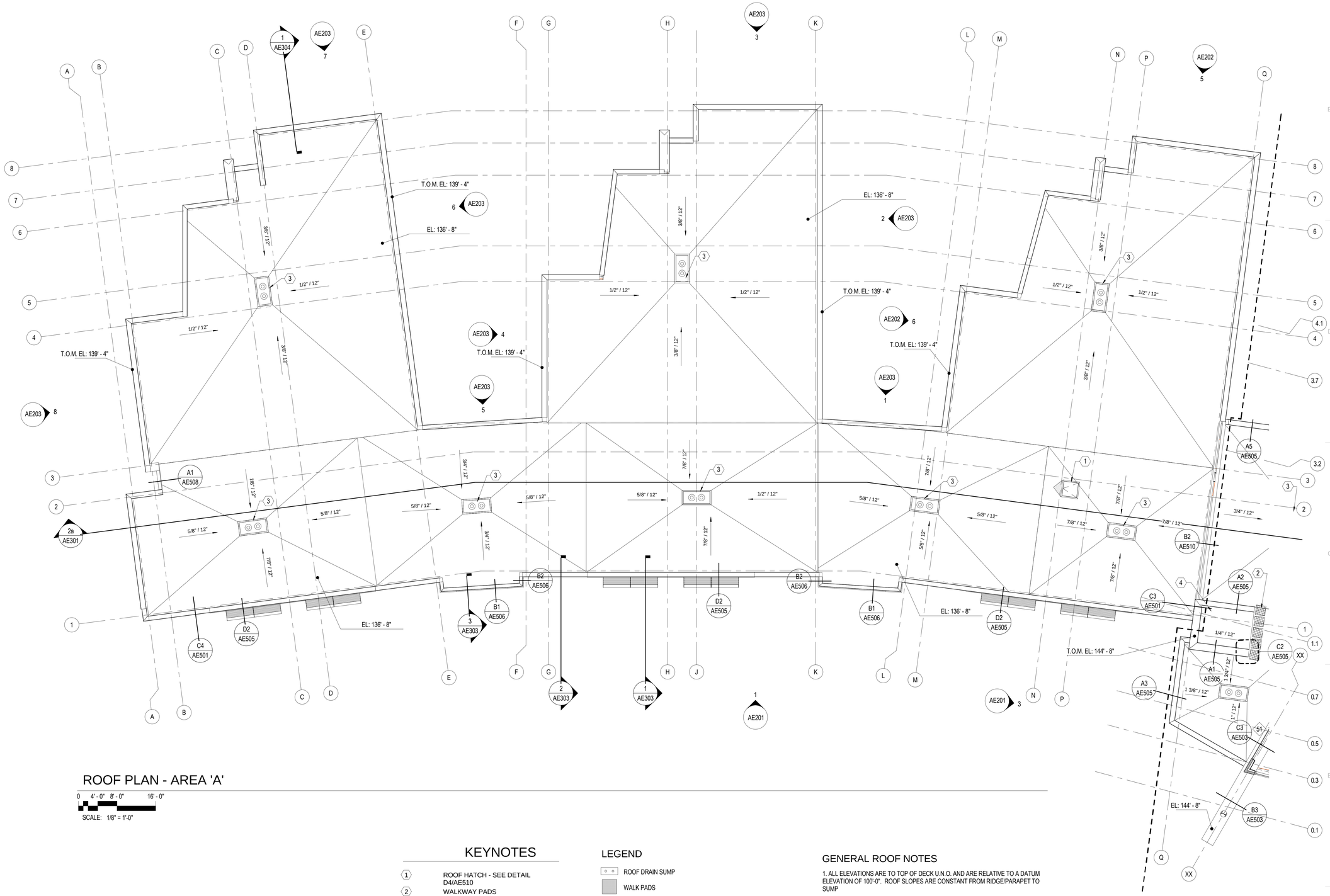

ROOF PLAN - AREA 'A'

0 4' - 0" 8' - 0" 16' - 0"

SCALE: 1/8" = 1'-0"

KEYNOTES

1. ROOF HATCH - SEE DETAIL D4/AE510
2. WALKWAY PADS
3. ROOF DRAIN - SEE A2/AE510
4. RAISED ROOF AT ELEVATOR SHAFT

LEGEND

- ROOF DRAIN SUMP
- WALK PADS
- GRAVEL BALAST

GENERAL ROOF NOTES

1. ALL ELEVATIONS ARE TO TOP OF DECK U.N.O. AND ARE RELATIVE TO A DATUM ELEVATION OF 100'-0". ROOF SLOPES ARE CONSTANT FROM RIDGE/PARAPET TO SUMP

2. ROOFING SYSTEM SHALL HAVE A LONG TERM THERMAL RESISTANCE EQUAL TO R=35 MIN.

3. PROVIDE TAPERED INSULATION WITH A MINUMUM SLOPE OF 1/4" PER FOOT IN THE VALLEYS TO THE ROOF DRAINS. MAINTAIN 12" EXPOSED PARAPET HEIGHT ABOVE ROOF SYSTEM & CRICKETS. DESIGN OF THE CRICKETS/SADDLES SHALL BE VERIFIED BY THE TAPERED INSULATION MANUFACTURER

4. AT ALL ROOF TOP EQUIPMENT PROVIDE TAPERED CRICKETS AT 3/8" PER FOOT MIN.

5. REFER TO THE STRUCTURAL, MECHANICAL AND ELECTRICAL DRAWINGS FOR PIPE QUANTITIES AND LOCATIONS. SEE DETAIL A4/AE510.

6. REFER TO THE MECHANICAL DRAWINGS FOR QUANTITIES AND SIZES OF ROOF PENETRATIONS AND MECHANICAL EQUIPMENT. SEE DETAIL A5/AE510 FOR CURB DETAIL.

7. REFER TO THE STRUCTURAL DRAWINGS FOR TYPICAL ROOF OPENING FRAMING.

8. ROOFING MEMBRANE SEAMS SHALL NOT RUN THROUGH DRAIN SUMPS.

MHTN ARCHITECTS
MHTN Architects, Inc.
420 East South Temple
Suite 100
Salt Lake City, Utah 84111
Telephone (801) 595-6700
Telefax (801) 595-6717
www.mhtn.com

WEBER STATE UNIVERSITY
RESIDENTIAL LIFE PHASE II - BLDG 2

DFCM PROJECT NUMBER: 10176810

WEBER STATE UNIVERSITY
OGDEN, UTAH 84408

SEAL

MHTN PROJECT NO. 2010543

DRAWN BY: MC CHECKED BY: MG

ISSUED:

NO.	DATE	DESCRIPTION
01	17 MAY 2011	CONSTRUCTION DOCUMENTS

CONTRACTOR TO VERIFY DRAWINGS IN FIELD USE REFLECT LAST REVISION DATE.

NO.	DATE	DESCRIPTION

SHEET NAME

ROOF PLAN
AREA 'A'

CONSTRUCTION DOCUMENTS
17 MAY 2011

SHEET NUMBER

AE104A

C:\Users\prestonm\Documents\A11_2010543 WSU RESIDENTIAL LIFE BUILDING II_CENTRAL_prestonm.rvt
5/17/2011 12:19:06 PM

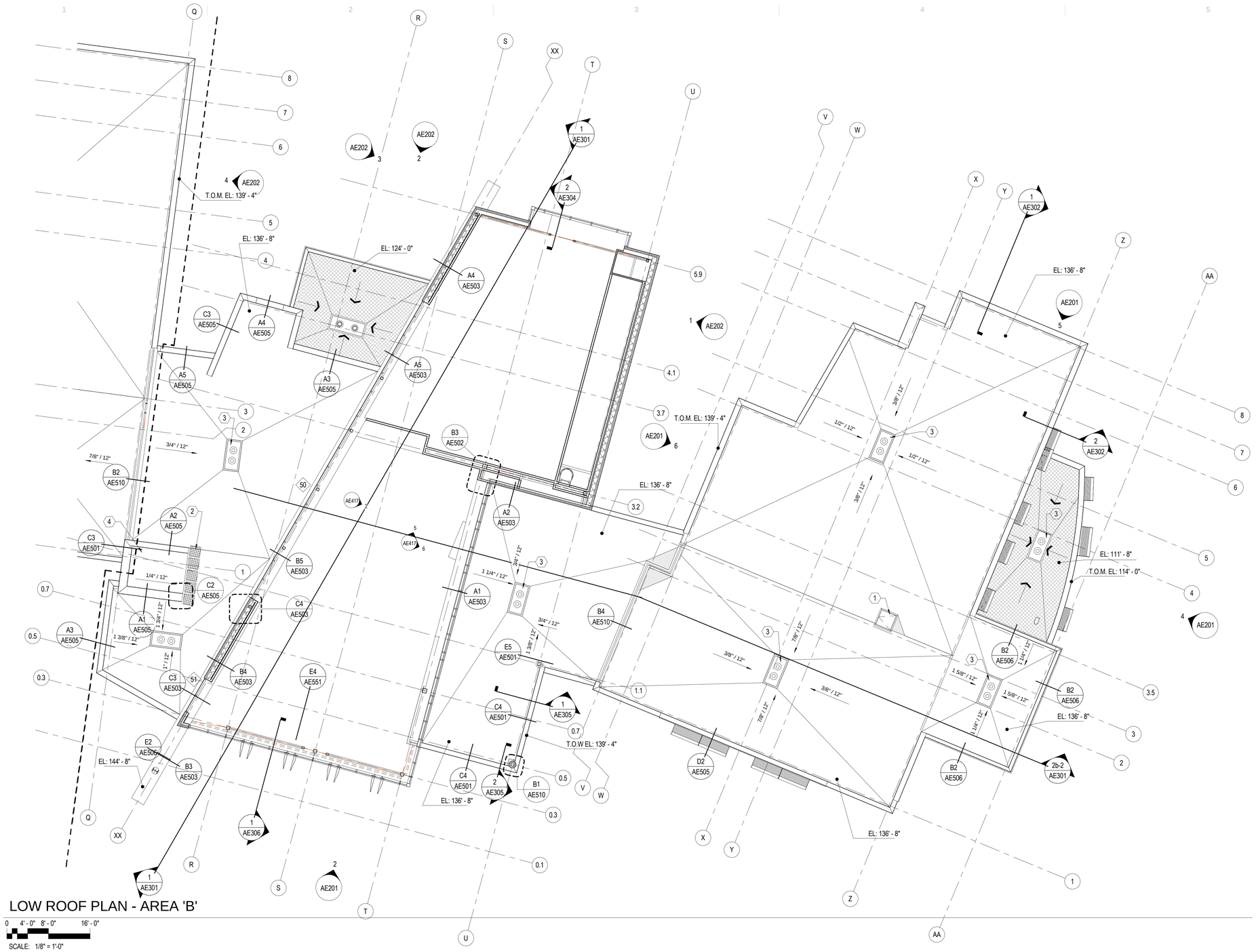

LOW ROOF PLAN - AREA 'B'

0 4' - 0" 8' - 0" 16' - 0"

SCALE: 1/8" = 1'-0"

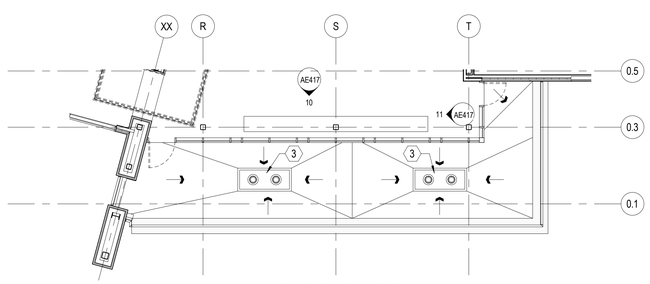

(PATIO PAVERS NOT SHOWN FOR CLARITY)

A1 LEVEL 2 PATIO PLAN

SCALE: 1/8" = 1'-0"

KEYNOTES

1. ROOF HATCH - SEE DETAIL D4/AE510
2. WALKWAY PADS
3. ROOF DRAIN - SEE A2/AE510
4. RAISED ROOF AT ELEVATOR SHAFT

LEGEND

- ROOF DRAIN SUMP
- WALK PADS
- GRAVEL BALAST

GENERAL ROOF NOTES

1. ALL ELEVATIONS ARE TO TOP OF DECK U.N.O. AND ARE RELATIVE TO A DATUM ELEVATION OF 100'-0". ROOF SLOPES ARE CONSTANT FROM RIDGE/PARAPET TO SUMP

2. ROOFING SYSTEM SHALL HAVE A LONG TERM THERMAL RESISTANCE EQUAL TO R=35 MIN.

3. PROVIDE TAPERED INSULATION WITH A MINUMUM SLOPE OF 1/4" PER FOOT IN THE VALLEYS TO THE ROOF DRAINS. MAINTAIN 12" EXPOSED PARAPET HEIGHT ABOVE ROOF SYSTEM & CRICKETS. DESIGN OF THE CRICKETS/SADDLES SHALL BE VERIFIED BY THE TAPERED INSULATION MANUFACTURER

4. AT ALL ROOF TOP EQUIPMENT PROVIDE TAPERED CRICKETS AT 3/8" PER FOOT MIN.

5. REFER TO THE STRUCTURAL, MECHANICAL AND ELECTRICAL DRAWINGS FOR PIPE QUANTITIES AND LOCATIONS. SEE DETAIL A4/AE510.

6. REFER TO THE MECHANICAL DRAWINGS FOR QUANTITIES AND SIZES OF ROOF PENETRATIONS AND MECHANICAL EQUIPMENT. SEE DETAIL A5/AE510 FOR CURB DETAIL.

7. REFER TO THE STRUCTURAL DRAWINGS FOR TYPICAL ROOF OPENING FRAMING.

8. ROOFING MEMBRANE SEAMS SHALL NOT RUN THROUGH DRAIN SUMPS.

MHTN ARCHITECTS
MHTN Architects, Inc.
420 East South Temple
Suite 100
Salt Lake City, Utah 84111
Telephone (801) 595-6700
Telefax (801) 595-6717
www.mhtn.com

WEBER STATE UNIVERSITY
RESIDENTIAL LIFE PHASE II - BLDG 2

DFCM PROJECT NUMBER: 10176810

WEBER STATE UNIVERSITY
OGDEN, UTAH 84408

SEAL

MHTN PROJECT NO. 2010543

DRAWN BY: Author CHECKED BY: Checker

ISSUED:

NO.	DATE	DESCRIPTION
01	17 MAY 2011	CONSTRUCTION DOCUMENTS

CONTRACTOR TO VERIFY DRAWINGS IN FIELD USE REFLECT LAST REVISION DATE.

NO.	DATE	DESCRIPTION

SHEET NAME

ROOF PLAN
AREA 'B'

CONSTRUCTION DOCUMENTS
17 MAY 2011

SHEET NUMBER

AE104B

C:\Users\prestonm\Documents\A11_2010543 WSU RESIDENTIAL LIFE BUILDING II_CENTRAL_prestonm.rvt
5/17/2011 12:19:12 PM

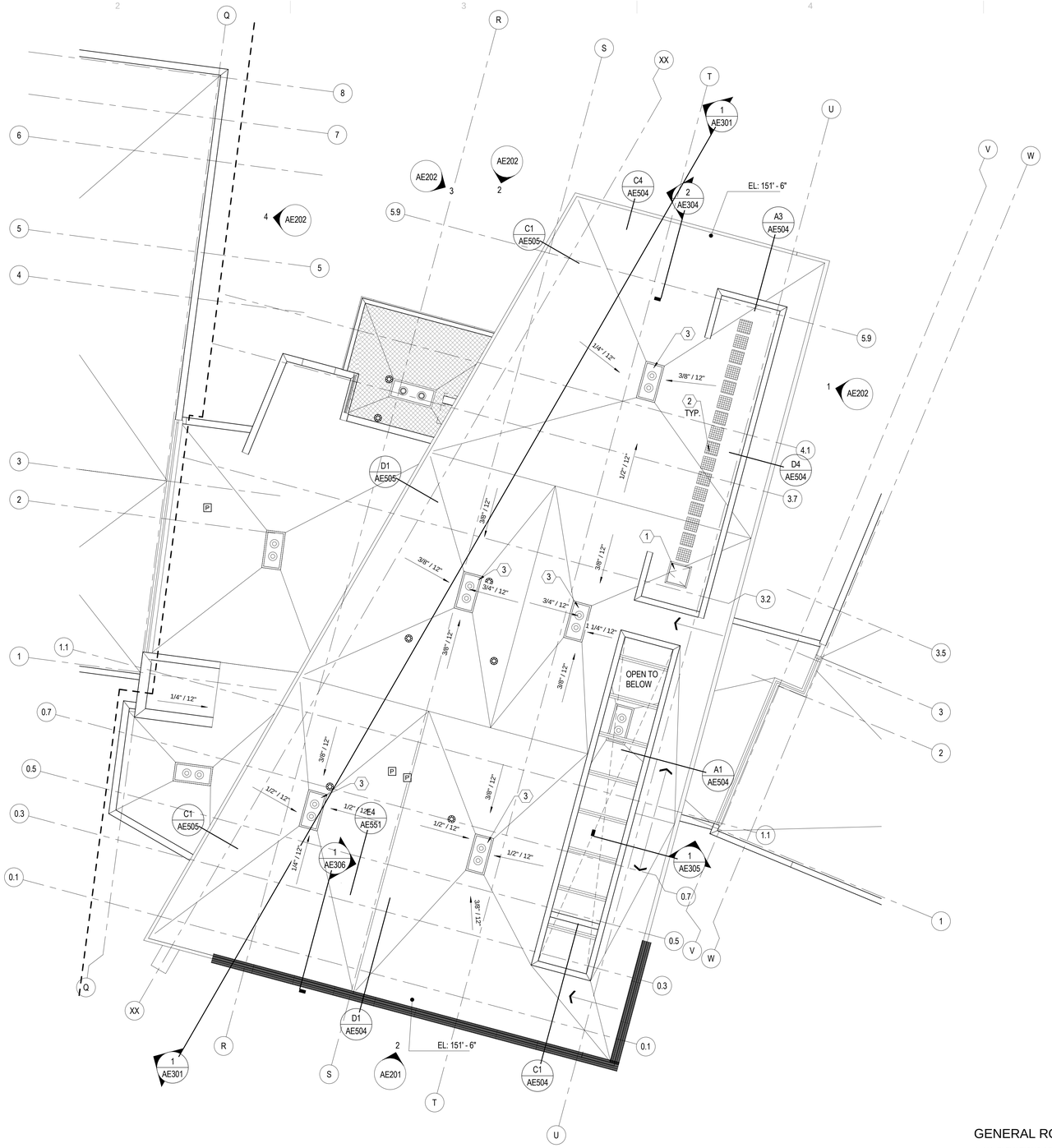

HIGH ROOF PLAN - AREA 'B'

0 4' - 0" 8' - 0" 16' - 0"

SCALE: 1/8" = 1'-0"

KEYNOTES

1. ROOF HATCH - SEE DETAIL D4/AE510
2. WALKWAY PADS
3. ROOF DRAIN - SEE A2/AE510
4. RAISED ROOF AT ELEVATOR SHAFT

LEGEND

- ROOF DRAIN SUMP
- WALK PADS
- GRAVEL BALAST

GENERAL ROOF NOTES

1. ALL ELEVATIONS ARE TO TOP OF DECK U.N.O. AND ARE RELATIVE TO A DATUM ELEVATION OF 100'-0". ROOF SLOPES ARE CONSTANT FROM RIDGE/PARAPET TO SUMP

2. ROOFING SYSTEM SHALL HAVE A LONG TERM THERMAL RESISTANCE EQUAL TO R=35 MIN.

3. PROVIDE TAPERED INSULATION WITH A MINUMUM SLOPE OF 1/4" PER FOOT IN THE VALLEYS TO THE ROOF DRAINS. MAINTAIN 12" EXPOSED PARAPET HEIGHT ABOVE ROOF SYSTEM & CRICKETS. DESIGN OF THE CRICKETS/SADDLES SHALL BE VERIFIED BY THE TAPERED INSULATION MANUFACTURER

4. AT ALL ROOF TOP EQUIPMENT PROVIDE TAPERED CRICKETS AT 3/8" PER FOOT MIN.

5. REFER TO THE STRUCTURAL, MECHANICAL AND ELECTRICAL DRAWINGS FOR PIPE QUANTITIES AND LOCATIONS. SEE DETAIL A4/AE510.

6. REFER TO THE MECHANICAL DRAWINGS FOR QUANTITIES AND SIZES OF ROOF PENETRATIONS AND MECHANICAL EQUIPMENT. SEE DETAIL A5/AE510 FOR CURB DETAIL.

7. REFER TO THE STRUCTURAL DRAWINGS FOR TYPICAL ROOF OPENING FRAMING.

8. ROOFING MEMBRANE SEAMS SHALL NOT RUN THROUGH DRAIN SUMPS.

MHTN ARCHITECTS
MHTN Architects, Inc.
420 East South Temple
Suite 100
Salt Lake City, Utah 84111
Telephone (801) 595-6700
Telefax (801) 595-6717
www.mhtn.com

WEBER STATE UNIVERSITY
RESIDENTIAL LIFE PHASE II - BLDG 2

DFCM PROJECT NUMBER: 10176810

WEBER STATE UNIVERSITY
OGDEN, UTAH 84408

SEAL

MHTN PROJECT NO. 2010543

DRAWN BY: Author CHECKED BY: Checker

ISSUED:

NO.	DATE	DESCRIPTION
01	17 MAY 2011	CONSTRUCTION DOCUMENTS

CONTRACTOR TO VERIFY DRAWINGS IN FIELD USE REFLECT LAST REVISION DATE.

NO.	DATE	DESCRIPTION

SHEET NAME

HIGH ROOF PLAN

CONSTRUCTION DOCUMENTS
17 MAY 2011

SHEET NUMBER

AE104C

C:\Users\prestonm\Documents\A11_2010543 WSU RESIDENTIAL LIFE BUILDING II_CENTRAL_prestonm.rvt
5/17/2011 12:19:16 PM

LEVEL 1 REFLECTED CEILING PLAN - AREA A

0 4' - 0" 8' - 0" 16' - 0"

SCALE: 1/8" = 1'-0"

LEGEND

5/8" GYP BOARD CEILING	OTS	OPEN TO STRUCTURE		ROUND SUPPLY AIR DIFFUSER
METAL PANEL SOFFIT	OTSP	OPEN TO STRUCTURE, PAINTED		SUPPLY AIR DIFFUSER
2X4 ACOUSTICAL LAY IN CEILING		CAN LIGHT FIXTURE		LINEAR SUPPLY AIR DIFFUSER
8"x48" ACOUSTICAL LAY IN CEILING ACCENT		1X4 LIGHT FIXTURE		RETURN AIR GRILLE
2X2 ACOUSTICAL LAY IN CEILING		2X2 LIGHT FIXTURE		EXHAUST FAN GRILLE
2X2 VINYL FACED ACOUSTICAL LAY IN CEILING		2X4 LIGHT FIXTURE		
2X4 VINYL FACED ACOUSTICAL LAY IN CEILING		WALL MOUNTED VANITY LIGHT FIXTURE		
CURVED ACOUSTICAL METAL PANEL TILE		STRIP LIGHT FIXTURE		
KITCHEN HOOD - SEE KITCHEN/MECH DRAWINGS		SURFACE MOUNT FIXTURE		
		SHOWERDOME		

GENERAL NOTES

1. REFER TO THE LIFE SAFETY PLANS FOR INDICATION OF FIRE RATED WALLS.

2. WHEN FLOOR HEIGHT VARIES IN A ROOM, THE CEILING HEIGHT SHOWN IS THE HEIGHT ABOVE THE FLOOR AT THE ENTRY.

3. ALL CEILINGS ARE TO BE SEISMICALLY BRACED. A MINIMUM OF ONE BRACE REQUIRED IN ANY SPACE OF 1,000 S.F. OR LARGER. SEE A1/AE551 FOR TYPICAL SUSPENDED CEILING SEISMIC BRACING.

4. ROOMS WITH AREAS LESS THAN 144 SF DO NOT NEED TO COMPLY WITH SEISMIC BRACING - SEE CISCA REQUIREMENTS

5. SEE DETAIL B1/AE551 FOR CEILING SUSPENSION DETAILS BELOW DUCTWORK OR OTHER OBSTRUCTIONS.

6. AT ALL LOCATIONS WHERE CEILINGS ARE OPEN TO STRUCTURE ABOVE, EXTEND ALL WALLS (INCLUDING ALL STUD FRAMING, GYPSUM BOARD, INSULATION & CMU WHERE APPLICABLE) TO THE METAL ROOF DECK ABOVE.

7. INSTALL ACCESS PANELS IN HARD CEILINGS AS REQUIRED FOR EQUIPMENT ACCESS. LOCATION AND SIZE TO BE APPROVED BY ARCHITECT PRIOR TO INSTALLATION.

8. RE: A4/AE551 FOR SUSPENDED CEILING PERIMETER SEISMIC ATTACHMENT.

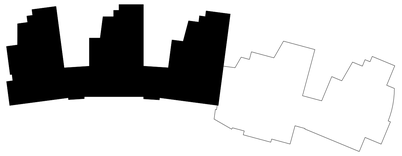

KEYPLAN

MHTN
ARCHITECTS
MHTN Architects, Inc.
420 East South Temple
Suite 100
Salt Lake City, Utah 84111
Telephone (801) 595-6700
Telefax (801) 595-6717
www.mhtn.com

WEBER STATE UNIVERSITY
RESIDENTIAL LIFE PHASE II - BLDG 2

DFCM PROJECT NUMBER: 10176810

WEBER STATE UNIVERSITY
OGDEN, UTAH 84408

SEAL

MHTN PROJECT NO. 2010543

DRAWN BY: MLH CHECKED BY: MG

ISSUED:

NO.	DATE	DESCRIPTION
01	17 MAY 2011	CONSTRUCTION DOCUMENTS

CONTRACTOR TO VERIFY DRAWINGS IN FIELD USE REFLECT LAST REVISION DATE.

NO.	DATE	DESCRIPTION

SHEET NAME

LEVEL ONE REFLECTED CLG PLAN - AREA 'A'

CONSTRUCTION DOCUMENTS

17 MAY 2011

SHEET NUMBER

AC101A

C:\Users\prestonn\Documents\A11_2010543 WSU RESIDENTIAL LIFE BUILDING II_CENTRAL_prestonn.rvt
5/17/2011 12:15:55 PM

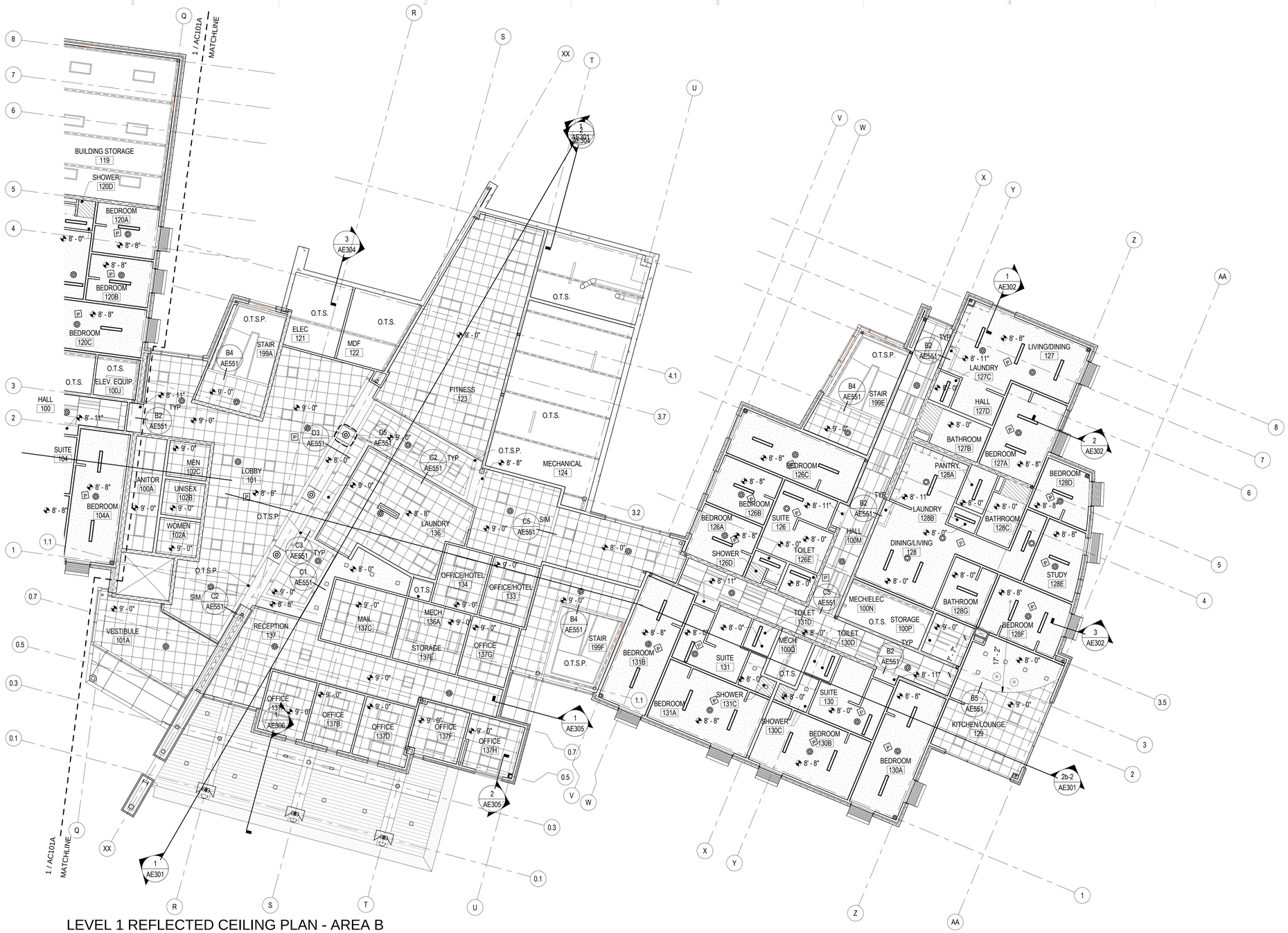

LEVEL 1 REFLECTED CEILING PLAN - AREA B

0 4'-0" 8'-0" 16'-0"

SCALE: 1/8" = 1'-0"

LEGEND

- 5/8" GYP BOARD CEILING
- METAL PANEL SOFFIT
- 2X4 ACOUSTICAL LAY IN CEILING
- 8"x48" ACOUSTICAL LAY IN CEILING ACCENT
- 2X2 ACOUSTICAL LAY IN CEILING
- 2X2 VINYL FACED ACOUSTICAL LAY IN CEILING
- 2X4 VINYL FACED ACOUSTICAL LAY IN CEILING
- CURVED ACOUSTICAL METAL PANEL TILE
- KITCHEN HOOD - SEE KITCHEN/MECH DRAWINGS
- OTS — OPEN TO STRUCTURE
- OTSP — OPEN TO STRUCTURE, PAINTED
- CAN LIGHT FIXTURE
- 1X4 LIGHT FIXTURE
- 2X2 LIGHT FIXTURE
- 2X4 LIGHT FIXTURE
- WALL MOUNTED VANITY LIGHT FIXTURE
- STRIP LIGHT FIXTURE
- SURFACE MOUNT FIXTURE
- SHOWERDOME
- ROUND SUPPLY AIR DIFFUSER
- SUPPLY AIR DIFFUSER
- LINEAR SUPPLY AIR DIFFUSER
- RETURN AIR GRILLE
- EXHAUST FAN GRILLE

GENERAL NOTES

1. REFER TO THE LIFE SAFETY PLANS FOR INDICATION OF FIRE RATED WALLS.
2. WHEN FLOOR HEIGHT VARIES IN A ROOM, THE CEILING HEIGHT SHOWN IS THE HEIGHT ABOVE THE FLOOR AT THE ENTRY.
3. ALL CEILINGS ARE TO BE SEISMICALLY BRACED. A MINIMUM OF ONE BRACE REQUIRED IN ANY SPACE OF 1,000 S.F. OR LARGER. SEE A1/AE551 FOR TYPICAL SUSPENDED CEILING SEISMIC BRACING.
4. ROOMS WITH AREAS LESS THAN 144 SF DO NOT NEED TO COMPLY WITH SEISMIC BRACING - SEE CISCA REQUIREMENTS
5. SEE DETAIL B1/AE551 FOR CEILING SUSPENSION DETAILS BELOW DUCTWORK OR OTHER OBSTRUCTIONS.
6. AT ALL LOCATIONS WHERE CEILINGS ARE OPEN TO STRUCTURE ABOVE, EXTEND ALL WALLS (INCLUDING ALL STUD FRAMING, GYPSUM BOARD, INSULATION & CMU WHERE APPLICABLE) TO THE METAL ROOF DECK ABOVE.
7. INSTALL ACCESS PANELS IN HARD CEILINGS AS REQUIRED FOR EQUIPMENT ACCESS. LOCATION AND SIZE TO BE APPROVED BY ARCHITECT PRIOR TO INSTALLATION.
8. RE: A4/AE551 FOR SUSPENDED CEILING PERIMETER SEISMIC ATTACHMENT.

KEYPLAN

MHTN ARCHITECTS
MHTN Architects, Inc.
420 East South Temple
Suite 100
Salt Lake City, Utah 84111
Telephone (801) 595-6700
Telefax (801) 595-6717
www.mhtn.com

WEBER STATE UNIVERSITY
RESIDENTIAL LIFE PHASE II - BLDG 2

DFCM PROJECT NUMBER: 10176810

WEBER STATE UNIVERSITY
OGDEN, UTAH 84408

SEAL

MHTN PROJECT NO. 2010543

DRAWN BY: MLH CHECKED BY: MG

ISSUED:

NO.	DATE	DESCRIPTION
01	17 MAY 2011	CONSTRUCTION DOCUMENTS

CONTRACTOR TO VERIFY DRAWINGS IN FIELD USE REFLECT LAST REVISION DATE.

NO.	DATE	DESCRIPTION

SHEET NAME

LEVEL ONE REFLECTED CLG PLAN - AREA 'B'

CONSTRUCTION DOCUMENTS

17 MAY 2011

SHEET NUMBER

AC101B

C:\Users\jprestom\Documents\A11_2010543 WSU RESIDENTIAL LIFE BUILDING II_CENTRAL_prestom.rvt
5/17/2011 12:16:09 PM

LEVEL 2 REFLECTED CEILING PLAN - AREA A

0 4' - 0" 8' - 0" 16' - 0"

SCALE: 1/8" = 1'-0"

LEGEND

- 5/8" GYP BOARD CEILING
- METAL PANEL SOFFIT
- 2X4 ACOUSTICAL LAY IN CEILING
- 8"x48" ACOUSTICAL LAY IN CEILING ACCENT
- 2X2 ACOUSTICAL LAY IN CEILING
- 2X2 VINYL FACED ACOUSTICAL LAY IN CEILING
- 2X4 VINYL FACED ACOUSTICAL LAY IN CEILING
- CURVED ACOUSTICAL METAL PANEL TILE
- KITCHEN HOOD - SEE KITCHEN/MECH DRAWINGS
- OTS — OPEN TO STRUCTURE
- OTSP — OPEN TO STRUCTURE, PAINTED
- CAN LIGHT FIXTURE
- 1X4 LIGHT FIXTURE
- 2X2 LIGHT FIXTURE
- 2X4 LIGHT FIXTURE
- WALL MOUNTED VANITY LIGHT FIXTURE
- STRIP LIGHT FIXTURE
- SURFACE MOUNT FIXTURE
- SHOWERDOME
- ROUND SUPPLY AIR DIFFUSER
- SUPPLY AIR DIFFUSER
- LINEAR SUPPLY AIR DIFFUSER
- RETURN AIR GRILLE
- EXHAUST FAN GRILLE

GENERAL NOTES

1. REFER TO THE LIFE SAFETY PLANS FOR INDICATION OF FIRE RATED WALLS.
2. WHEN FLOOR HEIGHT VARIES IN A ROOM, THE CEILING HEIGHT SHOWN IS THE HEIGHT ABOVE THE FLOOR AT THE ENTRY.
3. ALL CEILINGS ARE TO BE SEISMICALLY BRACED. A MINIMUM OF ONE BRACE REQUIRED IN ANY SPACE OF 1,000 S.F. OR LARGER. SEE A1/AE551 FOR TYPICAL SUSPENDED CEILING SEISMIC BRACING.
4. ROOMS WITH AREAS LESS THAN 144 SF DO NOT NEED TO COMPLY WITH SEISMIC BRACING - SEE CISCA REQUIREMENTS
5. SEE DETAIL B1/AE551 FOR CEILING SUSPENSION DETAILS BELOW DUCTWORK OR OTHER OBSTRUCTIONS.
6. AT ALL LOCATIONS WHERE CEILINGS ARE OPEN TO STRUCTURE ABOVE, EXTEND ALL WALLS (INCLUDING ALL STUD FRAMING, GYPSUM BOARD, INSULATION & CMU WHERE APPLICABLE) TO THE METAL ROOF DECK ABOVE.
7. INSTALL ACCESS PANELS IN HARD CEILINGS AS REQUIRED FOR EQUIPMENT ACCESS. LOCATION AND SIZE TO BE APPROVED BY ARCHITECT PRIOR TO INSTALLATION.
8. RE: A4/AE551 FOR SUSPENDED CEILING PERIMETER SEISMIC ATTACHMENT.

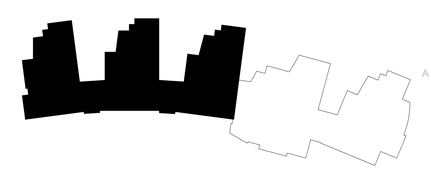

KEYPLAN

MHTN ARCHITECTS
MHTN Architects, Inc.
420 East South Temple
Suite 100
Salt Lake City, Utah 84111
Telephone (801) 595-6700
Telefax (801) 595-6717
www.mhtn.com

WEBER STATE UNIVERSITY
RESIDENTIAL LIFE PHASE II - BLDG 2

DFCM PROJECT NUMBER: 10176810

WEBER STATE UNIVERSITY
OGDEN, UTAH 84408

SEAL

MHTN PROJECT NO. 2010543

DRAWN BY: MLH CHECKED BY: MG

ISSUED:

NO.	DATE	DESCRIPTION
01	17 MAY 2011	CONSTRUCTION DOCUMENTS

CONTRACTOR TO VERIFY DRAWINGS IN FIELD USE REFLECT LAST REVISION DATE.

NO.	DATE	DESCRIPTION

SHEET NAME

LEVEL TWO REFLECTED CLG PLAN - AREA 'A'

CONSTRUCTION DOCUMENTS

17 MAY 2011

SHEET NUMBER

AC102A

C:\Users\prestonm\Documents\A11_2010543 WSU RESIDENTIAL LIFE BUILDING II_CENTRAL_prestonm.rvt
5/17/2011 12:16:26 PM

LEVEL 2 REFLECTED CEILING PLAN - AREA B

0 4' - 0" 8' - 0" 16' - 0"

SCALE: 1/8" = 1'-0"

N

LEGEND

- 5/8" GYP BOARD CEILING
- METAL PANEL SOFFIT
- 2X4 ACOUSTICAL LAY IN CEILING
- 8"x48" ACOUSTICAL LAY IN CEILING ACCENT
- 2X2 ACOUSTICAL LAY IN CEILING
- 2X2 VINYL FACED ACOUSTICAL LAY IN CEILING
- 2X4 VINYL FACED ACOUSTICAL LAY IN CEILING
- CURVED ACOUSTICAL METAL PANEL TILE
- KITCHEN HOOD - SEE KITCHEN/MECH DRAWINGS
- OTS — OPEN TO STRUCTURE
- OTSP — OPEN TO STRUCTURE, PAINTED
- CAN LIGHT FIXTURE
- 1X4 LIGHT FIXTURE
- 2X2 LIGHT FIXTURE
- 2X4 LIGHT FIXTURE
- WALL MOUNTED VANITY LIGHT FIXTURE
- STRIP LIGHT FIXTURE
- SURFACE MOUNT FIXTURE
- SHOWERDOME
- ROUND SUPPLY AIR DIFFUSER
- SUPPLY AIR DIFFUSER
- LINEAR SUPPLY AIR DIFFUSER
- RETURN AIR GRILLE
- EXHAUST FAN GRILLE

GENERAL NOTES

1. REFER TO THE LIFE SAFETY PLANS FOR INDICATION OF FIRE RATED WALLS.
2. WHEN FLOOR HEIGHT VARIES IN A ROOM, THE CEILING HEIGHT SHOWN IS THE HEIGHT ABOVE THE FLOOR AT THE ENTRY.
3. ALL CEILINGS ARE TO BE SEISMICALLY BRACED. A MINIMUM OF ONE BRACE REQUIRED IN ANY SPACE OF 1,000 S.F. OR LARGER. SEE A1/AE551 FOR TYPICAL SUSPENDED CEILING SEISMIC BRACING.
4. ROOMS WITH AREAS LESS THAN 144 SF DO NOT NEED TO COMPLY WITH SEISMIC BRACING - SEE CISCA REQUIREMENTS
5. SEE DETAIL B1/AE551 FOR CEILING SUSPENSION DETAILS BELOW DUCTWORK OR OTHER OBSTRUCTIONS.
6. AT ALL LOCATIONS WHERE CEILINGS ARE OPEN TO STRUCTURE ABOVE, EXTEND ALL WALLS (INCLUDING ALL STUD FRAMING, GYPSUM BOARD, INSULATION & CMU WHERE APPLICABLE) TO THE METAL ROOF DECK ABOVE.
7. INSTALL ACCESS PANELS IN HARD CEILINGS AS REQUIRED FOR EQUIPMENT ACCESS. LOCATION AND SIZE TO BE APPROVED BY ARCHITECT PRIOR TO INSTALLATION.
8. RE: A4/AE551 FOR SUSPENDED CEILING PERIMETER SEISMIC ATTACHMENT.

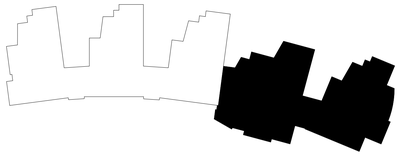

KEYPLAN

C:\Users\prestonm\Documents\A11_2010543 WSU RESIDENTIAL LIFE BUILDING II_CENTRAL_prestonm.rvt
5/17/2011 12:16:45 PM

MHTN ARCHITECTS
MHTN Architects, Inc.
420 East South Temple
Suite 100
Salt Lake City, Utah 84111
Telephone (801) 595-6700
Telefax (801) 595-6717
www.mhtn.com

WEBER STATE UNIVERSITY
RESIDENTIAL LIFE PHASE II - BLDG 2

DFCM PROJECT NUMBER: 10176810

WEBER STATE UNIVERSITY
OGDEN, UTAH 84408

SEAL

MHTN PROJECT NO. 2010543

DRAWN BY: MLH CHECKED BY: MG

ISSUED:

NO.	DATE	DESCRIPTION
01	17 MAY 2011	CONSTRUCTION DOCUMENTS

CONTRACTOR TO VERIFY DRAWINGS IN FIELD USE REFLECT LAST REVISION DATE.

NO.	DATE	DESCRIPTION

SHEET NAME

LEVEL TWO REFLECTED CLG PLAN - AREA 'B'

CONSTRUCTION DOCUMENTS

17 MAY 2011

SHEET NUMBER

AC102B

LEVEL 3 REFLECTED CEILING PLAN - AREA A

0 4' - 0" 8' - 0" 16' - 0"

SCALE: 1/8" = 1'-0"

LEGEND

- 5/8" GYP BOARD CEILING
- METAL PANEL SOFFIT
- 2X4 ACOUSTICAL LAY IN CEILING
- 8"x48" ACOUSTICAL LAY IN CEILING ACCENT
- 2X2 ACOUSTICAL LAY IN CEILING
- 2X2 VINYL FACED ACOUSTICAL LAY IN CEILING
- 2X4 VINYL FACED ACOUSTICAL LAY IN CEILING
- CURVED ACOUSTICAL METAL PANEL TILE
- KITCHEN HOOD - SEE KITCHEN/MECH DRAWINGS
- OTS OPEN TO STRUCTURE
- OTSP OPEN TO STRUCTURE, PAINTED
- CAN LIGHT FIXTURE
- 1X4 LIGHT FIXTURE
- 2X2 LIGHT FIXTURE
- 2X4 LIGHT FIXTURE
- WALL MOUNTED VANITY LIGHT FIXTURE
- STRIP LIGHT FIXTURE
- SURFACE MOUNT FIXTURE
- SHOWERDOME
- ROUND SUPPLY AIR DIFFUSER
- SUPPLY AIR DIFFUSER
- LINEAR SUPPLY AIR DIFFUSER
- RETURN AIR GRILLE
- EXHAUST FAN GRILLE

GENERAL NOTES

1. REFER TO THE LIFE SAFETY PLANS FOR INDICATION OF FIRE RATED WALLS.

2. WHEN FLOOR HEIGHT VARIES IN A ROOM, THE CEILING HEIGHT SHOWN IS THE HEIGHT ABOVE THE FLOOR AT THE ENTRY.

3. ALL CEILINGS ARE TO BE SEISMICALLY BRACED. A MINIMUM OF ONE BRACE REQUIRED IN ANY SPACE OF 1,000 S.F. OR LARGER. SEE A1/AE551 FOR TYPICAL SUSPENDED CEILING SEISMIC BRACING.

4. ROOMS WITH AREAS LESS THAN 144 SF DO NOT NEED TO COMPLY WITH SEISMIC BRACING - SEE CISCA REQUIREMENTS

5. SEE DETAIL B1/AE551 FOR CEILING SUSPENSION DETAILS BELOW DUCTWORK OR OTHER OBSTRUCTIONS.

6. AT ALL LOCATIONS WHERE CEILINGS ARE OPEN TO STRUCTURE ABOVE, EXTEND ALL WALLS (INCLUDING ALL STUD FRAMING, GYPSUM BOARD, INSULATION & CMU WHERE APPLICABLE) TO THE METAL ROOF DECK ABOVE.

7. INSTALL ACCESS PANELS IN HARD CEILINGS AS REQUIRED FOR EQUIPMENT ACCESS. LOCATION AND SIZE TO BE APPROVED BY ARCHITECT PRIOR TO INSTALLATION.

8. RE: A4/AE551 FOR SUSPENDED CEILING PERIMETER SEISMIC ATTACHMENT.

KEYPLAN

MHTN ARCHITECTS
MHTN Architects, Inc.
420 East South Temple
Suite 100
Salt Lake City, Utah 84111
Telephone (801) 595-6700
Telefax (801) 595-6717
www.mhtn.com

WEBER STATE UNIVERSITY
RESIDENTIAL LIFE PHASE II - BLDG 2
DFCM PROJECT NUMBER: 10176810

WEBER STATE UNIVERSITY
OGDEN, UTAH 84408

SEAL

MHTN PROJECT NO. 2010543

DRAWN BY: MLH CHECKED BY: MG

ISSUED:

NO.	DATE	DESCRIPTION
01	17 MAY 2011	CONSTRUCTION DOCUMENTS

CONTRACTOR TO VERIFY DRAWINGS IN FIELD USE REFLECT LAST REVISION DATE.

NO.	DATE	DESCRIPTION

SHEET NAME

LEVEL THREE REFLECTED CLG PLAN - ARE 'A'

CONSTRUCTION DOCUMENTS

17 MAY 2011

SHEET NUMBER

AC103A

C:\Users\prestonm\Documents\A11_2010543 WSU RESIDENTIAL LIFE BUILDING II_CENTRAL_prestonm.rvt
5/17/2011 12:17:01 PM

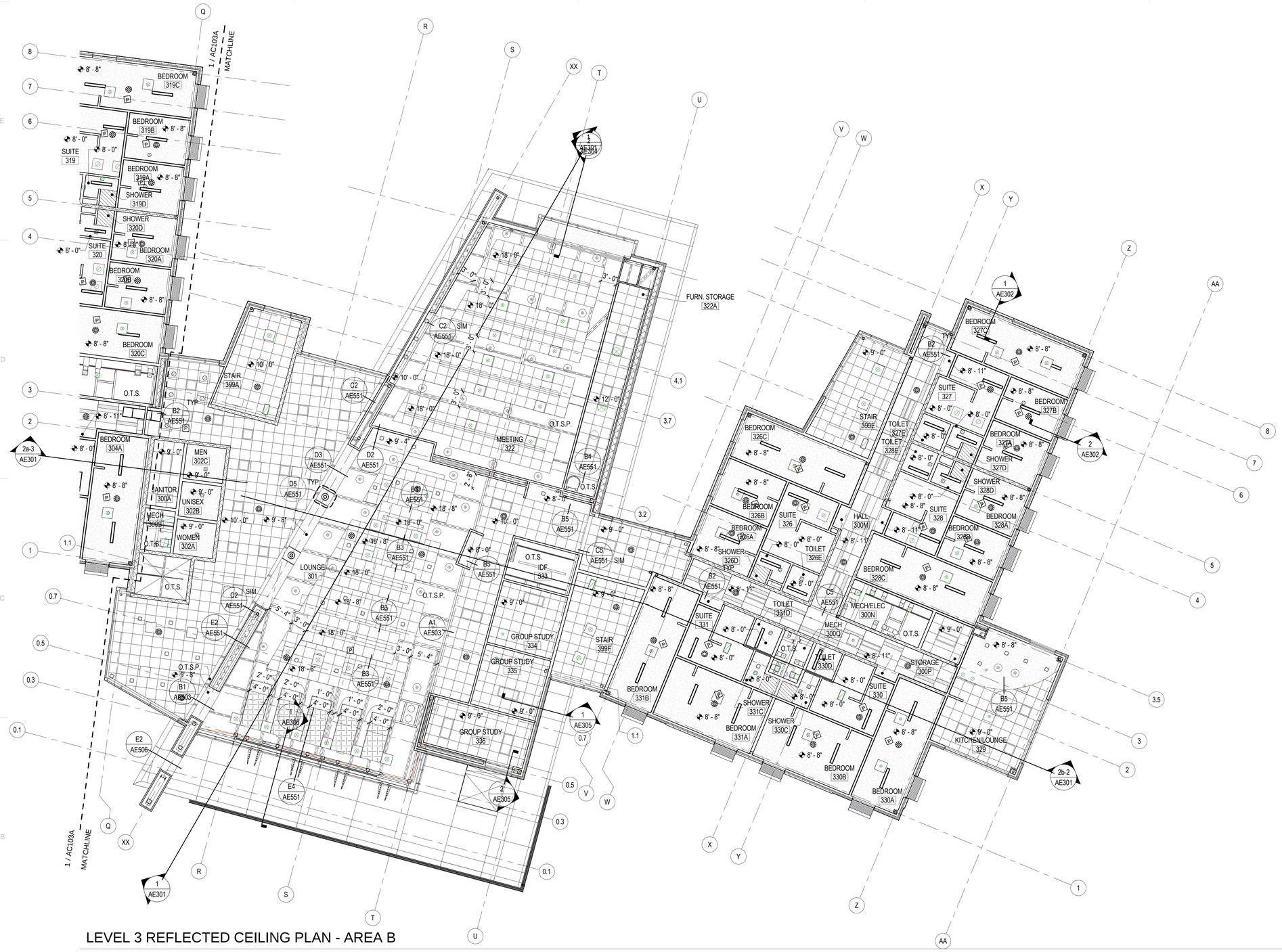

LEVEL 3 REFLECTED CEILING PLAN - AREA B

0 4'-0" 8'-0" 16'-0"

SCALE: 1/8" = 1'-0"

LEGEND

5/8" GYP BOARD CEILING	OTS	OPEN TO STRUCTURE	ROUND SUPPLY AIR DIFFUSER
METAL PANEL SOFFIT	OTSP	OPEN TO STRUCTURE, PAINTED	SUPPLY AIR DIFFUSER
2X4 ACOUSTICAL LAY IN CEILING		CAN LIGHT FIXTURE	LINEAR SUPPLY AIR DIFFUSER
8"x48" ACOUSTICAL LAY IN CEILING ACCENT		1X4 LIGHT FIXTURE	RETURN AIR GRILLE
2X2 ACOUSTICAL LAY IN CEILING		2X2 LIGHT FIXTURE	EXHAUST FAN GRILLE
2X2 VINYL FACED ACOUSTICAL LAY IN CEILING		2X4 LIGHT FIXTURE	
2X4 VINYL FACED ACOUSTICAL LAY IN CEILING		WALL MOUNTED VANITY LIGHT FIXTURE	
CURVED ACOUSTICAL METAL PANEL TILE		STRIP LIGHT FIXTURE	
KITCHEN HOOD - SEE KITCHEN/MECH DRAWINGS		SURFACE MOUNT FIXTURE	
		SHOWERDOME	

GENERAL NOTES

1. REFER TO THE LIFE SAFETY PLANS FOR INDICATION OF FIRE RATED WALLS.

2. WHEN FLOOR HEIGHT VARIES IN A ROOM, THE CEILING HEIGHT SHOWN IS THE HEIGHT ABOVE THE FLOOR AT THE ENTRY.

3. ALL CEILINGS ARE TO BE SEISMICALLY BRACED. A MINIMUM OF ONE BRACE REQUIRED IN ANY SPACE OF 1,000 S.F. OR LARGER. SEE A1/AE551 FOR TYPICAL SUSPENDED CEILING SEISMIC BRACING.

4. ROOMS WITH AREAS LESS THAN 144 SF DO NOT NEED TO COMPLY WITH SEISMIC BRACING - SEE CISCA REQUIREMENTS

5. SEE DETAIL B1/AE551 FOR CEILING SUSPENSION DETAILS BELOW DUCTWORK OR OTHER OBSTRUCTIONS.

6. AT ALL LOCATIONS WHERE CEILINGS ARE OPEN TO STRUCTURE ABOVE, EXTEND ALL WALLS (INCLUDING ALL STUD FRAMING, GYPSUM BOARD, INSULATION & CMU WHERE APPLICABLE) TO THE METAL ROOF DECK ABOVE.

7. INSTALL ACCESS PANELS IN HARD CEILINGS AS REQUIRED FOR EQUIPMENT ACCESS. LOCATION AND SIZE TO BE APPROVED BY ARCHITECT PRIOR TO INSTALLATION.

8. RE: A4/AE551 FOR SUSPENDED CEILING PERIMETER SEISMIC ATTACHMENT.

KEYPLAN

MHTN ARCHITECTS
MHTN Architects, Inc.
420 East South Temple
Suite 100
Salt Lake City, Utah 84111
Telephone (801) 595-6700
Telefax (801) 595-6717
www.mhtn.com

WEBER STATE UNIVERSITY
RESIDENTIAL LIFE PHASE II - BLDG 2

DFCM PROJECT NUMBER: 10176810

WEBER STATE UNIVERSITY
OGDEN, UTAH 84408

SEAL

MHTN PROJECT NO. 2010543

DRAWN BY: MLH CHECKED BY: MG

ISSUED:

NO.	DATE	DESCRIPTION
01	17 MAY 2011	CONSTRUCTION DOCUMENTS

CONTRACTOR TO VERIFY DRAWINGS IN FIELD USE REFLECT LAST REVISION DATE.

NO.	DATE	DESCRIPTION

SHEET NAME

LEVEL THREE REFLECTED CLG PLAN - AREA 'B'

CONSTRUCTION DOCUMENTS

17 MAY 2011

SHEET NUMBER

AC103B

C:\Users\prestonm\Documents\A11_2010543 WSU RESIDENTIAL LIFE BUILDING II_CENTRAL_prestonm.rvt
5/17/2011 12:17:20 PM

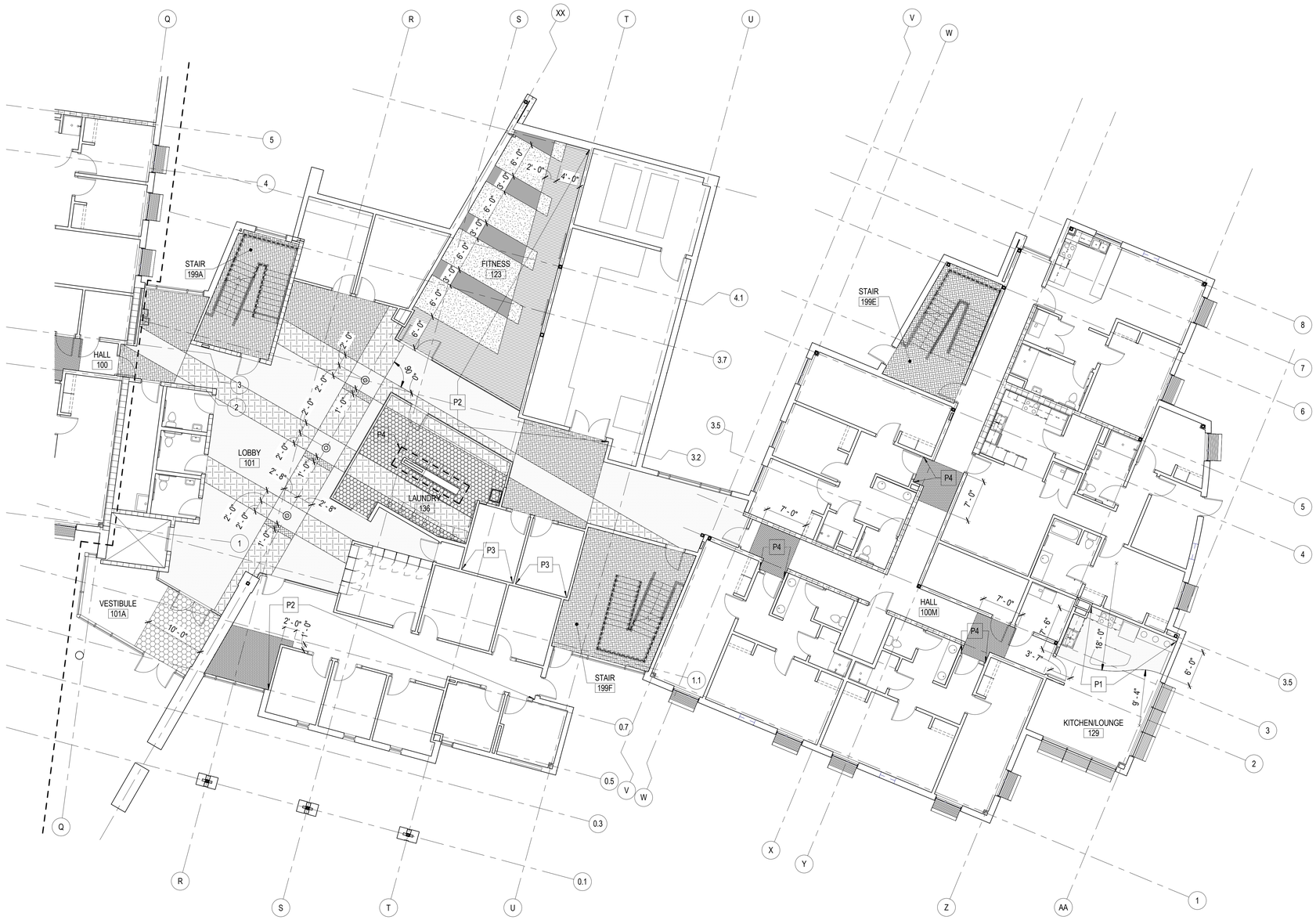

1 LEVEL 1 AREA B FLOOR PATTERN PLAN

SCALE: 1/8" = 1'-0"

PAINT LEGEND

P1	ACCENT PAINT 1
P2	ACCENT PAINT 2
P3	ACCENT PAINT 3
P4	ACCENT PAINT 4

FLOOR PATTERN LEGEND

- RESILIENT ATHLETIC FLOORING COLOR A
- RESILIENT ATHLETIC FLOORING COLOR B
- RESILIENT ATHLETIC FLOORING COLOR C
- RESILIENT TERRAZZO TILE A
- RESILIENT TERRAZZO TILE B
- RESILIENT TERRAZZO TILE C
- RESILIENT TERRAZZO TILE D
- CARPET TILE A
- CARPET TILE B
- CARPET TILE C
- WALK-OFF MAT

MHTN
ARCHITECTS
MHTN Architects, Inc.
420 East South Temple
Suite 100
Salt Lake City, Utah 84111
Telephone (801) 595-6700
Telefax (801) 595-6717
www.mhtn.com

WEBER STATE UNIVERSITY
RESIDENTIAL LIFE PHASE II - BLDG 2
DFCM PROJECT NUMBER: 10176810

WEBER STATE UNIVERSITY
OGDEN, UTAH 84408

SEAL

MHTN PROJECT NO. 2010543

DRAWN BY: Author CHECKED BY: Checker

ISSUED:

NO.	DATE	DESCRIPTION
01	17 MAY 2011	CONSTRUCTION DOCUMENTS

CONTRACTOR TO VERIFY DRAWINGS IN FIELD USE REFLECT LAST REVISION DATE.

NO.	DATE	DESCRIPTION

SHEET NAME
FLOOR PATTERN PLANS

CONSTRUCTION DOCUMENTS
17 MAY 2011

SHEET NUMBER
AF101

C:\Users\prestonm\Documents\A11_2010543 WSU RESIDENTIAL LIFE BUILDING II_CENTRAL_prestonm.rvt
5/17/2011 12:24:19 PM

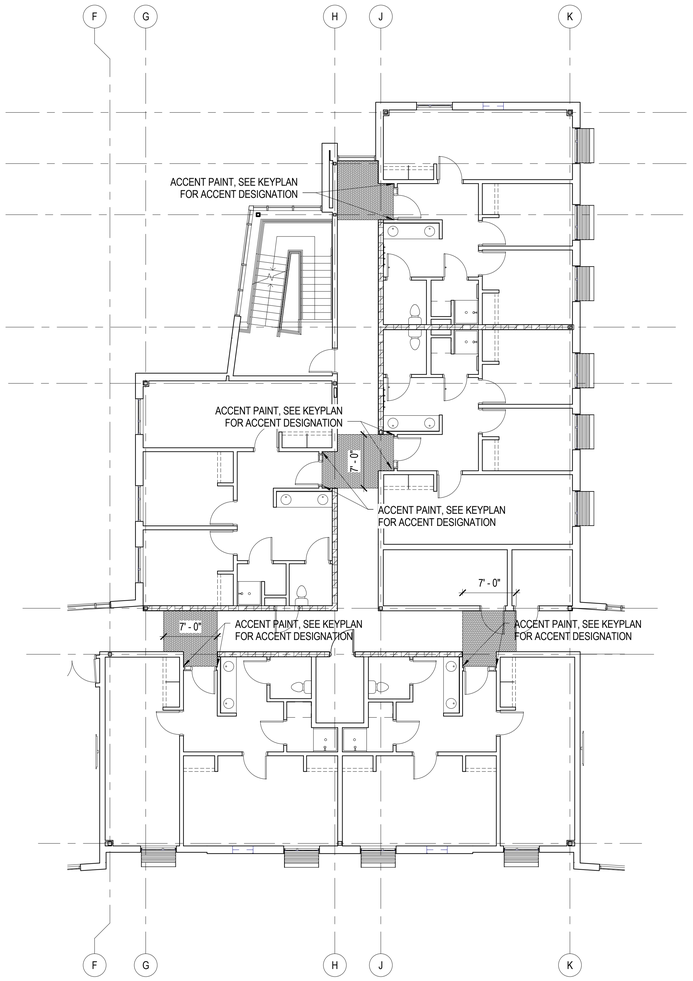

1 TYPICAL WING FLOOR PATTERN PLAN - LEVELS 1-3

SCALE: 1/8" = 1'-0"

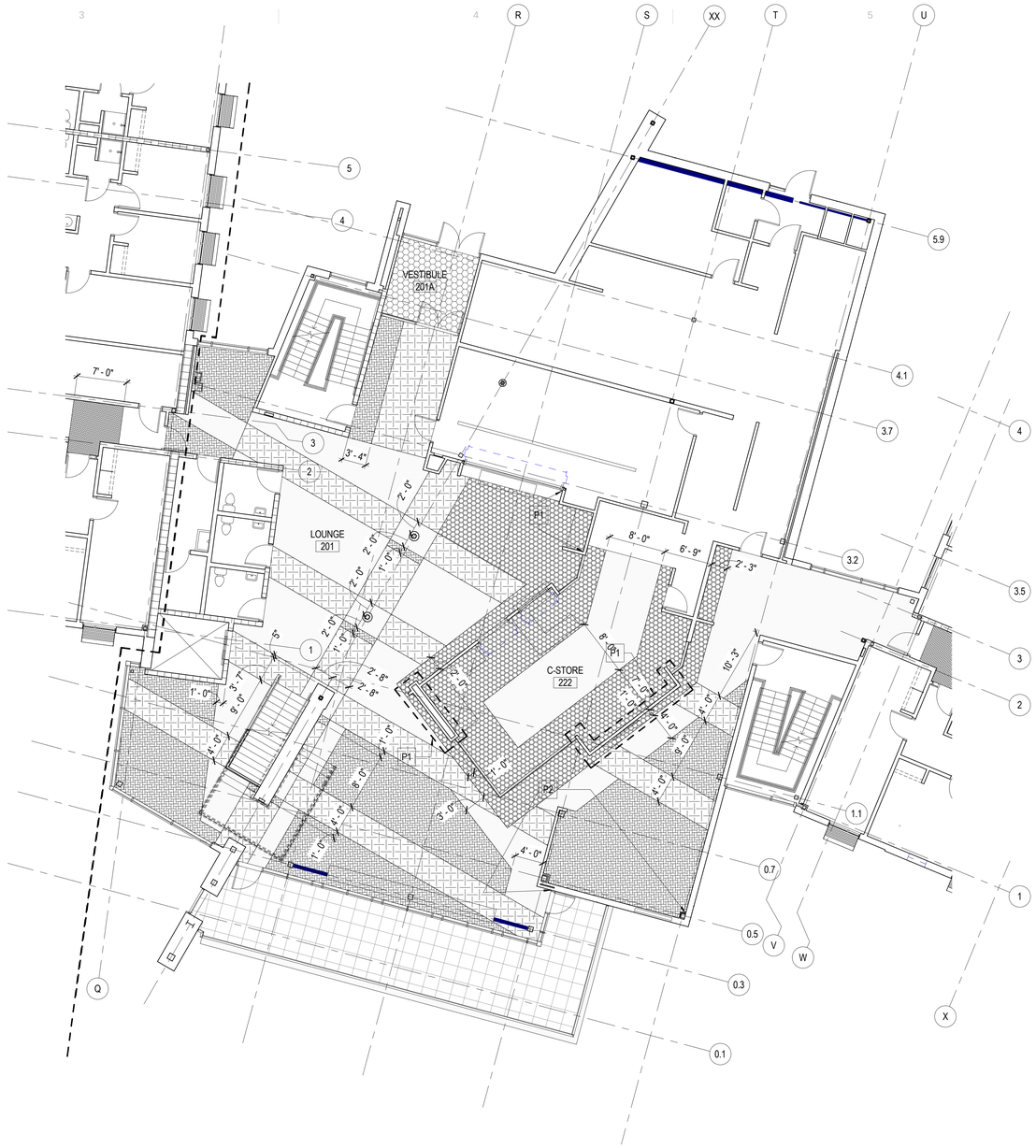

2 LEVEL 2 COMMONS FLOOR PATTERN PLAN

SCALE: 1/8" = 1'-0"

ACCENT PAINT DESIGNATION AT SUITE ENTRIES- TYP. LEVELS 1-3

PAINT LEGEND

P1	ACCENT PAINT 1
P2	ACCENT PAINT 2
P3	ACCENT PAINT 3
P4	ACCENT PAINT 4

FLOOR PATTERN LEGEND

- RESILIENT ATHLETIC FLOORING COLOR A
- RESILIENT ATHLETIC FLOORING COLOR B
- RESILIENT ATHLETIC FLOORING COLOR C
- RESILIENT TERRAZZO TILE A
- RESILIENT TERRAZZO TILE B
- RESILIENT TERRAZZO TILE C
- RESILIENT TERRAZZO TILE D
- CARPET TILE A
- CARPET TILE B
- CARPET TILE C
- WALK-OFF MAT

MHTN
ARCHITECTS
MHTN Architects, Inc.
420 East South Temple
Suite 100
Salt Lake City, Utah 84111
Telephone (801) 595-6700
Telefax (801) 595-6717
www.mhtn.com

WEBER STATE UNIVERSITY
RESIDENTIAL LIFE PHASE II - BLDG 2

DFCM PROJECT NUMBER: 10176810

WEBER STATE UNIVERSITY
OGDEN, UTAH 84408

SEAL

MHTN PROJECT NO. 2010543

DRAWN BY: Author CHECKED BY: Checker

ISSUED:

NO.	DATE	DESCRIPTION
01	17 MAY 2011	CONSTRUCTION DOCUMENTS

CONTRACTOR TO VERIFY DRAWINGS IN FIELD USE REFLECT LAST REVISION DATE.

NO.	DATE	DESCRIPTION

SHEET NAME

FLOOR PATTERN PLANS

CONSTRUCTION DOCUMENTS
17 MAY 2011

SHEET NUMBER

AF102

C:\Users\prestonn\Documents\A11_2010543 WSU RESIDENTIAL LIFE BUILDING II_CENTRAL_prestonn.rvt
5/17/2011 12:24:25 PM

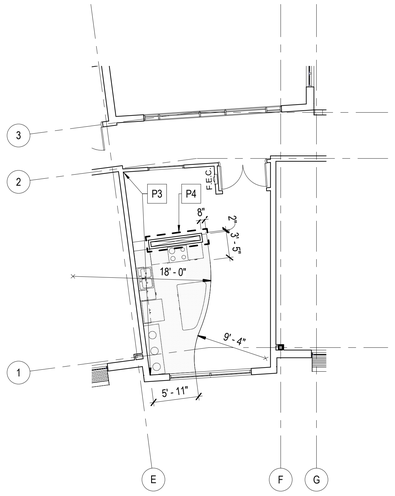

2 NORTH KITCHENETTE FLOOR PATTERN PLAN

SCALE: 1/8" = 1'-0"

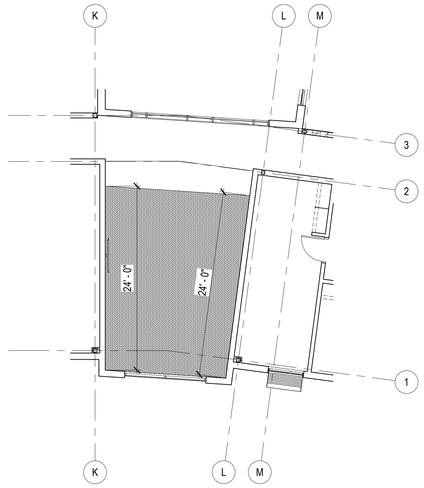

3 NORTH LOUNGE FLOOR PATTERN PLAN

SCALE: 1/8" = 1'-0"

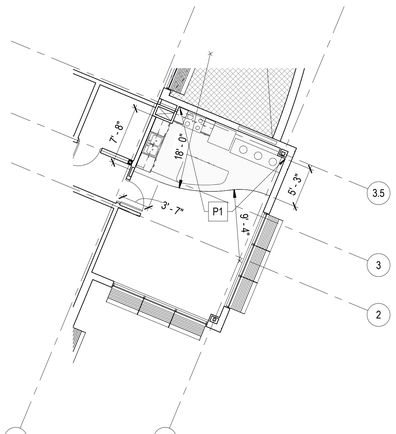

4 SOUTH KITCHENETTE FLOOR PATTERN PLAN - LEVELS 2 & 3

SCALE: 1/8" = 1'-0"

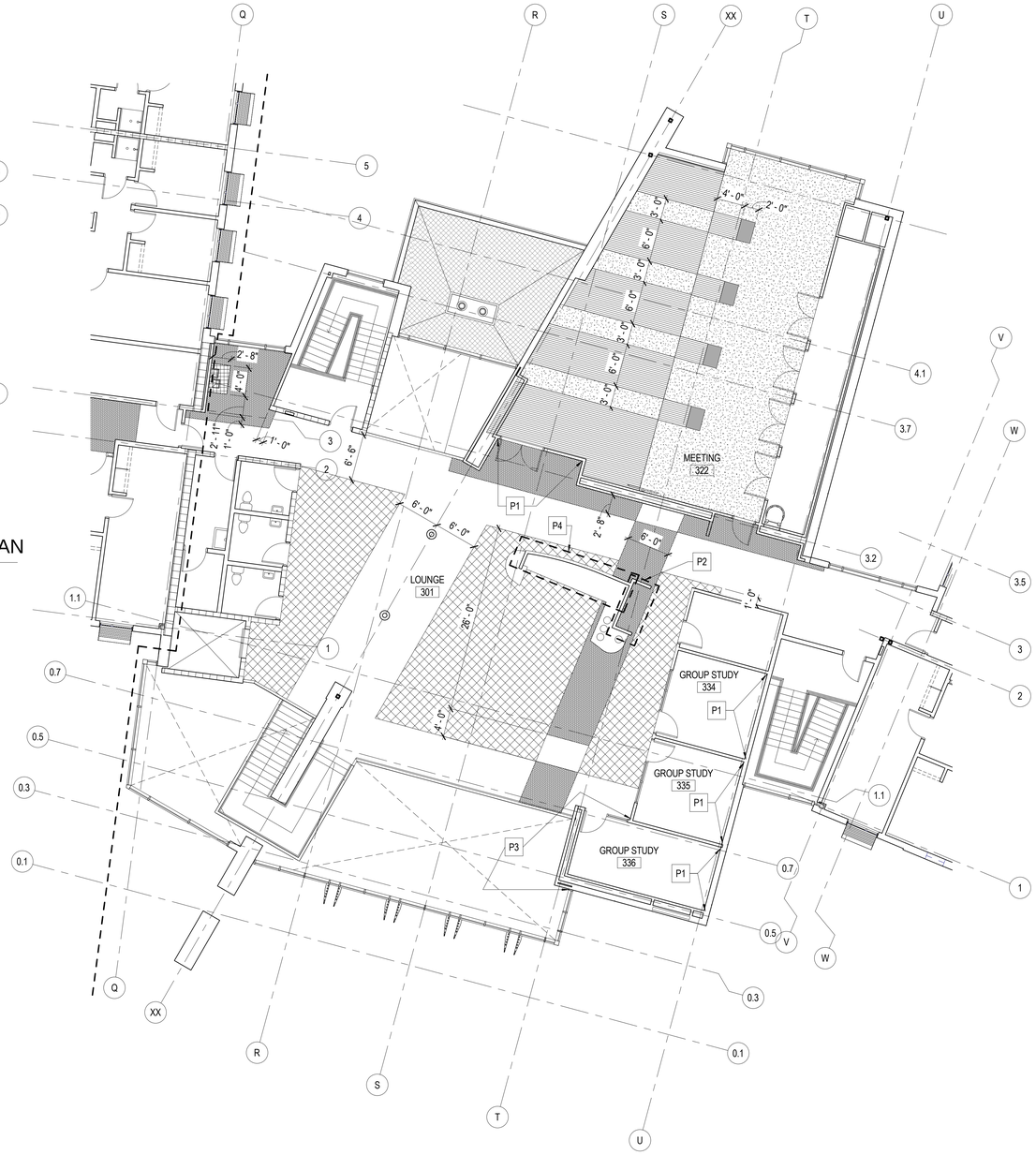

1 LEVEL 3 COMMONS FLOOR PATTERN PLAN

SCALE: 1/8" = 1'-0"

PAINT LEGEND

P1	ACCENT PAINT 1
P2	ACCENT PAINT 2
P3	ACCENT PAINT 3
P4	ACCENT PAINT 4

FLOOR PATTERN LEGEND

- RESILIENT ATHLETIC FLOORING COLOR A
- RESILIENT ATHLETIC FLOORING COLOR B
- RESILIENT ATHLETIC FLOORING COLOR C
- RESILIENT TERRAZZO TILE A
- RESILIENT TERRAZZO TILE B
- RESILIENT TERRAZZO TILE C
- RESILIENT TERRAZZO TILE D
- CARPET TILE A
- CARPET TILE B
- CARPET TILE C
- WALK-OFF MAT

MHTN ARCHITECTS

MHTN Architects, Inc.
420 East South Temple
Suite 100
Salt Lake City, Utah 84111
Telephone (801) 595-6700
Telefax (801) 595-6717
www.mhtn.com

WEBER STATE UNIVERSITY
RESIDENTIAL LIFE PHASE II - BLDG 2

DFCM PROJECT NUMBER: 10176810

WEBER STATE UNIVERSITY
OGDEN, UTAH 84408

SEAL

MHTN PROJECT NO. 2010543

DRAWN BY: Author CHECKED BY: Checker

ISSUED:

NO.	DATE	DESCRIPTION
01	17 MAY 2011	CONSTRUCTION DOCUMENTS

CONTRACTOR TO VERIFY DRAWINGS IN FIELD USE REFLECT LAST REVISION DATE.

NO.	DATE	DESCRIPTION
1	Date 3	Revision 3

SHEET NAME

FLOOR PATTERN PLANS

CONSTRUCTION DOCUMENTS
17 MAY 2011

SHEET NUMBER

AF103

C:\Users\jprestom\Documents\A11_2010543 WSU RESIDENTIAL LIFE BUILDING II_CENTRAL_prestom.rvt
5/17/2011 12:24:30 PM

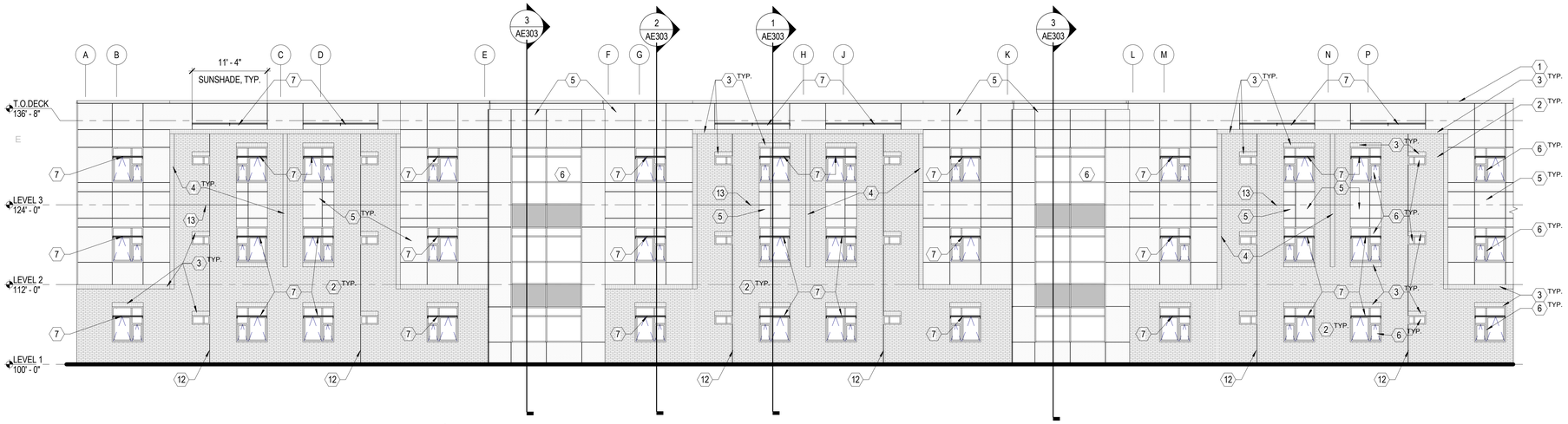

1 WEST ELEVATION - AREA 'A' (UNFOLDED)

SCALE: 1/8" = 1'-0"

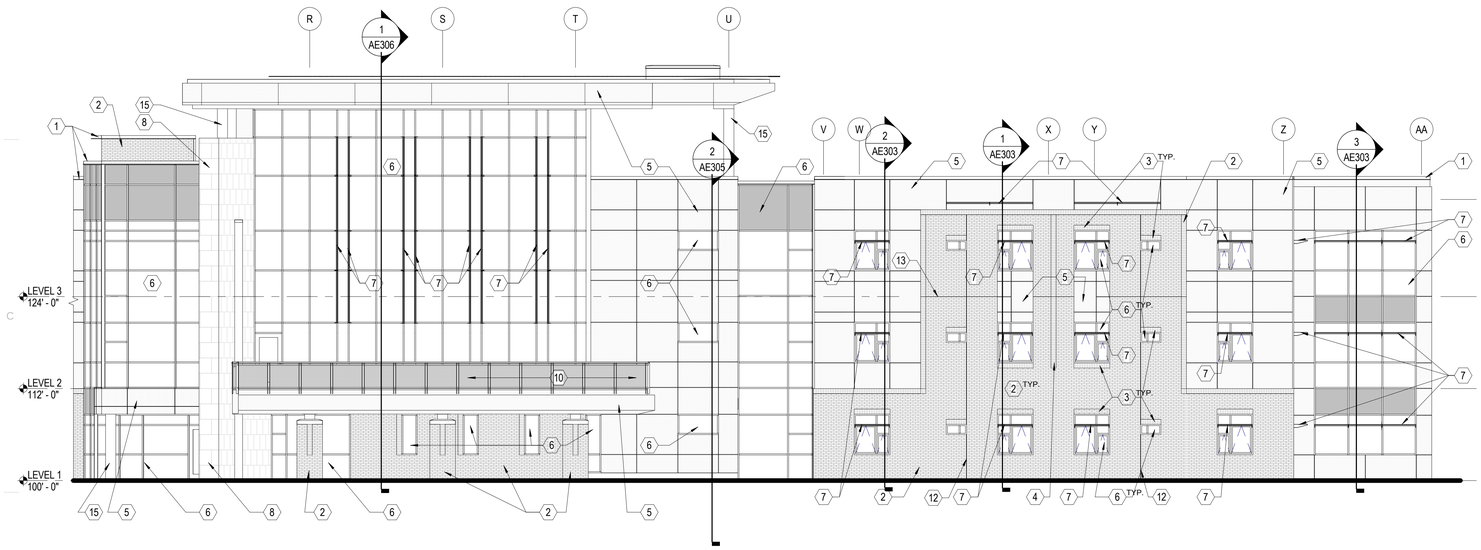

2 WEST ELEVATION - AREA 'B' (UNFOLDED)

SCALE: 1/8" = 1'-0"

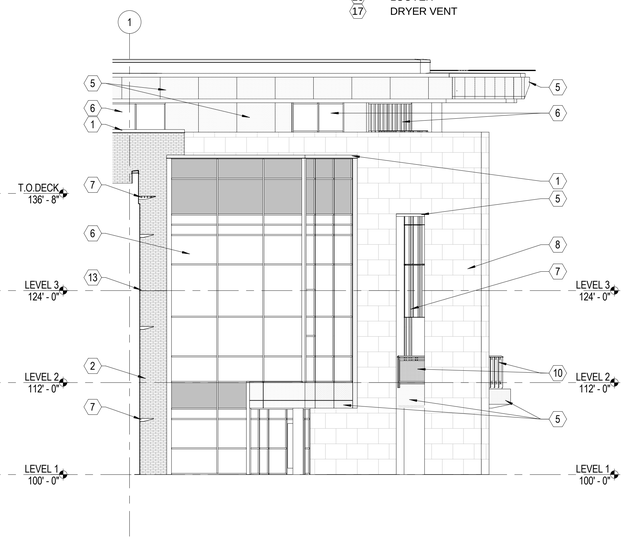

3 NORTH ELEVATION - GRID 'Q'

SCALE: 1/8" = 1'-0"

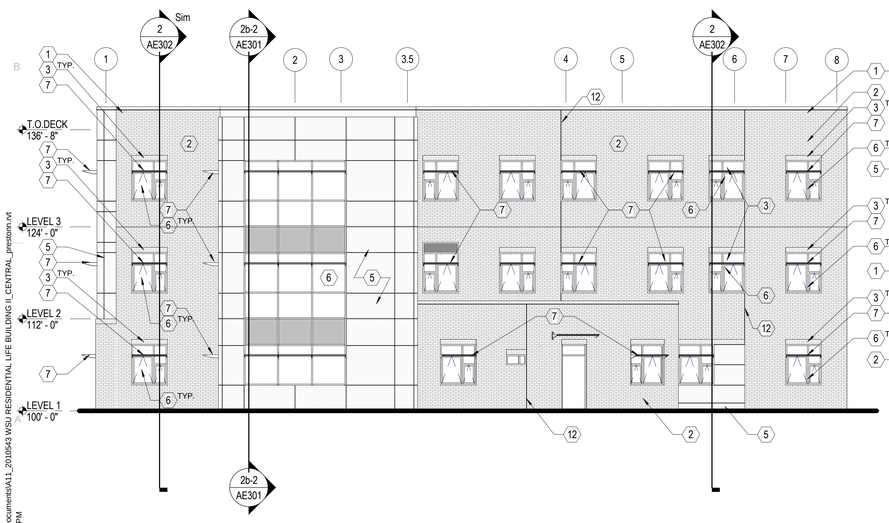

4 SOUTH ELEVATION - GRID 'AA'

SCALE: 1/8" = 1'-0"

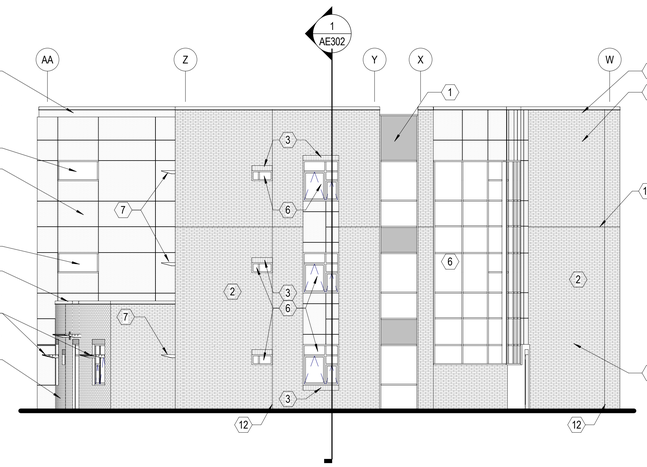

5 EAST ELEVATION - GRID '8'

SCALE: 1/8" = 1'-0"

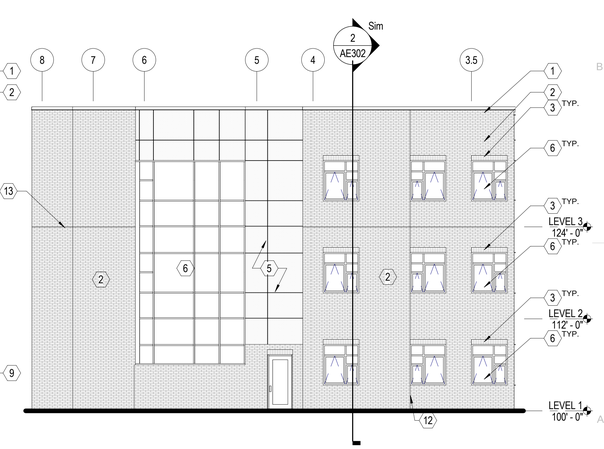

6 NORTH ELEVATION - GRID 'W'

SCALE: 1/8" = 1'-0"

GENERAL NOTES

1. CONTINUE ALL MATERIALS AND PATTERNS TO SURFACES NOT SHOWN IN ELEVATION.

2. NOT ALL ROOFTOP EQUIP. IS SHOWN, RE: MECHANICAL DRAWINGS AND ARCHITECTURAL ROOF PLAN.

3. DIMENSIONS SHOWN FOR MASONRY COURSING ARE NOMINAL U.N.O.

4. SEE WINDOW TYPE DRAWINGS FOR ADDITIONAL INFORMATION REGARDING WINDOW SYSTEMS AND GLAZING.

5. ALL EXPOSED METAL FABRICATIONS SHALL BE PRE-FINISHED

6. SEE STRUCTURAL DRAWINGS FOR LOCATIONS OF STEPS IN CONCRETE FOUNDATIONS.

7. SEE LANDSCAPE, CIVIL, & STRUCTURAL PLANS FOR INFORMATION REGARDING SITE WALLS AND RETAINING WALLS.

8. SEE D5/AE508 FOR MASONRY VENEER REINFORCEMENT DETAIL

9. METAL PANEL WIDTH NOT TO EXCEED 10'-0"

KEYNOTES

1. PRE-FINISHED METAL COPING
2. FIELD COLOR BRICK VENEER
3. SOLDIER COURSE ACCENT BRICK VENEER
4. STACK BOND ACCENT BRICK VENEER
5. COMPOSITE METAL PANEL SYSTEM
6. SCHEDULED WINDOW SYSTEM
7. PRE-MANUFACTURED SUNSHADE SYSTEM
8. SANDSTONE VENEER
9. WALL-MOUNTED CAN LIGHT @ 9'-0" A.F.F.
10. GUARDRAIL
11. ENTRY CANOPY
12. MASONRY CONTROL JOINT
13. MASONRY LINTEL ANGLE
14. CONCRETE
15. COMPOSITE METAL COLUMN COVER
16. LOUVER
17. DRYER VENT

MHTN
ARCHITECTS
MHTN Architects, Inc.
420 East South Temple
Suite 100
Salt Lake City, Utah 84111
Telephone (801) 595-6700
Telefax (801) 595-6717
www.mhtn.com

WEBER STATE UNIVERSITY
RESIDENTIAL LIFE PHASE II - BLDG 2
DFCM PROJECT NUMBER: 10176810

WEBER STATE UNIVERSITY
OGDEN, UTAH 84408

SEAL

MHTN PROJECT NO. 2010543

DRAWN BY: MC CHECKED BY: MG

ISSUED:

NO.	DATE	DESCRIPTION
01	17 MAY 2011	CONSTRUCTION DOCUMENTS

CONTRACTOR TO VERIFY DRAWINGS IN FIELD USE REFLECT LAST REVISION DATE:

NO.	DATE	DESCRIPTION

SHEET NAME

EXTERIOR ELEVATIONS

CONSTRUCTION DOCUMENTS
17 MAY 2011

SHEET NUMBER

AE201

C:\Users\prestonm\Documents\A11_2010543 WSU RESIDENTIAL LIFE BUILDING II_CENTRAL_prestonm.rvt
5/17/2011 12:20:42 PM

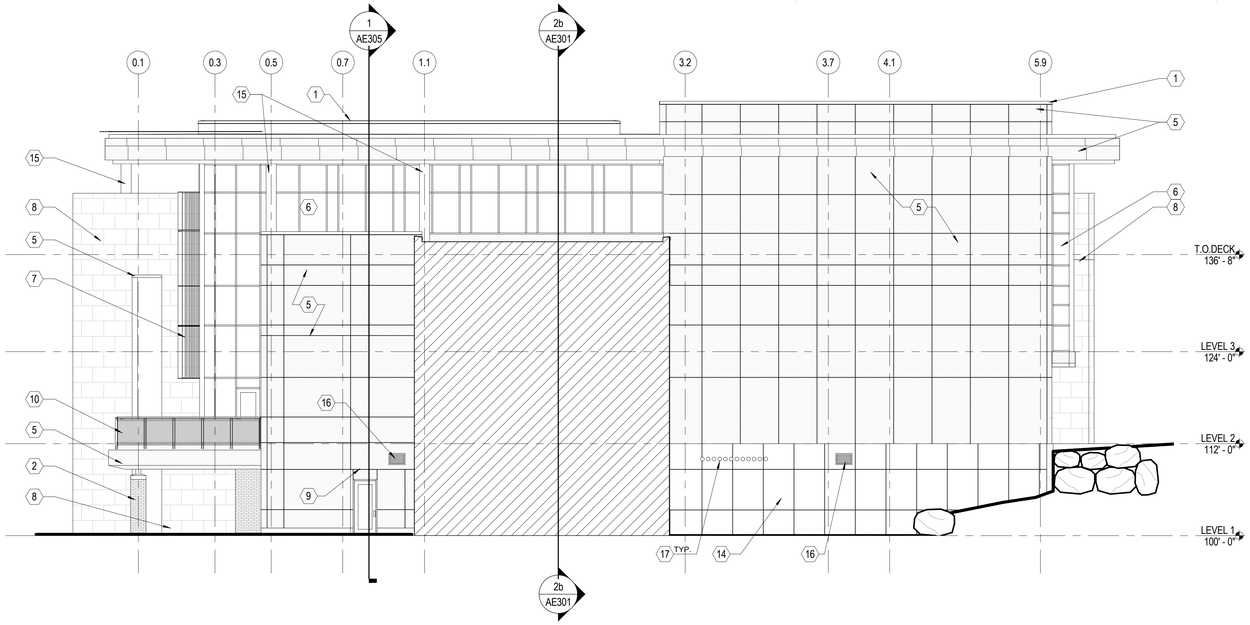

1 SOUTH ELEVATION - GRID 'U'

SCALE: 1/8" = 1'-0"

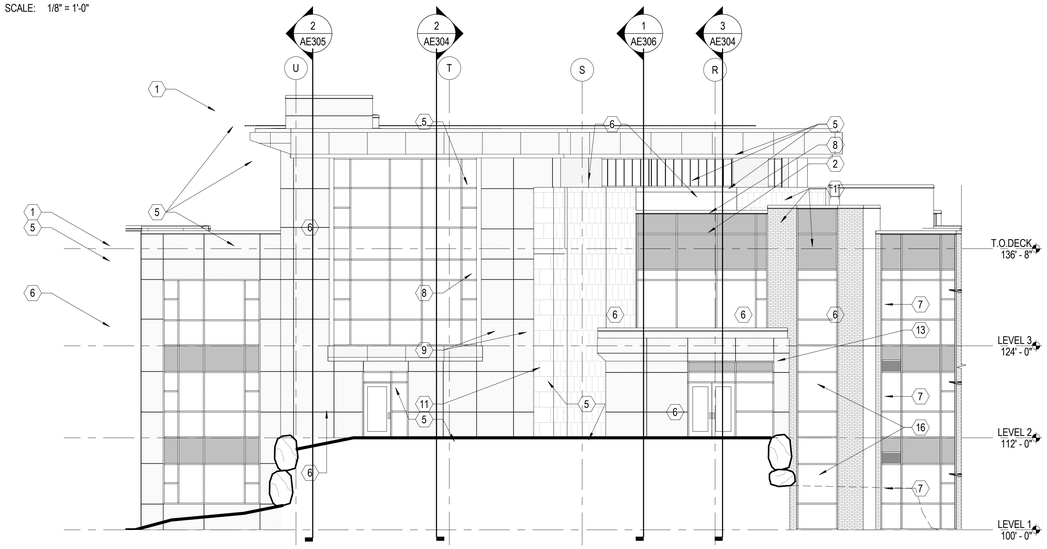

2 EAST ELEVATION - GRID '6'

SCALE: 1/8" = 1'-0"

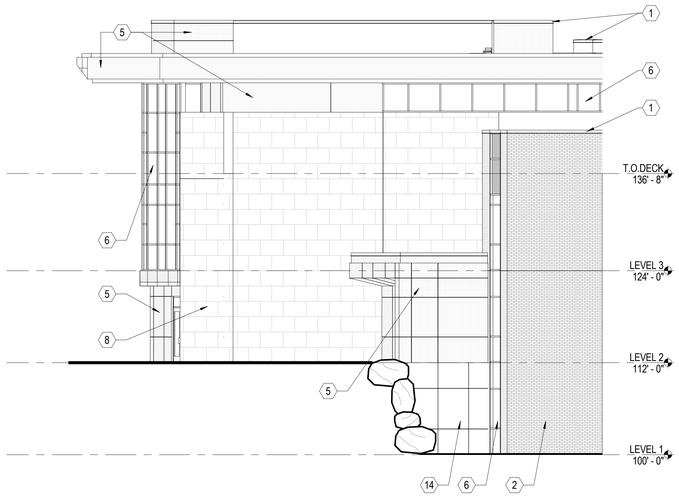

3 NORTH ELEVATION - GRID '5.9'

SCALE: 1/8" = 1'-0"

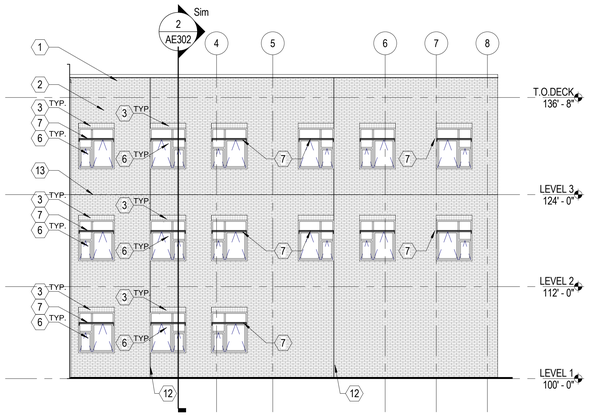

4 SOUTH ELEVATION - GRID 'Q'

SCALE: 1/8" = 1'-0"

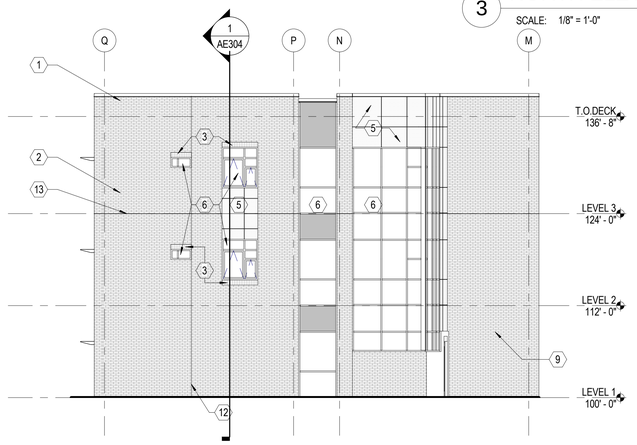

5 EAST ELEVATION - GRID '8'

SCALE: 1/8" = 1'-0"

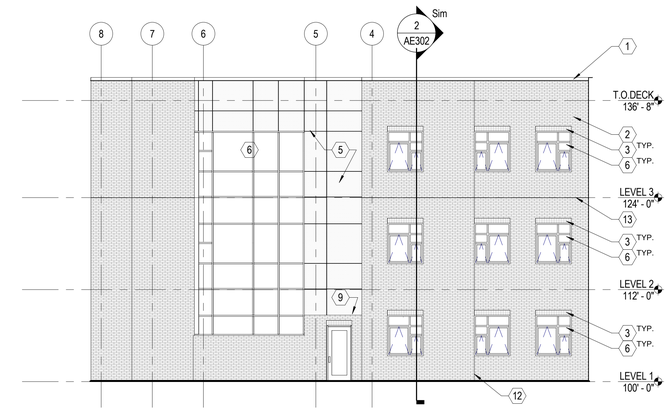

6 NORTH ELEVATION - GRID 'M'

SCALE: 1/8" = 1'-0"

GENERAL NOTES

1. CONTINUE ALL MATERIALS AND PATTERNS TO SURFACES NOT SHOWN IN ELEVATION.

2. NOT ALL ROOFTOP EQUIP. IS SHOWN, RE: MECHANICAL DRAWINGS AND ARCHITECTURAL ROOF PLAN.

3. DIMENSIONS SHOWN FOR MASONRY COURSING ARE NOMINAL U.N.O.

4. SEE WINDOW TYPE DRAWINGS FOR ADDITIONAL INFORMATION REGARDING WINDOW SYSTEMS AND GLAZING.

5. ALL EXPOSED METAL FABRICATIONS SHALL BE PRE-FINISHED

6. SEE STRUCTURAL DRAWINGS FOR LOCATIONS OF STEPS IN CONCRETE FOUNDATIONS.

7. SEE LANDSCAPE, CIVIL, & STRUCTURAL PLANS FOR INFORMATION REGARDING SITE WALLS AND RETAINING WALLS.

8. SEE D5/AE508 FOR MASONRY VENEER REINFORCEMENT DETAIL

9. METAL PANEL WIDTH NOT TO EXCEED 10'-0"

KEYNOTES

1. PRE-FINISHED METAL COPING
2. FIELD COLOR BRICK VENEER
3. SOLDIER COURSE ACCENT BRICK VENEER
4. STACK BOND ACCENT BRICK VENEER
5. COMPOSITE METAL PANEL SYSTEM
6. SCHEDULED WINDOW SYSTEM
7. PRE-MANUFACTURED SUNSHADE SYSTEM
8. SANDSTONE VENEER
9. WALL-MOUNTED CAN LIGHT @ 9'-0" A.F.F.
10. GUARDRAIL
11. ENTRY CANOPY
12. MASONRY CONTROL JOINT
13. MASONRY LINTEL ANGLE
14. CONCRETE
15. COMPOSITE METAL COLUMN COVER
16. LOUVER
17. DRYER VENT

MHTN ARCHITECTS
MHTN Architects, Inc.
420 East South Temple
Suite 100
Salt Lake City, Utah 84111
Telephone (801) 595-6700
Telefax (801) 595-6717
www.mhtn.com

WEBER STATE UNIVERSITY
RESIDENTIAL LIFE PHASE II - BLDG 2

DFCM PROJECT NUMBER: 10176810

WEBER STATE UNIVERSITY
OGDEN, UTAH 84408

SEAL

MHTN PROJECT NO. 2010543

DRAWN BY: MC CHECKED BY: MG

ISSUED:

NO.	DATE	DESCRIPTION
01	17 MAY 2011	CONSTRUCTION DOCUMENTS

CONTRACTOR TO VERIFY DRAWINGS IN FIELD USE REFLECT LAST REVISION DATE:

NO.	DATE	DESCRIPTION
1	Date 3	Revision 3

SHEET NAME

EXTERIOR ELEVATIONS

CONSTRUCTION DOCUMENTS
17 MAY 2011

SHEET NUMBER

AE202

C:\Users\prestonm\Documents\A11_2010543 WSU RESIDENTIAL LIFE BUILDING II_CENTRAL_prestonm.rvt
5/17/2011 12:21:10 PM

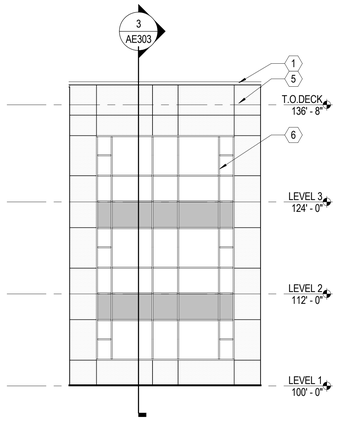

1 EAST ELEVATION - GRID '3'

SCALE: 1/8" = 1'-0"

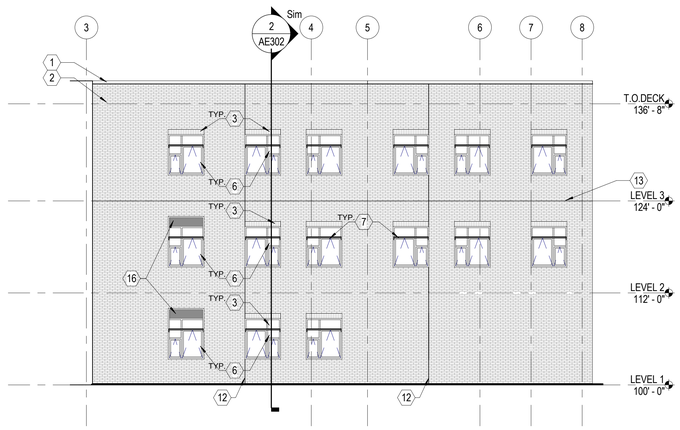

2 SOUTH ELEVATION - GRID 'K'

SCALE: 1/8" = 1'-0"

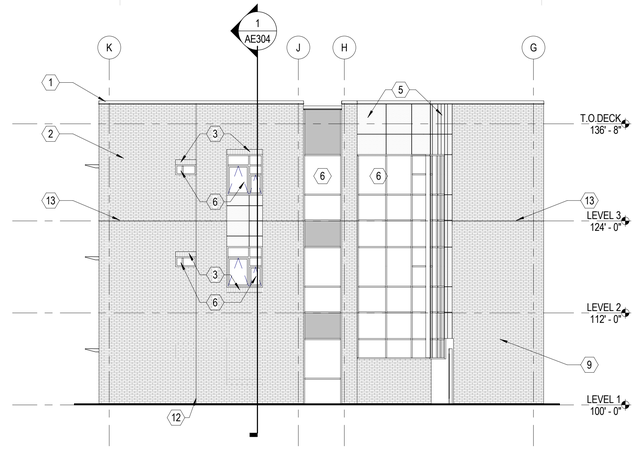

3 EAST ELEVATION - GRID '8'

SCALE: 1/8" = 1'-0"

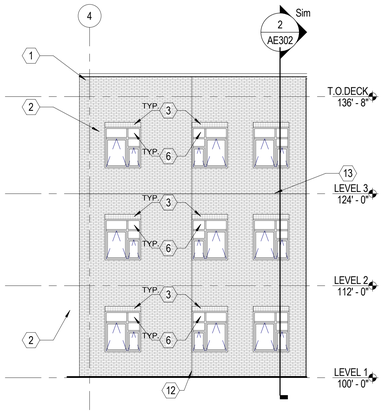

4 NORTH ELEVATION - GRID 'G'

SCALE: 1/8" = 1'-0"

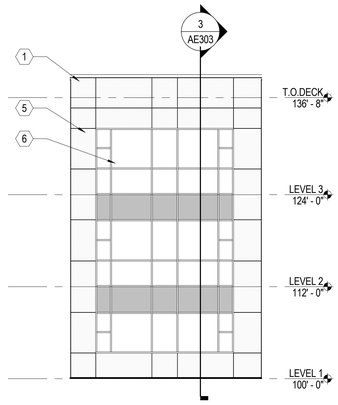

5 EAST ELEVATION - GRID '3'

SCALE: 1/8" = 1'-0"

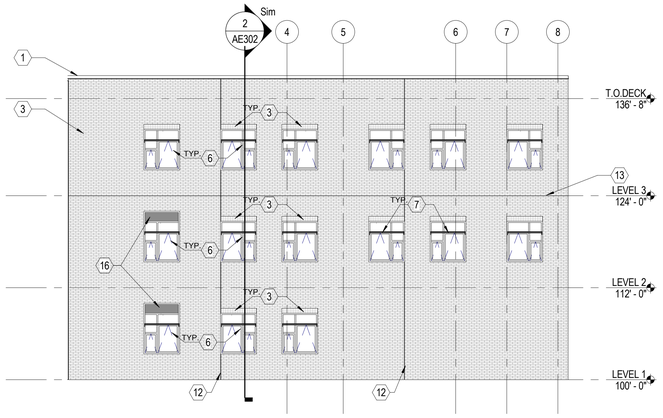

6 SOUTH ELEVATION - GRID 'E'

SCALE: 1/8" = 1'-0"

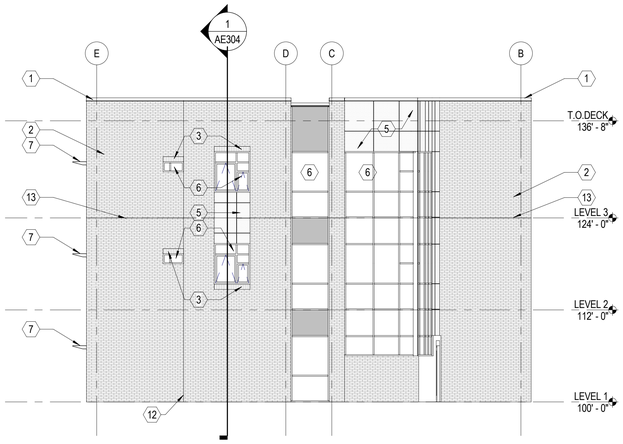

7 EAST ELEVATION - GRID '8'

SCALE: 1/8" = 1'-0"

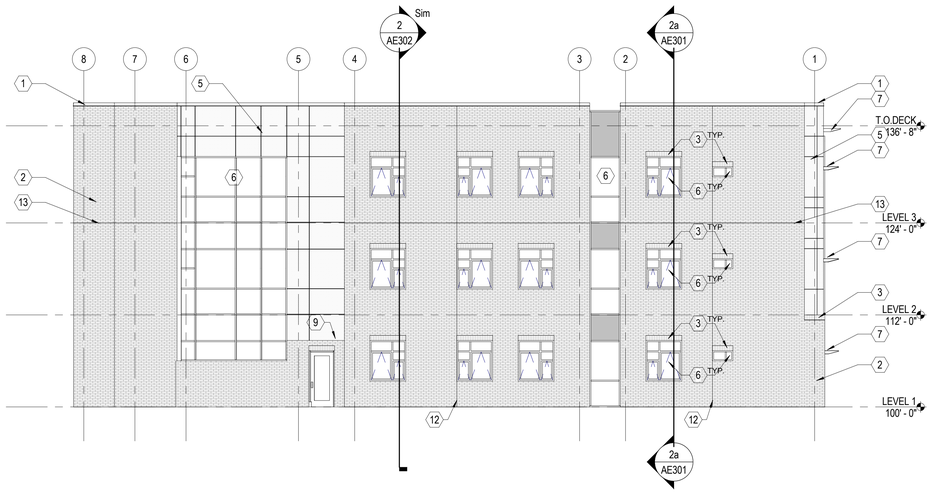

8 NORTH ELEVATION - GRID 'A'

SCALE: 1/8" = 1'-0"

GENERAL NOTES

1. CONTINUE ALL MATERIALS AND PATTERNS TO SURFACES NOT SHOWN IN ELEVATION.

2. NOT ALL ROOFTOP EQUIP. IS SHOWN, RE: MECHANICAL DRAWINGS AND ARCHITECTURAL ROOF PLAN.

3. DIMENSIONS SHOWN FOR MASONRY COURSING ARE NOMINAL U.N.O.

4. SEE WINDOW TYPE DRAWINGS FOR ADDITIONAL INFORMATION REGARDING WINDOW SYSTEMS AND GLAZING.

5. ALL EXPOSED METAL FABRICATIONS SHALL BE PRE-FINISHED

6. SEE STRUCTURAL DRAWINGS FOR LOCATIONS OF STEPS IN CONCRETE FOUNDATIONS.

7. SEE LANDSCAPE, CIVIL, & STRUCTURAL PLANS FOR INFORMATION REGARDING SITE WALLS AND RETAINING WALLS.

8. SEE D5/AE508 FOR MASONRY VENEER REINFORCEMENT DETAIL

9. METAL PANEL WIDTH NOT TO EXCEED 10'-0"

KEYNOTES

1. PRE-FINISHED METAL COPING
2. FIELD COLOR BRICK VENEER
3. SOLDIER COURSE ACCENT BRICK VENEER
4. STACK BOND ACCENT BRICK VENEER
5. COMPOSITE METAL PANEL SYSTEM
6. SCHEDULED WINDOW SYSTEM
7. PRE-MANUFACTURED SUNSHADE SYSTEM
8. SANDSTONE VENEER
9. WALL-MOUNTED CAN LIGHT @ 9'-0" A.F.F.
10. GUARDRAIL
11. ENTRY CANOPY
12. MASONRY CONTROL JOINT
13. MASONRY LINTEL ANGLE
14. CONCRETE
15. COMPOSITE METAL COLUMN COVER
16. LOUVER
17. DRYER VENT

MHTN
ARCHITECTS
MHTN Architects, Inc.
420 East South Temple
Suite 100
Salt Lake City, Utah 84111
Telephone (801) 595-6700
Telefax (801) 595-6717
www.mhtn.com

WEBER STATE UNIVERSITY
RESIDENTIAL LIFE PHASE II - BLDG 2

DFCM PROJECT NUMBER: 10176810

WEBER STATE UNIVERSITY
OGDEN, UTAH 84408

SEAL

MHTN PROJECT NO. 2010543

DRAWN BY: MC CHECKED BY: MG

ISSUED:

NO.	DATE	DESCRIPTION
01	17 MAY 2011	CONSTRUCTION DOCUMENTS

CONTRACTOR TO VERIFY DRAWINGS IN FIELD USE REFLECT LAST REVISION DATE:

NO.	DATE	DESCRIPTION

SHEET NAME

EXTERIOR ELEVATIONS

CONSTRUCTION DOCUMENTS
17 MAY 2011

SHEET NUMBER

AE203

C:\Users\prestonm\Documents\A11_2010543 WSU RESIDENTIAL LIFE BUILDING II_CENTRAL_prestonm.rvt
5/17/2011 12:21:38 PM

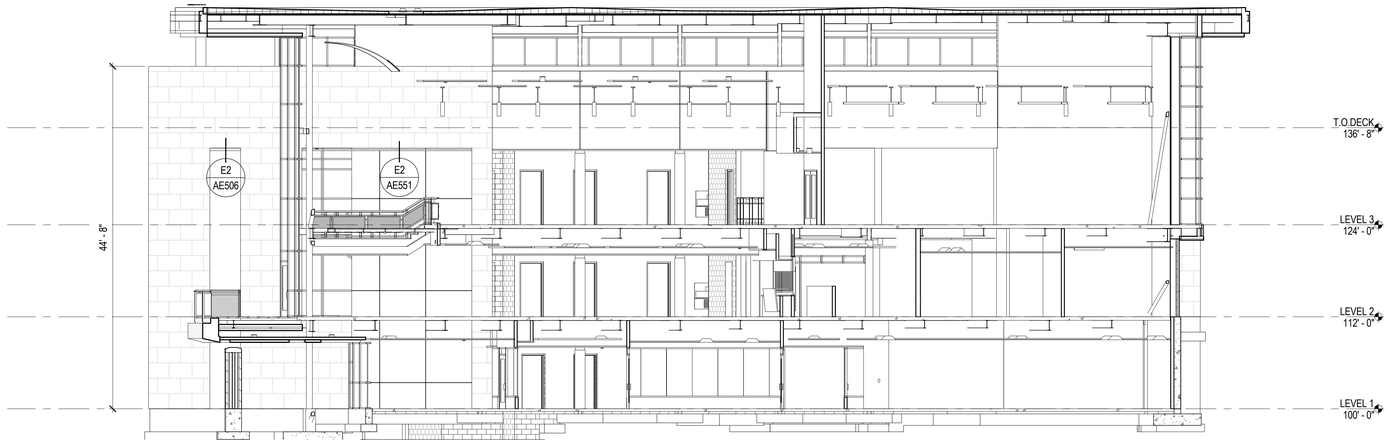

1 BUILDING SECTION

SCALE: 1/8" = 1'-0"

2a BUILDING SECTION UNFOLDED

SCALE: 1/8" = 1'-0"

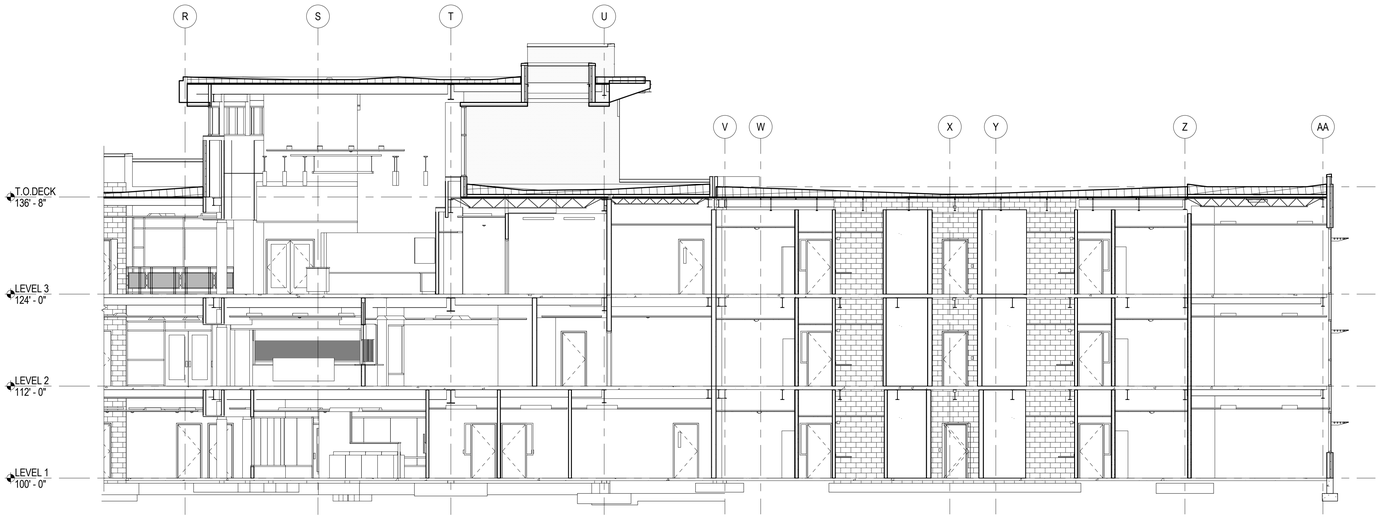

2b BUILDING SECTION UNFOLDED

SCALE: 1/8" = 1'-0"

C:\Users\preston\Documents\A11_2010543 WSU RESIDENTIAL LIFE BUILDING II_CENTRAL_preston.rvt
5/17/2011 12:21:47 PM

MHTN
ARCHITECTS
MHTN Architects, Inc.
420 East South Temple
Suite 100
Salt Lake City, Utah 84111
Telephone (801) 595-6700
Telefax (801) 595-6717
www.mhtn.com

WEBER STATE UNIVERSITY
RESIDENTIAL LIFE PHASE II - BLDG 2
DFCM PROJECT NUMBER: 10176810

WEBER STATE UNIVERSITY
OGDEN, UTAH 84408

SEAL

MHTN PROJECT NO. 2010543

DRAWN BY: MLH CHECKED BY: MG

ISSUED:

NO.	DATE	DESCRIPTION
01	17 MAY 2011	CONSTRUCTION DOCUMENTS

CONTRACTOR TO VERIFY DRAWINGS IN FIELD USE REFLECT LAST REVISION DATE:

NO.	DATE	DESCRIPTION

SHEET NAME
BUILDING SECTIONS

CONSTRUCTION DOCUMENTS
17 MAY 2011

SHEET NUMBER
AE301

C:\Users\prestonn\Documents\A11_2010543 WSU RESIDENTIAL LIFE BUILDING II_CENTRAL_prestonn.rvt
5/17/2011 12:21:50 PM

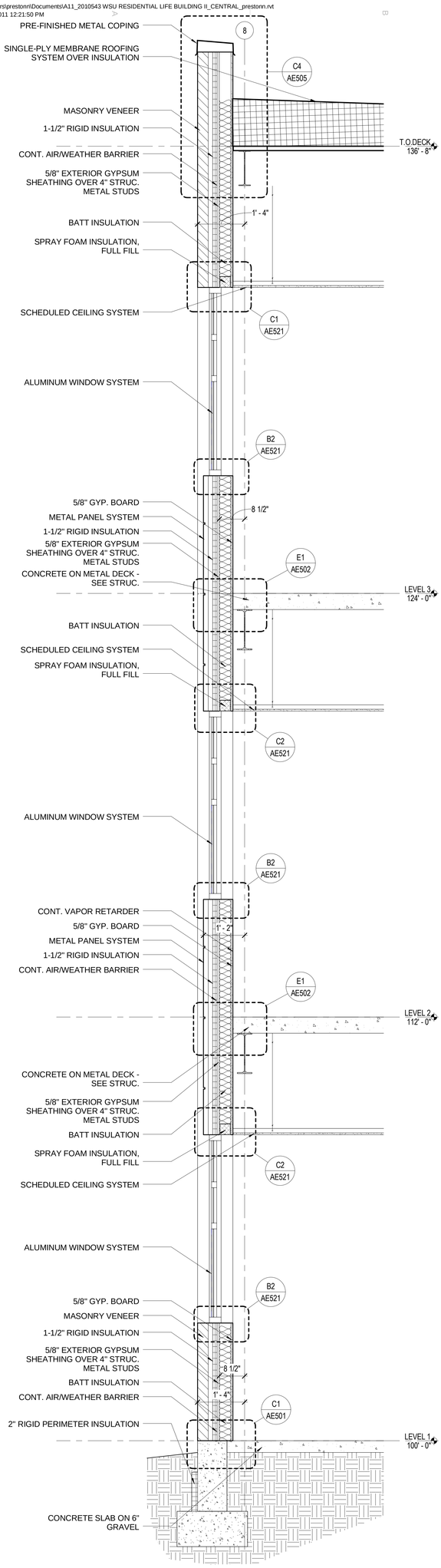

1 WALL SECTION

SCALE: 3/4" = 1'-0"

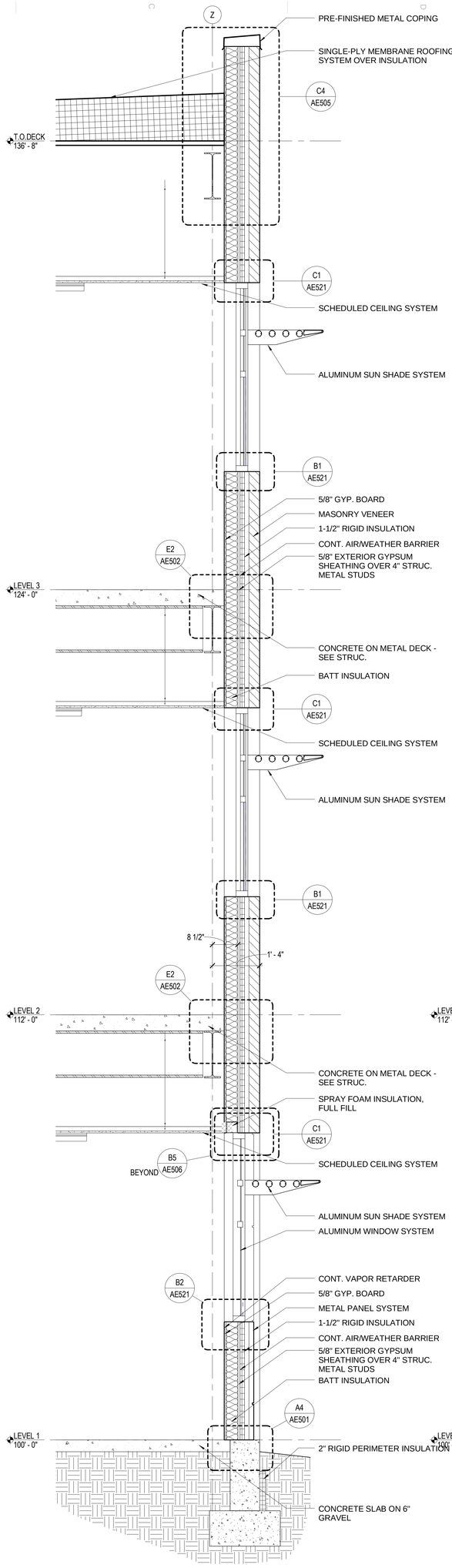

2 WALL SECTION

SCALE: 3/4" = 1'-0"

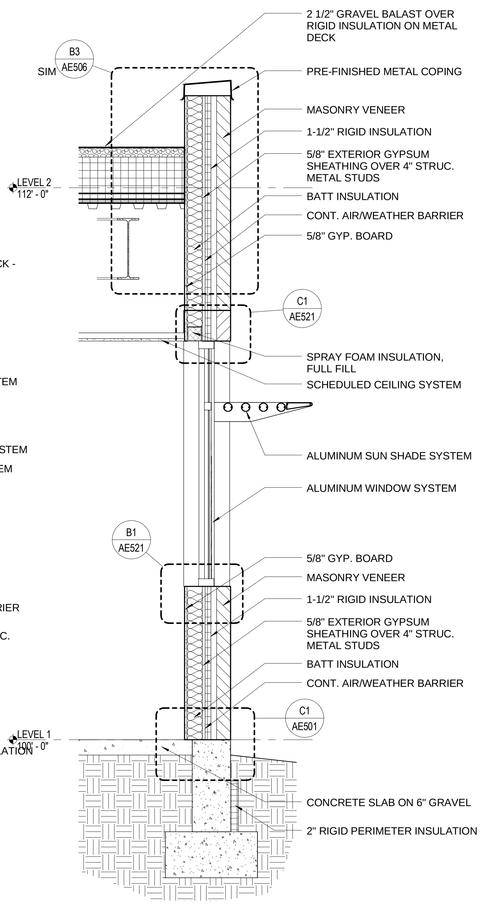

3 WALL SECTION

SCALE: 3/4" = 1'-0"

WEBER STATE UNIVERSITY

RESIDENTIAL LIFE PHASE II - BLDG 2

DFCM PROJECT NUMBER: 10176810

WEBER STATE UNIVERSITY
OGDEN, UTAH 84408

MHTN ARCHITECTS
MHTN Architects, Inc.
60 East South Temple
Suite 100
Salt Lake City, Utah 84111
Phone: (801) 355-6700
Telefax: (801) 355-6717
www.mhtn.com

NO.	DATE	DESCRIPTION
0	17 MAY 2011	CONSTRUCTION DOCUMENTS

MHTN PROJECT NO. 2010543
DRAWN BY: Mark
CHECKED BY: MD
ISSUED:

SHEET NAME
WALL SECTIONS

CONSTRUCTION DOCUMENTS
17 MAY 2011

SHEET NUMBER
AE302

C:\Users\prestonn\Documents\A11_2010543 WSU RESIDENTIAL LIFE BUILDING II_CENTRAL_prestonn.rvt
5/17/2011 12:21:53 PM

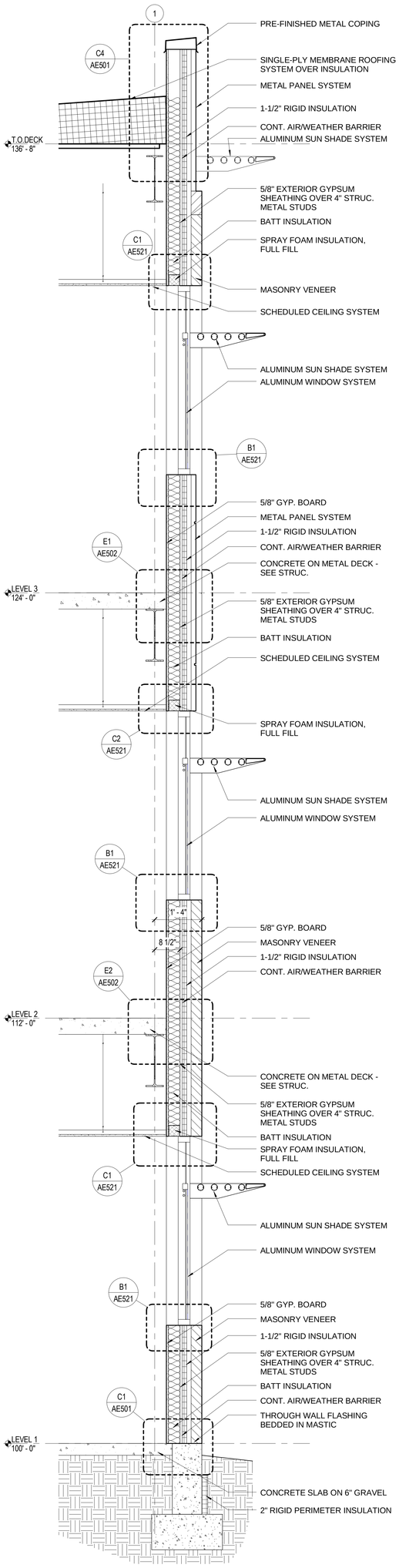

1 WALL SECTION

SCALE: 3/4" = 1'-0"

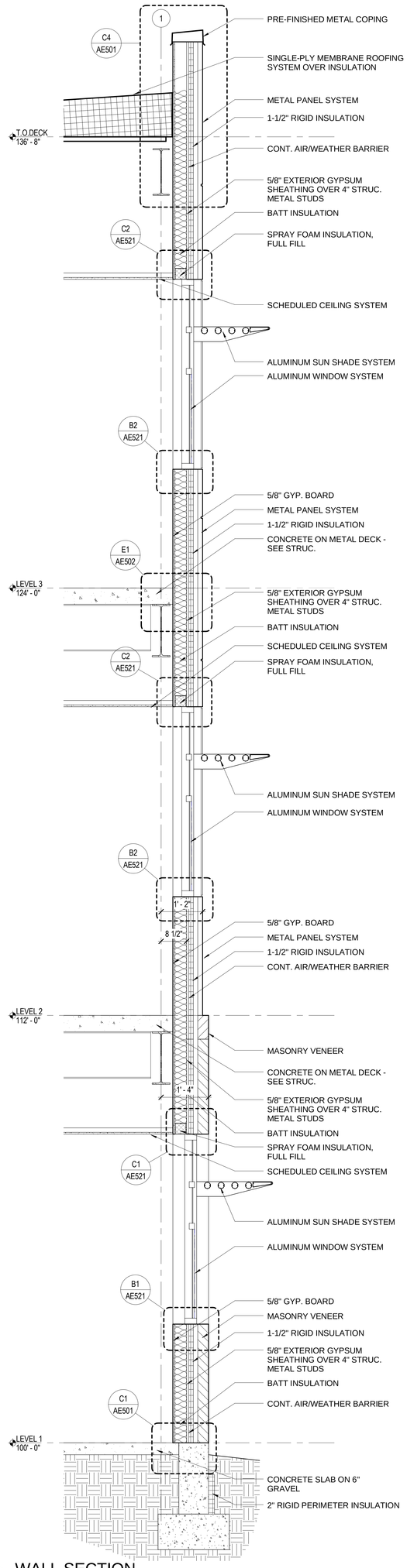

2 WALL SECTION

SCALE: 3/4" = 1'-0"

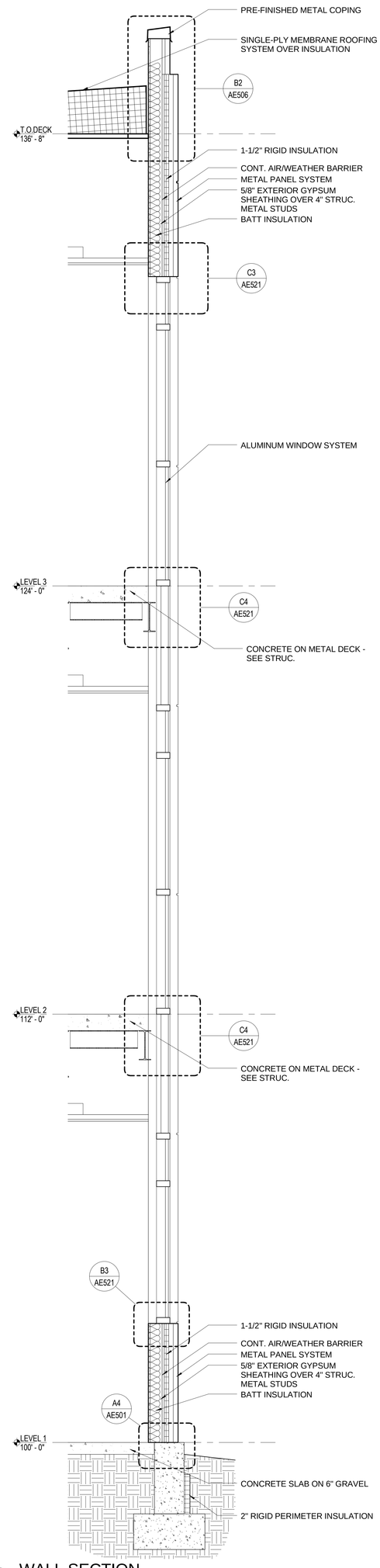

3 WALL SECTION

SCALE: 3/4" = 1'-0"

MHTN ARCHITECTS

MHTN Architects, Inc.
Architects
526 East South Temple
Salt Lake City, Utah 84111
Telephone (801) 595-0700
Telefax (801) 595-0717
www.mhtn.com

WEBER STATE UNIVERSITY

RESIDENTIAL LIFE PHASE II - BLDG 2

DFCM PROJECT NUMBER: 10176810

WEBER STATE UNIVERSITY
OGDEN, UTAH 84408

SEAL

NO.	DATE	DESCRIPTION
1	13 MAY 2011	CONSTRUCTION DOCUMENTS

ISSUED FOR:

DRAWN BY: MJM

CHECKED BY: MD

MHTN PROJECT No. 2010543

SHEET NAME

WALL SECTIONS

CONSTRUCTION DOCUMENTS
17 MAY 2011

SHEET NUMBER

AE303

C:\Users\prestonr\Documents\A11_20100543.WSU RESIDENTIAL LIFE BUILDING II_CENTRAL_prestonn.rvt
5/17/2011 12:13:57 PM

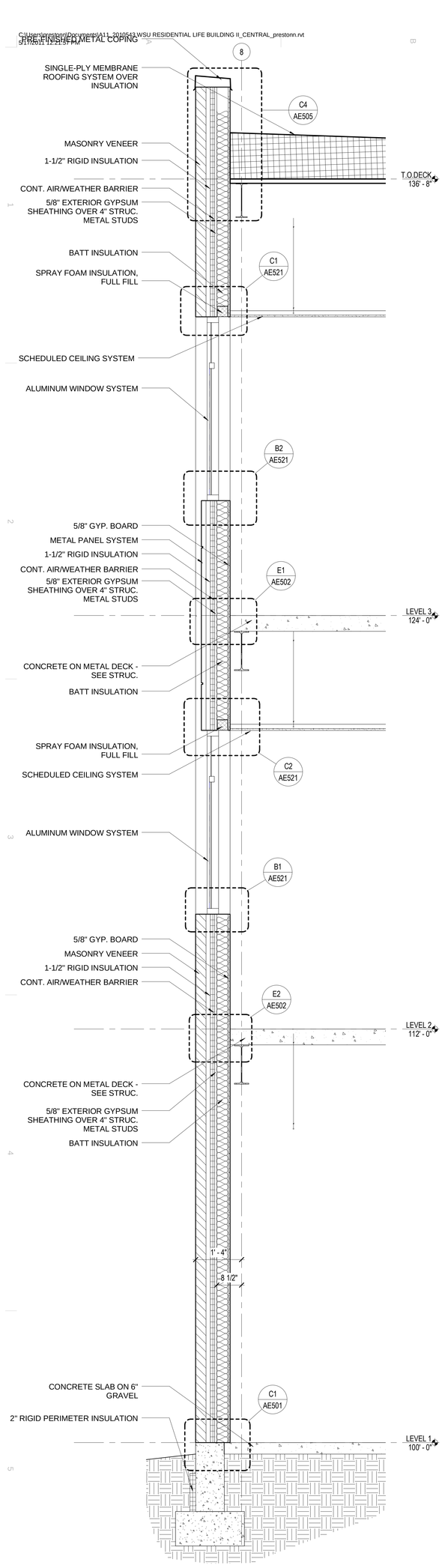

1 WALL SECTION

SCALE: 3/4" = 1'-0"

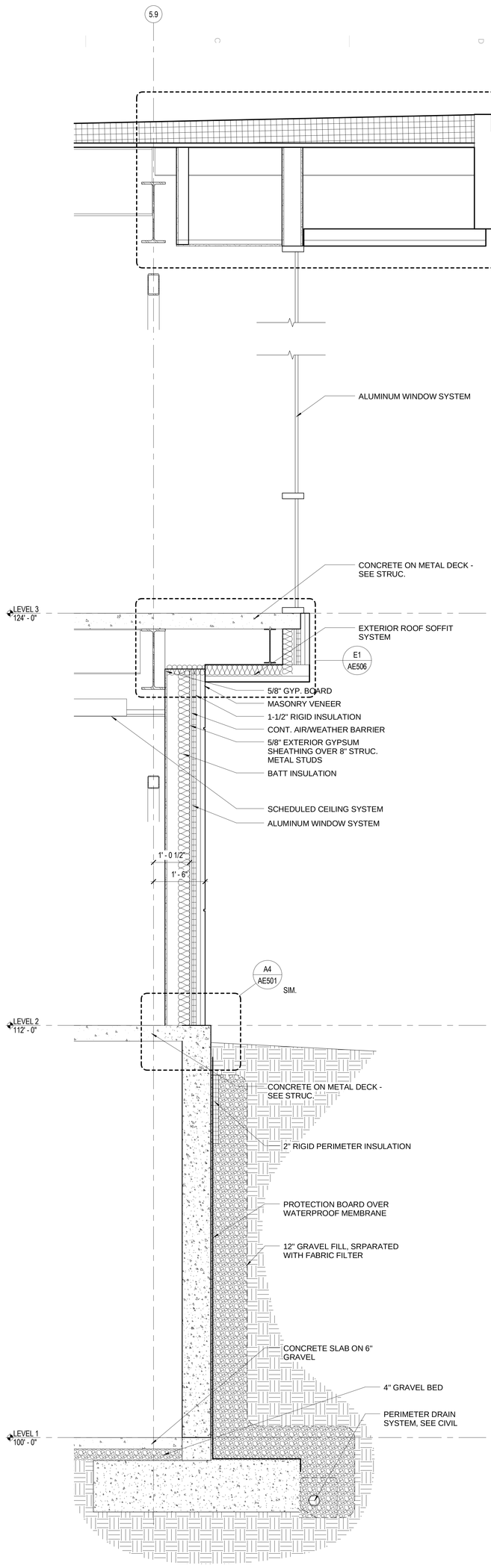

2 WALL SECTION

SCALE: 3/4" = 1'-0"

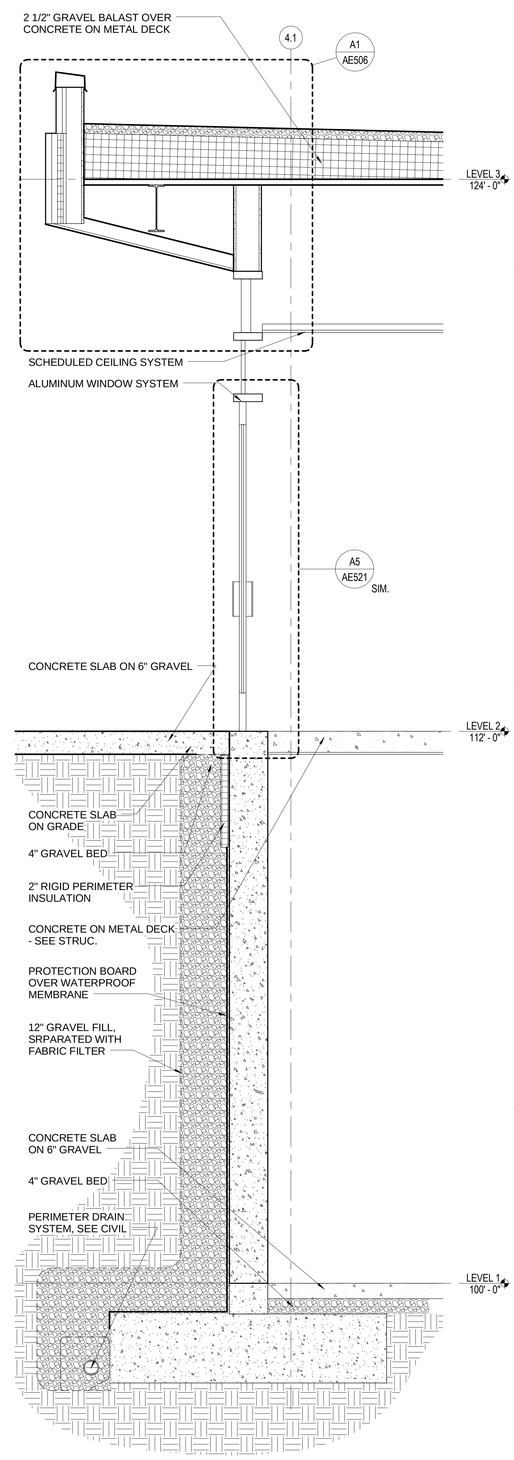

3 WALL SECTION

SCALE: 3/4" = 1'-0"

WEBER STATE UNIVERSITY

RESIDENTIAL LIFE PHASE II - BLDG 2

DFCM PROJECT NUMBER: 10176810

WEBER STATE UNIVERSITY
OGDEN, UTAH 84408

SEAL

MHTN ARCHITECTS
MHTN Architects, Inc.
60 E. South Temple
Suite 100
Salt Lake City, Utah 84111
Telephone (801) 521-7700
Telefax (801) 595-8717
www.mhtn.com

MHTN PROJECT NO. 20100543
DRAWN BY: MJH CHECKED BY: MG

ISSUED:

NO.	DATE	DESCRIPTION
0	17 MAY 2011	CONSTRUCTION DOCUMENTS

REVISIONS:

NO.	DATE	DESCRIPTION
1	Date 3	Revision 3

CONTRACTOR TO VERIFY DRAWINGS IN FIELD OR REPORT ERRORS, OMISSIONS, OR CONFLICTS TO ARCHITECT ASAP

SHEET NAME
WALL SECTIONS

CONSTRUCTION DOCUMENTS
17 MAY 2011

SHEET NUMBER
AE304

C:\Users\prestonn\Documents\A11_2010543 WSU RESIDENTIAL LIFE BUILDING II_CENTRAL_prestonn.rvt
5/17/2011 12:21:59 PM

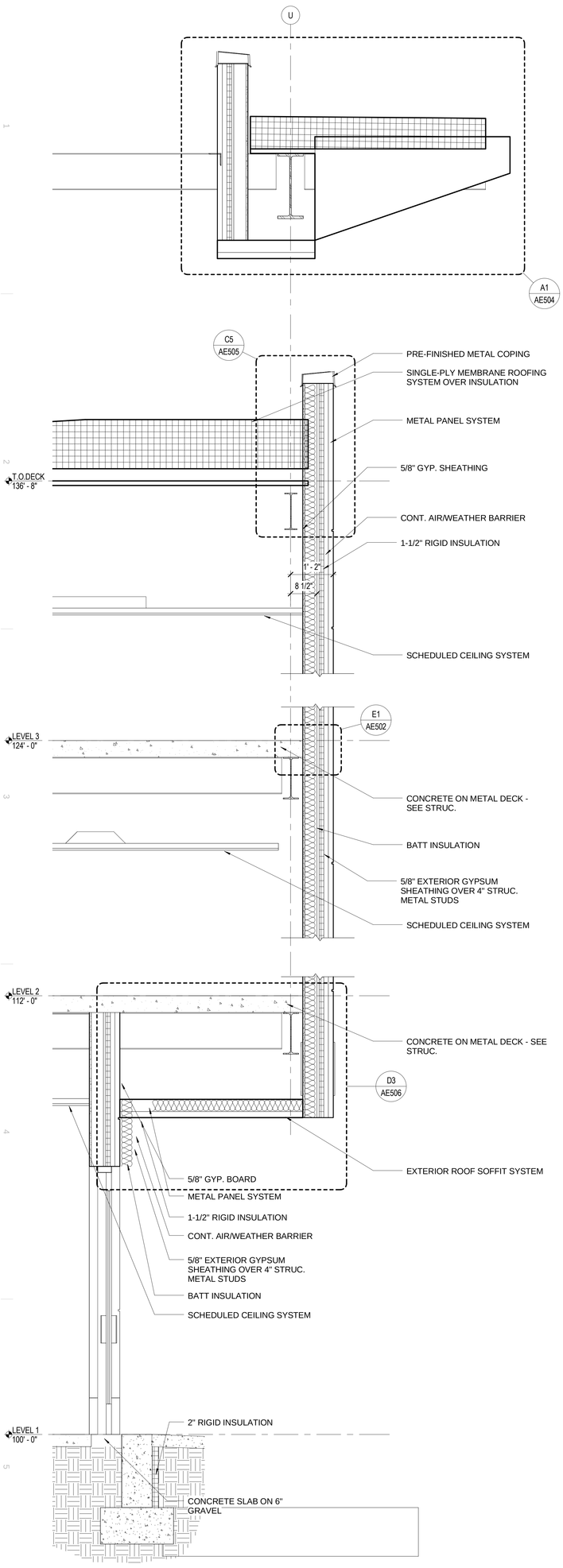

1 WALL SECTION

SCALE: 3/4" = 1'-0"

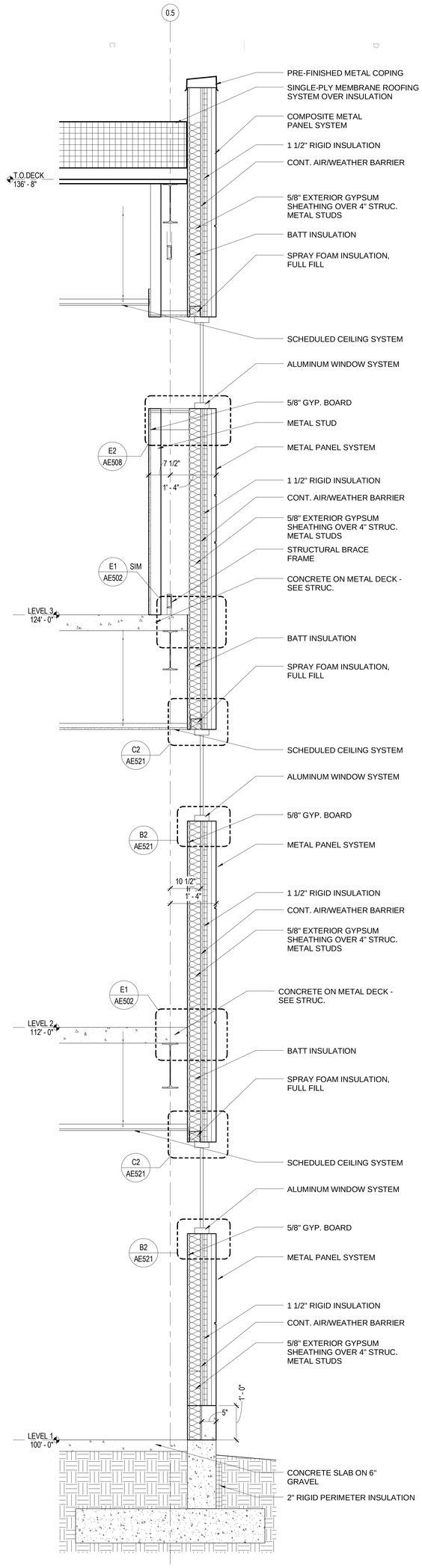

2 WALL SECTION

SCALE: 3/4" = 1'-0"

WEBER STATE UNIVERSITY

RESIDENTIAL LIFE PHASE II - BLDG 2

DFCM PROJECT NUMBER: 10176810

WEBER STATE UNIVERSITY
OGDEN, UTAH 84408

MHTN ARCHITECTS
MHTN Architects, Inc.
60 E. South Temple
Suite 800
Salt Lake City, Utah 84111
Telephone (801) 521-7700
Telefax (801) 595-6717
www.mhtn.com

SEAL

MHTN PROJECT NO. 2010543

DRAWN BY: MJ/J

CHECKED BY: MS

ISSUED:

NO.	DATE	DESCRIPTION
1	17 MAY 2011	CONSTRUCTION DOCUMENTS

CONTRACTOR SHALL VERIFY DRAWINGS IN FIELD. DO NOT SCALE DRAWINGS. VERIFY DIMENSIONS.

NO.	DATE	DESCRIPTION

SHEET NAME

WALL SECTIONS

CONSTRUCTION DOCUMENTS
17 MAY 2011

SHEET NUMBER

AE305

C:\Users\prestonn\Documents\A11_2010543 WSU RESIDENTIAL LIFE BUILDING II_CENTRAL_prestonn.rvt
5/17/2011 12:22:01 PM

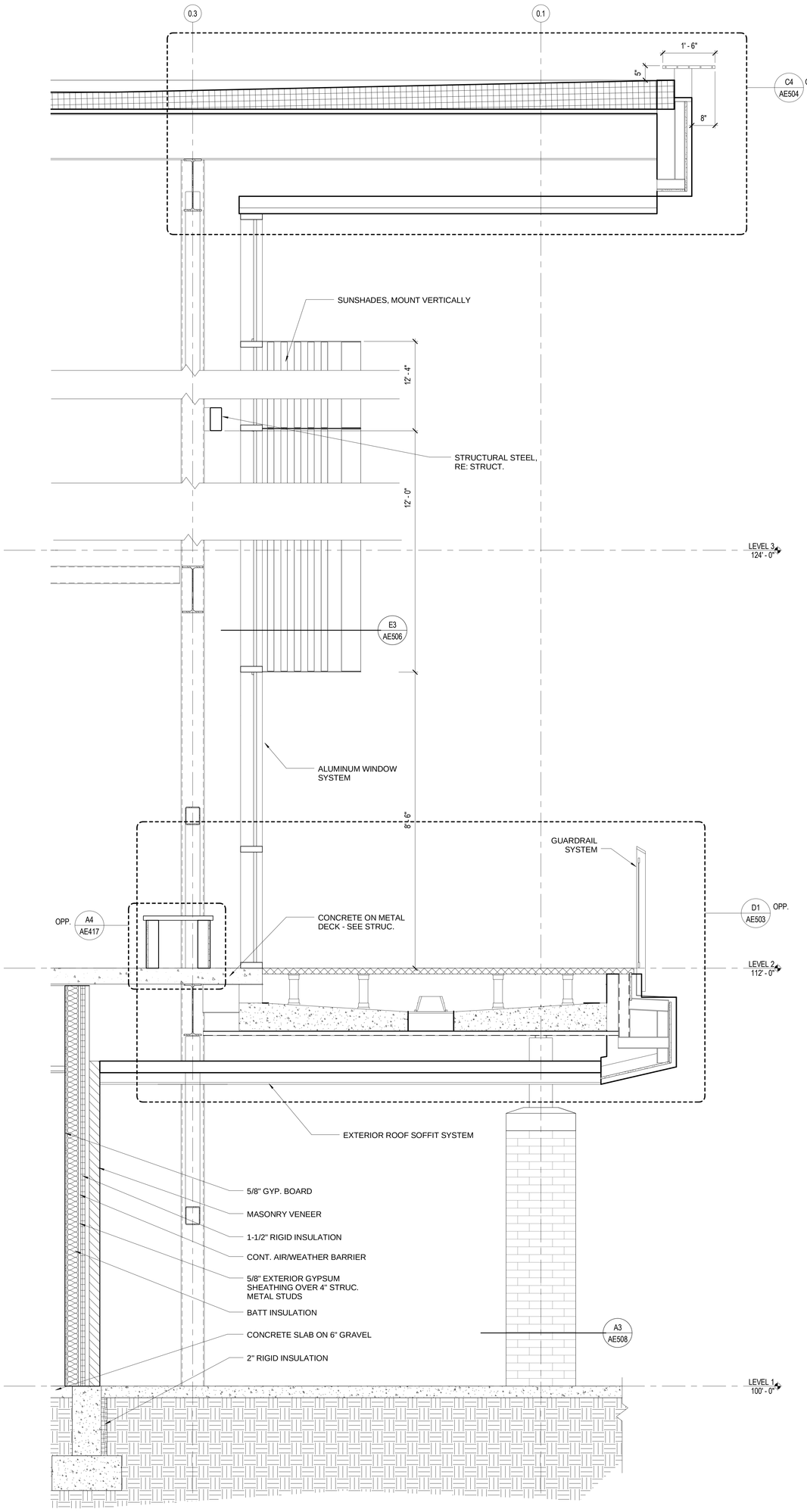

1 WALL SECTION

SCALE: 3/4" = 1'-0"

WEBER STATE UNIVERSITY

RESIDENTIAL LIFE PHASE II - BLDG 2

DFCM PROJECT NUMBER: 10176810

WEBER STATE UNIVERSITY
OGDEN, UTAH 84408

MHTN ARCHITECTS
MHTN Architects, Inc.
Academy Square
220 East South Temple
Salt Lake City, Utah 84111
Telephone (801) 595-0700
Telefax (801) 595-0717
www.mhtn.com

SEAL

MHTN PROJECT No. 2010543
DRAWN BY: Author
CHECKED BY: Checker

ISSUED:

NO.	DATE	DESCRIPTION
0	17 MAY 2011	CONSTRUCTION DOCUMENTS

REVISIONS:

NO.	DATE	DESCRIPTION

CONTRACTOR TO VERIFY DIMENSIONS IN FIELD AND REPORT ALL ERRORS TO ARCHITECT

SHEET NAME
WALL SECTIONS

CONSTRUCTION DOCUMENTS
17 MAY 2011

SHEET NUMBER
AE306

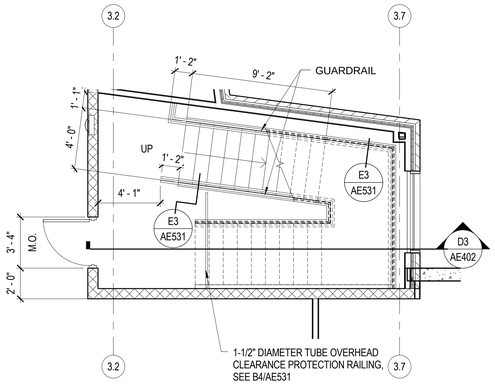

E1 ENLARGED STAIR 199A LEVEL 1

SCALE: 1/4" = 1'-0"

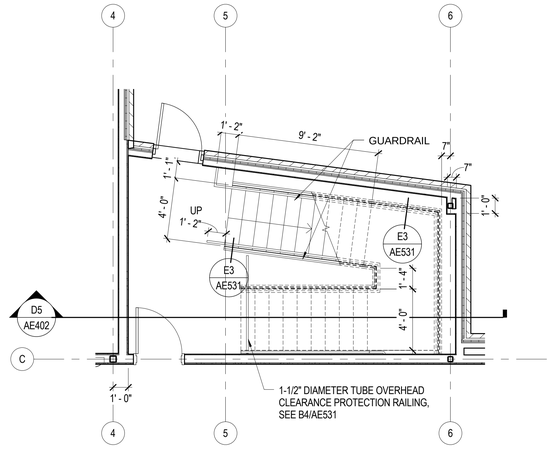

E3 ENLARGED STAIR 199B LEVEL 1

SCALE: 1/4" = 1'-0"

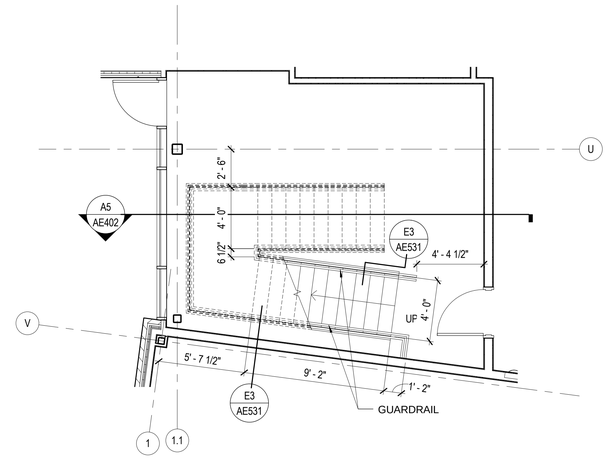

E5 ENLARGED STAIR 199F LEVEL 1

SCALE: 1/4" = 1'-0"

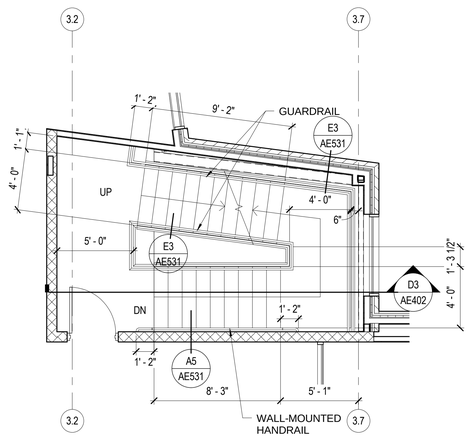

C1 ENLARGED STAIR 299A

SCALE: 1/4" = 1'-0"

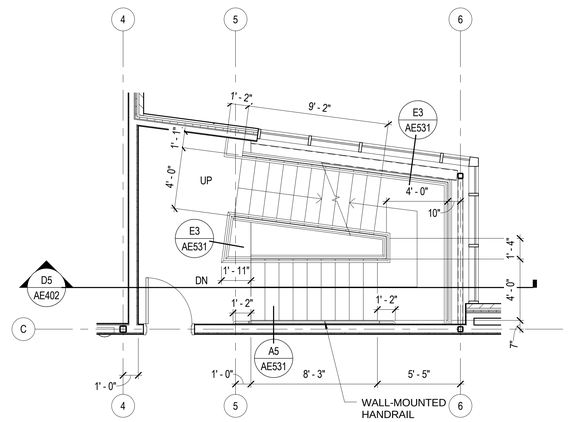

C3 ENLARGED STAIR 199B LEVEL 2

SCALE: 1/4" = 1'-0"

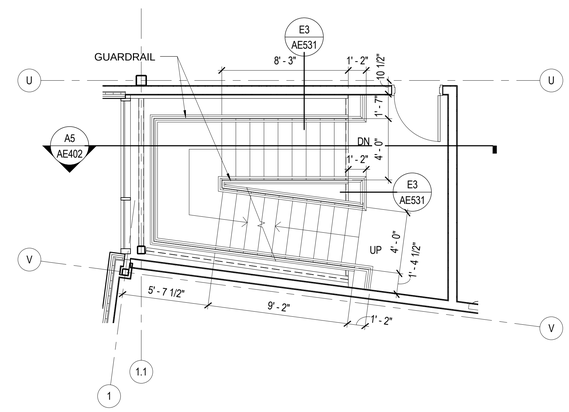

C5 ENLARGED STAIR 299F

SCALE: 1/4" = 1'-0"

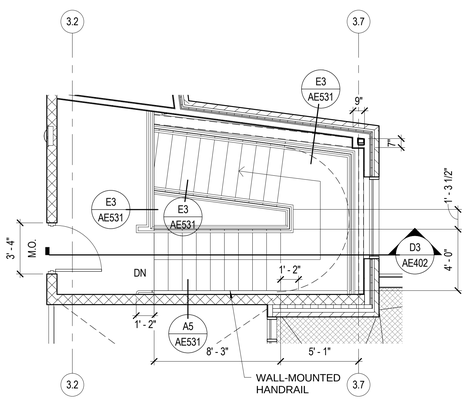

A1 ENLARGED STAIR 399A

SCALE: 1/4" = 1'-0"

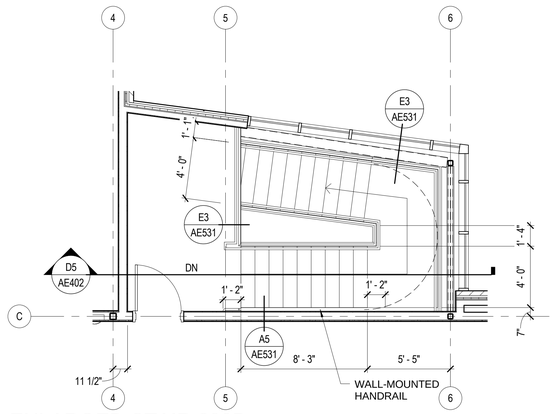

A3 ENLARGED STAIR 399B

SCALE: 1/4" = 1'-0"

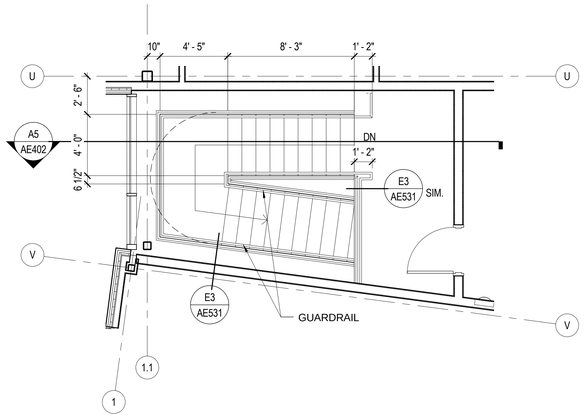

A5 ENLARGED STAIR 399F

SCALE: 1/4" = 1'-0"

MHTN
ARCHITECTS
MHTN Architects, Inc.
420 East South Temple
Suite 100
Salt Lake City, Utah 84111
Telephone (801) 595-6700
Telefax (801) 595-6717
www.mhtn.com

WEBER STATE UNIVERSITY
RESIDENTIAL LIFE PHASE II - BLDG 2

DFCM PROJECT NUMBER: 10176810

WEBER STATE UNIVERSITY
OGDEN, UTAH 84408

SEAL

MHTN PROJECT NO. 2010543

DRAWN BY: MC CHECKED BY: MG

ISSUED:

NO.	DATE	DESCRIPTION
01	17 MAY 2011	CONSTRUCTION DOCUMENTS

CONTRACTOR TO VERIFY DRAWINGS IN FIELD USE REFLECT LAST REVISION DATE.

NO.	DATE	DESCRIPTION

SHEET NAME

STAIR PLANS & SECTIONS

CONSTRUCTION DOCUMENTS
17 MAY 2011

SHEET NUMBER

AE401

C:\Users\preston\Documents\A11_2010543 WSU RESIDENTIAL LIFE BUILDING II_CENTRAL_preston.rvt
5/17/2011 12:22:09 PM

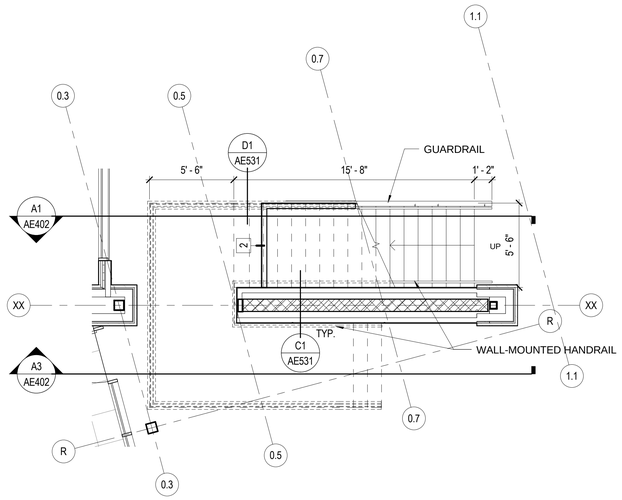

E1 ENLARGED STAIR 299G

SCALE: 1/4" = 1'-0"

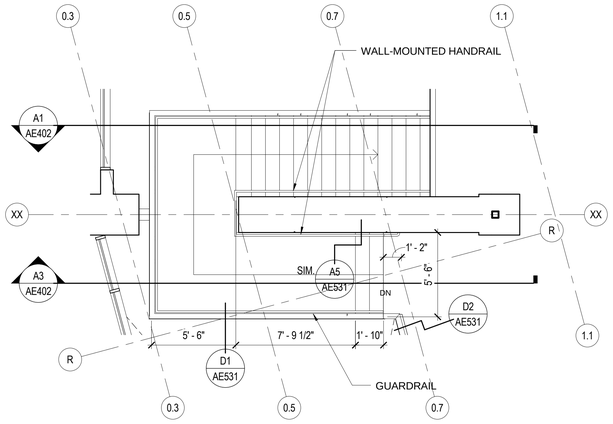

C1 ENLARGED STAIR 399G

SCALE: 1/4" = 1'-0"

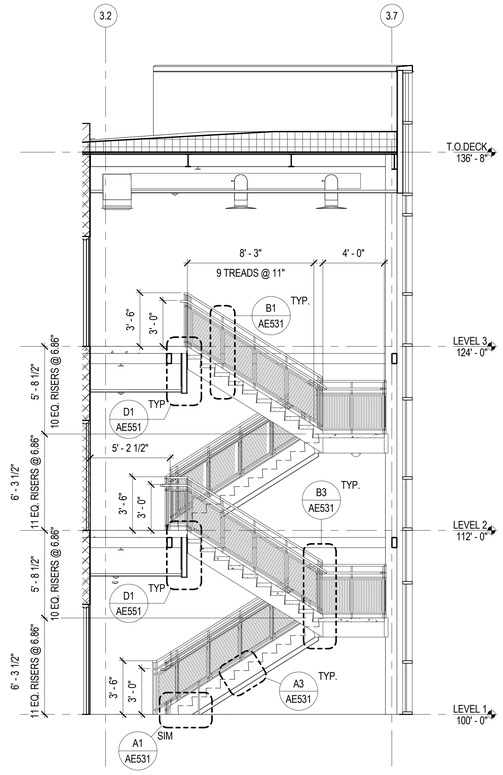

D3 STAIR A SECTION

SCALE: 1/4" = 1'-0"

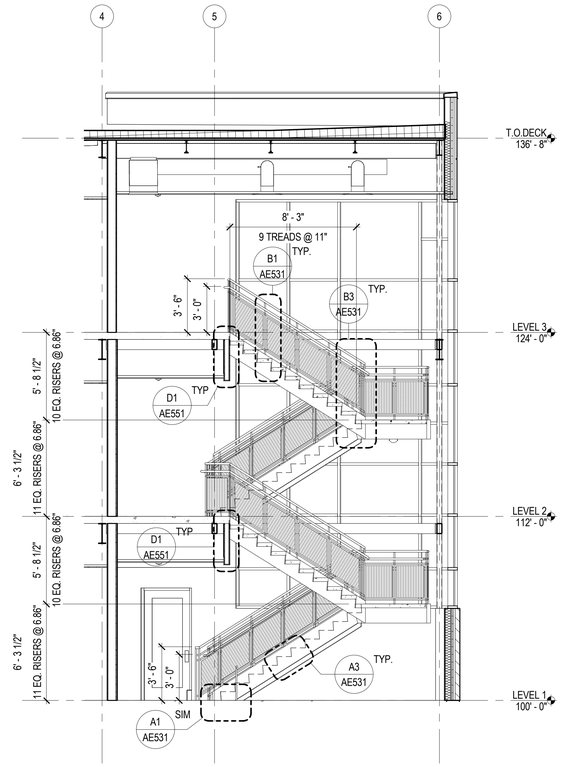

D5 STAIR B SECTION

SCALE: 1/4" = 1'-0"

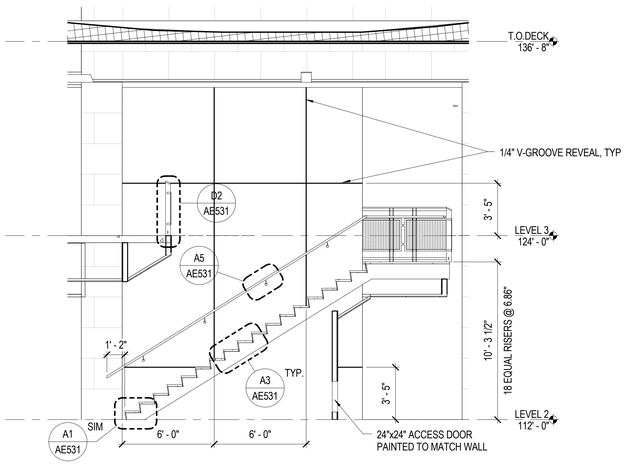

A1 STAIR G SECTION

SCALE: 1/4" = 1'-0"

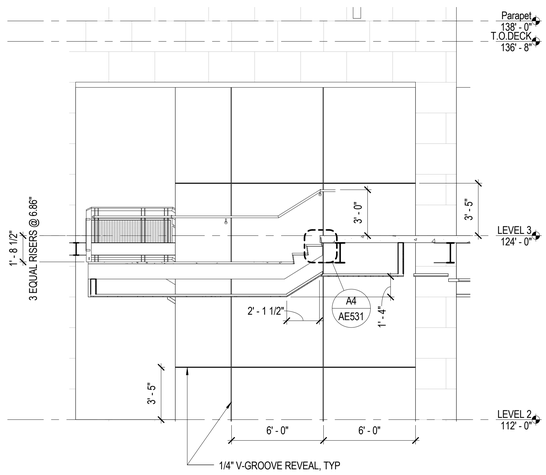

A3 STAIR G SECTION 02

SCALE: 1/4" = 1'-0"

MHTN ARCHITECTS

MHTN Architects, Inc.
420 East South Temple
Suite 100
Salt Lake City, Utah 84111
Telephone (801) 595-6700
Telefax (801) 595-6717
www.mhtn.com

WEBER STATE UNIVERSITY
RESIDENTIAL LIFE PHASE II - BLDG 2

DFCM PROJECT NUMBER: 10176810

WEBER STATE UNIVERSITY
OGDEN, UTAH 84408

SEAL

MHTN PROJECT NO. 2010543

DRAWN BY: MC CHECKED BY: MG

ISSUED:

NO.	DATE	DESCRIPTION
01	17 MAY 2011	CONSTRUCTION DOCUMENTS

CONTRACTOR TO VERIFY DRAWINGS IN FIELD USE REFLECT LAST REVISION DATE

NO.	DATE	DESCRIPTION

SHEET NAME

STAIR PLANS & SECTIONS

CONSTRUCTION DOCUMENTS
17 MAY 2011

SHEET NUMBER

AE402

C:\Users\prestonm\Documents\A11_2010543 WSU RESIDENTIAL LIFE BUILDING II_CENTRAL_prestonm.rvt
5/17/2011 12:22:17 PM

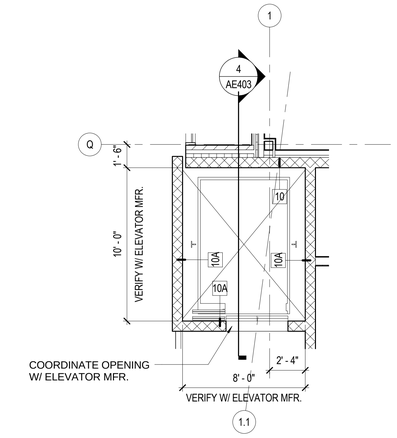

D3 LEVEL 3 ELEVATOR PLAN

SCALE: 1/4" = 1'-0"

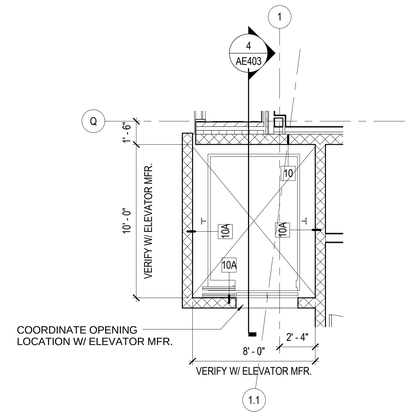

C3 LEVEL 2 ELEVATOR PLAN

SCALE: 1/4" = 1'-0"

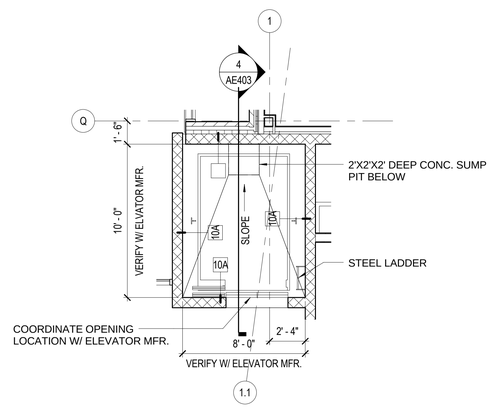

B3 LEVEL 1 ELEVATOR PLAN

SCALE: 1/4" = 1'-0"

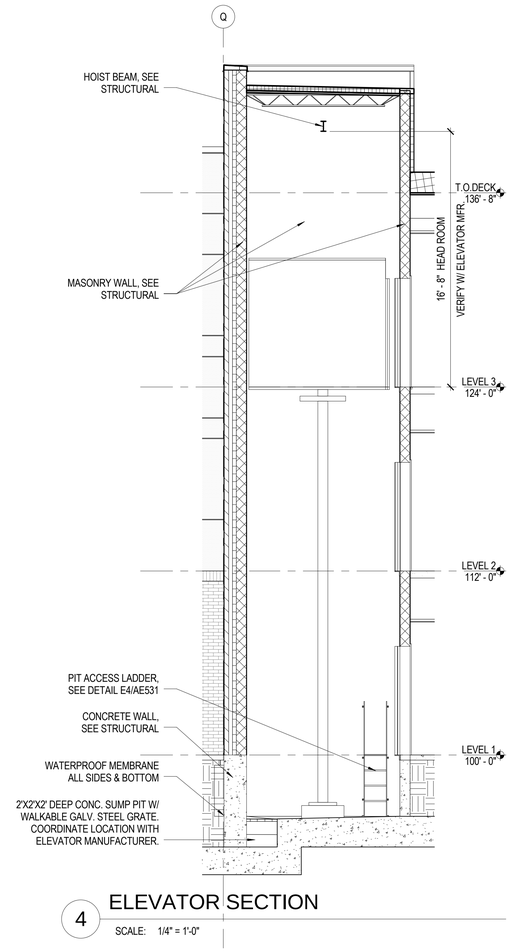

4 ELEVATOR SECTION

SCALE: 1/4" = 1'-0"

MHTN
ARCHITECTS
MHTN Architects, Inc.
420 East South Temple
Suite 100
Salt Lake City, Utah 84111
Telephone (801) 595-6700
Telefax (801) 595-6717
www.mhtn.com

WEBER STATE UNIVERSITY
RESIDENTIAL LIFE PHASE II - BLDG 2

DFCM PROJECT NUMBER: 10176810

WEBER STATE UNIVERSITY
OGDEN, UTAH 84408

SEAL

MHTN PROJECT NO. 2010543

DRAWN BY: MC CHECKED BY: MG

ISSUED:

NO.	DATE	DESCRIPTION
01	17 MAY 2011	CONSTRUCTION DOCUMENTS

CONTRACTOR TO VERIFY DRAWINGS IN FIELD USE REFLECT LAST REVISION DATE:

NO.	DATE	DESCRIPTION

SHEET NAME

ELEVATOR
PLANS &
SECTIONS

CONSTRUCTION DOCUMENTS

17 MAY 2011

SHEET NUMBER

AE403

C:\Users\prestonm\Documents\A11_2010543 WSU RESIDENTIAL LIFE BUILDING II_CENTRAL_prestonm.rvt
5/17/2011 12:22:20 PM

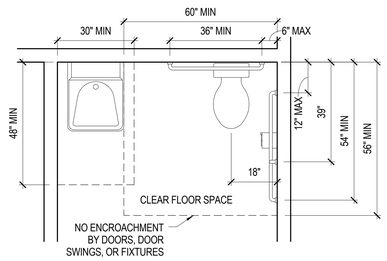

C2 PLAN

SCALE: 1/2" = 1'-0"

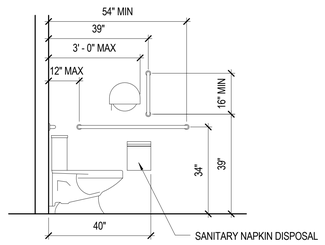

C3 SIDE ELEVATION

SCALE: 1/2" = 1'-0"

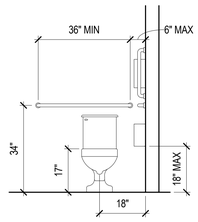

MOUNTING HEIGHTS
WHEELCHAIR & AMBULATORY
ACCESSIBLE TOILET

C4 BACK ELEVATION

SCALE: 1/2" = 1'-0"

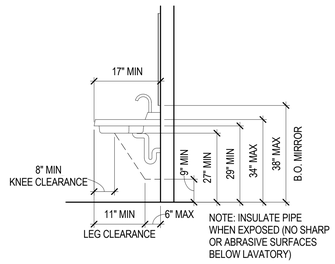

ACCESSIBLE LAVATORY

C5 LAVATORY HEIGHTS

SCALE: 1/2" = 1'-0"

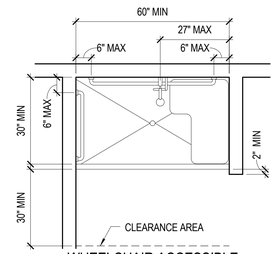

WHEELCHAIR ACCESSIBLE
SHOWER STALL

B1 WHEELCHAIR SHOWER STALL

SCALE: 1/2" = 1'-0"

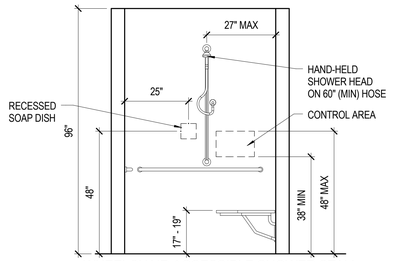

WHEELCHAIR ACCESSIBLE SHOWER STALL

B2 WHEELCHAIR SHOWER ELEVATION

SCALE: 1/2" = 1'-0"

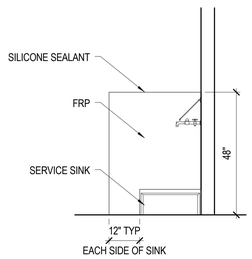

JANITOR SINK

B3 SERVICE SINK ELEVATION

SCALE: 1/2" = 1'-0"

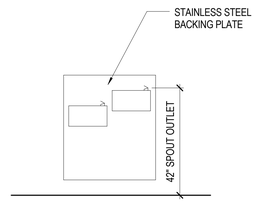

DRINKING FOUNTAIN

B4 EWC FRONT ELEVATION

SCALE: 1/2" = 1'-0"

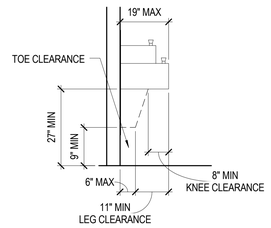

WHEELCHAIR ACCESSIBLE
DRINKING FOUNTAIN

B5 EWC SIDE ELEVATION

SCALE: 1/2" = 1'-0"

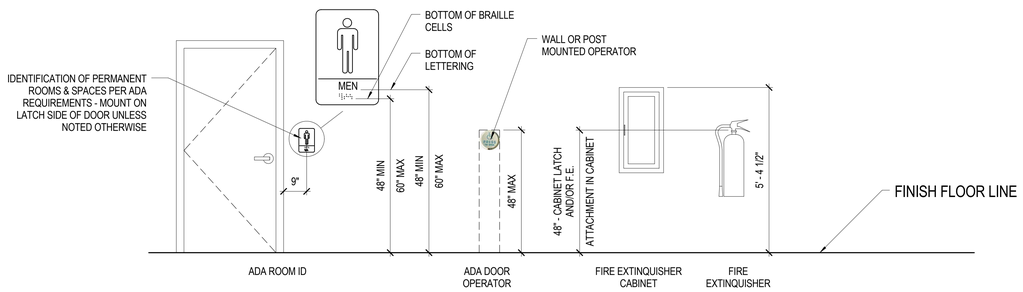

A1 MOUNTING HEIGHTS

SCALE: 1/2" = 1'-0"

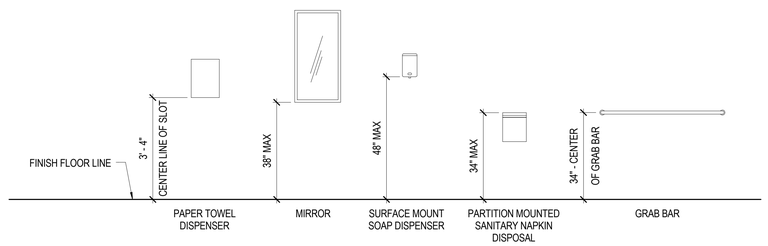

A2 TOILET ROOM EQUIPMENT

SCALE: 1/2" = 1'-0"

MHTN
ARCHITECTS
MHTN Architects, Inc.
420 East South Temple
Suite 100
Salt Lake City, Utah 84111
Telephone (801) 595-6700
Telefax (801) 595-6717
www.mhtn.com

WEBER STATE UNIVERSITY
RESIDENTIAL LIFE PHASE II - BLDG 2
DFCM PROJECT NUMBER: 10176810

WEBER STATE UNIVERSITY
OGDEN, UTAH 84408

SEAL

MHTN PROJECT NO. 2010543

DRAWN BY: MC CHECKED BY: MG

ISSUED:

NO.	DATE	DESCRIPTION
01	17 MAY 2011	CONSTRUCTION DOCUMENTS

CONTRACTOR TO VERIFY DRAWINGS IN FIELD USE REFLECT LAST REVISION DATE.

NO.	DATE	DESCRIPTION

SHEET NAME

TYPICAL
MOUNTING
HEIGHTS

CONSTRUCTION DOCUMENTS
17 MAY 2011

SHEET NUMBER

AE410

C:\Users\prestonm\Documents\A11_2010543 WSU RESIDENTIAL LIFE BUILDING II_CENTRAL_prestonm.rvt
5/17/2011 12:22:21 PM

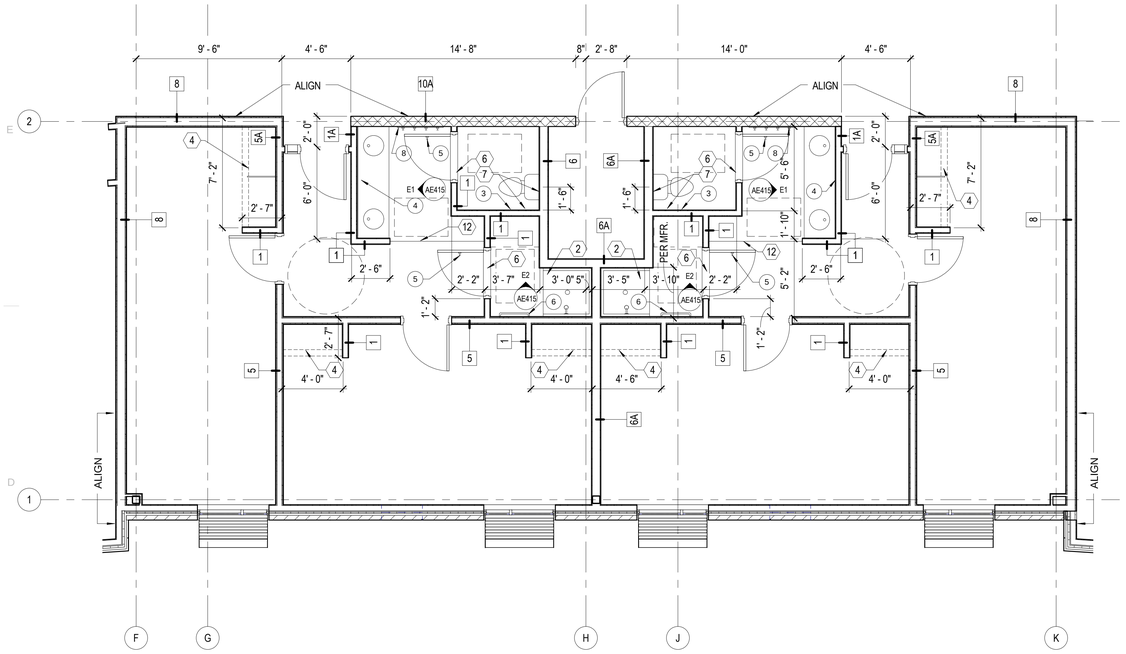

D1 TYPICAL SUITE PLAN

SCALE: 1/4" = 1'-0"

SUITES: 104, 105, 107, 108, 110, 111, 130, 131, 204, 205, 207, 208, 210, 211, 230, 231, 304, 305, 307, 308, 310, 311, 330, 331.

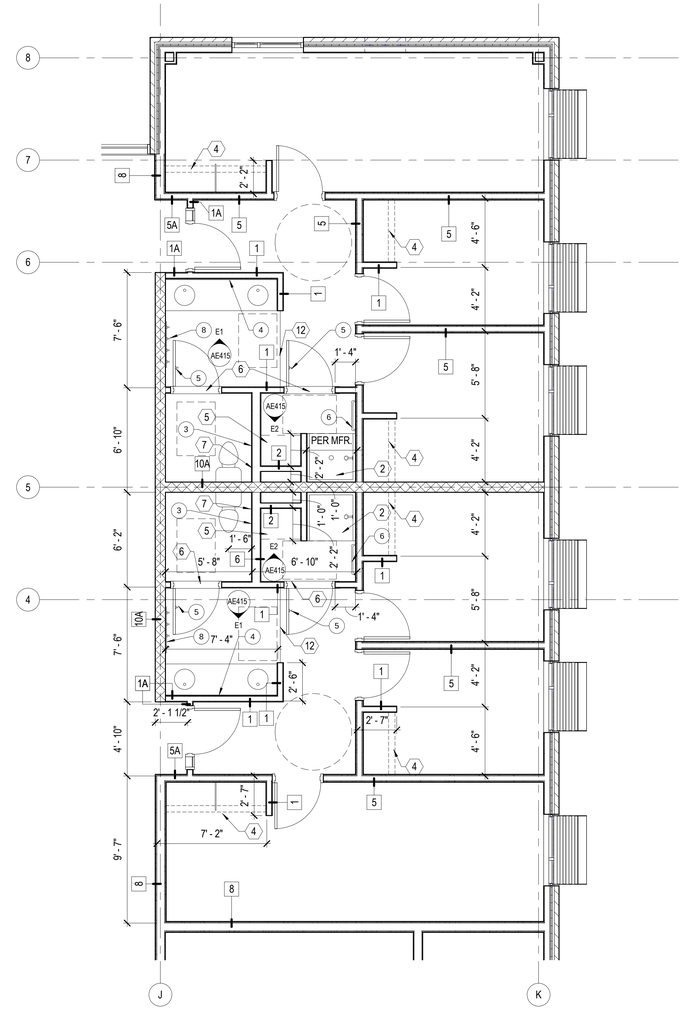

D2 TYPICAL SUITE PLAN

SCALE: 1/4" = 1'-0"

SUITES: 114, 117, 120, 213, 214, 216, 217, 219, 220, 227, 228, 313, 314, 316, 317, 319, 320, 327, 328.

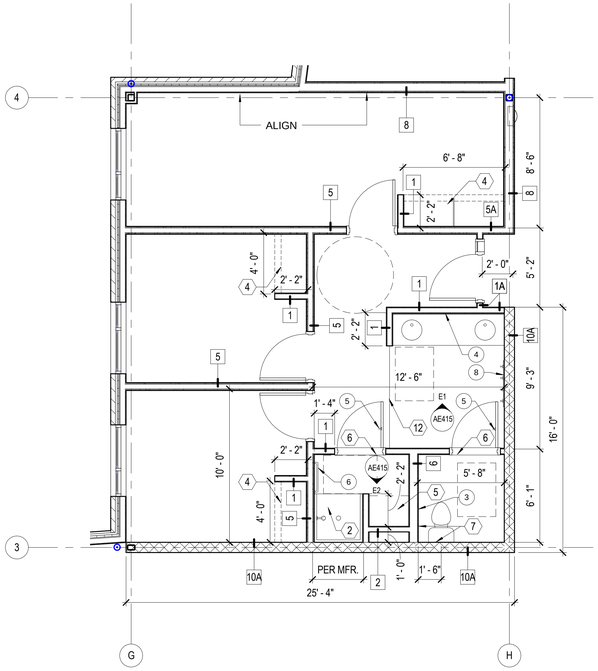

A1 TYPICAL SUITE PLAN

SCALE: 1/4" = 1'-0"

SUITES: 112, 115, 126, 212, 215, 226, 312, 315, 326.

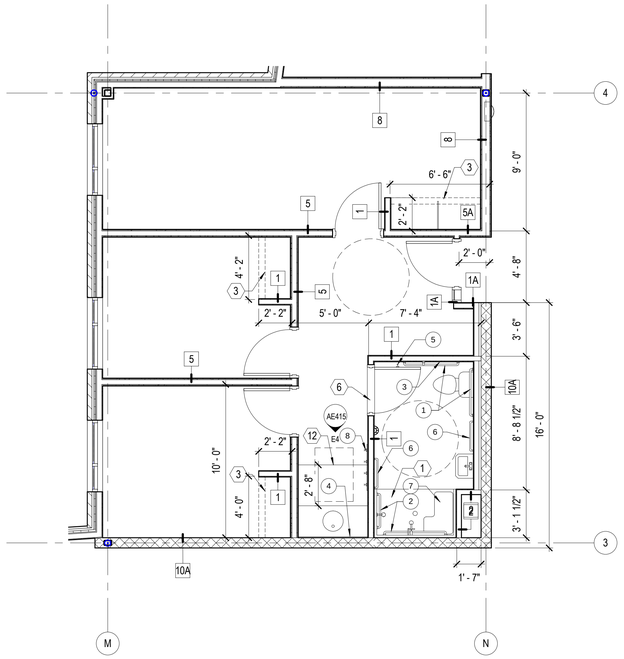

A2 ADA SUITE PLAN

SCALE: 1/4" = 1'-0"

SUITES: 118, 218, 318.

GENERAL NOTES

1. PLAN DIMENSIONS ARE TO FACE OF STUD, CMU, BRICK OR CONCRETE U.N.O.
2. REFER TO LIFE SAFETY PLANS FOR LOCATION OF FIRE RATED WALLS AND OTHER CODE AND LIFE SAFETY REQUIREMENTS.
3. ALL TOILET ROOMS/SHOWERS SHALL HAVE SOLID WOOD BLOCKING (2X6 MIN) FOR FUTURE GRAB BARS AND ADA WALL MOUNTED ACCESSORIES.
4. REFER TO SHEET AE410 FOR TYPICAL ACCESSIBLE MOUNTING HEIGHT REQUIREMENTS AND CLEARANCE.
5. SEE FINISH SCHEDULE / PLANS FOR DESIGNATION OF FINISHES.
6. PROVIDE INSULATION AT ALL EXPOSED PIPING BENEATH SINKS.

KEYNOTES

1. 36" x 60" x 96" SEAMLESS SHOWER ENCLOSURE WITH FOLDING SEAT, GRAB BARS, RECESSED SOAP DISH, SHOWER CURTAIN & ROD @ 6'-6"
2. 36" x 36" x 96" SEAMLESS SHOWER ENCLOSURE WITH RECESSED SOAP DISH, SHOWER CURTAIN & ROD @ 6'-6"
3. 14" DEEP, FIXED SHELF & CLOSET ROD @ 43" AFF TO TOP OF SHELF
4. 14" DEEP, FIXED SHELF & CLOSET ROD @ 64" AFF TO TOP OF SHELF
5. FIXED SHELF CABINET, SEE E2/AE415
6. STONE THRESHOLD
7. BLOCKING IN WALL FOR FUTURE INSTALLATION OF GRAB BARS
8. RECYCLING STATION - SEE DETAILS E1, D1, D2/AE412
9. WALL-MOUNTED TV
10. ISLAND
11. 32" x 60" x 79" SEAMLESS TUB/SHOWER ENCLOSURE, SHOWER CURTAIN & ROD
12. FLOORING TRANSITION STRIP
13. WASHER & DRYER - NIC

ACCESSORY SCHEDULE

1. GRAB BAR (42", 36", & 16")
2. GRAB BAR (SHOWER 48" & 24")
3. TOILET TISSUE DISPENSER
4. MIRROR (SEE ELEVATIONS)
5. ROBE HOOK, ON DOOR
6. TOWEL BAR (24")
7. FOLD DOWN SEAT W/ FOLDING LEGS
8. TOWEL HOOKS (4) ON 6" x 36" SOLID SURFACE MOUNTING
9. SANITARY NAPKIN DISPOSAL

MHTN ARCHITECTS
MHTN Architects, Inc.
420 East South Temple
Suite 100
Salt Lake City, Utah 84111
Telephone (801) 595-6700
Telefax (801) 595-6717
www.mhtn.com

WEBER STATE UNIVERSITY
RESIDENTIAL LIFE PHASE II - BLDG 2

DFCM PROJECT NUMBER: 10176810

WEBER STATE UNIVERSITY
OGDEN, UTAH 84408

SEAL

MHTN PROJECT NO. 2010543

DRAWN BY: MC CHECKED BY: MG

ISSUED:

NO.	DATE	DESCRIPTION
01	17 MAY 2011	CONSTRUCTION DOCUMENTS

CONTRACTOR TO VERIFY DRAWINGS IN FIELD USE REFLECT LAST REVISION DATE

NO.	DATE	DESCRIPTION

SHEET NAME

ENLARGED TOILET/SUITE PLANS

CONSTRUCTION DOCUMENTS

17 MAY 2011

SHEET NUMBER

AE411

C:\Users\prestonm\Documents\A11_2010543 WSU RESIDENTIAL LIFE BUILDING II_CENTRAL_prestonm.rvt
5/17/2011 12:22:26 PM

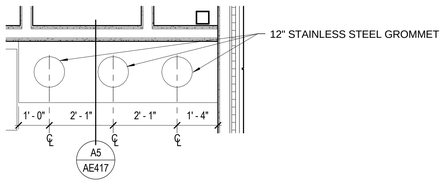

E1 RECYCLING CENTER PLAN - AREA B, LVL 1

SCALE: 1/2" = 1'-0"

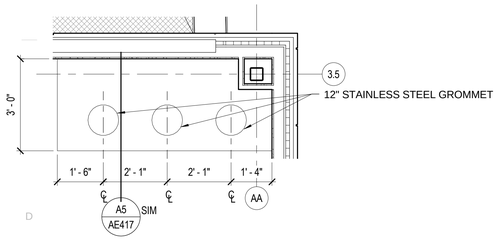

D1 RECYCLING CENTER PLAN - AREA B, LVLS 2 & 3

SCALE: 1/2" = 1'-0"

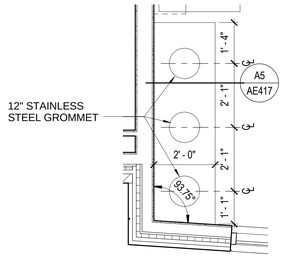

D2 RECYCLING CENTER PLAN - AREA A, TYP.

SCALE: 1/2" = 1'-0"

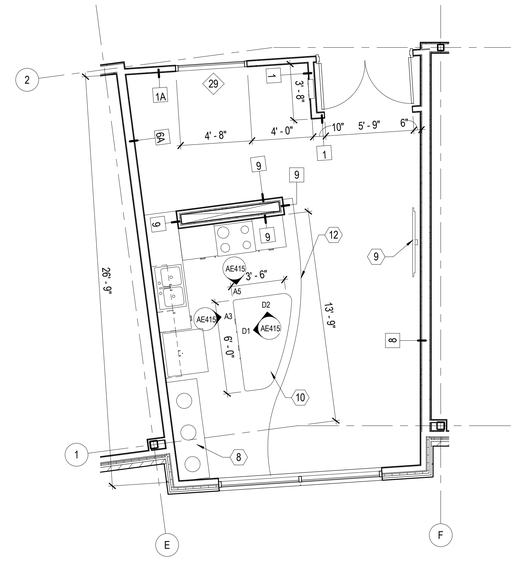

D3 TYPICAL KITCHEN PLAN - AREA A

SCALE: 1/4" = 1'-0"

GENERAL NOTES

1. PLAN DIMENSIONS ARE TO FACE OF STUD, CMU, BRICK OR CONCRETE U.N.O.
2. REFER TO LIFE SAFETY PLANS FOR LOCATION OF FIRE RATED WALLS AND OTHER CODE AND LIFE SAFETY REQUIREMENTS.
3. ALL TOILET ROOMS/SHOWERS SHALL HAVE SOLID WOOD BLOCKING (2X6 MIN) FOR FUTURE GRAB BARS AND ADA WALL MOUNTED ACCESSORIES.
4. REFER TO SHEET AE410 FOR TYPICAL ACCESSIBLE MOUNTING HEIGHT REQUIREMENTS AND CLEARANCE.
5. SEE FINISH SCHEDULE / PLANS FOR DESIGNATION OF FINISHES.
6. PROVIDE INSULATION AT ALL EXPOSED PIPING BENEATH SINKS.

KEYNOTES

1. 36" x 60" x 96" SEAMLESS SHOWER ENCLOSURE WITH FOLDING SEAT, GRAB BARS, RECESSED SOAP DISH, SHOWER CURTAIN & ROD @ 6'-6"
2. 36" x 36" x 96" SEAMLESS SHOWER ENCLOSURE WITH RECESSED SOAP DISH, SHOWER CURTAIN & ROD @ 6'-6"
3. 14" DEEP, FIXED SHELF & CLOSET ROD @ 43" AFF TO TOP OF SHELF
4. 14" DEEP, FIXED SHELF & CLOSET ROD @ 64" AFF TO TOP OF SHELF
5. FIXED SHELF CABINET, SEE E2/AE415
6. STONE THRESHOLD
7. BLOCKING IN WALL FOR FUTURE INSTALLATION OF GRAB BARS
8. RECYCLING STATION - SEE DETAILS E1, D1, D2/AE412
9. WALL-MOUNTED TV
10. ISLAND
11. 32" x 60" x 79" SEAMLESS TUB/SHOWER ENCLOSURE, SHOWER CURTAIN & ROD
12. FLOORING TRANSITION STRIP
13. WASHER & DRYER - NIC

ACCESSORY SCHEDULE

1. GRAB BAR (42", 36", & 16")
2. GRAB BAR (SHOWER 48" & 24")
3. TOILET TISSUE DISPENSER
4. MIRROR (SEE ELEVATIONS)
5. ROBE HOOK, ON DOOR
6. TOWEL BAR (24")
7. FOLD DOWN SEAT W/ FOLDING LEGS
8. TOWEL HOOKS (4) ON 6" x 36" SOLID SURFACE MOUNTING
9. SANITARY NAPKIN DISPOSAL

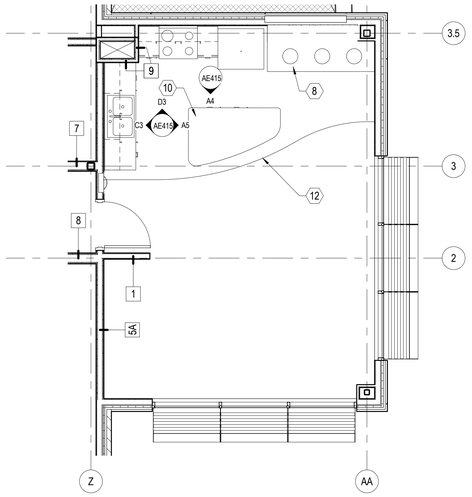

B1 LEVEL 2 & 3 KITCHEN PLAN - AREA B

SCALE: 1/4" = 1'-0"

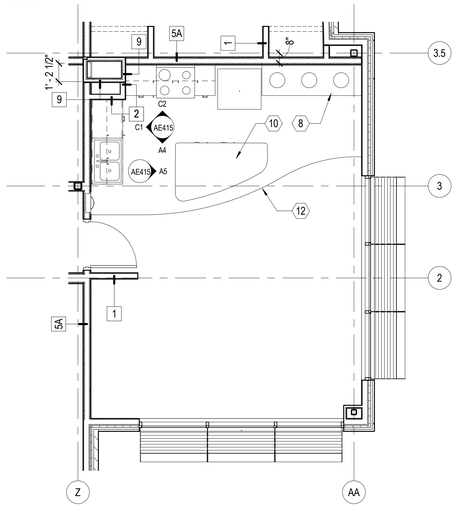

A1 LEVEL 1 KITCHEN PLAN - AREA B

SCALE: 1/4" = 1'-0"

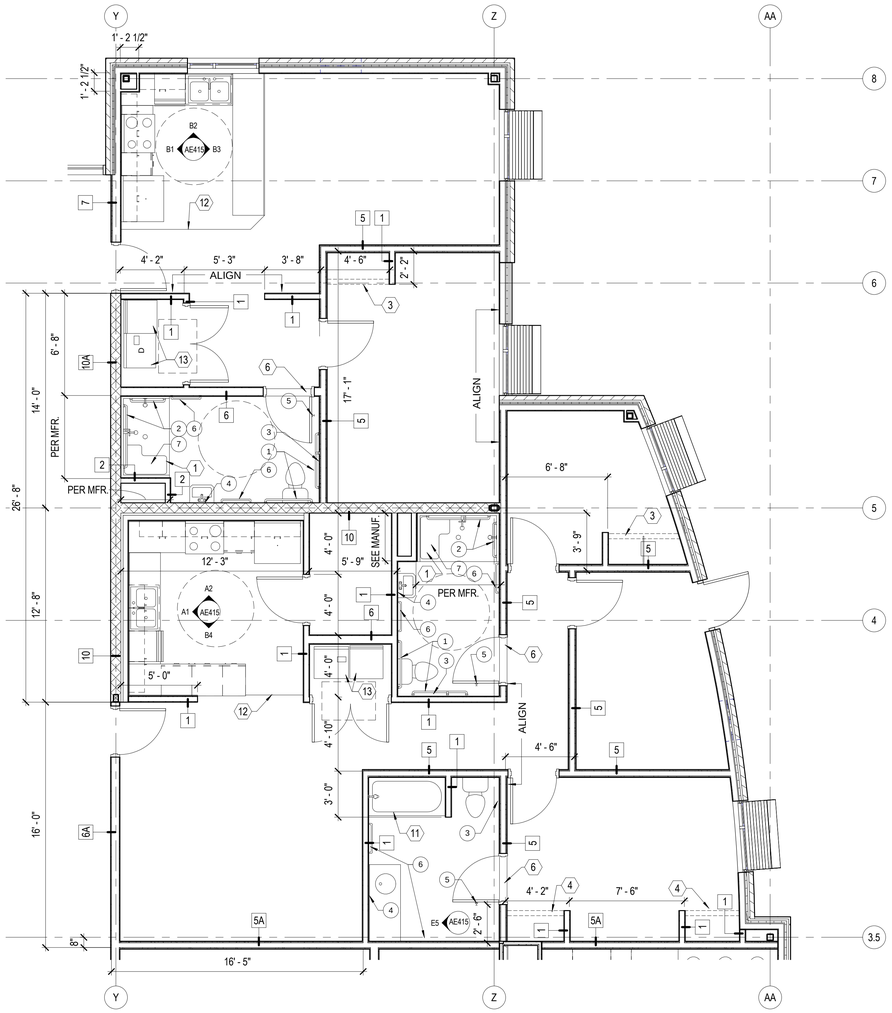

A2 SUITE E-F PLANS COMBINED

SCALE: 1/4" = 1'-0"

SUITES: 127, 128

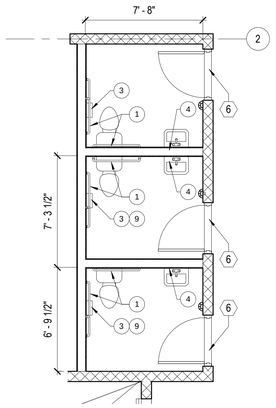

A3 PUBLIC RESTROOM

SCALE: 1/4" = 1'-0"

MHTN
ARCHITECTS
MHTN Architects, Inc.
420 East South Temple
Suite 100
Salt Lake City, Utah 84111
Telephone (801) 595-6700
Telefax (801) 595-6717
www.mhtn.com

WEBER STATE UNIVERSITY
RESIDENTIAL LIFE PHASE II - BLDG 2

DFCM PROJECT NUMBER: 10176810

WEBER STATE UNIVERSITY
OGDEN, UTAH 84408

SEAL

MHTN PROJECT NO. 2010543

DRAWN BY: MC CHECKED BY: MG

ISSUED:

NO.	DATE	DESCRIPTION
01	17 MAY 2011	CONSTRUCTION DOCUMENTS

CONTRACTOR TO VERIFY DRAWINGS IN FIELD USE REFLECT LAST REVISION DATE:

NO.	DATE	DESCRIPTION

SHEET NAME

ENLARGED TOILET/SUITE PLANS

CONSTRUCTION DOCUMENTS

17 MAY 2011

SHEET NUMBER

AE412

C:\Users\prestonm\Documents\A11_2010543 WSU RESIDENTIAL LIFE BUILDING II_CENTRAL_prestonm.rvt
5/17/2011 12:22:33 PM

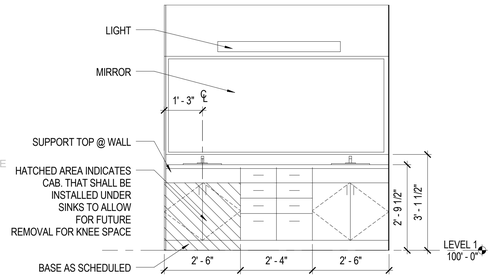

E1 UNIT VANITY TYP.
SCALE: 1/2" = 1'-0"

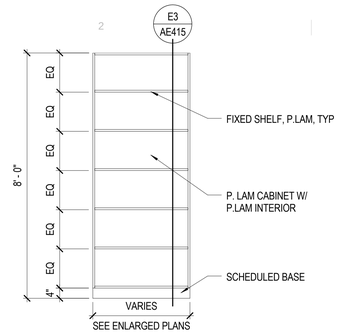

E2 UNIT SHELVES, TYP.
SCALE: 1/2" = 1'-0"

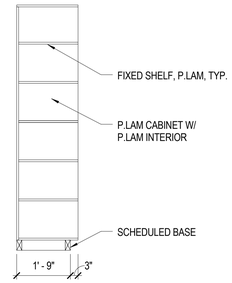

E3 UNIT SHELVES SECTION
SCALE: 1/2" = 1'-0"

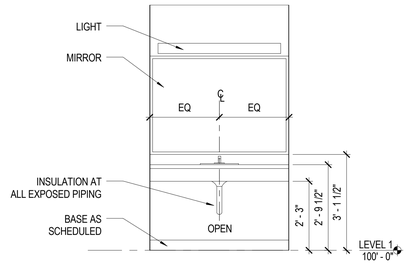

E4 ADA UNIT VANITY TYP.
SCALE: 1/2" = 1'-0"

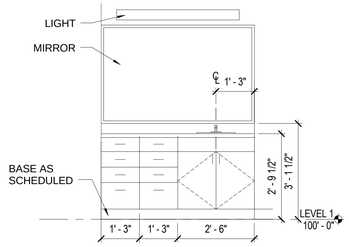

E5 SUITE 128 VANITY
SCALE: 1/2" = 1'-0"

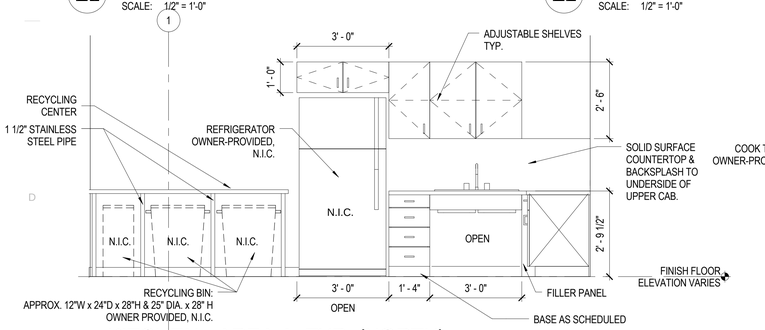

D1 KITCHEN - AREA A, TYP. (NORTH)
SCALE: 1/2" = 1'-0"

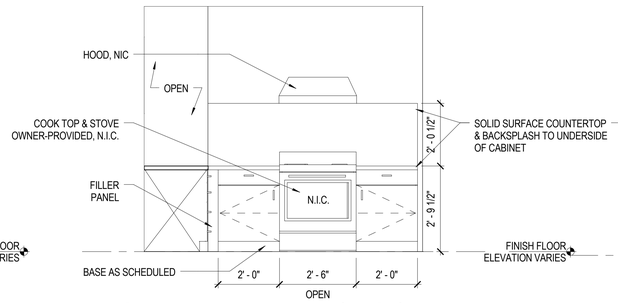

D2 KITCHEN - AREA A, TYP. (EAST)
SCALE: 1/2" = 1'-0"

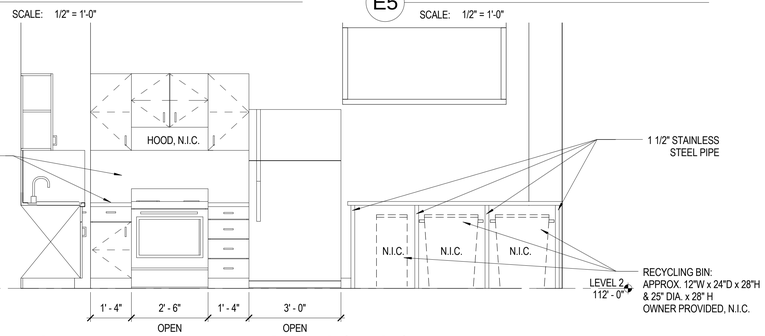

D3 KITCHEN - AREA B, LEVELS 2 & 3 (EAST)
SCALE: 1/2" = 1'-0"

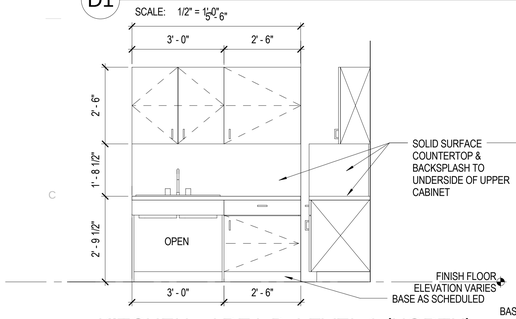

C1 KITCHEN - AREA B, LEVEL 1 (NORTH)
SCALE: 1/2" = 1'-0"

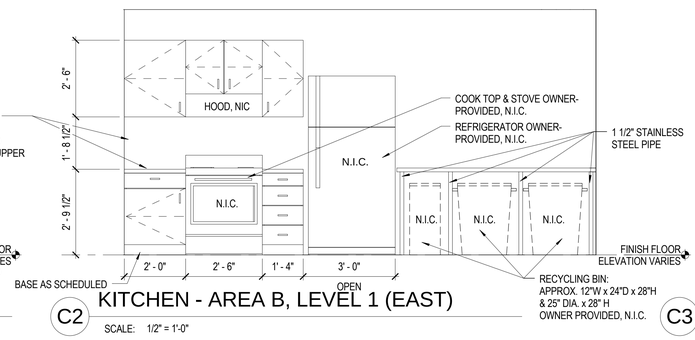

C2 KITCHEN - AREA B, LEVEL 1 (EAST)
SCALE: 1/2" = 1'-0"

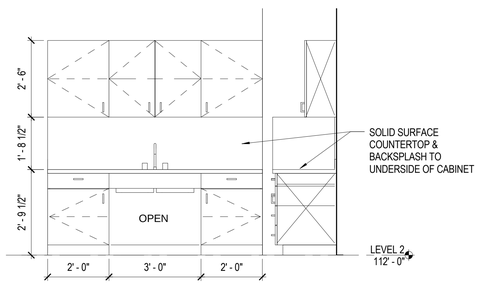

C3 KITCHEN - AREA B, LEVELS 2 & 3 (NORTH)
SCALE: 1/2" = 1'-0"

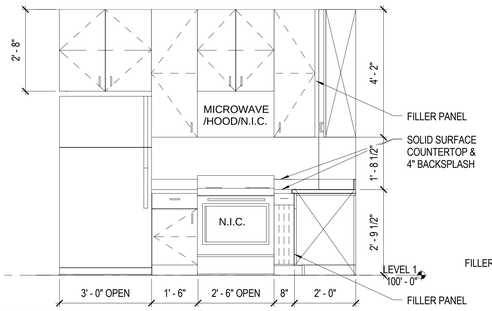

B1 KITCHEN - SUITE 127 (NORTH)
SCALE: 1/2" = 1'-0"

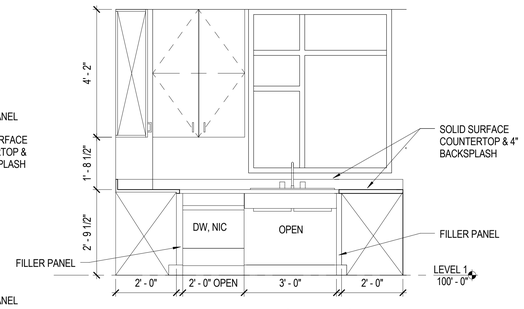

B2 KITCHEN - SUITE 127 (WEST)
SCALE: 1/2" = 1'-0"

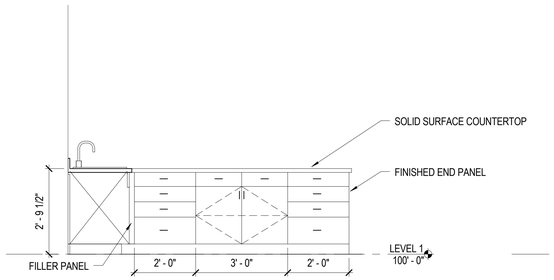

B3 KITCHEN - SUITE 127 (SOUTH)
SCALE: 1/2" = 1'-0"

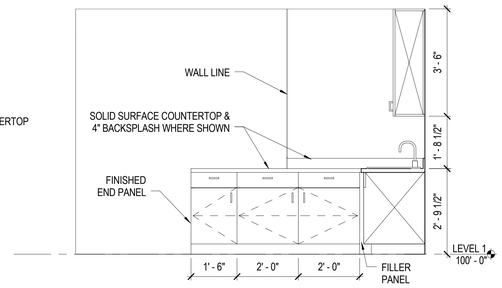

B4 KITCHEN - SUITE 128 (EAST)
SCALE: 1/2" = 1'-0"

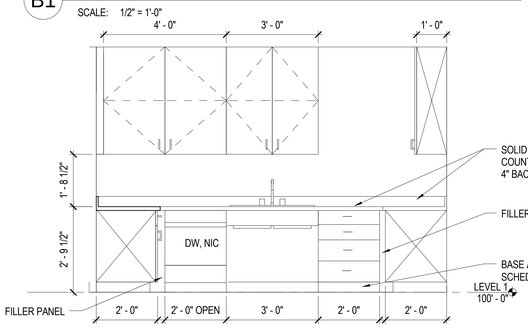

A1 KITCHEN - SUITE 128 (NORTH)
SCALE: 1/2" = 1'-0"

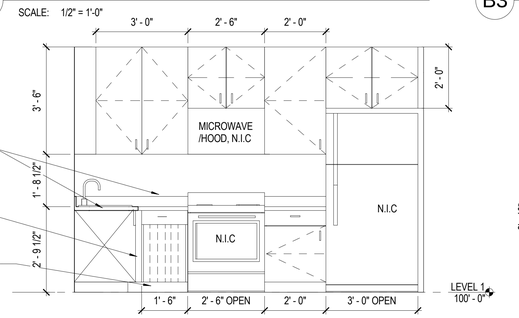

A2 KITCHEN - SUITE 128 (WEST)
SCALE: 1/2" = 1'-0"

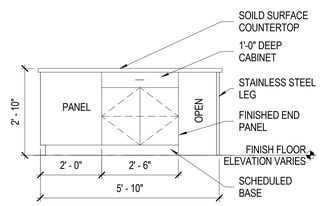

A3 ISLAND - AREA A, TYP.
SCALE: 1/2" = 1'-0"

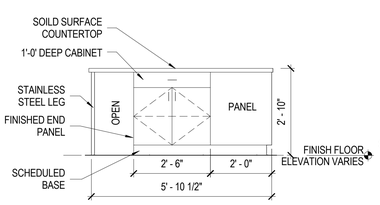

A4 ISLAND - AREA B, TYP.
SCALE: 1/2" = 1'-0"

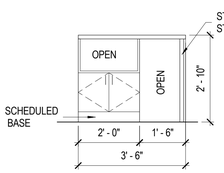

A5 ISLAND VIEW A5 (A6 O.H.)
SCALE: 1/2" = 1'-0"

MHTN ARCHITECTS
MHTN Architects, Inc.
420 East South Temple
Suite 100
Salt Lake City, Utah 84111
Telephone (801) 595-6700
Telefax (801) 595-6717
www.mhtn.com

WEBER STATE UNIVERSITY
RESIDENTIAL LIFE PHASE II - BLDG 2
DFCM PROJECT NUMBER: 10176810

WEBER STATE UNIVERSITY
OGDEN, UTAH 84408

SEAL

MHTN PROJECT NO. 2010543
DRAWN BY: MC CHECKED BY: MG

ISSUED:

NO.	DATE	DESCRIPTION
01	17 MAY 2011	CONSTRUCTION DOCUMENTS

CONTRACTOR TO VERIFY DRAWINGS IN FIELD USE REFLECT LAST REVISION DATE.

NO.	DATE	DESCRIPTION

SHEET NAME
INTERIOR ELEVATIONS

CONSTRUCTION DOCUMENTS
17 MAY 2011

SHEET NUMBER
AE415

C:\Users\prestonm\Documents\A11_2010543 WSU RESIDENTIAL LIFE BUILDING II_CENTRAL_prestonm.rvt
5/17/2011 12:22:43 PM

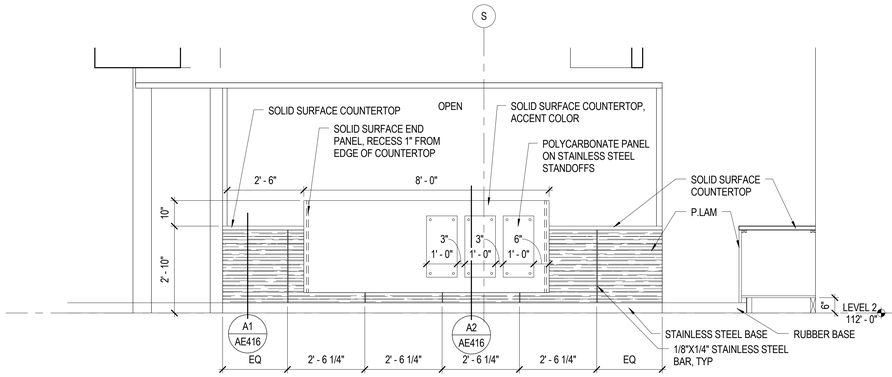

1 SHORT ORDER COUNTER

SCALE: 1/2" = 1'-0"

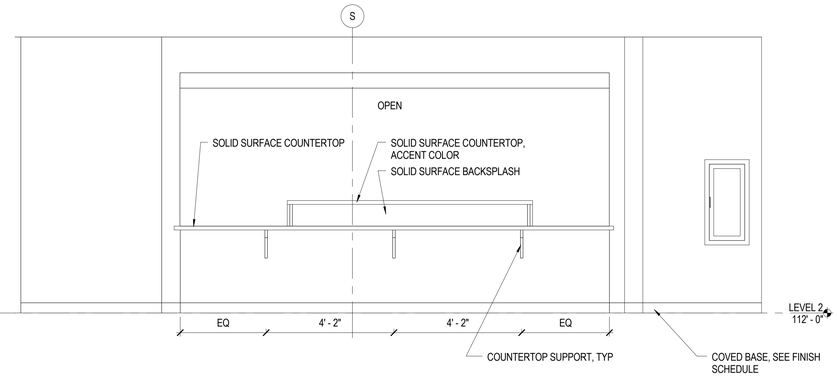

2 SHORT ORDER COUNTER (INSIDE)

SCALE: 1/2" = 1'-0"

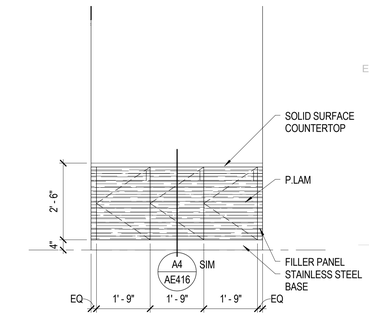

3 BEVERAGE STATION

SCALE: 1/2" = 1'-0"

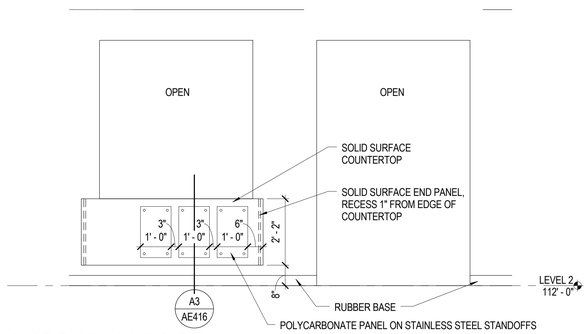

4 C-STORE (OUTSIDE)

SCALE: 1/2" = 1'-0"

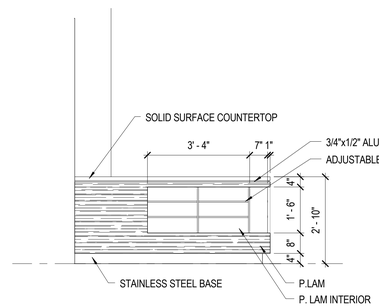

5 C-STORE TRANSACTION 01

SCALE: 1/2" = 1'-0"

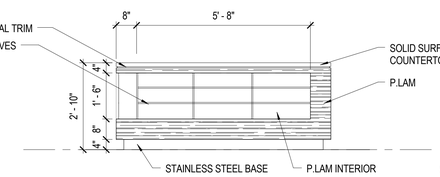

6 C-STORE TRANSACTION 02

SCALE: 1/2" = 1'-0"

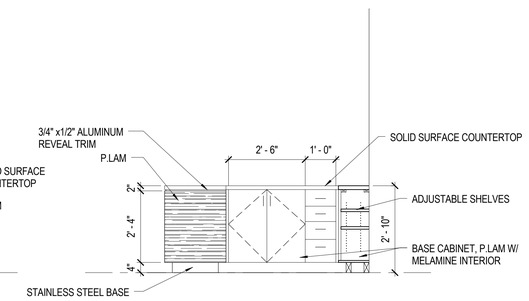

7 C-STORE TRANSACTION 03

SCALE: 1/2" = 1'-0"

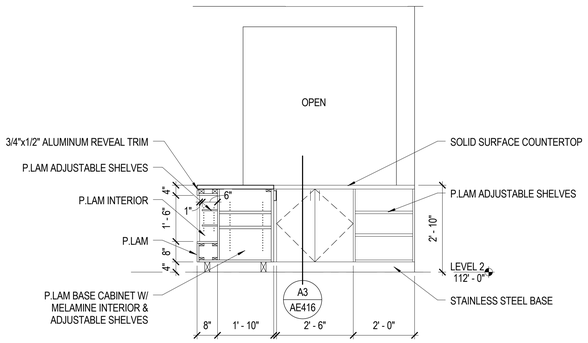

8 C-STORE TRANSACTION 04

SCALE: 1/2" = 1'-0"

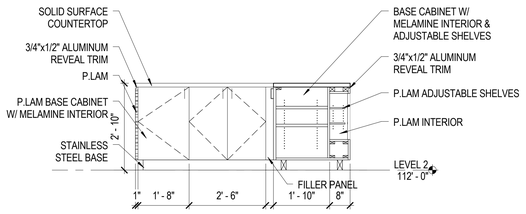

9 C-STORE TRANSACTION 05

SCALE: 1/2" = 1'-0"

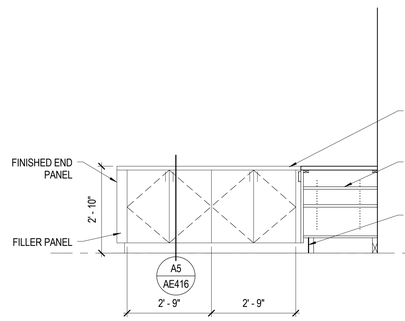

10 C-STORE COUNTER

SCALE: 1/2" = 1'-0"

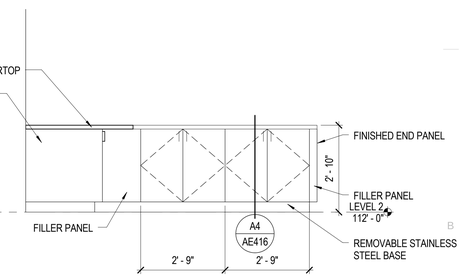

11 C-STORE COUNTER 2

SCALE: 1/2" = 1'-0"

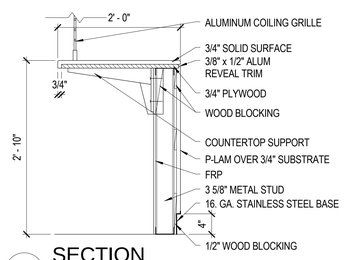

A1 SECTION

SCALE: 1" = 1'-0"

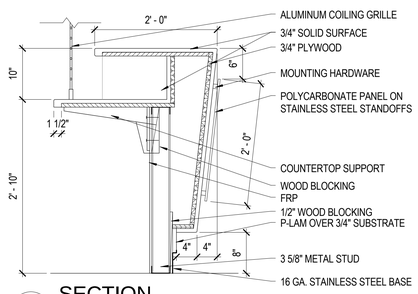

A2 SECTION

SCALE: 1" = 1'-0"

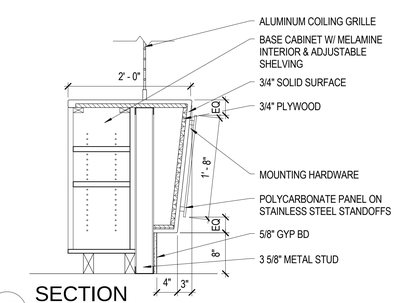

A3 SECTION

SCALE: 1" = 1'-0"

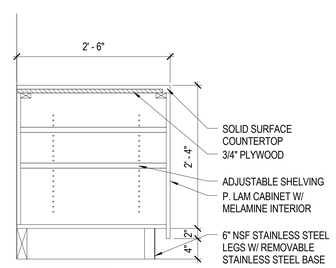

A4 SECTION

SCALE: 1" = 1'-0"

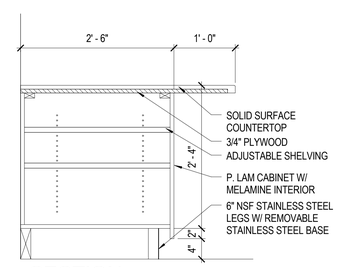

A5 SECTION

SCALE: 1" = 1'-0"

MHTN ARCHITECTS

MHTN Architects, Inc.
420 East South Temple
Suite 100
Salt Lake City, Utah 84111
Telephone (801) 595-6700
Telefax (801) 595-6717
www.mhtn.com

WEBER STATE UNIVERSITY
RESIDENTIAL LIFE PHASE II - BLDG 2

DFCM PROJECT NUMBER: 10176810

WEBER STATE UNIVERSITY
OGDEN, UTAH 84408

SEAL

MHTN PROJECT NO. 2010543

DRAWN BY: Author CHECKED BY: Checker

ISSUED:

NO.	DATE	DESCRIPTION
01	17 MAY 2011	CONSTRUCTION DOCUMENTS

CONTRACTOR TO VERIFY DRAWINGS IN FIELD USE REFLECT LAST REVISION DATE.

NO.	DATE	DESCRIPTION

SHEET NAME

INTERIOR ELEVATIONS

CONSTRUCTION DOCUMENTS
17 MAY 2011

SHEET NUMBER

AE416

C:\Users\prestom\Documents\A11_2010543 WSU RESIDENTIAL LIFE BUILDING II_CENTRAL_prestom.rvt
5/17/2011 12:22:51 PM

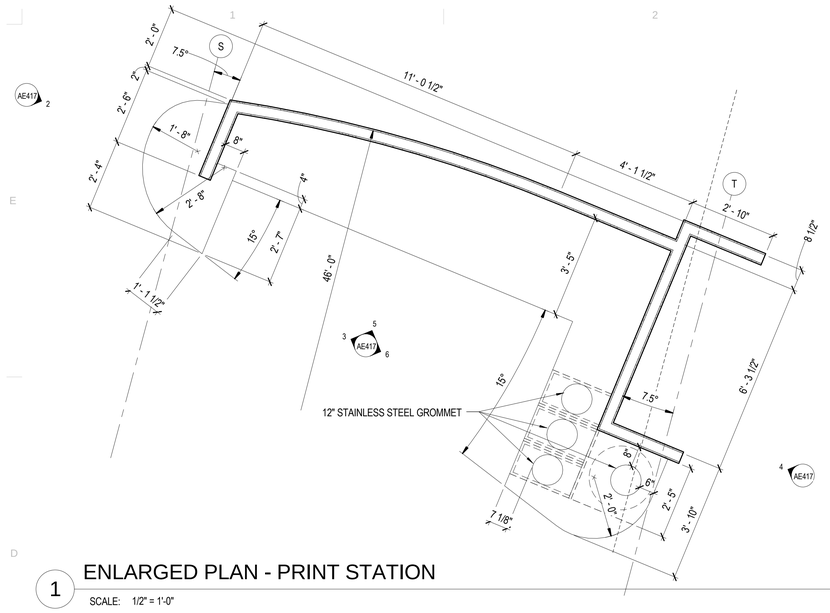

1 ENLARGED PLAN - PRINT STATION

SCALE: 1/2" = 1'-0"

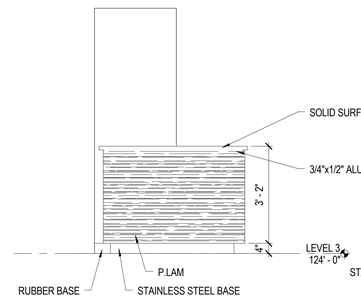

2 ELEVATION - PRINT STATION

SCALE: 1/2" = 1'-0"

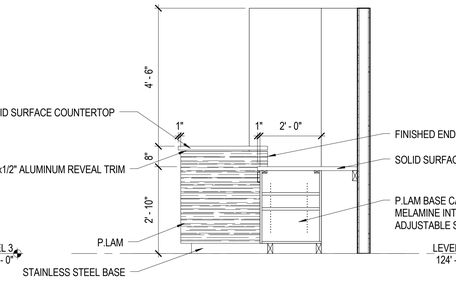

3 ELEVATION - PRINT STATION

SCALE: 1/2" = 1'-0"

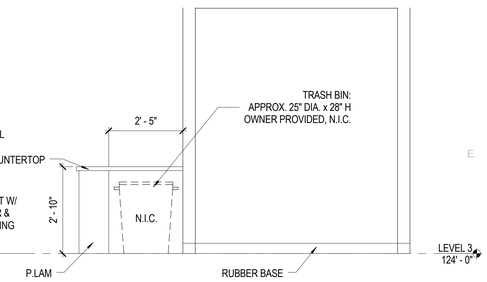

4 ELEVATION - PRINT STATION

SCALE: 1/2" = 1'-0"

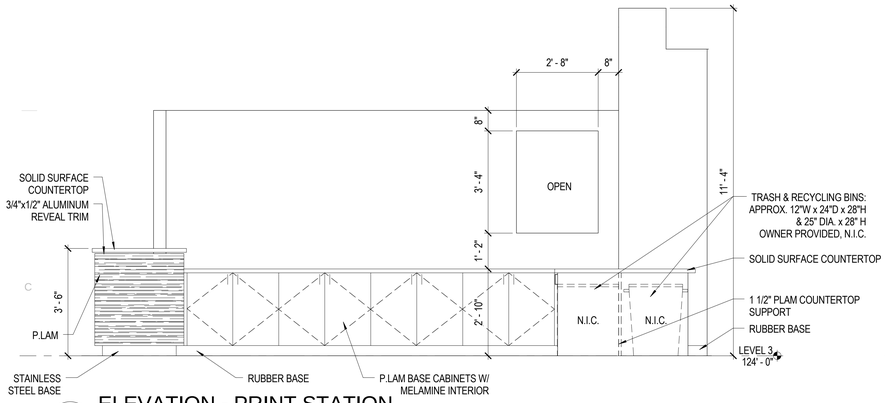

5 ELEVATION - PRINT STATION

SCALE: 1/2" = 1'-0"

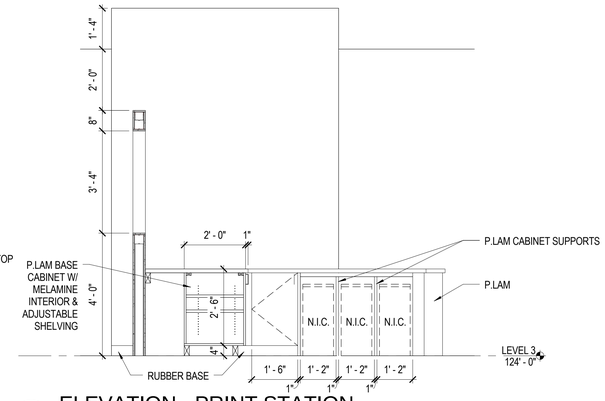

6 ELEVATION - PRINT STATION

SCALE: 1/2" = 1'-0"

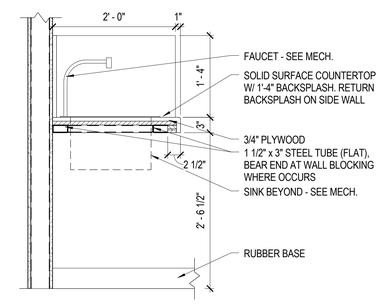

C5 SECTION

SCALE: 1" = 1'-0"

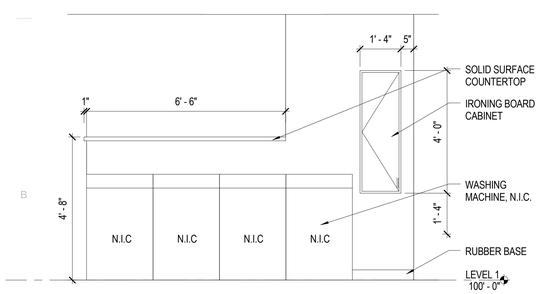

7 ELEVATION - LAUNDRY

SCALE: 1/2" = 1'-0"

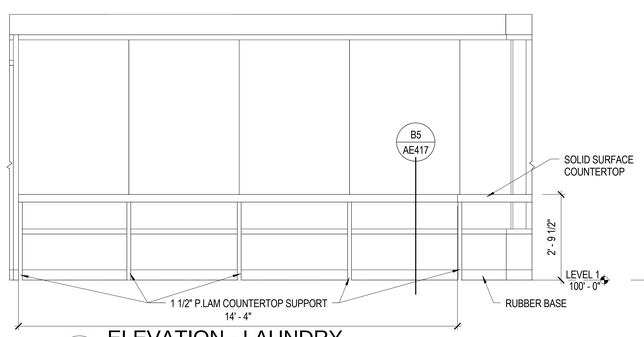

8 ELEVATION - LAUNDRY

SCALE: 1/2" = 1'-0"

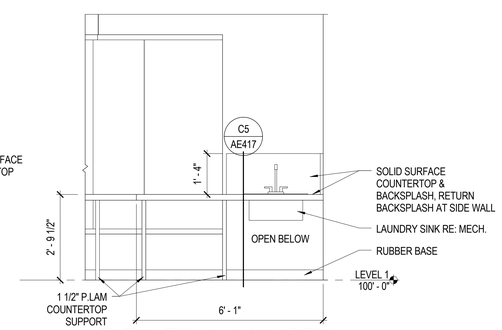

9 ELEVATION - LAUNDRY

SCALE: 1/2" = 1'-0"

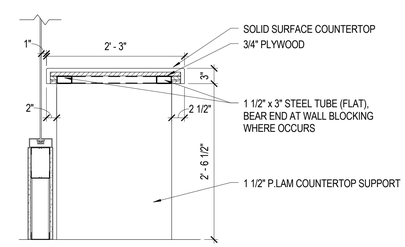

B5 SECTION

SCALE: 1" = 1'-0"

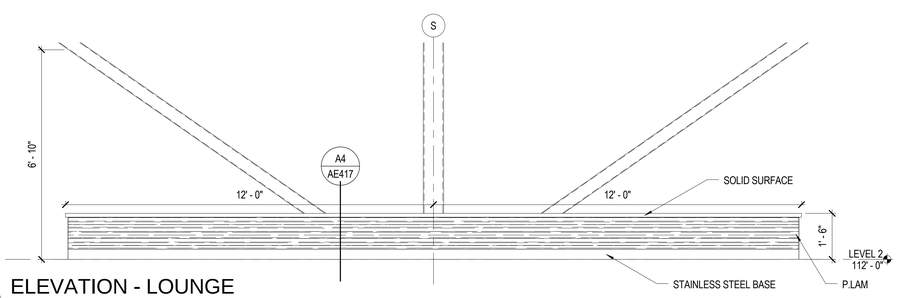

10 ELEVATION - LOUNGE

SCALE: 1/2" = 1'-0"

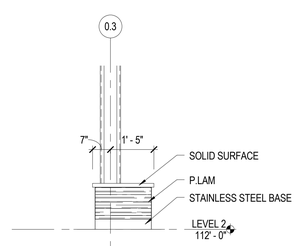

11 ELEVATION - LOUNGE

SCALE: 1/2" = 1'-0"

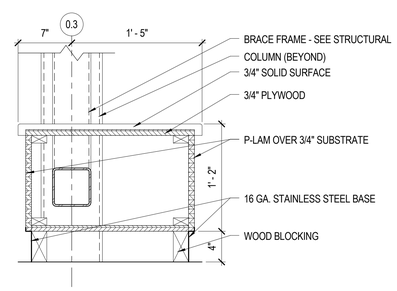

A4 SECTION

SCALE: 1 1/2" = 1'-0"

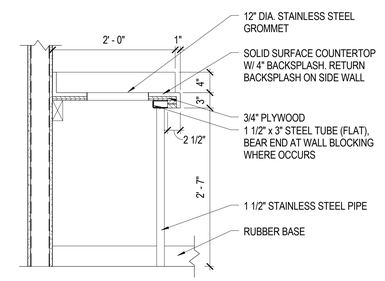

A5 SECTION

SCALE: 1" = 1'-0"

MHTN ARCHITECTS

MHTN Architects, Inc.
420 East South Temple
Suite 100
Salt Lake City, Utah 84111
Telephone (801) 595-6700
Telefax (801) 595-6717
www.mhtn.com

WEBER STATE UNIVERSITY
RESIDENTIAL LIFE PHASE II - BLDG 2
DFCM PROJECT NUMBER: 10176810

WEBER STATE UNIVERSITY
OGDEN, UTAH 84408

SEAL

MHTN PROJECT NO. 2010543

DRAWN BY: Author CHECKED BY: Checker

ISSUED:

NO.	DATE	DESCRIPTION
01	17 MAY 2011	CONSTRUCTION DOCUMENTS

CONTRACTOR TO VERIFY DRAWINGS IN FIELD-USE REFLECT LAST REVISION DATE:

NO.	DATE	DESCRIPTION

SHEET NAME

INTERIOR ELEVATIONS

CONSTRUCTION DOCUMENTS
17 MAY 2011

SHEET NUMBER

AE417

r:\jprestonn\Documents\A11_2010543 WSU RESIDENTIAL LIFE BUILDING II_CENTRAL_jprestonn.rvt
5/17/2011 12:22:58 PM

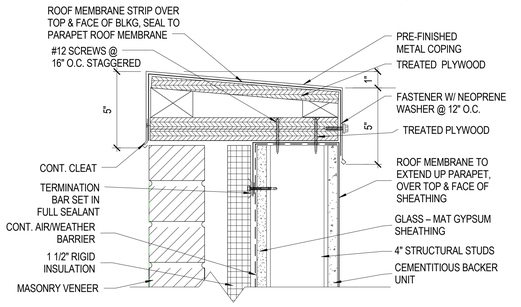

E1 SECTION

SCALE: 3" = 1'-0"

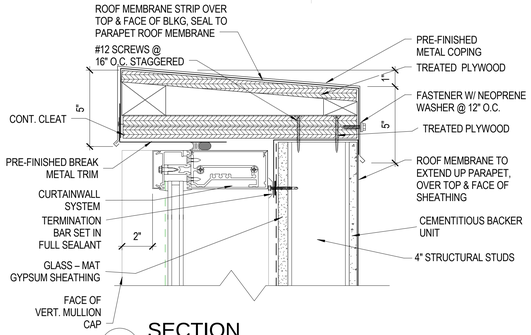

E2 SECTION

SCALE: 3" = 1'-0"

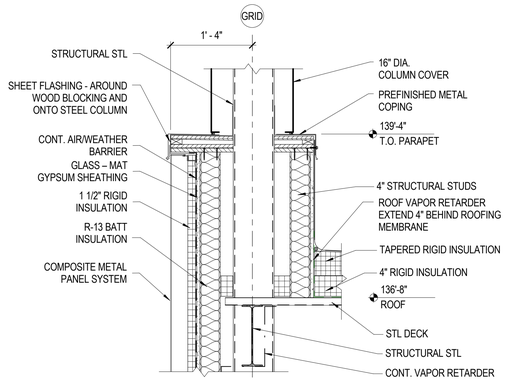

E4 SECTION

SCALE: 1" = 1'-0"

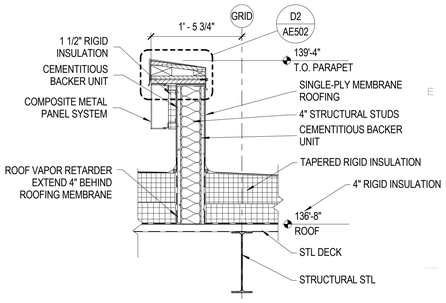

E5 SECTION

SCALE: 1" = 1'-0"

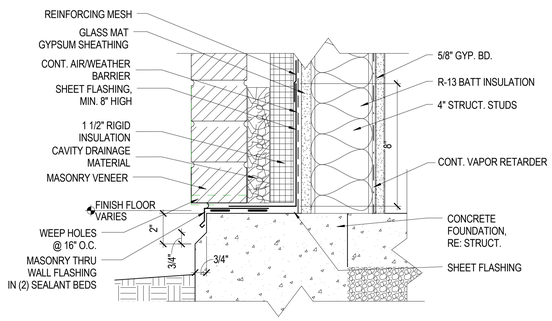

C1 SECTION

SCALE: 3" = 1'-0"

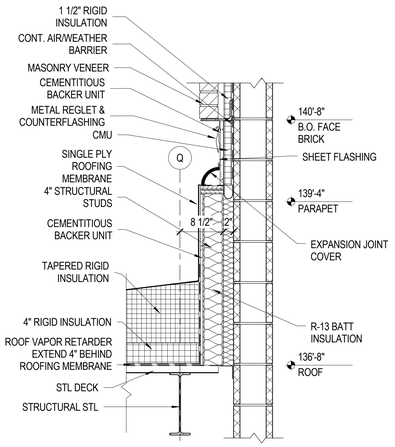

C3 SECTION

SCALE: 1" = 1'-0"

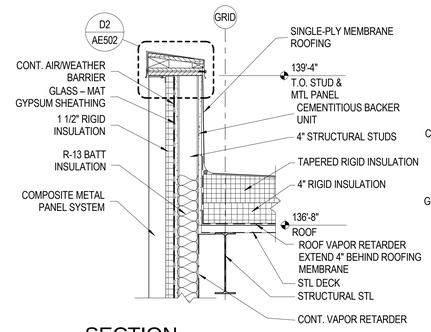

C4 SECTION

SCALE: 1" = 1'-0"

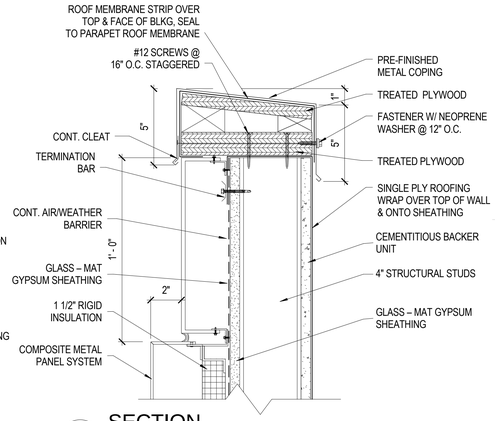

C5 SECTION

SCALE: 3" = 1'-0"

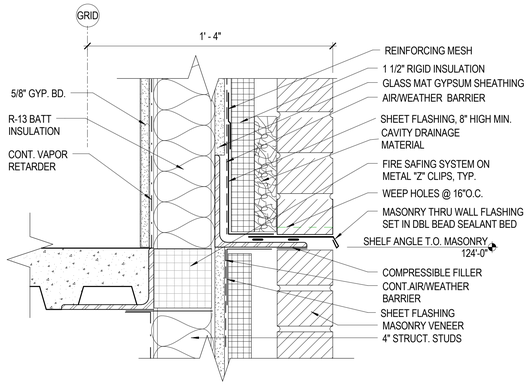

B1 SECTION

SCALE: 3" = 1'-0"

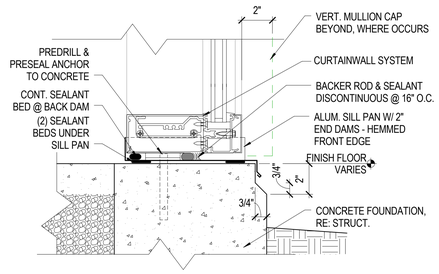

B2 SECTION

SCALE: 3" = 1'-0"

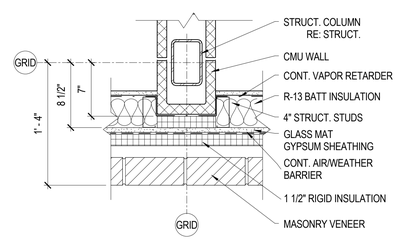

B4 DETAIL

SCALE: 1 1/2" = 1'-0"

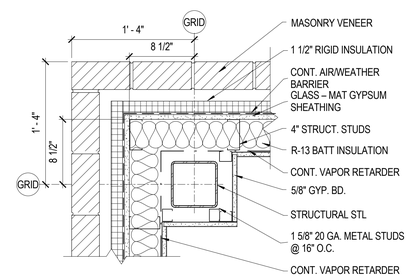

B5 DETAIL

SCALE: 1 1/2" = 1'-0"

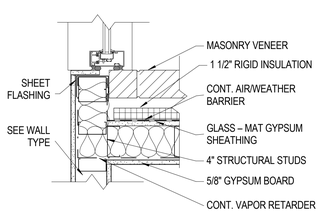

A1 DETAIL

SCALE: 1 1/2" = 1'-0"

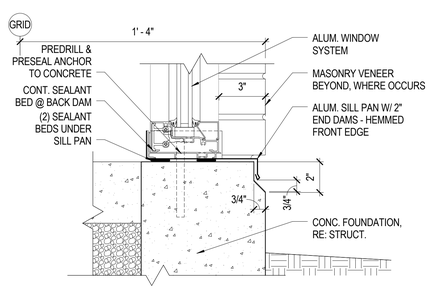

A2 SECTION

SCALE: 3" = 1'-0"

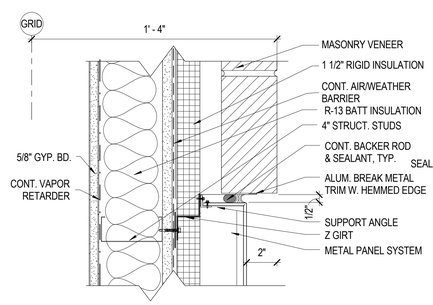

A3 DETAIL

SCALE: 3" = 1'-0"

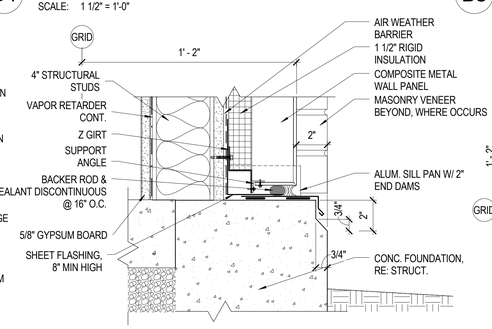

A4 SECTION

SCALE: 3" = 1'-0"

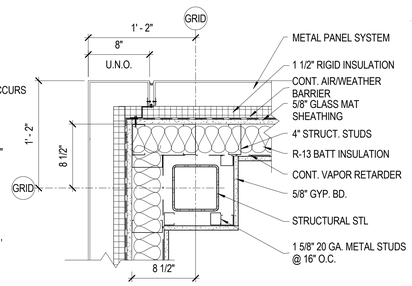

A5 DETAIL

SCALE: 1 1/2" = 1'-0"

C:\Users\prestom\Documents\A11_2010543 WSU RESIDENTIAL LIFE BUILDING II_CENTRAL_prestom.rvt
5/17/2011 12:23:01 PM

MHTN ARCHITECTS

MHTN Architects, Inc.
420 East South Temple
Suite 100
Salt Lake City, Utah 84111
Telephone (801) 595-6700
Telefax (801) 595-6717
www.mhtn.com

WEBER STATE UNIVERSITY
RESIDENTIAL LIFE PHASE II - BLDG 2

DFCM PROJECT NUMBER: 10176810

WEBER STATE UNIVERSITY
OGDEN, UTAH 84408

SEAL

MHTN PROJECT NO. 2010543

DRAWN BY: PWN CHECKED BY: MG

ISSUED:

NO.	DATE	DESCRIPTION
01	17 MAY 2011	CONSTRUCTION DOCUMENTS

CONTRACTOR TO VERIFY DRAWINGS IN FIELD USE REFLECT LAST REVISION DATE.

NO.	DATE	DESCRIPTION

SHEET NAME

EXTERIOR DETAILS

CONSTRUCTION DOCUMENTS
17 MAY 2011

SHEET NUMBER

AE501

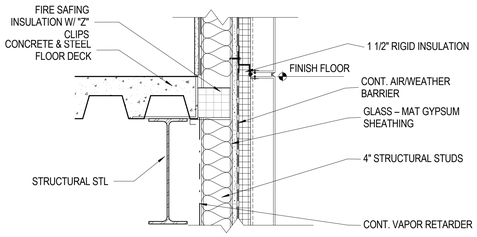

E1 SECTION
SCALE: 1 1/2" = 1'-0"

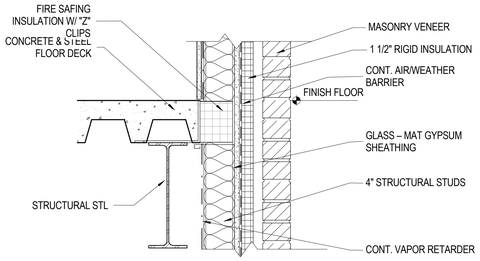

E2 SECTION
SCALE: 1 1/2" = 1'-0"

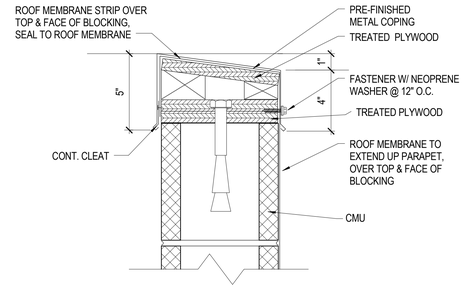

E4 SECTION
SCALE: 3" = 1'-0"

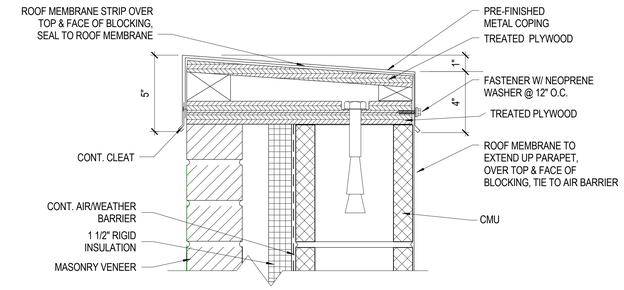

E5 SECTION
SCALE: 3" = 1'-0"

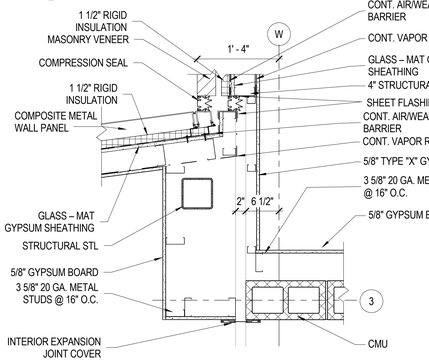

D1 DETAIL
SCALE: 1" = 1'-0"

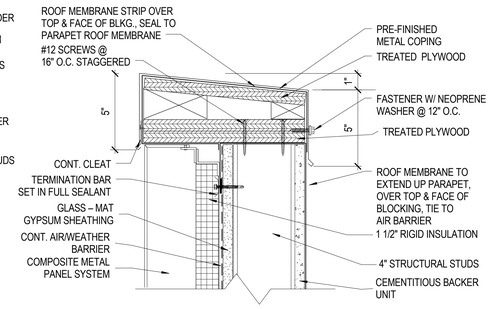

D2 SECTION
SCALE: 3" = 1'-0"

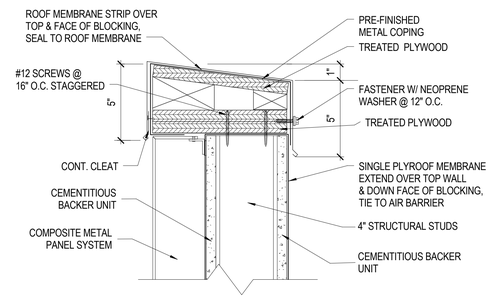

D4 SECTION
SCALE: 3" = 1'-0"

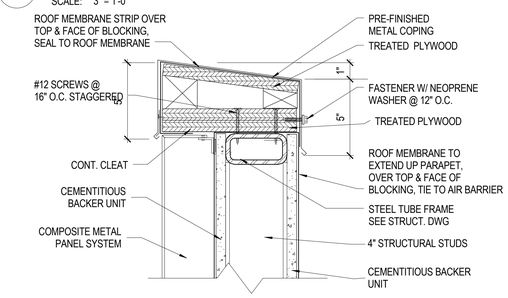

D5 SECTION
SCALE: 3" = 1'-0"

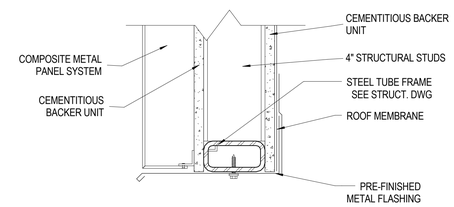

C5 SECTION
SCALE: 3" = 1'-0"

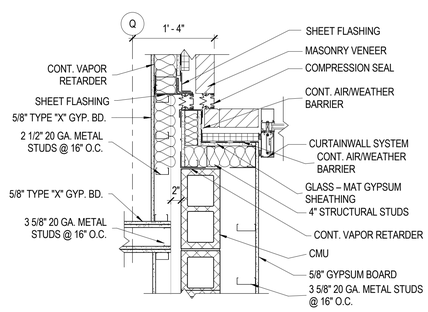

B1 DETAIL
SCALE: 1" = 1'-0"

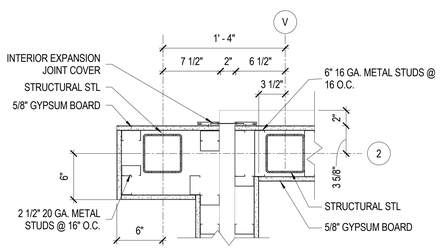

B2 DETAIL
SCALE: 1 1/2" = 1'-0"

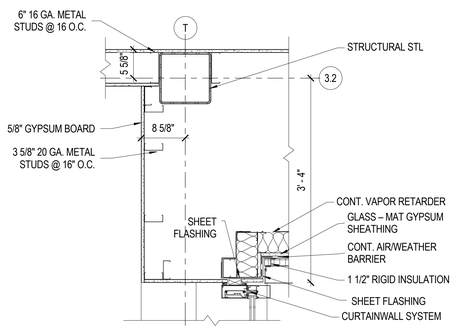

B3 DETAIL
SCALE: 1" = 1'-0"

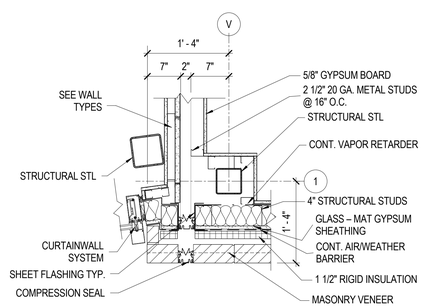

A1 DETAIL
SCALE: 1" = 1'-0"

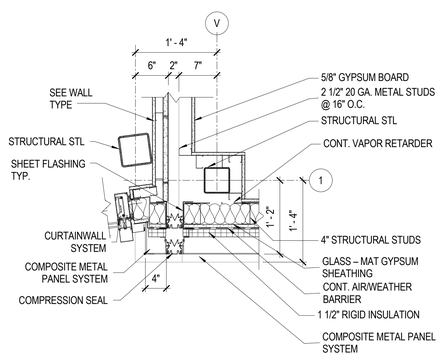

A2 DETAIL
SCALE: 1" = 1'-0"

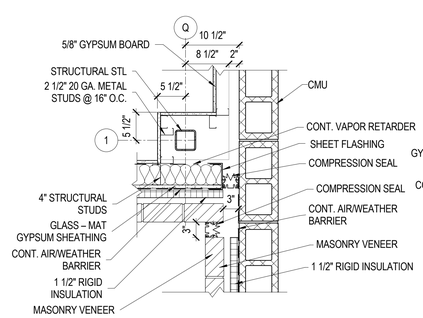

A3 DETAIL
SCALE: 1" = 1'-0"

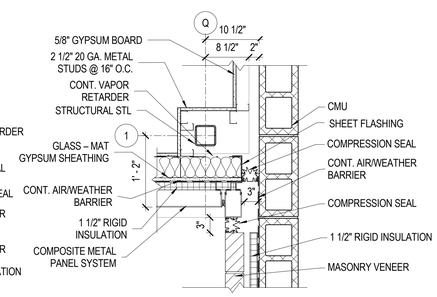

A4 DETAIL
SCALE: 1" = 1'-0"

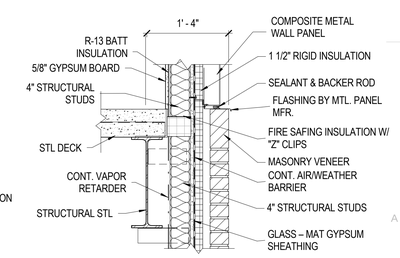

A5 SECTION
SCALE: 1" = 1'-0"

C:\Users\prestonn\Documents\A11_2010543 WSU RESIDENTIAL LIFE BUILDING II_CENTRAL_prestonn.rvt
5/17/2011 12:23:03 PM

MHTN ARCHITECTS
MHTN Architects, Inc.
420 East South Temple
Suite 100
Salt Lake City, Utah 84111
Telephone (801) 595-6700
Telefax (801) 595-6717
www.mhtn.com

WEBER STATE UNIVERSITY
RESIDENTIAL LIFE PHASE II - BLDG 2
DFCM PROJECT NUMBER: 10176810

WEBER STATE UNIVERSITY
OGDEN, UTAH 84408

SEAL

MHTN PROJECT NO. 2010543
DRAWN BY: PWN CHECKED BY: MG

ISSUED:

NO.	DATE	DESCRIPTION
01	17 MAY 2011	CONSTRUCTION DOCUMENTS

CONTRACTOR TO VERIFY DRAWINGS IN FIELD USE REFLECT LAST REVISION DATE.

NO.	DATE	DESCRIPTION

SHEET NAME
EXTERIOR DETAILS

CONSTRUCTION DOCUMENTS
17 MAY 2011

SHEET NUMBER
AE502

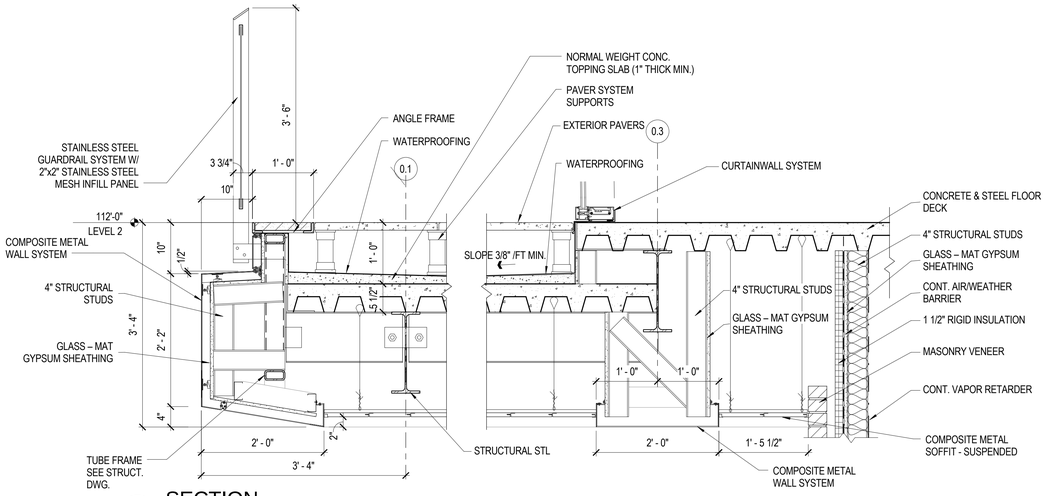

D1 SECTION

SCALE: 1" = 1'-0"

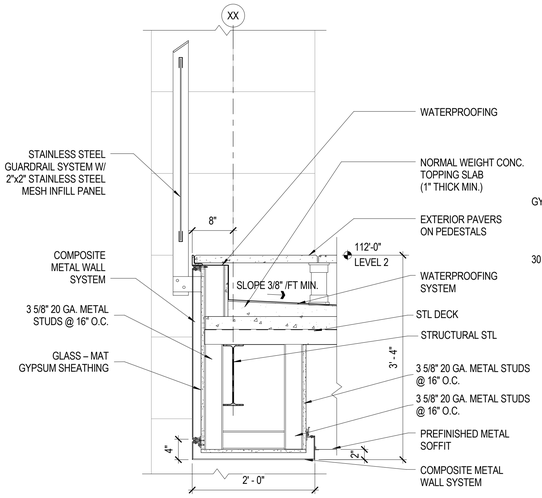

D3 SECTION

SCALE: 1" = 1'-0"

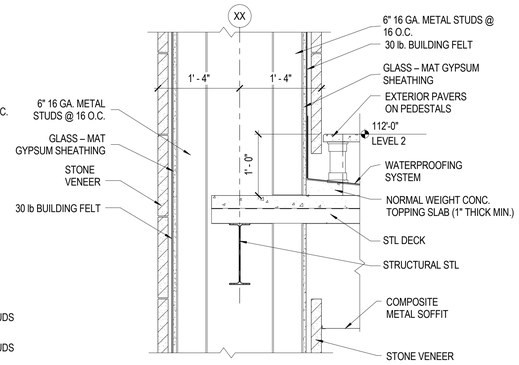

D4 SECTION

SCALE: 1" = 1'-0"

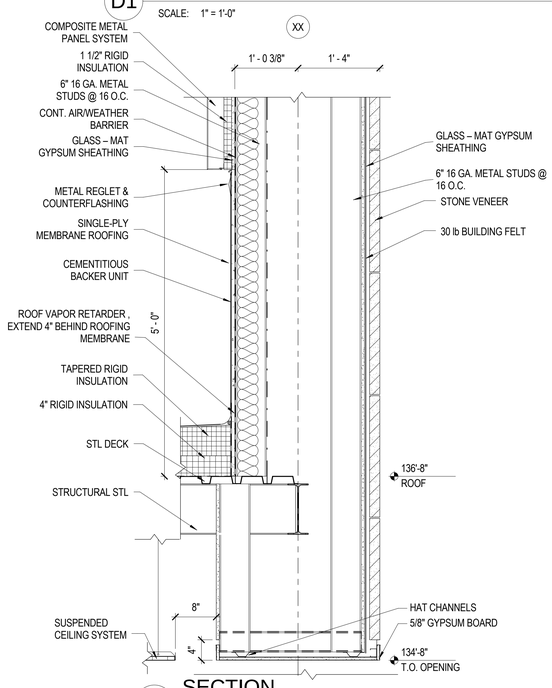

B1 SECTION

SCALE: 1" = 1'-0"

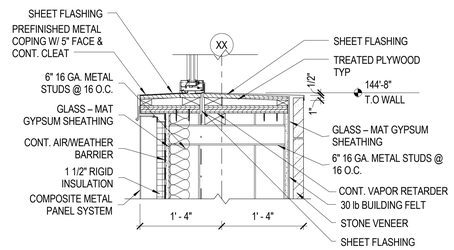

C3 SECTION

SCALE: 1" = 1'-0"

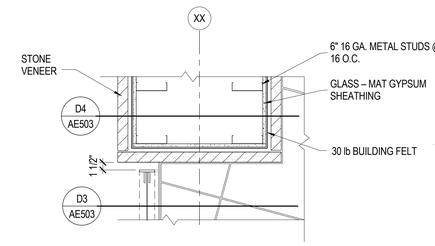

E5 DETAIL

SCALE: 1" = 1'-0"

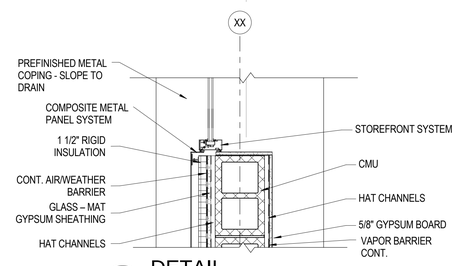

C4 DETAIL

SCALE: 1" = 1'-0"

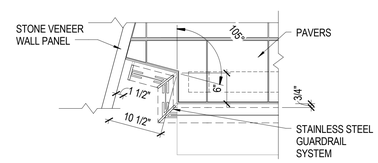

C5 DETAIL

SCALE: 1" = 1'-0"

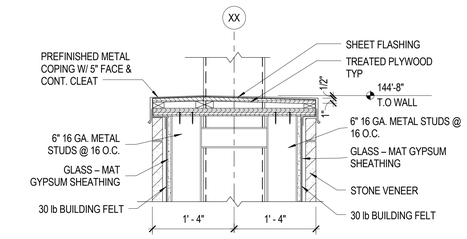

B3 SECTION

SCALE: 1" = 1'-0"

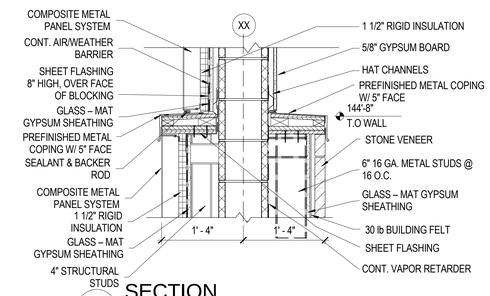

B4 SECTION

SCALE: 1" = 1'-0"

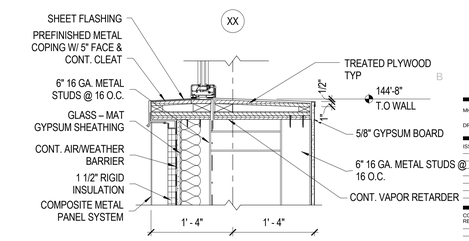

B5 SECTION

SCALE: 1" = 1'-0"

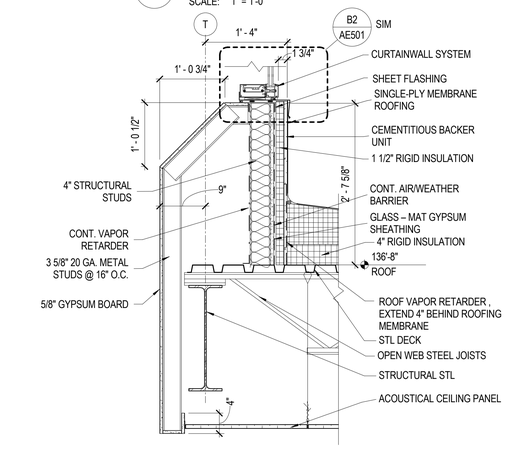

A1 SECTION

SCALE: 1" = 1'-0"

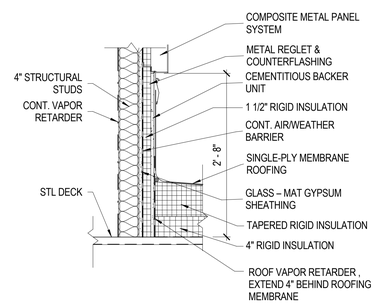

A2 SECTION

SCALE: 1" = 1'-0"

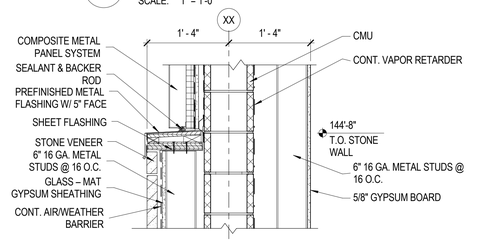

A4 SECTION

SCALE: 1" = 1'-0"

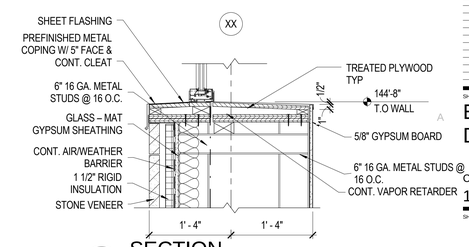

A5 SECTION

SCALE: 1" = 1'-0"

MHTN ARCHITECTS
MHTN Architects, Inc.
420 East South Temple
Suite 100
Salt Lake City, Utah 84111
Telephone (801) 595-6700
Telefax (801) 595-6717
www.mhtn.com

WEBER STATE UNIVERSITY
RESIDENTIAL LIFE PHASE II - BLDG 2
DFCM PROJECT NUMBER: 10176810

WEBER STATE UNIVERSITY
OGDEN, UTAH 84408

SEAL

MHTN PROJECT NO. 2010543

DRAWN BY: PWN CHECKED BY: MG

ISSUED:

NO.	DATE	DESCRIPTION
01	17 MAY 2011	CONSTRUCTION DOCUMENTS

CONTRACTOR TO VERIFY DRAWINGS IN FIELD USE REFLECT LAST REVISION DATE:

NO.	DATE	DESCRIPTION
1	Date 3	Revision 3

SHEET NAME

EXTERIOR DETAILS

CONSTRUCTION DOCUMENTS
17 MAY 2011

SHEET NUMBER

AE503

C:\Users\preston\Documents\A11_2010543 WSU RESIDENTIAL LIFE BUILDING II_CENTRAL_preston.rvt
5/17/2011 12:23:06 PM

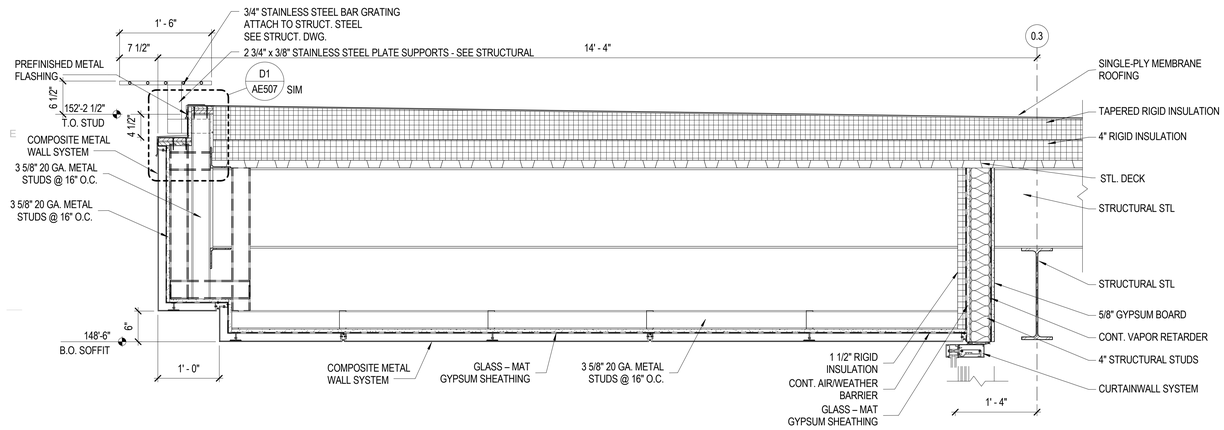

D1 SECTION

SCALE: 1" = 1'-0"

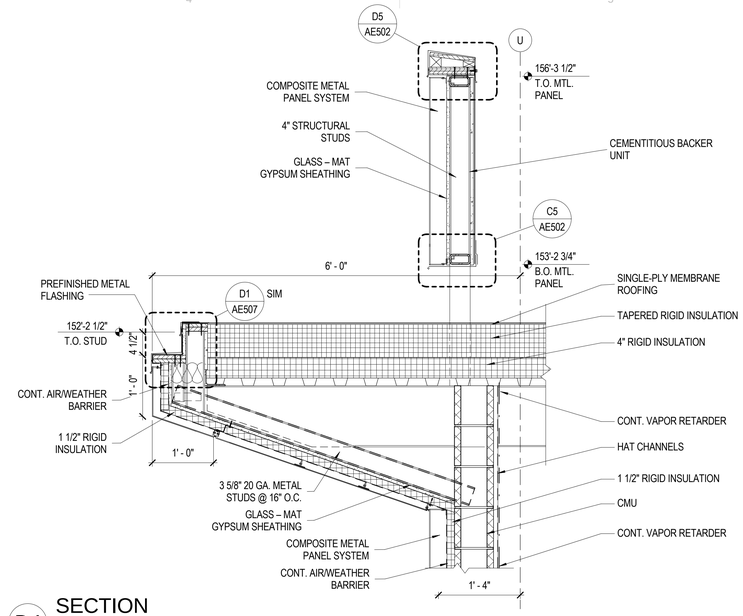

D4 SECTION

SCALE: 1" = 1'-0"

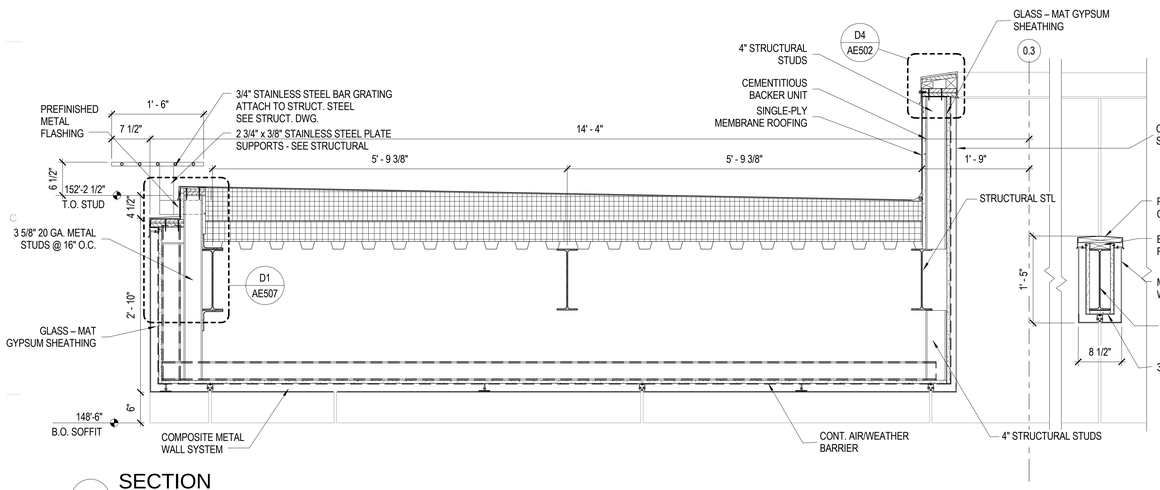

C1 SECTION

SCALE: 1" = 1'-0"

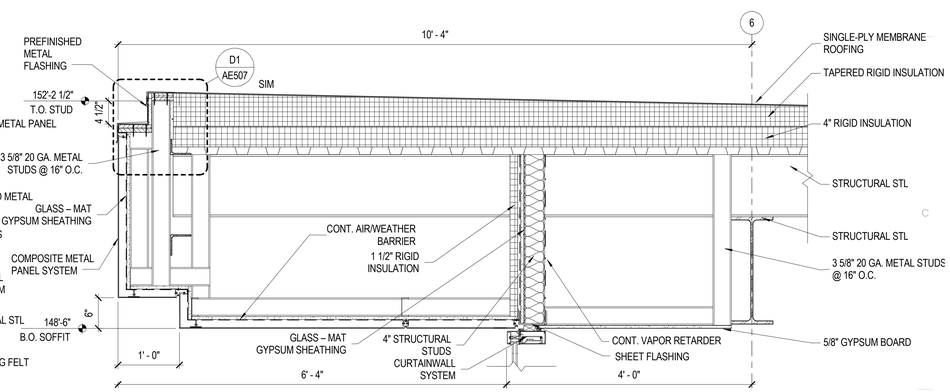

C4 SECTION

SCALE: 1" = 1'-0"

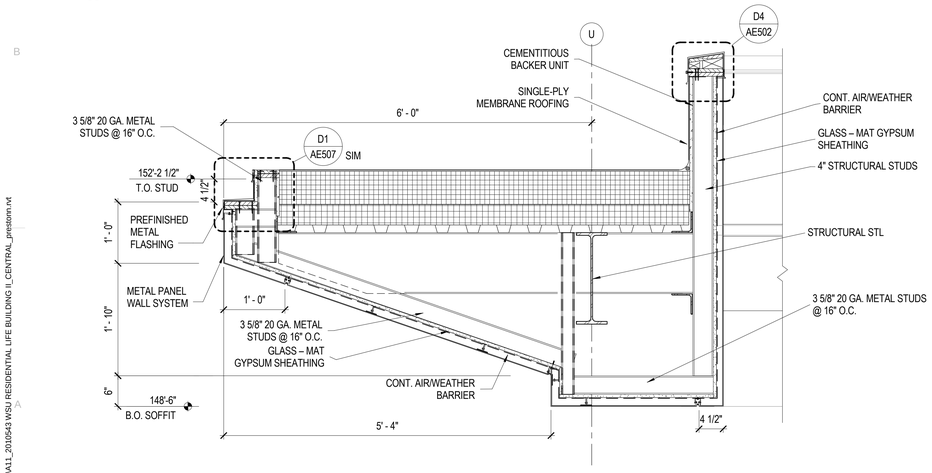

A1 SECTION

SCALE: 1" = 1'-0"

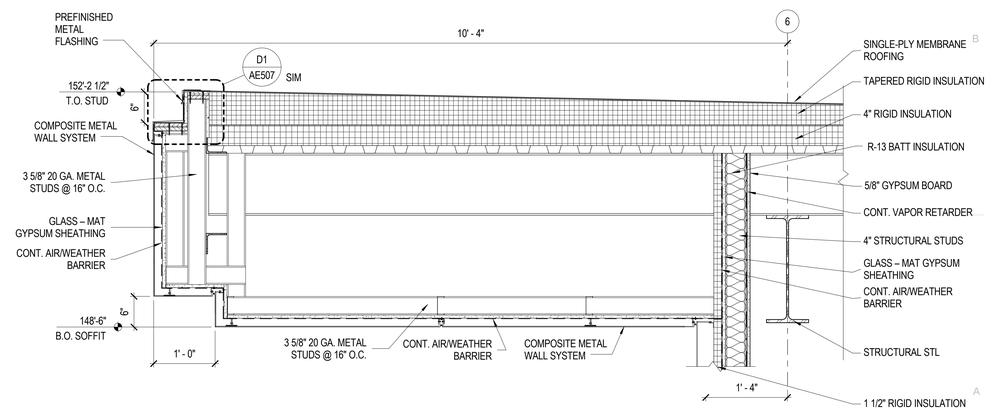

A3 SECTION

SCALE: 1" = 1'-0"

C:\Users\prestonn\Documents\A11_2010543 WSU RESIDENTIAL LIFE BUILDING II_CENTRAL_prestonn.rvt
5/17/2011 12:23:08 PM

MHTN
ARCHITECTS
MHTN Architects, Inc.
420 East South Temple
Suite 100
Salt Lake City, Utah 84111
Telephone (801) 595-6700
Telefax (801) 595-6717
www.mhtn.com

WEBER STATE UNIVERSITY
RESIDENTIAL LIFE PHASE II - BLDG 2

DFCM PROJECT NUMBER: 10176810

WEBER STATE UNIVERSITY
OGDEN, UTAH 84408

SEAL

MHTN PROJECT NO. 2010543

DRAWN BY: PWN CHECKED BY: MG

ISSUED:

NO.	DATE	DESCRIPTION
01	17 MAY 2011	CONSTRUCTION DOCUMENTS

CONTRACTOR TO VERIFY DRAWINGS IN FIELD USE REFLECT LAST REVISION DATE:

NO.	DATE	DESCRIPTION
1	Date 3	Revision 3

SHEET NAME

EXTERIOR DETAILS

CONSTRUCTION DOCUMENTS
17 MAY 2011

SHEET NUMBER

AE504

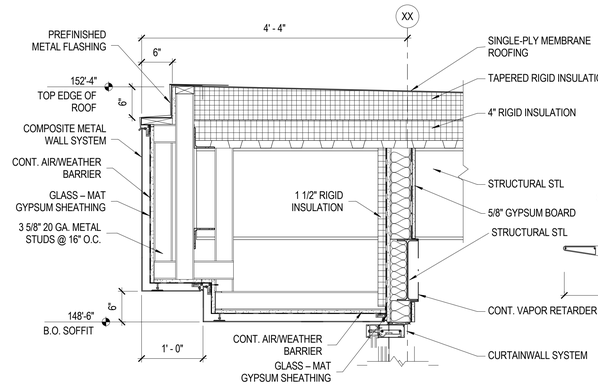

D1 SECTION

SCALE: 1" = 1'-0"

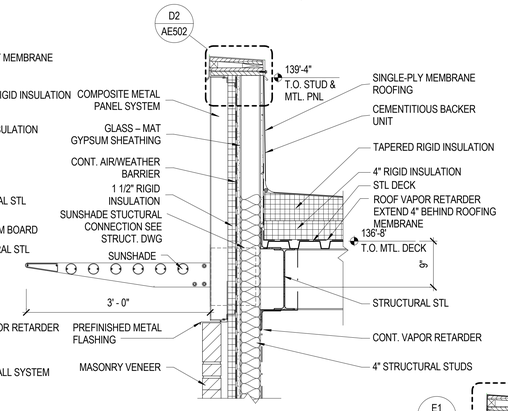

D2 SECTION

SCALE: 1" = 1'-0"

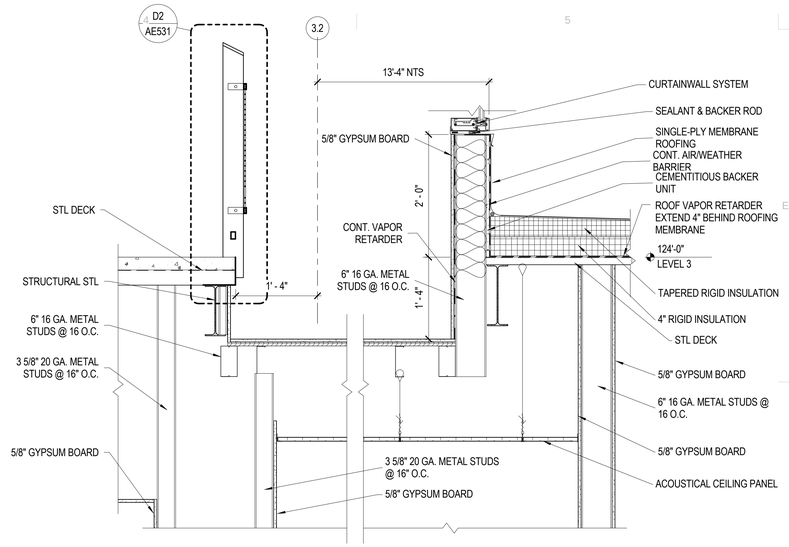

D4 SECTION

SCALE: 1" = 1'-0"

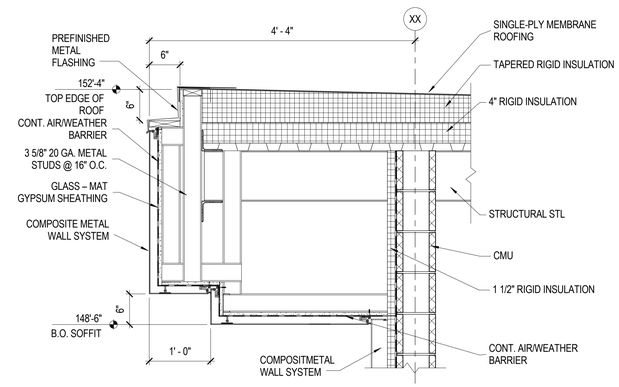

C1 SECTION

SCALE: 1" = 1'-0"

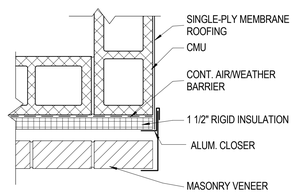

C2 DETAIL

SCALE: 1 1/2" = 1'-0"

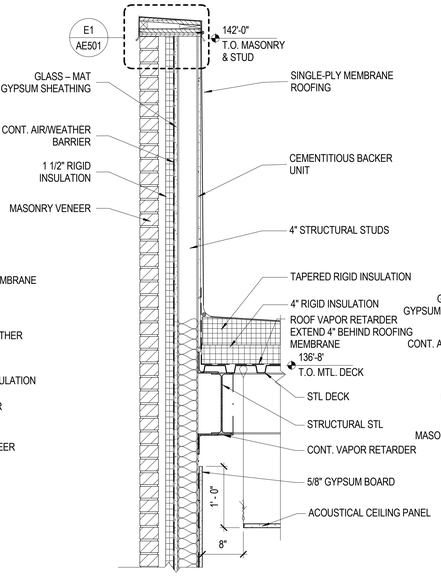

C3 SECTION

SCALE: 1" = 1'-0"

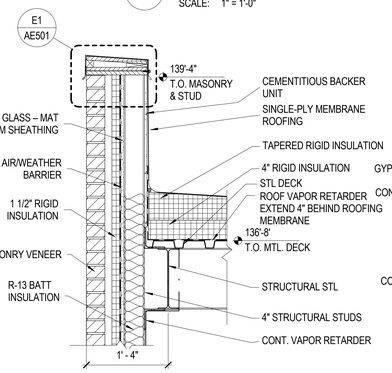

C4 SECTION

SCALE: 1" = 1'-0"

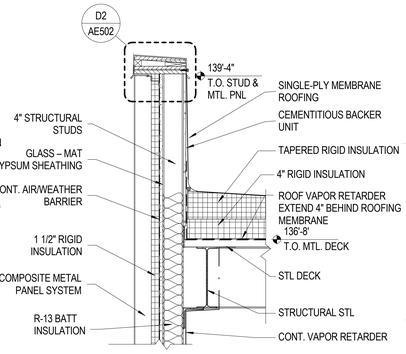

C5 SECTION

SCALE: 1" = 1'-0"

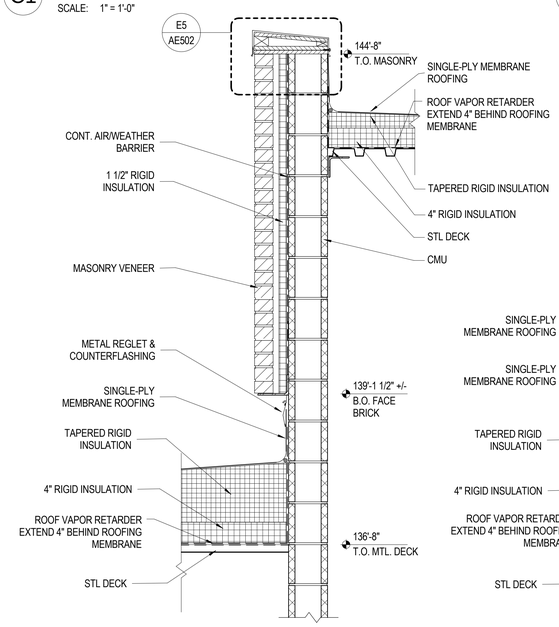

A1 SECTION

SCALE: 1" = 1'-0"

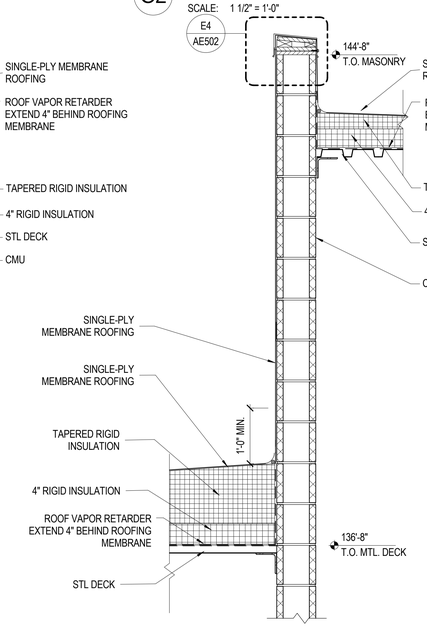

A2 SECTION

SCALE: 1" = 1'-0"

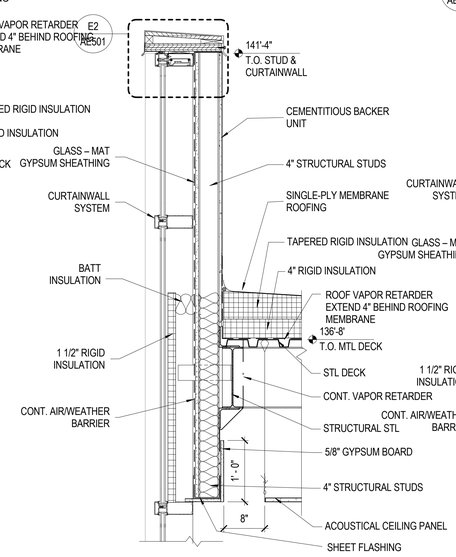

A3 SECTION

SCALE: 1" = 1'-0"

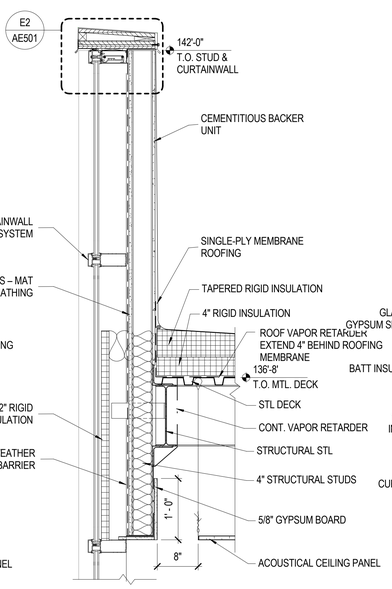

A4 SECTION

SCALE: 1" = 1'-0"

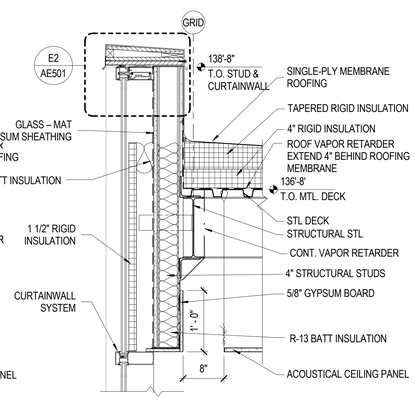

A5 SECTION

SCALE: 1" = 1'-0"

C:\Users\jpreston\Documents\A11_2010543 WSU RESIDENTIAL LIFE BUILDING II_CENTRAL_jpreston.rvt
5/17/2011 12:23:11 PM

MHTN ARCHITECTS
MHTN Architects, Inc.
420 East South Temple
Suite 100
Salt Lake City, Utah 84111
Telephone (801) 595-6700
Telefax (801) 595-6717
www.mhtn.com

WEBER STATE UNIVERSITY
RESIDENTIAL LIFE PHASE II - BLDG 2

DFCM PROJECT NUMBER: 10176810

WEBER STATE UNIVERSITY
OGDEN, UTAH 84408

SEAL

MHTN PROJECT NO. 2010543

DRAWN BY: PWN CHECKED BY: MG

ISSUED:

NO.	DATE	DESCRIPTION
01	17 MAY 2011	CONSTRUCTION DOCUMENTS

CONTRACTOR TO VERIFY DRAWINGS IN FIELD USE REFLECT LAST REVISION DATE.

NO.	DATE	DESCRIPTION
1	Date 3	Revision 3

SHEET NAME

EXTERIOR DETAILS

CONSTRUCTION DOCUMENTS
17 MAY 2011

SHEET NUMBER

AE505

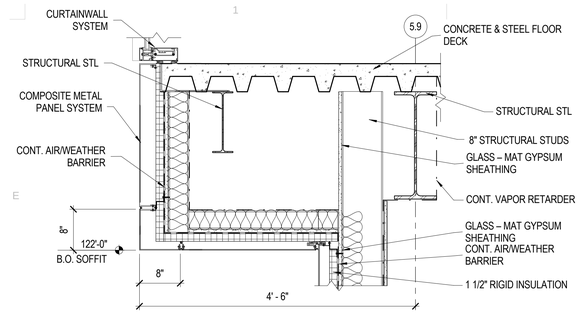

E1 SECTION
SCALE: 1" = 1'-0"

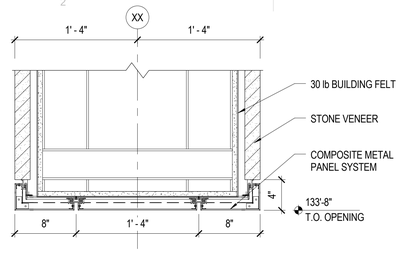

E2 DETAIL
SCALE: 1 1/2" = 1'-0"

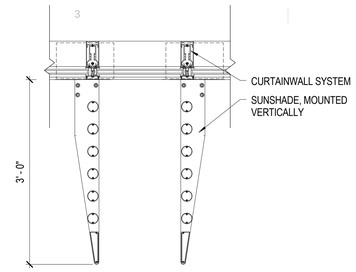

E3 DETAIL
SCALE: 1" = 1'-0"

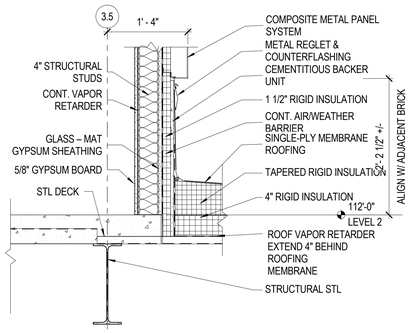

D1 SECTION
SCALE: 1" = 1'-0"

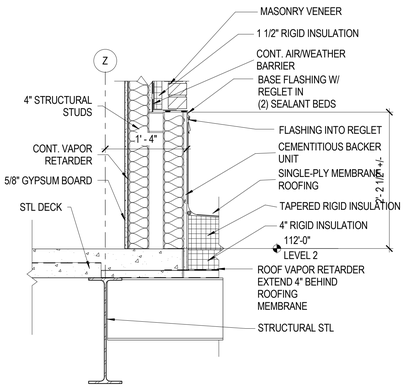

D2 SECTION
SCALE: 1" = 1'-0"

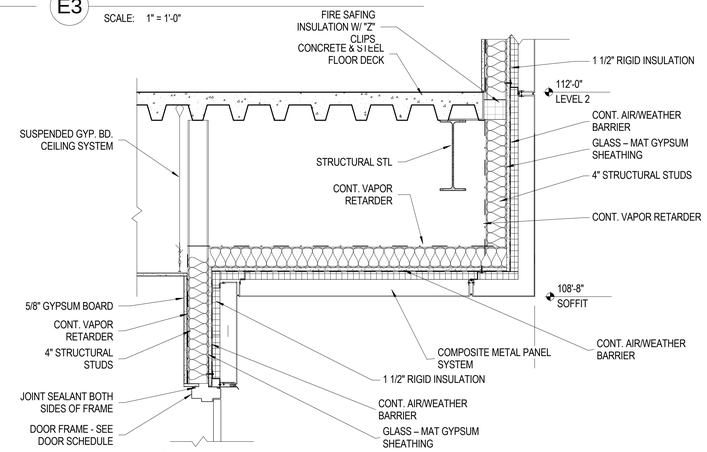

D3 SECTION
SCALE: 1" = 1'-0"

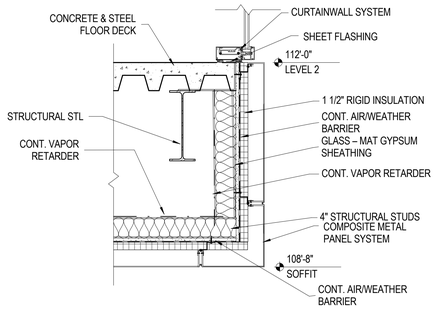

D4 SECTION
SCALE: 1" = 1'-0"

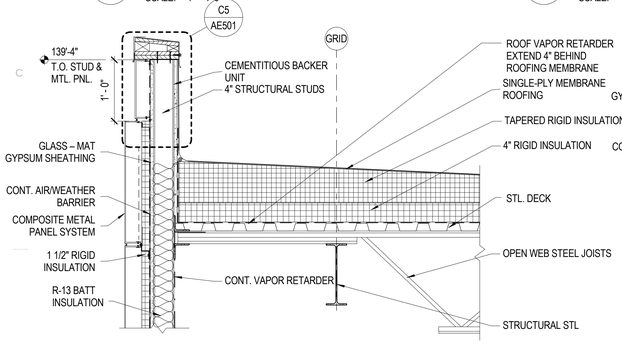

B1 SECTION
SCALE: 1" = 1'-0"

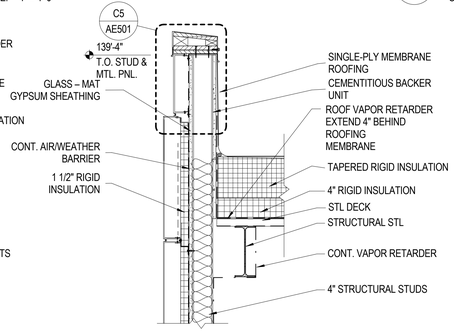

B2 SECTION
SCALE: 1" = 1'-0"

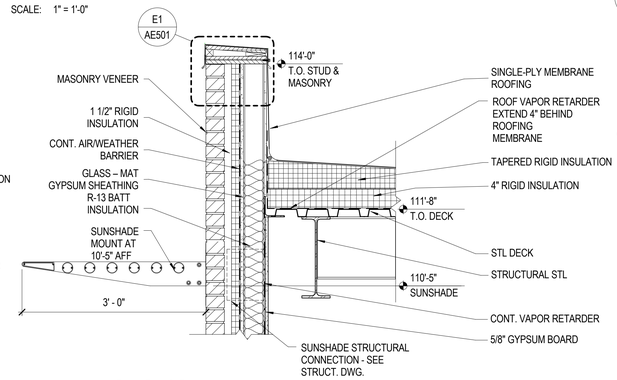

B3 SECTION
SCALE: 1" = 1'-0"

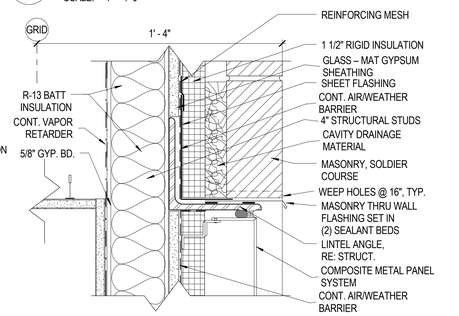

B5 SECTION
SCALE: 3" = 1'-0"

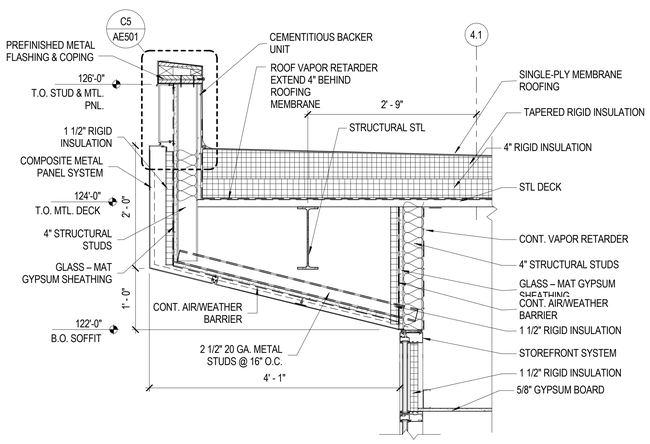

A1 SECTION
SCALE: 1" = 1'-0"

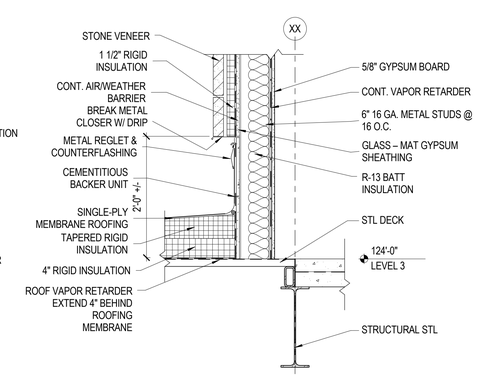

A2 SECTION
SCALE: 1" = 1'-0"

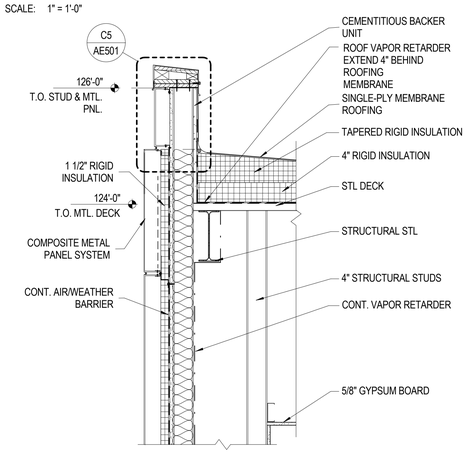

A3 SECTION
SCALE: 1" = 1'-0"

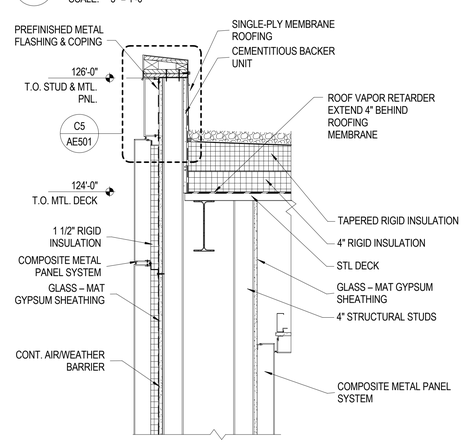

A4 SECTION
SCALE: 1" = 1'-0"

MHTN ARCHITECTS
MHTN Architects, Inc.
420 East South Temple
Suite 100
Salt Lake City, Utah 84111
Telephone (801) 595-6700
Telefax (801) 595-6717
www.mhtn.com

WEBER STATE UNIVERSITY
RESIDENTIAL LIFE PHASE II - BLDG 2

DFCM PROJECT NUMBER: 10176810

WEBER STATE UNIVERSITY
OGDEN, UTAH 84408

SEAL

MHTN PROJECT NO. 2010543

DRAWN BY: PWN CHECKED BY: MG

ISSUED:

NO.	DATE	DESCRIPTION
01	17 MAY 2011	CONSTRUCTION DOCUMENTS

CONTRACTOR TO VERIFY DRAWINGS IN FIELD USE REFLECT LAST REVISION DATE.

NO.	DATE	DESCRIPTION
1	Date 3	Revision 3

SHEET NAME
EXTERIOR DETAILS

CONSTRUCTION DOCUMENTS
17 MAY 2011

SHEET NUMBER
AE506

C:\Users\prestonm\Documents\A11_2010543 WSU RESIDENTIAL LIFE BUILDING II_CENTRAL_prestonm.rvt
5/17/2011 12:23:14 PM

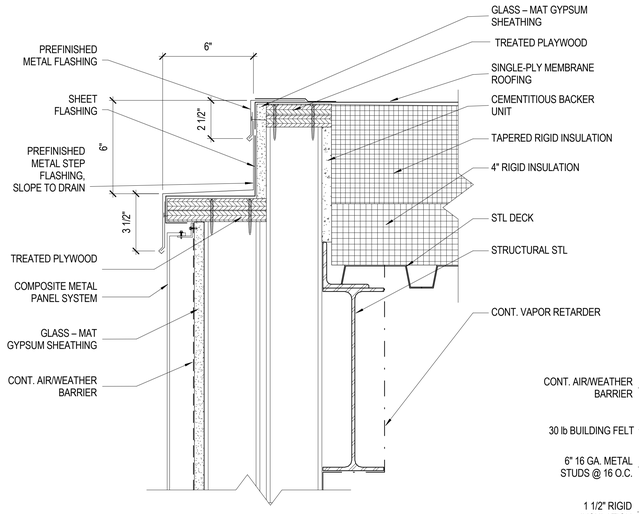

D1 SECTION

SCALE: 3" = 1'-0"

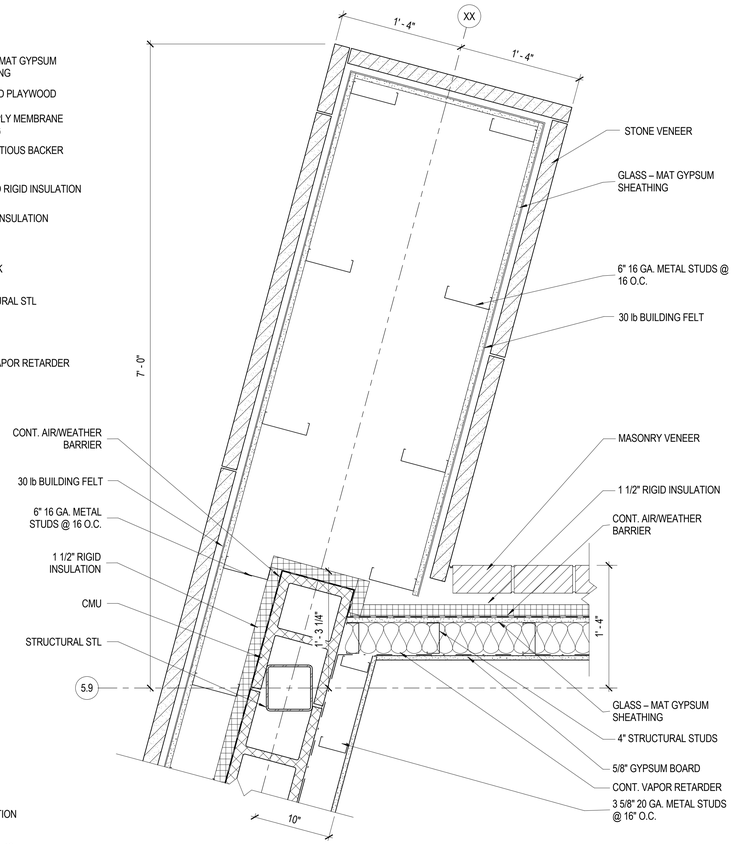

C2 DETAIL

SCALE: 1 1/2" = 1'-0"

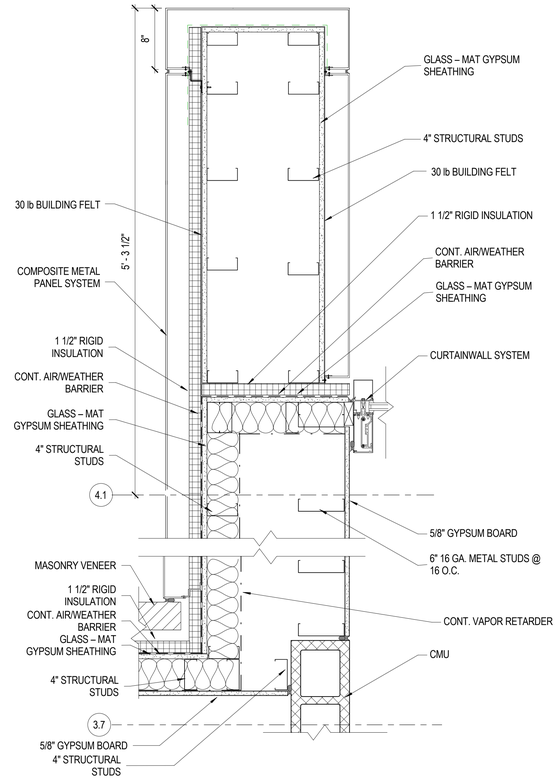

C4 DETAIL

SCALE: 1 1/2" = 1'-0"

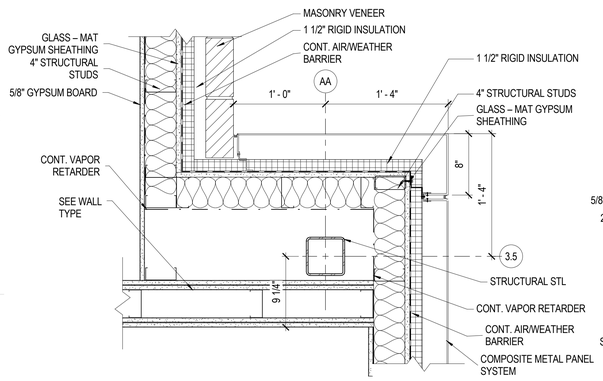

B1 DETAIL

SCALE: 1 1/2" = 1'-0"

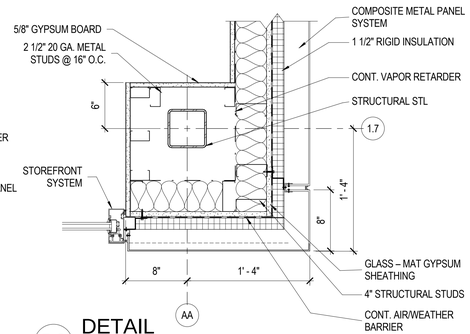

B2 DETAIL

SCALE: 1 1/2" = 1'-0"

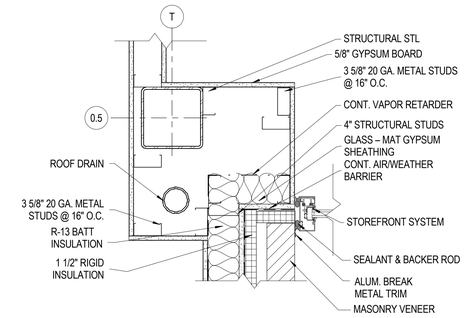

B3 DETAIL

SCALE: 1 1/2" = 1'-0"

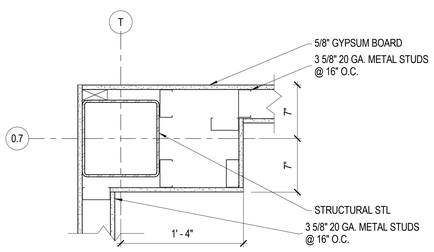

B5 DETAIL

SCALE: 1 1/2" = 1'-0"

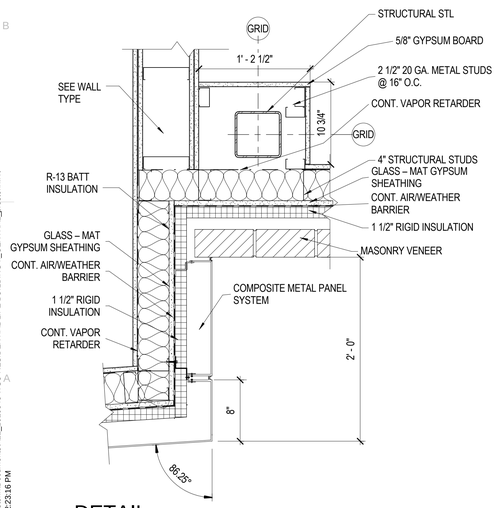

A1 DETAIL

SCALE: 1 1/2" = 1'-0"

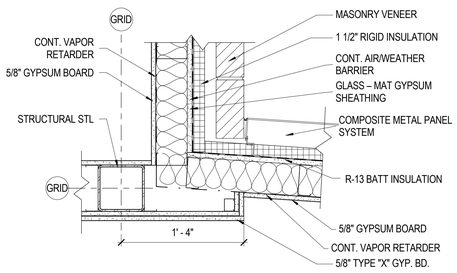

A2 DETAIL

SCALE: 1 1/2" = 1'-0"

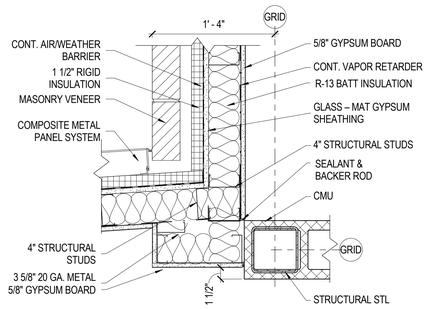

A3 DETAIL

SCALE: 1 1/2" = 1'-0"

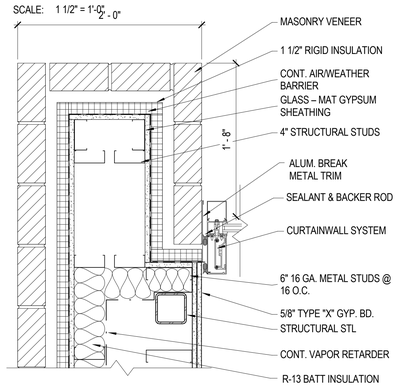

A5 DETAIL

SCALE: 1 1/2" = 1'-0"

C:\Users\preston\Documents\A11_2010543 WSU RESIDENTIAL LIFE BUILDING II_CENTRAL_preston.rvt
5/17/2011 12:23:16 PM

MHTN ARCHITECTS

MHTN Architects, Inc.
420 East South Temple
Suite 100
Salt Lake City, Utah 84111
Telephone (801) 595-6700
Telefax (801) 595-6717
www.mhtn.com

WEBER STATE UNIVERSITY
RESIDENTIAL LIFE PHASE II - BLDG 2

DFCM PROJECT NUMBER: 10176810

WEBER STATE UNIVERSITY
OGDEN, UTAH 84408

SEAL

MHTN PROJECT NO. 2010543

DRAWN BY: PWN CHECKED BY: MG

ISSUED

NO.	DATE	DESCRIPTION
01	17 MAY 2011	CONSTRUCTION DOCUMENTS

CONTRACTOR TO VERIFY DRAWINGS IN FIELD USE REFLECT LAST REVISION DATE.

NO.	DATE	DESCRIPTION

SHEET NAME

EXTERIOR DETAILS

CONSTRUCTION DOCUMENTS
17 MAY 2011

SHEET NUMBER

AE507

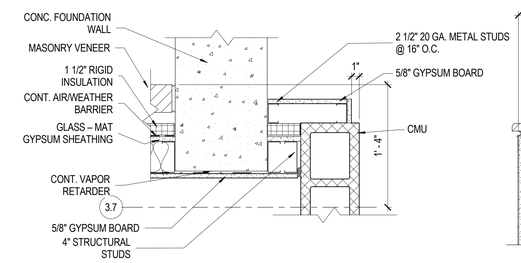

E1 DETAIL

SCALE: 1 1/2" = 1'-0"

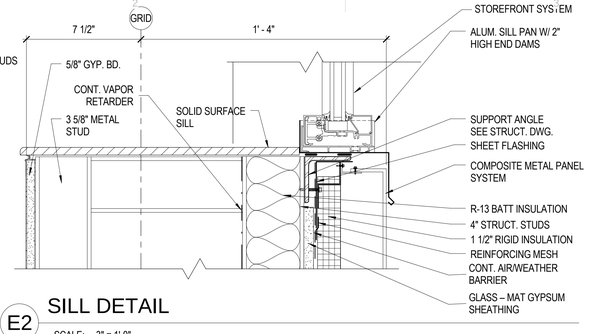

E2 SILL DETAIL

SCALE: 3" = 1'-0"

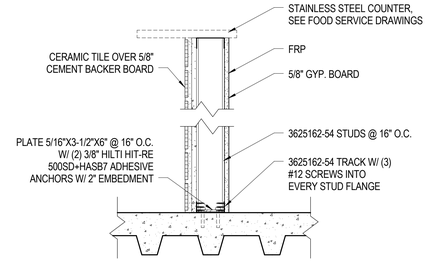

E3 SECTION

SCALE: 1 1/2" = 1'-0"

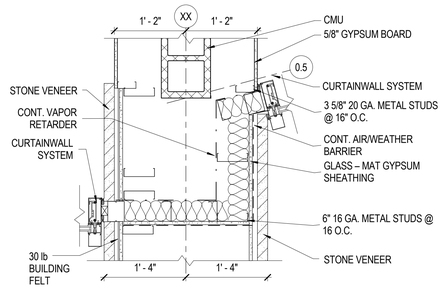

D1 DETAIL

SCALE: 1" = 1'-0"

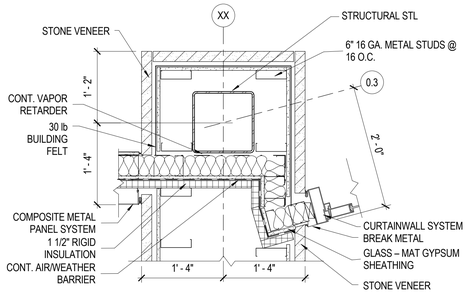

D2 DETAIL

SCALE: 1" = 1'-0"

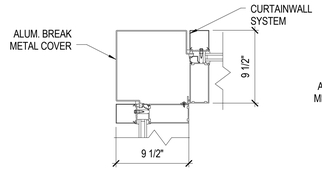

D3 JAMB DETAIL

SCALE: 1 1/2" = 1'-0"

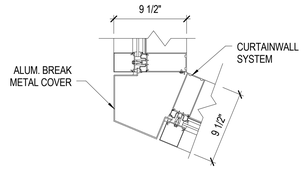

D4 JAMB DETAIL

SCALE: 1 1/2" = 1'-0"

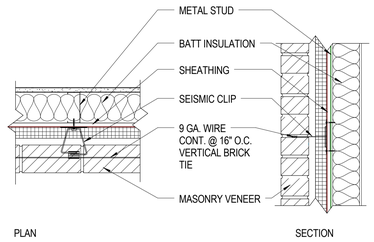

D5 TYP. VENEER REINFORCEMENT

SCALE: 1 1/2" = 1'-0"

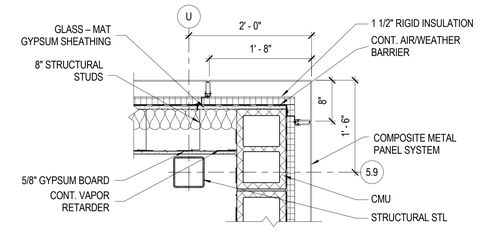

C1 DETAIL

SCALE: 1" = 1'-0"

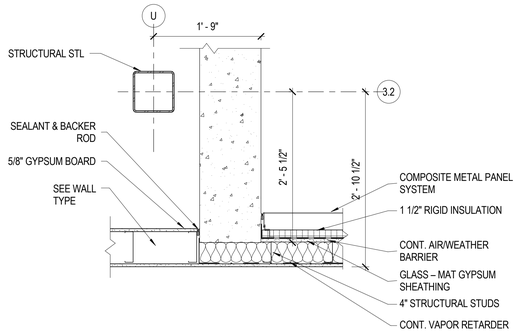

C2 DETAIL

SCALE: 1" = 1'-0"

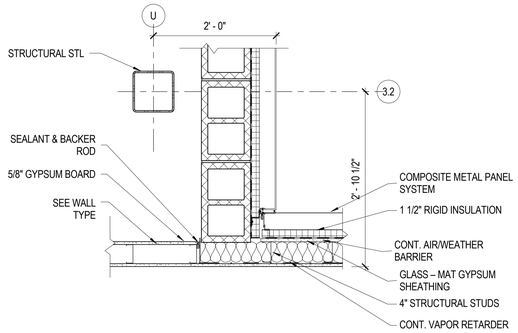

C3 DETAIL

SCALE: 1" = 1'-0"

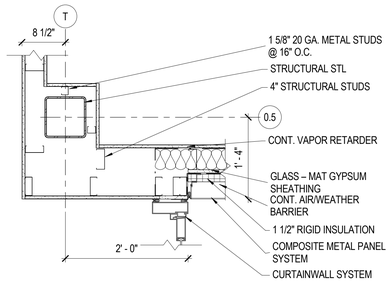

C5 DETAIL

SCALE: 1" = 1'-0"

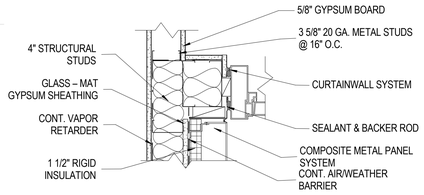

B1 DETAIL

SCALE: 1 1/2" = 1'-0"

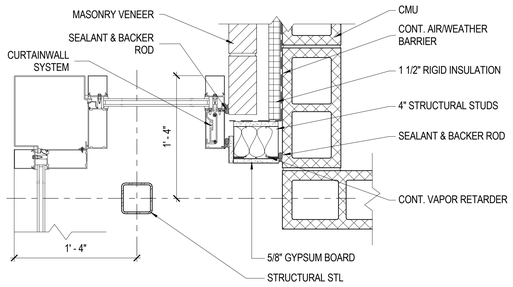

B3 DETAIL

SCALE: 1 1/2" = 1'-0"

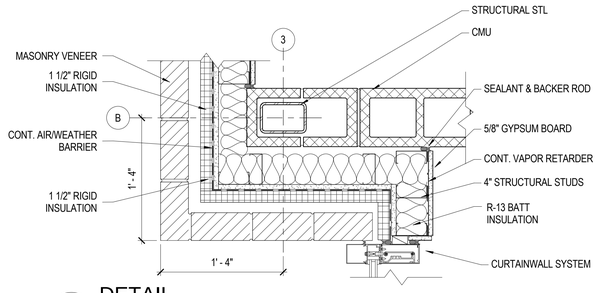

B4 DETAIL

SCALE: 1 1/2" = 1'-0"

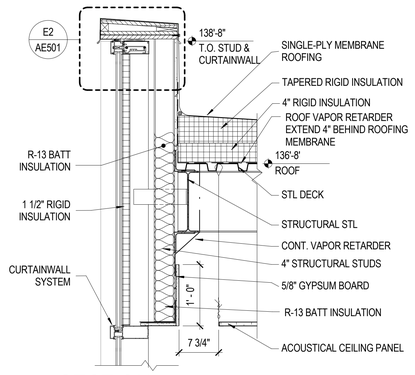

A1 SECTION

SCALE: 1" = 1'-0"

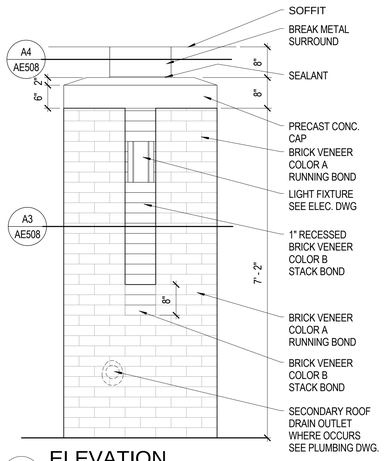

A2 ELEVATION

SCALE: 3/4" = 1'-0"

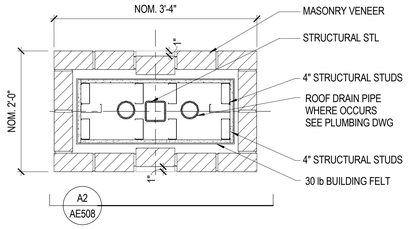

A3 DETAIL

SCALE: 1" = 1'-0"

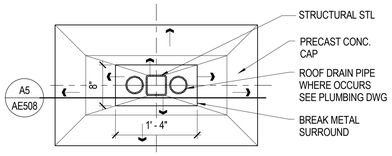

A4 DETAIL

SCALE: 1" = 1'-0"

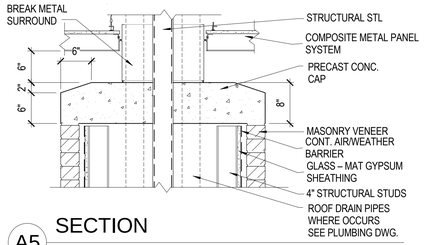

A5 SECTION

SCALE: 1" = 1'-0"

MHTN ARCHITECTS

MHTN Architects, Inc.
420 East South Temple
Suite 100
Salt Lake City, Utah 84111
Telephone (801) 595-6700
Telefax (801) 595-6717
www.mhtn.com

WEBER STATE UNIVERSITY
RESIDENTIAL LIFE PHASE II - BLDG 2

DFCM PROJECT NUMBER: 10176810

WEBER STATE UNIVERSITY
OGDEN, UTAH 84408

SEAL

MHTN PROJECT NO. 2010543

DRAWN BY: Author CHECKED BY: Checker

ISSUED:

NO.	DATE	DESCRIPTION
01	17 MAY 2011	CONSTRUCTION DOCUMENTS

CONTRACTOR TO VERIFY DRAWINGS IN FIELD-USE REFLECT LAST REVISION DATE:

NO.	DATE	DESCRIPTION
1	Date 3	Revision 3

SHEET NAME

EXTERIOR DETAILS

CONSTRUCTION DOCUMENTS
17 MAY 2011

SHEET NUMBER

AE508

C:\Users\prestonm\Documents\A11_2010543 WSU RESIDENTIAL LIFE BUILDING II_CENTRAL_prestonm.rvt
5/17/2011 12:23:19 PM

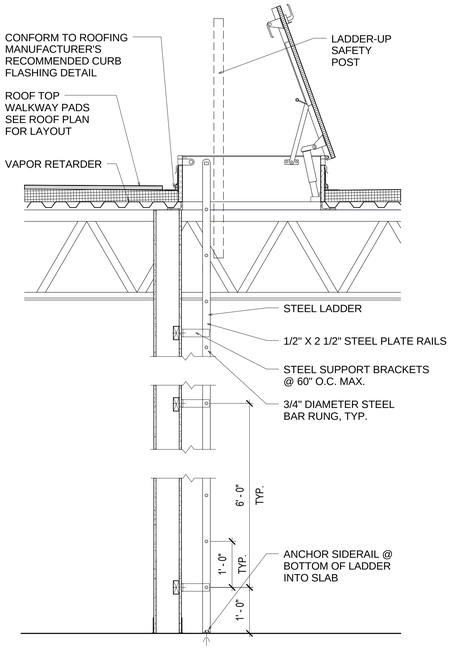

D4 DETAIL

SCALE: 3/4" = 1'-0"

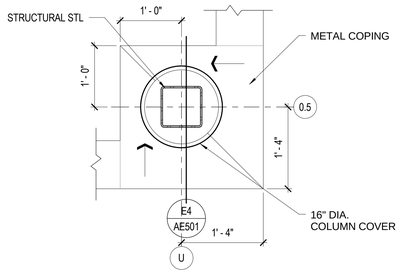

B1 DETAIL

SCALE: 1" = 1'-0"

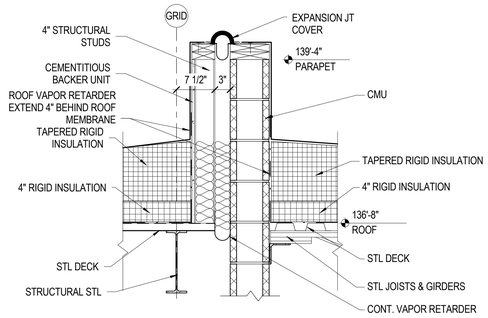

B2 SECTION

SCALE: 1" = 1'-0"

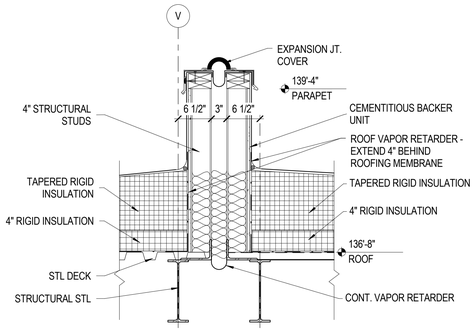

B4 SECTION

SCALE: 1" = 1'-0"

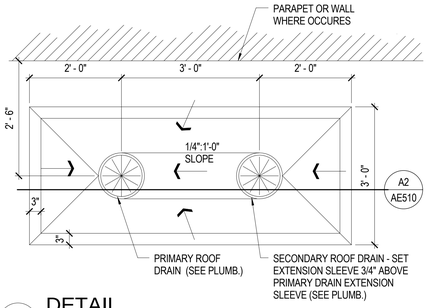

A1 DETAIL

SCALE: 3/4" = 1'-0"

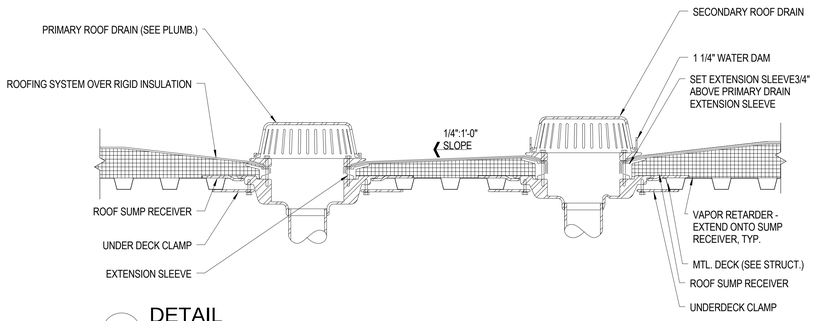

A2 DETAIL

SCALE: 1 1/2" = 1'-0"

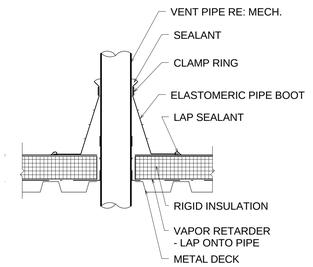

A4 DETAIL

SCALE: 1 1/2" = 1'-0"

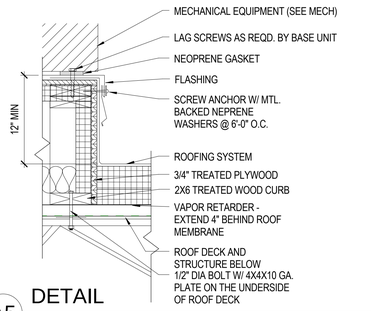

A5 DETAIL

SCALE: 1 1/2" = 1'-0"

MHTN ARCHITECTS
MHTN Architects, Inc.
420 East South Temple
Suite 100
Salt Lake City, Utah 84111
Telephone (801) 595-6700
Telefax (801) 595-6717
www.mhtn.com

WEBER STATE UNIVERSITY
RESIDENTIAL LIFE PHASE II - BLDG 2

DFCM PROJECT NUMBER: 10176810

WEBER STATE UNIVERSITY
OGDEN, UTAH 84408

SEAL

MHTN PROJECT NO. 2010543

DRAWN BY: PWN CHECKED BY: MG

ISSUED:

NO.	DATE	DESCRIPTION
01	17 MAY 2011	CONSTRUCTION DOCUMENTS

CONTRACTOR TO VERIFY DRAWINGS IN FIELD USE REFLECT LAST REVISION DATE:

NO.	DATE	DESCRIPTION

SHEET NAME

ROOF DETAILS

CONSTRUCTION DOCUMENTS
17 MAY 2011

SHEET NUMBER

AE510

C:\Users\prestonm\Documents\A11_2010543 WSU RESIDENTIAL LIFE BUILDING II_CENTRAL_prestonm.rvt
5/17/2011 12:23:21 PM

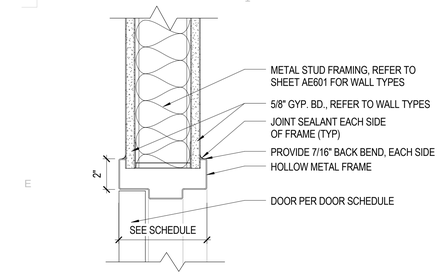

E1 DOOR HEAD DETAIL
SCALE: 3" = 1'-0"

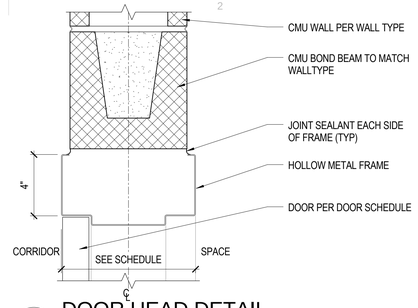

E2 DOOR HEAD DETAIL
SCALE: 3" = 1'-0"

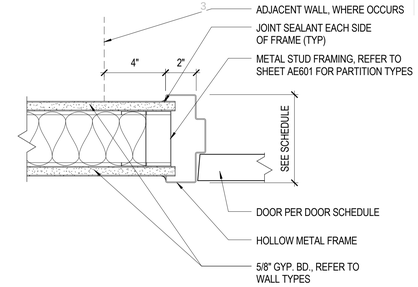

E3 DOOR JAMB DETAIL
SCALE: 3" = 1'-0"

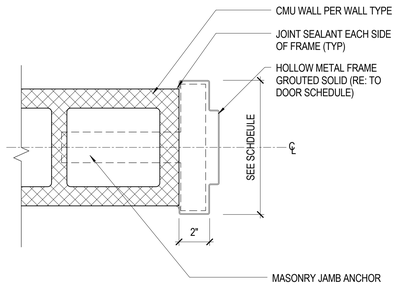

E4 DOOR JAMB DETAIL
SCALE: 3" = 1'-0"

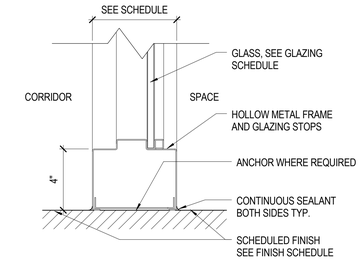

E5 WINDOW SILL DETAIL
SCALE: 3" = 1'-0"

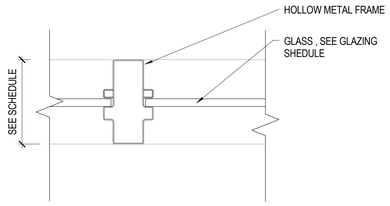

D1 MULLION DETAIL
SCALE: 3" = 1'-0"

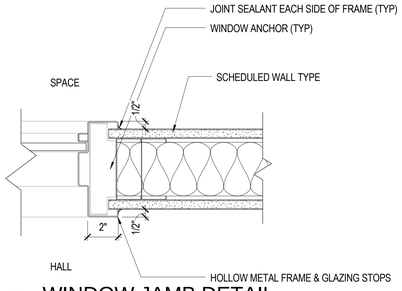

D2 WINDOW JAMB DETAIL
SCALE: 3" = 1'-0"

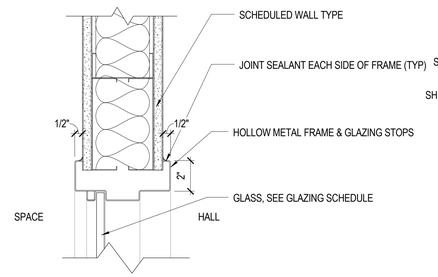

D3 WINDOW JAMB DETAIL
SCALE: 3" = 1'-0"

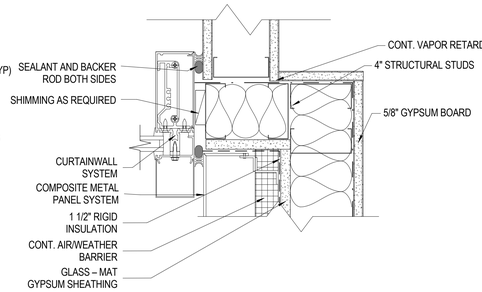

D4 JAMB DETAIL
SCALE: 3" = 1'-0"

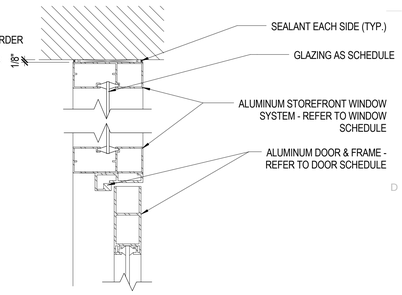

D5 STOREFRONT HEAD DETAIL
SCALE: 3" = 1'-0"

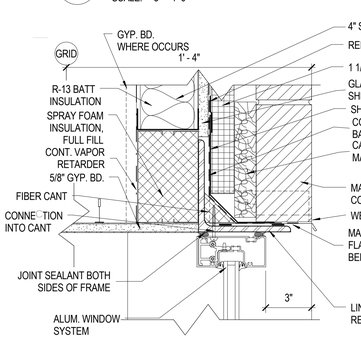

C1 HEAD DETAIL
SCALE: 3" = 1'-0"

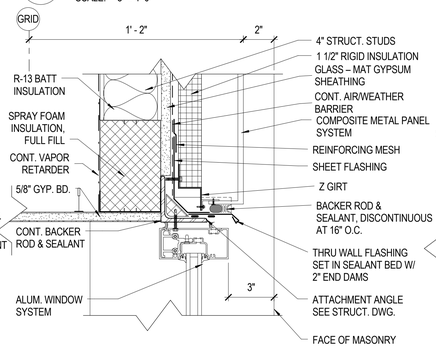

C2 HEAD DETAIL
SCALE: 3" = 1'-0"

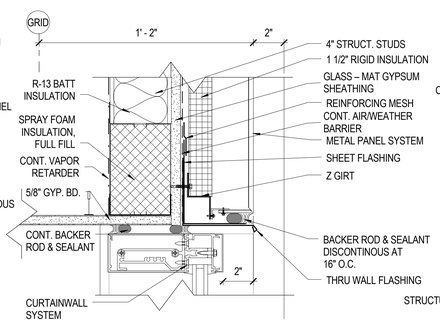

C3 HEAD DETAIL
SCALE: 3" = 1'-0"

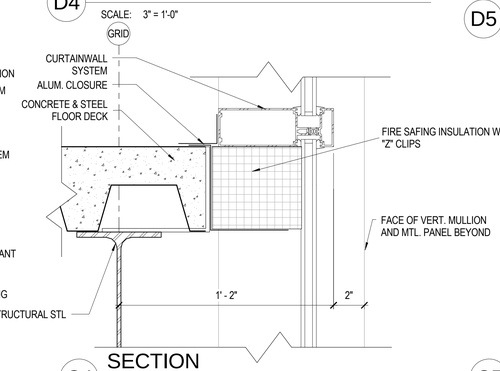

C4 SECTION
SCALE: 3" = 1'-0"

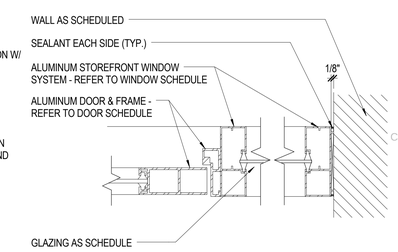

C5 STOREFRONT JAMB DETAIL
SCALE: 3" = 1'-0"

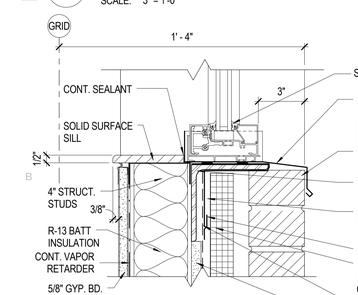

B1 SILL DETAIL
SCALE: 3" = 1'-0"

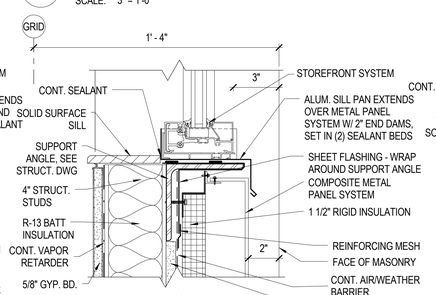

B2 SILL DETAIL
SCALE: 3" = 1'-0"

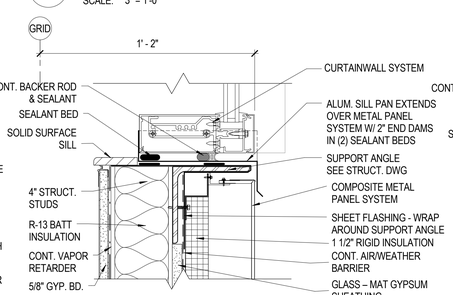

B3 SILL DETAIL
SCALE: 3" = 1'-0"

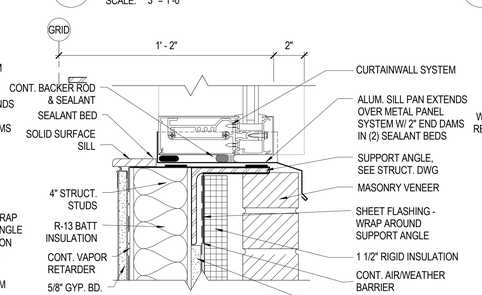

B4 SILL DETAIL
SCALE: 3" = 1'-0"

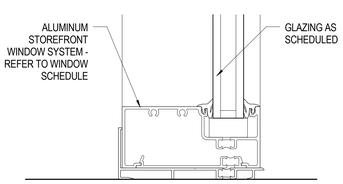

B5 INTERIOR STOREFRONT SILL DETAIL
SCALE: 6" = 1'-0"

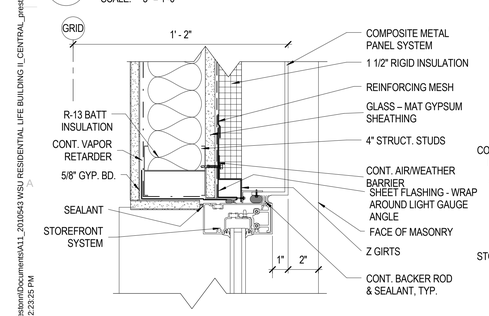

A1 JAMB DETAIL
SCALE: 3" = 1'-0"

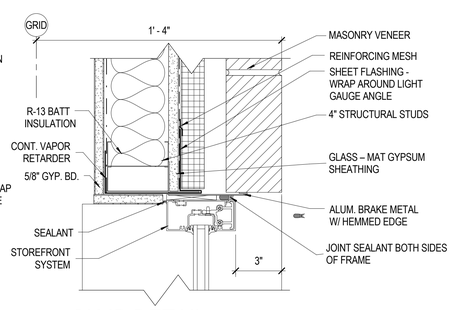

A2 JAMB DETAIL
SCALE: 3" = 1'-0"

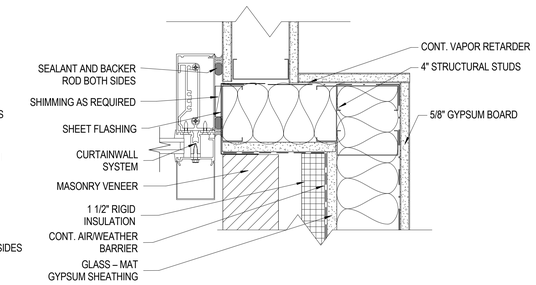

A3 JAMB DETAIL
SCALE: 3" = 1'-0"

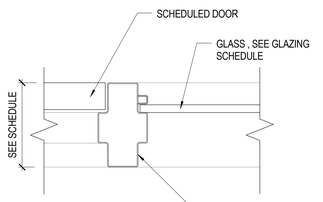

A4 JAMB DETAIL
SCALE: 3" = 1'-0"

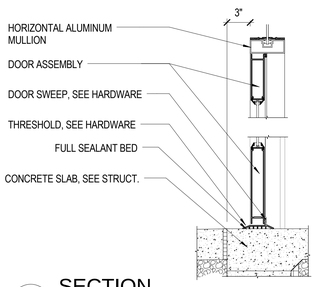

A5 SECTION
SCALE: 1 1/2" = 1'-0"

MHTN ARCHITECTS
MHTN Architects, Inc.
420 East South Temple
Suite 100
Salt Lake City, Utah 84111
Telephone (801) 595-6700
Telefax (801) 595-6717
www.mhtn.com

WEBER STATE UNIVERSITY
RESIDENTIAL LIFE PHASE II - BLDG 2
DFCM PROJECT NUMBER: 10176810

WEBER STATE UNIVERSITY
OGDEN, UTAH 84408

SEAL

MHTN PROJECT NO. 2010543
DRAWN BY: PWN CHECKED BY: MG

ISSUED:

NO.	DATE	DESCRIPTION
01	17 MAY 2011	CONSTRUCTION DOCUMENTS

CONTRACTOR TO VERIFY DRAWINGS IN FIELD USE REFLECT LAST REVISION DATE.

NO.	DATE	DESCRIPTION

SHEET NAME
DOOR & WINDOW DETAILS
CONSTRUCTION DOCUMENTS
17 MAY 2011

SHEET NUMBER
AE521

C:\Users\prestonm\Documents\A11_2010543 WSU RESIDENTIAL LIFE BUILDING II_CENTRAL_prestonm.rvt
5/17/2011 12:23:25 PM

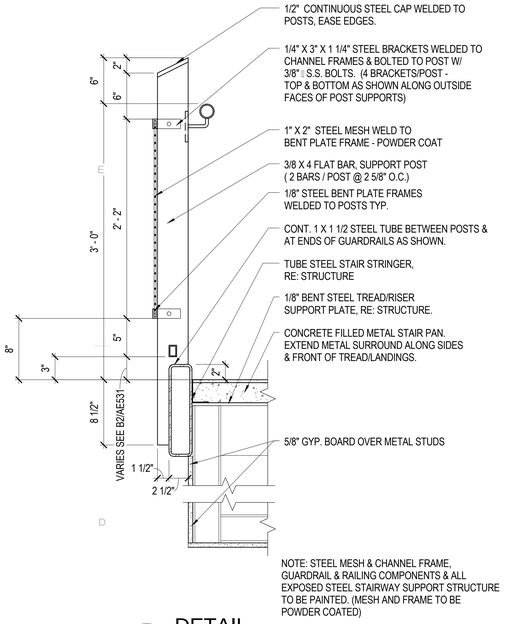

D1 DETAIL

SCALE: 1 1/2" = 1'-0"

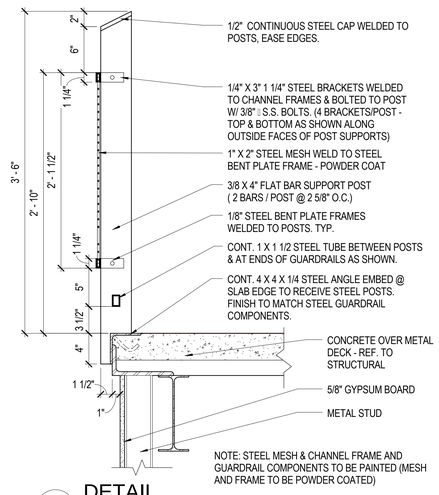

D2 DETAIL

SCALE: 1 1/2" = 1'-0"

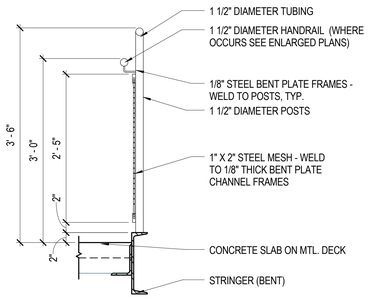

E3 DETAIL

SCALE: 1" = 1'-0"

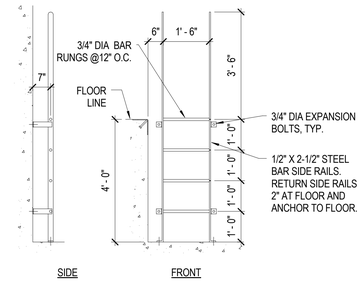

E4 ELEVATOR PIT LADDER DETAIL

SCALE: 1/2" = 1'-0"

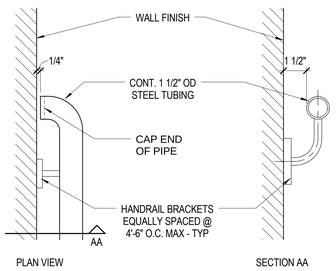

C1 TYP. HANDRAIL BRACKET

SCALE: 3" = 1'-0"

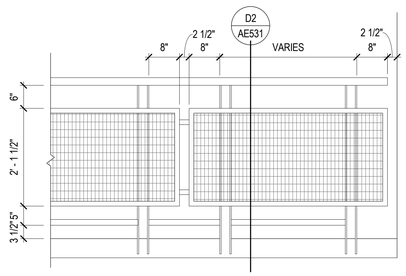

C2 DETAIL- TYP. GUARD RAIL

SCALE: 3/4" = 1'-0"

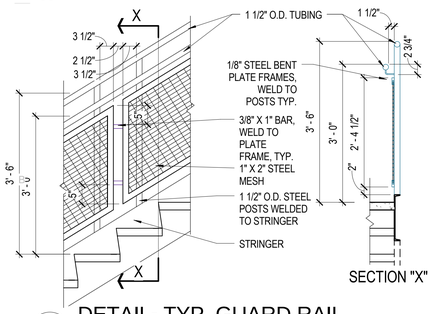

B1 DETAIL- TYP. GUARD RAIL

SCALE: 3/4" = 1'-0"

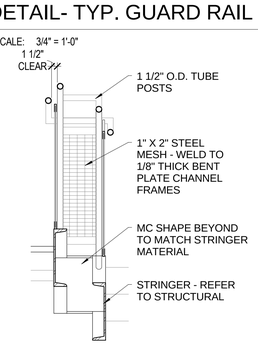

B2 STAIR LANDING

SCALE: 3/4" = 1'-0"

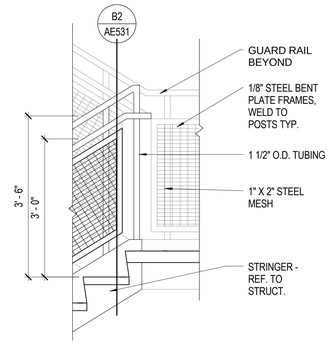

B3 DETAIL- TYP. GUARD RAIL

SCALE: 3/4" = 1'-0"

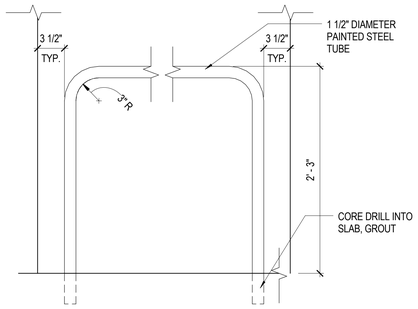

B4 DETAIL

SCALE: 1 1/2" = 1'-0"

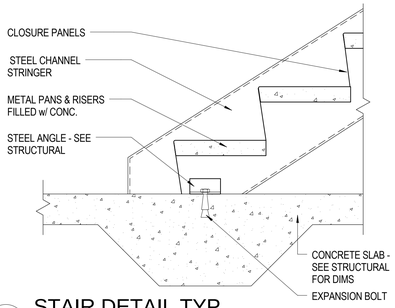

A1 STAIR DETAIL TYP.

SCALE: 1 1/2" = 1'-0"

ST02

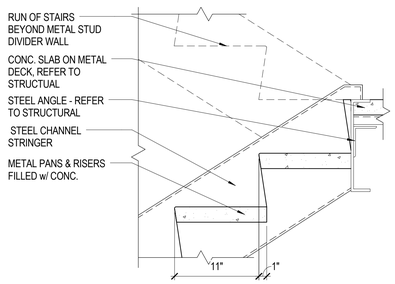

A2 STAIR DETAIL @ LANDING TYP.

SCALE: 1 1/2" = 1'-0"

ST05

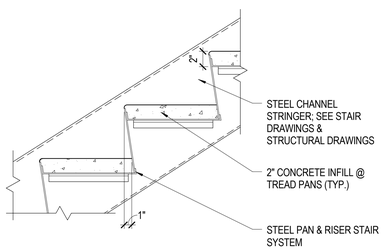

A3 STAIR DETAIL TYP.

SCALE: 1 1/2" = 1'-0"

ST03

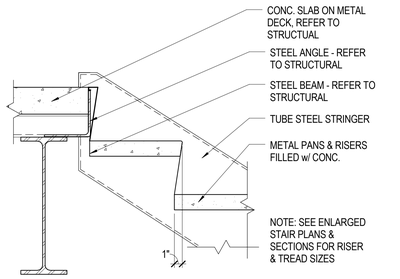

A4 STAIR DETAIL @ FLOOR TYP.

SCALE: 1 1/2" = 1'-0"

ST04

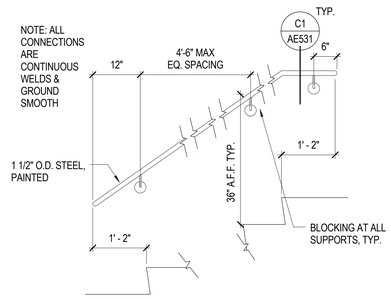

A5 HANDRAIL DETAIL TYP.

SCALE: 3/4" = 1'-0"

ST01

MHTN ARCHITECTS
MHTN Architects, Inc.
420 East South Temple
Suite 100
Salt Lake City, Utah 84111
Telephone (801) 595-6700
Telefax (801) 595-6717
www.mhtn.com

WEBER STATE UNIVERSITY
RESIDENTIAL LIFE PHASE II - BLDG 2

DFCM PROJECT NUMBER: 10176810

WEBER STATE UNIVERSITY
OGDEN, UTAH 84408

SEAL

MHTN PROJECT NO. 2010543

DRAWN BY: Author CHECKED BY: MG

ISSUED:

NO.	DATE	DESCRIPTION
01	17 MAY 2011	CONSTRUCTION DOCUMENTS

CONTRACTOR TO VERIFY DRAWINGS IN FIELD USE REFLECT LAST REVISION DATE.

NO.	DATE	DESCRIPTION

SHEET NAME

VERTICAL CIRCULATION DETAILS

CONSTRUCTION DOCUMENTS

17 MAY 2011

SHEET NUMBER

AE531

C:\Users\prestonm\Documents\AA11_2010543 WSU RESIDENTIAL LIFE BUILDING II_CENTRAL_prestonm.rvt
5/17/2011 12:23:27 PM

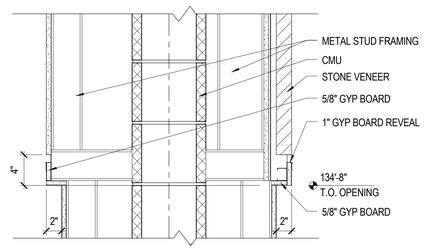

E2 DETAIL
SCALE: 1 1/2" = 1'-0"

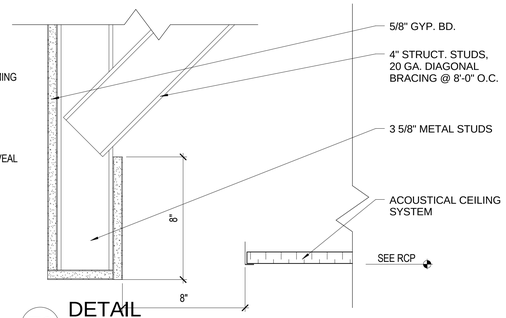

E3 DETAIL
SCALE: 3" = 1'-0"

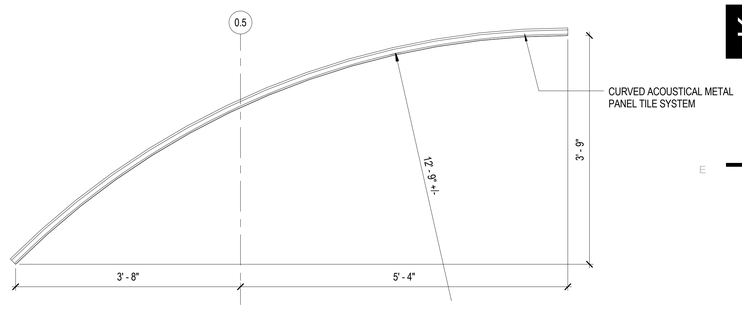

E4 CURVED METAL CEILING SECTION
SCALE: 1" = 1'-0"

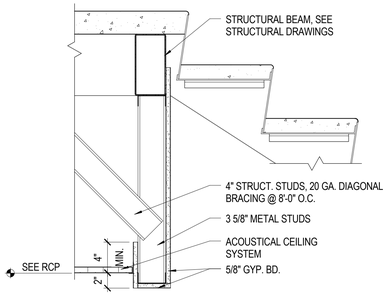

D1 DETAIL
SCALE: 1 1/2" = 1'-0"

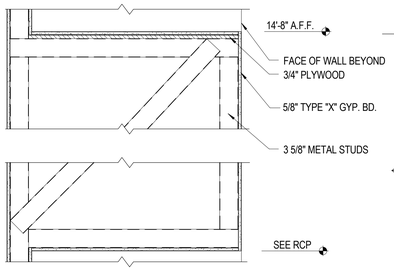

D2 DETAIL
SCALE: 1" = 1'-0"

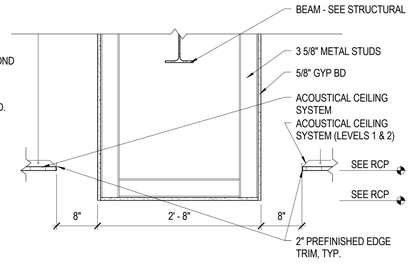

D3 DETAIL
SCALE: 1" = 1'-0"

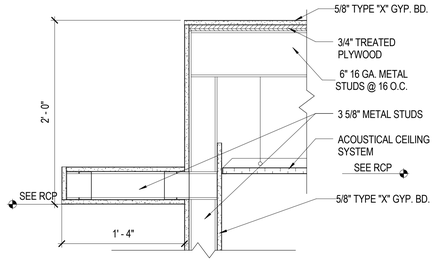

D4 DETAIL
SCALE: 1 1/2" = 1'-0"

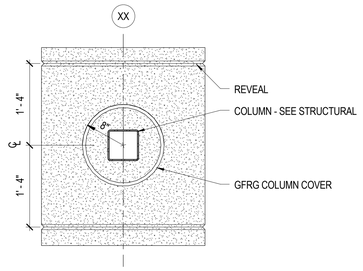

D5 DETAIL
SCALE: 1" = 1'-0"

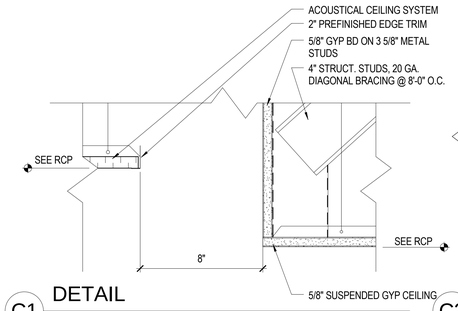

C1 DETAIL
SCALE: 3" = 1'-0"

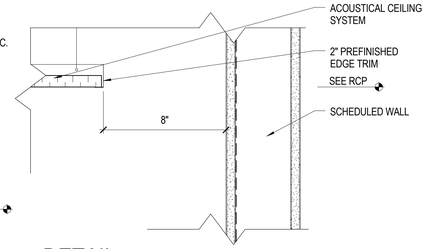

C2 DETAIL
SCALE: 3" = 1'-0"

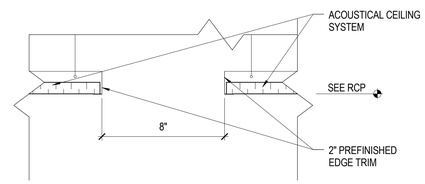

C3 DETAIL
SCALE: 3" = 1'-0"

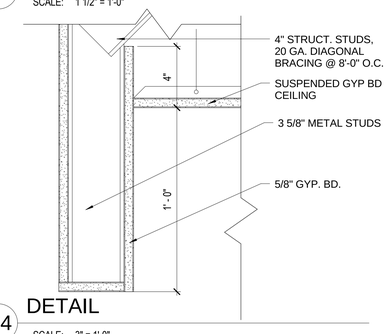

C4 DETAIL
SCALE: 3" = 1'-0"

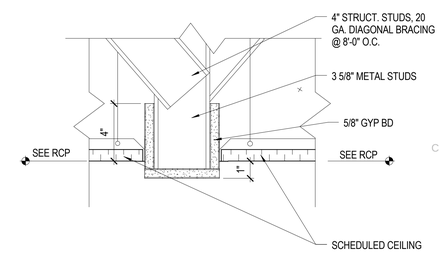

C5 DETAIL
SCALE: 3" = 1'-0"

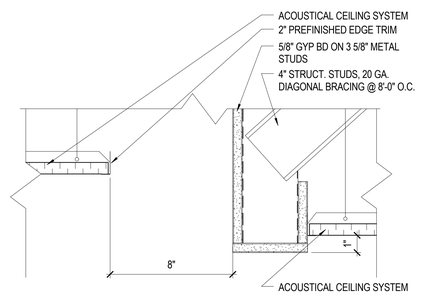

B1 DETAIL
SCALE: 3" = 1'-0"

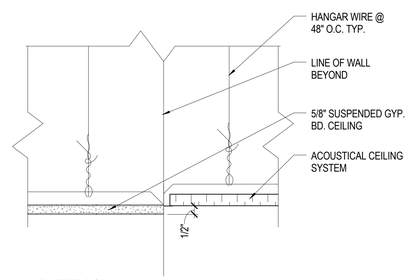

B2 DETAIL
SCALE: 3" = 1'-0"

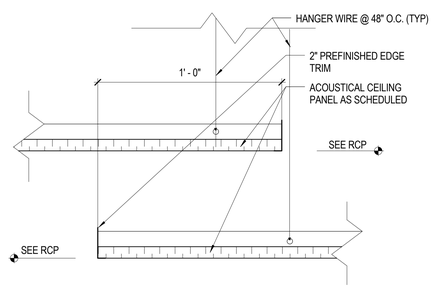

B3 DETAIL
SCALE: 3" = 1'-0"

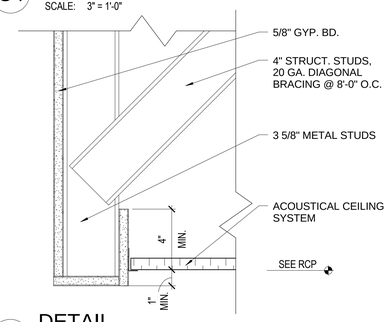

B4 DETAIL
SCALE: 3" = 1'-0"

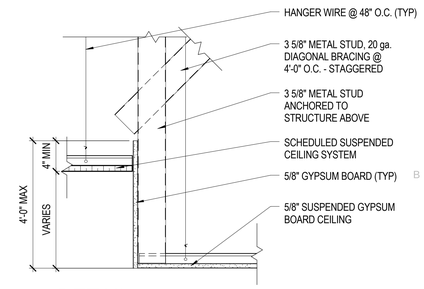

B5 DETAIL
SCALE: 1 1/2" = 1'-0"

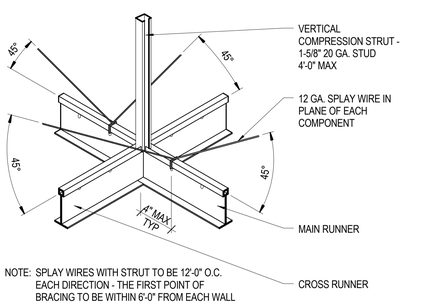

NOTE: SPLAY WIRES WITH STRUT TO BE 12'-0" O.C. EACH DIRECTION - THE FIRST POINT OF BRACING TO BE WITHIN 6'-0" FROM EACH WALL

A1 DETAIL
SCALE: 1 1/2" = 1'-0"

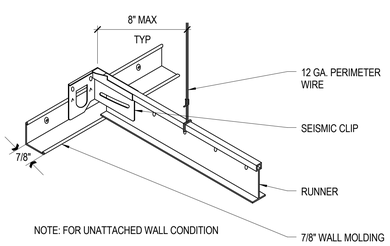

NOTE: FOR UNATTACHED WALL CONDITION

A2 DETAIL
SCALE: 1 1/2" = 1'-0"

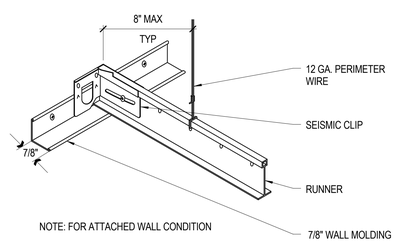

NOTE: FOR ATTACHED WALL CONDITION

A3 DETAIL
SCALE: 1 1/2" = 1'-0"

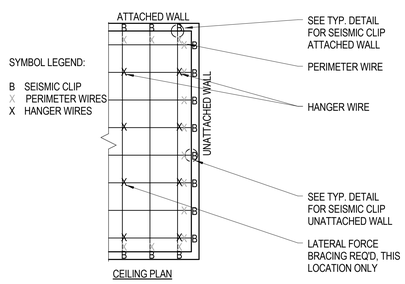

A4 DETAIL
SCALE: 1 1/2" = 1'-0"

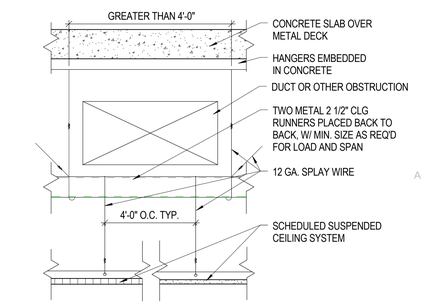

A5 DETAIL
SCALE: 1 1/2" = 1'-0"

MHTN ARCHITECTS
MHTN Architects, Inc.
420 East South Temple
Suite 100
Salt Lake City, Utah 84111
Telephone (801) 595-6700
Telefax (801) 595-6717
www.mhtn.com

WEBER STATE UNIVERSITY
RESIDENTIAL LIFE PHASE II - BLDG 2
DFCM PROJECT NUMBER: 10176810

WEBER STATE UNIVERSITY
OGDEN, UTAH 84408

SEAL

MHTN PROJECT NO. 2010543
DRAWN BY: Author CHECKED BY: MG

ISSUED:

NO.	DATE	DESCRIPTION
01	17 MAY 2011	CONSTRUCTION DOCUMENTS

CONTRACTOR TO VERIFY DRAWINGS IN FIELD-USE REFLECT LAST REVISION DATE.

NO.	DATE	DESCRIPTION

SHEET NAME
CEILING DETAILS

CONSTRUCTION DOCUMENTS
17 MAY 2011

SHEET NUMBER
AE551

C:\Users\jprestom\Documents\A11_2010543 WSU RESIDENTIAL LIFE BUILDING II_CENTRAL_jprestom.rvt
5/17/2011 12:23:30 PM

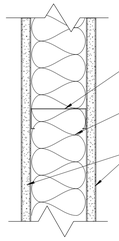

NOTES:
1. REFER TO A1,A2/AE601 FOR TOP OF WALL CONDITION

1A 5/8" TYPE "X" ABUSE RESISTANT GYP. BD. BOTH SIDES, FIRE RATING: 1 HOUR WHERE INDICATED - SEE LIFE SAFETY PLANS, REFER TO UL# U419. REFER TO A3,A4/AE601 FOR TOP OF WALL CONDITION.

1 PARTITION TYPE

SCALE: 3" = 1'-0"

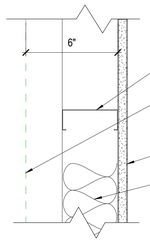

2 PARTITION TYPE

SCALE: 3" = 1'-0"

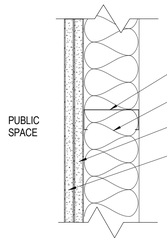

3 PARTITION TYPE

SCALE: 3" = 1'-0"

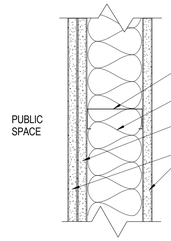

NOTES:
1. FIRE RATING: 1 HOUR WHERE INDICATED - SEE LIFE SAFETY PLANS, REFER TO UL# U419
2. STC RATING: 50-54
3. ACOUSTICAL SEALANT TOP & BOTTOM
4. REFER TO A1,A2/AE601 (SIM.) FOR TOP OF WALL CONDITION

4 PARTITION TYPE

SCALE: 3" = 1'-0"

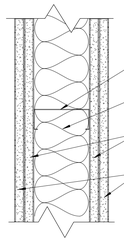

NOTES:
1. STC RATING: 55-59
2. ACOUSTICAL SEALANT TOP & BOTTOM
3. REFER TO A1,A2/AE601 FOR TOP OF WALL CONDITION

5A (2) LAYERS 5/8" TYPE "X" ABUSE RESISTANT GYP. BD. BOTH SIDES, FIRE RATING: 1 HOUR WHERE INDICATED - SEE LIFE SAFETY PLANS, REFER TO UL# U419. REFER TO A3,A4/AE601 FOR TOP OF WALL CONDITION.

5 PARTITION TYPE

SCALE: 3" = 1'-0"

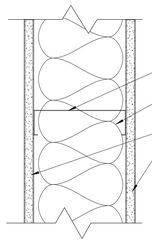

NOTES:
1. STC RATING: 45
2. ACOUSTICAL SEALANT TOP & BOTTOM
3. REFER TO A1,A2/AE601 FOR TOP OF WALL CONDITION

6A FIRE RATING: 1 HOUR WHERE INDICATED - SEE LIFE SAFETY PLANS, REFER TO UL# U419. STC RATING: 45

6 PARTITION TYPE

SCALE: 3" = 1'-0"

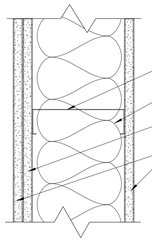

NOTES:
1. FIRE RATING: 1 HOUR WHERE INDICATED - SEE LIFE SAFETY PLANS, REFER TO UL# U419
2. STC RATING: 50-54
3. ACOUSTICAL SEALANT TOP & BOTTOM
4. REFER TO A3,A4/AE601 (SIM.) FOR TOP OF WALL CONDITION

7 PARTITION TYPE

SCALE: 3" = 1'-0"

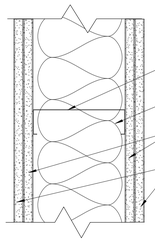

NOTES:
1. FIRE RATING: 1 HOUR WHERE INDICATED - SEE LIFE SAFETY PLANS, REFER TO UL# U419
2. STC RATING: 55-59
3. REFER TO A2,A3 FOR TOP OF WALL CONDITION

8 PARTITION TYPE

SCALE: 3" = 1'-0"

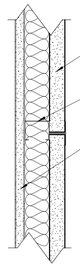

NOTES:
1. FIRE RATING: 1 HOUR WHERE INDICATED - SEE LIFE SAFETY PLANS, REFER TO UL# U469
2. REFER TO UL# HW-D-0119 FOR TOP OF WALL CONDITION
3. USE TO CLOSE BOTTOM OF CHASE

9 PARTITION TYPE

SCALE: 3" = 1'-0"

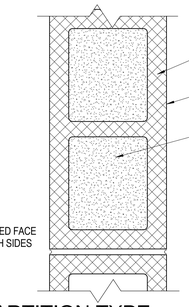

NOTES:
1. FIRE RATING: 1 HOUR WHERE INDICATED - SEE LIFE SAFETY PLANS, REFER TO UL# U905
2. STC RATING: 52

10A

10 PARTITION TYPE

SCALE: 3" = 1'-0"

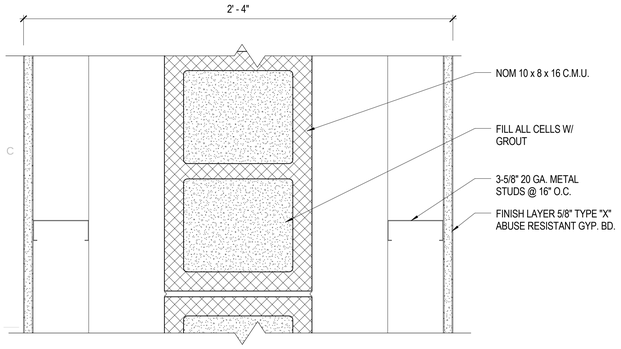

11 PARTITION TYPE

SCALE: 3" = 1'-0"

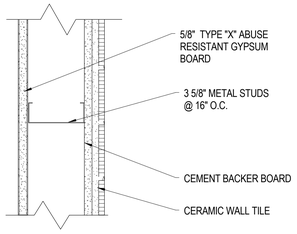

12 WALL TYPE

SCALE: 3" = 1'-0"

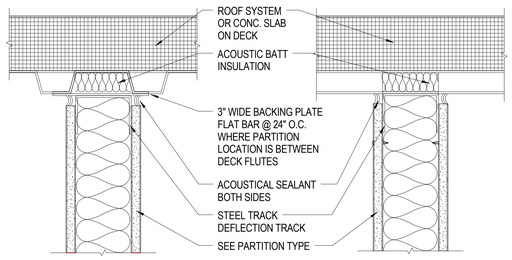

WALL PARALLEL W/ DECK FLUTES — WALL PERPENDICULAR TO DECK

A1 DETAIL

FOR NON-RATED CONSTRUCTION

SCALE: 3" = 1'-0"

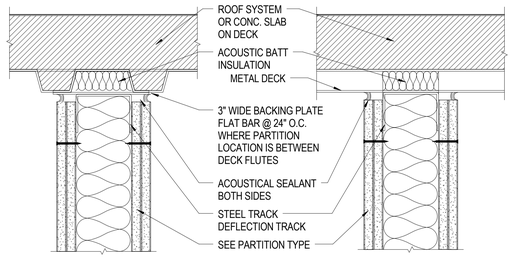

WALL PARALLEL W/ DECK FLUTES — WALL PERPENDICULAR TO DECK

A2 DETAIL

FOR NON-RATED CONSTRUCTION

SCALE: 3" = 1'-0"

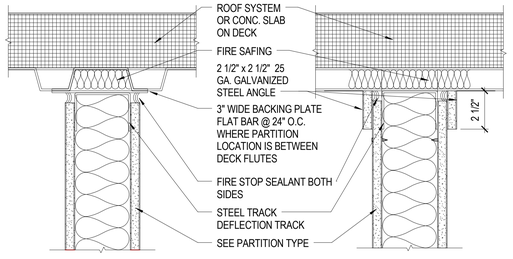

WALL PARALLEL W/ DECK FLUTES — WALL PERPENDICULAR TO DECK

A3 DETAIL

REFER TO UL HWD-0001

SCALE: 3" = 1'-0"

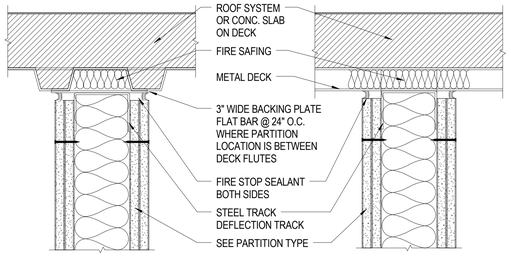

WALL PARALLEL W/ DECK FLUTES — WALL PERPENDICULAR TO DECK

A4 DETAIL

REFER TO UL HWD-0049

SCALE: 3" = 1'-0"

MHTN ARCHITECTS
MHTN Architects, Inc.
420 East South Temple
Suite 100
Salt Lake City, Utah 84111
Telephone (801) 595-6700
Telefax (801) 595-6717
www.mhtn.com

WEBER STATE UNIVERSITY
RESIDENTIAL LIFE PHASE II - BLDG 2

DFCM PROJECT NUMBER: 10176810

WEBER STATE UNIVERSITY
OGDEN, UTAH 84408

SEAL

MHTN PROJECT NO. 2010543

DRAWN BY: MLH CHECKED BY: MG

ISSUED:

NO.	DATE	DESCRIPTION
01	17 MAY 2011	CONSTRUCTION DOCUMENTS

CONTRACTOR TO VERIFY DRAWINGS IN FIELD USE REFLECT LAST REVISION DATE.

NO.	DATE	DESCRIPTION

SHEET NAME

PARTITION TYPES

CONSTRUCTION DOCUMENTS
17 MAY 2011

SHEET NUMBER

AE601

C:\Users\prestonn\Documents\A11_2010543 WSU RESIDENTIAL LIFE BUILDING II_CENTRAL_prestonn.rvt
5/17/2011 12:23:33 PM

LEVEL 1 DOOR AND FRAME SCHEDULE

DOOR #	DOOR						FRAME			JAMB DETAIL	HEAD DETAIL	ELECTRICAL	FIRE RATING (IN MIN.)	HARDWARE GROUP	REMARKS	DOOR #
	TYPE	LEAVES	WIDTH	HEIGHT	THICKNESS	MATERIAL	TYPE	DEPTH	MATERIAL							
100A	A		3' - 0"	7' - 0"	1 3/4"	WD	3	5 3/4"	HM	E4/AE521	E2/AE521			09		100A
100C	A		3' - 0"	7' - 0"	1 3/4"	WD	3	5 3/4"	HM	E4/AE521	E2/AE521		20 MIN	02		100C
100D	A		3' - 0"	7' - 0"	1 3/4"	WD	3	5 3/4"	HM	E4/AE521	E2/AE521		20 MIN	02		100D
100E	A		3' - 0"	7' - 0"	1 3/4"	WD	3	5 3/4"	HM	E4/AE521	E2/AE521		20 MIN	02		100E
100F	A		3' - 0"	7' - 0"	1 3/4"	WD	1	8 3/4"	HM	E3/AE521	E1/AE521		20 MIN	02		100F
100G	A		3' - 0"	7' - 0"	1 3/4"	WD	1	8 3/4"	HM	E3/AE521	E1/AE521		20 MIN	02		100G
100H	A		3' - 0"	7' - 0"	1 3/4"	WD	1	8 3/4"	HM	E3/AE521	E1/AE521		20 MIN	04		100H
100J	A		3' - 0"	7' - 0"	1 3/4"	WD	3	8 3/4"	HM	E4/AE521	E2/AE521		45 MIN	02		100J
100K	A		3' - 0"	7' - 0"	1 3/4"	WD	1	8 3/4"	HM	E3/AE521	E1/AE521		20 MIN	02		100K
100L	B		3' - 0"	7' - 0"	1 3/4"	WD	1	5 3/4"	HM	E3/AE521	E1/AE521	Yes	20 MIN	20		100L
100M	B		3' - 0"	7' - 0"	1 3/4"	WD	1	5 3/4"	HM	E3/AE521	E1/AE521	Yes	20 MIN	20		100M
100N	A		3' - 0"	7' - 0"	1 3/4"	WD	1	8 1/4"	HM	E3/AE521	E1/AE521		20 MIN	02		100N
100P	A		3' - 0"	7' - 0"	1 3/4"	WD	1	8 1/4"	HM	E3/AE521	E1/AE521		20 MIN	02		100P
100Q	A		3' - 0"	7' - 0"	1 3/4"	WD	3	5 3/4"	HM	E4/AE521	E1/AE521		20 MIN	02		100Q
101A	C	PR	6' - 0"	7' - 2"	1 3/4"	AL/G			AL			Yes		AL-02		101A
101B	C	PR	6' - 0"	7' - 2"	1 3/4"	AL/G			AL		A5/AE521	Yes		AL-01		101B
102A	A		3' - 0"	7' - 0"	1 3/4"	WD	3	5 3/4"	HM	E4/AE521	E1/AE521			19		102A
102B	A		3' - 0"	7' - 0"	1 3/4"	WD	3	5 3/4"	HM	E4/AE521	E1/AE521			18		102B
102C	A		3' - 0"	7' - 0"	1 3/4"	WD	3	5 3/4"	HM	E4/AE521	E1/AE521			19		102C
104	A		3' - 0"	7' - 0"	1 3/4"	WD	2	7"	HM	E3/AE521	E1/AE521		20 MIN	R-1		104
104A	A		3' - 0"	7' - 0"	1 3/4"	WD	1	7"	HM	E3/AE521	E1/AE521			R-4	1" UNDERCUT	104A
104B	A		3' - 0"	7' - 0"	1 3/4"	WD	1	7"	HM	E3/AE521	E1/AE521			R-4	1" UNDERCUT	104B
104C	A		3' - 0"	7' - 0"	1 3/4"	WD	1	5 3/4"	HM	E3/AE521	E1/AE521			R-3		104C
104D	A		3' - 0"	7' - 0"	1 3/4"	WD	1	5 3/4"	HM	E3/AE521	E1/AE521			R-3		104D
105	A		3' - 0"	7' - 0"	1 3/4"	WD	2	7"	HM	E3/AE521	E1/AE521		20 MIN	R-1		105
105A	A		3' - 0"	7' - 0"	1 3/4"	WD	1	7"	HM	E3/AE521	E1/AE521			R-4	1" UNDERCUT	105A
105B	A		3' - 0"	7' - 0"	1 3/4"	WD	1	7"	HM	E3/AE521	E1/AE521			R-4	1" UNDERCUT	105B
105C	A		3' - 0"	7' - 0"	1 3/4"	WD	1	5 3/4"	HM	E3/AE521	E1/AE521			R-3		105C
105D	A		3' - 0"	7' - 0"	1 3/4"	WD	1	5 3/4"	HM	E3/AE521	E1/AE521			R-3		105D
107	A		3' - 0"	7' - 0"	1 3/4"	WD	2	7"	HM	E3/AE521	E1/AE521		20 MIN	R-1		107
107A	A		3' - 0"	7' - 0"	1 3/4"	WD	1	7"	HM	E3/AE521	E1/AE521			R-4	1" UNDERCUT	107A
107B	A		3' - 0"	7' - 0"	1 3/4"	WD	1	7"	HM	E3/AE521	E1/AE521			R-4	1" UNDERCUT	107B
107C	A		3' - 0"	7' - 0"	1 3/4"	WD	1	5 3/4"	HM	E3/AE521	E1/AE521			R-3		107C
107D	A		3' - 0"	7' - 0"	1 3/4"	WD	1	5 3/4"	HM	E3/AE521	E1/AE521			R-3		107D
108	A		3' - 0"	7' - 0"	1 3/4"	WD	2	7"	HM	E3/AE521	E1/AE521		20 MIN	R-1		108
108A	A		3' - 0"	7' - 0"	1 3/4"	WD	1	7"	HM	E3/AE521	E1/AE521			R-4	1" UNDERCUT	108A
108B	A		3' - 0"	7' - 0"	1 3/4"	WD	1	7"	HM	E3/AE521	E1/AE521			R-4	1" UNDERCUT	108B
108C	A		3' - 0"	7' - 0"	1 3/4"	WD	1	5 3/4"	HM	E3/AE521	E1/AE521			R-3		108C
108D	A		3' - 0"	7' - 0"	1 3/4"	WD	1	5 3/4"	HM	E3/AE521	E1/AE521			R-3		108D
109	C	PR	3' - 0"	7' - 0"	1 3/4"	WD/G	1	7"	HM	E3/AE521	E1/AE521		20 MIN	05		109
110	A		3' - 0"	7' - 0"	1 3/4"	WD	2	7"	HM	E3/AE521	E1/AE521		20 MIN	R-1		110
110A	A		3' - 0"	7' - 0"	1 3/4"	WD	1	7"	HM	E3/AE521	E1/AE521			R-4	1" UNDERCUT	110A
110B	A		3' - 0"	7' - 0"	1 3/4"	WD	1	7"	HM	E3/AE521	E1/AE521			R-4	1" UNDERCUT	110B
110C	A		3' - 0"	7' - 0"	1 3/4"	WD	1	5 3/4"	HM	E3/AE521	E1/AE521			R-3		110C
110D	A		3' - 0"	7' - 0"	1 3/4"	WD	1	5 3/4"	HM	E3/AE521	E1/AE521			R-3		110D
111	A		3' - 0"	7' - 0"	1 3/4"	WD	2	7"	HM	E3/AE521	E1/AE521		20 MIN	R-1		111
111A	A		3' - 0"	7' - 0"	1 3/4"	WD	1	7"	HM	E3/AE521	E1/AE521			R-4	1" UNDERCUT	111A
111B	A		3' - 0"	7' - 0"	1 3/4"	WD	1	7"	HM	E3/AE521	E1/AE521			R-4	1" UNDERCUT	111B
111C	A		3' - 0"	7' - 0"	1 3/4"	WD	1	5 3/4"	HM	E3/AE521	E1/AE521			R-3		111C
111D	A		3' - 0"	7' - 0"	1 3/4"	WD	1	5 3/4"	HM	E3/AE521	E1/AE521			R-3		111D
112	A		3' - 0"	7' - 0"	1 3/4"	WD	2	7"	HM	E3/AE521	E1/AE521		20 MIN	R-1		112
112A	A		3' - 0"	7' - 0"	1 3/4"	WD	1	7"	HM	E3/AE521	E1/AE521			R-4	1" UNDERCUT	112A
112B	A		3' - 0"	7' - 0"	1 3/4"	WD	1	7"	HM	E3/AE521	E1/AE521			R-4	1" UNDERCUT	112B
112C	A		3' - 0"	7' - 0"	1 3/4"	WD	1	7"	HM	E3/AE521	E1/AE521			R-4	1" UNDERCUT	112C
112D	A		3' - 0"	7' - 0"	1 3/4"	WD	1	5 3/4"	HM	E3/AE521	E1/AE521			R-3		112D
112E	A		3' - 0"	7' - 0"	1 3/4"	WD	1	5 3/4"	HM	E3/AE521	E1/AE521			R-3		112E
113	A		3' - 6"	7' - 0"	1 3/4"	WD	1	7"	HM	E3/AE521	E1/AE521		20 MIN	03		113
114	A		3' - 0"	7' - 0"	1 3/4"	WD	2	7"	HM	E3/AE521	E1/AE521		20 MIN	R-1		114
114A	A		3' - 0"	7' - 0"	1 3/4"	WD	1	7"	HM	E3/AE521	E1/AE521			R-4	1" UNDERCUT	114A
114B	A		3' - 0"	7' - 0"	1 3/4"	WD	1	7"	HM	E3/AE521	E1/AE521			R-4	1" UNDERCUT	114B
114C	A		3' - 0"	7' - 0"	1 3/4"	WD	1	7"	HM	E3/AE521	E1/AE521			R-4	1" UNDERCUT	114C
114D	A		3' - 0"	7' - 0"	1 3/4"	WD	1	5 3/4"	HM	E3/AE521	E1/AE521			R-3		114D
114E	A		3' - 0"	7' - 0"	1 3/4"	WD	1	5 3/4"	HM	E3/AE521	E1/AE521			R-3		114E
115	A		3' - 0"	7' - 0"	1 3/4"	WD	2	7"	HM	E3/AE521	E1/AE521		20 MIN	R-1		115
115A	A		3' - 0"	7' - 0"	1 3/4"	WD	1	7"	HM	E3/AE521	E1/AE521			R-4	1" UNDERCUT	115A
115B	A		3' - 0"	7' - 0"	1 3/4"	WD	1	7"	HM	E3/AE521	E1/AE521			R-4	1" UNDERCUT	115B
115C	A		3' - 0"	7' - 0"	1 3/4"	WD	1	7"	HM	E3/AE521	E1/AE521			R-4	1" UNDERCUT	115C
115D	A		3' - 0"	7' - 0"	1 3/4"	WD	1	5 3/4"	HM	E3/AE521	E1/AE521			R-3		115D
115E	A		3' - 0"	7' - 0"	1 3/4"	WD	1	5 3/4"	HM	E3/AE521	E1/AE521			R-3		115E
116	A		3' - 6"	7' - 0"	1 3/4"	WD	1	7"	HM	E3/AE521	E1/AE521		20 MIN	03		116
117	A		3' - 0"	7' - 0"	1 3/4"	WD	2	7"	HM	E3/AE521	E1/AE521		20 MIN	R-1		117
117A	A		3' - 0"	7' - 0"	1 3/4"	WD	1	7"	HM	E3/AE521	E1/AE521			R-4	1" UNDERCUT	117A
117B	A		3' - 0"	7' - 0"	1 3/4"	WD	1	7"	HM	E3/AE521	E1/AE521			R-4	1" UNDERCUT	117B
117C	A		3' - 0"	7' - 0"	1 3/4"	WD	1	7"	HM	E3/AE521	E1/AE521			R-4	1" UNDERCUT	117C
117D	A		3' - 0"	7' - 0"	1 3/4"	WD	1	5 3/4"	HM	E3/AE521	E1/AE521			R-3		117D
117E	A		3' - 0"	7' - 0"	1 3/4"	WD	1	5 3/4"	HM	E3/AE521	E1/AE521			R-3		117E
118	A		3' - 0"	7' - 0"	1 3/4"	WD	2	7"	HM	E3/AE521	E1/AE521		20 MIN	R-1		118
118A	A		3' - 0"	7' - 0"	1 3/4"	WD	1	7"	HM	E3/AE521	E1/AE521			R-4	1" UNDERCUT	118A
118B	A		3' - 0"	7' - 0"	1 3/4"	WD	1	7"	HM	E3/AE521	E1/AE521			R-4	1" UNDERCUT	118B
118C	A		3' - 0"	7' - 0"	1 3/4"	WD	1	7"	HM	E3/AE521	E1/AE521			R-4	1" UNDERCUT	118C
118D	A		3' - 0"	7' - 0"	1 3/4"	WD	1	5 3/4"	HM	E3/AE521	E1/AE521			R-3		118D
119	A		3' - 6"	7' - 0"	1 3/4"	WD	1	7"	HM	E3/AE521	E1/AE521		20 MIN	03		119
120	A		3' - 0"	7' - 0"	1 3/4"	WD	2	7"	HM	E3/AE521	E1/AE521		20 MIN	R-1		120
120A	A		3' - 0"	7' - 0"	1 3/4"	WD	1	7"	HM	E3/AE521	E1/AE521			R-4	1" UNDERCUT	120A
120B	A		3' - 0"	7' - 0"	1 3/4"	WD	1	7"	HM	E3/AE521	E1/AE521			R-4	1" UNDERCUT	120B
120C	A		3' - 0"	7' - 0"	1 3/4"	WD	1	7"	HM	E3/AE521	E1/AE521			R-4	1" UNDERCUT	120C
120D	A		3' - 0"	7' - 0"	1 3/4"	WD	1	5 3/4"	HM	E3/AE521	E1/AE521			R-3		120D
120E	A		3' - 0"	7' - 0"	1 3/4"	WD	1	5 3/4"	HM	E3/AE521	E1/AE521			R-3		120E
121	A		3' - 0"	7' - 0"	1 3/4"	WD	1	5 3/4"	HM	E3/AE521	E1/AE521			09		121
122	A		3' - 0"	7' - 0"	1 3/4"	WD	1	5 3/4"	HM	E3/AE521	E1/AE521			10		122
123	C	PR	6' - 0"	7' - 0"	1 3/4"	AL/G			AL			Yes		AL-07		123
124A	A	PR	3' - 0"	7' - 0"	1 3/4"	WD	1	8 1/4"	HM	E3/AE521	E1/AE521			11		124A
124B	A		4' - 0"	7' - 0"	1 3/4"	WD	1	8 1/4"	HM	E3/AE521	E1/AE521		45 MIN	03		124B
126	A		3' - 0"	7' - 0"	1 3/4"	WD	2	7"	HM	E3/AE521	E1/AE521		20 MIN	R-1		126
126A	A		3' - 0"	7' - 0"	1 3/4"	WD	1	7"	HM	E3/AE521	E1/AE521			R-4	1" UNDERCUT	126A
126B	A		3' - 0"	7' - 0"	1 3/4"	WD	1	7"	HM	E3/AE521	E1/AE521			R-4	1" UNDERCUT	126B
126C	A		3' - 0"	7' - 0"	1 3/4"	WD	1	7"	HM	E3/AE521	E1/AE521			R-4	1" UNDERCUT	126C
126D	A		3' - 0"	7' - 0"	1 3/4"	WD	1	5 3/4"	HM	E3/AE521	E1/AE521			R-3		126D
126E	A		3' - 0"	7' - 0"	1 3/4"	WD	1	5 3/4"	HM	E3/AE521	E1/AE521			R-3		126E
127	A		3' - 0"	7' - 0"	1 3/4"	WD	2	7"	HM	E3/AE521	E1/AE521		20 MIN	R-2		127
127A	A		3' - 0"	7' - 0"	1 3/4"	WD	1	7"	HM	E3/AE521	E1/AE521			R-4	1" UNDERCUT	127A
127B	A		3' - 0"	7' - 0"	1 3/4"	WD	1	8 1/4"	HM	E3/AE521	E1/AE521			R-3		127B
127C	A		2' - 6"	7' - 0"	1 3/4"	WD	1	5 3/4"	HM	E3/AE521	E1/AE521			R-6		127C
128	A		3' - 0"	7' - 0"	1 3/4"	WD	2	7"	HM	E3/AE521	E1/AE521		20 MIN	R-2		128
128A	A		3' - 0"	7' - 0"	1 3/4"	WD	1	5 3/4"	HM	E3/AE521	E1/AE521			R-5		128A
128B	A	PR	2' - 6"	7' - 0"	1 3/4"	WD	1	7"	HM	E3/AE521	E1/AE521			R-6		128B
128C	A		3' - 0"	7' - 0"	1 3/4"	WD	1	7"	HM	E3/AE521	E1/AE521			R-3		128C
128D	A		3' - 0"	7' - 0"	1 3/4"	WD	1	7"	HM	E3/AE521	E1/AE521			R-4	1" UNDERCUT	128D
128E-N	A		3' - 0"	7' - 0"	1 3/4"	WD	1	7"	HM	E3/AE521	E1/AE521			R-5	1" UNDERCUT	128E-N
128E-S	C		3' - 0"	7' - 2"	1 3/4"	AL/G	6		AL					AL-04		128E-S
128F	A		3' - 0"	7' - 0"	1 3/4"	WD	1	7"	HM	E3/AE521	E1/AE521			R-4	1" UNDERCUT	128F
128G	A		3' - 0"	7' - 0"	1 3/4"	WD	1	7"	HM	E3/AE521	E1/AE521			R-3		128G
129	C		3' - 0"	7' - 0"	1 3/4"	WD/G	1	5 3/4"	HM	E3/AE521	E1/AE521		20 MIN	06		129
130	A		3' - 0"	7' - 0"	1 3/4"	WD	2	7"	HM	E3/AE521	E1/AE521		20 MIN	R-1		130
130A	A		3' - 0"	7' - 0"	1 3/4"	WD	1	7"	HM	E3/AE521	E1/AE521			R-4	1" UNDERCUT	130A
130B	A		3' - 0"	7' - 0"	1 3/4"	WD	1	7"	HM	E3/AE521	E1/AE521			R-4	1" UNDERCUT	130B
130C	A		3' - 0"	7' - 0"	1 3/4"	WD	1	5 3/4"	HM	E3/AE521	E1/AE521			R-3		130C
130D	A		3' - 0"	7' - 0"	1 3/4"	WD	1	5 3/4"	HM	E3/AE521	E1/AE521			R-3		130D
131	A		3' - 0"	7' - 0"	1 3/4"	WD	2	7"	HM	E3/AE521	E1/AE521		20 MIN	R-1		131
131A	A		3' - 0"	7' - 0"	1 3/4"	WD	1	7"	HM	E3/AE521	E1/AE521			R-4	1" UNDERCUT	131A
131B	A		3' - 0"	7' - 0"	1 3/4"	WD	1	7"	HM	E3/AE521	E1/AE521			R-4	1" UNDERCUT	131B
131C	A		3' - 0"	7' - 0"	1 3/4"	WD	1	5 3/4"	HM	E3/AE521	E1/AE521			R-3		131C
131D	A		3' - 0"	7' - 0"	1 3/4"	WD	1	5 3/4"	HM	E3/AE521	E1/AE521			R-3		131D
133	A		3' - 0"	7' - 0"	1 3/4"	WD	2	7 1/4"	HM	E3/AE521	E1/AE521			17		133
134	A		3' - 0"	7' - 0"	1 3/4"	WD	2	7 1/4"	HM	E3/AE521	E1/AE521			17		134
136-E	C		3' - 0"	7' - 0"	1 3/4"	AL/G			AL			Yes		AL-06		136-E
136-W	C		3' - 0"	7' - 0"	1 3/4"	AL/G			AL			Yes		AL-06		136-W
136A	A		3' - 0"	7' - 0"	1 3/4"	WD	1	5 3/4"	HM	E3/AE521	E1/AE521			13		136A
137-N	C		3' - 0"	7' - 0"	1 3/4"	AL/G			AL					AL-05		137-N
137-S	C		2' - 10"	7' - 2"	1 3/4"	AL/G	7		AL			Yes		AL-08		137-S
137A	A		3' - 0"	7' - 0"	1 3/4"	WD	2	7 1/4"	HM	E3/AE521	E1/AE521			17		137A
137B	A		3' - 0"	7' - 0"	1 3/4"	WD	2	7 1/4"	HM	E3/AE521	E1/AE521			17		137B
137C	A		3' - 0"	7' - 0"	1 3/4"	WD	1	5 3/4"	HM	E3/AE521	E1/AE521			17		137C
137D	A		3' - 0"	7' - 0"	1 3/4"	WD	2	7 1/4"	HM	E3/AE521	E1/AE521			17		137D
137E	A		3' - 0"	7' - 0"	1 3/4"	WD	1	5 3/4"	HM	E3/AE521	E1/AE521			12		137E
137F	A		3' - 0"	7' - 0"	1 3/4"	WD	2	7 1/4"	HM	E3/AE521	E1/AE521			17		137F
137G	A		3' - 0"	7' - 0"	1 3/4"	WD	2	7 1/4"	HM	E3/AE521	E1/AE521			17		137G
137H	A		3' - 0"	7' - 0"	1 3/4"	WD	2	7 1/4"	HM	E3/AE521	E1/AE521			17		137H
199A	A		3' - 0"	7' - 0"	1 3/4"	WD	3	5 3/4"	HM	E4/AE521	E2/AE521		60 MIN	07		199A
199B-N	C		3' - 0"	7' - 2"	1 3/4"	AL/G	7		AL			Yes		AL-03		199B-N
199B-S	B		3' - 0"	7' - 0"	1 3/4"	WD	1	8 3/4"	HM	E3/AE521	E1/AE521		60 MIN	07		199B-S
199C-N	C		3' - 0"	7' - 2"	1 3/4"	AL/G	7		AL			Yes		AL-03		199C-N
199C-S	B		3' - 0"	7' - 0"	1 3/4"	WD	1	8 3/4"	HM	E3/AE521	E1/AE521		60 MIN	07		199C-S
199D-N	C		3' - 0"	7' - 2"	1 3/4"	AL/G	7		AL			Yes		AL-03		199D-N
199D-S	B		3' - 0"	7' - 0"	1 3/4"	WD	1	8 3/4"	HM	E3/AE521	E1/AE521		60 MIN	07		199D-S
199E-N	C		3' - 0"	7' - 2"	1 3/4"	AL/G	7		AL			Yes		AL-03		199E-N
199E-S	B		3' - 0"	7' - 0"	1 3/4"	WD	1	8 3/4"	HM	E3/AE521	E1/AE521		60 MIN	07		199E-S
199F-E	B		3' - 0"	7' - 0"	1 3/4"	WD	1	8 1/4"	HM	E3/AE521	E1/AE521		60 MIN	07		199F-E
199F-W	C		3' - 0"	7' - 2"	1 3/4"	AL/G	7		AL		A5/AE521	Yes		AL-03		199F-W
Grand total: 149																

LEVEL 2 DOOR AND FRAME SCHEDULE

DOOR #	DOOR						FRAME			JAMB DETAIL	HEAD DETAIL	ELECTRICAL	FIRE RATING (IN MIN.)	HARDWARE GROUP	REMARKS	DOOR #
	TYPE	LEAVES	WIDTH	HEIGHT	THICKNESS	MATERIAL	TYPE	DEPTH	MATERIAL							
200A	A		3' - 0"	7' - 0"	1 3/4"	WD	3	5 3/4"	HM	E4/AE521	E2/AE521			09		200A
200B	A		3' - 0"	7' - 0"	1 3/4"	WD	1	5 3/4"	HM	E3/AE521	E1/AE521			12		200B
200C	A		3' - 0"	7' - 0"	1 3/4"	WD	3	5 3/4"	HM	E4/AE521	E2/AE521		20 MIN	02		200C
200D	A		3' - 0"	7' - 0"	1 3/4"	WD	3	5 3/4"	HM	E4/AE521	E2/AE521		20 MIN	02		200D
200E	A		3' - 0"	7' - 0"	1 3/4"	WD	3	5 3/4"	HM	E4/AE521	E2/AE521		20 MIN	02		200E
200F	A		3' - 0"	7' - 0"	1 3/4"	WD	1	8 3/4"	HM	E3/AE521	E1/AE521		20 MIN	02		200F
200G	A		3' - 0"	7' - 0"	1 3/4"	WD	1	8 3/4"	HM	E3/AE521	E1/AE521		20 MIN	02		200G
200H	A		3' - 0"	7' - 0"	1 3/4"	WD	1	8 3/4"	HM	E3/AE521	E1/AE521		20 MIN	04		200H
200J	B		3' - 0"	7' - 0"	1 3/4"	WD	1	5 3/4"	HM	E3/AE521	E1/AE521	Yes	20 MIN	20		200J
200K	A		3' - 0"	7' - 0"	1 3/4"	WD	1	8 3/4"	HM	E3/AE521	E1/AE521		20 MIN	02		200K
200M	B		3' - 0"	7' - 0"	1 3/4"	WD	1	5 3/4"	HM	E3/AE521	E1/AE521	Yes	20 MIN	20		200M
200N	A		3' - 0"	7' - 0"	1 3/4"	WD	1	5 3/4"	HM	E3/AE521	E1/AE521		20 MIN	02		200N
200P	A		3' - 0"	7' - 0"	1 3/4"	WD	1	5 3/4"	HM	E3/AE521	E1/AE521		20 MIN	04		200P
200Q	A		3' - 0"	7' - 0"	1 3/4"	WD	3	5 3/4"	HM	E4/AE521	E2/AE521		20 MIN	02		200Q
201A	C	PR	6' - 0"	7' - 2"	1 3/4"	AL/G			AL			Yes		AL-01		201A
201B	C	PR	6' - 0"	7' - 2"	1 3/4"	AL/G			AL			Yes		AL-02		201B
201C	C		3' - 5"	7' - 2"	1 3/4"	AL/G			AL					AL-04		201C
201D	C		3' - 0"	7' - 2"	1 3/4"	AL/G			AL					AL-04		201D
202A	A		3' - 0"	7' - 0"	1 3/4"	WD	3	5 3/4"	HM	E4/AE521	E2/AE521			18		202A
202B	A		3' - 0"	7' - 0"	1 3/4"	WD	3	5 3/4"	HM	E4/AE521	E2/AE521			18		202B
202C	A		3' - 0"	7' - 0"	1 3/4"	WD	3	5 3/4"	HM	E4/AE521	E2/AE521			18		202C
204	A		3' - 0"	7' - 0"	1 3/4"	WD	2	7"	HM	E3/AE521	E1/AE521		20 MIN	R-1		204
204A	A		3' - 0"	7' - 0"	1 3/4"	WD	1	7"	HM	E3/AE521	E1/AE521			R-4	1" UNDERCUT	204A
204B	A		3' - 0"	7' - 0"	1 3/4"	WD	1	7"	HM	E3/AE521	E1/AE521			R-4	1" UNDERCUT	204B
204C	A		3' - 0"	7' - 0"	1 3/4"	WD	1	5 3/4"	HM	E3/AE521	E1/AE521			R-3		204C
204D	A		3' - 0"	7' - 0"	1 3/4"	WD	1	5 3/4"	HM	E3/AE521	E1/AE521			R-3		204D
205	A		3' - 0"	7' - 0"	1 3/4"	WD	2	7"	HM	E3/AE521	E1/AE521		20 MIN	R-1		205
205A	A		3' - 0"	7' - 0"	1 3/4"	WD	1	7"	HM	E3/AE521	E1/AE521			R-4	1" UNDERCUT	205A
205B	A		3' - 0"	7' - 0"	1 3/4"	WD	1	7"	HM	E3/AE521	E1/AE521			R-4	1" UNDERCUT	205B
205C	A		3' - 0"	7' - 0"	1 3/4"	WD	1	5 3/4"	HM	E3/AE521	E1/AE521			R-3		205C
205D	A		3' - 0"	7' - 0"	1 3/4"	WD	1	5 3/4"	HM	E3/AE521	E1/AE521			R-3		205D
207	A		3' - 0"	7' - 0"	1 3/4"	WD	2	7"	HM	E3/AE521	E1/AE521		20 MIN	R-1		207
207A	A		3' - 0"	7' - 0"	1 3/4"	WD	1	7"	HM	E3/AE521	E1/AE521			R-4	1" UNDERCUT	207A
207B	A		3' - 0"	7' - 0"	1 3/4"	WD	1	7"	HM	E3/AE521	E1/AE521			R-4	1" UNDERCUT	207B
207C	A		3' - 0"	7' - 0"	1 3/4"	WD	1	5 3/4"	HM	E3/AE521	E1/AE521			R-3		207C
207D	A		3' - 0"	7' - 0"	1 3/4"	WD	1	5 3/4"	HM	E3/AE521	E1/AE521			R-3		207D
208	A		3' - 0"	7' - 0"	1 3/4"	WD	2	7"	HM	E3/AE521	E1/AE521		20 MIN	R-1		208
208A	A		3' - 0"	7' - 0"	1 3/4"	WD	1	7"	HM	E3/AE521	E1/AE521			R-4	1" UNDERCUT	208A
208B	A		3' - 0"	7' - 0"	1 3/4"	WD	1	7"	HM	E3/AE521	E1/AE521			R-4	1" UNDERCUT	208B
208C	A		3' - 0"	7' - 0"	1 3/4"	WD	1	5 3/4"	HM	E3/AE521	E1/AE521			R-3		208C
208D	A		3' - 0"	7' - 0"	1 3/4"	WD	1	5 3/4"	HM	E3/AE521	E1/AE521			R-3		208D
209	C	PR	3' - 0"	7' - 0"	1 3/4"	WD/G	1	7"	HM	E3/AE521	E1/AE521		20 MIN	05		209
210	A		3' - 0"	7' - 0"	1 3/4"	WD	2	7"	HM	E3/AE521	E1/AE521		20 MIN	R-1		210
210A	A		3' - 0"	7' - 0"	1 3/4"	WD	1	7"	HM	E3/AE521	E1/AE521			R-4	1" UNDERCUT	210A
210B	A		3' - 0"	7' - 0"	1 3/4"	WD	1	7"	HM	E3/AE521	E1/AE521			R-4	1" UNDERCUT	210B
210C	A		3' - 0"	7' - 0"	1 3/4"	WD	1	5 3/4"	HM	E3/AE521	E1/AE521			R-3		210C
210D	A		3' - 0"	7' - 0"	1 3/4"	WD	1	5 3/4"	HM	E3/AE521	E1/AE521			R-3		210D
211	A		3' - 0"	7' - 0"	1 3/4"	WD	2	7"	HM	E3/AE521	E1/AE521		20 MIN	R-1		211
211A	A		3' - 0"	7' - 0"	1 3/4"	WD	1	7"	HM	E3/AE521	E1/AE521			R-4	1" UNDERCUT	211A
211B	A		3' - 0"	7' - 0"	1 3/4"	WD	1	7"	HM	E3/AE521	E1/AE521			R-4	1" UNDERCUT	211B
211C	A		3' - 0"	7' - 0"	1 3/4"	WD	1	5 3/4"	HM	E3/AE521	E1/AE521			R-3		211C
211D	A		3' - 0"	7' - 0"	1 3/4"	WD	1	5 3/4"	HM	E3/AE521	E1/AE521			R-3		211D
212	A		3' - 0"	7' - 0"	1 3/4"	WD	2	7"	HM	E3/AE521	E1/AE521		20 MIN	R-1		212
212A	A		3' - 0"	7' - 0"	1 3/4"	WD	1	7"	HM	E3/AE521	E1/AE521			R-4	1" UNDERCUT	212A
212B	A		3' - 0"	7' - 0"	1 3/4"	WD	1	7"	HM	E3/AE521	E1/AE521			R-4	1" UNDERCUT	212B
212C	A		3' - 0"	7' - 0"	1 3/4"	WD	1	7"	HM	E3/AE521	E1/AE521			R-4	1" UNDERCUT	212C
212D	A		3' - 0"	7' - 0"	1 3/4"	WD	1	5 3/4"	HM	E3/AE521	E1/AE521			R-3		212D
212E	A		3' - 0"	7' - 0"	1 3/4"	WD	1	5 3/4"	HM	E3/AE521	E1/AE521			R-3		212E
213	A		3' - 0"	7' - 0"	1 3/4"	WD	2	7"	HM	E3/AE521	E1/AE521		20 MIN	R-1		213
213A	A		3' - 0"	7' - 0"	1 3/4"	WD	1	7"	HM	E3/AE521	E1/AE521			R-4	1" UNDERCUT	213A
213B	A		3' - 0"	7' - 0"	1 3/4"	WD	1	7"	HM	E3/AE521	E1/AE521			R-4	1" UNDERCUT	213B
213C	A		3' - 0"	7' - 0"	1 3/4"	WD	1	7"	HM	E3/AE521	E1/AE521			R-4	1" UNDERCUT	213C
213D	A		3' - 0"	7' - 0"	1 3/4"	WD	1	5 3/4"	HM	E3/AE521	E1/AE521			R-3		213D
213E	A		3' - 0"	7' - 0"	1 3/4"	WD	1	5 3/4"	HM	E3/AE521	E1/AE521			R-3		213E
214	A		3' - 0"	7' - 0"	1 3/4"	WD	2	7"	HM	E3/AE521	E1/AE521		20 MIN	R-1		214
214A	A		3' - 0"	7' - 0"	1 3/4"	WD	1	7"	HM	E3/AE521	E1/AE521			R-4	1" UNDERCUT	214A
214B	A		3' - 0"	7' - 0"	1 3/4"	WD	1	7"	HM	E3/AE521	E1/AE521			R-4	1" UNDERCUT	214B
214C	A		3' - 0"	7' - 0"	1 3/4"	WD	1	7"	HM	E3/AE521	E1/AE521			R-4	1" UNDERCUT	214C
214D	A		3' - 0"	7' - 0"	1 3/4"	WD	1	5 3/4"	HM	E3/AE521	E1/AE521			R-3		214D
214E	A		3' - 0"	7' - 0"	1 3/4"	WD	1	5 3/4"	HM	E3/AE521	E1/AE521			R-3		214E
215	A		3' - 0"	7' - 0"	1 3/4"	WD	2	7"	HM	E3/AE521	E1/AE521		20 MIN	R-1		215
215A	A		3' - 0"	7' - 0"	1 3/4"	WD	1	7"	HM	E3/AE521	E1/AE521			R-4	1" UNDERCUT	215A
215B	A		3' - 0"	7' - 0"	1 3/4"	WD	1	7"	HM	E3/AE521	E1/AE521			R-4	1" UNDERCUT	215B
215C	A		3' - 0"	7' - 0"	1 3/4"	WD	1	7"	HM	E3/AE521	E1/AE521			R-4	1" UNDERCUT	215C
215D	A		3' - 0"	7' - 0"	1 3/4"	WD	1	5 3/4"	HM	E3/AE521	E1/AE521			R-3		215D
215E	A		3' - 0"	7' - 0"	1 3/4"	WD	1	5 3/4"	HM	E3/AE521	E1/AE521			R-3		215E
216	A		3' - 0"	7' - 0"	1 3/4"	WD	2	7"	HM	E3/AE521	E1/AE521		20 MIN	R-1		216
216A	A		3' - 0"	7' - 0"	1 3/4"	WD	1	7"	HM	E3/AE521	E1/AE521			R-4	1" UNDERCUT	216A
216B	A		3' - 0"	7' - 0"	1 3/4"	WD	1	7"	HM	E3/AE521	E1/AE521			R-4	1" UNDERCUT	216B
216C	A		3' - 0"	7' - 0"	1 3/4"	WD	1	7"	HM	E3/AE521	E1/AE521			R-4	1" UNDERCUT	216C
216D	A		3' - 0"	7' - 0"	1 3/4"	WD	1	5 3/4"	HM	E3/AE521	E1/AE521			R-3		216D
216E	A		3' - 0"	7' - 0"	1 3/4"	WD	1	5 3/4"	HM	E3/AE521	E1/AE521			R-3		216E
217	A		3' - 0"	7' - 0"	1 3/4"	WD	2	7"	HM	E3/AE521	E1/AE521		20 MIN	R-1		217
217A	A		3' - 0"	7' - 0"	1 3/4"	WD	1	7"	HM	E3/AE521	E1/AE521			R-4	1" UNDERCUT	217A
217B	A		3' - 0"	7' - 0"	1 3/4"	WD	1	7"	HM	E3/AE521	E1/AE521			R-4	1" UNDERCUT	217B
217C	A		3' - 0"	7' - 0"	1 3/4"	WD	1	7"	HM	E3/AE521	E1/AE521			R-4	1" UNDERCUT	217C
217D	A		3' - 0"	7' - 0"	1 3/4"	WD	1	5 3/4"	HM	E3/AE521	E1/AE521			R-3		217D
217E	A		3' - 0"	7' - 0"	1 3/4"	WD	1	5 3/4"	HM	E3/AE521	E1/AE521			R-3		217E
218	A		3' - 0"	7' - 0"	1 3/4"	WD	2	7"	HM	E3/AE521	E1/AE521		20 MIN	R-1		218
218A	A		3' - 0"	7' - 0"	1 3/4"	WD	1	7"	HM	E3/AE521	E1/AE521			R-4	1" UNDERCUT	218A
218B	A		3' - 0"	7' - 0"	1 3/4"	WD	1	7"	HM	E3/AE521	E1/AE521			R-4	1" UNDERCUT	218B
218C	A		3' - 0"	7' - 0"	1 3/4"	WD	1	7"	HM	E3/AE521	E1/AE521			R-4	1" UNDERCUT	218C
218D	A		3' - 0"	7' - 0"	1 3/4"	WD	1	5 3/4"	HM	E3/AE521	E1/AE521			R-3		218D
219	A		3' - 0"	7' - 0"	1 3/4"	WD	2	7"	HM	E3/AE521	E1/AE521		20 MIN	R-1		219
219A	A		3' - 0"	7' - 0"	1 3/4"	WD	1	7"	HM	E3/AE521	E1/AE521			R-4	1" UNDERCUT	219A
219B	A		3' - 0"	7' - 0"	1 3/4"	WD	1	7"	HM	E3/AE521	E1/AE521			R-4	1" UNDERCUT	219B
219C	A		3' - 0"	7' - 0"	1 3/4"	WD	1	7"	HM	E3/AE521	E1/AE521			R-4	1" UNDERCUT	219C
219D	A		3' - 0"	7' - 0"	1 3/4"	WD	1	5 3/4"	HM	E3/AE521	E1/AE521			R-3		219D
219E	A		3' - 0"	7' - 0"	1 3/4"	WD	1	5 3/4"	HM	E3/AE521	E1/AE521			R-3		219E
220	A		3' - 0"	7' - 0"	1 3/4"	WD	2	7"	HM	E3/AE521	E1/AE521		20 MIN	R-1		220
220A	A		3' - 0"	7' - 0"	1 3/4"	WD	1	7"	HM	E3/AE521	E1/AE521			R-4	1" UNDERCUT	220A
220B	A		3' - 0"	7' - 0"	1 3/4"	WD	1	7"	HM	E3/AE521	E1/AE521			R-4	1" UNDERCUT	220B
220C	A		3' - 0"	7' - 0"	1 3/4"	WD	1	7"	HM	E3/AE521	E1/AE521			R-4	1" UNDERCUT	220C
220D	A		3' - 0"	7' - 0"	1 3/4"	WD	1	5 3/4"	HM	E3/AE521	E1/AE521			R-3		220D
220E	A		3' - 0"	7' - 0"	1 3/4"	WD	1	5 3/4"	HM	E3/AE521	E1/AE521			R-3		220E
222A	D		5' - 0"	5' - 2"		AL								01		222A
222B	E		5' - 0"	8' - 0"		AL								01		222B
222D	A		3' - 0"	7' - 0"	1 3/4"	WD	1	5 3/4"	HM	E3/AE521	E1/AE521			15		222D
224A	A		3' - 0"	7' - 0"	1 3/4"	WD	1	5 3/4"	HM	E3/AE521	E1/AE521	Yes		16		224A
224B-N	C		3' - 0"	7' - 0"	1 3/4"									AL-06	FROSTED GLAZING	224B-N
224B-S	A		3' - 0"	7' - 0"	1 3/4"	WD	1	5 3/4"	HM	E3/AE521	E1/AE521	Yes		15		224B-S
224B-W	D		14' - 0"	5' - 0"		AL								01		224B-W
224D	A		3' - 0"	7' - 0"	1 3/4"	WD	1	5 3/4"	HM	E3/AE521	E1/AE521			15		224D
224E	A		3' - 6"	7' - 0"	1 3/4"	WD	1	5 3/4"	HM	E3/AE521	E1/AE521			16		224E
224F	A		3' - 0"	7' - 0"	1 3/4"	WD	1	5 3/4"	HM	E3/AE521	E1/AE521			16		224F
224G	C		3' - 6"	7' - 2"	1 3/4"	AL/G			AL			Yes		AL-04		224G
226	A		3' - 0"	7' - 0"	1 3/4"	WD	2	7"	HM	E3/AE521	E1/AE521		20 MIN	R-1		226
226A	A		3' - 0"	7' - 0"	1 3/4"	WD	1	7"	HM	E3/AE521	E1/AE521			R-4	1" UNDERCUT	226A
226B	A		3' - 0"	7' - 0"	1 3/4"	WD	1	7"	HM	E3/AE521	E1/AE521			R-4	1" UNDERCUT	226B
226C	A		3' - 0"	7' - 0"	1 3/4"	WD	1	7"	HM	E3/AE521	E1/AE521			R-4	1" UNDERCUT	226C
226D	A		3' - 0"	7' - 0"	1 3/4"	WD	1	5 3/4"	HM	E3/AE521	E1/AE521			R-3		226D
226E	A		3' - 0"	7' - 0"	1 3/4"	WD	1	5 3/4"	HM	E3/AE521	E1/AE521			R-3		226E
227	A		3' - 0"	7' - 0"	1 3/4"	WD	2	7"	HM	E3/AE521	E1/AE521		20 MIN	R-1		227
227A	A		3' - 0"	7' - 0"	1 3/4"	WD	1	7"	HM	E3/AE521	E1/AE521			R-4	1" UNDERCUT	227A
227B	A		3' - 0"	7' - 0"	1 3/4"	WD	1	7"	HM	E3/AE521	E1/AE521			R-4	1" UNDERCUT	227B
227C	A		3' - 0"	7' - 0"	1 3/4"	WD	1	7"	HM	E3/AE521	E1/AE521			R-4	1" UNDERCUT	227C
227D	A		3' - 0"	7' - 0"	1 3/4"	WD	1	5 3/4"	HM	E3/AE521	E1/AE521			R-3		227D
227E	A		3' - 0"	7' - 0"	1 3/4"	WD	1	5 3/4"	HM	E3/AE521	E1/AE521			R-3		227E
228	A		3' - 0"	7' - 0"	1 3/4"	WD	2	7"	HM	E3/AE521	E1/AE521		20 MIN	R-1		228
228A	A		3' - 0"	7' - 0"	1 3/4"	WD	1	7"	HM	E3/AE521	E1/AE521			R-4	1" UNDERCUT	228A
228B	A		3' - 0"	7' - 0"	1 3/4"	WD	1	7"	HM	E3/AE521	E1/AE521			R-4	1" UNDERCUT	228B
228C	A		3' - 0"	7' - 0"	1 3/4"	WD	1	7"	HM	E3/AE521	E1/AE521			R-4	1" UNDERCUT	228C
228D	A		3' - 0"	7' - 0"	1 3/4"	WD	1	5 3/4"	HM	E3/AE521	E1/AE521			R-3		228D
228E	A		3' - 0"	7' - 0"	1 3/4"	WD	1	5 3/4"	HM	E3/AE521	E1/AE521			R-3		228E
229	C		3' - 0"	7' - 0"	1 3/4"	WD/G	2	7"	HM	E3/AE521	E1/AE521		20 MIN	06		229
230	A		3' - 0"	7' - 0"	1 3/4"	WD	2	7"	HM	E3/AE521	E1/AE521		20 MIN	R-1		230
230A	A		3' - 0"	7' - 0"	1 3/4"	WD	1	7"	HM	E3/AE521	E1/AE521			R-4	1" UNDERCUT	230A
230B	A		3' - 0"	7' - 0"	1 3/4"	WD	1	7"	HM	E3/AE521	E1/AE521			R-4	1" UNDERCUT	230B
230C	A		3' - 0"	7' - 0"	1 3/4"	WD	1	5 3/4"	HM	E3/AE521	E1/AE521			R-3		230C
230D	A		3' - 0"	7' - 0"	1 3/4"	WD	1	5 3/4"	HM	E3/AE521	E1/AE521			R-3		230D
231	A		3' - 0"	7' - 0"	1 3/4"	WD	2	7"	HM	E3/AE521	E1/AE521		20 MIN	R-1		231
231A	A		3' - 0"	7' - 0"	1 3/4"	WD	1	7"	HM	E3/AE521	E1/AE521			R-4	1" UNDERCUT	231A
231B	A		3' - 0"	7' - 0"	1 3/4"	WD	1	7"	HM	E3/AE521	E1/AE521			R-4	1" UNDERCUT	231B
231C	A		3' - 0"	7' - 0"	1 3/4"	WD	1	5 3/4"	HM	E3/AE521	E1/AE521			R-3		231C
231D	A		3' - 0"	7' - 0"	1 3/4"	WD	1	5 3/4"	HM	E3/AE521	E1/AE521			R-3		231D
299A	B		3' - 0"	7' - 0"	1 3/4"	WD	3	5 3/4"	HM	E4/AE521	E2/AE521		60 MIN	07		299A
299B	B		3' - 0"	7' - 0"	1 3/4"	WD	1	8 3/4"	HM	E3/AE521	E1/AE521		60 MIN	07		299B
299C	B		3' - 0"	7' - 0"	1 3/4"	WD	1	8 3/4"	HM	E3/AE521	E1/AE521		60 MIN	07		299C
299D	B		3' - 0"	7' - 0"	1 3/4"	WD	1	8 3/4"	HM	E3/AE521	E1/AE521		60 MIN	07		299D
299E	B		3' - 0"	7' - 0"	1 3/4"	WD	1	8 3/4"	HM	E3/AE521	E1/AE521		60 MIN	07		299E
299F	B		3' - 0"	7' - 0"	1 3/4"	WD	1	8 1/4"	HM	E3/AE521	E1/AE521		60 MIN	07		299F
Grand total: 151																

MHTN
ARCHITECTS
MHTN Architects, Inc.
420 East South Temple
Suite 100
Salt Lake City, Utah 84111
Telephone (801) 595-6700
Telefax (801) 595-6717
www.mhtn.com

WEBER STATE UNIVERSITY
RESIDENTIAL LIFE PHASE II - BLDG 2
DFCM PROJECT NUMBER: 10176810

WEBER STATE UNIVERSITY
OGDEN, UTAH 84408

SEAL

MHTN PROJECT NO. 2010543
DRAWN BY: MLH CHECKED BY: MG

ISSUED:

NO.	DATE	DESCRIPTION
01	17 MAY 2011	CONSTRUCTION DOCUMENTS

CONTRACTOR TO VERIFY DRAWINGS IN FIELD USE REFLECT LAST REVISION DATE.

NO.	DATE	DESCRIPTION

SHEET NAME
DOOR SCHEDULE LEVEL 1 AND 2
CONSTRUCTION DOCUMENTS
17 MAY 2011

SHEET NUMBER
AE603

C:\Users\prestonn\Documents\A11_2010543 WSU RESIDENTIAL LIFE BUILDING II_CENTRAL_prestonn.rvt
5/17/2011 12:23:35 PM

LEVEL 3 DOOR AND FRAME SCHEDULE

DOOR #	DOOR TYPE	DOOR LEAVES	DOOR WIDTH	DOOR HEIGHT	DOOR THICKNESS	DOOR MATERIAL	FRAME TYPE	FRAME DEPTH	FRAME MATERIAL	JAMB DETAIL	HEAD DETAIL	ELECTRICAL	FIRE RATING (IN MIN.)	HARDWARE GROUP	REMARKS	DOOR #
300A	A		3' - 0"	7' - 0"	1 3/4"	WD	3	5 3/4"	HM	E4/AE521	E2/AE521			09		300A
300B	A		3' - 0"	7' - 0"	1 3/4"	WD	1	8 1/4"	HM	E3/AE521	E1/AE521			12		300B
300C	A		3' - 0"	7' - 0"	1 3/4"	WD	3	5 3/4"	HM	E4/AE521	E2/AE521		20 MIN	02		300C
300D	A		3' - 0"	7' - 0"	1 3/4"	WD	3	5 3/4"	HM	E4/AE521	E2/AE521		20 MIN	02		300D
300E	A		3' - 0"	7' - 0"	1 3/4"	WD	3	5 3/4"	HM	E4/AE521	E2/AE521		20 MIN	02		300E
300F	A		3' - 0"	7' - 0"	1 3/4"	WD	1	8 3/4"	HM	E3/AE521	E1/AE521			02		300F
300G	A		3' - 0"	7' - 0"	1 3/4"	WD	1	8 3/4"	HM	E3/AE521	E1/AE521		20 MIN	02		300G
300H	A		3' - 0"	7' - 0"	1 3/4"	WD	1	8 3/4"	HM	E3/AE521	E1/AE521		20 MIN	04		300H
300K	A		3' - 0"	7' - 0"	1 3/4"	WD	1	8 3/4"	HM	E3/AE521	E1/AE521		20 MIN	02		300K
300L	B		3' - 0"	7' - 0"	1 3/4"	WD	1	5 3/4"	HM	E3/AE521	E1/AE521	Yes	20 MIN	20		300L
300M	B		3' - 0"	7' - 0"	1 3/4"	WD	1	5 3/4"	HM	E3/AE521	E1/AE521	Yes	20 MIN	20		300M
300N	A		3' - 0"	7' - 0"	1 3/4"	WD	1	8 1/4"	HM	E3/AE521	E1/AE521		20 MIN	02		300N
300P	A		3' - 0"	7' - 0"	1 3/4"	WD	1	8 1/4"	HM	E3/AE521	E1/AE521		20 MIN	02		300P
300Q	A		3' - 0"	7' - 0"	1 3/4"	WD	3	5 3/4"	HM	E4/AE521	E2/AE521		20 MIN	02		300Q
302A	A		3' - 0"	7' - 0"	1 3/4"	WD	3	5 3/4"	HM	E4/AE521	E2/AE521			18		302A
302B	A		3' - 0"	7' - 0"	1 3/4"	WD	3	5 3/4"	HM	E4/AE521	E2/AE521			18		302B
302C	A		3' - 0"	7' - 0"	1 3/4"	WD	3	5 3/4"	HM	E4/AE521	E2/AE521			18		302C
304	A		3' - 0"	7' - 0"	1 3/4"	WD	2	7"	HM	E3/AE521	E1/AE521		20 MIN	R-1		304
304A	A		3' - 0"	7' - 0"	1 3/4"	WD	1	7"	HM	E3/AE521	E1/AE521			R-4	1" UNDERCUT	304A
304B	A		3' - 0"	7' - 0"	1 3/4"	WD	1	7"	HM	E3/AE521	E1/AE521			R-4	1" UNDERCUT	304B
304C	A		3' - 0"	7' - 0"	1 3/4"	WD	1	5 3/4"	HM	E3/AE521	E1/AE521			R-3		304C
304D	A		3' - 0"	7' - 0"	1 3/4"	WD	1	5 3/4"	HM	E3/AE521	E1/AE521			R-3		304D
305	A		3' - 0"	7' - 0"	1 3/4"	WD	2	7"	HM	E3/AE521	E1/AE521		20 MIN	R-1		305
305A	A		3' - 0"	7' - 0"	1 3/4"	WD	1	7"	HM	E3/AE521	E1/AE521			R-4	1" UNDERCUT	305A
305B	A		3' - 0"	7' - 0"	1 3/4"	WD	1	7"	HM	E3/AE521	E1/AE521			R-4	1" UNDERCUT	305B
305C	A		3' - 0"	7' - 0"	1 3/4"	WD	1	5 3/4"	HM	E3/AE521	E1/AE521			R-3		305C
305D	A		3' - 0"	7' - 0"	1 3/4"	WD	1	5 3/4"	HM	E3/AE521	E1/AE521			R-3		305D
307	A		3' - 0"	7' - 0"	1 3/4"	WD	2	7"	HM	E3/AE521	E1/AE521		20 MIN	R-1		307
307A	A		3' - 0"	7' - 0"	1 3/4"	WD	1	7"	HM	E3/AE521	E1/AE521			R-4	1" UNDERCUT	307A
307B	A		3' - 0"	7' - 0"	1 3/4"	WD	1	7"	HM	E3/AE521	E1/AE521			R-4	1" UNDERCUT	307B
307C	A		3' - 0"	7' - 0"	1 3/4"	WD	1	5 3/4"	HM	E3/AE521	E1/AE521			R-3		307C
307D	A		3' - 0"	7' - 0"	1 3/4"	WD	1	5 3/4"	HM	E3/AE521	E1/AE521			R-3		307D
308	A		3' - 0"	7' - 0"	1 3/4"	WD	2	7"	HM	E3/AE521	E1/AE521		20 MIN	R-1		308
308A	A		3' - 0"	7' - 0"	1 3/4"	WD	1	7"	HM	E3/AE521	E1/AE521			R-4	1" UNDERCUT	308A
308B	A		3' - 0"	7' - 0"	1 3/4"	WD	1	7"	HM	E3/AE521	E1/AE521			R-4	1" UNDERCUT	308B
308C	A		3' - 0"	7' - 0"	1 3/4"	WD	1	5 3/4"	HM	E3/AE521	E1/AE521			R-3		308C
308D	A		3' - 0"	7' - 0"	1 3/4"	WD	1	5 3/4"	HM	E3/AE521	E1/AE521			R-3		308D
309	C	PR	3' - 0"	7' - 0"	1 3/4"	WD/G	1	7"	HM	E3/AE521	E1/AE521		20 MIN	05		309
310	A		3' - 0"	7' - 0"	1 3/4"	WD	2	7"	HM	E3/AE521	E1/AE521		20 MIN	R-1		310
310A	A		3' - 0"	7' - 0"	1 3/4"	WD	1	7"	HM	E3/AE521	E1/AE521			R-4	1" UNDERCUT	310A
310B	A		3' - 0"	7' - 0"	1 3/4"	WD	1	7"	HM	E3/AE521	E1/AE521			R-4	1" UNDERCUT	310B
310C	A		3' - 0"	7' - 0"	1 3/4"	WD	1	5 3/4"	HM	E3/AE521	E1/AE521			R-3		310C
310D	A		3' - 0"	7' - 0"	1 3/4"	WD	1	5 3/4"	HM	E3/AE521	E1/AE521			R-3		310D
311	A		3' - 0"	7' - 0"	1 3/4"	WD	2	7"	HM	E3/AE521	E1/AE521		20 MIN	R-1		311
311A	A		3' - 0"	7' - 0"	1 3/4"	WD	1	7"	HM	E3/AE521	E1/AE521			R-4	1" UNDERCUT	311A
311B	A		3' - 0"	7' - 0"	1 3/4"	WD	1	7"	HM	E3/AE521	E1/AE521			R-4	1" UNDERCUT	311B
311C	A		3' - 0"	7' - 0"	1 3/4"	WD	1	5 3/4"	HM	E3/AE521	E1/AE521			R-3		311C
311D	A		3' - 0"	7' - 0"	1 3/4"	WD	1	5 3/4"	HM	E3/AE521	E1/AE521			R-3		311D
312	A		3' - 0"	7' - 0"	1 3/4"	WD	2	7"	HM	E3/AE521	E1/AE521		20 MIN	R-1		312
312A	A		3' - 0"	7' - 0"	1 3/4"	WD	1	7"	HM	E3/AE521	E1/AE521			R-4	1" UNDERCUT	312A
312B	A		3' - 0"	7' - 0"	1 3/4"	WD	1	7"	HM	E3/AE521	E1/AE521			R-4	1" UNDERCUT	312B
312C	A		3' - 0"	7' - 0"	1 3/4"	WD	1	7"	HM	E3/AE521	E1/AE521			R-4	1" UNDERCUT	312C
312D	A		3' - 0"	7' - 0"	1 3/4"	WD	1	5 3/4"	HM	E3/AE521	E1/AE521			R-3		312D
312E	A		3' - 0"	7' - 0"	1 3/4"	WD	1	5 3/4"	HM	E3/AE521	E1/AE521			R-3		312E
313	A		3' - 0"	7' - 0"	1 3/4"	WD	2	7"	HM	E3/AE521	E1/AE521		20 MIN	R-1		313
313A	A		3' - 0"	7' - 0"	1 3/4"	WD	1	7"	HM	E3/AE521	E1/AE521			R-4	1" UNDERCUT	313A
313B	A		3' - 0"	7' - 0"	1 3/4"	WD	1	7"	HM	E3/AE521	E1/AE521			R-4	1" UNDERCUT	313B
313C	A		3' - 0"	7' - 0"	1 3/4"	WD	1	7"	HM	E3/AE521	E1/AE521			R-4	1" UNDERCUT	313C
313D	A		3' - 0"	7' - 0"	1 3/4"	WD	1	5 3/4"	HM	E3/AE521	E1/AE521			R-3		313D
313E	A		3' - 0"	7' - 0"	1 3/4"	WD	1	5 3/4"	HM	E3/AE521	E1/AE521			R-3		313E
314	A		3' - 0"	7' - 0"	1 3/4"	WD	2	7"	HM	E3/AE521	E1/AE521		20 MIN	R-1		314
314A	A		3' - 0"	7' - 0"	1 3/4"	WD	1	7"	HM	E3/AE521	E1/AE521			R-4	1" UNDERCUT	314A
314B	A		3' - 0"	7' - 0"	1 3/4"	WD	1	7"	HM	E3/AE521	E1/AE521			R-4	1" UNDERCUT	314B
314C	A		3' - 0"	7' - 0"	1 3/4"	WD	1	7"	HM	E3/AE521	E1/AE521			R-4	1" UNDERCUT	314C
314D	A		3' - 0"	7' - 0"	1 3/4"	WD	1	5 3/4"	HM	E3/AE521	E1/AE521			R-3		314D
314E	A		3' - 0"	7' - 0"	1 3/4"	WD	1	5 3/4"	HM	E3/AE521	E1/AE521			R-3		314E
315	A		3' - 0"	7' - 0"	1 3/4"	WD	2	7"	HM	E3/AE521	E1/AE521		20 MIN	R-1		315
315A	A		3' - 0"	7' - 0"	1 3/4"	WD	1	7"	HM	E3/AE521	E1/AE521			R-4	1" UNDERCUT	315A
315B	A		3' - 0"	7' - 0"	1 3/4"	WD	1	7"	HM	E3/AE521	E1/AE521			R-4	1" UNDERCUT	315B
315C	A		3' - 0"	7' - 0"	1 3/4"	WD	1	7"	HM	E3/AE521	E1/AE521			R-4	1" UNDERCUT	315C
315D	A		3' - 0"	7' - 0"	1 3/4"	WD	1	5 3/4"	HM	E3/AE521	E1/AE521			R-3		315D
315E	A		3' - 0"	7' - 0"	1 3/4"	WD	1	5 3/4"	HM	E3/AE521	E1/AE521			R-3		315E
316	A		3' - 0"	7' - 0"	1 3/4"	WD	2	7"	HM	E3/AE521	E1/AE521		20 MIN	R-1		316
316A	A		3' - 0"	7' - 0"	1 3/4"	WD	1	7"	HM	E3/AE521	E1/AE521			R-4	1" UNDERCUT	316A
316B	A		3' - 0"	7' - 0"	1 3/4"	WD	1	7"	HM	E3/AE521	E1/AE521			R-4	1" UNDERCUT	316B

LEVEL 3 DOOR AND FRAME SCHEDULE

DOOR #	DOOR TYPE	DOOR LEAVES	DOOR WIDTH	DOOR HEIGHT	DOOR THICKNESS	DOOR MATERIAL	FRAME TYPE	FRAME DEPTH	FRAME MATERIAL	JAMB DETAIL	HEAD DETAIL	ELECTRICAL	FIRE RATING (IN MIN.)	HARDWARE GROUP	REMARKS	DOOR #
316C	A		3' - 0"	7' - 0"	1 3/4"	WD	1	7"	HM	E3/AE521	E1/AE521			R-4	1" UNDERCUT	316C
316D	A		3' - 0"	7' - 0"	1 3/4"	WD	1	5 3/4"	HM	E3/AE521	E1/AE521			R-3		316D
316E	A		3' - 0"	7' - 0"	1 3/4"	WD	1	5 3/4"	HM	E3/AE521	E1/AE521			R-3		316E
317	A		3' - 0"	7' - 0"	1 3/4"	WD	2	7"	HM	E3/AE521	E1/AE521		20 MIN	R-1		317
317A	A		3' - 0"	7' - 0"	1 3/4"	WD	1	7"	HM	E3/AE521	E1/AE521			R-4	1" UNDERCUT	317A
317B	A		3' - 0"	7' - 0"	1 3/4"	WD	1	7"	HM	E3/AE521	E1/AE521			R-4	1" UNDERCUT	317B
317C	A		3' - 0"	7' - 0"	1 3/4"	WD	1	7"	HM	E3/AE521	E1/AE521			R-4	1" UNDERCUT	317C
317D	A		3' - 0"	7' - 0"	1 3/4"	WD	1	5 3/4"	HM	E3/AE521	E1/AE521			R-3		317D
317E	A		3' - 0"	7' - 0"	1 3/4"	WD	1	5 3/4"	HM	E3/AE521	E1/AE521			R-3		317E
318	A		3' - 0"	7' - 0"	1 3/4"	WD	2	7"	HM	E3/AE521	E1/AE521		20 MIN	R-1		318
318A	A		3' - 0"	7' - 0"	1 3/4"	WD	1	7"	HM	E3/AE521	E1/AE521			R-4	1" UNDERCUT	318A
318B	A		3' - 0"	7' - 0"	1 3/4"	WD	1	7"	HM	E3/AE521	E1/AE521			R-4	1" UNDERCUT	318B
318C	A		3' - 0"	7' - 0"	1 3/4"	WD	1	7"	HM	E3/AE521	E1/AE521			R-4	1" UNDERCUT	318C
318D	A		3' - 0"	7' - 0"	1 3/4"	WD	1	5 3/4"	HM	E3/AE521	E1/AE521			R-3		318D
319	A		3' - 0"	7' - 0"	1 3/4"	WD	2	7"	HM	E3/AE521	E1/AE521		20 MIN	R-1		319
319A	A		3' - 0"	7' - 0"	1 3/4"	WD	1	7"	HM	E3/AE521	E1/AE521			R-4	1" UNDERCUT	319A
319B	A		3' - 0"	7' - 0"	1 3/4"	WD	1	7"	HM	E3/AE521	E1/AE521			R-4	1" UNDERCUT	319B
319C	A		3' - 0"	7' - 0"	1 3/4"	WD	1	7"	HM	E3/AE521	E1/AE521			R-4	1" UNDERCUT	319C
319D	A		3' - 0"	7' - 0"	1 3/4"	WD	1	5 3/4"	HM	E3/AE521	E1/AE521			R-3		319D
319E	A		3' - 0"	7' - 0"	1 3/4"	WD	1	5 3/4"	HM	E3/AE521	E1/AE521			R-3		319E
320	A		3' - 0"	7' - 0"	1 3/4"	WD	2	7"	HM	E3/AE521	E1/AE521		20 MIN	R-1		320
320A	A		3' - 0"	7' - 0"	1 3/4"	WD	1	7"	HM	E3/AE521	E1/AE521			R-4	1" UNDERCUT	320A
320B	A		3' - 0"	7' - 0"	1 3/4"	WD	1	7"	HM	E3/AE521	E1/AE521			R-4	1" UNDERCUT	320B
320C	A		3' - 0"	7' - 0"	1 3/4"	WD	1	7"	HM	E3/AE521	E1/AE521			R-4	1" UNDERCUT	320C
320D	A		3' - 0"	7' - 0"	1 3/4"	WD	1	5 3/4"	HM	E3/AE521	E1/AE521			R-3		320D
320E	A		3' - 0"	7' - 0"	1 3/4"	WD	1	5 3/4"	HM	E3/AE521	E1/AE521			R-3		320E
322-N	B	PR	3' - 0"	7' - 0"	1 3/4"	WD	1	5 3/4"	HM	E3/AE521	E1/AE521			08		322-N
322-S	A		3' - 0"	7' - 0"	1 3/4"	WD	1	5 3/4"	HM	E3/AE521	E1/AE521			21		322-S
322A-1	A	PR	3' - 0"	7' - 0"	1 3/4"	WD	1	5 3/4"	HM	E3/AE521	E1/AE521			14		322A-1
322A-2	A	PR	3' - 0"	7' - 0"	1 3/4"	WD	1	5 3/4"	HM	E3/AE521	E1/AE521			14		322A-2
322A-3	A	PR	3' - 0"	7' - 0"	1 3/4"	WD	1	5 3/4"	HM	E3/AE521	E1/AE521			14		322A-3
322A-4	A	PR	3' - 0"	7' - 0"	1 3/4"	WD	1	5 3/4"	HM	E3/AE521	E1/AE521			14		322A-4
326	A		3' - 0"	7' - 0"	1 3/4"	WD	2	7"	HM	E3/AE521	E1/AE521		20 MIN	R-1		326
326A	A		3' - 0"	7' - 0"	1 3/4"	WD	1	7"	HM	E3/AE521	E1/AE521			R-4	1" UNDERCUT	326A
326B	A		3' - 0"	7' - 0"	1 3/4"	WD	1	7"	HM	E3/AE521	E1/AE521			R-4	1" UNDERCUT	326B
326C	A		3' - 0"	7' - 0"	1 3/4"	WD	1	7"	HM	E3/AE521	E1/AE521			R-4	1" UNDERCUT	326C
326D	A		3' - 0"	7' - 0"	1 3/4"	WD	1	5 3/4"	HM	E3/AE521	E1/AE521			R-3		326D
326E	A		3' - 0"	7' - 0"	1 3/4"	WD	1	5 3/4"	HM	E3/AE521	E1/AE521			R-3		326E
327	A		3' - 0"	7' - 0"	1 3/4"	WD	2	7"	HM	E3/AE521	E1/AE521		20 MIN	R-1		327
327A	A		3' - 0"	7' - 0"	1 3/4"	WD	1	7"	HM	E3/AE521	E1/AE521			R-4	1" UNDERCUT	327A
327B	A		3' - 0"	7' - 0"	1 3/4"	WD	1	7"	HM	E3/AE521	E1/AE521			R-4	1" UNDERCUT	327B
327C	A		3' - 0"	7' - 0"	1 3/4"	WD	1	7"	HM	E3/AE521	E1/AE521			R-4	1" UNDERCUT	327C
327D	A		3' - 0"	7' - 0"	1 3/4"	WD	1	5 3/4"	HM	E3/AE521	E1/AE521			R-3		327D
327E	A		3' - 0"	7' - 0"	1 3/4"	WD	1	5 3/4"	HM	E3/AE521	E1/AE521			R-3		327E
328	A		3' - 0"	7' - 0"	1 3/4"	WD	2	7"	HM	E3/AE521	E1/AE521		20 MIN	R-1		328
328A	A		3' - 0"	7' - 0"	1 3/4"	WD	1	7"	HM	E3/AE521	E1/AE521			R-4	1" UNDERCUT	328A
328B	A		3' - 0"	7' - 0"	1 3/4"	WD	1	7"	HM	E3/AE521	E1/AE521			R-4	1" UNDERCUT	328B
328C	A		3' - 0"	7' - 0"	1 3/4"	WD	1	7"	HM	E3/AE521	E1/AE521			R-4	1" UNDERCUT	328C
328D	A		3' - 0"	7' - 0"	1 3/4"	WD	1	5 3/4"	HM	E3/AE521	E1/AE521			R-3		328D
328E	A		3' - 0"	7' - 0"	1 3/4"	WD	1	5 3/4"	HM	E3/AE521	E1/AE521			R-3		328E
329	C		3' - 0"	7' - 0"	1 3/4"	WD/G	2	7"	HM	E3/AE521	E1/AE521		20 MIN	06		329
330	A		3' - 0"	7' - 0"	1 3/4"	WD	2	7"	HM	E3/AE521	E1/AE521		20 MIN	R-1		330
330A	A		3' - 0"	7' - 0"	1 3/4"	WD	1	7"	HM	E3/AE521	E1/AE521			R-4	1" UNDERCUT	330A
330B	A		3' - 0"	7' - 0"	1 3/4"	WD	1	7"	HM	E3/AE521	E1/AE521			R-4	1" UNDERCUT	330B
330C	A		3' - 0"	7' - 0"	1 3/4"	WD	1	5 3/4"	HM	E3/AE521	E1/AE521			R-3		330C
330D	A		3' - 0"	7' - 0"	1 3/4"	WD	1	5 3/4"	HM	E3/AE521	E1/AE521			R-3		330D
331	A		3' - 0"	7' - 0"	1 3/4"	WD	2	7"	HM	E3/AE521	E1/AE521		20 MIN	R-1		331
331A	A		3' - 0"	7' - 0"	1 3/4"	WD	1	7"	HM	E3/AE521	E1/AE521			R-4	1" UNDERCUT	331A
331B	A		3' - 0"	7' - 0"	1 3/4"	WD	1	7"	HM	E3/AE521	E1/AE521			R-4	1" UNDERCUT	331B
331C	A		3' - 0"	7' - 0"	1 3/4"	WD	1	5 3/4"	HM	E3/AE521	E1/AE521			R-3		331C
331D	A		3' - 0"	7' - 0"	1 3/4"	WD	1	5 3/4"	HM	E3/AE521	E1/AE521			R-3		331D
333	A		3' - 0"	7' - 0"	1 3/4"	WD	1	5 3/4"	HM	E3/AE521	E1/AE521			10		333
334	C		3' - 0"	7' - 0"	1 3/4"	WD	5		HM	E3/AE521	E1/AE521			15		334
335	C		3' - 0"	7' - 0"	1 3/4"	WD	5		HM	E3/AE521	E1/AE521			15		335
336	C		3' - 0"	7' - 0"	1 3/4"	WD	4		HM	E3/AE521	E1/AE521			15		336
399A	A		3' - 0"	7' - 0"	1 3/4"	WD	3	5 3/4"	HM	E4/AE521	E2/AE521		60 MIN	07		399A
399B	B		3' - 0"	7' - 0"	1 3/4"	WD	1	8 3/4"	HM	E3/AE521	E1/AE521		60 MIN	07		399B
399C	B		3' - 0"	7' - 0"	1 3/4"	WD	1	8 3/4"	HM	E3/AE521	E1/AE521		60 MIN	07		399C
399D	B		3' - 0"	7' - 0"	1 3/4"	WD	1	8 3/4"	HM	E3/AE521	E1/AE521		60 MIN	07		399D
399E	B		3' - 0"	7' - 0"	1 3/4"	WD	1	8 3/4"	HM	E3/AE521	E1/AE521		60 MIN	07		399E
399F	B		3' - 0"	7' - 0"	1 3/4"	WD	1	8 1/4"	HM	E3/AE521	E1/AE521		60 MIN	07		399F

Grand total: 146

GLAZING SCHEDULE

1. 1" INSULATED GLAZING
2. 1" INSULATED TEMPERED GLAZING
3. 1" INSULATED SPANDREL GLAZING
4. 1/4" CLEAR GLAZING
5. 1/4" CLEAR TEMPERED GLAZING (FROSTED AT DOOR 224B-N)
6. 45 MIN FIRE RATED GLAZING - TEMPERED/SAFETY (60 MINUTE FIRE RATED GLAZING AT DOORS 199A, 199B-S, 199C-S, 199D-S, 199E-S, 199F-E, 299A, 299B, 299C, 299D, 299E, 299F, 399A, 399B, 399C, 399D, 399E, 399F.)
7. FIRE RESISTANT METAL INFILL PANEL
8. METAL LOUVER

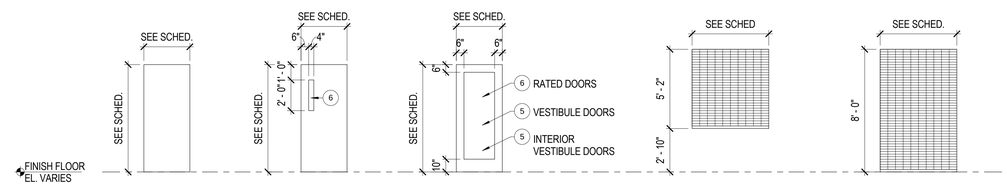

DOOR TYPE A | DOOR TYPE B | DOOR TYPE C | DOOR TYPE D | DOOR TYPE E

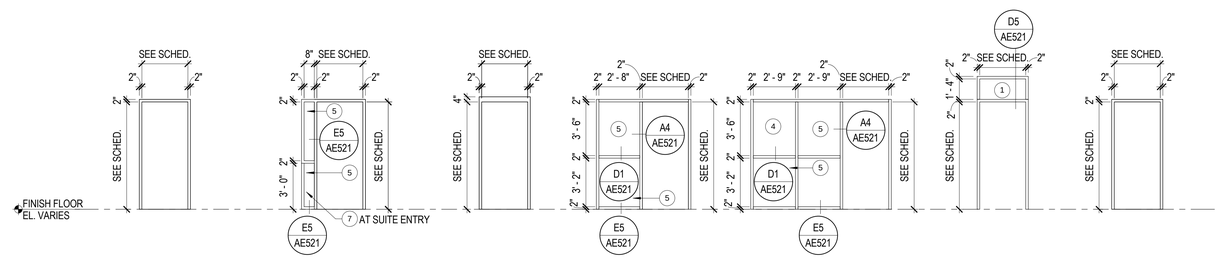

FRAME TYPE 1 — HOLLOW METAL

FRAME TYPE 2 — HOLLOW METAL, PROVIDE ROLLER SHADES AT SUITE ENTRY SIDELIGHTS

FRAME TYPE 3 — HOLLOW METAL

FRAME TYPE 4 — HOLLOW METAL

FRAME TYPE 5 — HOLLOW METAL

FRAME TYPE 6 — ALUMINUM STOREFRONT

FRAME TYPE 7 — ALUMINUM STOREFRONT

MHTN ARCHITECTS
MHTN Architects, Inc.
420 East South Temple
Suite 100
Salt Lake City, Utah 84111
Telephone (801) 595-6700
Telefax (801) 595-6717
www.mhtn.com

WEBER STATE UNIVERSITY
RESIDENTIAL LIFE PHASE II - BLDG 2
DFCM PROJECT NUMBER: 10176810

WEBER STATE UNIVERSITY
OGDEN, UTAH 84408

SEAL

MHTN PROJECT NO. 2010543

DRAWN BY: MLH CHECKED BY: MG

ISSUED:

NO.	DATE	DESCRIPTION
01	17 MAY 2011	CONSTRUCTION DOCUMENTS

CONTRACTOR TO VERIFY DRAWINGS IN FIELD USE REFLECT LAST REVISION DATE:

NO.	DATE	DESCRIPTION

SHEET NAME
DOOR SCHEDULE LEVEL 3
CONSTRUCTION DOCUMENTS
17 MAY 2011

SHEET NUMBER
AE604

C:\Users\prestonm\Documents\A11_2010543 WSU RESIDENTIAL LIFE BUILDING II_CENTRAL_prestonm.rvt
5/17/2011 12:23:37 PM

FINISH SCHEDULE - LEVEL 1

RM #	ROOM NAME	FLOOR											BASE				NORTH WALL							EAST WALL							SOUTH WALL							WEST WALL							CEILING							REMARKS	RM #
		F1 CARPET TILE A	F2 CARPET TILE B	F3 CARPET TILE C	F4 LINOLEUM SHEET FLOORING	F5 RESILIENT TERRAZZO TILE	F6 SEALED CONCRETE	F7 WALK-OFF-MAT	F8 INTEGRAL STAIR TREADS & RISERS & LANDINGS	F9 SHEET SAFETY FLOORING	F10 RESILIENT ATHLETIC FLOORING	F11 PORCELAIN TILE 2X2	B1 RUBBER BASE	B2 4" INTEGRAL LINOLEUM BASE, TO MATCH F4 W/ TOP CAP	B3 4" INTEGRAL SAFETY FLOOR BASE, TO MATCH F9, W/ TOP CAP	B4 BUILT-UP TILE BASE TO MATCH FLOOR F11	W1 PAINTED GYP BD -ABUSE RESISTANT	W2 FRP	W3 CMU	W4 TILE WAINSCOT - 4.5X4.5 CERAMIC	W5 CONCRETE WALL NOT PAINTED	W6 ACCENT PAINT	W7 TILE - 3X6 CERAMIC	W1 PAINTED GYP BD -ABUSE RESISTANT	W2 FRP	W3 CMU	W4 TILE WAINSCOT - 4.5X4.5 CERAMIC	W5 CONCRETE WALL - NOT PAINTED	W6 ACCENT PAINT	W7 TILE - 3X6 CERAMIC	W1 PAINTED GYP BD -ABUSE RESISTANT	W2 FRP	W3 CMU	W4 TILE WAINSCOT - 4.5X4.5 CERAMIC	W5 CONCRETE WALL - NOT PAINTED	W6 ACCENT PAINT	W7 TILE - 3X6 CERAMIC	W1 PAINTED GYP BD -ABUSE RESISTANT	W2 FRP	W3 CMU	W4 TILE WAINSCOT - 4.5X4.5 CERAMIC	W5 CONCRETE WALL - NOT PAINTED	W6 ACCENT PAINT	W7 TILE - 3X6 CERAMIC	C1 PAINTED GYP BD -ABUSE RESISTANT	C2 ACOUSTICAL CEILING TILE 2' x 2'	C3 ACOUSTICAL CEILING TILE 2' x 4'	C4 CURVED METAL PANEL	C5 ACOUSTICAL CEILING TILE 2X4 - ACCENT	C6 OPEN TO STRUCTURE - PAINTED	C7 OPEN TO STRUCTURE - NOT PAINTED	C8 VINYL-FACED LAY-IN CEILING		
1EL	ELEV		F2																																																		1EL
100	HALL		F2	F3									B1				W1		W3		W6		W1		W3					W1		W3		W6		W1		W3		W6				C3		C5				SEE AF101-103 FOR FLOOR PATTERNS & ACCENT PAINT LOCATIONS - SEE AC101A FOR CEILING TILE PATTERN	100
100A	JANITOR						F6						B1						W3						W3					W1								W3						C3							100A
100C	MECH						F6						B1				W1								W3					W1						W1													C7		100C
100D	MECH						F6						B1				W1								W3					W1						W1													C7		100D
100E	MECH						F6						B1				W1								W3					W1						W1													C7		100E
100F	MECH/ELEC						F6						B1				W1						W1							W1						W1													C7		100F
100G	MECH/ELEC						F6						B1				W1						W1							W1						W1													C7		100G
100H	IDF						F6						B1				W1						W1							W1						W1													C7		100H
100J	ELEV. EQUIP.						F6						B1				W1						W1							W1						W1													C7		100J
100K	MECH/ELEC						F6						B1				W1						W1							W1						W1													C7		100K
100M	HALL		F2	F3									B1				W1		W3		W6		W1		W3					W1		W3		W6		W1		W3		W6				C3		C5				SEE AF101-103 FOR FLOOR PATTERNS & ACCENT PAINT LOCATIONS - SEE AC101B FOR CEILING TILE PATTERN	100M
100N	MECH/ELEC						F6						B1				W1						W1							W1																			C7		100N
100P	STORAGE				F4									B2			W1						W1							W1														C3							100P
100Q	MECH						F6						B1				W1								W3					W1						W1													C7		100Q
101	LOBBY					F5							B1						W3				W1		W3					W1						W1				W6		C1	C2			C6			SEE AF101-103 FOR FLOOR PATTERNS & ACCENT PAINT LOCATIONS - SEE AC101B FOR CEILING TILE PATTERN	101
101A	VESTIBULE		F2					F7					B1												W3					W1														C2							101A
102A	WOMEN											F11				B4	W1			W4			W1			W4						W3					W3						C2							102A
102B	UNISEX											F11				B4	W1			W4			W1			W4						W3				W1							C2							102B
102C	MEN											F11				B4	W1			W4					W3							W3				W1			W4				C2							102C
104	SUITE	F1			F4								B1	B2			W1						W1		W3					W1						W1						C1										104
104A	BEDROOM	F1											B1				W1						W1							W1						W1						C1										104A
104B	BEDROOM	F1											B1				W1						W1							W1						W1						C1										104B
104C	SHOWER				F4									B2			W1						W1							W1						W1						C1										104C
104D	TOILET				F4									B2			W1								W3					W1						W1						C1										104D
105	SUITE	F1			F4								B1	B2			W1						W1		W3					W1						W1						C1										105
105A	BEDROOM	F1											B1				W1						W1							W1						W1						C1										105A
105B	BEDROOM	F1											B1				W1						W1							W1						W1						C1										105B
105C	SHOWER				F4									B2			W1						W1							W1						W1						C1										105C
105D	TOILET				F4									B2			W1								W3					W1						W1						C1										105D
106	LOUNGE		F2	F3									B1				W1													W1						W1								C2							SEE AF101-103 FOR FLOOR PATTERNS & ACCENT PAINT LOCATIONS - SEE AC101A FOR CEILING TILE PATTERN	106
107	SUITE	F1			F4								B1	B2			W1						W1		W3					W1						W1						C1										107
107A	BEDROOM	F1											B1				W1						W1							W1						W1						C1										107A
107B	BEDROOM	F1											B1				W1						W1							W1						W1						C1										107B
107C	SHOWER				F4									B2			W1						W1							W1						W1						C1										107C
107D	TOILET				F4									B2			W1								W3					W1						W1						C1										107D
108	SUITE	F1			F4								B1	B2			W1						W1		W3					W1						W1						C1										108
108A	BEDROOM	F1											B1				W1						W1							W1						W1						C1										108A
108B	BEDROOM	F1											B1				W1						W1							W1						W1						C1										108B
108C	SHOWER				F4									B2			W1						W1							W1						W1						C1										108C
108D	TOILET				F4									B2			W1								W3					W1						W1						C1										108D
109	KITCHEN/LOUNGE		F2			F5							B1								W6		W1				W6			W1				W6		W1				W6		C1	C2						SEE AF101-103 FOR FLOOR PATTERNS & ACCENT PAINT LOCATIONS - SEE AC101A FOR CEILING TILE PATTERN	109
110	SUITE	F1			F4								B1	B2			W1						W1		W3					W1						W1						C1										110
110A	BEDROOM	F1											B1				W1						W1							W1						W1						C1										110A
110B	BEDROOM	F1											B1				W1						W1							W1						W1						C1										110B
110C	SHOWER				F4									B2			W1						W1							W1						W1						C1										110C
110D	TOILET				F4									B2			W1								W3					W1						W1						C1										110D
111	SUITE	F1			F4								B1	B2			W1						W1		W3					W1						W1						C1										111
111A	BEDROOM	F1											B1				W1						W1							W1						W1						C1										111A
111B	BEDROOM	F1											B1				W1						W1							W1						W1						C1										111B
111C	SHOWER				F4									B2			W1						W1							W1						W1						C1										111C
111D	TOILET				F4									B2			W1								W3					W1						W1						C1										111D
112	SUITE	F1			F4								B1	B2			W1						W1							W1		W3				W1						C1										112
112A	BEDROOM	F1											B1				W1						W1														W3					C1										112A
112B	BEDROOM	F1											B1				W1						W1							W1						W1						C1										112B
112C	BEDROOM	F1											B1				W1						W1							W1						W1						C1										112C
112D	SHOWER				F4									B2			W1						W1							W1						W1						C1										112D
112E	TOILET				F4									B2			W1						W1								W3						W3					C1										112E
113	BUILDING STORAGE						F6											W3																			W3												C7			113
114	SUITE	F1			F4								B1	B2			W1	W3					W1							W1						W1						C1										114
114A	BEDROOM	F1											B1				W1								W3					W1						W1						C1										114A
114B	BEDROOM	F1											B1				W1						W1							W1						W1						C1										114B
114C	BEDROOM	F1											B1				W1						W1							W1						W1						C1										114C
114D	SHOWER				F4									B2			W1						W1							W1						W1						C1										114D
114E	TOILET				F4									B2				W3							W3					W1						W1						C1										114E
115	SUITE	F1			F4								B1	B2			W1						W1							W1		W3				W1						C1										115
115A	BEDROOM	F1											B1				W1						W1							W1								W3				C1										115A
115B	BEDROOM	F1											B1				W1						W1							W1						W1						C1										115B
115C	BEDROOM	F1											B1				W1						W1							W1						W1						C1										115C
115D	SHOWER				F4									B2			W1						W1							W1						W1						C1										115D
115E	TOILET				F4									B2			W1						W1								W3						W3					C1										115E
116	BUILDING STORAGE						F6											W3																			W3												C7			116
117	SUITE	F1			F4								B1	B2			W1	W3					W1							W1						W1						C1										117
117A	BEDROOM	F1											B1				W1								W3					W1						W1						C1										117A
117B	BEDROOM	F1											B1				W1						W1							W1						W1						C1										117B
117C	BEDROOM	F1											B1				W1						W1							W1						W1						C1										117C
117D	SHOWER				F4									B2			W1						W1							W1						W1						C1										117D
117E	TOILET				F4									B2				W3							W3					W1						W1						C1										117E
118	SUITE	F1			F4								B1	B2			W1						W1							W1		W3				W1						C1										118
118A	BEDROOM	F1											B1				W1						W1							W1								W3				C1										118A
118B	BEDROOM	F1											B1				W1						W1							W1						W1						C1										118B
118C	BEDROOM	F1											B1				W1						W1							W1						W1						C1										118C
118D	TOILET				F4									B2			W1						W1								W3						W3					C1										118D
119	BUILDING STORAGE						F6											W3																			W3												C7			119

MHTN ARCHITECTS
MHTN Architects, Inc.
420 East South Temple
Suite 100
Salt Lake City, Utah 84111
Telephone (801) 595-6700
Telefax (801) 595-6717
www.mhtn.com

WEBER STATE UNIVERSITY
RESIDENTIAL LIFE PHASE II - BLDG 2
DFCM PROJECT NUMBER: 10176810

WEBER STATE UNIVERSITY
OGDEN, UTAH 84408

SEAL

MHTN PROJECT NO. 2010543

DRAWN BY: MLH CHECKED BY: MG

ISSUED:

NO.	DATE	DESCRIPTION
01	17 MAY 2011	CONSTRUCTION DOCUMENTS

CONTRACTOR TO VERIFY DRAWINGS IN FIELD USE REFLECT LAST REVISION DATE:

NO.	DATE	DESCRIPTION
1	Date 3	Revision 3

SHEET NAME
FINISH SCHEDULE LEVEL 1
CONSTRUCTION DOCUMENTS
17 MAY 2011

SHEET NUMBER
AE605

C:\Users\prestonm\Documents\A11_2010543 WSU RESIDENTIAL LIFE BUILDING II_CENTRAL_prestonm.rvt
5/17/2011 12:23:38 PM

FINISH SCHEDULE - LEVEL 1 CONT.

RM #	ROOM NAME	FLOOR											BASE				NORTH WALL						
		F1 CARPET TILE A	F2 CARPET TILE B	F3 CARPET TILE C	F4 LINOLEUM SHEET FLOORING	F5 RESILIENT TERRAZZO TILE	F6 SEALED CONCRETE	F7 WALK-OFF-MAT	F8 INTEGRAL STAIR TREADS & RISERS & LANDINGS	F9 SHEET SAFETY FLOORING	F10 RESILIENT ATHLETIC FLOORING	F11 PORCELAIN TILE 2X2	B1 RUBBER BASE	B2 4" INTEGRAL LINOLEUM BASE, TO MATCH F4 W/ TOP CAP	B3 4" INTEGRAL SAFETY FLOOR BASE, TO MATCH F9, W/ TOP CAP	B4 BUILT-UP TILE BASE TO MATCH FLOOR F11	W1 PAINTED GYP.BD.-ABUSE RESISTANT	W2 FRP	W3 CMU	W4 TILE WAINSCOT - 4.5X4.5 CERAMIC	W5 CONCRETE WALL NOT PAINTED	W6 ACCENT PAINT	W7 TILE - 3X6 CERAMIC
120	SUITE	F1			F4								B1	B2			W1		W3				
120A	BEDROOM	F1											B1				W1						
120B	BEDROOM	F1											B1				W1						
120C	BEDROOM	F1											B1				W1						
120D	SHOWER				F4									B2			W1						
120E	TOILET				F4									B2					W3				
121	ELEC						F6						B1						W3		W5		
122	MDF						F6						B1				W1						
123	FITNESS										F10		B1				W1						
124	MECHANICAL						F6						B1				W1						
124A	BOILER						F6						B1				W1						
126	SUITE	F1			F4								B1	B2			W1						
126A	BEDROOM	F1											B1				W1						
126B	BEDROOM	F1											B1				W1						
126C	BEDROOM	F1											B1				W1						
126D	SHOWER				F4									B2			W1						
126E	TOILET				F4									B2			W1						
127	LIVING/DINING	F1			F4								B1	B2			W1						
127A	BEDROOM	F1											B1				W1						
127B	BATHROOM				F4									B2					W3				
127C	LAUNDRY				F4									B2					W3				
127D	HALL	F1											B1				W1						
128	DINING/LIVING	F1			F4								B1	B2			W1						
128A	PANTRY				F4									B2			W1						
128B	LAUNDRY				F4									B2			W1						
128C	BATHROOM				F4									B2			W1						
128D	BEDROOM	F1											B1				W1						
128E	STUDY	F1											B1				W1						
128F	BEDROOM	F1											B1				W1						
128G	BATHROOM				F4									B2			W1						
129	KITCHEN/LOUNGE		F2			F5							B1				W1						
130	SUITE	F1			F4								B1	B2			W1						
130A	BEDROOM	F1											B1				W1						
130B	BEDROOM	F1											B1				W1						
130C	SHOWER				F4									B2			W1						
130D	TOILET				F4									B2			W1						
131	SUITE	F1			F4								B1	B2			W1						
131A	BEDROOM	F1											B1				W1						
131B	BEDROOM	F1											B1				W1						
131C	SHOWER				F4									B2			W1						
131D	TOILET				F4									B2			W1						
133	OFFICE/HOTEL		F2										B1				W1						
134	OFFICE/HOTEL		F2										B1				W1						
136	LAUNDRY					F5							B1				W1					W6	
136A	MECH						F6						B1				W1						
137	RECEPTION		F2	F3									B1				W1						
137A	OFFICE		F2										B1				W1						
137B	OFFICE		F2										B1				W1						
137C	MAIL		F2										B1				W1						
137D	OFFICE		F2										B1				W1						
137E	STORAGE		F2										B1				W1						
137F	OFFICE		F2										B1				W1						
137G	OFFICE		F2										B1				W1						
137H	OFFICE		F2										B1				W1						
199A	STAIR					F5			F8				B1				W1						
199B	STAIR					F5			F8				B1				W1						
199C	STAIR					F5			F8				B1				W1						
199D	STAIR					F5			F8				B1				W1						
199E	STAIR					F5			F8				B1				W1						
199F	STAIR					F5			F8				B1				W1						

RM #	EAST WALL							SOUTH WALL							WEST WALL							CEILING								REMARKS	RM #
	W1 PAINTED GYP.BD.-ABUSE RESISTANT	W2 FRP	W3 CMU	W4 TILE WAINSCOT - 4.5X4.5 CERAMIC	W5 CONCRETE WALL - NOT PAINTED	W6 ACCENT PAINT	W7 TILE - 3X6 CERAMIC	W1 PAINTED GYP.BD.-ABUSE RESISTANT	W2 FRP	W3 CMU	W4 TILE WAINSCOT - 4.5X4.5 CERAMIC	W5 CONCRETE WALL - NOT PAINTED	W6 ACCENT PAINT	W7 TILE - 3X6 CERAMIC	W1 PAINTED GYP.BD.-ABUSE RESISTANT	W2 FRP	W3 CMU	W4 TILE WAINSCOT - 4.5X4.5 CERAMIC	W5 CONCRETE WALL - NOT PAINTED	W6 ACCENT PAINT	W7 TILE - 3X6 CERAMIC	C1 PAINTED GYP. BD.-ABUSE RESISTANT	C2 ACOUSTICAL CEILING TILE 2' x 2'	C3 ACOUSTICAL CEILING TILE 2' x 4'	C4 CURVED METAL PANEL	C5 ACOUSTICAL CEILING TILE 2X4 - ACCENT	C6 OPEN TO STRUCTURE - PAINTED	C7 OPEN TO STRUCTURE - NOT PAINTED	C8 VINYL-FACED LAY-IN CEILING		
120	W1							W1							W1							C1									120
120A			W3					W1							W1							C1									120A
120B	W1							W1							W1							C1									120B
120C	W1							W1							W1							C1									120C
120D	W1							W1							W1							C1									120D
120E			W3					W1							W1							C1									120E
121					W5			W1							W1													C7			121
122					W5			W1							W1													C7			122
123	W1							W1					W6		W1								C2								123
124	W1											W5			W1													C7			124
124A					W5							W5			W1													C7			124A
126	W1							W1		W3					W1							C1									126
126A	W1							W1									W3					C1									126A
126B	W1							W1							W1							C1									126B
126C	W1							W1							W1							C1									126C
126D	W1							W1							W1							C1									126D
126E	W1									W3							W3					C1									126E
127	W1							W1							W1							C1									127
127A	W1							W1							W1							C1									127A
127B	W1							W1									W3					C1									127B
127C	W1							W1							W1							C1									127C
127D	W1							W1							W1							C1									127D
128	W1							W1							W1							C1									128
128A			W3					W1							W1							C1									128A
128B	W1							W1							W1							C1									128B
128C	W1							W1							W1							C1									128C
128D	W1							W1							W1							C1									128D
128E	W1							W1							W1							C1									128E
128F	W1							W1							W1							C1									128F
128G	W1							W1							W1							C1									128G
129	W1					W6		W1							W1							C1	C2							SEE AF101-103 FOR FLOOR PATTERNS & ACCENT PAINT LOCATIONS - SEE AC101B FOR CEILING TILE PATTERN	129
130	W1		W3					W1							W1							C1									130
130A	W1							W1							W1							C1									130A
130B	W1							W1							W1							C1									130B
130C	W1							W1							W1							C1									130C
130D			W3					W1							W1							C1									130D
131	W1		W3					W1							W1							C1									131
131A	W1							W1							W1							C1									131A
131B	W1							W1							W1							C1									131B
131C	W1							W1							W1							C1									131C
131D			W3					W1							W1							C1									131D
133	W1							W1												W6			C2								133
134	W1							W1												W6			C2								134
136	W1					W6		W1					W6		W1					W6			C2								136
136A	W1							W1							W1													C7			136A
137	W1							W1					W6		W1					W6			C2								137
137A	W1							W1							W1								C2								137A
137B	W1							W1							W1								C2								137B
137C	W1							W1							W1								C2								137C
137D	W1							W1							W1								C2								137D
137E	W1							W1							W1								C2								137E
137F	W1							W1							W1								C2								137F
137G	W1							W1							W1								C2								137G
137H	W1							W1							W1								C2								137H
199A	W1									W3							W3													F5 FINISH AT LOWER LEVEL EXIT	199A
199B	W1							W1							W1															F5 FINISH AT LOWER LEVEL EXIT	199B
199C	W1							W1							W1															F5 FINISH AT LOWER LEVEL EXIT	199C
199D	W1							W1							W1															F5 FINISH AT LOWER LEVEL EXIT	199D
199E	W1							W1							W1															F5 FINISH AT LOWER LEVEL EXIT	199E
199F	W1							W1																						F5 FINISH AT LOWER LEVEL EXIT	199F

MHTN
ARCHITECTS
MHTN Architects, Inc.
420 East South Temple
Suite 100
Salt Lake City, Utah 84111
Telephone (801) 595-6700
Telefax (801) 595-6717
www.mhtn.com

WEBER STATE UNIVERSITY
RESIDENTIAL LIFE PHASE II - BLDG 2
DFCM PROJECT NUMBER: 10176810

WEBER STATE UNIVERSITY
OGDEN, UTAH 84408

SEAL

MHTN PROJECT NO. 2010543
DRAWN BY: MLH CHECKED BY: MG

ISSUED:

NO.	DATE	DESCRIPTION
01	17 MAY 2011	CONSTRUCTION DOCUMENTS

CONTRACTOR TO VERIFY DRAWINGS IN FIELD USE REFLECT LAST REVISION DATE.

NO.	DATE	DESCRIPTION
1	Date 3	Revision 3

SHEET NAME
FINISH SCHEDULE LEVEL 1 CONT.
CONSTRUCTION DOCUMENTS
17 MAY 2011

SHEET NUMBER
AE606

C:\Users\prestonn\Documents\A11_2010543 WSU RESIDENTIAL LIFE BUILDING II_CENTRAL_prestonn.rvt
5/17/2011 12:23:40 PM

FINISH SCHEDULE - LEVEL 2

RM #	ROOM NAME	FLOOR											BASE				NORTH WALL							EAST WALL							SOUTH WALL							WEST WALL							CEILING								REMARKS	RM #
		F1 CARPET TILE A	F2 CARPET TILE B	F3 CARPET TILE C	F4 LINOLEUM SHEET FLOORING	F5 RESILIENT TERRAZZO TILE	F6 SEALED CONCRETE	F7 WALK-OFF-MAT	F8 INTEGRAL STAIR TREADS & RISERS & LANDINGS	F9 SHEET SAFETY FLOORING	F10 RESILIENT ATHLETIC FLOORING	F11 PORCELAIN TILE 2X2	B1 RUBBER BASE	B2 4" INTEGRAL LINOLEUM BASE, TO MATCH F4 W/ TOP CAP	B3 4" INTEGRAL SAFETY FLOOR BASE, TO MATCH F9, W/ TOP CAP	B4 BUILT-UP TILE BASE TO MATCH FLOOR F11	W1 PAINTED GYP.BD.-ABUSE RESISTANT	W2 FRP	W3 CMU	W4 TILE WAINSCOT - 4.5X4.5 CERAMIC	W5 CONCRETE WALL NOT PAINTED	W6 ACCENT PAINT	W7 TILE - 3X6 CERAMIC	W1 PAINTED GYP.BD.-ABUSE RESISTANT	W2 FRP	W3 CMU	W4 TILE WAINSCOT - 4.5X4.5 CERAMIC	W5 CONCRETE WALL - NOT PAINTED	W6 ACCENT PAINT	W7 TILE - 3X6 CERAMIC	W1 PAINTED GYP.BD.-ABUSE RESISTANT	W2 FRP	W3 CMU	W4 TILE WAINSCOT - 4.5X4.5 CERAMIC	W5 CONCRETE WALL - NOT PAINTED	W6 ACCENT PAINT	W7 TILE - 3X6 CERAMIC	W1 PAINTED GYP.BD.-ABUSE RESISTANT	W2 FRP	W3 CMU	W4 TILE WAINSCOT - 4.5X4.5 CERAMIC	W5 CONCRETE WALL - NOT PAINTED	W6 ACCENT PAINT	W7 TILE - 3X6 CERAMIC	C1 PAINTED GYP.BD.-ABUSE RESISTANT	C2 ACOUSTICAL CEILING TILE 2' x 2'	C3 ACOUSTICAL CEILING TILE 2' x 4'	C4 CURVED METAL PANEL	C5 ACOUSTICAL CEILING TILE 2X4 - ACCENT	C6 OPEN TO STRUCTURE - PAINTED	C7 OPEN TO STRUCTURE - NOT PAINTED	C8 VINYL-FACED LAY-IN CEILING		
200	HALL		F2	F3									B1				W1		W3			W6		W1		W3					W1		W3			W6		W1		W3			W6				C3		C5				SEE AF101-103 FOR FLOOR PATTERNS & ACCENT PAINT LOCATIONS - SEE AC102A FOR CEILING TILE PATTERN	200
200A	JANITOR						F6						B1						W3							W3					W1							W1									C3							200A
200B	MECH.						F6						B1						W3					W1							W1									W3												C7			200B
200C	MECH						F6						B1				W1									W3					W1							W1														C7			200C
200D	MECH						F6						B1				W1									W3					W1							W1														C7			200D
200E	MECH						F6						B1				W1									W3					W1							W1														C7			200E
200F	MECH/ELEC						F6						B1				W1							W1							W1							W1														C7			200F
200G	MECH/ELEC						F6						B1				W1							W1							W1							W1														C7			200G
200H	IDF						F6						B1				W1							W1							W1							W1														C7			200H
200K	MECH/ELEC						F6						B1				W1							W1							W1							W1														C7			200K
200M	HALL		F2	F3									B1				W1		W3			W6		W1		W3					W1		W3			W6		W1		W3			W6				C3		C5				SEE AF101-103 FOR FLOOR PATTERNS & ACCENT PAINT LOCATIONS - SEE AC102B FOR CEILING TILE PATTERN	200M
200N	MECH/ELEC						F6						B1				W1							W1							W1							W1														C7			200N
200P	IDF						F6						B1				W1							W1							W1							W1														C7			200P
200Q	MECH						F6						B1				W1									W3					W1							W1														C7			200Q
201	LOUNGE					F5							B1				W1		W3			W6		W1		W3			W6		W1					W6		W1		W3			W6		C1	C2				C6			SEE AF101-103 FOR FLOOR PATTERNS & ACCENT PAINT LOCATIONS - SEE AC102B FOR CEILING TILE PATTERN	201
201A	VESTIBULE							F7					B1				W1														W1																C2							201A
202A	WOMEN											F11				B4	W1			W4				W1			W4						W3								W3							C2							202A
202B	UNISEX											F11				B4	W1			W4				W1			W4						W3						W1								C2							202B
202C	MEN											F11				B4	W1			W4						W3							W3						W1		W3						C2							202C
204	SUITE	F1			F4								B1	B2			W1							W1		W3					W1							W1								C1								204
204A	BEDROOM	F1											B1				W1							W1							W1							W1								C1								204A
204B	BEDROOM	F1											B1				W1							W1							W1							W1								C1								204B
204C	SHOWER				F4									B2			W1							W1							W1							W1								C1								204C
204D	TOILET				F4									B2			W1									W3					W1							W1								C1								204D
205	SUITE	F1			F4								B1	B2			W1							W1		W3					W1							W1								C1								205
205A	BEDROOM	F1											B1				W1							W1							W1							W1								C1								205A
205B	BEDROOM	F1											B1				W1							W1							W1							W1								C1								205B
205C	SHOWER				F4									B2			W1							W1							W1							W1								C1								205C
205D	TOILET				F4									B2			W1									W3					W1							W1								C1								205D
206	LOUNGE		F2										B1				W1														W1							W1										C3			C6			SEE AF101-103 FOR FLOOR PATTERNS & ACCENT PAINT LOCATIONS - SEE AC102A FOR CEILING TILE PATTERN	206
207	SUITE	F1			F4								B1	B2			W1							W1		W3					W1							W1								C1								207
207A	BEDROOM	F1											B1				W1							W1							W1							W1								C1								207A
207B	BEDROOM	F1											B1				W1							W1							W1							W1								C1								207B
207C	SHOWER				F4									B2			W1							W1							W1							W1								C1								207C
207D	TOILET				F4									B2			W1									W3					W1							W1								C1								207D
208	SUITE	F1											B1				W1							W1		W3					W1							W1								C1								208
208A	BEDROOM	F1											B1				W1							W1							W1							W1								C1								208A
208B	BEDROOM	F1											B1				W1							W1							W1							W1								C1								208B
208C	SHOWER				F4									B2			W1							W1							W1							W1								C1								208C
208D	TOILET				F4									B2			W1									W3					W1							W1								C1								208D
209	KITCHEN/LOUNGE		F2			F5							B1								W6		W1					W6		W1					W6		W1					W6		C1	C2							SEE AF101-103 FOR FLOOR PATTERNS & ACCENT PAINT LOCATIONS - SEE AC102A FOR CEILING TILE PATTERN	209
210	SUITE	F1			F4								B1	B2			W1							W1		W3					W1							W1								C1								210
210A	BEDROOM	F1											B1				W1							W1							W1							W1								C1								210A
210B	BEDROOM	F1											B1				W1							W1							W1							W1								C1								210B
210C	SHOWER				F4									B2			W1							W1							W1							W1								C1								210C
210D	TOILET				F4									B2			W1									W3					W1							W1								C1								210D
211	SUITE	F1			F4								B1	B2			W1							W1		W3					W1							W1								C1								211
211A	BEDROOM	F1											B1				W1							W1							W1							W1								C1								211A
211B	BEDROOM	F1											B1				W1							W1							W1							W1								C1								211B
211C	SHOWER				F4									B2			W1							W1							W1							W1								C1								211C
211D	TOILET				F4									B2			W1									W3					W1							W1								C1								211D
212	SUITE	F1			F4								B1	B2			W1							W1							W1		W3					W1								C1								212
212A	BEDROOM	F1											B1				W1							W1							W1									W3							C1								212A
212B	BEDROOM	F1											B1				W1							W1							W1							W1								C1								212B
212C	BEDROOM	F1											B1				W1							W1							W1							W1								C1								212C
212D	SHOWER				F4									B2			W1							W1							W1							W1								C1								212D
212E	TOILET				F4									B2			W1							W1									W3							W3							C1								212E
213	SUITE	F1											B1	B2			W1		W3					W1							W1							W1								C1								213
213A	BEDROOM	F1											B1				W1							W1							W1									W3							C1								213A
213B	BEDROOM	F1											B1				W1							W1							W1							W1								C1								213B
213C	BEDROOM	F1											B1				W1							W1							W1							W1								C1								213C
213D	SHOWER				F4									B2			W1							W1							W1							W1								C1								213D
213E	TOILET				F4									B2				W3						W1							W1									W3							C1								213E
214	SUITE	F1			F4								B1	B2			W1		W3					W1							W1							W1								C1								214
214A	BEDROOM	F1											B1				W1									W3					W1							W1								C1								214A
214B	BEDROOM	F1											B1				W1							W1							W1							W1								C1								214B
214C	BEDROOM	F1											B1				W1							W1							W1							W1								C1								214C
214D	SHOWER				F4									B2			W1							W1							W1							W1								C1								214D
214E	TOILET				F4									B2				W3						W1							W1							W1								C1								214E
215	SUITE	F1			F4								B1	B2			W1							W1							W1		W3					W1								C1								215
215A	BEDROOM	F1											B1				W1							W1							W1									W3							C1								215A
215B	BEDROOM	F1											B1				W1							W1							W1							W1								C1								215B
215C	BEDROOM	F1											B1				W1							W1							W1							W1								C1								215C
215D	SHOWER				F4									B2			W1							W1							W1							W1								C1								215D
215E	TOILET				F4									B2			W1							W1									W3							W3							C1								215E
216	SUITE	F1			F4								B1	B2			W1		W3					W1							W1							W1								C1								216
216A	BEDROOM	F1											B1				W1							W1							W1									W3							C1								216A
216B	BEDROOM	F1											B1				W1							W1							W1							W1								C1								216B
216C	BEDROOM	F1											B1				W1							W1							W1							W1								C1								216C
216D	SHOWER				F4									B2			W1							W1							W1							W1								C1								216D
216E	TOILET				F4									B2				W3						W1							W1							W1								C1								216E

C:\Users\prestonm\Documents\A11_2010543 WSU RESIDENTIAL LIFE BUILDING II_CENTRAL_prestonm.rvt
5/17/2011 12:23:42 PM

MHTN
ARCHITECTS
MHTN Architects, Inc.
420 East South Temple
Suite 100
Salt Lake City, Utah 84111
Telephone (801) 595-6700
Telefax (801) 595-6717
www.mhtn.com

WEBER STATE UNIVERSITY
RESIDENTIAL LIFE PHASE II - BLDG 2
DFCM PROJECT NUMBER: 10176810

WEBER STATE UNIVERSITY
OGDEN, UTAH 84408

SEAL

MHTN PROJECT NO. 2010543

DRAWN BY: MLH CHECKED BY: MG

ISSUED:

NO.	DATE	DESCRIPTION
01	17 MAY 2011	CONSTRUCTION DOCUMENTS

CONTRACTOR TO VERIFY DRAWINGS IN FIELD.USE REFLECT LAST REVISION DATE.

NO.	DATE	DESCRIPTION
1	Date 3	Revision 3

SHEET NAME
FINISH SCHEDULE LEVEL 2
CONSTRUCTION DOCUMENTS
17 MAY 2011

SHEET NUMBER
AE607

FINISH SCHEDULE - LEVEL 2 CONT.

RM #	ROOM NAME	FLOOR											BASE			NORTH WALL								EAST WALL								SOUTH WALL								WEST WALL								CEILING								REMARKS	RM #
		F1 CARPET TILE A	F2 CARPET TILE B	F3 CARPET TILE C	F4 LINOLEUM SHEET FLOORING	F5 RESILIENT TERRAZZO TILE	F6 SEALED CONCRETE	F7 WALK-OFF-MAT	F8 INTEGRAL STAIR TREADS & RISERS & LANDINGS	F9 SHEET SAFETY FLOORING	F10 RESILIENT ATHLETIC FLOORING	F11 PORCELAIN TILE 2X2	B1 RUBBER BASE	B2 4" INTEGRAL LINOLEUM BASE. TO MATCH F4 W/ TOP CAP	B3 4" INTEGRAL SAFETY FLOOR BASE. TO MATCH F9. W/ TOP CAP	B4 BUILT UP TILE BASE TO MATCH FLOOR F11	W1 PAINTED GYP BD.-ABUSE RESISTANT	W2 FRP	W3 CMU	W4 TILE WAINSCOT - 4.5X4.5 CERAMIC	W5 CONCRETE WALL NOT PAINTED	W6 ACCENT PAINT	W7 TILE - 3X6 CERAMIC	W1 PAINTED GYP BD.-ABUSE RESISTANT	W2 FRP	W3 CMU	W4 TILE WAINSCOT - 4.5X4.5 CERAMIC	W5 CONCRETE WALL - NOT PAINTED	W6 ACCENT PAINT	W7 TILE - 3X6 CERAMIC	W1 PAINTED GYP BD.-ABUSE RESISTANT	W2 FRP	W3 CMU	W4 TILE WAINSCOT - 4.5X4.5 CERAMIC	W5 CONCRETE WALL - NOT PAINTED	W6 ACCENT PAINT	W7 TILE - 3X6 CERAMIC	W1 PAINTED GYP BD.-ABUSE RESISTANT	W2 FRP	W3 CMU	W4 TILE WAINSCOT - 4.5X4.5 CERAMIC	W5 CONCRETE WALL - NOT PAINTED	W6 ACCENT PAINT	W7 TILE - 3X6 CERAMIC	C1 PAINTED GYP. BD.-ABUSE RESISTANT	C2 ACOUSTICAL CEILING TILE 2' x 2'	C3 ACOUSTICAL CEILING TILE 2' x 4'	C4 CURVED METAL PANEL	C5 ACOUSTICAL CEILING TILE 2X4 - ACCENT	C6 OPEN TO STRUCTURE - PAINTED	C7 OPEN TO STRUCTURE - NOT PAINTED	C8 VINYL-FACED LAY-IN CEILING		
217	SUITE	F1			F4								B1	B2			W1		W3						W1							W1								W1								C1									217
217A	BEDROOM	F1											B1				W1										W3					W1								W1								C1									217A
217B	BEDROOM	F1											B1				W1								W1							W1								W1								C1									217B
217C	BEDROOM	F1											B1				W1								W1							W1								W1								C1									217C
217D	SHOWER				F4									B2			W1								W1							W1								W1								C1									217D
217E	TOILET				F4									B2					W3								W3					W1								W1								C1									217E
218	SUITE	F1			F4								B1	B2			W1								W1							W1								W1								C1									218
218A	BEDROOM	F1											B1				W1								W1							W1										W3						C1									218A
218B	BEDROOM	F1											B1				W1								W1							W1								W1								C1									218B
218C	BEDROOM	F1											B1				W1								W1							W1								W1								C1									218C
218D	BATHROOM				F4									B2			W1								W1									W3						W1								C1									218D
219	SUITE	F1			F4								B1	B2			W1		W3						W1							W1								W1								C1									219
219A	BEDROOM	F1											B1				W1								W1							W1										W3						C1									219A
219B	BEDROOM	F1											B1				W1								W1							W1								W1								C1									219B
219C	BEDROOM	F1											B1				W1								W1							W1								W1								C1									219C
219D	SHOWER				F4									B2			W1								W1							W1								W1								C1									219D
219E	TOILET				F4									B2					W3						W1							W1										W3						C1									219E
220	SUITE	F1			F4								B1	B2			W1		W3						W1							W1								W1								C1									220
220A	BEDROOM	F1											B1				W1										W3					W1								W1								C1									220A
220B	BEDROOM	F1											B1				W1								W1							W1								W1								C1									220B
220C	BEDROOM	F1											B1				W1								W1							W1								W1								C1									220C
220D	SHOWER				F4									B2			W1								W1							W1								W1								C1									220D
220E	TOILET				F4									B2					W3						W1							W1								W1								C1									220E
222	C-STORE					F5							B1				W1					W6			W1					W6		W1					W6			W1					W6			C1	C2				C6			SEE AF101-103 FOR FLOOR PATTERNS & ACCENT PAINT LOCATIONS - SEE AC102B FOR CEILING TILE PATTERN	222
224	PREP KITCHEN									F9					B3			W2							W2								W2								W2															C8			224
224A	OFFICE									F9					B3			W2							W2								W2								W2															C8			224A
224B	SHORT ORDER COOK									F9					B3							W7							W7								W7			W2															C8			224B
224C	WALK-IN UNIT						F6																																															C7			224C
224D	DRY STORAGE									F9					B3			W2							W2								W2								W2								C1									224D
224E	JAN									F9					B3			W2							W2								W2								W2															C8			224E
224F	UNIFORMS									F9					B3		W1							W1							W1								W1									C2									224F
224G	VESTIBULE									F9					B3		W1							W1							W1								W1									C2									224G
224H	WALK IN						F6																																														C7			224H
226	SUITE	F1			F4								B1	B2			W1								W1							W1		W3						W1								C1									226
226A	BEDROOM	F1											B1				W1								W1							W1										W3						C1									226A
226B	BEDROOM	F1											B1				W1								W1							W1								W1								C1									226B
226C	BEDROOM	F1											B1				W1								W1							W1								W1								C1									226C
226D	SHOWER				F4									B2			W1								W1							W1								W1								C1									226D
226E	TOILET				F4									B2			W1								W1									W3								W3						C1									226E
227	SUITE	F1			F4								B1	B2			W1		W3						W1							W1								W1								C1									227
227A	BEDROOM	F1											B1				W1								W1							W1								W1								C1									227A
227B	BEDROOM	F1											B1				W1								W1							W1								W1								C1									227B
227C	BEDROOM	F1											B1				W1								W1							W1										W3						C1									227C
227D	SHOWER				F4									B2			W1								W1							W1								W1								C1									227D
227E	TOILET				F4									B2					W3						W1							W1										W3						C1									227E
228	SUITE	F1			F4								B1	B2			W1		W3						W1							W1								W1								C1									228
228A	BEDROOM	F1											B1				W1								W1							W1								W1								C1									228A
228B	BEDROOM	F1											B1				W1								W1							W1								W1								C1									228B
228C	BEDROOM	F1											B1				W1										W3					W1								W1								C1									228C
228D	SHOWER				F4									B2			W1								W1							W1								W1								C1									228D
228E	TOILET				F4									B2					W3						W1							W1								W1								C1									228E
229	KITCHEN/LOUNGE		F2			F5							B1				W1							W6	W1							W1								W1								C1	C2							SEE AF101-103 FOR FLOOR PATTERNS & ACCENT PAINT LOCATIONS - SEE AC102B FOR CEILING TILE PATTERN	229
230	SUITE	F1			F4								B1	B2			W1								W1		W3					W1								W1								C1									230
230A	BEDROOM	F1											B1				W1								W1							W1								W1								C1									230A
230B	BEDROOM	F1											B1				W1								W1							W1								W1								C1									230B
230C	SHOWER				F4									B2			W1								W1							W1								W1								C1									230C
230D	TOILET				F4									B2			W1										W3					W1								W1								C1									230D
231	SUITE	F1			F4								B1	B2			W1								W1		W3					W1								W1								C1									231
231A	BEDROOM	F1											B1				W1								W1							W1								W1								C1									231A
231B	BEDROOM	F1											B1				W1								W1							W1								W1								C1									231B
231C	SHOWER				F4									B2			W1								W1							W1								W1								C1									231C
231D	TOILET				F4									B2			W1								W1		W3					W1								W1								C1									231D
299A	STAIR								F8				B1				W1																	W3								W3															299A
299B	STAIR								F8				B1				W1															W1								W1																	299B
299C	STAIR								F8				B1				W1															W1								W1																	299C
299D	STAIR								F8				B1				W1															W1								W1																	299D
299E	STAIR								F8				B1				W1															W1								W1																	299E
299F	STAIR								F8				B1				W1								W1																															299F
299G	STAIR								F8																																																299G

MHTN ARCHITECTS
MHTN Architects, Inc.
420 East South Temple
Suite 100
Salt Lake City, Utah 84111
Telephone (801) 595-6700
Telefax (801) 595-6717
www.mhtn.com

WEBER STATE UNIVERSITY
RESIDENTIAL LIFE PHASE II - BLDG 2
DFCM PROJECT NUMBER: 10176810

WEBER STATE UNIVERSITY
OGDEN, UTAH 84408

SEAL

MHTN PROJECT NO. 2010543

DRAWN BY: Author CHECKED BY: Checker

ISSUED:

NO.	DATE	DESCRIPTION
01	17 MAY 2011	CONSTRUCTION DOCUMENTS

CONTRACTOR TO VERIFY DRAWINGS IN FIELD USE REFLECT LAST REVISION DATE:

NO.	DATE	DESCRIPTION

SHEET NAME
FINISH SCHEDULE LEVEL 2 CONT.
CONSTRUCTION DOCUMENTS
17 MAY 2011

SHEET NUMBER
AE608

C:\Users\prestonn\Documents\A11_2010543 WSU RESIDENTIAL LIFE BUILDING II_CENTRAL_prestonn.rvt
5/17/2011 12:23:43 PM

FINISH SCHEDULE - LEVEL 3

RM #	ROOM NAME	FLOOR											BASE				NORTH WALL							EAST WALL							SOUTH WALL							WEST WALL							CEILING							REMARKS	RM #
		F1 CARPET TILE A	F2 CARPET TILE B	F3 CARPET TILE C	F4 LINOLEUM SHEET FLOORING	F5 RESILIENT TERRAZZO TILE	F6 SEALED CONCRETE	F7 WALK-OFF-MAT	F8 INTEGRAL STAIR TREADS & RISERS & LANDINGS	F9 SHEET SAFETY FLOORING	F10 RESILIENT ATHLETIC FLOORING	F11 PORCELAIN TILE 2X2	B1 RUBBER BASE	B2 4" INTEGRAL LINOLEUM BASE. TO MATCH F4 W/ TOP CAP	B3 4" INTEGRAL SAFETY FLOOR BASE. TO MATCH F9. W/ TOP CAP	B4 BUILT-UP TILE BASE TO MATCH FLOOR F11	W1 PAINTED GYP.BD.-ABUSE RESISTANT	W2 FRP	W3 CMU	W4 TILE WAINSCOT - 4.5X4.5 CERAMIC	W5 CONCRETE WALL NOT PAINTED	W6 ACCENT PAINT	W7 TILE - 3X6 CERAMIC	W1 PAINTED GYP.BD.-ABUSE RESISTANT	W2 FRP	W3 CMU	W4 TILE WAINSCOT - 4.5X4.5 CERAMIC	W5 CONCRETE WALL - NOT PAINTED	W6 ACCENT PAINT	W7 TILE - 3X6 CERAMIC	W1 PAINTED GYP.BD.-ABUSE RESISTANT	W2 FRP	W3 CMU	W4 TILE WAINSCOT - 4.5X4.5 CERAMIC	W5 CONCRETE WALL - NOT PAINTED	W6 ACCENT PAINT	W7 TILE - 3X6 CERAMIC	W1 PAINTED GYP.BD.-ABUSE RESISTANT	W2 FRP	W3 CMU	W4 TILE WAINSCOT - 4.5X4.5 CERAMIC	W5 CONCRETE WALL - NOT PAINTED	W6 ACCENT PAINT	W7 TILE - 3X6 CERAMIC	C1 PAINTED GYP. BD.-ABUSE RESISTANT	C2 ACOUSTICAL CEILING TILE 2' x 2'	C3 ACOUSTICAL CEILING TILE 2' x 4'	C4 CURVED METAL PANEL	C5 ACOUSTICAL CEILING TILE 2X4 - ACCENT	C6 OPEN TO STRUCTURE - PAINTED	C7 OPEN TO STRUCTURE - NOT PAINTED	C8 VINYL-FACED LAY-IN CEILING		
300	HALL		F2	F3									B1				W1		W3			W6		W1		W3					W1		W3			W6		W1		W3			W6				C3		C5				SEE AF101-103 FOR FLOOR PATTERNS & ACCENT PAINT LOCATIONS - SEE AC103A FOR CEILING TILE PATTERN	300
300A	JANITOR						F6						B1						W3							W3					W1							W1									C3						300A
300B	MECH						F6						B1						W3					W1							W1									W3												C7		300B
300C	MECH						F6						B1				W1									W3					W1							W1														C7		300C
300D	MECH						F6						B1				W1									W3					W1							W1														C7		300D
300E	MECH						F6						B1				W1									W3					W1							W1														C7		300E
300F	MECH/ELEC						F6						B1				W1							W1							W1							W1														C7		300F
300G	MECH/ELEC						F6						B1				W1							W1							W1							W1														C7		300G
300H	IDF						F6						B1				W1							W1							W1							W1														C7		300H
300K	MECH/ELEC						F6						B1				W1							W1							W1							W1														C7		300K
300M	HALL		F2	F3									B1				W1		W3			W6		W1		W3					W1		W3			W6		W1		W3			W6				C3		C5				SEE AF101-103 FOR FLOOR PATTERNS & ACCENT PAINT LOCATIONS - SEE AC103B FOR CEILING TILE PATTERN	300M
300N	MECH/ELEC						F6						B1				W1							W1							W1							W1														C7		300N
300P	STORAGE		F2										B1				W1							W1							W1							W1									C3						300P
300Q	MECH						F6						B1				W1									W3					W1							W1														C7		300Q
301	LOUNGE	F1	F2	F3		F5							B1				W1	W3			W6		W1	W3				W6		W1				W6		W1		W3			W6	C1	C2				C6		SEE AF101-103 FOR FLOOR PATTERNS & ACCENT PAINT LOCATIONS - SEE AC103B FOR CEILING TILE PATTERN	301
302A	WOMEN											F11			B4	W1		W4				W1		W4						W3							W3						C2								302A
302B	UNISEX											F11			B4	W1		W4				W1		W4						W3						W1							C2								302B
302C	MEN											F11			B4	W1		W4					W3							W3						W1			W4				C2								302C
304	SUITE	F1			F4								B1	B2			W1						W1	W3						W1						W1							C1									304
304A	BEDROOM	F1											B1				W1						W1							W1						W1							C1									304A
304B	BEDROOM	F1											B1				W1						W1							W1						W1							C1									304B
304C	SHOWER				F4									B2			W1						W1							W1						W1							C1									304C
304D	TOILET				F4									B2			W1							W3						W1						W1							C1									304D
305	SUITE	F1			F4								B1	B2			W1						W1	W3						W1						W1							C1									305
305A	BEDROOM	F1											B1				W1						W1							W1						W1							C1									305A
305B	BEDROOM	F1											B1				W1						W1							W1						W1							C1									305B
305C	SHOWER				F4									B2			W1						W1							W1						W1							C1									305C
305D	TOILET				F4									B2			W1							W3						W1						W1							C1									305D
306	LOUNGE		F2	F3									B1				W1													W1						W1									C3			C6		SEE AF101-103 FOR FLOOR PATTERNS & ACCENT PAINT LOCATIONS - SEE AC103A FOR CEILING TILE PATTERN	306
307	SUITE	F1			F4								B1	B2			W1						W1	W3						W1						W1							C1									307
307A	BEDROOM	F1											B1				W1						W1							W1						W1							C1									307A
307B	BEDROOM	F1											B1				W1						W1							W1						W1							C1									307B
307C	SHOWER				F4									B2			W1						W1							W1						W1							C1									307C
307D	TOILET				F4									B2			W1							W3						W1						W1							C1									307D
308	SUITE	F1			F4								B1	B2			W1						W1	W3						W1						W1							C1									308
308A	BEDROOM	F1											B1				W1						W1							W1						W1							C1									308A
308B	BEDROOM	F1											B1				W1						W1							W1						W1							C1									308B
308C	SHOWER				F4									B2			W1						W1							W1						W1							C1									308C
308D	TOILET				F4									B2			W1							W3						W1						W1							C1									308D
309	KITCHEN/LOUNGE		F2		F4								B1	B2							W6		W1				W6			W1				W6		W1					W6	C1	C2						SEE AF101-103 FOR FLOOR PATTERNS & ACCENT PAINT LOCATIONS - SEE AC103A FOR CEILING TILE PATTERN	309
310	SUITE	F1			F4								B1	B2			W1						W1	W3						W1						W1							C1									310
310A	BEDROOM	F1											B1				W1						W1							W1						W1							C1									310A
310B	BEDROOM	F1											B1				W1						W1							W1						W1							C1									310B
310C	SHOWER				F4									B2			W1						W1							W1						W1							C1									310C
310D	TOILET				F4									B2			W1							W3						W1						W1							C1									310D
311	SUITE	F1			F4								B1	B2			W1						W1	W3						W1						W1							C1									311
311A	BEDROOM	F1											B1				W1						W1							W1						W1							C1									311A
311B	BEDROOM	F1											B1				W1						W1							W1						W1							C1									311B
311C	SHOWER				F4									B2			W1						W1							W1						W1							C1									311C
311D	TOILET				F4									B2			W1							W3						W1						W1							C1									311D
312	SUITE	F1			F4								B1	B2			W1						W1							W1	W3					W1							C1									312
312A	BEDROOM	F1											B1				W1						W1								W3					W1							C1									312A
312B	BEDROOM	F1											B1				W1						W1							W1						W1							C1									312B
312C	BEDROOM	F1											B1				W1						W1							W1						W1							C1									312C
312D	SHOWER				F4									B2			W1						W1							W1						W1							C1									312D
312E	TOILET				F4									B2			W1						W1								W3							W3					C1									312E
313	SUITE	F1			F4								B1	B2			W1	W3					W1							W1						W1							C1									313
313A	BEDROOM	F1											B1				W1						W1							W1								W3					C1									313A
313B	BEDROOM	F1											B1				W1						W1							W1						W1							C1									313B
313C	BEDROOM	F1											B1				W1						W1							W1						W1							C1									313C
313D	SHOWER				F4									B2			W1						W1							W1						W1							C1									313D
313E	TOILET				F4									B2				W3					W1														W3					C1									313E
314	SUITE	F1			F4								B1	B2			W1	W3					W1							W1						W1							C1									314
314A	BEDROOM	F1											B1				W1							W3						W1						W1							C1									314A
314B	BEDROOM	F1											B1				W1						W1							W1						W1							C1									314B
314C	BEDROOM	F1											B1				W1						W1							W1						W1							C1									314C
314D	SHOWER				F4									B2			W1						W1							W1						W1							C1									314D
314E	TOILET				F4									B2				W3						W3						W1						W1							C1									314E
315	SUITE	F1			F4								B1	B2			W1						W1							W1	W3					W1							C1									315
315A	BEDROOM	F1											B1				W1						W1							W1								W3					C1									315A
315B	BEDROOM	F1											B1				W1						W1							W1						W1							C1									315B
315C	BEDROOM	F1											B1				W1						W1							W1						W1							C1									315C
315D	SHOWER				F4									B2			W1						W1							W1						W1							C1									315D
315E	TOILET				F4									B2			W1						W1								W3							W3					C1									315E
316	SUITE	F1			F4								B1	B2			W1	W3					W1							W1						W1							C1									316
316A	BEDROOM	F1											B1				W1						W1							W1								W3					C1									316A
316B	BEDROOM	F1											B1				W1						W1							W1						W1							C1									316B
316C	BEDROOM	F1											B1				W1						W1							W1						W1							C1									316C
316D	SHOWER				F4									B2			W1						W1							W1						W1							C1									316D
316E	TOILET				F4									B2				W3					W1														W3					C1									316E

MHTN ARCHITECTS
MHTN Architects, Inc.
420 East South Temple
Suite 100
Salt Lake City, Utah 84111
Telephone (801) 595-6700
Telefax (801) 595-6717
www.mhtn.com

WEBER STATE UNIVERSITY
RESIDENTIAL LIFE PHASE II - BLDG 2
DFCM PROJECT NUMBER: 10176810

WEBER STATE UNIVERSITY
OGDEN, UTAH 84408

SEAL

MHTN PROJECT NO. 2010543

DRAWN BY: Author CHECKED BY: Checker

ISSUED:

NO.	DATE	DESCRIPTION
01	17 MAY 2011	CONSTRUCTION DOCUMENTS

CONTRACTOR TO VERIFY DRAWINGS IN FIELD USE REFLECT LAST REVISION DATE:

NO.	DATE	DESCRIPTION

SHEET NAME
FINISH SCHEDULE LEVEL 3
CONSTRUCTION DOCUMENTS
17 MAY 2011

SHEET NUMBER
AE609

C:\Users\preston\Documents\A11_2010543 WSU RESIDENTIAL LIFE BUILDING II_CENTRAL_preston.rvt
5/17/2011 12:23:45 PM

FINISH SCHEDULE - LEVEL 3 CONT.

RM #	ROOM NAME	FLOOR											BASE			NORTH WALL							EAST WALL							SOUTH WALL							WEST WALL							CEILING								REMARKS	RM #
		F1 CARPET TILE A	F2 CARPET TILE B	F3 CARPET TILE C	F4 LINOLEUM SHEET FLOORING	F5 RESILIENT TERRAZZO TILE	F6 SEALED CONCRETE	F7 WALK-OFF-MAT	F8 INTEGRAL STAIR TREADS & RISERS & LANDINGS	F9 SHEET SAFETY FLOORING	F10 RESILIENT ATHLETIC FLOORING	F11 PORCELAIN TILE 2X2	B1 RUBBER BASE	B2 4" INTEGRAL LINOLEUM BASE, TO MATCH F4 W/ TOP CAP	B3 4" INTEGRAL SAFETY FLOOR BASE, TO MATCH F9, W/ TOP CAP	B4 BUILT-UP TILE BASE TO MATCH FLOOR F11	W1 PAINTED GYP BD.-ABUSE RESISTANT	W2 FRP	W3 CMU	W4 TILE WAINSCOT - 4.5X4.5 CERAMIC	W5 CONCRETE WALL NOT PAINTED	W6 ACCENT PAINT	W7 TILE - 3X6 CERAMIC	W1 PAINTED GYP BD.-ABUSE RESISTANT	W2 FRP	W3 CMU	W4 TILE WAINSCOT - 4.5X4.5 CERAMIC	W5 CONCRETE WALL - NOT PAINTED	W6 ACCENT PAINT	W7 TILE - 3X6 CERAMIC	W1 PAINTED GYP BD.-ABUSE RESISTANT	W2 FRP	W3 CMU	W4 TILE WAINSCOT - 4.5X4.5 CERAMIC	W5 CONCRETE WALL - NOT PAINTED	W6 ACCENT PAINT	W7 TILE - 3X6 CERAMIC	W1 PAINTED GYP BD.-ABUSE RESISTANT	W2 FRP	W3 CMU	W4 TILE WAINSCOT - 4.5X4.5 CERAMIC	W5 CONCRETE WALL - NOT PAINTED	W6 ACCENT PAINT	W7 TILE - 3X6 CERAMIC	C1 PAINTED GYP. BD.-ABUSE RESISTANT	C2 ACOUSTICAL CEILING TILE 2' x 2'	C3 ACOUSTICAL CEILING TILE 2' x 4'	C4 CURVED METAL PANEL	C5 ACOUSTICAL CEILING TILE 2X4 - ACCENT	C6 OPEN TO STRUCTURE - PAINTED	C7 OPEN TO STRUCTURE - NOT PAINTED	C8 VINYL-FACED LAY-IN CEILING		
317	SUITE	F1			F4								B1	B2			W1		W3					W1							W1							W1							C1									317
317A	BEDROOM	F1											B1				W1									W3					W1							W1							C1									317A
317B	BEDROOM	F1											B1				W1							W1							W1							W1							C1									317B
317C	BEDROOM	F1											B1				W1							W1							W1							W1							C1									317C
317D	SHOWER				F4									B2			W1							W1							W1							W1							C1									317D
317E	TOILET				F4									B2				W3								W3					W1							W1							C1									317E
318	SUITE	F1			F4								B1	B2			W1							W1							W1							W1							C1									318
318A	BEDROOM	F1											B1				W1							W1							W1								W3						C1									318A
318B	BEDROOM	F1											B1				W1							W1							W1							W1							C1									318B
318C	BEDROOM	F1											B1				W1							W1							W1							W1							C1									318C
318D	TOILET				F4									B2			W1							W1							W1							W1	W3						C1									318D
319	SUITE	F1			F4								B1	B2			W1		W3					W1							W1							W1							C1									319
319A	BEDROOM	F1											B1				W1							W1							W1								W3						C1									319A
319B	BEDROOM	F1											B1				W1							W1							W1							W1							C1									319B
319C	BEDROOM	F1											B1				W1							W1							W1							W1							C1									319C
319D	SHOWER				F4									B2			W1							W1							W1							W1							C1									319D
319E	TOILET				F4									B2				W3						W1							W1								W3						C1									319E
320	SUITE	F1			F4								B1	B2			W1		W3					W1							W1							W1							C1									320
320A	BEDROOM	F1											B1				W1									W3					W1							W1							C1									320A
320B	BEDROOM	F1											B1				W1							W1							W1							W1							C1									320B
320C	BEDROOM	F1											B1				W1							W1							W1							W1							C1									320C
320D	SHOWER				F4									B2			W1							W1							W1							W1							C1									320D
320E	TOILET				F4									B2				W3						W1		W3					W1							W1							C1									320E
322	MEETING										F10		B1				W1							W1							W1							W1								C2				C6			SEE AF101-103 FOR FLOOR PATTERNS & ACCENT PAINT LOCATIONS - SEE AC103B FOR CEILING TILE PATTERN	322
322A	FURN. STORAGE		F2										B1				W1							W1							W1							W1								C2					C7			322A
326	SUITE	F1			F4								B1	B2			W1							W1							W1	W3						W1							C1									326
326A	BEDROOM	F1											B1				W1							W1							W1								W3						C1									326A
326B	BEDROOM	F1											B1				W1							W1							W1							W1							C1									326B
326C	BEDROOM	F1											B1				W1							W1							W1							W1							C1									326C
326D	SHOWER				F4									B2			W1							W1							W1							W1							C1									326D
326E	TOILET				F4									B2			W1							W1								W3							W3						C1									326E
327	SUITE	F1			F4								B1	B2			W1		W3					W1							W1							W1							C1									327
327A	BEDROOM	F1											B1				W1							W1							W1								W3						C1									327A
327B	BEDROOM	F1											B1				W1							W1							W1							W1							C1									327B
327C	BEDROOM	F1											B1				W1							W1							W1							W1							C1									327C
327D	SHOWER				F4									B2			W1							W1							W1							W1							C1									327D
327E	TOILET				F4									B2				W3						W1							W1								W3						C1									327E
328	SUITE	F1			F4								B1	B2			W1		W3					W1							W1							W1							C1									328
328A	BEDROOM	F1											B1				W1									W3					W1							W1							C1									328A
328B	BEDROOM	F1											B1				W1							W1							W1							W1							C1									328B
328C	BEDROOM	F1											B1				W1							W1							W1							W1							C1									328C
328D	SHOWER				F4									B2			W1							W1							W1							W1							C1									328D
328E	TOILET				F4									B2				W3						W1		W3					W1							W1							C1									328E
329	KITCHEN/LOUNGE		F2		F4								B1	B2			W1					W6		W1							W1							W1							C1	C2							SEE AF101-103 FOR FLOOR PATTERNS & ACCENT PAINT LOCATIONS - SEE AC103B FOR CEILING TILE PATTERN	329
330	SUITE	F1			F4								B1	B2			W1							W1		W3					W1							W1							C1									330
330A	BEDROOM	F1											B1				W1							W1							W1							W1							C1									330A
330B	BEDROOM	F1											B1				W1							W1							W1							W1							C1									330B
330C	SHOWER				F4									B2			W1							W1							W1							W1							C1									330C
330D	TOILET				F4									B2			W1									W3					W1							W1							C1									330D
331	SUITE	F1			F4								B1	B2			W1							W1		W3					W1							W1							C1									331
331A	BEDROOM	F1											B1				W1							W1							W1							W1							C1									331A
331B	BEDROOM	F1											B1				W1							W1							W1							W1							C1									331B
331C	SHOWER				F4									B2			W1							W1							W1							W1							C1									331C
331D	TOILET				F4									B2			W1									W3					W1							W1							C1									331D
333	IDF					F6							B1				W1							W1							W1							W1													C7			333
334	GROUP STUDY			F3									B1				W1							W1											W6		W1								C2								334
335	GROUP STUDY			F3									B1				W1							W1											W6		W1								C2								335
336	GROUP STUDY			F3									B1				W1							W1							W1				W6										C2								336
399A	STAIR								F8				B1				W1							W1							W1	W3							W3							C2								399A
399B	STAIR								F8				B1				W1														W1							W1							C2								399B
399C	STAIR								F8				B1				W1														W1							W1							C2								399C
399D	STAIR								F8				B1				W1														W1							W1							C2								399D
399E	STAIR								F8				B1				W1														W1							W1							C2								399E
399F	STAIR								F8				B1				W1							W1							W1														C2								399F
399G	STAIR								F8																																												399G

MHTN ARCHITECTS

MHTN Architects, Inc.
420 East South Temple
Suite 100
Salt Lake City, Utah 84111
Telephone (801) 595-6700
Telefax (801) 595-6717
www.mhtn.com

WEBER STATE UNIVERSITY
RESIDENTIAL LIFE PHASE II - BLDG 2
DFCM PROJECT NUMBER: 10176810

WEBER STATE UNIVERSITY
OGDEN, UTAH 84408

SEAL

MHTN PROJECT NO. 2010543

DRAWN BY: Author CHECKED BY: Checker

ISSUED:

NO.	DATE	DESCRIPTION
01	17 MAY 2011	CONSTRUCTION DOCUMENTS

CONTRACTOR TO VERIFY DRAWINGS IN FIELD-USE REFLECT LAST REVISION DATE:

NO.	DATE	DESCRIPTION
1	Date 3	Revision 3

SHEET NAME
FINISH SCHEDULE LEVEL 3 CONT.
CONSTRUCTION DOCUMENTS
17 MAY 2011

SHEET NUMBER
AE610

C:\Users\prestonm\Documents\A11_2010543 WSU RESIDENTIAL LIFE BUILDING II_CENTRAL_prestonm.rvt
5/17/2011 12:23:47 PM

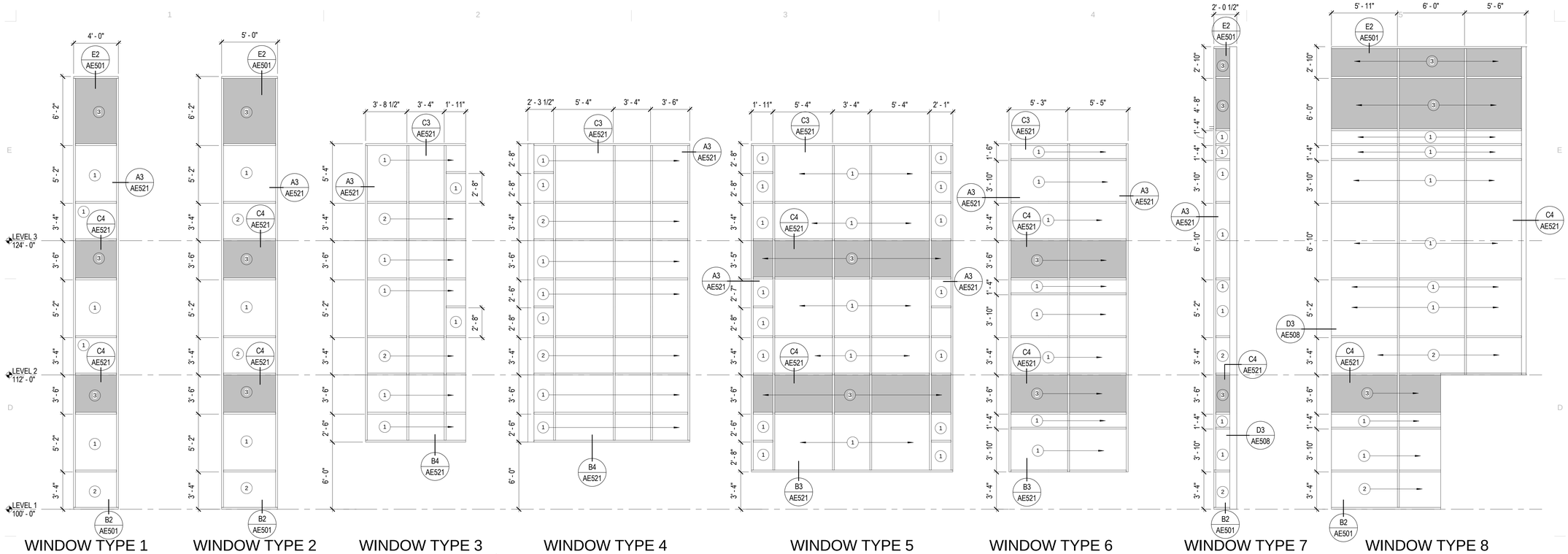

WINDOW TYPE 1
ALUM. CURTAINWALL

WINDOW TYPE 2
ALUM. CURTAINWALL

WINDOW TYPE 3
ALUM. CURTAINWALL

WINDOW TYPE 4
ALUM. CURTAINWALL

WINDOW TYPE 5
ALUM. CURTAINWALL

WINDOW TYPE 6
ALUM. CURTAINWALL
PROVIDE ROLLERSHADES

WINDOW TYPE 7
ALUM. CURTAINWALL

WINDOW TYPE 8
ALUM. CURTAINWALL

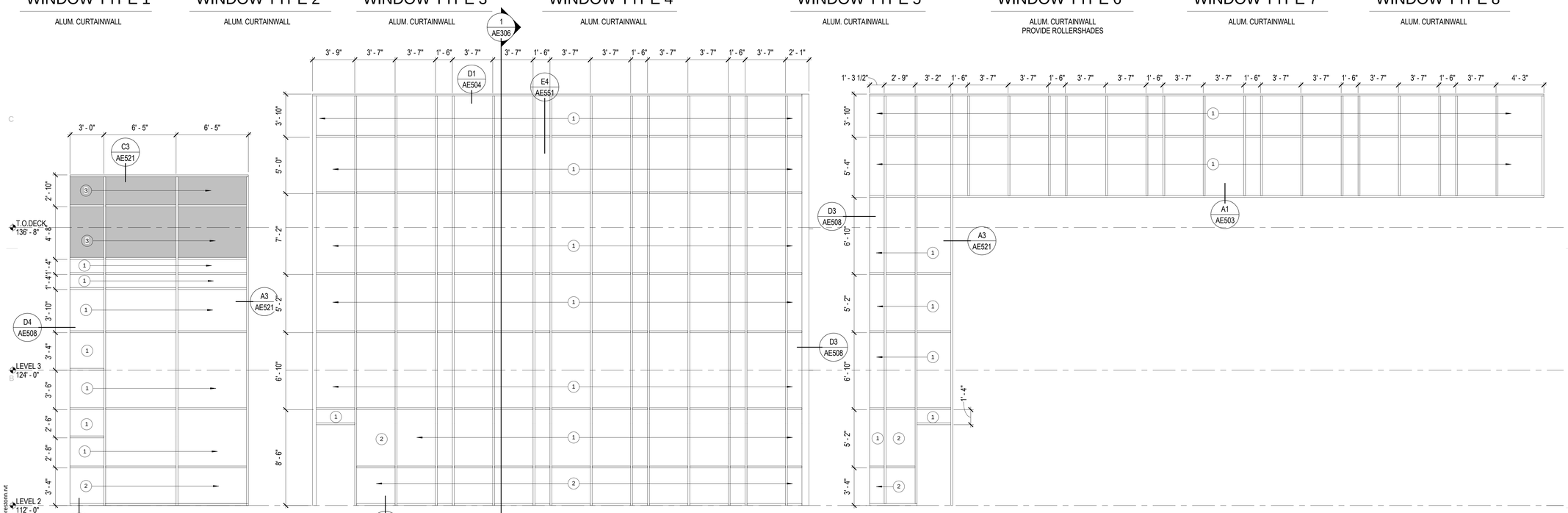

WINDOW TYPE 9
ALUM CURTAINWALL
PROVIDE 2 3/4" DEEP VERTICAL
MULLION SNAP COVERS

WINDOW TYPE 10
ALUM CURTAINWALL
PROVIDE 2 3/4" DEEP VERTICAL
MULLION SNAP COVERS -
SPLICE VERTICAL MULLIONS AT
29'-4" ABOVE LEVEL TWO

WINDOW TYPE 11
ALUM CURTAINWALL
PROVIDE 2 3/4" DEEP VERTICAL
MULLION SNAP COVERS -
SPLICE VERTICAL MULLIONS AT
29'-4" ABOVE LEVEL TWO

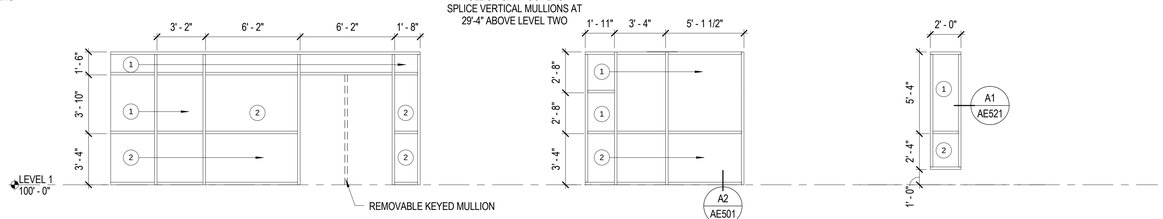

WINDOW TYPE 12
ALUM CURTAINWALL
PROVIDE 2 3/4" DEEP VERTICAL
MULLION SNAP COVERS

WINDOW TYPE 13
ALUM. STOREFRONT
PROVIDE ROLLER SHADES

WINDOW TYPE 14
ALUM. STOREFRONT
PROVIDE ROLLER SHADES

GLAZING SCHEDULE

1. 1" INSULATED GLAZING
2. 1" INSULATED TEMPERED GLAZING
3. 1" INSULATED SPANDREL GLAZING
4. 1/4" CLEAR GLAZING
5. 1/4" CLEAR TEMPERED GLAZING (FROSTED AT DOOR 224B-N)
6. 45 MIN FIRE RATED GLAZING - TEMPERED/SAFETY (60 MINUTE FIRE RATED GLAZING AT DOORS 199A, 199B-S, 199C-S, 199D-S, 199E-S, 199F-E, 299A, 299B, 299C, 299D, 299E, 299F, 399A, 399B, 399C, 399D, 399E, 399F.)
7. FIRE RESISTANT METAL INFILL PANEL
8. METAL LOUVER

MHTN ARCHITECTS
MHTN Architects, Inc.
420 East South Temple
Suite 100
Salt Lake City, Utah 84111
Telephone (801) 595-6700
Telefax (801) 595-6717
www.mhtn.com

WEBER STATE UNIVERSITY
RESIDENTIAL LIFE PHASE II - BLDG 2

DFCM PROJECT NUMBER: 10176810

WEBER STATE UNIVERSITY
OGDEN, UTAH 84408

SEAL

MHTN PROJECT NO. 2010543

DRAWN BY: MLH CHECKED BY: MG

ISSUED:

NO.	DATE	DESCRIPTION
01	17 MAY 2011	CONSTRUCTION DOCUMENTS

CONTRACTOR TO VERIFY DRAWINGS IN FIELD USE REFLECT LAST REVISION DATE.

NO.	DATE	DESCRIPTION

SHEET NAME
WINDOW SCHEDULE

CONSTRUCTION DOCUMENTS
17 MAY 2011

SHEET NUMBER
AE611

C:\Users\prestonn\Documents\A11_2010543 WSU RESIDENTIAL LIFE BUILDING II_CENTRAL_prestonn.rvt
5/17/2011 12:23:53 PM

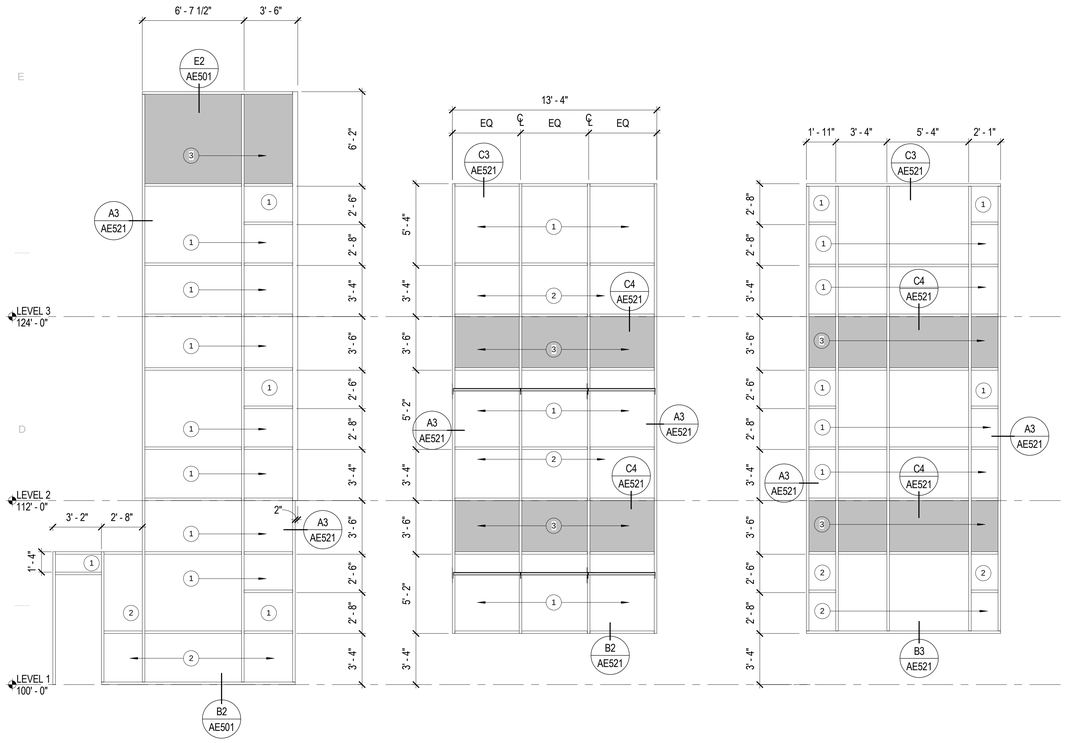

WINDOW TYPE 15

ALUM. CURTAINWALL

WINDOW TYPE 16

ALUM CURTAINWALL
PROVIDE 2 3/4" DEEP VERTICAL
MULLION SNAP COVERS
PROVIDE ROLLER SHADES

WINDOW TYPE 17

ALUM. CURTAINWALL

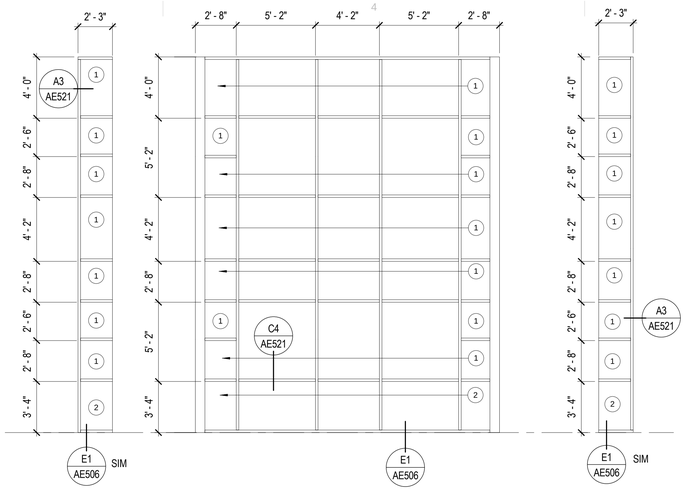

WINDOW TYPE 18

ALUM. CURTAINWALL
PROVIDE ROLLER SHADES

WINDOW TYPE 19

ALUM. CURTAINWALL
PROVIDE ROLLER SHADES

WINDOW TYPE 20

ALUM. CURTAINWALL
PROVIDE ROLLER SHADES

GLAZING SCHEDULE

1. 1" INSULATED GLAZING
2. 1" INSULATED TEMPERED GLAZING
3. 1" INSULATED SPANDREL GLAZING
4. 1/4" CLEAR GLAZING
5. 1/4" CLEAR TEMPERED GLAZING (FROSTED AT DOOR 224B-N)
6. 45 MIN FIRE RATED GLAZING - TEMPERED/SAFETY (60 MINUTE FIRE RATED GLAZING AT DOORS 199A, 199B-S, 199C-S, 199D-S, 199E-S, 199F-E, 299A, 299B, 299C, 299D, 299E, 299F, 399A, 399B, 399C, 399D, 399E, 399F.)
7. FIRE RESISTANT METAL INFILL PANEL
8. METAL LOUVER

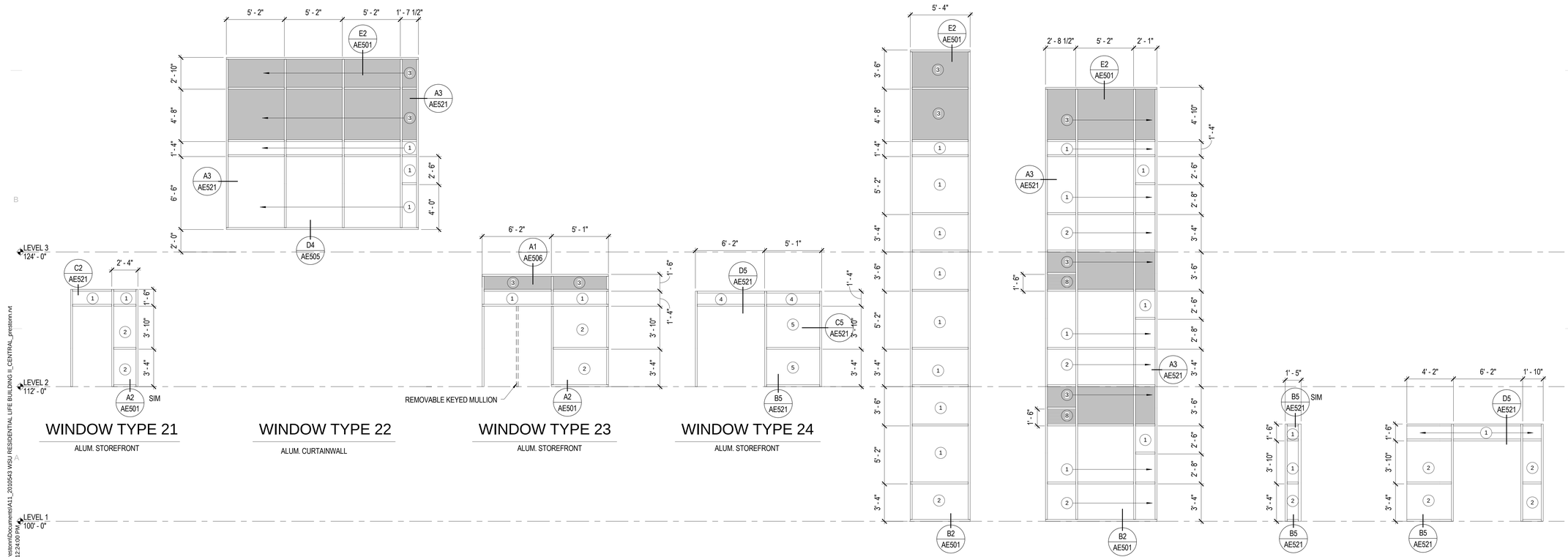

WINDOW TYPE 21

ALUM. STOREFRONT

WINDOW TYPE 22

ALUM. CURTAINWALL

WINDOW TYPE 23

ALUM. STOREFRONT

WINDOW TYPE 24

ALUM. STOREFRONT

WINDOW TYPE 25

ALUM. CURTAINWALL

WINDOW TYPE 26

ALUM. CURTAINWALL

WINDOW TYPE 27

ALUM. STOREFRONT

WINDOW TYPE 28

ALUM. STOREFRONT

C:\Users\prestonm\Documents\A11_2010543 WSU RESIDENTIAL LIFE BUILDING II_CENTRAL_prestonm.rvt
5/17/2011 12:24:00 PM

MHTN
ARCHITECTS
MHTN Architects, Inc.
420 East South Temple
Suite 100
Salt Lake City, Utah 84111
Telephone (801) 595-6700
Telefax (801) 595-6717
www.mhtn.com

WEBER STATE UNIVERSITY
RESIDENTIAL LIFE PHASE II - BLDG 2

DFCM PROJECT NUMBER: 10176810

WEBER STATE UNIVERSITY
OGDEN, UTAH 84408

SEAL

MHTN PROJECT NO. 2010543

DRAWN BY: MLH CHECKED BY: MG

ISSUED:

NO.	DATE	DESCRIPTION
01	17 MAY 2011	CONSTRUCTION DOCUMENTS

CONTRACTOR TO VERIFY DRAWINGS IN FIELD USE REFLECT LAST REVISION DATE:

NO.	DATE	DESCRIPTION
1	Date 3	Revision 3

SHEET NAME

WINDOW SCHEDULE

CONSTRUCTION DOCUMENTS
17 MAY 2011

SHEET NUMBER

AE612

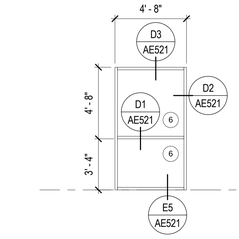

WINDOW TYPE 29

HOLLOW METAL

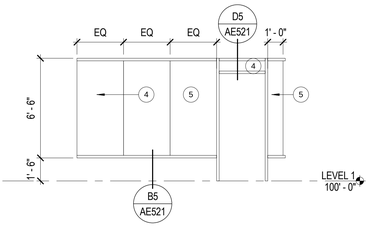

WINDOW TYPE 30

ALUM. STOREFRONT/BUTT GLAZED

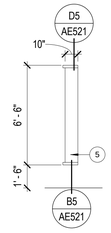

WINDOW TYPE 31

ALUM. STOREFRONT/BUTT GLAZED

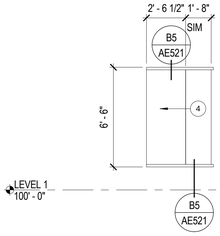

WINDOW TYPE 32

ALUM. STOREFRONT/BUTT GLAZED

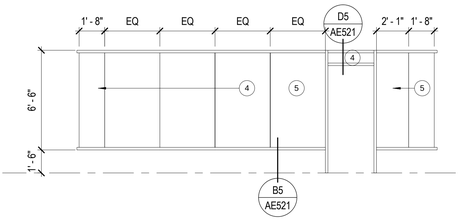

WINDOW TYPE 33

ALUM. STOREFRONT/BUTT GLAZED

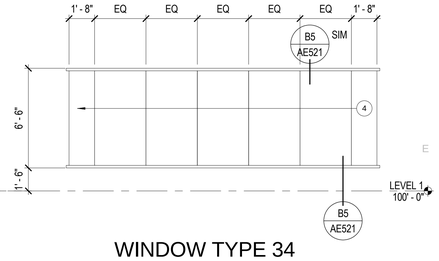

WINDOW TYPE 34

ALUM. STOREFRONT/BUTT GLAZED

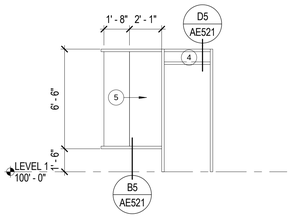

WINDOW TYPE 35

ALUM. STOREFRONT/BUTT GLAZED

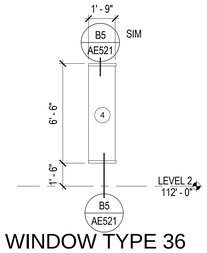

WINDOW TYPE 36

ALUM. STOREFRONT/BUTT GLAZED

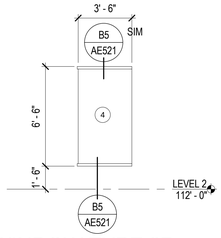

WINDOW TYPE 37

ALUM. STOREFRONT/BUTT GLAZED

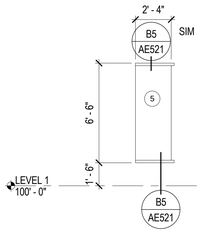

WINDOW TYPE 38

ALUM. STOREFRONT/BUTT GLAZED

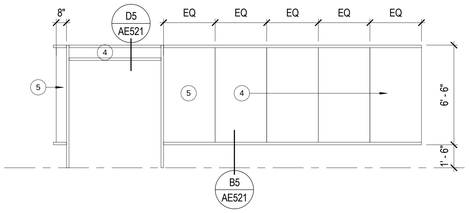

WINDOW TYPE 39

ALUM. STOREFRONT/BUTT GLAZED

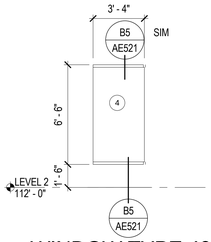

WINDOW TYPE 40

ALUM. STOREFRONT/BUTT GLAZED

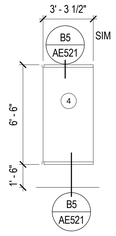

WINDOW TYPE 41

ALUM. STOREFRONT/BUTT GLAZED

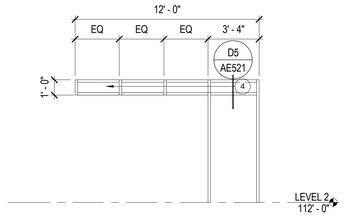

WINDOW TYPE 42

ALUM. STOREFRONT

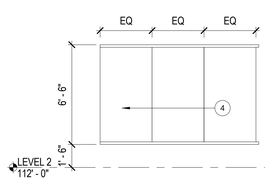

WINDOW TYPE 43

ALUM. STOREFRONT/BUTT GLAZED

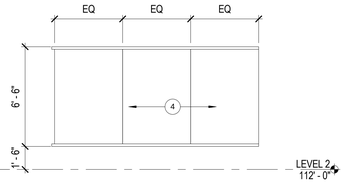

WINDOW TYPE 44

ALUM STOREFRONT/BUTT GLAZED

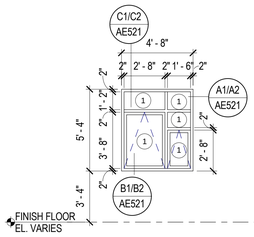

WINDOW TYPE 45

ALUM. STOREFRONT WINDOW
PROVIDE ROLLER SHADES

WINDOW TYPE 46

ALUM. STOREFRONT WINDOW
PROVIDE ROLLER SHADES

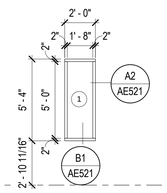

WINDOW TYPE 47

ALUM. STOREFRONT WINDOW
PROVIDE ROLLER SHADES

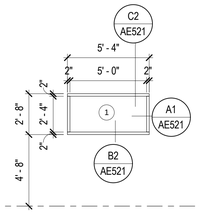

WINDOW TYPE 48

ALUM. STOREFRONT WINDOW
PROVIDE ROLLER SHADES

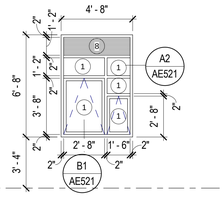

WINDOW TYPE 49

ALUM. STOREFRONT WINDOW
PROVIDE ROLLER SHADES

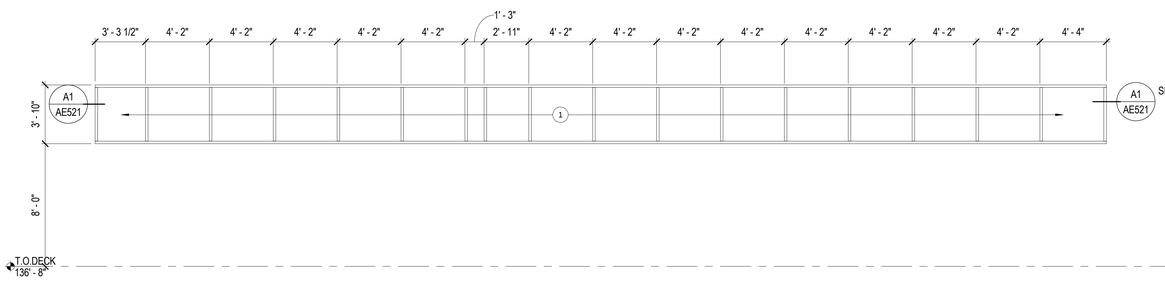

WINDOW TYPE 50

ALUM. STOREFRONT WINDOW

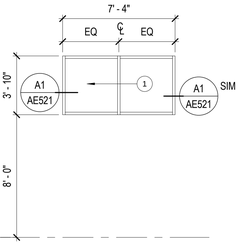

WINDOW TYPE 51

ALUM. STOREFRONT WINDOW

GLAZING SCHEDULE

1. 1" INSULATED GLAZING
2. 1" INSULATED TEMPERED GLAZING
3. 1" INSULATED SPANDREL GLAZING
4. 1/4" CLEAR GLAZING
5. 1/4" CLEAR TEMPERED GLAZING (FROSTED AT DOOR 224B-N)
6. 45 MIN FIRE RATED GLAZING - TEMPERED/SAFETY (60 MINUTE FIRE RATED GLAZING AT DOORS 199A, 199B-S, 199C-S, 199D-S, 199E-S, 199F-E, 299A, 299B, 299C, 299D, 299E, 299F, 399A, 399B, 399C, 399D, 399E, 399F.)
7. FIRE RESISTANT METAL INFILL PANEL
8. METAL LOUVER

MHTN
ARCHITECTS
MHTN Architects, Inc.
420 East South Temple
Suite 100
Salt Lake City, Utah 84111
Telephone (801) 595-6700
Telefax (801) 595-6717
www.mhtn.com

WEBER STATE UNIVERSITY
RESIDENTIAL LIFE PHASE II - BLDG 2

DFCM PROJECT NUMBER: 10176810

WEBER STATE UNIVERSITY
OGDEN, UTAH 84408

SEAL

MHTN PROJECT NO. 2010543

DRAWN BY: MLH CHECKED BY: MG

ISSUED:

NO.	DATE	DESCRIPTION
01	17 MAY 2011	CONSTRUCTION DOCUMENTS

CONTRACTOR TO VERIFY DRAWINGS IN FIELD USE REFLECT LAST REVISION DATE.

NO.	DATE	DESCRIPTION

SHEET NAME

WINDOW SCHEDULE

CONSTRUCTION DOCUMENTS
17 MAY 2011

SHEET NUMBER

AE613

C:\Users\prestonn\Documents\A11_2010543 WSU RESIDENTIAL LIFE BUILDING II_CENTRAL_prestonn.rvt
5/17/2011 12:24:08 PM

DRAWING INDEX	
#	SHEET NAME
MH001	LEGEND & ABBREVIATIONS
FP101A	LEVEL ONE FIRE PROTECTION PLAN - AREA 'A'
FP101B	LEVEL ONE FIRE PROTECTION PLAN - AREA 'B'
FP102A	LEVEL TWO FIRE PROTECTION PLAN - AREA 'A'
FP102B	LEVEL TWO FIRE PROTECTION PLAN - AREA 'B'
FP103A	LEVEL THREE FIRE PROTECTION PLAN - AREA 'A'
FP103B	LEVEL THREE FIRE PROTECTION PLAN - AREA 'B'
MH101	LEVEL ONE ADD ALTERNATE 1
MH101A	LEVEL ONE MECHANICAL PLAN - AREA 'A'
MH101B	LEVEL ONE MECHANICAL PLAN - AREA 'B'
MH102A	LEVEL TWO MECHANICAL PLAN - AREA 'A'
MH102B	LEVEL TWO MECHANICAL PLAN - AREA 'B'
MH103A	LEVEL THREE MECHANICAL PLAN - AREA 'A'
MH103B	LEVEL THREE MECHANICAL PLAN - AREA 'B'
MH104A	ROOF MECHANICAL PLAN - AREA 'A'
MH104B	ROOF MECHANICAL PLAN - AREA 'B'
MH301	MECHANICAL SCHEMATICS
MH302	MECHANICAL SECTIONS
MH401	ENLARGED MECHANICAL PLANS
MH402	KITCHEN MECHANICAL FLOOR PLAN
MH501	MECHANICAL DETAILS
MH502	MECHANICAL DETAILS
MH503	MECHANICAL DETAILS
MH504	MECHANICAL DETAILS
MH505	MECHANICAL DETAILS
MH506	MECHANICAL DETAILS
MH601	MECHANICAL SCHEDULES
MH602	MECHANICAL SCHEDULES
MH603	MECHANICAL SCHEDULES
MH604	MECHANICAL SCHEDULES
MH605	MECHANICAL SCHEDULES
MP101A	LEVEL ONE MECH PIPING PLAN - AREA 'A'
MP101B	LEVEL ONE MECH PIPING PLAN - AREA 'B'
MP102A	LEVEL TWO MECH PIPING PLAN - AREA 'A'
MP102B	LEVEL TWO MECH PIPING PLAN - AREA 'B'
MP103A	LEVEL THREE MECH PIPING PLAN - AREA 'A'
MP103B	LEVEL THREE MECH PIPING PLAN - AREA 'B'
MP201	MECHANICAL PIPING OVERALL SITE PLAN
MP301	MECHANICAL PIPING SCHEMATIC
MP401	ENLARGED MECHANICAL PIPING PLANS
PL101A	LEVEL ONE PLUMBING PLAN - AREA 'A'
PL101B	LEVEL ONE PLUMBING PLAN - AREA 'B'
PL102A	LEVEL TWO PLUMBING PLAN - AREA 'A'
PL102B	LEVEL TWO PLUMBING PLAN - AREA 'B'
PL103A	LEVEL THREE PLUMBING PLAN - AREA 'A'
PL103B	LEVEL THREE PLUMBING PLAN - AREA 'B'
PL104A	ROOF PLUMBING PLAN - AREA 'A'
PL104B	ROOF PLUMBING PLAN - AREA 'B'
PL301	SOLAR WATER HEATING SCHEMATIC
PL401	ENLARGED PLUMBING PLANS
PL402	ENLARGED PLUMBING PLAN
PL501	PLUMBING DETAILS
PL502	PLUMBING DETAILS
PL601	PLUMBING SCHEDULES

ABBREVIATIONS

Ø	ROUND OR DIAMETER	LWT	LEAVING WATER TEMPERATURE
AD	ACCESS DOOR	MAX	MAXIMUM
AF	AIRFOIL	MBH	THOUSAND BRITISH THERMAL UNITS/HOUR
AFF	ABOVE FINISHED FLOOR	MECH	MECHANICAL
ALT	ALTERNATE	MIN	MINIMUM
BI	BACKWARD INCLINED	NC	NOISE CRITERIA OR NORMALLY CLOSED
BOD	BOTTOM OF DUCT	NIC	NOT IN CONTRACT
BOP	BOTTOM OF PIPE	NO	NUMBER
BTUH	BRITISH THERMAL UNITS PER HOUR	NOM	NOMINAL
CAP	CAPACITY	NTS	NOT TO SCALE
CFM	CUBIC FEET PER MINUTE	OA	OUTSIDE AIR
CV	CONSTANT VOLUME	OBD	OPPOSED BLADE DAMPER
DB	DRY BULB	OD	OVERFLOW DRAIN
DN	DOWN	OFCI	OWNER FURNISHED, CONTRACTOR INSTALLED
DIA	DIAMETER	OFOI	OWNER FURNISHED, OWNER INSTALLED
DCW	DOMESTIC COLD WATER	PD	PRESSURE DROP
DHW	DOMESTIC HOT WATER	POC	POINT OF CONNECTION
DHWC	DOMESTIC HOT WATER CIRC.	PRV	PRESSURE REDUCING VALVE
DSN	DOWN SPOUT NOZZLE	PSI	POUNDS PER SQUARE INCH
DW	DISHWASHER	PSIG	POUNDS PER SQUARE INCH GAUGE
(E)	EXISTING	RA	RETURN AIR
EA	EXHAUST AIR	RAD	RADIUS
EAT	ENTERING AIR TEMPERATURE	RD	ROOF DRAIN
EFF	EFFICIENCY	RPBP	REDUCED PRESSURE BACKFLOW PREVENTER
ELEV	ELEVATION	SA	SUPPLY AIR OR SHOCK ARRESTOR
ENCL	ENCLOSURE	SEN	SENSIBLE
ESP	EXTERNAL STATIC PRESSURE	SIM	SIMILAR
ET	EXPANSION TANK	SL	SEA LEVEL
EWC	ELECTRIC WATER COOLER	SLD	SLAB LAND DRAIN
EWT	ENTERING WATER TEMPERATURE	SP	STATIC PRESSURE
FCO	FLOOR CLEANOUT	SQ.FT	SQUARE FEET
FD	FLOOR DRAIN	SS	SERVICE SINK OR STAINLESS STEEL
FO	FLAT OVAL	TOD	TOP OF DUCT
FPM	FEET PER MINUTE	TSP	TOTAL STATIC PRESSURE
FS	FLOOR SINK	TYP.	TYPICAL
FT	FEET	U	URINAL
FV	FACE VELOCITY	V	VENT
GA	GAUGE	VAV	VARIABLE AIR VOLUME
GAL	GALLON	VD	VOLUME DAMPER
GD	GARAGE DRAIN	VFD	VARIABLE FREQUENCY DRIVE
GPM	GALLONS PER MINUTE	VOL	VOLUME
HP	HORSEPOWER	VTR	VENT THROUGH ROOF
HR	HOUR	W/	WITH
HT	HEIGHT	W/O	WITHOUT
IN	INCH	WB	WET BULB
INWC	INCHES OF WATER COLUMN	WC	WATER CLOSET
INWG	INCHES OF WATER GAUGE	MVD	MANUAL VOLUME DAMPER
L	LAVATORY OR LOUVER	WCO	WALL CLEANOUT
LAT	LEAVING AIR TEMPERATURE	WPD	WATER PRESSURE DROP
LBS	POUNDS	WT	WEIGHT

ALTITUDE: 4455 FT

SITE ATMOSPHERIC PRESSURE: 12.48 P.S.I.

MECHANICAL LEGEND

NOTE: ALL ITEMS MAY NOT APPEAR ON DRAWINGS

GATE VALVE		CHILLED WATER SUPPLY	CHS
OS & Y PATTERN GATE VALVE		CHILLED WATER RETURN	CHR
BALL VALVE		CONDENSER WATER SUPPLY	CS
BUTTERFLY VALVE		CONDENSER WATER RETURN	CR
MOTORIZED VALVE OPERATOR	M	GROUND LOOP SUPPLY	GLS
GAS COCK		GROUND LOOP RETURN	GLR
PLUG VALVE		HEATING WATER SUPPLY	HWS
CHECK VALVE (SWING OR LIFT AS REQ'D)		HEATING WATER RETURN	HWR
SOLENOID VALVE	S	RADIANT FLOOR SUPPLY	RFS
AUTOMATIC CONTROL VALVE (2-WAY)		RADIANT FLOOR RETURN	RFR
AUTOMATIC CONTROL VALVE (3-WAY)		SNOW MELT SUPPLY	SMS
PRESSURE REDUCING VALVE		SNOW MELT RETURN	SMR
P & T RELIEF VALVE		STEAM	S
AIR VENT (AUTOMATIC)		STEAM CONDENSATE RETURN	SCR
CURB COCK		WATER TREATMENT	WT
THERMAL EXPANSION VALVE		FUEL OIL SUPPLY	FOS
STRAINER		FUEL OIL RETURN	FOR
CALIBRATED BALANCE VALVE		REFRIGERANT LIQUID	RL
VENTURI FLOW METER		REFRIGERANT SUCTION	RS
REDUCER		HOT GAS	HG
PET COCK OR GAUGE COCK		HOT GAS BYPASS	HGBP
PRESSURE GAUGE W/GAUGE COCK		VACUUM	VAC
THERMOMETER		MEDICAL AIR	MA
TEMPERATURE & PRESSURE TEST PLUG		OXYGEN	O2
IN-LINE PUMP		NITROUS OXIDE	N2O
FLOW SWITCH	F	NITROGEN	N
AQUASTAT	T	HYDROGEN	H
TEMPERATURE SENSING WELL	T	HELIUM	HE
HOSE BIBB OR SILLCOCK		CARBON DIOXIDE	CO2
YARD HYDRANT		ARGON	AR
FLOOR DRAIN		DUCT SIZE (IN), FIRST FIGURE IS SIDE SHOWN	18x12
FLOOR SINK		BURIED OR UNDERFLOOR DUCT	
MANHOLE		FLEXIBLE DUCT (HELICAL)	
WALL CLEANOUT	CO	SPIN-IN FITTING W/ MVD	
FLOOR OR GRADE CLEANOUT		FLEXIBLE DUCT CONNECTION	
GRADE CLEANOUT W/ CONCRETE PAD		SUPPLY SLOT DIFFUSER	
VENT THROUGH ROOF		SUPPLY DIFFUSER	
POST TYPE FDC CONNECTION		RETURN GRILLE	
WALL TYPE FDC CONNECTION		RADIAL SUPPLY DIFFUSERS	
FIRE HOSE CABINET		RETURN AIR DUCT SECTION	
FIRE DEPT. HORN & LIGHT		RETURN AIR DUCT UP	
EXPANSION JOINT		RETURN AIR DUCT DOWN	
FLEXIBLE PIPE CONNECTION		SUPPLY AIR DUCT SECTION	
REDUCED PRESSURE BACKFLOW PREVENTER	RPBP	SUPPLY AIR DUCT UP	
DIRECTION OF FLOW		SUPPLY AIR DUCT DOWN	
ELBOW DOWN		EXHAUST AIR DUCT SECTION	
ELBOW UP		EXHAUST AIR DUCT UP	
PIPE CAP		EXHAUST AIR DUCT DOWN	
TEE DOWN		ACCESS PANEL	
UNION		MANUAL VOLUME DAMPER	M
DOMESTIC COLD WATER		GRAVITY BACKDRAFT DAMPER	
DOMESTIC HOT WATER		MOTORIZED DAMPER	M
DOMESTIC HOT WATER CIRC.		AIR FLOW STATION	F
TEMPERED WATER	T	FIRE DAMPER	F
SANITARY (PLBG) VENT		SMOKE DAMPER	S
SANITARY SEWER ABOVE GRADE		COMBINATION FIRE/SMOKE DAMPER	FS
SANITARY SEWER BELOW GRADE		DUCT TRANSITION	
GREASE WASTE ABOVE GRADE	GW	ELBOW W/ TURNING VANES	
GREASE WASTE BELOW GRADE	GW	TEE W/ 45° ENTRY	
DRAIN	D	WYE W/ 45° ENTRY	
SLAB DRAIN	SLD	THERMOSTAT OR TEMP SENSOR	T
ROOF DRAIN	RD	HUMIDISTAT OR HUMIDITY SENSOR	H
OVERFLOW DRAIN	OD	CARBON MONOXIDE SENSOR	K
STORM DRAIN ABOVE GRADE	SD	CARBON DIOXIDE SENSOR	KL
STORM DRAIN BELOW GRADE	SD	NITROGEN DIOXIDE SENSOR	N
FIRE SERVICE	F	POINT OF REMOVAL FROM EXISTING	
NATURAL GAS	G	POINT OF CONNECTION TO EXISTING	
PROPANE	P	DETAIL TAG	DETAIL NO. / DRAWING NO.
COMPRESSED AIR	CA	KEYED NOTE	NOTE NO.
INDUSTRIAL WATER (NON-POTABLE)	IW	SECTION CUT LINE	SECTION NO. / DRAWING NO.
DEIONIZED WATER	DI		
DEIONIZED WATER RETURN	DIR		
HEAT TRACING			

MHTN ARCHITECTS
MHTN Architects, Inc.
420 East South Temple
Suite 100
Salt Lake City, Utah 84111
Telephone (801) 595-6700
Telefax (801) 595-6717
www.mhtn.com

Colvin Engineering Associates, Inc.
244 West 300 North Suite 200
Salt Lake City, Utah 84103
Phone: (801) 322-2400 / Fax: (801) 322-2416

WEBER STATE UNIVERSITY
RESIDENTIAL LIFE PHASE II - BLDG 2
DFCM PROJECT NUMBER: 10176810

WEBER STATE UNIVERSITY
OGDEN, UTAH 84408

SEAL

MHTN PROJECT NO. 10176810

DRAWN BY: GM CHECKED BY: BRC

ISSUED:

NO	DATE	DESCRIPTION

CONTRACTOR TO VERIFY DRAWINGS IN FIELD USE REFLECT LAST REVISION DATE:

NO	DATE	DESCRIPTION

SHEET NAME
LEGEND & ABBREVIATIONS

CONSTRUCTION SET
17 MAY 2011

SHEET NUMBER
MH001

Copyright (C) 2010 by Colvin Engineering Associates, Inc. Salt Lake City, Utah. All rights reserved. Unauthorized copying and/or use is illegal and subject to prosecution.

C:\Revit Local Models\2010-074.00 - WSU PH II Bldg 2 - Tyler 2011.rvt
5/17/2011 10:08:44 AM

1 LEVEL ONE FIRE PROTECTION PLAN - AREA 'A'

SCALE: 1/8" = 1'-0"

FIRE PROTECTION GENERAL NOTES

A. AUTOMATIC FIRE SPRINKLER SYSTEM SHALL BE HYDRAULICALLY CALCULATED IN ACCORDANCE WITH NFPA #14, 2009 EDITION.

B. AUTOMATIC FIRE SPRINKLER SYSTEM SHALL BE INSTALLED IN ACCORDANCE WITH NFPA#14, 2009 EDITION, INSTALLATION OF SPRINKLER SYSTEMS.

C. FURNISH AND INSTALL NEW PIPE, FITTINGS, SPRINKLER HEADS AS REQUIRED TO COMPLETE THE WORK.

D. NEW SPRINKLER HEADS TO MATCH CEILING TYPE. COORDINATE WITH ARCHITECTURAL SHEETS.

E. ALL PIPING SHALL BE DOMESTIC.

F. FITTINGS SHALL BE THREADED, WELDED AND GROOVED IN ACCORDANCE WITH LISTING AND NFPA #13 REQUIREMENTS.

G. SEISMIC BRACING AND FLEXIBLE COUPLINGS SHALL BE PROVIDED AS REQUIRED FOR SEISMIC PROTECTION.

H. PLAIN END OR MECHANICAL TEES SHALL NOT BE USED, UNLESS REQUIRED FOR FIELD MODIFICATION OF PIPING SYSTEM.

I. THE SPRINKLER CONTRACTOR SHALL COORDINATE WITH OTHER TRADES AND PROVIDE ADDITIONAL OFFSETS AS REQUIRED FOR INSTALLATION. SPRINKLER PIPING SHALL BE REROUTED AS REQUIRED WHERE CONFLICTS OCCUR. SPRINKLER CONTRACTOR'S PRICING SHALL INCLUDE ANY PIPING OFFSETS, OR REVISED CUT LENGTHS.

J. THE ARCHITECT SHALL PROVIDE SCHEMATIC SPRINKLER LAYOUTS ON REFLECTED CEILINGS DRAWINGS, FOR AREAS OF CONCERN. PROVIDE SPRINKLER LAYOUT AS PER ARCHITECTURAL DRAWINGS WHILE MEETING SPRINKLER LISTINGS. COORDINATE WITH ARCHITECT AND ENGINEER WHERE LAYOUTS ARE NOT FEASIBLE AS SHOWN.

K. SHOP DRAWINGS SHALL BE PROVIDED BY THE SPRINKLER CONTRACTOR USING AN AUTOCAD COMPATIBLE FORMAT. SUBMIT TO OWNERS INSURANCE REVIEW CONSULTANT AND ARCHITECT AND ENGINEER. AS-BUILT DRAWINGS AND ELECTRONIC DRAWING FILES SHALL BE PROVIDED AT END OF PROJECT BY CONTRACTOR.

L. FIRE SPRINKLER SHOP DRAWINGS, CALCULATIONS AND MATERIALS SHALL BE SUBMITTED AND REVIEWED BY ENGINEER PRIOR TO SUBMITTING TO OTHER AUTHORITIES HAVING JURISDICTION.

M. FIRE SPRINKLER CONTRACTOR TO ACQUIRE ALL NECESSARY PERMITS AND/OR APPROVALS FROM CITY, COUNTY, AND STATE.

N. PRESSURE TEST AND CERTIFY SPRINKLER SYSTEM.

O. PIPE ROUTING, ELEVATIONS, SPRINKLER LOCATIONS, ARE SCHEMATIC, AND SHALL BE USED AS REFERENCE ONLY. INSTALLER SHALL FIELD VERIFY CONDITIONS, AND PROVIDE OFFSETS AS REQUIRED FOR INSTALLATION. DEVIATION FROM SCHEMATIC PLAN SHALL BE APPROVED IN WRITING BY THE ENGINEER, PRIOR TO INSTALLATION.

P. NEW FIRE PROTECTION WORK TO INCLUDE HEADS AND PIPING SYSTEM AS REQUIRED TO MEET NFPA REQUIREMENTS.

Q. NEW PIPING TO BE SCHEDULE 40 STEEL PIPE LISTED FOR FIRE PROTECTION.

R. SEE ARCHITECTURAL PLANS FOR CEILING HEIGHTS.

S. SUBMIT FIRE PROTECTION DRAWINGS TO LANDLORD'S/OWNER'S INSURANCE REVIEW CONSULTANT.

T. COORDINATE WITH AHJ FOR SYSTEM DESIGN REQUIREMENTS.

KEYED NOTES

1 FIRE SPRINKLER SYSTEM TO ACCOMMODATE AREA(S) SHOWN.

2 STAIR STAND PIPE ASSEMBILY.

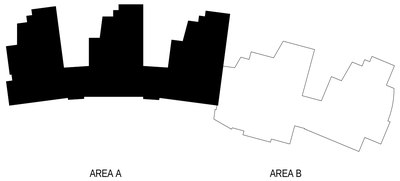

KEYPLAN

Copyright (C) 2010 by Colvin Engineering Associates, Inc. Salt Lake City, Utah. All rights reserved. Unauthorized copying and/or use is illegal and subject to prosecution.

C:\Revit Local Models\2010-074.00 - WSU PH III Bldg 2 - Tyler 2011.rvt
5/17/2011 10:00:40 AM

MHTN
ARCHITECTS
MHTN Architects, Inc.
420 East South Temple
Suite 100
Salt Lake City, Utah 84111
Telephone (801) 595-6700
Telefax (801) 595-6717
www.mhtn.com

Colvin Engineering Associates, Inc.
244 West 300 North Suite 200
Salt Lake City, Utah 84103
Phone: (801) 322-2400 / Fax: (801) 322-2416

WEBER STATE UNIVERSITY
RESIDENTIAL LIFE PHASE II - BLDG 2
DFCM PROJECT NUMBER: 10176810

WEBER STATE UNIVERSITY
OGDEN, UTAH 84408

SEAL

MHTN PROJECT NO. 10176810

DRAWN BY: TCF CHECKED BY: BRC

ISSUED:

NO.	DATE	DESCRIPTION

CONTRACTOR TO VERIFY DRAWINGS IN FIELD USE REFLECT LAST REVISION DATE.

NO.	DATE	DESCRIPTION

SHEET NAME

LEVEL ONE FIRE PROTECTION PLAN - AREA 'A'

CONSTRUCTION SET

17 MAY 2011

SHEET NUMBER

FP101A

1 LEVEL ONE FIRE PROTECTION PLAN - AREA 'B'

SCALE: 1/8" = 1'-0"

FIRE PROTECTION GENERAL NOTES

A. AUTOMATIC FIRE SPRINKLER SYSTEM SHALL BE HYDRAULICALLY CALCULATED IN ACCORDANCE WITH NFPA #14, 2009 EDITION.

B. AUTOMATIC FIRE SPRINKLER SYSTEM SHALL BE INSTALLED IN ACCORDANCE WITH NFPA#14, 2009 EDITION, INSTALLATION OF SPRINKLER SYSTEMS.

C. FURNISH AND INSTALL NEW PIPE, FITTINGS, SPRINKLER HEADS AS REQUIRED TO COMPLETE THE WORK.

D. NEW SPRINKLER HEADS TO MATCH CEILING TYPE. COORDINATE WITH ARCHITECTURAL SHEETS.

E. ALL PIPING SHALL BE DOMESTIC.

F. FITTINGS SHALL BE THREADED, WELDED AND GROOVED IN ACCORDANCE WITH LISTING AND NFPA #13 REQUIREMENTS.

G. SEISMIC BRACING AND FLEXIBLE COUPLINGS SHALL BE PROVIDED AS REQUIRED FOR SEISMIC PROTECTION.

H. PLAIN END OR MECHANICAL TEES SHALL NOT BE USED, UNLESS REQUIRED FOR FIELD MODIFICATION OF PIPING SYSTEM.

I. THE SPRINKLER CONTRACTOR SHALL COORDINATE WITH OTHER TRADES AND PROVIDE ADDITIONAL OFFSETS AS REQUIRED FOR INSTALLATION. SPRINKLER PIPING SHALL BE REROUTED AS REQUIRED WHERE CONFLICTS OCCUR. SPRINKLER CONTRACTOR'S PRICING SHALL INCLUDE ANY PIPING OFFSETS, OR REVISED CUT LENGTHS.

J. THE ARCHITECT SHALL PROVIDE SCHEMATIC SPRINKLER LAYOUTS ON REFLECTED CEILINGS DRAWINGS, FOR AREAS OF CONCERN. PROVIDE SPRINKLER LAYOUT AS PER ARCHITECTURAL DRAWINGS WHILE MEETING SPRINKLER LISTINGS. COORDINATE WITH ARCHITECT AND ENGINEER WHERE LAYOUTS ARE NOT FEASIBLE AS SHOWN.

K. SHOP DRAWINGS SHALL BE PROVIDED BY THE SPRINKLER CONTRACTOR USING AN AUTOCAD COMPATIBLE FORMAT. SUBMIT TO OWNERS INSURANCE REVIEW CONSULTANT AND ARCHITECT AND ENGINEER. AS-BUILT DRAWINGS AND ELECTRONIC DRAWING FILES SHALL BE PROVIDED AT END OF PROJECT BY CONTRACTOR.

L. FIRE SPRINKLER SHOP DRAWINGS, CALCULATIONS AND MATERIALS SHALL BE SUBMITTED AND REVIEWED BY ENGINEER PRIOR TO SUBMITTING TO OTHER AUTHORITIES HAVING JURISDICTION.

M. FIRE SPRINKLER CONTRACTOR TO ACQUIRE ALL NECESSARY PERMITS AND/OR APPROVALS FROM CITY, COUNTY, AND STATE.

N. PRESSURE TEST AND CERTIFY SPRINKLER SYSTEM.

O. PIPE ROUTING, ELEVATIONS, SPRINKLER LOCATIONS, ARE SCHEMATIC, AND SHALL BE USED AS REFERENCE ONLY. INSTALLER SHALL FIELD VERIFY CONDITIONS, AND PROVIDE OFFSETS AS REQUIRED FOR INSTALLATION. DEVIATION FROM SCHEMATIC PLAN SHALL BE APPROVED IN WRITING BY THE ENGINEER, PRIOR TO INSTALLATION.

P. NEW FIRE PROTECTION WORK TO INCLUDE HEADS AND PIPING SYSTEM AS REQUIRED TO MEET NFPA REQUIREMENTS.

Q. NEW PIPING TO BE SCHEDULE 40 STEEL PIPE LISTED FOR FIRE PROTECTION.

R. SEE ARCHITECTURAL PLANS FOR CEILING HEIGHTS.

S. SUBMIT FIRE PROTECTION DRAWINGS TO LANDLORD'S/OWNER'S INSURANCE REVIEW CONSULTANT.

T. COORDINATE WITH AHJ FOR SYSTEM DESIGN REQUIREMENTS.

KEYED NOTES

1. FIRE SPRINKLER SYSTEM TO ACCOMMODATE AREA(S) SHOWN.
2. FIRE ALARM AND STROBE.
3. STAIR STAND PIPE ASSEMBILY.
4. FIRE RISER FLOOR ZONE VALVE AND TAMPER FLOW SWITCH ASSEMBLY. PROVIDE MANUAL FLOOR ISOLATION VALVE.

KEYPLAN

Copyright (C) 2010 by Colvin Engineering Associates, Inc. Salt Lake City, Utah. All rights reserved. Unauthorized copying and/or use is illegal and subject to prosecution.

C:\Revit Local Models\2010-074.00 - WSU PH II Bldg 2 - Tyler 2011.rvt
5/17/2011 10:00:48 AM

MHTN ARCHITECTS
MHTN Architects, Inc.
420 East South Temple
Suite 100
Salt Lake City, Utah 84111
Telephone (801) 595-6700
Telefax (801) 595-6717
www.mhtn.com

Colvin Engineering Associates, Inc.
244 West 300 North Suite 200
Salt Lake City, Utah 84103
Phone: (801) 322-2400 / Fax: (801) 322-2416

WEBER STATE UNIVERSITY
RESIDENTIAL LIFE PHASE II - BLDG 2

DFCM PROJECT NUMBER: 10176810

WEBER STATE UNIVERSITY
OGDEN, UTAH 84408

SEAL

MHTN PROJECT NO. 10176810

DRAWN BY: TCF CHECKED BY: BRC

ISSUED:

NO.	DATE	DESCRIPTION

CONTRACTOR TO VERIFY DRAWINGS IN FIELD USE REFLECT LAST REVISION DATE.

NO.	DATE	DESCRIPTION

SHEET NAME

LEVEL ONE FIRE PROTECTION PLAN - AREA 'B'

CONSTRUCTION SET

17 MAY 2011

SHEET NUMBER

FP101B

1 LEVEL TWO FIRE PROTECTION PLAN - AREA 'A'

SCALE: 1/8" = 1'-0"

6' 0' 4' 8' 12' 16'

FIRE PROTECTION GENERAL NOTES

A. AUTOMATIC FIRE SPRINKLER SYSTEM SHALL BE HYDRAULICALLY CALCULATED IN ACCORDANCE WITH NFPA #14, 2009 EDITION.

B. AUTOMATIC FIRE SPRINKLER SYSTEM SHALL BE INSTALLED IN ACCORDANCE WITH NFPA#14, 2009 EDITION, INSTALLATION OF SPRINKLER SYSTEMS.

C. FURNISH AND INSTALL NEW PIPE, FITTINGS, SPRINKLER HEADS AS REQUIRED TO COMPLETE THE WORK.

D. NEW SPRINKLER HEADS TO MATCH CEILING TYPE. COORDINATE WITH ARCHITECTURAL SHEETS.

E. ALL PIPING SHALL BE DOMESTIC.

F. FITTINGS SHALL BE THREADED, WELDED AND GROOVED IN ACCORDANCE WITH LISTING AND NFPA #13 REQUIREMENTS.

G. SEISMIC BRACING AND FLEXIBLE COUPLINGS SHALL BE PROVIDED AS REQUIRED FOR SEISMIC PROTECTION.

H. PLAIN END OR MECHANICAL TEES SHALL NOT BE USED, UNLESS REQUIRED FOR FIELD MODIFICATION OF PIPING SYSTEM.

I. THE SPRINKLER CONTRACTOR SHALL COORDINATE WITH OTHER TRADES AND PROVIDE ADDITIONAL OFFSETS AS REQUIRED FOR INSTALLATION. SPRINKLER PIPING SHALL BE REROUTED AS REQUIRED WHERE CONFLICTS OCCUR. SPRINKLER CONTRACTOR'S PRICING SHALL INCLUDE ANY PIPING OFFSETS, OR REVISED CUT LENGTHS.

J. THE ARCHITECT SHALL PROVIDE SCHEMATIC SPRINKLER LAYOUTS ON REFLECTED CEILINGS DRAWINGS, FOR AREAS OF CONCERN. PROVIDE SPRINKLER LAYOUT AS PER ARCHITECTURAL DRAWINGS WHILE MEETING SPRINKLER LISTINGS. COORDINATE WITH ARCHITECT AND ENGINEER WHERE LAYOUTS ARE NOT FEASIBLE AS SHOWN.

K. SHOP DRAWINGS SHALL BE PROVIDED BY THE SPRINKLER CONTRACTOR USING AN AUTOCAD COMPATIBLE FORMAT. SUBMIT TO OWNERS INSURANCE REVIEW CONSULTANT AND ARCHITECT AND ENGINEER. AS-BUILT DRAWINGS AND ELECTRONIC DRAWING FILES SHALL BE PROVIDED AT END OF PROJECT BY CONTRACTOR.

L. FIRE SPRINKLER SHOP DRAWINGS, CALCULATIONS AND MATERIALS SHALL BE SUBMITTED AND REVIEWED BY ENGINEER PRIOR TO SUBMITTING TO OTHER AUTHORITIES HAVING JURISDICTION.

M. FIRE SPRINKLER CONTRACTOR TO ACQUIRE ALL NECESSARY PERMITS AND/OR APPROVALS FROM CITY, COUNTY, AND STATE.

N. PRESSURE TEST AND CERTIFY SPRINKLER SYSTEM.

O. PIPE ROUTING, ELEVATIONS, SPRINKLER LOCATIONS, ARE SCHEMATIC, AND SHALL BE USED AS REFERENCE ONLY. INSTALLER SHALL FIELD VERIFY CONDITIONS, AND PROVIDE OFFSETS AS REQUIRED FOR INSTALLATION. DEVIATION FROM SCHEMATIC PLAN SHALL BE APPROVED IN WRITING BY THE ENGINEER, PRIOR TO INSTALLATION.

P. NEW FIRE PROTECTION WORK TO INCLUDE HEADS AND PIPING SYSTEM AS REQUIRED TO MEET NFPA REQUIREMENTS.

Q. NEW PIPING TO BE SCHEDULE 40 STEEL PIPE LISTED FOR FIRE PROTECTION.

R. SEE ARCHITECTURAL PLANS FOR CEILING HEIGHTS.

S. SUBMIT FIRE PROTECTION DRAWINGS TO LANDLORD'S/OWNER'S INSURANCE REVIEW CONSULTANT.

T. COORDINATE WITH AHJ FOR SYSTEM DESIGN REQUIREMENTS.

KEYED NOTES

1 FIRE SPRINKLER SYSTEM TO ACCOMMODATE AREA(S) SHOWN.

2 STAIR STAND PIPE ASSEMBILY.

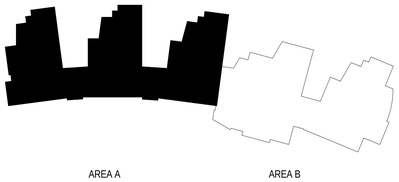

KEYPLAN

MHTN ARCHITECTS
MHTN Architects, Inc.
420 East South Temple
Suite 100
Salt Lake City, Utah 84111
Telephone (801) 595-6700
Telefax (801) 595-6717
www.mhtn.com

Colvin Engineering Associates, Inc.
244 West 300 North Suite 200
Salt Lake City, Utah 84103
Phone: (801) 322-2400 / Fax: (801) 322-2416

WEBER STATE UNIVERSITY
RESIDENTIAL LIFE PHASE II - BLDG 2

DFCM PROJECT NUMBER: 10176810

WEBER STATE UNIVERSITY
OGDEN, UTAH 84408

SEAL

MHTN PROJECT NO. 10176810

DRAWN BY: TCF CHECKED BY: BRC

ISSUED:

NO.	DATE	DESCRIPTION

CONTRACTOR TO VERIFY DRAWINGS IN FIELD USE REFLECT LAST REVISION DATE.

NO.	DATE	DESCRIPTION

SHEET NAME

LEVEL TWO FIRE PROTECTION PLAN - AREA 'A'

CONSTRUCTION SET

17 MAY 2011

SHEET NUMBER

FP102A

Copyright (C) 2010 by Colvin Engineering Associates, Inc. Salt Lake City, Utah. All rights reserved. Unauthorized copying and/or use is illegal and subject to prosecution.

C:\Revit Local Models\2010-074.00 - WSU Ph II Bldg 2 - Tyler 2011.rvt
5/17/2011 10:00:56 AM

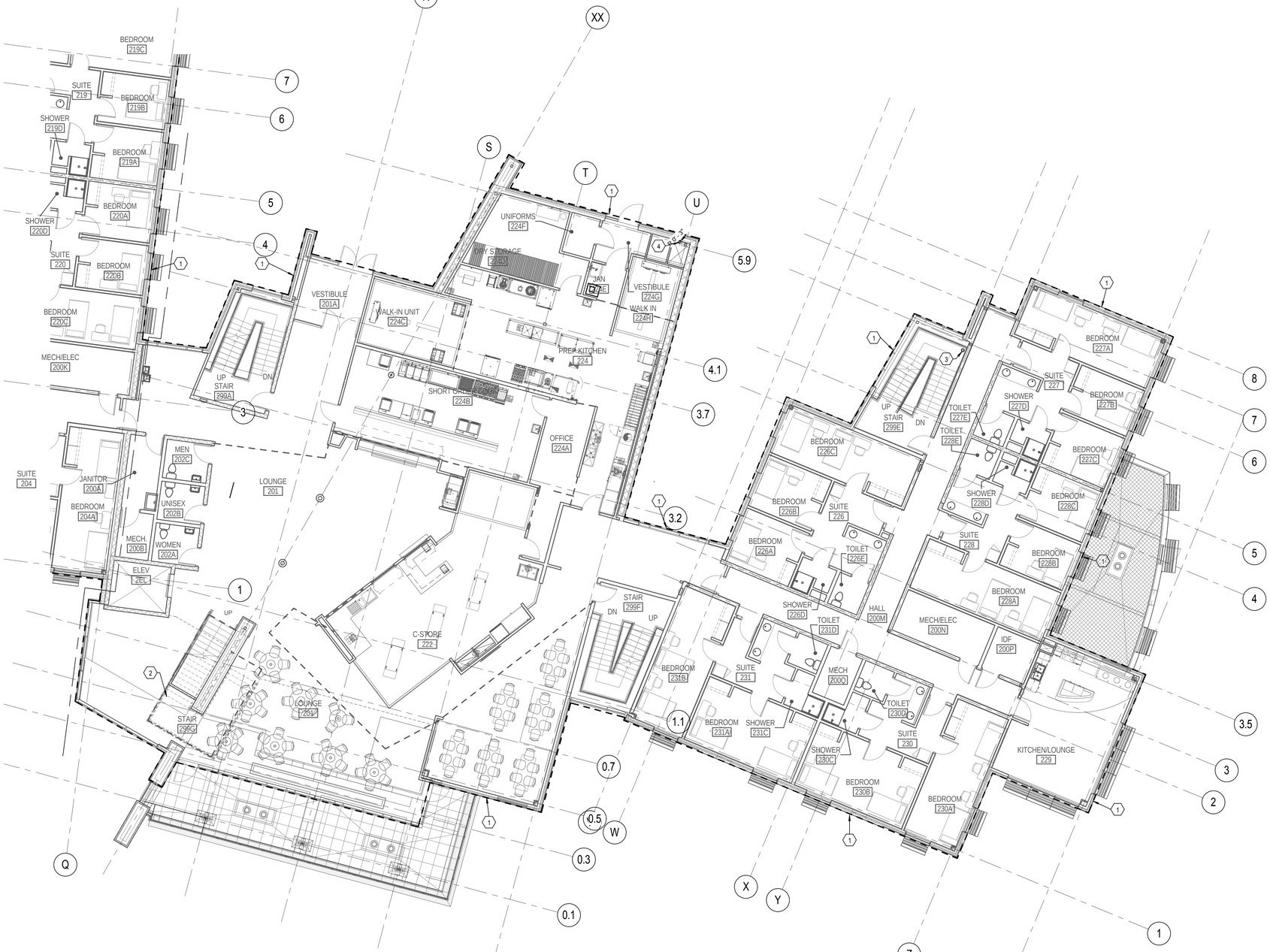

1 LEVEL TWO FIRE PROTECTION PLAN - AREA 'B'

SCALE: 1/8" = 1'-0"

6' 0' 4' 8' 12' 16'

FIRE PROTECTION GENERAL NOTES

A. AUTOMATIC FIRE SPRINKLER SYSTEM SHALL BE HYDRAULICALLY CALCULATED IN ACCORDANCE WITH NFPA #14, 2009 EDITION.

B. AUTOMATIC FIRE SPRINKLER SYSTEM SHALL BE INSTALLED IN ACCORDANCE WITH NFPA#14, 2009 EDITION, INSTALLATION OF SPRINKLER SYSTEMS.

C. FURNISH AND INSTALL NEW PIPE, FITTINGS, SPRINKLER HEADS AS REQUIRED TO COMPLETE THE WORK.

D. NEW SPRINKLER HEADS TO MATCH CEILING TYPE. COORDINATE WITH ARCHITECTURAL SHEETS.

E. ALL PIPING SHALL BE DOMESTIC.

F. FITTINGS SHALL BE THREADED, WELDED AND GROOVED IN ACCORDANCE WITH LISTING AND NFPA #13 REQUIREMENTS.

G. SEISMIC BRACING AND FLEXIBLE COUPLINGS SHALL BE PROVIDED AS REQUIRED FOR SEISMIC PROTECTION.

H. PLAIN END OR MECHANICAL TEES SHALL NOT BE USED, UNLESS REQUIRED FOR FIELD MODIFICATION OF PIPING SYSTEM.

I. THE SPRINKLER CONTRACTOR SHALL COORDINATE WITH OTHER TRADES AND PROVIDE ADDITIONAL OFFSETS AS REQUIRED FOR INSTALLATION. SPRINKLER PIPING SHALL BE REROUTED AS REQUIRED WHERE CONFLICTS OCCUR. SPRINKLER CONTRACTOR'S PRICING SHALL INCLUDE ANY PIPING OFFSETS, OR REVISED CUT LENGTHS.

J. THE ARCHITECT SHALL PROVIDE SCHEMATIC SPRINKLER LAYOUTS ON REFLECTED CEILINGS DRAWINGS, FOR AREAS OF CONCERN. PROVIDE SPRINKLER LAYOUT AS PER ARCHITECTURAL DRAWINGS WHILE MEETING SPRINKLER LISTINGS. COORDINATE WITH ARCHITECT AND ENGINEER WHERE LAYOUTS ARE NOT FEASIBLE AS SHOWN.

K. SHOP DRAWINGS SHALL BE PROVIDED BY THE SPRINKLER CONTRACTOR USING AN AUTOCAD COMPATIBLE FORMAT. SUBMIT TO OWNERS INSURANCE REVIEW CONSULTANT AND ARCHITECT AND ENGINEER. AS-BUILT DRAWINGS AND ELECTRONIC DRAWING FILES SHALL BE PROVIDED AT END OF PROJECT BY CONTRACTOR.

L. FIRE SPRINKLER SHOP DRAWINGS, CALCULATIONS AND MATERIALS SHALL BE SUBMITTED AND REVIEWED BY ENGINEER PRIOR TO SUBMITTING TO OTHER AUTHORITIES HAVING JURISDICTION.

M. FIRE SPRINKLER CONTRACTOR TO ACQUIRE ALL NECESSARY PERMITS AND/OR APPROVALS FROM CITY, COUNTY, AND STATE.

N. PRESSURE TEST AND CERTIFY SPRINKLER SYSTEM.

O. PIPE ROUTING, ELEVATIONS, SPRINKLER LOCATIONS, ARE SCHEMATIC, AND SHALL BE USED AS REFERENCE ONLY. INSTALLER SHALL FIELD VERIFY CONDITIONS, AND PROVIDE OFFSETS AS REQUIRED FOR INSTALLATION. DEVIATION FROM SCHEMATIC PLAN SHALL BE APPROVED IN WRITING BY THE ENGINEER, PRIOR TO INSTALLATION.

P. NEW FIRE PROTECTION WORK TO INCLUDE HEADS AND PIPING SYSTEM AS REQUIRED TO MEET NFPA REQUIREMENTS.

Q. NEW PIPING TO BE SCHEDULE 40 STEEL PIPE LISTED FOR FIRE PROTECTION.

R. SEE ARCHITECTURAL PLANS FOR CEILING HEIGHTS.

S. SUBMIT FIRE PROTECTION DRAWINGS TO LANDLORD'S/OWNER'S INSURANCE REVIEW CONSULTANT.

T. COORDINATE WITH AHJ FOR SYSTEM DESIGN REQUIREMENTS.

KEYED NOTES

1 FIRE SPRINKLER SYSTEM TO ACCOMMODATE AREA(S) SHOWN.

2 FIRE SPRINKLING REQUIRED UNDER STAIRS.

3 STAIR STAND PIPE ASSEMBLY.

4 FIRE RISER FLOOR ZONE VALVE AND TAMPER FLOW SWITCH ASSEMBLY. PROVIDE MANUAL FLOOR ISOLATION VALVE.

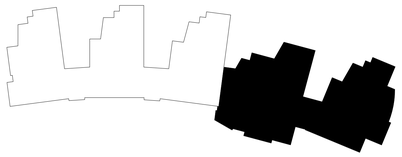

KEYPLAN

Copyright (C) 2010 by Colvin Engineering Associates, Inc. Salt Lake City, Utah. All rights reserved. Unauthorized copying and/or use is illegal and subject to prosecution.

C:\Revit Local Models\2010-074.00 - WSU PH II Bldg 2 - Tyler 2011.rvt
5/17/2011 10:01:04 AM

MHTN ARCHITECTS
MHTN Architects, Inc.
420 East South Temple
Suite 100
Salt Lake City, Utah 84111
Telephone (801) 595-6700
Telefax (801) 595-6717
www.mhtn.com

Colvin Engineering Associates, Inc.
244 West 300 North Suite 200
Salt Lake City, Utah 84103
Phone: (801) 322-2400 / Fax: (801) 322-2416

WEBER STATE UNIVERSITY
RESIDENTIAL LIFE PHASE II - BLDG 2

DFCM PROJECT NUMBER: 10176810

WEBER STATE UNIVERSITY
OGDEN, UTAH 84408

SEAL

MHTN PROJECT NO. 10176810

DRAWN BY: TCF CHECKED BY: BRC

ISSUED:

NO.	DATE	DESCRIPTION

CONTRACTOR TO VERIFY DRAWINGS IN FIELD USE REFLECT LAST REVISION DATE.

NO.	DATE	DESCRIPTION

SHEET NAME

LEVEL TWO FIRE PROTECTION PLAN - AREA 'B'

CONSTRUCTION SET

17 MAY 2011

SHEET NUMBER

FP102B

LEVEL THREE FIRE PROTECTION PLAN - AREA 'A'

1 SCALE: 1/8" = 1'-0"

FIRE PROTECTION GENERAL NOTES

A. AUTOMATIC FIRE SPRINKLER SYSTEM SHALL BE HYDRAULICALLY CALCULATED IN ACCORDANCE WITH NFPA #14, 2009 EDITION.

B. AUTOMATIC FIRE SPRINKLER SYSTEM SHALL BE INSTALLED IN ACCORDANCE WITH NFPA#14, 2009 EDITION, INSTALLATION OF SPRINKLER SYSTEMS.

C. FURNISH AND INSTALL NEW PIPE, FITTINGS, SPRINKLER HEADS AS REQUIRED TO COMPLETE THE WORK.

D. NEW SPRINKLER HEADS TO MATCH CEILING TYPE. COORDINATE WITH ARCHITECTURAL SHEETS.

E. ALL PIPING SHALL BE DOMESTIC.

F. FITTINGS SHALL BE THREADED, WELDED AND GROOVED IN ACCORDANCE WITH LISTING AND NFPA #13 REQUIREMENTS.

G. SEISMIC BRACING AND FLEXIBLE COUPLINGS SHALL BE PROVIDED AS REQUIRED FOR SEISMIC PROTECTION.

H. PLAIN END OR MECHANICAL TEES SHALL NOT BE USED, UNLESS REQUIRED FOR FIELD MODIFICATION OF PIPING SYSTEM.

I. THE SPRINKLER CONTRACTOR SHALL COORDINATE WITH OTHER TRADES AND PROVIDE ADDITIONAL OFFSETS AS REQUIRED FOR INSTALLATION. SPRINKLER PIPING SHALL BE REROUTED AS REQUIRED WHERE CONFLICTS OCCUR. SPRINKLER CONTRACTOR'S PRICING SHALL INCLUDE ANY PIPING OFFSETS, OR REVISED CUT LENGTHS.

J. THE ARCHITECT SHALL PROVIDE SCHEMATIC SPRINKLER LAYOUTS ON REFLECTED CEILINGS DRAWINGS, FOR AREAS OF CONCERN. PROVIDE SPRINKLER LAYOUT AS PER ARCHITECTURAL DRAWINGS WHILE MEETING SPRINKLER LISTINGS. COORDINATE WITH ARCHITECT AND ENGINEER WHERE LAYOUTS ARE NOT FEASIBLE AS SHOWN.

K. SHOP DRAWINGS SHALL BE PROVIDED BY THE SPRINKLER CONTRACTOR USING AN AUTOCAD COMPATIBLE FORMAT. SUBMIT TO OWNERS INSURANCE REVIEW CONSULTANT AND ARCHITECT AND ENGINEER. AS-BUILT DRAWINGS AND ELECTRONIC DRAWING FILES SHALL BE PROVIDED AT END OF PROJECT BY CONTRACTOR.

L. FIRE SPRINKLER SHOP DRAWINGS, CALCULATIONS AND MATERIALS SHALL BE SUBMITTED AND REVIEWED BY ENGINEER PRIOR TO SUBMITTING TO OTHER AUTHORITIES HAVING JURISDICTION.

M. FIRE SPRINKLER CONTRACTOR TO ACQUIRE ALL NECESSARY PERMITS AND/OR APPROVALS FROM CITY, COUNTY, AND STATE.

N. PRESSURE TEST AND CERTIFY SPRINKLER SYSTEM.

O. PIPE ROUTING, ELEVATIONS, SPRINKLER LOCATIONS, ARE SCHEMATIC, AND SHALL BE USED AS REFERENCE ONLY. INSTALLER SHALL FIELD VERIFY CONDITIONS, AND PROVIDE OFFSETS AS REQUIRED FOR INSTALLATION. DEVIATION FROM SCHEMATIC PLAN SHALL BE APPROVED IN WRITING BY THE ENGINEER, PRIOR TO INSTALLATION.

P. NEW FIRE PROTECTION WORK TO INCLUDE HEADS AND PIPING SYSTEM AS REQUIRED TO MEET NFPA REQUIREMENTS.

Q. NEW PIPING TO BE SCHEDULE 40 STEEL PIPE LISTED FOR FIRE PROTECTION.

R. SEE ARCHITECTURAL PLANS FOR CEILING HEIGHTS.

S. SUBMIT FIRE PROTECTION DRAWINGS TO LANDLORD'S/OWNER'S INSURANCE REVIEW CONSULTANT.

T. COORDINATE WITH AHJ FOR SYSTEM DESIGN REQUIREMENTS.

KEYED NOTES

1 FIRE SPRINKLER SYSTEM TO ACCOMMODATE AREA(S) SHOWN.

2 STAIR STAND PIPE ASSEMBILY.

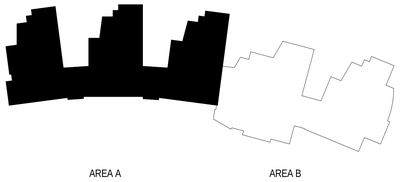

KEYPLAN

MHTN ARCHITECTS
MHTN Architects, Inc.
420 East South Temple
Suite 100
Salt Lake City, Utah 84111
Telephone (801) 595-6700
Telefax (801) 595-6717
www.mhtn.com

Colvin Engineering Associates, Inc.
244 West 300 North Suite 200
Salt Lake City, Utah 84103
Phone: (801) 322-2400 / Fax: (801) 322-2416

WEBER STATE UNIVERSITY
RESIDENTIAL LIFE PHASE II - BLDG 2

DFCM PROJECT NUMBER: 10176810

WEBER STATE UNIVERSITY
OGDEN, UTAH 84408

SEAL

MHTN PROJECT NO. 10176810

DRAWN BY: TCF CHECKED BY: BRC

ISSUED:

NO.	DATE	DESCRIPTION

CONTRACTOR TO VERIFY DRAWINGS IN FIELD USE REFLECT LAST REVISION DATE:

NO.	DATE	DESCRIPTION

SHEET NAME

LEVEL THREE FIRE PROTECTION PLAN - AREA 'A'

CONSTRUCTION SET

17 MAY 2011

SHEET NUMBER

FP103A

Copyright (C) 2010 by Colvin Engineering Associates, Inc. Salt Lake City, Utah. All rights reserved. Unauthorized copying and/or use is illegal and subject to prosecution.

C:\Revit Local Models\2010-074.00 - WSU PH II Bldg 2 - Tyler 2011.rvt
5/17/2011 10:01:09 AM

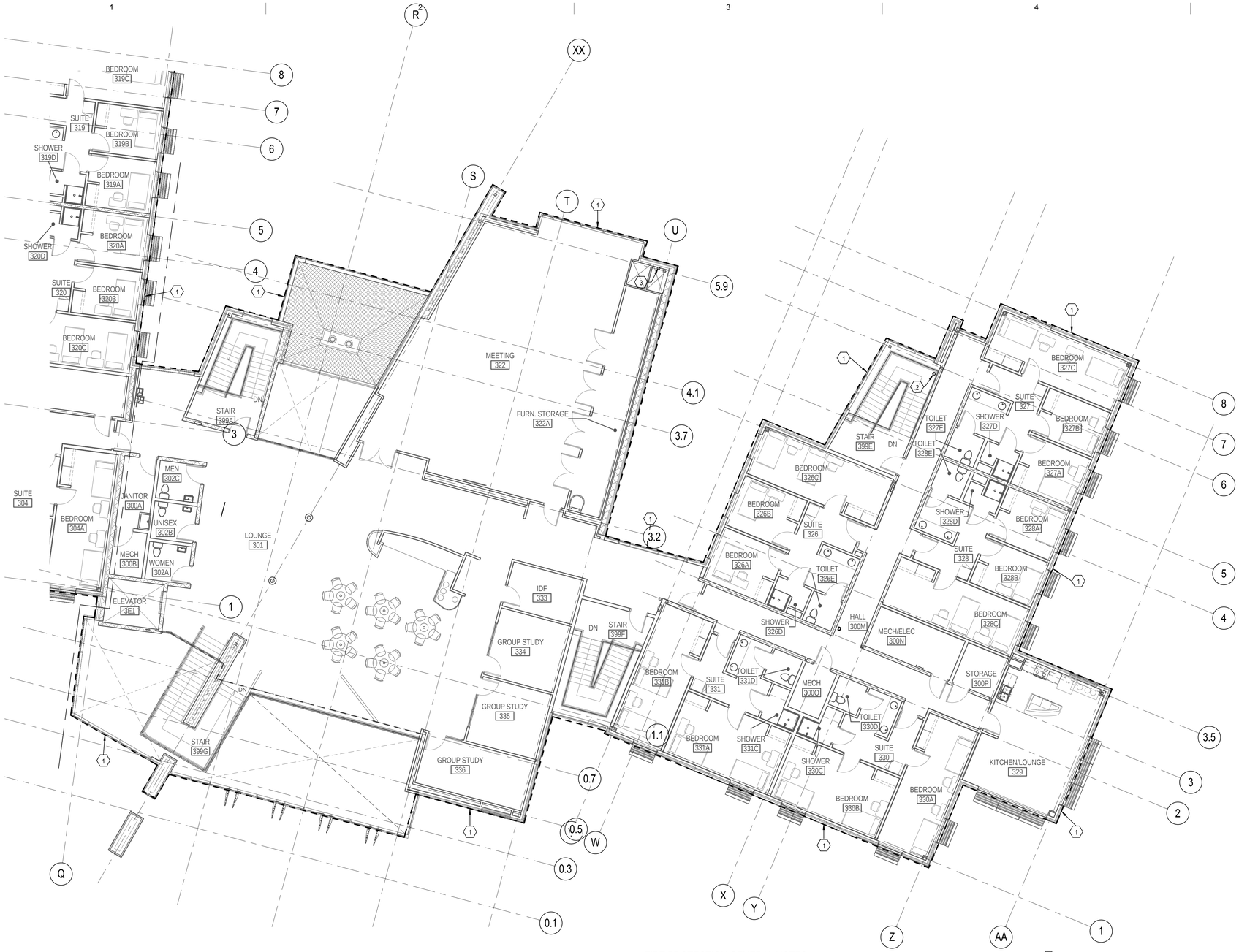

LEVEL THREE FIRE PROTECTION PLAN - AREA 'B'

1 SCALE: 1/8" = 1'-0"

FIRE PROTECTION GENERAL NOTES

A. AUTOMATIC FIRE SPRINKLER SYSTEM SHALL BE HYDRAULICALLY CALCULATED IN ACCORDANCE WITH NFPA #14, 2009 EDITION.

B. AUTOMATIC FIRE SPRINKLER SYSTEM SHALL BE INSTALLED IN ACCORDANCE WITH NFPA#14, 2009 EDITION, INSTALLATION OF SPRINKLER SYSTEMS.

C. FURNISH AND INSTALL NEW PIPE, FITTINGS, SPRINKLER HEADS AS REQUIRED TO COMPLETE THE WORK.

D. NEW SPRINKLER HEADS TO MATCH CEILING TYPE. COORDINATE WITH ARCHITECTURAL SHEETS.

E. ALL PIPING SHALL BE DOMESTIC.

F. FITTINGS SHALL BE THREADED, WELDED AND GROOVED IN ACCORDANCE WITH LISTING AND NFPA #13 REQUIREMENTS.

G. SEISMIC BRACING AND FLEXIBLE COUPLINGS SHALL BE PROVIDED AS REQUIRED FOR SEISMIC PROTECTION.

H. PLAIN END OR MECHANICAL TEES SHALL NOT BE USED, UNLESS REQUIRED FOR FIELD MODIFICATION OF PIPING SYSTEM.

I. THE SPRINKLER CONTRACTOR SHALL COORDINATE WITH OTHER TRADES AND PROVIDE ADDITIONAL OFFSETS AS REQUIRED FOR INSTALLATION. SPRINKLER PIPING SHALL BE REROUTED AS REQUIRED WHERE CONFLICTS OCCUR. SPRINKLER CONTRACTOR'S PRICING SHALL INCLUDE ANY PIPING OFFSETS, OR REVISED CUT LENGTHS.

J. THE ARCHITECT SHALL PROVIDE SCHEMATIC SPRINKLER LAYOUTS ON REFLECTED CEILINGS DRAWINGS, FOR AREAS OF CONCERN. PROVIDE SPRINKLER LAYOUT AS PER ARCHITECTURAL DRAWINGS WHILE MEETING SPRINKLER LISTINGS. COORDINATE WITH ARCHITECT AND ENGINEER WHERE LAYOUTS ARE NOT FEASIBLE AS SHOWN.

K. SHOP DRAWINGS SHALL BE PROVIDED BY THE SPRINKLER CONTRACTOR USING AN AUTOCAD COMPATIBLE FORMAT. SUBMIT TO OWNERS INSURANCE REVIEW CONSULTANT AND ARCHITECT AND ENGINEER. AS-BUILT DRAWINGS AND ELECTRONIC DRAWING FILES SHALL BE PROVIDED AT END OF PROJECT BY CONTRACTOR.

L. FIRE SPRINKLER SHOP DRAWINGS, CALCULATIONS AND MATERIALS SHALL BE SUBMITTED AND REVIEWED BY ENGINEER PRIOR TO SUBMITTING TO OTHER AUTHORITIES HAVING JURISDICTION.

M. FIRE SPRINKLER CONTRACTOR TO ACQUIRE ALL NECESSARY PERMITS AND/OR APPROVALS FROM CITY, COUNTY, AND STATE.

N. PRESSURE TEST AND CERTIFY SPRINKLER SYSTEM.

O. PIPE ROUTING, ELEVATIONS, SPRINKLER LOCATIONS, ARE SCHEMATIC, AND SHALL BE USED AS REFERENCE ONLY. INSTALLER SHALL FIELD VERIFY CONDITIONS, AND PROVIDE OFFSETS AS REQUIRED FOR INSTALLATION. DEVIATION FROM SCHEMATIC PLAN SHALL BE APPROVED IN WRITING BY THE ENGINEER, PRIOR TO INSTALLATION.

P. NEW FIRE PROTECTION WORK TO INCLUDE HEADS AND PIPING SYSTEM AS REQUIRED TO MEET NFPA REQUIREMENTS.

Q. NEW PIPING TO BE SCHEDULE 40 STEEL PIPE LISTED FOR FIRE PROTECTION.

R. SEE ARCHITECTURAL PLANS FOR CEILING HEIGHTS.

S. SUBMIT FIRE PROTECTION DRAWINGS TO LANDLORD'S/OWNER'S INSURANCE REVIEW CONSULTANT.

T. COORDINATE WITH AHJ FOR SYSTEM DESIGN REQUIREMENTS.

KEYED NOTES

1 FIRE SPRINKLER SYSTEM TO ACCOMMODATE AREA(S) SHOWN.

2 STAIR STAND PIPE ASSEMBILY.

3 FIRE RISER FLOOR ZONE VALVE AND TAMPER FLOW SWITCH ASSEMBLY. PROVIDE MANUAL FLOOR ISOLATION VALVE.

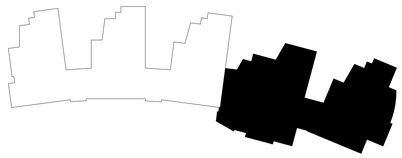

KEYPLAN

MHTN ARCHITECTS
MHTN Architects, Inc.
420 East South Temple
Suite 100
Salt Lake City, Utah 84111
Telephone (801) 595-6700
Telefax (801) 595-6717
www.mhtn.com

Colvin Engineering Associates, Inc.
244 West 300 North Suite 200
Salt Lake City, Utah 84103
Phone: (801) 322-2400 / Fax: (801) 322-2416

WEBER STATE UNIVERSITY RESIDENTIAL LIFE PHASE II - BLDG 2

DFCM PROJECT NUMBER: 10176810

WEBER STATE UNIVERSITY
OGDEN, UTAH 84408

SEAL

MHTN PROJECT NO. 10176810

DRAWN BY: TCF CHECKED BY: BRC

ISSUED:

NO	DATE	DESCRIPTION

CONTRACTOR TO VERIFY DRAWINGS IN FIELD USE REFLECT LAST REVISION DATE.

NO	DATE	DESCRIPTION

SHEET NAME

LEVEL THREE FIRE PROTECTION PLAN - AREA 'B'

CONSTRUCTION SET

17 MAY 2011

SHEET NUMBER

FP103B

Copyright (C) 2010 by Colvin Engineering Associates, Inc. Salt Lake City, Utah. All rights reserved. Unauthorized copying and/or use is illegal and subject to prosecution.

C:\Revit Local Models\2010-074.00 - WSU PH II Bldg 2 - Tyler 2011.rvt
5/17/2011 10:01:14 AM

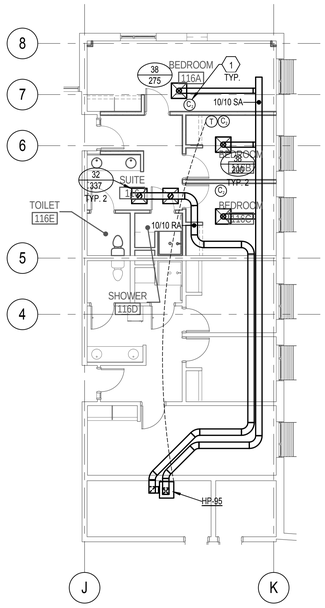

1 LEVEL ONE MECHANICAL FLOOR PLAN - ADD ALTERNATE 1

SCALE: 1/8" = 1'-0"

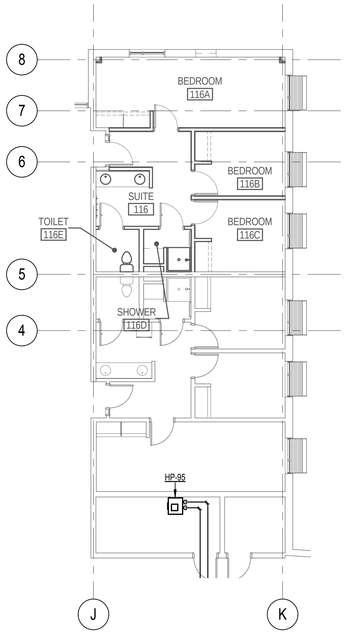

2 LEVEL ONE MECHANICAL PIPING FLOOR PLAN - ADD ALTERNATE 1

SCALE: 1/8" = 1'-0"

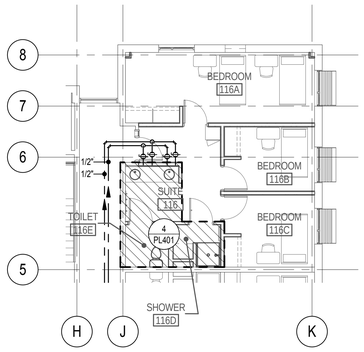

3 LEVEL ONE PLUMBING FLOOR PLAN - ADD ALTERNATE 1

SCALE: 1/8" = 1'-0"

KEYED NOTES

1 C02 SENSOR (TYPICAL)

GENERAL NOTES

A. ALL HEAT PUMPS TO HAVE SHEETMETAL PAN THAT DRAINS TO FLOOR DRAINS.

B. NO DUCT OR PIPE TO RUN OVER ELECTRICAL PANEL.

C. ALL RECTANGULAR SUPPLY AND RETURN DUCT TO BE INTERNALLY LINED WITH 1" LINER.

D FIRE/SMOKE DAMPER MOTORS TO BE MOUNTED TO SIDE OF NEAREST CEILING ACCESS HATCH OR OPENCEILING AREA. PROVIDE DUCT ACCESS AS REQUIRED.TYPICAL

E COORDINATE DUCTWORK AND EQUIPMENT WITH ALL TRADES.

F DIFFUSER DUCT RUNOUTS SAME SIZE AS DIFFUSER NECK UNLESS NOTED OTHERWISE.

G PROVIDE 18" X 18" ACCESS DOOR TO ALL FIRE/SMOKE AND MOTORIZED DAMPERS.

H ALL DUCT WORK IN EXPOSED AREAS TO BE HARD SPIRALUNINSULATED, RUN IN NEAT MANNER AND COORDINATE ON SITE WITH ARCHITECT.

I ROUTE CONDENSATE DRAINS FOR ALL REQUIRED MECHANICAL EQUIPMENT TO NEAREST FLOOR DRAIN OR SERVICE SINK.

J CONTRACTOR TO COORDINATE ALL ROOFTOP EQUIPMENT REQUIRING MAINTENANCE IS TO BE LOCATED 10'-0" MINIMUM FROM THE EDGE OF ROOF.

K PROVIDE A WATER TIGHT PAN THAT IS 2" DEEP AND 6" LARGER THAN ANY PLUMBING, MECHANICAL PIPING, OR MECHANICAL EQUIPMENT INSTALLED OVER ANY ELECTRICAL EQUIPMENT OR GEAR

MHTN ARCHITECTS
MHTN Architects, Inc.
420 East South Temple
Suite 100
Salt Lake City, Utah 84111
Telephone (801) 595-6700
Telefax (801) 595-6717
www.mhtn.com

Colvin Engineering Associates, Inc.
244 West 300 North Suite 200
Salt Lake City, Utah 84103
Phone: (801) 322-2400 / Fax: (801) 322-2416

WEBER STATE UNIVERSITY
RESIDENTIAL LIFE PHASE II - BLDG 2
DFCM PROJECT NUMBER: 10176810

WEBER STATE UNIVERSITY
OGDEN, UTAH 84408

SEAL

MHTN PROJECT NO. 10176810

DRAWN BY: Author CHECKED BY: Checker

ISSUED:

NO	DATE	DESCRIPTION

CONTRACTOR TO VERIFY DRAWINGS IN FIELD USE REFLECT LAST REVISION DATE:

NO	DATE	DESCRIPTION

SHEET NAME
LEVEL ONE ADD ALTERNATE 1

CONSTRUCTION SET
17 MAY 2011

SHEET NUMBER
MH101

Copyright (C) 2010 by Colvin Engineering Associates, Inc. Salt Lake City, Utah. All rights reserved. Unauthorized copying and/or use is illegal and subject to prosecution.

C:\Revit Local Models\2010-074.00 - WSU PH II Bldg 2 - Tyler 2011.rvt
5/17/2011 10:01:18 AM

1 LEVEL ONE MECHANICAL PLAN - AREA 'A'

SCALE: 1/8" = 1'-0"

GENERAL NOTES

A. ALL HEAT PUMPS TO HAVE SHEETMETAL PAN THAT DRAINS TO FLOOR DRAINS.

B. NO DUCT OR PIPE TO RUN OVER ELECTRICAL PANEL.

C. ALL RECTANGULAR SUPPLY AND RETURN DUCT TO BE INTERNALLY LINED WITH 1" LINER.

D FIRE/SMOKE DAMPER MOTORS TO BE MOUNTED TO SIDE OF NEAREST CEILING ACCESS HATCH OR OPENCEILING AREA. PROVIDE DUCT ACCESS AS REQUIRED.TYPICAL

E COORDINATE DUCTWORK AND EQUIPMENT WITH ALL TRADES.

F DIFFUSER DUCT RUNOUTS SAME SIZE AS DIFFUSER NECK UNLESS NOTED OTHERWISE.

G PROVIDE 18" X 18" ACCESS DOOR TO ALL FIRE/SMOKE AND MOTORIZED DAMPERS.

H ALL DUCT WORK IN EXPOSED AREAS TO BE HARD SPIRALUNINSULATED, RUN IN NEAT MANNER AND COORDINATE ON SITE WITH ARCHITECT.

I ROUTE CONDENSATE DRAINS FOR ALL REQUIRED MECHANICAL EQUIPMENT TO NEAREST FLOOR DRAIN OR SERVICE SINK.

J CONTRACTOR TO COORDINATE ALL ROOFTOP EQUIPMENT REQUIRING MAINTENANCE IS TO BE LOCATED 10'-0" MINIMUM FROM THE EDGE OF ROOF.

K PROVIDE A WATER TIGHT PAN THAT IS 2" DEEP AND 6" LARGER THAN ANY PLUMBING, MECHANICAL PIPING, OR MECHANICAL EQUIPMENT INSTALLED OVER ANY ELECTRICAL EQUIPMENT OR GEAR

KEYED NOTES

1 CONTRACTOR TO COORDINATE STRUCTURAL WALL PENETRATION TO BE LOCATED 24" FROM THE END OF THE WALL. PENETRATIONS TO BE BLOCKED IN DURING CONSTRUCTION.

2 CONNECT EXHAUST DUCT TO RANGE HOOD AS REQUIRED.

3 C02 SENSOR (TYPICAL)

4 PROVIDE SOUND WRAP BLANKET AROUND ENTIRE HEAT PUMP.

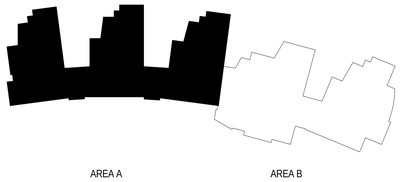

KEYPLAN

MHTN ARCHITECTS
MHTN Architects, Inc.
420 East South Temple
Suite 100
Salt Lake City, Utah 84111
Telephone (801) 595-6700
Telefax (801) 595-6717
www.mhtn.com

Colvin Engineering Associates, Inc.
244 West 300 North Suite 200
Salt Lake City, Utah 84103
Phone: (801) 322-2400 / Fax: (801) 322-2416

WEBER STATE UNIVERSITY
RESIDENTIAL LIFE PHASE II - BLDG 2
DFCM PROJECT NUMBER: 10176810

WEBER STATE UNIVERSITY
OGDEN, UTAH 84408

SEAL

MHTN PROJECT NO. 10176810

DRAWN BY: GM CHECKED BY: BRC

ISSUED:

NO.	DATE	DESCRIPTION

CONTRACTOR TO VERIFY DRAWINGS IN FIELD USE REFLECT LAST REVISION DATE.

NO.	DATE	DESCRIPTION

SHEET NAME

LEVEL ONE MECHANICAL PLAN - AREA 'A'

CONSTRUCTION SET

17 MAY 2011

SHEET NUMBER

MH101A

Copyright (C) 2010 by Colvin Engineering Associates, Inc. Salt Lake City, Utah. All rights reserved. Unauthorized copying and/or use is illegal and subject to prosecution.

C:\Revit Local Models\2010-074.00 - WSU PH II Bldg 2 - Tyler 2011.rvt
5/17/2011 10:01:28 AM

1 LEVEL ONE MECHANICAL PLAN - AREA 'B'

SCALE: 1/8" = 1'-0"

KEYED NOTES

1. CONNECT EXHAUST DUCT TO RANGE HOOD AS REQUIRED.
2. CONTRACTOR TO COORDINATE STRUCTURAL WALL PENETRATION TO BE LOCATED 24" FROM THE END OF THE WALL. PENETRATIONS TO BE BLOCKED IN DURING CONSTRUCTION.
3. PROVIDE DRYER WALL TERMINATION CAP SEIHO MODEL #SFZC WITH BACKDRAFT DAMPER AND CLEAR ANODIZED ALUMINUM FINISH.
4. ROUTE DRYER VENT IN WALL TO DRYER WITH CLEANOUT AT BOTTOM OF RISE AND A WALL CONNECTOR FOR DRYER. TYPICAL 12 DRYERS.
5. PROVIDE SOUND WRAP BLANKET AROUND ENTIRE HEAT PUMP.
6. C02 SENSOR (TYPICAL)
7. PROVIDE ACCESS DOOR TO FIRE SMOKE DAMPER.
8. DUCT CLEAN OUT (TYPICAL)

GENERAL NOTES

A. ALL HEAT PUMPS TO HAVE SHEETMETAL PAN THAT DRAINS TO FLOOR DRAINS.
B. NO DUCT OR PIPE TO RUN OVER ELECTRICAL PANEL.
C. ALL RECTANGULAR SUPPLY AND RETURN DUCT TO BE INTERNALLY LINED WITH 1" LINER.
D FIRE/SMOKE DAMPER MOTORS TO BE MOUNTED TO SIDE OF NEAREST CEILING ACCESS HATCH OR OPENCEILING AREA. PROVIDE DUCT ACCESS AS REQUIRED.TYPICAL
E COORDINATE DUCTWORK AND EQUIPMENT WITH ALL TRADES.
F DIFFUSER DUCT RUNOUTS SAME SIZE AS DIFFUSER NECK UNLESS NOTED OTHERWISE.
G PROVIDE 18" X 18" ACCESS DOOR TO ALL FIRE/SMOKE AND MOTORIZED DAMPERS.
H ALL DUCT WORK IN EXPOSED AREAS TO BE HARD SPIRALUNINSULATED, RUN IN NEAT MANNER AND COORDINATE ON SITE WITH ARCHITECT.
I ROUTE CONDENSATE DRAINS FOR ALL REQUIRED MECHANICAL EQUIPMENT TO NEAREST FLOOR DRAIN OR SERVICE SINK.
J CONTRACTOR TO COORDINATE ALL ROOFTOP EQUIPMENT REQUIRING MAINTENANCE IS TO BE LOCATED 10'-0" MINIMUM FROM THE EDGE OF ROOF.
K PROVIDE A WATER TIGHT PAN THAT IS 2" DEEP AND 6" LARGER THAN ANY PLUMBING, MECHANICAL PIPING, OR MECHANICAL EQUIPMENT INSTALLED OVER ANY ELECTRICAL EQUIPMENT OR GEAR

KEYPLAN

MHTN ARCHITECTS
MHTN Architects, Inc.
420 East South Temple
Suite 100
Salt Lake City, Utah 84111
Telephone (801) 595-6700
Telefax (801) 595-6717
www.mhtn.com

Colvin Engineering Associates, Inc.
244 West 300 North Suite 200
Salt Lake City, Utah 84103
Phone: (801) 322-2400 / Fax: (801) 322-2416

WEBER STATE UNIVERSITY
RESIDENTIAL LIFE PHASE II - BLDG 2

DFCM PROJECT NUMBER: 10176810

WEBER STATE UNIVERSITY
OGDEN, UTAH 84408

SEAL

MHTN PROJECT NO. 10176810

DRAWN BY: GM CHECKED BY: BRC

ISSUED:

NO.	DATE	DESCRIPTION

CONTRACTOR TO VERIFY DRAWINGS IN FIELD USE REFLECT LAST REVISION DATE.

NO.	DATE	DESCRIPTION

SHEET NAME

LEVEL ONE MECHANICAL PLAN - AREA 'B'

CONSTRUCTION SET

17 MAY 2011

SHEET NUMBER

MH101B

Copyright (C) 2010 by Colvin Engineering Associates, Inc. Salt Lake City, Utah. All rights reserved. Unauthorized copying and/or use is illegal and subject to prosecution.

C:\Revit Local Models\2010-074.00 - WSU PH II Bldg 2 - Tyler 2011.rvt
5/17/2011 10:01:38 AM

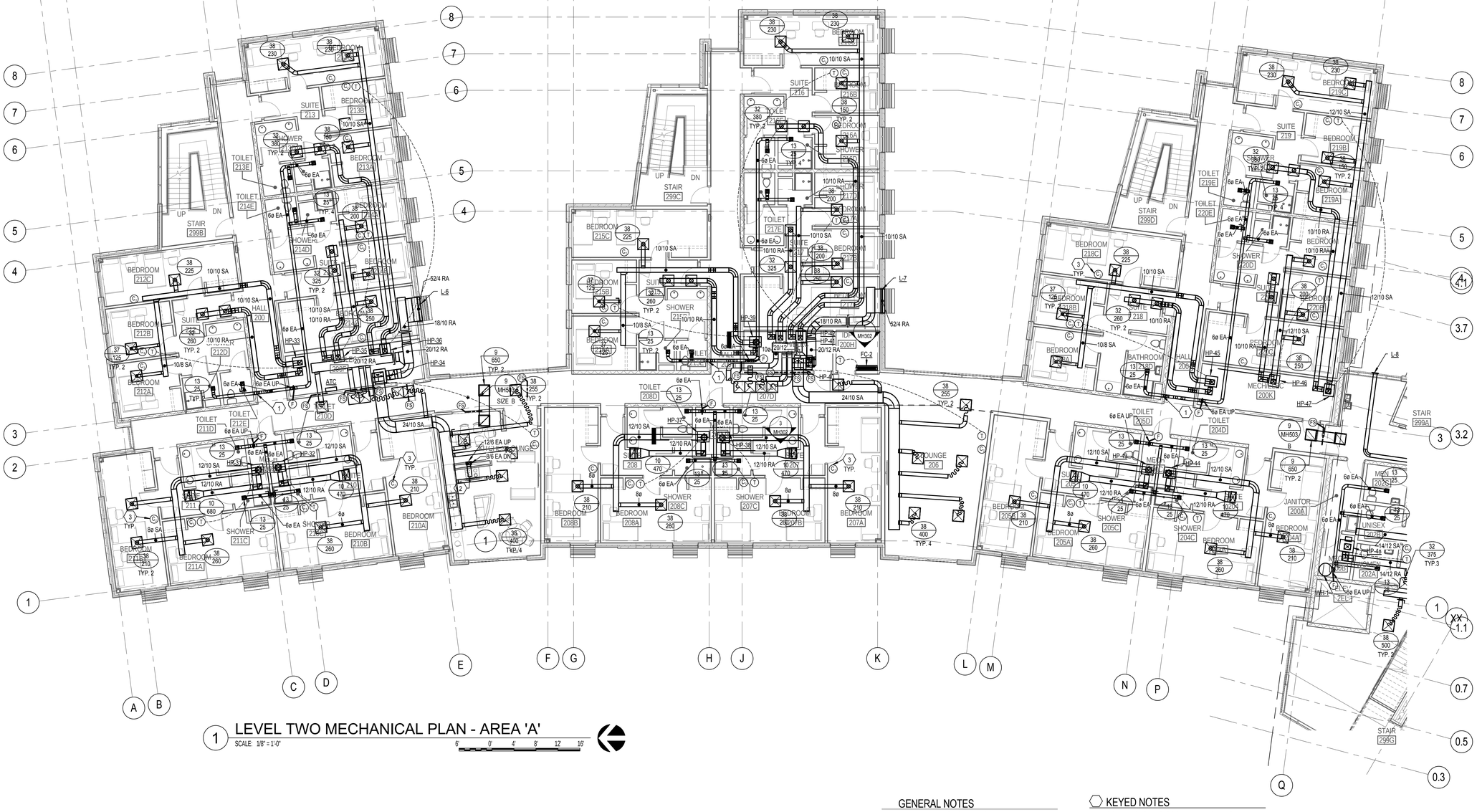

1 LEVEL TWO MECHANICAL PLAN - AREA 'A'

SCALE: 1/8" = 1'-0"

GENERAL NOTES

A. ALL HEAT PUMPS TO HAVE SHEETMETAL PAN THAT DRAINS TO FLOOR DRAINS.

B. NO DUCT OR PIPE TO RUN OVER ELECTRICAL PANEL.

C. ALL RECTANGULAR SUPPLY AND RETURN DUCT TO BE INTERNALLY LINED WITH 1" LINER.

D FIRE/SMOKE DAMPER MOTORS TO BE MOUNTED TO SIDE OF NEAREST CEILING ACCESS HATCH OR OPENCEILING AREA. PROVIDE DUCT ACCESS AS REQUIRED.TYPICAL

E COORDINATE DUCTWORK AND EQUIPMENT WITH ALL TRADES.

F DIFFUSER DUCT RUNOUTS SAME SIZE AS DIFFUSER NECK UNLESS NOTED OTHERWISE.

G PROVIDE 18" X 18" ACCESS DOOR TO ALL FIRE/SMOKE AND MOTORIZED DAMPERS.

H ALL DUCT WORK IN EXPOSED AREAS TO BE HARD SPIRALUNINSULATED, RUN IN NEAT MANNER AND COORDINATE ON SITE WITH ARCHITECT.

I ROUTE CONDENSATE DRAINS FOR ALL REQUIRED MECHANICAL EQUIPMENT TO NEAREST FLOOR DRAIN OR SERVICE SINK.

J CONTRACTOR TO COORDINATE ALL ROOFTOP EQUIPMENT REQUIRING MAINTENANCE IS TO BE LOCATED 10'-0" MINIMUM FROM THE EDGE OF ROOF.

K PROVIDE A WATER TIGHT PAN THAT IS 2" DEEP AND 6" LARGER THAN ANY PLUMBING, MECHANICAL PIPING, OR MECHANICAL EQUIPMENT INSTALLED OVER ANY ELECTRICAL EQUIPMENT OR GEAR

KEYED NOTES

1 CONTRACTOR TO COORDINATE STRUCTURAL WALL PENETRATION TO BE LOCATED 24" FROM THE END OF THE WALL. PENETRATIONS TO BE BLOCKED IN DURING CONSTRUCTION.

2 CONNECT EXHAUST DUCT TO RANGE HOOD AS REQUIRED.

3 C02 SENSOR (TYPICAL)

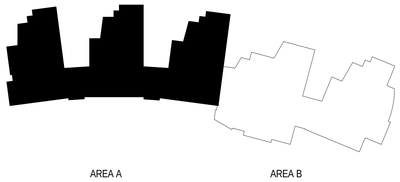

KEYPLAN

MHTN ARCHITECTS
MHTN Architects, Inc.
420 East South Temple
Suite 100
Salt Lake City, Utah 84111
Telephone (801) 595-6700
Telefax (801) 595-6717
www.mhtn.com

Colvin Engineering Associates, Inc.
244 West 300 North Suite 200
Salt Lake City, Utah 84103
Phone: (801) 322-2400 / Fax: (801) 322-2416

WEBER STATE UNIVERSITY
RESIDENTIAL LIFE PHASE II - BLDG 2
DFCM PROJECT NUMBER: 10176810

WEBER STATE UNIVERSITY
OGDEN, UTAH 84408

SEAL

MHTN PROJECT NO. 10176810

DRAWN BY: GM CHECKED BY: BRC

ISSUED:

NO.	DATE	DESCRIPTION

CONTRACTOR TO VERIFY DRAWINGS IN FIELD USE REFLECT LAST REVISION DATE.

NO.	DATE	DESCRIPTION

SHEET NAME
LEVEL TWO MECHANICAL PLAN - AREA 'A'

CONSTRUCTION SET
17 MAY 2011

SHEET NUMBER
MH102A

Copyright (C) 2010 by Colvin Engineering Associates, Inc. Salt Lake City, Utah. All rights reserved. Unauthorized copying and/or use is illegal and subject to prosecution.

C:\Revit Local Models\2010-074.00 - WSU PH II Bldg 2 - Tyler 2011.rvt
5/17/2011 10:01:48 AM

1 LEVEL TWO MECHANICAL PLAN - AREA 'B'

SCALE: 1/8" = 1'-0"

KEYED NOTES

1. CONNECT EXHAUST DUCT TO RANGE HOOD AS REQUIRED.
2. PROVIDE SOUND WRAP BLANKET AROUND ENTIRE HEAT PUMP.
3. C02 SENSOR (TYPICAL)

GENERAL NOTES

A. ALL HEAT PUMPS TO HAVE SHEETMETAL PAN THAT DRAINS TO FLOOR DRAINS.

B. NO DUCT OR PIPE TO RUN OVER ELECTRICAL PANEL.

C. ALL RECTANGULAR SUPPLY AND RETURN DUCT TO BE INTERNALLY LINED WITH 1" LINER.

D FIRE/SMOKE DAMPER MOTORS TO BE MOUNTED TO SIDE OF NEAREST CEILING ACCESS HATCH OR OPENCEILING AREA. PROVIDE DUCT ACCESS AS REQUIRED.TYPICAL

E COORDINATE DUCTWORK AND EQUIPMENT WITH ALL TRADES.

F DIFFUSER DUCT RUNOUTS SAME SIZE AS DIFFUSER NECK UNLESS NOTED OTHERWISE.

G PROVIDE 18" X 18" ACCESS DOOR TO ALL FIRE/SMOKE AND MOTORIZED DAMPERS.

H ALL DUCT WORK IN EXPOSED AREAS TO BE HARD SPIRALUNINSULATED, RUN IN NEAT MANNER AND COORDINATE ON SITE WITH ARCHITECT.

I ROUTE CONDENSATE DRAINS FOR ALL REQUIRED MECHANICAL EQUIPMENT TO NEAREST FLOOR DRAIN OR SERVICE SINK.

J CONTRACTOR TO COORDINATE ALL ROOFTOP EQUIPMENT REQUIRING MAINTENANCE IS TO BE LOCATED 10'-0" MINIMUM FROM THE EDGE OF ROOF.

K PROVIDE A WATER TIGHT PAN THAT IS 2" DEEP AND 6" LARGER THAN ANY PLUMBING, MECHANICAL PIPING, OR MECHANICAL EQUIPMENT INSTALLED OVER ANY ELECTRICAL EQUIPMENT OR GEAR

KEYPLAN

MHTN ARCHITECTS
MHTN Architects, Inc.
420 East South Temple
Suite 100
Salt Lake City, Utah 84111
Telephone (801) 595-6700
Telefax (801) 595-6717
www.mhtn.com

Colvin Engineering Associates, Inc.
244 West 300 North Suite 200
Salt Lake City, Utah 84103
Phone: (801) 322-2400 / Fax: (801) 322-2416

WEBER STATE UNIVERSITY
RESIDENTIAL LIFE PHASE II - BLDG 2

DFCM PROJECT NUMBER: 10176810

WEBER STATE UNIVERSITY
OGDEN, UTAH 84408

SEAL

MHTN PROJECT NO. 10176810

DRAWN BY: GM CHECKED BY: BRC

ISSUED:

NO.	DATE	DESCRIPTION

CONTRACTOR TO VERIFY DRAWINGS IN FIELD USE REFLECT LAST REVISION DATE.

NO.	DATE	DESCRIPTION

SHEET NAME

LEVEL TWO MECHANICAL PLAN - AREA 'B'

CONSTRUCTION SET

17 MAY 2011

SHEET NUMBER

MH102B

Copyright (C) 2010 by Colvin Engineering Associates, Inc. Salt Lake City, Utah. All rights reserved. Unauthorized copying and/or use is illegal and subject to prosecution.

C:\Revit Local Models\2010-074.00 - WSU PH II Bldg 2 - Tyler 2011.rvt
5/17/2011 10:01:55 AM

1 LEVEL THREE MECHANICAL PLAN - AREA 'A'

SCALE: 1/8" = 1'-0"

GENERAL NOTES

A. ALL HEAT PUMPS TO HAVE SHEETMETAL PAN THAT DRAINS TO FLOOR DRAINS.

B. NO DUCT OR PIPE TO RUN OVER ELECTRICAL PANEL.

C. ALL RECTANGULAR SUPPLY AND RETURN DUCT TO BE INTERNALLY LINED WITH 1" LINER.

D FIRE/SMOKE DAMPER MOTORS TO BE MOUNTED TO SIDE OF NEAREST CEILING ACCESS HATCH OR OPENCEILING AREA. PROVIDE DUCT ACCESS AS REQUIRED.TYPICAL

E COORDINATE DUCTWORK AND EQUIPMENT WITH ALL TRADES.

F DIFFUSER DUCT RUNOUTS SAME SIZE AS DIFFUSER NECK UNLESS NOTED OTHERWISE.

G PROVIDE 18" X 18" ACCESS DOOR TO ALL FIRE/SMOKE AND MOTORIZED DAMPERS.

H ALL DUCT WORK IN EXPOSED AREAS TO BE HARD SPIRALUNINSULATED, RUN IN NEAT MANNER AND COORDINATE ON SITE WITH ARCHITECT.

I ROUTE CONDENSATE DRAINS FOR ALL REQUIRED MECHANICAL EQUIPMENT TO NEAREST FLOOR DRAIN OR SERVICE SINK.

J CONTRACTOR TO COORDINATE ALL ROOFTOP EQUIPMENT REQUIRING MAINTENANCE IS TO BE LOCATED 10'-0" MINIMUM FROM THE EDGE OF ROOF.

K PROVIDE A WATER TIGHT PAN THAT IS 2" DEEP AND 6" LARGER THAN ANY PLUMBING, MECHANICAL PIPING, OR MECHANICAL EQUIPMENT INSTALLED OVER ANY ELECTRICAL EQUIPMENT OR GEAR

KEYED NOTES

1 CONTRACTOR TO COORDINATE STRUCTURAL WALL PENETRATION TO BE LOCATED 24" FROM THE END OF THE WALL. PENETRATIONS TO BE BLOCKED IN DURING CONSTRUCTION.

2 CONNECT EXHAUST DUCT TO RANGE HOOD AS REQUIRED.

3 C02 SENSOR (TYPICAL)

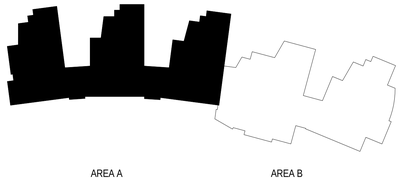

KEYPLAN

MHTN ARCHITECTS
MHTN Architects, Inc.
420 East South Temple
Suite 100
Salt Lake City, Utah 84111
Telephone (801) 595-6700
Telefax (801) 595-6717
www.mhtn.com

Colvin Engineering Associates, Inc.
244 West 300 North Suite 200
Salt Lake City, Utah 84103
Phone: (801) 322-2400 / Fax: (801) 322-2416

WEBER STATE UNIVERSITY
RESIDENTIAL LIFE PHASE II - BLDG 2
DFCM PROJECT NUMBER: 10176810

WEBER STATE UNIVERSITY
OGDEN, UTAH 84408

SEAL

MHTN PROJECT NO. 10176810

DRAWN BY: GM CHECKED BY: BRC

ISSUED:

NO.	DATE	DESCRIPTION

CONTRACTOR TO VERIFY DRAWINGS IN FIELD USE REFLECT LAST REVISION DATE.

NO.	DATE	DESCRIPTION

SHEET NAME

LEVEL THREE MECHANICAL PLAN - AREA 'A'

CONSTRUCTION SET

17 MAY 2011

SHEET NUMBER

MH103A

Copyright (C) 2010 by Colvin Engineering Associates, Inc. Salt Lake City, Utah. All rights reserved. Unauthorized copying and/or use is illegal and subject to prosecution.

C:\Revit Local Models\2010-074.00 - WSU PH II Bldg 2 - Tyler 2011.rvt
5/17/2011 10:02:07 AM

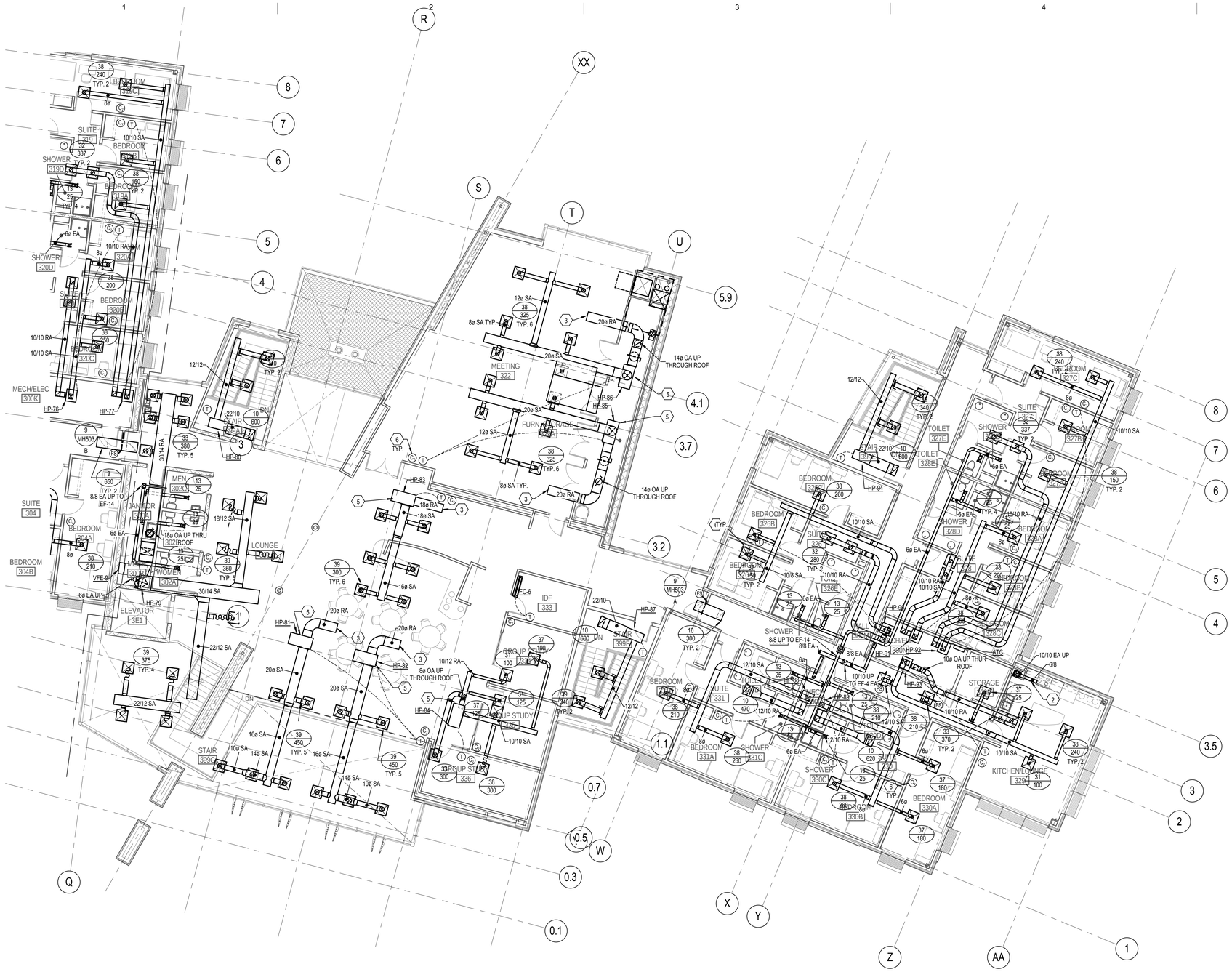

1 LEVEL THREE MECHANICAL PLAN - AREA 'B'

SCALE: 1/8" = 1'-0"

KEYED NOTES

1. CONTRACTOR TO COORDINATE STRUCTURAL WALL PENETRATION TO BE LOCATED 24" FROM THE END OF THE WALL. PENETRATIONS TO BE BLOCKED IN DURING CONSTRUCTION.
2. CONNECT EXHAUST DUCT TO RANGE HOOD AS REQUIRED.
3. RETURN AIR DUCT OPEN ABOVE.
4. CONTRACTOR TO ROUTE REFRIGERANT PIPING FROM ROOFTOP CONDENSING UNITS TO INDOOR UNITS AS NECESSARY.
5. PROVIDE SOUND WRAP BLANKET AROUND ENTIRE HEAT PUMP.
6. C02 SENSOR (TYPICAL)

GENERAL NOTES

A. ALL HEAT PUMPS TO HAVE SHEETMETAL PAN THAT DRAINS TO FLOOR DRAINS.

B. NO DUCT OR PIPE TO RUN OVER ELECTRICAL PANEL.

C. ALL RECTANGULAR SUPPLY AND RETURN DUCT TO BE INTERNALLY LINED WITH 1" LINER.

D FIRE/SMOKE DAMPER MOTORS TO BE MOUNTED TO SIDE OF NEAREST CEILING ACCESS HATCH OR OPENCEILING AREA. PROVIDE DUCT ACCESS AS REQUIRED.TYPICAL

E COORDINATE DUCTWORK AND EQUIPMENT WITH ALL TRADES.

F DIFFUSER DUCT RUNOUTS SAME SIZE AS DIFFUSER NECK UNLESS NOTED OTHERWISE.

G PROVIDE 18" X 18" ACCESS DOOR TO ALL FIRE/SMOKE AND MOTORIZED DAMPERS.

H ALL DUCT WORK IN EXPOSED AREAS TO BE HARD SPIRALUNINSULATED, RUN IN NEAT MANNER AND COORDINATE ON SITE WITH ARCHITECT.

I ROUTE CONDENSATE DRAINS FOR ALL REQUIRED MECHANICAL EQUIPMENT TO NEAREST FLOOR DRAIN OR SERVICE SINK.

J CONTRACTOR TO COORDINATE ALL ROOFTOP EQUIPMENT REQUIRING MAINTENANCE IS TO BE LOCATED 10'-0" MINIMUM FROM THE EDGE OF ROOF.

K PROVIDE A WATER TIGHT PAN THAT IS 2" DEEP AND 6" LARGER THAN ANY PLUMBING, MECHANICAL PIPING, OR MECHANICAL EQUIPMENT INSTALLED OVER ANY ELECTRICAL EQUIPMENT OR GEAR

KEYPLAN

MHTN
ARCHITECTS
MHTN Architects, Inc.
420 East South Temple
Suite 100
Salt Lake City, Utah 84111
Telephone (801) 595-6700
Telefax (801) 595-6717
www.mhtn.com

Colvin Engineering Associates, Inc.
244 West 300 North Suite 200
Salt Lake City, Utah 84103
Phone: (801) 322-2400 / Fax: (801) 322-2416

WEBER STATE UNIVERSITY
RESIDENTIAL LIFE PHASE II - BLDG 2
DFCM PROJECT NUMBER: 10176810

WEBER STATE UNIVERSITY
OGDEN, UTAH 84408

SEAL

MHTN PROJECT NO. 10176810

DRAWN BY: GM CHECKED BY: BRC

ISSUED:

NO.	DATE	DESCRIPTION

CONTRACTOR TO VERIFY DRAWINGS IN FIELD USE REFLECT LAST REVISION DATE.

NO.	DATE	DESCRIPTION

SHEET NAME
LEVEL THREE MECHANICAL PLAN - AREA 'B'

CONSTRUCTION SET
17 MAY 2011

SHEET NUMBER
MH103B

Copyright (C) 2010 by Colvin Engineering Associates, Inc. Salt Lake City, Utah. All rights reserved. Unauthorized copying and/or use is illegal and subject to prosecution.

C:\Revit Local Models\2010-074.00 - WSU PH II Bldg 2 - Tyler 2011.rvt
5/17/2011 10:02:17 AM

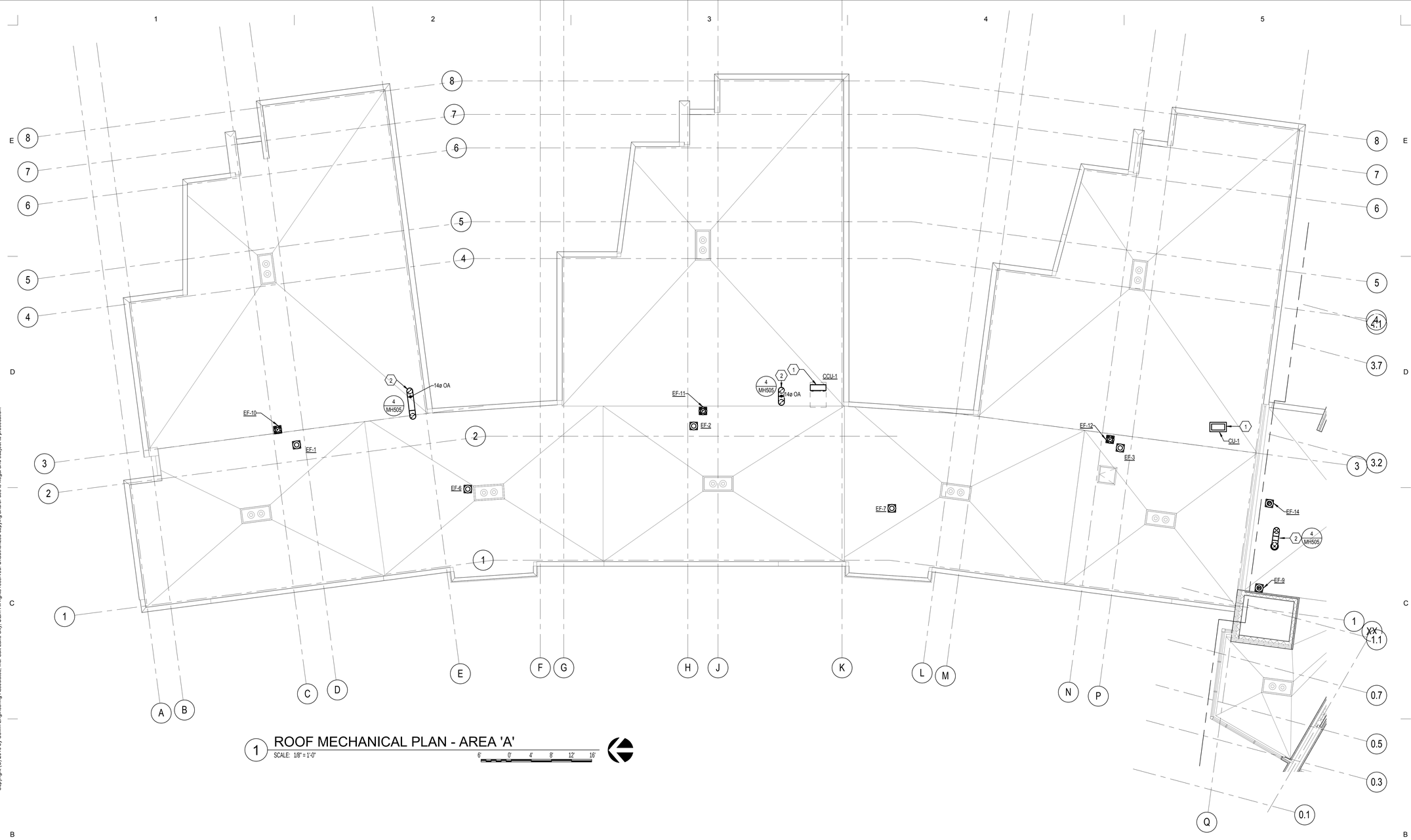

1 ROOF MECHANICAL PLAN - AREA 'A'

SCALE: 1/8" = 1'-0"

GENERAL NOTES

A. ALL HEAT PUMPS TO HAVE SHEETMETAL PAN THAT DRAINS TO FLOOR DRAINS.

B. NO DUCT OR PIPE TO RUN OVER ELECTRICAL PANEL.

C. ALL RECTANGULAR SUPPLY AND RETURN DUCT TO BE INTERNALLY LINED WITH 1" LINER.

D FIRE/SMOKE DAMPER MOTORS TO BE MOUNTED TO SIDE OF NEAREST CEILING ACCESS HATCH OR OPENCEILING AREA. PROVIDE DUCT ACCESS AS REQUIRED.TYPICAL

E COORDINATE DUCTWORK AND EQUIPMENT WITH ALL TRADES.

F DIFFUSER DUCT RUNOUTS SAME SIZE AS DIFFUSER NECK UNLESS NOTED OTHERWISE.

G PROVIDE 18" X 18" ACCESS DOOR TO ALL FIRE/SMOKE AND MOTORIZED DAMPERS.

H ALL DUCT WORK IN EXPOSED AREAS TO BE HARD SPIRALUNINSULATED, RUN IN NEAT MANNER AND COORDINATE ON SITE WITH ARCHITECT.

I ROUTE CONDENSATE DRAINS FOR ALL REQUIRED MECHANICAL EQUIPMENT TO NEAREST FLOOR DRAIN OR SERVICE SINK.

J CONTRACTOR TO COORDINATE ALL ROOFTOP EQUIPMENT REQUIRING MAINTENANCE IS TO BE LOCATED 10'-0" MINIMUM FROM THE EDGE OF ROOF.

K PROVIDE A WATER TIGHT PAN THAT IS 2" DEEP AND 6" LARGER THAN ANY PLUMBING, MECHANICAL PIPING, OR MECHANICAL EQUIPMENT INSTALLED OVER ANY ELECTRICAL EQUIPMENT OR GEAR

KEYED NOTES

1 CONTRACTOR TO ROUTE REFRIGERANT PIPING FROM ROOFTOP CONDENSING UNITS TO INDOOR UNITS AS NECESSARY.

2 PROVIDE GOOSE NECK WITH BIRD SCREEN.

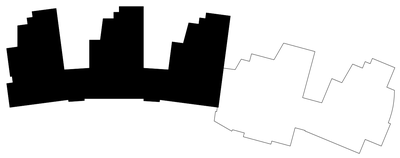

KEYPLAN

MHTN
ARCHITECTS
MHTN Architects, Inc.
420 East South Temple
Suite 100
Salt Lake City, Utah 84111
Telephone (801) 595-6700
Telefax (801) 595-6717
www.mhtn.com

Colvin Engineering Associates, Inc.
244 West 300 North Suite 200
Salt Lake City, Utah 84103
Phone: (801) 322-2400 / Fax: (801) 322-2416

WEBER STATE UNIVERSITY
RESIDENTIAL LIFE PHASE II - BLDG 2
DFCM PROJECT NUMBER: 10176810

WEBER STATE UNIVERSITY
OGDEN, UTAH 84408

SEAL

MHTN PROJECT NO: 10176810

DRAWN BY: GM CHECKED BY: BRC

ISSUED:

NO.	DATE	DESCRIPTION

CONTRACTOR TO VERIFY DRAWINGS IN FIELD USE REFLECT LAST REVISION DATE.

NO.	DATE	DESCRIPTION

SHEET NAME
ROOF MECHANICAL PLAN - AREA 'A'

CONSTRUCTION SET
17 MAY 2011

SHEET NUMBER
MH104A

Copyright (C) 2010 by Colvin Engineering Associates, Inc. Salt Lake City, Utah. All rights reserved. Unauthorized copying and/or use is illegal and subject to prosecution.

C:\Revit Local Models\2010-074.00 - WSU PH II Bldg 2 - Tyler 2011.rvt
5/17/2011 10:02:19 AM

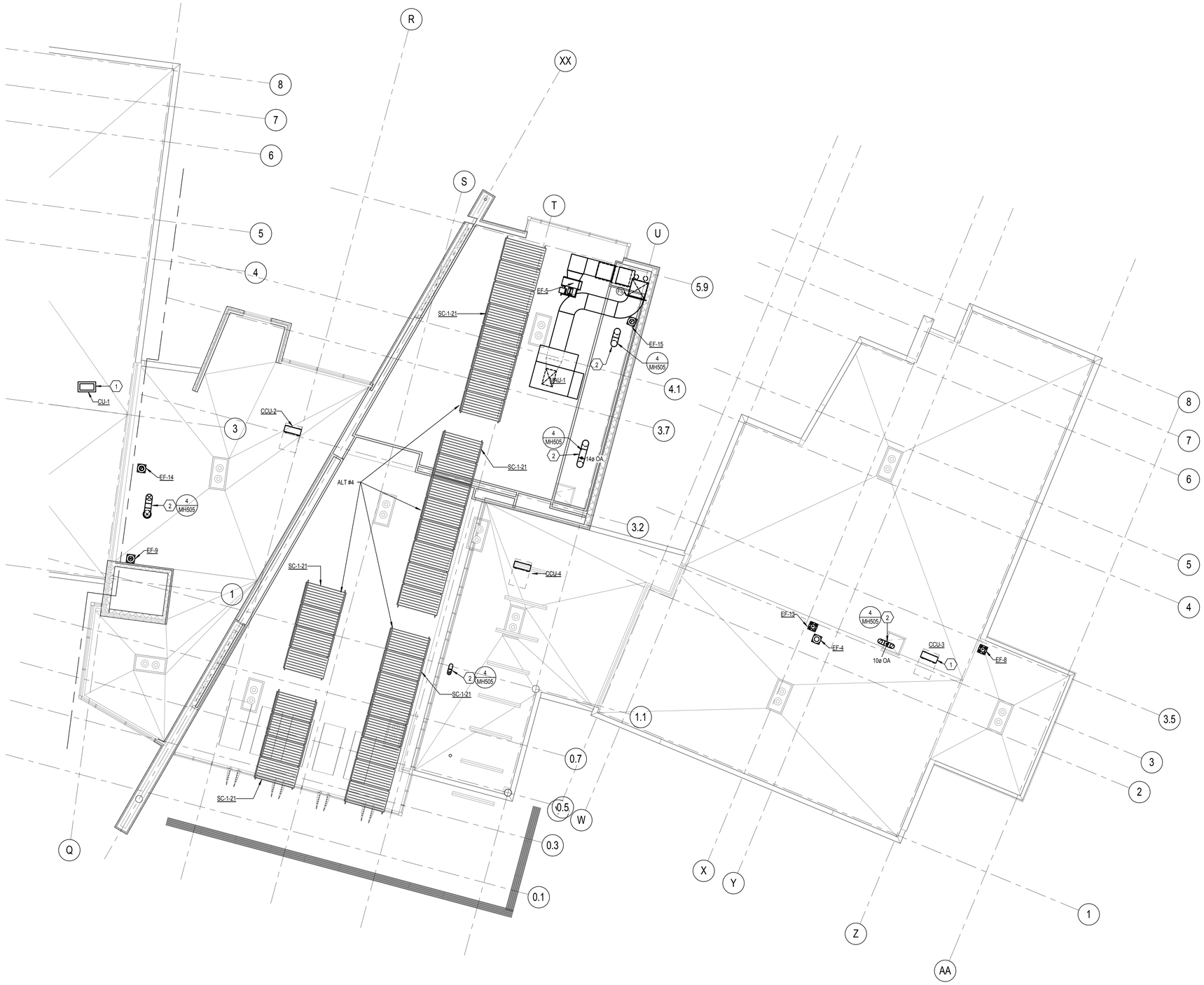

1 ROOF MECHANICAL PLAN - AREA 'B'

SCALE: 1/8" = 1'-0"

KEYED NOTES

1. CONTRACTOR TO ROUTE REFRIGERANT PIPING FROM ROOFTOP CONDENSING UNITS TO INDOOR UNITS AS NECESSARY.
2. PROVIDE GOOSE NECK WITH BIRD SCREEN.

GENERAL NOTES

A. ALL HEAT PUMPS TO HAVE SHEETMETAL PAN THAT DRAINS TO FLOOR DRAINS.

B. NO DUCT OR PIPE TO RUN OVER ELECTRICAL PANEL.

C. ALL RECTANGULAR SUPPLY AND RETURN DUCT TO BE INTERNALLY LINED WITH 1" LINER.

D FIRE/SMOKE DAMPER MOTORS TO BE MOUNTED TO SIDE OF NEAREST CEILING ACCESS HATCH OR OPENCEILING AREA. PROVIDE DUCT ACCESS AS REQUIRED.TYPICAL

E COORDINATE DUCTWORK AND EQUIPMENT WITH ALL TRADES.

F DIFFUSER DUCT RUNOUTS SAME SIZE AS DIFFUSER NECK UNLESS NOTED OTHERWISE.

G PROVIDE 18" X 18" ACCESS DOOR TO ALL FIRE/SMOKE AND MOTORIZED DAMPERS.

H ALL DUCT WORK IN EXPOSED AREAS TO BE HARD SPIRALUNINSULATED, RUN IN NEAT MANNER AND COORDINATE ON SITE WITH ARCHITECT.

I ROUTE CONDENSATE DRAINS FOR ALL REQUIRED MECHANICAL EQUIPMENT TO NEAREST FLOOR DRAIN OR SERVICE SINK.

J CONTRACTOR TO COORDINATE ALL ROOFTOP EQUIPMENT REQUIRING MAINTENANCE IS TO BE LOCATED 10'-0" MINIMUM FROM THE EDGE OF ROOF.

K PROVIDE A WATER TIGHT PAN THAT IS 2" DEEP AND 6" LARGER THAN ANY PLUMBING, MECHANICAL PIPING, OR MECHANICAL EQUIPMENT INSTALLED OVER ANY ELECTRICAL EQUIPMENT OR GEAR

KEYPLAN

MHTN
ARCHITECTS
MHTN Architects, Inc.
420 East South Temple
Suite 100
Salt Lake City, Utah 84111
Telephone (801) 595-6700
Telefax (801) 595-6717
www.mhtn.com

Colvin Engineering Associates, Inc.
244 West 300 North Suite 200
Salt Lake City, Utah 84103
Phone: (801) 322-2400 / Fax: (801) 322-2416

WEBER STATE UNIVERSITY
RESIDENTIAL LIFE PHASE II - BLDG 2

DFCM PROJECT NUMBER: 10176810

WEBER STATE UNIVERSITY
OGDEN, UTAH 84408

SEAL

MHTN PROJECT NO. 10176810

DRAWN BY: GM CHECKED BY: BRC

ISSUED:

NO.	DATE	DESCRIPTION

CONTRACTOR TO VERIFY DRAWINGS IN FIELD USE REFLECT LAST REVISION DATE:

NO.	DATE	DESCRIPTION

SHEET NAME

ROOF MECHANICAL PLAN - AREA 'B'

CONSTRUCTION SET

17 MAY 2011

SHEET NUMBER

MH104B

Copyright (C) 2010 by Colvin Engineering Associates, Inc. Salt Lake City, Utah. All rights reserved. Unauthorized copying and/or use is illegal and subject to prosecution.

C:\Revit Local Models\2010-074.00 - WSU PH II Bldg 2 - Tyler 2011.rvt
5/17/2011 10:02:23 AM

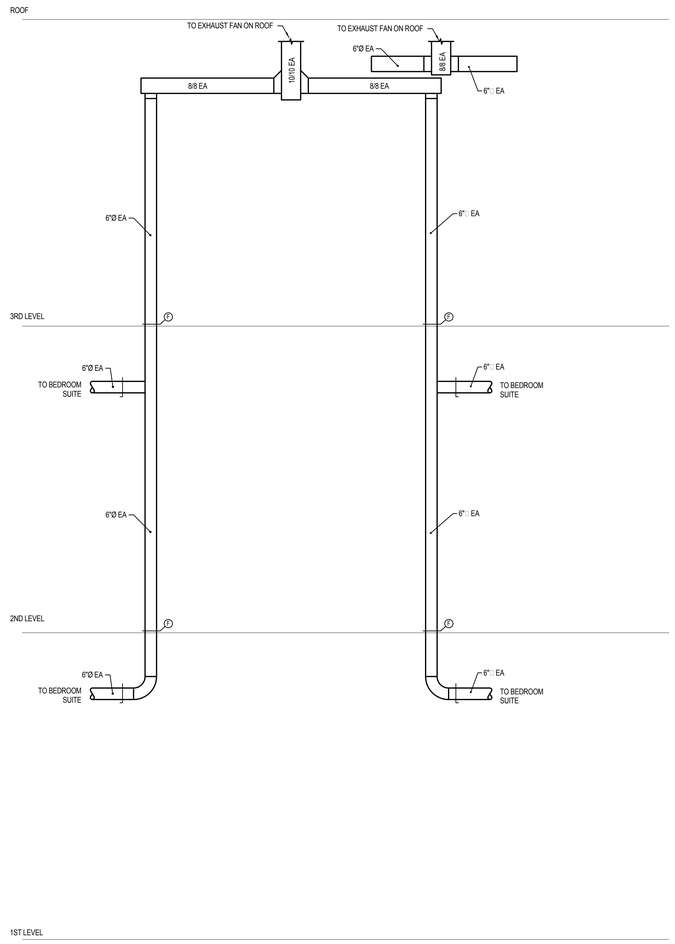

1 TYPICAL BEDROOM SUITE EXHAUST DUCT SCHEMATIC RISER DIAGRAM

SCALE: NONE

Copyright (C) 2010 by Colvin Engineering Associates, Inc. Salt Lake City, Utah. All rights reserved. Unauthorized copying and/or use is illegal and subject to prosecution.

C:\Revit Local Models\2010-074.00 - WSU PH II Bldg 2 - Tyler 2011.rvt
5/17/2011 10:02:23 AM

MHTN
ARCHITECTS
MHTN Architects, Inc.
420 East South Temple
Suite 100
Salt Lake City, Utah 84111
Telephone (801) 595-6700
Telefax (801) 595-6717
www.mhtn.com

Colvin Engineering Associates, Inc.
244 West 300 North Suite 200
Salt Lake City, Utah 84103
Phone: (801) 322-2400 / Fax: (801) 322-2416

WEBER STATE UNIVERSITY
RESIDENTIAL LIFE PHASE II - BLDG 2
DFCM PROJECT NUMBER: 10176810

WEBER STATE UNIVERSITY
OGDEN, UTAH 84408

SEAL

MHTN PROJECT NO. 10176810

DRAWN BY: GM CHECKED BY: BRC

ISSUED:

NO.	DATE	DESCRIPTION

CONTRACTOR TO VERIFY DRAWINGS IN FIELD USE REFLECT LAST REVISION DATE:

NO.	DATE	DESCRIPTION

SHEET NAME
MECHANICAL SCHEMATICS

CONSTRUCTION SET
17 MAY 2011

SHEET NUMBER
MH301

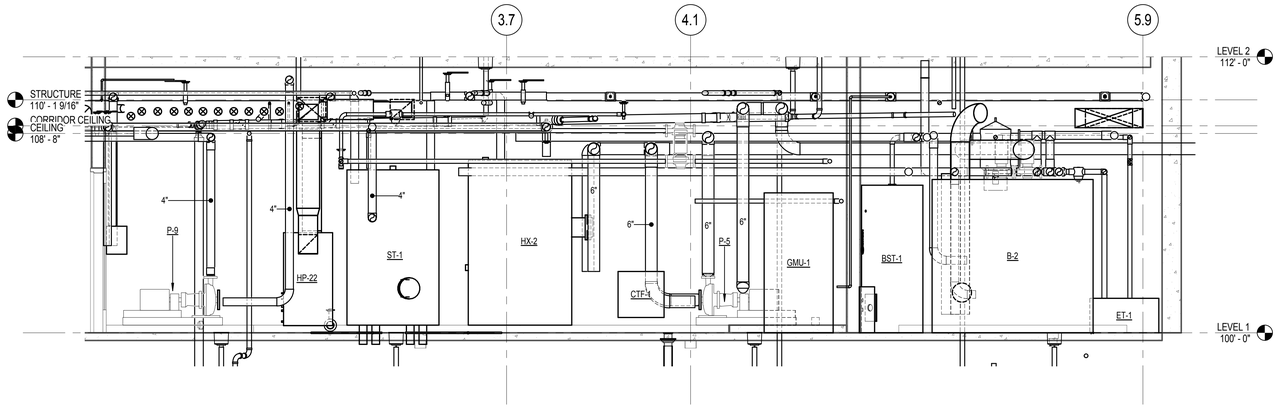

2 ENLARGED MAIN MECHANICAL ROOM

SCALE: 3/8" = 1'-0"

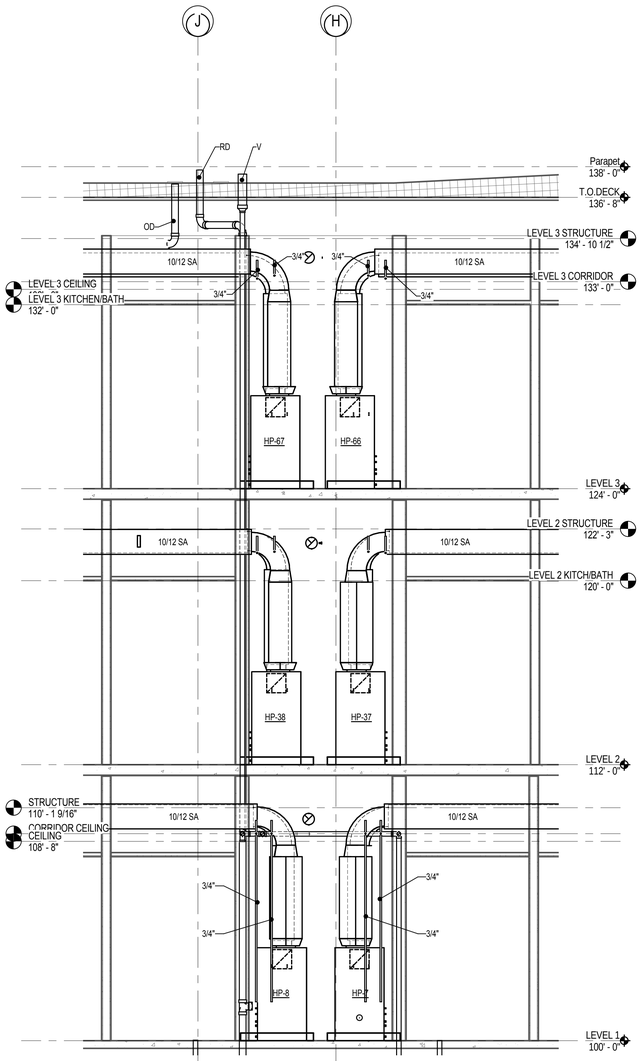

3 MECHANICAL SECTION

SCALE: 3/8" = 1'-0"

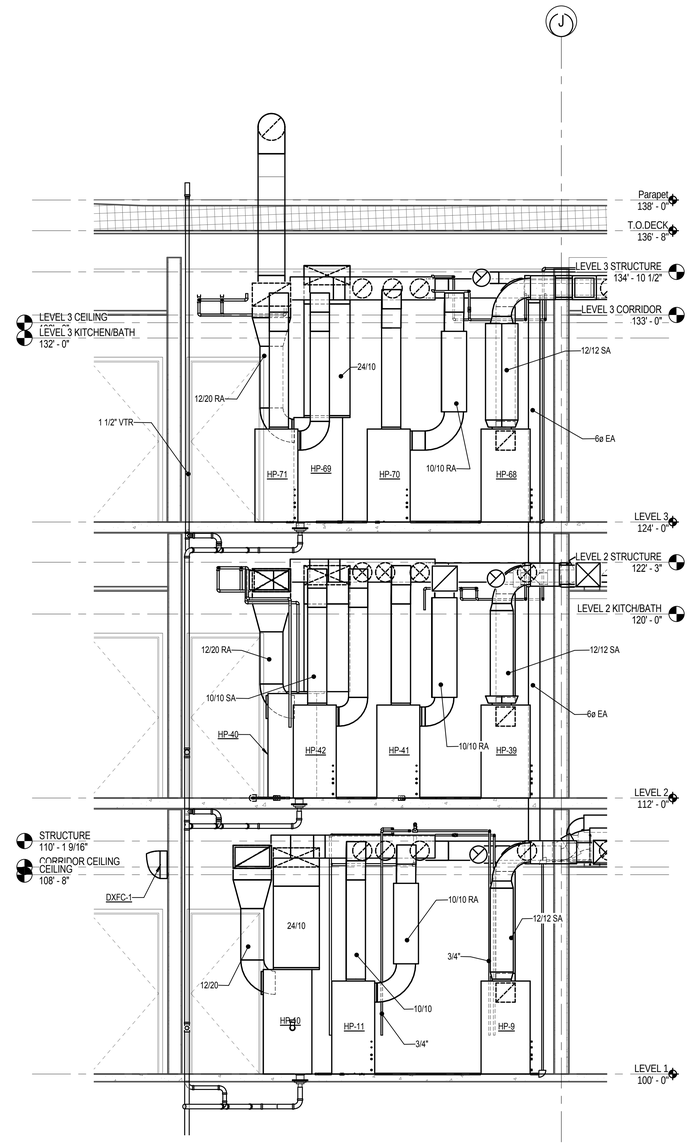

1 MECHANICAL SECTION

SCALE: 3/8" = 1'-0"

GENERAL NOTES

A. ALL HEAT PUMPS TO HAVE SHEETMETAL PAN THAT DRAINS TO FLOOR DRAINS.
B. NO DUCT OR PIPE TO RUN OVER ELECTRICAL PANEL.
C. ALL RECTANGULAR SUPPLY AND RETURN DUCT TO BE INTERNALLY LINED WITH 1" LINER.
D FIRE/SMOKE DAMPER MOTORS TO BE MOUNTED TO SIDE OF NEAREST CEILING ACCESS HATCH OR OPENCEILING AREA. PROVIDE DUCT ACCESS AS REQUIRED.TYPICAL
E COORDINATE DUCTWORK AND EQUIPMENT WITH ALL TRADES.
F DIFFUSER DUCT RUNOUTS SAME SIZE AS DIFFUSER NECK UNLESS NOTED OTHERWISE.
G PROVIDE 18" X 18" ACCESS DOOR TO ALL FIRE/SMOKE AND MOTORIZED DAMPERS.
H ALL DUCT WORK IN EXPOSED AREAS TO BE HARD SPIRALUNINSULATED, RUN IN NEAT MANNER AND COORDINATE ON SITE WITH ARCHITECT.
I ROUTE CONDENSATE DRAINS FOR ALL REQUIRED MECHANICAL EQUIPMENT TO NEAREST FLOOR DRAIN OR SERVICE SINK.
J CONTRACTOR TO COORDINATE ALL ROOFTOP EQUIPMENT REQUIRING MAINTENANCE IS TO BE LOCATED 10'-0" MINIMUM FROM THE EDGE OF ROOF.
K PROVIDE A WATER TIGHT PAN THAT IS 2" DEEP AND 6" LARGER THAN ANY PLUMBING, MECHANICAL PIPING, OR MECHANICAL EQUIPMENT INSTALLED OVER ANY ELECTRICAL EQUIPMENT OR GEAR

MHTN
ARCHITECTS
MHTN Architects, Inc.
420 East South Temple
Suite 100
Salt Lake City, Utah 84111
Telephone (801) 595-6700
Telefax (801) 595-6717
www.mhtn.com

Colvin Engineering Associates, Inc.
244 West 300 North Suite 200
Salt Lake City, Utah 84103
Phone: (801) 322-2400 / Fax: (801) 322-2416

WEBER STATE UNIVERSITY
RESIDENTIAL LIFE PHASE II - BLDG 2

DFCM PROJECT NUMBER: 10176810

WEBER STATE UNIVERSITY
OGDEN, UTAH 84408

SEAL

MHTN PROJECT NO. 10176810

DRAWN BY: Author CHECKED BY: Checker

ISSUED:

NO.	DATE	DESCRIPTION

CONTRACTOR TO VERIFY DRAWINGS IN FIELD USE REFLECT LAST REVISION DATE.

NO.	DATE	DESCRIPTION

SHEET NAME
MECHANICAL SECTIONS

CONSTRUCTION SET
17 MAY 2011

SHEET NUMBER
MH302

Copyright (C) 2010 by Colvin Engineering Associates, Inc. Salt Lake City, Utah. All rights reserved. Unauthorized copying and/or use is illegal and subject to prosecution.

C:\Revit Local Models\2010-074.00 - WSU PH II Bldg 2 - Tyler 2011.rvt
5/17/2011 10:02:28 AM

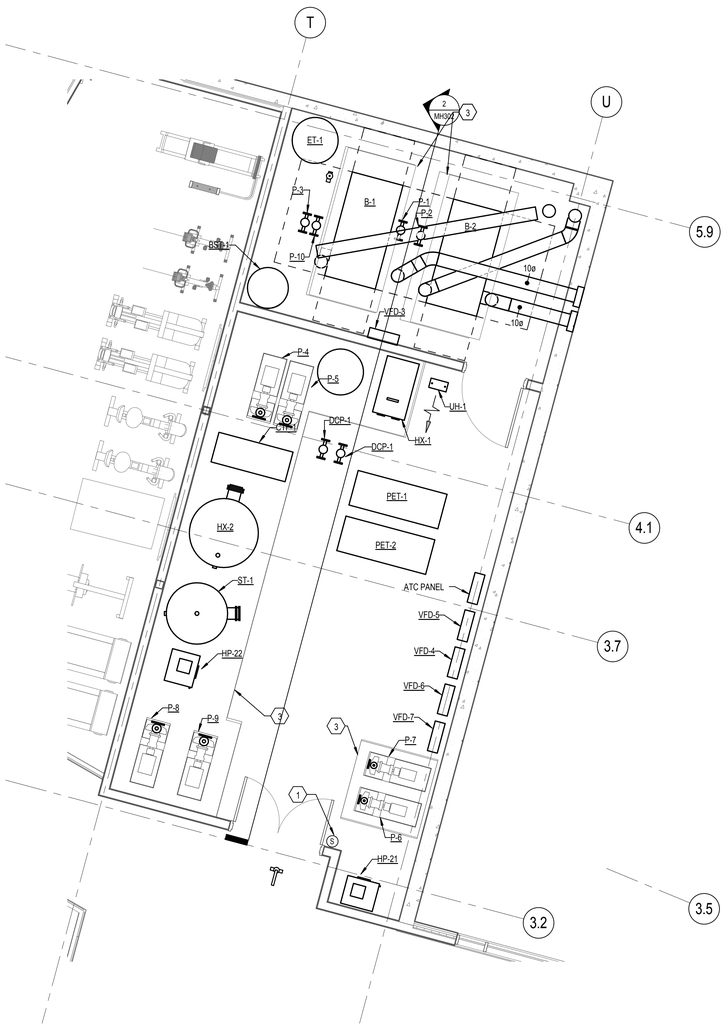

1 ENLARGED MECHANICAL ROOM MECHANICAL PLAN

SCALE: 1/4" = 1'-0"

2 CHILLER AND BOILER DEMO PLAN

SCALE: 1/8" = 1'-0"

KEYED NOTES

1. EMERGENCY BOILER SHUT OFF SWITCH.
2. EXISTING CHILLER, ASSOCIATED PIPING AND CONTROLS TO BE REMOVED.
3. 4" CONCRETE HOUSEKEEPING PAD.

GENERAL NOTES

A. ALL HEAT PUMPS TO HAVE SHEETMETAL PAN THAT DRAINS TO FLOOR DRAINS.

B. NO DUCT OR PIPE TO RUN OVER ELECTRICAL PANEL.

C. ALL RECTANGULAR SUPPLY AND RETURN DUCT TO BE INTERNALLY LINED WITH 1" LINER.

D FIRE/SMOKE DAMPER MOTORS TO BE MOUNTED TO SIDE OF NEAREST CEILING ACCESS HATCH OR OPENCEILING AREA. PROVIDE DUCT ACCESS AS REQUIRED.TYPICAL

E COORDINATE DUCTWORK AND EQUIPMENT WITH ALL TRADES.

F DIFFUSER DUCT RUNOUTS SAME SIZE AS DIFFUSER NECK UNLESS NOTED OTHERWISE.

G PROVIDE 18" X 18" ACCESS DOOR TO ALL FIRE/SMOKE AND MOTORIZED DAMPERS.

H ALL DUCT WORK IN EXPOSED AREAS TO BE HARD SPIRALUNINSULATED, RUN IN NEAT MANNER AND COORDINATE ON SITE WITH ARCHITECT.

I ROUTE CONDENSATE DRAINS FOR ALL REQUIRED MECHANICAL EQUIPMENT TO NEAREST FLOOR DRAIN OR SERVICE SINK.

J CONTRACTOR TO COORDINATE ALL ROOFTOP EQUIPMENT REQUIRING MAINTENANCE IS TO BE LOCATED 10'-0" MINIMUM FROM THE EDGE OF ROOF.

K PROVIDE A WATER TIGHT PAN THAT IS 2" DEEP AND 6" LARGER THAN ANY PLUMBING, MECHANICAL PIPING, OR MECHANICAL EQUIPMENT INSTALLED OVER ANY ELECTRICAL EQUIPMENT OR GEAR

MHTN
ARCHITECTS
MHTN Architects, Inc.
420 East South Temple
Suite 100
Salt Lake City, Utah 84111
Telephone (801) 595-6700
Telefax (801) 595-6717
www.mhtn.com

Colvin Engineering Associates, Inc.
244 West 300 North Suite 200
Salt Lake City, Utah 84103
Phone: (801) 322-2400 / Fax: (801) 322-2416

WEBER STATE UNIVERSITY
RESIDENTIAL LIFE PHASE II - BLDG 2
DFCM PROJECT NUMBER: 10176810

WEBER STATE UNIVERSITY
OGDEN, UTAH 84408

SEAL

MHTN PROJECT NO. 10176810

DRAWN BY: GM CHECKED BY: BRC

ISSUED:

NO.	DATE	DESCRIPTION

CONTRACTOR TO VERIFY DRAWINGS IN FIELD USE REFLECT LAST REVISION DATE:

NO.	DATE	DESCRIPTION

SHEET NAME
ENLARGED MECHANICAL PLANS

CONSTRUCTION SET
17 MAY 2011

SHEET NUMBER
MH401

Copyright (C) 2010 by Colvin Engineering Associates, Inc. Salt Lake City, Utah. All rights reserved. Unauthorized copying and/or use is illegal and subject to prosecution.

C:\Revit Local Models\2010-074.00 - WSU PH II Bldg 2 - Tyler 2011.rvt
5/17/2011 10:02:30 AM

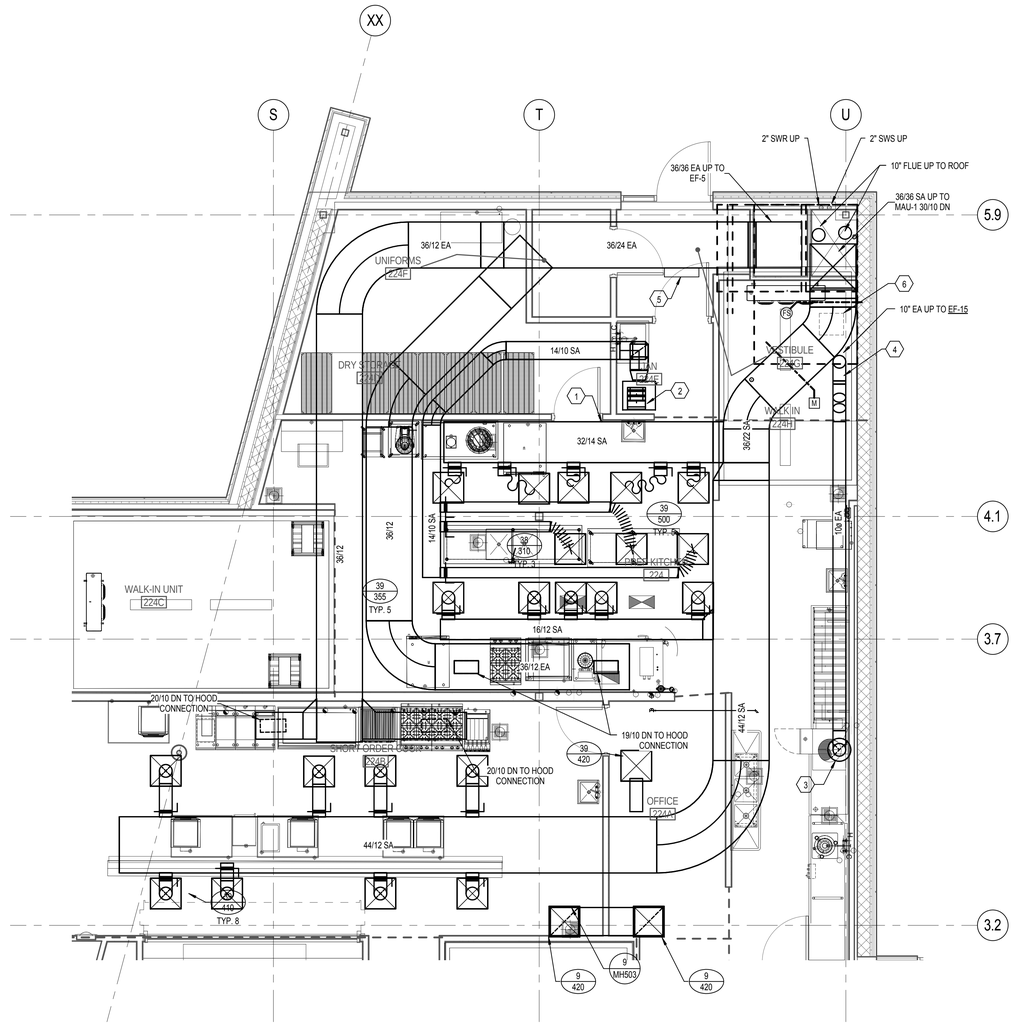

1 LEVEL TWO KITCHEN MECHANICAL PLAN

SCALE: 1/4" = 1'-0"

KEYED NOTES

1. CONTRACTOR TO CORDINATE BRANCH DUCTWORK TO RUN UP HIGH INBETWEEN STRUCTURE.
2. RETURN AIR DUCT IS OPEN ABOVE CEILING.
3. CONTRACTOR TO COORDINATE 10" EXHAUST AIR TO TRANSITION TO 18" CONNECTION SIZE FOR DISHWASHER HOOD.
4. EXHAUST DUCT TO OFFSET UP IN CEILING SPACE AND AVOID CONFLICT WITH MAKEUP AIR DUCT. CONTRACTOR TO COORDINATE DUCT ROUTING AS REQUIRED.
5. GREASE DUCT ACCESS DOOR.
6. PROVIDE DUCT ACCESS DOOR FOR FIRE/SMOKE DAMPER.

GENERAL NOTES

A. ALL HEAT PUMPS TO HAVE SHEETMETAL PAN THAT DRAINS TO FLOOR DRAINS.

B. NO DUCT OR PIPE TO RUN OVER ELECTRICAL PANEL.

C. ALL RECTANGULAR SUPPLY AND RETURN DUCT TO BE INTERNALLY LINED WITH 1" LINER.

D FIRE/SMOKE DAMPER MOTORS TO BE MOUNTED TO SIDE OF NEAREST CEILING ACCESS HATCH OR OPENCEILING AREA. PROVIDE DUCT ACCESS AS REQUIRED.TYPICAL

E COORDINATE DUCTWORK AND EQUIPMENT WITH ALL TRADES.

F DIFFUSER DUCT RUNOUTS SAME SIZE AS DIFFUSER NECK UNLESS NOTED OTHERWISE.

G PROVIDE 18" X 18" ACCESS DOOR TO ALL FIRE/SMOKE AND MOTORIZED DAMPERS.

H ALL DUCT WORK IN EXPOSED AREAS TO BE HARD SPIRALUNINSULATED, RUN IN NEAT MANNER AND COORDINATE ON SITE WITH ARCHITECT.

I ROUTE CONDENSATE DRAINS FOR ALL REQUIRED MECHANICAL EQUIPMENT TO NEAREST FLOOR DRAIN OR SERVICE SINK.

J CONTRACTOR TO COORDINATE ALL ROOFTOP EQUIPMENT REQUIRING MAINTENANCE IS TO BE LOCATED 10'-0" MINIMUM FROM THE EDGE OF ROOF.

K PROVIDE A WATER TIGHT PAN THAT IS 2" DEEP AND 6" LARGER THAN ANY PLUMBING, MECHANICAL PIPING, OR MECHANICAL EQUIPMENT INSTALLED OVER ANY ELECTRICAL EQUIPMENT OR GEAR

MHTN
ARCHITECTS
MHTN Architects, Inc.
420 East South Temple
Suite 100
Salt Lake City, Utah 84111
Telephone (801) 595-6700
Telefax (801) 595-6717
www.mhtn.com

Colvin Engineering Associates, Inc.
244 West 300 North Suite 200
Salt Lake City, Utah 84103
Phone: (801) 322-2400 / Fax: (801) 322-2416

WEBER STATE UNIVERSITY
RESIDENTIAL LIFE PHASE II - BLDG 2

DFCM PROJECT NUMBER: 10176810

WEBER STATE UNIVERSITY
OGDEN, UTAH 84408

SEAL

MHTN PROJECT NO. 10176810

DRAWN BY: Author CHECKED BY: Checker

ISSUED:

NO	DATE	DESCRIPTION

CONTRACTOR TO VERIFY DRAWINGS IN FIELD USE REFLECT LAST REVISION DATE.

NO	DATE	DESCRIPTION

SHEET NAME

KITCHEN MECHANICAL FLOOR PLAN

CONSTRUCTION SET

17 MAY 2011

SHEET NUMBER

MH402

Copyright (C) 2010 by Colvin Engineering Associates, Inc. Salt Lake City, Utah. All rights reserved. Unauthorized copying and/or use is illegal and subject to prosecution.

C:\Revit Local Models\2010-074.00 - WSU PH II Bldg 2 - Tyler 2011.rvt
5/17/2011 10:02:34 AM

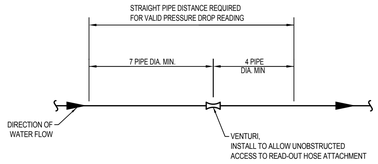

1 VENTURI INSTALLATION DETAIL

NO SCALE

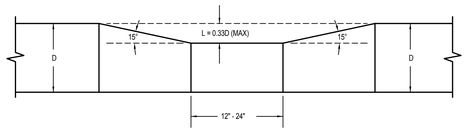

3 TYPICAL DUCT SLICE DETAIL

NO SCALE

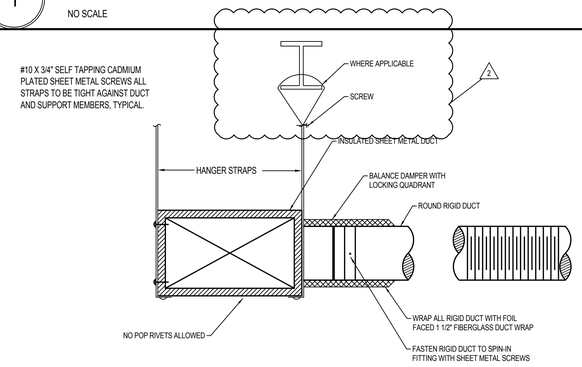

4 FLEX DUCT/SPIN-IN FITTING

NO SCALE

15880/23310

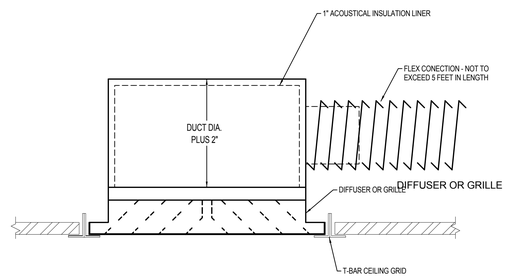

5 DIFFUSER AND GRILLE CONNECTION DETAIL

NO SCALE

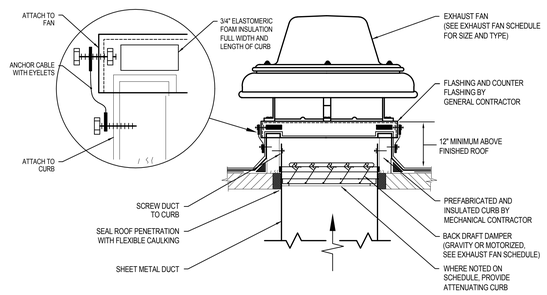

6 EXHAUST FAN AND CURB DETAIL

NO SCALE

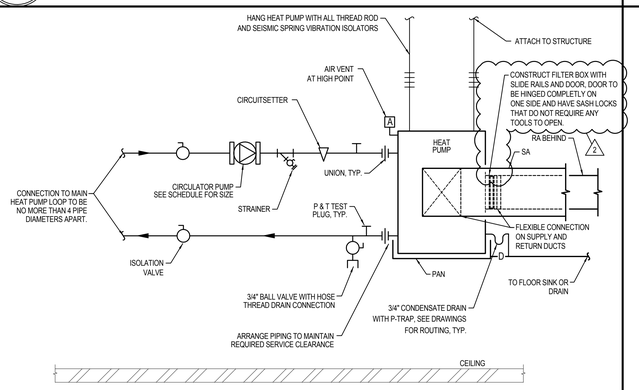

7 ABOVE CEILING HEAT PUMP PIPING PLAN

NO SCALE

NOTE:

VERIFY PIPING CONNECTIONS WITH
MANUFACTURERS INSTALLATION
INSTRUCTIONS.

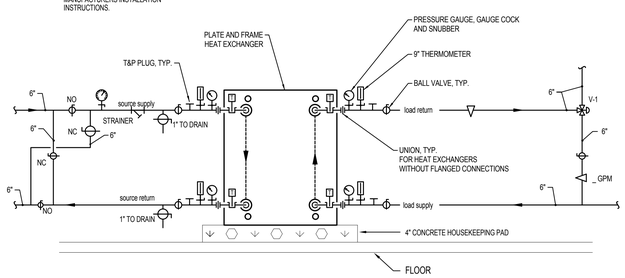

8 HX-1 PLATE AND FRAME HEAT EXCHANGER DETAIL

NO SCALE

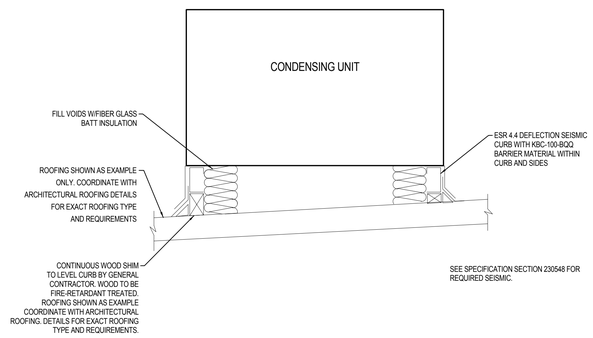

9 CONDENSING UNIT ROOF CURB DETAIL

NO SCALE

Copyright (C) 2010 by Colvin Engineering Associates, Inc. Salt Lake City, Utah. All rights reserved. Unauthorized copying and/or use is illegal and subject to prosecution.

C:\Revit Local Models\2010-074.00 - WSU PH II Bldg 2 - Tyler 2011.rvt
5/17/2011 10:02:34 AM

MHTN
ARCHITECTS
MHTN Architects, Inc.
420 East South Temple
Suite 100
Salt Lake City, Utah 84111
Telephone (801) 595-6700
Telefax (801) 595-6717
www.mhtn.com

Colvin
Engineering
Associates, Inc.
244 West 300 North Suite 200
Salt Lake City, Utah 84103
Phone: (801) 322-2400 / Fax: (801) 322-2416

WEBER STATE UNIVERSITY
RESIDENTIAL LIFE PHASE II - BLDG 2
DFCM PROJECT NUMBER: 10176810

WEBER STATE UNIVERSITY
OGDEN, UTAH 84408

SEAL

MHTN PROJECT NO: 10176810

DRAWN BY: GM CHECKED BY: BRC

ISSUED:

NO.	DATE	DESCRIPTION

CONTRACTOR TO VERIFY DRAWINGS IN FIELD USE REFLECT LAST REVISION DATE.

NO.	DATE	DESCRIPTION

SHEET NAME

MECHANICAL DETAILS

CONSTRUCTION SET
17 MAY 2011

SHEET NUMBER

MH501

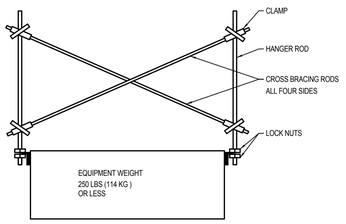

1 SEISMIC BRACING FOR SUSPENDED EQUIPMENT DETAIL

NO SCALE

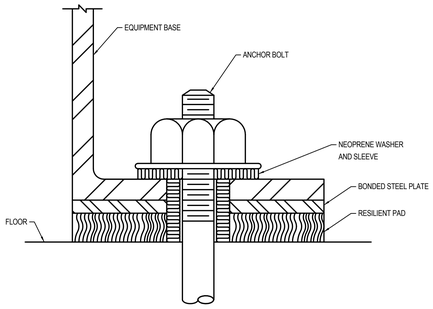

2 RESILIENT EQUIPMENT PAD DETAIL

NO SCALE

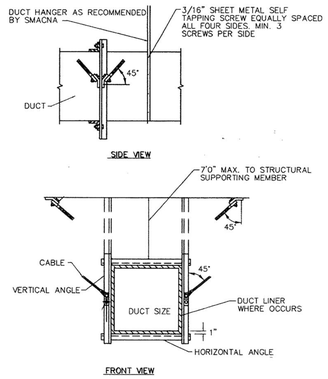

3 RESILIENT DUCT HANGER

NO SCALE

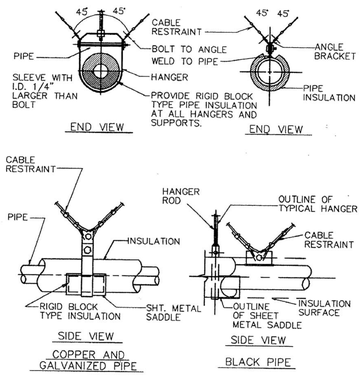

4 SEISMIC PIPING RESTRAINTS DETAIL

NO SCALE

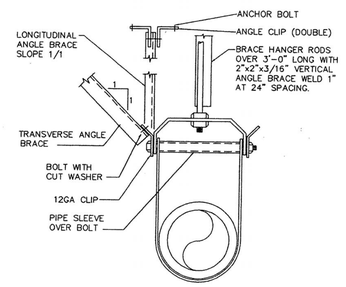

PIPE SIZE	*ANGLE BRACE	BOLT TO ANGLE	ANGLE CLIP	ANCHOR BOLT OR INSERT
2-1/2"	2"x2" 16GA	3/8"	3"x3"x1/4	3/8
3, 4	2½x2½" 16 GA	3/8"	3"x3"x1/4	1/2"
5, 6	2½x2½" 16 GA	1/2"	3"x3"x1/2	3/4"

* 1⅞ x 1⅞ x 12 GAGE CHANNEL MAY BE USED

5 SEISMIC BRACING FOR PIPE DETAIL

NO SCALE

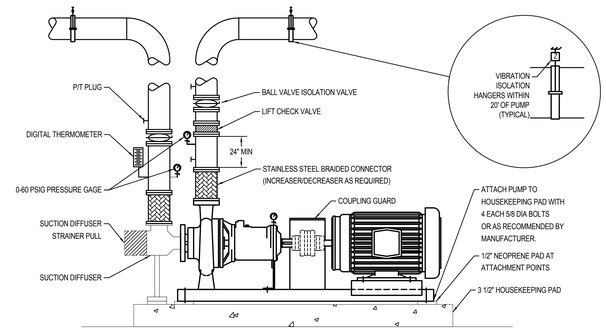

6 BASE MOUNTED PUMP DETAIL

NO SCALE

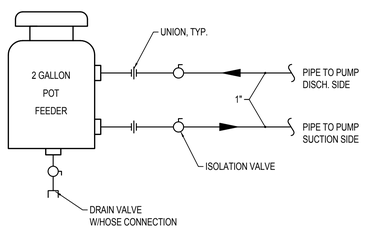

7 CHEMICAL POT FEEDER PIPING DETAIL

NO SCALE

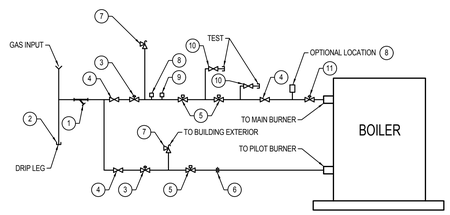

1- GAS FILTER OR STRAINER (IF REQ'D)
2- PIPE CAP
3- PRESSURE REGULATOR (SLB TO 9"W.C.)
4- MANUAL VALVE (TYPICAL)
5- SAFETY SHUTOFF VALVE
6- ORIFICE
7- RELIEF VALVE (IF REQ'D)
8- HIGH GAS PRESSURE SWITCH
9- LOW GAS PRESSURE SWITCH
10-LEAKAGE TEST VALVE
11-CONTROL VALVE (MODULATING)

8 BOILER GAS PIPING DETAIL

NO SCALE

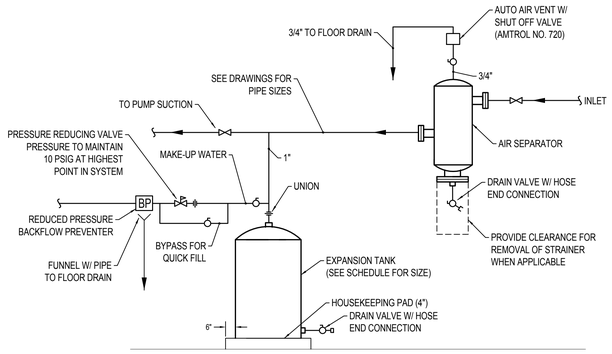

9 AIR SEPARATOR/EXPANSION TANK PIPING DETAIL

NO SCALE

Copyright (C) 2010 by Colvin Engineering Associates, Inc. Salt Lake City, Utah. All rights reserved. Unauthorized copying and/or use is illegal and subject to prosecution.

C:\Revit Local Models\2010-074.00 - WSU PH II Bldg 2 - Tyler 2011.rvt
5/17/2011 10:02:38 AM

MHTN
ARCHITECTS
MHTN Architects, Inc.
420 East South Temple
Suite 100
Salt Lake City, Utah 84111
Telephone (801) 595-6700
Telefax (801) 595-6717
www.mhtn.com

Colvin
Engineering
Associates, Inc.
244 West 300 North Suite 200
Salt Lake City, Utah 84103
Phone: (801) 322-2400 / Fax: (801) 322-2416

WEBER STATE UNIVERSITY
RESIDENTIAL LIFE PHASE II - BLDG 2

DFCM PROJECT NUMBER: 10176810

WEBER STATE UNIVERSITY
OGDEN, UTAH 84408

SEAL

MHTN PROJECT NO. 10176810

DRAWN BY: GM CHECKED BY: BRC

ISSUED:

NO.	DATE	DESCRIPTION

CONTRACTOR TO VERIFY DRAWINGS IN FIELD USE REFLECT LAST REVISION DATE:

NO.	DATE	DESCRIPTION

SHEET NAME

MECHANICAL DETAILS

CONSTRUCTION SET

17 MAY 2011

SHEET NUMBER

MH502

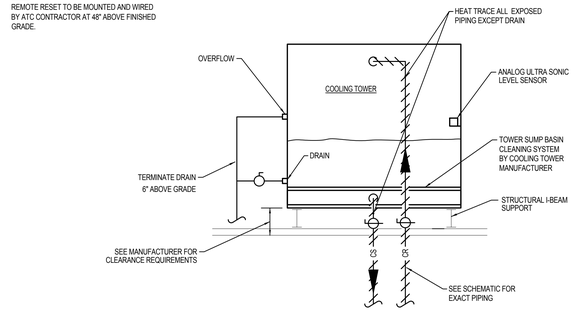

1 COOLING TOWER PIPING DETAIL

NO SCALE

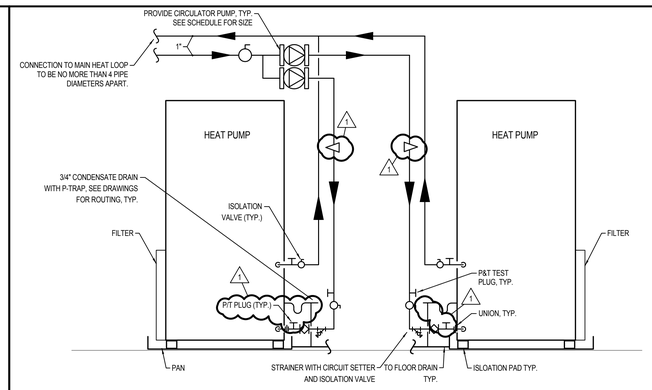

1 SIDE BY SIDE HEAT PUMP DETAIL (SIMILAR FOR SINGLE UNITS)

NO SCALE

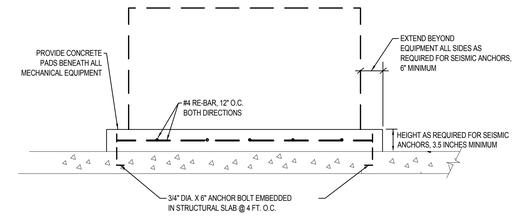

3 HOUSEKEEPING PAD DETAIL

NO SCALE

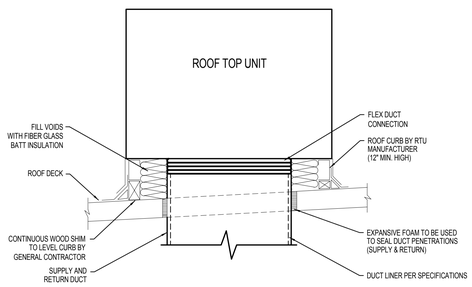

4 ROOF TOP UNIT CURB DETAIL

NO SCALE

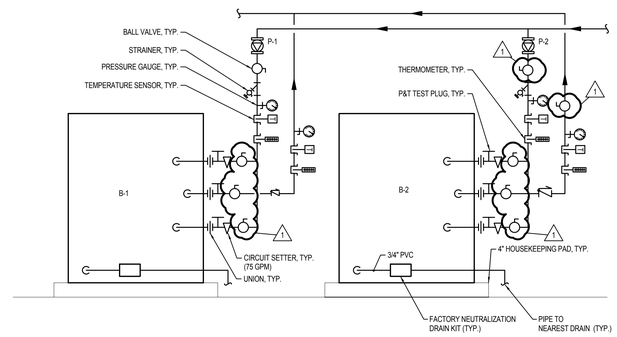

5 BOILER DETAIL

NO SCALE

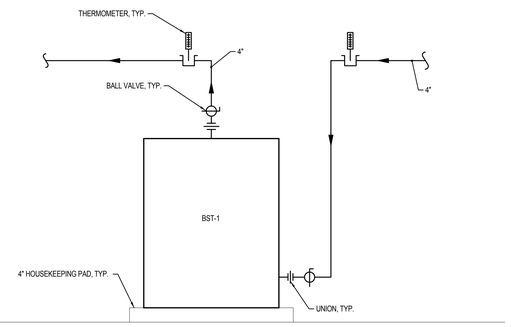

6 STORAGE TANK DETAIL

NO SCALE

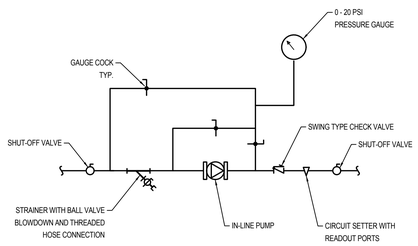

7 IN-LINE PUMP PIPING DETAIL

NO SCALE

SIZE	OPENING (INXIN)	W (IN)	H (IN)	MAX. TRANSFER (CFM)	APPROX. ΔS (INWC)
A	12 X 6	12	6	230	0.02
B	12 X 12	12	6	380	0.02
C	24 X 6	24	6	400	0.02
D	24 X 12	24	6	680	0.02
E	24 X 12	24	12	920	0.02
F	24 X 24	24	12	1500	0.02
G	36 X 24	36	12	2500	0.02

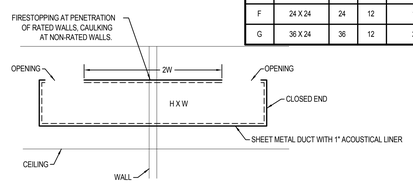

8 TRANSFER AIR DUCT (PLENUM/PLENUM)

NO SCALE

SIZE	GRILLE NECK (INXIN)	W (IN)	H (IN)	MAX. TRANSFER (CFM)	APPROX. ΔS (INWC)
A	22 X 10	22	6	300	0.05
B	22 X 22	22	12	650	0.05

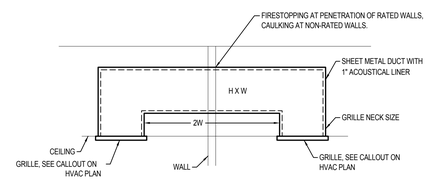

9 TRANSFER AIR DUCT (GRILLE/GRILLE)

NO SCALE

MHTN ARCHITECTS
MHTN Architects, Inc.
420 East South Temple
Suite 100
Salt Lake City, Utah 84111
Telephone (801) 595-6700
Telefax (801) 595-6717
www.mhtn.com

Colvin Engineering Associates, Inc.
244 West 300 North Suite 200
Salt Lake City, Utah 84103
Phone: (801) 322-2400 / Fax: (801) 322-2416

WEBER STATE UNIVERSITY
RESIDENTIAL LIFE PHASE II - BLDG 2
DFCM PROJECT NUMBER: 10176810

WEBER STATE UNIVERSITY
OGDEN, UTAH 84408

SEAL

MHTN PROJECT NO. 10176810

DRAWN BY: GM CHECKED BY: BRC

ISSUED:

NO.	DATE	DESCRIPTION

CONTRACTOR TO VERIFY DRAWINGS IN FIELD USE REFLECT LAST REVISION DATE.

NO.	DATE	DESCRIPTION

SHEET NAME
MECHANICAL DETAILS

CONSTRUCTION SET
17 MAY 2011

SHEET NUMBER
MH503

Copyright (C) 2010 by Colvin Engineering Associates, Inc. Salt Lake City, Utah. All rights reserved. Unauthorized copying and/or use is illegal and subject to prosecution.

C:\Revit Local Models\2010-074.00 - WSU PH II Bldg 2 - Tyler 2011.rvt
5/17/2011 10:02:37 AM

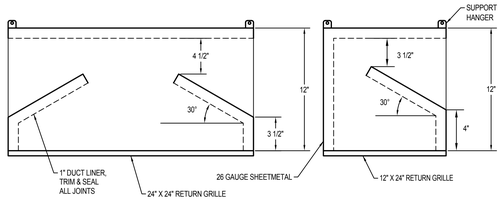

TYPICAL OF ALL RETURN AIR GRILLES

1 RETURN AIR SHEETMETAL SOUND BOOT DETAIL

NO SCALE

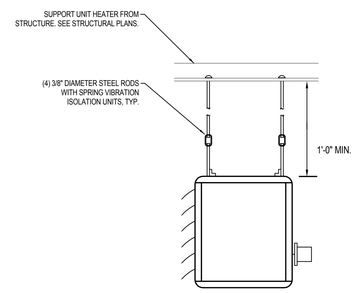

2 ELECTRIC UNIT HEATER DETAIL

NO SCALE

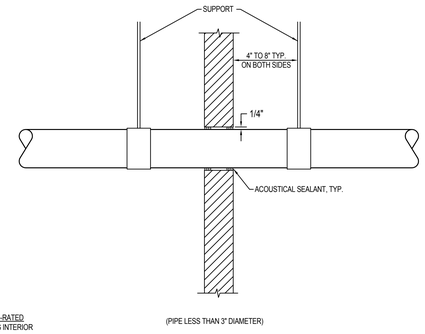

NOTE: APPLICABLE AT ALL SOUND-RATED CONSTRUCTION INCLUDING INTERIOR INSULATED ASSEMBLIES.

3 TYP PIPE PENETRATION THROUGH SOUND-RATED CONSTRUCTION DETAIL

NO SCALE

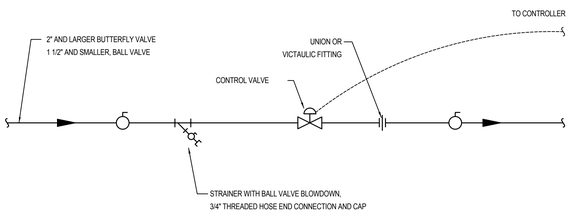

4 CONTROL VALVE PIPING DIAGRAM

NO SCALE

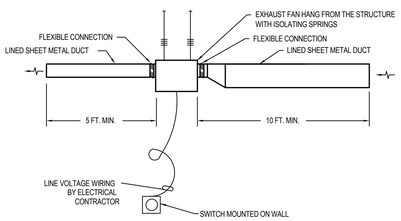

5 INLINE EXHAUST FAN DETAIL

NO SCALE

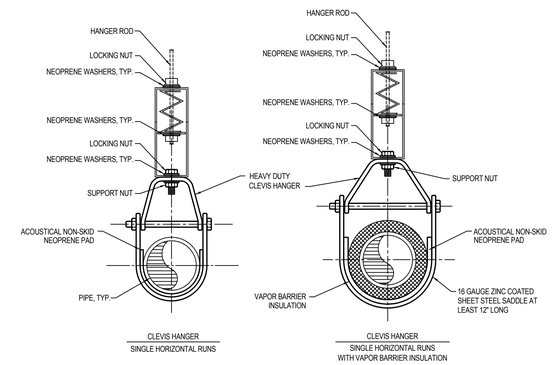

6 HANGER DETAIL FOR PIPING REQUIRING VIBRATION ISOLATION

NO SCALE

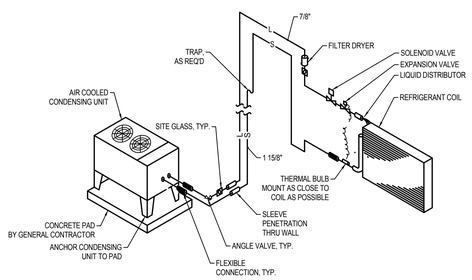

7 REFRIGERANT COIL CONNECTION DETAIL

NO SCALE

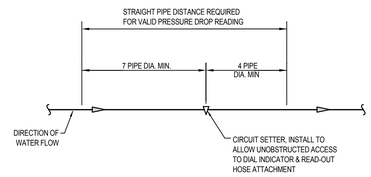

8 CIRCUIT SETTER DETAIL

NO SCALE

9

NO SCALE

Copyright (C) 2010 by Colvin Engineering Associates, Inc. Salt Lake City, Utah. All rights reserved. Unauthorized copying and/or use is illegal and subject to prosecution.

C:\Revit Local Models\2010-074.00 - WSU PH II Bldg 2 - Tyler 2011.rvt
5/17/2011 10:02:37 AM

MHTN
ARCHITECTS
MHTN Architects, Inc.
420 East South Temple
Suite 100
Salt Lake City, Utah 84111
Telephone (801) 595-6700
Telefax (801) 595-6717
www.mhtn.com

Colvin Engineering Associates, Inc.
244 West 300 North Suite 200
Salt Lake City, Utah 84103
Phone: (801) 322-2400 / Fax: (801) 322-2416

WEBER STATE UNIVERSITY
RESIDENTIAL LIFE PHASE II - BLDG 2
DFCM PROJECT NUMBER: 10176810

WEBER STATE UNIVERSITY
OGDEN, UTAH 84408

SEAL

MHTN PROJECT NO. 10176810

DRAWN BY: Author CHECKED BY: Checker

ISSUED:

NO.	DATE	DESCRIPTION

CONTRACTOR TO VERIFY DRAWINGS IN FIELD USE REFLECT LAST REVISION DATE:

NO.	DATE	DESCRIPTION

SHEET NAME
MECHANICAL DETAILS

CONSTRUCTION SET
17 MAY 2011

SHEET NUMBER
MH504

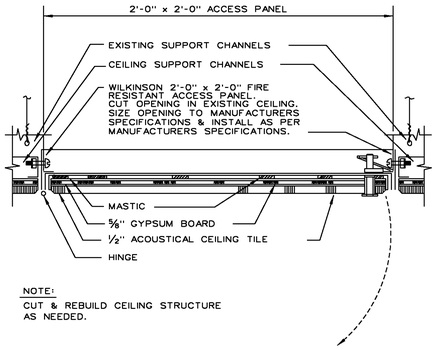

1 ACCESS PANEL DETAIL

NO SCALE

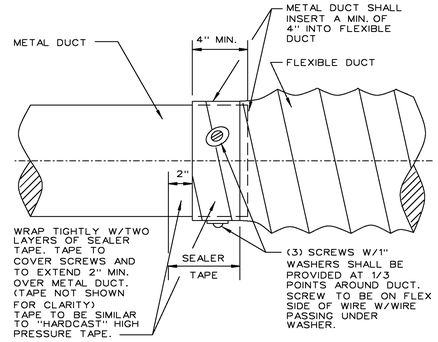

2 FLEXIBLE DUCT/RIGID DUCT CONNECTION

NO SCALE

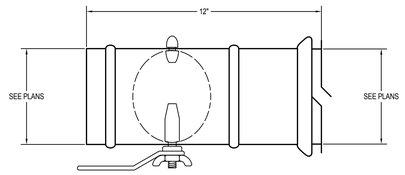

3 TYPICAL MANUAL VOLUME DAMPER DETAIL

NO SCALE

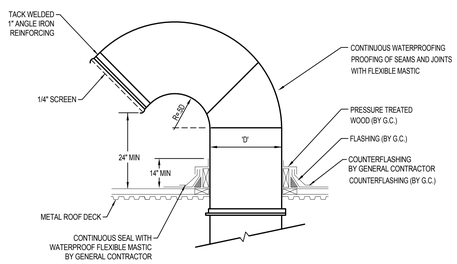

4 GOOSENECK DETAIL

NO SCALE

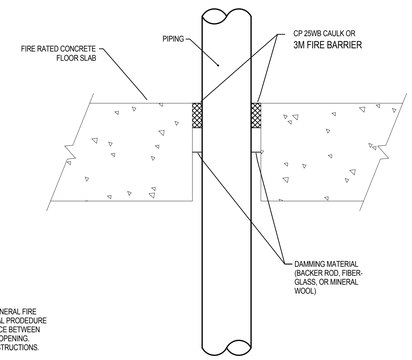

NOTE:
TYPICAL DETAILS SHOWING GENERAL FIRE STOPPING PROCEDURE. ACTUAL PRODEDURE DEPENDS UPON ANNULAR SPACE BETWEEN PIPE AND/OR INSULATION AND OPENING. FOLLOW MANUFACTURER'S INSTRUCTIONS.

5 FIRESTOP THRU CONCRETE FLOOR

NO SCALE

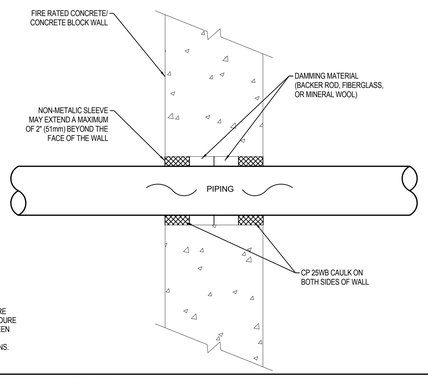

NOTE:
TYPICAL DETAILS SHOWING GENERAL FIRE STOPPING PROCEDURE. ACTUAL PRODEDURE DEPENDS UPON ANNULAR SPACE BETWEEN PIPE AND/OR INSULATION AND OPENING. FOLLOW MANUFACTURER'S INSTRUCTIONS.

6 FIRESTOP THRU CONCRETE WALL

NO SCALE

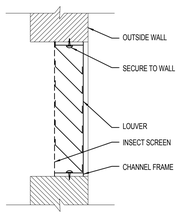

7 LOUVER DETAIL

NO SCALE

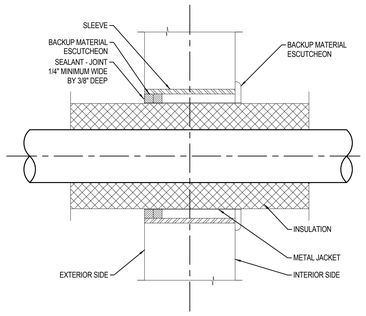

8 PIPE SLEEVE FOR INSULATED PIPE THRU WALL

NO SCALE

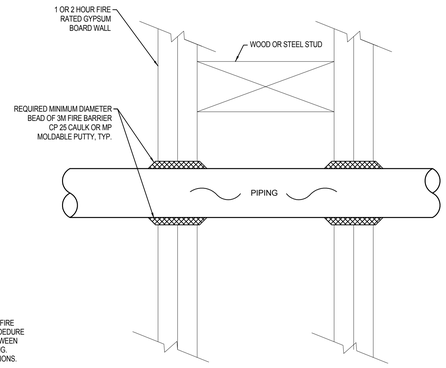

NOTE:
TYPICAL DETAILS SHOWING GENERAL FIRE STOPPING PROCEDURE. ACTUAL PRODEDURE DEPENDS UPON ANNULAR SPACE BETWEEN PIPE AND/OR INSULATION AND OPENING. FOLLOW MANUFACTURER'S INSTRUCTIONS.

9 FIRESTOP THRU GYPBOARD WALL

NO SCALE

Copyright (C) 2010 by Colvin Engineering Associates, Inc. Salt Lake City, Utah. All rights reserved. Unauthorized copying and/or use is illegal and subject to prosecution.

C:\Revit Local Models\2010-074.00 - WSU PH II Bldg 2 - Tyler 2011.rvt
5/17/2011 10:02:38 AM

MHTN
ARCHITECTS
MHTN Architects, Inc.
420 East South Temple
Suite 100
Salt Lake City, Utah 84111
Telephone (801) 595-6700
Telefax (801) 595-6717
www.mhtn.com

Colvin Engineering Associates, Inc.
244 West 300 North Suite 200
Salt Lake City, Utah 84103
Phone: (801) 322-2400 / Fax: (801) 322-2416

WEBER STATE UNIVERSITY
RESIDENTIAL LIFE PHASE II - BLDG 2

DFCM PROJECT NUMBER: 10176810

WEBER STATE UNIVERSITY
OGDEN, UTAH 84408

SEAL

MHTN PROJECT NO. 10176810

DRAWN BY: Author CHECKED BY: Checker

ISSUED:

NO	DATE	DESCRIPTION

CONTRACTOR TO VERIFY DRAWINGS IN FIELD USE REFLECT LAST REVISION DATE:

NO	DATE	DESCRIPTION

SHEET NAME
MECHANICAL DETAILS

CONSTRUCTION SET
17 MAY 2011

SHEET NUMBER
MH505

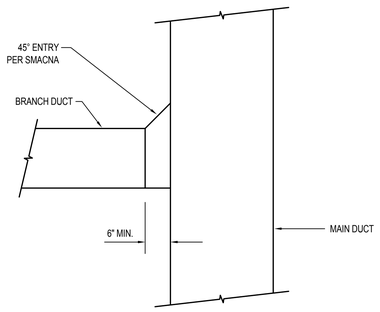

1 TYPICAL DUCT TAKEOFF DETAIL

NO SCALE 15900

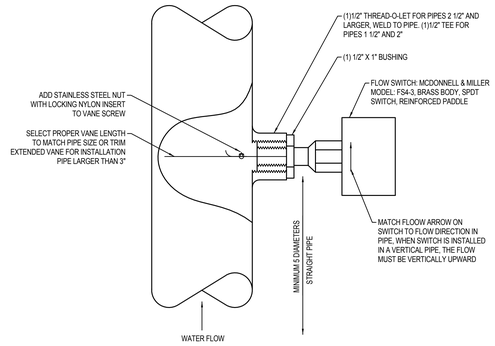

2 FLOW SWITCH INSTALLATION DETAIL

NO SCALE

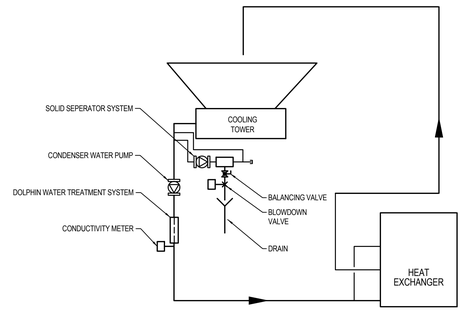

3 CONDUCTIVITY, PH & BIO CONTROL SYSTEM

NO SCALE

4

NO SCALE

5

NO SCALE

6

NO SCALE

7

NO SCALE

8

NO SCALE

9

NO SCALE

Copyright (C) 2010 by Colvin Engineering Associates, Inc. Salt Lake City, Utah. All rights reserved. Unauthorized copying and/or use is illegal and subject to prosecution.

C:\Revit Local Models\2010-074.00 - WSU PH II Bldg 2 - Tyler 2011.rvt
5/17/2011 10:02:39 AM

MHTN
ARCHITECTS
MHTN Architects, Inc.
420 East South Temple
Suite 100
Salt Lake City, Utah 84111
Telephone (801) 595-6700
Telefax (801) 595-6717
www.mhtn.com

Colvin Engineering Associates, Inc.
244 West 300 North Suite 200
Salt Lake City, Utah 84103
Phone: (801) 322-2400 / Fax: (801) 322-2416

WEBER STATE UNIVERSITY
RESIDENTIAL LIFE PHASE II - BLDG 2

DFCM PROJECT NUMBER: 10176810

WEBER STATE UNIVERSITY
OGDEN, UTAH 84408

SEAL

MHTN PROJECT NO. 10176810

DRAWN BY: Author CHECKED BY: Checker

ISSUED:

NO	DATE	DESCRIPTION

CONTRACTOR TO VERIFY DRAWINGS IN FIELD USE REFLECT LAST REVISION DATE:

NO	DATE	DESCRIPTION

SHEET NAME:
MECHANICAL DETAILS

CONSTRUCTION SET
17 MAY 2011

SHEET NUMBER
MH506

MAKE-UP AIR UNIT SCHEDULE (MAU)

PLAN CODE	FLOW (CFM)	E.S.P. (IN. WG.)	MOTOR			ELECTRICAL			NATURAL GAS INDIRECT FIRED HEATING SECTION				COOLING				SIZE				FILTER	MANUFACTURER & MODEL NO.	ACCESSORIES	CONTROLS
			H.P.	VOLTAGE & PHASE	VFD	FLA	MCA	MOC	INPUT (MBH)	OUTPUT (MBH)	EAT DB	AIR TEMP. RISE, °F	TOTAL MBH	SENSIBLE MBH	LAT DB	EAT DB/WB	LENGTH (IN)	WIDTH (IN)	HEIGHT (IN)	WEIGHT (LBS)	MERV			
MAU-1	9,480	1.5	2 @ 5	208/3	YES	155	161	175	915	730	6.0	84.4	333	333	54	96/62 (1)	156	101	98	6000	11	AAON RN-031-8-0-BBD2-5E9	DOWN BLAST FAN AND MOTOR MOUNTED ON VIBRATION ISOLATORS, 2" MESH FILTERS, WEATHER HOOD WITH BIRD SCREEN, MOTORIZED INTAKE DAMPER, ROOF CURB, EVAPORATIVE COOLER DRAIN, SINGLE POINT POWER CONNECTION, DISCONNECT SWITCH.	INTERLOCK WITH KITCHEN HOOD EXHAUST FAN. HEATING AND COOLING SECTIONS OPERATE TO MAINTAIN SPACE TEMPERATURE (SET AT 70F). SUPPLY AND EXHAUST FANS OPERATE CONTINUOUSLY. HEATING AND COOLING SECTIONS AND SUPPLY AND EXHAUST FANS OPERATE INTERMITTENTLY TO MAINTAIN NIGHT SETBACK TEMPERATURE (SET AT 65F).

HEAT PUMP WATER RUNOUT PIPE SIZES

GPM RANGE	RUNOUT PIPE SIZE
0 - 3	3/4"
3.1 - 6	1"
6.1 - 10	1 1/4"
10.1 - 20	1 1/2"

VARIABLE FREQUENCY DRIVE SCHEDULE (VFD)

PLAN CODE	SERVICE	H.P.	REMARKS
VFD-1	COOLING TOWER FAN	10	PROVIDE WITH NEMA 3 ENCLOSURE
VFD-2	COOLING TOWER FAN	10	PROVIDE WITH NEMA 3 ENCLOSURE
VFD-3	P-3	3/4	- -
VFD-4	P-6	25	- -
VFD-5	P-7	25	- -
VFD-6	P-8	10	- -
VFD-7	P-9	10	- -
VFD-8	MAU-1 FAN ONLY	10	PROVIDE WITH NEMA 3 ENCLOSURE
VFD-9	EF-5 KITCHEN HOOD	2	PROVIDE WITH NEMA 3 ENCLOSURE

(1) VFD SPECIFIED AND INSTALLED BY DIVISION 23000, WIRED BY ELECTRICAL DIVISION.

ELECTRIC UNIT HEATER SCHEDULE (UH)

PLAN CODE	ELECTRICAL				CFM (ALT.)	MOUNTING	EAT (°F)	MANUFACTURER & MODEL NO.	REMARKS	SERVES
	TOTAL KW	NO. OF STEPS	VOLTAGE & PHASE	FAN H.P.						
UH-1	5	2	208/3	1/100	350	(1) CEILING	60	QMARK MUH05-81	PROVIDE WITH THERMOSTAT	MECHANICAL ROOM
UH-2	5	2	208/3	1/100	350	(1) CEILING	60	QMARK MUH05-81	PROVIDE WITH THERMOSTAT	BUILDING STORAGE 113
UH-3	5	2	208/3	1/100	350	(1) CEILING	60	QMARK MUH05-81	PROVIDE WITH THERMOSTAT	BUILDING STORAGE 116
UH-4	5	2	208/3	1/100	350	(1) CEILING	60	QMARK MUH05-81	PROVIDE WITH THERMOSTAT	BUILDING STORAGE 119

(1) HANG WITH SPRING ISOLATORS.

COOLING TOWER FILTER (CTF)

PLAN CODE	SYSTEM	FLOW (GPM)	PUMP HEAD (PSI)	INLET/ OUTLET	PUMPS		OPERATING WEIGHT (LBS)	MANUFACTURER & MODEL NO	REMARKS
					VOLTAGE/ PHASE	HP			
CTF-1	COOLING TOWER WATER	65	AS REQUIRED	2"/2"	208/3	3	300	LAKOS TCI-0065-CMBV	PURGE FUNCTION, OUTDOOR UNIT (1) (2)

(1) CONTROL OF PURGE FUNCTION TO BE BY INTERLOCK BETWEEN CWT CONTROLLER (BY DIVISION 15548) AND MOTORIZED BALL VALVE (BY 15548 CONTRACTOR). VALVE WILL BE INSTALLED AT PURGE OUTLET OF CTF AND WIRED TO THE DDC CONTROL SYSTEM BY THE DIVISION 15955 CONTRACTOR.

(2) INCLUDE FULLY OPERATIONAL CONTROL PANEL MOUNTED ON CTF SKID. PANEL SHALL INCLUDE MOTOR STARTER, H-O-A SWITCH, DISCONNECTS, AND DRY CONTACT FOR USE BY DDC SYSTEM TO INDICATE ERROR STATUS.

DRYER BOOSTER FAN SCHEDULE (DB)

PLAN CODE	AREA SERVED	WATTS / AMPS	SWITCH VOLTAGE	RPM	METHOD OF CONTROL	MANUFACTURER / MODEL	REMARKS
DB-1	LAUNDRY	78/0.72	120	2761	PRESSURE SWITCH	FANTECH DVK100B-P	- -
DB-2	LAUNDRY	78/0.72	120	2761	PRESSURE SWITCH	FANTECH DVK100B-P	- -
DB-3	LAUNDRY	78/0.72	120	2761	PRESSURE SWITCH	FANTECH DVK100B-P	- -
DB-4	LAUNDRY	78/0.72	120	2761	PRESSURE SWITCH	FANTECH DVK100B-P	- -
DB-5	LAUNDRY	78/0.72	120	2761	PRESSURE SWITCH	FANTECH DVK100B-P	- -
DB-6	LAUNDRY	78/0.72	120	2761	PRESSURE SWITCH	FANTECH DVK100B-P	- -
DB-7	LAUNDRY	78/0.72	120	2761	PRESSURE SWITCH	FANTECH DVK100B-P	- -
DB-8	LAUNDRY	78/0.72	120	2761	PRESSURE SWITCH	FANTECH DVK100B-P	- -
DB-9	LAUNDRY	78/0.72	120	2761	PRESSURE SWITCH	FANTECH DVK100B-P	- -
DB-10	LAUNDRY	78/0.72	120	2761	PRESSURE SWITCH	FANTECH DVK100B-P	- -
DB-11	LAUNDRY	78/0.72	120	2761	PRESSURE SWITCH	FANTECH DVK100B-P	- -
DB-12	LAUNDRY	78/0.72	120	2761	PRESSURE SWITCH	FANTECH DVK100B-P	- -

TRANSFER FAN SCHEDULE (TF) (1)

PLAN CODE	AREA SERVED	TYPE	CFM @ ELEV.	ESP (S.L.)	FAN RPM	MOTOR				SONES	DAMPER (GRAVITY OR MOTOR)	METHOD OF CONTROL	OPENING SIZE (IN.)	OPERATING WT. (LBS.)	MANUFACTURER / MODEL	REMARKS
						WATTS	AMPS	EFFICIENY %	VOLTAGE & PHASE							
TF-1	BUILDING STORAGE	CEILING MOUNT	85	0.2	1000	48.3	-	N/A	120/1	1.8	GRAVITY	SWITCH RUN CONTINUOUS	6"ø	25	COOK GC-740	-
TF-2	BUILDING STORAGE	CEILING MOUNT	85	0.2	1000	48.3	-	N/A	120/1	1.8	GRAVITY	SWITCH RUN CONTINUOUS	6"ø	25	COOK GC-740	-
TF-3	BUILDING STORAGE	CEILING MOUNT	85	0.2	1000	48.3	-	N/A	120/1	1.8	GRAVITY	SWITCH RUN CONTINUOUS	6"ø	25	COOK GC-740	-

(1) MANUFACTURER TO PROVIDE SPEED CONTROLLER INTEGRAL WITH UNIT.

CONDENSER WATER TREATMENT EQUIPMENT

PLAN CODE	TYPE	FLOW RATE (GPM)	ELECTRICAL			MAXIMUM DIMENSIONS			MANUFACTURER & MODEL	(2) REMARKS (3)
			POWER (VA)	CONTROL (1)	VOLTAGE/ PHASE	LENGTH (IN)	DIAMETER PIPE (IN)	CABINET (IN)		
CWT-1	ELECTROMAGNETIC INDUCTION	650	480	NEMA PACKAGED	115-230/1ø	60	6	10 X 10	DOLPHIN C3060-PVC	INTERLOCK WITH CONDENSOR PUMP

(1) 120 VOLT / 1PH/ 60 HZ, 20 AMPS.
(2) INTERLOCK AUX. CONTACTS TO ATC SYSTEM FOR RUN STATUS AND ALARM STATUS.
(3) PROVIDE WITH FULL CONDUCTIVITY METER PACKAGE WITH BLOW DOWN VALVE PIPED TO DRAIN SOLIDS FROM COOLING TOWER FILTER.

AIR DEVICE SCHEDULE

PLAN CODE — GRILLE CFM

PLAN CODE	TYPE & DUTY	FACE SIZE	NECK SIZE	CEILING TYPE (2)	MAX. CFM	MAX. T.P. (IN. W.C.)	N.C. LEVEL MAX	MIN. THROW (FT) (T50)	4-WAY MIN. THROW (T50)	2-WAY MIN. THROW (T50)	MANUFACTURER & MODEL NO.	REMARKS
6	LINEAR-SUPPLY	48"L	10"Ø	MATCH CEILING	320	0.09	33	13	-	-	TEMPO L.D.	2 @ 1" SLOT
9	PERFORATED RETURN	24" X 24"	22" X 22"	MATCH CEILING	1200	0.05	17	-	-	-	TITUS PAR	-
10	PERFORATED RETURN	24" X 12"	22"X 10"	MATCH CEILING	600	0.06	10	-	-	-	TITUS PAR	-
13	PERFORATED EXHAUST GRILLE	8" X 8"	6" X 6"	MATCH CEILING	120	0.12	10	-	-	-	TITUS 8F	(3) -
16	PERFORATED EXHAUST GRILLE	14" x 14"	12" X 12"	MATCH CEILING	550	0.12	16	-	-	-	TITUS 8F	(3) -
31	PERFORATED STAR PATTERN	24" X 24"	6"Ø	MATCH CEILING	170	0.13	34	-	-	-	TITUS PSS-AA	-
32	PERFORATED STAR PATTERN	24" X 24"	8"Ø	MATCH CEILING	270	0.12	33	-	-	-	TITUS PSS-AA	-
33	PERFORATED STAR PATTERN	24" X 24"	10"Ø	MATCH CEILING	400	0.12	33	-	-	-	TITUS PSS-AA	-
37	ADJUSTABLE LOUVERED	24" X 24"	6"Ø	MATCH CEILING	170	0.13	25	-	11	-	TITUS TDCA	(3) -
38	ADJUSTABLE LOUVERED	24" X 24"	8"Ø	MATCH CEILING	400	0.2	32	-	14	-	TITUS TDCA	(3) -
39	ADJUSTABLE LOUVERED	24" X 24"	10"Ø	MATCH CEILING	500	0.2	32	-	17	-	TITUS TDCA	(3) -
48	SIDEWALL RETURN	20 X 14	18 X 12	SIDEWALL	675	0.05	13	-	-	-	TITUS 355RS	-
49	PERFORATED RETURN/TRANSFER	12 X 12	10 X 10	MATCH CEILING	400	0.06	-	-	-	-	TITUS PXP	-
50	LINEAR SUPPLY	48 X 6	10"Ø	MATCH CEILING	300	0.07	16	28	-	-	PRICE ASP225	1-SLOT PROVIDE WITH PLENUM BOX
51	LINEAR SUPPLY	12 X 8	10 X 6	SIDEWALL	240	0.12	19	14	-	-	PRICE 520	-
52	LINEAR SUPPLY	22 X 12	20 X 10	SIDEWALL	710	0.09	19	24	-	-	PRICE 520	3/4" BLADE SPACING

(1) RECOMMENDED MIN. DISTANCE BETWEEN DIFFUSERS IN 9' CEILING.
(2) VERIFY FRAME TYPE OF ALL AIR DEVICES WITH ARCHITECTURAL REFLECTED CEILING PLAN BEFORE ORDERING.
(3) PROVIDE WITH OPPOSED BLADE DAMPER

PUMP SCHEDULE

PLAN CODE	DUTY	FLOW (GPM)	PRESSURE (FT)	PUMP SPEED (RPM)	MIN. EFF. (%)	FLUID	MOTOR (1)			PUMP & MOTOR WT. (LB)	MANUFACTURER & MODEL NO.
							LOAD (BHP)	SIZE (HP)	VOLTAGE & PHASE		
P-1	HEATING WATER PRIMARY	185	42	1750	60	FW	2.7	5	208/3	250	B&G INLINE 80 SERIES 3x3x7B (5)
P-2	HEATING WATER PRIMARY	185	42	1750	60	FW	2.7	5	208/3	250	B&G INLINE 80 SERIES 3x3x7B (5)
P-3	HEATING WATER INJECTION	150	10	1150	60	FW	0.75	3/4	208/3	125	(2) B&G INLINE 60 SERIES 3 X 3 X 5-1/4 (3) (5)
P-4	COOLING TOWER	650	82	1750	60	FW	18.2	20	208/3	600	B&G BASE MNT. 1510 SERIES 4E (4)
P-5	COOLING TOWER	650	82	1750	60	FW	18.2	20	208/3	600	B&G BASE MNT. 1510 SERIES 4E (4)
P-6	HEAT PUMP LOOP	400	88	VFD	60	FW	12.7	15	208/3	630	B&G BASE MNT. 1510 SERIES 2-1/2AB (2) (3) (4)
P-7	HEAT PUMP LOOP	400	88	VFD	60	FW	12.7	15	208/3	630	B&G BASE MNT. 1510 SERIES 2-1/2AB (2) (3) (4)
P-8	HEAT PUMP LOOP BLDG 3	175	110	VFD	60	FW	7.0	10	208/3	600	B&G BASE MNT. 1510 SERIES 2AC (2) (3) (4)
P-9	HEAT PUMP LOOP BLDG 3	175	110	VFD	60	FW	7.0	10	208/3	600	B&G BASE MNT. 1510 SERIES 2AC (2) (3) (4)
P-10	DOMESTIC HOT WATER	145	20	1750	60	FW	1.25	1.5	208/3	225	B&G INLINE 80 SERIES 3 X 3 X 7B (5)
P-11	CONDENSATE	42	15	NA	MA	NA	NA	1/30	115/1	25	LITTLE GIANT VCMX-20UL
P-12	CONDENSATE	42	15	NA	MA	NA	NA	1/30	115/1	25	LITTLE GIANT VCMX-20UL
P-13	CONDENSATE	42	15	NA	MA	NA	NA	1/30	115/1	25	LITTLE GIANT VCMX-20UL
P-14	CONDENSATE	42	15	NA	MA	NA	NA	1/30	115/1	25	LITTLE GIANT VCMX-20UL
P-15	CONDENSATE	42	15	NA	MA	NA	NA	1/30	115/1	25	LITTLE GIANT VCMX-20UL
P-16	CONDENSATE	42	15	NA	MA	NA	NA	1/30	115/1	25	LITTLE GIANT VCMX-20UL
P-17	CONDENSATE	42	15	NA	MA	NA	NA	1/30	115/1	25	LITTLE GIANT VCMX-20UL
P-18	CONDENSATE	42	15	NA	MA	NA	NA	1/30	115/1	25	LITTLE GIANT VCMX-20UL

(1) INVERTER DUTY RATED MOTOR.
(2) PUMP TO BE PROVIDED WITH FACTORY VFD. SEE SPECIFICATIONS FOR REQUIREMENTS.
(3) FULL SIZED IMPELLER. NO TRIM.
(4) PROVIDE WITH APPROPRIATELY SIZED SUCTION DIFFUSER(< 1 PSI PRESSURE DROP)
(5) SIESMICALLY HANG FROM STRUCTURE WITH ALL THREAD ROD AND VIBRATION ISOLATORS.

MHTN ARCHITECTS
MHTN Architects, Inc.
420 East South Temple
Suite 100
Salt Lake City, Utah 84111
Telephone (801) 595-6700
Telefax (801) 595-6717
www.mhtn.com

Colvin Engineering Associates, Inc.
244 West 300 North Suite 200
Salt Lake City, Utah 84103
Phone: (801) 322-2400 / Fax: (801) 322-2416

WEBER STATE UNIVERSITY
RESIDENTIAL LIFE PHASE II - BLDG 2
DFCM PROJECT NUMBER: 10176810
WEBER STATE UNIVERSITY
OGDEN, UTAH 84408

SEAL

M-HTN PROJECT NO: 10176810
DRAWN BY: GM CHECKED BY: BRC

ISSUED:

NO.	DATE	DESCRIPTION

CONTRACTOR TO VERIFY DRAWINGS IN FIELD USE REFLECT LAST REVISION DATE.

NO.	DATE	DESCRIPTION

SHEET NAME
MECHANICAL SCHEDULES

CONSTRUCTION SET
17 MAY 2011

SHEET NUMBER
MH601

Copyright (C) 2010 by Colvin Engineering Associates, Inc. Salt Lake City, Utah. All rights reserved. Unauthorized copying and/or use is illegal and subject to prosecution.

C:\Revit Local Models\2010-074.00 - WSU PH II Bldg 2 - Tyler 2011.rvt
5/17/2011 10:02:40 AM

EXPANSION TANK SCHEDULE

PLAN CODE	SYSTEM SERVED	WATER TEMP. RANGE (°F)	TANK VOL. (GAL)	ACCEPTANCE VOL. (GAL)	PRE-CHARGE (PSI)	MAX. DIMENSIONS DIA. (IN.)	MAX. DIMENSIONS H (IN.)	MAX. DIMENSIONS OPERATING WT. (LBS.)	MANUFACTURER & MODEL NO.	REMARKS
ET-1	HOT WATER	40-180	317	-	10	36	86	3500	AMTROL 1200-L	-

AIR SEPARATOR

PLAN CODE	SYSTEM SERVED	CONNECTION SIZE	MAX. GPM	P.D. (FT)	MAX. DIMENSIONS DIA. (IN.)	MAX. DIMENSIONS H (IN.)	MAX. DIMENSIONS FLANGE TO FLANGE (IN.)	DRY WT. (LBS)	MAX. OPER. WT. (LBS.)	MANUFACTURER & MODEL NO.
AS-1	HOT WATER	5"	370	5	20	37	23	190	250	spyro-vent R-5G

EXHAUST FAN SCHEDULE (1)

PLAN CODE	AREA SERVED	TYPE	CFM @ ELEV.	ESP (@ ELEV.) (IN. W.C.)	FAN RPM	MOTOR (1) B.H.P./ INPUT WATTS	MOTOR (1) H.P.	MOTOR (1) VOLTAGE & PHASE	SONES	DAMPER (GRAVITY OR MOTOR)	METHOD OF CONTROL SYSTEM	OPENING SIZE (IN)	DIMENSIONS L (IN)	DIMENSIONS W (IN)	DIMENSIONS H (IN)	MAX. OPERATING WT. (LBS.)	MANUFACTURER / MODEL	REMARKS
EF-1	RESTROOMS	ROOF MOUNTED	450	0.75	1765	0.192	1/4	115/1	10.6	GRAVITY DAMPER	BLDG CONTROL SYSTEM	18 X 18	NA	24ø	22	30	COOK 80C3B	(3) PROVIDE WITH 14" CURB
EF-2	RESTROOMS	ROOF MOUNTED	450	0.75	1765	0.192	1/4	115/1	10.6	GRAVITY DAMPER	BLDG CONTROL SYSTEM	18 X 18	NA	24ø	22	30	COOK 80C3B	(3) PROVIDE WITH 14" CURB
EF-3	RESTROOMS	ROOF MOUNTED	450	0.75	1765	0.192	1/4	115/1	10.6	GRAVITY DAMPER	BLDG CONTROL SYSTEM	18 X 18	NA	24ø	22	30	COOK 80C3B	(3) PROVIDE WITH 14" CURB
EF-4	RESTROOMS	ROOF MOUNTED	475	0.75	1795	0.202	1/4	115/1	11.1	GRAVITY DAMPER	BLDG CONTROL SYSTEM	18 X 18	NA	24ø	22	30	COOK 80C3B	(3) PROVIDE WITH 14" CURB
EF-5 TYPE II	KITCHEN HOOD	ROOF MOUNTED	8,775	2.5	VFD	NA	5	208/3	NA	GRAVITY DAMPER	BLDG CONTROL SYSTEM	28"ø	46	43	43	500	COOK 225 CF	(2) PROVIDE WITH 14" CURB (4)
EF-6 TYPE I	KITCHEN HOOD	ROOF MOUNTED	675	0.5	1550	NA	1/8	115/1	11.0	GRAVITY DAMPER	BLDG CONTROL SYSTEM	18 X 18	NA	26ø	21	75	COOK 100V2B	(2) PROVIDE WITH 14" CURB
EF-7 TYPE I	KITCHEN HOOD	INLINE	450	0.3	716	0.046	1/6	115/1	5.2	GRAVITY DAMPER	BLDG CONTROL SYSTEM	18 X 18	23	19	16	53	COOK DB-8	(2)
EF-8 TYPE I	KITCHEN HOOD	ROOF MOUNTED	675	0.5	1550	NA	1/8	115/1	11.0	GRAVITY DAMPER	BLDG CONTROL SYSTEM	18 X 18	NA	26ø	21	75	COOK 100V2B	(2) PROVIDE WITH 14" CURB
EF-9	RESTROOMS	ROOF MOUNTED	150	0.75	1776	0.143/-	1/6	115/1	11.5	GRAVITY DAMPER	BLDG CONTROL SYSTEM	18 X 18	NA	24ø	22	30	COOK 70C2B	(3) PROVIDE WITH 14" CURB
EF-10	RESTROOMS	ROOF MOUNTED	250	0.7	1909	0.191/-	1/4	115/1	13.8	GRAVITY DAMPER	BLDG CONTROL SYSTEM	18 X 18	NA	24ø	22	30	COOK 70C3B	(3) PROVIDE WITH 14" CURB
EF-11	RESTROOMS	ROOF MOUNTED	250	0.7	1909	0.191/-	1/4	115/1	13.8	GRAVITY DAMPER	BLDG CONTROL SYSTEM	18 X 18	NA	24ø	22	30	COOK 70C3B	(3) PROVIDE WITH 14" CURB
EF-12	RESTROOMS	ROOF MOUNTED	225	0.7	1836	0.173/-	1/4	115/1	12.6	GRAVITY DAMPER	BLDG CONTROL SYSTEM	18 X 18	NA	24ø	22	30	COOK 70C3B	(3) PROVIDE WITH 14" CURB
EF-13	RESTROOMS	ROOF MOUNTED	250	0.7	1909	0.191/-	1/4	115/1	13.8	GRAVITY DAMPER	BLDG CONTROL SYSTEM	18 X 18	NA	24ø	22	30	COOK 70C3B	(3) PROVIDE WITH 14" CURB
EF-14	RESTROOMS	ROOF MOUNTED	75	0.7	1704	0.115/-	1/6	115/1	9.3	GRAVITY DAMPER	BLDG CONTROL SYSTEM	18 X 18	NA	24ø	22	30	COOK 60C2B	(3) PROVIDE WITH 14" CURB
EF-15	DISHWASHER	ROOF MOUNTED	474	0.7	1776	0.188/-	1/4	115/1	10.9	GRAVITY DAMPER	BLDG CONTROL SYSTEM	18 X 18	NA	24ø	22	30	COOK 80C3B	(3) PROVIDE WITH 14" CURB

(1) FACTORY FUSED DISCONNECT. (2) EXHAUST FAN TO BE INTERLOCKED WITH KITCHEN EXHAUST HOODS. (3) PROVIDE WITH PRE-WIRED FAN SPEED CONTROLLER. (4) EQUIPMENT TO BE ON EMERGENCY POWER.

HEAT EXCHANGER

PLAN CODE	SYSTEM SERVED	SOURCE SIDE CAP. (MBH)	SOURCE SIDE GPM	SOURCE SIDE EWT/LWT °F	SOURCE SIDE P.D. (FT.)	SOURCE SIDE FLUID	SOURCE SIDE SYSTEM OPERATING PRESSURE (PSIG)	LOAD SIDE CAP. (MBH)	LOAD SIDE EWT/LWT °F	LOAD SIDE GPM	LOAD SIDE P.D. (FT.)	LOAD SIDE FLUID	LOAD SIDE SYSTEM OPERATING PRESSURE (PSIG)	COIL SIZE DIA/ LENGTH	FOULING RESISTANCE	UNIT BOX DIMENSIONS DIA. (IN.)	UNIT BOX DIMENSIONS L (IN.)	UNIT BOX DIMENSIONS W (IN.)	UNIT BOX DIMENSIONS H (IN.)	WEIGHT (LBS.)	TYPE	MANUFACTURER & MODEL NO.
HX-1	HEAT PUMP LOOP	3730	650	72/84	15	FW	50	3,732	89/76	575	15	FW	50	NA	NA	NA	55	30	80	4,500	PLATE AND FRAME	B & G P47
HX-2	DOMESTIC HOT WATER	1450	145	180/160	5	FW	50	1450	45/140	30	1	FW	75	14/48 (1)	NA	54	NA	NA	86	7750	VERTICAL, DOMESTIC DOUBLE WALL/ STORAGE	AO SMITH HWG48-500V (2)

(1) TWO (2) COILS REQUIRED. (2) 500 GALLON TANK.

CABINET UNIT HEATER SCHEDULE

PLAN CODE	MIN. HEATING CAP. (MBH)	EAT (°F)	MOTOR WATTS (1)	MOTOR VOLTAGE & PHASE	MOUNTING	MAX. DIMENSIONS W X H X D	MANUFACTURER & MODEL NO	REMARKS
CUH-1	5.1	60	1500	120/1	CEILING	16" X 20" X 4"	QMARK EFF1500	(2)(3)
CUH-2	5.1	60	1500	120/1	CEILING	16" X 20" X 4"	QMARK EFF1500	(2)(3)

(1) MANUFACTURER TO PROVIDE INTERNAL DISCONNECT. (2) PROVIDE WITH INTEGRAL THERMOSTAT. (3) AMPS = 12.5

FORCED DRAFT CONDENSING BOILER SCHEDULE (B) (2)

PLAN CODE	MBH CAPACITY (3) OUTPUT @ 4400 FT.	MBH CAPACITY (3) INPUT @ 4400 FT.	ASME PRESS. RATING (PSI)	OPERATING PRESSURE (PSI)	EFFICIENCY %	FLUE / AIR INLET TYPE	EWT (°F)	LWT (°F)	AIR INLET	FLUE SIZE	MAX. GPM	PRESS. DROP (FT.HD.)	MAX. SIZE LENGTH (IN)	MAX. SIZE WIDTH (IN)	MAX. SIZE HEIGHT (IN)	MAX. SIZE OPERATING WT.(LBS)	BURNER AMPS	BURNER VOLTAGE & PHASE	BURNER GAS PRESSURE	MAKE & MODEL	REMARKS
B-1	2760	3000	160	50	92	AL29-4C SS.CAT.IV	60	80	10"	10"	276	15	84	41	80	4126	20	120/1	4 OZ.	LOCHINVAR FBN3000	(1)(2) 4" HOUSEKEEPING PAD
B-2	2760	3000	160	50	92	AL29-4C SS.CAT.IV	60	80	10"	10"	185	15	84	41	80	4126	20	120/1	4 OZ.	LOCHINVAR FBN3000	(1)(2) 4" HOUSEKEEPING PAD

(1) ACID NEUTRALIZATION KIT (2) PROVIDE WITH CONDENSATE DILUTION KIT.

LOUVER SCHEDULE (L) (1)

PLAN CODE	CFM	VELOCITY FPM	FREE AREA SQ. FT.	MAX. DIMENSIONS (W x H) (IN)	MANUFACTURER & MODEL NO.
L-1	560	514	1.09	52 x 14	RUSKIN ELF6350DMP
L-2	560	514	1.09	52 x 14	RUSKIN ELF6350DMP
L-3	570	523	1.09	24 x 16	RUSKIN ELF6350DMP
L-4	350	322	1.09	24 x 16	RUSKIN ELF6350DMP
L-5	250	230	1.09	24 x 16	RUSKIN ELF6350DMP
L-6	560	514	1.09	52 x 14	RUSKIN ELF6350DMP
L-7	560	514	1.09	52 x 14	RUSKIN ELF6350DMP
L-8	750	689	1.09	24 x 16	RUSKIN ELF6350DMP
L-9	660	606	1.09	24 x 16	RUSKIN ELF6350DMP
L-10	260	240	1.09	52 x 14	RUSKIN ELF6350DMP
L-11	85	78	1.09	24 x 16	RUSKIN ELF6350DMP
L-12	85	78	1.09	24 x 16	RUSKIN ELF6350DMP
L-13	85	78	1.09	24 x 16	RUSKIN ELF6350DMP

(1) LOUVER TO BE MILL FINISH ALUMINUM. COORDINATE WITH ARCHITECT.

SPLIT SYSTEM SCHEDULE - AIR COOLED CONDENSING UNIT (ACC)

AREA SERVED	ARI COOLING CAP (BTUH)	INDOOR UNIT PLAN CODE	INDOOR UNIT TYPE	INDOOR UNIT ELECTRICAL VOLTAGE	INDOOR UNIT ELECTRICAL PHASE	INDOOR UNIT ELECTRICAL MCA	INDOOR UNIT ELECTRICAL MOCP	INDOOR UNIT DIMENSIONS (IN) H	INDOOR UNIT DIMENSIONS (IN) W	INDOOR UNIT DIMENSIONS (IN) D	INDOOR UNIT WEIGHT (LBS)	INDOOR UNIT MANUFACTURER MODEL	OUTDOOR UNIT PLAN CODE	OUTDOOR UNIT UNIT SERVED	OUTDOOR UNIT REFRIGERANT	OUTDOOR UNIT ELECTRICAL VOLTAGE	OUTDOOR UNIT ELECTRICAL PHASE	OUTDOOR UNIT ELECTRICAL MCA	OUTDOOR UNIT ELECTRICAL MOCP	OUTDOOR UNIT DIMENSIONS (IN) H	OUTDOOR UNIT DIMENSIONS (IN) W	OUTDOOR UNIT DIMENSIONS (IN) D	OUTDOOR UNIT WEIGHT (LBS)	OUTDOOR UNIT MANUFACTURER MODEL	REMARKS
IDF ROOM	18,000	FC-1	HIGH WALL MOUNTED	208/230	1	0.38	15	12	36	10	30	CITY MULTI PKFY-P18NKMU-E	CCU-1	FC-1 FC-2 FC-3	R410A	208/230	3	35/32	40/40	65	37	30	-	CITY MULTI PUHY-P96TGMU-A	(2)(5)(6)(8)(9)
IDF ROOM	18,000	FC-2	HIGH WALL MOUNTED	208/230	1	0.38	15	12	36	10	30	CITY MULTI PKFY-P18NKMU-E													
IDF ROOM	18,000	FC-3	HIGH WALL MOUNTED	208/230	1	0.38	15	12	36	10	30	CITY MULTI PKFY-P18NKMU-E													
IDF ROOM	18,000	FC-4	HIGH WALL MOUNTED	208/230	1	15	15	15	60	10	75	SANYO KH3672R	CCU - 2	FC-4	R410A	208/230	1	35	35	31	37	14	165	SANYO C3672R	(2)(5)(6)(8)(9)
IDF ROOM	18,000	FC-5	HIGH WALL MOUNTED	208/230	1	15	15	15	60	10	75	SANYO KH3672R	CCU - 3	FC-5	R410A	208/230	1	35	35	31	37	14	165	SANYO C3672R	(2)(5)(6)(8)(9)
MDF ROOM	18,000	FC-6	HIGH WALL MOUNTED	208/230	1	15	15	15	60	10	75	SANYO KH3672R	CCU - 4	FC-6	R410A	208/230	1	35	35	31	37	14	165	SANYO C3672R	(2)(5)(6)(8)(9)
ELEVATOR EQUIP. ROOM	30,000 (1)	SSFC-1	CEILING	208/230	1	1	15	11	34	34	75	MITSUBISHI PLA-A30AA	CU-1	SSFC-1	R410A	208/230	1	25	30	38	38	14	200	MITSUBISHI PUY-A30NHA	(2)(3)(4)(5)(6)(7)(8)(9)

(1) RATING AT 95° F DB AND 75° F WB ENTERING EVAPORATOR.
(2) ROUTE REFRIGERANT LINES FROM CONDENSING UNIT TO SPLIT SYSTEM FAN COILS AS REQUIRED. ROUTE AND SIZE REFRIGERANT LINES PER MANUFACTURERS REQUIREMENTS.
(3) HANG UNIT FROM STRUCTURE WITH ALL THREAD ROD AND SPRING VIBRATION ISOLATION.
(4) EQUIPMENT TO BE ON EMERGENCY POWER.
(5) MOUNT OUTDOOR UNIT ON ROOF CURB.
(6) PROVIDE WITH LOW AMBIENT KIT DOWN TO 0°F.
(7) UNIT ON FUTURE EMERGENCY POWER.
(8) WITH DIGITAL THERMOSTAT.
(9) PROVIDE DISCONNECT WITH THE UNITS.

BOILER STORAGE TANK SCHEDULE (BST)

PLAN CODE	VOLUME (GALLONS)	DIMENSIONS DIAMETER (IN.)	DIMENSIONS HEIGHT (IN.)	CONNECTION SIZES WATER IN (IN.)	CONNECTION SIZES WATER OUT (IN.)	MANUFACTURER & MODEL NO.
BST-1	175	32	77	4"	4"	A.O. SMITH TJV-200M

COOLING TOWER SCHEDULE (CT)

PLAN CODE	FLOW RATE (GPM)	TOTAL HEAT REJECTED (MBH)	EWT (°F)	LWT (°F)	OSA wb (°F)	NO. OF CELLS	ELECTRICAL MOTOR HP	ELECTRICAL CONTROL	ELECTRICAL SUMP HEATERS (KW)	ELECTRICAL VOLTAGE/ PHASE	MAXIMUM DIMENSIONS LENGTH (FT)	MAXIMUM DIMENSIONS WIDTH (FT)	MAXIMUM DIMENSIONS HEIGHT (FT) (3)	MAX. OPERATING WEIGHT (LBS)	MANUFACTURER & MODEL	REMARKS
CT-1	500	3,245	85	72	66	1	10	VFD	4.5	208/3	10.5	20	12	20,200	MARLEY NC8405NAN1	PROVIDE RAILING AROUND TOP (1)(2)(4)
CT-2	500	3,245	85	72	66	1	10	VFD	4.5	208/3	10.5	20	12	20,200	MARLEY NC8405NAN1	PROVIDE RAILING AROUND TOP (1)(2)(4)

(1) UNIT TO BE INSTALLED ON I-BEAM STEEL SUPPORT ON CONCRETE. SEISMICALLY BRACE UNIT.
(2) PROVIDE FACTORY MOUNTED VFD WITH NEMA 3R ENCLOSURE.
(3) DOES NOT INCLUDE HEIGHT OF 3'-0" RAILING.
(4) COOLING TOWER TO OPERATE FROM 350 GPM MINIMUM TO 500 GPM MAXIMUM, PROVIDE FLOW CONTROL DEVICES WITH TOWER.

MHTN ARCHITECTS
MHTN Architects, Inc.
420 East South Temple
Suite 100
Salt Lake City, Utah 84111
Telephone (801) 595-6700
Telefax (801) 595-6717
www.mhtn.com

Colvin Engineering Associates, Inc.
244 West 300 North Suite 200
Salt Lake City, Utah 84103
Phone: (801) 322-2400 / Fax: (801) 322-2416

WEBER STATE UNIVERSITY
RESIDENTIAL LIFE PHASE II - BLDG 2
DFCM PROJECT NUMBER: 10176810

WEBER STATE UNIVERSITY
OGDEN, UTAH 84408

SEAL

MHTN PROJECT NO. 10176810
DRAWN BY: GM CHECKED BY: BRC

ISSUED:

NO	DATE	DESCRIPTION

CONTRACTOR TO VERIFY DRAWINGS IN FIELD USE REFLECT LAST REVISION DATE.

NO	DATE	DESCRIPTION

SHEET NAME
MECHANICAL SCHEDULES

CONSTRUCTION SET
17 MAY 2011

SHEET NUMBER
MH602

Copyright (C) 2010 by Colvin Engineering Associates, Inc. Salt Lake City, Utah. All rights reserved. Unauthorized copying and/or use is illegal and subject to prosecution.

C:\Revit Local Models\2010-074.00 - WSU PH II Bldg 2 - Tyler 2011.rvt
5/17/2011 10:02:40 AM

HEAT PUMP SCHEDULE (10) (11)

PLAN CODE	CFM HI/LO	ESP (WC)	GPM	PD FT	FLUID	COOLING CAPACITY: HEAT OF REJECTION (MBH)	COOLING CAPACITY: TOTAL CAP. MBH	COOLING CAPACITY: SENSIBLE CAP. MBH	COOLING CAPACITY: EAT DB/WB	COOLING CAPACITY: LAT °F	COOLING CAPACITY: EWT °F	COOLING CAPACITY: POWER (KW)	HEATING CAPACITY: TOTAL (MBH)	HEATING CAPACITY: EAT °F/DB	HEATING CAPACITY: LAT °F	HEATING CAPACITY: EWT	HEATING CAPACITY: HEAT OF ABSORPTION	HEATING CAPACITY: POWER (KW)	ELECTRICAL: MCA	ELECTRICAL: FLA	ELECTRICAL: VOLTAGE/PHASE	PUMP (4): FLOW (GPM)	PUMP (4): PRESSURE (FT)	PUMP (4): SIZE (HP)	PUMP (4): BHP	PUMP (4): VOLTAGE & PHASE	PUMP (4): MANUFACTURER & SERIES	MANUFACTURER & MODEL NO.	MAX. SIZE: LENGTH (IN)	MAX. SIZE: WIDTH (IN)	MAX. SIZE: HEIGHT (IN)	MAX. SIZE: OPERATING WT.(LBS)	REMARKS
HP-1	680	0.5	3	3.62	FW	21.95	17.20	17.18	78/60	54.93	79.81	1.39	19.62	68	94.35	55	15.16	1.31	14.10	11.70	208/1	3	20	0.08	-	115/1	B&G BOOSTER PL-30	TRANE GEVE0181	22	22	40	250	WATER TO AIR (1)(2)(3)(5)
HP-2	470	0.5	2.2	2.4	FW	17.29	13.48	12.78	78/60	53.17	79.81	1.12	15.21	68	97.54	52.56	11.29	1.15	10.58	8.60	208/1	2.2	20	0.08	-	115/1	B&G BOOSTER PL-30	TRANE GEVE0151	20	22	32	250	WATER TO AIR (1)(2)(3)(5)
HP-3	525	0.5	2.2	2.4	FW	17.54	13.77	13.71	78/60	54.16	79.17	1.11	15.38	68	94.75	52.97	11.61	1.11	10.58	8.60	208/1	2.2	20	0.08	-	115/1	B&G BOOSTER PL-30	TRANE GEVE0151	20	22	32	250	WATER TO AIR (1)(2)(3)(5)
HP-4	2,110	0.5	6	7.12	FW	73.71	57.57	56.04	78/60	53.75	79.17	4.73	60.95	68	94.38	52.97	45.89	4.80	38.28	31.70	208/1	6	20	0.08	-	115/1	B&G BOOSTER PL-30	TRANE GEVE0601	27	32	47	350	WATER TO AIR (1)(2)(3)(5)(9)
HP-5	650	0.5	3	3.63	FW	21.83	17.11	17.10	78/60	53.98	79.17	1.38	19.13	68	94.88	52.97	14.63	1.32	14.10	11.70	208/1	3	20	0.08	-	115/1	B&G BOOSTER PL-30	TRANE GEVE0181	22	22	40	250	WATER TO AIR (1)(2)(3)(5)
HP-6	680	0.5	3	3.87	FW	21.76	16.96	16.94	78/60	55.25	79.58	1.41	18.54	68	93.03	52.70	14.26	1.28	14.10	11.70	208/1	3	20	0.08	-	115/1	B&G BOOSTER PL-30	TRANE GEHE0181	46	23	18	250	WATER TO AIR (1)(2)(3)(5)(6)(7)
HP-7	470	0.5	3	4.14	FW	17.23	13.61	12.80	78/60	53.13	78.99	1.06	15.72	68	98.54	53.10	11.77	1.16	10.58	8.60	208/1	3	20	0.08	-	115/1	B&G BOOSTER PL-30	TRANE GEVE0151	20	22	32	250	WATER TO AIR (1)(2)(3)(5)
HP-8	470	0.5	3	4.14	FW	17.23	13.61	12.80	78/60	53.13	78.99	1.06	15.72	68	98.54	53.10	11.77	1.16	10.58	8.60	208/1	3	20	0.08	-	115/1	B&G BOOSTER PL-30	TRANE GEVE0151	20	22	32	250	WATER TO AIR (1)(2)(3)(5)
HP-9	525	0.5	2.3	2.61	FW	17.54	13.82	13.73	78/60	54.12	78.35	1.09	15.53	68	95.01	53.51	11.75	1.11	10.58	8.60	208/1	2.3	20	0.08	-	115/1	B&G BOOSTER PL-30	TRANE GEVE0151	20	22	32	250	WATER TO AIR (1)(2)(3)(5)
HP-10	2,110	0.5	6	7.14	FW	73.80	57.77	56.14	78/60	53.71	78.35	4.70	61.32	68	94.54	53.51	46.24	4.80	38.28	31.70	208/1	6	20	0.08	-	115/1	B&G BOOSTER PL-30	TRANE GEVE0601	27	32	47	350	WATER TO AIR (1)(2)(3)(5)
HP-11	650	0.5	2.8	3.2	FW	21.87	17.14	17.08	78/60	54.01	78.35	1.38	19.11	68	94.85	53.51	14.62	1.32	14.10	11.70	208/1	2.8	20	0.08	-	115/1	B&G BOOSTER PL-30	TRANE GEVE0181	22	22	40	250	WATER TO AIR (1)(2)(3)(5)(9)
HP-12	680	0.5	2.8	3.41	FW	21.76	16.97	16.95	78/60	55.23	78.75	1.40	18.60	68	92.98	53.24	14.22	1.28	14.10	11.70	208/1	2.8	20	0.08	-	115/1	B&G BOOSTER PL-30	TRANE GEHE0181	46	23	18	250	WATER TO AIR (1)(2)(3)(5)(6)(7)
HP-13	470	0.5	2.3	2.61	FW	17.29	13.56	12.82	78/60	53.09	78.16	1.09	15.44	68	98	53.63	11.51	1.15	10.58	8.60	208/1	2.3	20	0.08	-	115/1	B&G BOOSTER PL-30	TRANE GEVE0151	20	22	32	250	WATER TO AIR (1)(2)(3)(5)
HP-14	470	0.5	2.3	2.61	FW	17.29	13.56	12.82	78/60	53.09	78.16	1.09	15.44	68	98	53.63	11.51	1.15	10.58	8.60	208/1	2.3	20	0.08	-	115/1	B&G BOOSTER PL-30	TRANE GEVE0151	20	22	32	250	WATER TO AIR (1)(2)(3)(5)
HP-15	525	0.5	2.3	2.62	FW	17.54	13.85	13.75	78/60	54.09	77.71	1.08	15.60	68	95.13	53.92	11.81	1.11	10.58	8.60	208/1	2.3	20	0.08	-	115/1	B&G BOOSTER PL-30	TRANE GEVE0151	20	22	32	250	WATER TO AIR (1)(2)(3)(5)
HP-16	650	0.5	2.8	3.21	FW	21.87	17.18	17.09	78/60	53.99	77.71	1.37	19.20	68	94.97	53.92	14.70	1.32	14.10	11.70	208/1	2.8	20	0.08	-	115/1	B&G BOOSTER PL-30	TRANE GEVE0181	22	22	40	250	WATER TO AIR (1)(2)(3)(5)
HP-17	680	0.5	2.8	3.42	FW	21.76	17.02	17.00	78/60	55.18	77.93	1.39	18.72	68	93.14	53.78	14.33	1.28	14.10	11.70	208/1	2.8	20	0.08	-	115/1	B&G BOOSTER PL-30	TRANE GEHE0181	46	23	18	250	WATER TO AIR (1)(2)(3)(5)(6)(7)
HP-18	400	0.5	2	2.2	FW	14.19	11.17	10.77	78/60	53.42	77.56	0.88	12.53	68	96.61	54.03	9.39	0.92	8.58	7.00	208/1	2	20	0.08	-	115/1	B&G BOOSTER PL-30	TRANE GEHE0121	40	20	15	250	WATER TO AIR (1)(2)(3)(5)(6)(7)
HP-19	2,150	0.5	10	7.9	FW	73.47	58.10	56.19	78/60	54.13	76.77	4.50	62.66	68	94.61	54.54	47.36	4.48	38.28	31.70	208/1	10	20	0.08	-	115/1	B&G BOOSTER PL-30	TRANE GEHE0601	58	33	21	400	WATER TO AIR (1)(2)(3)(5)(6)(7)(9)
HP-20	1,350	0.5	4	5.28	FW	43.37	34.61	34.59	78/60	54.61	76.31	2.57	40.43	68	95.35	54.79	31.22	2.70	24.48	20.30	208/1	4	20	0.08	-	115/1	B&G BOOSTER PL-30	TRANE GEVE0361	25	27	42	250	WATER TO AIR (1)(2)(3)(5)(9)
HP-21	775	0.5	3.8	5.6	FW	28.78	22.74	21.08	78/60	53.17	76	1.77	26.11	68	98.76	55	19.76	1.86	18.10	14.90	208/1	3.8	20	0.08	-	115/1	B&G BOOSTER PL-30	TRANE GEVE0241	22	22	40	250	WATER TO AIR (1)(2)(3)(5)(9)
HP-22	705	0.5	3.8	5.6	FW	28.37	22.33	19.87	78/60	52.27	76	1.77	26.04	68	101.73	55	19.49	1.92	18.10	14.90	208/1	3.8	20	0.08	-	115/1	B&G BOOSTER PL-30	TRANE GEVE0241	22	22	40	250	WATER TO AIR (1)(2)(3)(5)(9)
HP-23	750	0.5	3.8	5.8	FW	28.32	22.37	20.44	78/60	53.12	76.13	1.74	26.15	68	99.84	54.91	19.60	1.92	18.10	14.90	208/1	3.8	20	0.08	-	115/1	B&G BOOSTER PL-30	TRANE GEHE0241	46	23	18	260	WATER TO AIR (1)(2)(3)(5)(6)(7)
HP-24	470	0.5	2.3	2.62	FW	17.29	13.64	12.85	78/60	53.04	76.40	1.07	15.62	68	98.35	54.73	11.68	1.16	10.58	8.60	208/1	2.3	20	0.08	-	115/1	B&G BOOSTER PL-30	TRANE GEVE0151	20	22	32	250	WATER TO AIR (1)(2)(3)(5)
HP-25	590	0.5	2.8	3.22	FW	21.62	16.99	16.15	78/60	53	76.40	1.36	19.25	68	97.79	54.73	14.59	1.37	14.10	11.70	208/1	2.8	20	0.08	-	115/1	B&G BOOSTER PL-30	TRANE GEVE0181	22	22	40	250	WATER TO AIR (1)(2)(3)(5)
HP-26	525	0.5	2.4	2.83	FW	17.53	13.91	13.77	78/60	54.06	76.78	1.06	15.75	68	95.40	54.48	11.96	1.11	10.58	8.60	208/1	2.4	20	0.08	-	115/1	B&G BOOSTER PL-30	TRANE GEVE0151	20	22	32	250	WATER TO AIR (1)(2)(3)(5)
HP-27	750	0.5	3.8	5.59	FW	28.64	22.54	20.63	78/60	52.89	76.78	1.78	25.95	68	99.60	54.48	19.54	1.88	18.10	14.90	208/1	3.8	20	0.08	-	115/1	B&G BOOSTER PL-30	TRANE GEVE0241	22	22	40	260	WATER TO AIR (1)(2)(3)(5)
HP-28	850	0.5	3.8	5.58	FW	29.17	23.06	22.32	78/60	54.02	77	1.79	26.03	68	95.97	54.33	19.86	1.81	18.10	14.90	208/1	3.8	20	0.08	-	115/1	B&G BOOSTER PL-30	TRANE GEVE0241	22	22	40	260	WATER TO AIR (1)(2)(3)(5)
HP-29	1,025	0.5	5	6.42	FW	34.50	27.51	26.83	78/60	54.10	77	2.05	30.75	68	95.40	54.33	23.82	2.03	19.73	16.20	208/1	5	20	0.08	-	115/1	B&G BOOSTER PL-30	TRANE GEVE0301	22	22	40	260	WATER TO AIR (1)(2)(3)(5)(9)
HP-30	680	0.5	2.8	3.43	FW	21.75	17.09	17.07	78/60	55.08	76.58	1.37	18.90	68	93.38	54.60	14.50	1.29	14.10	11.70	208/1	2.8	20	0.08	-	115/1	B&G BOOSTER PL-30	TRANE GEHE0181	46	23	18	250	WATER TO AIR (1)(2)(3)(5)(6)(7)
HP-31	680	0.5	2.8	3.18	FW	21.99	17.18	17.16	78/60	54.96	79.99	1.41	18.95	68	93.44	52.44	14.52	1.30	14.10	11.70	208/1	2.8	20	0.08	-	115/1	B&G BOOSTER PL-30	TRANE GEVE0181	22	22	40	250	WATER TO AIR (1)(2)(3)(5)
HP-32	470	0.5	2.4	2.82	FW	17.28	13.50	12.77	78/60	53.18	79.99	1.11	15.30	68	97.73	52.44	11.38	1.15	10.58	8.60	208/1	2.4	20	0.08	-	115/1	B&G BOOSTER PL-30	TRANE GEVE0151	20	22	32	250	WATER TO AIR (1)(2)(3)(5)
HP-33	525	0.5	2.4	2.82	FW	17.53	13.75	13.67	78/60	54.22	80.47	1.11	15.36	68	94.71	52.11	11.58	1.11	10.58	8.60	208/1	2.4	20	0.08	-	115/1	B&G BOOSTER PL-30	TRANE GEVE0151	20	22	32	250	WATER TO AIR (1)(2)(3)(5)
HP-34	2,110	0.5	6	7.09	FW	73.52	57.13	55.82	78/60	53.84	80.94	4.80	60.13	68	94.02	51.79	45.12	4.40	38.28	31.70	208/1	6	20	0.08	-	115/1	B&G BOOSTER PL-30	TRANE GEVE0601	27	32	47	350	WATER TO AIR (1)(2)(3)(5)(9)
HP-35	650	0.5	2.8	3.16	FW	21.88	17.03	17.01	78/60	54.10	80.47	1.42	18.82	68	94.43	52.11	14.34	1.31	14.10	11.70	208/1	2.8	20	0.08	-	115/1	B&G BOOSTER PL-30	TRANE GEVE0181	22	22	40	250	WATER TO AIR (1)(2)(3)(5)
HP-36	760	0.5	3.8	5.53	FW	28.67	22.29	20.71	78/60	53.12	80.94	1.87	25.19	68	98.27	51.79	18.85	1.86	18.10	14.90	208/1	3.8	20	0.08	-	115/1	B&G BOOSTER PL-30	TRANE GEVE0241	22	22	40	260	WATER TO AIR (1)(2)(3)(5)
HP-37	470	0.5	2.3	2.61	FW	17.29	13.40	12.72	78/60	53.29	82.18	1.14	15.01	68	97.16	50.98	11.10	1.14	10.58	8.60	208/1	2.3	20	0.08	-	115/1	B&G BOOSTER PL-30	TRANE GEVE0151	20	22	32	250	WATER TO AIR (1)(2)(3)(5)
HP-38	470	0.5	2.4	2.81	FW	17.28	13.41	12.72	78/60	53.29	82.18	1.13	15.06	68	97.26	50.98	11.15	1.14	10.58	8.60	208/1	2.4	20	0.08	-	115/1	B&G BOOSTER PL-30	TRANE GEVE0151	20	22	32	250	WATER TO AIR (1)(2)(3)(5)
HP-39	525	0.5	2.4	2.81	FW	17.53	13.66	13.62	78/60	54.31	82.59	1.14	15.12	68	94.30	50.70	11.36	1.10	10.58	8.60	208/1	2.4	20	0.08	-	115/1	B&G BOOSTER PL-30	TRANE GEVE0151	20	22	32	250	WATER TO AIR (1)(2)(3)(5)
HP-40	2,110	0.5	6	7.05	FW	73.30	56.60	55.57	78/60	53.95	83.07	4.89	59.16	68	93.60	50.38	44.21	4.38	38.28	31.70	208/1	6	20	0.08	-	115/1	B&G BOOSTER PL-30	TRANE GEVE0601	27	32	47	350	WATER TO AIR (1)(2)(3)(5)(9)
HP-41	650	0.5	2.8	3.15	FW	21.88	16.92	16.90	78/60	54.25	82.59	1.45	18.52	68	94.01	50.70	14.06	1.31	14.10	11.70	208/1	2.8	20	0.08	-	115/1	B&G BOOSTER PL-30	TRANE GEVE0181	22	22	40	250	WATER TO AIR (1)(2)(3)(5)
HP-42	760	0.5	3.7	5.27	FW	28.66	22.12	20.64	78/60	53.20	83.07	1.92	24.75	68	97.74	50.38	18.43	1.85	18.10	14.90	208/1	3.7	20	0.08	-	115/1	B&G BOOSTER PL-30	TRANE GEVE0241	22	22	40	260	WATER TO AIR (1)(2)(3)(5)
HP-43	470	0.5	2.4	2.81	FW	17.29	13.32	12.67	78/60	53.39	84.31	1.16	14.83	68	96.80	49.57	10.93	1.14	10.58	8.60	208/1	2.4	20	0.08	-	115/1	B&G BOOSTER PL-30	TRANE GEVE0151	20	22	32	250	WATER TO AIR (1)(2)(3)(5)
HP-44	470	0.5	2.4	2.81	FW	17.29	13.32	12.67	78/60	53.39	84.31	1.16	14.83	68	96.80	49.57	10.93	1.14	10.58	8.60	208/1	2.4	20	0.08	-	115/1	B&G BOOSTER PL-30	TRANE GEVE0151	20	22	32	250	WATER TO AIR (1)(2)(3)(5)
HP-45	525	0.5	2.4	2.80	FW	17.53	13.57	13.56	78/60	54.41	84.72	1.16	14.88	68	93.89	49.29	11.14	1.10	10.58	8.60	208/1	2.4	20	0.08	-	115/1	B&G BOOSTER PL-30	TRANE GEVE0151	20	22	32	250	WATER TO AIR (1)(2)(3)(5)
HP-46	650	0.5	2.8	3.13	FW	21.88	16.81	16.79	78/60	54.41	84.72	1.49	18.22	68	93.59	49.29	13.78	1.30	14.10	11.70	208/1	2.8	20	0.08	-	115/1	B&G BOOSTER PL-30	TRANE GEVE0181	22	22	40	250	WATER TO AIR (1)(2)(3)(5)
HP-47	760	0.5	3.8	5.48	FW	28.64	22.01	20.62	78/60	53.23	84.72	1.94	24.49	68	97.43	49.29	18.18	1.85	18.10	14.90	208/1	3.8	20	0.08	-	115/1	B&G BOOSTER PL-30	TRANE GEVE0241	22	22	40	260	WATER TO AIR (1)(2)(3)(5)
HP-48	1,510	0.5	7	7.43	FW	48.92	38.00	37.98	78/60	55.03	85.09	3.20	42.29	68	93.57	48.95	32.24	2.95	25.98	21.50	208/1	7	20	0.08	-	115/1	B&G BOOSTER PL-30	TRANE GEVE0421	25	27	42	300	WATER TO AIR (1)(2)(3)(5)

(1) PROVIDE WITH FACTORY INSTALLED DISCONNECT.
(2) PROVIDE WITH ECM MOTOR.
(3) MERV 13 FILTER.
(4) PUMP POWER IS SEPARATE FROM HEAT PUMP POWER.
(5) PROVIDE WITH CIRCUIT SETTER CONTROL VALVE, ISOLATION VALVE AND STRAINER.
(6) PROVIDE WITH 4 SIDE FILTER RACK AND MERV 13 FILTER.
(7) UNIT TO COME WITH INTEGRAL FILTER AND FLOAT SWITCH. SWITCHES TO BE PRE-WIRED IN SERIES WITH COMPRESSOR ENABLE AND FILTER SWITCH TERMINALS.
(8) UNIT TO BE PROVIDED TO OWNER FOR ATTIC STOCK ONLY, NOT TO BE INSTALLED.
(9) UNIT TO BE PROVIDED WITH HOT GAS BYPASS.
(10) EXTENDED RANGE UNITS OPERATING RANGE 45° TO 110° F IN COOLING AND 25° TO 86° F IN HEATING.
(11) PROVIDE HEAT PUMP WITH REMOTE RESET OPTION FROM BAS.

Copyright (C) 2010 by Colvin Engineering Associates, Inc. Salt Lake City, Utah. All rights reserved. Unauthorized copying and/or use is illegal and subject to prosecution.

C:\Revit Local Models\2010-074.00 - WSU Ph II Bldg 2 - Tyler 2011.rvt
5/17/2011 10:02:41 AM

MHTN ARCHITECTS
MHTN Architects, Inc.
420 East South Temple
Suite 100
Salt Lake City, Utah 84111
Telephone (801) 595-6700
Telefax (801) 595-6717
www.mhtn.com

Colvin Engineering Associates, Inc.
244 West 300 North Suite 200
Salt Lake City, Utah 84103
Phone: (801) 322-2400 / Fax: (801) 322-2416

WEBER STATE UNIVERSITY
RESIDENTIAL LIFE PHASE II - BLDG 2
DFCM PROJECT NUMBER: 10176810
WEBER STATE UNIVERSITY
OGDEN, UTAH 84408

SEAL

MHTN PROJECT NO. 10176810
DRAWN BY: GM CHECKED BY: BRC

ISSUED:

NO.	DATE	DESCRIPTION

CONTRACTOR TO VERIFY DRAWINGS IN FIELD USE REFLECT LAST REVISION DATE.

NO.	DATE	DESCRIPTION

SHEET NAME
MECHANICAL SCHEDULES

CONSTRUCTION SET
17 MAY 2011

SHEET NUMBER
MH603

HEAT PUMP SCHEDULE (10) (12)

PLAN CODE	CFM HI/LO	ESP (WC)	GPM	PD FT	FLUID	COOLING CAPACITY: HEAT OF REJECTION (MBH)	COOLING CAPACITY: TOTAL CAP. MBH	COOLING CAPACITY: SENSIBLE CAP. MBH	COOLING CAPACITY: EAT DB/WB	COOLING CAPACITY: LAT °F	COOLING CAPACITY: EWT °F	COOLING CAPACITY: POWER (KW)	HEATING CAPACITY: TOTAL (MBH)	HEATING CAPACITY: EAT °FDB	HEATING CAPACITY: LAT °F	HEATING CAPACITY: EWT	HEATING CAPACITY: HEAT OF ABSORPTION	HEATING CAPACITY: POWER (KW)	ELECTRICAL: MCA	ELECTRICAL: FLA	ELECTRICAL: VOLTAGE/PHASE	PUMP (4): FLOW (GPM)	PUMP (4): PRESSURE (FT)	PUMP (4): SIZE (HP)	PUMP (4): BHP	PUMP (4): VOLTAGE & PHASE	PUMP (4): MANUFACTURER & SERIES	MANUFACTURER & MODEL NO.	MAX. SIZE: LENGTH (IN)	MAX. SIZE: WIDTH (IN)	MAX. SIZE: HEIGHT (IN)	MAX. SIZE: OPERATING WT.(LBS)	REMARKS
HP-49	2,960	0.5	12	5.11	FW	106.44	82.79	76.92	78/60	54.27	82.44	6.93	84.45	68	94.05	50.62	62.92	6.31	37.10	33.10	208/1	12	20	0.08	-	115/1	B&G BOOSTER PL-30	TRANE GEHE0903	40	37	63	650	WATER TO AIR (1)(2)(3)(5)(6)(7)(9)
HP-50	660	0.5	2.8	3.38	FW	21.72	16.75	16.73	78/60	54.86	81.91	1.46	18.07	68	93.00	50.99	13.69	1.28	14.10	11.70	208/1	2.8	20	0.08	-	115/1	B&G BOOSTER PL-30	TRANE GEHE0181	46	23	18	250	WATER TO AIR (1)(2)(3)(5)(6)(7)(9)
HP-51	2,050	0.5	10	7.85	FW	72.73	57.03	54.29	78/60	53.82	79.04	4.60	61.22	68	95.27	52.92	45.84	4.50	38.28	31.70	208/1	10	20	0.08	-	115/1	B&G BOOSTER PL-30	TRANE GEHE0601	58	33	18	400	WATER TO AIR (1)(2)(3)(5)(6)(7)(9)
HP-52	1,300	0.5	6	6.17	FW	42.94	33.86	33.59	78/60	54.41	80.84	2.66	39.33	68	95.63	51.76	30.10	2.70	24.48	20.30	208/1	6	20	0.08	-	115/1	B&G BOOSTER PL-30	TRANE GEVE0361	25	27	42	300	WATER TO AIR (1)(2)(3)(5)
HP-53	470	0.5	2.4	2.83	FW	17.28	13.56	12.81	78/60	53.11	78.56	1.09	15.44	68	97.99	53.45	11.51	1.15	10.58	8.60	208/1	2.4	20	0.08	-	115/1	B&G BOOSTER PL-30	TRANE GEVE0151	20	22	32	250	WATER TO AIR (1)(2)(3)(5)
HP-54	590	0.5	2.8	3.20	FW	21.63	16.88	16.10	78/60	53.08	78.56	1.39	18.94	68	97.31	53.25	14.30	1.36	14.10	11.70	208/1	2.8	20	0.08	-	115/1	B&G BOOSTER PL-30	TRANE GEVE0181	22	22	40	250	WATER TO AIR (1)(2)(3)(5)
HP-55	525	0.5	2.4	2.83	FW	17.53	13.85	13.74	78/60	54.11	78.07	1.08	15.60	68	95.14	53.58	11.81	1.11	10.58	8.60	208/1	2.4	20	0.08	-	115/1	B&G BOOSTER PL-30	TRANE GEVE0151	20	22	32	250	WATER TO AIR (1)(2)(3)(5)
HP-56	650	0.5	2.8	3.20	FW	21.87	17.16	17.08	78/60	54	78.07	1.38	19.13	68	94.87	53.58	14.63	1.32	14.10	11.70	208/1	2.8	20	0.08	-	115/1	B&G BOOSTER PL-30	TRANE GEVE0181	22	22	40	250	WATER TO AIR (1)(2)(3)(5)
HP-57	760	0.5	3.8	5.58	FW	28.69	22.57	20.79	78/60	53.02	77.29	1.80	25.84	68	99.05	54.12	19.47	1.87	18.10	14.90	208/1	3.8	20	0.08	-	115/1	B&G BOOSTER PL-30	TRANE GEVE0241	22	22	40	260	WATER TO AIR (1)(2)(3)(5)
HP-58	1,000	0.5	4.8	5.94	FW	34.38	27.32	26.40	78/60	53.89	77.29	2.07	28.77	68	94.27	48.95	21.91	2.01	19.73	16.20	208/1	4.8	20	0.08	-	115/1	B&G BOOSTER PL-30	TRANE GEVE0301	22	22	40	260	WATER TO AIR (1)(2)(3)(5)(9)
HP-59	710	0.5	3.8	5.55	FW	28.38	22.07	19.86	78/60	52.46	79.99	1.85	25.35	68	100.60	52.44	18.84	1.91	18.10	14.90	208/1	3.8	20	0.08	-	115/1	B&G BOOSTER PL-30	TRANE GEVE0241	22	22	40	260	WATER TO AIR (1)(2)(3)(5)
HP-60	470	0.5	2.4	2.82	FW	17.28	13.50	12.77	78/60	53.18	79.99	1.11	15.30	68	97.73	52.44	11.38	1.15	10.58	8.60	208/1	2.4	20	0.08	-	115/1	B&G BOOSTER PL-30	TRANE GEVE0151	20	22	32	250	WATER TO AIR (1)(2)(3)(5)
HP-61	560	0.5	2.4	2.82	FW	17.51	13.71	13.58	78/60	54.15	80.86	1.11	11.53	68	94.89	51.87	11.53	1.11	10.58	8.60	208/1	2.4	20	0.08	-	115/1	B&G BOOSTER PL-30	TRANE GEVE0151	20	22	32	250	WATER TO AIR (1)(2)(3)(5)
HP-62	2,110	0.5	7	7.09	FW	73.49	57.05	55.79	78/60	53.86	81.24	4.82	60.00	68	93.97	51.60	45.00	4.39	38.28	31.70	208/1	7	20	0.08	-	115/1	B&G BOOSTER PL-30	TRANE GEVE0601	27	32	47	350	WATER TO AIR (1)(2)(3)(5)(9)
HP-63	650	0.5	2.8	3.17	FW	21.88	17.01	16.99	78/60	54.13	80.86	1.42	18.77	68	94.36	51.87	14.29	1.31	14.10	11.70	208/1	2.8	20	0.08	-	115/1	B&G BOOSTER PL-30	TRANE GEVE0181	22	22	40	250	WATER TO AIR (1)(2)(3)(5)
HP-64	780	0.5	3.8	5.53	FW	28.77	22.38	21.04	78/60	53.37	81.24	1.87	25.16	68	97.46	51.60	18.87	1.84	18.10	14.90	208/1	3.8	20	0.08	-	115/1	B&G BOOSTER PL-30	TRANE GEVE0241	22	22	40	260	WATER TO AIR (1)(2)(3)(5)
HP-65	680	0.5	2.8	3.4	FW	21.77	16.88	16.86	78/60	55.35	80.44	1.43	18.35	68	92.64	52.13	13.99	1.28	14.10	11.70	208/1	2.8	20	0.08	-	115/1	B&G BOOSTER PL-30	TRANE GEHE0181	46	23	18	250	WATER TO AIR (1)(2)(3)(5)(6)(7)
HP-66	470	0.5	2.4	2.81	FW	17.28	13.41	12.72	78/60	53.29	82.24	1.14	15.06	68	97.25	50.95	11.15	1.14	10.58	8.60	208/1	2.4	20	0.08	-	115/1	B&G BOOSTER PL-30	TRANE GEVE0151	20	22	32	250	WATER TO AIR (1)(2)(3)(5)
HP-67	470	0.5	2.4	2.81	FW	17.28	13.41	12.72	78/60	53.29	82.24	1.14	15.06	68	97.25	50.95	11.15	1.14	10.58	8.60	208/1	2.4	20	0.08	-	115/1	B&G BOOSTER PL-30	TRANE GEVE0151	20	22	32	250	WATER TO AIR (1)(2)(3)(5)
HP-68	560	0.5	2.8	3.15	FW	21.51	16.51	15.53	78/60	52.67	83	1.47	18.30	68	97.84	50.46	13.61	1.37	14.10	11.70	208/1	2.8	20	0.08	-	115/1	B&G BOOSTER PL-30	TRANE GEVE0181	22	22	40	250	WATER TO AIR (1)(2)(3)(5)
HP-69	2,110	0.5	6	7.05	FW	73.26	56.52	55.53	78/60	53.97	83.38	4.91	59.03	68	93.55	50.20	44.09	4.38	38.28	31.70	208/1	6	20	0.08	-	115/1	B&G BOOSTER PL-30	TRANE GEVE0601	27	32	47	350	WATER TO AIR (1)(2)(3)(5)(9)
HP-70	650	0.5	2.8	3.15	FW	21.88	16.90	16.88	78/60	54.28	83	1.46	18.47	68	93.94	50.46	14.01	1.31	14.10	11.70	208/1	2.8	20	0.08	-	115/1	B&G BOOSTER PL-30	TRANE GEVE0181	22	22	40	250	WATER TO AIR (1)(2)(3)(5)
HP-71	780	0.5	3.8	5.50	FW	28.76	22.22	20.99	78/60	53.43	83.38	1.92	24.77	68	97	50.20	18.50	1.84	18.10	14.90	208/1	3.8	20	0.08	-	115/1	B&G BOOSTER PL-30	TRANE GEVE0241	22	22	40	260	WATER TO AIR (1)(2)(3)(5)
HP-72	680	0.5	2.8	3.37	FW	21.78	16.77	16.75	78/60	55.51	82.57	1.47	18.04	68	92.22	50.73	13.70	1.27	14.10	11.70	208/1	2.8	20	0.08	-	115/1	B&G BOOSTER PL-30	TRANE GEHE0181	46	23	18	250	WATER TO AIR (1)(2)(3)(5)(6)(7)
HP-73	470	0.5	2.4	2.81	FW	17.29	13.32	12.66	78/60	53.39	84.38	1.16	14.82	68	96.80	49.55	10.93	1.14	10.58	8.60	208/1	2.4	20	0.08	-	115/1	B&G BOOSTER PL-30	TRANE GEVE0151	20	22	32	250	WATER TO AIR (1)(2)(3)(5)
HP-74	470	0.5	2.4	2.881	FW	17.29	13.32	12.66	78/60	53.39	84.38	1.16	14.82	68	96.80	49.55	10.93	1.14	10.58	8.60	208/1	2.4	20	0.08	-	115/1	B&G BOOSTER PL-30	TRANE GEVE0151	20	22	32	250	WATER TO AIR (1)(2)(3)(5)
HP-75	560	0.5	2.8	3.13	FW	21.51	16.40	15.50	78/60	52.72	85.13	1.50	18.01	68	97.36	49.06	13.34	1.37	14.10	11.70	208/1	2.8	20	0.08	-	115/1	B&G BOOSTER PL-30	TRANE GEVE0181	22	22	40	250	WATER TO AIR (1)(2)(3)(5)
HP-76	650	0.5	2.8	3.13	FW	21.89	16.79	16.77	78/60	54.44	85.13	1.49	18.17	68	93.53	49.06	13.73	1.30	14.10	11.70	208/1	2.8	20	0.08	-	115/1	B&G BOOSTER PL-30	TRANE GEVE0181	22	22	40	250	WATER TO AIR (1)(2)(3)(5)
HP-77	780	0.5	3.8	5.48	FW	28.75	22.09	20.95	78/60	53.48	85.13	1.95	24.45	68	96.63	49.06	18.19	1.83	18.10	14.90	208/1	3.8	20	0.08	-	115/1	B&G BOOSTER PL-30	TRANE GEVE0241	22	22	40	260	WATER TO AIR (1)(2)(3)(5)
HP-78	680	0.5	2.8	3.35	FW	21.79	16.66	16.64	78/60	55.66	84.71	1.50	17.72	68	91.80	49.32	13.41	1.26	14.10	11.70	208/1	2.8	20	0.08	-	115/1	B&G BOOSTER PL-30	TRANE GEHE0181	46	23	18	250	WATER TO AIR (1)(2)(3)(5)(6)(7)
HP-79	3,260	0.5	11.5	4.58	FW	110.35	86.04	82.94	78/60	54.77	82.71	7.12	82.08	68	90.99	50.53	61.03	6.17	37.10	37.10	208/1	10	20	0.08	-	115/1	B&G BOOSTER PL-30	TRANE GEVE0903	40	37	63	650	WATER TO AIR (1)(2)(3)(5)(9)
HP-80	400	0.5	2	2.17	FW	14.17	10.99	10.70	78/60	53.57	82.50	0.93	12.08	68	95.57	50.67	8.96	0.91	8.58	7.00	208/1	2	20	0.08	-	115/1	B&G BOOSTER PL-30	TRANE GEHE0121	40	20	15	250	WATER TO AIR (1)(2)(3)(5)(6)(7)
HP-81	2,250	0.5	10	7.80	FW	73.41	57.36	57.15	78/60	54.81	81.39	4.70	60.49	68	92.55	51.39	45.51	4.39	38.28	31.70	208/1	10	20	0.08	-	115/1	B&G BOOSTER PL-30	TRANE GEHE0601	58	33	21	400	WATER TO AIR (1)(2)(3)(5)(6)(7)
HP-82	2,250	0.5	10	7.80	FW	73.41	57.36	57.15	78/60	54.81	81.39	4.70	60.49	68	92.55	51.39	45.51	4.39	38.28	31.70	208/1	10	20	0.08	-	115/1	B&G BOOSTER PL-30	TRANE GEHE0601	58	33	21	400	WATER TO AIR (1)(2)(3)(5)(6)(7)
HP-83	1,800	0.5	8	5.01	FW	60.93	48.06	48.04	78/60	53.63	80.46	3.77	50.62	68	93.68	52	39.04	3.40	32.15	26.80	208/1	8	20	0.08	-	115/1	B&G BOOSTER PL-30	TRANE GEHE0481	58	33	21	400	WATER TO AIR (1)(2)(3)(5)(6)(7)
HP-84	525	0.5	2.5	3.11	FW	17.47	13.68	13.53	78/60	54.47	80.20	1.11	15.36	68	94.71	52.18	11.53	1.12	10.58	8.60	208/1	2.5	20	0.08	-	115/1	B&G BOOSTER PL-30	TRANE GEHE0151	20	40	15	250	WATER TO AIR (1)(2)(3)(5)(6)(7)(9)
HP-85	1,950	0.5	10	7.85	FW	72.18	56.48	52.67	78/60	53.34	79.11	4.60	61.10	68	96.61	52.89	45.55	4.50	38.28	31.70	208/1	10	20	0.08	-	115/1	B&G BOOSTER PL-30	TRANE GEHE0601	58	33	21	400	WATER TO AIR (1)(2)(3)(5)(6)(7)(9)
HP-86	1,950	0.5	10	7.85	FW	72.18	56.48	52.67	78/60	53.34	79.11	4.60	61.10	68	96.61	52.89	45.55	4.50	38.28	31.70	208/1	10	20	0.08	-	115/1	B&G BOOSTER PL-30	TRANE GEHE0601	58	33	21	400	WATER TO AIR (1)(2)(3)(5)(6)(7)(9)
HP-87	750	0.5	4	6.06	FW	28.61	22.43	20.63	78/60	52.89	78.68	1.81	25.67	68	99.26	53.18	19.28	1.87	18.10	14.90	208/1	4	20	0.08	-	115/1	B&G BOOSTER PL-30	TRANE GEHE0241	46	23	18	260	WATER TO AIR (1)(2)(3)(5)(6)(7)
HP-88	470	0.5	2.4	2.83	FW	17.28	13.57	12.81	78/60	53.11	78.39	1.09	15.46	68	98.04	53.38	11.53	1.15	10.58	8.60	208/1	2.4	20	0.08	-	115/1	B&G BOOSTER PL-30	TRANE GEVE0151	20	22	32	250	WATER TO AIR (1)(2)(3)(5)
HP-89	620	0.5	3	3.63	FW	21.72	17.03	16.63	78/60	53.50	78.39	1.37	19.16	68	96.22	53.38	14.59	1.34	14.10	11.70	208/1	3	20	0.08	-	115/1	B&G BOOSTER PL-30	TRANE GEVE0181	22	22	40	250	WATER TO AIR (1)(2)(3)(5)
HP-90	560	0.5	3	3.64	FW	21.44	16.77	15.64	78/60	52.49	77.77	1.37	19.13	68	99.20	53.79	14.39	1.39	14.10	11.70	208/1	3	20	0.08	-	115/1	B&G BOOSTER PL-30	TRANE GEVE0181	22	22	40	250	WATER TO AIR (1)(2)(3)(5)
HP-91	650	0.5	3	3.64	FW	21.83	17.18	17.13	78/60	53.94	77.77	1.36	19.31	68	95.12	53.79	14.80	1.32	14.10	11.70	208/1	3	20	0.08	-	115/1	B&G BOOSTER PL-30	TRANE GEVE0181	22	22	40	250	WATER TO AIR (1)(2)(3)(5)
HP-92	780	0.5	4	6.08	FW	28.79	22.70	21.18	78/60	53.21	77.29	1.78	25.96	68	98.39	54.12	19.63	1.85	18.10	14.90	208/1	4	20	0.08	-	115/1	B&G BOOSTER PL-30	TRANE GEVE0241	22	22	40	260	WATER TO AIR (1)(2)(3)(5)
HP-93	1,025	0.5	5	6.42	FW	34.49	27.48	26.81	78/60	54.11	77.29	2.05	30.68	68	95.33	54.12	30.68	2.03	19.73	16.20	208/1	5	20	0.08	-	115/1	B&G BOOSTER PL-30	TRANE GEVE0301	22	22	40	260	WATER TO AIR (1)(2)(3)(5)(9)
HP-94	680	0.5	3	3.89	FW	21.76	17.04	17.02	78/60	55.14	78.06	1.38	18.84	68	93.30	53.59	14.45	1.29	14.10	11.70	208/1	3	20	0.08	-	115/1	B&G BOOSTER PL-30	TRANE GEHE0181	46	23	18	250	WATER TO AIR (1)(2)(3)(5)(6)(7)
* HP-95	760	0.5	4	6.11	FW	28.68	22.68	20.87	78/60	56	76	1.76	30.01	68	95	55	23.31	1.96	18.10	14.90	208/1	4	20	0.08	-	115/1	B&G BOOSTER PL-30	TRANE GEVE0241	22	22	40	260	WATER TO AIR (1)(2)(3)(5)(11)

(1) PROVIDE WITH FACTORY INSTALLED DISCONNECT.
(2) PROVIDE WITH ECM MOTOR.
(3) MERV 13 FILTER.
(4) PUMP POWER IS SEPARATE FROM HEAT PUMP POWER.
(5) PROVIDE WITH CIRCUIT SETTER CONTROL VALVE, ISOLATION VALVE AND STRAINER.
(6) PROVIDE WITH 4 SIDE FILTER RACK AND MERV 13 FILTER.
(7) UNIT TO COME WITH INTEGRAL FILTER AND FLOAT SWITCH. SWITCHES TO BE PRE-WIRED IN SERIES WITH COMPRESSOR ENABLE AND FILTER SWITCH TERMINALS.
(8) UNIT TO BE PROVIDED TO OWNER FOR ATTIC STOCK ONLY, NOT TO BE INSTALLED.
(9) UNIT TO BE PROVIDED WITH HOT GAS BYPASS.
(10) EXTENDED RANGE UNITS OPERATING RANGE 45° TO 110° F IN COOLING AND 25° TO 86° F IN HEATING.
* (11) ADD ALTERNATE #1
(12) PROVIDE HEAT PUMP WITH REMOTE RESET OPTION FROM BAS.

Copyright (C) 2010 by Colvin Engineering Associates, Inc. Salt Lake City, Utah. All rights reserved. Unauthorized copying and/or use is illegal and subject to prosecution.

C:\Revit Local Models\2010-074.00 - WSU PH II Bldg 2 - Tyler 2011.rvt
5/17/2011 10:02:42 AM

MHTN ARCHITECTS
MHTN Architects, Inc.
420 East South Temple
Suite 100
Salt Lake City, Utah 84111
Telephone (801) 595-6700
Telefax (801) 595-6717
www.mhtn.com

Colvin Engineering Associates, Inc.
244 West 300 North Suite 200
Salt Lake City, Utah 84103
Phone: (801) 322-2400 / Fax: (801) 322-2416

WEBER STATE UNIVERSITY
RESIDENTIAL LIFE PHASE II - BLDG 2
DFCM PROJECT NUMBER: 10176810
WEBER STATE UNIVERSITY
OGDEN, UTAH 84408

SEAL

MHTN PROJECT NO: 10176810
DRAWN BY: GM CHECKED BY: BRC

ISSUED:

NO.	DATE	DESCRIPTION

CONTRACTOR TO VERIFY DRAWINGS IN FIELD USE REFLECT LAST REVISION DATE.

NO.	DATE	DESCRIPTION

SHEET NAME
MECHANICAL SCHEDULES

CONSTRUCTION SET
17 MAY 2011

SHEET NUMBER
MH604

HEAT PUMP SCHEDULE (8) (10) (11)

PLAN CODE	CFM HI/LO	ESP (WC)	GPM	PD FT	FLUID	COOLING CAPACITY							HEATING CAPACITY						ELECTRICAL			PUMP (4)						MANUFACTURER & MODEL NO.	MAX. SIZE				REMARKS
						HEAT OF REJECTION (MBH)	TOTAL CAP. MBH	SENSIBLE CAP MBH	EAT DB/WB	LAT °F	EWT °F	POWER (KW)	TOTAL (MBH)	EAT °FDB	LAT °F	EWT	HEAT OF ABSORPTION	POWER (KW)	MCA	FLA	VOLTAGE/PHASE	FLOW (GPM)	PRESSURE (FT)	SIZE (HP)	BHP	VOLTAGE & PHASE	MANUFACTURER & SERIES		LENGTH (IN)	WIDTH (IN)	HEIGHT (IN)	OPERATING WT.(LBS)	
HP-96	680	0.5	3	3.65	FW	21.93	17.38	17.36	78/60	56	76	1.33	22.80	68	95	55	18.16	1.36	14.10	11.70	208/1	3	20	0.08	-	115/1	B&G BOOSTER PL-30	TRANE GEVE0181	22	22	40	250	WATER TO AIR (1) (2) (3) (5)
HP-97	2,110	0.5	6	7.18	FW	74.05	58.36	56.42	78/60	56	76	4.60	73.61	68	95	55	57.56	4.70	38.28	31.70	208/1	6	20	0.08	-	115/1	B&G BOOSTER PL-30	TRANE GEVE0601	27	32	47	350	WATER TO AIR (1) (2) (3) (5) (9)
HP-98	680	0.5	3	3.9	FW	21.75	17.14	17.12	78/60	56	76	1.35	22.44	68	95	55	17.87	1.34	14.10	11.70	208/1	3	20	0.08	-	115/1	B&G BOOSTER PL-30	TRANE GEHE0181	46	23	18	250	WATER TO AIR (1) (2) (3) (5) (6) (7)
HP-99	400	0.5	2	2.2	FW	14.18	11.21	10.77	78/60	56	76	0.87	14.77	68	95	55	11.42	0.95	8.58	7.00	208	2	20	0.08	-	115/1	B&G BOOSTER PL-30	TRANE GEHE0121	40	20	15	250	WATER TO AIR (1) (2) (3) (5) (6) (7)
HP-100	2,150	0.5	10	7.92	FW	73.55	58.29	56.29	78/60	56	76	4.47	73.55	68	95	55	57.35	4.75	38.28	31.70	208/1	10	20	0.08	-	115/1	B&G BOOSTER PL-30	TRANE GEHE0601	58	33	21	400	WATER TO AIR (1) (2) (3) (5) (6) (7) (9)
HP-101	1,350	0.5	3	5.28	FW	43.38	34.65	34.63	78/60	56	76	2.56	47.20	68	95	55	37.39	2.87	24.48	20.30	208/1	3	20	0.08	-	115/1	B&G BOOSTER PL-30	TRANE GEVE0361	25	27	42	250	WATER TO AIR (1) (2) (3) (5) (9)
HP-102	750	0.5	4	6.31	FW	28.33	22.43	20.47	78/60	56	76	1.73	30.11	68	95	55	23.21	2.02	18.10	14.90	208/1	4	20	0.08	-	115/1	B&G BOOSTER PL-30	TRANE GEHE0241	46	23	18	260	WATER TO AIR (1) (2) (3) (5) (6) (7)
HP-103	850	0.5	4	6.11	FW	29.16	23.16	22.4	78/60	56	76	1.76	30.16	68	95	55	23.68	1.90	18.10	14.90	208/1	4	20	0.08	-	115/1	B&G BOOSTER PL-30	TRANE GEVE0241	22	22	40	260	WATER TO AIR (1) (2) (3) (5)
HP-104	1,025	0.5	5	6.44	FW	34.42	27.51	26.5	78/60	56	76	2.02	35.69	68	95	55	28.32	2.16	19.73	16.20	208/1	5	20	0.08	-	115/1	B&G BOOSTER PL-30	TRANE GEVE0301	22	22	40	260	WATER TO AIR (1) (2) (3) (5) (9)
HP-105	1,510	0.5	7	7.71	FW	49.92	39.88	39.32	78/60	56	76	2.94	52.48	68	95	55	41.55	3.20	25.98	21.50	208/1	7	20	0.08	-	115/1	B&G BOOSTER PL-30	TRANE GEVE0421	25	27	42	300	WATER TO AIR (1) (2) (3) (5)
HP-106	2,960	0.5	12	5.23	FW	107.27	84.93	77.75	78/60	56	76	6.54	105.91	68	95	55	83.15	6.67	37.10	33.10	208/1	12	20	0.08	-	115/1	B&G BOOSTER PL-30	TRANE GEHE0903	40	37	63	650	WATER TO AIR (1) (2) (3) (5) (6) (7) (9)
HP-107	3,260	0.5	11.5	4.58	FW	110.90	86.04	82.94	78/60	56	76	7.12	82.08	68	95	55	61.03	6.17	37.10	33.10	208/1	11.5	20	0.08	-	115/1	B&G BOOSTER PL-30	TRANE GEVE0721	37	40	63	600	WATER TO AIR (1) (2) (3) (5) (9)
HP-108	2,250	0.5	10	7.92	FW	73.99	58.73	57.83	78/60	56	76	4.47	73.59	68	95	55	57.57	4.69	38.28	31.70	208/1	10	20	0.08	-	115/1	B&G BOOSTER PL-30	TRANE GEHE0601	58	33	21	400	WATER TO AIR (1) (2) (3) (5) (6) (7)
HP-109	1,800	0.5	8	5.07	FW	61.43	49.13	49.04	78/60	56	76	3.60	59.73	68	95	55	47.52	3.58	32.15	26.80	208/1	8	20	0.08	-	115/1	B&G BOOSTER PL-30	TRANE GEHE0481	58	33	21	400	WATER TO AIR (1) (2) (3) (5) (6) (7)
HP-110	525	0.5	2.5	3.15	FW	17.48	13.87	13.62	78/60	56	76	1.06	18.52	68	95	55	14.48	1.18	10.58	8.60	208/1	2.5	20	0.08	-	115/1	B&G BOOSTER PL-30	TRANE GEHE0151	20	40	15	250	WATER TO AIR (1) (2) (3) (5) (6) (7) (9)

(1) PROVIDE WITH FACTORY INSTALLED DISCONNECT.
(2) PROVIDE WITH ECM MOTOR.
(3) MERV 13 FILTER.
(4) PUMP POWER IS SEPARATE FROM HEAT PUMP POWER.
(5) PROVIDE WITH CIRCUIT SETTER CONTROL VALVE, ISOLATION VALVE AND STRAINER.
(6) PROVIDE WITH 4 SIDE FILTER RACK AND MERV 13 FILTER.
(7) UNIT TO COME WITH INTEGRAL FILTER AND FLOAT SWITCH. SWITCHES TO BE PRE-WIRED IN SERIES WITH COMPRESSOR ENABLE AND FILTER SWITCH TERMINALS.
(8) UNIT TO BE PROVIDED TO OWNER FOR ATTIC STOCK ONLY, NOT TO BE INSTALLED.
(9) UNIT TO BE PROVIDED WITH HOT GAS BYPASS.
(10) EXTENDED RANGE UNITS OPERATING RANGE 45° TO 110° F IN COOLING AND 25° TO 86° F IN HEATING.
(11) PROVIDE HEAT PUMP WITH REMOTE RESET OPTION FROM BAS.

Copyright (C) 2010 by Colvin Engineering Associates, Inc. Salt Lake City, Utah. All rights reserved. Unauthorized copying and/or use is illegal and subject to prosecution.

C:\Revit Local Models\2010-074.00 - WSU PH II Bldg 2 - Tyler 2011.rvt
5/17/2011 10:02:42 AM

MHTN
ARCHITECTS
MHTN Architects, Inc.
420 East South Temple
Suite 100
Salt Lake City, Utah 84111
Telephone (801) 595-6700
Telefax (801) 595-6717
www.mhtn.com

Colvin Engineering Associates, Inc.
244 West 300 North Suite 200
Salt Lake City, Utah 84103
Phone: (801) 322-2400 / Fax: (801) 322-2416

WEBER STATE UNIVERSITY
RESIDENTIAL LIFE PHASE II - BLDG 2
DFCM PROJECT NUMBER: 10176810

WEBER STATE UNIVERSITY
OGDEN, UTAH 84408

SEAL

MHTN PROJECT NO. 10176810

DRAWN BY: Author CHECKED BY: Checker

ISSUED:

NO	DATE	DESCRIPTION

CONTRACTOR TO VERIFY DRAWINGS IN FIELD USE REFLECT LAST REVISION DATE:

NO	DATE	DESCRIPTION

SHEET NAME
MECHANICAL SCHEDULES

CONSTRUCTION SET
17 MAY 2011

SHEET NUMBER
MH605

LEVEL ONE MECHANICAL PIPING PLAN - AREA 'A'

1 SCALE: 1/8" = 1'-0"

GENERAL NOTES

A. SEE SCHEMATIC SHEET FOR PIPE SIZES.

B PROVIDE A WATER TIGHT PAN THAT IS 2" DEEP AND 6" LARGER THAN ANY PLUMBING, MECHANICAL PIPING, OR MECHANICAL EQUIPMENT INSTALLED OVER ANY ELECTRICAL EQUIPMENT OR GEAR

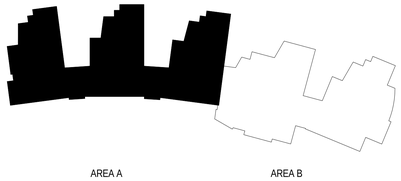

KEYPLAN

MHTN ARCHITECTS
MHTN Architects, Inc.
420 East South Temple
Suite 100
Salt Lake City, Utah 84111
Telephone (801) 595-6700
Telefax (801) 595-6717
www.mhtn.com

Colvin Engineering Associates, Inc.
244 West 300 North Suite 200
Salt Lake City, Utah 84103
Phone: (801) 322-2400 / Fax: (801) 322-2416

WEBER STATE UNIVERSITY
RESIDENTIAL LIFE PHASE II - BLDG 2
DFCM PROJECT NUMBER: 10176810

WEBER STATE UNIVERSITY
OGDEN, UTAH 84408

SEAL

MHTN PROJECT NO. 10176810

DRAWN BY: GM CHECKED BY: BRC

ISSUED:

NO.	DATE	DESCRIPTION

CONTRACTOR TO VERIFY DRAWINGS IN FIELD USE REFLECT LAST REVISION DATE:

NO.	DATE	DESCRIPTION

SHEET NAME
LEVEL ONE MECH PIPING PLAN - AREA 'A'

CONSTRUCTION SET
17 MAY 2011

SHEET NUMBER
MP101A

Copyright (C) 2010 by Colvin Engineering Associates, Inc. Salt Lake City, Utah. All rights reserved. Unauthorized copying and/or use is illegal and subject to prosecution.

C:\Revit Local\Models\2010-074.00 - WSU PH II Bldg 2 - Tyler 2011.rvt
5/17/2011 10:02:48 AM

LEVEL ONE MECHANICAL PIPING PLAN - AREA 'B'

1 SCALE: 1/8" = 1'-0"

6' 0' 4' 8' 12' 16'

KEYED NOTES

1 PIPING ABOVE OCCUPIED SPACES TO BE INSULATED WITH DEAD LAGGING MATERIAL.

GENERAL NOTES

A. SEE SCHEMATIC SHEET FOR PIPE SIZES.
B PROVIDE A WATER TIGHT PAN THAT IS 2" DEEP AND 6" LARGER THAN ANY PLUMBING, MECHANICAL PIPING, OR MECHANICAL EQUIPMENT INSTALLED OVER ANY ELECTRICAL EQUIPMENT OR GEAR

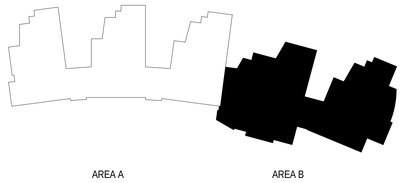

KEYPLAN

MHTN ARCHITECTS
MHTN Architects, Inc.
420 East South Temple
Suite 100
Salt Lake City, Utah 84111
Telephone (801) 595-6700
Telefax (801) 595-6717
www.mhtn.com

Colvin Engineering Associates, Inc.
244 West 300 North Suite 200
Salt Lake City, Utah 84103
Phone: (801) 322-2400 / Fax: (801) 322-2416

WEBER STATE UNIVERSITY
RESIDENTIAL LIFE PHASE II - BLDG 2

DFCM PROJECT NUMBER: 10176810

WEBER STATE UNIVERSITY
OGDEN, UTAH 84408

SEAL

MHTN PROJECT NO. 10176810

DRAWN BY: GM CHECKED BY: BRC

ISSUED:

NO.	DATE	DESCRIPTION

CONTRACTOR TO VERIFY DRAWINGS IN FIELD USE REFLECT LAST REVISION DATE.

NO.	DATE	DESCRIPTION

SHEET NAME

LEVEL ONE MECH PIPING PLAN - AREA 'B'

CONSTRUCTION SET

17 MAY 2011

SHEET NUMBER

MP101B

Copyright (C) 2010 by Colvin Engineering Associates, Inc. Salt Lake City, Utah. All rights reserved. Unauthorized copying and/or use is illegal and subject to prosecution.

C:\Revit Local Models\2010-074.00 - WSU PH II Bldg 2 - Tyler 2011.rvt
5/17/2011 10:02:58 AM

LEVEL TWO MECHANICAL PIPING PLAN - AREA 'A'

1 SCALE: 1/8" = 1'-0"

6' 0' 4' 8' 12' 16'

GENERAL NOTES

A. SEE SCHEMATIC SHEET FOR PIPE SIZES.

B PROVIDE A WATER TIGHT PAN THAT IS 2" DEEP AND 6" LARGER THAN ANY PLUMBING, MECHANICAL PIPING, OR MECHANICAL EQUIPMENT INSTALLED OVER ANY ELECTRICAL EQUIPMENT OR GEAR

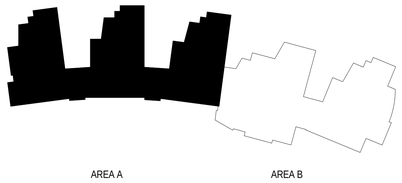

KEYPLAN

MHTN ARCHITECTS
MHTN Architects, Inc.
420 East South Temple
Suite 100
Salt Lake City, Utah 84111
Telephone (801) 595-6700
Telefax (801) 595-6717
www.mhtn.com

Colvin Engineering Associates, Inc.
244 West 300 North Suite 200
Salt Lake City, Utah 84103
Phone: (801) 322-2400 / Fax: (801) 322-2416

WEBER STATE UNIVERSITY
RESIDENTIAL LIFE PHASE II - BLDG 2

DFCM PROJECT NUMBER: 10176810

WEBER STATE UNIVERSITY
OGDEN, UTAH 84408

SEAL

MHTN PROJECT NO: 10176810

DRAWN BY: GM CHECKED BY: BRC

ISSUED:

NO.	DATE	DESCRIPTION

CONTRACTOR TO VERIFY DRAWINGS IN FIELD USE REFLECT LAST REVISION DATE.

NO.	DATE	DESCRIPTION

SHEET NAME

LEVEL TWO MECH PIPING PLAN - AREA 'A'

CONSTRUCTION SET

17 MAY 2011

SHEET NUMBER

MP102A

Copyright (C) 2010 by Colvin Engineering Associates, Inc. Salt Lake City, Utah. All rights reserved. Unauthorized copying and/or use is illegal and subject to prosecution.

C:\Revit Local Models\2010-074.00 - WSU PH II Bldg 2 - Tyler 2011.rvt
5/17/2011 10:03:05 AM

LEVEL TWO MECHANICAL PIPING PLAN - AREA - 'B'

1 SCALE: 1/8" = 1'-0"

GENERAL NOTES

A. SEE SCHEMATIC SHEET FOR PIPE SIZES.
B PROVIDE A WATER TIGHT PAN THAT IS 2" DEEP AND 6" LARGER THAN ANY PLUMBING, MECHANICAL PIPING, OR MECHANICAL EQUIPMENT INSTALLED OVER ANY ELECTRICAL EQUIPMENT OR GEAR

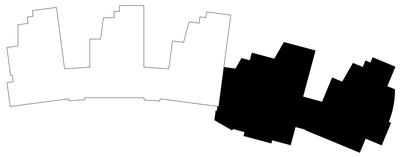

KEYPLAN

MHTN ARCHITECTS
MHTN Architects, Inc.
420 East South Temple
Suite 100
Salt Lake City, Utah 84111
Telephone (801) 595-6700
Telefax (801) 595-6717
www.mhtn.com

Colvin Engineering Associates, Inc.
244 West 300 North Suite 200
Salt Lake City, Utah 84103
Phone: (801) 322-2400 / Fax: (801) 322-2416

WEBER STATE UNIVERSITY
RESIDENTIAL LIFE PHASE II - BLDG 2
DFCM PROJECT NUMBER: 10176810

WEBER STATE UNIVERSITY
OGDEN, UTAH 84408

SEAL

MHTN PROJECT NO. 10176810
DRAWN BY: GM CHECKED BY: BRC

ISSUED:

NO.	DATE	DESCRIPTION

CONTRACTOR TO VERIFY DRAWINGS IN FIELD USE REFLECT LAST REVISION DATE:

NO.	DATE	DESCRIPTION

SHEET NAME
LEVEL TWO MECH PIPING PLAN - AREA 'B'

CONSTRUCTION SET
17 MAY 2011

SHEET NUMBER
MP102B

Copyright (C) 2010 by Colvin Engineering Associates, Inc. Salt Lake City, Utah. All rights reserved. Unauthorized copying and/or use is illegal and subject to prosecution.

C:\Revit Local Models\2010-074.00 - WSU PH II Bldg 2 - Tyler 2011.rvt
5/17/2011 10:03:15 AM

LEVEL THREE MECHANICAL PIPING PLAN - AREA 'A'

1 SCALE: 1/8" = 1'-0"

GENERAL NOTES

A. SEE SCHEMATIC SHEET FOR PIPE SIZES.

B PROVIDE A WATER TIGHT PAN THAT IS 2" DEEP AND 6" LARGER THAN ANY PLUMBING, MECHANICAL PIPING, OR MECHANICAL EQUIPMENT INSTALLED OVER ANY ELECTRICAL EQUIPMENT OR GEAR

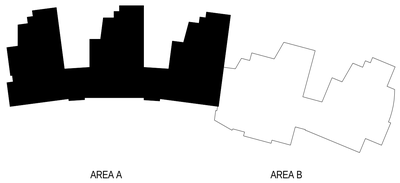

KEYPLAN

MHTN ARCHITECTS
MHTN Architects, Inc.
420 East South Temple
Suite 100
Salt Lake City, Utah 84111
Telephone (801) 595-6700
Telefax (801) 595-6717
www.mhtn.com

Colvin Engineering Associates, Inc.
244 West 300 North Suite 200
Salt Lake City, Utah 84103
Phone: (801) 322-2400 / Fax: (801) 322-2416

WEBER STATE UNIVERSITY
RESIDENTIAL LIFE PHASE II - BLDG 2
DFCM PROJECT NUMBER: 10176810

WEBER STATE UNIVERSITY
OGDEN, UTAH 84408

SEAL

MHTN PROJECT NO. 10176810

DRAWN BY: GM CHECKED BY: BRC

ISSUED:

NO	DATE	DESCRIPTION

CONTRACTOR TO VERIFY DRAWINGS IN FIELD USE REFLECT LAST REVISION DATE:

NO	DATE	DESCRIPTION

SHEET NAME
LEVEL THREE MECH PIPING PLAN - AREA 'A'

CONSTRUCTION SET
17 MAY 2011

SHEET NUMBER
MP103A

Copyright (C) 2010 by Colvin Engineering Associates, Inc. Salt Lake City, Utah. All rights reserved. Unauthorized copying and/or use is illegal and subject to prosecution.

C:\Revit Local Models\2010-074.00 - WSU PH II Bldg 2 - Tyler 2011.rvt
5/17/2011 10:03:22 AM

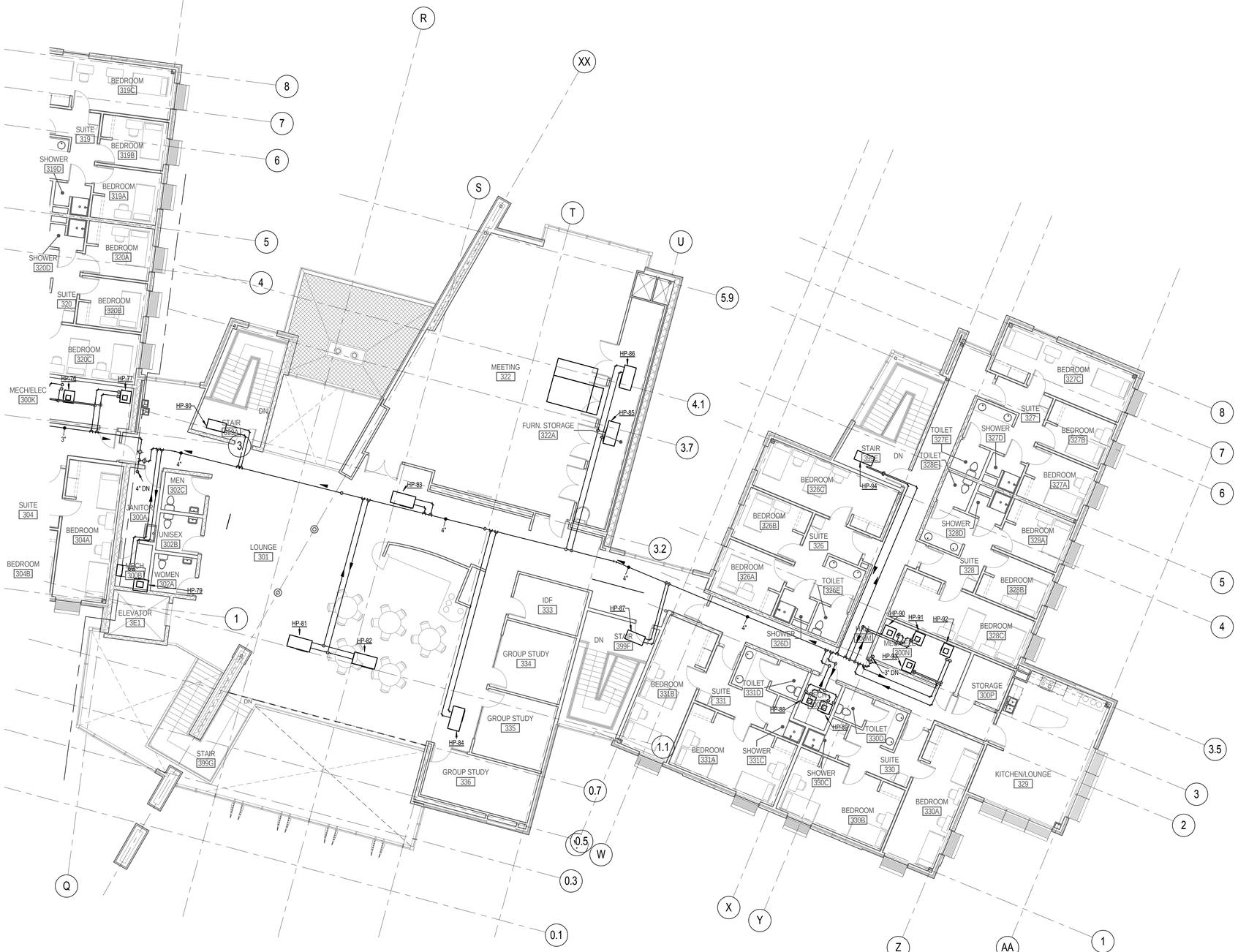

LEVEL THREE MECHANICAL PIPING PLAN - AREA 'B'

1 SCALE: 1/8" = 1'-0"

GENERAL NOTES

A. SEE SCHEMATIC SHEET FOR PIPE SIZES.
B PROVIDE A WATER TIGHT PAN THAT IS 2" DEEP AND 6" LARGER THAN ANY PLUMBING, MECHANICAL PIPING, OR MECHANICAL EQUIPMENT INSTALLED OVER ANY ELECTRICAL EQUIPMENT OR GEAR

KEYPLAN

MHTN ARCHITECTS
MHTN Architects, Inc.
420 East South Temple
Suite 100
Salt Lake City, Utah 84111
Telephone (801) 595-6700
Telefax (801) 595-6717
www.mhtn.com

Colvin Engineering Associates, Inc.
244 West 300 North Suite 200
Salt Lake City, Utah 84103
Phone: (801) 322-2400 / Fax: (801) 322-2416

WEBER STATE UNIVERSITY RESIDENTIAL LIFE PHASE II - BLDG 2

DFCM PROJECT NUMBER: 10176810

WEBER STATE UNIVERSITY
OGDEN, UTAH 84408

SEAL

MHTN PROJECT NO. 10176810

DRAWN BY: GM CHECKED BY: BRC

ISSUED:

NO.	DATE	DESCRIPTION

CONTRACTOR TO VERIFY DRAWINGS IN FIELD USE REFLECT LAST REVISION DATE:

NO.	DATE	DESCRIPTION

SHEET NAME
LEVEL THREE MECH PIPING PLAN - AREA 'B'

CONSTRUCTION SET
17 MAY 2011

SHEET NUMBER
MP103B

Copyright (C) 2010 by Colvin Engineering Associates, Inc. Salt Lake City, Utah. All rights reserved. Unauthorized copying and/or use is illegal and subject to prosecution.

C:\Revit Local Models\2010-074.00 - WSU PH II Bldg 2 - Tyler 2011.rvt
5/17/2011 10:03:31 AM

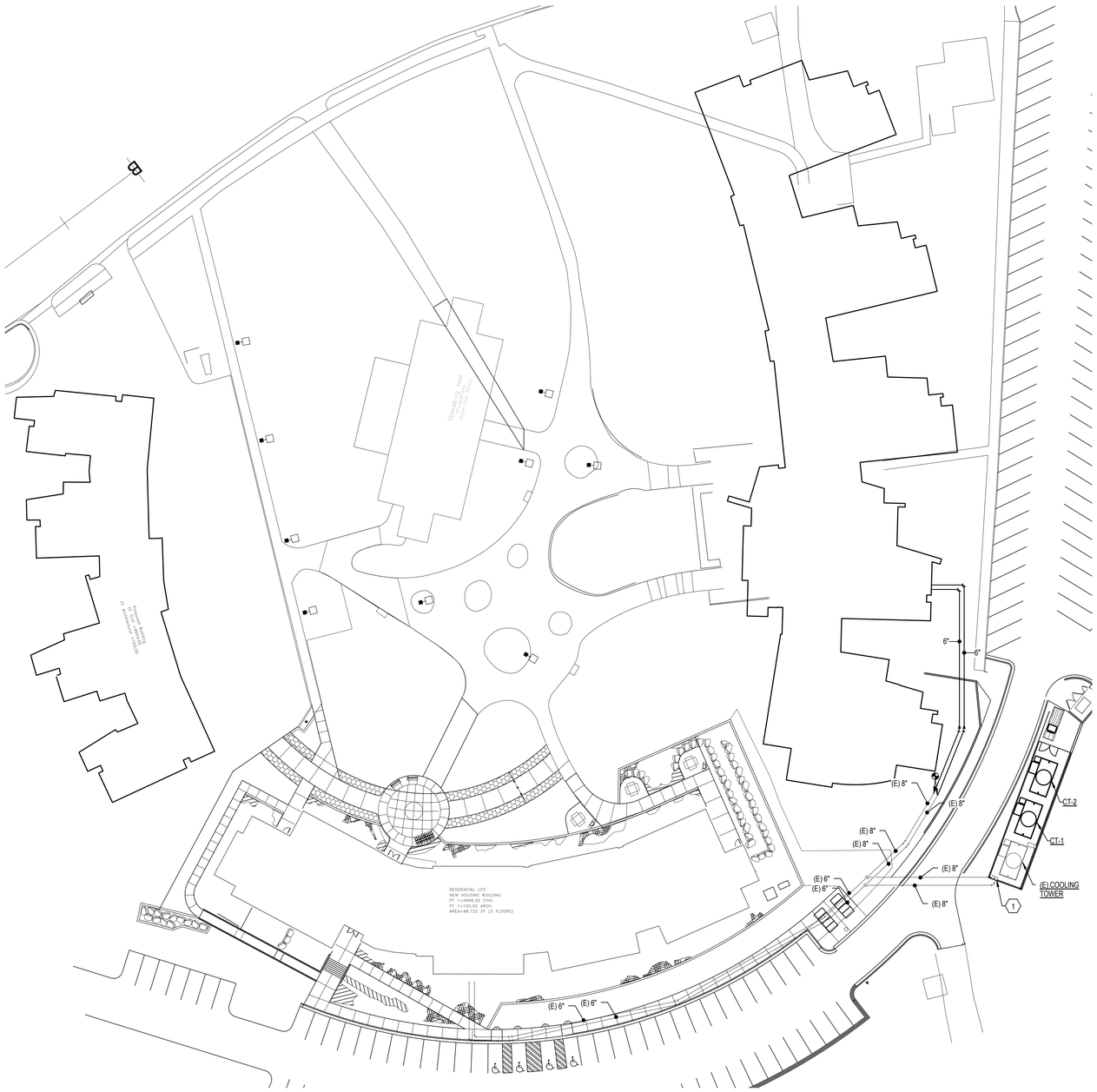

1 MECHANICAL PIPING OVERALL SITE PLAN

SCALE: 1" = 30'-0"

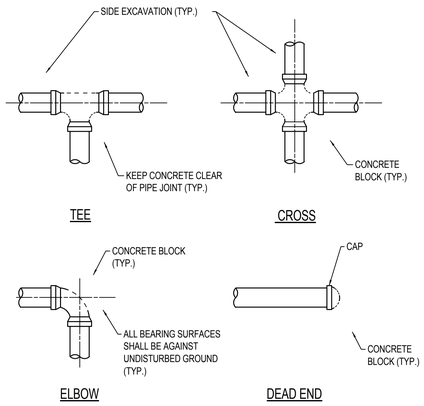

BEARING AREAS EACH DIRECTION OF THRUST IN SQUARE FEET				
PIPE SIZE	TEES & DEAD END	90° ELBOW	45° ELBOW CROSSES IN DIRECTION FLOW	22 1/2° ELBOW
6"	4.0	5.5	3.0	2.0
8"	7.0	9.5	5.0	3.0

3 THRUST BLOCK DETAIL

NO SCALE

KEYED NOTES

1 HEAT TRACE ALL EXPOSED PIPING AT COOLING TOWERS.

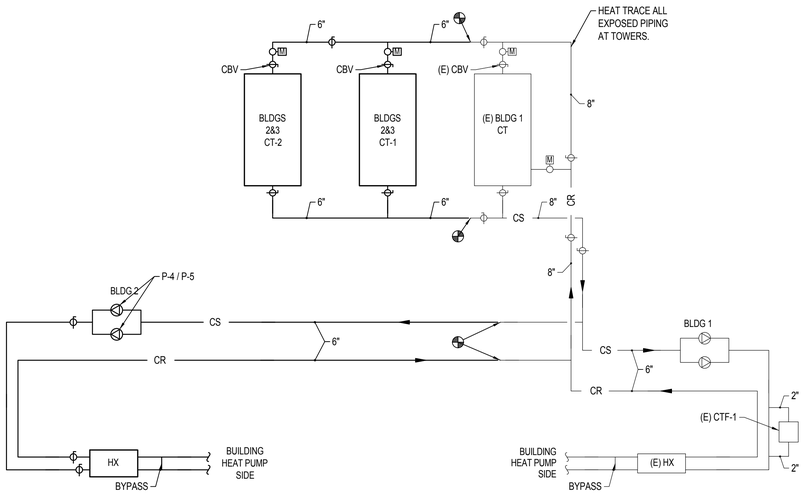

2 COOLING TOWER PIPING SCHEMATIC

SCALE: NONE

MHTN ARCHITECTS

MHTN Architects, Inc.
420 East South Temple
Suite 100
Salt Lake City, Utah 84111
Telephone (801) 595-6700
Telefax (801) 595-6717
www.mhtn.com

Colvin Engineering Associates, Inc.
244 West 300 North Suite 200
Salt Lake City, Utah 84103
Phone: (801) 322-2400 / Fax: (801) 322-2416

WEBER STATE UNIVERSITY
RESIDENTIAL LIFE PHASE II - BLDG 2
DFCM PROJECT NUMBER: 10176810

WEBER STATE UNIVERSITY
OGDEN, UTAH 84408

SEAL

MHTN PROJECT NO. 10176810

DRAWN BY: GM CHECKED BY: BRC

ISSUED:

NO.	DATE	DESCRIPTION

CONTRACTOR TO VERIFY DRAWINGS IN FIELD USE REFLECT LAST REVISION DATE:

NO.	DATE	DESCRIPTION

SHEET NAME
MECHANICAL PIPING OVERALL SITE PLAN

CONSTRUCTION SET
17 MAY 2011

SHEET NUMBER
MP201

Copyright (C) 2010 by Colvin Engineering Associates, Inc. Salt Lake City, Utah. All rights reserved. Unauthorized copying and/or use is illegal and subject to prosecution.

C:\Revit Local Models\2010-074.00 - WSU PH II Bldg 2 - Tyler 2011.rvt
5/17/2011 10:03:32 AM

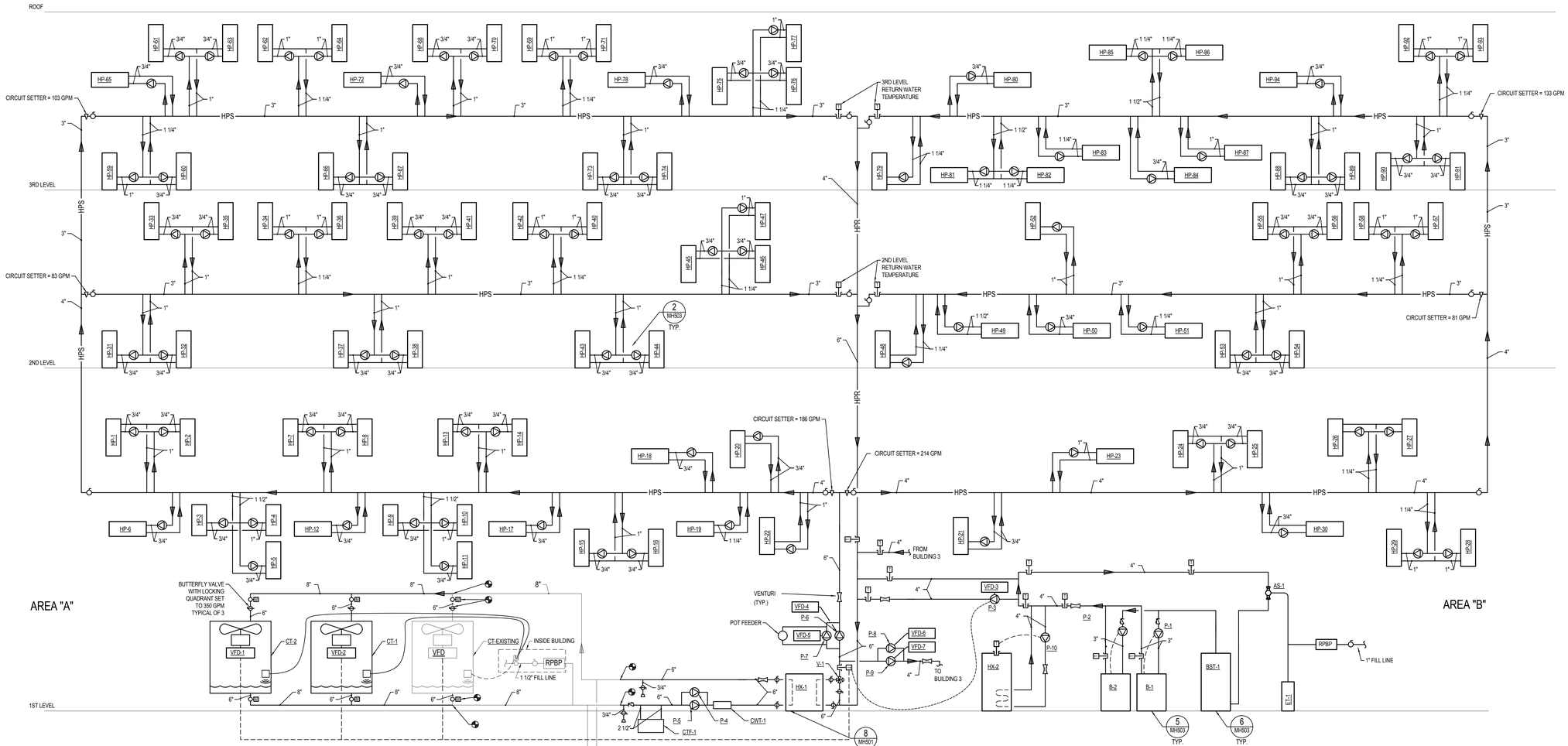

1 MECHANICAL PIPING SCHEMATIC

SCALE: NONE

HEAT PUMP LOOP SYSTEM: THIS SYSTEM CONSISTS OF TWO VARIABLE SPEED PUMPS FOR EACH BUILDING . THE FOLLOWING SEQUENCE APPLIES TO PUMPS P-6 AND 7 FOR BUILDING #2. THE FOLLOWING SEQUENCE ALSO APPLIES TO PUMPS P-8 AND 9 FOR BUILDING #3 WHICH IS LOCATED APPROXIMATELY 600 FEET AWAY, SEE SITE PLAN. FOR EACH BUILDING; ONE PUMP WILL RUN CONTINUOUS AND THE BUILDING AUTOMATION SYSTEM SHALL MODULATE THE SPEED OF THE PUMPS AS FOLLOWS:

1. IN HEATING SEASON: TO MAINTAIN THE COLDEST OF EACH LEVEL'S HEAT PUMP LOOP RETURN WATER TEMPERATURE (AS MEASURED IN THREE LOCATIONS FOR BUILDING #3 AND FOUR LOCATIONS FOR BUILDING #2) OF 15°F (ADJUSTABLE) BELOW THE HEAT PUMP LOOP SUPPLY WATER TEMPERATURE SET POINT OF 55°F (ADJUSTABLE).

2. IN COOLING SEASON: TO MAINTAIN THE WARMEST OF EACH LEVEL'S HEAT PUMP LOOP RETURN WATER TEMPERATURE (AS MEASURED IN THREE LOCATIONS FOR BUILDING #3 AND FOUR LOCATIONS FOR BUILDING #2) OF 15°F (ADJUSTABLE) ABOVE THE HEAT PUMP LOOP SUPPLY WATER TEMPERATURE SET POINT OF 76°F (ADJUSTABLE).

IF THE PUMP ANALOG STATUS DOES NOT MATCH THE ANALOG COMMAND, AN ALARM WILL BE GENERATED AND THE BACK-UP PUMP SHALL BE STARTED. THE PUMPS SHALL BE ROTATED AT NOON ON THE FIRST DAY OF EVERY MONTH.

BOILER SYSTEM: THIS SYSTEM CONSISTS OF TWO BOILERS. THE BURNERS SHALL BE CONTROLLED VIA THEIR OWN INTERNAL CONTROLS AND THE BOILERS SHALL RECEIVE A TEMPERATURE SET POINT FROM THE BUILDING AUTOMATION SYSTEM. BOILERS TO INCLUDE FACTORY STAGING CONTROLS FOR MULTIPLE BOILERS. THE HEATING SYSTEM WILL AUTOMATICALLY START AND VALVE V-1 BE DRIVEN TO BYPASS HEAT EXCHANGER HX-1 (VALVE V-1 TO INCLUDE END SWITCH TO VERIFY VALVE OPEN AND CLOSED POSITION) WHEN THE HEAT PUMP LOOP SUPPLY TEMPERATURE FALLS BELOW 55°F (ADJUSTABLE) OR IF PUMP P-10 IS RUNNING. START ONE BOILER AND ASSOCIATED PUMP AND MONITOR THE LOAD PERCENTAGE SIGNAL FROM THE BOILER. ONCE THE LOAD PERCENTAGE SIGNAL FROM ONE BOILER CLIMBS ABOVE 60%, ENABLE THE SECOND BOILER. DISABLE THE SECOND BOILER IF THE SUM OF THE PERCENTAGE LOAD SIGNAL FROM BOTH BOILERS DROPS BELOW 50%. MODULATE THE SPEED OF PUMP P-3 TO MAINTAIN A HEAT PUMP LOOP SUPPLY TEMPERATURE OF 55°F (ADJUSTABLE). INSTALL MUSHROOM TYPE BOILER KILL SWITCHES AT EVERY DOOR TO THE BOILER ROOM. THE BUILDING AUTOMATION SYSTEM SHALL COMMAND THE BOILERS TO INCREASE THEIR INTERNAL SETPOINT TO MAINTAIN A HEAT PUMP LOOP SUPPLY TEMPERATURE OF 55°F (ADJUSTABLE). THE BUILDING AUTOMATION SYSTEM SHALL COMMAND THE BOILERS TO INCREASE THEIR INTERNAL SETPOINT TO 180°F TO MAINTAIN A DOMESTIC HOT WATER SUPPLY TEMPERATURE OF 140°F (ADJUSTABLE). BOILER TO MAINTAIN THE MAXIMUM OF THE TWO AFORE-MENTIONED BOILER INTERNAL SETPOINTS TO SATISFY BOTH SYSTEMS. IF A BOILER HAS BEEN ENABLED AND THE LEAVING WATER TEMPERATURE OF THAT BOILER IS MORE THAN 20°F BELOW THE SET POINT IT HAS BEEN COMMANDED TO FOR MORE THAN 10 MINUTES AN ALARM SHALL BE GENERATED AND THE BACK-UP BOILER SHALL BE STARTED AS WELL BUT THE LEAD BOILER SHALL REMAIN ENABLED. THE BOILERS SHALL BE ROTATED AT NOON ON THE FIRST DAY OF EVERY MONTH.

BOILER PUMP CONTROL: BOILER PUMP P-1 OR P-2 SHALL BE ENABLED IF EITHER PUMP P-3 OR P-10 IS ENABLED OR WHEN A BOILER IS ENABLED, THE PUMP ASSOCIATED WITH EACH BOILER WILL BE STARTED. IF THE PUMP STATUS DOES NOT MATCH THE COMMAND, AN ALARM WILL BE GENERATED AND THE BOILER WILL BE STOPPED. UPON LOSS OF STATUS, THE PUMP WILL RESTART AFTER THE SYSTEM RESET IS ACTIVATED OR THE ALARM IS "ACKNOWLEDGED". AFTER THE BOILER IS COMMANDED OFF, THE PUMP WILL CONTINUE TO RUN FOR 5 MINUTES TO DISSIPATE THE HEAT.

ELECTRIC UNIT HEATER AND RADIANT CEIILING PANEL CONTROL: THE UNIT HEATER, CABINET UNIT HEATER, AND RADIANT CEILING PANELS SHALL BE STARTED AND STOPPED BY A LINE-VOLTAGE THERMOSTAT AS SHOWN ON THE DRAWINGS.

ELEVATOR EQUIPMENT ROOM OR ELECTRICAL ROOM COOLING UNIT CONTROL: THE ELEVATOR EQUIPMENT ROOM OR ELECTRICAL ROOM COOLING UNIT SHALL BE STARTED AND STOPPED BY A THERMOSTAT PROVIDED WITH THE UNIT. THE ROOM TEMPERATURE SHALL BE MONITORED BY THE BUILDING AUTOMATION SYSTEM AND AN ALARM SHALL BE GENERATED IF THE ZONE TEMPERATURE RISES ABOVE 80°F (ADJUSTABLE).

BAS ELECTRIC POWER MONITOR: BUILDING AUTOMATION SYSTEM TO MONITOR MAIN BUILDING POWER PANELS AND REPORT ON GRAPHICS SCREEN ALL BUILDING POWER USAGE, ONGOING BASIS.

EXHAUST FAN CONTROL: EXHAUST FANS SERVING RESTROOMS SHALL BE ENABLED VIA SCHEDULE IN THE BUILDING AUTOMATION SYSTEM (SCHEDULE TO INITIALLY BE 24/7). IF THE FAN STATUS DOES NOT MATCH THE COMMAND, AN ALARM WILL BE GENERATED. EXHAUST FAN SERVING RANGE-TOPS SHALL BE ENABLED WHEN EVER ANY OF THE RANGE-TOPS SERVED BY THAT EXHAUST FAN IS DRAWING CURRENT. EXHAUST FAN TO REMAIN RUNNING FOR 5 MINUTES (ADJUSTABLE) AFTER ALL RANGE TOP CURRENT DRAW HAS STOPPED.

DOMESTIC HOT WATER (HX-2): ENABLE PUMP P-10 WHENEVER THE DOMESTIC HOT WATER SUPPLY TEMPERATURE IS BELOW 130 DEG F. DOMESTIC HOT WATER RECIRCULATION PUMP TO BE ENABLED BY A STRAP-ON AQUASTAT INSTALLED ON THE DOMESTIC HOT WATER RECIRCULATION RETURN LINE PIPE. GENERATE AN ALARM IF PUMP P-10 FAILS.

MANDATORY DATA POINTS: THE BUILDING AUTOMATION SYSTEM SHALL MONITOR AND TREND THE FOLLOWING DATA POINTS AT A MINIMUM IN ADDITION TO ANY OTHER POINTS MENTIONED ELSEWHERE. THESE POINTS INCLUDE BUT ARE NOT LIMITED TO:

1. HEAT PUMP WATER (HPCW) LOOP SET POINT (°F)
2. SUPPLY AND RETURN HPCW LOOP TEMPERATURE (°F)
3. OUTDOOR AIR DRY-BULB TEMPERATURE (°F)
4. OUTDOOR AIR WET-BULB TEMPERATURE (°F)
5. HPCW PUMP SPEED FOR EACH PUMP (Hz - NOT %)
6. EVERY VFD'S SPEED (Hz - NOT %)
7. HEAT PUMP LOOP RETURN TEMPERATURE BLDG #2 LEVEL 2 AREA A(°F)
8. HEAT PUMP LOOP RETURN TEMPERATURE BLDG #2 LEVEL 2 AREA B(°F)
9. HEAT PUMP LOOP RETURN TEMPERATURE BLDG #2 LEVEL 3 AREA A(°F)
10. HEAT PUMP LOOP RETURN TEMPERATURE BLDG #2 LEVEL 3 AREA B(°F)
11. HEAT PUMP LOOP RETURN TEMPERATURE BLDG #3 LEVEL 1 (°F)
12. HEAT PUMP LOOP RETURN TEMPERATURE BLDG #3 LEVEL 2 (°F)
11. HEAT PUMP LOOP RETURN TEMPERATURE BLDG #3 LEVEL 3 (°F)
12. OUTDOOR AIR DRYBULB TEMPERATURE (°F)
13. OUTDOOR AIR WETBULB TEMPERATURE (°F)
14. EVERY EQUIPMENT STATUS (I.E. BOILER, PUMP, FAN, ETC.) (ON/OFF)
15. ALL TEMPERATURE SENSORS SHOWN ON ALL SCHEMATICS (°F)
16. ALL MODULATING VALVE POSITION COMMANDS (0-100%)
17. ALL HEAT PUMPS OPERATING MODE (OCCUPIED/UNOCCUPIED)
18. ALL ZONE TEMPERATURES (°F)
19. EACH HEAT PUMP UNIT'S CURRENT DRAW (AMPS)

COOLING TOWER CONTROL: THIS SYSTEM CONSISTS OF TWO NEW VARIABLE SPEED FAN COOLING TOWERS AND ONE FROM PHASE 1. WHEN A TOWER IS ENABLED, THE BUILDING AUTOMATION SHALL MODULATE THE SPEED OF THE COOLING TOWER FAN(S) TO MAINTAIN A HEAT PUMP LOOP SUPPLY WATER TEMPERATURE OF 76°F (ADJUSTABLE). THE SYSTEM SHALL CONTROL TO THE HEAT PUMP LOOP SUPPLY TEMPERATURE OF THE BUILDING (BUILDING #1 OR BUILDING #2) THAT HAS ENABLED ITS COOLING TOWER PUMP(S). IF BOTH BUILDINGS HAVE ENABLED THEIR COOLING TOWER PUMPS THEN CONTROL TO THE HIGHER OF THE TWO HEAT PUMP LOOP SUPPLY TEMPERATURES. IF BUILDING #1 HAS ENABLED ITS COOLING TOWER PUMP THEN OPEN THE ISOLATION VALVES OF THE LEAD COOLING TOWER AND MODULATE THE FAN SPEED AS DESCRIBED BEFORE. IF BUILDING #2 ENABLES ITS COOLING TOWER PUMP THEN OPEN THE ISOLATION VALVES OF THE LEAD COOLING TOWER AND 1ST LAG COOLING TOWER AND MODULATE THEIR FAN SPEEDS AS DESCRIBED BEFORE. IF BOTH BUILDINGS #1 AND #2 HAVE COOLING TOWER PUMPS ENABLED THEN ALL THREE TOWERS ARE TO OPERATE. ROTATE LEAD COOLING TOWER DUTY ON THE 1ST OF EACH MONTH AT MIDNIGHT. IF A TOWER FAN ANALOG STATUS DOES NOT MATCH THE ANALOG COMMAND (DEADBAND = 20% OF MAXIMUM CURRENT), AN ALARM WILL BE GENERATED.

COOLING TOWER LEVEL CONTROL: THE LEVEL OF THE COOLING TOWER SHALL BE CONTROLLED BY AN ANALOG ULTRASONIC LEVEL SENSOR. MODULATE THE MOTORIZED BALL VALVE LOCATED ON THE COOLING TOWER MAKE-UP WATER LINE TO MAINTAIN COOLING TOWER LEVEL. CONTROL TO THE LOWEST TOWER LEVEL MEASURED OF ALL THREE TOWERS. IF A TOWER HAS BEEN DISABLED/ISOLATED FOR SERVICE DISREGARD ITS COOLING TOWER LEVEL READING IN THE LEVEL CONTROL SCHEME. A LOW LEVEL SWITCH SHALL (HARD WIRED) LOCK OUT ALL COOLING TOWER PUMPS, WATER FILTER PACKAGE, AND ANY SUMP HEATERS IF A LOW LEVEL SITUATION OCCURS ON A TOWER THAT HAS NOT BEEN DISABLED/ISOLATED FOR SERVICE, AN ALARM WILL BE GENERATED.

BUILDING 2 & 3 COOLING TOWER SYSTEM ENABLE: THE COOLING TOWER SYSTEM WILL AUTOMATICALLY START WHEN THE HEAT PUMP LOOP SUPPLY TEMPERATURE RISES ABOVE 70°F (ADJUSTABLE). A TOWER WATER PUMP SHALL BE ENABLED AND THE HEAT PUMP LOOP HEAT EXCHANGER 3-WAY BYPASS VALVE V-1 SHALL BE DRIVEN TO DIRECT THE HEAT PUMP LOOP WATER FLOW THROUGH THE HEAT EXCHANGER. IF THE PUMP STATUS DOES NOT MATCH THE COMMAND, AN ALARM WILL BE GENERATED AND THE BACK-UP PUMP SHALL BE ENABLED. THE PUMPS SHALL BE ROTATED AT MIDNIGHT ON THE FIRST DAY OF EVERY MONTH. THE SUMP HEATERS SHALL BE ENABLED TO PREVENT FREEZING BY A SUMP MOUNTED BULB-STAT UNLESS LOCKED OUT BY THE SUMP LOW LEVEL SWITCH. THE COOLING TOWER WATER TREATMENT DEVICE AND COOLING TOWER WATER FILTER PACKAGE SHALL BE ENABLED ANYTIME A COOLING TOWER WATER PUMP IS OPERATING.

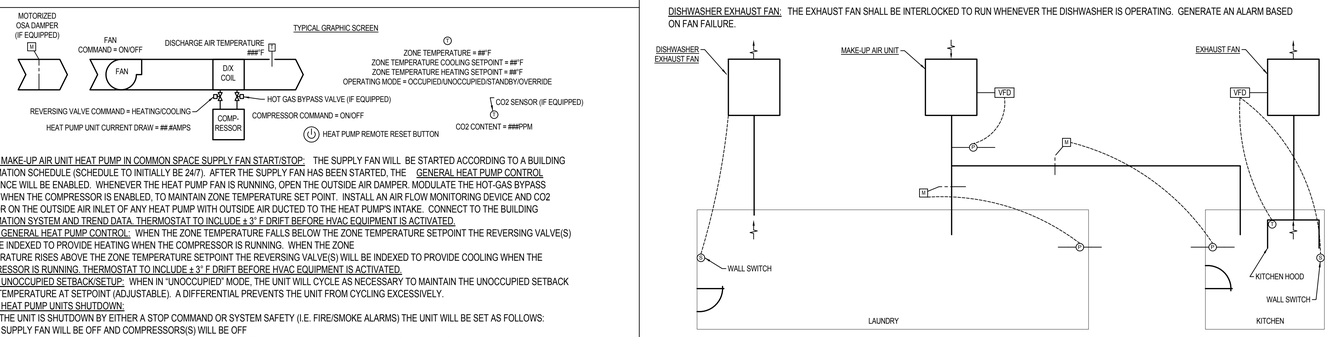

MAKE-UP AIR UNIT HEAT PUMP IN COMMON SPACE SUPPLY FAN START/STOP: THE SUPPLY FAN WILL BE STARTED ACCORDING TO A BUILDING AUTOMATION SCHEDULE (SCHEDULE TO INITIALLY BE 24/7). AFTER THE SUPPLY FAN HAS BEEN STARTED, THE GENERAL HEAT PUMP CONTROL SEQUENCE WILL BE ENABLED. WHENEVER THE HEAT PUMP FAN IS RUNNING, OPEN THE OUTSIDE AIR DAMPER. MODULATE THE HOT-GAS BYPASS VALVE WHEN THE COMPRESSOR IS ENABLED, TO MAINTAIN ZONE TEMPERATURE SET POINT. INSTALL AN AIR FLOW MONITORING DEVICE AND CO2 SENSOR ON THE OUTSIDE AIR INLET OF ANY HEAT PUMP WITH OUTSIDE AIR DUCTED TO THE HEAT PUMP'S INTAKE. CONNECT TO THE BUILDING AUTOMATION SYSTEM AND TREND DATA. THERMOSTAT TO INCLUDE ± 3° F DRIFT BEFORE HVAC EQUIPMENT IS ACTIVATED.

GENERAL HEAT PUMP CONTROL: WHEN THE ZONE TEMPERATURE FALLS BELOW THE ZONE TEMPERATURE SETPOINT THE REVERSING VALVE(S) WILL BE INDEXED TO PROVIDE HEATING WHEN THE COMPRESSOR IS RUNNING. WHEN THE ZONE TEMPERATURE RISES ABOVE THE ZONE TEMPERATURE SETPOINT THE REVERSING VALVE(S) WILL BE INDEXED TO PROVIDE COOLING WHEN THE COMPRESSOR IS RUNNING. THERMOSTAT TO INCLUDE ± 3° F DRIFT BEFORE HVAC EQUIPMENT IS ACTIVATED.

UNOCCUPIED SETBACK/SETUP: WHEN IN "UNOCCUPIED" MODE, THE UNIT WILL CYCLE AS NECESSARY TO MAINTAIN THE UNOCCUPIED SETBACK ZONE TEMPERATURE AT SETPOINT (ADJUSTABLE). A DIFFERENTIAL PREVENTS THE UNIT FROM CYCLING EXCESSIVELY.

HEAT PUMP UNITS SHUTDOWN:

WHEN THE UNIT IS SHUTDOWN BY EITHER A STOP COMMAND OR SYSTEM SAFETY (I.E. FIRE/SMOKE ALARMS) THE UNIT WILL BE SET AS FOLLOWS:
SUPPLY FAN WILL BE OFF AND COMPRESSORS(S) WILL BE OFF

WHEN THE UNIT IS SHUTDOWN BY A SYSTEM SAFETY (REFRIGERANT PRESSURE SWITCHES) THE UNIT WILL BE SET AS FOLLOWS:
SUPPLY FAN WILL BE ON AND COMPRESSORS(S) WILL BE OFF

BAS TO TIE INTO REMOTE RESET OPTION ON EACH INDIVIDUAL HEAT PUMP AND PROVIDE REMOTE RESET FOR EACH INDIVIDUAL HEAT PUMP FROM THE BAS SYSTEM.

VENTILATION CONTROL: PER THE LEED REQUIREMENTS, INSTALL A CO2 SENSOR AT 48" ABOVE FINISHED FLOOR IN EVERY SUITE, LOUNGE, LOBBY, AND STUDY. ALL CO2 SENSORS TO BE TIED BACK TO THE BUILDING AUTOMATION SYSTEM INDIVIDUALLY. GENERATE AN ALARM TO THE FACILITY MANAGER FOR EACH ZONE IF THE CO2 CONTENT RISES ABOVE 1000 PPM (ADJUSTABLE) IN THAT ZONE.

KITCHEN EXHAUST FAN: THE EXHAUST FAN SHALL BE INTERLOCKED WITH HOOD AND MAKE-UP AIR UNIT AND CONTROLLED BY A WALL SWITCH MOUNTED NEAR THE GRILLE HOOD. THE EXHAUST FAN SHALL ALSO BE ENABLED IF TEMPERATURE SENSORS LOCATED INSIDE THE KITCHEN HOOD SENSE HEAT. THE EXHAUST FAN SPEED SHALL BE MODULATED FROM MINIMUM SPEED TO MAXIMUM SPEED TO MAINTAIN HOOD TEMPERATURE SENSOR SET POINT, COORDINATE WITH THE KITCHEN HOOD SUPPLIER.

MAKE-UP AIR UNIT MAU-1: INTERLOCK THE AND MAKE-UP AIR UNIT FAN SERVING THE LAUNDRY AND KITCHEN AND BE ENABLED ANYTIME EITHER THE EXHAUST FAN/HOOD OR ANY LAUNDRY DRYERS ARE TURNED ON OR EITHER OF THE TWO DISCHARGE DAMPERS IS MORE THAN 10% OPEN. MODULATE THE SUPPLY FAN SPEED TO MAINTAIN A DISCHARGE STATIC PRESSURE OF 0.5"WC (ADJUSTABLE). IF THE MAKE-UP AIR UNIT FAN IS RUNNING THE OUTSIDE AIR DAMPER SHALL OPEN AND THE CONTROLS SHALL ENABLE AND MODULATE THE GAS HEATING VALVE IN MAIN UNIT AND AUXILIARY PREHEAT GAS HEATING UNIT TO MAINTAIN A MINIMUM DISCHARGE AIR TEMP OF 65 DEGREES OR THE CONTROLS SHALL ENABLE AND MODULATE THE DX-COOLING AND REMOTE CONDENSING UNIT TO MAINTAIN A MAXIMUM DISCHARGE AIR TEMPERATURE OF 65 DEGREES. HARD-WIRE INTERLOCK THE REMOTE CONDENSING UNIT TO BE LOCKED OUT OF OPERATION IF NO AIRFLOW IS SENSED IN THE MAKE-UP AIR UNIT OR IF OUTSIDE AIR TEMPERATURE IS BELOW 45 DEGREES. INSTALL A RUSKIN AMS-50 AIR FLOW MONITORING STATION AND CO2 SENSOR ON THE OUTSIDE AIR INLET OF MAKE-UP AIR UNIT SERVING THE KITCHEN AND THE LAUNDRY. CONNECT TO THE BUILDING AUTOMATION SYSTEM AND TREND DATA. GENERATE AN ALARM BASED ON ANY FAN FAILURE.

KITCHEN STATIC PRESSURE CONTROL: MODULATE THE SUPPLY AIR DAMPER OPEN TO MAINTAIN A KITCHEN SPACE STATIC PRESSURE OF -0.02"WC WITH RESPECT TO THE HALLWAY.

LAUNDRY STATIC PRESSURE CONTROL: MODULATE THE SUPPLY AIR DAMPER OPEN TO MAINTAIN A LAUNDRY SPACE STATIC PRESSURE OF -0.02"WC WITH RESPECT TO THE HALLWAY.

DISHWASHER EXHAUST FAN: THE EXHAUST FAN SHALL BE INTERLOCKED TO RUN WHENEVER THE DISHWASHER IS OPERATING. GENERATE AN ALARM BASED ON FAN FAILURE.

2 KITCHEN/LAUNDRY SCHEMATIC

SCALE: NONE

Copyright (C) 2010 by Colvin Engineering Associates, Inc. Salt Lake City, Utah. All rights reserved. Unauthorized copying and/or use is illegal and subject to prosecution.

C:\Revit Local Models\2010-074.00 - WSU PH II Bldg 2 - Tyler 2011.rvt
5/17/2011 10:03:33 AM

MHTN ARCHITECTS
MHTN Architects, Inc.
420 East South Temple
Suite 100
Salt Lake City, Utah 84111
Telephone (801) 595-6700
Telefax (801) 595-6717
www.mhtn.com

Colvin Engineering Associates, Inc.
244 West 300 North Suite 200
Salt Lake City, Utah 84103
Phone: (801) 322-2400 / Fax: (801) 322-2416

WEBER STATE UNIVERSITY
RESIDENTIAL LIFE PHASE II - BLDG 2
DFCM PROJECT NUMBER: 10176810

WEBER STATE UNIVERSITY
OGDEN, UTAH 84408

SEAL

MHTN PROJECT NO. 10176810

DRAWN BY: GM CHECKED BY: BRC

ISSUED:

NO.	DATE	DESCRIPTION

CONTRACTOR TO VERIFY DRAWINGS IN FIELD USE REFLECT LAST REVISION DATE.

NO.	DATE	DESCRIPTION

SHEET NAME
MECHANICAL PIPING SCHEMATIC

CONSTRUCTION SET
17 MAY 2011

SHEET NUMBER
MP301

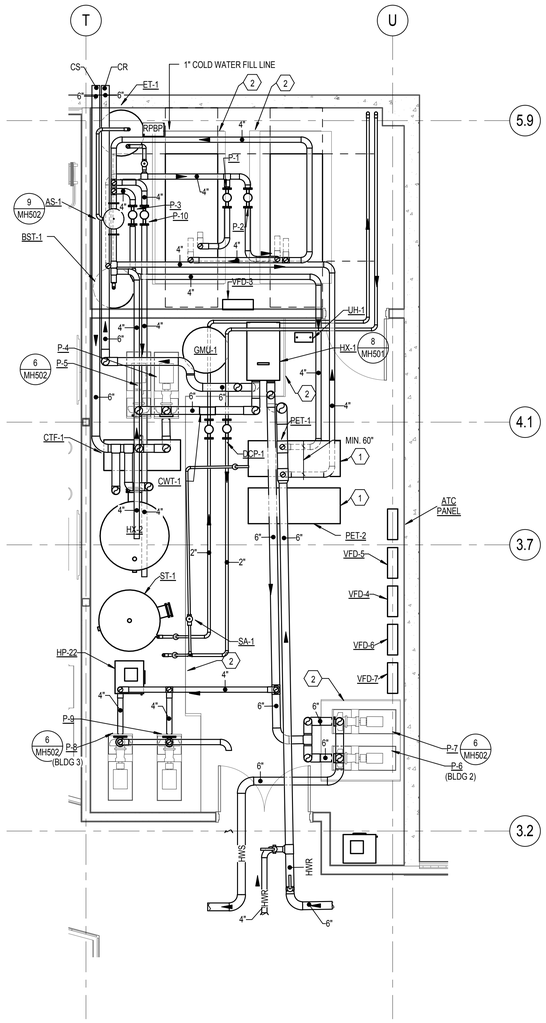

1 ENLARGE MECHANICAL PIPING PLAN

SCALE: 1/4" = 1'-0"

KEYED NOTES

1. HANG FROM STRUCTURE AS HIGH AS POSSIBLE.
2. 4" CONCRETE HOUSEKEEPING PAD.

GENERAL NOTES

A. SEE SCHEMATIC SHEET FOR PIPE SIZES.

B PROVIDE A WATER TIGHT PAN THAT IS 2" DEEP AND 6" LARGER THAN ANY PLUMBING, MECHANICAL PIPING, OR MECHANICAL EQUIPMENT INSTALLED OVER ANY ELECTRICAL EQUIPMENT OR GEAR

Copyright (C) 2010 by Colvin Engineering Associates, Inc. Salt Lake City, Utah. All rights reserved. Unauthorized copying and/or use is illegal and subject to prosecution.

C:\Revit Local Models\2010-074.00 - WSU PH II Bldg 2 - Tyler 2011.rvt
5/17/2011 10:03:35 AM

MHTN
ARCHITECTS
MHTN Architects, Inc.
420 East South Temple
Suite 100
Salt Lake City, Utah 84111
Telephone (801) 595-6700
Telefax (801) 595-6717
www.mhtn.com

Colvin Engineering Associates, Inc.
244 West 300 North Suite 200
Salt Lake City, Utah 84103
Phone: (801) 322-2400 / Fax: (801) 322-2416

WEBER STATE UNIVERSITY
RESIDENTIAL LIFE PHASE II - BLDG 2
DFCM PROJECT NUMBER: 10176810

WEBER STATE UNIVERSITY
OGDEN, UTAH 84408

SEAL

MHTN PROJECT NO. 10176810

DRAWN BY: GM CHECKED BY: BRC

ISSUED:

NO.	DATE	DESCRIPTION

CONTRACTOR TO VERIFY DRAWINGS IN FIELD USE REFLECT LAST REVISION DATE:

NO.	DATE	DESCRIPTION

SHEET NAME
ENLARGED MECHANICAL PIPING PLANS

CONSTRUCTION SET
17 MAY 2011

SHEET NUMBER
MP401

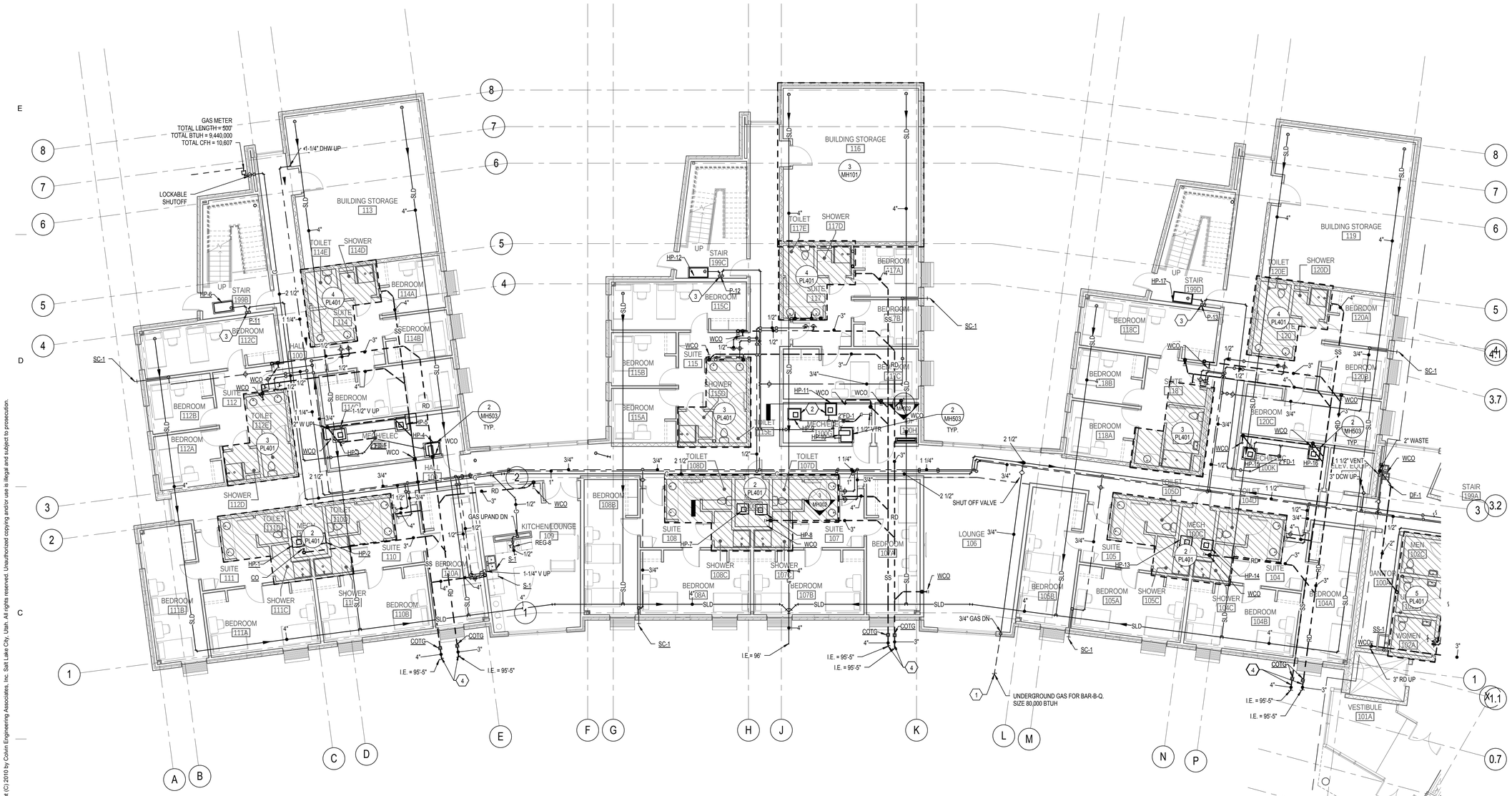

1 LEVEL ONE PLUMBING PLAN - AREA 'A'

SCALE: 1/8" = 1'-0"

GENERAL NOTES

A. ALL UNDER SLAB DRINS TO SLOPE 1/8"
B. ALL HEAT PUMPS TO HAVE SHEETMETAL PAN THAT DRAINS TO FLOOR DRAINS.
C. ALL WASTE, ROOF DRAINS AND OVERFLOW DRAINS TO BE RUN AT 1/8" PER FOOT SLOPE UNLESS NOTED OTHERWISE.
D. PROVIDE ACCESS DOORS TO ALL MIXING VALVES, TRAP PRIMERS, SHUTOFF VALVES, ETC.
E. COORDINATE PLUMBING PIPING ROUTING AND LOCATION WITH ALL TRADES.
F PROVIDE A WATER TIGHT PAN THAT IS 2" DEEP AND 6" LARGER THAN ANY PLUMBING, MECHANICAL PIPING, OR MECHANICAL EQUIPMENT INSTALLED OVER ANY ELECTRICAL EQUIPMENT OR GEAR.

KEYED NOTES

1 ROUTE 3/4" GAS PIPING UNDERGROUND TO NATURAL GAS BBQ. COORDINATE EXACT LOCATION WITH ARCHITECT. UNDERGROUND PIPING TO BE PVC PIPING. PROVIDE AND INSTALL A LOCKING SHUT OFF VALVE AT BBQ LOCATION. ESTIMATED 40,000 BTUH.
2 ROUTE CONDENSATE DRAIN FROM DRAIN PAN TO FLOOR SINK.
3 CONDENSATE DRAIN TO DROP FROM UNIT DRAIN PAN TO CONDENSATE PUMP, ROUTE CONDENSATEFROM PUMP TO NEAREST FLOOR DRAIN.
4 SEE STRUCTURAL DETAIL (C3/SB501) FOR PIPING CROSSING UNDER FOOTING.

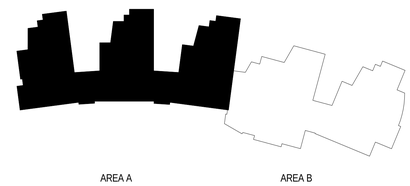

KEYPLAN

Copyright (C) 2010 by Colvin Engineering Associates, Inc. Salt Lake City, Utah. All rights reserved. Unauthorized copying and/or use is illegal and subject to prosecution.

C:\Revit Local Models\2010-074.00 - WSU PH II Bldg 2 - Tyler 2011.rvt
5/17/2011 10:03:42 AM

MHTN ARCHITECTS
MHTN Architects, Inc.
420 East South Temple
Suite 100
Salt Lake City, Utah 84111
Telephone (801) 595-6700
Telefax (801) 595-6717
www.mhtn.com

Colvin Engineering Associates, Inc.
244 West 300 North Suite 200
Salt Lake City, Utah 84103
Phone: (801) 322-2400 / Fax: (801) 322-2416

WEBER STATE UNIVERSITY
RESIDENTIAL LIFE PHASE II - BLDG 2

DFCM PROJECT NUMBER: 10176810

WEBER STATE UNIVERSITY
OGDEN, UTAH 84408

SEAL

MHTN PROJECT NO: 10176810

DRAWN BY: GM CHECKED BY: BRC

ISSUED:

NO.	DATE	DESCRIPTION

CONTRACTOR TO VERIFY DRAWINGS IN FIELD USE REFLECT LAST REVISION DATE.

NO.	DATE	DESCRIPTION

SHEET NAME

LEVEL ONE PLUMBING PLAN - AREA 'A'

CONSTRUCTION SET

17 MAY 2011

SHEET NUMBER

PL101A

1 LEVEL ONE PLUMBING PLAN - AREA 'B'

SCALE: 1/8" = 1'-0"

KEYED NOTES

1. ROUTE 1 1/2" GAS PIPING UNDERGROUND TO NATURAL GAS FIRE PIT. COORDINATE EXACT LOCATION WITH ARCHITECT. UNDERGROUND PIPING TO BE PVC PIPING. PROVIDE AND INSTALL A LOCKING SHUT OFF VALVE AT FIRE PIT LOCATION. ESTIMATED 375,000 BTUH, PROVIDE WITH GAS PRESSURE REGULATOR OUTLET PRESSURE 4 OZ.
2. GAS COOK MOUNT AT 42" A.F.F.
3. CONDENSATE DRAIN TO DROP FROM UNIT DRAIN PAN TO CONDENSATE PUMP, ROUTE CONDENSATEFROM PUMP TO NEAREST FLOOR DRAIN.
4. ROUTE CONDENSATE DRAIN FROM DRAIN PAN TO FLOOR SINK.
5. ROUTE 3/4" CONDENSATE PIPE FROM PAN AS SHOWN.
6. CONNECT THE DISHWASHER TO THE WASTE PIPE AND CONNECT HOT AND COLD WATER.
7. SEE STRUCTURAL DETAIL (C3/SB501) FOR PIPING CROSSING UNDER FOOTING.
8. CONNECT 1/2" COLD WATER TO REFRIGERATOR AS REQUIRED.

GENERAL NOTES

A. ALL UNDER SLAB DRINS TO SLOPE 1/8"
B. ALL HEAT PUMPS TO HAVE SHEETMETAL PAN THAT DRAINS TO FLOOR DRAINS.
C. ALL WASTE, ROOF DRAINS AND OVERFLOW DRAINS TO BE RUN AT 1/8" PER FOOT SLOPE UNLESS NOTED OTHERWISE.
D. PROVIDE ACCESS DOORS TO ALL MIXING VALVES, TRAP PRIMERS, SHUTOFF VALVES, ETC.
E. COORDINATE PLUMBING PIPING ROUTING AND LOCATION WITH ALL TRADES.
F. PROVIDE A WATER TIGHT PAN THAT IS 2" DEEP AND 6" LARGER THAN ANY PLUMBING, MECHANICAL PIPING, OR MECHANICAL EQUIPMENT INSTALLED OVER ANY ELECTRICAL EQUIPMENT OR GEAR.

KEYPLAN

MHTN ARCHITECTS
MHTN Architects, Inc.
420 East South Temple
Suite 100
Salt Lake City, Utah 84111
Telephone (801) 595-6700
Telefax (801) 595-6717
www.mhtn.com

Colvin Engineering Associates, Inc.
244 West 300 North Suite 200
Salt Lake City, Utah 84103
Phone: (801) 322-2400 / Fax: (801) 322-2416

WEBER STATE UNIVERSITY
RESIDENTIAL LIFE PHASE II - BLDG 2
DFCM PROJECT NUMBER: 10176810

WEBER STATE UNIVERSITY
OGDEN, UTAH 84408

SEAL

MHTN PROJECT NO. 10176810

DRAWN BY: GM CHECKED BY: BRC

ISSUED:

NO	DATE	DESCRIPTION

CONTRACTOR TO VERIFY DRAWINGS IN FIELD USE REFLECT LAST REVISION DATE:

NO	DATE	DESCRIPTION

SHEET NAME
LEVEL ONE PLUMBING PLAN - AREA 'B'

CONSTRUCTION SET
17 MAY 2011

SHEET NUMBER
PL101B

Copyright (C) 2010 by Colvin Engineering Associates, Inc. Salt Lake City, Utah. All rights reserved. Unauthorized copying and/or use is illegal and subject to prosecution.

C:\Revit Local Models\2010-074.00 - WSU PH II Bldg 2 - Tyler 2011.rvt
5/17/2011 10:03:52 AM

1 LEVEL TWO PLUMBING PLAN - AREA 'A'

SCALE: 1/8" = 1'-0"

GENERAL NOTES

A. ALL UNDER SLAB DRINS TO SLOPE 1/8"
B. ALL HEAT PUMPS TO HAVE SHEETMETAL PAN THAT DRAINS TO FLOOR DRAINS.
C. ALL WASTE, ROOF DRAINS AND OVERFLOW DRAINS TO BE RUN AT 1/8" PER FOOT SLOPE UNLESS NOTED OTHERWISE.
D. PROVIDE ACCESS DOORS TO ALL MIXING VALVES, TRAP PRIMERS, SHUTOFF VALVES, ETC.
E. COORDINATE PLUMBING PIPING ROUTING AND LOCATION WITH ALL TRADES.
F PROVIDE A WATER TIGHT PAN THAT IS 2" DEEP AND 6" LARGER THAN ANY PLUMBING, MECHANICAL PIPING, OR MECHANICAL EQUIPMENT INSTALLED OVER ANY ELECTRICAL EQUIPMENT OR GEAR.

KEYED NOTES

1 CONDENSATE PIPE TO OPEN 3'-0" ABOVE FINISH FLOOR FLUSH WITH WALL DRAINING INTO SS-1
2 ROUTE CONDENSATE DRAIN FROM DRAIN PAN TO FLOOR SINK.

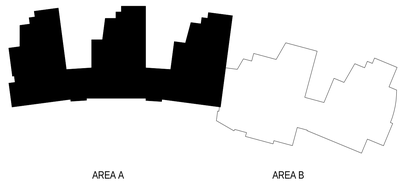

KEYPLAN

MHTN ARCHITECTS
MHTN Architects, Inc.
420 East South Temple
Suite 100
Salt Lake City, Utah 84111
Telephone (801) 595-6700
Telefax (801) 595-6717
www.mhtn.com

Colvin Engineering Associates, Inc.
244 West 300 North Suite 200
Salt Lake City, Utah 84103
Phone: (801) 322-2400 / Fax: (801) 322-2416

WEBER STATE UNIVERSITY
RESIDENTIAL LIFE PHASE II - BLDG 2
DFCM PROJECT NUMBER: 10176810

WEBER STATE UNIVERSITY
OGDEN, UTAH 84408

SEAL

MHTN PROJECT NO. 10176810
DRAWN BY: GM CHECKED BY: BRC

ISSUED:

NO.	DATE	DESCRIPTION

CONTRACTOR TO VERIFY DRAWINGS IN FIELD USE REFLECT LAST REVISION DATE:

NO.	DATE	DESCRIPTION

SHEET NAME
LEVEL TWO PLUMBING PLAN - AREA 'A'

CONSTRUCTION SET
17 MAY 2011

SHEET NUMBER
PL102A

Copyright (C) 2010 by Colvin Engineering Associates, Inc. Salt Lake City, Utah. All rights reserved. Unauthorized copying and/or use is illegal and subject to prosecution.

C:\Revit Local Models\2010-074.00 - WSU PH II Bldg 2 - Tyler 2011.rvt
5/17/2011 10:03:59 AM

1 LEVEL TWO PLUMBING PLAN - AREA 'B'

SCALE: 1/8" = 1'-0"

KEYED NOTES

1. CONDENSATE PIPE TO OPEN 3'-0" ABOVE FINISH FLOOR FLUSH WITH WALL DRAINING INTO SS-1
2. ROUTE SOFT COLD WATER LINE TO KITCHEN DISHWASHER.

GENERAL NOTES

A. ALL UNDER SLAB DRINS TO SLOPE 1/8"
B. ALL HEAT PUMPS TO HAVE SHEETMETAL PAN THAT DRAINS TO FLOOR DRAINS.
C. ALL WASTE, ROOF DRAINS AND OVERFLOW DRAINS TO BE RUN AT 1/8" PER FOOT SLOPE UNLESS NOTED OTHERWISE.
D. PROVIDE ACCESS DOORS TO ALL MIXING VALVES, TRAP PRIMERS, SHUTOFF VALVES, ETC.
E. COORDINATE PLUMBING PIPING ROUTING AND LOCATION WITH ALL TRADES.
F PROVIDE A WATER TIGHT PAN THAT IS 2" DEEP AND 6" LARGER THAN ANY PLUMBING, MECHANICAL PIPING, OR MECHANICAL EQUIPMENT INSTALLED OVER ANY ELECTRICAL EQUIPMENT OR GEAR.

KEYPLAN

MHTN ARCHITECTS
MHTN Architects, Inc.
420 East South Temple
Suite 100
Salt Lake City, Utah 84111
Telephone (801) 595-6700
Telefax (801) 595-6717
www.mhtn.com

Colvin Engineering Associates, Inc.
244 West 300 North Suite 200
Salt Lake City, Utah 84103
Phone: (801) 322-2400 / Fax: (801) 322-2416

WEBER STATE UNIVERSITY
RESIDENTIAL LIFE PHASE II - BLDG 2
DFCM PROJECT NUMBER: 10176810

WEBER STATE UNIVERSITY
OGDEN, UTAH 84408

SEAL

MHTN PROJECT NO. 10176810

DRAWN BY: GM CHECKED BY: BRC

ISSUED:

NO.	DATE	DESCRIPTION

CONTRACTOR TO VERIFY DRAWINGS IN FIELD USE REFLECT LAST REVISION DATE:

NO.	DATE	DESCRIPTION

SHEET NAME
LEVEL TWO PLUMBING PLAN - AREA 'B'

CONSTRUCTION SET
17 MAY 2011

SHEET NUMBER
PL102B

Copyright (C) 2010 by Colvin Engineering Associates, Inc. Salt Lake City, Utah. All rights reserved. Unauthorized copying and/or use is illegal and subject to prosecution.

C:\Revit Local\Models\2010-074.00 - WSU PH II Bldg 2 - Tyler 2011.rvt
5/17/2011 10:04:06 AM

1 LEVEL THREE PLUMBING PLAN - AREA 'A'

SCALE: 1/8" = 1'-0"

6' 0' 4' 8' 12' 16'

GENERAL NOTES

A. ALL UNDER SLAB DRINS TO SLOPE 1/8"
B. ALL HEAT PUMPS TO HAVE SHEETMETAL PAN THAT DRAINS TO FLOOR DRAINS.
C. ALL WASTE, ROOF DRAINS AND OVERFLOW DRAINS TO BE RUN AT 1/8" PER FOOT SLOPE UNLESS NOTED OTHERWISE.
D. PROVIDE ACCESS DOORS TO ALL MIXING VALVES, TRAP PRIMERS, SHUTOFF VALVES, ETC.
E. COORDINATE PLUMBING PIPING ROUTING AND LOCATION WITH ALL TRADES.
F PROVIDE A WATER TIGHT PAN THAT IS 2" DEEP AND 6" LARGER THAN ANY PLUMBING, MECHANICAL PIPING, OR MECHANICAL EQUIPMENT INSTALLED OVER ANY ELECTRICAL EQUIPMENT OR GEAR.

KEYED NOTES

1 DSN 9' FROM THE FINISHED 3RD FLOOR.
2 CONDENSATE PIPE TO OPEN 3'-0" ABOVE FINISH FLOOR FLUSH WITH WALL DRAINING INTO SS-1

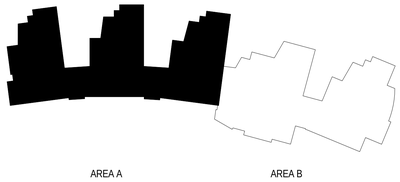

KEYPLAN

MHTN ARCHITECTS
MHTN Architects, Inc.
420 East South Temple
Suite 100
Salt Lake City, Utah 84111
Telephone (801) 595-6700
Telefax (801) 595-6717
www.mhtn.com

Colvin Engineering Associates, Inc.
244 West 300 North Suite 200
Salt Lake City, Utah 84103
Phone: (801) 322-2400 / Fax: (801) 322-2416

WEBER STATE UNIVERSITY
RESIDENTIAL LIFE PHASE II - BLDG 2
DFCM PROJECT NUMBER: 10176810

WEBER STATE UNIVERSITY
OGDEN, UTAH 84408

SEAL

MHTN PROJECT NO. 10176810
DRAWN BY: GM CHECKED BY: BRC

ISSUED:

NO.	DATE	DESCRIPTION

CONTRACTOR TO VERIFY DRAWINGS IN FIELD USE REFLECT LAST REVISION DATE.

NO.	DATE	DESCRIPTION

SHEET NAME
LEVEL THREE PLUMBING PLAN - AREA 'A'

CONSTRUCTION SET
17 MAY 2011

SHEET NUMBER
PL103A

Copyright (C) 2010 by Colvin Engineering Associates, Inc. Salt Lake City, Utah. All rights reserved. Unauthorized copying and/or use is illegal and subject to prosecution.

C:\Revit Local Models\2010-074.00 - WSU PH II Bldg 2 - Tyler 2011.rvt
5/17/2011 10:04:16 AM

1 LEVEL THREE PLUMBING PLAN - AREA 'B'

SCALE: 1/8" = 1'-0"

KEYED NOTES

1. DSN 9' FROM THE FINISHED 3RD FLOOR.
2. CONDENSATE PIPE TO OPEN 3'-0" ABOVE FINISH FLOOR FLUSH WITH WALL DRAINING INTO SS-1

GENERAL NOTES

A. ALL UNDER SLAB DRINS TO SLOPE 1/8"
B. ALL HEAT PUMPS TO HAVE SHEETMETAL PAN THAT DRAINS TO FLOOR DRAINS.
C. ALL WASTE, ROOF DRAINS AND OVERFLOW DRAINS TO BE RUN AT 1/8" PER FOOT SLOPE UNLESS NOTED OTHERWISE.
D. PROVIDE ACCESS DOORS TO ALL MIXING VALVES, TRAP PRIMERS, SHUTOFF VALVES, ETC.
E. COORDINATE PLUMBING PIPING ROUTING AND LOCATION WITH ALL TRADES.
F PROVIDE A WATER TIGHT PAN THAT IS 2" DEEP AND 6" LARGER THAN ANY PLUMBING, MECHANICAL PIPING, OR MECHANICAL EQUIPMENT INSTALLED OVER ANY ELECTRICAL EQUIPMENT OR GEAR.

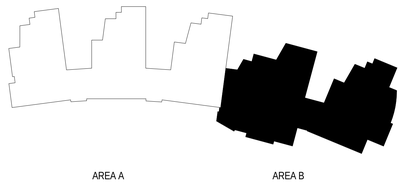

KEYPLAN

MHTN ARCHITECTS
MHTN Architects, Inc.
420 East South Temple
Suite 100
Salt Lake City, Utah 84111
Telephone (801) 595-6700
Telefax (801) 595-6717
www.mhtn.com

Colvin Engineering Associates, Inc.
244 West 300 North Suite 200
Salt Lake City, Utah 84103
Phone: (801) 322-2400 / Fax: (801) 322-2416

WEBER STATE UNIVERSITY
RESIDENTIAL LIFE PHASE II - BLDG 2
DFCM PROJECT NUMBER: 10176810

WEBER STATE UNIVERSITY
OGDEN, UTAH 84408

SEAL

MHTN PROJECT NO. 10176810
DRAWN BY: GM CHECKED BY: BRC

ISSUED:

NO.	DATE	DESCRIPTION

CONTRACTOR TO VERIFY DRAWINGS IN FIELD USE REFLECT LAST REVISION DATE:

NO.	DATE	DESCRIPTION

SHEET NAME
LEVEL THREE PLUMBING PLAN - AREA 'B'

CONSTRUCTION SET
17 MAY 2011

SHEET NUMBER
PL103B

Copyright (C) 2010 by Colvin Engineering Associates, Inc. Salt Lake City, Utah. All rights reserved. Unauthorized copying and/or use is illegal and subject to prosecution.

C:\Revit Local Models\2010-074.00 - WSU PH II Bldg 2 - Tyler 2011.rvt
5/17/2011 10:04:24 AM

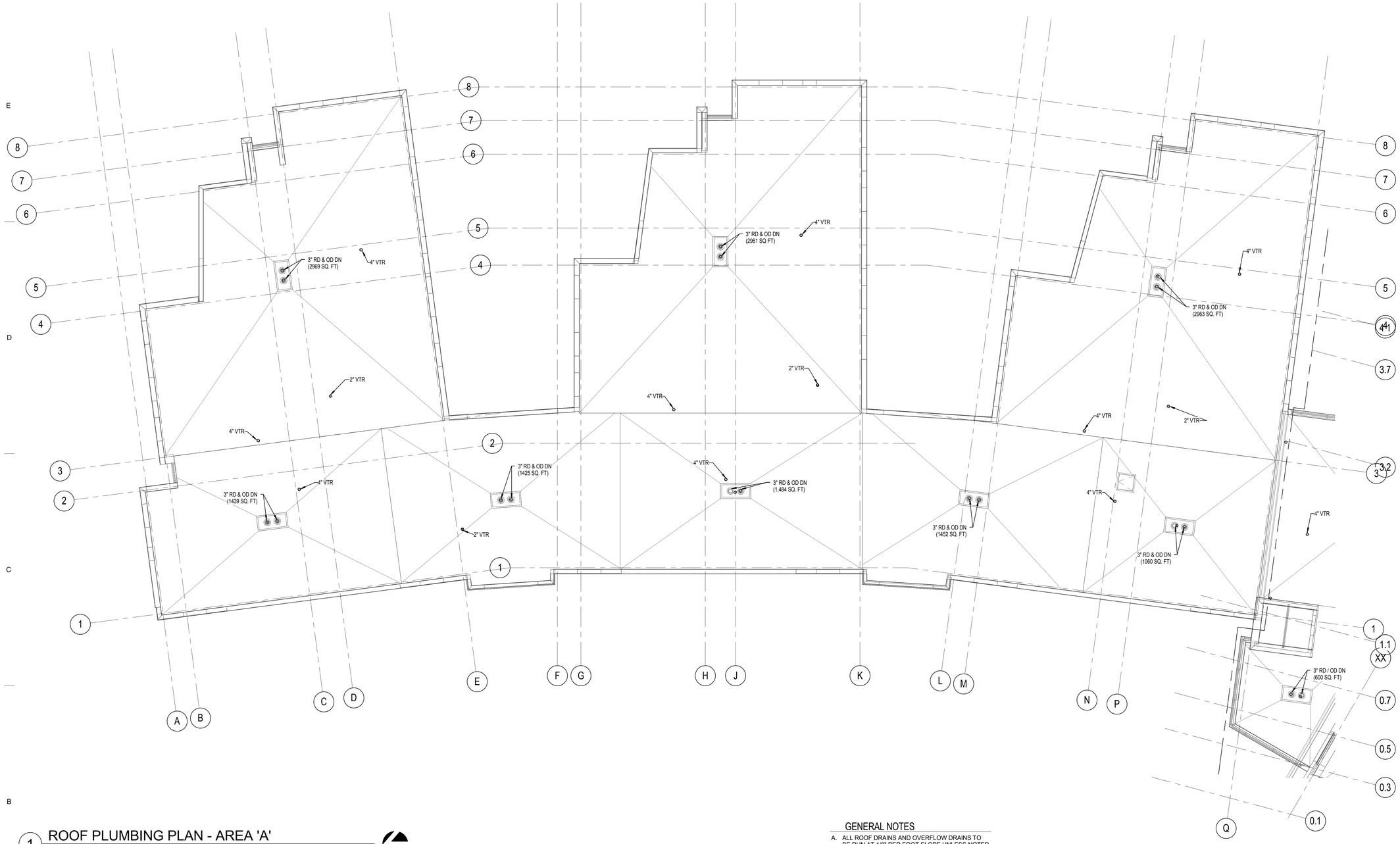

1 ROOF PLUMBING PLAN - AREA 'A'

SCALE: 1/8" = 1'-0"

GENERAL NOTES

A. ALL ROOF DRAINS AND OVERFLOW DRAINS TO BE RUN AT 1/8" PER FOOT SLOPE UNLESS NOTED OTHERWISE.

B. COORDINATE PLUMBING PIPING ROUTING AND LOCATION WITH ALL TRADES.

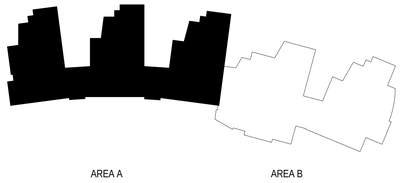

KEYPLAN

MHTN ARCHITECTS
MHTN Architects, Inc.
420 East South Temple
Suite 100
Salt Lake City, Utah 84111
Telephone (801) 595-6700
Telefax (801) 595-6717
www.mhtn.com

Colvin Engineering Associates, Inc.
244 West 300 North Suite 200
Salt Lake City, Utah 84103
Phone: (801) 322-2400 / Fax: (801) 322-2416

WEBER STATE UNIVERSITY
RESIDENTIAL LIFE PHASE II - BLDG 2
DFCM PROJECT NUMBER: 10176810

WEBER STATE UNIVERSITY
OGDEN, UTAH 84408

SEAL

MHTN PROJECT NO. 10176810

DRAWN BY: GM CHECKED BY: BRC

ISSUED:

NO.	DATE	DESCRIPTION

CONTRACTOR TO VERIFY DRAWINGS IN FIELD USE REFLECT LAST REVISION DATE:

NO.	DATE	DESCRIPTION

SHEET NAME
ROOF PLUMBING PLAN - AREA 'A'

CONSTRUCTION SET
17 MAY 2011

SHEET NUMBER
PL104A

Copyright (C) 2010 by Colvin Engineering Associates, Inc. Salt Lake City, Utah. All rights reserved. Unauthorized copying and/or use is illegal and subject to prosecution.

C:\Revit Local Models\2010-074.00 - WSU PH II Bldg 2 - Tyler 2011.rvt
5/17/2011 10:04:26 AM

1 ROOF PLUMBING PLAN - AREA 'B'

SCALE: 1/8" = 1'-0"

6' 0' 4' 8' 12' 16'

KEYED NOTES

1. PROVIDE TYPE M COPPER CONDINSATE DRAIN WITH P-TRAP ON ROOF CONDENSATE TO DRIP ON ROOF.

GENERAL NOTES

A. ALL ROOF DRAINS AND OVERFLOW DRAINS TO BE RUN AT 1/8" PER FOOT SLOPE UNLESS NOTED OTHERWISE.

B. COORDINATE PLUMBING PIPING ROUTING AND LOCATION WITH ALL TRADES.

KEYPLAN

MHTN
ARCHITECTS
MHTN Architects, Inc.
420 East South Temple
Suite 100
Salt Lake City, Utah 84111
Telephone (801) 595-6700
Telefax (801) 595-6717
www.mhtn.com

Colvin Engineering Associates, Inc.
244 West 300 North Suite 200
Salt Lake City, Utah 84103
Phone: (801) 322-2400 / Fax: (801) 322-2416

WEBER STATE UNIVERSITY
RESIDENTIAL LIFE PHASE II - BLDG 2
DFCM PROJECT NUMBER: 10176810

WEBER STATE UNIVERSITY
OGDEN, UTAH 84408

SEAL

MHTN PROJECT NO. 10176810

DRAWN BY: GM CHECKED BY: BRC

ISSUED:

NO.	DATE	DESCRIPTION

CONTRACTOR TO VERIFY DRAWINGS IN FIELD USE REFLECT LAST REVISION DATE

NO.	DATE	DESCRIPTION

SHEET NAME
ROOF PLUMBING PLAN - AREA 'B'

CONSTRUCTION SET
17 MAY 2011

SHEET NUMBER
PL104B

Copyright (C) 2010 by Colvin Engineering Associates, Inc. Salt Lake City, Utah. All rights reserved. Unauthorized copying and/or use is illegal and subject to prosecution.

C:\Revit Local Models\2010-074.00 - WSU PH II Bldg 2 - Tyler 2011.rvt
5/17/2011 10:05:03 AM

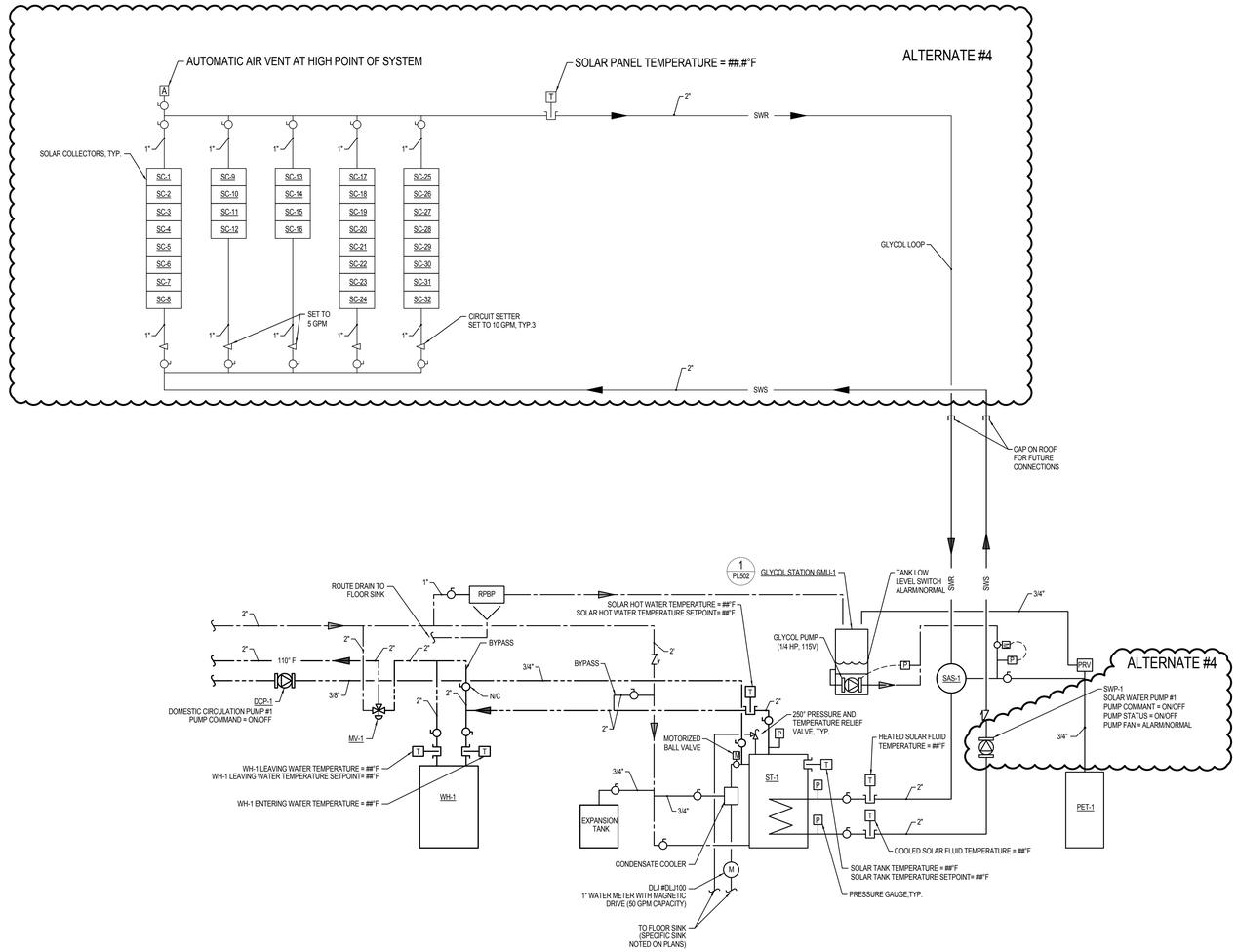

1 SOLAR WATER HEATING SCHEMATIC

SCALE: NONE

SOLAR WATER HEATING SEQUENCE

START THE SOLAR WATER PUMP SWP-1 ANYTIME THE PANEL TEMPERATURE IS GREATER THAN THE TEMPERATURE OF STORAGE TANK ST-1 AND THE TEMPERATURE OF STORAGE TANK ST-1 IS BELOW 180°F. ENERGIZE DOMESTIC RECIRCULATION PUMP DCP-1 DURING THE BUILDING'S OCCUPIED MODE. HEAT EXCHANGER HX-2 TO MAINTAIN 140°F DOMESTIC LEAVING WATER TEMPERATURE. SEE HEATING WATER SCHEMATIC FOR HEAT EXCHANGER HX-2 SEQUENCE OF OPERATION. HEAT EXCHANGER HX-2 TO BE ABLE TO HEAT 40°F INCOMING DOMESTIC WATER TO 140°F. HEAT EXCHANGER HX-2 TO CYCLE OFF WHEN TANK TEMP REACHES 140°F. DOMESTIC SOLAR HOT WATER MOTORIZED BALANCE VALVE TO OPEN AND DUMP WHEN ST-1 REACHES 200°F (ADJUSTABLE). BAS TO MONITOR THE LOW LEVEL SWITCH ON THE GLYCOL MAKE UP UNIT AND GENERATE AN ALARM ON LOW LEVEL DETECTION. THE DOMESTIC HOT WATER OVERHEATING DUMP WATER SHALL BE METERED AND TIED IN TO THE BAS TO MONITOR DUMPED WATER AMOUNT.

GRAPHICS LEGEND

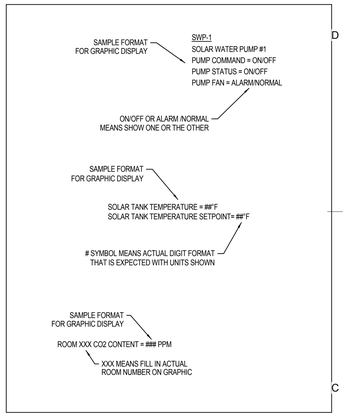

MHTN ARCHITECTS
MHTN Architects, Inc.
420 East South Temple
Suite 100
Salt Lake City, Utah 84111
Telephone (801) 595-6700
Telefax (801) 595-6717
www.mhtn.com

Colvin Engineering Associates, Inc.
244 West 300 North Suite 200
Salt Lake City, Utah 84103
Phone: (801) 322-2400 / Fax: (801) 322-2416

WEBER STATE UNIVERSITY
RESIDENTIAL LIFE PHASE II - BLDG 2
DFCM PROJECT NUMBER: 10176810

WEBER STATE UNIVERSITY
OGDEN, UTAH 84408

SEAL

MHTN PROJECT NO. 10176810

DRAWN BY: GM CHECKED BY: BRC

ISSUED:

NO.	DATE	DESCRIPTION

CONTRACTOR TO VERIFY DRAWINGS IN FIELD USE REFLECT LAST REVISION DATE:

NO.	DATE	DESCRIPTION

SHEET NAME
SOLAR WATER HEATING SCHEMATIC

CONSTRUCTION SET
17 MAY 2011

SHEET NUMBER
PL301

Copyright (C) 2010 by Colvin Engineering Associates, Inc. Salt Lake City, Utah. All rights reserved. Unauthorized copying and/or use is illegal and subject to prosecution.

C:\Revit Local Models\2010-074.00 - WSU PH II Bldg 2 - Tyler 2011.rvt
5/17/2011 10:05:03 AM

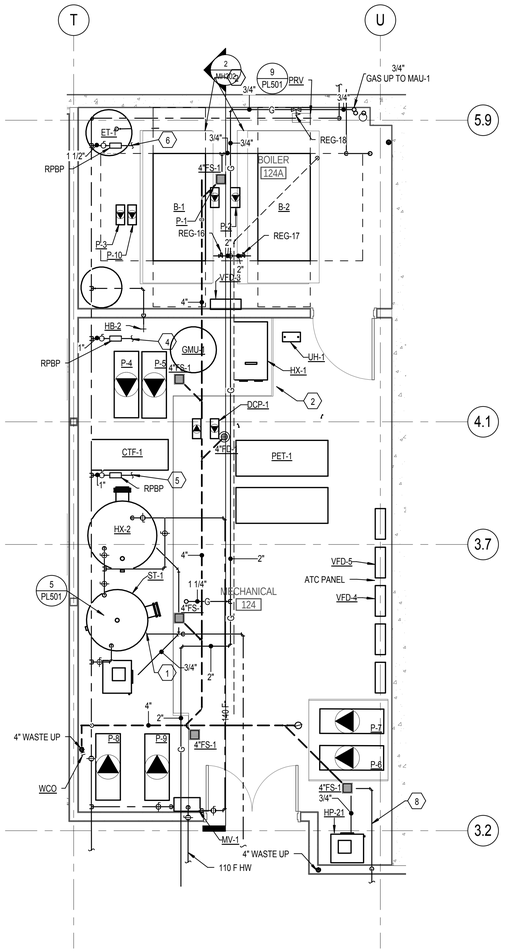

1 ENLARGED MECHANICAL ROOM PLUMBING PLAN

SCALE: 1/4" = 1'-0"

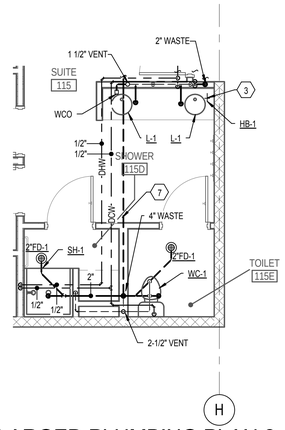

3 ENLARGED PLUMBING PLAN 2

SCALE: 1/4" = 1'-0"

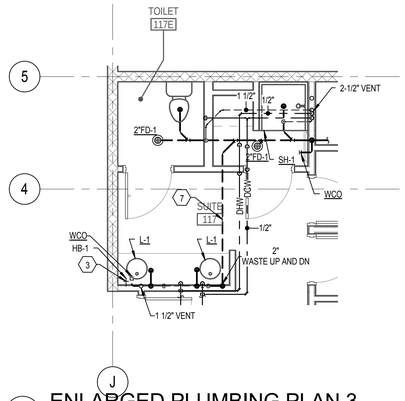

4 ENLARGED PLUMBING PLAN 3

SCALE: 1/4" = 1'-0"

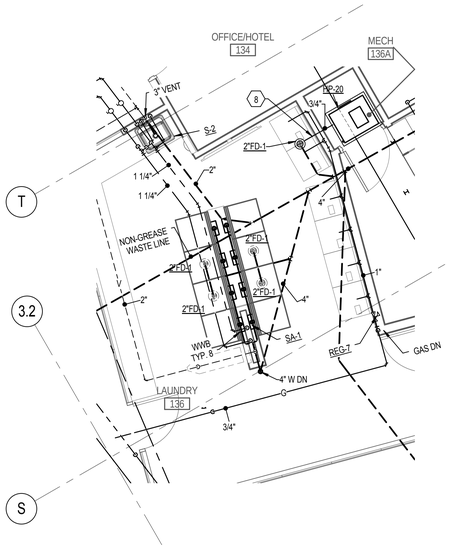

7 LEVEL ONE ENLARGED LAUNDRY ROOM

SCALE: 1/4" = 1'-0"

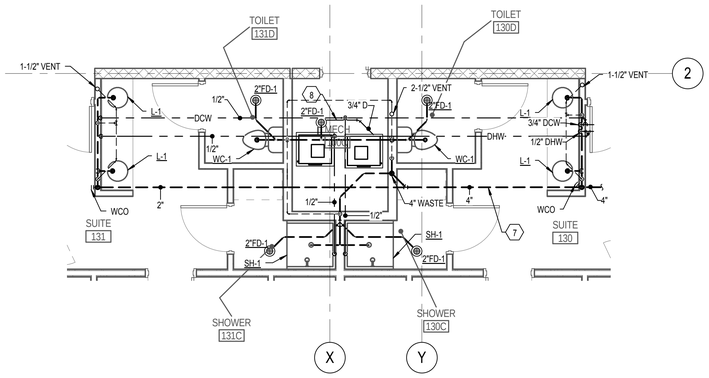

2 ENLARGED PLUMBING PLAN 1 AND 5

SCALE: 1/4" = 1'-0"

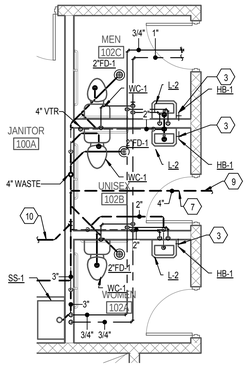

5 ENLARGED PLUMBING PLAN 4

SCALE: 1/4" = 1'-0"

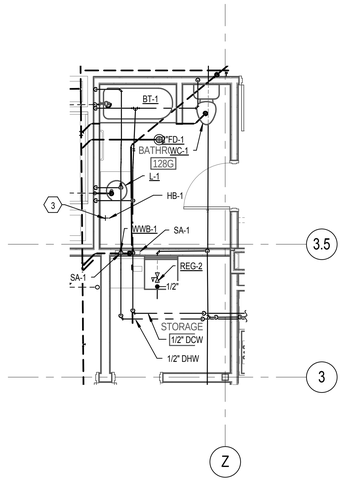

6 ENLARGED PLUMBING PLAN 6

SCALE: 1/4" = 1'-0"

KEYED NOTES

1. CONNECT HOT WATER RECIRCULATION LINE TO TANK. SEE SCHEMATIC PL301
2. 4" CONCRETE HOUSEKEEPING PAD.
3. HB-1 LOCATES UNDER LAVATORY.
4. 1" FILL LINE FOR GLYCOL SYSTEM. CONNECT AS REQUIRED.
5. 1" FILL LINE FOR HEAT PUMP LOOP. CONNECT AS REQUIRED.
6. 1 1/2" FILL LINE FOR COOLING TOWER. CONNECT AS REQUIRED.
7. THIS PIPE APPLIES FOR FIRST LEVEL ONLY.
8. ROUTE CONDENSATE DRAIN FROM DRAIN PAN TO FLOOR SINK.
9. SEE STRUCTURAL DETAIL (C3/SB501) FOR PIPING CROSSING UNDER FOOTING.
10. THIS PIPE APPLIES FOR SECONED LEVEL ONLY.

GENERAL NOTES

A. ALL WASTE, ROOF DRAINS AND OVERFLOW DRAINS TO BE RUN AT 1/8" PER FOOT SLOPE UNLESS NOTED OTHERWISE.
B. PROVIDE ACCESS DOORS TO ALL MIXING VALVES, TRAP PRIMERS, SHUTOFF VALVES, ETC.
C. COORDINATE PLUMBING PIPING ROUTING AND LOCATION WITH ALL TRADES.

MHTN ARCHITECTS
MHTN Architects, Inc.
420 East South Temple
Suite 100
Salt Lake City, Utah 84111
Telephone (801) 595-6700
Telefax (801) 595-6717
www.mhtn.com

Colvin Engineering Associates, Inc.
244 West 300 North Suite 200
Salt Lake City, Utah 84103
Phone: (801) 322-2400 / Fax: (801) 322-2416

WEBER STATE UNIVERSITY
RESIDENTIAL LIFE PHASE II - BLDG 2

DFCM PROJECT NUMBER: 10176810

WEBER STATE UNIVERSITY
OGDEN, UTAH 84408

SEAL

MHTN PROJECT NO. 10176810

DRAWN BY: GM CHECKED BY: BRC

ISSUED:

NO.	DATE	DESCRIPTION

CONTRACTOR TO VERIFY DRAWINGS IN FIELD USE REFLECT LAST REVISION DATE:

NO.	DATE	DESCRIPTION

SHEET NAME
ENLARGED PLUMBING PLANS

CONSTRUCTION SET
17 MAY 2011

SHEET NUMBER
PL401

Copyright (C) 2010 by Colvin Engineering Associates, Inc. Salt Lake City, Utah. All rights reserved. Unauthorized copying and/or use is illegal and subject to prosecution.

C:\Revit Local\Models\2010-074.00 - WSU PH II Bldg 2 - Tyler 2011.rvt
5/17/2011 10:05:09 AM

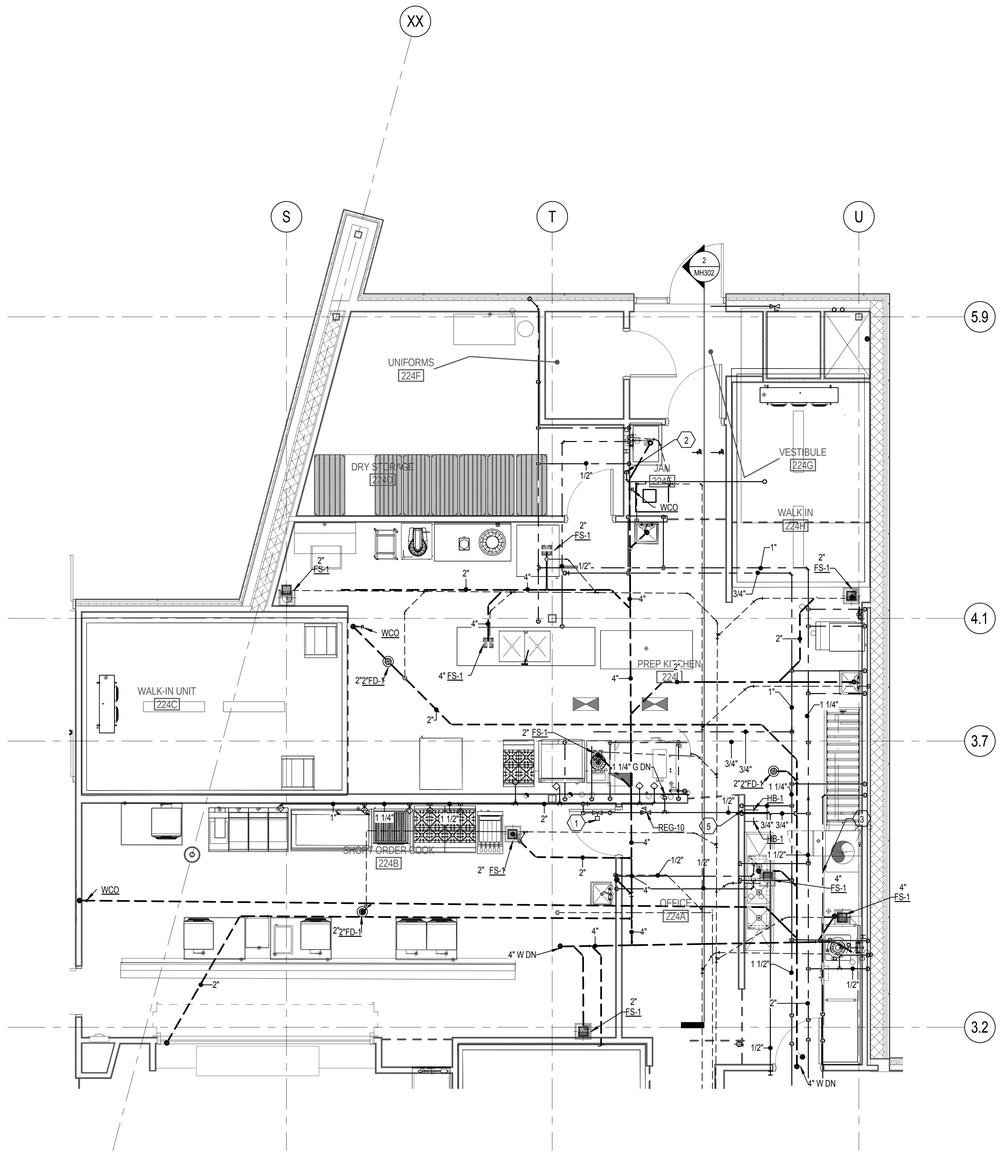

1 ENLARGED KITCHEN PLAN

SCALE: 1/4" = 1'-0"

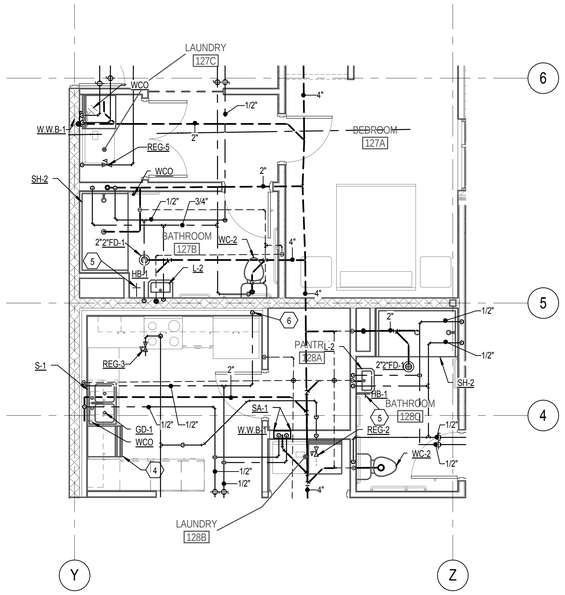

2 AREA B ENLARGED PLAN

SCALE: 1/4" = 1'-0"

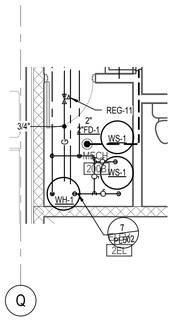

3 ENLARGED MECHANICAL ROOM 200B PLUMBING PLAN

SCALE: 1/4" = 1'-0"

KEYED NOTES

1. GAS SHUTOFF VALVE EXPOSED UNDER CEILING.
2. CONDENSATE PIPE TO OPEN 3'-0" ABOVE FINISH FLOOR FLUSH WITH WALL DRAINING INTO SS-1
3. ROUTE SOFT COLD WATER LINE TO KITCHEN DISHWASHER.
4. CONNECT THE DISHWASHER TO THE WASTE PIPE AND CONNECT HOT AND COLD WATER.
5. HB-1 LOCATED UNDER LAVATORY.
6. CONNECT 1/2" COLD WATER TO REFRIGERATOR AS REQUIRED.

GENERAL NOTES

A. ALL UNDER SLAB DRINS TO SLOPE 1/8"
B. ALL HEAT PUMPS TO HAVE SHEETMETAL PAN THAT DRAINS TO FLOOR DRAINS.
C. ALL WASTE, ROOF DRAINS AND OVERFLOW DRAINS TO BE RUN AT 1/8" PER FOOT SLOPE UNLESS NOTED OTHERWISE.
D. PROVIDE ACCESS DOORS TO ALL MIXING VALVES, TRAP PRIMERS, SHUTOFF VALVES, ETC.
E. COORDINATE PLUMBING PIPING ROUTING AND LOCATION WITH ALL TRADES.
F PROVIDE A WATER TIGHT PAN THAT IS 2" DEEP AND 6" LARGER THAN ANY PLUMBING, MECHANICAL PIPING, OR MECHANICAL EQUIPMENT INSTALLED OVER ANY ELECTRICAL EQUIPMENT OR GEAR.

MHTN ARCHITECTS
MHTN Architects, Inc.
420 East South Temple
Suite 100
Salt Lake City, Utah 84111
Telephone (801) 595-6700
Telefax (801) 595-6717
www.mhtn.com

Colvin Engineering Associates, Inc.
244 West 300 North Suite 200
Salt Lake City, Utah 84103
Phone: (801) 322-2400 / Fax: (801) 322-2416

WEBER STATE UNIVERSITY
RESIDENTIAL LIFE PHASE II - BLDG 2

DFCM PROJECT NUMBER: 10176810

WEBER STATE UNIVERSITY
OGDEN, UTAH 84408

SEAL

MHTN PROJECT NO. 10176810

DRAWN BY: Author CHECKED BY: Checker

ISSUED:

NO.	DATE	DESCRIPTION

CONTRACTOR TO VERIFY DRAWINGS IN FIELD USE REFLECT LAST REVISION DATE.

NO.	DATE	DESCRIPTION

SHEET NAME
ENLARGED PLUMBING PLAN

CONSTRUCTION SET
17 MAY 2011

SHEET NUMBER
PL402

Copyright (C) 2010 by Colvin Engineering Associates, Inc. Salt Lake City, Utah. All rights reserved. Unauthorized copying and/or use is illegal and subject to prosecution.

C:\Revit Local Models\2010-074.00 - WSU PH II Bldg 2 - Tyler 2011.rvt
5/17/2011 10:05:13 AM

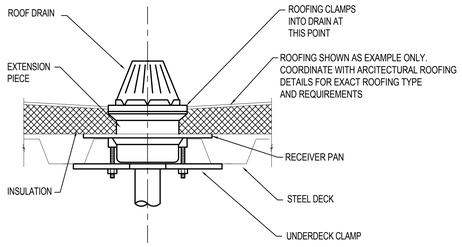

1 ROOF DRAIN DETAIL

NO SCALE

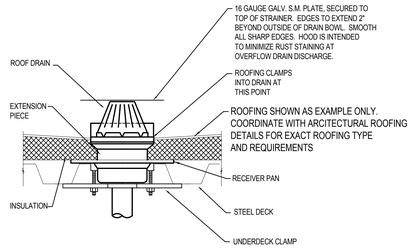

2 OVERFLOW ROOF DRAIN WITH HOOD DETAIL

NO SCALE

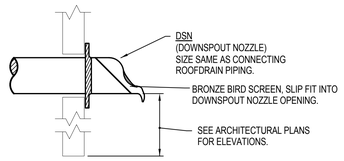

3 DOWNSPOUT NOZZLE DETAIL

NO SCALE

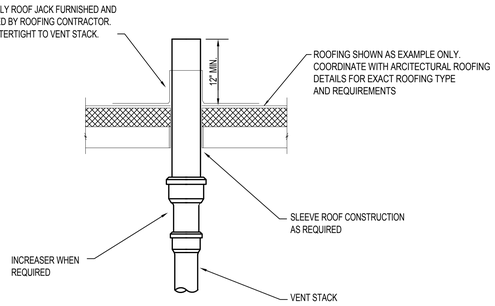

4 VENT THROUGH ROOF DETAIL

NO SCALE 15410

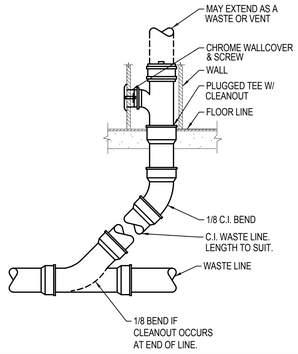

5 WALL CLEANOUT DETAIL

NO SCALE

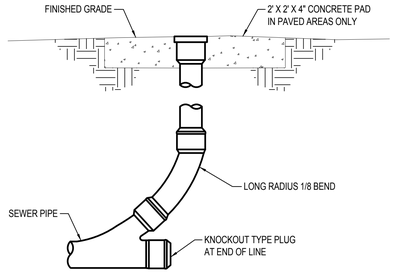

6 SURFACE CLEANOUT DETAIL

NO SCALE 15430

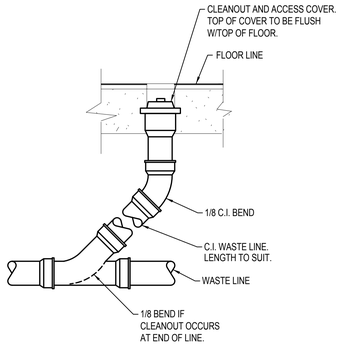

7 FLOOR CLEANOUT DETAIL

NO SCALE

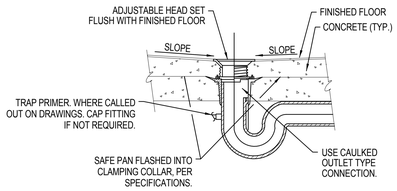

8 TYPICAL FLOOR DRAIN IN SUSPENDED SLAB DETAIL

NO SCALE

PRV SCHEDULE

PLAN CODE	SIZE	GPM RANGE	PRESSURE SETTING (PSIG)	MANUFACTURER & MODEL NO.
PRV-1	3"	0-190	80	WATTS SERIES N223BS
PRV-2	5"	190-380	75	WATTS SERIES 2300

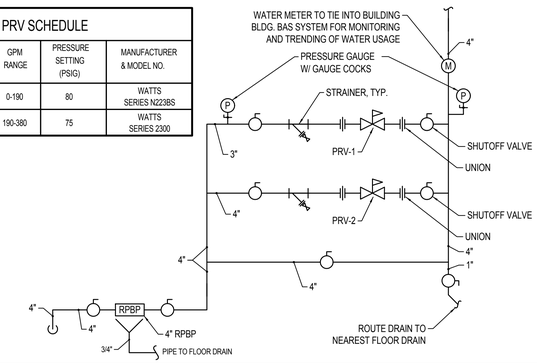

9 PRV/RPBP STATION DETAIL

NO SCALE

Copyright (C) 2010 by Colvin Engineering Associates, Inc. Salt Lake City, Utah. All rights reserved. Unauthorized copying and/or use is illegal and subject to prosecution.

C:\Revit Local Models\2010-074.00 - WSU PH II Bldg 2 - Tyler 2011.rvt
5/17/2011 10:05:14 AM

MHTN ARCHITECTS
MHTN Architects, Inc.
420 East South Temple
Suite 100
Salt Lake City, Utah 84111
Telephone (801) 595-6700
Telefax (801) 595-6717
www.mhtn.com

Colvin Engineering Associates, Inc.
244 West 300 North Suite 200
Salt Lake City, Utah 84103
Phone: (801) 322-2400 / Fax: (801) 322-2416

WEBER STATE UNIVERSITY
RESIDENTIAL LIFE PHASE II - BLDG 2
DFCM PROJECT NUMBER: 10176810

WEBER STATE UNIVERSITY
OGDEN, UTAH 84408

SEAL

MHTN PROJECT NO. 10176810

DRAWN BY: GM CHECKED BY: BRC

ISSUED:

NO	DATE	DESCRIPTION

CONTRACTOR TO VERIFY DRAWINGS IN FIELD USE REFLECT LAST REVISION DATE:

NO	DATE	DESCRIPTION

SHEET NAME
PLUMBING DETAILS

CONSTRUCTION SET
17 MAY 2011

SHEET NUMBER
PL501

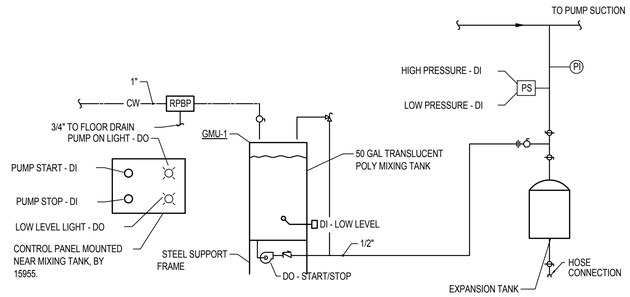

CONTROL SEQUENCE: ADJUSTABLE LOW PRESSURE SWITCH SHALL INITIATE A SOFTWARE ALARM THROUGH THE DDC CONTROL SYSTEM. MOMENTARY PUSH BUTTON SHALL START MAKE-UP PUMP. PUMP SHALL BE STOPPED BY ADJUSTABLE HIGH PRESSURE SWITCH OR MOMENTARY PUSH BUTTON STOP SWITCH. FLOAT SWITCH IN MIXING TANK SHALL INITIATE A SOFTWARE ALARM AND TURN ON AN INDICATOR LIGHT ON THE PUMP CONTROL PANEL, WHEN LEVEL DROPS BELOW 1/4 FULL.

1 GLYCOL MAKE-UP SYSTEM DETAIL - DDC CONTROLS

NO SCALE

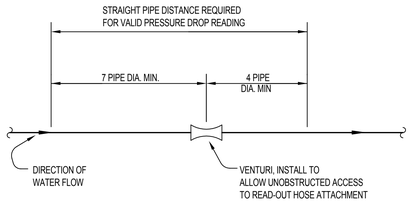

2 VENTURI INSTALLATION DETAIL

NO SCALE

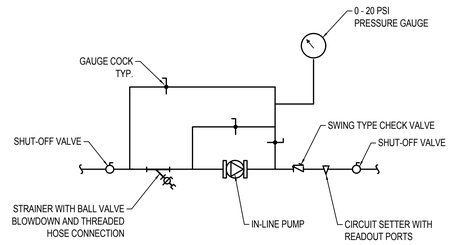

3 IN-LINE PUMP PIPING DETAIL

NO SCALE

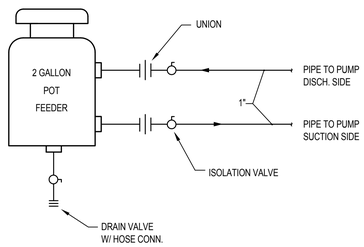

4 CHEMICAL POT FEEDER PIPING DETAIL

NO SCALE

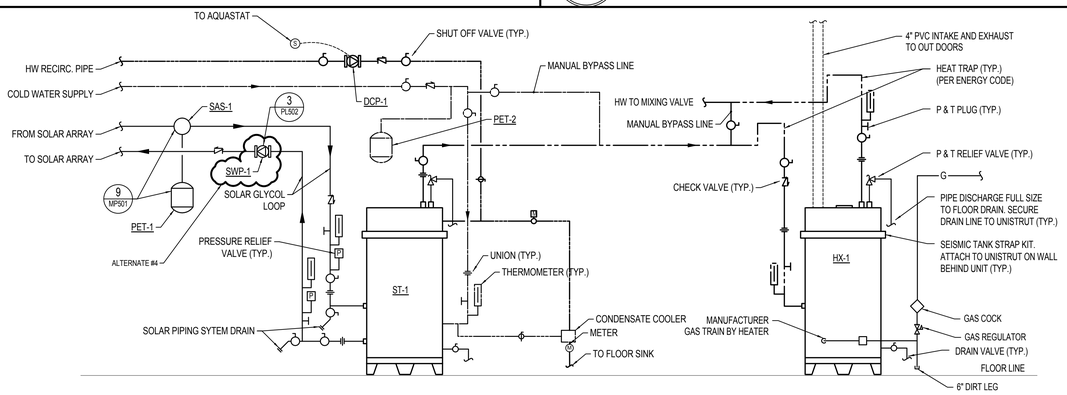

5 SOLAR WATER STORAGE TANK AND DOMESTIC WATER HEATER PIPING DETAIL

NO SCALE

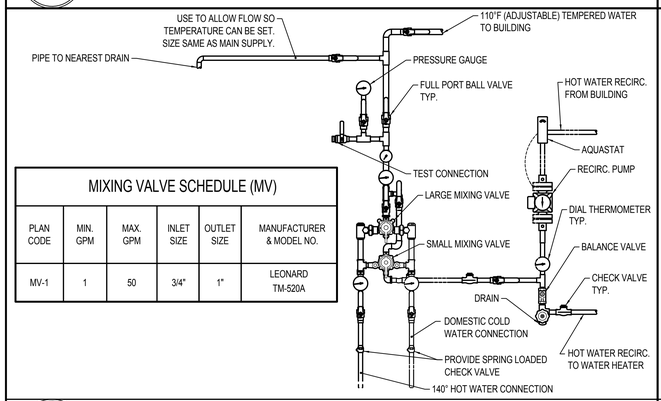

MIXING VALVE SCHEDULE (MV)

PLAN CODE	MIN. GPM	MAX. GPM	INLET SIZE	OUTLET SIZE	MANUFACTURER & MODEL NO.
MV-1	1	50	3/4"	1"	LEONARD TM-520A

6 DUAL DOMESTIC MIXING VALVE ASSEMBLY DETAIL

NO SCALE

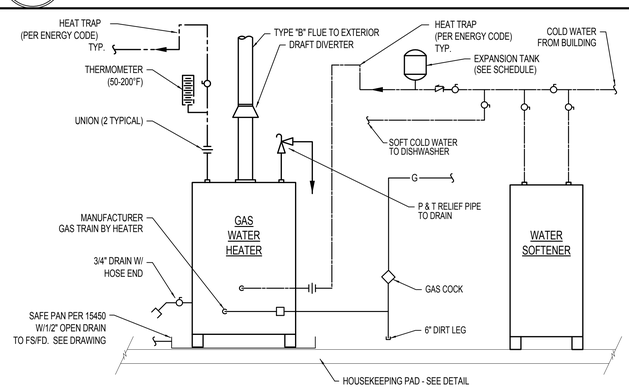

7 GAS WATER HEATER PIPING DETAIL

NO SCALE

8

NO SCALE

Copyright (C) 2010 by Colvin Engineering Associates, Inc. Salt Lake City, Utah. All rights reserved. Unauthorized copying and/or use is illegal and subject to prosecution.

C:\Revit Local Models\2010-074.00 - WSU PH II Bldg 2 - Tyler 2011.rvt
5/17/2011 10:05:14 AM

MHTN
ARCHITECTS
MHTN Architects, Inc.
420 East South Temple
Suite 100
Salt Lake City, Utah 84111
Telephone (801) 595-6700
Telefax (801) 595-6717
www.mhtn.com

Colvin Engineering Associates, Inc.
244 West 300 North Suite 200
Salt Lake City, Utah 84103
Phone: (801) 322-2400 / Fax: (801) 322-2416

WEBER STATE UNIVERSITY
RESIDENTIAL LIFE PHASE II - BLDG 2

DFCM PROJECT NUMBER: 10176810

WEBER STATE UNIVERSITY
OGDEN, UTAH 84408

SEAL

MHTN PROJECT NO. 10176810

DRAWN BY: GM CHECKED BY: BRC

ISSUED:

NO	DATE	DESCRIPTION

CONTRACTOR TO VERIFY DRAWINGS IN FIELD USE REFLECT LAST REVISION DATE:

NO	DATE	DESCRIPTION

SHEET NAME
PLUMBING DETAILS

CONSTRUCTION SET
17 MAY 2011

SHEET NUMBER
PL502

SOLAR WATER AIR SEPARATOR (SAS)

PLAN CODE	SYSTEM SERVED	CONNECTION SIZE	MAX. GPM	P.D. (FT)	MAX. DIMENSIONS DIA. (IN.)	H (IN.)	FLANGE TO FLANGE (IN.)	DRY WT (LBS)	MAX. OPER. WT. (LBS.)	MANUFACTURER & MODEL NO.
SAS-1	RADIANT ZONE LOOP	2"	30	2	3	9	4	5	10	SPIROTHERM SPIROVENT JUNIOR 150TM

STORAGE TANK SCHEDULE (ST)

PLAN CODE	VOLUME (GALLONS)	DIMENSIONS DIAMETER (IN.)	HEIGHT (IN.)	CONNECTION SIZES WATER IN (IN.)	WATER OUT (IN.)	CIRCULATION IN (IN.)	CIRCULATION OUT (IN.)	MANUFACTURER & MODEL NO.	REMARKS
ST-1	600	48	81	2 1/2	2 1/2"	3	3	A.O. SMITH HD48-600	1

1 VERTICAL INSTALLATION. PROVIDE WITH A.O. SMITH DW6-24 DOUBLE WALL TUBE TANK HEATER.

EXPANSION TANK SCHEDULE (PET)

PLAN CODE	SYSTEM SERVED	WATER TEMP. (°F)	% GLYCOL	TANK VOL. (GAL)	ACCEPTANCE VOL. (GAL)	PRE-CHARGE (PSI)	MAX. DIMENSIONS DIA. (IN.)	H (IN.)	OPERATING WT. (LBS)	MANUFACTURER & MODEL NO.	REMARKS
PET-1	SOLAR WATER	180	50	53	34	50	24	41	700	AMTROL ST-80V-C	-
PET-2	DOMESTIC WATER	140	0	3.2	1.9	50	9	15	25	AMTROL ST-8	-

NATURAL GAS PRESSURE REGULATOR SCHEDULE (REG) 1

PLAN CODE	TYPE	EQUIPMENT SERVED	INLET PRESSURE (PSIG)	OUTLET PRESSURE (OZ./SQ. IN.)	LOAD (MBH)	GAS DELIVERY (CU.FT./H)	NOTES
REG-1	SELF-OPERATING SPRING LOADED DIAPHRAGM	STOVE	5 LB.	4 OZ.	60	68	VENT LIMITER W/ OVER PRESSURE PROTECTION DEVICE
REG-2	SELF-OPERATING SPRING LOADED DIAPHRAGM	DRYERS	5 LB.	4 OZ.	25	28	VENT LIMITER W/ OVER PRESSURE PROTECTION DEVICE
REG-3	SELF-OPERATING SPRING LOADED DIAPHRAGM	STOVE	5 LB.	4 OZ.	60	68	VENT LIMITER W/ OVER PRESSURE PROTECTION DEVICE
REG-4	SELF-OPERATING SPRING LOADED DIAPHRAGM	DRYERS	5 LB.	4 OZ.	25	28	VENT LIMITER W/ OVER PRESSURE PROTECTION DEVICE
REG-5	SELF-OPERATING SPRING LOADED DIAPHRAGM	DRYERS	5 LB.	4 OZ.	25	28	VENT LIMITER W/ OVER PRESSURE PROTECTION DEVICE
REG-6	SELF-OPERATING SPRING LOADED DIAPHRAGM	STOVE	5 LB.	4 OZ.	60	68	VENT LIMITER W/ OVER PRESSURE PROTECTION DEVICE
REG-7	SELF-OPERATING SPRING LOADED DIAPHRAGM	DRYERS	5 LB.	4 OZ.	300	337	VENT LIMITER W/ OVER PRESSURE PROTECTION DEVICE
REG-8	SELF-OPERATING SPRING LOADED DIAPHRAGM	STOVE	5 LB.	4 OZ.	60	68	VENT LIMITER W/ OVER PRESSURE PROTECTION DEVICE
REG-9	SELF-OPERATING SPRING LOADED DIAPHRAGM	STOVE	5 LB.	4 OZ.	60	68	VENT LIMITER W/ OVER PRESSURE PROTECTION DEVICE
REG-10	SELF-OPERATING SPRING LOADED DIAPHRAGM	KITCHEN	5 LB.	4 OZ.	1,065	1,197	VENT LIMITER W/ OVER PRESSURE PROTECTION DEVICE
REG-11	SELF-OPERATING SPRING LOADED DIAPHRAGM	WH-1	5 LB.	4 OZ.	150	169	VENT LIMITER W/ OVER PRESSURE PROTECTION DEVICE
REG-12	SELF-OPERATING SPRING LOADED DIAPHRAGM	STOVE	5 LB.	4 OZ.	60	68	VENT LIMITER W/ OVER PRESSURE PROTECTION DEVICE
REG-13	SELF-OPERATING SPRING LOADED DIAPHRAGM	STOVE	5 LB.	4 OZ.	60	68	VENT LIMITER W/ OVER PRESSURE PROTECTION DEVICE
REG-14	SELF-OPERATING SPRING LOADED DIAPHRAGM	STOVE	5 LB.	4 OZ.	60	68	VENT LIMITER W/ OVER PRESSURE PROTECTION DEVICE
REG-15	SELF-OPERATING SPRING LOADED DIAPHRAGM	BARBECUE	5 LB.	4 OZ.	80	90	VENT LIMITER W/ OVER PRESSURE PROTECTION DEVICE
REG-16	SELF-OPERATING SPRING LOADED DIAPHRAGM	BOILER	5 LB.	4 OZ.	3,000	3,371	VENT LIMITER W/ OVER PRESSURE PROTECTION DEVICE
REG-17	SELF-OPERATING SPRING LOADED DIAPHRAGM	BOILER	5 LB.	4 OZ.	3,000	3,371	VENT LIMITER W/ OVER PRESSURE PROTECTION DEVICE
REG-18	SELF-OPERATING SPRING LOADED DIAPHRAGM	MAU-1	5 LB.	4 OZ.	915	1,028	VENT LIMITER W/ OVER PRESSURE PROTECTION DEVICE

1 VENT REGULATOR TO EXTERIOR AS REQUIRED UNLESS DEAD-END LOCKUP VENTLESS TYPE IS APPROVED BY LOCAL JURISDICTION.

PLUMBING FIXTURE SCHEDULE

PLAN CODE	DESCRIPTION	ROUGH-IN SIZE C.W.	H.W.	TEMPERED	WASTE	VENT	STORM	MANUFACTURE
WC-1	WATER CLOSET, FLOOR MOUNT, MANUAL TANK FLUSH, CLASS 5 FLUSHING SYSTEM, LONGATED BOWL, VITREOUS CHINA 1.28 GPF	1/2"	-	-	4"	2"	-	KOHLER "WELLWORTH" K-3575 SEAT: KOHLER K-4664 COLOR: WHITE FLOOR TO RIM: 15". OR EQUAL
WC-2	WATER CLOSET, ADA COMPLIANT, FLOOR MOUNT, MANUAL TANK FLUSH, CLASS 5 FLUSHING SYSTEM, ELONGATED BOWL, VITREOUS CHINA 1.28 GPF	1/2"	-	-	4"	2"	-	KOHLER "KELSTON" K-3755 SEAT: KOHLER K-4650 COLOR: WHITE FLOOR TO RIM: 17". OR EQUAL
L-1	COUNTER MOUNT, OVAL LAVATORY, ADA COMPLIANT, VITREOUS CHINA, TWO HANDLE FAUCET WITH DRAIN ASSEMBLY, 0.5 GPM BUILT IN VANDAL RESISTANT AERATOR.	1/2"	1/2"	-	1 1/2"	1 1/2"	-	KOHLER: "PENNINGTON" K-2196 FAUCET: MOEN 8211 WITH 0.5 GPM AERATOR WITH DRAIN ASSEMBLY OR EQUAL
L-2	WALL HUNG LAVATORY, ADA COMPLIANT, VITREOUS CHINA, TWO HANDLE FAUCET WITH DRAIN ASSEMBLY, 0.5 GPM BUILT IN VANDAL RESISTANT AERATOR.	1/2"	1/2"	-	1 1/2"	1 1/2"	-	KOHLER: "KINGSTON" K-2007 FAUCET: MOEN 8211 WITH 0.5 GPM AERATOR WITH DRAIN ASSEMBLY OR EQUAL
SH-1	SINGLE LEVER, ADA COMPLIANT, PRESSURE BALANCING MIXING VALVE, SHOWER HEAD, HAND SPRAYER, 1.6 GPM	1/2"	1/2"	-	1 1/2"	1 1/2"	-	MOEN 8342 WITH HAND SPRAY, WALL SHOWER HEAD, AND BAR SLIDE . PROVIDE WITH MOEN 52716LF16 LOW FLOW SHOWER HEAD AND 8349LF16 LOW FLOW HAND SPRAY. PROVIDE WITH J.R. SMITH MANUFACTURING COMPANY FIG. 2005Y-B-P050-NB DUCO CAST IRON FLOOR DRAIN. DRAIN TO BE PROVIDED WITH 2" OUTLET, ROUND NICKEL BRONZE STRAINER HEAD, SEDIMENT BUCKET, AND VANDAL PROOF SCREWS. STRAINER HEAD MUST BE HEEL PROOF.
SH-2	SINGLE LEVER, PRESSURE BALANCING MIXING VALVE, SHOWER HEAD, 1.6 GPM	1/2"	1/2"	-	1 1/2"	1 1/2"	-	MOEN 52716LF16 LOW FLOW SHOWER HEAD WITH MOEN 8370 SINGLE HANDLE PRESSURE BALANCING VALVE. PROVIDE WITH J.R. SMITH MANUFACTURING COMPANY FIG. 2005Y-B-P050-NB DUCO CAST IRON FLOOR DRAIN. DRAIN TO BE PROVIDED WITH 2" OUTLET, ROUND NICKEL BRONZE STRAINER HEAD, SEDIMENT BUCKET, AND VANDAL PROOF SCREWS. STRAINER HEAD MUST BE HEEL PROOF.
S-1	DOUBLE COMPARTMENT, ADA COMPLIANT, RECTANGULAR STAINLESS STEEL, COUNTER MOUNT SINK, GOOSENECK SWING SPOUT WITH SINGLE HANDLE, GLASS FILLER, 2.2 GPM 18 GA.	1/2"	1/2"	-	1 1/2"	1 1/4"	-	BOWL: ELKAY LRADQ3319 WITH MR2 HOLE CONFIGURATION. FAUCET: MOEN 8701 GLASS FILLER: ELKAY LK1110 STRAINER: ELKAY LK-35 . OR EQUAL
S-2	SINGLE COMPARTMENT, RECTANGULAR STAINLESS STEEL, COUNTER MOUNT SINK, GOOSENECK SWING SPOUT WITH WING HANDLES, 2.2 GPM 18 GA.	1/2"	1/2"	-	1 1/2"	1 1/4"	-	BOWL: ELKAY DLFR 2519 FAUCET: MOEN CA8940 STRAINER: ELKAY LK-35 . OR EQUAL BOWL DEPTH: 10"
DF-1	ADA COMPLIANT, BARRIER FREE, STAINLESS STEEL, SURFACE MOUNT DRINKING FOUNTAIN WITH BOTTLE FILLING STATION	3/8"	-	-	1 1/2"	1 1/4"	-	ELKAY #LZS7L8WSLK (ADA), BI-LEVEL FILTERED COOLER WITH BOTTLE FILLING STATION.
SS-1	SERVICE SINK, MOLDED STONE, WITH RIM GUARD, 3" GRID DRAIN AND FAUCET WITH VACUUM BREAKER, HANDLES, LOOSE KEY STOPS, BOTTOM BRACE, CHROME FINISH.	3/4"	3/4"	-	3"	2"	-	SINK: FIAT MSB-2424 WITH 1453-BB STRAINER AND E-77-AA RIM GUARD. FAUCET: MOEN 8230 WITH TOP BRACE AND VACUUM BREAKER. OR EQUAL
FD-1	FLOOR DRAIN (INDOOR FINISHED AREA USE)	-	-	-	SEE PLANS	1 1/2"	-	J.R. SMITH MANUFACTURING COMPANY FIG. 2005Y-B-P050-NB DUCO CAST IRON FLOOR DRAIN. DRAIN TO BE PROVIDED WITH 2" OUTLET, SQUARE NICKEL BRONZE STRAINER HEAD, DEEP SEAL P-TRAP AND VANDAL PROOF SCREWS. TRAP PRIMER CONNECTION CAPPED IF NOT USED, STRAINER HEAD MUST BE HEEL PROOF, DEEP SEAL TRAP, OR EQUAL.
FS-1	FLOOR SINK	-	-	-	SEE PLANS	1 1/2"	-	J.R. SMITH MANUFACTURING COMPANY FIG. 3150-Y-ASB SQUARE FLOOR SINK. FLOOR SINK SHALL BE OF CAST IRON CONSTRUCTION WITH ENAMEL INTERIOR FINISH, MINIMUM INTERIOR DIMENSIONS OF 12"x12"x8"D. PROVIDE WITH NICKEL BRONZE GRATE AND DEEP SEAL P-TRAP. SEE FOOD SERVICE EQUIPMENT PLANS FOR GRATE REQUIRED IN KITCHEN. OR EQUAL. PROVIDE HEAVY DUTY GRATE IN MECHANICAL ROOMS.
WCO	WALL CLEANOUT	-	-	-	-	4"	-	J.R. SMITH MANUFACTURING COMPANY SERIES 4530, CAST IRON CLEANOUT TEE, ABS PLUG, STAINLESS STEEL COVER WITH VANDAL PROOF SECURITY SCREWS. OR EQUAL.
FCO	FLOOR CLEANOUT	-	-	-	-	4"	-	J.R. SMITH MANUFACTURING COMPANY SERIES 4020, CAST IRON ADJUSTABLE BODY, ABS PLUG, VANDAL PROOF SECURITY SCREWS. OR EQUAL.
RD-1	ROOF DRAIN - PRIMARY	-	-	-	-	-	SEE PLANS	J.R. SMITH MODEL 1010-C LARGE GENERAL PURPOSE ROOF DRAIN. ROOF DRAIN SHALL BE PROVIDED WITH DUCO CAST IRON BODY, REVERSIBLE COLLAR, COMBINED FLASHING CLAMP AND GRAVEL STOP WITH NEOPRENE GASKET, POLYETHYLENE DOME, SUMP RECEIVER, UNDERDECK CLAMP, TWO PIECE BODY WITHOUT ADJUSTABLE EXTENSION AND VANDAL PROOF SECURITY SCREWS, OR EQUAL.
OD-1	ROOF DRAIN - SECONDARY	-	-	-	-	-	SEE PLANS	J.R. SMITH MODEL 1010-C GENERAL PURPOSE OVERFLOW DRAIN. OVERFLOW DRAIN SHALL BE PROVIDED WITH DUCO CAST IRON BODY, REVERSIBLE COLLAR, COMBINED FLASHING CLAMP AND GRAVEL STOP WITH NEOPRENE GASKET, POLYETHYLENE DOME, SUMP RECEIVER, UNDERDECK CLAMP, TWO PIECE BODY WITHOUT ADJUSTABLE EXTENSION, VANDAL PROOF SECURITY SCREWS, OR EQUAL. MOUNT 2" HIGHER THAN RD-1.
DSN-1	DOWN SPOUT NOZZLE	-	-	-	-	-	SEE PLANS	J.R. SMITH SERIES 1770 WITH WALL FLANGE. PROVIDE BIRD SCREEN.
SC-1	SILLCOCK (OUTDOOR FREEZE PROOF USE)	3/4"	-	-	-	-	-	WOODFORD MANUFACTURING CO. MODEL 65 (OR EQUAL) WALL MOUNTED ANTI-SIPHON AUTOMATIC DRAINING FREEZELESS WALL HYDRANT. WALL HYDRANT SHALL BE PROVIDED WITH LOOSE KEE SHUTOFF, 3/4" INLET AND 3/4" MALE HOSE THREAD OUTLET. EXTERIOR FINISH SHALL BE CHROME PLATED. OR EQUAL
HB-1	HOSE BIBB - WALL MOUNTED (INDOOR FINISHED AREA USE)	3/4"	-	-	-	-	-	CHICAGO FAUCETS MODEL 952.CP. BRASS CONSTRUCTION HOSE BIB, CHROME PLATED FINISH, VACUUM BREAKER, 3/4" HOSE THREAD, WALL FLANGE, LOOSE KEY OPERATOR. OR EQUAL
HB-2	HOSE BIBB - WALL MOUNTED (MECHANICAL ROOM USE)	3/4"	-	-	-	-	-	WOODFORD MODEL 40HT, BRASS CONSTRUCTION HOSE BIBB, MODEL 34HF ANTI-SIPHON VACUUM BREAKER, BRASS LEVER HANDLE ADJUSTABLE WALL FLANGE, ADJUSTABLE BRASS PACKING NUT WITH DEEP STEAM GUARD.
SA-1	SHOCK ARRESTOR	3/4"	-	-	-	-	-	PRECISION PLUMBING PRODUCTS SC-750. OR EQUAL
WWB-1	WASHER WALL BOX	1/2"	1/2"	-	2"	1 1/2"	-	GUY GRAY MANUFACTURING CO. INC. MODEL WB-200 IN WALL, BOTTOM SUPPLY WITH DRAIN CONNECTION.
BT-1	TUB SPOUT, DRAIN, DIVERTER SPOUT MIXING VALVE AND SHOWER HEAD	1/2"	1/2"	-	1 1/2"	1 1/2"	-	TUB BY ARCHITECT, SEE ARCHITECTURAL DRAWINGS. MOEN 8370 SINGLE HANDLE PRESSURE BALANCING MIXING VALVE,MOEN SHOWER HEAD # 52716LF16 LOW FLOW,CHROME FINISH.
GD-1	DISPOSAL	-	-	-	-	-	-	INSINKERATOR EVOLUTION ESSENTIAL, 3/4 H.P., 120 V, 8.1 A

WATER SOFTENER SCHEDULE (WS) 1

PLAN CODE	CONTINUOUS FLOW RATE	CAPACITY (GRAINS)	CONTROL	MAX. DIMENSIONS	REMARKS	MANUFACTURER & MODEL NO.
WS-1	8.0 GPM	23,000	FACTORY AUTOMATIC	18" X 26" X 53"	TWO TANKS	CSI #MS24V

1 120V/1PH/20AMP OUTLET

GAS FIRED WATER HEATER SCHEDULE (WH)

PLAN CODE	INPUT (BTUH)	OUTPUT (BTUH)	EFFICIENY %	FUEL	CAP. (GAL)	RECOVERY RATE (GPH)	TEMP RISE (°F)	FLUE DIA	FLUE TYPE	MAX. DIMENSIONS HEIGHT (IN)	WIDTH (IN)	DEPTH (IN)	VOLTAGE & PHASE	MANUFACTURER & MODEL NO.	WEIGHT (LBS.)	OPTIONS	REMARKS
WH-1	150,00	141,000	94	NAT GAS	100	171	100	4"	PVC	74-1/2	27-3/4	30	120/1	A.O. SMITH BTH-150	1500	-	-

MIXING VALVE SCHEDULE (MV)

PLAN CODE	AREA SERVED	INLET SIZE	OUTLET SIZE	MINIMUM FLOW GPM	MAXIMUM FLOW GPM	MANUFACTURER & MODEL NO.
MV-1	DOMESTIC HOT	1 1/4"	1 1/2"	1	165	LEONARD TM-1520A-DT-IT

ALTERNATE #4

SOLAR WATER PUMP SCHEDULE

PLAN CODE	DUTY	FLOW (GPM)	PRESSURE (FT)	PUMP SPEED (RPM)	MIN. EFF. (%)	FLUID	MOTOR LOAD (BHP)	SIZE (HP)	EFF. (%)	VOLTAGE & PHASE	PUMP & MOTOR WT (LB)	MANUFACTURER & MODEL NO.
SWP-1	HEATING WATER PRIMARY	40	50	1750	70	50% PG	0.92	1.5	PREMIUM	208/3	170	B & G SERIES 80 1-1/2 X 1-1/2 X 7B

1 INVERTER DUTY RATED MOTOR.

SOLAR COLLECTOR SCHEDULE (SC)

PLAN CODE	TYPE	FLOW RATE (GPM)	ΔP (IN.)	OPTICAL EFFICIENCY (%)	DIMENSIONS WIDTH (IN.)	HEIGHT (IN.)	DEPTH (IN.)	WEIGHT (LB)	MANUFACTURER & MODEL NO.	REMARKS
SC-1-32	FLAT PLATE	1.25	0.25	79	48	121	4	170 EA.	HEAT TRANSFER FP-40SC	1 2 3 4

1 SOLAR PANELS TO BE INSTALLED RIGIDLY TO STRUCTURE AT A 41° ANGLE, AND WITHIN +/- 10° OF TRUE SOUTH.

2 PROVIDE CONNECTION KIT FOR PANELS TO BE INSTALLED IN A SOLAR ARRAY.

3 WATER HEATER TO BE CAPABLE OF RECEIVING INLET WATER TEMPERATURES FROM 40°F TO 140°F.

4 SUPPLIER TO PROVIDE SUPPLEMENTAL SUPPORT REQUIRED FOR PROPER LAYOUT AND MOUNTING.

DOMESTIC HOT WATER RECIRCULATION PUMP SCHEDULE

PLAN CODE	DUTY	GPM	FEET OF HEAD	PUMP RPM	MOTOR H.P.	VOLTAGE & PHASE	MANUFACTURER & MODEL NO.	REMARKS
DCP-1	DOMESTIC HOT WATER RECIRC.	5	20	1750	1/3	120/1	BELL & GOSSETT HD3	INLINE BRONZE

Copyright (C) 2010 by Colvin Engineering Associates, Inc. Salt Lake City, Utah. All rights reserved. Unauthorized copying and/or use is illegal and subject to prosecution.

C:\Revit Local Models\2010-074.00 - WSU PH II Bldg 2 - Tyler 2011.rvt
5/17/2011 10:05:15 AM

MHTN ARCHITECTS
MHTN Architects, Inc.
420 East South Temple
Suite 100
Salt Lake City, Utah 84111
Telephone (801) 595-6700
Telefax (801) 595-6717
www.mhtn.com

Colvin Engineering Associates, Inc.
244 West 300 North Suite 200
Salt Lake City, Utah 84103
Phone: (801) 322-2400 / Fax: (801) 322-2416

WEBER STATE UNIVERSITY
RESIDENTIAL LIFE PHASE II - BLDG 2
DFCM PROJECT NUMBER: 10176810
WEBER STATE UNIVERSITY
OGDEN, UTAH 84408

SEAL

MHTN PROJECT NO. 10176810
DRAWN BY: GM CHECKED BY: BRC

ISSUED:

NO.	DATE	DESCRIPTION

CONTRACTOR TO VERIFY DRAWINGS IN FIELD USE REFLECT LAST REVISION DATE.

NO.	DATE	DESCRIPTION

SHEET NAME
PLUMBING SCHEDULES

CONSTRUCTION SET
17 MAY 2011

SHEET NUMBER
PL601

LIGHTING FIXTURE SCHEDULE

SYMBOL	DESCRIPTION	LAMPS	APPROVED MANUFACTURERS	CATALOG NUMBER
T-1	1'X4' SURFACE MOUNTED FLUORESCENT LIGHT FIXTURE WITH VANDAL RESISTANT HOUSING.	2F28 T8	KENALL	RHL7 48 MW PIA 2 32 SB-OSRAM QHE2X32
			EXCELINE	PVNO232B-K2Y-SCBA
			LUMINAIRE	CLF 74-232-EPLWU-OP-WHT
T-2	WALL MOUNTED FLUORESCENT LIGHT FIXTURE WITH OPAL LENS. LENGTH AS SHOWN.	2F28 T8	PRUDENTIAL	S1 2T8 04' XX MVB SUR
			AXIS LTG	PW+S54T8 WUNVERS1DW
			ARCH LTG WORKS	WLPIV-4-FSOT8-R-PLW-UNV-WD-WH
			XAL	640-341060
T-3	2'X2' LAY-IN DECORATIVE FLUORESCENT LIGHT FIXTURE.	2F17 T8	LITHONIA	2RT8B 217 MVOLT BILP L841HT8
			METALUX	2AC-214-UNV-ER81
			COLUMBIA	EPC22-217G-DL-EPLWU
			DAY BRITE	2-AT-N-G-217-D-UNV-1/2-EB
			HE WILLIAMS	
T-4	2'X4' LAY-IN DECORATIVE FLUORESCENT LIGHT FIXTURE.	2F28 T8	LITHONIA	2RT8S 2 32 MVOLT BILP L841HT8
			METALUX	2AC232-UNV-ER81
			COLUMBIA	EPC24-232G-DL-EPLWU
			DAY BRITE	2-AT-N-G-232-D-UNV-1/2-EB
			HE WILLIAMS	
T-5	2'X4' LAY-IN FLUORESCENT LIGHT FIXTURE WITH .125 PRISMATIC LENS AND REGRESSED DOOR.	2F28 T8	LITHONIA	2SP8F 2 32 RW A12125 MVOLT ADOPRL
			METALUX	2GC8RA-232A125-UNV-ER81
			COLUMBIA	ST814-232F-RAA12125-EPLWU
			LIGHTOLIER	SPS2FRAVI232-UNV-HI
			HE WILLIAMS	
			DAY BRITE	1DF232-RA21-UNV-1/2-EB10R-.78
T-6	POLE MOUNTED LIGHT FIXTURE WITH 25' POLE. 250 WATT MH RETROFITTED WITH SELF BALLASTED COMPACT FLUORESCENT.	110 WATT SELF BALLASTED CF	KIM LIGHTING	1A/ET3/300INC120/SCBA / CPS-1-6007-25-SCBA
T-7	4' FLUORESCENT STRIP LIGHT FIXTURE. CHAIN HUNG WITH WIRE GUARD.	1F28 T8	LITHONIA	C 1 32 MVOLT ADOPRL WGCUN HUC36
			COLUMBIA	CS4-132-EPLWU-CSWG4-CSHC
			METALUX	SS-132-UNV-ER81 / WG/SS-4FT / AYC-CHAIN
			LIGHTOLIER	SW4S132HPF-UNV-HI / AWG3WCSP / AH5CSP
			HE WILLIAMS	
			DAY BRITE	T132-UNV-1/2-EB10R-.78-CG4-FKY126
T-8	WALL MOUNTED FLUORESCENT FRUIT JAR LIGHT FIXTURE WITH GUARD.	32 W CFL	ANP	100WGLCLGUP-RTC-32W-CFL
			CANLET	6802FWF32-OG-09
			GUTH LIGHTING	VPW-32T-W
			EXCELINE	RLW32HFLCGC-?
			ARK	
			DAY BRITE	VFN32CUW-LP-PG
T-9	PENDANT MOUNTED DECORATIVE TRACK (APPROXIMATELY 2") WITH PENDANT MOUNTED FLUORESCENT LIGHT FIXTURES. REFER TO FLOOR PLAN FOR QUANTITY. VERIFY LENGTH OF DROP WITH ENGINEER. COLOR, SHAPE AND SIZE BY ARCHITECT.	26W CFL	TECH LIGHTING	700TTA96S SERIES / 700TAZPWS-CF
			WAC LIGHTING	
			MP LIGHTING	
			PRIMA	
T-10	WALL MOUNTED EXTERIOR LIGHT FIXTURE WITH DIE CAST HOUSING. 5 YEAR WARRANTY (PARTS & LABOR). CUSTOM COLOR BY ARCHITECT.	25 WATT LED INCLUDED	KIM	WD14D3/60L3K120/SCBA
			DECO	D444-LED-37-**-GREY
			VISN	ARS-1-T3-24L-3-4K-UNV-WM-SCBA
			INVUE	
			FC LIGHTING	
T-11	6" RECESSED LED SHOWER LIGHT FIXTURE WITH OPAL LENS.	15 W LED INCLUDED	PRESCOLITE	DBXQC-LB6LED335K WH
			LIGHTOLIER	C4L10DL**KCCLW / C4L10N*
			HALO	
			LITHONIA	
			PEACH TREE	
T-12	6" RECESSED LED CAN LIGHT FIXTURE . COLOR OF CONE BY ARCHITECT.	25 W LED INCLUDED	GOTHAM	ECSR 35 14 6 XX LD XX
			PORTFOLIO	
			CREE	LR6C-DR1000-LT6A-DR-H6-GU24
			LIGHTOLIER	C6L1520DL??KM??W / C6L20N?
			OMEGA	OM6LED103KMD-SCBA-VOLT
			PEACH TREE	
T-13	EXTERIOR WALL MOUNTED FLUORESCENT LIGHT FIXTURE.		BEGA	4425P.537
			VISA	
			WINONA	
T-14	POLE MOUNTED LIGHT FIXTURE WITH 10' POLE TO MATCH CAMPUS STANDARD, WITH MOTION SENSOR. SELF BALLASTED COMPACT FLUORESCENT.	42 WATT SELF BALLASTED CF	KIM LIGHTING	PT/SRS1F3/150INC120/SCBA-MOD / PHA-5-4012-10-T3
T-15	OUTDOOR LED ROPE LIGHT FIXTURE WITH REMOTE TRANSFORMER.		TIVOLI	FLT-05-02-WA-**-12-W-PSU-MT-60-1-4-12-D
			BARRON	
			MODA	
			WAC LIGHTING	
T-16	RECESSED FLUORESCENT LIGHT FIXTURE WITH DROP GLASS.	26 W CFL	DELRAY	1-32-4370.0.X
			LIGHTOLIER	D6A04 / 8021CL / S6132BU
			LOUIS POULSON	BAL/1/32WCF/GX24Q-2/120-277/WHT
			ATLANTIC	
			VANTAGE	
T-17	SEMI-RECESSED LED LIGHT FIXTURE WITH 2" ROUND DROPPED GLASS.	6 WATT LED INCLUDED	LOUIS POULSEN	BAL/1/6W/LED/120/12/WHT
			WILA	621 333G 80 GSW TRMC 500705-01
			HALO	
T-18	LED COLOR CHANGING THEATRICAL LIGHT FIXTURE WITH BARN DOORS, ADJUSTABLE BEAM PATTERN AND DMX CONTROLLER.	120 WATT LED INCLUDED	STRAND LIGHTING	PL1-LED / PLIRR
T-19	1'x4' FLUORESCENT LIGHT FIXTURE WITH REGRESSED DOOR AND .125 PRISMATIC LENS.	2F28 T8	COLUMBIA	ST814-232G-RAA12125-EPLWU
			LIGHTOLIER	SPS1GRAVI232-UNV-HI
			LITHONIA	SP8 G 2 32 RW A12125 MVOLT ADOPRL
			METALUX	
			HE WILLIAMS	
T-20	FLUORESCENT PENDANT MOUNTED LINEAR LIGHT FIXTURE WITH PERFORATED HOUSING. LENGTH AS SHOWN.	2F28 T8 PER 4'	LEDALITE	7705-T02-L-N-*-1-U-EPLW-W
			PRUDENTIAL	WV-P 2T8 04' TMW SC UNV CA48 X1 B.78
			CORELITE	
			HE WILLIAMS	
T-21	LED PENDANT MOUNTED LIGHT FIXTURE WITH GLASS REFLECTOR. 6 WATT. VERIFY LENGTH OF PENDANT WITH ARCHITECT. COLOR, SHAPE AND SIZE BY ARCHITECT.	INCLUDED	TECH LIGHTING	700FJFIRF*S-LED / 700FJ4RFS-LED
			LBL	
			CONTECH	
			PRIMA	
T-22	8' FLUORESCENT WALL MOUNTED LIGHT FIXTURE.	2F28 T8 PER 4'	ALERA LIGHTING	CV-8-2T8-PERF-WM-ELWU-MW
			LEDALITE	7708-T02-L-N-*-1-U-EPLW-W
			PINNACLE	G9R-2T8-8'-WA-UNV-1B-W
			PRUDENTIAL	WAL WV XX(SL) 2T8 08' SCBA SC UNV WM B.78BF
			CORELITE	
			HE WILLIAMS	
T-23	8" RECESSED LED CAN LIGHT FIXTURE.	70W INCLUDED	SPECTRUM LIGHTING	SGE8LED-40W-3K-E*-BH6-AR8454-SG
			PEACH TREE	
			SOLERA	
			GOTHAM	
T-24	PENDANT MOUNTED DIMMABLE LED LIGHT FIXTURE. CUSTOM COLOR BY ARCHITECT. APPROXIMATELY 18' A.F.F. VERIFY LENGTH OF STEM.	70 WATT LED INCLUDED	SPECTRUM LIGHTING	SPC0812LED-40W-35K-**-DR*-AR8454-SG-HMAT**-CC
			SPECTRUM LIGHTING ALTERNATE	SPC1116LED-80W-35K-**-DR*-HM*-CC
			PEACH TREE	
			SOLERA	
			GOTHAM	
T-25	SAME AS T-20 EXCEPT DIMMABLE.	2F28 T8 PER 4'	LEDALITE	7705-T02-L-N-*-7-U-E-W
			PRUDENTIAL	WV-P 2T8 04' TMW SC UNV CA48 X1 DM
			CORELITE	
			HE WILLIAMS	
EX-1	LED EXIT SIGN WITH DIE CAST HOUSING AND NICAD BATTERY BACK UP. VANDAL PROOF.	INCLUDED	ISOLITE	LPDCEMGSWW-UN-VR
			LITHONIA	LES W 1 G 120/277 EL N
			DUAL-LITE	SESGWE
			LIGHTOLIER	LDSNUGW
			EXITRONIX	
			MCPHILBEN	ER55L1G
EX-2	SAME AS EX-1 EXCEPT DOUBLE SIDED.	INCLUDED	LITHONIA	LES W 2 G 120/277 EL N
			ISOLITE	LPDCEMGDWW-UN-VR
			DUAL-LITE	SEDGWE
			LIGHTOLIER	LDSNUGW
			MCPHILBEN	ER55L2G
			EXITRONIX	

NOTES:

1. ALL FLUORESCENT LIGHTS SHALL HAVE ELECTRONIC PROGRAM START BALLASTS WITH .78 BALLAST FACTOR. BALLASTS TO HAVE 5 YEAR WARRANTY.
2. ALL FLUORESCENT LAMPS SHALL HAVE 4100ÁCOLOR TEMPERATURE UNLESS INDICATED OTHERWISE.
3. CONTRACTOR TO VERIFY ALL LIGHTING VOLTAGES PRIOR TO RELEASE OF THE LIGHT FIXTURES.
4. THE WRITTEN CRITERIA OF THE FIXTURE DESCRIPTION TAKES PRECEDENCE OVER THE CATALOG NUMBER.
5. ALL LED LIGHT FIXTURES SHALL HAVE 5 YEARS WARRANTY WITH 1 YEAR PARTS AND LABOR.

FIRE ALARM SYSTEMS SYMBOL LIST

SYMBOL	DESCRIPTION
	ELECTRICAL PANEL LOCATION
S	FIRE ALARM SYSTEM PHOTOELECTRIC SMOKE DETECTOR
S D	FIRE ALARM PHOTOELECTRIC DUCT DETECTOR
	FIRE ALARM HEAT DETECTOR
F	FIRE ALARM MANUAL PULL STATION, +42" A.F.F.
	FIRE ALARM SPEAKER WITH STROBE, HIGH DECIBEL, +96" A.F.F.
	FIRE ALARM SPEAKER
	FIRE ALARM HORN HIGH DECIBEL, SEE ARCH. ELEVATIONS FOR HEIGHT
RM FAR	ADDRESSABLE RELAY CONTROL MODULE
FS	FIRE SPRINKLER FLOW SWITCH
TS	FIRE SPRINKLER TAMPER SWITCH
	MAGNETIC DOOR HOLDER
FSD	FIRE/SMOKE DAMPER
	DOOR STRIKE
	CARD READER
S S	SMOKE DETECTOR WITH SOUNDED BASE
	SECURITY CAMERA
CB	CODE BLUE
X X	REFERENCE NOTE CALL OUT

LIGHTING SYSTEMS SYMBOL LIST

SYMBOL	DESCRIPTION
	ELECTRICAL PANEL LOCATION
	LAY-IN MOUNTED FLUORESCENT FIXTURE
	SURFACE MOUNTED FLUORESCENT FIXTURE
E	EMERGENCY LIGHTING
	FLUORESCENT STRIP LIGHT FIXTURE
	RECESSED FIXTURE
	WALL MOUNTED FIXTURE
	PENDANT MOUNTED LIGHT FIXTURE - LENGTH AS SHOWN
	TRACK LIGHTING
	EXIT LIGHT. ARROWS SHOW EXIT DIRECTION
	PENDANT MOUNTED FIXTURE
	WALL MOUNTED LIGHT FIXTURE
	WALL MOUNTED CAN LIGHT FIXTURE
	POST MOUNTED PARKING OR WALKWAY LIGHTING
$	SINGLE POLE TOGGLE SWITCH - 20 AMP
$a,b	SINGLE POLE TOGGLE SWITCH - 20 AMP, LETTERS INDICATE SWITCH ASSIGNMENT
$3	THREE WAY TOGGLE SWITCH - 20 AMP
P	POWER PACK
U,I,DT	CEILING MOUNTED OCCUPANCY SENSOR - U = ULTRASONIC, I = INFRARED, DT = DUAL TECH.
	WALL MOUNTED OCCUPANCY SENSOR - U = ULTRASONIC, I = INFRARED, DT = DUAL TECH.
D	SLIDE CONTROL DIMMER
T-X	LIGHTING FIXTURE CALLOUT NUMBER INDICATES A SUGGESTED QUANTITY- TO BE VERIFIED
X X	REFERENCE NOTE CALLOUT

COMMUNICATION SYSTEMS SYMBOL LIST

SYMBOL	DESCRIPTION
	TELEPHONE TERMINAL BOARD
	FLUSH TELE/DATA OUTLET
	WIRELESS DEVICE
TV	FLUSH TELEVISION OUTLET
	GROUND BUS BAR
X X	REFERENCE NOTE CALLOUT

ABBREVIATIONS SYMBOL LIST

SYMBOL	DESCRIPTION
W.P.	INDICATES WEATHER PROOF EQUIPMENT
E	INDICATES DEVICE IS ON EMERGENCY CIRCUIT
CLG	INDICATES CEILING MOUNTED DEVICE
A.T.C.	AUTOMATIC TEMPERATURE CONTROL PANEL
M.M.C.	MULTIMEDIA CABINET
T.V.S.S.	TRANSIENT VOLTAGE SURGE SUPPRESSOR
F.A.C.P.	FIRE ALARM CONTROL PANEL
F.A.R.A.P.	FIRE ALARM REMOTE ANNUNCIATOR PANEL
F.A.N.E.P.	FIRE ALARM NETWORK EXPANDER PANEL

POWER SYSTEMS SYMBOL LIST

SYMBOL	DESCRIPTION
	DUPLEX CONVENIENCE OUTLET - 20 AMP
	SINGLE RECEPTACLE OUTLET - 20 AMP
	DUPLEX CONVENIENCE OUTLET - 20 AMP GROUND FAULT INTERRUPTER
	4-PLEX CONVENIENCE OUTLET - 20 AMP
	4-PLEX CONVENIENCE OUTLET - 20 AMP GROUND FAULT INTERRUPTER
	DROP CORD OUTLET
	SPECIAL PURPOSE OUTLET - SINGLE PHASE
	SPECIAL PURPOSE OUTLET - THREE PHASE
J	JUNCTION BOX - SIZE AND FUNCTION AS REQUIRED
	PUSH BUTTON SWITCH
	DISCONNECT SWITCH - SIZE AS REQUIRED
S	COMBINATION STARTER/FUSED DISCONNECT SWITCH - SIZE AS REQUIRED
	MOTOR LOCATION
$T	MANUAL DISCONNECT WITH THERMAL OVERLOAD PROTECTION
	ELECTRICAL PANEL LOCATION
	CABLE TRAY SYSTEM
VFD	VARIABLE FREQUENCY DRIVE - BY DIV. 15000
XX-X	MECHANICAL EQUIPMENT CALLOUT
X X	REFERENCE NOTE CALLOUT

GENERAL NOTES:

1. THE COLOR OF THE LIGHT FIXTURES SHALL BE SELECTED BY THE ARCHITECT.
2. OUTLETS AND LIGHT SWITCHES INSTALLED ADJACENT TO EACH OTHER SHALL BE INSTALLED AT THE SAME HEIGHT. COORDINATE ALL LOCATIONS AND HEIGHTS WITH THE ARCHITECT PRIOR TO ROUGH IN.
3. PRIOR TO SUBMITTING A BID THE ELECTRICAL CONTRACTOR SHALL INSPECT THE SITE AND INCLUDE IN HIS BID PACKAGE ALL CHARGES DUE TO EXISTING CONDITIONS. SHOP DRAWINGS ARE REQUIRED. ALL LABOR, MATERIAL AND WORKMANSHIP SHALL BE GUARANTEED FOR A PERIOD OF 1 YEAR FROM THE DATE OF ACCEPTANCE BY THE TENANT. REPLACE OR REPAIR ALL DEFECTS DURING THE GUARANTEED PERIOD.
4. THE CONTRACTOR SHALL INFORM THE ARCHITECT/ENGINEER IN WRITING OF ANY DISCREPANCIES FOUND BETWEEN THE INTENDED FUNCTION OF EQUIPMENT AND EQUIPMENT SPECIFIED IN THE CONTRACT DOCUMENTS A MINIMUM OF FIVE (5) WORKING DAYS PRIOR TO ISSUANCE OF THE FINAL BID. FAILURE TO REPORT ANY DISCREPANCY (CATALOG NUMBERS, DISCONTINUED ITEMS, ETC.) DOES NOT RELIEVE THE CONTRACTOR FROM PROVIDING EQUIPMENT WHICH SHALL CONFORM TO AND FULFILL THE INTENT OF THE CONTRACT DOCUMENTS, NOR SHALL IT BE USED AS A CONDITION TO OBTAIN ADDITIONAL FUNDS FROM THE OWNER AFTER THE CONTRACT IS AWARDED. THE CONTRACTOR SHALL REQUEST ALL CLARIFICATIONS OF CONTRACT DOCUMENT REQUIREMENTS IN WRITING TO THE ARCHITECT/ENGINEER A MINIMUM OF FIVE (5) WORKING DAYS PRIOR TO ISSUANCE OF THE FINAL BID.
5. REFER TO THE MECHANICAL SHEETS FOR THE EXACT LOCATION OF THE MECHANICAL EQUIPMENT.
6. THE ELECTRICAL CONTRACTOR SHALL NOTIFY AND COORDINATE WITH THE MECHANICAL CONTRACTOR SO THAT NO PIPING, DUCTS, OR OTHER EQUIPMENT SHALL BE INSTALLED IN ENTRY OR PASS THROUGH ELECTRICAL ROOM OR SPACES ABOVE OR BELOW ELECTRICAL PANELS.
7. ELECTRICAL CONTRACTOR SHALL VERIFY ALL ELECTRICAL LOADS (VOLTAGE, PHASE, CONNECTION REQUIREMENT, ETC.) OF EQUIPMENT FURNISHED UNDER OTHER DIVISIONS WITH APPROVED SHOP DRAWINGS PRIOR TO BEGINNING ROUGH-IN.
8. COORDINATE WITH KITCHEN EQUIPMENT CONTRACTOR FOR EXACT LOCATION OF ALL DISCONNECTS, J-BOXES AND TERMINATION POINTS USED TO CONNECT EQUIPMENT.
9. MINIMUM SIZE OF CONDUIT TO BE 3/4". ALUMINUM CONDUITS SHALL NOT BE USED.
10. USE RIGID STEEL SET SCREW TYPE FITTINGS ONLY. DIE CAST FITTINGS SHALL NOT BE USED.
11. RUN A NEUTRAL CONDUCTOR FOR EACH PHASE CONDUCTOR (EACH CIRCUIT) IN A CONDUIT. NOT MORE THAN THREE (3) CIRCUITS IN A CONDUIT. THREE (3) PHASE CONDUCTORS, THREE (3) NEUTRAL CONDUCTORS (ONE FOR EACH PHASE) AND ONE (1) GROUND CONDUCTOR FOR A TOTAL OF SEVEN (7) CONDUCTORS.
12. NO CONDUITS SHALL RUN IN CONCRETE SLABS OR CEILING DECKS. UNDERGROUND CONDUITS SHALL RUN 6" BELOW BOTTOM OF SLAB MINIMUM. CONDUITS ABOVE DROP CEILING SHALL RUN PARALLEL AND PERPENDICULAR TO STRUCTURE.
13. FOR SPECIFICATION OF PULL WIRES IN EMPTY CONDUITS, REFER TO THE ELECTRICAL SPECIFICATION FOR RACEWAYS.
14. THE MINIMUM SIZE OF THE CONDUCTORS ARE TO BE #12 AWG THHN STRANDED COPPER, UNLESS INDICATED OTHERWISE ON THE DRAWINGS.
15. ALL J-BOXES SHALL HAVE MINIMUM DEPTH OF 2-1/8" UNLESS OTHERWISE SPECIFIED. SECURE ALL J-BOXES AS SHOWN IN THE DETAILS. FURNISH AND INSTALL PROPER MUD RINGS. WIRE GUTTERS: MINIMUM SIZE 6" X 6" X 20"
16. ALL NEW EXPOSED CONDUIT MUST RUN AGAINST THE WALLS OR CEILINGS. DO NOT PENDANT MOUNT ANY CONDUIT FROM THE CEILINGS.
17. ALL THE HOMERUNS MUST BE ACCESSIBLE IN THE CEILING PLENUM. DO NOT CARRY A HOMERUN FROM ONE DEVICE TO ANOTHER WHICH IS TIED TO A SEPARATE HOMERUN INSIDE THE WALL. MARK ON ALL THE J-BOXES THE CIRCUIT NAMES AND NUMBERS.
18. AT THE END OF THE JOB, PROVIDE BLANK COVER PLATES TO MATCH THE OTHER COVER PLATES FOR ALL J-BOXES WHERE DEVICES HAVE NOT YET BEEN INSTALLED.
19. SEAL AROUND ALL CONDUIT PENETRATIONS THROUGH FIRE RATED WALLS AND CEILINGS WITH FIRE RATED MATERIAL. 3M IS AN APPROVED MANUFACTURER.
20. ALL ELECTRICAL WIRING MUST BE IN CONDUIT (ROMEX AND MC CABLE NOT PERMITTED).
21. FLEXIBLE CONDUITS CAN ONLY BE USED FOR SHORT RUNS (6' MAXIMUM).
22. NO CONDUITS SHALL RUN IN DUCT WORK.
23. THE ELECTRICAL CONTRACTOR SHALL TERMINATE THE ELECTRICAL CONNECTIONS TO ALL THE EQUIPMENT BY PROVIDING THE NECESSARY MALE/FEMALE CONNECTOR, RECEPTACLE, PLUG, ETC.
24. USE NO. 10 THHN CONDUCTORS FOR CONDUCTOR LENGTH OVER 100 FEET, NO. 8 THHN OVER 200 FEET, NO. 6 THHN OVER 300 FEET AND NO. 4 THHN OVER 400 FEET LENGTH.
25. ALL CONDUITS EXPOSED TO THE WEATHER SHALL BE GALVANIZED RIGID STEEL, UNLESS OTHERWISE NOTED.
26. THE FIRST 10' LENGTH OF ALL BURIED CONDUIT OVER 1" SHALL BE RIGID GALVANIZED STEEL WHERE THEY ARE LEAVING OR ENTERING THE BUILDING, MANHOLE, VAULT, ETC.
27. ALL METALLIC CONDUITS, JOINTS, FITTINGS, ETC., IN CONTACT WITH THE GROUND SHALL BE SPIRALLY WRAPPED WITH 3M SCOTCHRAP-51, 20 MIL TAPE (OR APPROVED EQUAL). 1/2" OVERLAP IS REQUIRED.
28. ALL UNDERGROUND CONDUIT SHALL BE BURIED 24" MINIMUM UNDER THE GROUND.
29. PROVIDE TYPED LABEL FOR ALL DUPLEX OUTLETS AND LIGHT SWITCHES TO INDICATE WHICH CIRCUIT THEY ARE TIED TO.
30. ALL DUPLEX OUTLETS AND SWITCHES SHALL BE 20 AMP., 120 VOLT SPEC GRADE. HUBBELL AND PASS & SEYMOUR AND LEVITON ARE APPROVED MANUFACTURERS.
31. LIGHT SWITCHES INSTALLED ADJACENT TO EACH OTHER, SHALL BE GANGED TOGETHER WITH ONE PIECE COVERPLATE.
32. INSTALL LIGHT SWITCHES AS CLOSE AS POSSIBLE TO THE DOOR. COORDINATE EXACT LOCATION OF LIGHT SWITCHES WITH ARCHITECT.
33. SUPPORT THE LAY-IN TYPE FIXTURES FROM THE CEILING DECK INDEPENDENT OF THE CEILING GRID, AS SHOWN ON THE TYPICAL RECESSED FIXTURE MOUNTING DETAIL.
34. INSTALL EXIT SIGNS ON THE WALL IF POSSIBLE
35. ALL PANELBOARDS SHALL HAVE FULL SIZE ISOLATED NEUTRAL AND GROUND COPPER BUS BARS.
36. SUCCESSFUL BIDDER FOR THE PANELBOARDS, MAIN DISTRIBUTION PANEL, MOTOR CONTROL CENTERS, TRANSFORMERS, ETC., SHALL INCLUDE IN THEIR SUBMITTALS, LAYOUTS OF ALL THE ELECTRICAL ROOMS TO SHOW THE ELECTRICAL SWITCH GEAR LAYOUT OF EACH ROOM. (SCALE: 1/4" = 1'-0").
37. USE EPOXY ANCHORS TO SUPPORT THE ELECTRICAL EQUIPMENT. EXPANSION ANCHOR BOLTS ARE NOT ACCEPTED.
38. ALL PANELS SHALL HAVE COPPER BUSSES AND SHALL BE BRACED FOR A MINIMUM OF 10,000 AIC OR AS SPECIFIED.
39. SWITCHBOARDS, PANELBOARDS, AND MOTOR CONTROL CENTERS SHALL BE FIELD MARKED TO WARN QUALIFIED PERSONS OF POTENTIAL ELECTRIC ARC FLASH HAZARDS. THE MARKING SHALL BE LOCATED SO AS TO BE CLEARLY VISIBLE TO QUALIFIED PERSONS BEFORE EXAMINATION, ADJUSTMENT, SERVICING, OR MAINTENANCE OF THE EQUIPMENT. (NEC 110-16)
40. A SIGN SHALL BE PLACED AT THE SERVICE ENTRANCE EQUIPMENT, INDICATING TYPE AND LOCATION OF ONSITE EMERGENCY POWER SOURCES.
41. WHERE THE GROUNDED CIRCUIT CONDUCTOR CONNECTED TO THE EMERGENCY SOURCE IS CONNECTED TO
42. GROUNDING ELECTRODE CONDUCTOR AT A LOCATION REMOTE FROM THE EMERGENCY SOURCE, THERE SHALL BE A SIGN AT THE GROUNDING LOCATION THAT SHALL IDENTIFY ALL EMERGENCY AND NORMAL SOURCES CONNECTED AT THAT LOCATION.
43. PROVIDE UPDATED, TYPED WRITTEN, PANEL SCHEDULES FOR NEW AND EXISTING PANELBOARDS SHOWING CIRCUIT CHANGES MADE DURING THIS PROJECT.
44. ALL DISCONNECTS, J-BOXES AND CONDUITS EXPOSED TO THE OUTSIDE WEATHER SHALL BE NON-CORROSIVE, WEATHER PROOF TYPE.
45. ALL DISCONNECTS SHALL BE HEAVY DUTY TYPE.
46. ALL MAGNETIC DOOR HOLDERS SHALL BE TIED TO THE FIRE ALARM CONTROL PANEL, REFER TO TYPICAL FIRE ALARM RISER DIAGRAM ON SHEET EE007 FOR MORE INFORMATION. IN THE EVENT OF A FIRE ALARM THE SHALL BE DE-ENERGIZED AND RELEASE THE DOORS. PROVIDE ALL CONDUIT, WIRE, JUNCTION BOXES, ETC., FOR A COMPLETE INSTALLATION. REFER TO THE ELECTRICAL AND ARCHITECTURAL FLOOR PLANS FOR THE EXACT LOCATIONS OF THE DOOR HOLDERS.
47. PAINT ALL THE J-BOXES FOR FIRE ALARM SYSTEM WITH RED PAINT PRIOR TO INSTALLATION. ALL THE CONDUIT FOR FIRE ALARM SYSTEM SHALL BE RED.
48. ANY CIRCUIT BREAKER FEEDING FIRE ALARM SYSTEMS SHALL CONTAIN RED MARKING AND SHALL BE LABELED "FOR FIRE ALARM SYSTEM".
49. ALL NEW WORK MUST MEET THE CURRENT ADOPTED NATIONAL ELECTRICAL CODE.
50. ALL MATERIALS USED IN THIS INSTALLATION SHALL BE U.L. APPROVED AND NEW.
51. TEMPORARY ELECTRICAL SERVICE IS TO BE PROVIDED BY THE ELECTRICAL CONTRACTOR AND REMOVED BY THE ELECTRICAL CONTRACTOR.
52. DETAILS ARE SHOWN ON DIFFERENT SHEETS. THE CONTRACTOR SHALL REFER TO THOSE DETAILS WHETHER OR NOT CALLED IN REFERENCE NOTES.
53. CONTRACT DOCUMENTS SHALL TAKE PRECEDENCE OVER SHOP DRAWINGS UNLESS SPECIFICALLY NOTED OTHERWISE.
54. IN AREAS WHERE CIRCUIT CONTINUITY IS INTERRUPTED, BUT MUST BE MAINTAINED TO THE DEVICES WHICH ARE TO REMAIN, MAKE ALL THE NECESSARY MODIFICATIONS TO THE CIRCUITS IN ORDER TO MAINTAIN THE CIRCUIT INTEGRITY.
55. REFER TO THE ARCHITECTURAL REFLECTED CEILING PLANS FOR THE EXACT LOCATION OF ALL LIGHTING FIXTURES.

MHTN ARCHITECTS
MHTN Architects, Inc.
420 East South Temple
Suite 100
Salt Lake City, Utah 84111
Telephone (801) 595-6700
Telefax (801) 595-6717
www.mhtn.com

E.C.E. LLC
Electrical Consulting Engineers
939 So. West Temple
Salt Lake City, Utah 84101
Telephone (801) 521-8007
Email Admin@eceonline.com

WEBER STATE UNIVERSITY
RESIDENTIAL LIFE PHASE II - BLDG.2
DFCM PROJECT NUMBER: 10176810
WEBER STATE UNIVERSITY
OGDEN, UTAH 84408

SEAL

MHTN PROJECT NO. 4007-2
DRAWN BY: CC CHECKED BY: JHM

ISSUED:

NO.	DATE	DESCRIPTION
01	17 MAY 2011	CONSTRUCTION DOCUMENTS

CONTRACTOR TO VERIFY DRAWINGS IN FIELD USE REFLECT LAST REVISION DATE.

NO.	DATE	DESCRIPTION

SHEET NAME
GENERAL NOTES DETAILS & SCHEDULES
CONSTRUCTION DOCUMENTS
17 MAY 2011
SHEET NUMBER
EE001

C:\Users\richie\Documents\WEBER-STATE-BLDG2-CENTRAL1_richie.rvt
11/26/2010 1:33:01 PM

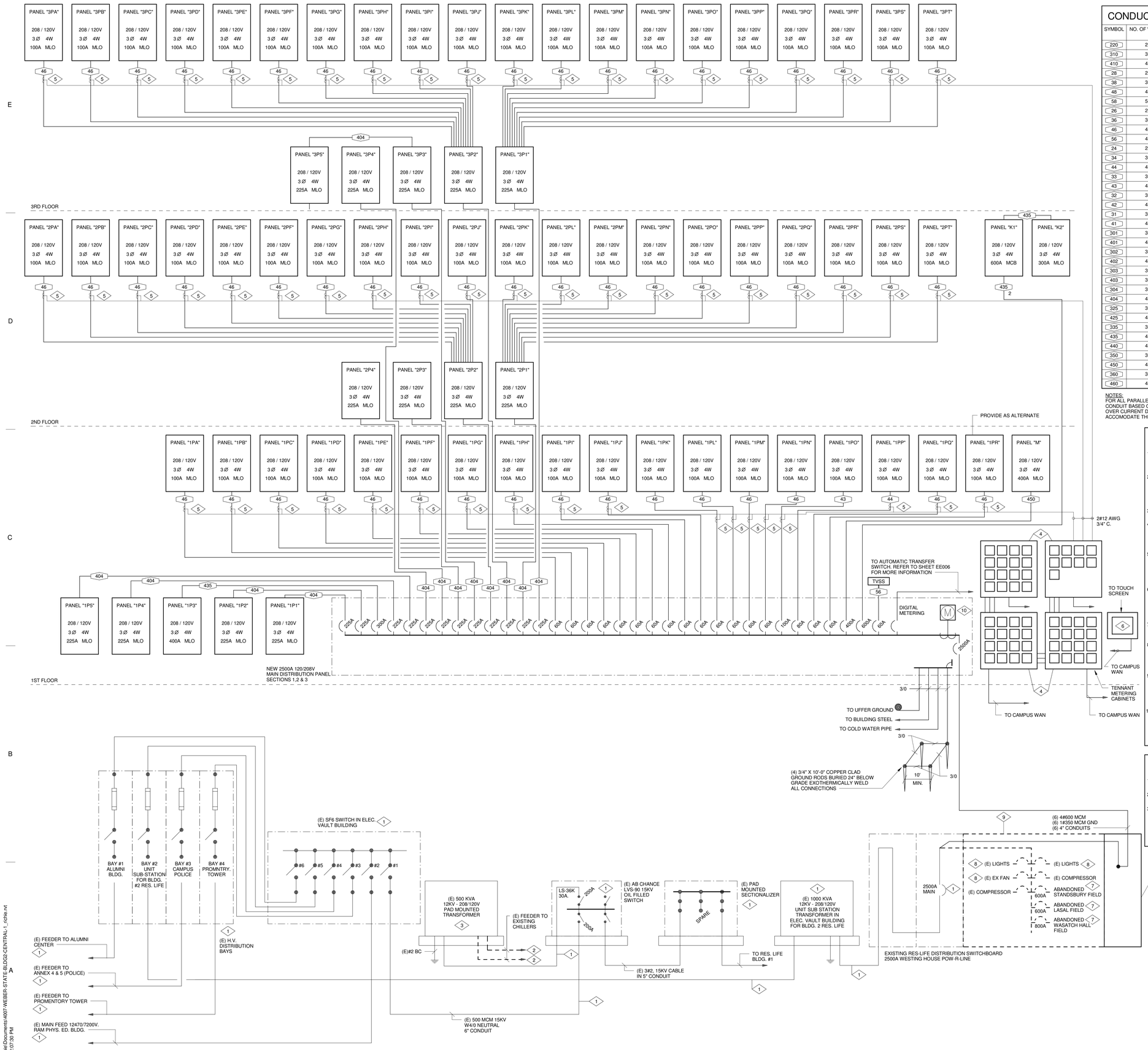

RES. LIFE BUILDING #2 POWER SINGLE LINE DIAGRAM

SCALE: N.T.S.

CONDUCTORS/CONDUIT FILL SCHEDULE

SYMBOL	NO. OF WIRES	WIRE SIZE	GROUND WIRE SIZE	COND. SIZE	AMPACITY
220	2	10 AWG	10 AWG	3/4"	30 A.
310	3	10 AWG	10 AWG	3/4"	30 A.
410	4	10 AWG	10 AWG	3/4"	30 A.
28	2	8 AWG	8 AWG	3/4"	50 A.
38	3	8 AWG	8 AWG	3/4"	50 A.
48	4	8 AWG	8 AWG	3/4"	50 A.
58	5	8 AWG	8 AWG	1"	50 A.
26	2	6 AWG	10 AWG	3/4"	60 A.
36	3	6 AWG	10 AWG	3/4"	60 A.
46	4	6 AWG	10 AWG	1"	60 A.
56	4	6 AWG	6 AWG	1"	60 A.
24	2	4 AWG	8 AWG	1"	85 A.
34	3	4 AWG	8 AWG	1"	85 A.
44	4	4 AWG	8 AWG	1-1/4"	85 A.
33	3	3 AWG	8 AWG	1-1/4"	100 A.
43	4	3 AWG	8 AWG	1-1/4"	100 A.
32	3	2 AWG	6 AWG	1-1/4"	115 A.
42	4	2 AWG	6 AWG	1-1/4"	115 A.
31	3	1 AWG	6 AWG	1-1/2"	130 A.
41	4	1 AWG	6 AWG	1-1/2"	130 A.
301	3	1/0 AWG	6 AWG	1-1/2"	150 A.
401	4	1/0 AWG	6 AWG	2"	150 A.
302	3	2/0 AWG	4 AWG	1-1/2"	175 A.
402	4	2/0 AWG	4 AWG	2"	175 A.
303	3	3/0 AWG	4 AWG	2"	200 A.
403	3	3/0 AWG	4 AWG	2"	200 A.
304	3	4/0 AWG	2 AWG	2"	230 A.
404	4	4/0 AWG	2 AWG	2-1/2"	230 A.
325	3	250 AWG	2 AWG	2-1/2"	255 A.
425	4	250 AWG	2 AWG	2-1/2"	255 A.
335	3	350 AWG	1/0 AWG	2-1/2"	310 A.
435	4	350 AWG	1/0 AWG	3"	310 A.
440	4	400 AWG	1/0 AWG	3"	335 A.
350	3	500 AWG	1/0 AWG	3-1/2"	380 A.
450	4	500 AWG	1/0 AWG	4"	380 A.
360	3	600 AWG	1/0 AWG	4"	420 A.
460	4	600 AWG	1/0 AWG	4"	420 A.

NOTES:
FOR ALL PARALLEL RUNS PROVIDE GROUND CONDUCTORS IN EACH CONDUIT BASED ON NEC TABLE 250-95 FOR THE SPECIFIED RATING OF THE OVER CURRENT DEVICES. OVERSIZE THE CONDUIT ACCORDINGLY TO ACCOMODATE THE LARGER GROUND CONDUCTORS.

REFERENCE NOTES:

1. EXISTING TRANSFORMER, H.V. DISTRIBUTION SWITCHBOARD, SF6 SWITCH, PAD MOUNTED SWITCH, ETC. SHALL REMAIN. MAKE ANY MODIFICATIONS REQUIRED TO MAINTAIN CIRCUIT INTEGRITY.
2. EXISTING CHILLERS SHALL BE REMOVED BY THE MECHANICAL CONTRACTOR. DISCONNECT POWER AND REMOVE THE ASSOCIATED CONDUIT, CONDUCTORS, DISCONNECTS BACK TO SOURCE. CAP ANY BELOW GRADE CONDUITS FLUSH WITH GRADE. SHUT OF PRIMARY FEED TO THE 500 KVA TRANSFORMER THAT FEEDS THE CHILLER.
3. EXISTING TRANSFORMER SHALL REMAIN. SHUT OFF FEED TO TRANSFORMER AT THE EXISTING SWITCH.
4. FURNISH AND INSTALL NEW TENANT SUBMETER (SQUARE-D #HDOM20123**11) CABINETS IN THE MAIN ELECTRICAL ROOM. TIE THE PANELS TO THE CAMPUS NETWORK. PROVIDE COMMUNICATIONS CARD IN PANEL. VOICE/DATA CABLING WILL BE BY OWNER.
5. FURNISH AND INSTALL NEW SOLID CORE CURRENT TRANSFORMERS (SQUARE-D#DMCT200S1) AT EACH OF THE SUITE PANELS. TIE TO THE TENANT SUBMETERS IN THE MAIN ELECTRICAL ROOM. V.A. RS485 MOD BUS NETWORK. COORDINATE WITH THE METERING CABINET SUPPLIER FOR NETWORK CABLE AND ADDITIONAL REQUIREMENTS.
6. FURNISH AND INSTALL POWER MANAGEMENT TOUCH SCREEN IN THE MAIN LOBBY. PROVIDE POWER MANAGEMENT DISPLAY SOFTWARE AND DATA MANAGEMENT BY LUCID DESIGN. PROVIDE WITH SET UP TRAINING AND YEARLY SERVICE PLAN. CONTACT NICK PORLUND WITH LUCID DESIGN (510)907-0440 X 18. FOR MORE INFORMATION.
7. DISCONNECT EXISTING FEEDERS AND REMOVE EXISTING CIRCUIT BREAKERS UTILIZE THE EXISTING UNDERGROUND CONDUITS TO FEED NEW BUILDING.
8. EXTEND THE EXISTING BRANCH CIRCUIT TO (3) NEW 20A, 1-POLE SPARE CIRCUIT BREAKERS IN SIDE BUILDING #2 PANEL 1P5. PROVIDE ADDITIONAL CONDUIT, CONDUCTORS, ETC., FOR A COMPLETE INSTALLATION. COORDINATE THE OUTAGES REQUIRED WITH THE OWNER.
9. REPLACE THE EXISTING BRANCH PANEL SECTION OF THE EXISTING DISTRIBUTION SWITCHBOARD WITH NEW 2500A. LUG SECTION. PROVIDE NEW BUSS CONNECTIONS AS REQUIRED TO FEED NEW BUILDING. COORDINATE THIS WORK CAREFULLY WITH THE SWITCHBOARD MANUFACTURER.
10. FURNISH AND INSTALL NEW DIGITAL BUILDING METER (HAWKEYE 8100 SERIES OR EQUAL). PROVIDE WITH WALL MOUNTED COMMUNICATIONS BOARD AND INFORMATION TO CAMPUS BAS (JOHNSON JCI BACNET CAMPATIBLE). TIE TO THE MAIN DISTRIBUTION PANEL AND NEW DDC SYSTEM. PROVIDE NEW C.T.'S AND P.T.'S AS REQUIRED.

SPECIAL NOTES:

1. PROVIDE SELECTIVE COORDINATION STUDY PER SPECIFICATION SECTION 260573.
2. PROVIDE A RECORD OF EXACT LENGTH OF FEEDERS AS INSTALLED.
3. SHUTTING DOWN AND RE-ENERGIZING OF ANY MEDIUM VOLTAGE SWITCHES SHALL BE DONE BY THE ELECTRICAL CONTRACTOR AND COORDINATED AT LEAST 2 WEEKS IN ADVANCE WITH WSU. STEP BY STEP METHOD OF PROCEDURE WILL BE REQUIRED AND SHALL BE APPROVED BY THE ENGINEER AND WSU PRIOR TO THE WORK. THIS APPLIES TO THE ENTIRE JOB.

MHTN ARCHITECTS
MHTN Architects, Inc.
420 East South Temple
Suite 100
Salt Lake City, Utah 84111
Telephone (801) 595-6700
Telefax (801) 595-6717
www.mhtn.com

ECE, Inc. Consulting Engineers
939 S. West Temple
Salt Lake City, Utah 84101
Phone 801.521.8007
e-mail admin@eceonline.com

WEBER STATE UNIVERSITY
RESIDENTIAL LIFE PHASE II - BLDG.2

DFCM PROJECT NUMBER: 10176810

WEBER STATE UNIVERSITY
OGDEN, UTAH 84408

SEAL

MHTN PROJECT NO. 4007-2

DRAWN BY: RS CHECKED BY: JHM

ISSUED:

NO.	DATE	DESCRIPTION
01	17 MAY 2011	CONSTRUCTION DOCUMENTS

CONTRACTOR TO VERIFY DRAWINGS IN FIELD USE REFLECT LAST REVISION DATE:

NO.	DATE	DESCRIPTION

SHEET NAME

POWER SINGLE LINE DIAGRAM

CONSTRUCTION DOCUMENTS
17 MAY 2011

SHEET NUMBER

EE002

C:\Users\richie\Documents\4007-WEBER-STATE-BLDG2-CENTRAL-1_richie.rvt
5/17/2011 12:07:30 PM

REFERENCE NOTES:

1 EXISTING ENGINE GENERATOR SHALL REMAIN AND IS PROVIDING EMERGENCY POWER TO BUILDING 1. COORDINATE ALL WORK IN AND AROUND THE ENGINE WITH THE OWNER TWO WEEKS IN ADVANCE SO THAT ANY OUTAGES REQUIRED CAN BE SCHEDULED.

2 EXISTING EMERGENCY SYSTEM CIRCUIT BREAKERS. UTILIZE THE 400A. CIRCUIT BREAKER FOR NEW BUILDING # 2.

3 EXISTING AUTOMATIC TRANSFER SWITCH, PANELBOARD, ANNUNCIATOR PANEL, ETC. IN BUILDING 1 SHALL REMAIN. MAKE ANY MODIFICATIONS REQUIRED TO MAINTAIN CIRCUIT INTEGRITY.

4 FURNISH AND INSTALL NEW AUTOMATIC TRANSFER SWITCH AND ANNUCIATOR PANEL. TIE TO THE NEW EXISTING 400A. EMERGENCY SYSTEM CIRCUIT BREAKER AS INDICATED. TIE THE NEW TRANSFER SWITCH TO THE ENGINE GENERATOR CONTROLS FOR AUTOMATIC OPERATION UPON COMMERCIAL POWER FAILURE.

CONDUCTORS/CONDUIT FILL SCHEDULE

SYMBOL	NO. OF WIRES	WIRE SIZE	GROUND WIRE SIZE	COND. SIZE	AMPACITY
220	2	10 AWG	10 AWG	3/4"	30 A.
310	3	10 AWG	10 AWG	3/4"	30 A.
410	4	10 AWG	10 AWG	3/4"	30 A.
28	2	8 AWG	8 AWG	3/4"	50 A.
38	3	8 AWG	8 AWG	3/4"	50 A.
48	4	8 AWG	8 AWG	3/4"	50 A.
58	5	8 AWG	8 AWG	1"	50 A.
26	2	6 AWG	10 AWG	3/4"	60 A.
36	3	6 AWG	10 AWG	3/4"	60 A.
46	4	6 AWG	10 AWG	1"	60 A.
56	4	6 AWG	6 AWG	1"	60 A.
24	2	4 AWG	8 AWG	1"	85 A.
34	3	4 AWG	8 AWG	1"	85 A.
44	4	4 AWG	8 AWG	1-1/4"	85 A.
33	3	3 AWG	8 AWG	1-1/4"	100 A.
43	4	3 AWG	8 AWG	1-1/4"	100 A.
32	3	2 AWG	6 AWG	1-1/4"	115 A.
42	4	2 AWG	6 AWG	1-1/4"	115 A.
31	3	1 AWG	6 AWG	1-1/2"	130 A.
41	4	1 AWG	6 AWG	1-1/2"	130 A.
301	3	1/0 AWG	6 AWG	1-1/2"	150 A.
401	4	1/0 AWG	6 AWG	2"	150 A.
302	3	2/0 AWG	4 AWG	1-1/2"	175 A.
402	4	2/0 AWG	4 AWG	2"	175 A.
303	3	3/0 AWG	4 AWG	2"	200 A.
403	3	3/0 AWG	4 AWG	2"	200 A.
304	3	4/0 AWG	2 AWG	2"	230 A.
404	4	4/0 AWG	2 AWG	2-1/2"	230 A.
325	3	250 AWG	2 AWG	2-1/2"	255 A.
425	4	250 AWG	2 AWG	2-1/2"	255 A.
335	3	350 AWG	1/0 AWG	2-1/2"	310 A.
435	4	350 AWG	1/0 AWG	3"	310 A.
440	4	400 AWG	1/0 AWG	3"	335 A.
350	3	500 AWG	1/0 AWG	3-1/2"	380 A.
450	4	500 AWG	1/0 AWG	4"	380 A.
360	3	600 AWG	1/0 AWG	4"	420 A.
460	4	600 AWG	1/0 AWG	4"	420 A.

NOTES:
FOR ALL PARALLEL RUNS PROVIDE GROUND CONDUCTORS IN EACH CONDUIT BASED ON NEC TABLE 250-95 FOR THE SPECIFIED RATING OF THE OVER CURRENT DEVICES. OVERSIZE THE CONDUIT ACCORDINGLY TO ACCOMODATE THE LARGER GROUND CONDUCTORS.

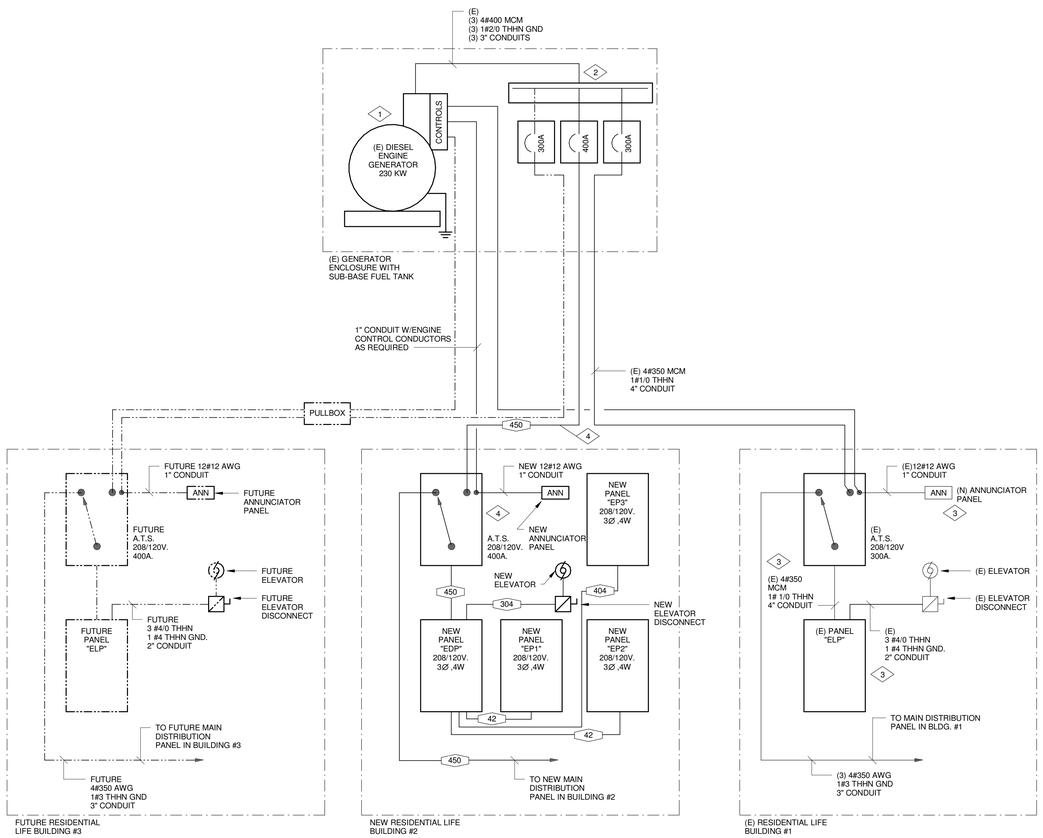

EMERGENCY POWER DISTRIBUTION SINGLE LINE DIAGRAM

SCALE: N.T.S.

MHTN ARCHITECTS
MHTN Architects, Inc.
420 East South Temple
Suite 100
Salt Lake City, Utah 84111
Telephone (801) 595-6700
Telefax (801) 595-6717
www.mhtn.com

ECE, Inc. Consulting Engineers
939 S. West Temple
Salt Lake City, Utah 84101
Phone 801.521.8007
e-mail admin@eceonline.com

WEBER STATE UNIVERSITY
RESIDENTIAL LIFE PHASE II - BLDG.2
DFCM PROJECT NUMBER: 10176810

WEBER STATE UNIVERSITY
OGDEN, UTAH 84408

SEAL

MHTN PROJECT NO. 4007-2

DRAWN BY: CC CHECKED BY: JHM

ISSUED:

NO.	DATE	DESCRIPTION
01	17 MAY 2011	CONSTRUCTION DOCUMENTS

CONTRACTOR TO VERIFY DRAWINGS IN FIELD USE REFLECT LAST REVISION DATE.

NO.	DATE	DESCRIPTION

SHEET NAME
EMERGENCY POWER SINGLE LINE DIAGRAM
CONSTRUCTION DOCUMENTS
17 MAY 2011

SHEET NUMBER
EE003

C:\Users\richie\Documents\4007-WEBER-STATE-BLDG2-CENTRAL-1_richie.rvt
5/17/2011 12:07:31 PM

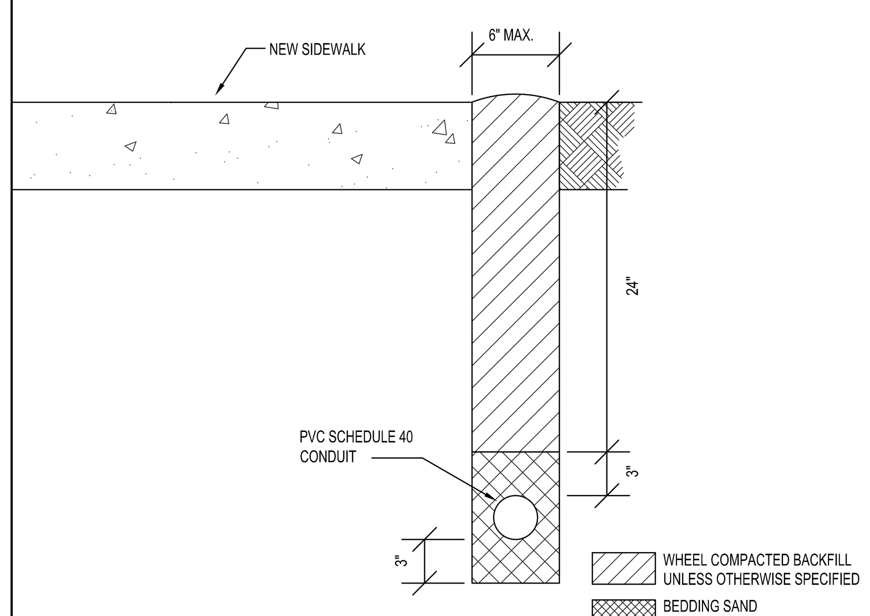

NOTE:

RUN CONDUITS UNDER NEW SIDEWALK

SCALE: N.T.S.

NEW LIGHT FIXTURE FEEDS TRENCH DETAIL

PARTS LIST

ITEM NO.	DESCRIPTION	SIZE	CATALOG NO. UNISTRUT
1	THREADED ROD (MIN. MODULUS OF ELASTICITY = 29 x 10^6 LBS/IN)	SEE SCHEDULE FOR DIAMETER	-
2	METAL FRAMING CHANNEL	1-5/8" X 1-5/8"	P1000
3	ADJUSTABLE HINGE	2-1/8" X 2-1/8"	P1843
4	HEX HEAD CAP SCREW WITH SPRING UNIT	1/2" - 13"	HHCS/P1010
5	FLAT WASHER WITH HEX NUT	3/8"	-
6	FLAT PLATE FITTING WITH HEX NUT	3/8" OR 1/2" AS REQ-D	P1063 OR P1064
7	CRADLE	-	P2485
8	HEX HEAD CAP SCREW WITH NUT	3/8" X 1"	HHCS/P2008
9	SLOTTED METAL FRAMING CHANNEL	1-5/8" X 1-5/8"	P1000T

SIZE (IN)	RIGID CONDUIT #/FT	#/CPLG	TOTAL #/10FT	INTERMEDIATE CONDUIT #/FT	(1) #/CPL	TOTAL #/10FT	EMT CONDUIT #/FT	(2) #/CPL	#/10FT
1/2	0.820	0.14	8.34	0.570	0.14	5.84	0.295	0.07	3.02
3/4	1.120	0.24	11.44	0.780	0.24	8.04	0.445	0.12	4.57
1	1.600	0.39	16.39	1.120	0.39	11.59	0.650	0.20	6.70
1-1/4	2.160	0.47	22.07	1.440	0.47	14.87	0.960	0.24	9.84
1-1/2	2.680	0.66	27.46	1.760	0.66	18.26	1.110	0.33	11.43
2	3.500	1.05	36.05	2.350	1.05	24.55	1.410	0.53	14.63
2-1/2	5.600	1.80	57.80	3.930	1.80	41.10	2.300	0.90	23.90
3	7.120	3.00	74.20	4.830	3.00	51.30	2.700	1.50	28.50
3-1/2	8.520	3.90	89.10	5.610	3.90	60.00	-	-	-
4	10.300	4.00	107.00	6.250	4.00	66.50	4.000	2.00	42.00
5	13.910	7.60	746.70						
6	18.500	10.75	195.75						

NOTES

(1) WEIGHTS USED ARE FOR RIGID STEEL CPLGS

(2) WEIGHTS USED ARE EQUAL TO .5 TIMES RIGID STEEL CPLGS

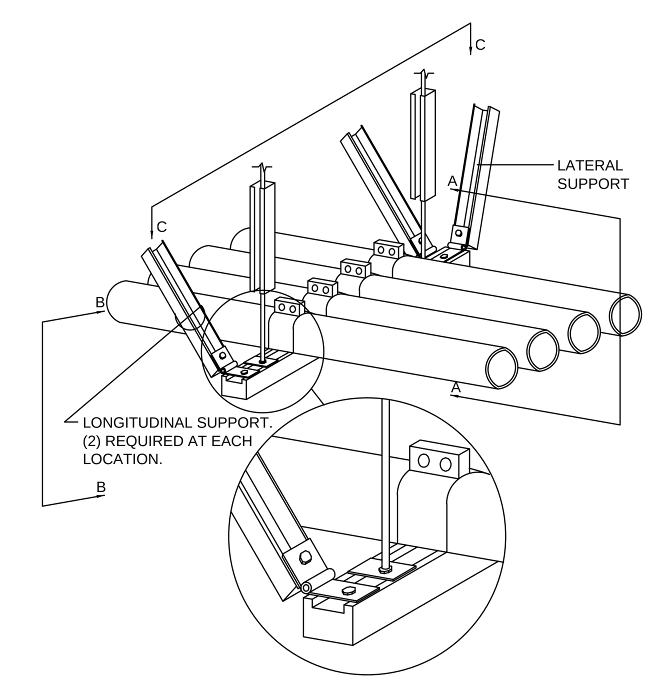

FEEDER WEIGHTS (COPPER CONDUCTORS)

TYPE	AMPERE RATING	W/RIGID (PER 10')	W/IMC (PER 10')	W/EMT (PER 10')
20	30	12.61	9.21	5.74
30	30	13.00	9.60	6.13
40	30	13.39	9.99	6.52
28	40	13.42	10.02	6.55
38	40	14.08	10.68	7.21
48	40	14.74	11.34	7.87
26	55	14.38	10.98	7.51
36	55	15.36	11.96	8.49
46	55	21.29	16.49	11.60
24	70	16.09	12.69	9.22
34	70	22.59	17.79	12.90
44	70	29.82	22.62	17.59
32	95	31.47	24.27	19.24
42	95	33.82	26.62	21.59
31	110	34.07	26.87	21.84
41	110	42.46	33.26	26.43
31X	150	39.54	30.34	23.51
41X	150	43.24	34.04	27.21
32X	175	42.24	33.04	26.21
42X	175	55.43	43.93	34.01
33X	200	54.13	42.63	32.71
43X	200	59.83	48.33	38.41
34X	230	58.90	47.40	37.48
44X	230	87.75	71.05	53.85
325	255	62.95	51.45	41.53
425	255	93.15	76.45	59.25
335	310	94.85	77.95	80.75
435	310	122.70	99.80	77.00
340	335	115.85	92.95	70.15
440	335	129.10	106.20	83.40
350	380	140.20	111.10	93.10
450	380	156.60	127.50	109.50

CONDUCTOR WEIGHTS

WIRE SIZE	#/FT	FOUR CONDRS
14	0.016	0.064
12	0.025	0.100
10	0.039	0.156
8	0.066	0.264
6	0.098	0.392
4	0.155	0.620
3	0.190	0.760
2	0.235	0.940
1	0.300	1.200
1/0	0.370	1.480
2/0	0.460	1.840
3/0	0.570	2.280
4/0	0.710	2.840
250	0.845	3.380
300	1.020	4.080
350	1.165	4.660
400	1.325	5.300
500	1.640	6.560
600	2.005	8.020
750	2.480	9.920
1000	3.300	13.200

NOTES:

1. PROVIDE LONGITUDINAL AND LATERAL SUPPORT SPACING IN ACCORDANCE WITH THE FOLLOWING:

MAX CONDUIT/ WIRE WT.	VERTICAL SUPPORT SPACING	LATERAL SUPPORT SPACING	LONGITUDINAL SUPPORT SPACING	ROD DIAMETER	CONTROL BUCKLING LENGTH (2)
POUNDS/FOOT	FEET	FEET	FEET	INCHES	INCHES
15	10	20	20	.375	18
30	10	10	20	.375	12
45	10	10	20	.375	10
60	10	10	20	.500	16

2. PROVIDE METAL FRAMING CHANNEL ON ALL VERTICAL SUPPORTS WHEN ROD LENGTH EXCEEDS SPECIFIED VALUES. STIFFENER CLIP SPACING SHALL BE AS INDICATED.

3. PROVIDE LATERAL SUPPORTS AT SPACING INDICATED ON ALTERNATE SIDES OF CONDUIT RACK.

4. SEE SPECIFICAITONS FOR APPROVED FITTINGS FOR ATTACHMENT TO STRUCTURE.

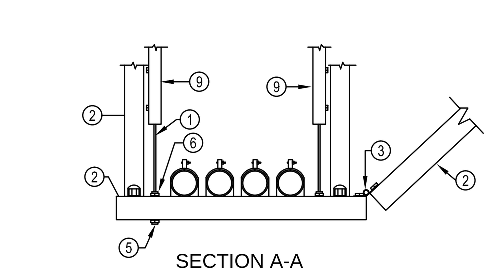

SECTION A-A

GENERAL NOTES

1. COORDIANTE ROUTING OF CONDUIT AND SUPPORT SYSTEMS WITH DIVISION 15.

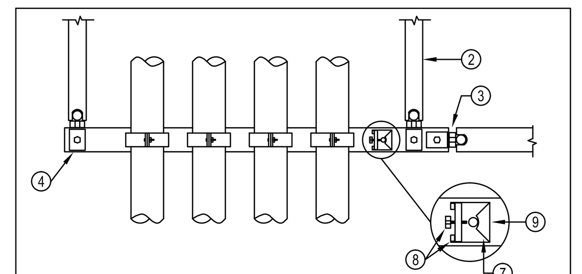

SECTION C-C

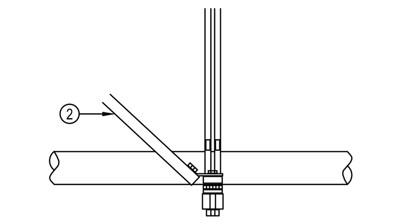

SECTION B-B

SCALE: N.T.S.

SEISMIC BRACING FOR CONDUIT (EXPOSED STRUCTURE OR ABOVE CEILING ONLY)

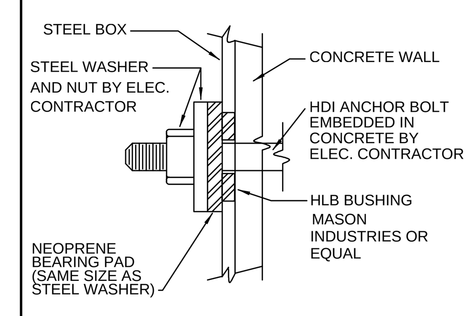

BOLT DETAIL #1

N.T.S.

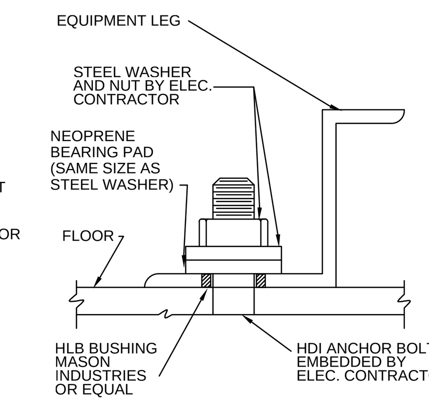

BOLT DETAIL #2

N.T.S.

NOTES

1. THE SIZES AND EMBEDMENT ARE FOR ANCHORS INSTALLED IN STONE AGGREGATE CONCRETE HAVING AN fc=2000 PSI ULTIMATE COMPRESSIVE STRENGTH AT THE TIME OF INSTALLATION. ALL BOLTS ARE TO BE INSTALLED AS PER MANUFACTURER'S INSTRUCTIONS NO CLOSER THAN 12" O.C. WITH MINIMUM EDGE DISTANCES AS SCHEDULED.
2. EACH EQUIPMENT SUPPORT LEG WILL BE ANCHORED AND ALL EQUIPMENT WILL BE ANCHORED AT ALL CORNERS. A MINIMUM OF FOUR ANCHORS ARE REQUIRED FOR ALL EQUIPMENT.
3. SIZES REFER TO "HILTI KWIK-BOLT."
4. EQUIPMENT WEIGHT PER ANCHOR IS THE OPERATION WEIGHT OF THE EQUIPMENT PLUS BASES AND SUPPORT WEIGHT DIVIDED BY THE NUMBER OF ANCHORS.
5. ANCHORAGE IS TO PREVENT HORIZONTAL MOVEMENT IF EQUIPMENT GEOMETRY IS SUCH THAT THE VERTICAL DISTANCE FROM SUPPORT LEG TO CENTER OF GRAVITY IS GREATER THAN FOUR TIMES THE SHORTEST HORIZONTAL DISTANCD FROM A SUPPORT LEG TO THE CENTER OF GRAVITY. ADDITIONAL ANCHORING AND RESTRAINTS WILL BE REQUIRED TO PREVENT OVERTURNING.

Equipment Per Anchor Bolt	Minimum Bolt Dia-meter	Minimum Embedment (in.)	ICBO Allow-able Shear per bolt (LBD)	ICBO Allow-able Tension per bolt (LBF)	Equip-ment
Up to 150 lbs.	5/16" Ï	1-1/2"	380	215	
300 lbs.	3/8" Ï	2-1/2"	860	355	
600 lbs.	1/2" Ï	3"	1710	655	
900 lbs.	5/8" Ï	4-1/2"	2500	855	
1300 lbs.	3/4" Ï	6"	3050	1585	
2000 lbs.	1" Ï	6"	6280	2020	

CONTRACTOR TO REFER TO MANUFACTURER'S BROCHURE FOR THE WEIGHT OF ELECTRICAL EQUIPMENT TO DETERMINE THE SIZE OF ANCHOR BOLTS.

SCALE: N.T.S.

EQUIPMENT SEISMIC ANCHORAGE SCHEDULE AND BOLT DETAILS

PARTS LIST

ITEM NO.	DESCRIPTION	SIZE	CATALOG NO. UNISTRUT
1	THREADED ROD (MIN. MODULUS OF ELASTICITY = 29x10^6 LBS/IN)	SEE SCHEDULE FOR DIAMETER	-
2	METAL FRAMING CHANNEL	1-5/8" X 1-5/8"	P1000
3	ADJUSTABLE HINGE	2-1/8" X 2-1/8"	P1843
4	HEX HEAD CAP SCREW WITH SPRING UNIT	1/2" - 13"	HHCS/P1010
5	FLAT WASHER WITH HEX NUT	3/8"	-
6	FLAT PLATE FITTING WITH HEX NUT	3/8" OR 1/2" AS REQ-D	P1063 OR P1064
7	CRADLE	-	P2485
8	HEX HEAD CAP SCREW WITH NUT	3/8" X 1"	HHCS/P2008
9	SLOTTED METAL FRAMING CHANNEL	1-5/8" X 1-5/8"	P1000T -
	CABLE TRAY ATACHMENT CLIP W/ CAP SCREW AND NUT	-	

GENERAL NOTES

1. COORDIANTE ROUTING OF CABLE TRAYS AND SUPPORT SYSTEMS WITH DIVISION 15.

NOTES:

1. PROVIDE LONGITUDINAL AND LATERAL SUPPORT SPACING IN ACCORDANCE WITH THE FOLLOWING:

MAX CONDUIT/ WIRE WT.	VERTICAL SUPPORT SPACING	LATERAL SUPPORT SPACING	LONGITUDINAL SUPPORT SPACING	ROD DIAMETER
POUNDS/FOOT	FEET	FEET	FEET	INCHES
25	10	10	20	.375
50	10	10	20	.500

2. PROVIDE METAL FRAMING CHANNEL ON ALL VERTICAL SUPPORTS WHEN ROD LENGTH EXCEEDS 14". STIFFENER CLIP SPACING SHALL BE 12".

3. SEE SPECIFICATIONS FOR APPROVED FITTINGS FOR ATTACHMENT TO STRUCTURE.

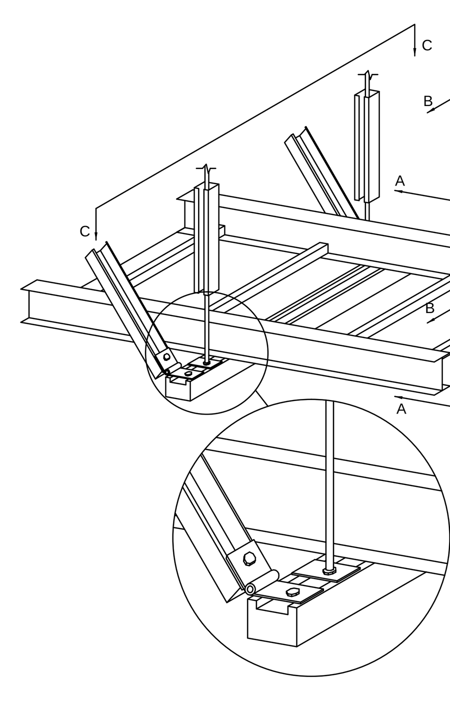

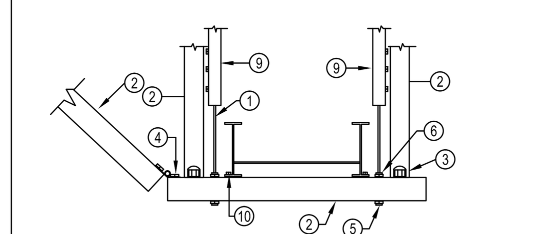

SECTION A-A

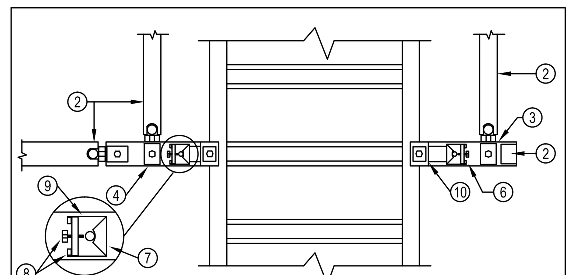

SECTION C-C

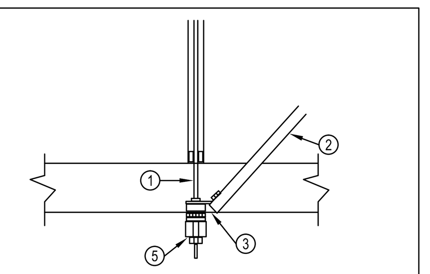

SECTION B-B

SCALE: N.T.S.

SEISMIC BRACING FOR CABLE TRAY/UNISTRUT (EXPOSED STRUCTURE OR ABOVE CEILING ONLY)

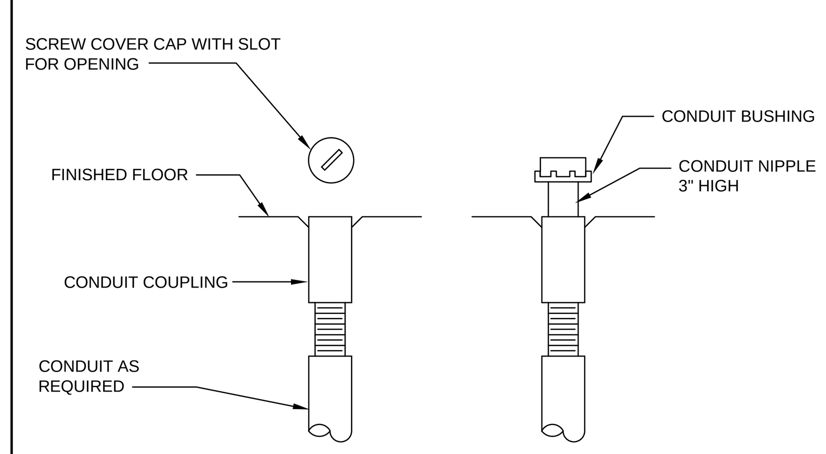

SCALE: N.T.S.

CONDUIT IN FLOOR SLAB DETAIL

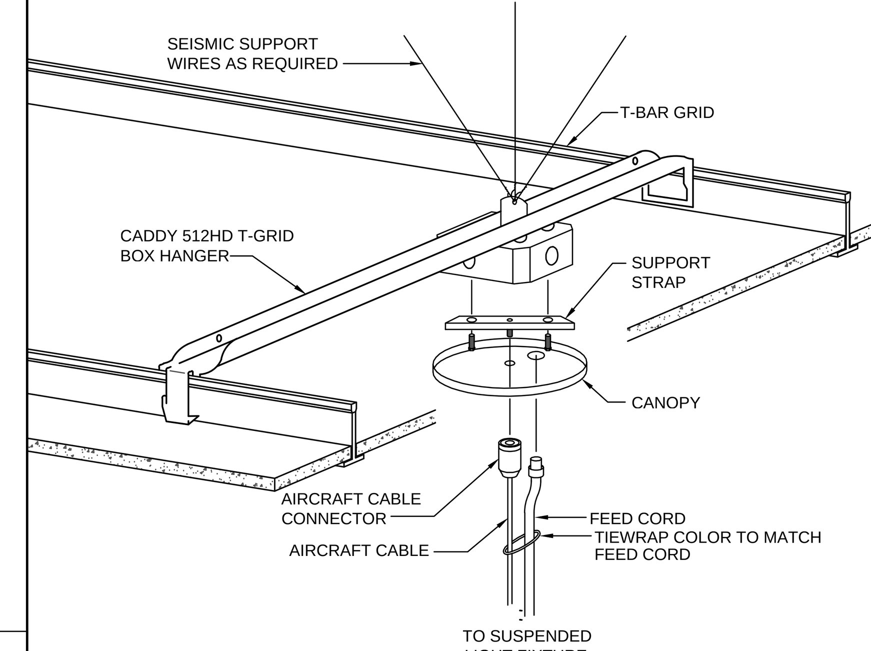

NOTE:
UTILIZE SIMILAR CONSTRUCTION FOR NON-POWER FEED.

SCALE: N.T.S.

INDIRECT LIGHT FIXTURE MOUNTING DETAIL

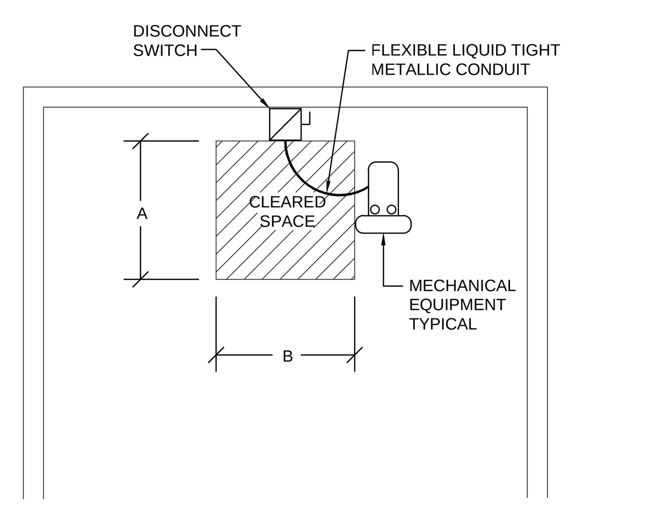

NOTE:
1. THE CONTRACTOR MUST COORDINATE EXACT LOCATION OF THE DISCONNECT WITH THE MECHANICAL CONTRACTOR TO ELIMINATE ANY OBSTACLE (PIPE, CONCRETE PAD, ETC.) IN FRONT OF THE DISCONNECT. IF THERE ARE ANY OBSTACLES, PROVIDE UNISTRUT AND INSTALL THE DISCONNECT NEXT TO MECHANICAL EQUIPMENT IN ORDER TO PROVIDE THE REQUIRED CLEARANCE.

2. PROVIDE MINIMUM CLEARANCE AS FOLLOWS:

SYSTEM VOLTAGE	A	B
480	42"	30"
208	36"	30"

SCALE: N.T.S.

TYPICAL DISCONNECT CLEARANCE REQUIREMENTS

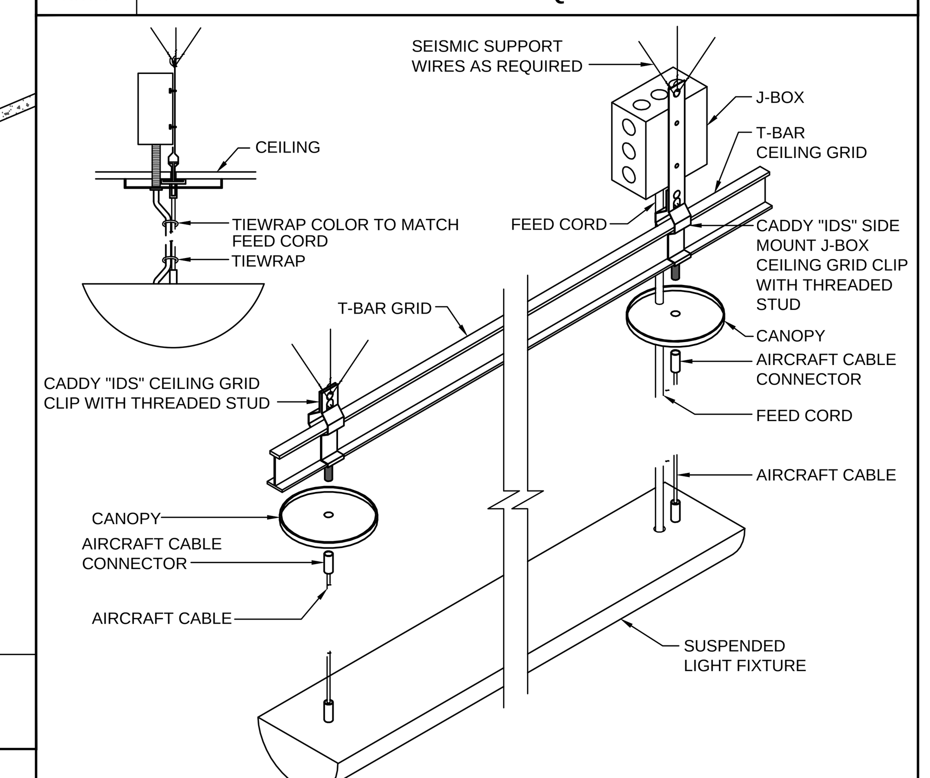

SCALE: N.T.S.

INDIRECT LIGHT FIXTURE MOUNTING DETAIL (GRID MOUNTED)

MHTN ARCHITECTS

MHTN Architects, Inc.
420 East South Temple
Suite 100
Salt Lake City, Utah 84111
Telephone (801) 595-6700
Telefax (801) 595-6717
www.mhtn.com

E.C.E. LLC
Electrical Consulting Engineers
939 So. West Temple
Salt Lake City, Utah 84101
Telephone (801) 521-8007
Email Admin@eceonline.com

WEBER STATE UNIVERSITY
RESIDENTIAL LIFE PHASE II - BLDG.2

DFCM PROJECT NUMBER: 10176810

WEBER STATE UNIVERSITY
OGDEN, UTAH 84408

SEAL

MHTN PROJECT NO. 4007-2

DRAWN BY: CC CHECKED BY: JHM

ISSUED:

NO.	DATE	DESCRIPTION
01	17 MAY 2011	CONSTRUCTION DOCUMENTS

CONTRACTOR TO VERIFY DRAWINGS IN FIELD USE REFLECT LAST REVISION DATE.

NO.	DATE	DESCRIPTION

SHEET NAME

DETAILS

CONSTRUCTION DOCUMENTS

17 MAY 2011

SHEET NUMBER

EE004

C:\Users\richie\Documents\WEBER-STATE-BLDG2-CENTRAL1_richie.rvt
11/26/2010 1:33:01 PM

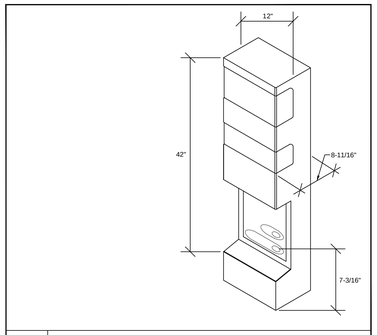

SCALE: N.T.S.

CODE BLUE PEDESTAL INTERACTIVE VOICE COMMUNICATION UNIT

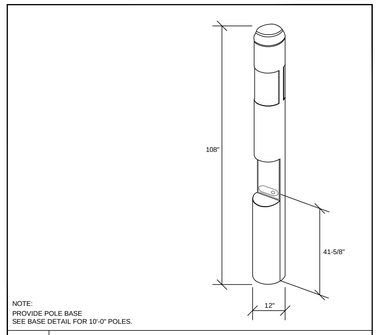

NOTE:
PROVIDE POLE BASE
SEE BASE DETAIL FOR 10'-0" POLES.

SCALE: N.T.S.

PEDESTAL INTERACTIVE VOICE COMMUNICATION UNIT

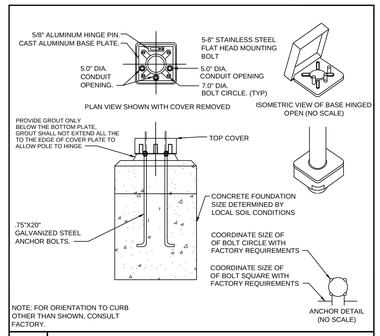

SCALE: N.T.S.

HINGED POLE BASE DETAIL

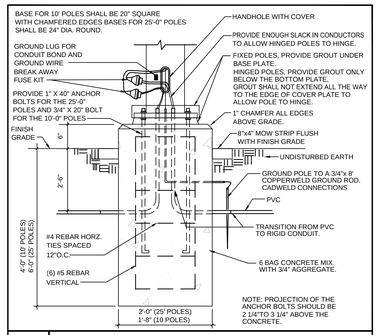

SCALE: N.T.S.

POLE BASE DETAIL

SYSTEM VOLTAGE	A
480	42"
208	36"

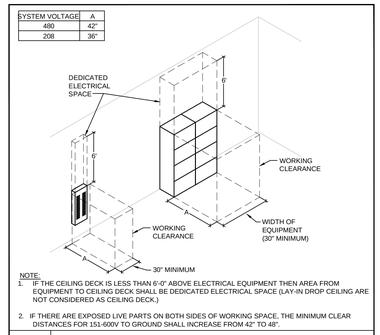

NOTE:
1. IF THE CEILING DECK IS LESS THAN 6'-0" ABOVE ELECTRICAL EQUIPMENT THEN AREA FROM EQUIPMENT TO CEILING DECK SHALL BE DEDICATED ELECTRICAL SPACE (LAY-IN DROP CEILING ARE NOT CONSIDERED AS CEILING DECK.)
2. IF THERE ARE EXPOSED LIVE PARTS ON BOTH SIDES OF WORKING SPACE, THE MINIMUM CLEAR DISTANCES FOR 151-600V TO GROUND SHALL INCREASE FROM 42" TO 48".

SCALE: N.T.S.

TYPICAL PANELBOARD CLEARANCE REQUIREMENTS

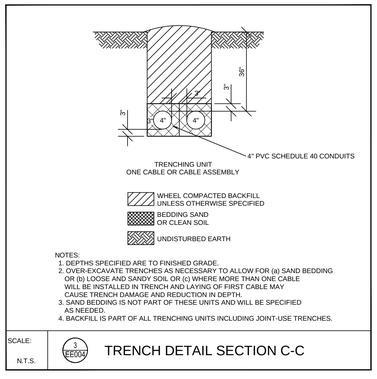

NOTES:
1. DEPTHS SPECIFIED ARE TO FINISHED GRADE.
2. OVER-EXCAVATE TRENCHES AS NECESSARY TO ALLOW FOR (a) SAND BEDDING OR (b) LOOSE AND SANDY SOIL OR (c) WHERE MORE THAN ONE CABLE WILL BE INSTALLED IN TRENCH AND LAYING OF FIRST CABLE MAY CAUSE TRENCH DAMAGE AND REDUCTION IN DEPTH.
3. SAND BEDDING IS NOT PART OF THESE UNITS AND WILL BE SPECIFIED AS NEEDED.
4. BACKFILL IS PART OF ALL TRENCHING UNITS INCLUDING JOINT-USE TRENCHES.

SCALE: N.T.S. (3 / EE005)

TRENCH DETAIL SECTION C-C

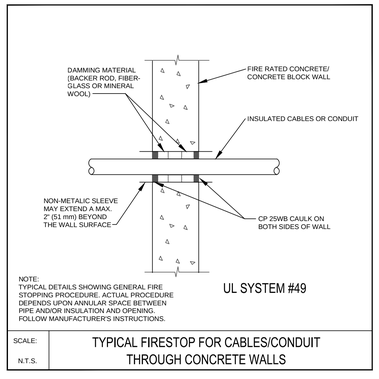

NOTE:
TYPICAL DETAILS SHOWING GENERAL FIRE STOPPING PROCEDURE. ACTUAL PROCEDURE DEPENDS UPON ANNULAR SPACE BETWEEN PIPE AND/OR INSULATION AND OPENING. FOLLOW MANUFACTURER'S INSTRUCTIONS.

SCALE: N.T.S.

TYPICAL FIRESTOP FOR CABLES/CONDUIT THROUGH CONCRETE WALLS

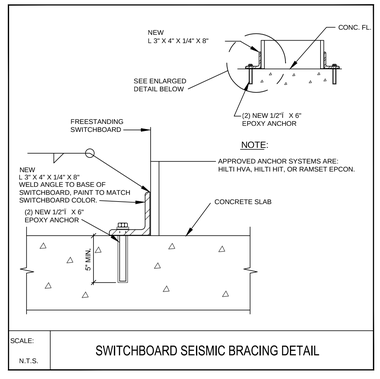

SCALE: N.T.S.

SWITCHBOARD SEISMIC BRACING DETAIL

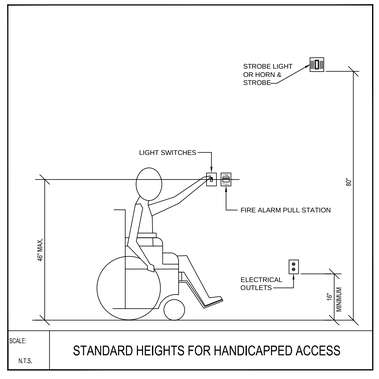

SCALE: N.T.S.

STANDARD HEIGHTS FOR HANDICAPPED ACCESS

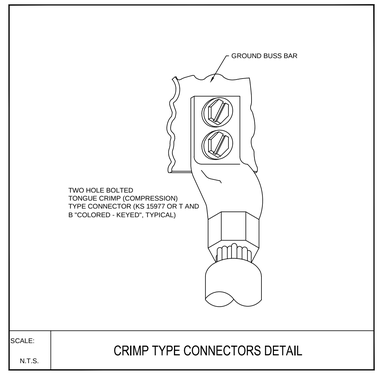

SCALE: N.T.S.

CRIMP TYPE CONNECTORS DETAIL

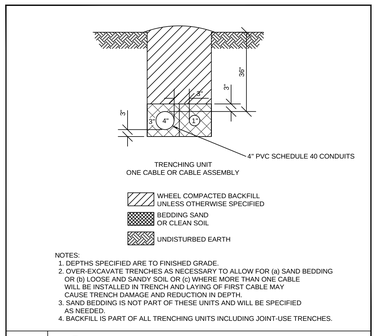

NOTES:
1. DEPTHS SPECIFIED ARE TO FINISHED GRADE.
2. OVER-EXCAVATE TRENCHES AS NECESSARY TO ALLOW FOR (a) SAND BEDDING OR (b) LOOSE AND SANDY SOIL OR (c) WHERE MORE THAN ONE CABLE WILL BE INSTALLED IN TRENCH AND LAYING OF FIRST CABLE MAY CAUSE TRENCH DAMAGE AND REDUCTION IN DEPTH.
3. SAND BEDDING IS NOT PART OF THESE UNITS AND WILL BE SPECIFIED AS NEEDED.
4. BACKFILL IS PART OF ALL TRENCHING UNITS INCLUDING JOINT-USE TRENCHES.

SCALE: N.T.S. (2 / EE005)

TRENCH DETAIL SECTION B-B

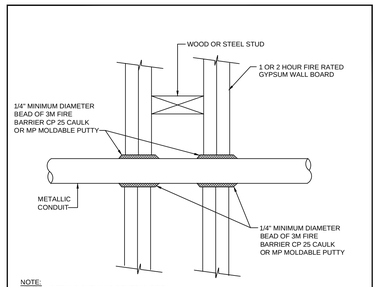

NOTE:
TYPICAL DETAILS SHOWING GENERAL FIRE STOPPING PROCEDURE. ACTUAL PROCEDURE DEPENDS UPON ANNULAR SPACE BETWEEN PIPE AND/OR INSULATION AND OPENING. FOLLOW MANUFACTURER'S INSTRUCTIONS.

SCALE: N.T.S.

FIRESTOP FOR METAL CONDUIT THROUGH GYPSUM WALL BOARD

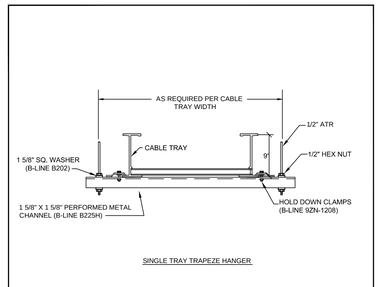

SCALE: N.T.S.

CABLE TRAY RACK DETAIL

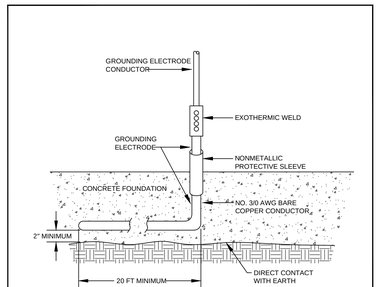

SCALE: N.T.S.

TYPICAL UFER GROUNDING DETAIL

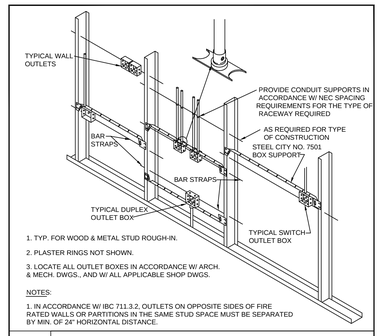

1. TYP. FOR WOOD & METAL STUD ROUGH-IN.
2. PLASTER RINGS NOT SHOWN.
3. LOCATE ALL OUTLET BOXES IN ACCORDANCE W/ ARCH. & MECH. DWGS., AND W/ ALL APPLICABLE SHOP DWGS.

NOTES:
1. IN ACCORDANCE W/ IBC 711.3.2, OUTLETS ON OPPOSITE SIDES OF FIRE RATED WALLS OR PARTITIONS IN THE SAME STUD SPACE MUST BE SEPARATED BY MIN. OF 24" HORIZONTAL DISTANCE.

SCALE: N.T.S.

TYPICAL ROUGH-IN REQUIREMENTS DETAIL

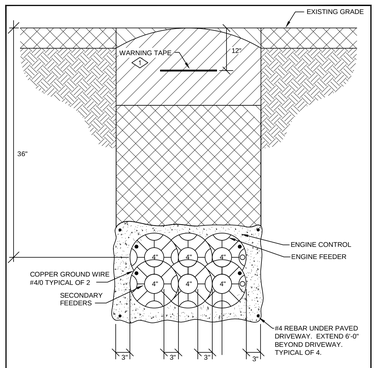

REFERENCE NOTES:

1. PROVIDE DETECTABLE WARNING TAPE FOR ALL UNDERGROUND DUCTS. TAPE SHALL BE ACID AND ALKALI RESISTANT POLYETHYLENE FILM 6" WIDE AND 4 MILS THICK MINIMUM WITH METALLIC CORE PROTECTED FROM CORROSION AND DETECTABLE UP TO 30" DEEP.

WHEEL COMPACTED BACKFILL UNLESS OTHERWISE SPECIFIED

BEDDING SAND OR CLEANSOIL

CONCRETE ENCLOSURE DIED RED

NOTES:
1. TIE DUCT BUNDELS WITH PLASTIC TAPE. DO NOT USE METAL WIRE.
2. ANCHOR DUCT BUNDLES DOWN WITH HOLD-DOWN BARS WITH #3 REBAR DRIVEN INTO GROUND BETWEEN DUCTS.
3. COMMUNICATION DUCTS TO BE 6" I.D. TYPE-1 PLASTIC DUCTS.
4. THE LAST 10' OF DUCT ENTERING MANHOLE OR BUILDING SHALL BE RIGID GALVANIZED CONDUIT WITH FLUSH BELL ENDS (O.Z. GEDNEY TYPE TNS).

SCALE: N.T.S. (1 / EE005)

DUCT BANK DETAIL SECTION A-A

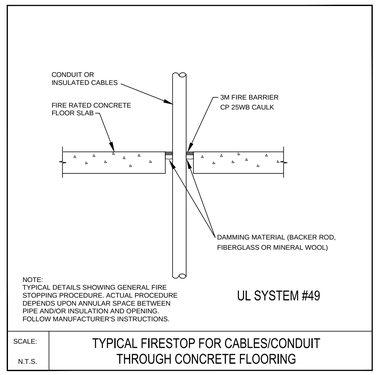

NOTE:
TYPICAL DETAILS SHOWING GENERAL FIRE STOPPING PROCEDURE. ACTUAL PROCEDURE DEPENDS UPON ANNULAR SPACE BETWEEN PIPE AND/OR INSULATION AND OPENING. FOLLOW MANUFACTURER'S INSTRUCTIONS.

SCALE: N.T.S.

TYPICAL FIRESTOP FOR CABLES/CONDUIT THROUGH CONCRETE FLOORING

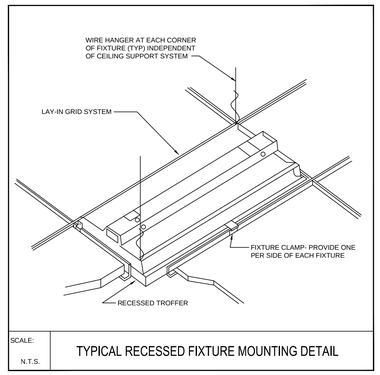

SCALE: N.T.S.

TYPICAL RECESSED FIXTURE MOUNTING DETAIL

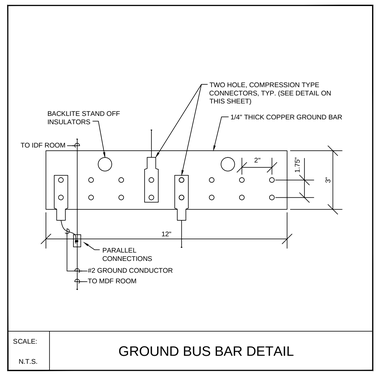

SCALE: N.T.S.

GROUND BUS BAR DETAIL

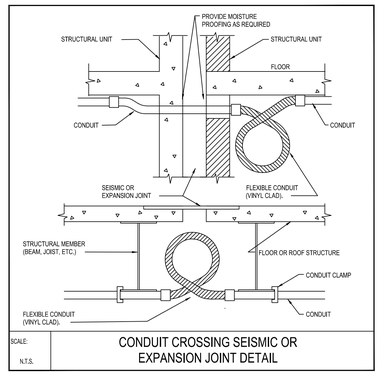

SCALE: N.T.S.

CONDUIT CROSSING SEISMIC OR EXPANSION JOINT DETAIL

MHTN ARCHITECTS
MHTN Architects, Inc.
420 East South Temple
Suite 100
Salt Lake City, Utah 84111
Telephone (801) 595-6700
Telefax (801) 595-6717
www.mhtn.com

E.C.E. LLC
Electrical Consulting Engineers
939 So. West Temple
Salt Lake City, Utah 84101
Telephone (801) 521-8007
Email Admin@eceonline.com

WEBER STATE UNIVERSITY
RESIDENTIAL LIFE PHASE II - BLDG.2
DFCM PROJECT NUMBER: 10176810

WEBER STATE UNIVERSITY
OGDEN, UTAH 84408

SEAL

MHTN PROJECT NO. 4007-2

DRAWN BY: CC CHECKED BY: JHM

ISSUED:

NO.	DATE	DESCRIPTION
01	17 MAY 2011	CONSTRUCTION DOCUMENTS

CONTRACTOR TO VERIFY DRAWINGS IN FIELD USE REFLECT LAST REVISION DATE.

NO.	DATE	DESCRIPTION

SHEET NAME
DETAILS

CONSTRUCTION DOCUMENTS
17 MAY 2011

SHEET NUMBER
EE005

C:\Users\richie\Documents\WEBER STATE BLDG2-CENTRAL1_richie.rvt
11/26/2010 1:33:01 PM

1 2 3 4 5

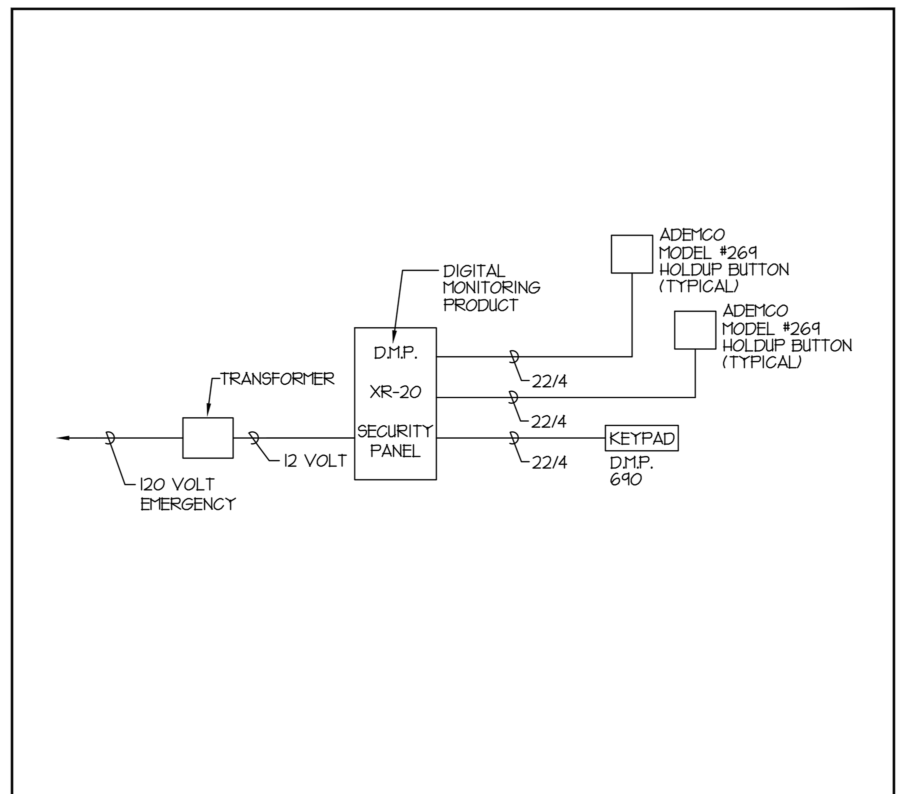

SCALE: N.T.S. — PANIC BUTTON – RISER DIAGRAM

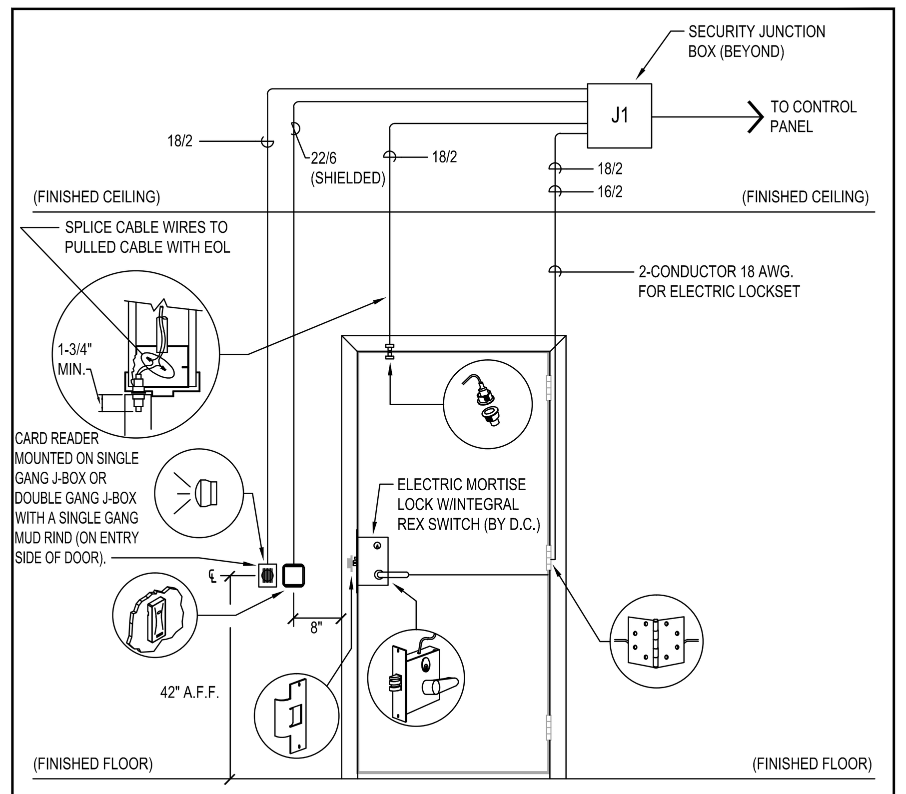

SCALE: N.T.S. — MORTISE LOCK CARD READER, REX AND ALARM — 1 / EE004

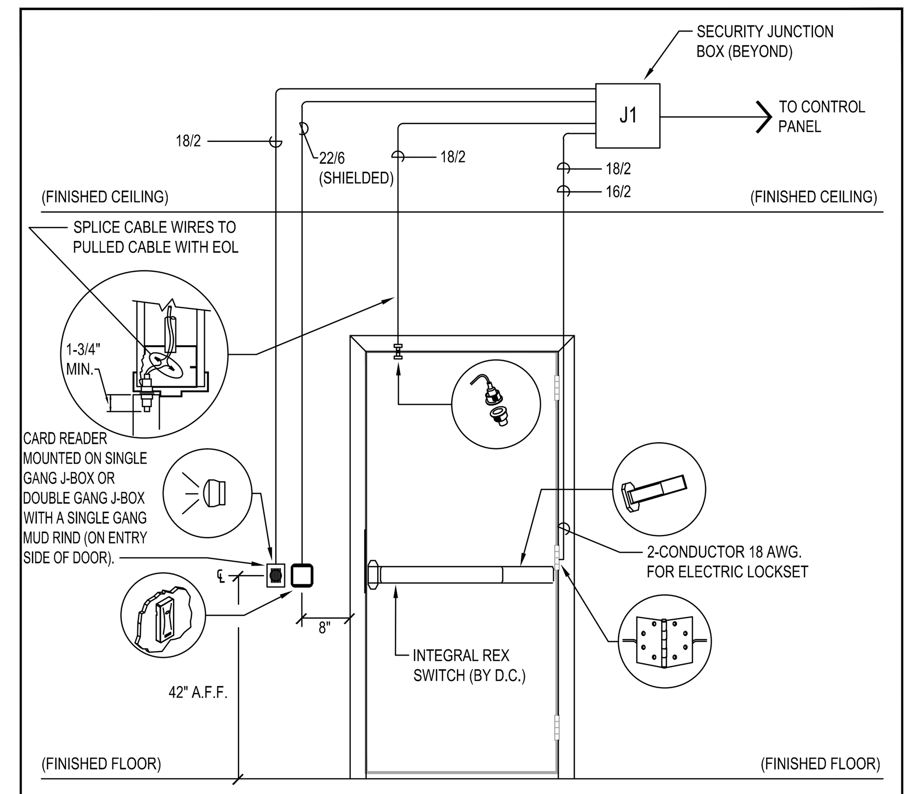

SCALE: N.T.S. — CRASH BAR CARD READER, REX AND ALARM — 2 / EE004

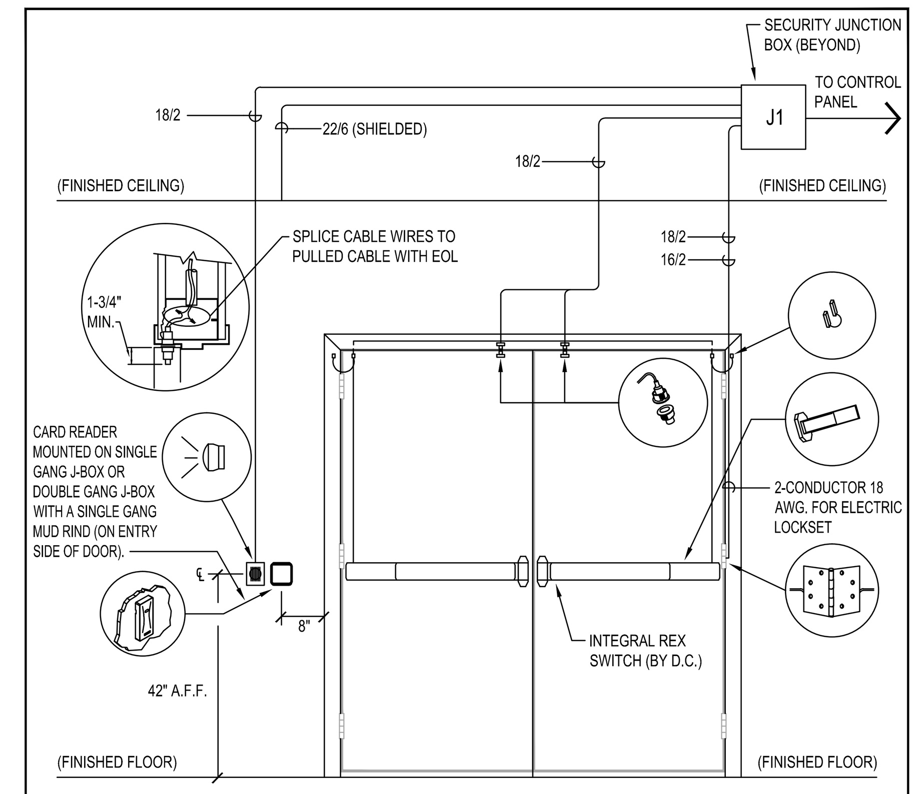

SCALE: N.T.S. — CRASH BAR CARD READER, REX AND ALARM — 6 / EE004

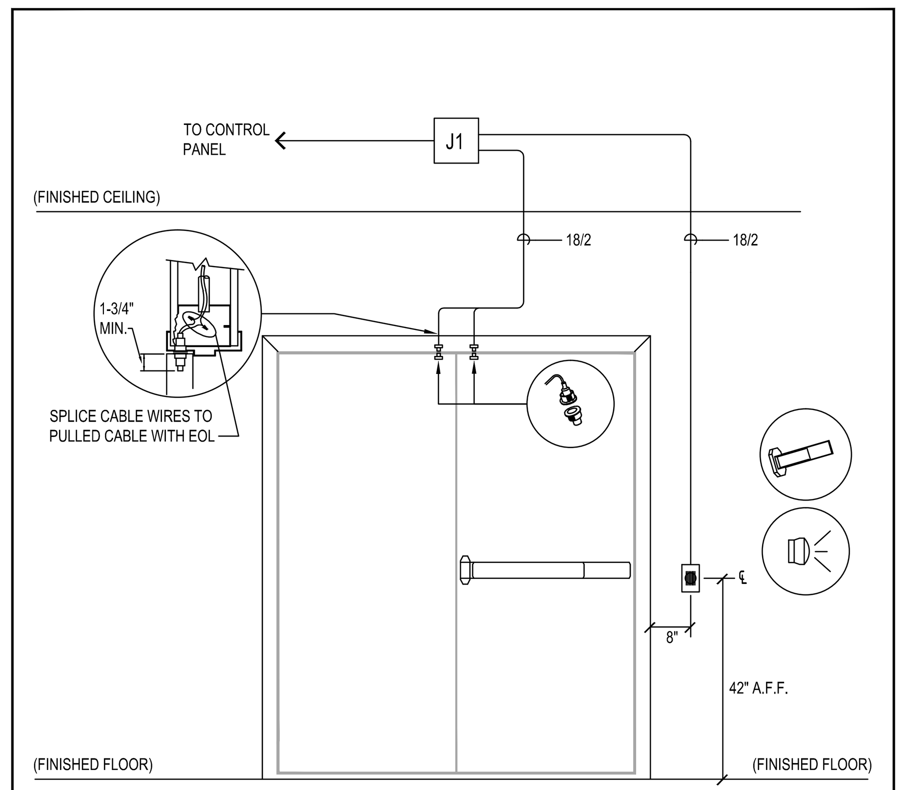

SCALE: N.T.S. — CRASH BAR WITH LOCAL DOOR ALARM — 4 / EE004

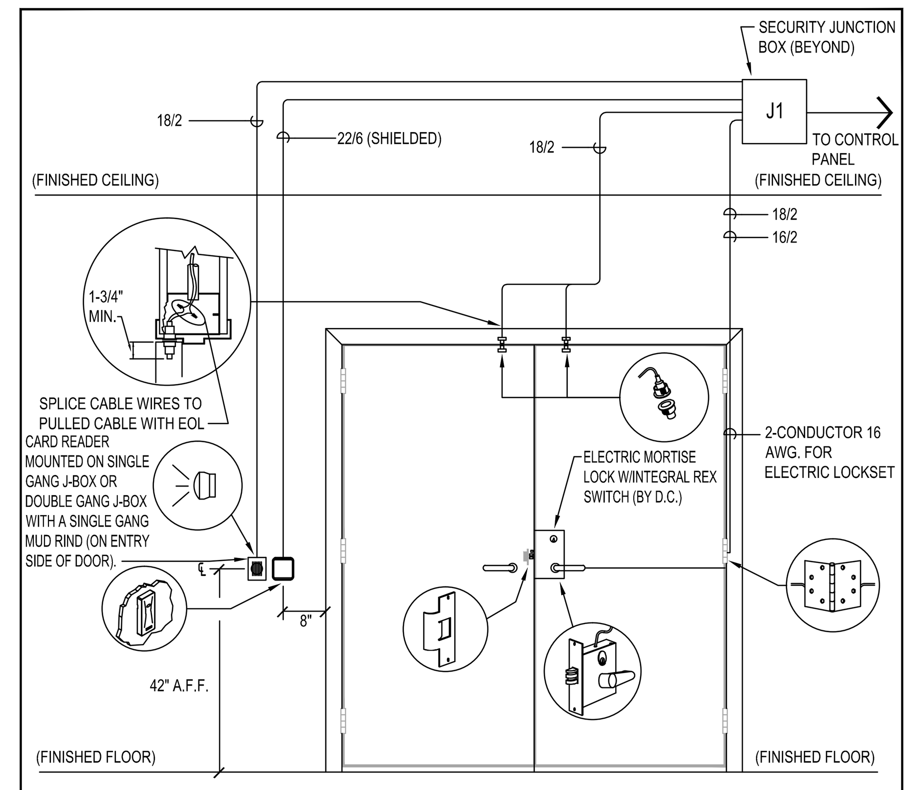

SCALE: N.T.S. — MORTISE LOCK CARD READER, REX AND ALARM — 5 / EE004

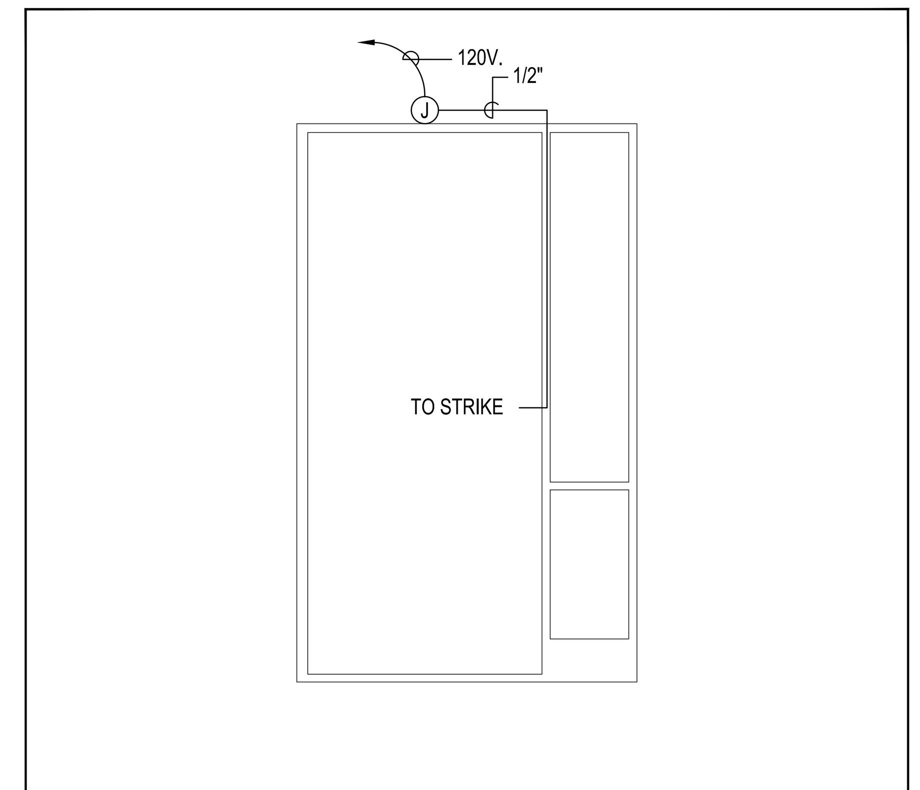

SCALE: N.T.S. — TYPICAL ADA SUITE / RESTROOM DOOR — 7 / EE004

MECHANICAL EQUIPMENT SCHEDULE

	NAME OF MECHANICAL EQUIPMENT	CONDENSING UNIT	SPLIT SYSTEM FAN COIL UNIT	DRYER BOOSTER FAN	COOLING TOWER	COOLING TOWER	UNIT HEATER	PUMP	PUMP	PUMP	PUMP	PUMP	PUMP	PUMP	PUMP	PUMP	PUMP	PUMP	CONDENSER WATER TREATMENT	COOLING TOWER FILTER
MOTOR DATA	EQUIPMENT NO.	CU-1	SSFC-1	DB-1 THRU DB-12	CT-1	CT-2	UH-1 UH-2 UH-3 UH-4	P-1	P-2	P-3	P-4	P-5	P-6	P-7	P-8	P-9	P-10	P-11-18	CWT-1	CTF-1
	RATING/WATTS	--	--	78W	10HP	10HP	5KW	5HP	5HP	3/4HP	20HP	20HP	15HP	15HP	10HP	10HP	1.5HP	1/30HP	480W	3HP
	VOLTAGE	208	208	120	208	208	208	208	208	208	208	208	208	208	208	208	208	120	120	208
	PHASE	1	1	1	3	3	3	3	3	3	3	3	3	3	3	3	3	1	1	3
	AMPS	25	1	.72	32.2	32.2	13.8	17.5	17.5	3.22	62.1	62.1	48.3	48.3	32.2	32.2	5.98	--	4	11
	WIRE SIZE	2#10	2#12	2#12	3#6	3#6	3#12	3#10	3#10	3#12	3#2	3#2	3#3	3#3	3#6	3#6	3#12	2#12	2#12	3#12
	GROUND WIRE	1#10	1#12	1#12	1#10	1#10	1#12	1#12	1#12	1#12	1#6	1#6	1#8	1#8	1#10	1#10	1#12	1#12	1#12	1#12
	CONDUIT SIZE	3/4"	3/4"	3/4"	1"	1"	3/4"	3/4"	3/4"	3/4"	1-1/4"	1-1/4"	1-1/4"	1-1/4"	1"	1"	3/4"	3/4"	3/4"	3/4"
	FUSE DISC. SW.	--	--	--	60	60	30	30	30	30	100	100	100	100	60	60	30	--	--	--
	TYPE RKI FUSES	--	--	--	45	45	20	20	20	5	80	80	70	70	45	45	8	--	--	--
	NON-FUSE SW.	--	30	--	--	--	--	--	--	--	--	--	--	--	--	--	--	--	--	--
	CAPACITOR (KVAR)	--	--	--	--	--	--	--	--	--	--	--	--	--	--	--	--	--	--	--
	NOTES	6	2,12	2	8	8	1	3	3	4	3	3	4	4	4	4	3	2	2	6

	NAME OF MECHANICAL EQUIPMENT	EXHAUST FAN	EXHAUST FAN	EXHAUST FAN	EXHAUST FAN	BOILER	MAKE-UP AIR UNIT	CABINET UNIT HEATER	TRANSFER FAN	SPLIT AC SYSTEM INDOOR	SPLIT AC SYSTEM INDOOR	SPLIT AC SYSTEM OUTDOOR	SPLIT AC SYSTEM OUTDOOR	WATER HEATER	WATER SOFTENER	GLYCOL MAKE UP UNIT
MOTOR DATA	EQUIPMENT NO.	EF-1,2, 3,4,10, 11,12, 13,15	EF-5	EF-6,8	EF-7,9, 14	B-1,2	MAU-1	CUH-1 & CUH-2	TF-1 TF-2 TF-3	FC-1,2, 3	FC-4,5, 6	CCU-1	CCU-2, 3,4	WH-1	WS-1	GMU-1
	RATING/WATTS	1/4HP	5HP	1/8HP	1/6HP	--	(2)5HP	1500W	48.3W							1/4HP
	VOLTAGE	120	208	120	120	120	208	120	120	208	208	208	208	120	120	120
	PHASE	1	3	1	1	1	3	1	1	1	1	3	1	1	1	1
	AMPS	5.8	17.5	3	4.4	13.6	155	12.5	.40	.38	15	28	28	--	--	5.8
	WIRE SIZE	2#12	3#10	2#12	2#12	2#12	3#2/0	2#12	2#12	2#12	2#12	3#8	2#8	2#12	2#12	2#12
	GROUND WIRE	1#12	1#12	1#12	1#12	1#12	1#6	1#12	1#12	1#12	1#12	1#10	1#10	1#12	1#12	1#12
	CONDUIT SIZE	3/4"	3/4"	3/4"	3/4"	3/4"	2"	3/4"	3/4"	3/4"	3/4"	3/4"	3/4"	3/4"	3/4"	3/4"
	FUSE DISC. SW.	--	30	--	--	--	--	--	--	--	--	--	--	--	--	--
	TYPE RKI FUSES	--	25	--	--	--	--	--	--	--	--	--	--	--	--	--
	NON-FUSE SW.	--	--	--	--	--	--	--	--	--	--	--	--	--	--	--
	CAPACITOR (KVAR)	--	--	--	--	--	--	--	--	--	--	--	--	--	--	--
	NOTES	6	5,8,9	2	6	2	5,6	2	2	2	2,12	6	6	2	--	11,13

	NAME OF MECHANICAL EQUIPMENT	HEAT PUMP	CIRCULATION PUMP	HEAT PUMP	CIRCULATION PUMP	HEAT PUMP	CIRCULATION PUMP	HEAT PUMP	CIRCULATION PUMP	HEAT PUMP	CIRCULATION PUMP	HEAT PUMP	CIRCULATION PUMP	HEAT PUMP	CIRCULATION PUMP	HEAT PUMP	CIRCULATION PUMP	HEAT PUMP	CIRCULATION PUMP	HEAT PUMP	CIRCULATION PUMP	DOMESTIC HOT WATER RECIRCULATION PUMP	SOLAR WATER PUMP	ELEVATOR
MOTOR DATA	EQUIPMENT NO.	HP-2,3,7,8,9,13, 14,15,24,26,32, 33,37,38,39,43, 44,45,53,55,60, 61,66,67,73,74, 84,88,110		HP-1,5,6,11,12, 16,17,25,30,31, 35,41,46,50,54, 56,63,65,68,70, 72,75,76,78,89, 90,91,94,96,98		HP-4,10,19,34, 40,51,62,69,81, 82,85,86,97, 100,108		HP-18,80,99		HP-20,52,101		HP-21,22,23,27, 28,36,42,47,57, 59,64,71,77,87, 92,95,102,103		HP-29,58,93, 104		HP-48,105		HP-49,79, 106,107		HP-83,109		DCP-1	SWP-1	EV-1
	RATING/WATTS	--	.08HP		.08HP		.08HP		.08HP		.08HP		.08HP		.08HP		.08HP		.08HP		.08HP	1/3HP	1.5HP	40HP
	VOLTAGE	208	120	208	120	208	120	208	120	208	120	208	120	208	120	208	120	208	120	208	120	120	208	208
	PHASE	1	1	1	1	1	1	1	1	1	1	1	1	1	1	1	1	1	1	1	1	1	3	3
	AMPS	8.60	--	11.70	--	31.70	--	7.00	--	20.30	--	14.90	--	16.20	--	21.50	--	33.10	--	26.80	--	7.2	5.98	125
	WIRE SIZE	2#12	2#12	2#12	2#12	2#6	2#12	2#12	2#12	2#8	2#12	2#10	2#12	2#10	2#12	2#8	2#12	2#8	2#12	2#8	2#12	2#12	3#12	3#4/0
	GROUND WIRE	1#12	1#12	1#12	1#12	1#10	1#12	1#12	1#12	1#10	1#12	1#12	1#12	1#10	1#12	1#10	1#12	1#10	1#12	1#10	1#12	1#12	1#12	1#4
	CONDUIT SIZE	3/4"	3/4"	3/4"	3/4"	3/4"	3/4"	3/4"	3/4"	3/4"	3/4"	3/4"	3/4"	3/4"	3/4"	3/4"	3/4"	3/4"	3/4"	3/4"	3/4"	3/4"	3/4"	2-1/2"
	FUSE DISC. SW.	--	--		--		--		--		--		--		--		--		--		--	--	--	200
	TYPE RKI FUSES	--	--		--		--		--		--		--		--		--		--		--	--	--	200
	NON-FUSE SW.	--	--		--		--		--		--		--		--		--		--		--	--	--	--
	CAPACITOR (KVAR)	--	--		--		--		--		--		--		--		--		--		--	--	--	--
	NOTES	6	2	6	2	6	2	6	2	6	2	6	2	6	2	6	2	6	2	6	2	2	1,11	10

NOTES:
1. STARTER IS FURNISHED WITH THE UNIT. PROVIDE SITE DISCONNECT.
2. PROVIDE THERMAL OVERLOAD SWITCH.
3. PROVIDE COMBINATION STARTER & DISCONNECT (HOA) W/ (2) N.O. & N.C. CONTACTS.
4. VFD IS PROVIDED BY MECHANICAL AND INSTALLED BY ELECTRICAL.
5. TIE-INTO FIRE ALARM SYSTEM FOR AUTOMATIC OPERATION.
6. UNIT IS FURNISHED WITH FACTORY DISCONNECT.
7. PROVIDE CIRCUIT BREAKER DISCONNECT WITH SHUNT TRIP. PROVIDE RELAY MONITORING FROM FIRE ALARM SYSTEM FOR SHUNT TRIP POWER SUPPLY.
8. UNIT IS FURNISHED WITH VFD. PROVIDE SITE FUSED DISCONNECT. NAME TAG FOR DISCONNECT TO INDICATE TO SHUT THE VFD PRIOR TO OPENING THE DISCONNECT.
9. INTERLOCK WITH KITCHEN EXHAUST HOOD.
10. PROVIDE SITE DISCONNECT. PROVIDE SHUNT TRIP CIRCUIT BREAKER WITH AUX CONTACTS FOR SHUNT TRIP POWER SUPPLY MONITORING.
11. PROVIDE AS ADD ALTERNATE NO.4.
12. TIE TO CIRCUIT FEEDING ASSOCIATED CONDENSING UNIT.
13. PROVIDE DUPLEX GFCI RECEPTACLE.

C:\Users\richie\Documents\WEBER-STATE-BLDG2-CENTRAL1_richie.rvt
11/26/2010 1:33:01 PM

MHTN
ARCHITECTS
MHTN Architects, Inc.
420 East South Temple
Suite 100
Salt Lake City, Utah 84111
Telephone (801) 595-6700
Telefax (801) 595-6717
www.mhtn.com

E.C.E. LLC
Electrical Consulting Engineers
939 So. West Temple
Salt Lake City, Utah 84101
Telephone (801) 521-8007
Email Admin@eceonline.com

WEBER STATE UNIVERSITY
RESIDENTIAL LIFE PHASE II - BLDG.2

DFCM PROJECT NUMBER: 10176810

WEBER STATE UNIVERSITY
OGDEN, UTAH 84408

SEAL

MHTN PROJECT NO. 4007-2
DRAWN BY: CC CHECKED BY: JHM

ISSUED:

NO.	DATE	DESCRIPTION
01	17 MAY 2011	CONSTRUCTION DOCUMENTS

CONTRACTOR TO VERIFY DRAWINGS IN FIELD USE REFLECT LAST REVISION DATE.

NO.	DATE	DESCRIPTION

SHEET NAME
DETAILS

CONSTRUCTION DOCUMENTS
17 MAY 2011

SHEET NUMBER
EE006

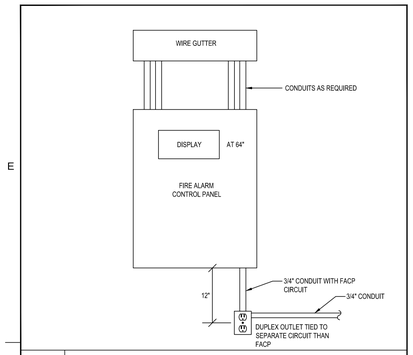

SCALE: N.T.S.

FIRE ALARM CONTROL PANEL ELEVATION DETAIL

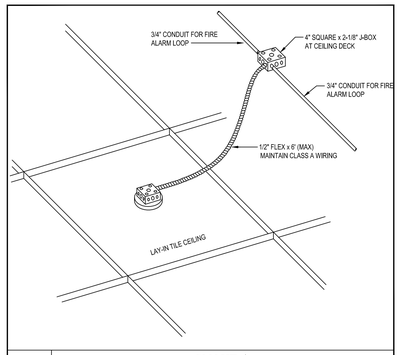

SCALE: N.T.S.

CONNECTIONS FOR SMOKE/HEAT DETECTORS IN LAY-IN CEILINGS

S S FIRE ALARM SMOKE DETECTORS WITH BUILT-IN HORN. THE DETECTORS SHALL BE IN THE SUITES, AND SHALL ALARM ALL DEVICES WITHIN THE SUITE AND ALARM THE FIRE ALARM CONTROL PANEL.

FIRE ALARM SPECIAL NOTES:

1. DO NOT EXCEED SIX (6) SPEAKER AND STROBES PER SINGLE CIRCUIT.
2. DO NOT EXCEED 500 FEET TOTAL WIRE LENGTH WITH #14.
3. DO NOT EXCEED 1000 FEET TOTAL WIRE LENGTH WITH #12.
4. ADDRESSABLE MONITOR MODULE(S) PROVIDED TO MONITOR ALL WATER FLOW, PRESSURE SWITCHES, TAMPER SWITCHES AND POST INDICATING VALVES ASSOCIATED WITH THE FIRE SPRINKLER SYSTEM. INSTALLING CONTRACTOR SHALL FIELD VERIFY EXACT MOUNTING, CIRCUITING AND PROGRAMMING REQUIREMENTS. FIELD VERIFY EXACT QUANTITY AND LOCATION(S).
5. ALL STROBES SHALL BE HIGH INTENSITY TO MEET ADA CODE REQUIREMENTS.
6. ALL FIRE ALARM J-BOXES SHALL BE PAINTED RED.
7. ALL FIRE ALARM CONDUIT AND COUPLINGS SHALL BE RED.
8. NEW AIR HANDLING SYSTEMS IN THE ENTIRE BUILDING SHALL BE TIED TO NEW FIRE ALARM CONTROL PANEL FOR FAN SHUT DOWN DURING FIRE ALARM IN THE BUILDING. PROVIDE ADDRESSABLE RELAYS, MODULES, ETC. FOR A COMPLETE INSTALLATION.
9. FIRE ALARM SMOKE DETECTORS TO BE MOUNTED IN THE CENTER OF CEILING TILES.
10. NO SMOKE DETECTORS SHALL BE INSTALLED WITHIN 3 FEET OF AN AIR CONDITIONING OUTLET.
11. STORE FIRE ALARM EQUIPMENT IN A CLEAN, DRY PLACE AND PROTECT FROM PHYSICAL DAMAGE.
12. FIRE ALARM BREAKER SHALL BE RED AND LABELED "FOR FIRE ALARM SYSTEM".

PROVIDE:

a. 80% OF SMOKE DETECTORS PER CIRCUIT
b. 80% OF ALL OTHER ADDRESSABLE DEVICES PER CIRCUIT
c. 64% OF ALL NOTIFICATION DEVICES
d. ALL DGP'S SHALL BE INSTALLED IN THE ELECTRICAL ROOM
e. ADDRESSABLE RELAY MODULE(S) AND MULTI-VOLTAGE CONTROL RELAY(S) PROVIDED FOR FIRE-SMOKE DAMPER CONTROL. INSTALLING CONTRACTOR SHALL FIELD VEIRFY EXACT MOUNTING, CIRCUITING AND PROGRAMMING REQUIREMENTS. FIELD VERIFY EXACT QUANTITY AND LOCATION(S) WITH MECHANICAL DIVISION.
f. ADDRESSABLE RELAY MODULE(S) AND MULTI-VOLTAGE CONTROL RELAY(S) PROVIDED FOR MAGNETIC DOOR HOLDER(S). INSTALLING CONTRACTOR SHALL FIELD VERIFY EXACT MOUNTING, CIRCUITING AND PROGRAMMING REQUIREMENTS. FIELD VERIFY EXACT QUANTITY AND LOCATION(S) WITH MECHANICAL DIVISION.
g. ADDRESSABLE RELAY MODULES PROVIDED FOR THE ELEVATOR RECALL AND SHUT DOWN. TIE TO ELEVATOR EQUIPMENT ROOM DETECTOR(S), HOISTWAY DETECTOR(S) AND LOBBY DETECTOR(S) TO INITIATE RECALL AND SHUT DOWN. FIELD VERIFY EXACT MOUNTING, CIRCUITING AND PROGRAMMING REQUIREMENTS.
h. COORDINATE THE NUMBER OF FIRE ALARM POWER SUPPLIES WITH THE EQUIPMENT SUPPLIER. FIELD VERIFY EXACT LOCATION OF FIRE ALARM POWER SUPPLIES. MONITOR MODULES TO BE INSTALLED INSIDE FIRE ALARM POWER SUPPLY CABINET.
i. PROVIDE 120 VOLTS EMERGENCY POWER TO ALL PANELS PER MANUFACTURER REQUIREMENT.
j. THE RISER IS FOR INFORMATION PURPOSES ONLY FIRE ALARM SUPPLIER TO PROVIDE DRAWING FOR APPROVAL.

NOTE:

1. IN AND OUT CABLES TO THE DEVICES MUST RUN IN A SEPARATE CONDUIT. 3/4" CONDUIT SHALL BE CONDUIT. 3/4" CONDUIT SHALL BE THE MINIMUM SIZE.
   EXCEPTION: A SINGLE 1/2" STEEL FLEXIBLE CONDUIT LESS THAN 6' LONG TO A SINGLE SMOKE DETECTOR, OR OTHER SINGLE ADDRESSABLE INITIATING DEVICE. THE ADDRESSABLE LOOP MAY FEED AND RETURN IN THE SAME 1/2" FLEXIBLE CONDUIT.
2. ALL FIRE ALARM DEVICES, CONTROL PANELS, REMOTE ANNUNCIATOR PANEL AND DATA GATHERING PANELS SHALL BE FURNISHED BY CONTRACTOR AND INSTALLED BY CONTRACTOR. NOTIFIER ONLY (BY FIRE PROTECTION SERVICES)
3. ALL PROGRAMMING SHALL BE DONE BY FIRE PROTECTION SERVICES.
4. ALL LABELING TO BE DONE BY CONTRACTOR.
5. ALL WIRING TO BE DONE BY CONTRACTOR.
6. PROVIDE A MONITOR MODULE FOR EACH POWER SUPPLY.

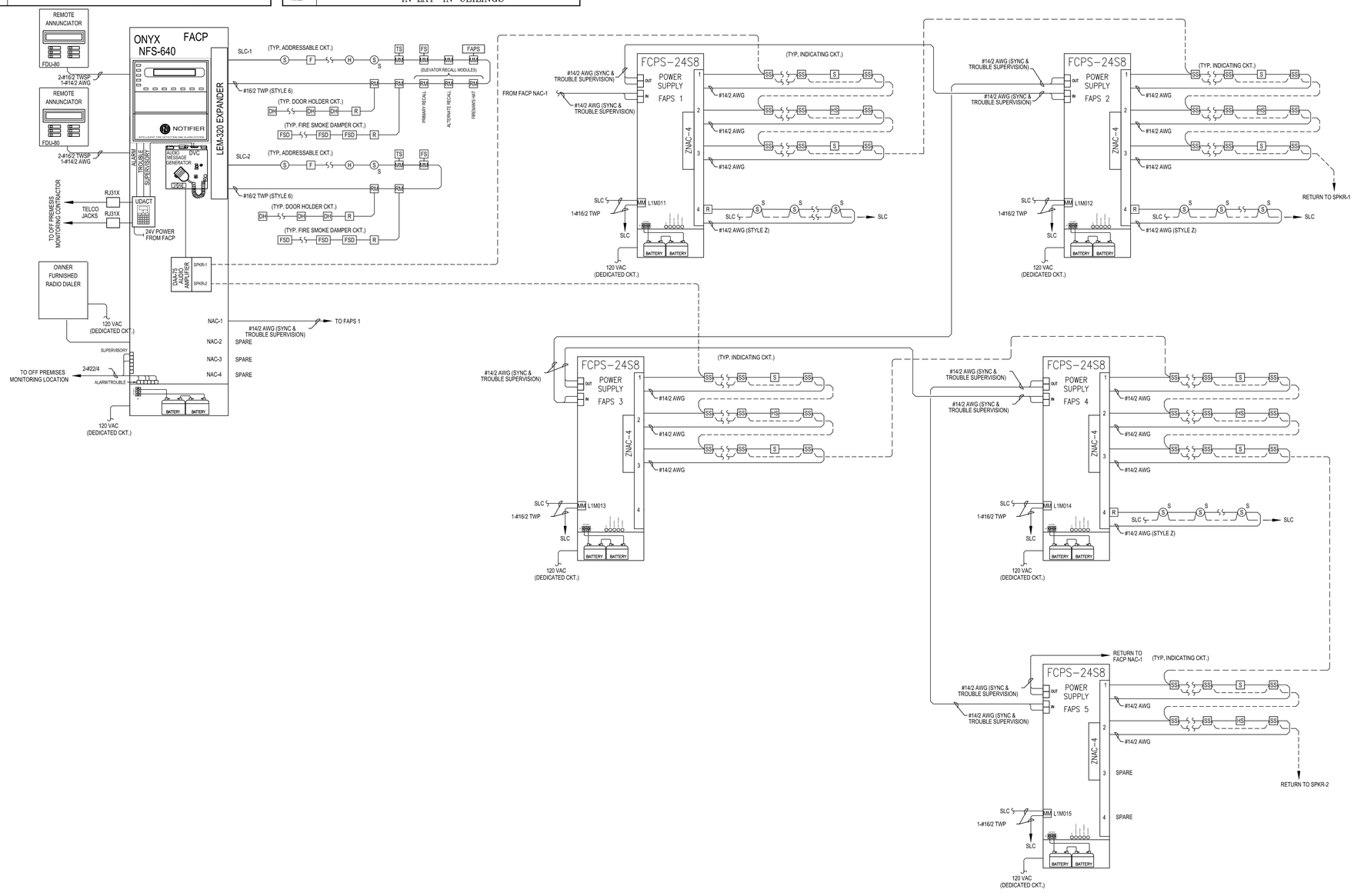

SCALE: N.T.S.

TYPICAL FIRE ALARM RISER DIAGRAM

MHTN ARCHITECTS
MHTN Architects, Inc.
420 East South Temple
Suite 100
Salt Lake City, Utah 84111
Telephone (801) 595-6700
Telefax (801) 595-6717
www.mhtn.com

E.C.E. LLC
Electrical Consulting Engineers
939 So. West Temple
Salt Lake City, Utah 84101
Telephone (801) 521-8007
Email Admin@eceonline.com

WEBER STATE UNIVERSITY
RESIDENTIAL LIFE PHASE II - BLDG.2
DFCM PROJECT NUMBER: 10176810

WEBER STATE UNIVERSITY
OGDEN, UTAH 84408

SEAL

MHTN PROJECT NO. 4007-2

DRAWN BY: CC CHECKED BY: JHM

ISSUED:

NO.	DATE	DESCRIPTION
01	17 MAY 2011	CONSTRUCTION DOCUMENTS

CONTRACTOR TO VERIFY DRAWINGS IN FIELD USE REFLECT LAST REVISION DATE.

NO.	DATE	DESCRIPTION

SHEET NAME

FIRE ALARM RISER DIAGRAM

CONSTRUCTION DOCUMENTS
17 MAY 2011

SHEET NUMBER

EE007

C:\Users\richie\Documents\WEBER STATE-BLDG2-CENTRAL1_richie.rvt
11/26/2010 1:33:01 PM

Branch Panel: 1PC

Location: MECH/ELEC 100F
Supply From: MDS2
Mounting: Surface
Enclosure: Type 1
Volts: 120/208 Wye
Phases: 3
Wires: 4
A.I.C. Rating: 22000
Mains Type:
Mains Rating: 100 A

Notes:

CKT	Circuit Description	Trip	Poles	A		B		C		Poles	Trip	Circuit Description	CKT
1	Outlet Space 51	20 A	1	360	329					1	20 A	Room 54, 53, 51, 50, 52	2
3	Outlet Space 52	20 A	1			540	1217			2	20 A	HP-5 MECH/ELEC 100F	4
5	Outlet Space 52	20 A	1					540	1217	--	--	--	6
7	Outlet Room 51, 54	20 A	1	540	540					1	20 A	Outlet Space 50	8
9	Outlet Space 50	20 A	1			540	0 VA			1	20 A	Spare	10
11	Spare	20 A	1					0 VA	0 VA	1	20 A	Spare	12
13	Spare	20 A	1	0 VA	0 VA					1	20 A	Spare	14
15	Spare	20 A	1			0 VA	0 VA			1	20 A	Spare	16
17	Spare	20 A	1					0 VA	0 VA	1	20 A	Spare	18
19	Space	--	--	0 VA	0 VA					--	--	Space	20
21	Space	--	--			0 VA	0 VA			--	--	Space	22
23	Space							0 VA	0 VA	--	--	Space	24
		Total Load:		1788 VA		2297 VA		1757 VA					
		Total Amps:		15 A		19 A		15 A					

Legend:

Load Classification	Connected Load	Demand Factor	Estimated Demand	Panel Totals	
HVAC	2434 VA	100.00%	2434 VA		
Lighting	348 VA	100.00%	348 VA	**Total Conn. Load:**	5842 VA
Other	0 VA	0.00%	0 VA	**Total Est. Demand:**	5842 VA
Outlet	3060 VA	100.00%	3060 VA	**Total Conn.:**	16 A
				Total Est. Demand:	16 A

Notes:
PROVIDE FULLY HINGED COVER PLATE. PROVIDE AFCI BREAKERS FOR DORM CIRCUITS.

Branch Panel: 1PB

Location: MECH/ELEC 100F
Supply From: MDS2
Mounting: Surface
Enclosure: Type 1
Volts: 120/208 Wye
Phases: 3
Wires: 4
A.I.C. Rating: 22000
Mains Type:
Mains Rating: 100 A

Notes:

CKT	Circuit Description	Trip	Poles	A		B		C		Poles	Trip	Circuit Description	CKT
1	Spare	20 A	1	0 VA	540					1	20 A	Outlet Space 55	2
3	Outlet Space 55	20 A	1			540	540			1	20 A	Outlet Space 57	4
5	Outlet Space 57	20 A	1					540	540	1	20 A	Outlet Room 56, 58	6
7	Outlet Space 56	20 A	1	360	395					1	20 A	Room 58, 59, 56, 55, 57	8
9	HP-1 MECH 208	20 A	2			1217	0 VA			1	20 A	Spare	10
11	--	--	--					1217	0 VA	1	20 A	Spare	12
13	Spare	20 A	1	0 VA	0 VA					1	20 A	Spare	14
15	Spare	20 A	1			0 VA	0 VA			1	20 A	Spare	16
17	Spare	20 A	1					0 VA	0 VA	1	20 A	Spare	18
19	Space	--	--	0 VA	0 VA					--	--	Space	20
21	Space	--	--			0 VA	0 VA			--	--	Space	22
23	Space							0 VA	0 VA	--	--	Space	24
		Total Load:		1295 VA		2297 VA		2297 VA					
		Total Amps:		11 A		19 A		19 A					

Legend:

Load Classification	Connected Load	Demand Factor	Estimated Demand	Panel Totals	
HVAC	2434 VA	100.00%	2434 VA		
Lighting	395 VA	100.00%	395 VA	**Total Conn. Load:**	5889 VA
Other	0 VA	0.00%	0 VA	**Total Est. Demand:**	5889 VA
Outlet	3060 VA	100.00%	3060 VA	**Total Conn.:**	16 A
				Total Est. Demand:	16 A

Notes:
PROVIDE FULLY HINGED COVER PLATE. PROVIDE AFCI BREAKERS FOR DORM CIRCUITS.

Branch Panel: 1PA

Location: MECH/ELEC 100F
Supply From: MDS2
Mounting: Surface
Enclosure: Type 1
Volts: 120/208 Wye
Phases: 3
Wires: 4
A.I.C. Rating: 22000
Mains Type:
Mains Rating: 100 A
MCB Rating:

Notes:

CKT	Circuit Description	Trip	Poles	A		B		C		Poles	Trip	Circuit Description	CKT
1	Outlet IDF 100H	20 A	1	360	540					1	20 A	Outlet Room 63, 61	2
3	Outlet Space 63	20 A	1			360	540			1	20 A	Outlet Space 64	4
5	Outlet Space 64	20 A	1					540	540	1	20 A	Outlet Space 65	6
7	Outlet Space 65	20 A	1	540	395					1	20 A	Room 62, 61, 63, 64, 65	8
9	HP-2 MECH 208	20 A	2			894	540			1	20 A	Outlet IDF 100H	10
11	--	--	--					894	0 VA	1	20 A	Spare	12
13	Spare	20 A	1	0 VA	0 VA					1	20 A	Spare	14
15	Spare	20 A	1			0 VA	0 VA			1	20 A	Spare	16
17	Spare	20 A	1					0 VA	0 VA	1	20 A	Spare	18
19	Space	--	--	0 VA	0 VA					--	--	Space	20
21	Space	--	--			0 VA	0 VA			--	--	Space	22
23	Space							0 VA	0 VA	--	--	Space	24
		Total Load:		1835 VA		2334 VA		1974 VA					
		Total Amps:		15 A		19 A		16 A					

Legend:

Load Classification	Connected Load	Demand Factor	Estimated Demand	Panel Totals	
HVAC	1789 VA	100.00%	1789 VA		
Lighting	395 VA	100.00%	395 VA	**Total Conn. Load:**	6144 VA
Other	0 VA	0.00%	0 VA	**Total Est. Demand:**	6144 VA
Outlet	3960 VA	100.00%	3960 VA	**Total Conn.:**	17 A
				Total Est. Demand:	17 A

Notes:
PROVIDE FULLY HINGED COVER PLATE. PROVIDE AFCI BREAKERS FOR DORM CIRCUITS.

Branch Panel: 1PF

Location: MECH/ELEC 100G
Supply From: MDS2
Mounting: Surface
Enclosure: Type 1
Volts: 120/208 Wye
Phases: 3
Wires: 4
A.I.C. Rating: 22000
Mains Type:
Mains Rating: 100 A
MCB Rating:

Notes:

CKT	Circuit Description	Trip	Poles	A		B		C		Poles	Trip	Circuit Description	CKT
1	Spare	20 A	1	0 VA	540					1	20 A	Outlet Space 67	2
3	Outlet Space 67	20 A	1			540	540			1	20 A	Outlet Space 68	4
5	Outlet Space 68	20 A	1					540	540	1	20 A	Outlet Room 69, 70	6
7	Outlet Space 69	20 A	1	360	395					1	20 A	Room 69, 71, 70, 67, 68	8
9	HP-7 MECH 252	20 A	2			894	0 VA			1	20 A	Spare	10
11	--	--	--					894	0 VA	1	20 A	Spare	12
13	Spare	20 A	1	0 VA	0 VA					1	20 A	Spare	14
15	Spare	20 A	1			0 VA	0 VA			1	20 A	Spare	16
17	Spare	20 A	1					0 VA	0 VA	1	20 A	Spare	18
19	Space	--	--	0 VA	0 VA					--	--	Space	20
21	Space	--	--			0 VA	0 VA			--	--	Space	22
23	Space	--	--					0 VA	0 VA	--	--	Space	24
		Total Load:		1295 VA		1974 VA		1974 VA					
		Total Amps:		11 A		16 A		16 A					

Legend:

Load Classification	Connected Load	Demand Factor	Estimated Demand	Panel Totals	
HVAC	1789 VA	100.00%	1789 VA		
Lighting	395 VA	100.00%	395 VA	**Total Conn. Load:**	5244 VA
Other	0 VA	0.00%	0 VA	**Total Est. Demand:**	5244 VA
Outlet	3060 VA	100.00%	3060 VA	**Total Conn.:**	15 A
				Total Est. Demand:	15 A

Notes:
PROVIDE FULLY HINGED COVER PLATE. PROVIDE AFCI BREAKER FOR DORM CIRCUITS.

Branch Panel: 1PE

Location: MECH/ELEC 100G
Supply From: MDS2
Mounting: Surface
Enclosure: Type 1
Volts: 120/208 Wye
Phases: 3
Wires: 4
A.I.C. Rating: 22000
Mains Type:
Mains Rating: 100 A
MCB Rating:

Notes:

CKT	Circuit Description	Trip	Poles	A		B		C		Poles	Trip	Circuit Description	CKT
1	Spare	20 A	1	0 VA	540					1	20 A	Outlet Room 75, 73	2
3	Outlet Space 75	20 A	1			360	540			1	20 A	Outlet Space 76	4
5	Outlet Space 76	20 A	1					540	540	1	20 A	Outlet Space 77	6
7	Outlet Space 77	20 A	1	540	395					1	20 A	Room 75, 73, 74, 76, 77	8
9	HP-8 MECH 252	20 A	2			894	0 VA			1	20 A	Spare	10
11	--	--	--					894	0 VA	1	20 A	Spare	12
13	Spare	20 A	1	0 VA	0 VA					1	20 A	Spare	14
15	Spare	20 A	1			0 VA	0 VA			1	20 A	Spare	16
17	Spare	20 A	1					0 VA	0 VA	1	20 A	Spare	18
19	Space	--	--	0 VA	0 VA					--	--	Space	20
21	Space	--	--			0 VA	0 VA			--	--	Space	22
23	Space	--	--					0 VA	0 VA	--	--	Space	24
		Total Load:		1475 VA		1794 VA		1974 VA					
		Total Amps:		12 A		15 A		16 A					

Legend:

Load Classification	Connected Load	Demand Factor	Estimated Demand	Panel Totals	
HVAC	1789 VA	100.00%	1789 VA		
Lighting	395 VA	100.00%	395 VA	**Total Conn. Load:**	5244 VA
Other	0 VA	0.00%	0 VA	**Total Est. Demand:**	5244 VA
Outlet	3060 VA	100.00%	3060 VA	**Total Conn.:**	15 A
				Total Est. Demand:	15 A

Notes:
PROVIDE FULLY HINGED COVER PLATE. PROVIDE AFCI BREAKERS FOR DORM CIRCUITS.

Branch Panel: 1PD

Location: MECH/ELEC 100F
Supply From: MDS2
Mounting: Surface
Enclosure: Type 1
Volts: 120/208 Wye
Phases: 3
Wires: 4
A.I.C. Rating: 22000
Mains Type:
Mains Rating: 100 A
MCB Rating:

Notes:

CKT	Circuit Description	Trip	Poles	A		B		C		Poles	Trip	Circuit Description	CKT
1	Outlet Space 43	20 A	1	540	540					1	20 A	Outlet Space 43	2
3	Outlet Space 48	20 A	1			360	540			1	20 A	Outlet Room 47, 48	4
5	Outlet Space 44	20 A	1					540	540	1	20 A	Outlet	6
7	HP-3 MECH/ELEC 100F	20 A	2	8904	370					1	20 A	Room 47, 46, 48, 43, 44	8
9	--	--	--			8904	0 VA			1	20 A	Spare	10
11	Spare	20 A	1					0 VA	0 VA	1	20 A	Spare	12
13	Spare	20 A	1	0 VA	0 VA					1	20 A	Spare	14
15	Spare	20 A	1			0 VA	0 VA			1	20 A	Spare	16
17	Spare	20 A	1					0 VA	0 VA	1	20 A	Spare	18
19	Space	--	--	0 VA	0 VA					--	--	Space	20
21	Space	--	--			0 VA	0 VA			--	--	Space	22
23	Space	--	--					0 VA	0 VA	--	--	Space	24
		Total Load:		10373 VA		9804 VA		1080 VA					
		Total Amps:		86 A		82 A		9 A					

Legend:

Load Classification	Connected Load	Demand Factor	Estimated Demand	Panel Totals	
HVAC	17808 VA	100.00%	17808 VA		
Lighting	389 VA	100.00%	389 VA	**Total Conn. Load:**	21257 VA
Other	0 VA	0.00%	0 VA	**Total Est. Demand:**	21257 VA
Outlet	3060 VA	100.00%	3060 VA	**Total Conn.:**	59 A
				Total Est. Demand:	59 A

Notes:
PROVIDE FULLY HINGED COVER PLATE. PROVIDE AFCI BREAKERS FOR DORM CIRCUIT.

Branch Panel: 1PI

Location: MECH/ELEC 100K
Supply From: MDS2
Mounting: Surface
Enclosure: Type 1
Volts: 120/208 Wye
Phases: 3
Wires: 4
A.I.C. Rating: 22000
Mains Type:
Mains Rating: 100 A
MCB Rating:

Notes:

CKT	Circuit Description	Trip	Poles	A		B		C		Poles	Trip	Circuit Description	CKT
1	Outlet Space 99	20 A	1	360	540					1	20 A	Outlet Room 98, 99	2
3	Outlet Space 101	20 A	1			540	540			1	20 A	Outlet Space 101	4
5	Outlet Space 102	20 A	1					540	540	1	20 A	Outlet Space 102	6
7	HP-14 MECH 256	20 A	2	894	395					1	20 A	Room 99, 98, 97, 101, 102	8
9	--	--	--			894	0 VA			1	20 A	Spare	10
11	Spare	20 A	1					0 VA	0 VA	1	20 A	Spare	12
13	Spare	20 A	1	0 VA	0 VA					1	20 A	Spare	14
15	Spare	20 A	1			0 VA	0 VA			1	20 A	Spare	16
17	Spare	20 A	1					0 VA	0 VA	1	20 A	Spare	18
19	Space	--	--	0 VA	0 VA					--	--	Space	20
21	Space	--	--			0 VA	0 VA			--	--	Space	22
23	Space	--	--					0 VA	0 VA	--	--	Space	24
		Total Load:		2189 VA		1974 VA		1080 VA					
		Total Amps:		18 A		16 A		9 A					

Legend:

Load Classification	Connected Load	Demand Factor	Estimated Demand	Panel Totals	
HVAC	1789 VA	100.00%	1789 VA		
Lighting	395 VA	100.00%	395 VA	**Total Conn. Load:**	5244 VA
Other	0 VA	0.00%	0 VA	**Total Est. Demand:**	5244 VA
Outlet	3060 VA	100.00%	3060 VA	**Total Conn.:**	15 A
				Total Est. Demand:	15 A

Notes:
PROVIDE FULLY HINGED COVER PLATE. PROVIDE AFCI BREAKERS FOR DORM CIRCUITS.

Branch Panel: 1PH

Location: BEDROOM 117C
Supply From: MDS2
Mounting: Surface
Enclosure: Type 1
Volts: 120/208 Wye
Phases: 3
Wires: 4
A.I.C. Rating: 22000
Mains Type:
Mains Rating: 100 A
MCB Rating:

Notes:

CKT	Circuit Description	Trip	Poles	A		B		C		Poles	Trip	Circuit Description	CKT
1	Outlet Space 84	20 A	1	540	540					1	20 A	Outlet Space 84	2
3	Outlet Space 79	20 A	1			540	540			1	20 A	Outlet Space 79	4
5	Outlet Space 83	20 A	1					360	540	1	20 A	Outlet Room 83, 82	6
7	HP-9 MECH/ELEC 100G	20 A	2	728	370					1	20 A	Room 83, 82, 81, 79, 84	8
9	--	--	--			728	0 VA			1	20 A	Spare	10
11	Spare	20 A	1					0 VA	0 VA	1	20 A	Spare	12
13	Spare	20 A	1	0 VA	0 VA					1	20 A	Spare	14
15	Spare	20 A	1			0 VA	0 VA			1	20 A	Spare	16
17	Spare	20 A	1					0 VA	0 VA	1	20 A	Spare	18
19	Space	--	--	0 VA	0 VA					--	--	Space	20
21	Space	--	--			0 VA	0 VA			--	--	Space	22
23	Space	--	--					0 VA	0 VA	--	--	Space	24
		Total Load:		2197 VA		1808 VA		900 VA					
		Total Amps:		18 A		15 A		8 A					

Legend:

Load Classification	Connected Load	Demand Factor	Estimated Demand	Panel Totals	
HVAC	1456 VA	100.00%	1456 VA		
Lighting	389 VA	100.00%	389 VA	**Total Conn. Load:**	4905 VA
Other	0 VA	0.00%	0 VA	**Total Est. Demand:**	4905 VA
Outlet	3060 VA	100.00%	3060 VA	**Total Conn.:**	14 A
				Total Est. Demand:	14 A

Notes:
PROVIDE FULLY HINGED COVER PLATE. PROVIDE AFCI BREAKERS FOR DORM CIRCUITS.

Branch Panel: 1PG

Location: MECH/ELEC 100G
Supply From: MDS2
Mounting: Surface
Enclosure: Type 1
Volts: 120/208 Wye
Phases: 3
Wires: 4
A.I.C. Rating: 22000
Mains Type:
Mains Rating: 100 A
MCB Rating:

Notes:

CKT	Circuit Description	Trip	Poles	A		B		C		Poles	Trip	Circuit Description	CKT
1	Outlet Space 89	20 A	1	360	540					1	20 A	Outlet Room 89, 86	2
3	Outlet Space 88	20 A	1			540	540			1	20 A	Outlet Space 88	4
5	Outlet Space 90	20 A	1					540	540	1	20 A	Outlet Space 90	6
7	HP-11 MECH/ELEC 100G	20 A	2	1217	329					1	20 A	Room 89, 87, 86, 90, 88	8
9	--	--	--			1217	0 VA			1	20 A	Spare	10
11	Spare	20 A	1					0 VA	0 VA	1	20 A	Spare	12
13	Spare	20 A	1	0 VA	0 VA					1	20 A	Spare	14
15	Spare	20 A	1			0 VA	0 VA			1	20 A	Spare	16
17	Spare	20 A	1					0 VA	0 VA	1	20 A	Spare	18
19	Space	--	--	0 VA	0 VA					--	--	Space	20
21	Space	--	--			0 VA	0 VA			--	--	Space	22
23	Space	--	--					0 VA	0 VA	--	--	Space	24
		Total Load:		2465 VA		2297 VA		1080 VA					
		Total Amps:		21 A		19 A		9 A					

Legend:

Load Classification	Connected Load	Demand Factor	Estimated Demand	Panel Totals	
HVAC	2434 VA	100.00%	2434 VA		
Lighting	348 VA	100.00%	348 VA	**Total Conn. Load:**	5842 VA
Other	0 VA	0.00%	0 VA	**Total Est. Demand:**	5842 VA
Outlet	3060 VA	100.00%	3060 VA	**Total Conn.:**	16 A
				Total Est. Demand:	16 A

Notes:
PROVIDE FULLY HINGED COVER PLATE. PROVIDE AFCI BREAKERS FOR DORM CIRCUITS.

MHTN ARCHITECTS
MHTN Architects, Inc.
420 East South Temple
Suite 100
Salt Lake City, Utah 84111
Telephone (801) 595-6700
Telefax (801) 595-6717
www.mhtn.com

ECE, Inc. Consulting Engineers
939 S. West Temple
Salt Lake City, Utah 84101
Phone 801.521.8007
e-mail admin@eceonline.com

WEBER STATE UNIVERSITY
RESIDENTIAL LIFE PHASE II - BLDG.2

DFCM PROJECT NUMBER: 10176810

WEBER STATE UNIVERSITY
OGDEN, UTAH 84408

SEAL

MHTN PROJECT NO. 4007-2

DRAWN BY: Author CHECKED BY: Checker

ISSUED:

NO.	DATE	DESCRIPTION
01	17 MAY 2011	CONSTRUCTION DOCUMENTS

CONTRACTOR TO VERIFY DRAWINGS IN FIELD USE REFLECT LAST REVISION DATE.

NO.	DATE	DESCRIPTION

SHEET NAME
PANEL SCHEDULES 1ST FLOOR
CONSTRUCTION DOCUMENTS
17 MAY 2011

SHEET NUMBER
EE008

C:\Users\riche\Documents\4007-WEBER STATE BLDG2-CENTRAL-1_richie.rvt
5/17/2011 12:07:32 PM

Branch Panel: 1PL

Location: MECH/ELEC 100K
Supply From: MDS2
Mounting: Surface
Enclosure: Type 1
Volts: 120/208 Wye
Phases: 3
Wires: 4
A.I.C. Rating: 22000
Mains Type:
Mains Rating: 100 A
MCB Rating:

Notes:

CKT	Circuit Description	Trip	Poles	A		B		C		Poles	Trip	Circuit Description	CKT
1	Outlet Space 7	20 A	1	540	540					1	20 A	Outlet Space 108	2
3	Outlet Space 107	20 A	1			360	360			1	20 A	Outlet Room 106, 107	4
5	Outlet Space 103	20 A	1					540	540	1	20 A	Outlet Space 103	6
7	HP-15 MECH/ELEC 100K	20 A	2	894	329					1	20 A	Room 107, 106, 105, 7, 103	8
9	--	--	--			894	0 VA			1	20 A	Spare	10
11	Spare	20 A	1					0 VA	0 VA	1	20 A	Spare	12
13	Spare	20 A	1	0 VA	0 VA					1	20 A	Spare	14
15	Spare	20 A	1			0 VA	0 VA			1	20 A	Spare	16
17	Spare	20 A	1					0 VA	0 VA	1	20 A	Spare	18
19	Space	--	--	0 VA	0 VA					--	--	Space	20
21	Space	--	--			0 VA	0 VA			--	--	Space	22
23	Space							0 VA	0 VA	--	--	Space	24
		Total Load:		2322 VA		1614 VA		1080 VA					
		Total Amps:		19 A		13 A		9 A					

Legend:

Load Classification	Connected Load	Demand Factor	Estimated Demand	Panel Totals	
HVAC	1789 VA	100.00%	1789 VA		
Lighting	329 VA	100.00%	329 VA	**Total Conn. Load:**	4998 VA
Other	0 VA	0.00%	0 VA	**Total Est. Demand:**	4998 VA
Outlet	2880 VA	100.00%	2880 VA	**Total Conn.:**	14 A
				Total Est. Demand:	14 A

Notes:
PROVIDE FULLY HINGED COVER PLATE. PROVIDE AFCI BREAKERS FOR DORM CIRCUITS.

Branch Panel: 1PK

Location: MECH/ELEC 100K
Supply From: MDS2
Mounting: Surface
Enclosure: Type 1
Volts: 120/208 Wye
Phases: 3
Wires: 4
A.I.C. Rating: 22000
Mains Type:
Mains Rating: 100 A
MCB Rating:

Notes:

CKT	Circuit Description	Trip	Poles	A		B		C		Poles	Trip	Circuit Description	CKT
1	Outlet Space 112	20 A	1	360	540					1	20 A	Outlet Room 110, 112	2
3	Outlet Space 113	20 A	1			540	540			1	20 A	Outlet Space 113	4
5	Outlet Space 114	20 A	1					540	540	1	20 A	Outlet Space 114	6
7	HP-16 MECH/ELEC 100K	20 A	2	1217	370					1	20 A	Room 112, 110, 111, 114, 113	8
9	--	--	--			1217	0 VA			1	20 A	Spare	10
11	Spare	20 A	1					0 VA	0 VA	1	20 A	Spare	12
13	Spare	20 A	1	0 VA	0 VA					1	20 A	Spare	14
15	Spare	20 A	1			0 VA	0 VA			1	20 A	Spare	16
17	Spare	20 A	1					0 VA	0 VA	1	20 A	Spare	18
19	Space	--	--	0 VA	0 VA					--	--	Space	20
21	Space	--	--			0 VA	0 VA			--	--	Space	22
23	Space							0 VA	0 VA	--	--	Space	24
		Total Load:		2506 VA		2297 VA		1080 VA					
		Total Amps:		21 A		19 A		9 A					

Legend:

Load Classification	Connected Load	Demand Factor	Estimated Demand	Panel Totals	
HVAC	2434 VA	100.00%	2434 VA		
Lighting	370 VA	100.00%	370 VA	**Total Conn. Load:**	5864 VA
Other	0 VA	0.00%	0 VA	**Total Est. Demand:**	5864 VA
Outlet	3060 VA	100.00%	3060 VA	**Total Conn.:**	16 A
				Total Est. Demand:	16 A

Notes:
PROVIDE FULLY HINGED COVER PLATE. PROVIDE AFCI BREAKERS FOR DORM CIRCUITS.

Branch Panel: 1PJ

Location: MECH/ELEC 100K
Supply From: MDS2
Mounting: Surface
Enclosure: Type 1
Volts: 120/208 Wye
Phases: 3
Wires: 4
A.I.C. Rating: 22000
Mains Type:
Mains Rating: 100 A
MCB Rating:

Notes:

CKT	Circuit Description	Trip	Poles	A		B		C		Poles	Trip	Circuit Description	CKT
1	Outlet Room 21, 92	20 A	1	540	540					1	20 A	Outlet Space 92	2
3	Outlet Space 93	20 A	1			360	540			1	20 A	Outlet Room 94, 93	4
5	Outlet Room 100, 23	20 A	1					540	540	1	20 A	Outlet Space 23	6
7	HP-13 MECH 256	20 A	2	894	395					1	20 A	Room 93, 14, 94, 21, 23	8
9	--	--	--			894	0 VA			1	20 A	Spare	10
11	Spare	20 A	1					0 VA	0 VA	1	20 A	Spare	12
13	Spare	20 A	1	0 VA	0 VA					1	20 A	Spare	14
15	Spare	20 A	1			0 VA	0 VA			1	20 A	Spare	16
17	Spare	20 A	1					0 VA	0 VA	1	20 A	Spare	18
19	Space	--	--	0 VA	0 VA					--	--	Space	20
21	Space	--	--			0 VA	0 VA			--	--	Space	22
23	Space							0 VA	0 VA	--	--	Space	24
		Total Load:		2369 VA		1794 VA		1080 VA					
		Total Amps:		20 A		15 A		9 A					

Legend:

Load Classification	Connected Load	Demand Factor	Estimated Demand	Panel Totals	
HVAC	1789 VA	100.00%	1789 VA		
Lighting	395 VA	100.00%	395 VA	**Total Conn. Load:**	5244 VA
Other	0 VA	0.00%	0 VA	**Total Est. Demand:**	5244 VA
Outlet	3060 VA	100.00%	3060 VA	**Total Conn.:**	15 A
				Total Est. Demand:	15 A

Notes:
PROVIDE FULLY HINGED COVER PLATE. PROVIDE AFCI BREAKERS FOR DORM CIRCUITS.

Branch Panel: 1PO

Location: MECH/ELEC 100N
Supply From: MDS2
Mounting: Surface
Enclosure: Type 1
Volts: 120/208 Wye
Phases: 3
Wires: 4
A.I.C. Rating: 22000
Mains Type:
Mains Rating: 100 A
MCB Rating:

Notes:

CKT	Circuit Description	Trip	Poles	A		B		C		Poles	Trip	Circuit Description	CKT
1	MICROWAVE DINING/LIVING 128-2	20 A	1	180	180					1	20 A	Outlet BATHROOM 128G	2
3	Outlet Space 169	20 A	1			540	676			1	20 A	Room 162, 166, 164, 161, 165	4
5	Outlet Space 163	20 A	1					900	1800	1	15 A	DRYER LAUNDRY 128B	6
7	Outlet Space 164	20 A	1	360	4150					2	50 A	RANGE DINING/LIVING 128	8
9	Outlet Space 161	20 A	1			720	4150			--	--	--	10
11	WASHER LAUNDRY 128B	15 A	1					1800	1550	2	20 A	HP-28 MECH/ELEC 100N	12
13	DISPOSAL	20 A	1	972	1550					--	--	--	14
15	Outlet Space 169	20 A	1			360	360			1	20 A	Outlet Space 165	16
17	REF. DINING/LIVING-1 128-1	20 A	1					180	360	1	20 A	Outlet Space 166	18
19	Spare	20 A	1	0 VA	0 VA					1	20 A	Spare	20
21	Spare	20 A	1			0 VA	0 VA			1	20 A	Spare	22
23	Spare	20 A	1					0 VA	0 VA	1	20 A	Spare	24
		Total Load:		7392 VA		6806 VA		6590 VA					
		Total Amps:		62 A		57 A		55 A					

Legend:

Load Classification	Connected Load	Demand Factor	Estimated Demand	Panel Totals	
Appliance - Dwelling Unit	3600 VA	100.00%	3600 VA		
HVAC	3099 VA	100.00%	3099 VA	**Total Conn. Load:**	20787 VA
Lighting	676 VA	100.00%	676 VA	**Total Est. Demand:**	17101 VA
Other	0 VA	0.00%	0 VA	**Total Conn.:**	58 A
Outlet	2880 VA	100.00%	2880 VA	**Total Est. Demand:**	47 A
Kitchen	10532 VA	65.00%	6846 VA		

Notes:
PROVIDE FULLY HINGED COVER PLATE. PROVIDE AFCI BREAKERS FOR DORM CIRCUITS.

Branch Panel: 1PN

Location: MECH/ELEC 100N
Supply From: MDS2
Mounting: Surface
Enclosure: Type 1
Volts: 120/208 Wye
Phases: 3
Wires: 4
A.I.C. Rating: 22000
Mains Type:
Mains Rating: 100 A
MCB Rating:

Notes:

CKT	Circuit Description	Trip	Poles	A		B		C		Poles	Trip	Circuit Description	CKT
1	Outlet Space 142	20 A	1	360	894					2	20 A	HP-24 MECH 100Q	2
3	Room 142, 144, 143, 140, 141	20 A	1			395	894			--	--	--	4
5	Outlet Room 143, 142	20 A	1					540	540	1	20 A	Outlet Space 140	6
7	Spare	0 A	1	0 VA	540					1	20 A	Outlet Space 141	8
9	Spare	0 A	1			0 VA	540			1	20 A	Outlet Space 141	10
11	Outlet Space 140	20 A	1					540	0 VA	1	20 A	Spare	12
13	Spare	20 A	1	0 VA	0 VA					1	20 A	Spare	14
15	Spare	20 A	1			0 VA	0 VA			1	20 A	Spare	16
17	Spare	20 A	1					0 VA	0 VA	1	20 A	Spare	18
19	Space	--	--	0 VA	0 VA					--	--	Space	20
21	Space	--	--			0 VA	0 VA			--	--	Space	22
23	Space	--	--					0 VA	0 VA	--	--	Space	24
		Total Load:		1794 VA		1829 VA		1620 VA					
		Total Amps:		15 A		15 A		14 A					

Legend:

Load Classification	Connected Load	Demand Factor	Estimated Demand	Panel Totals	
HVAC	1789 VA	100.00%	1789 VA		
Lighting	395 VA	100.00%	395 VA	**Total Conn. Load:**	5244 VA
Other	0 VA	0.00%	0 VA	**Total Est. Demand:**	5244 VA
Outlet	3060 VA	100.00%	3060 VA	**Total Conn.:**	15 A
				Total Est. Demand:	15 A

Notes:
PROVIDE FULLY HINGED COVER PLATE. PROVIDE AFCI BREAKERS FOR DORM CIRCUITS.

Branch Panel: 1PM

Location: MECH/ELEC 100N
Supply From: MDS2
Mounting: Surface
Enclosure: Type 1
Volts: 120/208 Wye
Phases: 3
Wires: 4
A.I.C. Rating: 22000
Mains Type:
Mains Rating: 100 A
MCB Rating:

Notes:

CKT	Circuit Description	Trip	Poles	A		B		C		Poles	Trip	Circuit Description	CKT
1	Outlet Space 148	20 A	1	360	540					1	20 A	Outlet Room 146, 148	2
3	Room 148, 146, 147, 149, 150	20 A	1			395	540			1	20 A	Outlet Space 149	4
5	Outlet Space 150	20 A	1					540	1217	2	20 A	HP-25 MECH 265	6
7	Spare	20 A	1	0 VA	1217					--	--	--	8
9	Outlet Space 149	20 A	1			540	540			1	20 A	Outlet Space 150	10
11	Spare	20 A	1					0 VA	0 VA	1	20 A	Spare	12
13	Spare	20 A	1	0 VA	0 VA					1	20 A	Spare	14
15	Spare	20 A	1			0 VA	0 VA			1	20 A	Spare	16
17	Spare	20 A	1					0 VA	0 VA	1	20 A	Spare	18
19	Space	--	--	0 VA	0 VA					--	--	Space	20
21	Space	--	--			0 VA	0 VA			--	--	Space	22
23	Space	--	--					0 VA	0 VA	--	--	Space	24
		Total Load:		2117 VA		2015 VA		1757 VA					
		Total Amps:		18 A		17 A		15 A					

Legend:

Load Classification	Connected Load	Demand Factor	Estimated Demand	Panel Totals	
HVAC	2434 VA	100.00%	2434 VA		
Lighting	395 VA	100.00%	395 VA	**Total Conn. Load:**	5889 VA
Other	0 VA	0.00%	0 VA	**Total Est. Demand:**	5889 VA
Outlet	3060 VA	100.00%	3060 VA	**Total Conn.:**	16 A
				Total Est. Demand:	16 A

Notes:
PROVIDE FULLY HINGED COVER PLATE. PROVIDE AFCI BREAKERS FOR DORM CIRCUITS.

Branch Panel: 1PR

Location: MECH/ELEC 100G
Supply From: MDS2
Mounting: Surface
Enclosure: Type 1
Volts: 120/208 Wye
Phases: 3
Wires: 4
A.I.C. Rating: 22000
Mains Type:
Mains Rating: 100 A
MCB Rating:

Notes:

CKT	Circuit Description	Trip	Poles	A		B		C		Poles	Trip	Circuit Description	CKT
1	Room 116A, 116-2, 116E, 116D, 116B,	20 A	1	374	900					1	20 A	Outlet BEDROOM 116A	2
3	Outlet Room 116E, 116D, 116-2	20 A	1			540	360			1	20 A	Outlet SUITE-2 116-2	4
5	Outlet BEDROOM 116B	20 A	1					540	540	1	20 A	Outlet BEDROOM 116C	6
7	HP-95 MECH/ELEC 100G	30 A	2	1550	0 VA					1	20 A	Spare	8
9	--	--	--			1550	0 VA			--	--	Spare	10
11	Spare	20 A	1					0 VA	0 VA	1	20 A	Spare	12
13	Spare	20 A	1	0 VA	0 VA					1	20 A	Spare	14
15	Spare	20 A	1			0 VA	0 VA			1	20 A	Spare	16
17	Spare	20 A	1					0 VA	0 VA	1	20 A	Spare	18
19	Space	--	--	0 VA	0 VA					--	--	Space	20
21	Space	--	--			0 VA	0 VA			--	--	Space	22
23	Space	--	--					0 VA	0 VA	--	--	Space	24
		Total Load:		2824 VA		2450 VA		1080 VA					
		Total Amps:		24 A		20 A		9 A					

Legend:

Load Classification	Connected Load	Demand Factor	Estimated Demand	Panel Totals	
HVAC	3099 VA	100.00%	3099 VA		
Lighting	374 VA	100.00%	374 VA	**Total Conn. Load:**	6353 VA
Other	0 VA	0.00%	0 VA	**Total Est. Demand:**	6353 VA
Outlet	2880 VA	100.00%	2880 VA	**Total Conn.:**	18 A
				Total Est. Demand:	18 A

Notes:
PROVIDE AS ADD. ALTERNATE NO. 1. PROVIDE FULLY HINGED COVERPLATE. PROVIDE AFCI BREAKERS FOR DORM CIRCUITS.

Branch Panel: 1PQ

Location: MECH/ELEC 100N
Supply From: MDS2
Mounting: Surface
Enclosure: Type 1
Volts: 120/208 Wye
Phases: 3
Wires: 4
A.I.C. Rating: 22000
Mains Type:
Mains Rating: 100 A
MCB Rating:

Notes:

CKT	Circuit Description	Trip	Poles	A		B		C		Poles	Trip	Circuit Description	CKT
1	Outlet Space 157	20 A	1	540	540					1	20 A	Outlet Space 157	2
3	Outlet Space 156	20 A	1			360	540			1	20 A	Outlet Room 155, 156	4
5	Outlet Space 153	20 A	1					540	540	1	20 A	Outlet Space 153	6
7	HP-26 MECH/ELEC 100N	20 A	2	894	370					1	20 A	Room 156, 155, 154, 157, 153	8
9	--	--	--			894	0 VA			1	20 A	Spare	10
11	Spare	20 A	1					0 VA	0 VA	1	20 A	Spare	12
13	Spare	20 A	1	0 VA	0 VA					1	20 A	Spare	14
15	Spare	20 A	1			0 VA	0 VA			1	20 A	Spare	16
17	Spare	20 A	1					0 VA	0 VA	1	20 A	Spare	18
19	Space	--	--	0 VA	0 VA					--	--	Space	20
21	Space	--	--			0 VA	0 VA			--	--	Space	22
23	Space	--	--					0 VA	0 VA	--	--	Space	24
		Total Load:		2363 VA		1794 VA		1080 VA					
		Total Amps:		20 A		15 A		9 A					

Legend:

Load Classification	Connected Load	Demand Factor	Estimated Demand	Panel Totals	
HVAC	1789 VA	100.00%	1789 VA		
Lighting	389 VA	100.00%	389 VA	**Total Conn. Load:**	5238 VA
Other	0 VA	0.00%	0 VA	**Total Est. Demand:**	5238 VA
Outlet	3060 VA	100.00%	3060 VA	**Total Conn.:**	15 A
				Total Est. Demand:	15 A

Notes:
PROVIDE FULLY HINGED COVER PLATE. PROVIDE AFCI BREAKER FOR DORM CIRCUITS.

Branch Panel: 1PP

Location: MECH/ELEC 100N
Supply From: MDS2
Mounting: Surface
Enclosure: Type 1
Volts: 120/208 Wye
Phases: 3
Wires: 4
A.I.C. Rating: 22000
Mains Type:
Mains Rating: 100 A
MCB Rating:

Notes:

CKT	Circuit Description	Trip	Poles	A		B		C		Poles	Trip	Circuit Description	CKT
1	Room 171, 170	20 A	1	369	540					1	20 A	Outlet Room 171, 173	2
3	REF. 127-1	20 A	1			180	360			1	20 A	Outlet LIVING/DINING-1 127-1	4
5	Kitchen LIVING/DINING-1 127-1	20 A	1					180	360	1	20 A	Outlet Room 175, 174	6
7	Outlet Space 175	20 A	1	720	900					1	20 A	Outlet Space 170	8
9	HP-27 MECH/ELEC 100N	30 A	2			1550	4150			2	50 A	RANGE LIVING/DINING-1 127-1	10
11	--	--	--					1550	4150	--	--	--	12
13	DRYER LAUNDRY 127C	15 A	1	1800	1800					1	15 A	WASHER LAUNDRY 127C	14
15	EF-7 LIVING/DINING-1 127-1	20 A	1			528	972			1	20 A	DISPOSAL	16
17	Spare	20 A	1					0 VA	0 VA	1	20 A	Spare	18
19	Space	--	--	0 VA	0 VA					--	--	Space	20
21	Space	--	--			0 VA	0 VA			--	--	Space	22
23	Space	--	--					0 VA	0 VA	--	--	Space	24
		Total Load:		6129 VA		7740 VA		6240 VA					
		Total Amps:		51 A		64 A		52 A					

Legend:

Load Classification	Connected Load	Demand Factor	Estimated Demand	Panel Totals	
Appliance - Dwelling Unit	3600 VA	100.00%	3600 VA		
HVAC	3627 VA	100.00%	3627 VA	**Total Conn. Load:**	20108 VA
Lighting	369 VA	100.00%	369 VA	**Total Est. Demand:**	16548 VA
Other	0 VA	0.00%	0 VA	**Total Conn.:**	56 A
Outlet	2340 VA	100.00%	2340 VA	**Total Est. Demand:**	46 A
Kitchen	10172 VA	65.00%	6612 VA		

Notes:
PROVIDE FULLY HINGED COVER PLATE. PROVIDE AFCI BREAKERS FOR DORM CIRCUITS.

MHTN
ARCHITECTS
MHTN Architects, Inc.
420 East South Temple
Suite 100
Salt Lake City, Utah 84111
Telephone (801) 595-6700
Telefax (801) 595-6717
www.mhtn.com

ECE, Inc. Consulting Engineers
939 S. West Temple
Salt Lake City, Utah 84101
Phone 801.521.8007
e-mail admin@eceonline.com

WEBER STATE UNIVERSITY
RESIDENTIAL LIFE PHASE II - BLDG.2
DFCM PROJECT NUMBER: 10176810
WEBER STATE UNIVERSITY
OGDEN, UTAH 84408

SEAL

MHTN PROJECT NO. 4007-2
DRAWN BY: Author CHECKED BY: Checker

ISSUED:

NO.	DATE	DESCRIPTION
01	17 MAY 2011	CONSTRUCTION DOCUMENTS

CONTRACTOR TO VERIFY DRAWINGS IN FIELD USE REFLECT LAST REVISION DATE.

NO.	DATE	DESCRIPTION

SHEET NAME
PANEL SCHEDULES 1ST FLOOR
CONSTRUCTION DOCUMENTS
17 MAY 2011

SHEET NUMBER
EE009

C:\Users\riche\Documents\4007-WEBER STATE BLDG2-CENTRAL-1_richie.rvt
5/17/2011 12:07:33 PM

Branch Panel: 1P2

Location: ELEC 121
Supply From: MDS2
Mounting: Surface
Enclosure: Type 1
Volts: 120/208 Wye
Phases: 3
Wires: 4
A.I.C. Rating: 30000
Mains Type:
Mains Rating: 225 A
MCB Rating:

Notes:

CKT	Circuit Description	Trip	Poles	A		B		C		Poles	Trip	Circuit Description	CKT
1	CIRC. PUMP	20 A	1	120	540					1	20 A	Outlet LOUNGE 106	2
3	HVAC Room 113, 119	20 A	1			145	540			1	20 A	Outlet MECH 100E	4
5	FIRE SMOKE DAMPER	20 A	1					180	720	1	20 A	Outlet HALL 100	6
7	Outlet KITCHEN/LOUNGE 109	20 A	1	720	900					1	20 A	Outlet Room 6, 100, 199B, 113	8
9	Lighting HALL 100M	20 A	1			740	1080			1	20 A	Outlet Room 6, 100	10
11	Outlet Room 199D, 100, 6, 119	20 A	1					900	1500	1	20 A	CUH-1 LOUNGE 101	12
13	137C, 137E, 137G, 134, 133, 136	20 A	1	727	2111					2	40 A	HP-20	14
15	Power STORAGE 100P	20 A	1			1800	2111			--	--	--	16
17	Lighting VESTIBULE 101A	20 A	1					1829	728	2	20 A	HP-18 STAIR 199A	18
19	RANGE KITCHEN/LOUNGE 109	50 A	2	4150	728					--	--	--	20
21	--	--	--			4150	0 VA			1	20 A	Spare	22
23	HP-21	30 A	2					1550	1550	2	30 A	HP-22	24
25	--	--	--	1550	1550					--	--	--	26
27	Outlet KITCHEN/LOUNGE 109	20 A	1			180	3442			2	60 A	HP-19	28
29	DRYER STORAGE 100P	30 A	2					2450	3442	--	--	--	30
31	--	--	--	2450	180					1	20 A	Outlet KITCHEN/LOUNGE 109	32
33	Outlet MECH/ELEC 100K	20 A	1			540	720			1	20 A	Outlet LOUNGE 106	34
35	CIRC. PUMP STAIR 199A	20 A	1					240	180	1	20 A	Outlet LOUNGE 106	36
37	Outlet MECH/ELEC 100F	20 A	1	540	720					1	20 A	Outlet KITCHEN/LOUNGE 109	38
39	Spare	20 A	1			0 VA	0 VA			1	20 A	Spare	40
41	Outlet Room 100, 199B	20 A	1					540	720	1	20 A	Outlet Room 199D, 100	42
		Total Load:		16985 VA		15449 VA		16529 VA					
		Total Amps:		142 A		129 A		138 A					

Legend:

Load Classification	Connected Load	Demand Factor	Estimated Demand	Panel Totals	
Appliance - Dwelling Unit	6700 VA	100.00%	6700 VA		
HVAC	19267 VA	100.00%	19267 VA	**Total Conn. Load:**	48963 VA
Lighting	3296 VA	100.00%	3296 VA	**Total Est. Demand:**	45680 VA
Other	0 VA	0.00%	0 VA	**Total Conn.:**	136 A
Outlet	8640 VA	100.00%	8640 VA	**Total Est. Demand:**	127 A
Fire Alarm	180 VA	100.00%	180 VA		
Kitchen	9380 VA	65.00%	6097 VA		
HVAC Heating	1500 VA	100.00%	1500 VA		

Notes:
PROVIDE FULLY HINGED COVER PLATE.

Branch Panel: 1P4

Location: MECH/ELEC 100G
Supply From: MDS2
Mounting: Surface
Enclosure: Type 1
Volts: 120/208 Wye
Phases: 3
Wires: 4
A.I.C. Rating: 22000
Mains Type:
Mains Rating: 225 A
MCB Rating:

Notes:

CKT	Circuit Description	Trip	Poles	A		B		C		Poles	Trip	Circuit Description	CKT
1	Other SUITE-2 116-2	20 A	1	2 VA	14 VA					1	20 A	Other Room 108, 107, 115, 117, 109	2
3	Other Room 105, 104, 118, 120	20 A	1			10 VA	120			1	20 A	CIRC. PUMP MECH 208	4
5	Other Room 112, 114, 111, 110	20 A	1					10 VA	180	1	20 A	CIRC. PUMP MECH/ELEC 187	6
7	Outlet	20 A	1	180	1650					1	20 A	SITE LTG.	8
9	CIRC. PUMP MECH/ELEC 254	20 A	1			240	1700			1	20 A	SITE LTG.	10
11	IRRIGATION CONTROL	20 A	1					300	360	1	20 A	Outlet KITCHEN/LOUNGE 109	12
13	SITE LTG.	20 A	1	1800	540					1	20 A	Outlet MECH/ELEC 100G	14
15	EXTERIOR OUTLETS	20 A	1			1260	894			2	20 A	HP-10 MECH/ELEC 100G	16
17	ATC PANEL MECH/ELEC. 100F	20 A	1					500	894	--	--	--	18
19	HP-4 MECH/ELEC 100F	60 A	2	3297	300					1	20 A	CIRC. PUMP STAIR 195	20
21	--	--	--			3297							22
23	Spare	20 A	1					0 VA	120	1	20 A	CIRC. PUMP MECH/ELEC 257	24
25	CIRC. PUMP MECH 252	20 A	1	120	1217					2	20 A	HP-12 STAIR 259	26
27	CIRC. PUMP MECH 256	20 A	1			120	1217			--	--	--	28
29	HP-6 STAIR 195	20 A	2					1217	1667	3	20 A	UH-2	30
31	--	--	--	1217	1667					--	--	--	32
33	HP-17 STAIR 258	20 A	2			1217	1667			--	--	--	34
35	--	--	--					1217	1667	3	20 A	UH-3	36
37	UH-4	20 A	3	1667	1667					--	--	--	38
39	--	--	--			1667	1667			--	--	--	40
41	--	--	--					1667	0 VA	1	20 A	Spare	42
		Total Load:		15337 VA		15074 VA		9798 VA					
		Total Amps:		128 A		126 A		82 A					

Legend:

Load Classification	Connected Load	Demand Factor	Estimated Demand	Panel Totals	
HVAC	16883 VA	100.00%	16883 VA		
Power	5450 VA	100.00%	5450 VA	**Total Conn. Load:**	39709 VA
Outlet	2340 VA	100.00%	2340 VA	**Total Est. Demand:**	39709 VA
Fire Alarm	36 VA	100.00%	36 VA	**Total Conn.:**	110 A
HVAC Heating	15000 VA	100.00%	15000 VA	**Total Est. Demand:**	110 A

Notes:
PROVIDE FULLY HINGED COVER PLATE.

Branch Panel: 1P1

Location: ELEC 121
Supply From: MDS2
Mounting: Surface
Enclosure: Type 1
Volts: 120/208 Wye
Phases: 3
Wires: 4
A.I.C. Rating: 30000
Mains Type:
Mains Rating: 225 A
MCB Rating:

Notes:

CKT	Circuit Description	Trip	Poles	A		B		C		Poles	Trip	Circuit Description	CKT
1	GAS FIRE PIT CONTROL PANEL	20 A	1	0 VA	297					1	20 A	KITCHEN/LOUNGE 109	2
3	C.O. RESTROOMS 102, 103	20 A	1			540	1440			1	20 A	C.O. ROOMS 133, 134	4
5	Outlet	20 A	1					360	900	1	20 A	C.O. FITNESS 123	6
7	C.O. LAUNDRY 136	20 A	1	540	1080					1	20 A	Outlet LOUNGE 101	8
9	C.O. ROOMS 137B, 137D	20 A	1			1440	180			1	20 A	TREADMILL FITNESS 123	10
11	ADA OPERATOR MEN 103	20 A	1					1000	1000	1	20 A	LTG. 100, 106	12
13	LTG. HALL 100	20 A	1	1233	180					1	20 A	Outlet RECEPTION/WAITING 137	14
15	Outlet LAUNDRY 136	20 A	1			180	180			1	20 A	ELLIPTICAL FITNESS 123	16
17	TREADMILL FITNESS 123	20 A	1					180	180	1	20 A	Outlet RECEPTION/WAITING 137	18
19	Outlet FITNESS 123	20 A	1	180	180					1	20 A	ELLIPTICAL FITNESS 123	20
21	Outlet FITNESS 123	20 A	1			360	500			1	20 A	ATC PANEL MECH/ELEC 100N	22
23	EWC LOUNGE 101	20 A	1					180	360	1	20 A	Outlet JANITOR 100A	24
25	Outlet DATA 122	20 A	1	360	500					1	20 A	ADA OPERATOR LOUNGE 101	26
27	C.O. OFFICE 137A	20 A	1			720	900			1	20 A	Outlet LOUNGE 101	28
29	Spare	20 A	1					0 VA	720	1	20 A	Outlet ELEC 121	30
31	C.O. MAIL 137C	20 A	1	720	900					1	20 A	C.O. ROOMS 101, 137	32
33	C.O. ROOMS 101A, 101	20 A	1			1260	1440			1	20 A	C.O. ROOMS 137G, 137E	34
35	Outlet Room 100P, 100N	20 A	1					900	1260	1	20 A	Outlet Room 124, 124A	36
37	C.O. HALL 100M	20 A	1	1260	1440					1	20 A	C.O. ROOMS 137F, 137H	38
39	Spare	20 A	1			0 VA	0 VA			1	20 A	Spare	40
41									1260	1	20 A	FIRE SMOKE DAMPERS HALL 100	42
		Total Load:		8870 VA		9140 VA		8300 VA					
		Total Amps:		74 A		76 A		69 A					

Legend:

Load Classification	Connected Load	Demand Factor	Estimated Demand	Panel Totals	
Lighting	2530 VA	100.00%	2530 VA		
Other	0 VA	0.00%	0 VA	**Total Conn. Load:**	25810 VA
Power	1500 VA	100.00%	1500 VA	**Total Est. Demand:**	20550 VA
Outlet	20520 VA	74.37%	15260 VA	**Total Conn.:**	72 A
Fire Alarm	1260 VA	100.00%	1260 VA	**Total Est. Demand:**	57 A

Notes:
PROVIDE FULLY HINGED COVER PLATE.

Branch Panel: 1P3

Location: ELEC 121
Supply From: MDS3
Mounting: Surface
Enclosure: Type 1
Volts: 120/208 Wye
Phases: 3
Wires: 4
A.I.C. Rating: 30000
Mains Type:
Mains Rating: 400 A
MCB Rating:

Notes:

CKT	Circuit Description	Trip	Poles	A		B		C		Poles	Trip	Circuit Description	CKT
1	Other Room 130, 131, 126, 129	20 A	1	10 VA	120					1	20 A	CIRC. PUMP MECH 100Q	2
3	CIRC. PUMP STAIR 199E	20 A	1			120	1800			1	20 A	Appliance - Dwelling Unit LAUNDRY 136	4
5	FIRE SMOKE DAMPER HALL 100	20 A	1					1080	240	1	20 A	CIRC. PUMP MECH/ELEC 100N	6
7	Lighting	20 A	1	260	1800					1	20 A	Appliance - Dwelling Unit LAUNDRY 136	8
9	WASHER LAUNDRY 136	20 A	1			1800	1800			1	20 A	DRYER LAUNDRY 136	10
11	IRONING BOARD LAUNDRY 136	20 A	1					360	1217	2	20 A	HP-30 STAIR 199E	12
13	WASHER LAUNDRY 136	20 A	1	1800	1217					--	--	--	14
15	HP-23 STAIR 199F	30 A	2			1550	1800			1	20 A	DRYER LAUNDRY 136	16
17	--	--	--					1550	1800	1	20 A	WASHER LAUNDRY 136	18
19	DRYER LAUNDRY 136	20 A	1	1800	1800					1	20 A	DRYER LAUNDRY 136	20
21	DRYER LAUNDRY 136	20 A	1			1800	1800			1	20 A	Appliance - Dwelling Unit LAUNDRY 136	22
23	DRYER LAUNDRY 136	20 A	1					1800	1800	1	20 A	DRYER LAUNDRY 136	24
25	SITE TEMP. OUTLETS ELEC 121	60 A	3	5764	1800					1	20 A	DRYER LAUNDRY 136	26
27	--	--	--			5764	5764			3	60 A	SITE TEMP. OUTLETS ELEC 121	28
29	--	--	--					5764	5764	--	--	--	30
31	Appliance - Dwelling Unit LAUNDRY 136	20 A	1	1800	5764					--	--	--	32
33	Appliance - Dwelling Unit LAUNDRY 136	20 A	1			1800	0 VA			1	20 A	LED ROAD LIGHT	34
35	DRYER LAUNDRY 136	20 A	1					1800	1800	1	20 A	Appliance - Dwelling Unit LAUNDRY 136	36
37	Appliance - Dwelling Unit LAUNDRY 136	20 A	1	1800	900					1	20 A	FIRE SMOKE DAMPERS HALL 100M	38
39	Spare	20 A	1			0 VA	0 VA			1	20 A	Spare	40
41	Appliance - Dwelling Unit LAUNDRY 136	20 A	1					1800	0 VA	1	20 A	Spare	42
		Total Load:		26634 VA		25798 VA		26774 VA					
		Total Amps:		222 A		215 A		223 A					

Legend:

Load Classification	Connected Load	Demand Factor	Estimated Demand	Panel Totals	
Appliance - Dwelling Unit	36000 VA	75.00%	27000 VA		
HVAC	6013 VA	100.00%	6013 VA	**Total Conn. Load:**	79206 VA
Lighting	260 VA	100.00%	260 VA	**Total Est. Demand:**	57914 VA
Other	360 VA	100.00%	360 VA	**Total Conn.:**	220 A
Outlet	34584 VA	64.46%	22292 VA	**Total Est. Demand:**	161 A
Fire Alarm	1990 VA	100.00%	1990 VA		

Notes:
PROVIDE FULLY HINGED COVER PLATE.

Branch Panel: MDS2

Location:
Supply From: MDS1
Mounting: Surface
Enclosure: Type 1
Volts: 120/208 Wye
Phases: 3
Wires: 4
A.I.C. Rating: 45000
Mains Type:
Mains Rating: 2500 A
MCB Rating:

Notes:

CKT	Circuit Description	Trip	Poles	A		B		C		Poles	Trip	Circuit Description	CKT
1	1PA	60 A	3	2189 VA	2369 VA					3	60 A	1PB	2
3	--	--	--			1974 VA	1794 VA			--	--	--	4
5	--	--	--					1080 VA	1080 VA	--	--	--	6
7	1PC	60 A	3	2506 VA	2322 VA					3	60 A	1PD	8
9	--	--	--			2297 VA	1614 VA			--	--	--	10
11	--	--	--					1080 VA	1080 VA	--	--	--	12
13	1PE	60 A	3	1475 VA	1295 VA					3	60 A	1PF	14
15	--	--	--			1794 VA	1974 VA			--	--	--	16
17	--	--	--					1974 VA	1974 VA	--	--	--	18
19	1PG	60 A	3	2465 VA	2197 VA					3	60 A	1PH	20
21	--	--	--			2297 VA	1808 VA			--	--	--	22
23	--	--	--					1080 VA	900 VA	--	--	--	24
25	1PI	60 A	3	1835 VA	1295 VA					3	60 A	1PJ	26
27	--	--	--			2334 VA	2297 VA			--	--	--	28
29	--	--	--					1974 VA	2297 VA	--	--	--	30
31	1PK	60 A	3	1788 VA	10373 VA					3	60 A	1PL	32
33	--	--	--			2297 VA	9804 VA			--	--	--	34
35	--	--	--					1757 VA	1080 VA	--	--	--	36
37	1PM	60 A	3	2117 VA	1794 VA					3	60 A	1PN	38
39	--	--	--			2015 VA	1829 VA			--	--	--	40
41	--	--	--					1757 VA	1620 VA	--	--	--	42
43	1PO	100 A	3	7392 VA	6129 VA					3	80 A	1PP	44
45	--	--	--			6806 VA	7740 VA			--	--	--	46
47	--	--	--					6590 VA	6240 VA	--	--	--	48
49	1PQ	60 A	3	2363 VA	8870 VA					3	225 A	1P1	50
51	--	--	--			1794 VA	9140 VA			--	--	--	52
53	--	--	--					1080 VA	8300 VA	--	--	--	54
55	1P2	225 A	3	16985 VA	1980 VA					3	225 A	1P5	56
57	--	--	--			15449 VA	5835 VA			--	--	--	58
59	--	--	--					16529 VA	5835 VA	--	--	--	60
61	1P4	225 A	3	15337 VA	51917 VA					3	400 A	M	62
63	--	--	--			15074 VA	51877 VA			--	--	--	64
65	--	--	--					9798 VA	51789 VA	--	--	--	66
67	MDS3	2500	3	284848 VA	2824 VA					3	60 A	1PR	68
69	--	--	--			300781 VA	2450 VA			--	--	--	70
71	--	--	--					297101 VA	1080 VA	--	--	--	72
		Total Load:		434666 VA		453074 VA		425074 VA					
		Total Amps:		3622 A		3776 A		3542 A					

Legend:

Load Classification	Connected Load	Demand Factor	Estimated Demand	Panel Totals	
Appliance - Dwelling Unit	49900 VA	75.00%	37425 VA		
HVAC	445385 VA	100.00%	445385 VA	**Total Conn. Load:**	1309314 VA
Lighting	45901 VA	100.00%	45901 VA	**Total Est. Demand:**	1008852 VA
Other	22488 VA	100.00%	22488 VA	**Total Conn.:**	3634 A
Power	53643 VA	100.00%	53643 VA	**Total Est. Demand:**	2800 A
Outlet	316628 VA	51.58%	163314 VA		
Security	10 VA	100.00%	10 VA		
Fire Alarm	10176 VA	100.00%	10176 VA		
Kitchen	224437 VA	65.00%	145884 VA		
HVAC Redundant	112240 VA	50.00%	56120 VA		
HVAC Heating	18000 VA	100.00%	18000 VA		
Lighting - Emergency	10506 VA	100.00%	10506 VA		

Notes:
MAIN DISTRIBUTION SWITCHBOARD SHALL BE FREE STANDING 24" DEEP SQUARE-D QED-2 TYPE WITH 2500A. MAIN CIRCUIT BREAKER IN SECTION #1 WITH FULL SIZE NEUTRAL AND HALF SIZE GROUND BUS, 1"7" OF I-LINE BRANCH CIRCUIT BREAKER MOUNTING SPACE IN SECTION #2&3. PROVIDE A 2500A. CONNECTION FOR SECTION 3 IN LIEU OF 2500A. CIRCUIT BREAKER INDICATED.

Branch Panel: MDS3

Location:
Supply From: MDS2
Mounting: Surface
Enclosure: Type 1
Volts: 120/208 Wye
Phases: 3
Wires: 4
A.I.C. Rating: 45000
Mains Type:
Mains Rating: 2500 A
MCB Rating:

Notes:

CKT	Circuit Description	Trip	Poles	A		B		C		Poles	Trip	Circuit Description	CKT
1	2P1	225 A	3	4920 VA									2
3	--	--	--			6111 VA							4
5	--	--	--					1766 VA	12535 VA	3	225 A	3P1	6
7					13753 VA					--	--	--	8
9							14585 VA			--	--	--	10
11	2P4	225 A	3					19822 VA					12
13	--	--	--	15828 VA	29136 VA					3	225 A	2P3	14
15	--	--	--			18132 VA	25824 VA			--	--	--	16
17									11335 VA	--	--	--	18
19													20
21	3P2	225 A	3			22184 VA	12344 VA			3	225 A	2P2	22
23	--	--	--					22494 VA	28052 VA	--	--	--	24
25	--	--	--	21572 VA	24394 VA					--	--	--	26
27	3P3	225 A	3			28586 VA							28
29	--	--	--					23633 VA	26634 VA	3	225 A	1P3	30
31	--	--	--	11909 VA	25798 VA					--	--	--	32
33							26774 VA			--	--	--	34
35	3P4	225 A	3					28929 VA	52387 VA	3	400 A	A.T.S. / EDP	36
37	--	--	--	30621 VA	50004 VA					--	--	--	38
39	--	--	--			25583 VA	52755 VA			--	--	--	40
41	K1	600 A	3					69512 VA	0 VA	3	225 A	Spare	42
43	--	--	--	56914 VA	0 VA					--	--	--	44
45	--	--	--			67901 VA	0 VA			--	--	--	46
47	Spare	225 A	3					0 VA	0 VA	3	225 A	Spare	48
49	--	--	--	0 VA	0 VA					--	--	--	50
51	--	--	--			0 VA	0 VA			--	--	--	52
53	Spare	225 A	3					0 VA	0 VA	3	60 A	TVSS	54
55	--	--	--	0 VA	0 VA					--	--	--	56
57	--	--	--			0 VA	0 VA			--	--	--	58
59													60
61													62
63													64
65													66
67													68
69													70
71													72
		Total Load:		284848 VA		300781 VA		297101 VA					
		Total Amps:		2374 A		2507 A		2476 A					

Legend:

Load Classification	Connected Load	Demand Factor	Estimated Demand	Panel Totals	
Appliance - Dwelling Unit	36000 VA	75.00%	27000 VA		
HVAC	307755 VA	100.00%	307755 VA	**Total Conn. Load:**	880729 VA
Lighting	32896 VA	100.00%	32896 VA	**Total Est. Demand:**	697235 VA
Other	22488 VA	100.00%	22488 VA	**Total Conn.:**	2445 A
Power	46393 VA	100.00%	46393 VA	**Total Est. Demand:**	1935 A
Outlet	229508 VA	52.18%	119754 VA		
Security	10 VA	100.00%	10 VA		
Fire Alarm	8700 VA	100.00%	8700 VA		
Kitchen	184973 VA	65.00%	120232 VA		
HVAC Heating	1500 VA	100.00%	1500 VA		
Lighting - Emergency	10506 VA	100.00%	10506 VA		

Notes:
MAIN DISTRIBUTION SWITCHBOARD SHALL BE FREE STANDING 24" DEEP SQUARE-D QED-2 TYPE WITH 2500A. MAIN CIRCUIT BREAKER IN SECTION #1 WITH FULL SIZE NEUTRAL AND HALF SIZE GROUND BUS, 1"7" OF I-LINE BRANCH CIRCUIT BREAKER MOUNTING SPACE IN SECTION #2&3.

MHTN ARCHITECTS
MHTN Architects, Inc.
420 East South Temple
Suite 100
Salt Lake City, Utah 84111
Telephone (801) 595-6700
Telefax (801) 595-6717
www.mhtn.com

ECE, Inc. Consulting Engineers
939 S. West Temple
Salt Lake City, Utah 84101
Phone 801.521.8007
e-mail admin@eceonline.com

WEBER STATE UNIVERSITY
RESIDENTIAL LIFE PHASE II - BLDG.2
DFCM PROJECT NUMBER: 10176810

WEBER STATE UNIVERSITY
OGDEN, UTAH 84408

SEAL

MHTN PROJECT NO. 4007-2
DRAWN BY: Author CHECKED BY: Checker

ISSUED:

NO.	DATE	DESCRIPTION
01	17 MAY 2011	CONSTRUCTION DOCUMENTS

CONTRACTOR TO VERIFY DRAWINGS IN FIELD USE REFLECT LAST REVISION DATE.

NO.	DATE	DESCRIPTION

SHEET NAME
PANEL SCHEDULES 1ST FLOOR
CONSTRUCTION DOCUMENTS
17 MAY 2011

SHEET NUMBER
EE010

C:\Users\richie\Documents\4007-WEBER-STATE-BLDG2-CENTRAL-1_richie.rvt
5/17/2011 12:07:38 PM

Branch Panel: EP3

Location: JANITOR 300A
Supply From: EDP
Mounting: Surface
Enclosure: Type 1
Volts: 120/208 Wye
Phases: 3
Wires: 4
A.I.C. Rating: 22000
Mains Type:
Mains Rating: 225 A
MCB Rating:

Notes:

CKT	Circuit Description	Trip	Poles	A		B		C		Poles	Trip	Circuit Description	CKT
1	Outlet IDF 300H	20 A	1	180	928					1	20 A	Lighting	2
3	Outlet IDF 333	20 A	1			180	668			1	20 A	Lighting	4
5	Outlet IDF 333	20 A	1					360	1058	1	20 A	Lighting	6
7	Lighting	20 A	1	940	40 VA					2	20 A	FC-6	8
9	FC-3 IDF 300H	20 A	2			40 VA	40 VA			--	--	--	10
11	--	--	--					40 VA	2912	2	35 A	CUU-3	12
13	CCU-2 STAIR 399A	35 A	2	2912	2912					--	--	--	14
15	--	--	--			2912	1664			2	20 A	EM. IDF 333	16
17	CU-1	30 A	2					2080	1664	--	--	--	18
19	--	--	--	2080	1664					2	20 A	Outlet IDF 300H	20
21	EM. IDF 333	20 A	2			1664	1664			--	--	--	22
23	--	--	--					1664	1729	3	20 A	E-R008	24
25	E-R009	20 A	3	1129	1729					--	--	--	26
27	--	--	--			1129	1729			--	--	--	28
29	--	--	--					1129	2102	3	35 A	EF-5	30
31	E-R009	20 A	3	1129	2102					--	--	--	32
33	--	--	--			1129	2102			--	--	--	34
35	--	--	--					1129	3362	3	40 A	CCU-1	36
37	CCU-4	35 A	2	2912	3362					--	--	--	38
39	--	--	--			2912	3362			--	--	--	40
41	Spare	20 A	1					0 VA	0 VA	1	20 A	Spare	42
		Total Load:		24019 VA		21194 VA		19229 VA					
		Total Amps:		200 A		177 A		160 A					

Legend:

Load Classification	Connected Load	Demand Factor	Estimated Demand	Panel Totals	
HVAC	38182 VA	100.00%	38182 VA		
Other	6656 VA	100.00%	6656 VA	**Total Conn. Load:**	64442 VA
Outlet	4048 VA	100.00%	4048 VA	**Total Est. Demand:**	63246 VA
Kitchen	11962 VA	90.00%	10766 VA	**Total Conn.:**	179 A
Lighting - Emergency	3594 VA	100.00%	3594 VA	**Total Est. Demand:**	176 A

Notes:
PROVIDE FULLY HINGED COVER PLATE.

Branch Panel: EP2

Location: JANITOR 200A
Supply From: EDP
Mounting: Surface
Enclosure: Type 1
Volts: 120/208 Wye
Phases: 3
Wires: 4
A.I.C. Rating: 22000
Mains Type:
Mains Rating: 100 A
MCB Rating:

Notes:

CKT	Circuit Description	Trip	Poles	A		B		C		Poles	Trip	Circuit Description	CKT
1	Security	20 A	1	5 VA	360					1	20 A	Outlet IDF 200P	2
3	Lighting	20 A	1			668	1058			1	20 A	Lighting	4
5	Outlet IDF 200H	20 A	1					360	902	1	20 A	LTG. EM. R.R., 200A, 201,	6
7	LTG. EM. 200M, 201B,229	20 A	1	980	40 VA					2	20 A	FC-2 IDF 200H	8
9	FIRE SUPPRESION PREP KITCHEN 224	20 A	1			1200	40 VA			--	--	--	10
11	EM. IDF 200H	20 A	2					1664	1664	2	20 A	Other IDF 200H	12
13	--	--	--	1664	1664					--	--	--	14
15	FC-5 IDF 200P	20 A	2			40 VA	1664			2	20 A	Outlet IDF 200P	16
17	--	--	--					40 VA	1664	--	--	--	18
19	Outlet IDF 200P	20 A	2	1664	300					1	20 A	FACP ANNUNCIATOR VESTIBULE 201A	20
21	--	--	--			1664	0 VA			1	20 A	Spare	22
23	Spare	20 A	1					0 VA	0 VA	1	20 A	Spare	24
25	Spare	20 A	1	0 VA	0 VA					1	20 A	Spare	26
27	Spare	20 A	1			0 VA	0 VA			1	20 A	Spare	28
29	Spare	20 A	1					0 VA	0 VA	1	20 A	Spare	30
31	Spare	20 A	1	0 VA	0 VA					1	20 A	Spare	32
33	Spare	20 A	1			0 VA	0 VA			1	20 A	Spare	34
35	Spare	20 A	1					0 VA	0 VA	1	20 A	Spare	36
37	Spare	20 A	1	0 VA	0 VA					1	20 A	Spare	38
39	Spare	20 A	1			0 VA	0 VA			1	20 A	Spare	40
41	Spare	20 A	1					0 VA	0 VA	1	20 A	Spare	42
		Total Load:		6677 VA		6333 VA		6294 VA					
		Total Amps:		56 A		53 A		52 A					

Legend:

Load Classification	Connected Load	Demand Factor	Estimated Demand	Panel Totals	
HVAC	158 VA	100.00%	158 VA		
Other	6656 VA	100.00%	6656 VA	**Total Conn. Load:**	19303 VA
Outlet	7376 VA	100.00%	7376 VA	**Total Est. Demand:**	19303 VA
Security	5 VA	100.00%	5 VA	**Total Conn.:**	54 A
Fire Alarm	300 VA	100.00%	300 VA	**Total Est. Demand:**	54 A
Kitchen	1200 VA	100.00%	1200 VA		
Lighting - Emergency	3608 VA	100.00%	3608 VA		

Notes:
PROVIDE FULLY HINGED COVER PLATE.

Branch Panel: EDP

Location: ELEC 121
Supply From: MDS3
Mounting: Surface
Enclosure: Type 1
Volts: 120/208 Wye
Phases: 3
Wires: 4
A.I.C. Rating: 30000
Mains Type:
Mains Rating: 400 A
MCB Rating: 400 A

Notes:

CKT	Circuit Description	Trip	Poles	A		B		C		Poles	Trip	Circuit Description	CKT
1	Security	20 A	1	5 VA	432					1	20 A	EVAP.*	2
3	Outlet ELEVATOR EQUIPMENT 100J	20 A	1			360	0 VA			1	20 A	Spare	4
5	FIRE ALARM RADIO TRANSMITTER	20 A	1					300	500	1	20 A	Lighting ELEVATOR EQUIPMENT 100J	6
7	Outlet DATA 122	20 A	1	360	40 VA					2	20 A	FC-1 IDF 100H	8
9	ELEC 121 CODE BLUE	20 A	1			500	40 VA			--	--	--	10
11	Outlet DATA 122	20 A	1					540	1626	1	20 A	Lighting LOUNGE 101	12
13	SSFC-1 ELEVATOR EQUIPMENT 100J	20 A	2	104	3514					3	100 A	EP1	14
15	--	--	--			104	1974			--	--	--	16
17	EM. IDF 100H	20 A	2					1664	1999	--	--	--	18
19	--	--	--	1664	6677					3	100 A	EP2	20
21	EP3	225 A	3			2401	6333			--	--	--	22
23	--	--	--					2119	6294	--	--	--	24
25	--	--	--	1922	360					1	20 A	Outlet IDF 100H	26
27	Spare	20 A	1			0 VA	0 VA			1	20 A	SHUNT TRIP	28
29	F.A.C.P.	20 A	1					300	1501	3	200 A	ELEV. ELEVATOR EQUIPMENT 100J	30
31	EM. IDF 100H	20 A	2	1664	1501					--	--	--	32
33	--	--	--			1664	1501			--	--	--	34
35	Outlet DATA 122	20 A	2					1664	1664	2	20 A	Outlet DATA 122	36
37	--	--	--	1664	1664					--	--	--	38
39	Spare	20 A	1			0 VA	0 VA			1	20 A	Spare	40
41	Spare	20 A	1					0 VA	0 VA	1	20 A	Spare	42
		Total Load:		52387 VA		50004 VA		52755 VA					
		Total Amps:		437 A		417 A		440 A					

Legend:

Load Classification	Connected Load	Demand Factor	Estimated Demand	Panel Totals	
HVAC	38706 VA	100.00%	38706 VA		
Lighting	1792 VA	100.00%	1792 VA	**Total Conn. Load:**	155147 VA
Other	19968 VA	100.00%	19968 VA	**Total Est. Demand:**	143956 VA
Power	45533 VA	100.00%	45533 VA	**Total Conn.:**	431 A
Outlet	20600 VA	74.27%	15300 VA	**Total Est. Demand:**	400 A
Security	10 VA	100.00%	10 VA		
Fire Alarm	1200 VA	100.00%	1200 VA		
Kitchen	16832 VA	65.00%	10941 VA		
Lighting - Emergency	10506 VA	100.00%	10506 VA		

Notes:
*PROVIDE GFCI CIRCUIT BREAKER. PROVIDE FULLY HINGED COVERPLATE.

Branch Panel: K1

Location: OFFICE 224A
Supply From: MDS3
Mounting: Recessed
Enclosure: NEMA 4
Volts: 120/208 Wye
Phases: 3
Wires: 4
A.I.C. Rating: 22000
Mains Type:
Mains Rating: 400 A
MCB Rating: 400 A

Notes: FULLY HINGED COVERPLATE.

CKT	Circuit Description	Trip	Poles	A		B		C		Poles	Trip	Circuit Description	CKT
1	ICE CREAM CABINET & FREEZER	20 A	1	307	720					1	20 A	Outlet Room 224E, 224F, 224G	2
3	CASH REGISTER	20 A	1			480	804			1	20 A	SOUP WARMER	4
5	SODA/ICE DISPENSER	20 A	1					624	864	1	20 A	DISPLAY CASE, REFRIGERATED	6
7	WALK-IN COOLER*	20 A	1	960	1104					1	20 A	INFRARED FOODWARMER*	8
9	PIZZA PREP. TABLE	20 A	1			1032	1200			1	20 A	HOT DOG GRILL	10
11	REF. PREP TABLE	20 A	1					1080	1200	1	20 A	WARMER, FOOD, ELECTRIC	12
13	REF. BASE, STATIONARY CABINET	20 A	1	1464	1800					1	20 A	SODA DISPENSER*	14
15	FREEZER DISPLAY	20 A	1			1560	1508			2	20 A	SELF SERVICE REF. MERCH.	16
17	REF. BASE, REF. PREP TABLE	20 A	1					1548	1508	--	--	--	18
19	TOASTER CONVEYOR	20 A	2	1456	1104					1	20 A	INFRARED FOODWARMER*	20
21	--	--	--			1456	1508			2	30 A	SELF SERVICE REF. MERCH.	22
23	REF. PREP TABLE	20 A	1					1104	1508	--	--	--	24
25	COFFEE BREWER	20 A	2	2330	1440					1	20 A	E-R005e,d,c*	26
27	--	--	--			2330	1104			1	20 A	INFRARED FOODWARMER*	28
29	OVEN RAPID COOK	30 A	2					3125	3125	2	30 A	OVEN, RAPID COOK	30
31	--	--	--	3125	3125					--	--	--	32
33	NACH CHEESE DISPENSER	20 A	1			1440	720			1	20 A	Outlet Room 224A, 224, 224B	34
35	PRETZEL WARMER	20 A	1					1440	987	1	20 A	Room 224F, 224A, 224D	36
37	K2	400 A	3	3196	1861					3	200 A	MAU-1	38
39	--	--	--			2315	1861			--	--	--	40
41	--	--	--					3117	1861	--	--	--	42
43	Spare	20 A	1	0 VA	0 VA					1	20 A	Spare	44
45	Spare	20 A	1			0 VA	0 VA			1	20 A	Spare	46
47	Spare	20 A	1					0 VA	0 VA	1	20 A	Spare	48
49	Spare	20 A	1	0 VA	0 VA					1	20 A	Spare	50
51	Spare	20 A	1			0 VA	0 VA			1	20 A	Spare	52
53	Spare	20 A	1					0 VA	0 VA	1	20 A	Spare	54
		Total Load:		69512 VA		56914 VA		67901 VA					
		Total Amps:		579 A		474 A		566 A					

Legend:

Load Classification	Connected Load	Demand Factor	Estimated Demand	Panel Totals	
HVAC	60123 VA	100.00%	60123 VA		
Lighting	1243 VA	100.00%	1243 VA	**Total Conn. Load:**	194328 VA
Other	2160 VA	100.00%	2160 VA	**Total Est. Demand:**	148610 VA
Outlet	180 VA	100.00%	180 VA	**Total Conn.:**	539 A
Kitchen	130621 VA	65.00%	84904 VA	**Total Est. Demand:**	413 A

Notes:
*PROVIDE GFI CIRCUIT BREAKER. PROVIDE SUB FEED LUGS FOR PANEL K2 IN LIEU OF 400A. 3-POLE CIRCUIT BREAKER SHOWN PROVIDE (3) 20A. 1-POLE BREAKERS IN THOSE SPACES.

Branch Panel: K2

Location: OFFICE 224A
Supply From: K1
Mounting: Recessed
Enclosure: NEMA 4
Volts: 120/208 Wye
Phases: 3
Wires: 4
A.I.C. Rating: 22000
Mains Type:
Mains Rating: 400 A

Notes: FULLY HINGED COVER PLATE

CKT	Circuit Description	Trip	Poles	A		B		C		Poles	Trip	Circuit Description	CKT
1	TILT SKILLET, GAS, 30-GALLON*	20 A	1	300	500					1	20 A	WALK-IN COOLER	2
3	SHUNT TRIP	0 A	1			0 VA	360			1	20 A	FRYER, DEEP FAT	4
5	DESK	20 A	1					180	0 VA	1	0 A	SHUNT TRIP	6
7	MIXER 20 QUART	20 A	1	1176	468					1	20 A	REF. BASE, COOK-TOP SYSTEM	8
9	HOOD*	20 A	1			408	0 VA			1	0 A	SHUNT TRIP	10
11	FOOD PROCESSOR	20 A	1					492	1368	1	20 A	COMBI-OVEN	12
13	WALK-IN FREEZER*	20 A	1	500	0 VA					1	0 A	SHUNT TRIP	14
15	INFRARED FOODWARMER*	20 A	1			1104	1104			1	20 A	INFRARED FOODWARMER*	16
17	ICE CUBER*	20 A	1					1524	1068	1	20 A	WARMER, FOOD OVERHEAD	18
19	ICE CUBER*	20 A	1	1524	1560					1	20 A	REF. BASE, COOK-TOP, FREEZER	20
21	BAG-IN-BOX SYSTEM*	20 A	1			1800	0 VA			1	0 A	SHUNT TRIP	22
23	OVEN, COOKING AND HOLDING	40 A	2					2995	1332	1	20 A	FREEZER, RETHERMALIZING UNIT	24
25	--	--	--	2995	0 VA					1	0 A	SHUNT TRIP	26
27	SHUNT TRIP	0 A	1			0 VA	1800			1	20 A	Power PREP KITCHEN 224	28
29	OVEN, RAPID COOK	30 A	2					3125	2400	1	20 A	PREP. TABLE*	30
31	--	--	--	3125	3125					2	30 A	OVEN, RAPID COOK	32
33	CLEAN DISH TABLE KITCHEN 224	20 A	1			360	3125			--	--	--	34
35	Spare	20 A	1					0 VA	588	3	20 A	DISPOSER	36
37	Spare	20 A	1	0 VA	588					--	--	--	38
39	SHUNT TRIP	20 A	1			0 VA	588			--	--	--	40
41	OVEN, RAPID COOK	30 A	2					3125	1859	3	20 A	CHILLER/FREEZER, BLAST	42
43	--	--	--	3125	1859					--	--	--	44
45	CIRC. PUMP JAN 224E	20 A	1			60 VA	1859			--	--	--	46
47	HP-52 JAN 224E	35 A	2					2111	9007	3	100 A	DISH MACHINE ELEC. W/BOOSTER	48
49	--	--	--	2111	9007					--	--	--	50
51	EXHAUST HOOD	20 A	1			1584	9007			--	--	--	52
53	SHUNT TRIP	0 A	1					0 VA	0 VA	1	20 A	Spare	54
		Total Load:		31964 VA		23159 VA		31175 VA					
		Total Amps:		266 A		193 A		260 A					

Legend:

Load Classification	Connected Load	Demand Factor	Estimated Demand	Panel Totals	
HVAC	4282 VA	100.00%	4282 VA		
Lighting	256 VA	100.00%	256 VA	**Total Conn. Load:**	86297 VA
Other	2160 VA	100.00%	2160 VA	**Total Est. Demand:**	58438 VA
Kitchen	79599 VA	65.00%	51739 VA	**Total Conn.:**	240 A
				Total Est. Demand:	162 A

Notes:
*PROVIDE GFI CIRCUIT BREAKER.

Branch Panel: M

Location: MECHANICAL 124
Supply From: MDS2
Mounting: Surface
Enclosure: Type 1
Volts: 120/208 Wye
Phases: 3
Wires: 4
A.I.C. Rating: 30000
Mains Type:
Mains Rating: 400 A
MCB Rating:

Notes:

CKT	Circuit Description	Trip	Poles	A		B		C		Poles	Trip	Circuit Description	CKT
1	P-4 MECHANICAL 124	100 A	3	9391	9391					3	100 A	P-5 MECHANICAL 124	2
3	--	--	--			9391	9391			--	--	--	4
5	--	--	--					9391	9391	--	--	--	6
7	P-6 MECHANICAL 124	90 A	3	3348	3348					3	90 A	P-7 MECHANICAL 124	8
9	--	--	--			3348	3348			--	--	--	10
11	--	--	--					3348	3348	--	--	--	12
13	P-9 MECHANICAL 124	60 A	3	3867	717					3	20 A	P-10 MECHANICAL 124	14
15	--	--	--			3867	717			--	--	--	16
17	--	--	--					3867	717	--	--	--	18
19	CTF-1 MECHANICAL 124	20 A	3	1321	864					1	20 A	DCP-1 MECHANICAL 124	20
21	--	--	--			1321	1656			1	20 A	SWP-1 MECHANICAL 124	22
23	--	--	--					1321	386	3	20 A	P-3 BOILER 124A	24
25	Spare	20 A	1	0 VA	386					--	--	--	26
27	ATC PANEL	20 A	1			500	386			--	--	--	28
29	DB-1,-11 MECHANICAL 124	20 A	1					1037	2101	3	35 A	P-1 BOILER 124A	30
31	P-2 BOILER 124A	35 A	3	2101	2101					--	--	--	32
33	--	--	--			2101	2101			--	--	--	34
35	--	--	--					2101	1632	1	20 A	B-2 BOILER 124A	36
37	B-1 BOILER 124A	20 A	1	1632	1559					3	20 A	UH-1 MECHANICAL 124	38
39	HVAC	20 A	3			3862	1559			--	--	--	40
41	--	--	--					3862	1559	--	--	--	42
43	--	--	--	3862	3862					3	60 A	CT-2	44
45	P-8	60 A	3			3867	3862			--	--	--	46
47	--	--	--					3867	3862	--	--	--	48
49	--	--	--	3867	300					1	20 A	WATER METER	50
51	CWT-1 MECHANICAL 124	20 A	1			480	0 VA			3	30 A	Spare	52
53	Spare	30 A	3					0 VA	0 VA	--	--	--	54
55	--	--	--	0 VA	0 VA					--	--	--	56
57	--	--	--			0 VA	0 VA			3	30 A	Spare	58
59	Spare	20 A	3					0 VA	0 VA	--	--	--	60
61	--	--	--	0 VA	0 VA					--	--	--	62
63	--	--	--			0 VA	120			1	20 A	HVAC MECHANICAL 124	64
65	Space	--	--					0 VA	0 VA	--	--	Space	66
67	Space	--	--	0 VA	0 VA					--	--	Space	68
69	Space	--	--			0 VA	0 VA			--	--	Space	70
71	Space	--	--					0 VA	0 VA	--	--	Space	72
		Total Load:		51917 VA		51877 VA		51789 VA					
		Total Amps:		433 A		432 A		432 A					

Legend:

Load Classification	Connected Load	Demand Factor	Estimated Demand	Panel Totals	
HVAC	42542 VA	100.00%	42542 VA		
Power	300 VA	100.00%	300 VA	**Total Conn. Load:**	155082 VA
HVAC Redundant	112240 VA	50.00%	56120 VA	**Total Est. Demand:**	98962 VA
				Total Conn.:	430 A
				Total Est. Demand:	275 A

Notes:
DISTRIBUTION PANEL SHALL BE WALL MOUNTED SQUARE-D I-LINE TYPE HCM WITH 99" OF BRANCH CIRCUIT MOUNTING SPACE. FULL SIZE NEUTRAL AND HALF SIZE GROUND BUS. PROVIDE FULLY HINGED COVER PLATE.

MHTN ARCHITECTS
MHTN Architects, Inc.
420 East South Temple
Suite 100
Salt Lake City, Utah 84111
Telephone (801) 595-6700
Telefax (801) 595-6717
www.mhtn.com

ECE, Inc. Consulting Engineers
939 S. West Temple
Salt Lake City, Utah 84101
Phone 801.521.8007
e-mail admin@eceonline.com

WEBER STATE UNIVERSITY
RESIDENTIAL LIFE PHASE II - BLDG.2
DFCM PROJECT NUMBER: 10176810

WEBER STATE UNIVERSITY
OGDEN, UTAH 84408

SEAL

MHTN PROJECT NO. 4007-2
DRAWN BY: Author CHECKED BY: Checker

ISSUED:

NO.	DATE	DESCRIPTION
01	17 MAY 2011	CONSTRUCTION DOCUMENTS

CONTRACTOR TO VERIFY DRAWINGS IN FIELD USE REFLECT LAST REVISION DATE.

NO.	DATE	DESCRIPTION

SHEET NAME
PANEL SCHEDULES 1ST FLOOR
CONSTRUCTION DOCUMENTS
17 MAY 2011

SHEET NUMBER
EE011

C:\Users\chris\Documents\4007-WEBER-STATE-BLDG2-CENTRAL-L_richie.rvt
5/17/2011 12:07:37 PM

Branch Panel: 2PC

Location: MECH/ELEC 200F
Supply From: 2P1
Mounting: Surface
Enclosure: Type 1
Volts: 120/208 Wye
Phases: 3
Wires: 4
A.I.C. Rating: 22000
Mains Type:
Mains Rating: 100 A
MCB Rating:

Notes:

CKT	Circuit Description	Trip	Poles	A		B		C		Poles	Trip	Circuit Description	CKT
1	Outlet	20 A	1	540	540					--	20 A	Outlet	2
3	Outlet	20 A	1			360	540			1	20 A	Outlet	4
5	Outlet	20 A	1					540	540	1	20 A	Outlet	6
7	HP-35 MECH/ELEC 200F	20 A	2	1217	389					1	20 A	Outlet	8
9	--	--	--			1217	0 VA			1	20 A	Spare	10
11	Spare	20 A	1					0 VA	0 VA	1	20 A	Spare	12
13	Spare	20 A	1	0 VA	0 VA					1	20 A	Spare	14
15	Spare	20 A	1			0 VA	0 VA			1	20 A	Spare	16
17	Spare	20 A	1					0 VA	0 VA	1	20 A	Spare	18
19	Space	--	--	0 VA	0 VA					--	--	Space	20
21	Space	--	--			0 VA	0 VA			--	--	Space	22
23	Space							0 VA	0 VA	--	--	Space	24
		Total Load:		2686 VA		2117 VA		1080 VA					
		Total Amps:		22 A		18 A		9 A					

Legend:

Load Classification	Connected Load	Demand Factor	Estimated Demand	Panel Totals	
HVAC	2434 VA	100.00%	2434 VA		
Lighting	389 VA	100.00%	389 VA	**Total Conn. Load:**	5883 VA
Other	0 VA	0.00%	0 VA	**Total Est. Demand:**	5883 VA
Outlet	3060 VA	100.00%	3060 VA	**Total Conn.:**	16 A
				Total Est. Demand:	16 A

Notes:
PROVIDE FULLY HINGED COVER PLATE. PROVIDE AFCI BREAKERS FOR DORM CIRCUITS.

Branch Panel: 2PB

Location: MECH/ELEC 200F
Supply From: 2P1
Mounting: Surface
Enclosure: Type 1
Volts: 120/208 Wye
Phases: 3
Wires: 4
A.I.C. Rating: 22000
Mains Type:
Mains Rating: 100 A
MCB Rating:

Notes:

CKT	Circuit Description	Trip	Poles	A		B		C		Poles	Trip	Circuit Description	CKT
1	Outlet	20 A	1	540	540					1	20 A	Outlet	2
3	Outlet	20 A	1			540	540			1	20 A	Outlet	4
5	Outlet	20 A	1					360	540	1	20 A	Outlet	6
7	HP-31 JAN 297	20 A	2	1217	395					1	20 A	Lighting	8
9	--	--	--			1217	0 VA			1	20 A	Spare	10
11	Spare	20 A	1					0 VA	0 VA	1	20 A	Spare	12
13	Spare	20 A	1	0 VA	0 VA					1	20 A	Spare	14
15	Spare	20 A	1			0 VA	0 VA			1	20 A	Spare	16
17	Spare	20 A	1					0 VA	0 VA	1	20 A	Spare	18
19	Space	--	--	0 VA	0 VA					--	--	Space	20
21	Space	--	--			0 VA	0 VA			--	--	Space	22
23	Space							0 VA	0 VA	--	--	Space	24
		Total Load:		2692 VA		2297 VA		900 VA					
		Total Amps:		22 A		19 A		8 A					

Legend:

Load Classification	Connected Load	Demand Factor	Estimated Demand	Panel Totals	
HVAC	2434 VA	100.00%	2434 VA		
Lighting	395 VA	100.00%	395 VA	**Total Conn. Load:**	5889 VA
Other	0 VA	0.00%	0 VA	**Total Est. Demand:**	5889 VA
Outlet	3060 VA	100.00%	3060 VA	**Total Conn.:**	16 A
				Total Est. Demand:	16 A

Notes:
PROVIDE FULLY HINGED COVER PLATE. PROVIDE AFCI BREAKER FOR DORM CIRCUITS.

Branch Panel: 2PA

Location: MECH/ELEC 200F
Supply From: 2P1
Mounting: Surface
Enclosure: Type 1
Volts: 120/208 Wye
Phases: 3
Wires: 4
A.I.C. Rating: 22000
Mains Type:
Mains Rating: 100 A
MCB Rating:

Notes:

CKT	Circuit Description	Trip	Poles	A		B		C		Poles	Trip	Circuit Description	CKT
1	Outlet	20 A	1	360	395					1	20 A	Lighting	2
3	Outlet	20 A	1			540	540			1	20 A	Outlet	4
5	Outlet	20 A	1					540	894	2	20 A	HP-32 JAN 297	6
7	Outlet	20 A	1	540	894					--	--	--	8
9	Outlet	20 A	1			540	0 VA			1	20 A	Spare	10
11	Spare	20 A	1					0 VA	0 VA	1	20 A	Spare	12
13	Spare	20 A	1	0 VA	0 VA					1	20 A	Spare	14
15	Spare	20 A	1			0 VA	0 VA			1	20 A	Spare	16
17	Spare	20 A	1					0 VA	0 VA	1	20 A	Spare	18
19	Space	--	--	0 VA	0 VA					--	--	Space	20
21	Space	--	--			0 VA	0 VA			--	--	Space	22
23	Space							0 VA	0 VA	--	--	Space	24
		Total Load:		2189 VA		1620 VA		1434 VA					
		Total Amps:		18 A		14 A		12 A					

Legend:

Load Classification	Connected Load	Demand Factor	Estimated Demand	Panel Totals	
HVAC	1789 VA	100.00%	1789 VA		
Lighting	395 VA	100.00%	395 VA	**Total Conn. Load:**	5244 VA
Other	0 VA	0.00%	0 VA	**Total Est. Demand:**	5244 VA
Outlet	3060 VA	100.00%	3060 VA	**Total Conn.:**	15 A
				Total Est. Demand:	15 A

Notes:
PROVIDE FULLY HINGED COVER PLATE. PROVIDE AFCI BREAKERS FOR DORM CIRCUITS.

Branch Panel: 2PF

Location: MECH/ELEC 200G
Supply From: 2P1
Mounting: Surface
Enclosure: Type 1
Volts: 120/208 Wye
Phases: 3
Wires: 4
A.I.C. Rating: 22000
Mains Type:
Mains Rating: 100 A
MCB Rating:

Notes:

CKT	Circuit Description	Trip	Poles	A		B		C		Poles	Trip	Circuit Description	CKT
1	Outlet	20 A	1	360	540					1	20 A	Outlet	2
3	Outlet	20 A	1			540	540			1	20 A	Outlet	4
5	Outlet	20 A	1					540	540	1	20 A	Outlet	6
7	HP-38 IDF 298	20 A	2	894	395					1	20 A	Lighting	8
9	--	--	--			894	0 VA			1	20 A	Spare	10
11	Spare	20 A	1					0 VA	0 VA	1	20 A	Spare	12
13	Spare	20 A	1	0 VA	0 VA					1	20 A	Spare	14
15	Spare	20 A	1			0 VA	0 VA			1	20 A	Spare	16
17	Spare	20 A	1					0 VA	0 VA	1	20 A	Spare	18
19	Space	--	--	0 VA	0 VA					--	--	Space	20
21	Space	--	--			0 VA	0 VA			--	--	Space	22
23	Space	--	--					0 VA	0 VA	--	--	Space	24
		Total Load:		2189 VA		1974 VA		1080 VA					
		Total Amps:		18 A		16 A		9 A					

Legend:

Load Classification	Connected Load	Demand Factor	Estimated Demand	Panel Totals	
HVAC	1789 VA	100.00%	1789 VA		
Lighting	395 VA	100.00%	395 VA	**Total Conn. Load:**	5244 VA
Other	0 VA	0.00%	0 VA	**Total Est. Demand:**	5244 VA
Outlet	3060 VA	100.00%	3060 VA	**Total Conn.:**	15 A
				Total Est. Demand:	15 A

Notes:
PROVIDE FULLY HINGED COVER PLATE. PROVIDE AFCI BREAKERS FOR DORM CIRCUITS.

Branch Panel: 2PE

Location: MECH/ELEC 200F
Supply From: 2P1
Mounting: Surface
Enclosure: Type 1
Volts: 120/208 Wye
Phases: 3
Wires: 4
A.I.C. Rating: 22000
Mains Type:
Mains Rating: 100 A
MCB Rating:

Notes:

CKT	Circuit Description	Trip	Poles	A		B		C		Poles	Trip	Circuit Description	CKT
1	Outlet	20 A	1	540	540					1	20 A	Outlet	2
3	Outlet	20 A	1			540	540			1	20 A	Outlet	4
5	Outlet	20 A	1					360	540	1	20 A	Outlet	6
7	HP-33 MECH/ELEC 200F	20 A	2	894	370					1	20 A	Lighting	8
9	--	--	--			894	0 VA			1	20 A	Spare	10
11	Spare	20 A	1					0 VA	0 VA	1	20 A	Spare	12
13	Spare	20 A	1	0 VA	0 VA					1	20 A	Spare	14
15	Spare	20 A	1			0 VA	0 VA			1	20 A	Spare	16
17	Spare	20 A	1					0 VA	0 VA	1	20 A	Spare	18
19	Space	--	--	0 VA	0 VA					--	--	Space	20
21	Space	--	--			0 VA	0 VA			--	--	Space	22
23	Space	--	--					0 VA	0 VA	--	--	Space	24
		Total Load:		2363 VA		1974 VA		900 VA					
		Total Amps:		20 A		16 A		8 A					

Legend:

Load Classification	Connected Load	Demand Factor	Estimated Demand	Panel Totals	
HVAC	1789 VA	100.00%	1789 VA		
Lighting	389 VA	100.00%	389 VA	**Total Conn. Load:**	5238 VA
Other	0 VA	0.00%	0 VA	**Total Est. Demand:**	5238 VA
Outlet	3060 VA	100.00%	3060 VA	**Total Conn.:**	15 A
				Total Est. Demand:	15 A

Notes:
PROVIDE FULLY HINGED COVER PLATE. PROVIDE AFCI BREAKER FOR DORM CIRCUITS.

Branch Panel: 2PD

Location: MECH/ELEC 200F
Supply From: 2P1
Mounting: Surface
Enclosure: Type 1
Volts: 120/208 Wye
Phases: 3
Wires: 4
A.I.C. Rating: 22000
Mains Type:
Mains Rating: 100 A
MCB Rating:

Notes:

CKT	Circuit Description	Trip	Poles	A		B		C		Poles	Trip	Circuit Description	CKT
1	Outlet	20 A	1	540	540					1	20 A	Outlet	2
3	Outlet	20 A	1			360	540			1	20 A	Outlet	4
5	Outlet	20 A	1					540	540	1	20 A	Outlet	6
7	HP-36 MECH/ELEC 200F	30 A	2	1550	370					1	20 A	Lighting	8
9	--	--	--			1550	0 VA			1	20 A	Spare	10
11	Spare	20 A	1					0 VA	0 VA	1	20 A	Spare	12
13	Spare	20 A	1	0 VA	0 VA					1	20 A	Spare	14
15	Spare	20 A	1			0 VA	0 VA			1	20 A	Spare	16
17	Spare	20 A	1					0 VA	0 VA	1	20 A	Spare	18
19	Space	--	--	0 VA	0 VA					--	--	Space	20
21	Space	--	--			0 VA	0 VA			--	--	Space	22
23	Space	--	--					0 VA	0 VA	--	--	Space	24
		Total Load:		3019 VA		2450 VA		1080 VA					
		Total Amps:		25 A		20 A		9 A					

Legend:

Load Classification	Connected Load	Demand Factor	Estimated Demand	Panel Totals	
HVAC	3099 VA	100.00%	3099 VA		
Lighting	389 VA	100.00%	389 VA	**Total Conn. Load:**	6548 VA
Other	0 VA	0.00%	0 VA	**Total Est. Demand:**	6548 VA
Outlet	3060 VA	100.00%	3060 VA	**Total Conn.:**	18 A
				Total Est. Demand:	18 A

Notes:
PROVIDE FULLY HINGED COVER PLATE. PROVIDE AFCI BREAKERS FOR DORM CIRCUITS.

Branch Panel: 2PI

Location: MECH/ELEC 200G
Supply From: 2P1
Mounting: Surface
Enclosure: Type 1
Volts: 120/208 Wye
Phases: 3
Wires: 4
A.I.C. Rating: 22000
Mains Type:
Mains Rating: 100 A
MCB Rating:

Notes:

CKT	Circuit Description	Trip	Poles	A		B		C		Poles	Trip	Circuit Description	CKT
1	Outlet BEDROOM 216C	20 A	1	540	540					1	20 A	Outlet	2
3	Outlet	20 A	1			360	540			1	20 A	Outlet	4
5	HP-42 MECH/ELEC 200G	20 A	2					1550	540	1	20 A	Outlet	6
7	--	--	--	1550	370					1	20 A	Lighting	8
9	Spare	20 A	1			0 VA	1440			1	20 A	Outlet	10
11	Spare	20 A	1					0 VA	0 VA	1	20 A	Spare	12
13	Spare	20 A	1	0 VA	0 VA					1	20 A	Spare	14
15	Spare	20 A	1			0 VA	0 VA			1	20 A	Spare	16
17	Spare	20 A	1					0 VA	0 VA	1	20 A	Spare	18
19	Space	--	--	0 VA	0 VA					--	--	Space	20
21	Space	--	--			0 VA	0 VA			--	--	Space	22
23	Space	--	--					0 VA	0 VA	--	--	Space	24
		Total Load:		3019 VA		2340 VA		2090 VA					
		Total Amps:		25 A		20 A		17 A					

Legend:

Load Classification	Connected Load	Demand Factor	Estimated Demand	Panel Totals	
HVAC	3099 VA	100.00%	3099 VA		
Lighting	389 VA	100.00%	389 VA	**Total Conn. Load:**	7448 VA
Other	0 VA	0.00%	0 VA	**Total Est. Demand:**	7448 VA
Outlet	3960 VA	100.00%	3960 VA	**Total Conn.:**	21 A
				Total Est. Demand:	21 A

Notes:
PROVIDE FULLY HINGED COVER PLATE. PROVIDE AFCI BREAKER FOR DORM CIRCUITS.

Branch Panel: 2PH

Location: MECH/ELEC 200G
Supply From: 2P1
Mounting: Surface
Enclosure: Type 1
Volts: 120/208 Wye
Phases: 3
Wires: 4
A.I.C. Rating: 22000
Mains Type:
Mains Rating: 100 A
MCB Rating:

Notes:

CKT	Circuit Description	Trip	Poles	A		B		C		Poles	Trip	Circuit Description	CKT
1	Outlet	20 A	1	540	540					1	20 A	Outlet	2
3	Outlet	20 A	1			360	540			1	20 A	Outlet	4
5	Outlet	20 A	1					540	540	1	20 A	Outlet	6
7	HP-41 MECH/ELEC 200G	20 A	2	1217	389					1	20 A	Lighting	8
9	--	--	--			1217	0 VA			1	20 A	Spare	10
11	Spare	20 A	1					0 VA	0 VA	1	20 A	Spare	12
13	Spare	20 A	1	0 VA	0 VA					1	20 A	Spare	14
15	Spare	20 A	1			0 VA	0 VA			1	20 A	Spare	16
17	Spare	20 A	1					0 VA	0 VA	1	20 A	Spare	18
19	Space	--	--	0 VA	0 VA					--	--	Space	20
21	Space	--	--			0 VA	0 VA			--	--	Space	22
23	Space	--	--					0 VA	0 VA	--	--	Space	24
		Total Load:		2686 VA		2117 VA		1080 VA					
		Total Amps:		22 A		18 A		9 A					

Legend:

Load Classification	Connected Load	Demand Factor	Estimated Demand	Panel Totals	
HVAC	2434 VA	100.00%	2434 VA		
Lighting	389 VA	100.00%	389 VA	**Total Conn. Load:**	5883 VA
Other	0 VA	0.00%	0 VA	**Total Est. Demand:**	5883 VA
Outlet	3060 VA	100.00%	3060 VA	**Total Conn.:**	16 A
				Total Est. Demand:	16 A

Notes:
PROVIDE FULLY HINGED COVER PLATE. PROVIDE AFCI BREAKERS FOR DORM CIRCUITS.

Branch Panel: 2PG

Location: MECH/ELEC 200G
Supply From: 2P1
Mounting: Surface
Enclosure: Type 1
Volts: 120/208 Wye
Phases: 3
Wires: 4
A.I.C. Rating: 22000
Mains Type:
Mains Rating: 100 A
MCB Rating:

Notes:

CKT	Circuit Description	Trip	Poles	A		B		C		Poles	Trip	Circuit Description	CKT
1	Outlet	20 A	1	540	540					1	20 A	Outlet	2
3	Outlet	20 A	1			360	540			1	20 A	Outlet	4
5	Outlet	20 A	1					540	540	1	20 A	Outlet	6
7	HP-37 IDF 298	20 A	2	894	395					1	20 A	Lighting	8
9	--	--	--			894	0 VA			1	20 A	Spare	10
11	Spare	20 A	1					0 VA	0 VA	1	20 A	Spare	12
13	Spare	20 A	1	0 VA	0 VA					1	20 A	Spare	14
15	Spare	20 A	1			0 VA	0 VA			1	20 A	Spare	16
17	Spare	20 A	1					0 VA	0 VA	1	20 A	Spare	18
19	Space	--	--	0 VA	0 VA					--	--	Space	20
21	Space	--	--			0 VA	0 VA			--	--	Space	22
23	Space	--	--					0 VA	0 VA	--	--	Space	24
		Total Load:		2369 VA		1794 VA		1080 VA					
		Total Amps:		20 A		15 A		9 A					

Legend:

Load Classification	Connected Load	Demand Factor	Estimated Demand	Panel Totals	
HVAC	1789 VA	100.00%	1789 VA		
Lighting	395 VA	100.00%	395 VA	**Total Conn. Load:**	5244 VA
Other	0 VA	0.00%	0 VA	**Total Est. Demand:**	5244 VA
Outlet	3060 VA	100.00%	3060 VA	**Total Conn.:**	15 A
				Total Est. Demand:	15 A

Notes:
PROVIDE FULLY HINGED COVER PLATE. PROVIDE AFCI BREAKERS FOR DORM CIRCUITS.

MHTN ARCHITECTS
MHTN Architects, Inc.
420 East South Temple
Suite 100
Salt Lake City, Utah 84111
Telephone (801) 595-6700
Telefax (801) 595-6717
www.mhtn.com

ECE, Inc. Consulting Engineers
939 S. West Temple
Salt Lake City, Utah 84101
Phone 801.521.8007
e-mail admin@eceonline.com

WEBER STATE UNIVERSITY
RESIDENTIAL LIFE PHASE II - BLDG.2

DFCM PROJECT NUMBER: 10176810

WEBER STATE UNIVERSITY
OGDEN, UTAH 84408

SEAL

MHTN PROJECT NO. 4007-2

DRAWN BY: Author CHECKED BY: Checker

ISSUED:

NO.	DATE	DESCRIPTION
01	17 MAY 2011	CONSTRUCTION DOCUMENTS

CONTRACTOR TO VERIFY DRAWINGS IN FIELD USE REFLECT LAST REVISION DATE.

NO.	DATE	DESCRIPTION

SHEET NAME

PANEL SCHEDULES 2ND FLOOR

CONSTRUCTION DOCUMENTS

17 MAY 2011

SHEET NUMBER

EE012

C:\Users\riche\Documents\4007-WEBER STATE BLDG2-CENTRAL-1_richie.rvt
5/17/2011 12:07:38 PM

Branch Panel: 2PL

Location: MECH/ELEC 200K
Supply From: 2P2
Mounting: Surface
Enclosure: Type 1
Volts: 120/208 Wye
Phases: 3
Wires: 4
A.I.C. Rating: 22000
Mains Type:
Mains Rating: 100 A
MCB Rating:

Notes:

CKT	Circuit Description	Trip	Poles	A		B		C		Poles	Trip	Circuit Description	CKT
1	Outlet	20 A	1	540	540					--	20 A	Outlet	2
3	Outlet	20 A	1			540	540			1	20 A	Outlet	4
5	Outlet	20 A	1					360	540	1	20 A	Outlet	6
7	HP-43 JAN 301	20 A	2	894	395					1	20 A	Lighting	8
9	--	--	--			894	0 VA			1	20 A	Spare	10
11	Spare	20 A	1					0 VA	0 VA	1	20 A	Spare	12
13	Spare	20 A	1	0 VA	0 VA					1	20 A	Spare	14
15	Spare	20 A	1			0 VA	0 VA			1	20 A	Spare	16
17	Spare	20 A	1					0 VA	0 VA	1	20 A	Spare	18
19	Space	--	--	0 VA	0 VA					--	--	Space	20
21	Space	--	--			0 VA	0 VA			--	--	Space	22
23	Space							0 VA	0 VA	--	--	Space	24
		Total Load:		2369 VA		1974 VA		900 VA					
		Total Amps:		20 A		16 A		8 A					

Legend:

Load Classification	Connected Load	Demand Factor	Estimated Demand	Panel Totals	
HVAC	1789 VA	100.00%	1789 VA		
Lighting	395 VA	100.00%	395 VA	**Total Conn. Load:**	5244 VA
Other	0 VA	0.00%	0 VA	**Total Est. Demand:**	5244 VA
Outlet	3060 VA	100.00%	3060 VA	**Total Conn.:**	15 A
				Total Est. Demand:	15 A

Notes:
PROVIDE FULLY HINGED COVER PLATE. PROVIDE AFCI BREAKERS FOR DORM CIRCUITS.

Branch Panel: 2PK

Location: MECH/ELEC 200K
Supply From: 2P2
Mounting: Surface
Enclosure: Type 1
Volts: 120/208 Wye
Phases: 3
Wires: 4
A.I.C. Rating: 22000
Mains Type:
Mains Rating: 100 A
MCB Rating:

Notes:

CKT	Circuit Description	Trip	Poles	A		B		C		Poles	Trip	Circuit Description	CKT
1	Outlet	20 A	1	360	540					1	20 A	Outlet	2
3	Outlet	20 A	1			540	540			1	20 A	Outlet	4
5	Outlet	20 A	1					540	540	1	20 A	Outlet	6
7	HP-44 JAN 301	20 A	2	894	395					1	20 A	Lighting	8
9	--	--	--			894	0 VA			1	20 A	Spare	10
11	Spare	20 A	1					0 VA	0 VA	1	20 A	Spare	12
13	Spare	20 A	1	0 VA	0 VA					1	20 A	Spare	14
15	Spare	20 A	1			0 VA	0 VA			1	20 A	Spare	16
17	Spare	20 A	1					0 VA	0 VA	1	20 A	Spare	18
19	Space	--	--	0 VA	0 VA					--	--	Space	20
21	Space	--	--			0 VA	0 VA			--	--	Space	22
23	Space							0 VA	0 VA	--	--	Space	24
		Total Load:		2189 VA		1974 VA		1080 VA					
		Total Amps:		18 A		16 A		9 A					

Legend:

Load Classification	Connected Load	Demand Factor	Estimated Demand	Panel Totals	
HVAC	1789 VA	100.00%	1789 VA		
Lighting	395 VA	100.00%	395 VA	**Total Conn. Load:**	5244 VA
Other	0 VA	0.00%	0 VA	**Total Est. Demand:**	5244 VA
Outlet	3060 VA	100.00%	3060 VA	**Total Conn.:**	15 A
				Total Est. Demand:	15 A

Notes:
PROVIDE FULLY HINGED COVER PLATE. PROVIDE AFCI BREAKERS FOR DORM CIRCUITS.

Branch Panel: 2PJ

Location: MECH/ELEC 200G
Supply From: 2P1
Mounting: Surface
Enclosure: Type 1
Volts: 120/208 Wye
Phases: 3
Wires: 4
A.I.C. Rating: 22000
Mains Type:
Mains Rating: 100 A
MCB Rating:

Notes:

CKT	Circuit Description	Trip	Poles	A		B		C		Poles	Trip	Circuit Description	CKT
1	Outlet	20 A	1	540	540					1	20 A	Outlet	2
3	Outlet	20 A	1			540	540			1	20 A	Outlet	4
5	Outlet	20 A	1					360	540	1	20 A	Outlet	6
7	HP-39 MECH/ELEC 200G	20 A	2	894	370					1	20 A	Lighting	8
9	--	--	--			894	0 VA			1	20 A	Spare	10
11	Spare	20 A	1					0 VA	0 VA	1	20 A	Spare	12
13	Spare	20 A	1	0 VA	0 VA					1	20 A	Spare	14
15	Spare	20 A	1			0 VA	0 VA			1	20 A	Spare	16
17	Spare	20 A	1					0 VA	0 VA	1	20 A	Spare	18
19	Space	--	--	0 VA	0 VA					--	--	Space	20
21	Space	--	--			0 VA	0 VA			--	--	Space	22
23	Space							0 VA	0 VA	--	--	Space	24
		Total Load:		2363 VA		1974 VA		900 VA					
		Total Amps:		20 A		16 A		8 A					

Legend:

Load Classification	Connected Load	Demand Factor	Estimated Demand	Panel Totals	
HVAC	1789 VA	100.00%	1789 VA		
Lighting	389 VA	100.00%	389 VA	**Total Conn. Load:**	5238 VA
Other	0 VA	0.00%	0 VA	**Total Est. Demand:**	5238 VA
Outlet	3060 VA	100.00%	3060 VA	**Total Conn.:**	15 A
				Total Est. Demand:	15 A

Notes:
PROVIDE FULLY HINGED COVER PLATE. PROVIDE AFCI BREAKER FOR DORM CIRCUITS.

Branch Panel: 2PO

Location: MECH/ELEC 200K
Supply From: 2P2
Mounting: Surface
Enclosure: Type 1
Volts: 120/208 Wye
Phases: 3
Wires: 4
A.I.C. Rating: 22000
Mains Type:
Mains Rating: 100 A
MCB Rating:

Notes:

CKT	Circuit Description	Trip	Poles	A		B		C		Poles	Trip	Circuit Description	CKT
1	Outlet	20 A	1	540	540					1	20 A	Outlet	2
3	Outlet	20 A	1			540	540			1	20 A	Outlet	4
5	Outlet	20 A	1					360	360	1	20 A	Outlet	6
7	HP-45 MECH/ELEC 200K	20 A	2	894	329					1	20 A	Lighting	8
9	--	--	--			894	0 VA			1	20 A	Spare	10
11	Spare	20 A	1					0 VA	0 VA	1	20 A	Spare	12
13	Spare	20 A	1	0 VA	0 VA					1	20 A	Spare	14
15	Spare	20 A	1			0 VA	0 VA			1	20 A	Spare	16
17	Spare	20 A	1					0 VA	0 VA	1	20 A	Spare	18
19	Space	--	--	0 VA	0 VA					--	--	Space	20
21	Space	--	--			0 VA	0 VA			--	--	Space	22
23	Space	--	--					0 VA	0 VA	--	--	Space	24
		Total Load:		2322 VA		1974 VA		720 VA					
		Total Amps:		19 A		16 A		6 A					

Legend:

Load Classification	Connected Load	Demand Factor	Estimated Demand	Panel Totals	
HVAC	1789 VA	100.00%	1789 VA		
Lighting	329 VA	100.00%	329 VA	**Total Conn. Load:**	4998 VA
Other	0 VA	0.00%	0 VA	**Total Est. Demand:**	4998 VA
Outlet	2880 VA	100.00%	2880 VA	**Total Conn.:**	14 A
				Total Est. Demand:	14 A

Notes:
PROVIDE FULLY HINGED COVER PLATE. PROVIDE AFCI BREAKERS FOR DORM CIRCUITS.

Branch Panel: 2PN

Location: MECH/ELEC 200K
Supply From: 2P2
Mounting: Surface
Enclosure: Type 1
Volts: 120/208 Wye
Phases: 3
Wires: 4
A.I.C. Rating: 22000
Mains Type:
Mains Rating: 100 A
MCB Rating:

Notes:

CKT	Circuit Description	Trip	Poles	A		B		C		Poles	Trip	Circuit Description	CKT
1	Outlet	20 A	1	540	540					1	20 A	Outlet	2
3	Outlet	20 A	1			540	540			1	20 A	Outlet	4
5	Outlet	20 A	1					360	540	1	20 A	Outlet	6
7	HP-47 MECH/ELEC 200K	30 A	2	1550	370					1	20 A	Lighting	8
9	--	--	--			1550	0 VA			1	20 A	Spare	10
11	Spare	20 A	1					0 VA	0 VA	1	20 A	Spare	12
13	Spare	20 A	1	0 VA	0 VA					1	20 A	Spare	14
15	Spare	20 A	1			0 VA	0 VA			1	20 A	Spare	16
17	Spare	20 A	1					0 VA	0 VA	1	20 A	Spare	18
19	Space	--	--	0 VA	0 VA					--	--	Space	20
21	Space	--	--			0 VA	0 VA			--	--	Space	22
23	Space	--	--					0 VA	0 VA	--	--	Space	24
		Total Load:		3019 VA		2630 VA		900 VA					
		Total Amps:		25 A		22 A		8 A					

Legend:

Load Classification	Connected Load	Demand Factor	Estimated Demand	Panel Totals	
HVAC	3099 VA	100.00%	3099 VA		
Lighting	389 VA	100.00%	389 VA	**Total Conn. Load:**	6548 VA
Other	0 VA	0.00%	0 VA	**Total Est. Demand:**	6548 VA
Outlet	3060 VA	100.00%	3060 VA	**Total Conn.:**	18 A
				Total Est. Demand:	18 A

Notes:
PROVIDE FULLY HINGED COVER PLATE. PROVIDE AFCI BREAKERS FOR DORM CIRCUITS.

Branch Panel: 2PM

Location: MECH/ELEC 200K
Supply From: 2P2
Mounting: Surface
Enclosure: Type 1
Volts: 120/208 Wye
Phases: 3
Wires: 4
A.I.C. Rating: 22000
Mains Type:
Mains Rating: 100 A
MCB Rating:

Notes:

CKT	Circuit Description	Trip	Poles	A		B		C		Poles	Trip	Circuit Description	CKT
1	Outlet	20 A	1	540	540					1	20 A	Outlet	2
3	Outlet	20 A	1			360	540			1	20 A	Outlet	4
5	Outlet	20 A	1					540	540	1	20 A	Outlet	6
7	HP-46 MECH/ELEC 200K	20 A	2	1217	389					1	20 A	Lighting	8
9	--	--	--			1217	0 VA			1	20 A	Spare	10
11	Spare	20 A	1					0 VA	0 VA	1	20 A	Spare	12
13	Spare	20 A	1	0 VA	0 VA					1	20 A	Spare	14
15	Spare	20 A	1			0 VA	0 VA			1	20 A	Spare	16
17	Spare	20 A	1					0 VA	0 VA	1	20 A	Spare	18
19	Space	--	--	0 VA	0 VA					--	--	Space	20
21	Space	--	--			0 VA	0 VA			--	--	Space	22
23	Space	--	--					0 VA	0 VA	--	--	Space	24
		Total Load:		2686 VA		2117 VA		1080 VA					
		Total Amps:		22 A		18 A		9 A					

Legend:

Load Classification	Connected Load	Demand Factor	Estimated Demand	Panel Totals	
HVAC	2434 VA	100.00%	2434 VA		
Lighting	389 VA	100.00%	389 VA	**Total Conn. Load:**	5883 VA
Other	0 VA	0.00%	0 VA	**Total Est. Demand:**	5883 VA
Outlet	3060 VA	100.00%	3060 VA	**Total Conn.:**	16 A
				Total Est. Demand:	16 A

Notes:
PROVIDE FULLY HINGED COVER PLATE. PROVIDE AFCI BREAKERS FOR DORM CIRCUITS.

Branch Panel: 2PR

Location: MECH/ELEC 200N
Supply From: 2P2
Mounting: Surface
Enclosure: Type 1
Volts: 120/208 Wye
Phases: 3
Wires: 4
A.I.C. Rating: 22000
Mains Type:
Mains Rating: 100 A
MCB Rating:

Notes:

CKT	Circuit Description	Trip	Poles	A		B		C		Poles	Trip	Circuit Description	CKT
1	Outlet	20 A	1	540	360					1	20 A	Outlet	2
3	Outlet	20 A	1			540	540			1	20 A	Outlet	4
5	Outlet	20 A	1					540	540	1	20 A	Outlet	6
7	HP-56 MECH/ELEC 200N	30 A	2	1217	370					1	20 A	Lighting	8
9	--	--	--			1217	0 VA			1	20 A	Spare	10
11	Spare	20 A	1					0 VA	0 VA	1	20 A	Spare	12
13	Spare	20 A	1	0 VA	0 VA					1	20 A	Spare	14
15	Spare	20 A	1			0 VA	0 VA			1	20 A	Spare	16
17	Spare	20 A	1					0 VA	0 VA	1	20 A	Spare	18
19	Space	--	--	0 VA	0 VA					--	--	Space	20
21	Space	--	--			0 VA	0 VA			--	--	Space	22
23	Space	--	--					0 VA	0 VA	--	--	Space	24
		Total Load:		2506 VA		2297 VA		1080 VA					
		Total Amps:		21 A		19 A		9 A					

Legend:

Load Classification	Connected Load	Demand Factor	Estimated Demand	Panel Totals	
HVAC	2434 VA	100.00%	2434 VA		
Lighting	370 VA	100.00%	370 VA	**Total Conn. Load:**	5864 VA
Other	0 VA	0.00%	0 VA	**Total Est. Demand:**	5864 VA
Outlet	3060 VA	100.00%	3060 VA	**Total Conn.:**	16 A
				Total Est. Demand:	16 A

Notes:
PROVIDE FULLY HINGED COVER PLATE. PROVIDE AFCI BREAKERS FOR DORM CIRCUITS.

Branch Panel: 2PQ

Location: MECH/ELEC 200N
Supply From: 2P2
Mounting: Surface
Enclosure: Type 1
Volts: 120/208 Wye
Phases: 3
Wires: 4
A.I.C. Rating: 22000
Mains Type:
Mains Rating: 100 A
MCB Rating:

Notes:

CKT	Circuit Description	Trip	Poles	A		B		C		Poles	Trip	Circuit Description	CKT
1	Outlet	20 A	1	540	540					1	20 A	Outlet	2
3	Outlet	20 A	1			360	540			1	20 A	Outlet	4
5	Outlet	20 A	1					540	540	1	20 A	Outlet	6
7	HP-53 Room 306	20 A	2	894	0 VA					1	20 A	Spare	8
9	--	--	--			894	0 VA			1	20 A	Spare	10
11	Spare	20 A	1					0 VA	395	1	20 A	Lighting	12
13	Spare	20 A	1	0 VA	0 VA					1	20 A	Spare	14
15	Spare	20 A	1			0 VA	0 VA			1	20 A	Spare	16
17	Spare	20 A	1					0 VA	0 VA	1	20 A	Spare	18
19	Space	--	--	0 VA	0 VA					--	--	Space	20
21	Space	--	--			0 VA	0 VA			--	--	Space	22
23	Space	--	--					0 VA	0 VA	--	--	Space	24
		Total Load:		1974 VA		1794 VA		1475 VA					
		Total Amps:		16 A		15 A		12 A					

Legend:

Load Classification	Connected Load	Demand Factor	Estimated Demand	Panel Totals	
HVAC	1789 VA	100.00%	1789 VA		
Lighting	395 VA	100.00%	395 VA	**Total Conn. Load:**	5244 VA
Other	0 VA	0.00%	0 VA	**Total Est. Demand:**	5244 VA
Outlet	3060 VA	100.00%	3060 VA	**Total Conn.:**	15 A
				Total Est. Demand:	15 A

Notes:
PROVIDE FULLY HINGED COVER PLATE. PROVIDE AFCI BREAKERS FOR DORM CIRCUITS.

Branch Panel: 2PP

Location: MECH/ELEC 200N
Supply From: 2P2
Mounting: Surface
Enclosure: Type 1
Volts: 120/208 Wye
Phases: 3
Wires: 4
A.I.C. Rating: 22000
Mains Type:
Mains Rating: 100 A
MCB Rating:

Notes:

CKT	Circuit Description	Trip	Poles	A		B		C		Poles	Trip	Circuit Description	CKT
1	Outlet	20 A	1	540	540					1	20 A	Outlet	2
3	Outlet	20 A	1			360	540			1	20 A	Outlet	4
5	Outlet	20 A	1					540	540	1	20 A	Outlet	6
7	HP-54 Room 306	20 A	2	1217	395					1	20 A	Lighting	8
9	--	--	--			1217	0 VA			1	20 A	Spare	10
11	Spare	20 A	1					0 VA	0 VA	1	20 A	Spare	12
13	Spare	20 A	1	0 VA	0 VA					1	20 A	Spare	14
15	Spare	20 A	1			0 VA	0 VA			1	20 A	Spare	16
17	Spare	20 A	1					0 VA	0 VA	1	20 A	Spare	18
19	Space	--	--	0 VA	0 VA					--	--	Space	20
21	Space	--	--			0 VA	0 VA			--	--	Space	22
23	Space	--	--					0 VA	0 VA	--	--	Space	24
		Total Load:		2692 VA		2117 VA		1080 VA					
		Total Amps:		22 A		18 A		9 A					

Legend:

Load Classification	Connected Load	Demand Factor	Estimated Demand	Panel Totals	
HVAC	2434 VA	100.00%	2434 VA		
Lighting	395 VA	100.00%	395 VA	**Total Conn. Load:**	5889 VA
Other	0 VA	0.00%	0 VA	**Total Est. Demand:**	5889 VA
Outlet	3060 VA	100.00%	3060 VA	**Total Conn.:**	16 A
				Total Est. Demand:	16 A

Notes:
PROVIDE FULLY HINGED COVER PLATE. PROVIDE AFCI BREAKERS FOR DORM CIRCUITS.

MHTN
ARCHITECTS
MHTN Architects, Inc.
420 East South Temple
Suite 100
Salt Lake City, Utah 84111
Telephone (801) 595-6700
Telefax (801) 595-6717
www.mhtn.com

ECE, Inc. Consulting Engineers
939 S. West Temple
Salt Lake City, Utah 84101
Phone 801.521.8007
e-mail admin@eceonline.com

WEBER STATE UNIVERSITY
RESIDENTIAL LIFE PHASE II - BLDG.2

DFCM PROJECT NUMBER: 10176810

WEBER STATE UNIVERSITY
OGDEN, UTAH 84408

SEAL

MHTN PROJECT NO. 4007-2

DRAWN BY: Author CHECKED BY: Checker

ISSUED:

NO.	DATE	DESCRIPTION
01	17 MAY 2011	CONSTRUCTION DOCUMENTS

CONTRACTOR TO VERIFY DRAWINGS IN FIELD USE REFLECT LAST REVISION DATE.

NO.	DATE	DESCRIPTION

SHEET NAME
PANEL SCHEDULES 2ND FLOOR
CONSTRUCTION DOCUMENTS
17 MAY 2011

SHEET NUMBER
EE013

C:\Users\riche\Documents\4007-WEBER STATE BLDG2-CENTRAL-1_richie.rvt
5/17/2011 12:07:39 PM

Branch Panel: 2P4

Location: MECH/ELEC 200K
Supply From: MDS3
Mounting: Surface
Enclosure: Type 1
Volts: 120/208 Wye
Phases: 3
Wires: 4
A.I.C. Rating: 22000
Mains Type:
Mains Rating: 225 A
MCB Rating:

Notes:

CKT	Circuit Description	Trip	Poles	A		B		C		Poles	Trip	Circuit Description	CKT
1	Other Room 210, 211, 212, 214, 213	20 A	1	12 VA	17 VA					1	20 A	Other Room 209, 207, 208, 215, 217, 216	2
3	CIRC. PUMP MECH 200D	20 A	1			120	180			1	20 A	Power	4
5	Other Room 219, 220, 218, 204, 205	20 A	1					12 VA	240	1	20 A	CIRC. PUMPS MECH/ELEC 200F	6
7	CIRC. PUMP MECH/ELEC 200G	20 A	1	240	360					1	20 A	Outlet KITCHEN/LOUNGE 209	8
9	FSD HALL 200	20 A	1			1440	0 VA			1	20 A	Spare	10
11	ATC PANEL MECH/ELEC 200F	20 A	1					500	0 VA	1	20 A	Spare	12
13	Lighting C-STORE 222	20 A	1	694	3297					2	60 A	HP-34 MECH/ELEC 200F	14
15	HP-40 MECH/ELEC 200G	20 A	2			894	3297			--	--	--	16
17	--	--	--					894	120	1	20 A	CIRC. PUMP MECH 200E	18
19	CIRC. PUMP MECH 200C	20 A	1	120	180					1	20 A	CIRC. PUMP MECH/ELEC 200K	20
21	Power	20 A	1			180	0 VA			1	20 A	Spare	22
23	Spare	20 A	1					0 VA	0 VA	1	20 A	Spare	24
25	Spare	20 A	1	0 VA	0 VA					1	20 A	Spare	26
27	Spare	20 A	1			0 VA	0 VA			1	20 A	Spare	28
29	Spare	20 A	1					0 VA	0 VA	1	20 A	Spare	30
31	Spare	20 A	1	0 VA	0 VA					1	20 A	Spare	32
33	Spare	20 A	1			0 VA	0 VA			1	20 A	Spare	34
35	Spare	20 A	1					0 VA	0 VA	1	20 A	Spare	36
37	Spare	20 A	1	0 VA	0 VA					1	20 A	Spare	38
39	Spare	20 A	1			0 VA	0 VA			1	20 A	Spare	40
41	Spare	20 A	1					0 VA	0 VA	1	20 A	Spare	42
		Total Load:		4920 VA		6111 VA		1766 VA					
		Total Amps:		41 A		51 A		15 A					

Legend:

Load Classification	Connected Load	Demand Factor	Estimated Demand	Panel Totals	
HVAC	9402 VA	100.00%	9402 VA		
Lighting	694 VA	100.00%	694 VA	**Total Conn. Load:**	12297 VA
Other	0 VA	0.00%	0 VA	**Total Est. Demand:**	12297 VA
Power	360 VA	100.00%	360 VA	**Total Conn.:**	34 A
Outlet	360 VA	100.00%	360 VA	**Total Est. Demand:**	34 A
Fire Alarm	1481 VA	100.00%	1481 VA		

Notes:
PROVIDE FULLY HINGED COVER PLATE

Branch Panel: 2P1

Location: JANITOR 200A
Supply From: MDS3
Mounting: Surface
Enclosure: Type 1
Volts: 120/208 Wye
Phases: 3
Wires: 4
A.I.C. Rating: 22000
Mains Type:
Mains Rating: 225 A
MCB Rating:

Notes:

CKT	Circuit Description	Trip	Poles	A		B		C		Poles	Trip	Circuit Description	CKT
1	CIRC. PUMP	20 A	1	240	120					1	20 A	WS-1 MECH. 200B	2
3						120				1	20 A	WS-1 MECH. 200B	4
5	Spare	20 A	1					0 VA	0 VA	1	20 A	Spare	6
7	CIRC. PUMP MECH/ELEC 305	20 A	1	240	120					1	20 A	CIRC. PUMP Room 306	8
9	2PA	60 A	3			2189	2692			3	60 A	2PB	10
11	--	--	--					1620	2297	--	--	--	12
13	--	--	--	1434	900					--	--	--	14
15	2PC	60 A	3			2686	3019			3	60 A	2PD	16
17	--	--	--					2117	2450	--	--	--	18
19	--	--	--	1080	1080					--	--	--	20
21	2PE	60 A	3			2363	2189			3	60 A	2PF	22
23	--	--	--					1974	1974	--	--	--	24
25	--	--	--	900	1080					--	--	--	26
27	2PG	60 A	3			2369	2686			3	60 A	2PH	28
29	--	--	--					1794	2117	--	--	--	30
31	--	--	--	1080	1080					--	--	--	32
33	2PI	60 A	3			3019	2363			3	60 A	2PJ	34
35	--	--	--					2340	1974	--	--	--	36
37	--	--	--	2090	900					--	--	--	38
39	HP-48 MECH. 200B	40 A	2			2236	120			1	20 A	WH-1 MECH. 200B	40
41	--	--	--					2236	1500	1	20 A	CUH-2	42
		Total Load:		12344 VA		28052 VA		24394 VA					
		Total Amps:		103 A		234 A		203 A					

Legend:

Load Classification	Connected Load	Demand Factor	Estimated Demand	Panel Totals	
HVAC	27875 VA	100.00%	27875 VA		
Lighting	3914 VA	100.00%	3914 VA	**Total Conn. Load:**	64789 VA
Other	0 VA	0.00%	0 VA	**Total Est. Demand:**	54039 VA
Outlet	31500 VA	65.87%	20750 VA	**Total Conn.:**	180 A
HVAC Heating	1500 VA	100.00%	1500 VA	**Total Est. Demand:**	150 A

Notes:
PROVIDE FULLY HINGED COVER PLATE.

Branch Panel: 2PT

Location: MECH/ELEC 200N
Supply From: 2P2
Mounting: Surface
Enclosure: Type 1
Volts: 120/208 Wye
Phases: 3
Wires: 4
A.I.C. Rating: 22000
Mains Type:
Mains Rating: 100 A
MCB Rating:

Notes:

CKT	Circuit Description	Trip	Poles	A		B		C		Poles	Trip	Circuit Description	CKT
1	Outlet	20 A	1	540	540					1	20 A	Outlet	2
3	Outlet	20 A	1			540	540			1	20 A	Outlet	4
5	Outlet	20 A	1					360	540	1	20 A	Outlet	6
7	HP-55 MECH/ELEC 200N	20 A	2	894	370					1	20 A	Lighting	8
9	--	--	--			894	0 VA			1	20 A	Spare	10
11	Spare	20 A	1					0 VA	0 VA	1	20 A	Spare	12
13	Spare	20 A	1	0 VA	0 VA					1	20 A	Spare	14
15	Spare	20 A	1			0 VA	0 VA			1	20 A	Spare	16
17	Spare	20 A	1					0 VA	0 VA	1	20 A	Spare	18
19	Space	--	--	0 VA	0 VA					--	--	Space	20
21	Space	--	--			0 VA	0 VA			--	--	Space	22
23	Space							0 VA	0 VA	--	--	Space	24
		Total Load:		2363 VA		1974 VA		900 VA					
		Total Amps:		20 A		16 A		8 A					

Legend:

Load Classification	Connected Load	Demand Factor	Estimated Demand	Panel Totals	
HVAC	1789 VA	100.00%	1789 VA		
Lighting	389 VA	100.00%	389 VA	**Total Conn. Load:**	5238 VA
Other	0 VA	0.00%	0 VA	**Total Est. Demand:**	5238 VA
Outlet	3060 VA	100.00%	3060 VA	**Total Conn.:**	15 A
				Total Est. Demand:	15 A

Notes:
PROVIDE FULLY HINGED COVER PLATE. PROVIDE AFCI BREAKERS FOR DORM CIRCUITS.

Branch Panel: 2PS

Location: MECH/ELEC 200N
Supply From: 2P2
Mounting: Surface
Enclosure: Type 1
Volts: 120/208 Wye
Phases: 3
Wires: 4
A.I.C. Rating: 22000
Mains Type:
Mains Rating: 100 A
MCB Rating:

Notes:

CKT	Circuit Description	Trip	Poles	A		B		C		Poles	Trip	Circuit Description	CKT
1	Outlet	20 A	1	540	540					1	20 A	Outlet	2
3	Outlet	20 A	1			540	540			1	20 A	Outlet	4
5	Outlet	20 A	1					360	540	1	20 A	Outlet	6
7	HP-57 MECH/ELEC 200N	30 A	2	1550	370					1	20 A	Lighting	8
9	--	--	--			1550	0 VA			1	20 A	Spare	10
11	Spare	20 A	1					0 VA	0 VA	1	20 A	Spare	12
13	Spare	20 A	1	0 VA	0 VA					1	20 A	Spare	14
15	Spare	20 A	1			0 VA	0 VA			1	20 A	Spare	16
17	Spare	20 A	1					0 VA	0 VA	1	20 A	Spare	18
19	Space	--	--	0 VA	0 VA					--	--	Space	20
21	Space	--	--			0 VA	0 VA			--	--	Space	22
23	Space							0 VA	0 VA	--	--	Space	24
		Total Load:		3019 VA		2630 VA		900 VA					
		Total Amps:		25 A		22 A		8 A					

Legend:

Load Classification	Connected Load	Demand Factor	Estimated Demand	Panel Totals	
HVAC	3099 VA	100.00%	3099 VA		
Lighting	389 VA	100.00%	389 VA	**Total Conn. Load:**	6548 VA
Other	0 VA	0.00%	0 VA	**Total Est. Demand:**	6548 VA
Outlet	3060 VA	100.00%	3060 VA	**Total Conn.:**	18 A
				Total Est. Demand:	18 A

Notes:
PROVIDE FULLY HINGED COVER PLATE. PROVIDE AFCI BREAKERS FOR DORM CIRCUITS.

Branch Panel: 2P2

Location: JANITOR 200A
Supply From: MDS3
Mounting: Surface
Enclosure: Type 1
Volts: 120/208 Wye
Phases: 3
Wires: 4
A.I.C. Rating: 22000
Mains Type:
Mains Rating: 225 A
MCB Rating:

Notes:

CKT	Circuit Description	Trip	Poles	A		B		C		Poles	Trip	Circuit Description	CKT
1	2PA	60 A	3	2189	2369					3	60 A	2PB	2
3	--	--	--			1974	1974			--	--	--	4
5	--	--	--					1080	900	--	--	--	6
7	2PC	60 A	3	2686	3019					3	60 A	2PD	8
9	--	--	--			2117	2630			--	--	--	10
11	--	--	--					1080	900	--	--	--	12
13	2PE	60 A	3	2322	2692					3	60 A	2PP	14
15	--	--	--			1974	2117			--	--	--	16
17	--	--	--					720	1080	--	--	--	18
19	2PQ	60 A	3	1974	2506					3	60 A	2PR	20
21	--	--	--			1794	2297			--	--	--	22
23	--	--	--					1475	1080	--	--	--	24
25	2PS	60 A	3	3019	2363					3	60 A	2PT	26
27	--	--	--			2630	1974			--	--	--	28
29	--	--	--					900	900	--	--	--	30
31	Other Room 227, 228, 226, 230, 639, 229	20 A	1	14 VA	540					1	20 A	Outlet LOUNGE 206	32
33	EWC	20 A	1			180	720			1	20 A	Outlet LOUNGE 206	34
35	Outlet LOUNGE 206	20 A	1					180	540	1	20 A	Outlet Room 200E, 200C, 200D	36
37	HP-49	50 A	2	3442									38
39	--	--	--			3442	0 VA			1	0 A	Spare	40
41	Spare	0 A	1					0 VA	500	1	20 A	ATC PANEL MECH/ELEC 200N	42
		Total Load:		29136 VA		25824 VA		11335 VA					
		Total Amps:		243 A		215 A		94 A					

Legend:

Load Classification	Connected Load	Demand Factor	Estimated Demand	Panel Totals	
HVAC	29328 VA	100.00%	29328 VA		
Lighting	3873 VA	100.00%	3873 VA	**Total Conn. Load:**	65795 VA
Other	0 VA	0.00%	0 VA	**Total Est. Demand:**	54505 VA
Outlet	32580 VA	65.35%	21290 VA	**Total Conn.:**	183 A
Fire Alarm	14 VA	100.00%	14 VA	**Total Est. Demand:**	151 A

Notes:
PROVIDE FULLY HINGED COVER PLATE.

Branch Panel: 2P3

Location: JANITOR 200A
Supply From: MDS3
Mounting: Surface
Enclosure: Type 1
Volts: 120/208 Wye
Phases: 3
Wires: 4
A.I.C. Rating: 22000
Mains Type:
Mains Rating: 225 A
MCB Rating:

Notes:

CKT	Circuit Description	Trip	Poles	A		B		C		Poles	Trip	Circuit Description	CKT
1	MICROWAVE KITCHEN/LOUNGE 209	20 A	1	180	500					1	20 A	ADA DOOR VESTIBULE 201A	2
3	MICROWAVE KITCHEN/LOUNGE 229	20 A	1			180	180			1	20 A	REF. KITCHEN/LOUNGE 209	4
5	C.O. 299F, 201B	20 A	1					360	540	1	20 A	C.O. 203, 202	6
7	C.O. IDF 200H	20 A	1	720	900					1	20 A	C.O. KITCHEN/LOUNGE 229	8
9	Outlet	20 A	1			360	360			1	20 A	C.O. KITCHEN/LOUNGE 209	10
11	C.O. KITCHEN/LOUNGE 209	20 A	1					900	1440	1	20 A	C.O. 200M, 200N, 299E	12
13	C.O. JANITOR 200A	20 A	1	1260	1440					1	20 A	C.O. 200G, 200, 299C	14
15	C.O. SEATING 201	20 A	1			1440	4150			2	50 A	RANGE KITCHEN/LOUNGE 229	16
17	C.O. 200K, 200, 292	20 A	1					1440	4150	--	--	--	18
19	RANGE KITCHEN/LOUNGE 209	50 A	2	4150	180					1	20 A	Outlet IDF 200H	20
21	--	--	--			4150	948			1	20 A	Lighting	22
23	REF. KITCHEN/LOUNGE 229	20 A	1					180	360	1	20 A	Outlet Room 201B, 253	24
25	C.O. IDF 200P	20 A	1	360	540					1	20 A	C.O. IDF 200P	26
27	LTG. KITCHEN/LOUNGE 209	20 A	1			297	816			1	20 A	LTG. Room 200M	28
29	C.O. KITCHEN/LOUNGE 229	20 A	1					720	1260	1	20 A	C.O. SEATING 201	30
31	C.O. 299B, 200, 200F	20 A	1	1440	1414					1	20 A	Lighting C-STORE 222	32
33	Room 229	20 A	1			247	1123			1	20 A	LTG. HALL 200	34
35	Outlet LOUNGE 201	20 A	1					720	3297	2	60 A	HP-51	36
37	HP-50	20 A	2	1217	3297					--	--	--	38
39	--	--	--			1217	360			1	20 A	Kitchen KITCHEN/LOUNGE 209	40
41	HP-58 MECH/ELEC 200N	30 A	2					1685	1080	1	20 A	FIRE SMOKE DAMPERS HALL 200	42
43	--	--	--	1685	540					1	20 A	FIRE SMOKE DAMPERS HALL 200M	44
45	Spare	20 A	1			0 VA	0 VA			1	20 A	Spare	46
47	Spare	20 A	1					0 VA	0 VA	1	20 A	Spare	48
49	Spare	20 A	1	0 VA	0 VA					1	20 A	Spare	50
51	Spare	20 A	1			0 VA	0 VA			1	20 A	Spare	52
53	Spare	20 A	1					0 VA	0 VA	1	20 A	Spare	54
		Total Load:		19822 VA		15828 VA		18132 VA					
		Total Amps:		165 A		132 A		151 A					

Legend:

Load Classification	Connected Load	Demand Factor	Estimated Demand	Panel Totals	
HVAC	12397 VA	100.00%	12397 VA		
Lighting	4845 VA	100.00%	4845 VA	**Total Conn. Load:**	53782 VA
Other	0 VA	0.00%	0 VA	**Total Est. Demand:**	44386 VA
Power	500 VA	100.00%	500 VA	**Total Conn.:**	149 A
Outlet	15660 VA	81.93%	12830 VA	**Total Est. Demand:**	123 A
Fire Alarm	1620 VA	100.00%	1620 VA		
Kitchen	18760 VA	65.00%	12194 VA		

Notes:
PROVIDE FULLY HINGED COVER PLATE.

MHTN ARCHITECTS
MHTN Architects, Inc.
420 East South Temple
Suite 100
Salt Lake City, Utah 84111
Telephone (801) 595-6700
Telefax (801) 595-6717
www.mhtn.com

ECE, Inc. Consulting Engineers
939 S. West Temple
Salt Lake City, Utah 84101
Phone 801.521.8007
e-mail admin@eceonline.com

WEBER STATE UNIVERSITY
RESIDENTIAL LIFE PHASE II - BLDG.2

DFCM PROJECT NUMBER: 10176810

WEBER STATE UNIVERSITY
OGDEN, UTAH 84408

SEAL

MHTN PROJECT NO. 4007-2

DRAWN BY: Author CHECKED BY: Checker

ISSUED:

NO.	DATE	DESCRIPTION
01	17 MAY 2011	CONSTRUCTION DOCUMENTS

CONTRACTOR TO VERIFY DRAWINGS IN FIELD USE REFLECT LAST REVISION DATE:

NO.	DATE	DESCRIPTION

SHEET NAME
PANEL SCHEDULES 2ND FLOOR
CONSTRUCTION DOCUMENTS
17 MAY 2011

SHEET NUMBER
EE014

C:\Users\richie\Documents\4007 WEBER-STATE-BLDG2-CENTRAL-1_richie.rvt
5/17/2011 12:07:41 PM

Branch Panel: 3PA

Location: MECH/ELEC 300F
Supply From: 3P1
Mounting: Surface
Enclosure: Type 1
Volts: 120/208 Wye
Phases: 3
Wires: 4
A.I.C. Rating: 22000
Mains Type:
Mains Rating: 100 A
MCB Rating:

Notes:

CKT	Circuit Description	Trip	Poles	A		B		C		Poles	Trip	Circuit Description	CKT
1	Outlet	20 A	1	540	540					1	20 A	Outlet	2
3	Outlet	20 A	1			540	360			1	20 A	Outlet	4
5	Outlet	20 A	1					540	540	1	20 A	Outlet	6
7	HP-60 MECH 300E	20 A	2	894	395					1	20 A	Lighting	8
9	--	--	--			894	0 VA			1	20 A	Spare	10
11	Spare	20 A	1					0 VA	0 VA	1	20 A	Spare	12
13	Spare	20 A	1	0 VA	0 VA					1	20 A	Spare	14
15	Spare	20 A	1			0 VA	0 VA			1	20 A	Spare	16
17	Spare	20 A	1					0 VA	0 VA	1	20 A	Spare	18
19	Space	--	--	0 VA	0 VA					--	--	Space	20
21	Space	--	--			0 VA	0 VA			--	--	Space	22
23	Space	--	--					0 VA	0 VA	--	--	Space	24
				Total Load:		2369 VA		1794 VA		1080 VA			
				Total Amps:		20 A		15 A		9 A			

Legend:

Load Classification	Connected Load	Demand Factor	Estimated Demand	Panel Totals	
HVAC	1789 VA	100.00%	1789 VA		
Lighting	395 VA	100.00%	395 VA	**Total Conn. Load:**	5244 VA
Other	0 VA	0.00%	0 VA	**Total Est. Demand:**	5244 VA
Outlet	3060 VA	100.00%	3060 VA	**Total Conn.:**	15 A
				Total Est. Demand:	15 A

Notes:
PROVIDE FULLY HINGED COVER PLATE. PROVIDE AFCI BREAKERS FOR DORM CIRCUITS.

Branch Panel: 3PB

Location: MECH/ELEC 300F
Supply From: 3P1
Mounting: Surface
Enclosure: Type 1
Volts: 120/208 Wye
Phases: 3
Wires: 4
A.I.C. Rating: 22000
Mains Type:
Mains Rating: 100 A
MCB Rating:

Notes:

CKT	Circuit Description	Trip	Poles	A		B		C		Poles	Trip	Circuit Description	CKT
1	Outlet	20 A	1	540	540					1	20 A	Outlet	2
3	Outlet	20 A	1			360	540			1	20 A	Outlet	4
5	Outlet	20 A	1					540	540	1	20 A	Outlet	6
7	HP-59 MECH 300E	30 A	2	1550	395					1	20 A	Lighting	8
9	--	--	--			1550	0 VA			1	20 A	Spare	10
11	Spare	20 A	1					0 VA	0 VA	1	20 A	Spare	12
13	Spare	20 A	1	0 VA	0 VA					1	20 A	Spare	14
15	Spare	20 A	1			0 VA	0 VA			1	20 A	Spare	16
17	Spare	20 A	1					0 VA	0 VA	1	20 A	Spare	18
19	Space	--	--	0 VA	0 VA					--	--	Space	20
21	Space	--	--			0 VA	0 VA			--	--	Space	22
23	Space	--	--					0 VA	0 VA	--	--	Space	24
				Total Load:		3025 VA		2450 VA		1080 VA			
				Total Amps:		25 A		20 A		9 A			

Legend:

Load Classification	Connected Load	Demand Factor	Estimated Demand	Panel Totals	
HVAC	3099 VA	100.00%	3099 VA		
Lighting	395 VA	100.00%	395 VA	**Total Conn. Load:**	6554 VA
Other	0 VA	0.00%	0 VA	**Total Est. Demand:**	6554 VA
Outlet	3060 VA	100.00%	3060 VA	**Total Conn.:**	18 A
				Total Est. Demand:	18 A

Notes:
PROVIDE FULLY HINGED COVER PLATE. PROVIDE AFCI BREAKERS FOR DORM CIRCUITS.

Branch Panel: 3PC

Location:
Supply From: 3P1
Mounting: Surface
Enclosure: Type 1
Volts: 120/208 Wye
Phases: 3
Wires: 4
A.I.C. Rating: 22000
Mains Type:
Mains Rating: 100 A
MCB Rating:

Notes:

CKT	Circuit Description	Trip	Poles	A		B		C		Poles	Trip	Circuit Description	CKT
1	Outlet	20 A	1	540	540					1	20 A	Outlet	2
3	Outlet	20 A	1			360	540			1	20 A	Outlet	4
5	Outlet	20 A	1					540	540	1	20 A	Outlet	6
7	HP-63 MECH/ELEC 300F	20 A	2	1217	370					1	20 A	Lighting	8
9	--	--	--			1217	0 VA			1	20 A	Spare	10
11	Spare	20 A	1					0 VA	0 VA	1	20 A	Spare	12
13	Spare	20 A	1	0 VA	0 VA					1	20 A	Spare	14
15	Spare	20 A	1			0 VA	0 VA			1	20 A	Spare	16
17	Spare	20 A	1					0 VA	0 VA	1	20 A	Spare	18
19	Space	--	--	0 VA	0 VA					--	--	Space	20
21	Space	--	--			0 VA	0 VA			--	--	Space	22
23	Space	--	--					0 VA	0 VA	--	--	Space	24
				Total Load:		2686 VA		2117 VA		1080 VA			
				Total Amps:		22 A		18 A		9 A			

Legend:

Load Classification	Connected Load	Demand Factor	Estimated Demand	Panel Totals	
HVAC	2434 VA	100.00%	2434 VA		
Lighting	370 VA	100.00%	370 VA	**Total Conn. Load:**	5864 VA
Other	0 VA	0.00%	0 VA	**Total Est. Demand:**	5864 VA
Outlet	3060 VA	100.00%	3060 VA	**Total Conn.:**	16 A
				Total Est. Demand:	16 A

Notes:
PROVIDE FULLY HINGED COVER PLATE. PROVIDE AFCI BREAKERS FOR DORM CIRCUITS.

Branch Panel: 3PD

Location: MECH/ELEC 300F
Supply From: 3P1
Mounting: Surface
Enclosure: Type 1
Volts: 120/208 Wye
Phases: 3
Wires: 4
A.I.C. Rating: 22000
Mains Type:
Mains Rating: 100 A
MCB Rating:

Notes:

CKT	Circuit Description	Trip	Poles	A		B		C		Poles	Trip	Circuit Description	CKT
1	Outlet	20 A	1	540	540					1	20 A	Outlet	2
3	Outlet	20 A	1			360	540			1	20 A	Outlet	4
5	Outlet	20 A	1					540	540	1	20 A	Outlet	6
7	HP-64 MECH/ELEC 300F	30 A	2	1550	370					1	20 A	Lighting	8
9	--	--	--			1550	0 VA			1	20 A	Spare	10
11	Spare	20 A	1					0 VA	0 VA	1	20 A	Spare	12
13	Spare	20 A	1	0 VA	0 VA					1	20 A	Spare	14
15	Spare	20 A	1			0 VA	0 VA			1	20 A	Spare	16
17	Spare	20 A	1					0 VA	0 VA	1	20 A	Spare	18
19	Space	--	--	0 VA	0 VA					--	--	Space	20
21	Space	--	--			0 VA	0 VA			--	--	Space	22
23	Space	--	--					0 VA	0 VA	--	--	Space	24
				Total Load:		3019 VA		2450 VA		1080 VA			
				Total Amps:		25 A		20 A		9 A			

Legend:

Load Classification	Connected Load	Demand Factor	Estimated Demand	Panel Totals	
HVAC	3099 VA	100.00%	3099 VA		
Lighting	389 VA	100.00%	389 VA	**Total Conn. Load:**	6548 VA
Other	0 VA	0.00%	0 VA	**Total Est. Demand:**	6548 VA
Outlet	3060 VA	100.00%	3060 VA	**Total Conn.:**	18 A
				Total Est. Demand:	18 A

Notes:
PROVIDE FULLY HINGED COVER PLATE. PROVIDE AFCI BREAKERS FOR DORM CIRCUITS.

Branch Panel: 3PE

Location: MECH/ELEC 300F
Supply From: 3P1
Mounting: Surface
Enclosure: Type 1
Volts: 120/208 Wye
Phases: 3
Wires: 4
A.I.C. Rating: 22000
Mains Type:
Mains Rating: 100 A
MCB Rating:

Notes:

CKT	Circuit Description	Trip	Poles	A		B		C		Poles	Trip	Circuit Description	CKT
1	Outlet	20 A	1	540	540					1	20 A	Outlet	2
3	Outlet	20 A	1			540	540			1	20 A	Outlet	4
5	Outlet	20 A	1					360	540	1	20 A	Outlet	6
7	HP-61 MECH/ELEC 300F	20 A	2	894	389					1	20 A	Lighting	8
9	--	--	--			894	0 VA			1	20 A	Spare	10
11	Spare	20 A	1					0 VA	0 VA	1	20 A	Spare	12
13	Spare	20 A	1	0 VA	0 VA					1	20 A	Spare	14
15	Spare	20 A	1			0 VA	0 VA			1	20 A	Spare	16
17	Spare	20 A	1					0 VA	0 VA	1	20 A	Spare	18
19	Space	--	--	0 VA	0 VA					--	--	Space	20
21	Space	--	--			0 VA							22
23	Space	--	--					0 VA					24
				Total Load:		4027 VA		1974 VA		2564 VA			
				Total Amps:		34 A		16 A		21 A			

Legend:

Load Classification	Connected Load	Demand Factor	Estimated Demand	Panel Totals	
HVAC	1789 VA	100.00%	1789 VA		
Lighting	389 VA	100.00%	389 VA	**Total Conn. Load:**	8566 VA
Other	0 VA	0.00%	0 VA	**Total Est. Demand:**	8566 VA
Outlet	6388 VA	100.00%	6388 VA	**Total Conn.:**	24 A
				Total Est. Demand:	24 A

Notes:
PROVIDE FULLY HINGED COVER PLATE. PROVIDE AFCI BREAKERS FOR DORM CIRCUITS.

Branch Panel: 3PF

Location: MECH/ELEC 300G
Supply From: 3P1
Mounting: Surface
Enclosure: Type 1
Volts: 120/208 Wye
Phases: 3
Wires: 4
A.I.C. Rating: 22000
Mains Type:
Mains Rating: 100 A
MCB Rating:

Notes:

CKT	Circuit Description	Trip	Poles	A		B		C		Poles	Trip	Circuit Description	CKT
1	Outlet	20 A	1	540	540					1	20 A	Outlet	2
3	Outlet	20 A	1			360	540			1	20 A	Outlet	4
5	Outlet	20 A	1					540	540	1	20 A	Outlet	6
7	HP-67 MECH 300D	20 A	2	894	395					1	20 A	Lighting	8
9	--	--	--			894	0 VA			1	20 A	Spare	10
11	Spare	20 A	1					0 VA	0 VA	1	20 A	Spare	12
13	Spare	20 A	1	0 VA	0 VA					1	20 A	Spare	14
15	Spare	20 A	1			0 VA	0 VA			1	20 A	Spare	16
17	Spare	20 A	1					0 VA	0 VA	1	20 A	Spare	18
19	Space	--	--	0 VA	0 VA					--	--	Space	20
21	Space	--	--			0 VA	0 VA			--	--	Space	22
23	Space	--	--					0 VA	0 VA	--	--	Space	24
				Total Load:		2369 VA		1794 VA		1080 VA			
				Total Amps:		20 A		15 A		9 A			

Legend:

Load Classification	Connected Load	Demand Factor	Estimated Demand	Panel Totals	
HVAC	1789 VA	100.00%	1789 VA		
Lighting	395 VA	100.00%	395 VA	**Total Conn. Load:**	5244 VA
Other	0 VA	0.00%	0 VA	**Total Est. Demand:**	5244 VA
Outlet	3060 VA	100.00%	3060 VA	**Total Conn.:**	15 A
				Total Est. Demand:	15 A

Notes:
PROVIDE FULLY HINGED COVER PLATE. PROVIE AFCI BREAKERS FOR DORM CIRCUITS.

Branch Panel: 3PG

Location: MECH/ELEC 300G
Supply From: 3P1
Mounting: Surface
Enclosure: Type 1
Volts: 120/208 Wye
Phases: 3
Wires: 4
A.I.C. Rating: 22000
Mains Type:
Mains Rating: 100 A
MCB Rating:

Notes:

CKT	Circuit Description	Trip	Poles	A		B		C		Poles	Trip	Circuit Description	CKT
1	Outlet	20 A	1	540	540					1	20 A	Outlet	2
3	Outlet	20 A	1			360	540			1	20 A	Outlet	4
5	Outlet	20 A	1					540	540	1	20 A	Outlet	6
7	HP-66 MECH 300D	20 A	2	894	395					1	20 A	Lighting	8
9	--	--	--			894	0 VA			1	20 A	Spare	10
11	Spare	20 A	1					0 VA	0 VA	1	20 A	Spare	12
13	Spare	20 A	1	0 VA	0 VA					1	20 A	Spare	14
15	Spare	20 A	1			0 VA	0 VA			1	20 A	Spare	16
17	Spare	20 A	1					0 VA	0 VA	1	20 A	Spare	18
19	Space	--	--	0 VA	0 VA					--	--	Space	20
21	Space	--	--			0 VA	0 VA			--	--	Space	22
23	Space	--	--					0 VA	0 VA	--	--	Space	24
				Total Load:		2369 VA		1794 VA		1080 VA			
				Total Amps:		20 A		15 A		9 A			

Legend:

Load Classification	Connected Load	Demand Factor	Estimated Demand	Panel Totals	
HVAC	1789 VA	100.00%	1789 VA		
Lighting	385 VA	100.00%	385 VA	**Total Conn. Load:**	5244 VA
Other	0 VA	0.00%	0 VA	**Total Est. Demand:**	5244 VA
Outlet	3060 VA	100.00%	3060 VA	**Total Conn.:**	15 A
				Total Est. Demand:	15 A

Notes:
PROVIDE FULLY HINGED COVER PLATE. PROVIDE AFCI BREAKERS FOR DORM CIRCUITS.

Branch Panel: 3PH

Location: MECH/ELEC 300G
Supply From: 3P1
Mounting: Surface
Enclosure: Type 1
Volts: 120/208 Wye
Phases: 3
Wires: 4
A.I.C. Rating: 22000
Mains Type:
Mains Rating: 100 A
MCB Rating:

Notes:

CKT	Circuit Description	Trip	Poles	A		B		C		Poles	Trip	Circuit Description	CKT
1	Outlet	20 A	1	360	540					1	20 A	Outlet	2
3	Outlet	20 A	1			540	540			1	20 A	Outlet	4
5	Outlet	20 A	1					540	540	1	20 A	Outlet	6
7	HP-70 MECH/ELECG	20 A	2	1217	370					1	20 A	Lighting	8
9	--	--	--			1217	0 VA			1	20 A	Spare	10
11	Spare	20 A	1					0 VA	0 VA	1	20 A	Spare	12
13	Spare	20 A	1	0 VA	0 VA					1	20 A	Spare	14
15	Spare	20 A	1			0 VA	0 VA			1	20 A	Spare	16
17	Spare	20 A	1					0 VA	0 VA	1	20 A	Spare	18
19	Space	--	--	0 VA	0 VA					--	--	Space	20
21	Space	--	--			0 VA	0 VA			--	--	Space	22
23	Space	--	--					0 VA	0 VA	--	--	Space	24
				Total Load:		2506 VA		2297 VA		1080 VA			
				Total Amps:		21 A		19 A		9 A			

Legend:

Load Classification	Connected Load	Demand Factor	Estimated Demand	Panel Totals	
HVAC	2434 VA	100.00%	2434 VA		
Lighting	370 VA	100.00%	370 VA	**Total Conn. Load:**	5864 VA
Other	0 VA	0.00%	0 VA	**Total Est. Demand:**	5864 VA
Outlet	3060 VA	100.00%	3060 VA	**Total Conn.:**	16 A
				Total Est. Demand:	16 A

Notes:
PROVIDE FULLY HINGED COVER PLATE. PROVIDE AFCI BREAKERS FOR DORM CIRCUITS.

Branch Panel: 3PI

Location: MECH/ELEC 300G
Supply From: 3P1
Mounting: Surface
Enclosure: Type 1
Volts: 120/208 Wye
Phases: 3
Wires: 4
A.I.C. Rating: 22000
Mains Type:
Mains Rating: 100 A
MCB Rating:

Notes:

CKT	Circuit Description	Trip	Poles	A		B		C		Poles	Trip	Circuit Description	CKT
1	Outlet BEDROOM 316C	20 A	1	540	540					1	20 A	Outlet	2
3	Outlet	20 A	1			540	540			1	20 A	Outlet	4
5	Outlet	20 A	1					360	540	1	20 A	Outlet	6
7	HP-71 MECH/ELEC 300G	20 A	2	1550	370					1	20 A	Lighting	8
9	--	--	--			1550	0 VA			1	20 A	Spare	10
11	Spare	20 A	1					0 VA	0 VA	1	20 A	Spare	12
13	Spare	20 A	1	0 VA	0 VA					1	20 A	Spare	14
15	Spare	20 A	1			0 VA	0 VA			1	20 A	Spare	16
17	Spare	20 A	1					0 VA	0 VA	1	20 A	Spare	18
19	Space	--	--	0 VA	0 VA					--	--	Space	20
21	Space	--	--			0 VA	0 VA			--	--	Space	22
23	Space	--	--					0 VA	0 VA	--	--	Space	24
				Total Load:		3019 VA		2630 VA		900 VA			
				Total Amps:		25 A		22 A		8 A			

Legend:

Load Classification	Connected Load	Demand Factor	Estimated Demand	Panel Totals	
HVAC	3099 VA	100.00%	3099 VA		
Lighting	389 VA	100.00%	389 VA	**Total Conn. Load:**	6548 VA
Other	0 VA	0.00%	0 VA	**Total Est. Demand:**	6548 VA
Outlet	3060 VA	100.00%	3060 VA	**Total Conn.:**	18 A
				Total Est. Demand:	18 A

Notes:
PROVIDE FULLY HINGED COVER PLATE. PROVIDE AFCI BREAKERS FOR DORM CIRCUITS.

MHTN ARCHITECTS
MHTN Architects, Inc.
420 East South Temple
Suite 100
Salt Lake City, Utah 84111
Telephone (801) 595-6700
Telefax (801) 595-6717
www.mhtn.com

ECE, Inc. Consulting Engineers
939 S. West Temple
Salt Lake City, Utah 84101
Phone 801.521.8007
e-mail admin@eceonline.com

WEBER STATE UNIVERSITY
RESIDENTIAL LIFE PHASE II - BLDG.2

DFCM PROJECT NUMBER: 10176810

WEBER STATE UNIVERSITY
OGDEN, UTAH 84408

SEAL

MHTN PROJECT NO. 4007-2
DRAWN BY: Author CHECKED BY: Checker

ISSUED:

NO.	DATE	DESCRIPTION
01	17 MAY 2011	CONSTRUCTION DOCUMENTS

CONTRACTOR TO VERIFY DRAWINGS IN FIELD USE REFLECT LAST REVISION DATE:

NO.	DATE	DESCRIPTION

SHEET NAME
PANEL SCHEDULES 3RD FLOOR
CONSTRUCTION DOCUMENTS
17 MAY 2011

SHEET NUMBER
EE015

C:\Users\riche\Documents\4007-WEBER-STATE-BLDG2-CENTRAL-1_richie.rvt
5/17/2011 12:07:42 PM

Branch Panel: 3PJ

Location: MECH/ELEC 300G
Supply From: 3P1
Mounting: Surface
Enclosure: Type 1

Volts: 120/208 Wye
Phases: 3
Wires: 4

A.I.C. Rating: 22000
Mains Type:
Mains Rating: 100 A
MCB Rating:

Notes:

CKT	Circuit Description	Trip	Poles	A		B		C		Poles	Trip	Circuit Description	CKT
1	Outlet	20 A	1	540	540					1	20 A	Outlet	2
3	Outlet	20 A	1			540	540			1	20 A	Outlet	4
5	Outlet	20 A	1					360	540	1	20 A	Outlet	6
7	Spare	20 A	1	0 VA	389					1	20 A	Lighting	8
9	Spare	20 A	1			0 VA	1217			2	20 A	HP-68 MECH/ELEC 300G	10
11	Spare	20 A	1					0 VA	1217	--	--	--	12
13	Spare	20 A	1	0 VA	0 VA					1	20 A	Spare	14
15	Spare	20 A	1			0 VA	0 VA			1	20 A	Spare	16
17	Spare	20 A	1					0 VA	0 VA	1	20 A	Spare	18
19	Space	--	--	0 VA	0 VA					--	--	Space	20
21	Space	--	--			0 VA	0 VA			--	--	Space	22
23	Space	--	--					0 VA	0 VA	--	--	Space	24
		Total Load:		1469 VA		2297 VA		2117 VA					
		Total Amps:		12 A		19 A		18 A					

Legend:

Load Classification	Connected Load	Demand Factor	Estimated Demand	Panel Totals	
HVAC	2434 VA	100.00%	2434 VA		
Lighting	389 VA	100.00%	389 VA	**Total Conn. Load:**	5883 VA
Other	0 VA	0.00%	0 VA	**Total Est. Demand:**	5883 VA
Outlet	3060 VA	100.00%	3060 VA	**Total Conn.:**	16 A
				Total Est. Demand:	16 A

Notes:
PROVIDE FULLY HINGED COVER PLATE. PROVIDE AFCI BREAKERS FOR DORM CIRCUITS.

Branch Panel: 3PK

Location: MECH/ELEC 300K
Supply From: 3P2
Mounting: Surface
Enclosure: Type 1

Volts: 120/208 Wye
Phases: 3
Wires: 4

A.I.C. Rating: 22000
Mains Type:
Mains Rating: 100 A
MCB Rating:

Notes:

CKT	Circuit Description	Trip	Poles	A		B		C		Poles	Trip	Circuit Description	CKT
1	Outlet	20 A	1	540	540					1	20 A	Outlet	2
3	Outlet	20 A	1			360	540			1	20 A	Outlet	4
5	Outlet	20 A	1					540	540	1	20 A	Outlet	6
7	HP-74 JANITOR 522	20 A	2	894	395					1	20 A	Lighting	8
9	--	--	--			894	0 VA			1	20 A	Spare	10
11	Spare	20 A	1					0 VA	0 VA	1	20 A	Spare	12
13	Spare	20 A	1	0 VA	0 VA					1	20 A	Spare	14
15	Spare	20 A	1			0 VA	0 VA			1	20 A	Spare	16
17	Spare	20 A	1					0 VA	0 VA	1	20 A	Spare	18
19	Space	--	--	0 VA	0 VA					--	--	Space	20
21	Space	--	--			0 VA	0 VA			--	--	Space	22
23	Space	--	--					0 VA	0 VA	--	--	Space	24
		Total Load:		2369 VA		1794 VA		1080 VA					
		Total Amps:		20 A		15 A		9 A					

Legend:

Load Classification	Connected Load	Demand Factor	Estimated Demand	Panel Totals	
HVAC	1789 VA	100.00%	1789 VA		
Lighting	395 VA	100.00%	395 VA	**Total Conn. Load:**	5244 VA
Other	0 VA	0.00%	0 VA	**Total Est. Demand:**	5244 VA
Outlet	3060 VA	100.00%	3060 VA	**Total Conn.:**	15 A
				Total Est. Demand:	15 A

Notes:
PROVIDE FULLY HINGED COVER PLATE. PROVIDE AFCI BREAKERS FOR DORM CIRCUITS.

Branch Panel: 3PL

Location: MECH/ELEC 300K
Supply From: 3P2
Mounting: Surface
Enclosure: Type 1

Volts: 120/208 Wye
Phases: 3
Wires: 4

A.I.C. Rating: 22000
Mains Type:
Mains Rating: 100 A
MCB Rating:

Notes:

CKT	Circuit Description	Trip	Poles	A		B		C		Poles	Trip	Circuit Description	CKT
1	Outlet	20 A	1	540	540					1	20 A	Outlet	2
3	Outlet	20 A	1			540	540			1	20 A	Outlet	4
5	Outlet	20 A	1					360	540	1	20 A	Outlet	6
7	HP-73 JANITOR 522	20 A	2	894	395					1	20 A	Lighting	8
9	--	--	--			894	0 VA			1	20 A	Spare	10
11	Spare	20 A	1					0 VA	0 VA	1	20 A	Spare	12
13	Spare	20 A	1	0 VA	0 VA					1	20 A	Spare	14
15	Spare	20 A	1			0 VA	0 VA			1	20 A	Spare	16
17	Spare	20 A	1					0 VA	0 VA	1	20 A	Spare	18
19	Space	--	--	0 VA	0 VA					--	--	Space	20
21	Space	--	--			0 VA	0 VA			--	--	Space	22
23	Space	--	--					0 VA	0 VA	--	--	Space	24
		Total Load:		2369 VA		1974 VA		900 VA					
		Total Amps:		20 A		16 A		8 A					

Legend:

Load Classification	Connected Load	Demand Factor	Estimated Demand	Panel Totals	
HVAC	1789 VA	100.00%	1789 VA		
Lighting	395 VA	100.00%	395 VA	**Total Conn. Load:**	5244 VA
Other	0 VA	0.00%	0 VA	**Total Est. Demand:**	5244 VA
Outlet	3060 VA	100.00%	3060 VA	**Total Conn.:**	15 A
				Total Est. Demand:	15 A

Notes:
PROVIDE FULLY HINGED COVER PLATE. PROVIDE AFCI BREAKERS FOR DORM CIRCUITS.

Branch Panel: 3PM

Location: MECH/ELEC 300K
Supply From: 3P2
Mounting: Surface
Enclosure: Type 1

Volts: 120/208 Wye
Phases: 3
Wires: 4

A.I.C. Rating: 22000
Mains Type:
Mains Rating: 100 A
MCB Rating:

Notes:

CKT	Circuit Description	Trip	Poles	A		B		C		Poles	Trip	Circuit Description	CKT
1	Outlet	20 A	1	540	540					1	20 A	Outlet	2
3	Outlet	20 A	1			360	540			1	20 A	Outlet	4
5	Outlet	20 A	1					540	540	1	20 A	Outlet	6
7	HVAC MECH/ELEC 300K	20 A	2	1217	370					1	20 A	Lighting	8
9	--	--	--			1217	0 VA			1	20 A	Spare	10
11	Spare	20 A	1					0 VA	0 VA	1	20 A	Spare	12
13	Spare	20 A	1	0 VA	0 VA					1	20 A	Spare	14
15	Spare	20 A	1			0 VA	0 VA			1	20 A	Spare	16
17	Spare	20 A	1					0 VA	0 VA	1	20 A	Spare	18
19	Space	--	--	0 VA	0 VA					--	--	Space	20
21	Space	--	--			0 VA	0 VA			--	--	Space	22
23	Space	--	--					0 VA	0 VA	--	--	Space	24
		Total Load:		2686 VA		2117 VA		1080 VA					
		Total Amps:		22 A		18 A		9 A					

Legend:

Load Classification	Connected Load	Demand Factor	Estimated Demand	Panel Totals	
HVAC	2434 VA	100.00%	2434 VA		
Lighting	389 VA	100.00%	389 VA	**Total Conn. Load:**	5883 VA
Other	0 VA	0.00%	0 VA	**Total Est. Demand:**	5883 VA
Outlet	3060 VA	100.00%	3060 VA	**Total Conn.:**	16 A
				Total Est. Demand:	16 A

Notes:
PROVIDE FULLY HINGED COVER PLATE. PROVIDE AFCI BREAKERS FOR DORM CIRCUITS.

Branch Panel: 3PN

Location: MECH/ELEC 300K
Supply From: 3P2
Mounting: Surface
Enclosure: Type 1

Volts: 120/208 Wye
Phases: 3
Wires: 4

A.I.C. Rating: 22000
Mains Type:
Mains Rating: 100 A
MCB Rating:

Notes:

CKT	Circuit Description	Trip	Poles	A		B		C		Poles	Trip	Circuit Description	CKT
1	Outlet	20 A	1	540	540					1	20 A	Outlet	2
3	Outlet	20 A	1			540	540			1	20 A	Outlet	4
5	Outlet	20 A	1					360	540	1	20 A	Outlet	6
7	HVAC MECH/ELEC 300K	20 A	2	1550	370					1	20 A	Lighting	8
9	--	--	--			1550	0 VA			1	20 A	Spare	10
11	Spare	20 A	1					0 VA	0 VA	1	20 A	Spare	12
13	Spare	20 A	1	0 VA	0 VA					1	20 A	Spare	14
15	Spare	20 A	1			0 VA	0 VA			1	20 A	Spare	16
17	Spare	20 A	1					0 VA	0 VA	1	20 A	Spare	18
19	Space	--	--	0 VA	0 VA					--	--	Space	20
21	Space	--	--			0 VA	0 VA			--	--	Space	22
23	Space	--	--					0 VA	0 VA	--	--	Space	24
		Total Load:		3019 VA		2630 VA		900 VA					
		Total Amps:		25 A		22 A		8 A					

Legend:

Load Classification	Connected Load	Demand Factor	Estimated Demand	Panel Totals	
HVAC	3099 VA	100.00%	3099 VA		
Lighting	389 VA	100.00%	389 VA	**Total Conn. Load:**	6548 VA
Other	0 VA	0.00%	0 VA	**Total Est. Demand:**	6548 VA
Outlet	3060 VA	100.00%	3060 VA	**Total Conn.:**	18 A
				Total Est. Demand:	18 A

Notes:
PROVIDE FULLY HINGED COVER PLATE. PROVIDE AFCI BREAKERS FOR DORM CIRCUITS.

Branch Panel: 3PO

Location: MECH/ELEC 300K
Supply From: 3P2
Mounting: Surface
Enclosure: Type 1

Volts: 120/208 Wye
Phases: 3
Wires: 4

A.I.C. Rating: 22000
Mains Type:
Mains Rating: 100 A
MCB Rating:

Notes:

CKT	Circuit Description	Trip	Poles	A		B		C		Poles	Trip	Circuit Description	CKT
1	Outlet	20 A	1	540	540					1	20 A	Outlet	2
3	Outlet	20 A	1			540	540			1	20 A	Outlet	4
5	Outlet	20 A	1					360	360	1	20 A	Outlet	6
7	HP-75 MECH/ELEC 300K	20 A	2	1217	348					1	20 A	Lighting	8
9	--	--	--			1217	0 VA			1	20 A	Spare	10
11	Spare	20 A	1					0 VA	0 VA	1	20 A	Spare	12
13	Spare	20 A	1	0 VA	0 VA					1	20 A	Spare	14
15	Spare	20 A	1			0 VA	0 VA			1	20 A	Spare	16
17	Spare	20 A	1					0 VA	0 VA	1	20 A	Spare	18
19	Space	--	--	0 VA	0 VA					--	--	Space	20
21	Space	--	--			0 VA	0 VA			--	--	Space	22
23	Space	--	--					0 VA	0 VA	--	--	Space	24
		Total Load:		2645 VA		2297 VA		720 VA					
		Total Amps:		22 A		19 A		6 A					

Legend:

Load Classification	Connected Load	Demand Factor	Estimated Demand	Panel Totals	
HVAC	2434 VA	100.00%	2434 VA		
Lighting	348 VA	100.00%	348 VA	**Total Conn. Load:**	5662 VA
Other	0 VA	0.00%	0 VA	**Total Est. Demand:**	5662 VA
Outlet	2880 VA	100.00%	2880 VA	**Total Conn.:**	16 A
				Total Est. Demand:	16 A

Notes:
PROVIDE FULLY HINGED COVER PLATE. PROVIDE AFCI BREAKERS FOR DORM CIRCUITS.

Branch Panel: 3PP

Location: MECH/ELEC 300N
Supply From: 3P2
Mounting: Surface
Enclosure: Type 1

Volts: 120/208 Wye
Phases: 3
Wires: 4

A.I.C. Rating: 22000
Mains Type:
Mains Rating: 100 A
MCB Rating:

Notes:

CKT	Circuit Description	Trip	Poles	A		B		C		Poles	Trip	Circuit Description	CKT
1	Outlet	20 A	1	360	540					1	20 A	Outlet	2
3	Outlet	20 A	1			540	540			1	20 A	Outlet	4
5	Outlet	20 A	1					540	540	1	20 A	Outlet	6
7	HP-75 Room 525	20 A	2	1217	395					1	20 A	Lighting	8
9	--	--	--			1217	0 VA			1	20 A	Spare	10
11	Spare	20 A	1					0 VA	0 VA	1	20 A	Spare	12
13	Spare	20 A	1	0 VA	0 VA					1	20 A	Spare	14
15	Spare	20 A	1			0 VA	0 VA			1	20 A	Spare	16
17	Spare	20 A	1					0 VA	0 VA	1	20 A	Spare	18
19	Space	--	--	0 VA	0 VA					--	--	Space	20
21	Space	--	--			0 VA	0 VA			--	--	Space	22
23	Space	--	--					0 VA	0 VA	--	--	Space	24
		Total Load:		2512 VA		2297 VA		1080 VA					
		Total Amps:		21 A		19 A		9 A					

Legend:

Load Classification	Connected Load	Demand Factor	Estimated Demand	Panel Totals	
HVAC	2434 VA	100.00%	2434 VA		
Lighting	395 VA	100.00%	395 VA	**Total Conn. Load:**	5889 VA
Other	0 VA	0.00%	0 VA	**Total Est. Demand:**	5889 VA
Outlet	3060 VA	100.00%	3060 VA	**Total Conn.:**	16 A
				Total Est. Demand:	16 A

Notes:
PROVIDE FULLY HINGED COVER PLATE. PROVIDE AFCI BREAKERS FOR DORM CIRCUITS.

Branch Panel: 3PQ

Location: MECH/ELEC 300N
Supply From: 3P2
Mounting: Surface
Enclosure: Type 1

Volts: 120/208 Wye
Phases: 3
Wires: 4

A.I.C. Rating: 22000
Mains Type:
Mains Rating: 100 A
MCB Rating:

Notes:

CKT	Circuit Description	Trip	Poles	A		B		C		Poles	Trip	Circuit Description	CKT
1	Outlet	20 A	1	540	540					1	20 A	Outlet	2
3	Outlet	20 A	1			540	540			1	20 A	Outlet	4
5	Outlet	20 A	1					360	540	1	20 A	Outlet	6
7	HVAC MECH 300Q	20 A	2	894	395					1	20 A	Lighting	8
9	--	--	--			894	0 VA			1	20 A	Spare	10
11	Spare	20 A	1					0 VA	0 VA	1	20 A	Spare	12
13	Spare	20 A	1	0 VA	0 VA					1	20 A	Spare	14
15	Spare	20 A	1			0 VA	0 VA			1	20 A	Spare	16
17	Spare	20 A	1					0 VA	0 VA	1	20 A	Spare	18
19	Space	--	--	0 VA	0 VA					--	--	Space	20
21	Space	--	--			0 VA	0 VA			--	--	Space	22
23	Space	--	--					0 VA	0 VA	--	--	Space	24
		Total Load:		2369 VA		1974 VA		900 VA					
		Total Amps:		20 A		16 A		8 A					

Legend:

Load Classification	Connected Load	Demand Factor	Estimated Demand	Panel Totals	
HVAC	1789 VA	100.00%	1789 VA		
Lighting	395 VA	100.00%	395 VA	**Total Conn. Load:**	5244 VA
Other	0 VA	0.00%	0 VA	**Total Est. Demand:**	5244 VA
Outlet	3060 VA	100.00%	3060 VA	**Total Conn.:**	15 A
				Total Est. Demand:	15 A

Notes:
PROVIDE FULLY HINGED COVER PLATE. PROVIDE AFCI BREAKERS FOR DORM CIRCUITS.

Branch Panel: 3PR

Location: MECH/ELEC 300N
Supply From: 3P2
Mounting: Surface
Enclosure: Type 1

Volts: 120/208 Wye
Phases: 3
Wires: 4

A.I.C. Rating: 22000
Mains Type:
Mains Rating: 100 A
MCB Rating:

Notes:

CKT	Circuit Description	Trip	Poles	A		B		C		Poles	Trip	Circuit Description	CKT
1	Outlet	20 A	1	540	540					1	20 A	Outlet	2
3	Outlet	20 A	1			360	540			1	20 A	Outlet	4
5	Outlet	20 A	1					540	540	1	20 A	Outlet	6
7	HP-91 MECH/ELEC 300N	20 A	2	1217	370					1	20 A	Lighting	8
9	--	--	--			1217	0 VA			1	20 A	Spare	10
11	Spare	20 A	1					0 VA	0 VA	1	20 A	Spare	12
13	Spare	20 A	1	0 VA	0 VA					1	20 A	Spare	14
15	Spare	20 A	1			0 VA	0 VA			1	20 A	Spare	16
17	Spare	20 A	1					0 VA	0 VA	1	20 A	Spare	18
19	Space	--	--	0 VA	0 VA					--	--	Space	20
21	Space	--	--			0 VA	0 VA			--	--	Space	22
23	Space	--	--					0 VA	0 VA	--	--	Space	24
		Total Load:		2686 VA		2117 VA		1080 VA					
		Total Amps:		22 A		18 A		9 A					

Legend:

Load Classification	Connected Load	Demand Factor	Estimated Demand	Panel Totals	
HVAC	2434 VA	100.00%	2434 VA		
Lighting	389 VA	100.00%	389 VA	**Total Conn. Load:**	5883 VA
Other	0 VA	0.00%	0 VA	**Total Est. Demand:**	5883 VA
Outlet	3060 VA	100.00%	3060 VA	**Total Conn.:**	16 A
				Total Est. Demand:	16 A

Notes:
PROVIDE FULLY HINGED COVER PLATE. PROVIDE AFCI BREAKERS FOR DORM CIRCUITS.

MHTN ARCHITECTS
MHTN Architects, Inc.
420 East South Temple
Suite 100
Salt Lake City, Utah 84111
Telephone (801) 595-6700
Telefax (801) 595-6717
www.mhtn.com

ECE, Inc. Consulting Engineers
939 S. West Temple
Salt Lake City, Utah 84101
Phone 801.521.8007
e-mail admin@eceonline.com

WEBER STATE UNIVERSITY
RESIDENTIAL LIFE PHASE II - BLDG.2

DFCM PROJECT NUMBER: 10176810

WEBER STATE UNIVERSITY
OGDEN, UTAH 84408

SEAL

MHTN PROJECT NO. 4007-2

DRAWN BY: Author CHECKED BY: Checker

ISSUED:

NO.	DATE	DESCRIPTION
01	17 MAY 2011	CONSTRUCTION DOCUMENTS

CONTRACTOR TO VERIFY DRAWINGS IN FIELD USE REFLECT LAST REVISION DATE:

NO.	DATE	DESCRIPTION

SHEET NAME
PANEL SCHEDULES 3RD FLOOR
CONSTRUCTION DOCUMENTS
17 MAY 2011

SHEET NUMBER
EE016

C:\Users\riche\Documents\4007-WEBER-STATE-BLDG2-CENTRAL-1_richie.rvt
5/17/2011 12:07:43 PM

Branch Panel: 1P5

Location: ELEC 121
Supply From: MDS2
Mounting: Surface
Enclosure: Type 1

Volts: 120/208 Wye
Phases: 3
Wires: 4

A.I.C. Rating:
Mains Type:
Mains Rating: 225 A
MCB Rating:

Notes:

CKT	Circuit Description	Trip	Poles	A		B		C		Poles	Trip	Circuit Description	CKT
1	MICROWAVE KITCHEN/LOUNGE 129	20 A	1	180	180					1	20 A	REF. KITCHEN/LOUNGE 129	2
3	RANGE KITCHEN/LOUNGE 129	50 A	2			4150	1685			2	30 A	HP-29 MECH/ELEC 100N	4
5	--	--	--					4150	1685	--	--	--	6
7	Outlet Space 159	20 A	1	360	540					1	20 A	Outlet Space 159	8
9	Spare	20 A	1			0 VA	0 VA			1	20 A	Spare	10
11	Spare	20 A	1					0 VA	0 VA	1	20 A	Spare	12
13	Outlet KITCHEN/LOUNGE 129	20 A	1	720	0 VA					1	20 A	Spare	14
15	Spare	20 A	1			0 VA	0 VA			1	20 A	Spare	16
17	Spare	20 A	1					0 VA	0 VA	1	20 A	Spare	18
19	Spare	20 A	1	0 VA	0 VA					1	20 A	Spare	20
21	Spare	20 A	1			0 VA	0 VA			1	20 A	Spare	22
23	Spare	20 A	1					0 VA	0 VA	1	20 A	Spare	24
25	Spare	20 A	1	0 VA	0 VA					1	20 A	Spare	26
27	Spare	20 A	1			0 VA	0 VA			1	20 A	Spare	28
29	Spare	20 A	1					0 VA	0 VA	1	20 A	Spare	30
31	Spare	20 A	1	0 VA	0 VA					1	20 A	Spare	32
33	Spare	20 A	1			0 VA	0 VA			1	20 A	Spare	34
35	Spare	20 A	1					0 VA	0 VA	1	20 A	Spare	36
37	Spare	20 A	1	0 VA	0 VA					1	20 A	Spare	38
39	Spare	20 A	1			0 VA	0 VA			1	20 A	Spare	40
41	Spare	20 A	1					0 VA	0 VA	1	20 A	Spare	42
			Total Load:	1980 VA		5835 VA		5835 VA					
			Total Amps:	17 A		49 A		49 A					

Legend:

Load Classification	Connected Load	Demand Factor	Estimated Demand	Panel Totals	
HVAC	3370 VA	100.00%	3370 VA		
Outlet	900 VA	100.00%	900 VA	**Total Conn. Load:**	13650 VA
Kitchen	9380 VA	65.00%	6097 VA	**Total Est. Demand:**	10367 VA
				Total Conn.:	38 A
				Total Est. Demand:	29 A

Notes:

Branch Panel: 3PS

Location: MECH/ELEC 300N
Supply From: 3P2
Mounting: Surface
Enclosure: Type 1

Volts: 120/208 Wye
Phases: 3
Wires: 4

A.I.C. Rating: 22000
Mains Type:
Mains Rating: 100 A
MCB Rating:

Notes:

CKT	Circuit Description	Trip	Poles	A		B		C		Poles	Trip	Circuit Description	CKT
1	Outlet	20 A	1	540	540					1	20 A	Outlet	2
3	Outlet	20 A	1			540	540			1	20 A	Outlet	4
5	Outlet	20 A	1					540	360	1	20 A	Outlet	6
7	HP-92 MECH/ELEC 300N	30 A	2	1550	370					1	20 A	Lighting	8
9	--	--	--			1550	0 VA			1	20 A	Spare	10
11	Spare	20 A	1					0 VA	0 VA	1	20 A	Spare	12
13	Spare	20 A	1	0 VA	0 VA					1	20 A	Spare	14
15	Spare	20 A	1			0 VA	0 VA			1	20 A	Spare	16
17	Spare	20 A	1					0 VA	0 VA	1	20 A	Spare	18
19	Space	--	--	0 VA	0 VA					--	--	Space	20
21	Space	--	--			0 VA	0 VA			--	--	Space	22
23	Space	--	--					0 VA	0 VA	--	--	Space	24
			Total Load:	3019 VA		2630 VA		900 VA					
			Total Amps:	25 A		22 A		8 A					

Legend:

Load Classification	Connected Load	Demand Factor	Estimated Demand	Panel Totals	
HVAC	3099 VA	100.00%	3099 VA		
Lighting	389 VA	100.00%	389 VA	**Total Conn. Load:**	6548 VA
Other	0 VA	0.00%	0 VA	**Total Est. Demand:**	6548 VA
Outlet	3060 VA	100.00%	3060 VA	**Total Conn.:**	18 A
				Total Est. Demand:	18 A

Notes:
PROVIDE FULLY HINGED COVER PLATE. PROVIDE AFCI BREAKERS FOR DORM CIRCUITS.

Branch Panel: 3PT

Location: MECH/ELEC 300N
Supply From: 3P2
Mounting: Surface
Enclosure: Type 1

Volts: 120/208 Wye
Phases: 3
Wires: 4

A.I.C. Rating: 22000
Mains Type:
Mains Rating: 100 A
MCB Rating:

Notes:

CKT	Circuit Description	Trip	Poles	A		B		C		Poles	Trip	Circuit Description	CKT
1	Outlet	20 A	1	540	540					1	20 A	Outlet	2
3	Outlet	20 A	1			540	540			1	20 A	Outlet	4
5	Outlet	20 A	1					360	540	1	20 A	Outlet	6
7	HP-90 MECH/ELEC 300N	20 A	2	894	370					1	20 A	Lighting	8
9	--	--	--			894	0 VA			1	20 A	Spare	10
11	Spare	20 A	1					0 VA	0 VA	1	20 A	Spare	12
13	Spare	20 A	1	0 VA	0 VA					1	20 A	Spare	14
15	Spare	20 A	1			0 VA	0 VA			1	20 A	Spare	16
17	Spare	20 A	1					0 VA	0 VA	1	20 A	Spare	18
19	Space	--	--	0 VA	0 VA					--	--	Space	20
21	Space	--	--			0 VA	0 VA			--	--	Space	22
23	Space	--	--					0 VA	0 VA	--	--	Space	24
			Total Load:	2363 VA		1974 VA		900 VA					
			Total Amps:	20 A		16 A		8 A					

Legend:

Load Classification	Connected Load	Demand Factor	Estimated Demand	Panel Totals	
HVAC	1789 VA	100.00%	1789 VA		
Lighting	389 VA	100.00%	389 VA	**Total Conn. Load:**	5238 VA
Other	0 VA	0.00%	0 VA	**Total Est. Demand:**	5238 VA
Outlet	3060 VA	100.00%	3060 VA	**Total Conn.:**	15 A
				Total Est. Demand:	15 A

Notes:
PROVIDE FULLY HINGED COVER PLATE. PROVIDE AFCI BREAKERS FOR DORM CIRCUITS.

MHTN
ARCHITECTS
MHTN Architects, Inc.
420 East South Temple
Suite 100
Salt Lake City, Utah 84111
Telephone (801) 595-6700
Telefax (801) 595-6717
www.mhtn.com

ECE, Inc. Consulting Engineers
939 S. West Temple
Salt Lake City, Utah 84101
Phone 801.521.8007
e-mail admin@eceonline.com

WEBER STATE UNIVERSITY
RESIDENTIAL LIFE PHASE II - BLDG.2
DFCM PROJECT NUMBER: 10176810

WEBER STATE UNIVERSITY
OGDEN, UTAH 84408

SEAL

MHTN PROJECT NO. 4007-2

DRAWN BY: Author CHECKED BY: Checker

ISSUED:

NO.	DATE	DESCRIPTION
01	17 MAY 2011	CONSTRUCTION DOCUMENTS

CONTRACTOR TO VERIFY DRAWINGS IN FIELD USE REFLECT LAST REVISION DATE:

NO.	DATE	DESCRIPTION

SHEET NAME
PANEL SCHEDULES 3RD FLOOR
CONSTRUCTION DOCUMENTS
17 MAY 2011

SHEET NUMBER
EE017

C:\Users\riche\Documents\4007-WEBER-STATE-BLDG2-CENTRAL-1_richie.rvt
5/17/2011 12:07:44 PM

Branch Panel: 3P3

Location: JANITOR 300A
Supply From: MDS3
Mounting: Surface
Enclosure: Type 1
Volts: 120/208 Wye
Phases: 3
Wires: 4
A.I.C. Rating: 22000
Mains Type:
Mains Rating: 225 A
MCB Rating:

Notes:

CKT	Circuit Description	Trip	Poles	A		B		C		Poles	Trip	Circuit Description	CKT
1	ATC PANEL MECH/ELEC 300N	20 A	1	500	240					1	20 A	CIRC. PUMP MECH/ELEC 300N	2
3	Power MECH 300Q	20 A	1			120	180			1	20 A	Outlet KITCHEN/LOUNGE 329	4
5	Outlet KITCHEN/LOUNGE 309	20 A	1					180	1752	1	20 A	EF-1,6,10	6
7	EF-2,7,11	20 A	1	1752	540					1	20 A	Outlet FURNITURE STORAGE 322A	8
9	EF-3,12,14	20 A	1			1920	360			1	20 A	Outlet KITCHEN/LOUNGE 309	10
11	C.O. WP ROOF	20 A	1					1080	1123	1	20 A	Lighting	12
13	Outlet GROUP STUDY 336	20 A	1	720	900					1	20 A	Outlet KITCHEN/LOUNGE 329	14
15	Kitchen KITCHEN/LOUNGE 329	20 A	2			4150	180			1	20 A	Outlet KITCHEN/LOUNGE 329	16
17	--	--	--					4150	180	1	20 A	Outlet KITCHEN/LOUNGE 309	18
19	RANGE KITCHEN/LOUNGE 309	50 A	2	4150	1440					1	20 A	Outlet Room 399B, 309, 300F	20
21	--	--	--			4150	720			1	20 A	Outlet KITCHEN/LOUNGE 329	22
23	Outlet IDF 300H	20 A	1					360	540	1	20 A	Outlet IDF 300H	24
25	EF-4,8,13	20 A	1	1752	948					1	20 A		26
27	Outlet Room 300M, 300N, 399E	20 A	1			1440	1440			1	20 A	Outlet Room 399D, 309, 300K	28
29	Outlet Room 399F, 301B, 301-2	20 A	1					900	1440	1	20 A	Outlet Room 334, 335	30
31	Outlet KITCHEN/LOUNGE 309	20 A	1	900	1346					3	275 A	3P5	32
33	Outlet Room 309, 300G, 399C	20 A	1			1440	1329			--	--	--	34
35	Outlet MEETING 322	20 A	1					1440	1243	--	--	--	36
37	Kitchen KITCHEN/LOUNGE 309	20 A	1	360	180					1	20 A	Outlet STORAGE 300P	38
39	EF-15	20 A	1			696	528			1	20 A	EF-9	40
41	Spare	20 A	1					0 VA					42
		Total Load:		28929 VA		30621 VA		25583 VA					
		Total Amps:		241 A		255 A		213 A					

Legend:

Load Classification	Connected Load	Demand Factor	Estimated Demand	Panel Totals	
HVAC	46922 VA	100.00%	46922 VA		
Lighting	2071 VA	100.00%	2071 VA	**Total Conn. Load:**	84133 VA
Other	0 VA	0.00%	0 VA	**Total Est. Demand:**	74917 VA
Outlet	15300 VA	82.68%	12650 VA	**Total Conn.:**	234 A
Fire Alarm	1080 VA	100.00%	1080 VA	**Total Est. Demand:**	208 A
Kitchen	18760 VA	65.00%	12194 VA		

Notes:
PROVIDE FULLY HINGED COVER PLATE. PROVIDE SUB FEED LUGS FOR PANEL 3P5. PROVIDE (3) 20A, 1-POLE CIRCUIT BREAKERS IN LIEU OF 225A 3-POLE SHOWN.

Branch Panel: 3P2

Location: JANITOR 300A
Supply From: MDS3
Mounting: Surface
Enclosure: Type 1
Volts: 120/208 Wye
Phases: 3
Wires: 4
A.I.C. Rating: 22000
Mains Type:
Mains Rating: 225 A
MCB Rating:

Notes:

CKT	Circuit Description	Trip	Poles	A		B		C		Poles	Trip	Circuit Description	CKT
1	3PK	20 A	3	2369	2369					3	20 A	3PL	2
3	--	--	--			1794	1974			--	--	--	4
5	--	--	--					1080	900	--	--	--	6
7	3PM	20 A	3	2686	3019					3	20 A	3P0	8
9	--	--	--			2117	2630			--	--	--	10
11	--	--	--					1080	900	--	--	--	12
13	3PEE	20 A	3	2645	2512					3	20 A	3PP	14
15	--	--	--			2297	2297			--	--	--	16
17	--	--	--					720	1080	--	--	--	18
19	3PQ	20 A	3	2369	2686					3	20 A	3PR	20
21	--	--	--			1974	2117			--	--	--	22
23	--	--	--					900	1080	--	--	--	24
25	3PS	20 A	3	3019	2363					3	20 A	3PT	26
27	--	--	--			2630	1974			--	--	--	28
29	--	--	--					900	900	--	--	--	30
31	Outlet Room 300A, 303, 302	60 A	1	720	720					1	20 A	Outlet LOUNGE-2 301-2	32
33							720			1	20 A	Outlet IDF 333	34
35	Outlet IDF 333	20 A	1					540	1109	3	20 A	Outlet LOUNGE-2 301-2	36
37					1109					--	--	--	38
39	Spare	20 A	1			0 VA	1109			--	--	--	40
41	Spare	20 A	1					0 VA	720	1	20 A	C.O. WP ROOF	42
		Total Load:		28586 VA		23633 VA		11909 VA					
		Total Amps:		238 A		197 A		99 A					

Legend:

Load Classification	Connected Load	Demand Factor	Estimated Demand	Panel Totals	
HVAC	23088 VA	100.00%	23088 VA		
Lighting	3873 VA	100.00%	3873 VA	**Total Conn. Load:**	64129 VA
Other	0 VA	0.00%	0 VA	**Total Est. Demand:**	50545 VA
Outlet	37168 VA	63.45%	23584 VA	**Total Conn.:**	178 A
				Total Est. Demand:	140 A

Notes:
PROVIDE FULLY HINGED COVER PLATE.

Branch Panel: 3P1

Location: JANITOR 300A
Supply From: MDS3
Mounting: Surface
Enclosure: Type 1
Volts: 120/208 Wye
Phases: 3
Wires: 4
A.I.C. Rating: 22000
Mains Type:
Mains Rating: 225 A
MCB Rating:

Notes:

CKT	Circuit Description	Trip	Poles	A		B		C		Poles	Trip	Circuit Description	CKT
1	EWC LOUNGE-1 301-1	20 A	1	180	0 VA					1	20 A	Spare	2
3							1469			3	60 A	3PJ	4
5								2297		--	--	--	6
7	3PD	60 A	3	3019	2117					--	--	--	8
9	--	--	--			2450	3019			3	60 A	3PI	10
11	--	--	--					1080	2630	--	--	--	12
13	3PC	60 A	3	2686	900					--	--	--	14
15	--	--	--			2117	0 VA			1	20 A	Spare	16
17	--	--	--					1080	3025	3	60 A	3PB	18
19	3PH	60 A	3	2506	2450					--	--	--	20
21	--	--	--			2297	1080			--	--	--	22
23	--	--	--					1080	4027	3	60 A	3PE	24
25	3PA	60 A	3	2369	1974					--	--	--	26
27	--	--	--			1794	2564			--	--	--	28
29	--	--	--					1080	2369	3	60 A	3PG	30
31	Spare	20 A	1	0 VA	1794					--	--	--	32
33	3PF	60 A	3			2369	1080			--	--	--	34
35	--	--	--					1794	1109	3	60 A	Outlet LOUNGE-2 301-2	36
37	--	--	--	1080	1109					--	--	--	38
39	Lighting Space 525	20 A	1			1146	1109			--	--	--	40
41	Spare	20 A	1					0 VA	0 VA	1	20 A	Spare	42
		Total Load:		22184 VA		22494 VA		21572 VA					
		Total Amps:		185 A		187 A		180 A					

Legend:

Load Classification	Connected Load	Demand Factor	Estimated Demand	Panel Totals	
HVAC	23754 VA	100.00%	23754 VA		
Lighting	5060 VA	100.00%	5060 VA	**Total Conn. Load:**	66250 VA
Other	0 VA	0.00%	0 VA	**Total Est. Demand:**	52532 VA
Outlet	37436 VA	63.36%	23718 VA	**Total Conn.:**	184 A
				Total Est. Demand:	146 A

Notes:
PROVIDE FULLY HINGED COVER PLATE.

Branch Panel: EP1

Location: MDF 122
Supply From: EDP
Mounting: Surface
Enclosure: Type 1
Volts: 120/208 Wye
Phases: 3
Wires: 4
A.I.C. Rating: 22000
Mains Type:
Mains Rating: 100 A
MCB Rating:

Notes:

CKT	Circuit Description	Trip	Poles	A		B		C		Poles	Trip	Circuit Description	CKT
1	IN PIT 286	20 A	1	180	1058					1	20 A	LTG. HALL100	2
3	EVAP.*	20 A	1			432	325			1	20 A	Lighting	4
5	WALK-IN COOLER*	20 A	1					500	620	1	20 A	LTG. HALL 100	6
7	EVAP.	20 A	2	1217	720					1	20 A	SITE OUTLETS +20'-0" ELEC 121	8
9	--	--	--			1217	0 VA			1	20 A	Spare	10
11	STAIR LIGHTING	20 A	1					839	40 VA	2	20 A	FC-4 MDF 122	12
13	FACP ANNUNCIATOR VESTIBULE 101A	20 A	1	300	40 VA					--	--	--	14
15	Spare	20 A	1			0 VA	0 VA			1	20 A	Spare	16
17	Spare	20 A	1					0 VA	0 VA	1	20 A	Spare	18
19	Spare	20 A	1	0 VA	0 VA					1	20 A	Spare	20
21	Spare	20 A	1			0 VA	0 VA			1	20 A	Spare	22
23	Spare	20 A	1					0 VA	0 VA	1	20 A	Spare	24
25	Spare	20 A	1	0 VA	0 VA					1	20 A	Spare	26
27	Spare	20 A	1			0 VA	0 VA			1	20 A	Spare	28
29	Spare	20 A	1					0 VA	0 VA	1	20 A	Spare	30
31	Spare	20 A	1	0 VA	0 VA					1	20 A	Spare	32
33	Spare	20 A	1			0 VA	0 VA			1	20 A	Spare	34
35	Spare	20 A	1					0 VA	0 VA	1	20 A	Spare	36
37	Spare	20 A	1	0 VA	0 VA					1	20 A	Spare	38
39	Spare	20 A	1			0 VA	0 VA			1	20 A	Spare	40
41	Spare	20 A	1					0 VA	0 VA	1	20 A	Spare	42
		Total Load:		3514 VA		1974 VA		1999 VA					
		Total Amps:		29 A		16 A		17 A					

Legend:

Load Classification	Connected Load	Demand Factor	Estimated Demand	Panel Totals	
HVAC	79 VA	100.00%	79 VA		
Lighting	1292 VA	100.00%	1292 VA	**Total Conn. Load:**	7487 VA
Other	0 VA	0.00%	0 VA	**Total Est. Demand:**	7163 VA
Outlet	900 VA	100.00%	900 VA	**Total Conn.:**	21 A
Fire Alarm	300 VA	100.00%	300 VA	**Total Est. Demand:**	20 A
Kitchen	3238 VA	90.00%	2914 VA		
Lighting - Emergency	1678 VA	100.00%	1678 VA		

Notes:
PROVIDE FULLY HINGED COVER PLATE. *PROVIDE GFCI CIRCUIT BREAKER.

Branch Panel: 3P5

Location: JANITOR 300A
Supply From: 3P3
Mounting: Surface
Enclosure: Type 1
Volts: 120/208 Wye
Phases: 3
Wires: 4
A.I.C. Rating: 22000
Mains Type:
Mains Rating: 225 A
MCB Rating:

Notes:

CKT	Circuit Description	Trip	Poles	A		B		C		Poles	Trip	Circuit Description	CKT
1	HP-93 MECH/ELEC 300N	30 A	2	1685	500					1	20 A	ATC PANEL MECH/ELEC 300F	2
3	--	--	--			1685	2787			2	50 A	HP-83	4
5	HP-77 STAIR 529	20 A	2					728	2787	--	--	--	6
7	--	--	--	728	894					2	20 A	HP-84	8
9	CIRC. PUMP STAIR 399E	20 A	1			120	894			--	--	--	10
11	CIRC. PUMP STAIR 399F	20 A	1					240	1550	2	30 A	HP-87 STAIR 399F	12
13	HP-94 STAIR 399E	20 A	2	1217	1550					--	--	--	14
15	--	--	--			1217	0 VA			1	20 A	Spare	16
17	Spare	20 A	1					0 VA	540	1	20 A	Outlet Room 336, 335, 334	18
19	CIRC. PUMP STAIR 399A	20 A	1	300	0 VA					1	20 A	Spare	20
21	HP-85 FURN. STORAGE 322A	60 A	2			3297	0 VA			1	20 A	Spare	22
23	--	--	--					3297	3297	2	60 A	HP-86	24
25	HP-82	60 A	2	3297	3297					--	--	--	26
27	--	--	--			3297	0 VA			1	20 A	Spare	28
29	Spare	20 A	1					0 VA	0 VA	1	20 A	Spare	30
31	Spare	20 A	1	0 VA	0 VA					1	20 A	Spare	32
33	Spare	20 A	1			0 VA	0 VA			1	20 A	Spare	34
35	Spare	20 A	1					0 VA	0 VA	1	20 A	Spare	36
37	Spare	20 A	1	0 VA	0 VA					1	20 A	Spare	38
39	Spare	20 A	1			0 VA	0 VA			1	20 A	Spare	40
41	Spare	20 A	1					0 VA	0 VA	1	20 A	Spare	42
		Total Load:		13467 VA		13297 VA		12438 VA					
		Total Amps:		112 A		111 A		104 A					

Legend:

Load Classification	Connected Load	Demand Factor	Estimated Demand	Panel Totals	
HVAC	38162 VA	100.00%	38162 VA		
Outlet	540 VA	100.00%	540 VA	**Total Conn. Load:**	38702 VA
				Total Est. Demand:	38702 VA
				Total Conn.:	107 A
				Total Est. Demand:	107 A

Notes:
PROVIDE FULLY HINGED COVER PLATE.

Branch Panel: 3P4

Location: MECH/ELEC 300K
Supply From: MDS3
Mounting: Surface
Enclosure: Type 1
Volts: 120/208 Wye
Phases: 3
Wires: 4
A.I.C. Rating: 22000
Mains Type:
Mains Rating: 225 A
MCB Rating:

Notes:

CKT	Circuit Description	Trip	Poles	A		B		C		Poles	Trip	Circuit Description	CKT
1	Other Room 304, 305, 320, 319, 318	20 A	1	12 VA	17 VA					1	20 A	Other Room 309, 315, 317, 316, 308, 307	2
3	Other Room 310, 311, 312, 314, 313	20 A	1			12 VA	240			1	20 A	CIRC. PUMP MECH/ELEC 300G	4
5	Other Room 327, 328, 326, 330, 331, 329	20 A	1					14 VA	360	1	20 A	Outlet KITCHEN/LOUNGE 309	6
7	Outlet LOUNGE 306	20 A	1	540	895					1	20 A	Lighting	8
9	Outlet Room 300E, 300D, 300C	20 A	1			540	247			1	20 A	KITCHEN/LOUNGE 329	10
11	Outlet LOUNGE 306	20 A	1					720	1503	1	20 A	Lighting	12
13	HALL 300M	20 A	1	1196	360					1	20 A	CIRC. PUMP STAIR 399B	14
15	LTG. KITCHEN/LOUNGE 309	20 A	1			297	894			2	20 A	EF-14	16
17	Lighting	20 A	1					929	894	--	--	--	18
19	HP-69 MECH/ELEC 300G	20 A	2	1550	120					1	20 A	CIRC. PUMP MECH 300C	20
21	--	--	--			1550	96 VA			1	20 A	Lighting	22
23	Lighting	20 A	1					108	120	1	20 A	Power MECH 300D	24
25	CIRC. PUMP MECH/ELEC 300F	20 A	1	240	180					1	20 A	CIRC. PUMP MECH/ELEC 300K	26
27	CIRC. PUMP MECH 300E	20 A	1			120	1217			2	20 A	HP-78 STAIR 399D	28
29	Outlet LOUNGE 306	20 A	1					180	1217	--	--	--	30
31	HP-65 STAIR 399B	20 A	2	1217	1217					2	20 A	HP-72 STAIR 399C	32
33	--	--	--			1217	1217			--	--	--	34
35	Outlet LOUNGE-2 301-2	20 A	1					1440	3442	2	50 A	HP-79 MECH 300B	36
37	Spare	20 A	1	0 VA	3442					--	--	--	38
39	HP-81	60 A	2			3297	1260			1	20 A	FSD HALL LVL 3	40
41	--	--	--					3297	360	1	20 A	Outlet MEETING 322	42
43	HP-62 MECH/ELEC 300F	30 A	2	1550									44
45	--	--	--			1550	0 VA			1	20 A	Spare	46
47	Spare	20 A	1					0 VA	0 VA	1	20 A	Spare	48
49	Spare	20 A	1	0 VA	0 VA					1	20 A	Spare	50
51	Spare	20 A	1			0 VA	0 VA			1	20 A	Spare	52
53	Spare	20 A	1					0 VA	0 VA	1	20 A	Spare	54
		Total Load:		12535 VA		13753 VA		14585 VA					
		Total Amps:		104 A		115 A		122 A					

Legend:

Load Classification	Connected Load	Demand Factor	Estimated Demand	Panel Totals	
HVAC	30146 VA	100.00%	30146 VA		
Lighting	5271 VA	100.00%	5271 VA	**Total Conn. Load:**	40873 VA
Other	0 VA	0.00%	0 VA	**Total Est. Demand:**	40873 VA
Outlet	4140 VA	100.00%	4140 VA	**Total Conn.:**	113 A
Fire Alarm	1315 VA	100.00%	1315 VA	**Total Est. Demand:**	113 A

Notes:
PROVIDE FULLY HINGED COVER PLATE.

MHTN
ARCHITECTS
MHTN Architects, Inc.
420 East South Temple
Suite 100
Salt Lake City, Utah 84111
Telephone (801) 595-6700
Telefax (801) 595-6717
www.mhtn.com

ECE, Inc. Consulting Engineers
939 S. West Temple
Salt Lake City, Utah 84101
Phone 801.521.8007
e-mail admin@eceonline.com

WEBER STATE UNIVERSITY
RESIDENTIAL LIFE PHASE II - BLDG.2
DFCM PROJECT NUMBER: 10176810

WEBER STATE UNIVERSITY
OGDEN, UTAH 84408

SEAL

MHTN PROJECT NO. 4007-2
DRAWN BY: Author CHECKED BY: Checker

ISSUED:

NO.	DATE	DESCRIPTION
01	17 MAY 2011	CONSTRUCTION DOCUMENTS

CONTRACTOR TO VERIFY DRAWINGS IN FIELD USE REFLECT LAST REVISION DATE.

NO.	DATE	DESCRIPTION

SHEET NAME
PANEL SCHEDULES 3RD FLOOR
CONSTRUCTION DOCUMENTS
17 MAY 2011

SHEET NUMBER
EE018

C:\Users\riche\Documents\4007-WEBER STATE BLDG2-CENTRAL-1_richie.rvt
5/17/2011 12:07:45 PM

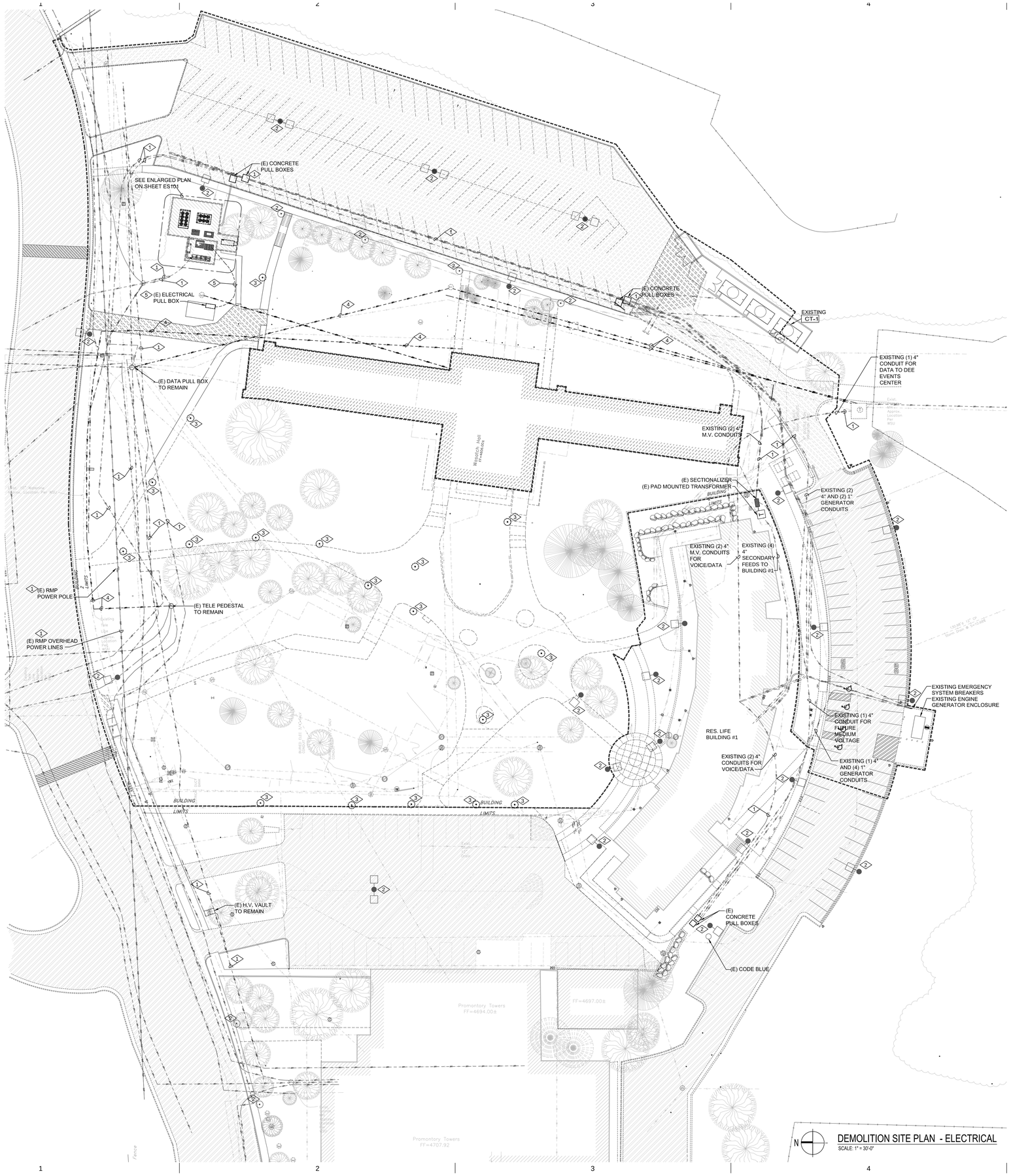

DEMOLITION SITE PLAN - ELECTRICAL

SCALE: 1" = 30'-0"

REFERENCE NOTES:

1. EXISTING UNDER GROUND UTILITIES, (TELEPHONE, DATA POWER) SHALL REMAIN. FIELD VERIFY EXACT LOCATION AND DEPTH. MAKE ANY MODIFICATIONS REQUIRED TO MAINTAIN INTEGRITY OF THE EXISTING UTILITIES.
2. EXISTING LIGHT FIXTURES SHALL REMAIN. MAKE ANY MODIFICATIONS TO MAINTAIN CIRCUIT INTEGRITY.
3. EXISTING LIGHT FIXTURES AND POLE BASES SHALL BE REMOVED. REMOVE ASSOCIATED CONDUCTORS BACK TO ORIGINATION POINTS. CUT CONDUIT OFF BELOW GRADE AND CAP. RETURN THE LIGHT FIXTURES & POLES TO THE OWNER.
4. EXISTING UNDERGROUND TELEPHONE LINES SHALL BE ABANDONED BY WSU. REMOVE EXISTING CONDUIT AND CONDUCTORS AS REQUIRED BY NEW BUILDING EXCAVATION. COORDINATE THIS WORK WITH WSU.
5. DISCONNECT EXISTING FEEDS TO THE EXISTING BUILDINGS AT THE EXISTING BREAKERS IN THE EXISTING 2500A, DISTRIBUTION SWITCHBOARD. REMOVE ASSOCIATED CONDUCTORS BACK TO SOURCE. UTILIZE THE EXISTING CONDUITS IN THE APPROXIMATE LOCATION SHOWN FOR NEW BUILDING 2 FEEDERS. REMOVE ABANDONED CONDUIT, PULL BOX AND CONCRETE PAD AS REQUIRED BY NEW BUILDING EXCAVATION.

MHTN ARCHITECTS

MHTN Architects, Inc.
420 East South Temple
Suite 100
Salt Lake City, Utah 84111
Telephone (801) 595-6700
Telefax (801) 595-6717
www.mhtn.com

E.C.E. LLC
Electrical Consulting Engineers
939 So. West Temple
Salt Lake City, Utah 84101
Telephone (801) 521-8007
Email Admin@eceonline.com

WEBER STATE UNIVERSITY
RESIDENTIAL LIFE PHASE II - BLDG.2

DFCM PROJECT NUMBER: 10176810

WEBER STATE UNIVERSITY
OGDEN, UTAH 84408

SEAL

MHTN PROJECT NO. 4007-2

DRAWN BY: CC CHECKED BY: JHM

ISSUED:

NO.	DATE	DESCRIPTION
01	17 MAY 2011	CONSTRUCTION DOCUMENTS

CONTRACTOR TO VERIFY DRAWINGS IN FIELD USE REFLECT LAST REVISION DATE.

NO.	DATE	DESCRIPTION

SHEET NAME

DEMOLITION SITE PLAN - ELECTRICAL

CONSTRUCTION DOCUMENTS

17 MAY 2011

SHEET NUMBER

EDS101

C:\Users\jeriche\Documents\WEBER STATE BLDG2 CENTRAL1_jeriche.rvt
11/29/2010 1:33:01 PM

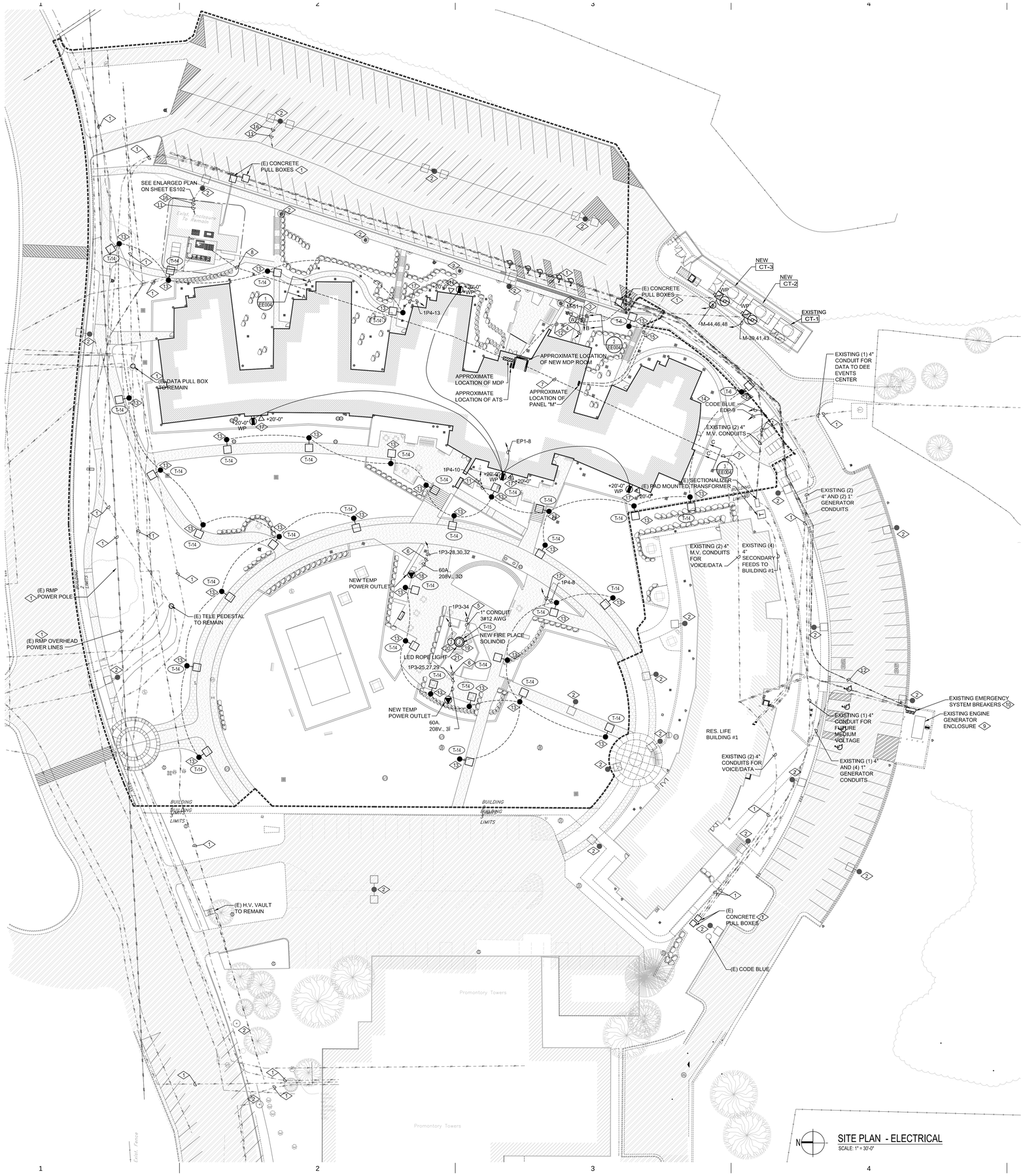

REFERENCE NOTES:

1. EXISTING UNDER GROUND UTILITIES, (TELEPHONE, DATA POWER) SHALL REMAIN. FIELD VERIFY EXACT LOCATION AND DEPTH. MAKE ANY MODIFICATIONS REQUIRED TO MAINTAIN INTEGRITY OF THE EXISTING UTILITIES.
2. EXISTING LIGHT FIXTURES SHALL REMAIN. MAKE ANY MODIFICATIONS TO MAINTAIN CIRCUIT INTEGRITY.
3. TIE THE WATER METERS TO A 120V., 20A. CIRCUIT BREAKER IN PANEL "M". RUN 1" CONDUIT 24" BELOW GRADE MINIMUM.
4. PROVIDE A 1" CONDUIT FROM THE MDF ROOM TO THE WATER METERS. INSERT A PULL STRING AND LABEL.
5. FURNISH AND INSTALL J-BOX FOR FIRE PLACE CONTROL POWER AND IGNITER IN THE APPROXIMATE LOCATIONS SHOWN. TIE TO THE CONTROL PANEL IN ROOM 137E.
6. FURNISH AND INSTALL A FLUSH MOUNTED, 60 AMP, 4-POLE, 5W. SPECIAL OUTLET IN A STAINLESS STEEL VANDAL RESISTANT ENCLOSURE (STRONG BOX #SB-18SS WITH QUICK PAD # QP-18).IN THE APPROXIMATE LOCATION SHOWN. COORDINATE WITH THE ARCHITECT AND OWNER FOR THE EXACT LOCATION.
7. EXTEND THE EXISTING 4" CONDUITS FROM THE APPROXIMATE LOCATION SHOWN TO THE NEW MDF ROOM IN THE NEW BUILDING. INSERT A PULL STRING AND LABEL. COORDINATE THE EXACT STUB UP LOCATION WITH THE OWNER PRIOR TO INSTALLATION. INSTALL MAX CELL (4"-3-CELL) FABRIC INNERDUCT.
8. RUN NEW SECONDARY FEEDERS FROM THE EXISTING SWITCH BOARD IN THE ELECTRICAL VAULT BUILDING TO NEW MAIN DISTRIBUTION PANELS IN NEW BUILDING. INTERCEPT THE EXISTING CONDUITS AND RUN 36" BELOW GRADE MINIMUM. PROVIDE TRENCHING, BACKFILL AND PATCHING AS REQUIRED. REFER TO THE POWER SINGLE LINE DIAGRAM FOR MORE INFORMATION.
9. EXISTING ENGINE GENERATOR SHALL REMAIN AND IS PROVIDING EMERGENCY POWER TO BUILDING 1. COORDINATE ALL WORK IN AND AROUND THE ENGINE WITH THE OWNER TWO WEEKS IN ADVANCE SO THAT ANY OUTAGES REQUIRED CAN BE SCHEDULED.
10. EXISTING EMERGENCY SYSTEM CIRCUIT BREAKERS. UTILIZE THE 400A. CIRCUIT BREAKER FOR NEW BUILDING #2.
11. TIE LIGHT FIXTURES TO THE CIRCUIT SHOWN THROUGH THE TIMECLOCK.
12. TIE THE NEW AUTOMATIC TRANSFER SWITCH TO THE EMERGENCY GENERATOR. UTILIZE EXISTING CONDUITS INSTALLED UNDER BUILDING 1 PROJECT UP TO THE (E) CONCRETE PULL BOXES. RUN CONDUIT AND CONDUCTORS MINIMUM 36" BELOW GRADE. REFER TO THE EMERGENCY POWER SINGLE LINE DIAGRAM FOR MORE INFORMATION.
13. NEW CAMPUS STANDARD LIGHT FIXTURES ON NEW CONCRETE BASES. INSTALL THE FEEDERS NEXT TO THE SIDE WALK AS SHOWN IN THE DETAILS. REFER TO THE CONCRETE POLE BASE DETAILS FOR ADDITIONAL INFORMATION.
14. FURNISH AND INSTALL NEW CODE BLUE #CB1-Ø ON NEW POLE BASE IN THE APPROXIMATE LOCATION SHOWN. TIE TO THE CIRCUIT INDICATED. RUN A 1" CONDUIT TO THE MDF ROOM.
15. UTILIZE THE EXISTING CONDUITS INSTALLED UNDER BUILDING 1 PROJECT TO FEED THE NEW COOLING TOWERS CT-2 AND CT-3.
16. EXTEND EXISTING LIGHTING CIRCUIT TO NEW CIRCUIT IN BUILDING AS SHOWN.
17. FURNISH AND INSTALL A 4"X4"X2-1/8" DEEP J-BOX WITH SINGLE GANG MUDRING FOR TELE/DATA DEVICE. COORDINATE EXACT LOCATION WITH ARCHITECT AND OWNER PRIOR TO ROUGH IN. RUN A 1" CONDUIT TO THE CABLETRAY. INSERT PULL STRING AND LABEL. PROVIDE PLASTIC BUSHING AT CONDUIT ENDS.
18. RUN A 1" CONDUIT FROM THE NEW PEDESTAL TO THE FIRE PIT CONTROL PANEL IN ROOM 137E IN THE BUILDING FOR EMERGENCY FIRE PIT SHUT OFF SWITCH. INSERT A PULL STRING AND LABEL. COORDINATE THIS WORK WITH THE FIRE PIT SUPPLIER.
19. FURNISH AND INSTALL AN LED ROPE LIGHT AT THE FIRE PIT. REFER TO DETAIL C4 ON AS501 FOR LOCATION. LED ROPE LIGHT FIXTURE SHALL HAVE LED EVERY 2" O.C. (TRIVOLI #FTL-05-02-WH-**-12-W-PSU WITH 60W UNIVERSAL VOLTAGE POWER SUPPLY TIVOLI #MT-60-1-4-12-D OR APPROVED EQUAL FROM BARRON, MODA OR WAC). TIE TO CIRCUIT 1P3-34 THROUGH THE TIME CLOCK FOR THE EXTERIOR LOCATIONS AND TO MOUNT IN APPROXIMATE 6'-6" RADIUS UNDER THE SANDSTONE CAP OF THE FIRE RING. PROVIDE CONDUIT, CONDUCTORS, WEATHER PROOF J-BOXES, ETC. FOR A COMPLETE INSTALLATION.
20. TIE THE FIRE PUT GAS VALVE TO THE FIRE ALARM SYSTEM FOR AUTOMATIC SHUT DOWN UPON FIRE ALARM IN THE BUILDING. PROVIDE RELAYS, WIRING, PROGRAMMING, ETC. AS REQUIRED. COORDINATE THE LOCATION OF THE GAS VALVES WITH THE FIRE PIT SUPPLIER.
21. INSTALL THE TRANSFORMER FOR THE ROPE LIGHT AROUND THE FIRE PIT IN A NEMA 3R ELECTRICAL BOX NEXT TO THE GAS BOX.

SPECIAL NOTES:

1. IN THE (2) 4" VOICE/DATA CONDUITS FROM BUILDING #1 TO THE NEW BUILDING #2 INSTALL MAXCELL (4"-3-CELL) FABRIC INNERDUCT.

MHTN ARCHITECTS
MHTN Architects, Inc.
420 East South Temple
Suite 100
Salt Lake City, Utah 84111
Telephone (801) 595-6700
Telefax (801) 595-6717
www.mhtn.com

E.C.E. LLC
Electrical Consulting Engineers
939 So. West Temple
Salt Lake City, Utah 84101
Telephone (801) 521-8007
Email Admin@eceonline.com

WEBER STATE UNIVERSITY
RESIDENTIAL LIFE PHASE II - BLDG.2
DFCM PROJECT NUMBER: 10176810

WEBER STATE UNIVERSITY
OGDEN, UTAH 84408

SEAL

MHTN PROJECT NO. 4007-2

DRAWN BY: CC CHECKED BY: JHM

ISSUED:

NO.	DATE	DESCRIPTION
01	17 MAY 2011	CONSTRUCTION DOCUMENTS

CONTRACTOR TO VERIFY DRAWINGS IN FIELD USE REFLECT LAST REVISION DATE.

NO.	DATE	DESCRIPTION

SHEET NAME
SITE PLAN - ELECTRICAL

CONSTRUCTION DOCUMENTS
17 MAY 2011

SHEET NUMBER
ES101

C:\Users\chris\Documents\WEBER-STATE-BLDG2-CENTRAL1_rchris.rvt
11/26/2010 1:33:01 PM

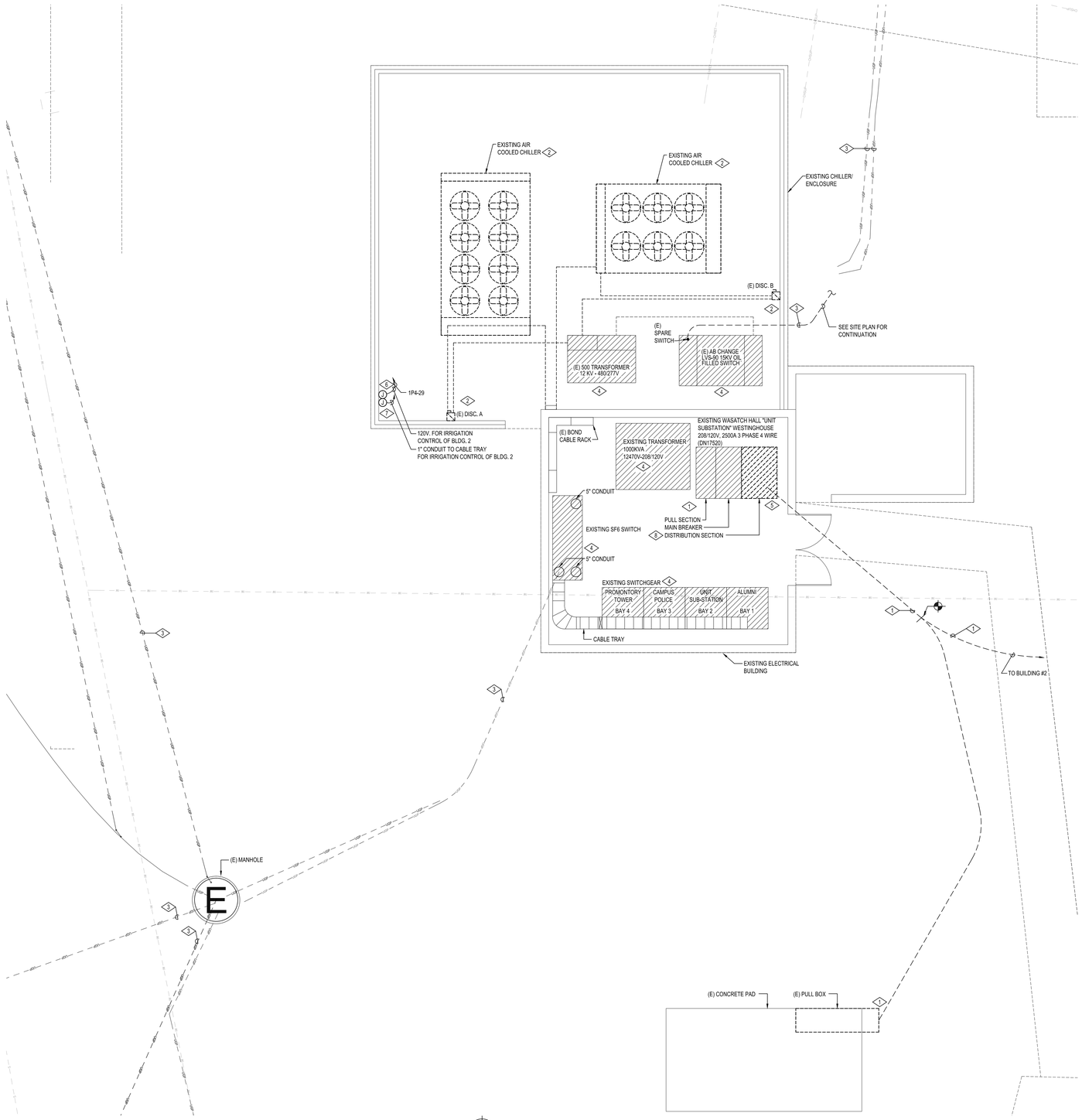

N

ENLARGED CHILLER/ELECTRICAL BUILDING PLAN - ELECTRICAL

SCALE: 1/4" = 1'-0"

REFERENCE NOTES:

1. DISCONNECT EXISTING COMMERCIAL POWER FEEDS TO THE WASATCH HALL BUILDING IN THE EXISTING UNIT SUBSTATION PANEL. REMOVE THE CONDUCTORS. UTILIZE THE EXISTING CONDUITS FOR NEW SECONDARY FEEDS TO BUILDING #2. REMOVE THE ASSOCIATED PULL BOX AND CONCRETE PAD.
2. EXISTING CHILLERS SHALL BE REMOVED BY THE MECHANICAL CONTRACTOR. DISCONNECT POWER AND REMOVE THE ASSOCIATED CONDUIT, CONDUCTORS, DISCONNECTS BACK TO SOURCE. CAP ANY BELOW GRADE CONDUITS PLUSH WITH GRADE. SHUT OFF PRIMARY FEED TO THE 500 KVA TRANSFORMER THAT FEEDS THE CHILLERS.
3. EXISTING UNDER GROUND UTILITIES, (TELEPHONE, DATA POWER) SHALL REMAIN. FIELD VERIFY EXACT LOCATION AND DEPTH. MAKE ANY MODIFICATIONS REQUIRED TO MAINTAIN INTEGRITY OF THE EXISTING UTILITIES.
4. EXISTING, PANELBOARDS, MEDIUM VOLTAGE SWITCHES, TRANSFORMER, CHILLERS, DISCONNECTS, ETC. SHALL REMAIN. MAKE ANY MODIFICATIONS REQUIRED TO MAINTAIN CIRCUIT INTEGRITY.
5. EXTEND THE EXISTING BRANCH CIRCUITS FOR SITE LIGHTS AND EXHAUST FAN TO NEW CIRCUIT BREAKERS INSIDE BLDG #2. PROVIDE ADDITIONAL CONDUIT, CONDUCTORS, ETC., FOR A COMPLETE RELOCATION. REFER TO ES101 AND EE002 FOR MORE INFORMATION.
6. FURNISH AND INSTALL J-BOX FOR IRRIGATION CONTROLLER IN THE APPROXIMATE LOCATION SHOWN TIE TO THE CIRCUIT INDICATED. COORDINATE WITH THE IRRIGATION SUPPLIER FOR EXACT LOCATION.
7. FURNISH AND INSTALL A J-BOX FOR IRRIGATION CONTROLLER VOICE/DATA CABLE IN THE APPROXIMATE LOCATION SHOWN. RUN A 1" CONDUIT TO THE 1ST FLOOR CABLE TRAY OF BLDG.2 FOR FUTURE CABLING. INSERT PULL STRING AND LABEL.
8. REMOVE THE EXISTING BRANCH PANEL DISTRIBUTION SECTION OF THE EXISTING SWITCHBOARD. REPLACE WITH A NEW 2500A. LUG SECTION. PROVIDE NEW BUS CONNECTIONS AS REQUIRED. COORDINATE THIS WORK CAREFULLY WITH THE SWITCHBOARD MANUFACTURER.

MHTN ARCHITECTS
MHTN Architects, Inc.
420 East South Temple
Suite 100
Salt Lake City, Utah 84111
Telephone (801) 595-6700
Telefax (801) 595-6717
www.mhtn.com

E.C.E. LLC
Electrical Consulting Engineers
939 So. West Temple
Salt Lake City, Utah 84101
Telephone (801) 521-8007
Email Admin@eceonline.com

WEBER STATE UNIVERSITY
RESIDENTIAL LIFE PHASE II - BLDG.2

DFCM PROJECT NUMBER: 10176810

WEBER STATE UNIVERSITY
OGDEN, UTAH 84408

SEAL

MHTN PROJECT NO. 4007-2

DRAWN BY: CC CHECKED BY: JHM

ISSUED:

NO.	DATE	DESCRIPTION
01	17 MAY 2011	CONSTRUCTION DOCUMENTS

CONTRACTOR TO VERIFY DRAWINGS IN FIELD USE REFLECT LAST REVISION DATE.

NO.	DATE	DESCRIPTION

SHEET NAME

PARTIAL SITE PLAN - ELECTRICAL

CONSTRUCTION DOCUMENTS

17 MAY 2011

SHEET NUMBER

ES102

C:\Users\chel\Documents\WEBER-STATE-BLDG2-CENTRAL1_richle.rvt
11/26/2010 1:33:01 PM

SPECIAL NOTES:

1. IN THE SUITES AND RESTROOMS INSTALL OUTLETS AND LIGHT SWITCHES ABOVE COUNTERS AT 46" TO CENTER OF DEVICE.

REFERENCE NOTES:

1. FURNISH AND INSTALL AN ULTRASONIC MOTION SENSOR WITH POWER PACK IN THE APPROXIMATE LOCATIONS SHOWN TO CONTROL THE LIGHT FIXTURES IN THE CORRIDORS. WATTSTOPPER TYPE LMUC-100 OR APPROVED EQUAL. REFER TO MANUFACTURER WIRING DIAGRAM FOR MORE INFORMATION. PROVIDE CONDUIT AND CONDUCTORS FOR A COMPLETE INSTALLATION.
2. FURNISH AND INSTALL NEW EXIT SIGNS IN THE APPROXIMATE LOCATION SHOWN. TIE TO THE UNSWITCHED EMERGENCY LIGHTING CIRCUIT OF THE AREA.
3. FURNISH AND INSTALL A 1 BUTTON WALL MOUNTED DUAL TECHNOLOGY MOTION SENSOR WITH AUTO-OFF SWITCH IN THE APPROXIMATE LOCATION SHOWN. WATTSTOPPER TYPE PW-100 OR APPROVED EQUAL. REFER TO MANUFACTURER WIRING DIAGRAM FOR MORE INFORMATION. PROVIDE CONDUIT AND CONDUCTORS FOR A COMPLETE INSTALLATION.
4. FURNISH AND INSTALL A DUAL TECHNOLOGY OCCUPANCY SENSOR COMPLETE WITH EXTERNAL POWER PACK IN THE APPROXIMATE LOCATION SHOWN. WATTSTOPPER TYPE LMDC-100 OR APPROVED EQUAL. TIE THE LIGHT FIXTURES TO THE WALL SWITCH THROUGH THE MOTION SENSOR. REFER TO MANUFACTURER WIRING DIAGRAM FOR MORE INFORMATION. PROVIDE CONDUIT AND CONDUCTORS FOR A COMPLETE INSTALLATION.
5. TIE EMERGENCY LIGHT FIXTURE TO A BODINE TRANSFER SWITCH (CAT. #GTD OR APPROVED EQUAL) SUCH THAT WHEN COMMERCIAL POWER FAILS THE EMERGENCY LIGHTS COME ON AUTOMATICALLY REGARDLESS OF POSITION OF LIGHT SWITCHES. PROVIDE UNSWITCHED POWER TO TRANSFER SWITCH. REFER TO MANUFACTURE WIRING DIAGRAM FOR MORE INFORMATION. NORMALLY THESE LIGHT FIXTURES ARE CONTROLLED BY LIGHT SWITCHES.
6. TIE THE EXTERIOR LIGHT FIXTURES TO THE CIRCUIT AS SHOWN THROUGH THE TIME CLOCK IN THE ELECTRICAL ROOM.

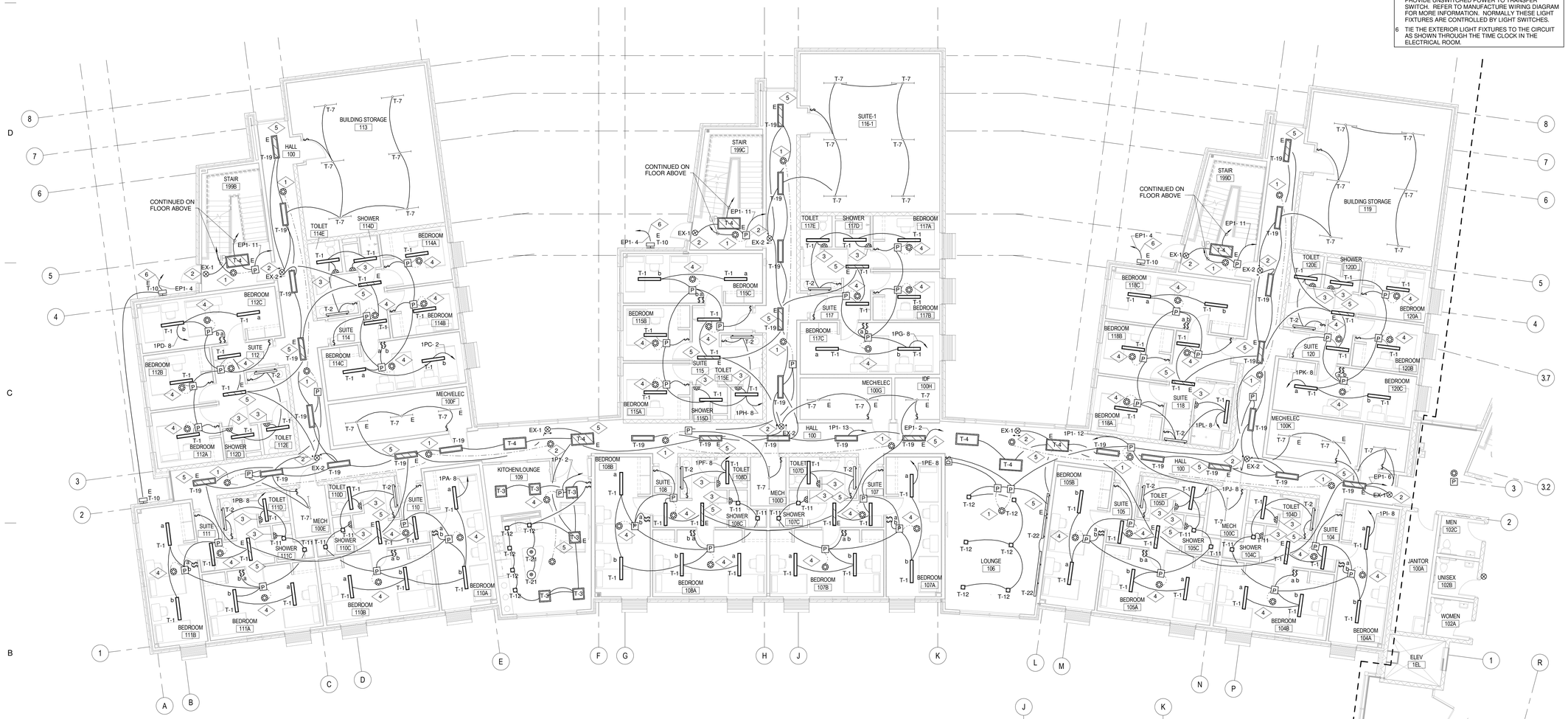

1 LEVEL 1 FLOOR PLAN AREA A - LIGHTING
1/8" = 1'-0"

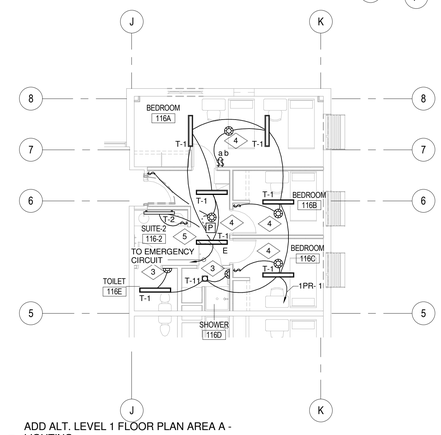

2 ADD ALT. LEVEL 1 FLOOR PLAN AREA A - LIGHTING
1/8" = 1'-0"

MHTN ARCHITECTS
MHTN Architects, Inc.
420 East South Temple
Suite 100
Salt Lake City, Utah 84111
Telephone (801) 595-6700
Telefax (801) 595-6717
www.mhtn.com

ECE, Inc. Consulting Engineers
939 S. West Temple
Salt Lake City, Utah 84101
Phone 801.521.8007
e-mail admin@eceonline.com

WEBER STATE UNIVERSITY RESIDENTIAL LIFE PHASE II - BLDG.2

DFCM PROJECT NUMBER: 10176810

WEBER STATE UNIVERSITY
OGDEN, UTAH 84408

SEAL

MHTN PROJECT NO. 4007-2

DRAWN BY: CC CHECKED BY: JHM

ISSUED:

NO.	DATE	DESCRIPTION
01	17 MAY 2011	CONSTRUCTION DOCUMENTS

CONTRACTOR TO VERIFY DRAWINGS IN FIELD USE REFLECT LAST REVISION DATE.

NO.	DATE	DESCRIPTION

SHEET NAME

FIRST FLOOR AREA A - LIGHTING

CONSTRUCTION DOCUMENTS

17 MAY 2011

SHEET NUMBER

EL101A

C:\Users\richie\Documents\4007 WEBER STATE BLDG2-CENTRAL-1_richie.rvt
5/17/2011 12:07:54 PM

SPECIAL NOTES:

1. IN THE SUITES AND RESTROOMS INSTALL OUTLETS AND LIGHT SWITCHES ABOVE COUNTERS AT 46" TO CENTER OF DEVICE.

REFERENCE NOTES:

1 FURNISH AND INSTALL A 1 BUTTON WALL MOUNTED DUAL TECHNOLOGY MOTION SENSOR WITH AUTO-OFF SWITCH IN THE APPROXIMATE LOCATION SHOWN. WATTSTOPPER TYPE PW-100 OR APPROVED EQUAL. REFER TO MANUFACTURER WIRING DIAGRAM FOR MORE INFORMATION. PROVIDE CONDUIT AND CONDUCTORS FOR A COMPLETE INSTALLATION.

2 FURNISH AND INSTALL AN ULTRASONIC MOTION SENSOR WITH POWER PACK IN THE APPROXIMATE LOCATIONS SHOWN TO CONTROL THE LIGHT FIXTURES IN THE CORRIDORS. WATTSTOPPER TYPE LMUC-100 OR APPROVED EQUAL. REFER TO MANUFACTURER WIRING DIAGRAM FOR MORE INFORMATION. PROVIDE CONDUIT AND CONDUCTORS FOR A COMPLETE INSTALLATION.

3 FURNISH AND INSTALL NEW EXIT SIGNS IN THE APPROXIMATE LOCATION SHOWN. TIE TO THE UNSWITCHED EMERGENCY LIGHTING CIRCUIT OF THE AREA.

4 FURNISH AND INSTALL A DUAL TECHNOLOGY OCCUPANCY SENSOR COMPLETE WITH EXTERNAL POWER PACK IN THE APPROXIMATE LOCATION SHOWN. WATTSTOPPER TYPE LMDC-100 OR APPROVED EQUAL. TIE THE LIGHT FIXTURES TO THE WALL SWITCH THROUGH THE MOTION SENSOR. REFER TO MANUFACTURER WIRING DIAGRAM FOR MORE INFORMATION. PROVIDE CONDUIT AND CONDUCTORS FOR A COMPLETE INSTALLATION.

5 TIE EMERGENCY LIGHT FIXTURE TO A BODINE TRANSFER SWITCH (CAT. #GTD OR APPROVED EQUAL) SUCH THAT WHEN COMMERCIAL POWER FAILS THE EMERGENCY LIGHTS COME ON AUTOMATICALLY REGARDLESS OF POSITION OF LIGHT SWITCHES. PROVIDE UNSWITCHED POWER TO TRANSFER SWITCH. REFER TO MANUFACTURE WIRING DIAGRAM FOR MORE INFORMATION. NORMALLY THESE LIGHT FIXTURES ARE CONTROLLED BY LIGHT SWITCHES.

6 TIE THE EXTERIOR LIGHT FIXTURES TO THE CIRCUIT AS SHOWN THROUGH THE TIME CLOCK IN THE ELECTRICAL ROOM.

1 LEVEL 1 FLOOR PLAN AREA B - LIGHTING
1/8" = 1'-0"

MHTN ARCHITECTS
MHTN Architects, Inc.
420 East South Temple
Suite 100
Salt Lake City, Utah 84111
Telephone (801) 595-6700
Telefax (801) 595-6717
www.mhtn.com

ECE, Inc. Consulting Engineers
939 S. West Temple
Salt Lake City, Utah 84101
Phone 801.521.8007
e-mail admin@eceonline.com

WEBER STATE UNIVERSITY
RESIDENTIAL LIFE PHASE II - BLDG.2
DFCM PROJECT NUMBER: 10176810

WEBER STATE UNIVERSITY
OGDEN, UTAH 84408

SEAL

MHTN PROJECT NO. 4007-2

DRAWN BY: CC CHECKED BY: JHM

ISSUED:

NO.	DATE	DESCRIPTION
01	17 MAY 2011	CONSTRUCTION DOCUMENTS

CONTRACTOR TO VERIFY DRAWINGS IN FIELD USE REFLECT LAST REVISION DATE.

NO.	DATE	DESCRIPTION

SHEET NAME:
FIRST FLOOR AREA B - LIGHTING
CONSTRUCTION DOCUMENTS
17 MAY 2011

SHEET NUMBER
EL101B

C:\Users\richie\Documents\4007 WEBER STATE BLDG2 CENTRAL\ l_richie.rvt
5/17/2011 12:08:00 PM

SPECIAL NOTES:

1. IN THE SUITES AND RESTROOMS INSTALL OUTLETS AND LIGHT SWITCHES ABOVE COUNTERS AT 46" TO CENTER OF DEVICE.

REFERENCE NOTES:

1 FURNISH AND INSTALL A DUAL TECHNOLOGY OCCUPANCY SENSOR COMPLETE WITH EXTERNAL POWER PACK IN THE APPROXIMATE LOCATION SHOWN. WATTSTOPPER TYPE LMDC-100 OR APPROVED EQUAL. TIE THE LIGHT FIXTURES TO THE WALL SWITCH THROUGH THE MOTION SENSOR. REFER TO MANUFACTURER WIRING DIAGRAM FOR MORE INFORMATION. PROVIDE CONDUIT AND CONDUCTORS FOR A COMPLETE INSTALLATION.

2 FURNISH AND INSTALL A 1 BUTTON WALL MOUNTED DUAL TECHNOLOGY MOTION SENSOR WITH AUTO-OFF SWITCH IN THE APPROXIMATE LOCATION SHOWN. WATTSTOPPER TYPE PW-100 OR APPROVED EQUAL. REFER TO MANUFACTURER WIRING DIAGRAM FOR MORE INFORMATION. PROVIDE CONDUIT AND CONDUCTORS FOR A COMPLETE INSTALLATION.

3 FURNISH AND INSTALL NEW EXIT SIGNS IN THE APPROXIMATE LOCATION SHOWN. TIE TO THE UNSWITCHED EMERGENCY LIGHTING CIRCUIT OF THE AREA.

REFERENCE NOTES:

4 TIE EMERGENCY LIGHT FIXTURE TO A BODINE TRANSFER SWITCH (CAT. #GTD OR APPROVED EQUAL) SUCH THAT WHEN COMMERCIAL POWER FAILS THE EMERGENCY LIGHTS COME ON AUTOMATICALLY REGARDLESS OF POSITION OF LIGHT SWITCHES. PROVIDE UNSWITCHED POWER TO TRANSFER SWITCH. REFER TO MANUFACTURE WIRING DIAGRAM FOR MORE INFORMATION. NORMALLY THESE LIGHT FIXTURES ARE CONTROLLED BY LIGHT SWITCHES.

5 FURNISH AND INSTALL AN ULTRASONIC MOTION SENSOR WITH POWER PACK IN THE APPROXIMATE LOCATIONS SHOWN TO CONTROL THE LIGHT FIXTURES IN THE CORRIDORS. WATTSTOPPER TYPE LMUC-100 OR APPROVED EQUAL. REFER TO MANUFACTURER WIRING DIAGRAM FOR MORE INFORMATION. PROVIDE CONDUIT AND CONDUCTORS FOR A COMPLETE INSTALLATION.

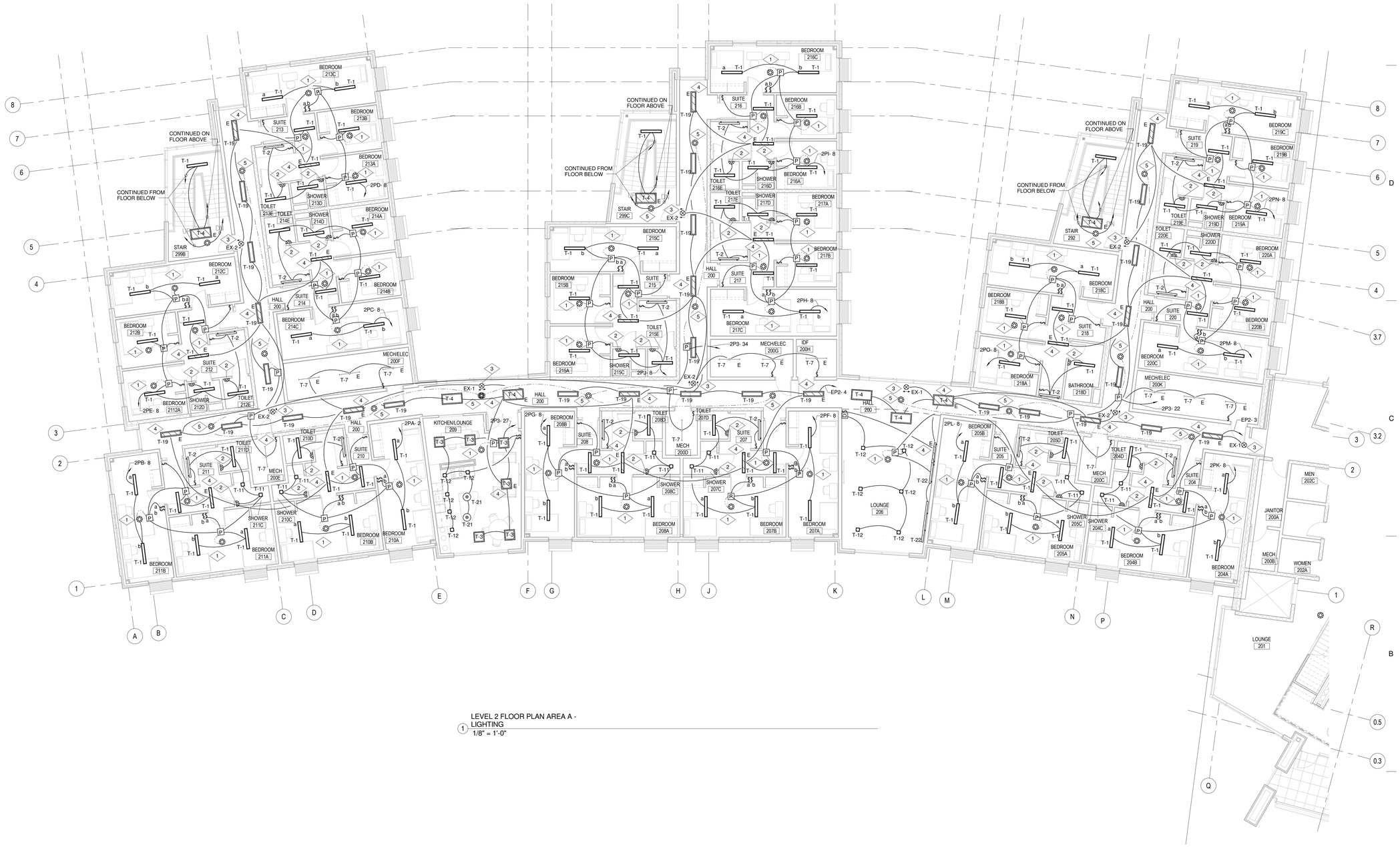

1 LEVEL 2 FLOOR PLAN AREA A - LIGHTING
1/8" = 1'-0"

MHTN ARCHITECTS
MHTN Architects, Inc.
420 East South Temple
Suite 100
Salt Lake City, Utah 84111
Telephone (801) 595-6700
Telefax (801) 595-6717
www.mhtn.com

ECE, Inc. Consulting Engineers
939 S. West Temple
Salt Lake City, Utah 84101
Phone 801.521.8007
e-mail admin@eceonline.com

WEBER STATE UNIVERSITY
RESIDENTIAL LIFE PHASE II - BLDG.2
DFCM PROJECT NUMBER: 10176810

WEBER STATE UNIVERSITY
OGDEN, UTAH 84408

SEAL

MHTN PROJECT NO. 4007-2

DRAWN BY: CC CHECKED BY: JHM

ISSUED:

NO.	DATE	DESCRIPTION
01	17 MAY 2011	CONSTRUCTION DOCUMENTS

CONTRACTOR TO VERIFY DRAWINGS IN FIELD USE REFLECT LAST REVISION DATE.

NO.	DATE	DESCRIPTION

SHEET NAME:
SECOND FLOOR AREA A - LIGHTING
CONSTRUCTION DOCUMENTS
17 MAY 2011

SHEET NUMBER
EL102A

C:\Users\richie\Documents\4007-WEBER-STATE-BLDG2-CENTRAL-I_richie.rvt
5/17/2011 12:08:07 PM

1 LEVEL 2 FLOOR PLAN AREA B - LIGHTING
1/8" = 1'-0"

SPECIAL NOTES:

1. IN THE SUITES AND RESTROOMS INSTALL OUTLETS AND LIGHT SWITCHES ABOVE COUNTERS AT 46" TO CENTER OF DEVICE.
2. PROVIDE .178 THICK LENS FOR THE LAY-IN FIXTURES IN THE KITCHEN AREAS. INVERT LENS SO SMOOTH SIDE IS FACING DOWN.

REFERENCE NOTES:

1. FURNISH AND INSTALL A DUAL TECHNOLOGY OCCUPANCY SENSOR COMPLETE WITH EXTERNAL POWER PACK IN THE APPROXIMATE LOCATION SHOWN. WATTSTOPPER TYPE LMDC-100 OR APPROVED EQUAL. TIE THE LIGHT FIXTURES TO THE WALL SWITCH THROUGH THE MOTION SENSOR. REFER TO MANUFACTURER WIRING DIAGRAM FOR MORE INFORMATION. PROVIDE CONDUIT AND CONDUCTORS FOR A COMPLETE INSTALLATION.
2. FURNISH AND INSTALL A 1 BUTTON WALL MOUNTED DUAL TECHNOLOGY MOTION SENSOR WITH AUTO-OFF SWITCH IN THE APPROXIMATE LOCATION SHOWN. WATTSTOPPER TYPE PW-100 OR APPROVED EQUAL. REFER TO MANUFACTURER WIRING DIAGRAM FOR MORE INFORMATION. PROVIDE CONDUIT AND CONDUCTORS FOR A COMPLETE INSTALLATION.
3. TIE EMERGENCY LIGHT FIXTURE TO A BODINE TRANSFER SWITCH (CAT. #GTD OR APPROVED EQUAL) SUCH THAT WHEN COMMERCIAL POWER FAILS THE EMERGENCY LIGHTS COME ON AUTOMATICALLY REGARDLESS OF POSITION OF LIGHT SWITCHES. PROVIDE UNSWITCHED POWER TO TRANSFER SWITCH. REFER TO MANUFACTURE WIRING DIAGRAM FOR MORE INFORMATION. NORMALLY THESE LIGHT FIXTURES ARE CONTROLLED BY LIGHT SWITCHES.
4. FURNISH AND INSTALL NEW EXIT SIGNS IN THE APPROXIMATE LOCATION SHOWN. TIE TO THE UNSWITCHED EMERGENCY LIGHTING CIRCUIT OF THE AREA.
5. FURNISH AND INSTALL AN ULTRASONIC MOTION SENSOR WITH POWER PACK IN THE APPROXIMATE LOCATIONS SHOWN TO CONTROL THE LIGHT FIXTURES IN THE CORRIDORS. WATTSTOPPER TYPE LMUC-100 OR APPROVED EQUAL. REFER TO MANUFACTURER WIRING DIAGRAM FOR MORE INFORMATION. PROVIDE CONDUIT AND CONDUCTORS FOR A COMPLETE INSTALLATION.
6. TIE THE EXTERIOR LIGHT FIXTURES TO THE CIRCUIT AS SHOWN THROUGH THE TIME CLOCK IN THE ELECTRICAL ROOM.
7. FURNISH AND INSTALL DIGITAL PIR OCCUPANCY SENSOR WITH POWER PACK IN APPROXIMATE LOCATION SHOWN. WATTSTOPPER TYPE LMPX-100 OR APPROVED EQUAL. TIE THE MOTION SENSOR TO POWER PACK. REFER TO MANUFACTURER WIRING DIAGRAM FOR MORE INFORMATION. PROVIDE CONDUIT AND CONDUCTORS FOR A COMPLETE INSTALLATION.

MHTN ARCHITECTS
MHTN Architects, Inc.
420 East South Temple
Suite 100
Salt Lake City, Utah 84111
Telephone (801) 595-6700
Telefax (801) 595-6717
www.mhtn.com

ECE, Inc. Consulting Engineers
939 S. West Temple
Salt Lake City, Utah 84101
Phone 801.521.8007
e-mail admin@eceonline.com

WEBER STATE UNIVERSITY
RESIDENTIAL LIFE PHASE II - BLDG.2
DFCM PROJECT NUMBER: 10176810

WEBER STATE UNIVERSITY
OGDEN, UTAH 84408

SEAL

MHTN PROJECT NO. 4007-2

DRAWN BY: CC CHECKED BY: JHM

ISSUED:

NO.	DATE	DESCRIPTION
01	17 MAY 2011	CONSTRUCTION DOCUMENTS

CONTRACTOR TO VERIFY DRAWINGS IN FIELD USE REFLECT LAST REVISION DATE:

NO.	DATE	DESCRIPTION

SHEET NAME
SECOND FLOOR AREA B - LIGHTING
CONSTRUCTION DOCUMENTS
17 MAY 2011

SHEET NUMBER
EL102B

C:\Users\richie\Documents\4007-WEBER-STATE-BLDG2-CENTRAL-1_richie.rvt
5/17/2011 12:08:14 PM

SPECIAL NOTES:

1. IN THE SUITES AND RESTROOMS INSTALL OUTLETS AND LIGHT SWITCHES ABOVE COUNTERS AT 46" TO CENTER OF DEVICE.

REFERENCE NOTES:

1 FURNISH AND INSTALL A DUAL TECHNOLOGY OCCUPANCY SENSOR COMPLETE WITH EXTERNAL POWER PACK IN THE APPROXIMATE LOCATION SHOWN. WATTSTOPPER TYPE LMDC-100 OR APPROVED EQUAL. TIE THE LIGHT FIXTURES TO THE WALL SWITCH THROUGH THE MOTION SENSOR. REFER TO MANUFACTURER WIRING DIAGRAM FOR MORE INFORMATION. PROVIDE CONDUIT AND CONDUCTORS FOR A COMPLETE INSTALLATION.

2 FURNISH AND INSTALL A 1 BUTTON WALL MOUNTED DUAL TECHNOLOGY MOTION SENSOR WITH AUTO-OFF SWITCH IN THE APPROXIMATE LOCATION SHOWN. WATTSTOPPER TYPE PW-100 OR APPROVED EQUAL. REFER TO MANUFACTURER WIRING DIAGRAM FOR MORE INFORMATION. PROVIDE CONDUIT AND CONDUCTORS FOR A COMPLETE INSTALLATION.

3 FURNISH AND INSTALL AN ULTRASONIC MOTION SENSOR WITH POWER PACK IN THE APPROXIMATE LOCATIONS SHOWN TO CONTROL THE LIGHT FIXTURES IN THE CORRIDORS. WATTSTOPPER TYPE LMUC-100 OR APPROVED EQUAL. REFER TO MANUFACTURER WIRING DIAGRAM FOR MORE INFORMATION. PROVIDE CONDUIT AND CONDUCTORS FOR A COMPLETE INSTALLATION.

REFERENCE NOTES:

4 FURNISH AND INSTALL NEW EXIT SIGNS IN THE APPROXIMATE LOCATION SHOWN. TIE TO THE UNSWITCHED EMERGENCY LIGHTING CIRCUIT OF THE AREA.

5 TIE EMERGENCY LIGHT FIXTURE TO A BODINE TRANSFER SWITCH (CAT. #GTD OR APPROVED EQUAL) SUCH THAT WHEN COMMERCIAL POWER FAILS THE EMERGENCY LIGHTS COME ON AUTOMATICALLY REGARDLESS OF POSITION OF LIGHT SWITCHES. PROVIDE UNSWITCHED POWER TO TRANSFER SWITCH. REFER TO MANUFACTURE WIRING DIAGRAM FOR MORE INFORMATION. NORMALLY THESE LIGHT FIXTURES ARE CONTROLLED BY LIGHT SWITCHES.

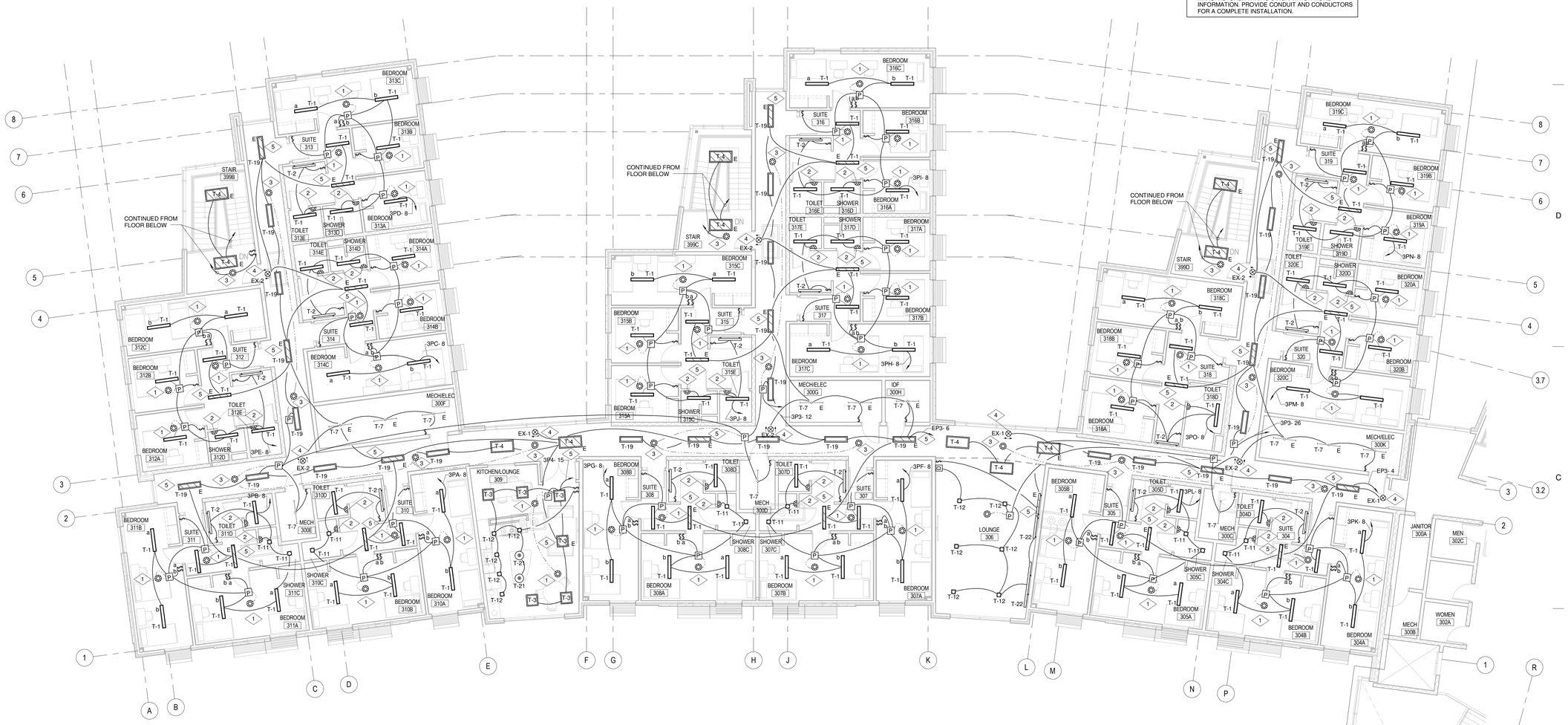

1 LEVEL 3 FLOOR PLAN AREA A - LIGHTING
1/8" = 1'-0"

MHTN ARCHITECTS
MHTN Architects, Inc.
420 East South Temple
Suite 100
Salt Lake City, Utah 84111
Telephone (801) 595-6700
Telefax (801) 595-6717
www.mhtn.com

ECE, Inc. Consulting Engineers
939 S. West Temple
Salt Lake City, Utah 84101
Phone 801.521.8007
e-mail admin@eceonline.com

WEBER STATE UNIVERSITY
RESIDENTIAL LIFE PHASE II - BLDG.2
DFCM PROJECT NUMBER: 10176810

WEBER STATE UNIVERSITY
OGDEN, UTAH 84408

SEAL

MHTN PROJECT NO. 4007-2

DRAWN BY: CC CHECKED BY: JHM

ISSUED:

NO.	DATE	DESCRIPTION
01	17 MAY 2011	CONSTRUCTION DOCUMENTS

CONTRACTOR TO VERIFY DRAWINGS IN FIELD USE REFLECT LAST REVISION DATE:

NO.	DATE	DESCRIPTION

SHEET NAME

THIRD FLOOR AREA A - LIGHTING

CONSTRUCTION DOCUMENTS

17 MAY 2011

SHEET NUMBER

EL103A

C:\Users\richie\Documents\4007-WEBER STATE BLDG2-CENTRAL-1_richie.rvt
5/17/2011 12:08:22 PM

1 LEVEL 3 FLOOR PLAN AREA B - LIGHTING
1/8" = 1'-0"

SPECIAL NOTES:

1. IN THE SUITES AND RESTROOMS INSTALL OUTLETS AND LIGHT SWITCHES ABOVE COUNTERS AT 46" TO CENTER OF DEVICE.

REFERENCE NOTES:

1 FURNISH AND INSTALL A DUAL TECHNOLOGY OCCUPANCY SENSOR COMPLETE WITH EXTERNAL POWER PACK IN THE APPROXIMATE LOCATION SHOWN. WATTSTOPPER TYPE LMDC-100 OR APPROVED EQUAL. TIE THE LIGHT FIXTURES TO THE WALL SWITCH THROUGH THE MOTION SENSOR. REFER TO MANUFACTURER WIRING DIAGRAM FOR MORE INFORMATION. PROVIDE CONDUIT AND CONDUCTORS FOR A COMPLETE INSTALLATION.

2 FURNISH AND INSTALL A 1 BUTTON WALL MOUNTED DUAL TECHNOLOGY MOTION SENSOR WITH AUTO-OFF SWITCH IN THE APPROXIMATE LOCATION SHOWN. WATTSTOPPER TYPE PW-100 OR APPROVED EQUAL. REFER TO MANUFACTURER WIRING DIAGRAM FOR MORE INFORMATION. PROVIDE CONDUIT AND CONDUCTORS FOR A COMPLETE INSTALLATION.

3 TIE EMERGENCY LIGHT FIXTURE TO A BODINE TRANSFER SWITCH (CAT. #GTD OR APPROVED EQUAL) SUCH THAT WHEN COMMERCIAL POWER FAILS THE EMERGENCY LIGHTS COME ON AUTOMATICALLY REGARDLESS OF POSITION OF LIGHT SWITCHES. PROVIDE UNSWITCHED POWER TO TRANSFER SWITCH. REFER TO MANUFACTURE WIRING DIAGRAM FOR MORE INFORMATION. NORMALLY THESE LIGHT FIXTURES ARE CONTROLLED BY LIGHT SWITCHES.

4 FURNISH AND INSTALL AN ULTRASONIC MOTION SENSOR WITH POWER PACK IN THE APPROXIMATE LOCATIONS SHOWN TO CONTROL THE LIGHT FIXTURES IN THE CORRIDORS. WATTSTOPPER TYPE LMUC-100 OR APPROVED EQUAL. REFER TO MANUFACTURER WIRING DIAGRAM FOR MORE INFORMATION. PROVIDE CONDUIT AND CONDUCTORS FOR A COMPLETE INSTALLATION.

5 FURNISH AND INSTALL NEW EXIT SIGNS IN THE APPROXIMATE LOCATION SHOWN. TIE TO THE UNSWITCHED EMERGENCY LIGHTING CIRCUIT OF THE AREA.

6 TIE THE EXTERIOR LIGHT FIXTURES TO THE CIRCUIT AS SHOWN THROUGH THE TIME CLOCK IN THE ELECTRICAL ROOM.

7 MOUNT TYPE T-18 LIGHT FIXTURES ON THE WIND GERT IN THE APPROXIMATE LOCATION SHOWN. MOUNT AT APPROXIMATELY 8'-6" ABOVE THE THIRD LEVEL FLOOR. COORDINATE EXACT HEIGHT AND LOCATION WITH ARCHITECT. RUN BELDON CABLE IN 3/4" CONDUIT FROM THE LIGHT FIXTURES TO CONTROLLER IN IDF ROOM 333. COORDINATE EXACT CABLE TYPE WITH MANUFACTURER. MANUFACTURER REPRESENTATIVE IS TO COMMISSION LIGHT FIXTURES AND CONTROLLER AND TRAIN THE OWNER ON PROPER OPERATION.

8 FURNISH AND INSTALL STRAND LIGHTING DMX CONTROLLER IN THE APPROXIMATE LOCATION SHOWN TO CONTROL LED THEATRICAL LIGHTS. COORDINATE EXACT LOCATION OF CONTROLLER WITH OWNER.

MHTN
ARCHITECTS
MHTN Architects, Inc.
420 East South Temple
Suite 100
Salt Lake City, Utah 84111
Telephone (801) 595-6700
Telefax (801) 595-6717
www.mhtn.com

ECE, Inc. Consulting Engineers
939 S. West Temple
Salt Lake City, Utah 84101
Phone 801.521.8007
e-mail admin@eceonline.com

WEBER STATE UNIVERSITY
RESIDENTIAL LIFE PHASE II - BLDG.2

DFCM PROJECT NUMBER: 10176810

WEBER STATE UNIVERSITY
OGDEN, UTAH 84408

SEAL

MHTN PROJECT NO. 4007-2

DRAWN BY: CC CHECKED BY: JHM

ISSUED:

NO.	DATE	DESCRIPTION
01	17 MAY 2011	CONSTRUCTION DOCUMENTS

CONTRACTOR TO VERIFY DRAWINGS IN FIELD USE REFLECT LAST REVISION DATE.

NO.	DATE	DESCRIPTION

SHEET NAME

THIRD FLOOR AREA B - LIGHTING

CONSTRUCTION DOCUMENTS
17 MAY 2011

SHEET NUMBER

EL103B

C:\Users\chris\Documents\4007-WEBER-STATE-BLDG2-CENTRAL-1_richie.rvt
5/17/2011 12:08:29 PM

SPECIAL NOTES:

1. ALL UNDER SLAB CONDUITS SHALL RUN 6" BELOW BOTTOM OF SLAB AND 24" BELOW GRADE. REFER TO TRENCH DETAILS FOR WARNING TAPE ON ALL FEEDS THAT RUN OUTSIDE THE BUILDING FOOT PRINT. COORDINATE ALL ROUTES & LOCATIONS WITH THE OWNER & ARCHITECT PRIOR TO ROUGH IN.
2. REFER TO THE POWER SINGLE LINE DIAGRAMS FOR CONDUIT SIZES.

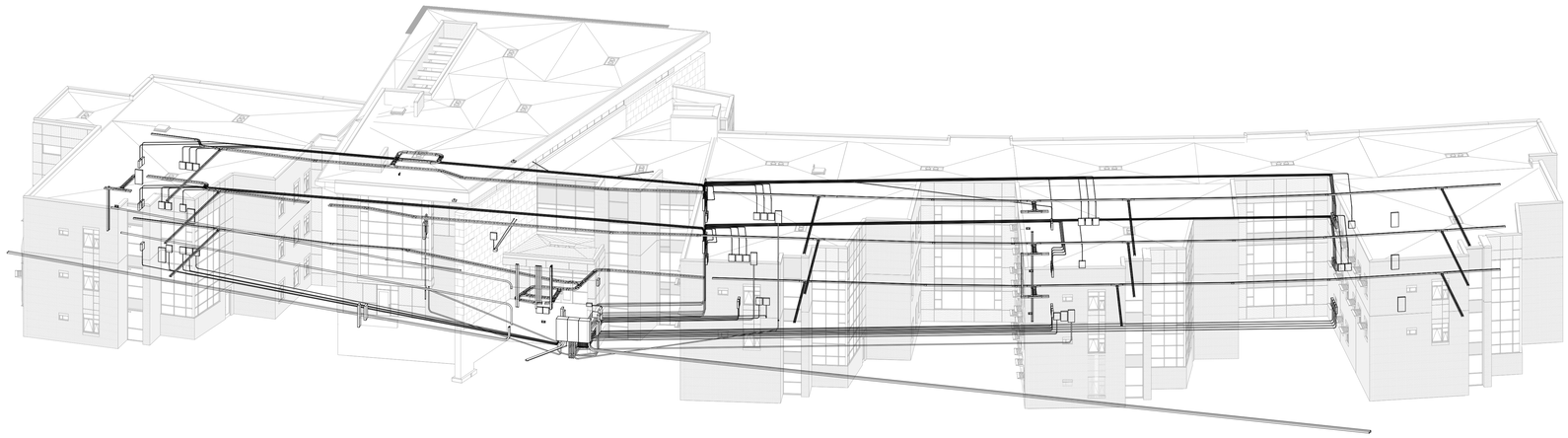

2 3D - CONDUIT COORDINATION

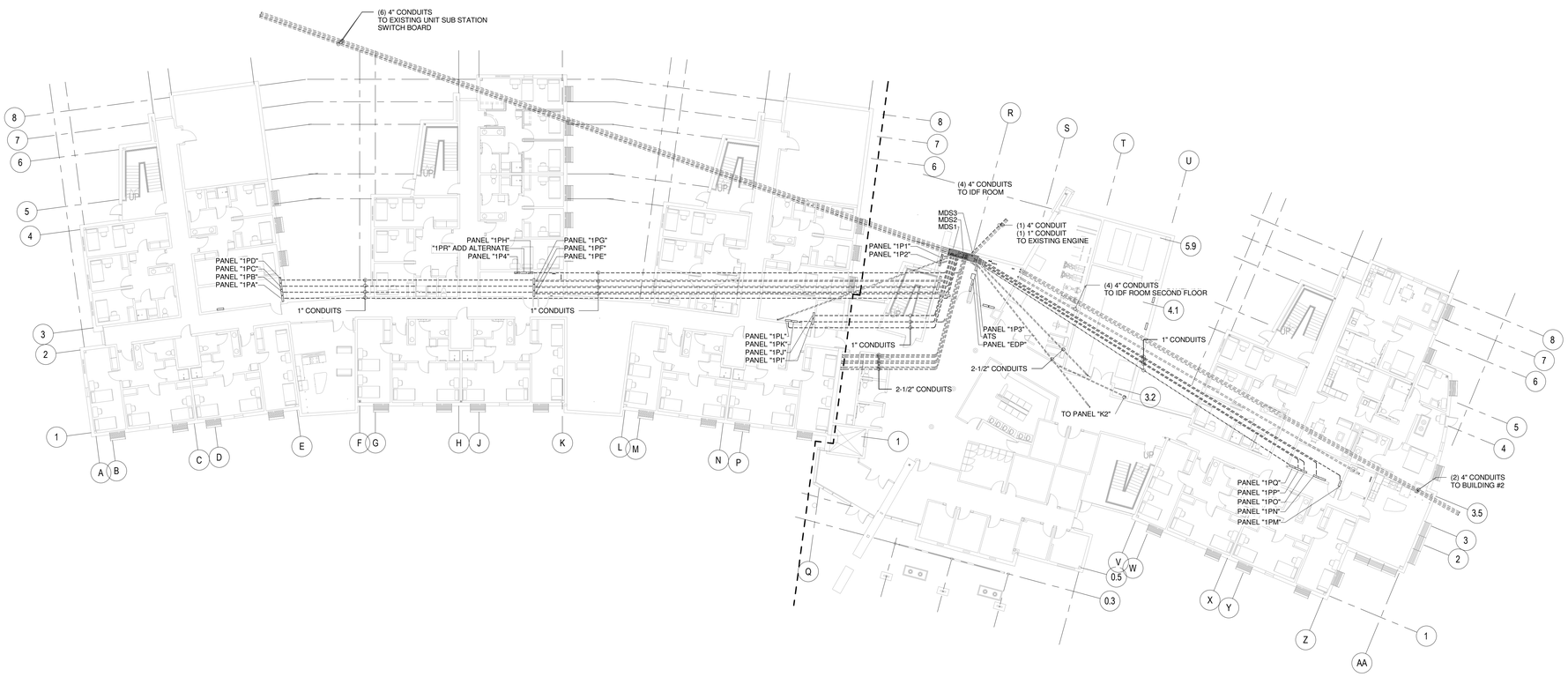

1 CONDUIT COORDINATION
1/16" = 1'-0"

C:\Users\richie\Documents\4007-WEBER-STATE-BLDG2-CENTRAL-1_richie.rvt
5/17/2011 12:08:52 PM

MHTN
ARCHITECTS
MHTN Architects, Inc.
420 East South Temple
Suite 100
Salt Lake City, Utah 84111
Telephone (801) 595-6700
Telefax (801) 595-6717
www.mhtn.com

ECE, Inc. Consulting Engineers
939 S. West Temple
Salt Lake City, Utah 84101
Phone 801.521.8007
e-mail admin@eceonline.com

WEBER STATE UNIVERSITY
RESIDENTIAL LIFE PHASE II - BLDG.2
DFCM PROJECT NUMBER: 10176810

WEBER STATE UNIVERSITY
OGDEN, UTAH 84408

SEAL

MHTN PROJECT NO. 4007-2

DRAWN BY: Author CHECKED BY: Checker

ISSUED:

NO.	DATE	DESCRIPTION
01	17 MAY 2011	CONSTRUCTION DOCUMENTS

CONTRACTOR TO VERIFY DRAWINGS IN FIELD USE REFLECT LAST REVISION DATE.

NO.	DATE	DESCRIPTION

SHEET NAME
UNDERGROUND CONDUIT

CONSTRUCTION DOCUMENTS
17 MAY 2011

SHEET NUMBER
EP100

SPECIAL NOTES:

1. IN THE SUITES AND RESTROOMS INSTALL OUTLETS AND LIGHT SWITCHES ABOVE COUNTERS AT 46" TO CENTER OF DEVICE.

REFERENCE NOTES:

1 FURNISH AND INSTALL A 4" X 4" X 2-1/8" DEEP J-BOX WITH SINGLE GANG MUDRING FOR TELE/DATA DEVICE. COORDINATE EXACT LOCATION WITH ARCHITECT AND OWNER PRIOR TO ROUGH IN. RUN A 1" CONDUIT TO THE CABLETRAY. INSERT PULL STRING AND LABEL. PROVIDE PLASTIC BUSHING AT CONDUIT ENDS.

2 TIE TO AN ARC FAULT CIRCUIT INTERUPTING BREAKER FOR THE DORM OUTLETS.

3 FURNISH AND INSTALL A 4" X 4" X 2-1/8" DEEP J-BOX WITH SINGLE GANG MUDRING FOR T.V. OUTLET. RUN A 1" CONDUIT FROM THE J-BOX TO THE CABLE TRAY. INSERT PULL WIRE AND LABEL THE CONDUIT.

4 FURNISH AND INSTALL A 2-POLE, 50 AMP, 208V. CONTACTOR IN A NEMA 1 ENCLOSURE ABOVE THE CEILING. TIE THE RANGE TO THE CIRCUIT INDICATED THROUGH THE CONTACT ON THE LIGHTING OCCUPANCY SENSOR IN THE ROOM SUCH THAT WHEN THE OCCUPANCY SENSOR SHUTS OFF THE LIGHT FIXTURES IN THE ROOM AND THE RANGE WILL SHUT OFF. ALSO PROVIDE THE SPARE CONTACT CLOSURE TO THE ATC PANEL PROVIDE CONDUIT, CONDUCTORS, ETC. FOR A COMPLETE INSTALLATION.

5 FURNISH AND INSTALL AN ISOLATED COPPER GROUND BUS BAR IN THE APPROXIMATE LOCATION SHOWN. REFER TO THE DETAILS FOR MORE INFORMATION. RUN A #2 GREEN GROUND TO THE GROUND BUS IN MAIN DISTRIBUTION PANEL. TERMINATE BOTH ENDS WITH TWO HOLE CRIMP CONNECTORS. COORDINATE THE EXACT LOCATION AND HEIGHT OF GROUND BUS WITH WSU.

MHTN ARCHITECTS
MHTN Architects, Inc.
420 East South Temple
Suite 100
Salt Lake City, Utah 84111
Telephone (801) 595-6700
Telefax (801) 595-6717
www.mhtn.com

ECE, Inc. Consulting Engineers
939 S. West Temple
Salt Lake City, Utah 84101
Phone 801.521.8007
e-mail admin@eceonline.com

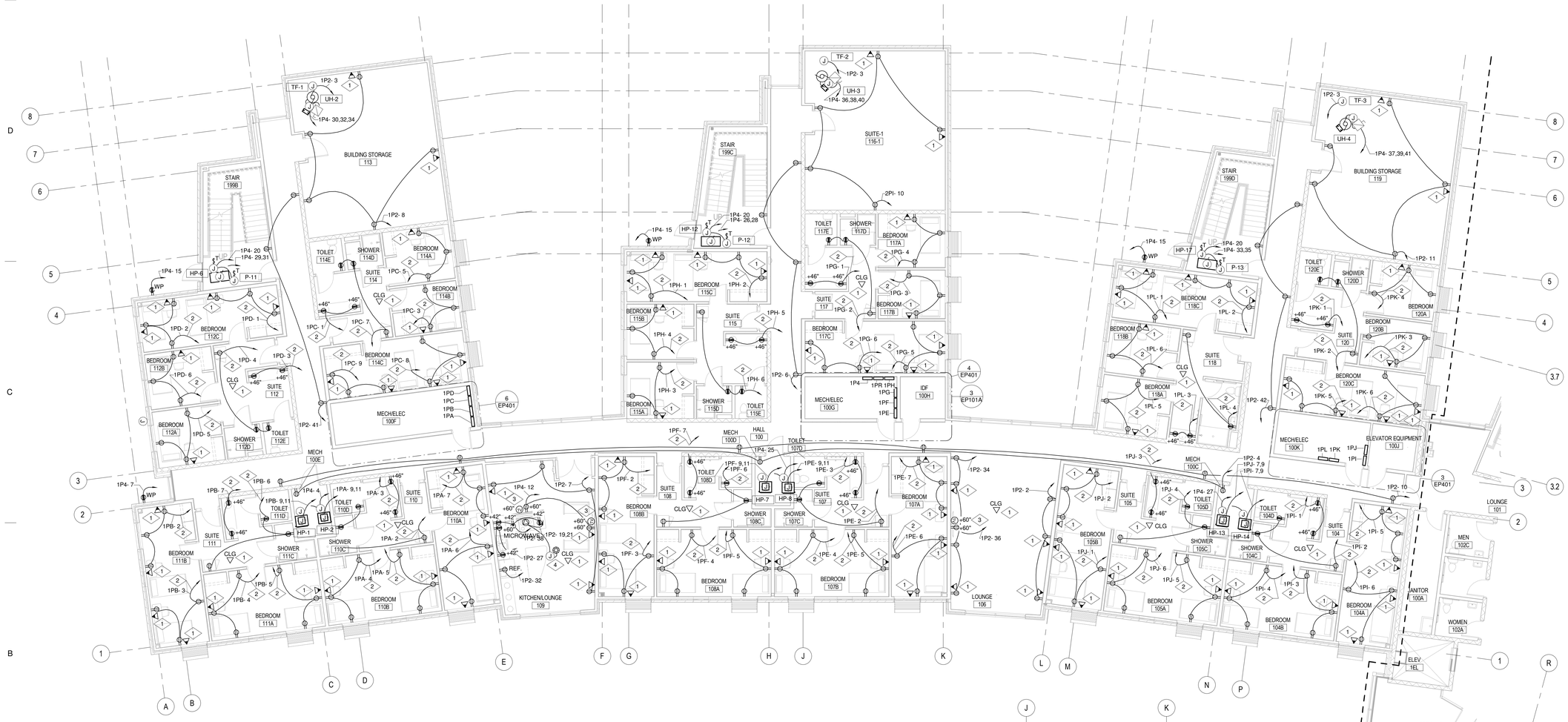

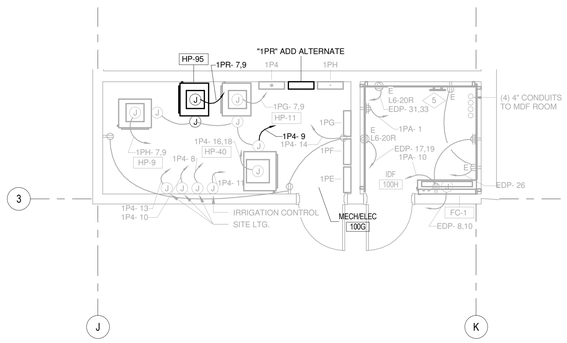

3 LEVEL 1 ALTERNATE ENLARGED MECH/ELEC 100G, IDF 100H
1/4" = 1'-0"

1 LEVEL 1 FLOOR PLAN AREA A - POWER
1/8" = 1'-0"

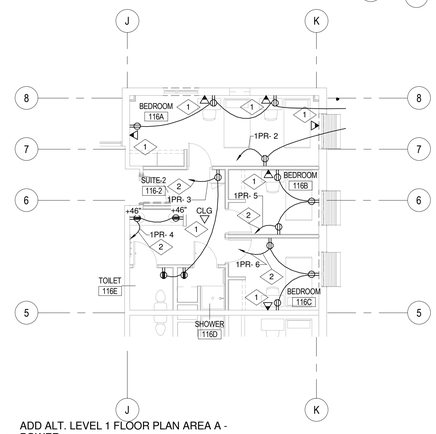

2 ADD ALT. LEVEL 1 FLOOR PLAN AREA A - POWER
1/8" = 1'-0"

WEBER STATE UNIVERSITY
RESIDENTIAL LIFE PHASE II - BLDG.2

DFCM PROJECT NUMBER: 10176810

WEBER STATE UNIVERSITY
OGDEN, UTAH 84408

SEAL

MHTN PROJECT NO. 4007-2

DRAWN BY: CC CHECKED BY: JHM

ISSUED:

NO.	DATE	DESCRIPTION
01	17 MAY 2011	CONSTRUCTION DOCUMENTS

CONTRACTOR TO VERIFY DRAWINGS IN FIELD USE REFLECT LAST REVISION DATE.

NO.	DATE	DESCRIPTION

SHEET NAME

FIRST FLOOR AREA A - POWER

CONSTRUCTION DOCUMENTS
17 MAY 2011

SHEET NUMBER

EP101A

C:\Users\richie\Documents\4007-WEBER-STATE-BLDG2-CENTRAL-1_richie.rvt
5/17/2011 12:08:59 PM

SPECIAL NOTES:

1. IN THE SUITES AND RESTROOMS INSTALL OUTLETS AND LIGHT SWITCHES ABOVE COUNTERS AT 46" TO CENTER OF DEVICE.

REFERENCE NOTES:

1 FURNISH AND INSTALL A 4" X 4" X 2-1/8" DEEP J-BOX WITH SINGLE GANG MUDRING FOR TELE/DATA DEVICE. COORDINATE EXACT LOCATION WITH ARCHITECT AND OWNER PRIOR TO ROUGH IN. RUN A 1" CONDUIT TO THE CABLETRAY. INSERT PULL STRING AND LABEL. PROVIDE PLASTIC BUSHING AT CONDUIT ENDS.

2 FURNISH AND INSTALL A 4" X 4" X 2-1/8" DEEP J-BOX WITH SINGLE GANG MUDRING FOR T.V. OUTLET. RUN A 1" CONDUIT FROM THE J-BOX TO THE CABLE TRAY. INSERT PULL WIRE AND LABEL THE CONDUIT.

3 TIE TO AN ARC FAULT CIRCUIT INTERUPTING BREAKER FOR THE DORM OUTLETS.

4 FURNISH AND INSTALL A J-BOX IN THE CEILING IN THE APPROXIMATE LOCATION SHOWN FOR FUTURE ADA DOOR OPERATOR. TIE TO THE CIRCUIT INDICATED. REFER TO THE ADA SUITE/RESTROOM DOOR DETAILS FOR MORE INFORMATION.

5 INSTALL THE ADA DOOR OPERATOR SWITCHES (BY DOOR HARDWAIRE SUPPLIER) IN THE APPROXIMATE LOCATION SHOWN. TIE TO THE DOOR OPERATOR. COORDINATE THE EXACT LOCATIONS WITH THE OWNER AND ARCHITECT. REFER TO THE MANUFACTURERS WIRING DIAGRAM FOR MORE INFORMATION.

6 FURNISH AND INSTALL A 2-POLE, 50 AMP, 208V. CONTACTOR IN A NEMA 1 ENCLOSURE ABOVE THE CEILING. TIE THE RANGE TO THE CIRCUIT INDICATED THROUGH THE CONTACT ON THE LIGHTING OCCUPANCY SENSOR IN THE ROOM SUCH THAT WHEN THE OCCUPANCY SENSOR SHUTS OFF THE LIGHT FIXTURES IN THE ROOM AND THE RANGE WILL SHUT OFF. ALSO PROVIDE THE SPARE CONTACT CLOSURE TO THE ATC PANEL. PROVIDE CONDUIT, CONDUCTORS, ETC. FOR A COMPLETE INSTALLATION.

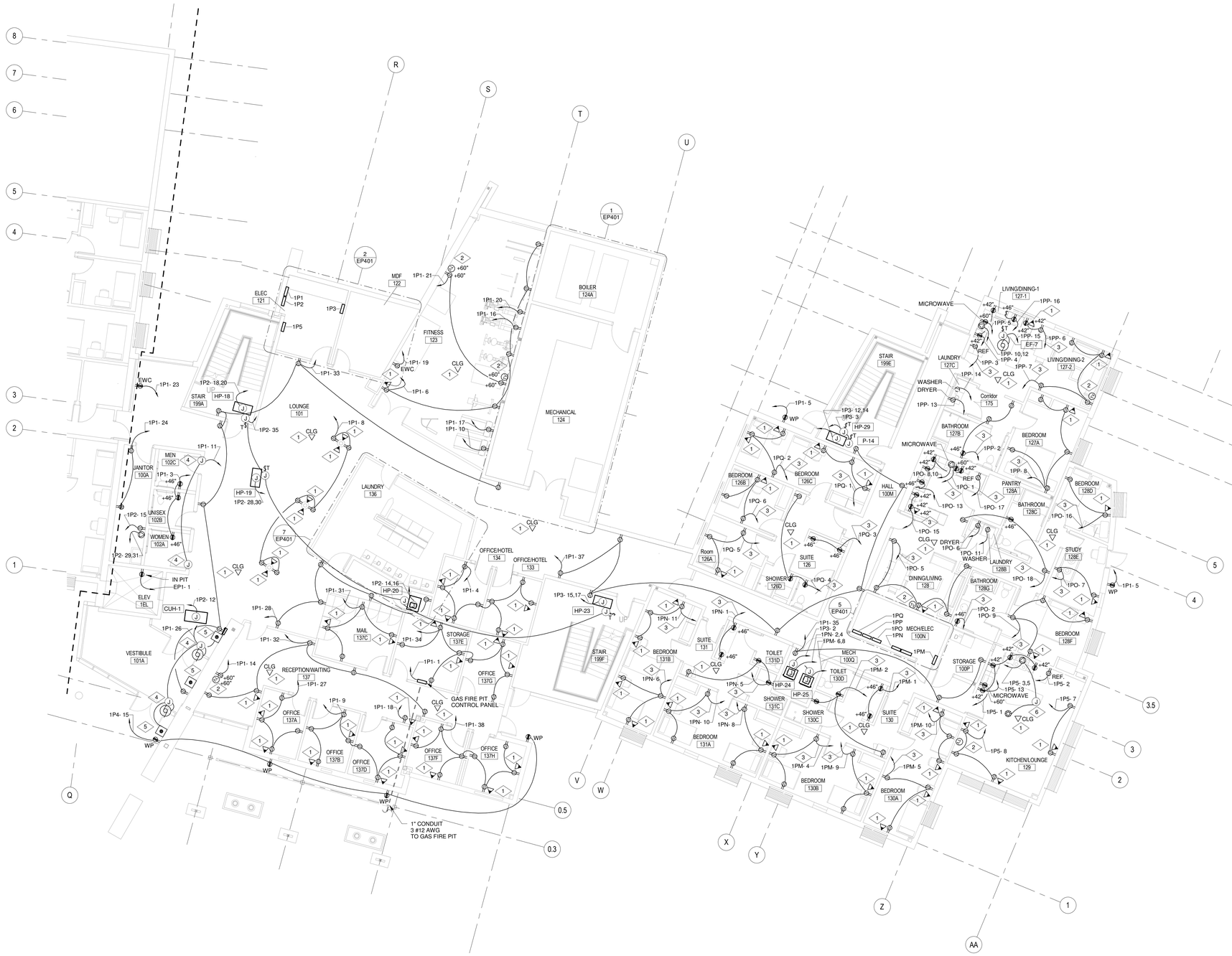

1 LEVEL 1 FLOOR PLAN AREA B - POWER
1/8" = 1'-0"

MHTN ARCHITECTS
MHTN Architects, Inc.
420 East South Temple
Suite 100
Salt Lake City, Utah 84111
Telephone (801) 595-6700
Telefax (801) 595-6717
www.mhtn.com

ECE, Inc. Consulting Engineers
939 S. West Temple
Salt Lake City, Utah 84101
Phone 801.521.8007
e-mail admin@eceonline.com

WEBER STATE UNIVERSITY
RESIDENTIAL LIFE PHASE II - BLDG.2
DFCM PROJECT NUMBER: 10176810

WEBER STATE UNIVERSITY
OGDEN, UTAH 84408

SEAL

MHTN PROJECT NO. 4007-2

DRAWN BY: CC CHECKED BY: JHM

ISSUED:

NO.	DATE	DESCRIPTION
01	17 MAY 2011	CONSTRUCTION DOCUMENTS

CONTRACTOR TO VERIFY DRAWINGS IN FIELD USE REFLECT LAST REVISION DATE:

NO.	DATE	DESCRIPTION

SHEET NAME
FIRST FLOOR
AREA B - POWER

CONSTRUCTION DOCUMENTS
17 MAY 2011

SHEET NUMBER
EP101B

C:\Users\riche\Documents\4007-WEBER-STATE-BLDG2-CENTRAL-1_richie.rvt
5/17/2011 12:09:04 PM

SPECIAL NOTES:

1. IN THE SUITES AND RESTROOMS INSTALL OUTLETS AND LIGHT SWITCHES ABOVE COUNTERS AT 46" TO CENTER OF DEVICE.

REFERENCE NOTES:

1 FURNISH AND INSTALL A 4" X 4" X 2-1/8" DEEP J-BOX WITH SINGLE GANG MUDRING FOR TELE/DATA DEVICE. COORDINATE EXACT LOCATION WITH ARCHITECT AND OWNER PRIOR TO ROUGH IN. RUN A 1" CONDUIT TO THE CABLETRAY. INSERT PULL STRING AND LABEL. PROVIDE PLASTIC BUSHING AT CONDUIT ENDS.

2 FURNISH AND INSTALL A 4" X 4" X 2-1/8" DEEP J-BOX WITH SINGLE GANG MUDRING FOR T.V. OUTLET. RUN A 1" CONDUIT FROM THE J-BOX TO THE CABLE TRAY. INSERT PULL WIRE AND LABEL THE CONDUIT.

3 TIE TO AN ARC FAULT CIRCUIT INTERUPTING BREAKER FOR THE DORM OUTLETS.

4 FURNISH AND INSTALL A 2-POLE, 50 AMP, 208V. CONTACTOR IN A NEMA 1 ENCLOSURE ABOVE THE CEILING. TIE THE RANGE TO THE CIRCUIT INDICATED THROUGH THE CONTACT ON THE LIGHTING OCCUPANCY SENSOR IN THE ROOM SUCH THAT WHEN THE OCCUPANCY SENSOR SHUTS OFF THE LIGHT FIXTURES IN THE ROOM AND THE RANGE WILL SHUT OFF. ALSO PROVIDE THE SPARE CONTACT CLOSURE TO THE ATC PANEL. PROVIDE CONDUIT, CONDUCTORS, ETC. FOR A COMPLETE INSTALLATION.

MHTN ARCHITECTS
MHTN Architects, Inc.
420 East South Temple
Suite 100
Salt Lake City, Utah 84111
Telephone (801) 595-6700
Telefax (801) 595-6717
www.mhtn.com

ECE, Inc. Consulting Engineers
939 S. West Temple
Salt Lake City, Utah 84101
Phone 801.521.8007
e-mail admin@eceonline.com

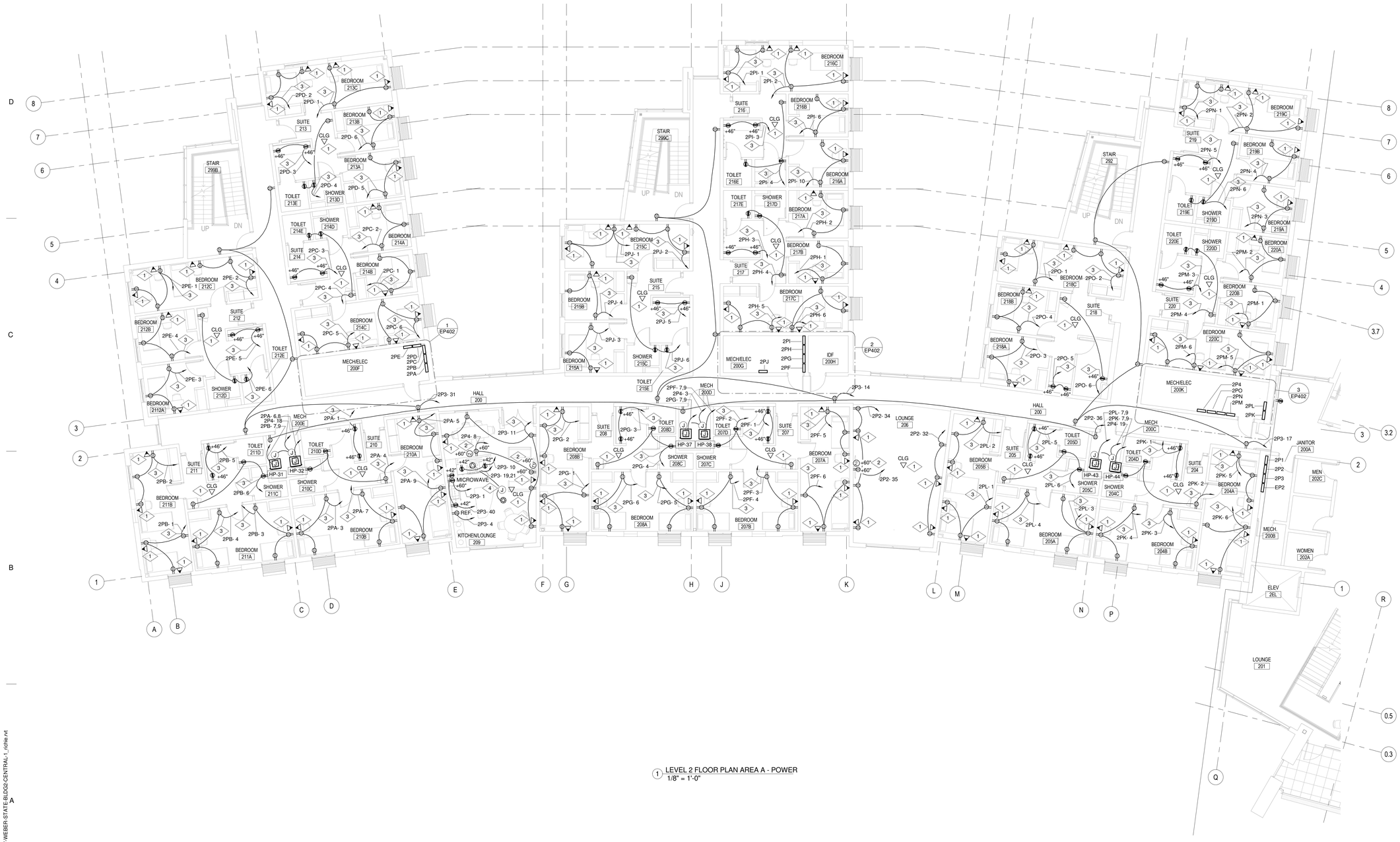

1 LEVEL 2 FLOOR PLAN AREA A - POWER
1/8" = 1'-0"

WEBER STATE UNIVERSITY
RESIDENTIAL LIFE PHASE II - BLDG.2
DFCM PROJECT NUMBER: 10176810

WEBER STATE UNIVERSITY
OGDEN, UTAH 84408

SEAL

MHTN PROJECT NO. 4007-2

DRAWN BY: CC CHECKED BY: JHM

ISSUED:

NO.	DATE	DESCRIPTION
01	17 MAY 2011	CONSTRUCTION DOCUMENTS

CONTRACTOR TO VERIFY DRAWINGS IN FIELD USE REFLECT LAST REVISION DATE.

NO.	DATE	DESCRIPTION

SHEET NAME
SECOND FLOOR AREA A - POWER

CONSTRUCTION DOCUMENTS
17 MAY 2011

SHEET NUMBER
EP102A

C:\Users\richie\Documents\4007-WEBER-STATE-BLDG2-CENTRAL-1_richie.rvt
5/17/2011 12:09:09 PM

SPECIAL NOTES:

1. IN THE SUITES AND RESTROOMS INSTALL OUTLETS AND LIGHT SWITCHES ABOVE COUNTERS AT 46" TO CENTER OF DEVICE.

REFERENCE NOTES:

1. FURNISH AND INSTALL A 4" X 4" X 2-1/8" DEEP J-BOX WITH SINGLE GANG MUDRING FOR TELE/DATA DEVICE. COORDINATE EXACT LOCATION WITH ARCHITECT AND OWNER PRIOR TO ROUGH IN. RUN A 1" CONDUIT TO THE CABLETRAY. INSERT PULL STRING AND LABEL. PROVIDE PLASTIC BUSHING AT CONDUIT ENDS.
2. TIE TO AN ARC FAULT CIRCUIT INTERUPTING BREAKER FOR THE DORM OUTLETS.
3. FURNISH AND INSTALL A 4" X 4" X 2-1/8" DEEP J-BOX WITH SINGLE GANG MUDRING FOR T.V. OUTLET. RUN A 1" CONDUIT FROM THE J-BOX TO THE CABLE TRAY. INSERT PULL WIRE AND LABEL THE CONDUIT.
4. INSTALL THE ADA DOOR OPERATOR SWITCHES (BY DOOR HARDWARE SUPPLIER) IN THE APPROXIMATE LOCATION SHOWN. TIE TO THE DOOR OPERATOR. COORDINATE THE EXACT LOCATIONS WITH THE OWNER AND ARCHITECT. REFER TO THE MANUFACTURERS WIRING DIAGRAM FOR MORE INFORMATION.
5. FURNISH AND INSTALL A J-BOX IN THE CEILING IN THE APPROXIMATE LOCATION SHOWN FOR FUTURE ADA DOOR OPERATOR. TIE TO THE CIRCUIT INDICATED. REFER TO THE ADA SUITE/RESTROOM DOOR DETAILS FOR MORE INFORMATION.
6. FURNISH AND INSTALL A 2-POLE, 50 AMP, 208V. CONTACTOR IN A NEMA 1 ENCLOSURE ABOVE THE CEILING. TIE THE RANGE TO THE CIRCUIT INDICATED THROUGH THE CONTACT ON THE LIGHTING OCCUPANCY SENSOR IN THE ROOM SUCH THAT WHEN THE OCCUPANCY SENSOR SHUTS OFF THE LIGHT FIXTURES IN THE ROOM AND THE RANGE WILL SHUT OFF. ALSO PROVIDE THE SPARE CONTACT CLOSURE TO THE ATC PANEL PROVIDE CONDUIT, CONDUCTORS, ETC. FOR A COMPLETE INSTALLATION.
7. FURNISH AND INSTALL NEW SELF-REGULATING HEAT TRACE CABLE (RAYCHEM #COM-IXT OR APPROVED EQUAL) ON THE ROOF AND DOWN ROOF DRAINS IN THE LOCATIONS SHOWN. TIE TO THE CIRCUIT INDICATED. REFER TO MANUFACTURER'S INSTALLATION INSTRUCTIONS FOR ATTACHEMENT REQUIREMENTS. REFER TO THE DETAILS FOR MORE INFORMATION.
8. FURNISH AND INSTALL NEW TEMPERATURE SENSOR IN THE APPROXIMATE LOCATION SHOWN. TIE TO THE CONTACTOR FOR AUTOMATIC HEAT CABLE OPERATION.
9. FURNISH AND INSTALL NEW CONTACTOR/CONTROL PANEL ENCLOSURE IN ROOM E104. PROVIDE MECHANICALLY HELD CONTACTORS. COORDINATE THE EXACT LOCATION WITH THE ARCHITECT AND OWNER.
10. FURNISH AND INSTALL NEW POWER MANAGEMENT TOUCH SCREEN IN THE APPROXIMATE LOCATION SHOWN. REFER TO POWER SINGLE LINE DIAGRAM FOR MORE INFORMATION. COORDINATE THE EXACT LOCATION WITH THE OWNER AND ARCHITECT PRIOR TO ROUGH IN.

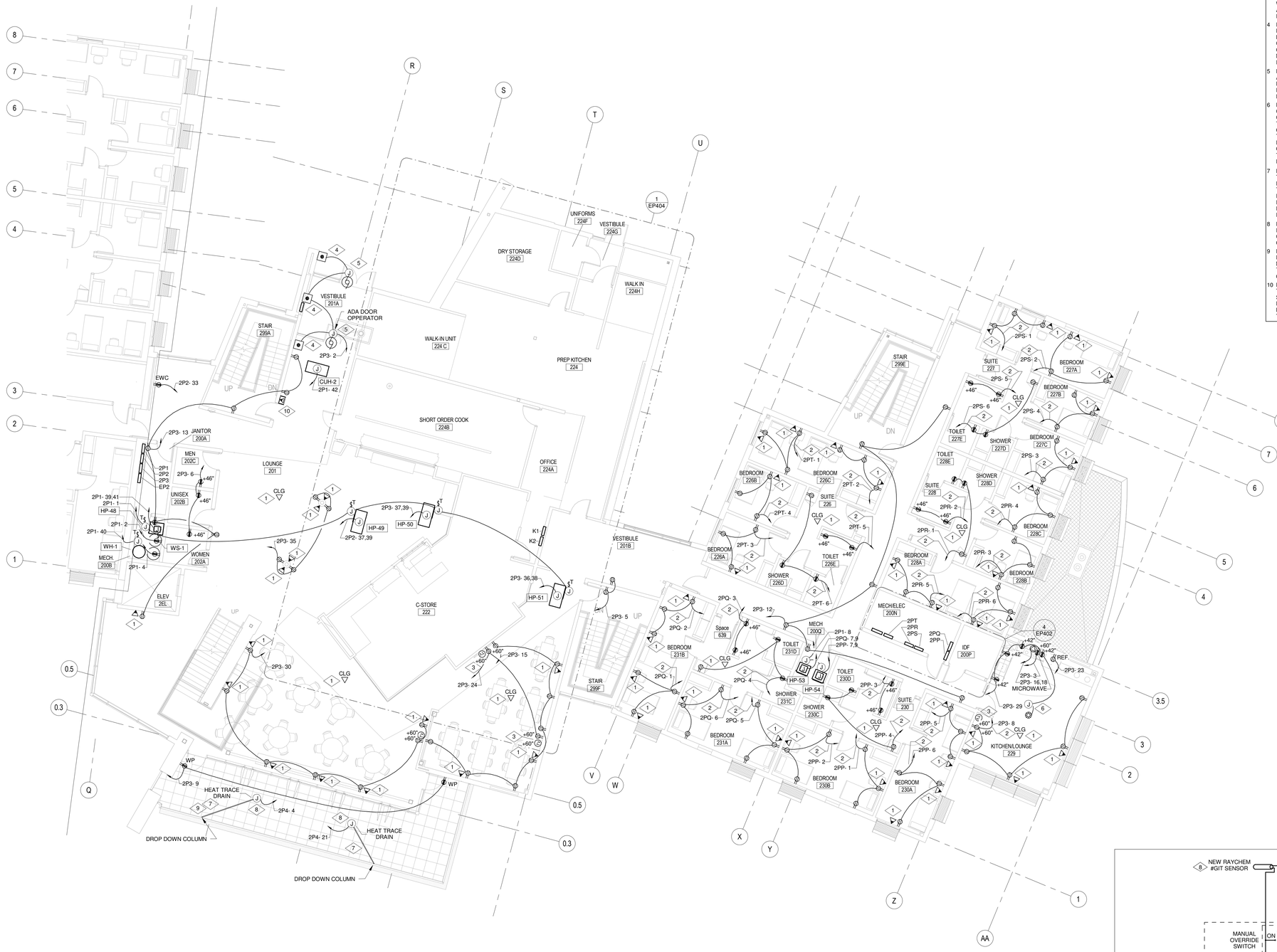

1 LEVEL 2 FLOOR PLAN AREA B - POWER
1/8" = 1'-0"

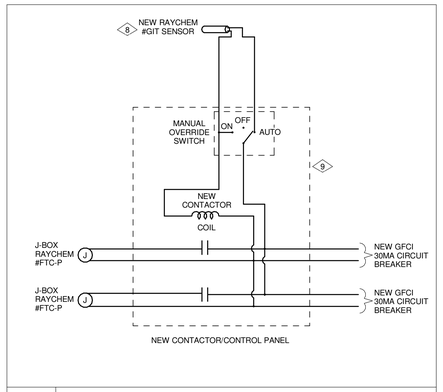

SCALE: NTS:

HEAT CABLE SINGLE LINE DIAGRAM

MHTN ARCHITECTS
MHTN Architects, Inc.
420 East South Temple
Suite 100
Salt Lake City, Utah 84111
Telephone (801) 595-6700
Telefax (801) 595-6717
www.mhtn.com

ECE, Inc. Consulting Engineers
939 S. West Temple
Salt Lake City, Utah 84101
Phone 801.521.8007
e-mail admin@eceonline.com

WEBER STATE UNIVERSITY
RESIDENTIAL LIFE PHASE II - BLDG.2
DFCM PROJECT NUMBER: 10176810

WEBER STATE UNIVERSITY
OGDEN, UTAH 84408

SEAL

MHTN PROJECT NO. 4007-2

DRAWN BY: CC CHECKED BY: JHM

ISSUED:

NO.	DATE	DESCRIPTION
01	17 MAY 2011	CONSTRUCTION DOCUMENTS

CONTRACTOR TO VERIFY DRAWINGS IN FIELD USE REFLECT LAST REVISION DATE.

NO.	DATE	DESCRIPTION

SHEET NAME:

SECOND FLOOR AREA B - POWER

CONSTRUCTION DOCUMENTS
17 MAY 2011

SHEET NUMBER

EP102B

C:\Users\richie\Documents\4007 WEBER STATE BLDG2 CENTRAL_I_richie.rvt
5/17/2011 12:09:15 PM

SPECIAL NOTES:

1. IN THE SUITES AND RESTROOMS INSTALL OUTLETS AND LIGHT SWITCHES ABOVE COUNTERS AT 46" TO CENTER OF DEVICE.

REFERENCE NOTES:

1. FURNISH AND INSTALL A 4" X 4" X 2-1/8" DEEP J-BOX WITH SINGLE GANG MUDRING FOR TELE/DATA DEVICE. COORDINATE EXACT LOCATION WITH ARCHITECT AND OWNER PRIOR TO ROUGH IN. RUN A 1" CONDUIT TO THE CABLETRAY. INSERT PULL STRING AND LABEL. PROVIDE PLASTIC BUSHING AT CONDUIT ENDS.
2. FURNISH AND INSTALL A 4" X 4" X 2-1/8" DEEP J-BOX WITH SINGLE GANG MUDRING FOR T.V. OUTLET. RUN A 1" CONDUIT FROM THE J-BOX TO THE CABLE TRAY. INSERT PULL WIRE AND LABEL THE CONDUIT.
3. TIE TO AN ARC FAULT CIRCUIT INTERUPTING BREAKER FOR THE DORM OUTLETS.
4. FURNISH AND INSTALL A 2-POLE, 50 AMP, 208V. CONTACTOR IN A NEMA 1 ENCLOSURE ABOVE THE CEILING. TIE THE RANGE TO THE CIRCUIT INDICATED THROUGH THE CONTACT ON THE LIGHTING OCCUPANCY SENSOR IN THE ROOM SUCH THAT WHEN THE OCCUPANCY SENSOR SHUTS OFF THE LIGHT FIXTURES IN THE ROOM AND THE RANGE WILL SHUT OFF. ALSO PROVIDE THE SPARE CONTACT CLOSURE TO THE ATC PANEL. PROVIDE CONDUIT, CONDUCTORS, ETC. FOR A COMPLETE INSTALLATION.

MHTN ARCHITECTS
MHTN Architects, Inc.
420 East South Temple
Suite 100
Salt Lake City, Utah 84111
Telephone (801) 595-6700
Telefax (801) 595-6717
www.mhtn.com

ECE, Inc. Consulting Engineers
939 S. West Temple
Salt Lake City, Utah 84101
Phone 801.521.8007
e-mail admin@eceonline.com

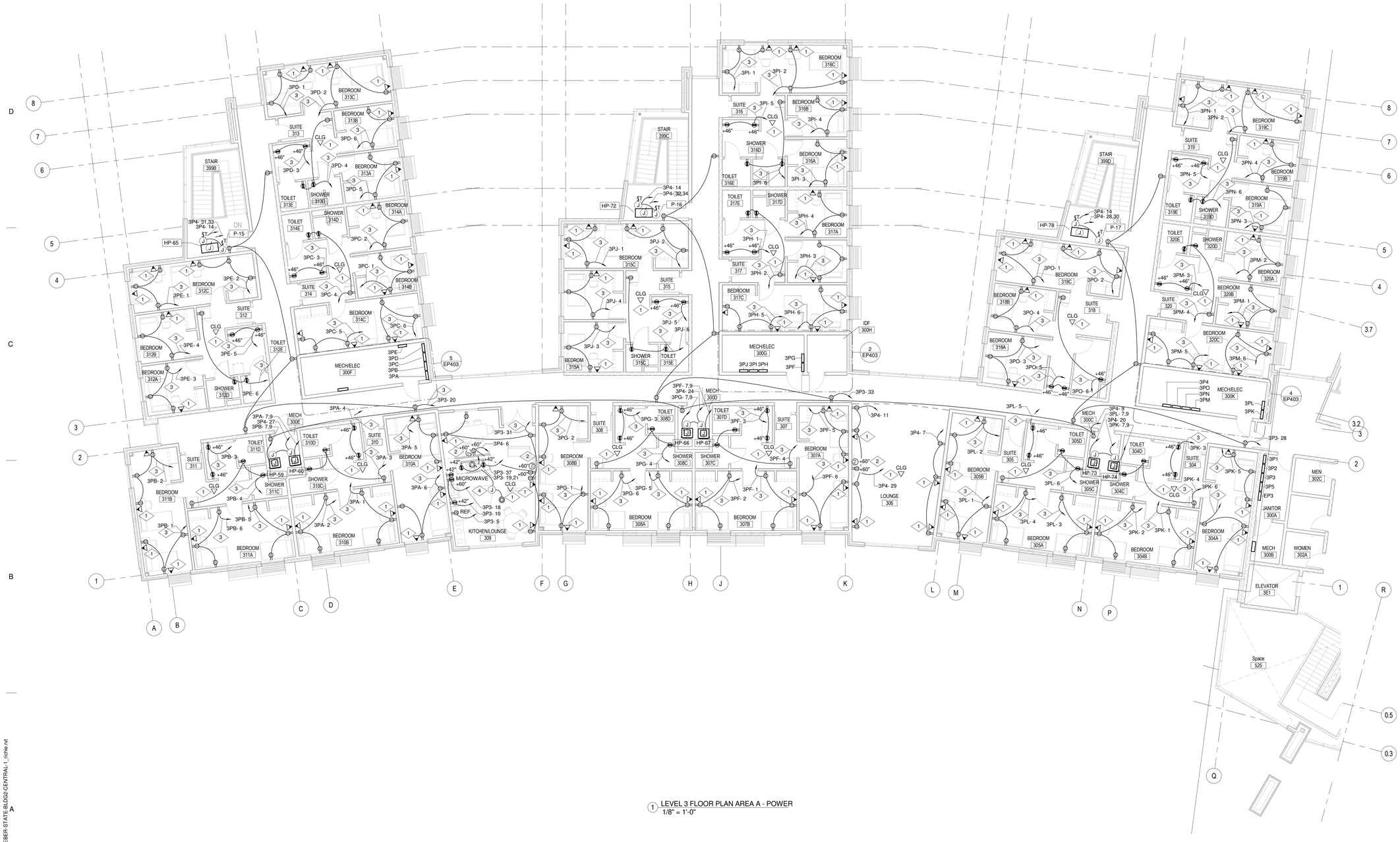

1 LEVEL 3 FLOOR PLAN AREA A - POWER
1/8" = 1'-0"

WEBER STATE UNIVERSITY
RESIDENTIAL LIFE PHASE II - BLDG.2

DFCM PROJECT NUMBER: 10176810

WEBER STATE UNIVERSITY
OGDEN, UTAH 84408

SEAL

MHTN PROJECT NO. 4007-2

DRAWN BY: CC CHECKED BY: JHM

ISSUED:

NO.	DATE	DESCRIPTION
01	17 MAY 2011	CONSTRUCTION DOCUMENTS

CONTRACTOR TO VERIFY DRAWINGS IN FIELD USE REFLECT LAST REVISION DATE.

NO.	DATE	DESCRIPTION

SHEET NAME

THIRD FLOOR AREA A - POWER

CONSTRUCTION DOCUMENTS
17 MAY 2011

SHEET NUMBER

EP103A

C:\Users\richc\Documents\4007-WEBER STATE BLDG2-CENTRAL-1_richie.rvt
5/17/2011 12:09:22 PM

SPECIAL NOTES:

1. IN THE SUITES AND RESTROOMS INSTALL OUTLETS AND LIGHT SWITCHES ABOVE COUNTERS AT 46" TO CENTER OF DEVICE.

REFERENCE NOTES:

1 FURNISH AND INSTALL A 4" X 4" X 2-1/8" DEEP J-BOX WITH SINGLE GANG MUDRING FOR TELE/DATA DEVICE. COORDINATE EXACT LOCATION WITH ARCHITECT AND OWNER PRIOR TO ROUGH IN. RUN A 1" CONDUIT TO THE CABLETRAY. INSERT PULL STRING AND LABEL. PROVIDE PLASTIC BUSHING AT CONDUIT ENDS.

2 FURNISH AND INSTALL A 4" X 4" X 2-1/8" DEEP J-BOX WITH SINGLE GANG MUDRING FOR T.V. OUTLET. RUN A 1" CONDUIT FROM THE J-BOX TO THE CABLE TRAY. INSERT PULL WIRE AND LABEL THE CONDUIT.

3 TIE TO AN ARC FAULT CIRCUIT INTERUPTING BREAKER FOR THE DORM OUTLETS.

4 FURNISH AND INSTALL A 2-POLE, 50 AMP, 208V. CONTACTOR IN A NEMA 1 ENCLOSURE ABOVE THE CEILING. TIE THE RANGE TO THE CIRCUIT INDICATED THROUGH THE CONTACT ON THE LIGHTING OCCUPANCY SENSOR IN THE ROOM SUCH THAT WHEN THE OCCUPANCY SENSOR SHUTS OFF THE LIGHT FIXTURES IN THE ROOM AND THE RANGE WILL SHUT OFF. ALSO PROVIDE THE SPARE CONTACT CLOSURE TO THE ATC PANEL. PROVIDE CONDUIT, CONDUCTORS, ETC. FOR A COMPLETE INSTALLATION.

5 FURNISH AND INSTALL A MULTI-CONNECT, 2-GANG, RECESSED WALL BOX FOR FUTURE MEDIA EQUIPMENT CONNECTION POINT. HUBBEL #HBLWSCS2MMO OR APPROVED EQUAL. RUN A 2" CONDUIT TO THE CEILING PLENUM. INSERT A PULL STRING AND LABEL. PROVIDE A PLASTIC BUSHING AT END OF CONDUIT. INSTALL A BLANK COVER PLATE OVER THE BOX.

6 FURNISH AND INSTALL A 4"X4"X2-1/8" J-BOX WITH SINGLE GANG MUD RING BELOW THE TV OUTLET. RUN (2) 1" CONDUITS UP TO THE TV OUTLET ABOVE FOR HDMI & VCA CABLES THAT WILL BE INSTALLED BY THE OWNER. PROVIDE PULL STRING AND LABEL.

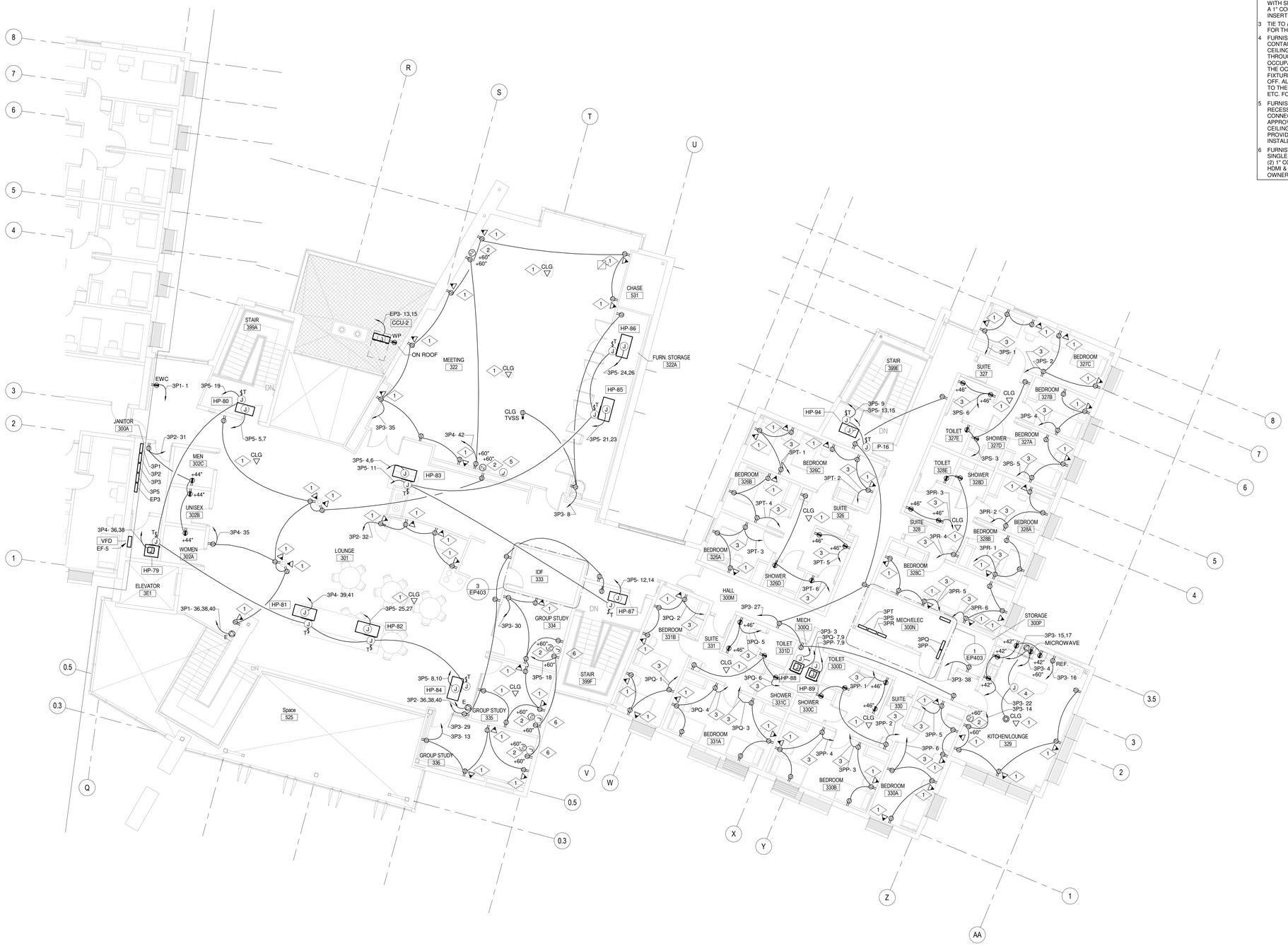

1 LEVEL 3 FLOOR PLAN AREA B - POWER
1/8" = 1'-0"

MHTN ARCHITECTS
MHTN Architects, Inc.
420 East South Temple
Suite 100
Salt Lake City, Utah 84111
Telephone (801) 595-6700
Telefax (801) 595-6717
www.mhtn.com

ECE, Inc. Consulting Engineers
939 S. West Temple
Salt Lake City, Utah 84101
Phone 801.521.8007
e-mail admin@eceonline.com

WEBER STATE UNIVERSITY
RESIDENTIAL LIFE PHASE II - BLDG.2
DFCM PROJECT NUMBER: 10176810

WEBER STATE UNIVERSITY
OGDEN, UTAH 84408

SEAL

MHTN PROJECT NO. 4007-2

DRAWN BY: CC CHECKED BY: JHM

ISSUED:

NO.	DATE	DESCRIPTION
01	17 MAY 2011	CONSTRUCTION DOCUMENTS

CONTRACTOR TO VERIFY DRAWINGS IN FIELD USE REFLECT LAST REVISION DATE:

NO.	DATE	DESCRIPTION

SHEET NAME
THIRD FLOOR
AREA B - POWER

CONSTRUCTION DOCUMENTS
17 MAY 2011

SHEET NUMBER
EP103B

C:\Users\richie\Documents\4007-WEBER-STATE-BLDG2-CENTRAL-1_richie.rvt
5/17/2011 12:09:28 PM

SPECIAL NOTE:

1 DO NOT RUN ANY CONDUIT EXPOSED ON THE ROOF.

REFERENCE NOTES:

1 FURNISH AND INSTALL J-BOX AND RACEWAY TO DOOR CONTACT, EXIT DEVICE AND POWER TRANSFER HINGE FOR THE SECURITY DOOR. RUN A 3/4" CONDUIT FROM THE J-BOX TO THE SECURITY PANEL IN THE MDF ROOM. REFER TO THE SECURITY DOOR DETAIL FOR MORE INFORMATION.

MHTN ARCHITECTS

MHTN Architects, Inc.
420 East South Temple
Suite 100
Salt Lake City, Utah 84111
Telephone (801) 595-6700
Telefax (801) 595-6717
www.mhtn.com

ECE, Inc. Consulting Engineers
939 S. West Temple
Salt Lake City, Utah 84101
Phone 801.521.8007
e-mail admin@eceonline.com

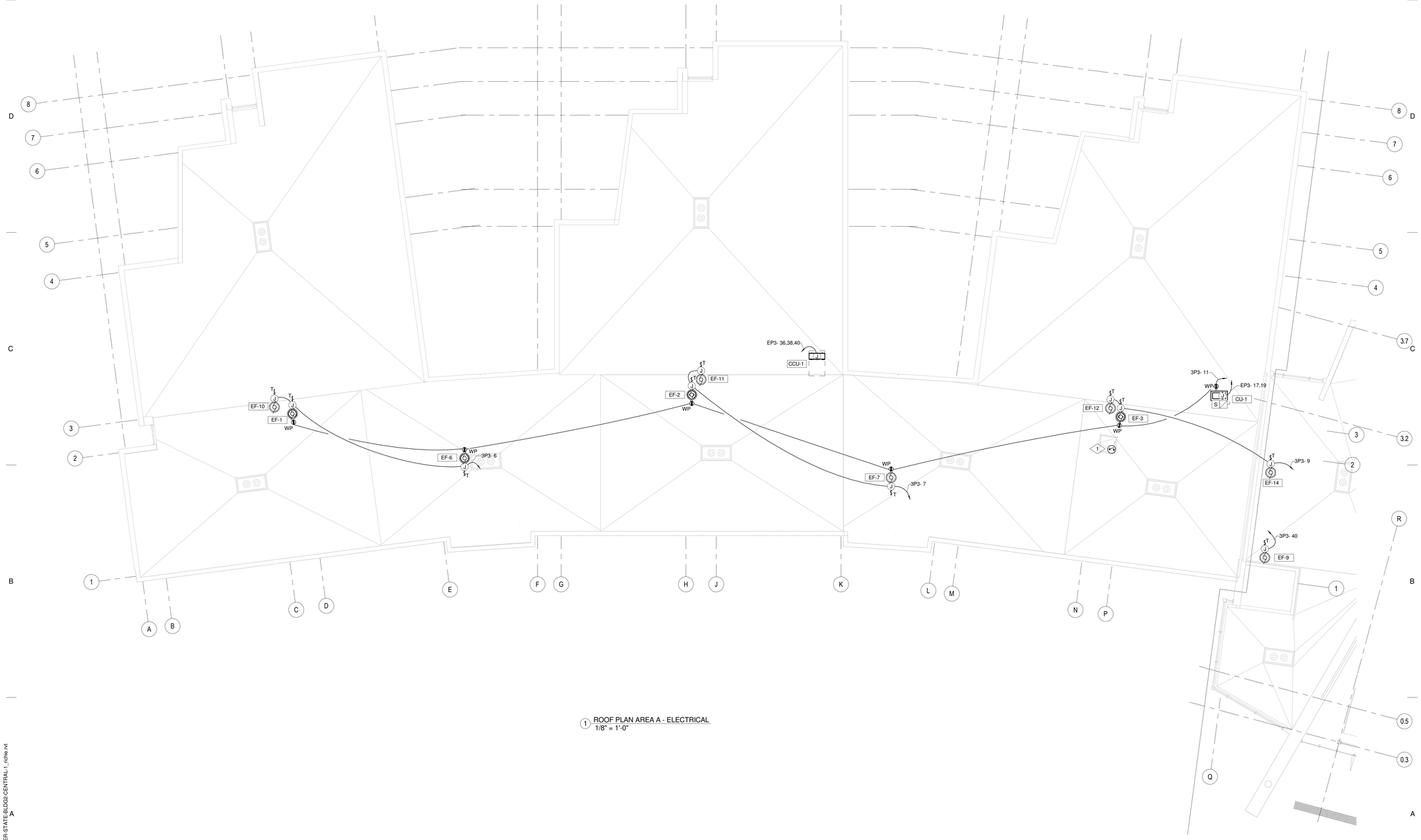

1 ROOF PLAN AREA A - ELECTRICAL
1/8" = 1'-0"

WEBER STATE UNIVERSITY
RESIDENTIAL LIFE PHASE II - BLDG.2
DFCM PROJECT NUMBER: 10176810

WEBER STATE UNIVERSITY
OGDEN, UTAH 84408

SEAL

MHTN PROJECT NO. 4007-2

DRAWN BY: CC CHECKED BY: JHM

ISSUED:

NO.	DATE	DESCRIPTION
01	17 MAY 2011	CONSTRUCTION DOCUMENTS

CONTRACTOR TO VERIFY DRAWINGS IN FIELD USE REFLECT LAST REVISION DATE.

NO.	DATE	DESCRIPTION

SHEET NAME
ROOF AREA A - POWER

CONSTRUCTION DOCUMENTS
17 MAY 2011

SHEET NUMBER
EP104A

C:\Users\richie\Documents\4007-WEBER-STATE-BLDG2-CENTRAL-1_richie.rvt
5/17/2011 12:09:30 PM

SPECIAL NOTE:

1 DO NOT RUN ANY CONDUIT EXPOSED ON THE ROOF.

REFERENCE NOTES:

1 FURNISH AND INSTALL J-BOX AND RACEWAY TO DOOR CONTACT. EXIT DEVICE AND POWER TRANSFER HINGE FOR THE SECURITY DOOR. RUN A 3/4" CONDUIT FROM THE J-BOX TO THE SECURITY PANEL IN THE MDF ROOM. REFER TO THE SECURITY DOOR DETAIL FOR MORE INFORMATION.

2 FURNISH AND INSTALL A DUCT SMOKE DETECTOR WITH SAMPLING TUBE WITHIN 5'-0" OF THE FIRE SMOKE DAMPERS. TIE TO THE FIRE ALARM SYSTEM IN CLASS A LOOP. IN AND OUT CIRCUITS SHALL RUN IN SEPARATE CONDUITS.

1 ROOF PLAN AREA B - ELECTRICAL
1/8" = 1'-0"

MHTN
ARCHITECTS
MHTN Architects, Inc.
420 East South Temple
Suite 100
Salt Lake City, Utah 84111
Telephone (801) 595-6700
Telefax (801) 595-6717
www.mhtn.com

ECE, Inc. Consulting Engineers
939 S. West Temple
Salt Lake City, Utah 84101
Phone 801.521.8007
e-mail admin@eceonline.com

WEBER STATE UNIVERSITY
RESIDENTIAL LIFE PHASE II - BLDG.2
DFCM PROJECT NUMBER: 10176810

WEBER STATE UNIVERSITY
OGDEN, UTAH 84408

SEAL

MHTN PROJECT NO. 4007-2

DRAWN BY: CC CHECKED BY: JHM

ISSUED:

NO.	DATE	DESCRIPTION
01	17 MAY 2011	CONSTRUCTION DOCUMENTS

CONTRACTOR TO VERIFY DRAWINGS IN FIELD USE REFLECT LAST REVISION DATE.

NO.	DATE	DESCRIPTION

SHEET NAME
ROOF AREA B - POWER

CONSTRUCTION DOCUMENTS
17 MAY 2011

SHEET NUMBER
EP104B

C:\Users\richie\Documents\4007-WEBER-STATE-BLDG2-CENTRAL-1_richie.rvt
5/17/2011 12:09:32 PM

REFERENCE NOTES:

1. FURNISH AND INSTALL AN ISOLATED COPPER GROUND BUS BAR IN THE APPROXIMATE LOCATION SHOWN. REFER TO THE DETAILS FOR MORE INFORMATION. RUN A #2 GREEN GROUND TO THE GROUND BUS IN MAIN DISTRIBUTION PANEL. TERMINATE BOTH ENDS WITH TWO HOLE CRIMP CONNECTORS. COORDINATE THE EXACT LOCATION AND HEIGHT OF GROUND BUS WITH WSU.
2. FURNISH AND INSTALL A 4" X 4" X 2-1/8" DEEP J-BOX WITH SINGLE GANG MUDRING FOR TELE/DATA DEVICE. COORDINATE EXACT LOCATION WITH ARCHITECT AND OWNER PRIOR TO ROUGH IN. RUN A 1" CONDUIT TO THE CABLETRAY. INSERT PULL STRING AND LABEL. PROVIDE PLASTIC BUSHING AT CONDUIT ENDS.
3. TIE THE IRONING BOARD TO THE CIRCUIT INDICATED. COORDINATE EXACT LOCATION AND HEIGHT WITH THE SUPPLIER.
4. FURNISH AND INSTALL A 4" X 4" X 2-1/8" DEEP J-BOX WITH SINGLE GANG MUDRING FOR T.V. OUTLET. RUN A 1" CONDUIT FROM THE J-BOX TO THE CABLE TRAY. INSERT PULL WIRE AND LABEL THE CONDUIT.

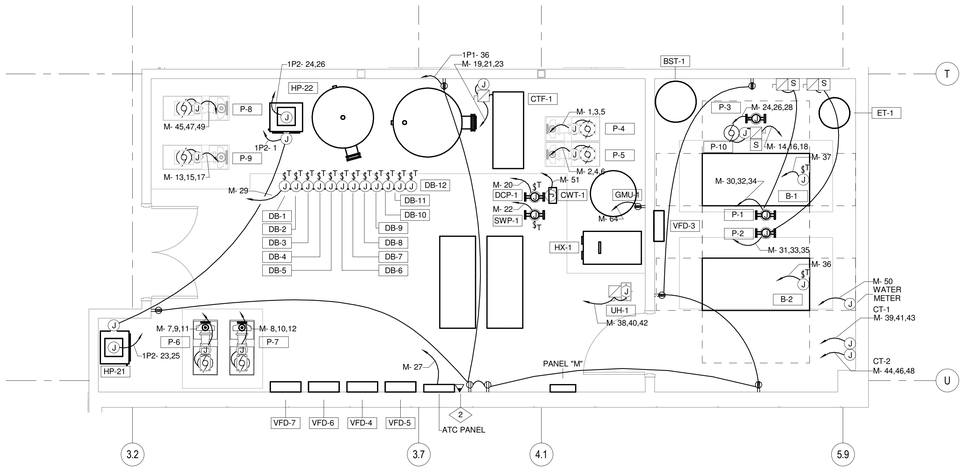

1 LEVEL 1 ENLARGED MECHANICAL ROOM PLAN - POWER
1/4" = 1'-0"

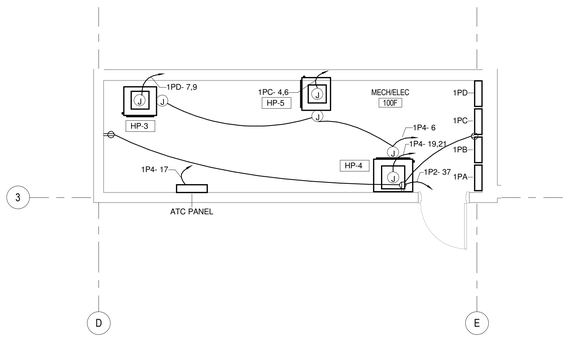

6 LEVEL 1 ENLARGED MECH/ELEC 100F
1/4" = 1'-0"

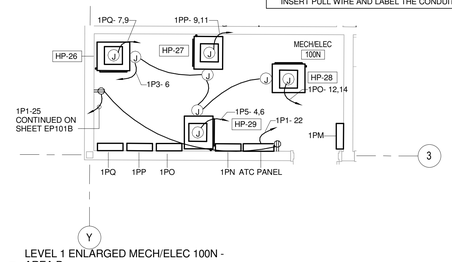

5 LEVEL 1 ENLARGED MECH/ELEC 100N - AREA B
1/4" = 1'-0"

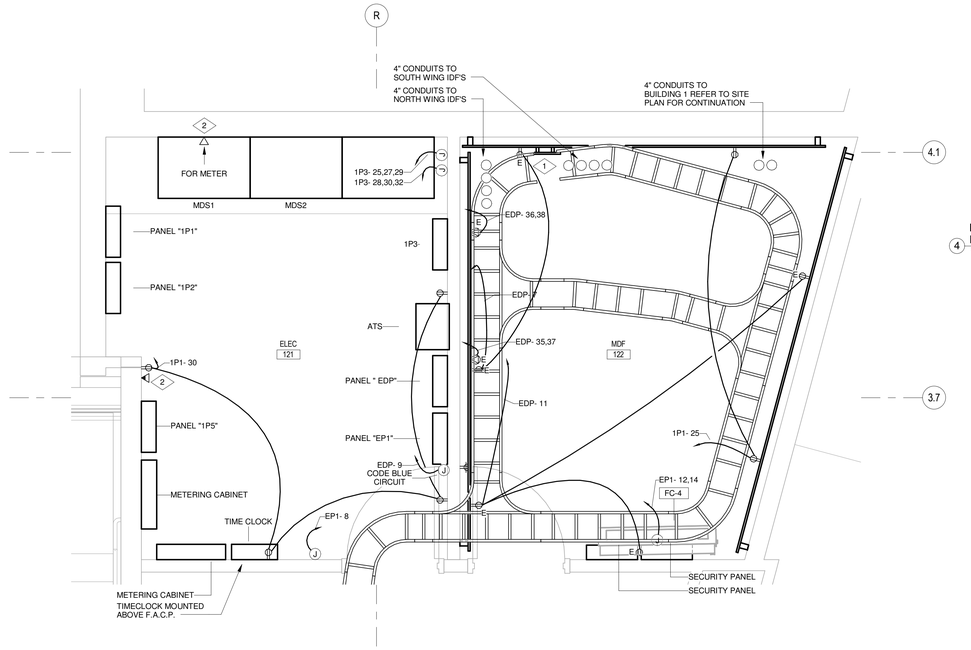

2 LEVEL 1 ENLARGED ELECTRICAL AND DATA ROOM - POWER 2
1/2" = 1'-0"

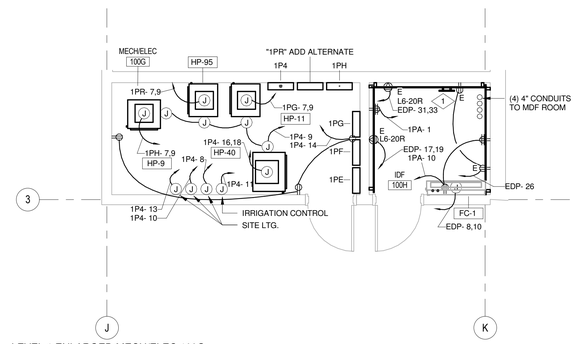

4 LEVEL 1 ENLARGED MECH/ELEC 100G, IDF 100H
1/4" = 1'-0"

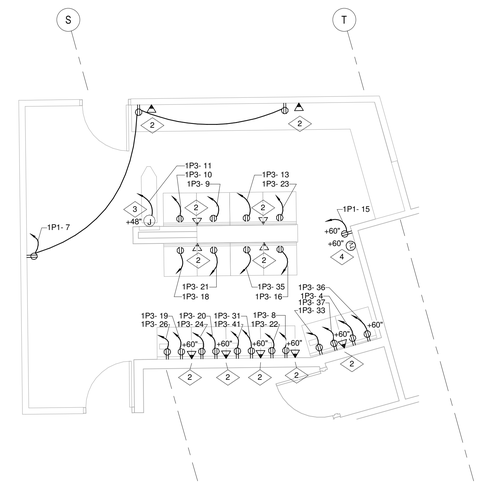

7 LEVEL 1 LAUNDRY - POWER
1/4" = 1'-0"

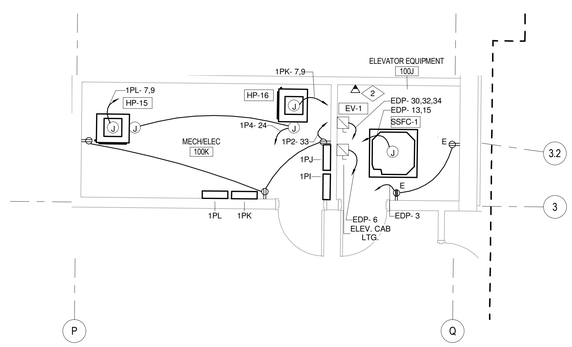

3 LEVEL 1 ENLARGED ELEVATOR EQUIPMENT 100K
1/4" = 1'-0"

MHTN
ARCHITECTS
MHTN Architects, Inc.
420 East South Temple
Suite 100
Salt Lake City, Utah 84111
Telephone (801) 595-6700
Telefax (801) 595-6717
www.mhtn.com

ECE, Inc. Consulting Engineers
939 S. West Temple
Salt Lake City, Utah 84101
Phone 801.521.8007
e-mail admin@eceonline.com

WEBER STATE UNIVERSITY
RESIDENTIAL LIFE PHASE II - BLDG.2

DFCM PROJECT NUMBER: 10176810

WEBER STATE UNIVERSITY
OGDEN, UTAH 84408

SEAL

MHTN PROJECT NO. 4007-2

DRAWN BY: CC CHECKED BY: JHM

ISSUED:

NO.	DATE	DESCRIPTION
01	17 MAY 2011	CONSTRUCTION DOCUMENTS

CONTRACTOR TO VERIFY DRAWINGS IN FIELD USE REFLECT LAST REVISION DATE:

NO.	DATE	DESCRIPTION

SHEET NAME

FIRST FLOOR ENLARGED PLANS - POWER

CONSTRUCTION DOCUMENTS

17 MAY 2011

SHEET NUMBER

EP401

C:\Users\richie\Documents\4007-WEBER-STATE-BLDG2-CENTRAL-1_richie.rvt
5/17/2011 12:09:38 PM

REFERENCE NOTES:

1 FURNISH AND INSTALL AN ISOLATED COPPER GROUND BUS BAR IN THE APPROXIMATE LOCATION SHOWN. REFER TO THE DETAILS FOR MORE INFORMATION. RUN A #2 GREEN GROUND TO THE GROUND BUS IN MAIN DISTRIBUTION PANEL. TERMINATE BOTH ENDS WITH TWO HOLE CRIMP CONNECTORS. COORDINATE THE EXACT LOCATION AND HEIGHT OF GROUND BUS WITH WSU.

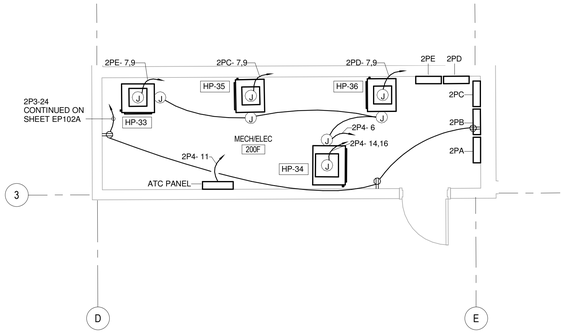

1 LEVEL 2 ENLARGED MECH/ELEC 200F - AREA A
1/4" = 1'-0"

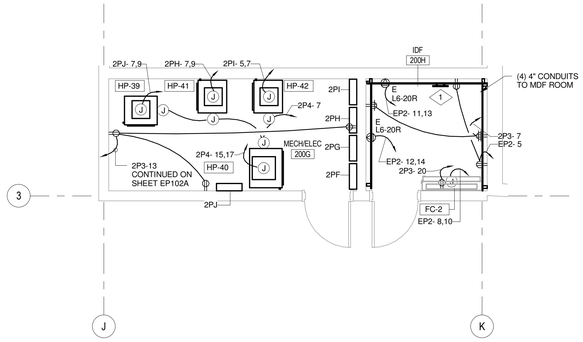

2 LEVEL 2 ENLARGED IDF 200 H AND MECH/ELEC 200 G - AREA A
1/4" = 1'-0"

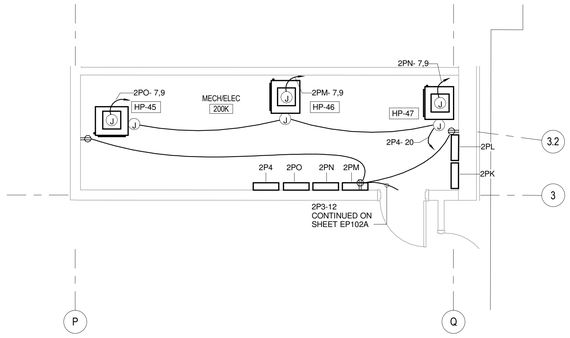

3 LEVEL 2 ENLARGED MECH/ELEC 200K - AREA A
1/4" = 1'-0"

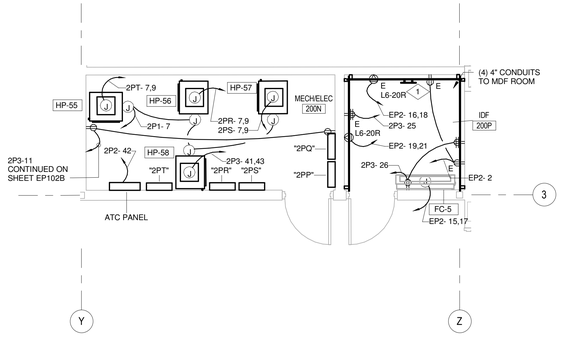

4 LEVEL 2 ENLARGED IDF 200P - AREA B
1/4" = 1'-0"

MHTN
ARCHITECTS
MHTN Architects, Inc.
420 East South Temple
Suite 100
Salt Lake City, Utah 84111
Telephone (801) 595-6700
Telefax (801) 595-6717
www.mhtn.com

ECE, Inc. Consulting Engineers
939 S. West Temple
Salt Lake City, Utah 84101
Phone 801.521.8007
e-mail admin@eceonline.com

WEBER STATE UNIVERSITY
RESIDENTIAL LIFE PHASE II - BLDG.2
DFCM PROJECT NUMBER: 10176810

WEBER STATE UNIVERSITY
OGDEN, UTAH 84408

SEAL

MHTN PROJECT NO. 4007-2

DRAWN BY: Author CHECKED BY: Checker

ISSUED:

NO.	DATE	DESCRIPTION
01	17 MAY 2011	CONSTRUCTION DOCUMENTS

CONTRACTOR TO VERIFY DRAWINGS IN FIELD USE REFLECT LAST REVISION DATE:

NO.	DATE	DESCRIPTION

SHEET NAME
SECOND FLOOR ENLARGED PLANS - POWER
CONSTRUCTION DOCUMENTS
17 MAY 2011

SHEET NUMBER
EP402

C:\Users\richie\Documents\4007-WEBER-STATE-BLDG2-CENTRAL-1_richie.rvt
5/17/2011 12:09:41 PM

REFERENCE NOTES:

1 FURNISH AND INSTALL AN ISOLATED COPPER GROUND BUS BAR IN THE APPROXIMATE LOCATION SHOWN. REFER TO THE DETAILS FOR MORE INFORMATION. RUN A #2 GREEN GROUND TO THE GROUND BUS IN MAIN DISTRIBUTION PANEL. TERMINATE BOTH ENDS WITH TWO HOLE CRIMP CONNECTORS. COORDINATE THE EXACT LOCATION AND HEIGHT OF GROUND BUS WITH WSU.

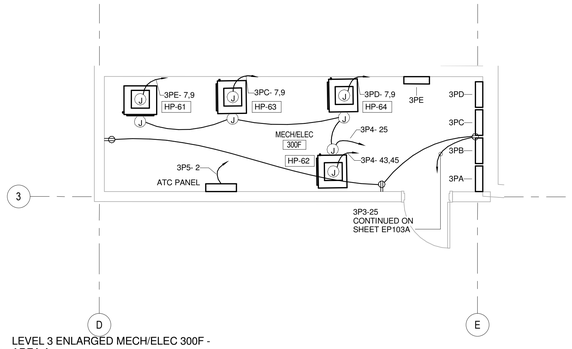

5 LEVEL 3 ENLARGED MECH/ELEC 300F - AREA A
1/4" = 1'-0"

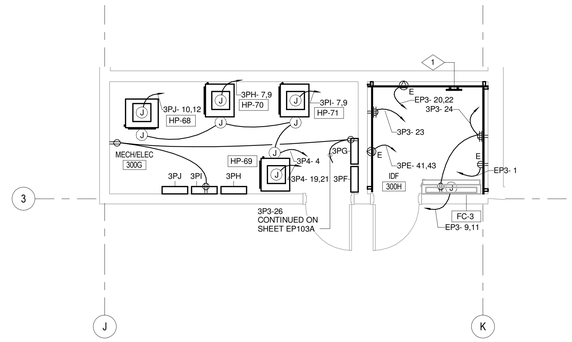

2 LEVEL 3 ENLARGED IDF AND MECH/ELEC - AREA A
1/4" = 1'-0"

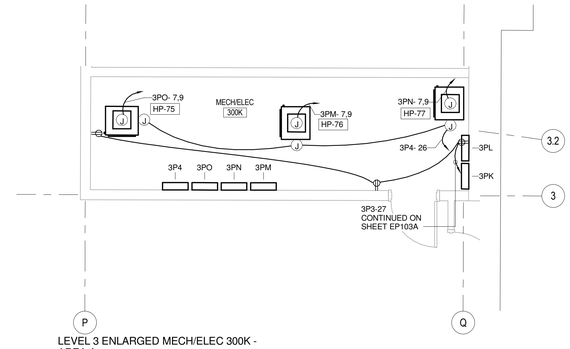

4 LEVEL 3 ENLARGED MECH/ELEC 300K - AREA A
1/4" = 1'-0"

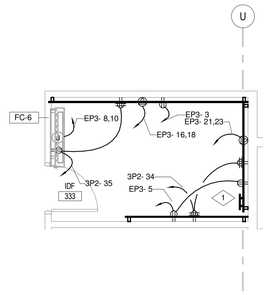

3 LEVEL 3 ENLARGED IDF 333 - AREA B
1/4" = 1'-0"

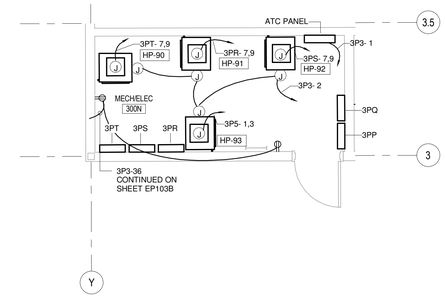

1 LEVEL 3 ENLARGED IDF AND MECH/ELEC - AREA B
1/4" = 1'-0"

MHTN
ARCHITECTS
MHTN Architects, Inc.
420 East South Temple
Suite 100
Salt Lake City, Utah 84111
Telephone (801) 595-6700
Telefax (801) 595-6717
www.mhtn.com

ECE, Inc. Consulting Engineers
939 S. West Temple
Salt Lake City, Utah 84101
Phone 801.521.8007
e-mail admin@eceonline.com

WEBER STATE UNIVERSITY
RESIDENTIAL LIFE PHASE II - BLDG.2

DFCM PROJECT NUMBER: 10176810

WEBER STATE UNIVERSITY
OGDEN, UTAH 84408

SEAL

MHTN PROJECT NO. 4007-2

DRAWN BY: Author CHECKED BY: Checker

ISSUED:

NO.	DATE	DESCRIPTION
01	17 MAY 2011	CONSTRUCTION DOCUMENTS

CONTRACTOR TO VERIFY DRAWINGS IN FIELD USE REFLECT LAST REVISION DATE:

NO.	DATE	DESCRIPTION

SHEET NAME

THIRD FLOOR ENLARGED PLANS - POWER

CONSTRUCTION DOCUMENTS

17 MAY 2011

SHEET NUMBER

EP403

C:\Users\richie\Documents\4007-WEBER-STATE-BLDG2-CENTRAL-1_richie.rvt
5/17/2011 12:09:45 PM

KITCHEN EQUIPMENT SCHEDULE

EQUIP. NO.	EQUIPMENT NAME*	ELECTRICAL CHARACTERISTIC								COMMENTS
		VOLTS	PHASE	AMPS	HP	KW	WIRE SIZE	CONDUIT SIZE	CONNECTOR TYPE	
E-C001	CASH REGISTER	120	1	2	--	--	2#12 1#12 GND	3/4"	5-20P	
E-C003	SODA DISPENSER	120	1	15	--	--	2#12 1#12 GND	3/4"	J-BOX	6
E-C006	COFFEE BREWER	120/ 208	1	22.4	--	4.6	3#12 1#12 GND	3/4"	J-BOX	6
E-C007	HOT DOG GRILL	120	1	10	--	1.15	2#12 1#12 GND	3/4"	5-20P	
E-C008	NACHO CHEESE DISPENSER	120	1	12	--	--	2#12 1#12 GND	3/4"	5-20P	
E-C009	PRETZEL WARMER	120	1	12	--	--	2#12 1#12 GND	3/4"	5-20P	
E-C010	SOUP WARMER	120	1	6.7	--	--	2#12 1#12 GND	3/4"	5-20P	
E-C011	DISPLAY CASE, REFRIGERATED	120	1	7.2	1/2	--	2#12 1#12 GND	3/4"	5-20P	
E-C012	SELF SERVICE REF. MERCHANDISE	208	1	14.5	--	--	2#12 1#12 GND	3/4"	6-20P	
E-C013	FREEZER DISPLAY	120	1	13	--	--	2#12 1#12 GND	3/4"	5-20P	
E-C014	ICE CREAM CABINET & FREEZER	120	1	2.56	1/3	--	2#12 1#12 GND	3/4"	5-20P	
E-D003	DISPOSER	208	3	4.9	3	--	2#12 1#12 GND	3/4"	30A. DISC. 8A. FUSE	PROVIDE NEMA 4 DISCONNECT
E-D006	DISHMACHINE, ELECTRIC W/BOOSTER	208	3	75	--	--	3#1 1#8 GND	1-1/4"	100A. DISC. 100A. FUSES	PROVIDE NEMA 4 DISCONNECT
E-D007	CLEAN DISH TABLE	120	1	0.1	--	--	2#12 1#12 GND	3/4"	J-BOX	6,9
E-K001	DESK	120	1	20	--	--	2#12 1#12 GND	3/4"	5-20P	
E-K004	MIXER, 20 QUART	120	1	9.8	1/2	--	2#12 1#12 GND	3/4"	5-20P	
E-K005	PREP TABLE	120	1	20	1/4	0.2	2#12 1#12 GND	3/4"	J-BOX	6
E-K006	FOOD PROCESSOR	120	1	4.1	1/3	--	2#12 1#12 GND	3/4"	5-20P	
E-K008	CHILLER/FREEZER, BLAST	208	3	15.5	5	3.7	3#12 1#12 GND	3/4"	15-20P	
E-K013	ICE CUBER	120	1	12.7	--	--	2#12 1#12 GND	3/4"	J-BOX	6
E-K015	CATERING TABLE	120	1	15	--	--	2#12 1#12 GND	3/4"	5-20P	PROVIDE RECEPTACLE CORD REAL 20'-0".
E-K017	CHILLER/FREEZER, BLAST	208	3	15.5	5	3.7	3#12 1#12 GND	3/4"	15-20P	4
E-K018	OVEN, COOKING AND HOLDING	208	1	28.8	--	6	2#8 1#10 GND	3/4"	J-BOX	4,6
E-K020	TILT SKILLET, GAS 30-GALLON	120	1	2.5	--	0.3	2#12 1#12 GND	3/4"	J-BOX	4,6
E-K022	COMBI-OVEN	120	1	5.7	--	0.68	2#12 1#12 GND	3/4"	5-20P	4
E-R001	WALK-IN FREEZER	120	1	3.1	--	--	2#12 1#12 GND	3/4"	J-BOX	2,3
E-R002	EVAP.	208	1	11.7	--	--	2#12 1#12 GND	3/4"	J-BOX	1,3,6
E-R003	WALK-IN COOLER	120	1	3.1	--	--	2#12 1#12 GND	3/4"	J-BOX	2,3
E-H001	EXHAUST HOOD	120	1	3.4		.4	2#12 1#12 GND	3/4"	J-BOX	5,8
E-H003	EXHAUST FAN	120	1	4.4		.4	2#12 1#12 GND	3/4"	J-BOX	5,8
E-H004	EXHAUST FAN	120	1	1			2#12 1#12 GND	3/4"	J-BOX	5,8
E-H005	FIRE SUPPRESSION	120	1	10			2#12 1#12 GND	3/4"	J-BOX	10

KITCHEN EQUIPMENT SCHEDULE

EQUIP. NO.	EQUIPMENT NAME*	ELECTRICAL CHARACTERISTIC								COMMENTS
		VOLTS	PHASE	AMPS	HP	KW	WIRE SIZE	CONDUIT SIZE	CONNECTOR TYPE	
E-R004	EVAP.	120	1	3.6	--	--	2#12 1#12 GND	3/4"	J-BOX	1,3,6
E-R005	WALK-IN COOLER	120	1	3.1	--	--	2#12 1#12 GND	3/4"	J-BOX	2,3
E-R005B-P	WALK-IN COOLER	120	1	4	--	--	2#12 1#12 GND	3/4"	J-BOX	2,3
E-R006	EVAP.	120	1	5.4	--	--	2#12 1#12 GND	3/4"	J-BOX	1,3,6
E-R007	BAG-INBOX SYSTEM	120	1	15	--	--	2#12 1#12 GND	3/4"	J-BOX	6
E-R008	CONDENSING UNIT	208	3	14.4	3		3#12 1#12 GND	3/4"	30A. DISC. 20A. FUSES	REFER TO ROOF PLAN FOR LOCATION
E-R009	CONDENSING UNIT	208	3	9.4	2		3#12 1#12 GND	3/4"	30A. DISC. 15A. FUSES	REFER TO ROOF PLAN FOR LOCATION
E-S002	REF. PREP. TABLE	120	1	9.2	3/8	--	2#12 1#12 GND	3/4"	5-20P	
E-S003	FREEZER	120	1	9.1	--	--	2#12 1#12 GND	3/4"	5-20P	4
E-S004	RETHERMALIZING UNIT	120	1	2	--	--	2#12 1#12 GND	3/4"	5-20P	4
E-S008	FRYER, DEEP FAT	120	1	1	--	--	2#12 1#12 GND	3/4"	5-20P	4
E-S009	WARMER, FOOD OVERHEAD	120	1	8.9	--	0.8	2#12 1#12 GND	3/4"	5-20P	
E-S011	OVEN, RAPID COOK	208	1	--	--	6.25	2#12 1#12 GND	3/4"	L6-30P	
E-S012	REF. BASE, COOK-TOP SYSTEM	120	1	3.9	--	--	2#12 1#12 GND	3/4"	5-20P	
E-S013	FREEZER	120	1	9.1	--	--	2#12 1#12 GND	3/4"	5-20P	
E-S014	REF. PREP TABLE	120	1	9	1/3	--	2#12 1#12 GND	3/4"	5-20P	
E-S015	CAB. STATIONARY, WARMING & HOLDING	120	1	8.3	--	1	2#12 1#12 GND	3/4"	5-20P	
E-S016	TOASTER, CONVEYOR	208	1	14	--	2.8	2#12 1#12 GND	3/4"	6-20P	
E-S017	WARMER, FOOD, ELECTRIC	120	1	10	--	1.2	2#12 1#12 GND	3/4"	5-20P	
E-S018	PIZZA PREP TABLE	120	1	8.6	1/3	--	2#12 1#12 GND	3/4"	5-20P	
E-S019	INFRARED FOODWARMER	120	1	9.2	--	1.1	2#12 1#12 GND	3/4"	STUB-UP	
E-S021	SODA/ICE DISPENSER	120	1	5.2	--	--	2#12 1#12 GND	3/4"	5-20P	
E-S022	ICE CUBER	208	1	7	--	--	2#12 1#12 GND	3/4"	J-BOX	6

NOTES:

1. INTERCONNECT CONTROLS WITH CONDENSER.
2. INTERCONNECT LIGHTS, SWITCH AND HEATER.
3. UTILIZE RIGID CONDUIT IN COLD STORAGE ROOMS. PROVIDE SEAL OFFS AT TRANSITIONS FROM COLD TO WARM SPACES.
4. PROVIDE SHUNT TRIP CIRCUIT BREAKER.
5. INTERCONNECT WITH EXHAUST SYSTEM TO MAKE UP AIR AND HOOD.
6. PROVIDE THERMAL OVERLOAD DISCONNECTING MEANS.
7. INTERLOCK THE DISHWASHER TO EXHAUST FAN SHALL BE BY MECHANICAL CONTROLS CONTRACTOR.
8. INSTALL THE LIGHT FIXTURES PROVIDED WITH THE HOOD.
9. INTERLOCK DISH TABLE TO DISHMACHINE.
10. TIE TO THE FIRE ALARM SYSTEM AND SHUNT TRIP CIRCUIT BREAKERS.

KITCHEN HOOD ELECTRICAL AND FIRE ALARM CONNECTION GENERAL NOTES:

1. COORDINATE LOCATIONS OF ALL OUTLETS IN THE KITCHEN AREAS WITH THE OWNER AND EQUIPMENT SUPPLIERS PRIOR TO ROUGH-IN. COORDINATE NEMA TYPES OF SPECIAL PURPOSE OUTLETS WITH THE OWNER AND EQUIPMENT SUPPLIER PRIOR TO INSTALLATION. FURNISH AND INSTALL CORD AND PLUGS AS REQUIRED.
2. ELECTRICAL CONTRACTOR SHALL COORDINATE WITH HOOD CONTROLS SUPPLIER AND MECHANICAL CONTRACTOR TO INTERLOCK EXHAUST FANS FOR KITCHEN HOOD WITH THE MAKE-UP AIR UNIT AND THE DISHWASHER EXHAUST FAN AS REQUIRED.
3. DISHWASHER EXHAUST FAN SHALL BE INTERLOCKED, BY THE MECHANICAL CONTROLS CONTRACTOR IN CONJUNCTION WITH THE HOOD CONTROLS SUPPLIER, WITH THE DISHWASHER SO THAT IT WILL RUN WHEN THE DISHWASHER RUNS. MAKE PROVISION FOR ALL RELAYS, ETC. AS REQUIRED.
4. ELECTRICAL CONTRACTOR SHALL TIE THE HOOD FIRE SUPPRESSION SYSTEM(S) TO THE FIRE ALARM SYSTEM FOR MONITORING. SUPPRESSION SYSTEM SHALL ALSO BE TIED TO THE GAS SOLENOID VALVE(S). VERIFY SHUTDOWN OF EXHAUST FANS AND MAKE-UP AIR UNIT WITH HOOD CONTROLS CONTRACTOR.
5. ALL MECHANICAL UNITS OVER 2000 CFM SHALL BE TIED TO THE FIRE ALARM SYSTEM FOR SHUT DOWN UPON ALARM.
6. PROVIDE ADDITIONAL LABOR AND MATERIALS AS REQUIRED TO PROVIDE FINAL CONNECTIONS TO ALL EQUIPMENT.
7. SHUNT TRIP CIRCUIT BREAKERS SHALL BE PROVIDED FOR ALL EQUIPMENT LOCATED UNDER KITCHEN HOODS WHETHER OR NOT SHOWN ON SCHEDULES. TIE THE SHUNT TRIP CIRCUIT BREAKERS TO THE HOOD FIRE SUPPRESSION SYSTEM FOR SHUT DOWN OFELECTRICAL EQUIPMENT UPON ALARM.
8. UPON ACTIVATION OF AN ALARM, EXHAUST FANS SHALL RUN AND ALL MAKE UP AIR UNITS SHALL SHUT DOWN.

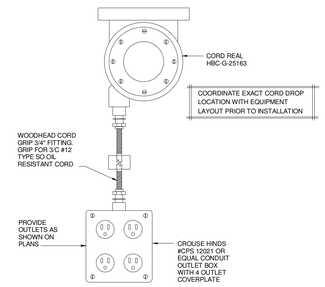

SCALE: N.T.S.

EQUIPMENT CORD DROP DETAIL

REFERENCE NOTES:

1. FURNISH AND INSTALL A 4" X 4" X 2-1/8" DEEP J-BOX WITH SINGLE GANG MUDRING FOR TELE/DATA DEVICE. COORDINATE EXACT LOCATION WITH ARCHITECT AND OWNER PRIOR TO ROUGH IN. RUN A 1" CONDUIT TO THE CABLETRAY. INSERT PULL STRING AND LABEL. PROVIDE PLASTIC BUSHING AT CONDUIT ENDS.
2. INSTALL THE OUTLETS IN THE APPROXIMATE LOCATION IN THE MILLWORK. COORDINATE THE EXACT LOCATIONS OF OUTLETS, STUB-UPS AND FLEX CONDUIT ROUTES WITH THE MILLWORK SUPPLIER.
3. TIE TO THE FIRE ALARM SYSTEM FOR MONITORING.

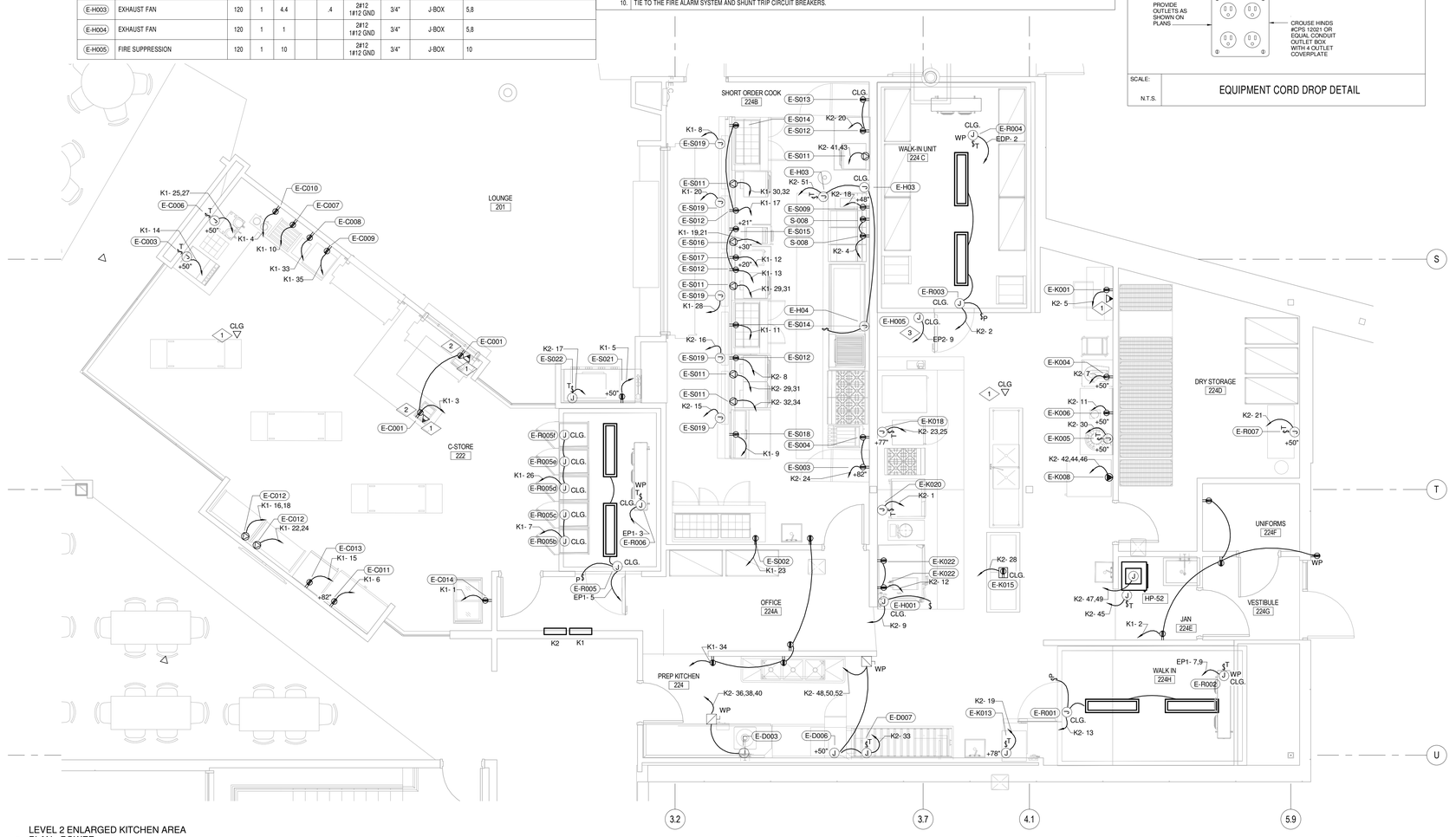

1 LEVEL 2 ENLARGED KITCHEN AREA PLAN - POWER
1/4" = 1'-0"

MHTN ARCHITECTS
MHTN Architects, Inc.
420 East South Temple
Suite 100
Salt Lake City, Utah 84111
Telephone (801) 595-6700
Telefax (801) 595-6717
www.mhtn.com

ECE, Inc. Consulting Engineers
939 S. West Temple
Salt Lake City, Utah 84101
Phone 801.521.8007
e-mail admin@eceonline.com

WEBER STATE UNIVERSITY
RESIDENTIAL LIFE PHASE II - BLDG.2

DFCM PROJECT NUMBER: 10176810

WEBER STATE UNIVERSITY
OGDEN, UTAH 84408

SEAL

MHTN PROJECT NO. 4007-2

DRAWN BY: CC CHECKED BY: JHM

ISSUED:

NO.	DATE	DESCRIPTION
01	17 MAY 2011	CONSTRUCTION DOCUMENTS

CONTRACTOR TO VERIFY DRAWINGS IN FIELD USE REFLECT LAST REVISION DATE.

NO.	DATE	DESCRIPTION

SHEET NAME

ENLARGED KITCHEN PLAN

CONSTRUCTION DOCUMENTS
17 MAY 2011

SHEET NUMBER

EP404

C:\Users\richie\Documents\4007-WEBER-STATE-BLDG2-CENTRAL-1_richie.rvt
5/17/2011 12:09:48 PM

REFERENCE NOTES:

1. FURNISH AND INSTALL NEW ADDRESSABLE FIRE ALARM DEVICES IN THE APPROXIMATE LOCATION SHOWN. TIE TO THE FIRE ALARM CONTROL PANEL IN CLASS "A" LOOP. IN AND OUT CIRCUITS SHALL RUN IN SEPARATE CONDUITS.
2. FURNISH AND INSTALL A NEW FIRE ALARM REMOTE ANNUNCIATOR PANEL IN THE APPROXIMATE LOCATION AS SHOWN. TIE ANNUNCIATOR PANEL TO THE FIRE ALARM CONTROL PANEL. PROVIDE ALL HARDWARE, SOFTWARE, PROGRAMMING, POWER SUPPLIES, BATTERIES, ETC. AS REQUIRED FOR A COMPLETE INSTALLATION.
3. FURNISH AND INSTALL J-BOX AND RACEWAY TO DOOR FOR CARD READER, DOOR CONTACT AND LOCK SET FOR THE SECURITY DOOR. RUN A 3/4" CONDUIT FROM THE J-BOX TO THE SECURITY PANEL IN THE MDF ROOM. REFER TO THE SECURITY DOOR DETAIL FOR MORE INFORMATION.
4. FURNISH AND INSTALL J-BOX AND RACEWAY TO DOOR CONTACT, EXIT DEVICE AND POWER TRANSFER HINGE FOR THE SECURITY DOOR. RUN A 3/4" CONDUIT FROM THE J-BOX TO THE SECURITY PANEL IN THE MDF ROOM. REFER TO THE SECURITY DOOR DETAIL FOR MORE INFORMATION.
5. FURNISH AND INSTALL A LADDER TYPE CABLE TRAY, IN THE APPROXIMATE LOCATION SHOWN. SUPPORT THE TRAY EVERY 6'-0" ON CENTER AND BRACE TO THE STRUCTURE EVERY 20'-0" AND AT TRANSITIONS AND TURNS. PROVIDE BONDING JUMPERS AT EACH TRAY SECTION AND GROUND TO THE GROUND BUS IN THE MDF/IDF ROOMS. COORDINATE THE EXACT LOCATION AND HEIGHT OF TRAY WITH OTHER TRADES. PROVIDE MINIMUM OF 4" CLEARANCE ABOVE THE ENTIRE LENGTH OF TRAY. REFER TO THE DETAILS FOR MORE INFORMATION.

REFERENCE NOTES:

6. FURNISH AND INSTALL A 4" x 4" x 2-3/8" J-BOX IN THE CEILING FOR FUTURE SECURITY CAMERAS. RUN A 3/4" CONDUIT FROM EACH J-BOX TO THE CABLE TRAY. COORDINATE THE EXACT LOCATION WITH THE OWNER.
7. TIE THE NEW MAGNETIC DOOR HOLDER TO THE CIRCUIT SHOWN. PROVIDE A RELAY FROM FIRE ALARM SYSTEM TO RELEASE UPON PROGRAMMED SIGNAL.
8. TIE THE FIRE SMOKE DAMPER TO THE CIRCUIT SHOWN THROUGH THE FIRE ALARM SYSTEM.
9. FURNISH AND INSTALL A DUCT SMOKE DETECTOR WITH SAMPLING TUBE WITHIN 5'-0" OF THE FIRE SMOKE DAMPERS. TIE TO THE FIRE ALARM SYSTEM IN CLASS A LOOP. IN AND OUT CIRCUITS SHALL RUN IN SEPARATE CONDUITS.
10. TIE THE TAMPER AND FLOW SWITCHES TO THE FIRE ALARM SYSTEM IN A CLASS "A" LOOP. COORDINATE THE EXACT LOCATION AND QUANTITY WITH THE FIRE SPRINKLER SUPPLIER. REFER TO THE FIRE ALARM RISER DIAGRAM FOR MORE INFORMATION.

MHTN ARCHITECTS
MHTN Architects, Inc.
420 East South Temple
Suite 100
Salt Lake City, Utah 84111
Telephone (801) 595-6700
Telefax (801) 595-6717
www.mhtn.com

ECE, Inc. Consulting Engineers
939 S. West Temple
Salt Lake City, Utah 84101
Phone 801.521.8007
e-mail admin@eceonline.com

1 LEVEL 1 FLOOR PLAN AREA A - SYSTEMS
1/8" = 1'-0"

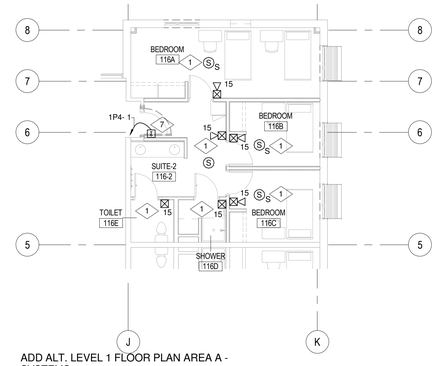

2 ADD ALT. LEVEL 1 FLOOR PLAN AREA A - SYSTEMS
1/8" = 1'-0"

WEBER STATE UNIVERSITY
RESIDENTIAL LIFE PHASE II - BLDG.2

DFCM PROJECT NUMBER: 10176810

WEBER STATE UNIVERSITY
OGDEN, UTAH 84408

SEAL

M+TN PROJECT NO. 4007-2

DRAWN BY: CC CHECKED BY: JHM

ISSUED:

NO.	DATE	DESCRIPTION
01	17 MAY 2011	CONSTRUCTION DOCUMENTS

CONTRACTOR TO VERIFY DRAWINGS IN FIELD USE REFLECT LAST REVISION DATE.

NO.	DATE	DESCRIPTION

SHEET NAME:

FIRST FLOOR AREA A - SYSTEMS

CONSTRUCTION DOCUMENTS

17 MAY 2011

SHEET NUMBER

EY101A

C:\Users\richie\Documents\4007 WEBER STATE BLDG2 CENTRAL\ I_richie.rvt
5/17/2011 12:09:54 PM

1 LEVEL 1 FLOOR PLAN AREA B - SYSTEMS
1/8" = 1'-0"

REFERENCE NOTES:

1. FURNISH AND INSTALL NEW ADDRESSABLE FIRE ALARM DEVICES IN THE APPROXIMATE LOCATION SHOWN. TIE TO THE FIRE ALARM CONTROL PANEL IN CLASS "A" LOOP. IN AND OUT CIRCUITS SHALL RUN IN SEPARATE CONDUITS.
2. FURNISH AND INSTALL J-BOX AND RACEWAY TO DOOR CONTACT, EXIT DEVICE AND POWER TRANSFER HINGE FOR THE SECURITY DOOR. RUN A 3/4" CONDUIT FROM THE J-BOX TO THE SECURITY PANEL IN THE MDF ROOM. REFER TO THE SECURITY DOOR DETAIL FOR MORE INFORMATION.
3. FURNISH AND INSTALL A LADDER TYPE CABLE TRAY, IN THE APPROXIMATE LOCATION SHOWN. SUPPORT THE TRAY EVERY 6'-0" ON CENTER AND BRACE TO THE STRUCTURE EVERY 20'-0" AND AT TRANSITIONS AND TURNS. PROVIDE BONDING JUMPERS AT EACH TRAY SECTION AND GROUND TO THE GROUND BUS IN THE MDF/IDF ROOMS. COORDINATE THE EXACT LOCATION AND HEIGHT OF TRAY WITH OTHER TRADES. PROVIDE MINIMUM OF 4" CLEARANCE ABOVE THE ENTIRE LENGTH OF TRAY. REFER TO THE DETAILS FOR MORE INFORMATION.
4. FURNISH AND INSTALL J-BOX AND RACEWAY TO DOOR FOR CARD READER, DOOR CONTACT AND LOCK SET FOR THE SECURITY DOOR. RUN A 3/4" CONDUIT FROM THE J-BOX TO THE SECURITY PANEL IN THE MDF ROOM. REFER TO THE SECURITY DOOR DETAIL FOR MORE INFORMATION.
5. TIE THE NEW MAGNETIC DOOR HOLDER TO THE CIRCUIT SHOWN. PROVIDE A RELAY FROM FIRE ALARM SYSTEM TO RELEASE UPON PROGRAMMED SIGNAL.
6. FURNISH AND INSTALL A 4" x 4" x 2-3/8" J-BOX IN THE CEILING FOR FUTURE SECURITY CAMERAS. RUN A 3/4" CONDUIT FROM EACH J-BOX TO THE CABLE TRAY. COORDINATE THE EXACT LOCATION WITH THE OWNER.

REFERENCE NOTES:

7. NEW SECURITY PANEL SHALL BE FURNISHED AND INSTALLED BY THE OWNER IN THE APPROXIMATE LOCATION SHOWN. PROVIDE A 120 V. EMERGENCY CIRCUIT. ALL INTERNAL WIRING FOR THE SECURITY PANEL SHALL BE DONE BY OTHERS.
8. FURNISH AND INSTALL CONDUIT AND J-BOX FOR THE OWNER FURNISHED PANIC BUTTON IN THE APPROXIMATE LOCATION SHOWN.
9. FURNISH AND INSTALL NEW WALL MOUNTED CODE BLUE #CB2-S IN THE APPROXIMATE LOCATION SHOWN. TIE TO THE CIRCUIT INDICATED. RUN A 3/4" CONDUIT TO THE MDF ROOM FOR OWNER FURNISHED CABLES. INSERT A PULL STRING AND LABEL.
10. FURNISH AND INSTALL NEW FIRE ALARM CONTROL PANEL IN THE APPROXIMATE LOCATION SHOWN. PROVIDE ALL HARDWARE, SOFTWARE, PROGRAMMING, POWER SUPPLIES, ETC., FOR A COMPLETE INSTALLATION.
11. INSTALL THE OWNER FURNISHED FIRE ALARM RADIO TRANSMITTER NEXT TO THE F.A.C.P. TIE TO THE OUTPUT OF FACP FOR DIAL OUT OVER RADIO. PROVIDE CONDUIT, CONDUCTORS, ETC., FOR A COMPLETE INSTALLATION. REFER TO THE MANUFACTURERS WIRING DIAGRAM FOR MORE INFORMATION.
12. FURNISH AND INSTALL A DUCT SMOKE DETECTOR WITH SAMPLING TUBE WITHIN 5'-0" OF THE FIRE SMOKE DAMPERS. TIE TO THE FIRE ALARM SYSTEM IN CLASS A LOOP. IN AND OUT CIRCUITS SHALL RUN IN SEPARATE CONDUITS.
13. TIE THE FIRE SMOKE DAMPER TO THE CIRCUIT SHOWN THROUGH THE FIRE ALARM SYSTEM.
14. TIE THE TAMPER AND FLOW SWITCHES TO THE FIRE ALARM SYSTEM IN A CLASS "A" LOOP. COORDINATE THE EXACT LOCATION AND QUANTITY WITH THE FIRE SPRINKLER SUPPLIER. REFER TO THE FIRE ALARM RISER DIAGRAM FOR MORE INFORMATION.

MHTN
ARCHITECTS
MHTN Architects, Inc.
420 East South Temple
Suite 100
Salt Lake City, Utah 84111
Telephone (801) 595-6700
Telefax (801) 595-6717
www.mhtn.com

ECE, Inc. Consulting Engineers
939 S. West Temple
Salt Lake City, Utah 84101
Phone 801.521.8007
e-mail admin@eceonline.com

WEBER STATE UNIVERSITY
RESIDENTIAL LIFE PHASE II - BLDG.2

DFCM PROJECT NUMBER: 10176810

WEBER STATE UNIVERSITY
OGDEN, UTAH 84408

SEAL

MHTN PROJECT NO. 4007-2

DRAWN BY: CC CHECKED BY: JHM

ISSUED:

NO.	DATE	DESCRIPTION
01	17 MAY 2011	CONSTRUCTION DOCUMENTS

CONTRACTOR TO VERIFY DRAWINGS IN FIELD USE REFLECT LAST REVISION DATE:

NO.	DATE	DESCRIPTION

SHEET NAME

FIRST FLOOR AREA B - SYSTEMS

CONSTRUCTION DOCUMENTS
17 MAY 2011

SHEET NUMBER

EY101B

C:\Users\richie\Documents\4007-WEBER-STATE-BLDG2-CENTRAL-1_richie.rvt
5/17/2011 12:09:59 PM

REFERENCE NOTES:

1. FURNISH AND INSTALL NEW ADDRESSABLE FIRE ALARM DEVICES IN THE APPROXIMATE LOCATION SHOWN. TIE TO THE FIRE ALARM CONTROL PANEL IN CLASS "A" LOOP. IN AND OUT CIRCUITS SHALL RUN IN SEPARATE CONDUITS.
2. FURNISH AND INSTALL J-BOX AND RACEWAY TO DOOR CONTACT, EXIT DEVICE AND POWER TRANSFER HINGE FOR THE SECURITY DOOR. RUN A 3/4" CONDUIT FROM THE J-BOX TO THE SECURITY PANEL IN THE MDF ROOM. REFER TO THE SECURITY DOOR DETAIL FOR MORE INFORMATION.
3. FURNISH AND INSTALL J-BOX AND RACEWAY TO DOOR FOR CARD READER, DOOR CONTACT AND LOCK SET FOR THE SECURITY DOOR. RUN A 3/4" CONDUIT FROM THE J-BOX TO THE SECURITY PANEL IN THE MDF ROOM. REFER TO THE SECURITY DOOR DETAIL FOR MORE INFORMATION.
4. FURNISH AND INSTALL A LADDER TYPE CABLE TRAY, IN THE APPROXIMATE LOCATION SHOWN. SUPPORT THE TRAY EVERY 6'-0" ON CENTER AND BRACE TO THE STRUCTURE EVERY 20'-0" AND AT TRANSITIONS AND TURNS. PROVIDE BONDING JUMPERS AT EACH TRAY SECTION AND GROUND TO THE GROUND BUS IN THE MDF/IDF ROOMS. COORDINATE THE EXACT LOCATION AND HEIGHT OF TRAY WITH OTHER TRADES. PROVIDE MINIMUM OF 4" CLEARANCE ABOVE THE ENTIRE LENGTH OF TRAY. REFER TO THE DETAILS FOR MORE INFORMATION.

REFERENCE NOTES:

5. FURNISH AND INSTALL A 4" x 4" x 2-3/8" J-BOX IN THE CEILING FOR FUTURE SECURITY CAMERAS. RUN A 3/4" CONDUIT FROM EACH J-BOX TO THE CABLE TRAY. COORDINATE THE EXACT LOCATION WITH THE OWNER.
6. TIE THE NEW MAGNETIC DOOR HOLDER TO THE CIRCUIT SHOWN. PROVIDE A RELAY FROM FIRE ALARM SYSTEM TO RELEASE UPON PROGRAMMED SIGNAL.
7. TIE THE FIRE SMOKE DAMPER TO THE CIRCUIT SHOWN THROUGH THE FIRE ALARM SYSTEM.
8. FURNISH AND INSTALL A DUCT SMOKE DETECTOR WITH SAMPLING TUBE WITHIN 5'-0" OF THE FIRE SMOKE DAMPERS. TIE TO THE FIRE ALARM SYSTEM IN CLASS A LOOP. IN AND OUT CIRCUITS SHALL RUN IN SEPARATE CONDUITS.
9. TIE THE TAMPER AND FLOW SWITCHES TO THE FIRE ALARM SYSTEM IN A CLASS "A" LOOP. COORDINATE THE EXACT LOCATION AND QUANTITY WITH THE FIRE SPRINKLER SUPPLIER. REFER TO THE FIRE ALARM RISER DIAGRAM FOR MORE INFORMATION.

MHTN ARCHITECTS
MHTN Architects, Inc.
420 East South Temple
Suite 100
Salt Lake City, Utah 84111
Telephone (801) 595-6700
Telefax (801) 595-6717
www.mhtn.com

ECE, Inc. Consulting Engineers
939 S. West Temple
Salt Lake City, Utah 84101
Phone 801.521.8007
e-mail admin@eceonline.com

1 LEVEL 2 FLOOR PLAN AREA A - SYSTEMS
1/8" = 1'-0"

WEBER STATE UNIVERSITY
RESIDENTIAL LIFE PHASE II - BLDG.2

DFCM PROJECT NUMBER: 10176810

WEBER STATE UNIVERSITY
OGDEN, UTAH 84408

SEAL

MHTN PROJECT NO. 4007-2

DRAWN BY: CC CHECKED BY: JHM

ISSUED:

NO.	DATE	DESCRIPTION
01	17 MAY 2011	CONSTRUCTION DOCUMENTS

CONTRACTOR TO VERIFY DRAWINGS IN FIELD USE REFLECT LAST REVISION DATE.

NO.	DATE	DESCRIPTION

SHEET NAME

SECOND FLOOR AREA A - SYSTEMS

CONSTRUCTION DOCUMENTS
17 MAY 2011

SHEET NUMBER

EY102A

C:\Users\richie\Documents\4007-WEBER-STATE-BLDG2-CENTRAL-I_richie.rvt
5/17/2011 12:10:04 PM

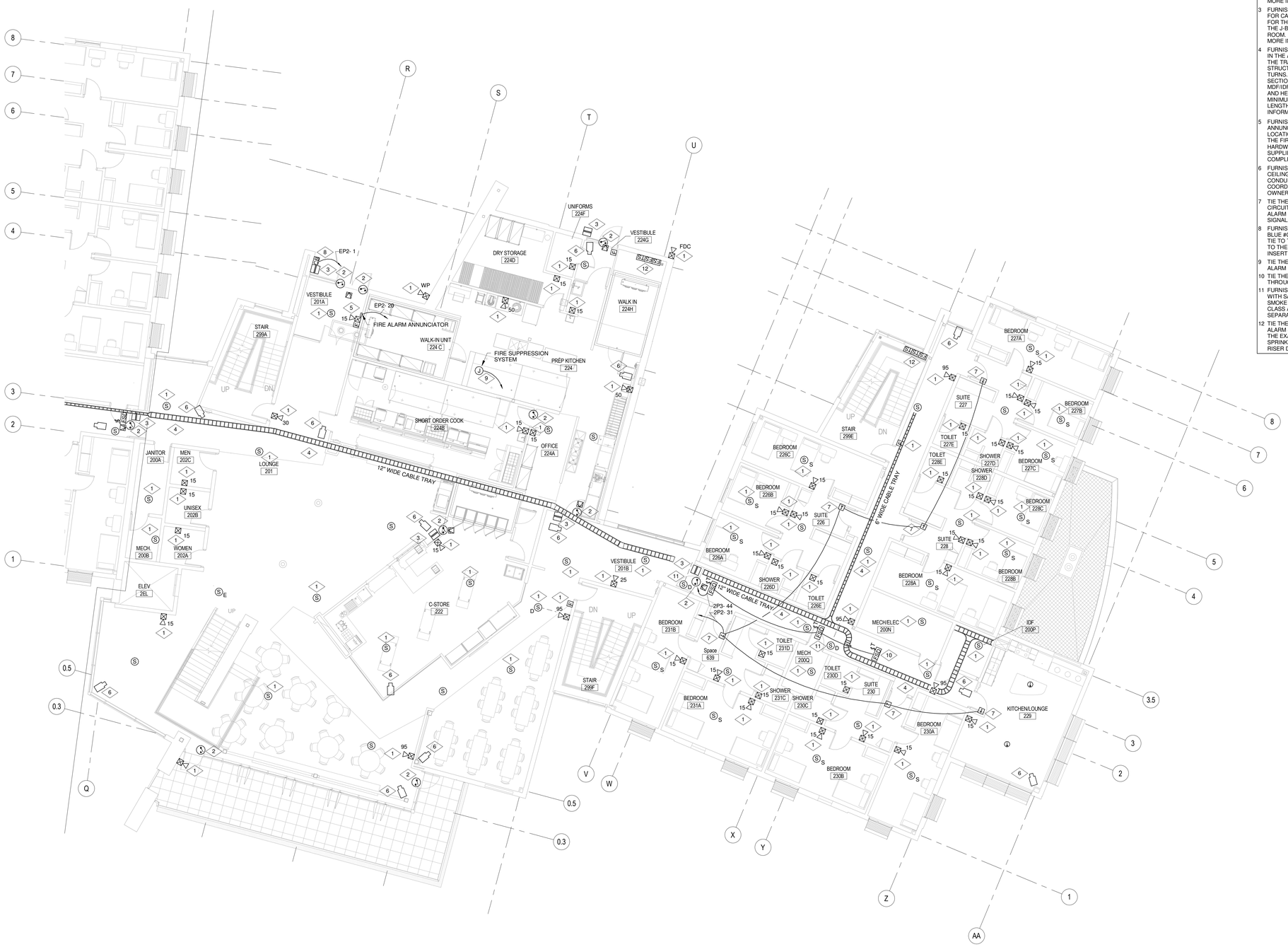

1 LEVEL 2 FLOOR PLAN AREA B - SYSTEMS
1/8" = 1'-0"

REFERENCE NOTES:

1. FURNISH AND INSTALL NEW ADDRESSABLE FIRE ALARM DEVICES IN THE APPROXIMATE LOCATION SHOWN. TIE TO THE FIRE ALARM CONTROL PANEL IN CLASS "A" LOOP. IN AND OUT CIRCUITS SHALL RUN IN SEPARATE CONDUITS.
2. FURNISH AND INSTALL J-BOX AND RACEWAY TO DOOR CONTACT, EXIT DEVICE AND POWER TRANSFER HINGE FOR THE SECURITY DOOR. RUN A 3/4" CONDUIT FROM THE J-BOX TO THE SECURITY PANEL IN THE MDF ROOM. REFER TO THE SECURITY DOOR DETAIL FOR MORE INFORMATION.
3. FURNISH AND INSTALL J-BOX AND RACEWAY TO DOOR FOR CARD READER, DOOR CONTACT AND LOCK SET FOR THE SECURITY DOOR. RUN A 3/4" CONDUIT FROM THE J-BOX TO THE SECURITY PANEL IN THE MDF ROOM. REFER TO THE SECURITY DOOR DETAIL FOR MORE INFORMATION.
4. FURNISH AND INSTALL A LADDER TYPE CABLE TRAY, IN THE APPROXIMATE LOCATION SHOWN. SUPPORT THE TRAY EVERY 6'-0" ON CENTER AND BRACE TO THE STRUCTURE EVERY 20'-0" AND AT TRANSITIONS AND TURNS. PROVIDE BONDING JUMPERS AT EACH TRAY SECTION AND GROUND TO THE GROUND BUS IN THE MDF/IDF ROOMS. COORDINATE THE EXACT LOCATION AND HEIGHT OF TRAY WITH OTHER TRADES. PROVIDE MINIMUM OF 4" CLEARANCE ABOVE THE ENTIRE LENGTH OF TRAY. REFER TO THE DETAILS FOR MORE INFORMATION.
5. FURNISH AND INSTALL A NEW FIRE ALARM REMOTE ANNUNCIATOR PANEL IN THE APPROXIMATE LOCATION AS SHOWN. TIE ANNUNCIATOR PANEL TO THE FIRE ALARM CONTROL PANEL. PROVIDE ALL HARDWARE, SOFTWARE, PROGRAMMING, POWER SUPPLIES, BATTERIES, ETC. AS REQUIRED FOR A COMPLETE INSTALLATION.
6. FURNISH AND INSTALL A 4" x 4" x 2-3/8" J-BOX IN THE CEILING FOR FUTURE SECURITY CAMERAS. RUN A 3/4" CONDUIT FROM EACH J-BOX TO THE CABLE TRAY. COORDINATE THE EXACT LOCATION WITH THE OWNER.
7. TIE THE NEW MAGNETIC DOOR HOLDER TO THE CIRCUIT SHOWN. PROVIDE A RELAY FROM FIRE ALARM SYSTEM TO RELEASE UPON PROGRAMMED SIGNAL.
8. FURNISH AND INSTALL NEW WALL MOUNTED CODE BLUE #CB2-S IN THE APPROXIMATE LOCATION SHOWN. TIE TO THE CIRCUIT INDICATED. RUN A 3/4" CONDUIT TO THE MDF ROOM FOR OWNER FURNISHED CABLES. INSERT A PULL STRING AND LABEL.
9. TIE THE FIRE SUPPRESSION SYSTEM TO THE FIRE ALARM PANEL FOR MONITORING.
10. TIE THE FIRE SMOKE DAMPER TO THE CIRCUIT SHOWN THROUGH THE FIRE ALARM SYSTEM.
11. FURNISH AND INSTALL A DUCT SMOKE DETECTOR WITH SAMPLING TUBE WITHIN 5'-0" OF THE FIRE SMOKE DAMPERS. TIE TO THE FIRE ALARM SYSTEM IN CLASS A LOOP. IN AND OUT CIRCUITS SHALL RUN IN SEPARATE CONDUITS.
12. TIE THE TAMPER AND FLOW SWITCHES TO THE FIRE ALARM SYSTEM IN A CLASS "A" LOOP. COORDINATE THE EXACT LOCATION AND QUANTITY WITH THE FIRE SPRINKLER SUPPLIER. REFER TO THE FIRE ALARM RISER DIAGRAM FOR MORE INFORMATION.

MHTN ARCHITECTS
MHTN Architects, Inc.
420 East South Temple
Suite 100
Salt Lake City, Utah 84111
Telephone (801) 595-6700
Telefax (801) 595-6717
www.mhtn.com

ECE, Inc. Consulting Engineers
939 S. West Temple
Salt Lake City, Utah 84101
Phone 801.521.8007
e-mail admin@eceonline.com

WEBER STATE UNIVERSITY
RESIDENTIAL LIFE PHASE II - BLDG.2
DFCM PROJECT NUMBER: 10176810

WEBER STATE UNIVERSITY
OGDEN, UTAH 84408

SEAL

MHTN PROJECT NO. 4007-2

DRAWN BY: CC CHECKED BY: JHM

ISSUED:

NO.	DATE	DESCRIPTION
01	17 MAY 2011	CONSTRUCTION DOCUMENTS

CONTRACTOR TO VERIFY DRAWINGS IN FIELD USE REFLECT LAST REVISION DATE.

NO.	DATE	DESCRIPTION

SHEET NAME
SECOND FLOOR AREA B - SYSTEMS
CONSTRUCTION DOCUMENTS
17 MAY 2011

SHEET NUMBER
EY102B

C:\Users\richie\Documents\4007-WEBER-STATE-BLDG2-CENTRAL-1_richie.rvt
5/17/2011 12:10:10 PM

REFERENCE NOTES:

1. FURNISH AND INSTALL NEW ADDRESSABLE FIRE ALARM DEVICES IN THE APPROXIMATE LOCATION SHOWN. TIE TO THE FIRE ALARM CONTROL PANEL IN CLASS "A" LOOP. IN AND OUT CIRCUITS SHALL RUN IN SEPARATE CONDUITS.
2. FURNISH AND INSTALL J-BOX AND RACEWAY TO DOOR CONTACT, EXIT DEVICE AND POWER TRANSFER HINGE FOR THE SECURITY DOOR. RUN A 3/4" CONDUIT FROM THE J-BOX TO THE SECURITY PANEL IN THE MDF ROOM. REFER TO THE SECURITY DOOR DETAIL FOR MORE INFORMATION.
3. FURNISH AND INSTALL J-BOX AND RACEWAY TO DOOR FOR CARD READER, DOOR CONTACT AND LOCK SET FOR THE SECURITY DOOR. RUN A 3/4" CONDUIT FROM THE J-BOX TO THE SECURITY PANEL IN THE MDF ROOM. REFER TO THE SECURITY DOOR DETAIL FOR MORE INFORMATION.
4. FURNISH AND INSTALL A LADDER TYPE CABLE TRAY, IN THE APPROXIMATE LOCATION SHOWN. SUPPORT THE TRAY EVERY 6'-0" ON CENTER AND BRACE TO THE STRUCTURE EVERY 20'-0" AND AT TRANSITIONS AND TURNS. PROVIDE BONDING JUMPERS AT EACH TRAY SECTION AND GROUND TO THE GROUND BUS IN THE MDF/IDF ROOMS. COORDINATE THE EXACT LOCATION AND HEIGHT OF TRAY WITH OTHER TRADES. PROVIDE MINIMUM OF 4" CLEARANCE ABOVE THE ENTIRE LENGTH OF TRAY. REFER TO THE DETAILS FOR MORE INFORMATION.

REFERENCE NOTES:

5. FURNISH AND INSTALL A 4" x 4" x 2-3/8" J-BOX IN THE CEILING FOR FUTURE SECURITY CAMERAS. RUN A 3/4" CONDUIT FROM EACH J-BOX TO THE CABLE TRAY. COORDINATE THE EXACT LOCATION WITH THE OWNER.
6. TIE THE NEW MAGNETIC DOOR HOLDER TO THE CIRCUIT SHOWN. PROVIDE A RELAY FROM FIRE ALARM SYSTEM TO RELEASE UPON PROGRAMMED SIGNAL.
7. TIE THE FIRE SMOKE DAMPER TO THE CIRCUIT SHOWN THROUGH THE FIRE ALARM SYSTEM.
8. FURNISH AND INSTALL A DUCT SMOKE DETECTOR WITH SAMPLING TUBE WITHIN 5'-0" OF THE FIRE SMOKE DAMPERS. TIE TO THE FIRE ALARM SYSTEM IN CLASS A LOOP. IN AND OUT CIRCUITS SHALL RUN IN SEPARATE CONDUITS.
9. TIE THE TAMPER AND FLOW SWITCHES TO THE FIRE ALARM SYSTEM IN A CLASS "A" LOOP. COORDINATE THE EXACT LOCATION AND QUANTITY WITH THE FIRE SPRINKLER SUPPLIER. REFER TO THE FIRE ALARM RISER DIAGRAM FOR MORE INFORMATION.

1 LEVEL 3 FLOOR PLAN AREA A - SYSTEMS
1/8" = 1'-0"

MHTN ARCHITECTS
MHTN Architects, Inc.
420 East South Temple
Suite 100
Salt Lake City, Utah 84111
Telephone (801) 595-6700
Telefax (801) 595-6717
www.mhtn.com

ECE, Inc. Consulting Engineers
939 S. West Temple
Salt Lake City, Utah 84101
Phone 801.521.8007
e-mail admin@eceonline.com

WEBER STATE UNIVERSITY
RESIDENTIAL LIFE PHASE II - BLDG.2

DFCM PROJECT NUMBER: 10176810

WEBER STATE UNIVERSITY
OGDEN, UTAH 84408

SEAL

MHTN PROJECT NO. 4007-2

DRAWN BY: CC CHECKED BY: JHM

ISSUED:

NO.	DATE	DESCRIPTION
01	17 MAY 2011	CONSTRUCTION DOCUMENTS

CONTRACTOR TO VERIFY DRAWINGS IN FIELD USE REFLECT LAST REVISION DATE.

NO.	DATE	DESCRIPTION

SHEET NAME

THIRD FLOOR AREA A - SYSTEMS

CONSTRUCTION DOCUMENTS

17 MAY 2011

SHEET NUMBER

EY103A

C:\Users\chris\Documents\4007-WEBER-STATE-BLDG2-CENTRAL-I_richie.rvt
5/17/2011 12:10:16 PM

1 LEVEL 3 FLOOR PLAN AREA B - SYSTEMS
1/8" = 1'-0"

REFERENCE NOTES:

1. FURNISH AND INSTALL NEW ADDRESSABLE FIRE ALARM DEVICES IN THE APPROXIMATE LOCATION SHOWN. TIE TO THE FIRE ALARM CONTROL PANEL IN CLASS "A" LOOP. IN AND OUT CIRCUITS SHALL RUN IN SEPARATE CONDUITS.
2. FURNISH AND INSTALL J-BOX AND RACEWAY TO DOOR CONTACT, EXIT DEVICE AND POWER TRANSFER HINGE FOR THE SECURITY DOOR. RUN A 3/4" CONDUIT FROM THE J-BOX TO THE SECURITY PANEL IN THE MDF ROOM. REFER TO THE SECURITY DOOR DETAIL FOR MORE INFORMATION.
3. FURNISH AND INSTALL J-BOX AND RACEWAY TO DOOR FOR CARD READER, DOOR CONTACT AND LOCK SET FOR THE SECURITY DOOR. RUN A 3/4" CONDUIT FROM THE J-BOX TO THE SECURITY PANEL IN THE MDF ROOM. REFER TO THE SECURITY DOOR DETAIL FOR MORE INFORMATION.
4. FURNISH AND INSTALL A LADDER TYPE CABLE TRAY, IN THE APPROXIMATE LOCATION SHOWN. SUPPORT THE TRAY EVERY 6'-0" ON CENTER AND BRACE TO THE STRUCTURE EVERY 20'-0" AND AT TRANSITIONS AND TURNS. PROVIDE BONDING JUMPERS AT EACH TRAY SECTION AND GROUND TO THE GROUND BUS IN THE MDF/IDF ROOMS. COORDINATE THE EXACT LOCATION AND HEIGHT OF TRAY WITH OTHER TRADES. PROVIDE MINIMUM OF 4" CLEARANCE ABOVE THE ENTIRE LENGTH OF TRAY. REFER TO THE DETAILS FOR MORE INFORMATION.
5. TIE THE NEW MAGNETIC DOOR HOLDER TO THE CIRCUIT SHOWN. PROVIDE A RELAY FROM FIRE ALARM SYSTEM TO RELEASE UPON PROGRAMMED SIGNAL.
6. FURNISH AND INSTALL A 4" x 4" x 2-3/8" J-BOX IN THE CEILING FOR FUTURE SECURITY CAMERAS. RUN A 3/4" CONDUIT FROM EACH J-BOX TO THE CABLE TRAY. COORDINATE THE EXACT LOCATION WITH THE OWNER.
7. TIE THE FIRE SMOKE DAMPER TO THE CIRCUIT SHOWN THROUGH THE FIRE ALARM SYSTEM.
8. FURNISH AND INSTALL A DUCT SMOKE DETECTOR WITH SAMPLING TUBE WITHIN 5'-0" OF THE FIRE SMOKE DAMPERS. TIE TO THE FIRE ALARM SYSTEM IN CLASS A LOOP. IN AND OUT CIRCUITS SHALL RUN IN SEPARATE CONDUITS.
9. TIE THE TAMPER AND FLOW SWITCHES TO THE FIRE ALARM SYSTEM IN A CLASS "A" LOOP. COORDINATE THE EXACT LOCATION AND QUANTITY WITH THE FIRE SPRINKLER SUPPLIER. REFER TO THE FIRE ALARM RISER DIAGRAM FOR MORE INFORMATION.

MHTN ARCHITECTS
MHTN Architects, Inc.
420 East South Temple
Suite 100
Salt Lake City, Utah 84111
Telephone (801) 595-6700
Telefax (801) 595-6717
www.mhtn.com

ECE, Inc. Consulting Engineers
939 S. West Temple
Salt Lake City, Utah 84101
Phone 801.521.8007
e-mail admin@eceonline.com

WEBER STATE UNIVERSITY
RESIDENTIAL LIFE PHASE II - BLDG.2

DFCM PROJECT NUMBER: 10176810

WEBER STATE UNIVERSITY
OGDEN, UTAH 84408

SEAL

MHTN PROJECT NO. 4007-2

DRAWN BY: CC CHECKED BY: JHM

ISSUED:

NO.	DATE	DESCRIPTION
01	17 MAY 2011	CONSTRUCTION DOCUMENTS

CONTRACTOR TO VERIFY DRAWINGS IN FIELD USE REFLECT LAST REVISION DATE.

NO.	DATE	DESCRIPTION

SHEET NAME
THIRD FLOOR AREA B - SYSTEMS
CONSTRUCTION DOCUMENTS
17 MAY 2011

SHEET NUMBER
EY103B

C:\Users\richie\Documents\4007-WEBER STATE BLDG2-CENTRAL-1_richie.rvt
5/17/2011 12:10:21 PM