UTAH NATIONAL GUARD

CAMP W.G. WILLIAMS

BUILDING 3030 REMODEL
17800 South Redwood Road
RIVERTON, UTAH 84065

DFCM PROJECT NO. - 10205480

CRSA PROJECT NUMBER: B10-029

30 AUGUST, 2010
BID SET

ARCHITECT

COOPER ROBERTS SIMONSEN
ARCHITECTS
700 NORTH 200 WEST
SALT LAKE CITY, UT 84103
(801) 355-5915
FAX (801) 355-9885
WWW.CRARCHITECTS.COM

STRUCTURAL ENGINEER

CALDER RICHARDS ENGINEERS
2015 S 1100 EAST
SALT LAKE CITY, UT 84111
(801) 466-1699
FAX (801) 467-2495

stephen@crceng.com

ELECTRICAL ENGINEER

SPECTRUM
175 S. MAIN STREET STE. 300
SALT LAKE CITY, UTAH 84111
(801) 328-5151
(801) 401-9471

MECHANICAL ENGINEER

SMD
986 WEST ATHERTON DRIVE STE. 200
TAYLORSVILLE, UTAH 84123
(801) 268- 3828
FAX (801) 268-3297

SHEET INDEX

GENERAL

G1001 COVER SHEET & SHEET INDEX

ARCHITECTURAL

AS101 SITE PLAN
AS102 OVERALL BUILDING PLAN
AS103 LEVEL 1 BUILDING EXITING PLAN
AS104 LEVEL 2 BUILDING EXITING PLAN
AD101 DEMOLITION PLAN
AE101 LEVEL 1 FLOOR PLAN
AE102 LEVEL 2 FLOOR PLAN
AE111 LEVEL 1 REFLECTED CEILING PLAN
AE112 LEVEL 2 REFLECTED CEILING PLAN
AE301 BUILDING SECTIONS
AE302 BUILDING SECTIONS
AE401 ENLARGED STAIR & ELEVATOR PLANS AND SECTIONS
AE501 DETAILS AND WALL TYPES
AE502 DETAILS

STRUCTURAL

S001 STRUCTURAL GENERAL NOTES & DETAILS
S101 FOOTING & FOUNDATION PLAN & LEVEL 2 FRAMING PLAN
S501 STRUCTURAL DETAILS
S502 STRUCTURAL DETAILS

MECHANICAL

MH001 MECHANICAL LEGENDS AND NOTES
MD101 MECHANICAL DEMO UPPER LEVEL FLOOR PLAN PHASE 2&3
MH100 MECHANICAL OVERALL FLOOR PLAN
MH101 MECHANICAL MAIN LEVEL FLOOR PLAN PHASE 2
MH102 MECHANICAL UPPER LEVEL FLOOR PLAN PHASE 2
MH103 MECHANICAL UPPER LEVEL FLOOR PLAN PHASE 3
MH104 MECHANICAL MAIN LEVEL FLOOR PLAN PHASE 4
MP101 MECHANICAL PIPING UPPER LEVEL FLOOR PLAN PHASE 2
MH501 MECHANICAL DETAILS
MH502 MECHANICAL DETAILS
MH601 MECHANICAL SCHEDULES
MH602 MECHANICAL SCHEDULES

ELECTRICAL

EE001 SYMBOL LEGEND, SHEET INDEX & ABBREVIATIONS
EE501 TYPICAL MOUNTING HEIGHT DETAILS
EE502 DETAILS
EE503 DETAILS
ED101 1ST FLOOR DEMOLITION PLAN
EP101 1ST FLOOR POWER PLAN
EP102 2ND FLOOR POWER PLAN
EP601 ONE-LINE DIAGRAM
EP602 MECHANICAL EQUIPMENT AND PANEL SCHEDULES
EP603 MECHANICAL EQUIPMENT AND PANEL SCHEDULES
EL101 1ST FLOOR LIGHTING PLAN
EL102 2ND FLOOR LIGHTING PLAN
EL601 LIGHTING FIXTURE SCHEDULE
ET101 1ST FLOOR TECHNOLOGY PLAN
ET102 2ND FLOOR TECHNOLOGY PLAN
ET601 TECHNOLOGY RISERS AND DIAGRAMS
ET602 TECHNOLOGY DETAILS AND SCHEDULE
FA101 1ST FLOOR FIRE ALARM PLAN
FA102 2ND FLOOR FIRE ALARM PLAN
FA601 FIRE ALARM RISER

CRSA
ARCHITECTURE
PLANNING
INTERIORS
649 E SOUTH TEMPLE
SALT LAKE CITY, UT 84102
801.355.5915
www.crsa-us.com

STRUCTURAL ENGINEER
CALDER RICHARDS CONSULTING ENGINEERS
634 South 400 West Suite 100
SALT LAKE CITY, UT 84101
(801) 466-1699 (801) 467-2495 FAX
stephen@crceng.com

MECHANICAL ENGINEER
SMD
986 WEST ATHERTON DRIVE STE. 200
TAYLORSVILLE, UTAH 84123
(801)268-3828 FAX (801)268-3297
# #

ELECTRICAL ENGINEER
SPECTRUM
175 S MAIN STREET STE. 300
SALT LAKE CITY, UTAH 84111
(801)328-5151 (801)401-9471
# #

PROJECT:
BUILDING 3030 REMODEL
UTAH NATIONAL GUARD
CAMP W.G. WILLIAMS
17800 South Redwood Road
Riverton, Utah 84065

UTAH NATIONAL GUARD
12953 SOUTH

BN	BID DOCUMENTS	8-30-2010
CD	PLAN CHECK	8-30-2010

PROJECT NO: B10-029
CAD DWG FILE: G1001.DWG
DRAWN BY: MC
CHECKED BY: DT

COVER SHEET

G1001

SYMBOLS LEGEND

DETAIL NUMBER — C5 / SHEET NUMBER — AE502: DETAIL REFERENCE

A1 / AE202: EXTERIOR ELEVATION REFERENCE

A4 / AE301: SECTION REFERENCE

B2 / AE401: INTERIOR ELEVATION REFERENCE (SINGLE)

DETAIL NUMBER — B2: B3, B1, B4 / AE401: INTERIOR ELEVATION REFERENCE (MULTIPLE)

1: REFERENCE NOTE

A: WALL TYPE

W1: FINISH TYPE

A: WINDOW TYPE

NAME / 101: ROOM NOTE

DOOR # 101 / FRAME TYPE A 1: DOOR NOTE / DOOR TYPE

FINISH C-1 / CEILING HEIGHT 8'-0": CEILING TYPE

A: FURNITURE NOTE

1: REVISION NOTE

ELEVATION MARKER

CONCRETE
CONCRETE BLOCK
MASONRY
STEEL
BATT INSULATION
RIGID INSULATION
FINISH GRADE WOOD
PLYWOOD
DEMOLITION

NOTE: ALL MATERIALS REFERENCED ARE NEW UNLESS NOTED OTHERWISE

THESE DRAWINGS COMPLY WITH UTAH STATE DFCM STANDARDS EXCEPT WHERE SUPERCEDED BY CODE

CODE ANALYSIS

APPLICABLE CODES

	Year		Year
International Building Code	2009	National Electrical Code	2008
International Mechanical Code	2009	Uniform Code for Building Conservation	N/A
International Plumbing Code	2009	ADA Accessibility Guidelines	2006
International Fire Code	2009		
International Energy Conservation Code	2009		

A. Occupancy and Group: Existing A-1 & B, Proposed A-1 & B
Change in Use: Yes ____ No X Mixed Occupancy: Yes X No ____
Special Use and Occupancy (e.g. High Rise, Covered Mall): N/A

B. Seismic Design Category: D Design Wind Speed: N/A mph

C. Type of Construction (circle one):
I/A I/B II/A II/B III/A III/B IV/HT V/A V/B (Assumed)

D. Fire Resistance Rating Requirements for the Exterior Walls based on the fire separation distance (in hours) Min. distance exceeds 10 feet all sides):
North: 0 South: 0 East: 0 West: 0

E. Mixed Occupancies: Yes Nonseparated Uses: Yes
Evaluate building as required for A-1 Occupancy, non-separated use with B Occupancy

F: Sprinklers:
Required: YES Provided: YES Type of Sprinkler System: Existing

G: Number of Stories: 2 Building Height: 26' (APPROX.)

H: Actual Area:
1st Floor Existing: 19,849 SF Proposed: 19,849 SF
2nd Floor Existing: 2,087 SF Proposed: 8,000 SF

I: Tabular Area: A-1: 5,500 SF (B: N/A for non-separated uses)

J: Area Modifications: $A_a = A_1 + [A_1 I_f] + [A_1 I_s]$ $I_f = \left[\frac{F}{P} - 0.25\right]\frac{W}{30}$

a) I_f = [558/624 - 0.25]30/30 = 0.644 I_s = 2 (for multi-story bldgs)
A_a = 5500+[5500x0.644]+[5500x2] = 20,042 SF

b) Sum of the Ratio Calculations for Mixed Occupancies:
N/A / N/A ≤ 1 (N/A for non-separated uses)

c) Total Allowable Area for:
1) One Story: 20,042 SF
2) Two Story: A_a (2) 40,084 SF
3) Three Story: A_a (3) N/A

d) Unlimited Area Building: Yes ____ No X Code Section: N/A

K. Fire Resistance Rating Requirements for Building Elements (hours).

Element	Hours	Assembly Listing	Element	Hours	Assembly Listing
Exterior Bearing Walls	0		Floors - Ceiling Floors	0	
Interior Bearing Walls	0		Roofs - Ceiling Roofs	0	
Exterior Non-Bearing Walls	0		Exterior Doors and Windows	0	
Structural Frame	0		Shaft Enclosures	0	
Partitions - Permanent	0		Fire Walls	N/A	
Fire Barriers	N/A		Fire Partitions	N/A	
			Smoke Partitions	N/A	

L. Design Occupant Load:
A-1: 9,319 S.F. / 15 = 621.26
B: 16,953 S.F. / 100 = 196.53
TOTAL: 621.26 + 196.53 = 818
Exit Width Required: 163.5" Exit Width Provided: 384"

M. Minimum Number of Required Plumbing Facilities: (EXISTING TO REMAIN)
EXISTING FACILITIES ON-SITE, INCLUDING PRIMARY BUILDING, EXCEED REQ'S.

A-1 OCCUPANCY: 622
a) Water Closets - Required (m) 3 (f) 4
b) Lavatories - Required (m) 2 (f) 2
c) Bath Tubs or Showers: N/A
d) Drinking Fountains: 2 Service Sinks: 1

B OCCUPANCY: 197
a) Water Closets - Required (m) 3 (f) 3
b) Lavatories - Required (m) 3 (f) 3
c) Bath Tubs or Showers: N/A
d) Drinking Fountains: 2 Service Sinks: 1

TOTAL FIXTURES REQUIRED & PROVIDED:
a) Water Closets - Required (m) 6 (f) 7 Provided (m) 9 (f) 6
b) Lavatories - Required (m) 5 (f) 5 Provided (m) 9 (f) 5
c) Bath Tubs or Showers: N/A
d) DF - Req'd 2 Provided 3 Service Sinks - Req'd 1 Provided 1

FOOTNOTES:
1) In case of conflict with the U.S. Department of Justice Federal Registers Parts I through V - ADA Guidelines and specific reference to the International Building Code Accessibility Chapters, the more restrictive requirement shall govern.
2) Additional Code Information shall be provided at the discretion of the Building Official for Complex Buildings. Including, but not limited to:
a) High Rise Requirements.
b) Atriums.
c) Performance Based Criteria.
d) Means or Egress Analysis.
e) Fire Assembly Locator Sheet.
f) Exterior and Interior Accessibility Route.
g) Fire Stopping, Including Tested Design Number.

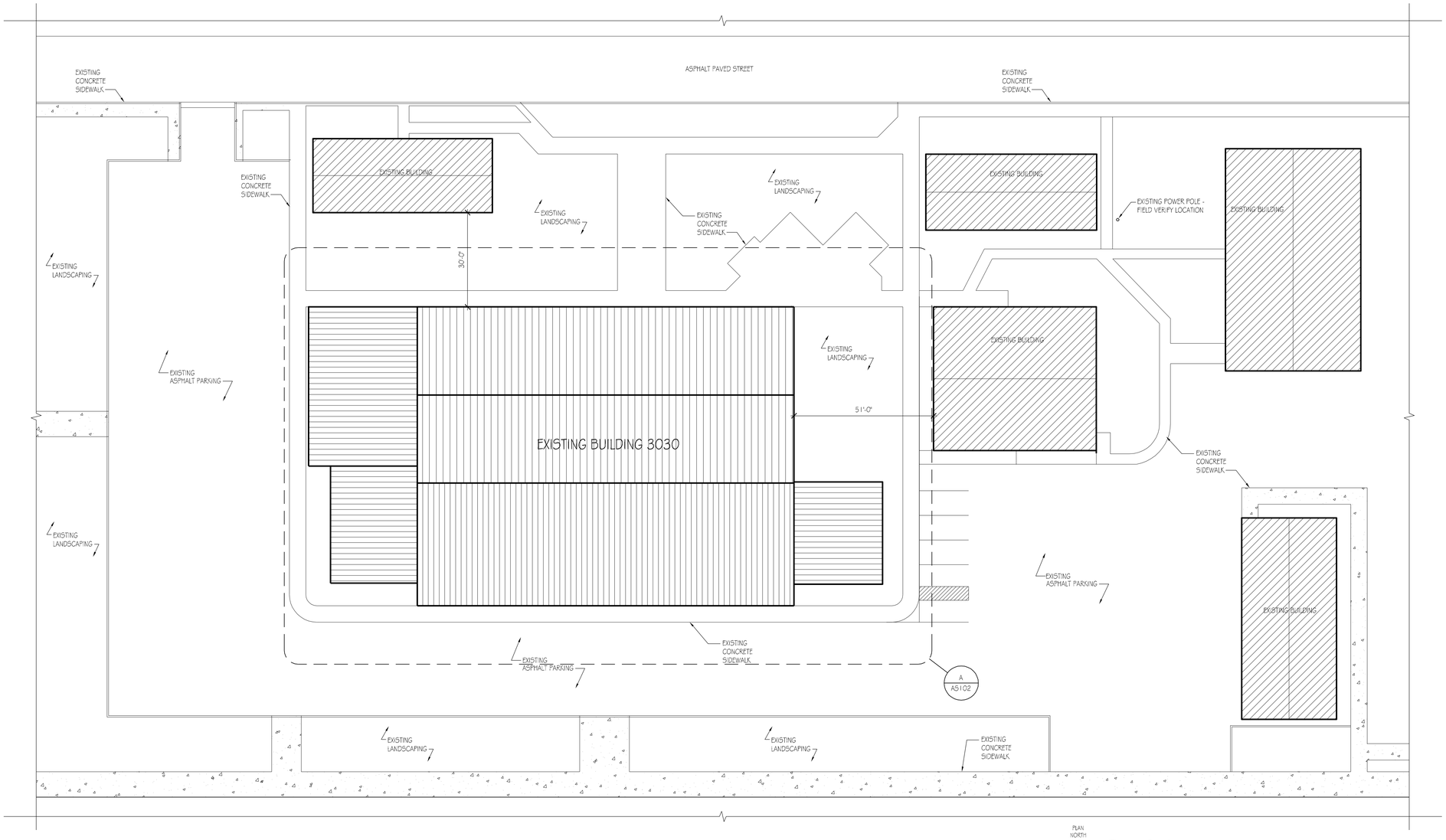

PLAN NORTH

1 SITE PLAN

SCALE: 1" = 20'-0"

0 10' 20' 40'

CRSA
ARCHITECTURE
PLANNING
INTERIORS
649 E SOUTH TEMPLE
SALT LAKE CITY, UT 84102
801.355.5915
www.crsa-us.com

STRUCTURAL ENGINEER
CALDER RICHARDS CONSULTING ENGINEERS
634 South 400 West Suite 100
SALT LAKE CITY, UT 84101
(801) 466-1699 (801) 467-2495 FAX
stephen@crceng.com

MECHANICAL ENGINEER
SMD
986 WEST ATHERTON DRIVE STE. 200
TAYLORSVILLE, UTAH 84123
(801)268-3828 FAX (801)268-3297
# #

ELECTRICAL ENGINEER
SPECTRUM
175 S MAIN STREET STE. 300
SALT LAKE CITY, UTAH 84111
(801)328-5151 (801)401-9471
# #

PROJECT:
BUILDING 3030 REMODEL
UTAH NATIONAL GUARD
CAMP W.G. WILLIAMS
17800 South Redwood Road
Riverton, Utah 84065

UTAH NATIONAL GUARD
12953 SOUTH

BN	BID DOCUMENTS	8-30-2010
CD	PLAN CHECK	8-30-2010

PROJECT NO: B10-029
CAD DWG FILE: AS101.DWG
DRAWN BY: MC
CHECKED BY: DT

SITE PLAN

AS101

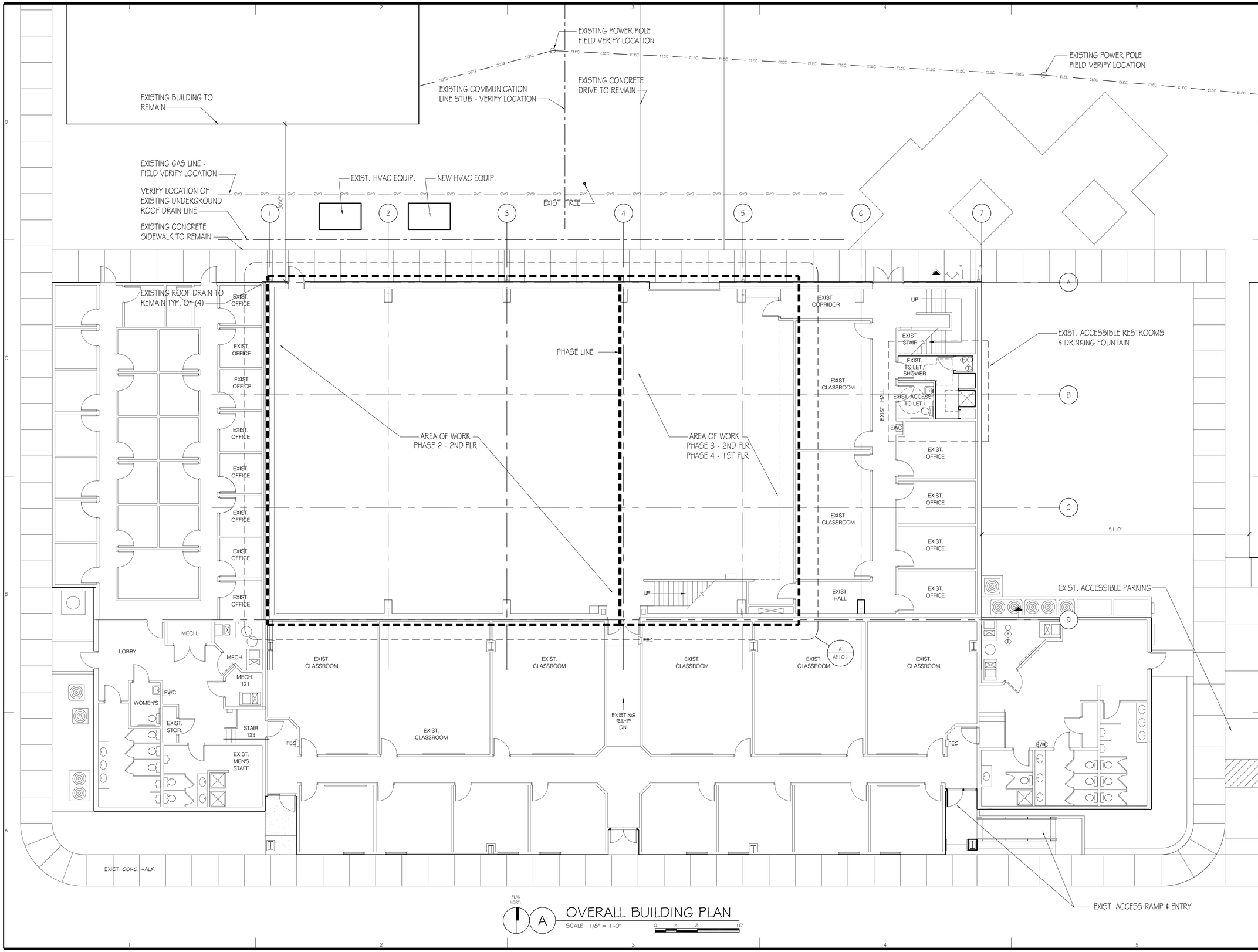

A OVERALL BUILDING PLAN
SCALE: 1/8" = 1'-0"

CRSA
ARCHITECTURE
PLANNING
INTERIORS
649 E SOUTH TEMPLE
SALT LAKE CITY, UT 84102
801.355.5915
www.crsa-us.com

STRUCTURAL ENGINEER
CALDER RICHARDS CONSULTING ENGINEERS
634 South 400 West Suite 100
SALT LAKE CITY, UT 84101
(801) 466-1699 (801) 467-2495 FAX
stephen@crceng.com

MECHANICAL ENGINEER
SMD
986 WEST ATHERTON DRIVE STE. 200
TAYLORSVILLE, UTAH 84123
(801)268-3828 FAX (801)268-3297
# #

ELECTRICAL ENGINEER
SPECTRUM
175 S MAIN STREET STE. 300
SALT LAKE CITY, UTAH 84111
(801)328-5151 (801)401-9471
# #

PROJECT:
BUILDING 3030 REMODEL
UTAH NATIONAL GUARD
CAMP W.G. WILLIAMS
17800 South Redwood Road
Riverton, Utah 84065

UTAH NATIONAL GUARD
12953 SOUTH

BN	BID DOCUMENTS	8-30-2010
CD	PLAN CHECK	8-30-2010

PROJECT NO: B10-029
CAD DWG FILE: AS102.DWG
DRAWN BY: MC
CHECKED BY: DT

OVERALL
BUILDING PLAN

AS102

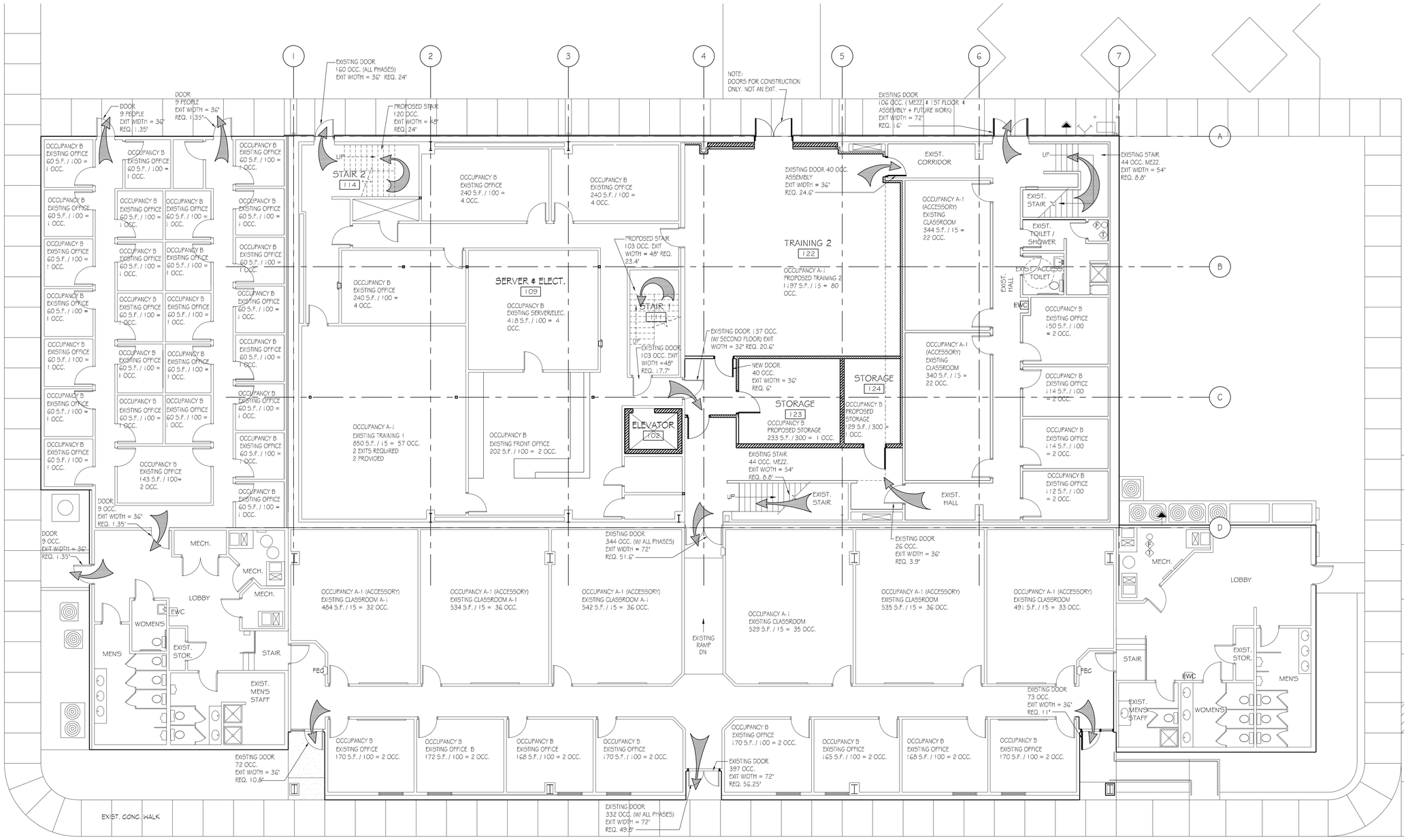

PLAN NORTH

A

LEVEL 1 BUILDING EXITING PLAN

SCALE: 1/8" = 1'-0"

0 4' 8' 16'

CRSA

ARCHITECTURE
PLANNING
INTERIORS

649 E SOUTH TEMPLE
SALT LAKE CITY, UT 84102
801.355.5915
www.crsa-us.com

STRUCTURAL ENGINEER
CALDER RICHARDS CONSULTING ENGINEERS
634 South 400 West Suite 100
SALT LAKE CITY, UT 84101
(801) 466-1699 (801) 467-2495 FAX
stephen@crceng.com

MECHANICAL ENGINEER
SMD
986 WEST ATHERTON DRIVE STE. 200
TAYLORSVILLE, UTAH 84123
(801)268-3828 FAX (801)268-3297
# #

ELECTRICAL ENGINEER
SPECTRUM
175 S MAIN STREET STE. 300
SALT LAKE CITY, UTAH 84111
(801)328-5151 (801)401-9471
# #

PROJECT:
BUILDING 3030 REMODEL
UTAH NATIONAL GUARD
CAMP W.G. WILLIAMS
17800 South Redwood Road
Riverton, Utah 84065

UTAH NATIONAL GUARD
12953 SOUTH

BN	BID DOCUMENTS	8-30-2010
CD	PLAN CHECK	8-30-2010

PROJECT NO: B10-029
CAD DWG FILE: AS103.DWG
DRAWN BY: MC
CHECKED BY: DT

LEVEL 1 BUILDING
EXITING PLAN

AS103

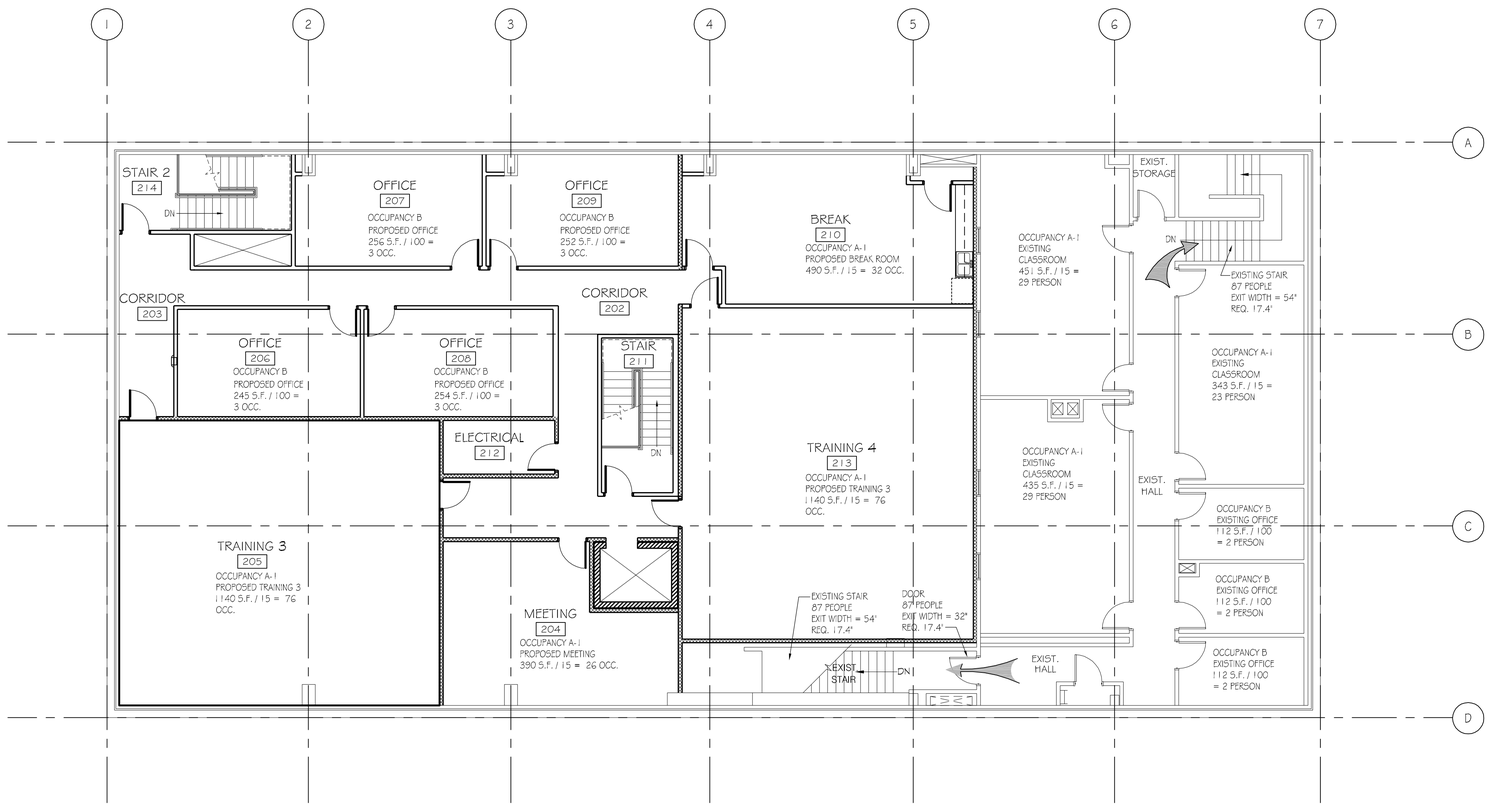

PLAN NORTH

A

LEVEL 2 BUILDING EXITING PLAN

SCALE: 1/8" = 1'-0"

0 4' 8' 16'

CRSA
ARCHITECTURE
PLANNING
INTERIORS
649 E SOUTH TEMPLE
SALT LAKE CITY, UT 84102
801.355.5915
www.crsa-us.com

STRUCTURAL ENGINEER
CALDER RICHARDS CONSULTING ENGINEERS
634 South 400 West Suite 100
SALT LAKE CITY, UT 84101
(801) 466-1699 (801) 467-2495 FAX
stephen@crceng.com

MECHANICAL ENGINEER
SMD
986 WEST ATHERTON DRIVE STE. 200
TAYLORSVILLE, UTAH 84123
(801)268-3828 FAX (801)268-3297
# #

ELECTRICAL ENGINEER
SPECTRUM
175 S MAIN STREET STE. 300
SALT LAKE CITY, UTAH 84111
(801)328-5151 (801)401-9471
# #

PROJECT:
BUILDING 3030 REMODEL
UTAH NATIONAL GUARD
CAMP W.G. WILLIAMS
17800 South Redwood Road
Riverton, Utah 84065

UTAH NATIONAL GUARD
12953 SOUTH

BN	BID DOCUMENTS	8-30-2010
CD	PLAN CHECK	8-30-2010

PROJECT NO: B10-029
CAD DWG FILE: A5104.DWG
DRAWN BY: MC
CHECKED BY: DT

LEVEL 2 BUILDING
EXITING PLAN

AS104

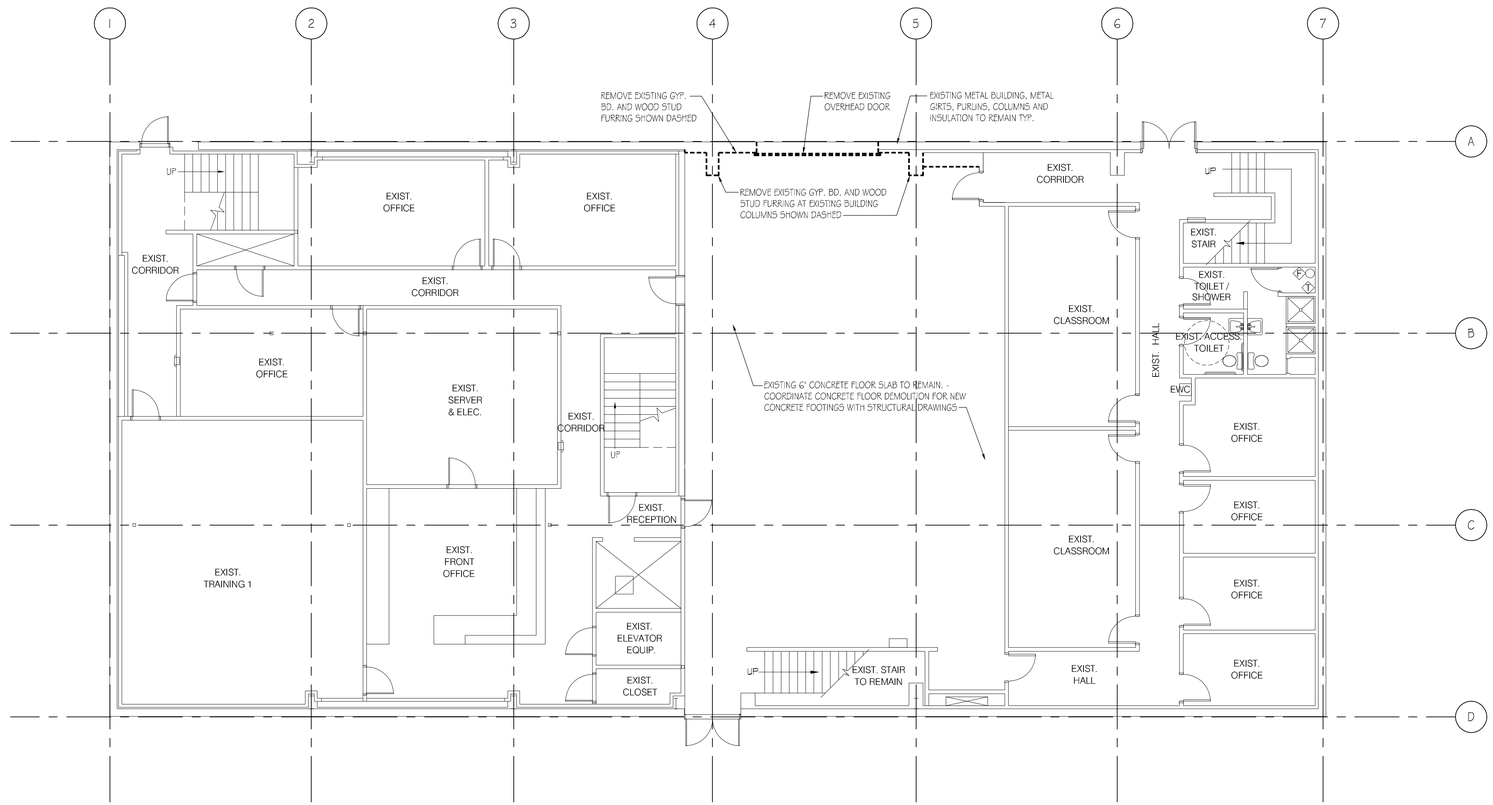

PLAN NORTH

A

DEMOLITION PLAN

SCALE: 1/8" = 1'-0" 0 4' 8' 16'

NOTE:
DEMOLITION SCOPE: WHETHER OR NOT SPECIFICALLY INDICATED IN THE DRAWINGS OR SPECIFICATIONS, PROVIDE ALL SELECTIVE DEMOLITION & PATCH/REPAIR WORK REQUIRED TO ACCOMMODATE INSTALLATION & TIE-IN OF NEW WORK, AND FOR A COMPLETE & FUNCTIONAL INSTALLATION.

CRSA
ARCHITECTURE
PLANNING
INTERIORS
649 E SOUTH TEMPLE
SALT LAKE CITY, UT 84102
801.355.5915
www.crsa-us.com

STRUCTURAL ENGINEER
CALDER RICHARDS CONSULTING ENGINEERS
634 South 400 West Suite 100
SALT LAKE CITY, UT 84101
(801) 466-1699 (801) 467-2495 FAX
stephen@crceng.com

MECHANICAL ENGINEER
SMD
986 WEST ATHERTON DRIVE STE. 200
TAYLORSVILLE, UTAH 84123
(801)268-3828 FAX (801)268-3297
# #

ELECTRICAL ENGINEER
SPECTRUM
175 S MAIN STREET STE. 300
SALT LAKE CITY, UTAH 84111
(801)328-5151 (801)401-9471
# #

PROJECT:
BUILDING 3030 REMODEL
UTAH NATIONAL GUARD
CAMP W.G. WILLIAMS
17800 South Redwood Road
Riverton, Utah 84065

UTAH NATIONAL GUARD
12953 SOUTH

BN	BID DOCUMENTS	8-30-2010
CD	PLAN CHECK	8-30-2010

PROJECT NO: B10-029
CAD DWG FILE: AD101.DWG
DRAWN BY: MC
CHECKED BY: DT

DEMOLITION PLAN

AD101

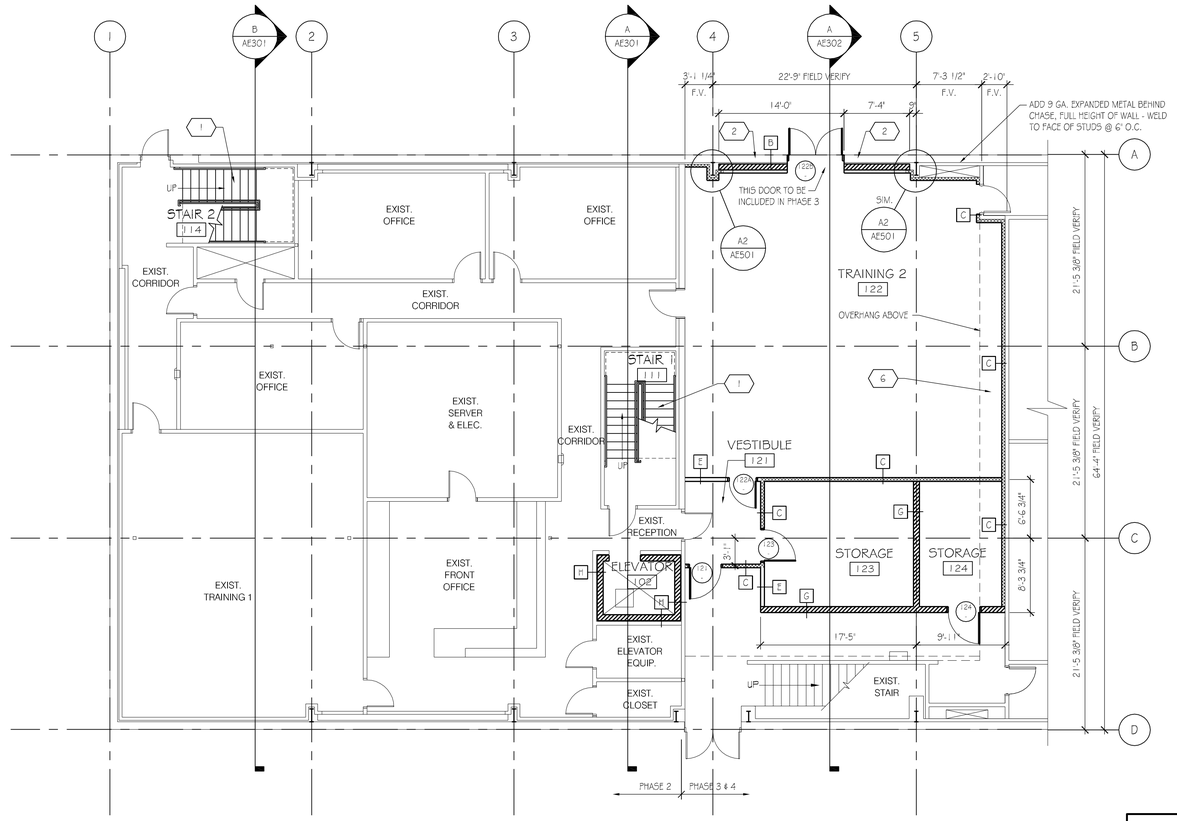

PLAN NORTH

A LEVEL ONE PARTIAL FLOOR PLAN

SCALE: 1/8" = 1'-0"

0 4' 8' 16'

DOOR SCHEDULE

DOOR NUMBER	SINGLE	DOUBLE	DOOR TYPE	DOOR SIZE	HARDWARE GROUP	FRAME TYPE	COMMENTS
121	●		T-2	S-1	H-5	F-1	
122A	●		T-2	S-2	H-5	F-1	
122B		●	T-1	S-1	H-6	F-1	●
123	●		T-2	S-2	H-1	F-1	
124	●		T-2	S-2	H-1	F-1	
204	●		T-2	S-1	H-4	F-1	
205	●		T-2	S-1	H-4	F-1	
206	●		T-2	S-1	H-4	F-1	
207	●		T-2	S-1	H-4	F-1	
208	●		T-2	S-1	H-4	F-1	
209	●		T-2	S-1	H-4	F-1	
210A	●		T-2	S-1	H-4	F-1	
210B	●		T-2	S-1	H-2	F-1	
211	●		T-2	S-1	H-5	F-1	
212	●		-	S-1		F-1	
213A	●		T-2	S-1	H-4	F-1	
213B	●		T-2	S-1	H-4	F-1	
214	●		T-2	S-1	H-5	F-1	

DOOR TYPES
T-1 = HOLLOW METAL INSULATED FLUSH
T-2 = SOLID CORE WOOD - PLAIN SLICED OAK VENEER

DOOR SIZES
S-1 = 3'-0" x 7'-0" x 1-3/4"
S-2 = 3'-6" x 7'-0" x 1-3/4"

HARDWARE GROUPS
H-1 STORAGE DOOR
H-2 CLOSET DOOR
H-3 ELEVATOR EQUIPMENT ROOM
H-4 OFFICE DOORS
H-5 STAIRWELL / EXIT DOOR
H-6 EXTERIOR DOOR

FRAME TYPES
F-1 = HOLLOW METAL

COMMENTS
SEE SHEET AE501 FOR DOOR DETAILS
ALL DOORS ARE TO BE PAINTED
DOOR 122B TO BE REMOVED AT THE END OF PHASE 4. IN-FILL OPENING WITH FRAMING, AND INTERIOR & EXTERIOR MATERIALS TO MATCH ADJACENT.

KEYED NOTES

1. NEW STAIR
2. INFILL OPENING - MATCH EXTERIOR FINISHES (PHASE 3)
3. SOUND BATT INSULATION FULL HEIGHT IN WALL CAVITY
4. FIRE-EXTINGUISHER IN CABINET
5. ACCESSIBILITY SIGNAGE - SEE DETAILS ON SHEET AE101
6. APPLY FOIL AND (1) LAYER OF GYP. BD. AROUND & UNDERNEATH OVERHANG AND PAINT. TIE IN TO NEW CONSTRUCTION AND GROUND THE FOIL SO AS TO MAINTAIN CONTINUITY OF RF ENCLOSURE.

FINISH SCHEDULE

ROOM NUMBER	FLOOR	BASE	WALLS NORTH	WALLS EAST	WALLS SOUTH	WALLS WEST	CEILING
121	CARPET	4" RUBBER	PAINT	PAINT	PAINT	PAINT	SEE SHEET AE111
122	CARPET	4" RUBBER	PAINT	PAINT	PAINT	PAINT	SEE SHEET AE111
123	VCT	4" RUBBER	PAINT	PAINT	PAINT	PAINT	SEE SHEET AE111
124	VCT	4" RUBBER	PAINT	PAINT	PAINT	PAINT	SEE SHEET AE111
204	CARPET	4" RUBBER	PAINT	PAINT	PAINT	PAINT	SEE SHEET AE111
205	CARPET	4" RUBBER	PAINT	PAINT	PAINT	PAINT	SEE SHEET AE111
206	CARPET	4" RUBBER	PAINT	PAINT	PAINT	PAINT	SEE SHEET AE111
207	CARPET	4" RUBBER	PAINT	PAINT	PAINT	PAINT	SEE SHEET AE111
208	CARPET	4" RUBBER	PAINT	PAINT	PAINT	PAINT	SEE SHEET AE111
209	CARPET	4" RUBBER	PAINT	PAINT	PAINT	PAINT	SEE SHEET AE111
210	VCT	4" RUBBER	PAINT	PAINT	PAINT	PAINT	SEE SHEET AE111
211	-	-	-	-	-	-	SEE SHEET AE111
212	VCT	4" RUBBER	PAINT	PAINT	PAINT	PAINT	SEE SHEET AE111
213	CARPET	4" RUBBER	PAINT	PAINT	PAINT	PAINT	SEE SHEET AE111
214	-	-	-	-	-	-	SEE SHEET AE111

CT = CERAMIC TILE
VCT = VINYL COMPOSITION TILE
SC = SEALED CONCRETE

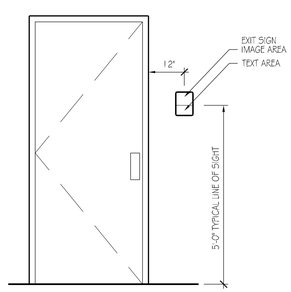

NOTE: MOUNT TO WALL ON THE LATCH SIDE OF THE DOOR

A2 ACCESSIBILITY SIGNAGE TYP. MOUNTING

SCALE: 1/2" = 1'-0"

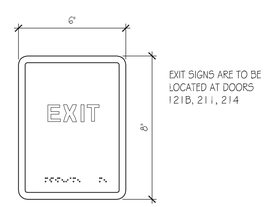

A3 ACCESSIBILITY SIGN

SCALE: 3" = 1'-0"

CRSA
ARCHITECTURE
PLANNING
INTERIORS
649 E SOUTH TEMPLE
SALT LAKE CITY, UT 84102
801.355.5915
www.crsa-us.com

STRUCTURAL ENGINEER
CALDER RICHARDS CONSULTING ENGINEERS
634 South 400 West Suite 100
SALT LAKE CITY, UT 84101
(801) 466-1699 (801) 467-2495 FAX
stephen@crceng.com

MECHANICAL ENGINEER
SMD
986 WEST ATHERTON DRIVE STE. 200
TAYLORSVILLE, UTAH 84123
(801)268-3828 FAX (801)268-3297
# #

ELECTRICAL ENGINEER
SPECTRUM
175 S MAIN STREET STE. 300
SALT LAKE CITY, UTAH 84111
(801)328-5151 (801)401-9471
# #

PROJECT:
BUILDING 3030 REMODEL
UTAH NATIONAL GUARD
CAMP W.G. WILLIAMS
17800 South Redwood Road
Riverton, Utah 84065

UTAH NATIONAL GUARD
12953 SOUTH

BN	BID DOCUMENTS	8-30-2010
CD	PLAN CHECK	8-30-2010

PROJECT NO: B10-029
CAD DWG FILE: AE101.DWG
DRAWN BY: MC
CHECKED BY: DT

LEVEL 1 PARTIAL FLOOR PLAN

AE101

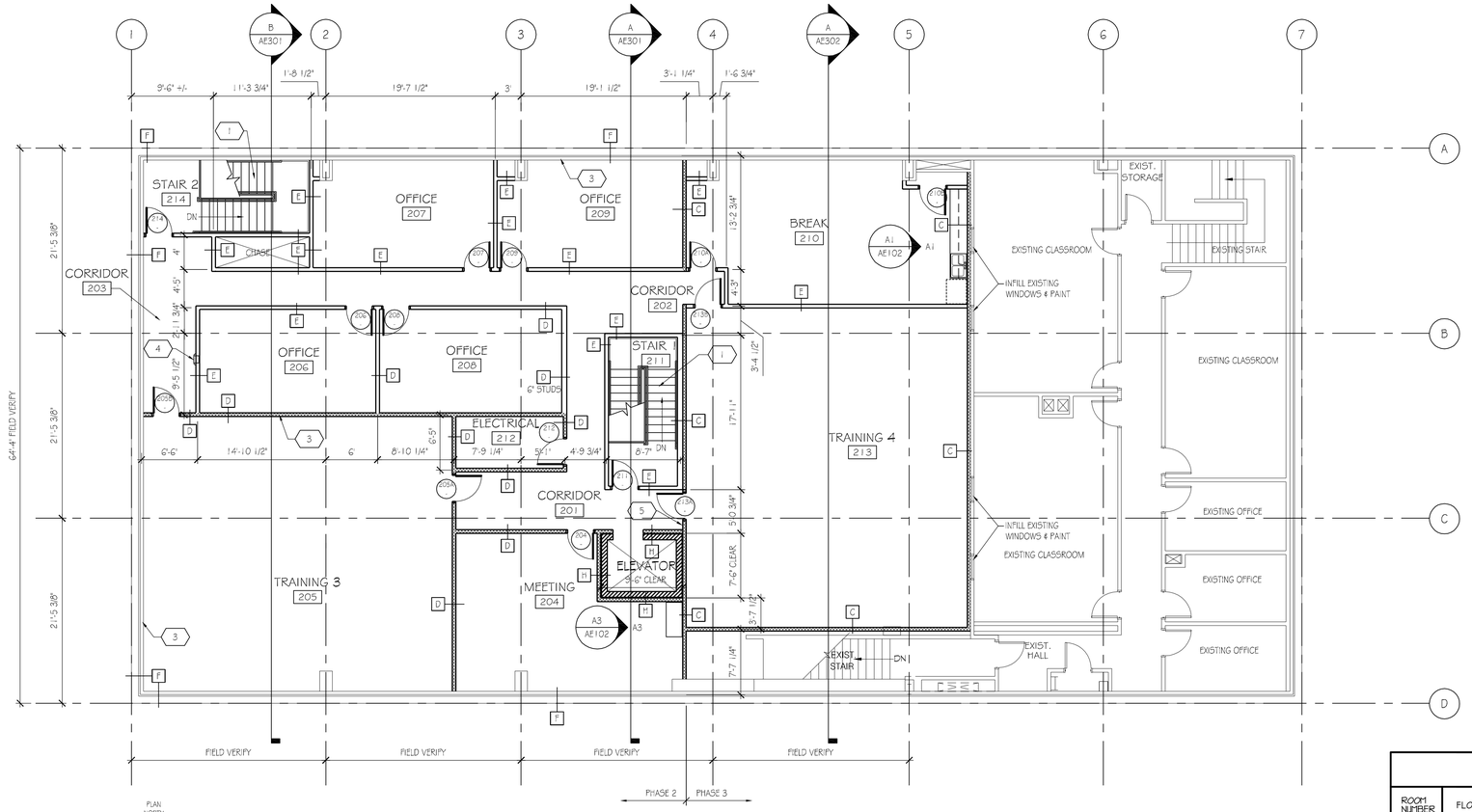

PLAN NORTH

A LEVEL TWO FLOOR PLAN

SCALE: 1/8" = 1'-0"

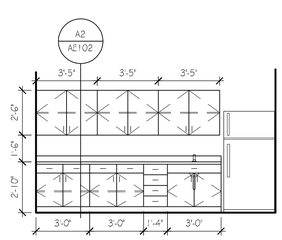

A1 BREAK ROOM

SCALE: 1/4" = 1'-0"

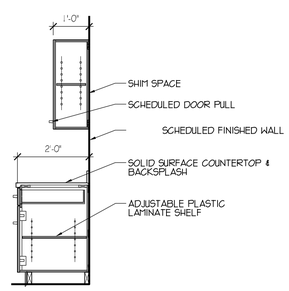

A2 CABINETRY SECTION

SCALE: 1/2" = 1'-0"

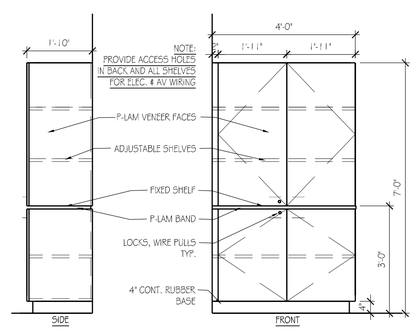

A3 CABINETRY ELEVATIONS

SCALE: 1/2" = 1'-0"

DOOR SCHEDULE

DOOR NUMBER	SINGLE	DOUBLE	DOOR TYPE	DOOR SIZE	HARDWARE GROUP	FRAME TYPE	COMMENTS
121	●		T-2	S-1	H-5	F-1	
122A	●		T-2	S-2	H-5	F-1	
122B		●	T-1	S-1	H-6	F-1	●
123	●		T-2	S-2	H-1	F-1	
124	●		T-2	S-2	H-1	F-1	
204	●		T-2	S-1	H-4	F-1	
205	●		T-2	S-1	H-4	F-1	
206	●		T-2	S-1	H-4	F-1	
207	●		T-2	S-1	H-4	F-1	
208	●		T-2	S-1	H-4	F-1	
209	●		T-2	S-1	H-4	F-1	
210A	●		T-2	S-1	H-4	F-1	
210B	●		T-2	S-1	H-2	F-1	
211	●		T-2	S-1	H-5	F-1	
212	●		-	S-1		F-1	
213A	●		T-2	S-1	H-4	F-1	
213B	●		T-2	S-1	H-4	F-1	
214	●		T-2	S-1	H-5	F-1	

DOOR TYPES
T-1 = HOLLOW METAL INSULATED FLUSH
T-2 = SOLID CORE WOOD - PLAIN SLICED OAK VENEER

DOOR SIZES
S-1 = 3'-0" x 7'-0" x 1-3/4"
S-2 = 3'-6" x 7'-0" x 1-3/4"

HARDWARE GROUPS
H-1 STORAGE DOOR
H-2 CLOSET DOOR
H-3 ELEVATOR EQUIPMENT ROOM
H-4 OFFICE DOORS
H-5 STAIRWELL / EXIT DOOR
H-6 EXTERIOR DOOR

FRAME TYPES
F-1 = HOLLOW METAL

COMMENTS
SEE SHEET AE501 FOR DOOR DETAILS
ALL DOORS ARE TO BE PAINTED
DOOR 122B TO BE REMOVED AT THE END OF PHASE 4. IN-FILL OPENING WITH FRAMING, AND INTERIOR & EXTERIOR MATERIALS TO MATCH ADJACENT.

KEYED NOTES

1. NEW STAIR
2. INFILL OPENING - MATCH EXTERIOR FINISHES (PHASE 3)
3. SOUND BATT INSULATION FULL HEIGHT IN WALL CAVITY
4. FIRE-EXTINGUISHER IN CABINET
5. ACCESSIBILITY SIGNAGE - SEE DETAILS ON SHEET AE101
6. APPLY FOIL AND (1) LAYER OF GYP. BD. AROUND & UNDERNEATH OVERHANG AND PAINT. TIE IN TO NEW CONSTRUCTION AND GROUND THE FOIL SO AS TO MAINTAIN CONTINUITY OF RF ENCLOSURE.

FINISH SCHEDULE

ROOM NUMBER	FLOOR	BASE	WALLS NORTH	WALLS EAST	WALLS SOUTH	WALLS WEST	CEILING
121	CARPET	4" RUBBER	PAINT	PAINT	PAINT	PAINT	SEE SHEET AE111
122	CARPET	4" RUBBER	PAINT	PAINT	PAINT	PAINT	SEE SHEET AE111
123	VCT	4" RUBBER	PAINT	PAINT	PAINT	PAINT	SEE SHEET AE111
124	VCT	4" RUBBER	PAINT	PAINT	PAINT	PAINT	SEE SHEET AE111
204	CARPET	4" RUBBER	PAINT	PAINT	PAINT	PAINT	SEE SHEET AE111
205	CARPET	4" RUBBER	PAINT	PAINT	PAINT	PAINT	SEE SHEET AE111
206	CARPET	4" RUBBER	PAINT	PAINT	PAINT	PAINT	SEE SHEET AE111
207	CARPET	4" RUBBER	PAINT	PAINT	PAINT	PAINT	SEE SHEET AE111
208	CARPET	4" RUBBER	PAINT	PAINT	PAINT	PAINT	SEE SHEET AE111
209	CARPET	4" RUBBER	PAINT	PAINT	PAINT	PAINT	SEE SHEET AE111
210	VCT	4" RUBBER	PAINT	PAINT	PAINT	PAINT	SEE SHEET AE111
211	-	-	-	-	-	-	SEE SHEET AE111
212	VCT	4" RUBBER	PAINT	PAINT	PAINT	PAINT	SEE SHEET AE111
213	CARPET	4" RUBBER	PAINT	PAINT	PAINT	PAINT	SEE SHEET AE111
214	-	-	-	-	-	-	SEE SHEET AE111

CT = CERAMIC TILE
VCT = VINYL COMPOSITION TILE
SC = SEALED CONCRETE

CRSA
ARCHITECTURE
PLANNING
INTERIORS
649 E SOUTH TEMPLE
SALT LAKE CITY, UT 84102
801.355.5915
www.crsa-us.com

STRUCTURAL ENGINEER
CALDER RICHARDS CONSULTING ENGINEERS
634 South 400 West Suite 100
SALT LAKE CITY, UT 84101
(801) 466-1699 (801) 467-2495 FAX
stephen@crceng.com

MECHANICAL ENGINEER
SMD
986 WEST ATHERTON DRIVE STE. 200
TAYLORSVILLE, UTAH 84123
(801)268-3828 FAX (801)268-3297
# #

ELECTRICAL ENGINEER
SPECTRUM
175 S MAIN STREET STE. 300
SALT LAKE CITY, UTAH 84111
(801)328-5151 (801)401-9471
# #

PROJECT:
BUILDING 3030 REMODEL
UTAH NATIONAL GUARD
CAMP W.G. WILLIAMS
17800 South Redwood Road
Riverton, Utah 84065

UTAH NATIONAL GUARD
12953 SOUTH

BN	BID DOCUMENTS	8-30-2010
CD	PLAN CHECK	8-30-2010

PROJECT NO: B10-029
CAD DWG FILE: AE102.DWG
DRAWN BY: MC
CHECKED BY: DT

LEVEL 2 FLOOR PLAN

AE102

CEILING FINISH SCHEDULE

C-1	2'-0" X 4'-0" SUSPENDED CLG. SYSTEM.
C-2	GYP. BOARD W/ FOIL LINER
C-3	OPEN TO STRUCTURE ABOVE - PAINT STRUCTURE AND ATTACHMENTS WHERE EXPOSED.
C-4	2'-0" X 4'-0" SUSPENDED CEILING GRID WITHOUT CEILING TILE. EVERYTHING ABOVE CEILING GRID TO BE PANTED BLACK.

KEYED NOTES

1. NEW STAIR
2. INFILL OPENING - MATCH EXTERIOR FINISHES (PHASE 3)
3. SOUND BATT INSULATION FULL HEIGHT IN WALL CAVITY
4. FIRE-EXTINGUISHER IN CABINET
5. ACCESSIBILITY SIGNAGE - SEE DETAILS ON SHEET AE101
6. APPLY FOIL AND (1) LAYER OF GYP. BD. AROUND & UNDERNEATH OVERHANG AND PAINT. TIE IN TO NEW CONSTRUCTION AND GROUND THE FOIL SO AS TO MAINTAIN CONTINUITY OF RF ENCLOSURE.

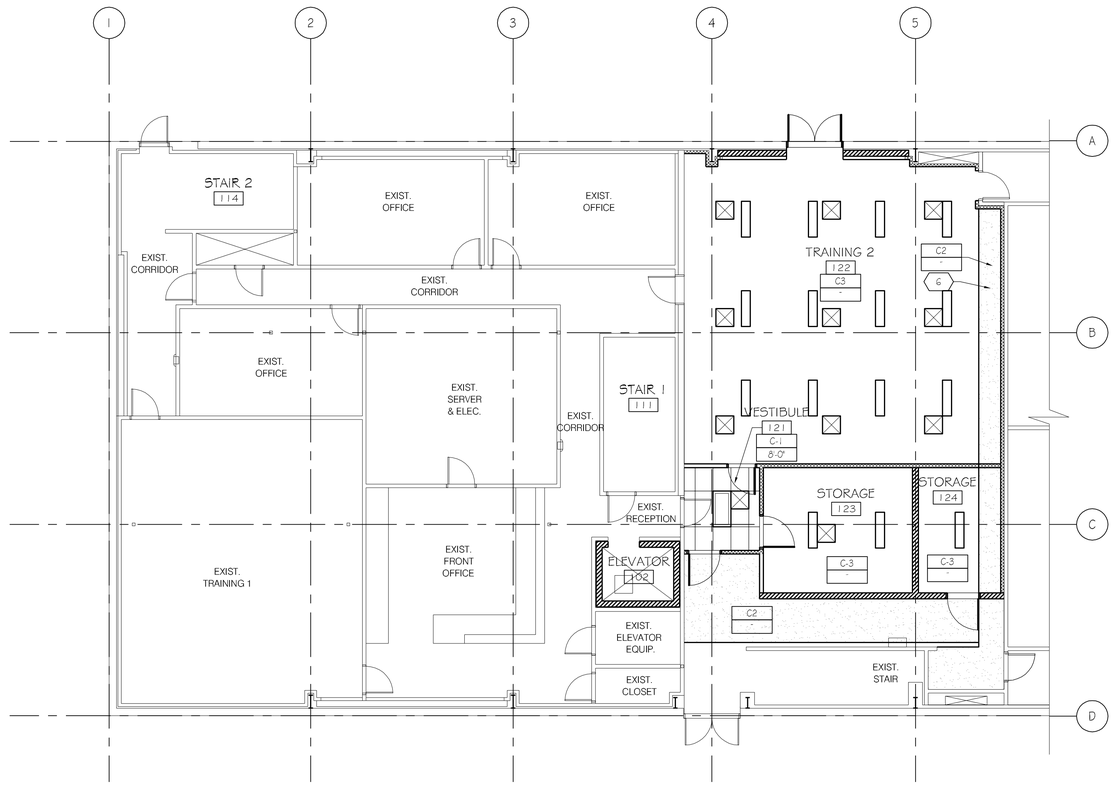

PLAN NORTH

A LEVEL 1 REFLECTED CEILING PLAN

SCALE: 1/8" = 1'-0"

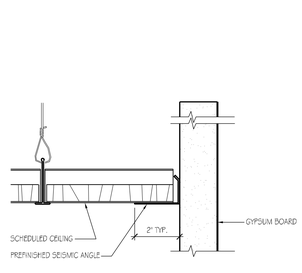

A2 TYP. SEISMIC FINISH ANGLE

NO SCALE

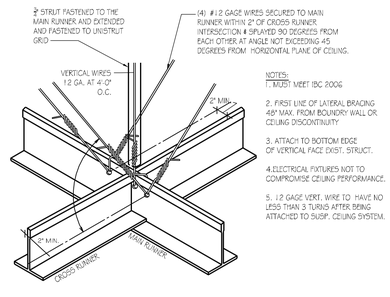

NOTES:
1. MUST MEET IBC 2006
2. FIRST LINE OF LATERAL BRACING 48" MAX. FROM BOUNDRY WALL OR CEILING DISCONTINUITY
3. ATTACH TO BOTTOM EDGE OF VERTICAL FACE EXIST. STRUCT.
4.ELECTRICAL FIXTURES NOT TO COMPROMISE CEILING PERFORMANCE.
5. 12 GAGE VERT. WIRE TO HAVE NO LESS THAN 3 TURNS AFTER BEING ATTACHED TO SUSP. CEILING SYSTEM.

A3 SEISMIC BRACING DETAIL

NO SCALE

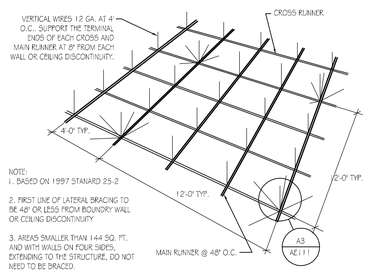

NOTE:
1. BASED ON 1997 STANARD 25-2
2. FIRST LINE OF LATERAL BRACING TO BE 48" OR LESS FROM BOUNDRY WALL OR CEILING DISCONTINUITY
3. AREAS SMALLER THAN 144 SQ. FT. AND WITH WALLS ON FOUR SIDES, EXTENDING TO THE STRUCTURE, DO NOT NEED TO BE BRACED.

A4 TYP. SUSP CLNG. DET.

NO SCALE

CRSA
ARCHITECTURE
PLANNING
INTERIORS
649 E SOUTH TEMPLE
SALT LAKE CITY, UT 84102
801.355.5915
www.crsa-us.com

STRUCTURAL ENGINEER
CALDER RICHARDS CONSULTING ENGINEERS
634 South 400 West Suite 100
SALT LAKE CITY, UT 84101
(801) 466-1699 (801) 467-2495 FAX
stephen@crceng.com

MECHANICAL ENGINEER
SMD
986 WEST ATHERTON DRIVE STE. 200
TAYLORSVILLE, UTAH 84123
(801)268-3828 FAX (801)268-3297
# #

ELECTRICAL ENGINEER
SPECTRUM
175 S MAIN STREET STE. 300
SALT LAKE CITY, UTAH 84111
(801)328-5151 (801)401-9471
# #

PROJECT:
BUILDING 3030 REMODEL
UTAH NATIONAL GUARD
CAMP W.G. WILLIAMS
17800 South Redwood Road
Riverton, Utah 84065

UTAH NATIONAL GUARD
12953 SOUTH

BN	BID DOCUMENTS	8-30-2010
CD	PLAN CHECK	8-30-2010

PROJECT NO: B10-029
CAD DWG FILE: AE111.DWG
DRAWN BY: MC
CHECKED BY: DT

LEVEL 1 REFLECTED CEILING PLAN

AE111

CEILING FINISH SCHEDULE

C-1	2'-0" X 4'-0" SUSPENDED CLG. SYSTEM.
C-2	GYP. BOARD W/ FOIL LINER
C-3	OPEN TO STRUCTURE ABOVE - PAINT STRUCTURE AND ATTACHMENTS WHERE EXPOSED.
C-4	2'-0" X 4'-0" SUSPENDED CEILING GRID WITHOUT CEILING TILE. EVERYTHING ABOVE CEILING GRID TO BE PANTED BLACK.

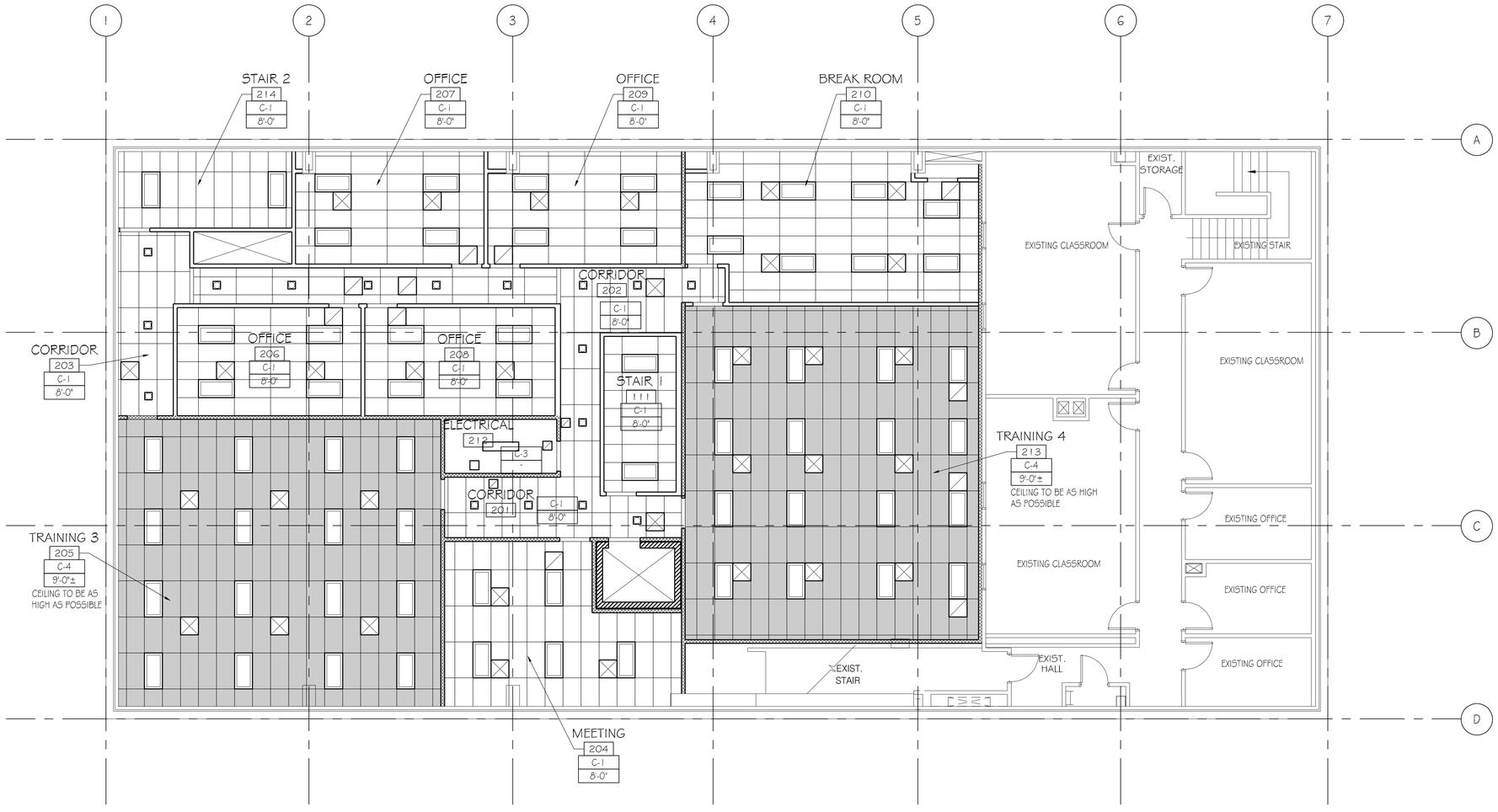

PLAN NORTH

A

LEVEL 2 REFLECTED CEILING PLAN

SCALE: 1/8" = 1'-0"

0 4' 8' 16'

CRSA

ARCHITECTURE
PLANNING
INTERIORS

649 E SOUTH TEMPLE
SALT LAKE CITY, UT 84102
801.355.5915
www.crsa-us.com

STRUCTURAL ENGINEER
CALDER RICHARDS CONSULTING ENGINEERS
634 South 400 West Suite 100
SALT LAKE CITY, UT 84101
(801) 466-1699 (801) 467-2495 FAX
stephen@crceng.com

MECHANICAL ENGINEER
SMD
986 WEST ATHERTON DRIVE STE. 200
TAYLORSVILLE, UTAH 84123
(801)268-3828 FAX (801)268-3297
# #

ELECTRICAL ENGINEER
SPECTRUM
175 S MAIN STREET STE. 300
SALT LAKE CITY, UTAH 84111
(801)328-5151 (801)401-9471
# #

PROJECT:
BUILDING 3030 REMODEL
UTAH NATIONAL GUARD
CAMP W.G. WILLIAMS
17800 South Redwood Road
Riverton, Utah 84065

UTAH NATIONAL GUARD
12953 SOUTH

BN	BID DOCUMENTS	8-30-2010
CD	PLAN CHECK	8-30-2010

PROJECT NO: B10-029
CAD DWG FILE: AE112.DWG
DRAWN BY: MC
CHECKED BY: DT

LEVEL 2
REFLECTED
CEILING PLAN

AE112

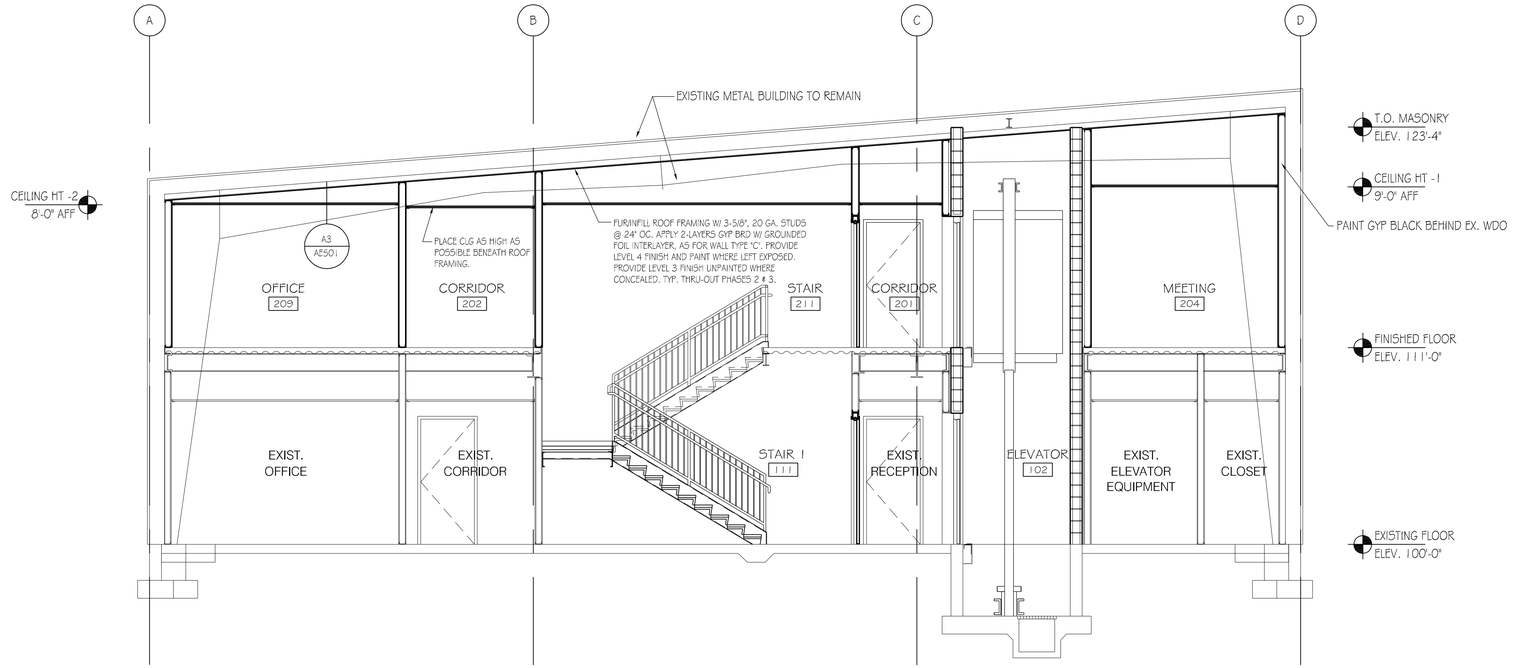

A BUILDING SECTION PHASE 2

SCALE: 1/4" = 1'-0" 0 2' 4' 8'

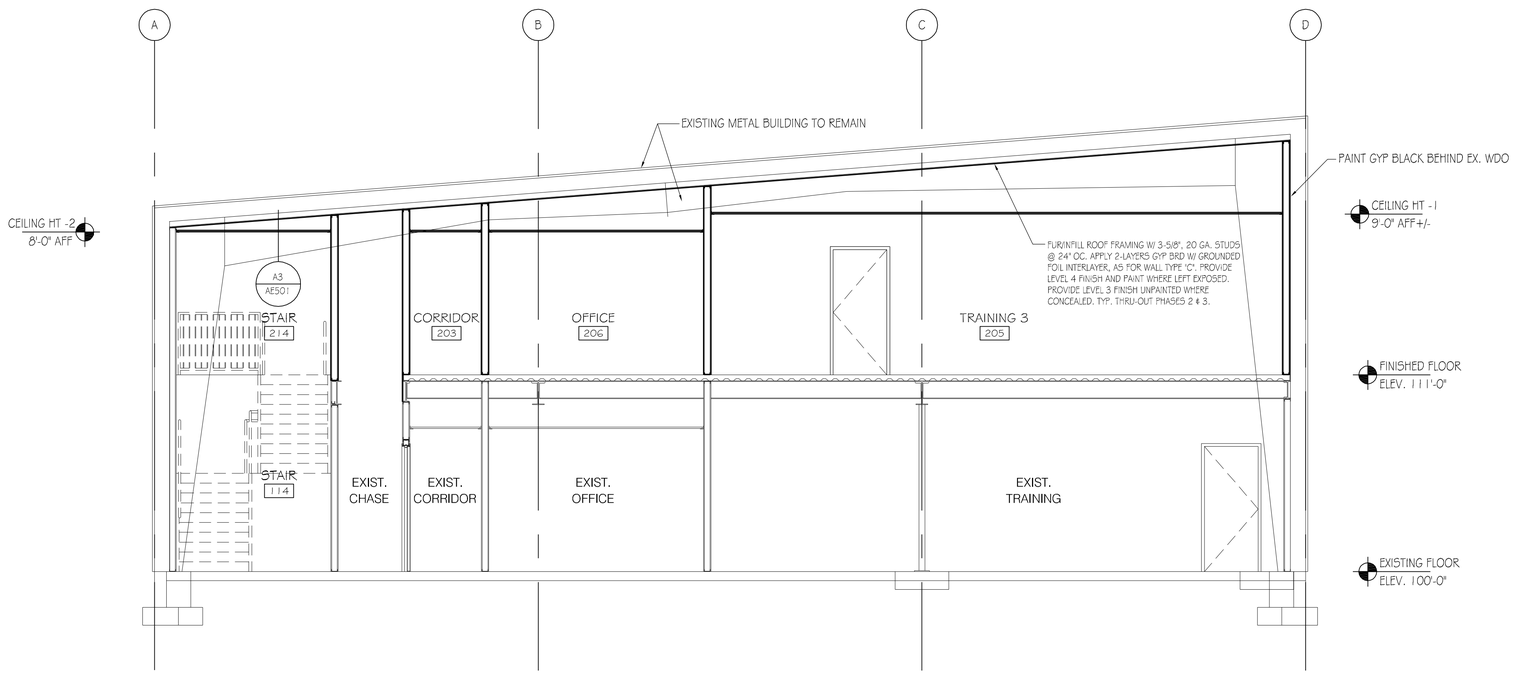

B BUILDING SECTION PHASE 2

SCALE: 1/4" = 1'-0" 0 2' 4' 8'

CRSA
ARCHITECTURE
PLANNING
INTERIORS
649 E SOUTH TEMPLE
SALT LAKE CITY, UT 84102
801.355.5915
www.crsa-us.com

STRUCTURAL ENGINEER
CALDER RICHARDS CONSULTING ENGINEERS
634 South 400 West Suite 100
SALT LAKE CITY, UT 84101
(801) 466-1699 (801) 467-2495 FAX
stephen@crceng.com

MECHANICAL ENGINEER
SMD
986 WEST ATHERTON DRIVE STE. 200
TAYLORSVILLE, UTAH 84123
(801)268-3828 FAX (801)268-3297
# #

ELECTRICAL ENGINEER
SPECTRUM
175 S MAIN STREET STE. 300
SALT LAKE CITY, UTAH 84111
(801)328-5151 (801)401-9471
# #

PROJECT:
BUILDING 3030 REMODEL
UTAH NATIONAL GUARD
CAMP W.G. WILLIAMS
17800 South Redwood Road
Riverton, Utah 84065

UTAH NATIONAL GUARD
12953 SOUTH

BN	BID DOCUMENTS	8-30-2010
CD	PLAN CHECK	8-30-2010

PROJECT NO: B10-029
CAD DWG FILE: AE301.DWG
DRAWN BY: MC
CHECKED BY: DT

BUILDING SECTIONS

AE301

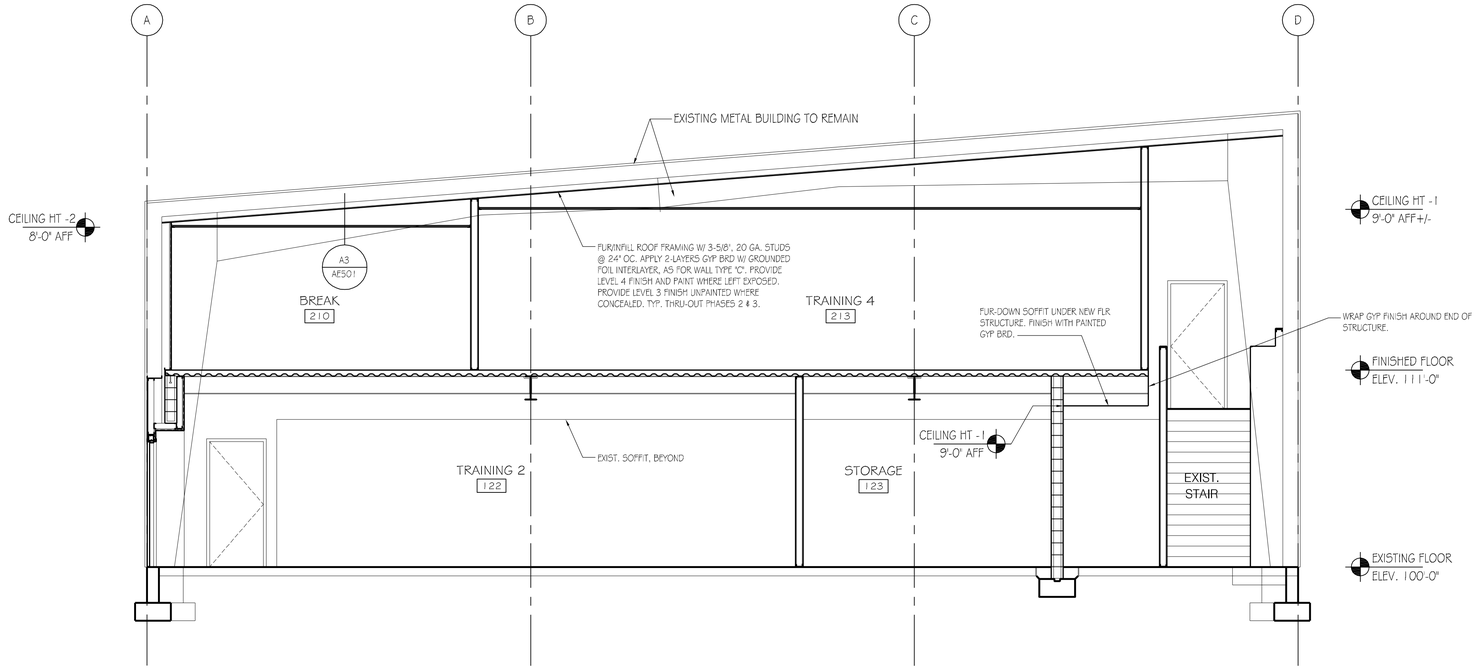

A BUILDING SECTION - PHASES 3 & 4

SCALE: 1/4" = 1'-0" 0 2' 4' 8'

CRSA
ARCHITECTURE
PLANNING
INTERIORS
649 E SOUTH TEMPLE
SALT LAKE CITY, UT 84102
801.355.5915
www.crsa-us.com

STRUCTURAL ENGINEER
CALDER RICHARDS CONSULTING ENGINEERS
634 South 400 West Suite 100
SALT LAKE CITY, UT 84101
(801) 466-1699 (801) 467-2495 FAX
stephen@crceng.com

MECHANICAL ENGINEER
SMD
986 WEST ATHERTON DRIVE STE. 200
TAYLORSVILLE, UTAH 84123
(801)268-3828 FAX (801)268-3297
# #

ELECTRICAL ENGINEER
SPECTRUM
175 S MAIN STREET STE. 300
SALT LAKE CITY, UTAH 84111
(801)328-5151 (801)401-9471
# #

PROJECT:
BUILDING 3030 REMODEL
UTAH NATIONAL GUARD
CAMP W.G. WILLIAMS
17800 South Redwood Road
Riverton, Utah 84065

UTAH NATIONAL GUARD
12953 SOUTH

BN	BID DOCUMENTS	8-30-2010
CD	PLAN CHECK	8-30-2010

PROJECT NO: B10-029
CAD DWG FILE: AE302.DWG
DRAWN BY: MC
CHECKED BY: DT

BUILDING
SECTIONS

AE302

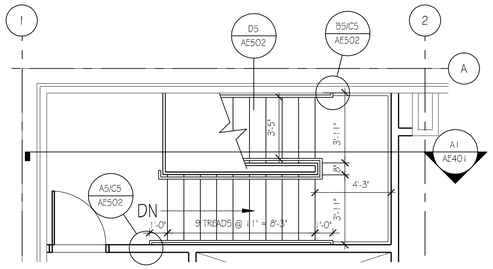

C1 STAIR 214
SCALE: 1/4" = 1'-0"

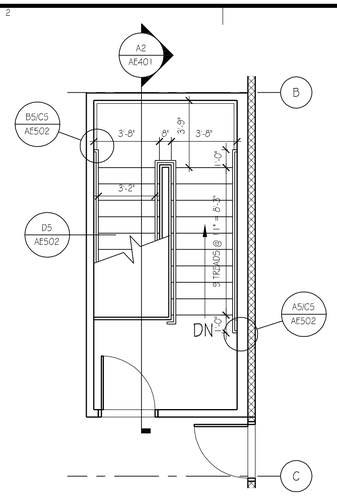

C2 STAIR 211
SCALE: 1/4" = 1'-0"

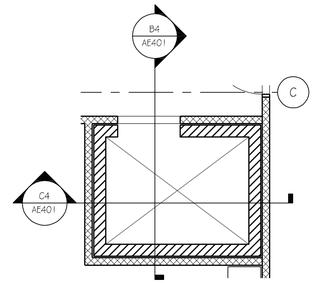

C3 ELEVATOR 102
SCALE: 1/4" = 1'-0"

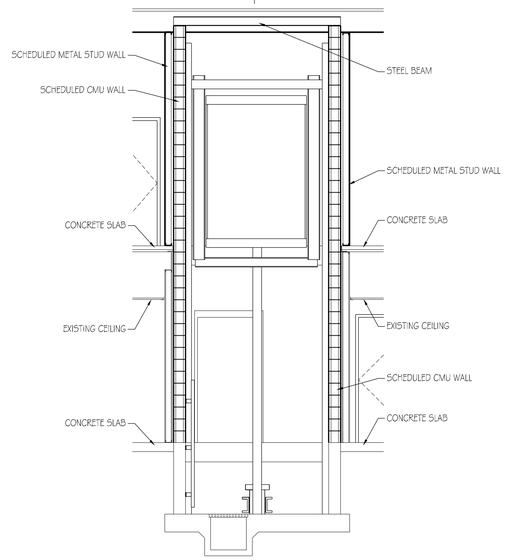

C4 ELEVATOR SECTION
SCALE: 1/4" = 1'-0"

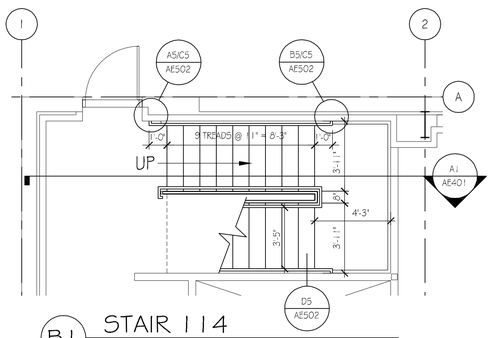

B1 STAIR 114
SCALE: 1/4" = 1'-0"

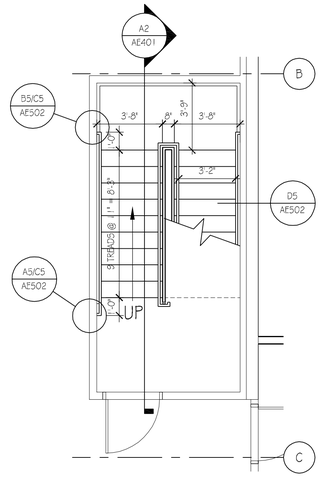

B2 STAIR 111
SCALE: 1/4" = 1'-0"

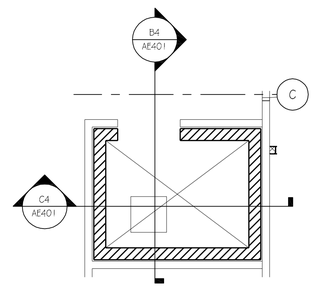

B3 ELEVATOR 102
SCALE: 1/4" = 1'-0"

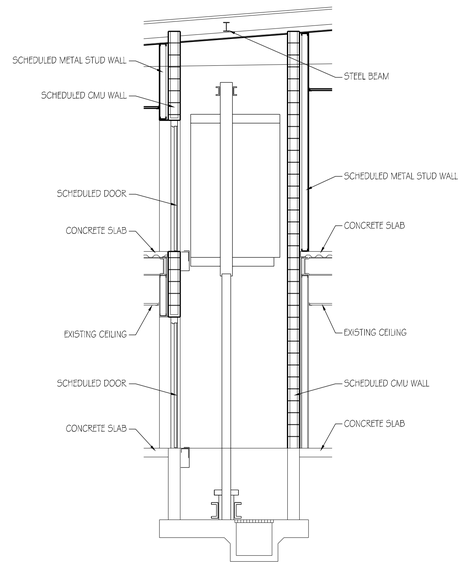

B4 ELEVATOR SECTION
SCALE: 1/4" = 1'-0"

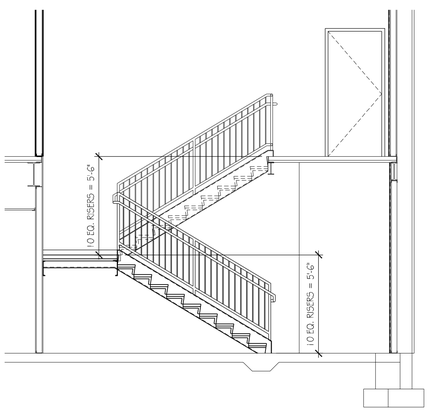

A1 STAIR SECTION
SCALE: 1/4" = 1'-0"

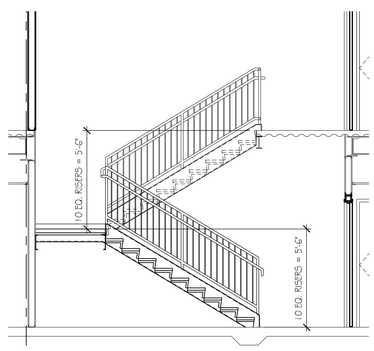

A2 STAIR SECTION
SCALE: 1/4" = 1'-0"

CRSA
ARCHITECTURE
PLANNING
INTERIORS
649 E SOUTH TEMPLE
SALT LAKE CITY, UT 84102
801.355.5915
www.crsa-us.com

STRUCTURAL ENGINEER
CALDER RICHARDS CONSULTING ENGINEERS
634 South 400 West Suite 100
SALT LAKE CITY, UT 84101
(801) 466-1699 (801) 467-2495 FAX
stephen@crceng.com

MECHANICAL ENGINEER
SMD
986 WEST ATHERTON DRIVE STE. 200
TAYLORSVILLE, UTAH 84123
(801)268-3828 FAX (801)268-3297
# #

ELECTRICAL ENGINEER
SPECTRUM
175 S MAIN STREET STE. 300
SALT LAKE CITY, UTAH 84111
(801)328-5151 (801)401-9471
# #

PROJECT:
BUILDING 3030 REMODEL
UTAH NATIONAL GUARD
CAMP W.G. WILLIAMS
17800 South Redwood Road
Riverton, Utah 84065

UTAH NATIONAL GUARD
12953 SOUTH

BN	BID DOCUMENTS	8-30-2010
CD	PLAN CHECK	8-30-2010

PROJECT NO: B10-029
CAD DWG FILE: AE401.DWG
DRAWN BY: MC
CHECKED BY: DT

ENLARGED STAIR & ELEVATOR PLANS AND SECTIONS

AE401

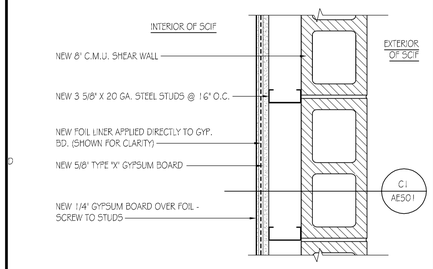

D1 WALL TYPE 'A' PLAN
SCALE: 1 1/2" = 1'-0"

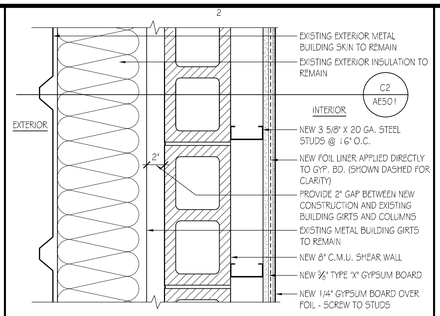

D2 WALL TYPE 'B' PLAN
SCALE: 1 1/2" = 1'-0"

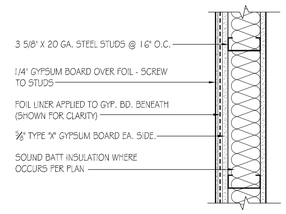

D3 WALL TYPE 'C' PLAN
SCALE: 1 1/2" = 1'-0"

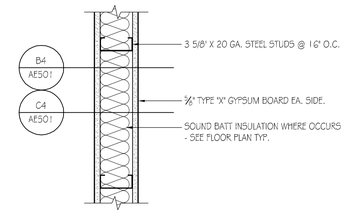

D4 WALL TYPE 'D' PLAN
SCALE: 1 1/2" = 1'-0"

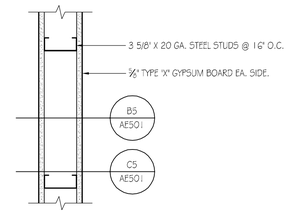

D5 WALL TYPE 'E' PLAN
SCALE: 1 1/2" = 1'-0"

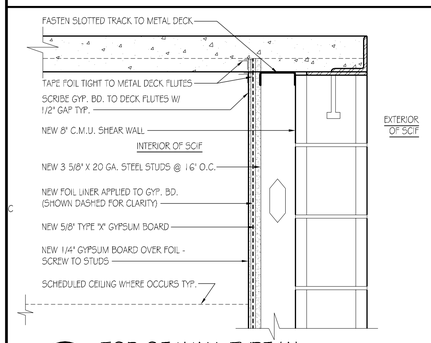

C1 TOP OF WALL TYPE 'A'
SCALE: 1 1/2" = 1'-0"

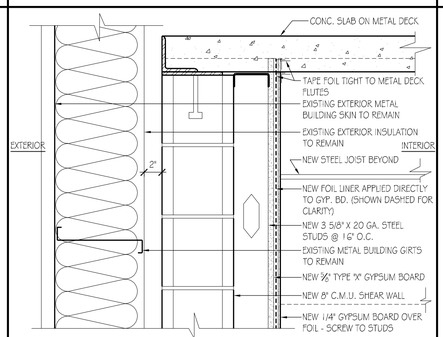

C2 TOP OF WALL TYPE 'B'
SCALE: 1 1/2" = 1'-0"

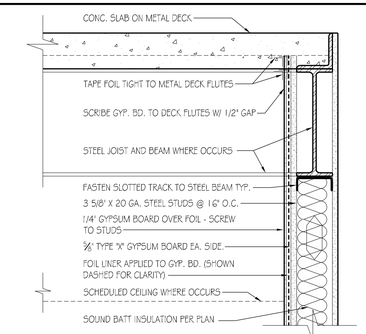

C3 TOP OF WALL TYPE 'C'
SCALE: 1 1/2" = 1'-0"

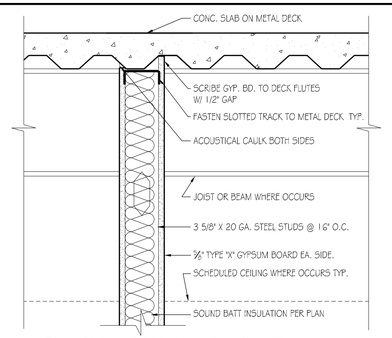

C4 TOP OF WALL TYPE 'D'
SCALE: 1 1/2" = 1'-0"

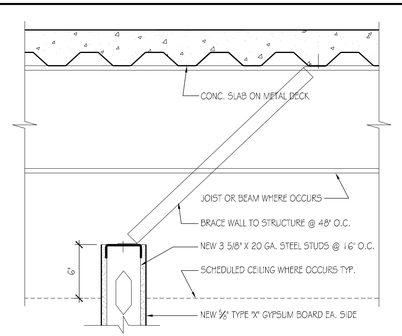

C5 TOP OF WALL TYPE 'E'
SCALE: 1 1/2" = 1'-0"

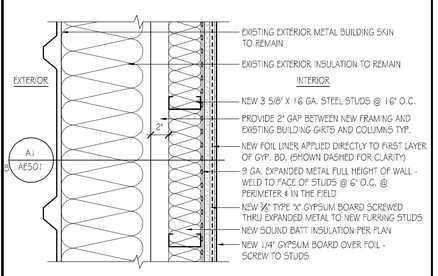

B1 WALL TYPE 'F' PLAN
SCALE: 1 1/2" = 1'-0"

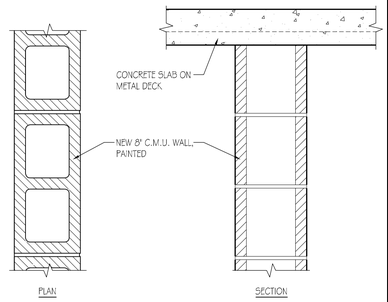

B2 WALL TYPE 'G' PLAN
SCALE: 1 1/2" = 1'-0"

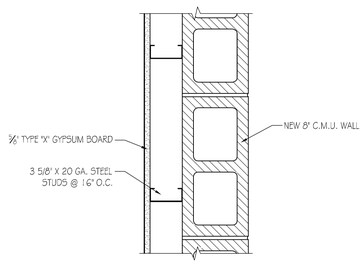

B3 WALL TYPE 'H' PLAN
SCALE: 1 1/2" = 1'-0"

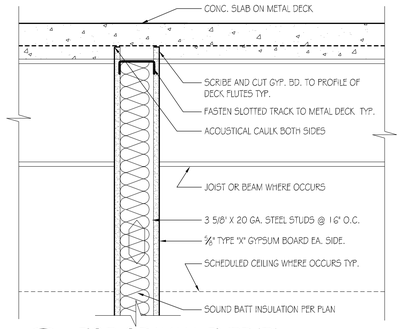

B4 TOP OF WALL TYPE 'D'
SCALE: 1 1/2" = 1'-0"

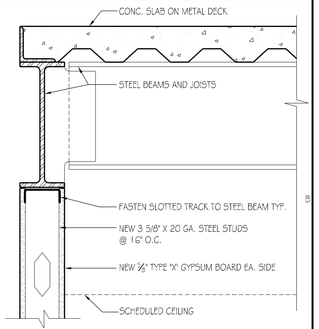

B5 TOP OF WALL TYPE 'E' @ STAIRS
SCALE: 1 1/2" = 1'-0"

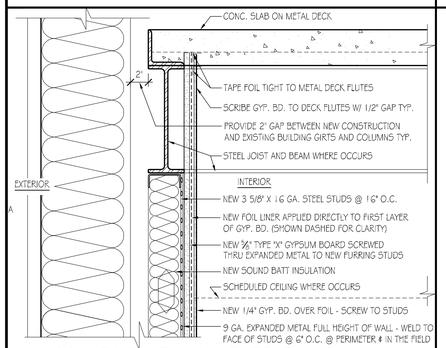

A1 TOP OF WALL TYPE 'F'
SCALE: 1 1/2" = 1'-0"

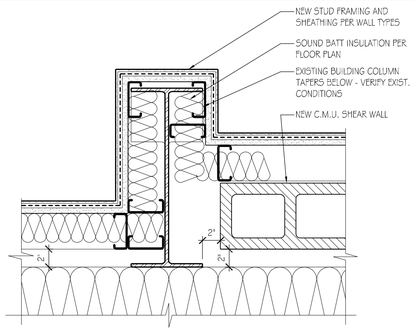

A2 FURRING @ EXIST. BLDG. COL.
SCALE: 1 1/2" = 1'-0"

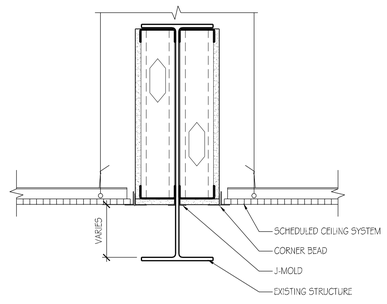

A3 CEILING @ EXISTING STRUCTURE
SCALE: 1 1/2" = 1'-0"

CRSA
ARCHITECTURE
PLANNING
INTERIORS
649 E SOUTH TEMPLE
SALT LAKE CITY, UT 84102
801.355.5915
www.crsa-us.com

STRUCTURAL ENGINEER
CALDER RICHARDS CONSULTING ENGINEERS
634 South 400 West Suite 100
SALT LAKE CITY, UT 84101
(801) 466-1699 (801) 467-2495 FAX
stephen@crceng.com

MECHANICAL ENGINEER
SMD
986 WEST ATHERTON DRIVE STE. 200
TAYLORSVILLE, UTAH 84123
(801)268-3828 FAX (801)268-3297
# #

ELECTRICAL ENGINEER
SPECTRUM
175 S MAIN STREET STE. 300
SALT LAKE CITY, UTAH 84111
(801)328-5151 (801)401-9471
# #

PROJECT:
BUILDING 3030 REMODEL
UTAH NATIONAL GUARD
CAMP W.G. WILLIAMS
17800 South Redwood Road
Riverton, Utah 84065

UTAH NATIONAL GUARD
12953 SOUTH

BN	BID DOCUMENTS	8-30-2010
CD	PLAN CHECK	8-30-2010

PROJECT NO: B10-029
CAD DWG FILE: AE501.DWG
DRAWN BY: MC
CHECKED BY: DT

DETAILS AND WALL TYPES

AE501

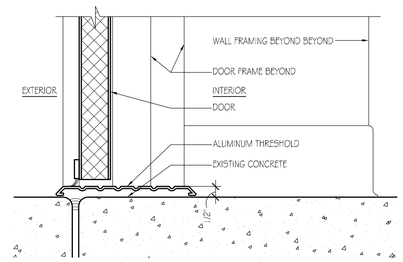

D3 EXT. DOOR THRESHOLD
SCALE: 1 1/2" = 1'-0"

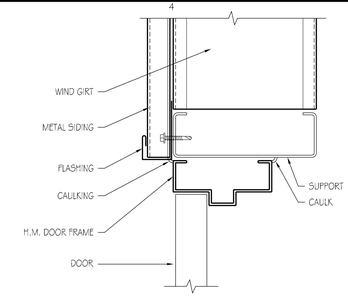

D4 H.M. DOOR HEAD
SCALE: 3" = 1'-0"

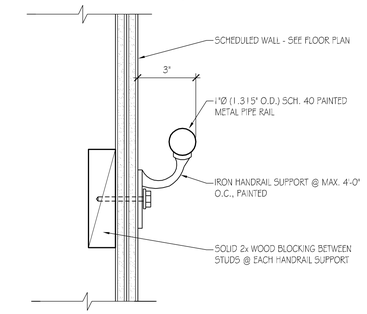

D5 HANDRAIL TO WALL CON.
SCALE: 3" = 1'-0"

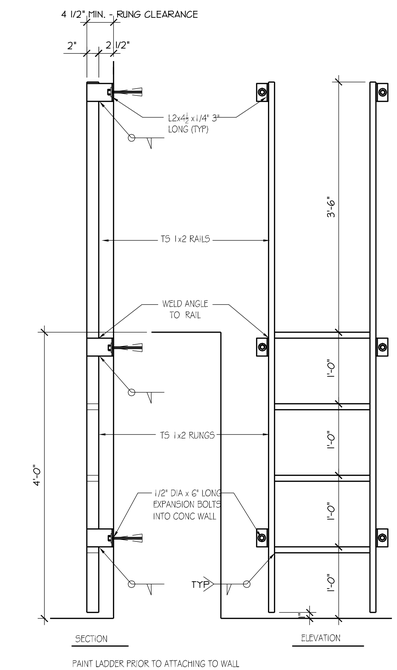

B3 ELEVATOR PIT LADDER DETAIL
SCALE: 1"= 1'-0"

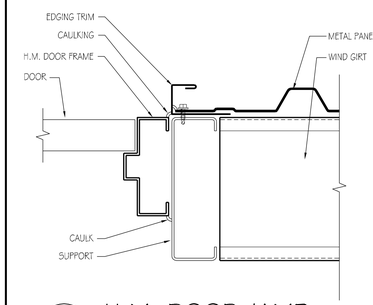

C4 H.M. DOOR JAMB
SCALE: 3" = 1'-0"

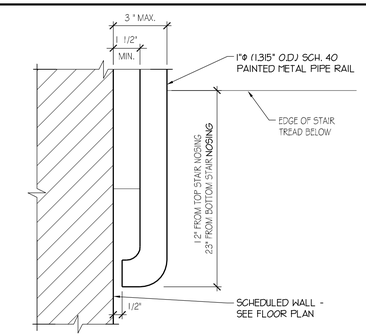

C5 END RAIL TO WALL CON.
SCALE: 3" = 1'-0"

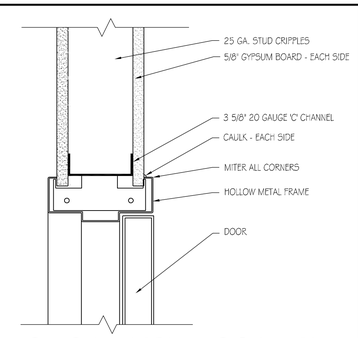

B4 HOLLOW METAL DOOR HEAD
SCALE: 3" = 1'-0"

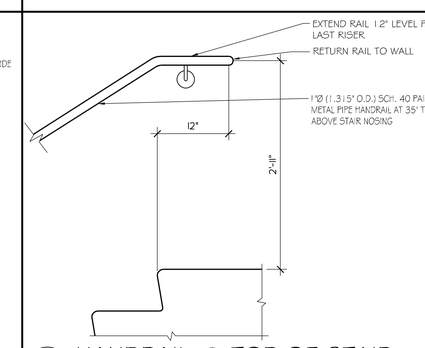

B5 HANDRAIL @ TOP OF STAIR
SCALE: 1"= 1'-0"

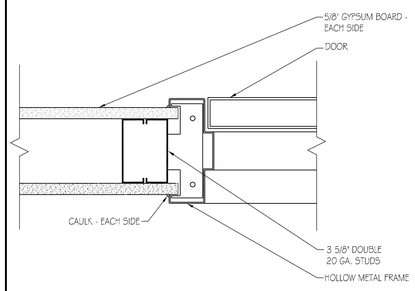

A4 HOLLOW METAL DOOR JAMB
SCALE: 3" = 1'-0"

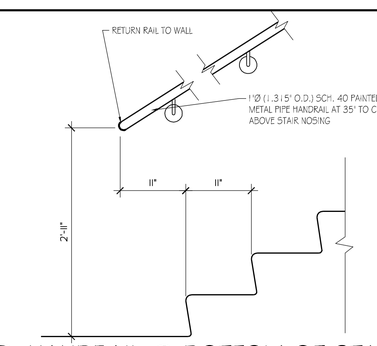

A5 HANDRAIL @ BOTTOM OF STAIR
SCALE: 1"= 1'-0"

CRSA
ARCHITECTURE
PLANNING
INTERIORS
649 E SOUTH TEMPLE
SALT LAKE CITY, UT 84102
801.355.5915
www.crsa-us.com

STRUCTURAL ENGINEER
CALDER RICHARDS CONSULTING ENGINEERS
634 South 400 West Suite 100
SALT LAKE CITY, UT 84101
(801) 466-1699 (801) 467-2495 FAX
stephen@crceng.com

MECHANICAL ENGINEER
SMD
986 WEST ATHERTON DRIVE STE. 200
TAYLORSVILLE, UTAH 84123
(801)268-3828 FAX (801)268-3297
# #

ELECTRICAL ENGINEER
SPECTRUM
175 S MAIN STREET STE. 300
SALT LAKE CITY, UTAH 84111
(801)328-5151 (801)401-9471
# #

PROJECT:
BUILDING 3030 REMODEL
UTAH NATIONAL GUARD
CAMP W.G. WILLIAMS
17800 South Redwood Road
Riverton, Utah 84065

UTAH NATIONAL GUARD
12953 SOUTH

BN	BID DOCUMENTS	8-30-2010
CD	PLAN CHECK	8-30-2010

PROJECT NO: B10-029
CAD DWG FILE: AE502.DWG
DRAWN BY: MC
CHECKED BY: DT

DETAILS

AE502

STRUCTURAL NOTES

GENERAL

1. ALL DESIGN, CONSTRUCTION, AND INSPECTION SHALL BE IN CONFORMANCE WITH THE 2009 INTERNATIONAL BUILDING CODE.
2. THE CONTRACTOR SHALL VERIFY ALL DIMENSIONS AND CONDITIONS AT THE SITE.
3. ALL OMISSIONS OR CONFLICT'S BETWEEN THE VARIOUS ELEMENTS OF THE WORKING DRAWINGS AND/OR SPECIFICATIONS SHALL BE BROUGHT TO THE ATTENTION OF THE ARCHITECT AND/OR STRUCTURAL ENGINEER BEFORE PROCEEDING WITH ANY WORK INVOLVED.
4. DRAWINGS INDICATE THE FINISHED PRODUCT. THEY DO NOT INDICATE A METHOD OF CONSTRUCTION. CONTRACTOR SHALL TAKE ALL PRECAUTIONS NECESSARY TO PROTECT THE STRUCTURE DURING CONSTRUCTION. SUCH PRECAUTIONS SHALL INCLUDE, BUT NOT BE LIMITED TO, BRACING, SHORING FOR CONSTRUCTION EQUIPMENT, ETC.
5. THE CONTRACTOR SHALL BE RESPONSIBLE FOR COMPENSATING THE OWNER FOR ANY CHANGES MADE AS A RESULT OF A DEVIATION FROM THE CONTRACT DOCUMENTS, DEVIATION FROM THE SPECIFICATIONS, FAULTY MATERIALS, OR FAULTY WORKMANSHIP.
6. OPTIONS ARE FOR THE CONTRACTORS CONVENIENCE. THE CONTRACTOR SHALL BE RESPONSIBLE FOR COORDINATING ALL REQUIRED DESIGN CHANGES. COST ASSOCIATED WITH ANY DESIGN WORK INITIATED BY THE OPTION SHALL BE BORNE BY THE CONTRACTOR.
7. CONTRACTOR SHALL BE RESPONSIBLE FOR SAFETY AND PROTECTION WITHIN AND ADJACENT TO THE JOB SITE.
8. TEMPORARY SHORING AND BRACING SHALL BE PROVIDED WHEREVER NECESSARY TO TAKE CARE OF ALL LOADS TO WHICH THE STRUCTURE MAY BE SUBJECTED. SUCH BRACING SHALL BE LEFT IN PLACE AS LONG AS MAY BE REQUIRED FOR SAFETY OR UNTIL ALL THE STRUCTURAL ELEMENTS ARE COMPLETE.
9. DURING AND AFTER CONSTRUCTION THE CONTRACTOR AND/OR OWNER SHALL KEEP LOADS ON THE STRUCTURE WITHIN THE LIMITS OF THE DESIGN LOADS.
10. THE GENERAL CONTRACTOR SHALL HAVE SHOP DRAWINGS REVIEWED BY THE ARCHITECT PRIOR TO THE FABRICATION OR ERECTION FOR THE FOLLOWING ITEMS: REINFORCING STEEL, STRUCTURAL STEEL, AND MISCELLANEOUS METALS.
11. ALL DETAILS, SECTIONS, AND NOTES ARE INTENDED TO BE TYPICAL AND SHALL APPLY TO SIMILAR SITUATIONS UNLESS NOTED OR SHOWN OTHERWISE.
12. REFER TO THE SPECIFICATIONS FOR ADDITIONAL INFORMATION NOT COVERED ON THE DRAWINGS.
13. OBSERVATION VISITS TO THE JOB SITE BY FIELD REPRESENTATIVES OF CALDER RICHARDS CONSULTING ENGINEERS SHALL NEITHER BE CONSTRUED AS INSPECTION NOR APPROVAL OF CONSTRUCTION.
14. SIZES, LOCATIONS, AND ANCHORAGES OF EQUIPMENT SHALL BE VERIFIED IN THE FIELD WITH EQUIPMENT MANUFACTURERS (SUPPLIERS) PRIOR TO PLACING CONCRETE OR FABRICATING STEEL.

FOOTINGS

1. ALL FOOTINGS SHALL BEAR 12" MINIMUM INTO ORIGINAL UNDISTURBED EARTH OR ON ENGINEERED FILL COMPACTED TO 95% OF MAXIMUM RELATIVE DENSITY BASED ON ASTM D1557. SUCH FILL SHALL BE PLACED IN LAYERS NOT TO EXCEED 6" IN DEPTH AFTER COMPACTION AND SHALL EXTEND DOWN TO IN-SITU GRANULAR SOILS.
2. FOOTING ELEVATIONS SHOWN ON PLAN ARE TOP OF FOOTINGS AND ARE MINIMUM DEPTH. DIFFERENT OR UNUSUAL CONDITIONS SHALL BE REPORTED TO THE ARCHITECT AND/OR ENGINEER.
3. WALL FOOTINGS, WHERE NOT SHOWN OTHERWISE, SHALL BE 12" THICK WITH AN 8" SPREAD EACH SIDE OF WALL AND PROVIDE 1 #5 CONTINUOUS AT BOTTOM FOR EACH 8" OF FOOTING WIDTH.
4. WHERE 6" DIAMETER OR LARGER PIPE PASSES THROUGH AN INTERIOR FOUNDATION WALL, STEP THE FOOTING DOWN TO PASS BELOW PIPE AND THEN STEP BACK UP TO INDICATED ELEVATION. PROVIDE PIPE SLEEVE THROUGH FOUNDATION WALL.
5. SITE PREPARATION, PLACEMENT AND COMPACTION OF STRUCTURAL FILL SHALL BE OBSERVED AND TESTED BY THE OWNER'S TESTING LABORATORY.
6. SLABS ON GRADE SHALL BE UNDERLAIN BY A MINIMUM OF 4" OF FREE-DRAINING GRANULAR MATERIAL. GRANULAR MATERIAL SHALL BE PLACED UPON PROPERLY PREPARED SUBGRADE AS DESCRIBED ABOVE.

CONCRETE

1. CONCRETE SHALL ATTAIN THE FOLLOWING MINIMUM COMPRESSIVE STRENGTHS AT 28 DAYS:
   FOOTINGS.....3000 PSI
   SLABS ON GRADE & SUSPENDED SLABS.....4000 PSI
2. A STATEMENT OF MIX DESIGN FOR ALL CONCRETE SHALL BE SUBMITTED TO AND REVIEWED BY THE STRUCTURAL ENGINEER PRIOR TO COMMENCING WORK.
3. ALL CONCRETE WORK SHALL BE PLACED, CURED, STRIPPED, AND PROTECTED AS DIRECTED BY THE SPECIFICATIONS AND ACI STANDARDS AND PRACTICES.
4. BEFORE CONCRETE IS POURED CHECK WITH ALL TRADES TO ENSURE PROPER PLACEMENT OF ALL OPENINGS, SLEEVES, CURBS, CONDUITS, BOLTS, INSERTS, ETC. RELATIVE TO WORK.
5. ADD (2) #5 BARS MINIMUM AROUND ALL OPENINGS (UNLESS OTHERWISE NOTED) AND EXTEND 24" BEYOND CORNER OF OPENING.
6. WHERE OPENINGS LARGER THAN 16" IN ANY DIRECTION OCCUR IN WALLS OR SLABS, PROVIDE SAME SIZE ADDITIONAL, FULL LENGTH REINFORCING AT EACH SIDE OF OPENING EQUAL TO 1/2 THE NUMBER OF BARS INTERRUPTED BY THE OPENING. SPACE ADDITIONAL BARS AT 4 x BAR DIAMETER.
7. UNLESS OTHERWISE NOTED, SLABS ON GRADE SHALL BE 4" THICK AND SHALL BE REINFORCED WITH 6x6-W1.4xW1.4 WELDED WIRE FABRIC.
8. WHERE INTERIOR MASONRY WALLS DO NOT BEAR ON A FOOTING PROVIDE A TYPICAL THICKENED SLAB (12" THICK x 16" WIDE) UNDER WALL. REINFORCE WITH (2) #4 CONTINUOUS. DOWEL WALL REINFORCING TO SLAB.

MASONRY

1. ALL MASONRY SHALL BE REINFORCED WITH BOTH HORIZONTAL AND VERTICAL REINFORCEMENT. ALL BLOCK CELLS OR BRICK CAVITIES WITH REINFORCEMENT SHALL BE GROUTED FULL USING 2000 PSI GROUT. CELLS SHALL BE ALIGNED TO PRESERVE UNOBSTRUCTED VERTICAL CAVITIES OF 2" x 3" MINIMUM.
2. CONCRETE FOR BLOCK FILL SHALL HAVE 3/8 INCH MAXIMUM SIZE COURSE AGGREGATE AND SUFFICIENT WATER SO THE CONCRETE WILL FLOW INTO THE BLOCK CELLS WITHOUT LEAVING VOIDS. WHERE BEAMS BEAR ON CONCRETE BLOCK WALLS. BLOCK CELLS SHALL BE FILLED WITH CONCRETE 1'-4" WIDE TO FOUNDATION AND REINFORCE WITH A #5 EACH CELL, UNLESS OTHERWISE SHOWN.
3. AN ADDITIONAL VERTICAL BAR (MATCHING WALL REINFORCEMENT) SHALL BE PLACED AT EACH CORNER, END OF WALL, AND JAMB OF ALL OPENINGS.
4. HORIZONTAL BARS SHALL BE PLACED IN BOND BEAMS FILLED WITH GROUT AT THE TOP OF ALL WALLS AND AT 48" O.C. MAXIMUM BETWEEN TOP OF WALL AND FOUNDATION. BOND BEAM UNITS AND REINFORCING SHALL CONTINUE UNINTERRUPTED AROUND ALL CORNERS AND WALL INTERSECTIONS. WHERE STRUCTURAL STEEL COLUMNS OR BEAMS INTERRUPT THE CONTINUITY OF A BOND BEAM, DEFORMED BAR ANCHORS MATCHING BOND BEAM REINFORCEMENT SHALL BE WELDED TO THE STRUCTURAL STEEL TO PROVIDE CONTINUITY.
5. ALL VERTICAL REINFORCING BARS SHALL BE DOWELED TO STRUCTURE BELOW WITH BARS OF SAME SIZE AND SPACING. LAP ALL SPLICES IN MASONRY 48 BAR DIAMETERS. PLACE ALL BARS SECURELY PRIOR TO GROUTING.
6. MASONRY REINFORCEMENT: REINFORCEMENT SHALL BE PLACED IN GROUTED CELLS AND SHALL BE A MINIMUM OF:

WIDTH	HORIZ REINF	VERTICAL REINF
8" WALL	(2)#4 @ 48" OC	#5 @ 32" IN CENTER OF WALL

   IN ADDITION LADDER-TYPE REINFORCING CONSISTING OF #9 WIRE FOR EACH FACE SHELL OF EACH WYTHE SHALL BE USED AT 16 IN. O.C. HORIZONTALLY IN ALL MASONRY WALLS.

   ALL HORIZONTAL REINFORCING SHALL TERMINATE WITH A HOOK AROUND
7. VERTICAL REINFORCING.

   CONCRETE MASONRY UNITS SHALL BE GRADE N UNITS CONFORMING TO
8. A.S.T.M. DESIGNATION C90 AND SHALL HAVE A MINIMUM ULTIMATE COMPRESSIVE STRENGTH OF 1900 PSI ON THE NET SECTION.

   MORTAR SHALL BE TYPE "S" AND SHALL HAVE THE FOLLOWING
9. PROPORTIONS BY VOLUMES:

   PORTLAND CEMENT . . . . . 1 PART
   HYDRATED LIME . . . . . 1/4 - 1/2 PART
   DAMP LOOSE AGGREGATE. . NOT LESS THAN 2-1/4 AND NOT MORE THAN 3 TIMES THE SUM OF CEMENT AND LIME USED.

   STOP GROUT POURS 1-1/2" BELOW TOP OF BLOCK UNITS WHEN WALL
10. CONTINUES ABOVE.

   ALL ANCHOR BOLTS MUST BE PLACED IN GROUTED CELLS.
11.

   ALL REINFORCING SHALL BE IN PLACE PRIOR TO GROUTING. VERTICAL
12. REINFORCING BARS SHALL BE HELD IN POSITION AT THE TOP, BOTTOM AND AT INTERVALS NOT FARTHER APART THAN 200 BAR DIAMETERS. PROVIDE WIRE TIES AT ALL LAP SPLICES.

REINFORCING STEEL

1. ALL REINFORCEMENT SHALL BE DETAILED AND PLACED IN ACCORDANCE WITH ACI DETAILING MANUAL 315-99 AND ACI STANDARD 318-08.
2. REINFORCING STEEL SHALL BE ASTM A615 GRADE 60.
3. WELDED WIRE FABRIC SHALL CONFORM TO ASTM A185. LAP ONE MESH TIE.
4. ALL REINFORCEMENT SHALL BE SECURELY TIED AND HELD IN PLACE.
5. REINFORCING BARS THAT ARE TO BE WELDED, INCLUDING DEFORMED BAR ANCHORS (D.B.A.) SHALL COMPLY WITH ASTM A706 OR ANOTHER WELDABLE GRADE AND SHALL BE WELDED IN ACCORDANCE WITH THE A.W.S. RECOMMENDATIONS.
6. ALL CONTINUOUS REINFORCEMENT SHALL TERMINATE WITH A 90 DEG. TURN OR A SEPARATE CORNER BAR. ALL SPLICES SHALL HAVE A MINIMUM LAP OF 36 BAR DIAMETERS FOR CONCRETE.
7. WHERE THE LENGTH OF A BAR IS GIVEN AND IT IS TO BE HOOKED, THE HOOK SHALL BE IN ADDITION TO THE LENGTH GIVEN, UNLESS SHOWN OTHERWISE.
8. COVER TO MAIN REINFORCEMENT FROM ADJACENT SURFACES SHALL BE AS FOLLOWS UNLESS SHOWN OTHERWISE:
   UNFORMED SURFACES IN CONTACT WITH GROUND OR EXPOSED TO THE WEATHER (BOTTOM OF FOOTINGS). . 3"
   SLABS ON GRADE . . . . . 2"
   FORMED SURFACES IN CONTACT WITH THE GROUND OR EXPOSED TO THE WEATHER (GRADE BMS, WALLS, ETC.), BEAMS AND COLUMNS . . . . . 2"
9. PRIOR TO FABRICATION AND PLACEMENT, SHOP DRAWINGS FOR ALL REINFORCING STEEL SHALL BE REVIEWED BY THE STRUCTURAL ENGINEER.

STRUCTURAL STEEL

1. ALL STRUCTURAL STEEL AND STRUCTURAL STEEL WORK SHALL COMPLY WITH BOTH THE AISC "MANUAL OF STEEL CONSTRUCTION" CONTAINING THE SPECIFICATIONS FOR THE DESIGN, FABRICATION AND ERECTION OF STRUCTURAL STEEL BUILDINGS, INCLUDING THE "CODE OF STANDARD PRACTICES" (LATEST EDITION), AND WITH THE IBC 2009 EDITION.
2. ALL WIDE FLANGE STRUCTURAL STEEL SHALL BE ASTM A992 AND ALL MISCELLANEOUS SHAPES SHALL BE ASTM A36, UNO.
3. STRUCTURAL STEEL TUBING SHALL CONFORM TO ASTM A500 GRADE B; YIELD STRESS = 46 KSI.
4. USE A325 BOLTS FOR STEEL TO STEEL CONNECTIONS AND A307 BOLTS FOR ALL OTHER CONNECTIONS INCLUDING ANCHOR BOLTS. USE 3/4" DIAMETER MINIMUM.
5. PRIOR TO FABRICATION AND ERECTION, SHOP DRAWINGS FOR ALL STEEL ITEMS SHALL BE REVIEWED BY THE STRUCTURAL ENGINEER. THE CONTRACTOR SHALL VERIFY ALL SHOP DRAWING DIMENSIONS WITH STRUCTURAL AND ARCHITECTURAL PLANS AND DETAILS.
6. ALL WELDS SHALL BE MADE WITH E70XX ELECTRODES AND BY WELDERS CERTIFIED BY AWS STANDARDS WITHIN THE PAST 12 MONTHS; PROVIDE WRITTEN CERTIFICATION IF REQUESTED.

STRUCTURAL STEEL, CONT

7. ALL HIGH-STRENGTH BOLTS SHALL BE TIGHTENED TO THE APPROPRIATE MINIMUM BOLT TENSION IN ACCORDANCE WITH AISC "SPECIFICATIONS FOR STRUCTURAL JOINTS USING ASTM A325 OR A490 BOLTS." THE PREFERRED METHOD OF TIGHTENING IS BY USING TENSION CONTROL BOLTS WITH TWIST OFF ENDS. THE TURN-OF-NUT METHOD MAY ALSO BE USED. PROVIDE CARBONIZED WASHERS UNDER THE TURNED ELEMENT.
8. CONCENTRATED LOADS SHALL NOT BE PLACED ON NOR HUNG FROM JOISTS UNLESS THEY ARE PLACED AT PANEL POINTS OR A BRACE IS INSTALLED BETWEEN THE LOAD AND PANEL POINT (SEE DETAIL C5/S501).
9. SPECIAL INSPECTIONS AND TESTING OF WELDS AS REQUIRED BY IBC 2009 SHALL BE PROVIDED BY THE OWNER.
10. WHERE INDICATED ON PLAN PROVIDE 3/4 INCH DIAMETER, 3.5 INCH LONG (AFTER WELDING) HEADED STUD SHEAR CONNECTORS. STUD SHEAR CONNECTORS SHALL COMPLY WITH ASTM A 108-81. WHERE STEEL DECK IS PERPENDICULAR TO BEAMS, STUDS SHALL BE WELDED THROUGH DECK TO BEAM.
11. NUMBERS THAT ARE SHOWN IN PARENTHESIS AT BEAMS ARE NUMBER OF HEADED STUD CONNECTORS THAT ARE TO BE SPACED EQUALLY BETWEEN INTERSECTION BEAMS OR LINES SHOWN ON PLAN.

LIGHT GAGE METAL FRAMING

1. DESIGN, FABRICATION AND ERECTION OF LIGHT-GAGE METAL FRAMING SHALL COMPLY WITH REQUIREMENTS OF: AISC "MANUAL OF STEEL CONSTRUCTION", AWS "STRUCTURAL WELDING CODE", AISI "SPECIFICATION FOR THE DESIGN OF COLD FORMED STEEL STRUCTURAL MEMBERS", AND ICC-ES REPORT ER-4943P.
2. FRAMING SHOWN ON PLANS ARE MINIMUM SIZES AND CONDITIONS. SUBSTITUTION OF FRAMING MEMBERS SHALL BE APPROVED BY ARCHITECT AND ENGINEERS. THEY SHALL HAVE CAPACITY FOR GRAVITY LOADS AND LATERAL LOADS EQUAL TO OR BETTER THAN SPECIFIED FRAMING MEMBERS AND SHALL BE ICC-ES APPROVED.
3. ALL COMPONENTS SHALL BE GALVANIZED ACCORDING TO REQUIREMENTS OF ASTM A-653 FOR MINIMUM G-60 COATING.
4. ALL 16 AND 18 GAGE STUDS, AND ALL TRACK, BRIDGING, END CLOSURES AND ACCESSORIES SHALL BE FORMED FROM STEEL THAT CORRESPONDS TO THE MINIMUM REQUIREMENTS OF ASTM A-653, WITH A MINIMUM YIELD OF 33 KSI FOR 18 GAGE AND 50 KSI FOR 16 GAGE, FOR STUDS AND 33 KSI FOR RUNNERS, BRIDGING, END CLOSURES AND ACCESSORIES.
5. ALL WELDS SHALL BE ACCOMPLISHED USING 1/8 INCH AWS TYPE 6013 OR 7014 ROD WITH A WELDING HEAT OF 60 TO 110 AMPERES DEPENDING ON THE GAGE OF MATERIAL AND THE FIT OF THE PARTS. WIRE TYING OF FRAMING COMPONENTS IS NOT PERMITTED.
6. ADEQUATE LATERAL BRACING MUST BE PROVIDED DURING CONSTRUCTION.
7. UNLESS NOTED OTHERWISE, METAL FRAMING MEMBERS @ LOAD BEARING, SHEAR WALLS AND EXTERIOR WALLS SHALL BE 18 GAGE FOR STUDS, 16 GAGE FOR TOP AND BOTTOM RUNNER. 16 GAGE FOR STUDS @ HOLD DOWNS.
8. RUNNER TRACKS: INSTALL CONTINUOUS TRACKS SIZED TO MATCH STUDS. ALIGN TRACKS ACCURATELY TO LAYOUT AT BASE AND TOPS OF STUDS. UNLESS INDICATED OTHERWISE, SECURE TRACKS AS RECOMMENDED BY STUD MANUFACTURER FOR TYPE OF CONSTRUCTION INVOLVED, EXCEPT DO NOT EXCEED 24" O.C. SPACING FOR NAIL OR POWER-DRIVEN FASTENERS, OR 16" O.C., FOR OTHER TYPES OF ATTACHMENT. PROVIDE FASTENERS AT CORNERS AND ENDS OF TRACK.
9. FASTENINGS: FASTENING OF COMPONENTS SHALL BE WITH SELF-DRILLING SCREWS OR BY WELDING. SCREWS AND WELDS SHALL BE OF SUFFICIENT SIZE TO ENSURE THE STRENGTH OF THE CONNECTION. WIRE TYING OF COMPONENTS SHALL NOT BE PERMITTED. ALL WELDS SHALL BE TOUCHED UP WITH A ZINC-RICH PAINT. FASTENING OF PLYWOOD DIAPHRAGMS AND SILL PLATES SHALL BE AS INDICATED IN STRUCTURAL NOTES, AND DETAILED.
10. STUD SECTIONS USED AS RAFTERS OR JOISTS SHALL BE UNPUNCHED.
11. ALL NON-LOAD BEARING WALLS SHALL BE ERECTED SO AS TO ALLOW FOR PROPER DEFLECTION OF STRUCTURE ABOVE. THE TOPS OF ALL SUCH WALLS SHALL BE HORIZONTALLY BRACED TO THE STRUCTURE ABOVE AT A MAXIMUM OF 8'-0" O.C.

STRUCTURAL DESIGN LOADS

FLOOR(S): DEAD LOAD: 60 PSF
LIVE LOAD(S):
OFFICES = 50 PSF (+20 PSF PARTITION)
CORRIDORS = 100 PSF

SEISMIC: OCCUPANCY CATEGORY: II
SPECTRAL RESPONSE COEF: SDS = 0.79
SD1 = 0.47
SITE CLASS: D
SEISMIC DESIGN CATEGORY: D
BASIC SEISMIC FORCE-RESISTING SYSTEM:
SPECIAL REINFORCED MASONRY BEARING WALL SYSTEM
R=5, OMEGA=2.5, Cd=3.5, Cs=0.16

SOILS: NET ALLOWABLE SOIL PRESSURE = 1500 PSF (ASSUMED AND TO BE FIELD VERIFIED)

QUALITY ASSURANCE PLAN

1. SPECIAL INSPECTION SHALL BE PROVIDED BY THE OWNER ACCORDING TO IBC CHAPTER 17 FOR THE ITEMS IDENTIFIED IN THIS SECTION AND ON THE CONTRACT DOCUMENTS.
2. THE NAMES AND CREDENTIALS OF SPECIAL INSPECTORS TO BE USED SHALL BE SUBMITTED TO THE BUILDING DEPARTMENT WHEN APPLYING FOR A BUILDING PERMIT.
3. SPECIAL INSPECTION REPORTS SHALL BE DELIVERED TO THE ENGINEER OF RECORD, ARCHITECT, AND OWNER (AS REQUESTED) BI-WEEKLY OR MORE FREQUENTLY AS REQUIRED BY THE INSPECTOR OR BUILDING OFFICIAL.
4. OFF-SITE FABRICATION: WHERE FABRICATION OF STRUCTURAL LOAD-BEARING MEMBERS AND ASSEMBLIES IS BEING PERFORMED ON THE PREMISES OF A FABRICATORS SHOP, SPECIAL INSPECTION OF THE FABRICATED ITEMS SHALL BE IN ACCORDANCE WITH IBC SECTION 1704.2 UNLESS THE FABRICATOR IS APPROVED ACCORDING TO IBC SECTION 1704.2.2.
5. PROVIDE SPECIAL INSPECTION BELOW!

STRUCTURAL SPECIAL INSPECTION SCHEDULE

NOTE: REFER TO THE CURRENT IBC, CHAPTER 17, THE ARCHITECTURAL DRAWINGS, AND THE GEOTECHNICAL REPORT FOR ADDITIONAL INFORMATION AND ADDITIONAL INSPECTION REQUIREMENTS FOR NON-STRUCTURAL ITEMS.

STEEL: (C)ONTINUOUS (P)ERIODIC
(CURRENT IBC, TABLE 1704.3)
1. MATERIAL VERIFICATION OF HIGH STRENGTH BOLTS, NUTS AND WASHERS:
   A. IDENTIFICATION MARKINGS TO CONFORM TO ASTM STANDARDS SPECIFIED IN THE APPROVED CONSTRUCTION DOCUMENTS. ..... P
   B. MANUFACTURER'S CERTIFICATE OF COMPLIANCE REQUIRED. ..... P
2. INSPECTION OF HIGH-STRENGTH BOLTING:
   A. SNUG - TIGHT JOINTS. ..... P
3. INSPECTION OF WELDING:
   A. STRUCTURAL STEEL:
      1. SINGLE-PASS FILLET WELDS ≤5/16". . P
      2. FLOOR AND DECK WELDS. ..... P

CONCRETE: (C)ONTINUOUS (P)ERIODIC
(CURRENT IBC, TABLE 1704.4)
1. VERIFYING USE OF REQUIRED DESIGN MIX. .. P
2. AT THE TIME FRESH CONCRETE IS SAMPLED TO FABRICATE SPECIMENS FOR STRENGTH TESTS, PERFORM SLUMP AND AIR CONTENT TESTS, AND DETERMINE THE TEMPERATURE OF THE CONCRETE. C

MASONRY: (C)ONTINUOUS (P)ERIODIC
(CURRENT IBC, TABLE 1704.5.1)
1. AS MASONRY CONSTRUCTION BEGINS, THE FOLLOWING SHALL BE VERIFIED TO ENSURE COMPLIANCE:
   A. PROPORTIONS OF SITE-PREPARED MORTAR. P
   B. CONSTRUCTION OF MORTAR JOINTS. ..... P
   C. LOCATION OF REINFORCEMENT AND CONNECTORS. ..... P
2. THE INSPECTION PROGRAM SHALL VERIFY:
   A. SIZE AND LOCATION OF STRUCTURAL ELEMENTS. ..... P
   B. TYPE, SIZE AND LOCATIONS OF ANCHORS, INCLUDING OTHER DETAILS OF ANCHORAGE OF MASONRY TO STRUCTURAL MEMBERS, FRAMES OR OTHER CONSTRUCTION. ..... P
   C. SPECIFIED SIZE, GRADE AND TYPE OF REINFORCEMENT. ..... P
   D. PROTECTION OF MASONRY DURING COLD WEATHER (TEMPERATURE BELOW 40°F) OR HOT WEATHER (TEMPERATURE ABOVE 90°F). ..... P
3. PRIOR TO GROUTING, THE FOLLOWING SHALL BE VERIFIED TO ENSURE COMPLIANCE:
   A. GROUT SPACE IS CLEAN. ..... P
   B. PLACEMENT OF REINFORCEMENT AND CONNECTORS ..... P
   C. CONSTRUCTION OF MORTAR JOINTS. ..... P
4. GROUT PLACEMENT SHALL BE VERIFIED TO ENSURE COMPLIANCE WITH CODE AND CONSTRUCTION DOCUMENT PROVISIONS. C
5. PREPARATION OF ANY REQUIRED GROUT SPECIMENS, MORTAR SPECIMENS, AND/OR PRISMS SHALL BE OBSERVED. ..... P

SITE PREPARATION: (C)ONTINUOUS (P)ERIODIC
(CURRENT IBC, TABLE 1704.7)
1. SITE PREPARATION ..... P
2. STRUCTURAL FILL MATERIAL ..... P
3. STRUCTURAL FILL LIFT THICKNESS ..... P
4. STRUCTURAL FILL SOIL DENSITIES ..... P

MISCELLANEOUS ITEMS:
1. EPOXY ANCHOR PLACEMENT ..... P

STRUCTURAL OBSERVATION

CALDER RICHARDS CONSULTING ENGINEERS SHALL BE NOTIFIED BY THE CONTRACTOR 5 BUSINESS DAYS BEFORE THE COMPLETION OF THE ITEMS LISTED IN THIS SECTION SO THAT STRUCTURAL OBSERVATION MAY BE PERFORMED IN ACCORDANCE WITH IBC SECTION 1709. THE OBSERVATIONS WILL BE PERFORMED AT THE DISCRETION OF CALDER RICHARDS CONSULTING ENGINEERS.

1. BEFORE FIRST GROUT POUR FOR MASONRY WALLS.
2. BEFORE CONCRETE PLACEMENT ON SUSPENDED METAL DECK.
3. AT COMPLETION OF STRUCTURAL WORK SHOWN ON STRUCTURAL DRAWINGS.

QUALITY ASSURANCE PLAN CONTRACTOR RESPONSIBILITY

EACH CONTRACTOR RESPONSIBLE FOR THE CONSTRUCTION OF A SEISMIC-FORCE-RESISTING SYSTEM, DESIGNATED SEISMIC SYSTEM, OR COMPONENT LISTED IN THE QUALITY ASSURANCE PLAN SHALL SUBMIT A WRITTEN CONTRACTOR'S STATEMENT OF RESPONSIBILITY TO THE BUILDING OFFICIAL AND TO THE OWNER PRIOR TO THE COMMENCEMENT OF WORK ON THE SYSTEM OR COMPONENT. THE CONTRACTOR'S STATEMENT OF RESPONSIBILITY SHALL CONTAIN THE FOLLOWING:

1. ACKNOWLEDGMENT OF AWARENESS OF THE SPECIAL REQUIREMENTS CONTAINED IN THE QUALITY ASSURANCE PLAN.
2. ACKNOWLEDGMENT THAT CONTROL WILL BE EXERCISED TO OBTAIN CONFORMANCE WITH THE CONSTRUCTION DOCUMENTS APPROVED BY THE BUILDING OFFICIAL.
3. PROCEDURES FOR EXERCISING CONTROL WITHIN THE CONTRACTOR'S ORGANIZATION, THE METHOD AND FREQUENCY OF REPORTING, AND THE DISTRIBUTION OF REPORTS.
4. IDENTIFICATION AND QUALIFICATIONS OF THE PERSON(S) EXERCISING SUCH CONTROL AND THE POSITION(S) IN THE ORGANIZATION.

FOOTING SCHEDULE

MARK	WIDTH	LENGTH	THICK	CROSSWISE REINF				LENGTHWISE REINF				NOTES
				NO	SIZE	LENGTH	SPACING	NO	SIZE	LENGTH	SPACING	
FCA	2'-0"	CONT	12"	–	#5	REQD	16" OC	(2)	#5 TOP & BOT	CONT	12" OC	SEE DETAILS **A4/S501** & **A5/S501**
FC2.0	2'-0"	CONT	12"	–	#4	1'-6"	18" OC	(2)	#5	CONT	18" OC	
FS3.5	3'-6"	3'-6"	12"	(3)	#5	3'-0"	18" OC	(3)	#5	3'-0"	18" OC	
FS5.0	5'-0"	5'-0"	12"	(5)	#5	4'-6"	13.5" OC	(5)	#5	4'-6"	13.5" OC	
FS5.5	5'-6"	5'-6"	12"	(5)	#5	5'-0"	15" OC	(5)	#5	5'-0"	15" OC	

FOOTING NOTES:

1. PLACE CROSSWISE REINFORCING 3" CLEAR FROM GRADE AND LENGTHWISE REINFORCING ON TOP OF CROSSWISE.
2. WHERE TOP REINFORCING IS INDICATED, PLACE TOP CROSSWISE REINFORCING 2" CLEAR FROM TOP OF FOOTING AND LENGTHWISE REINFORCING UNDER CROSSWISE REINFORCING.
3. REINFORCE FOOTINGS MARKED WITH AN ASTERISK (*) EQUALLY TOP AND BOTTOM.
4. REINFORCE FOOTINGS MARKED WITH A PLUS SIGN (+) W/ #4 @ 12" OC, EACH WAY AT TOP MAT AND BOTTOM MAT AS SCHEDULED.
5. ALL CONTINUOUS FOOTINGS SHALL BE FC2.0 AND SQUARE FOOTINGS SHALL BE FS3.5, MINIMUM, UNO ON PLANS.

A4 FOOTING SCHEDULE
3731_01 Footing Schedule SCALE: NONE

CRSA
ARCHITECTURE
PLANNING
INTERIORS
649 E SOUTH TEMPLE
SALT LAKE CITY, UT 84102
801.355.5915
www.crsa-us.com

STRUCTURAL ENGINEER
CALDER RICHARDS CONSULTING ENGINEERS
634 South 400 West Suite 100
SALT LAKE CITY, UT 84101
(801) 466-1699 (801) 467-2495 FAX
stephen@crceng.com

MECHANICAL ENGINEER
SMD
986 WEST ATHERTON DRIVE STE. 200
TAYLORSVILLE, UTAH 84123
(801)268-3828 FAX (801)268-3297
# #

ELECTRICAL ENGINEER
SPECTRUM
175 S MAIN STREET STE. 300
SALT LAKE CITY, UTAH 84111
(801)328-5151 (801)401-9471
# #

ALL DRAWINGS, PLANS AND DETAILS ARE INSTRUMENTS OF SERVICE AND SHALL REMAIN THE PROPERTY OF CALDER RICHARDS CONSULTING ENGINEERS AND ARE NOT SUITABLE FOR REUSE NOR INTENDED FOR ANY OTHER PROJECT.

PROJECT:
BUILDING 3030 REMODEL
UTAH NATIONAL GUARD
CAMP W.G. WILLIAMS
17800 South Redwood Road
Riverton, Utah 84065

UTAH NATIONAL GUARD
12953 SOUTH

BN	BID DOCUMENTS	8-30-2010
CD	PLAN CHECK	8-30-2010

PROJECT NO: B10-029
CAD DWG FILE: S001.dwg
DRAWN BY: JRS / DJK
CHECKED BY: SDC

STRUCTURAL GENERAL NOTES & DETAILS

S001

X:\Project Files\2010\10xxx Camp Williams Bldg 3030\Drawings\S001.dwg, S001, 8/26/2010 5:17:53 PM

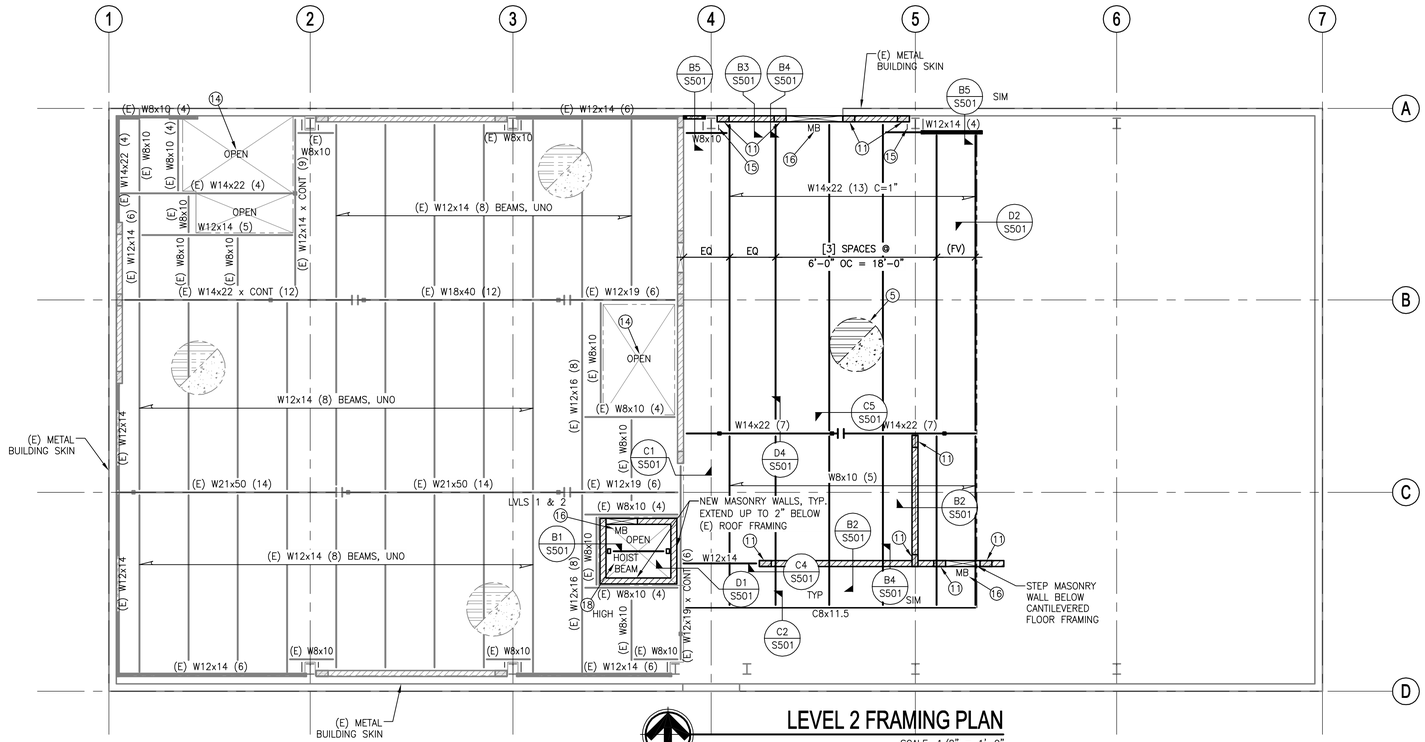

LEVEL 2 FRAMING PLAN

SCALE: 1/8" = 1'-0"

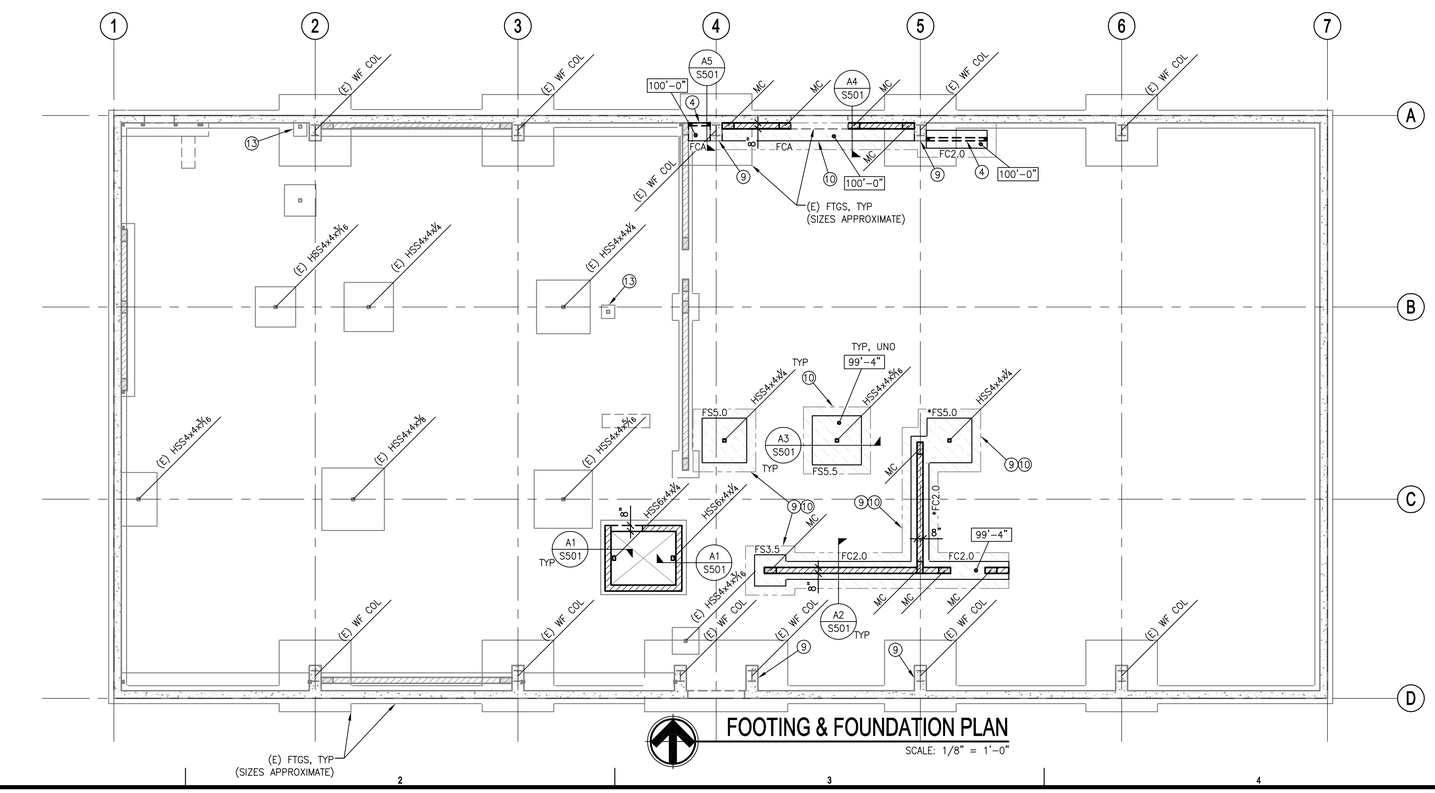

FOOTING & FOUNDATION PLAN

SCALE: 1/8" = 1'-0"

PLAN NOTES

(◯) CIRCLED NOTES ARE KEYED TO PLAN.

1. SEE **SHEET S001** FOR STRUCTURAL NOTES, INCLUDING FOOTING PREPARATION NOTES.
2. FFE 100'-0" = EXISTING LEVEL 1 FLOOR ELEVATION.
3. FFE 111'-0" = EXISTING LEVEL 2 FLOOR ELEVATION. COORDINATE W/ ARCHITECTURAL DRAWINGS.
4. METAL STUD WALL FRAMING SHALL BE 400S162-43 (4"x1⅝"-18 GAGE) @ 16" OC. SEE ARCH DWGS FOR OTHER STUD WALLS. SEE **D5/S501** FOR ADDITIONAL INFO.
5. TYPICAL SUSPENDED FLOOR SLAB, UNO: 4" (TOTAL THICKNESS) NORMAL WEIGHT CONCRETE SLAB ON 1½" DEEP, 20 GAGE, PHOSPHATIZED / PAINTED COMPOSITE "B FORMLOK" DECK, WITH INTERLOCKING SIDE LAPS. DECK SHALL HAVE A MINIMUM YIELD STRENGTH OF 38,000 PSI. REINFORCE CONCRETE SLAB WITH 6x6-W1.4xW1.4 WWF PLACED AT MIDDLE DEPTH OF SLAB. (USE FLAT SHEETS).
6. ATTACH FLOOR DECK AS FOLLOWS:
   - ATTACH SIDE LAPS WITH BUTTON PUNCH @ 12" OC
   - ATTACH TO PERPENDICULAR SUPPORTS WITH ¾"ø PUDDLE WELDS @ EVERY FLUTE.
   - ATTACH TO PARALLEL SUPPORTS WITH ¾"ø PUDDLE WELDS @ 12" OC
7. NUMBER IN PARENTHESES FOLLOWING BEAM SIZE DENOTES NUMBER OF ¾"ø x 3½" HSA TO BE EQUALLY SPACED ALONG THE TOP FLANGE OF THE BEAM.
8. BEAM TO BEAM CONNECTIONS SHALL BE AS PER BOLTING SCHEDULE **D3/S501**.
9. CONTRACTOR SHALL VERIFY IF TENSION TIES EXIST IN SLAB ON GRADE AT EXISTING COLUMNS PRIOR TO CUTTING SLAB ON GRADE. IF TENSION TIES ARE FOUND AT COLUMNS **DO NOT CUT SLAB** WITHOUT ENGINEER'S APPROVAL.
10. SAWCUT, REMOVE, AND REPLACE EXISTING SLAB AS REQD FOR INSTALLATION OF NEW FOOTINGS AND COLUMNS, TYP. NO REINF REQD IN NEW SLAB INFILL.
11. PROVIDE (2) #5 VERT BARS AT ALL MCs, AT END OF CMU WALLS, OR ALL CELLS SUPPORTING STEEL BEAMS, AND GROUT SOLID ALL CELLS W/ REINF.
12. PROVIDE 2" EXPANSION JOINT BETWEEN ALL EXISTING & NEW CONSTRUCTION.
13. FOOTING FOR STAIR FRAMING SUPPORT COLUMN. COORD EXACT LOCATION W/ ARCH DWGS.
14. NEW STAIRS TO BE LOCATED AT EXISTING OPENING. SEE **A3/S502** FOR STAIR FRAMING DETAILS AND ARCH DRAWINGS FOR DIMENSIONS AND OTHER REQUIREMENTS.
15. SEE DETAIL **C3/S501** FOR BLOCKOUT REQUIREMENTS AROUND EXISTING COLS.
16. DENOTES MASONRY BEAM. SEE DETAIL **C4/S502** FOR DIMENSIONS, REINF, AND OTHERS REQUIREMENTS.
17. C = A/B" INDICATES BEAM CAMBER (IN INCHES).
18. W8x10 HOIST BEAM (HIGH) SUPPORTED BY HSS ELEVATOR RAIL SUPPORTS OR BY MASONRY WALLS SIM TO **B4/S501**. COORDINATE LOCATION W/ ELEVATOR SUPPLIER.

LEGEND

FCx, FSx	CONTINUOUS FOOTING, SPOT FOOTING TYPES RESPECTIVELY, SEE SCHEDULE ON **SHEET S001**		CONCRETE FOOTING
xx'-xx"	TOP OF FTG ELEVATION	MC	MASONRY WALL W/ COLUMN AT END OF WALL, SEE **NOTE 11**
	NEW CONC SLAB INFILL TO MATCH (E)	(#) MS	METAL STUD WALL W/ (#) STUDS AT END OF WALL
	CONC SLAB ON STEEL DECK, W/ SPAN DIRECTION INDICATED		WALL BELOW SLAB OR DECK
	OPENING IN DECK		STEEL BEAM
	STEEL COLUMN		BEAM SPLICE, SEE DETAIL **C5/S501**
			STEEL FRAME ANGLES
		MB	MASONRY BEAM, SEE **NOTE 16**

CRSA
ARCHITECTURE
PLANNING
INTERIORS
649 E SOUTH TEMPLE
SALT LAKE CITY, UT 84102
801.355.5915
www.crsa-us.com

STRUCTURAL ENGINEER
CALDER RICHARDS CONSULTING ENGINEERS
634 South 400 West Suite 100
SALT LAKE CITY, UT 84101
(801) 466-1699 (801) 467-2495 FAX
stephen@crceng.com

MECHANICAL ENGINEER
SMD
986 WEST ATHERTON DRIVE STE. 200
TAYLORSVILLE, UTAH 84123
(801)268-3828 FAX (801)268-3297
# #

ELECTRICAL ENGINEER
SPECTRUM
175 S MAIN STREET STE. 300
SALT LAKE CITY, UTAH 84111
(801)328-5151 (801)401-9471
# #

ALL DRAWINGS, PLANS AND DETAILS ARE INSTRUMENTS OF SERVICE AND SHALL REMAIN THE PROPERTY OF CALDER RICHARDS CONSULTING ENGINEERS AND ARE NOT SUITABLE FOR REUSE NOR INTENDED FOR ANY OTHER PROJECT.

PROJECT:
BUILDING 3030 REMODEL
UTAH NATIONAL GUARD
CAMP W.G. WILLIAMS
17800 South Redwood Road
Riverton, Utah 84065

UTAH NATIONAL GUARD
12953 SOUTH

BN	BID DOCUMENTS	8-30-2010
CD	PLAN CHECK	8-30-2010

PROJECT NO: B10-029
CAD DWG FILE: S101.dwg
DRAWN BY: JRS / DJK
CHECKED BY: SDC

FOOTING & FOUNDATION PLAN AND LEVEL 2 FRAMING PLAN

S101

X:\Project Files\2010\10xxx Camp Williams Bldg 3030\Drawings\S101.dwg, S101, 8/26/2010 5:18:12 PM

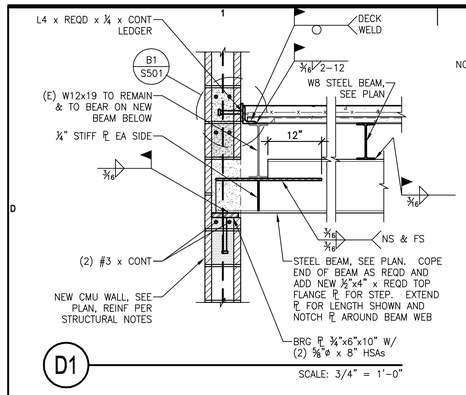

D1 SCALE: 3/4" = 1'-0"

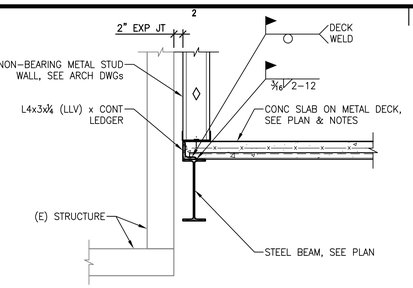

D2 SCALE: 3/4" = 1'-0"

BOLT SCHEDULE

BEAM SIZE	SHEAR BOLTS
W8, W10	(2) ¾"ø
W12, W14	(3) ¾"ø
W16, W18	(4) ¾"ø
W21	(5) ¾"ø
W24	(6) ¾"ø

NOTES:
1. SEE FRAMING PLANS FOR BEAM SIZES.
2. ALL BOLTS SHALL BE A325-N, UNO

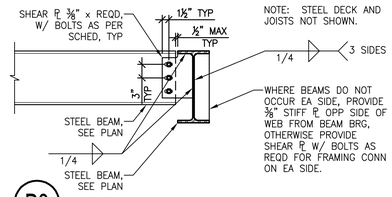

D3 SCALE: 3/4" = 1'-0" SCALE: NONE

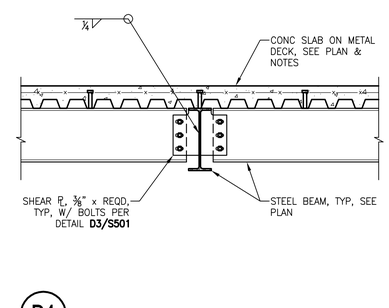

D4 SCALE: 3/4" = 1'-0"

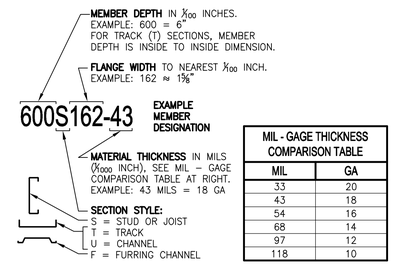

MIL - GAGE THICKNESS COMPARISON TABLE	
MIL	GA
33	20
43	18
54	16
68	14
97	12
118	10

D5 STEEL STUD DESIGNATIONS SCALE: NONE
4717_01 Steel Stud Designation

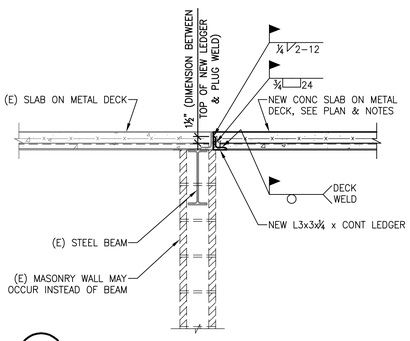

C1 SCALE: 3/4" = 1'-0"

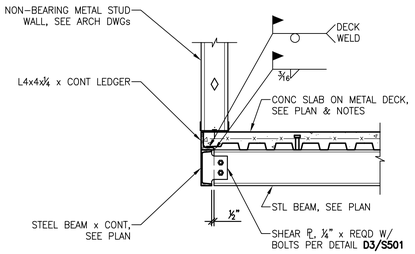

C2 SCALE: 3/4" = 1'-0"

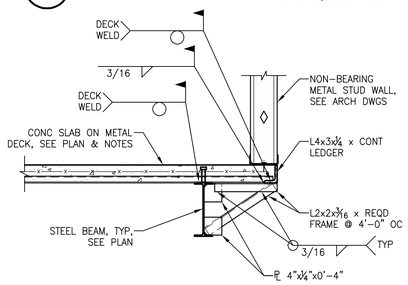

C3 SCALE: 3/4" = 1'-0"

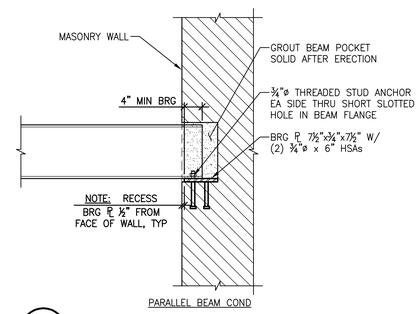

C4 SCALE: 3/4" = 1'-0"

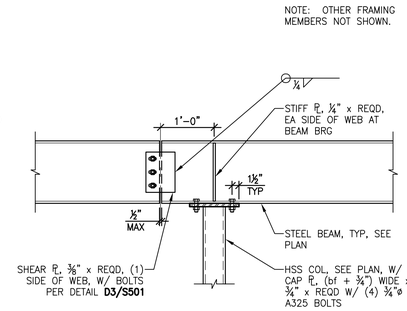

C5 SCALE: 3/4" = 1'-0"

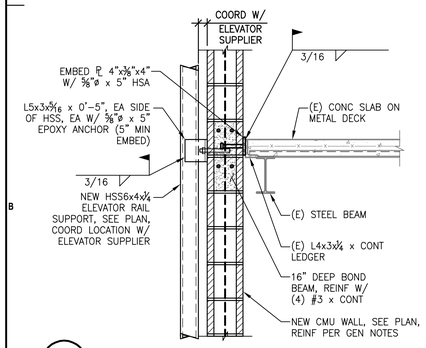

B1 SCALE: 3/4" = 1'-0"

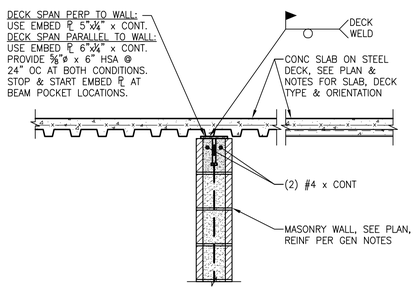

B2 SCALE: 3/4" = 1'-0"
5246_02

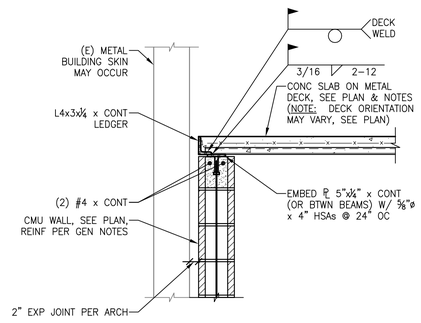

B3 SCALE: 3/4" = 1'-0"

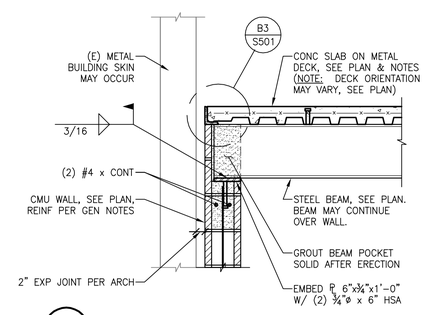

B4 SCALE: 3/4" = 1'-0"

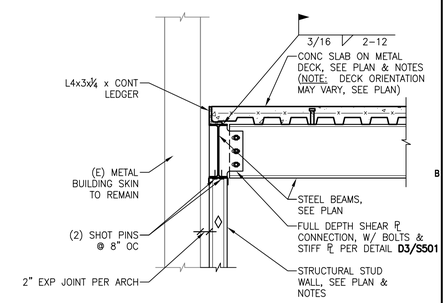

B5 SCALE: 3/4" = 1'-0"

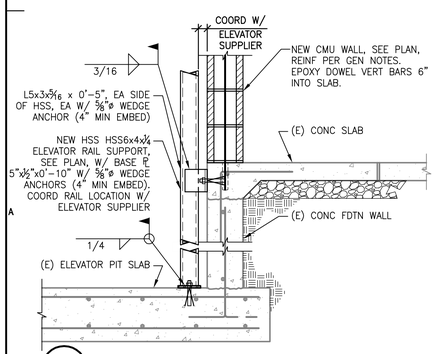

A1 SCALE: 3/4" = 1'-0"

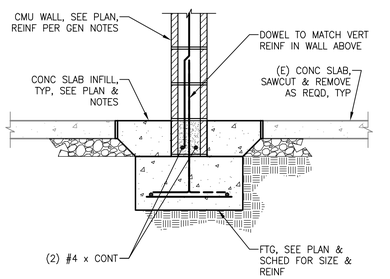

A2 SCALE: 3/4" = 1'-0"

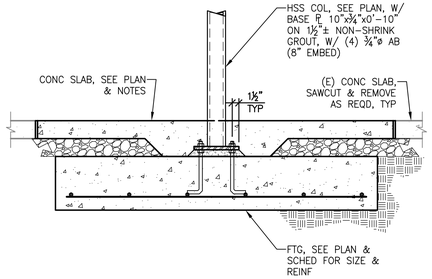

A3 SCALE: 3/4" = 1'-0"

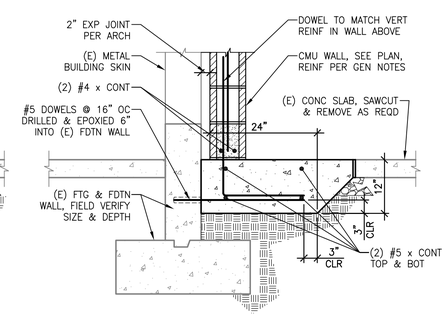

A4 SCALE: 3/4" = 1'-0"

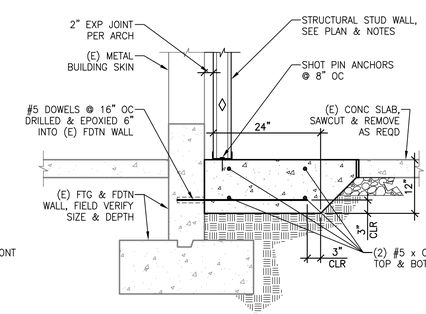

A5 SCALE: 3/4" = 1'-0"

CRSA
ARCHITECTURE
PLANNING
INTERIORS
649 E SOUTH TEMPLE
SALT LAKE CITY, UT 84102
801.355.5915
www.crsa-us.com

STRUCTURAL ENGINEER
CALDER RICHARDS CONSULTING ENGINEERS
634 South 400 West Suite 100
SALT LAKE CITY, UT 84101
(801) 466-1699 (801) 467-2495 FAX
stephen@crceng.com

MECHANICAL ENGINEER
SMD
986 WEST ATHERTON DRIVE STE. 200
TAYLORSVILLE, UTAH 84123
(801)268-3828 FAX (801)268-3297
# #

ELECTRICAL ENGINEER
SPECTRUM
175 S MAIN STREET STE. 300
SALT LAKE CITY, UTAH 84111
(801)328-5151 (801)401-9471
# #

ALL DRAWINGS, PLANS AND DETAILS ARE INSTRUMENTS OF SERVICE AND SHALL REMAIN THE PROPERTY OF CALDER RICHARDS CONSULTING ENGINEERS AND ARE NOT SUITABLE FOR REUSE NOR INTENDED FOR ANY OTHER PROJECT.

PROJECT:
BUILDING 3030 REMODEL
UTAH NATIONAL GUARD
CAMP W.G. WILLIAMS
17800 South Redwood Road
Riverton, Utah 84065

UTAH NATIONAL GUARD
12953 SOUTH

BN	BID DOCUMENTS	8-30-2010
CD	PLAN CHECK	8-30-2010

PROJECT NO: B10-029
CAD DWG FILE: S501.dwg
DRAWN BY: JRS / DJK
CHECKED BY: SDC

STRUCTURAL DETAILS

S501

X:\Project Files\2010\10xxx Camp Williams Bldg 3030\Drawings\S501.dwg, S501, 8/26/2010 5:18:29 PM

D1 SCALE: 3/4" = 1'-0"

D2 SCALE: 3/4" = 1'-0"

D3 SCALE: 3/4" = 1'-0"

D4 SCALE: 3/4" = 1'-0"

D5 SCALE: 3/4" = 1'-0"

MASONRY BEAM NOTES:

1. VERTICAL WALL REINFORCEMENT (SIZE AND SPACING) SHALL BE USED, UNO. VERTICAL REINFORCEMENT ENDS WITH STANDARD ACI 180° HOOK AND SCHEDULED LAP WITH VERTICAL REINFORCEMENT ABOVE BEAM. WHERE NO WALL OCCURS ABOVE BEAM OR LAP IS NOT POSSIBLE, PROVIDE 180° STD HOOK AT TOP.
2. TOP BARS SHALL EXTEND 24" BEYOND FACE OF SUPPORTS OR END IN 90° HOOK.
3. REINFORCING INDICATED IS IN ADDITION TO SCHEDULED WALL HORIZONTAL AND VERTICAL REINFORCING.

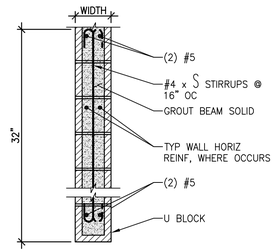

C1 SCALE: 3/4" = 1'-0"

C2 SCALE: 3/4" = 1'-0"

C3 SCALE: 3/4" = 1'-0"

C4 5410_01 Masonry Beam Schedule

MASONRY BEAM

SCALE: NONE

B1 SCALE: 3/4" = 1'-0"

B2 SCALE: 3/4" = 1'-0"

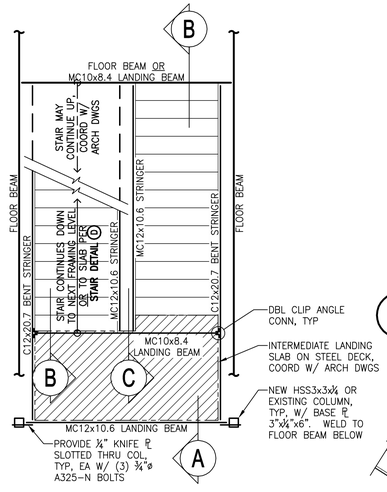

NOTES:

1. SCHEMATIC STAIR PLAN DEPICTS TYPICAL MEMBER SIZES AND CONNECTIONS REQUIRED.
2. SEE ARCH PLANS AND SECTIONS FOR ALL SPECIFIC STAIR DIMENSIONS, LAYOUT, UP/DOWN RUN DIRECTIONS, AND OTHER GEOMETRY.
3. SEE STRUCTURAL FRAMING PLANS FOR FLOOR BEAM SIZES.
4. HSS TUBE STRINGERS MAY BE SUBSTITUTED FOR CHANNELS, SEE ARCHITECTURAL SECTIONS.
5. AT CONTRACTOR'S OPTION, SHOP DRAWINGS MAY BE PROVIDED SHOWING A DIFFERENT TYPE OF STAIR LAYOUT FOR REVIEW.

SCHEMATIC STAIR PLAN

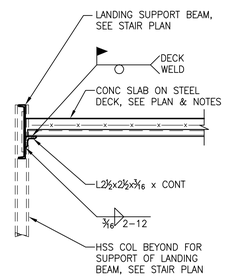

A

LANDING SUPPORT DETAIL

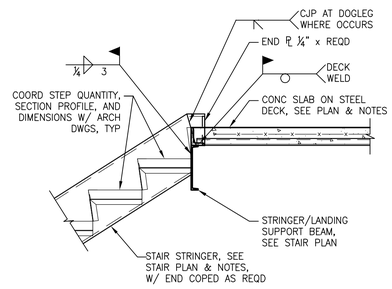

B

STAIR DETAIL

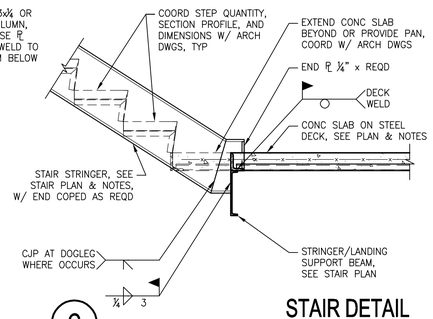

C

STAIR DETAIL

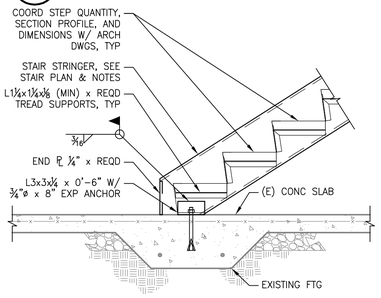

D

STAIR DETAIL

A1 SCALE: 3/4" = 1'-0"

A2 SCALE: 3/4" = 1'-0"

A3

SCHEMATIC STAIR FRAMING AND DETAILS

4444_02 Stair

SCALE: NONE

CRSA
ARCHITECTURE
PLANNING
INTERIORS
649 E SOUTH TEMPLE
SALT LAKE CITY, UT 84102
801.355.5915
www.crsa-us.com

STRUCTURAL ENGINEER
CALDER RICHARDS CONSULTING ENGINEERS
634 South 400 West Suite 100
SALT LAKE CITY, UT 84101
(801) 466-1699 (801) 467-2495 FAX
stephen@crceng.com

MECHANICAL ENGINEER
SMD
986 WEST ATHERTON DRIVE STE. 200
TAYLORSVILLE, UTAH 84123
(801)268-3828 FAX (801)268-3297
# #

ELECTRICAL ENGINEER
SPECTRUM
175 S MAIN STREET STE. 300
SALT LAKE CITY, UTAH 84111
(801)328-5151 (801)401-9471
# #

ALL DRAWINGS, PLANS AND DETAILS ARE INSTRUMENTS OF SERVICE AND SHALL REMAIN THE PROPERTY OF CALDER RICHARDS CONSULTING ENGINEERS AND ARE NOT SUITABLE FOR REUSE NOR INTENDED FOR ANY OTHER PROJECT.

PROJECT:
BUILDING 3030 REMODEL
UTAH NATIONAL GUARD
CAMP W.G. WILLIAMS
17800 South Redwood Road
Riverton, Utah 84065

UTAH NATIONAL GUARD
12953 SOUTH

BN	BID DOCUMENTS	8-30-2010
CD	PLAN CHECK	8-30-2010

PROJECT NO: B10-029
CAD DWG FILE: S502.dwg
DRAWN BY: JRS / DJK
CHECKED BY: SDC

STRUCTURAL DETAILS

S502

X:\Project Files\2010\10xxx Camp Williams Bldg 3030\Drawings\S502.dwg, S502, 8/26/2010 5:18:46 PM

THIS DRAWING, AS AN INSTRUMENT OF SERVICE, IS AND SHALL REMAIN THE PROPERTY OF SMD ENGINEERING, PLLC AND SHALL NOT BE REPRODUCED, PUBLISHED, OR USED IN ANY WAY WITHOUT THE PERMISSION OF SMD ENGINEERING, PLLC. THE INFORMATION, DESIGN, OR CONCEPTS REPRESENTED ON THIS DRAWING ARE CONFIDENTIAL AND ARE NOT FOR GENERAL DISTRIBUTION. © SMD ENGINEERING, PLLC 2010

ABBREVIATIONS

ø	ROUND, DIAMETER, PHASE	EWT	ENTERING WATER TEMPERATURE	OZ	OUNCE
ABS	ACRYLONITRILE–BUTADIENE–STYRENE, ABSOLUTE	EXH	EXHAUST	P	PUMP
ACCU	AIR COOLED CONDENSING UNIT	EXP	EXPANSION	PD	PRESSURE DROP/DIFFERENCE
A/C	AIR CONDITIONING	EXT	EXTERIOR	PE	POLYETHYLENE
AD	ACCESS DOOR, AREA DRAIN	F	FAHRENHEIT	PEX	CROSS–LINKED POLYETHYLENE
ADA	AMERICAN DISABILITIES ACT	FC	FLEXIBLE CONNECTION, FORWARD CURVED	PF	PRE–FILTER
AF	AIR FOIL, AIR FILTER	FCO	FLOOR CLEAN OUT	PH	PHASE
AFF	ABOVE FINISH FLOOR	FCU	FAN COIL UNIT	PIV	POST INDICATOR VALVE
AHU	AIR HANDLING UNIT	FD	FLOOR DRAIN, FIRE DAMPER	PLMB	PLUMBING
ALT	ALTITUDE, ALTERNATE	FDC	FIRE DEPARTMENT CONNECTION	POC	POINT OF CONNECTION
AMB	AMBIENT	FF	FINISH FLOOR, FINAL FILTER	PPM	PARTS PER MILLION
AMP	AMPERE (AMP, AMPS)	FL	FLOW LINE	PRS	PRESSURE REDUCING STATION
AP	ACCESS PANEL	FLEX	FLEXIBLE	PRV	PRESSURE REDUCING VALVE
APD	AIR PRESSURE DROP	FO	FLAT OVAL	PSF	POUNDS PER SQUARE FOOT
ARCH	ARCHITECT	FP	FIRE PROTECTION	PSI	POUNDS PER SQUARE INCH
AS	AIR SEPARATOR	FPM	FEET PER MINUTE	PTAC	PACKAGED TERMINAL AIR CONDITIONER
AV	ACID VENT, AIR VENT	FS	FLOOR SINK	PVC	POLYVINYL CHLORIDE
B	BOILER	FSD	FIRE SMOKE DAMPER	R	THERMAL RESISTANCE, RANKINE, RETURN
BAL	BALANCE	FSTAT	FREEZESTAT	RA	RETURN AIR
BAS	BUILDING AUTOMATION SYSTEM	FT	FEET	RAD	RADIUS
BBR	BASEBOARD RADIATOR	FTR	FIN TUBE RADIATION	RCP	RADIANT CEILING PANEL
BDD	BACKDRAFT DAMPER	FURN	FURNACE, FURNISH, FURNITURE	RD	ROOF DRAIN
BFP	BACKFLOW PREVENTER	FV	FACE VELOCITY	RECIRC	RECIRCULAT(E),(OR),(ING)
BFV	BUTTERFLY VALVE	G	GAUGE, NATURAL GAS	REF	REFRIGERAT(OR),(ION)
BHP	BRAKE HORSEPOWER	GA	GAGE	REQ'D	REQUIRED
BI	BACKWARD INCLINED	GAL	GALLON	RF	RETURN FAN
BOD	BOTTOM OF DUCT	GALV	GALVANIZED	RH	RELATIVE HUMIDITY
BOP	BOTTOM OF PIPE	GC	GENERAL CONTRACTOR	RM	ROOM
BT	BATH TUB	GD	GARAGE DRAIN	RPBP	REDUCED PRESS. BACKFLOW PREVENTER
BTU	BRITISH THERMAL UNIT	GH	GRAVITY HOOD	RPM	REVOLUTIONS PER MINUTE
BTUH	BRITISH THERMAL UNITS/HR	GPM	GALLONS PER MINUTE	RTU	ROOF TOP UNIT
BV	BALL VALVE	GT	GREASE TRAP	REV	REVOLUTION, REVISION, REVERSE
C	CHILLER	HB	HOSE BIBB	S	SECONDS, SUPPLY, SINK
CA	COMPRESSED AIR, COMBUSTION AIR	H/C, HC	HEATING COIL	SA	SUPPLY AIR, SOUND ATTENUATOR
CAP	CAPACITY	HEPA	HIGH EFFICIENCY PARTICULATE AIR	SAN	SANITARY
CAV	CONSTANT AIR VOLUME	HOA	HAND, OFF, AUTO	SAT	SATURATED
C/C, CC	COOLING COIL	HP	HORSEPOWER, HEAT PUMP	SCFM	STANDARD CUBIC FEET PER MINUTE
CD	CONDENSATE DRAIN, CEILING DIFFUSER	HR	HOUR	SD	STORM DRAIN, SMOKE DAMPER
CFM	CUBIC FEET PER MINUTE	HSTAT	HUMIDISTAT	SECT	SECTION
CFOI	CONTRACTOR FURN., OWNER INSTALLED	HT	HEIGHT	SEN	SENSIBLE
CHW	CHILLER WATER	HVAC	HEATING, VENTILATING, AIR–CONDITIONING	SHT	SHEET
CO	CLEAN OUT, CARBON MONOXIDE	HX	HEAT EXCHANGER	SIM	SIMILAR
CO2	CARBON DIOXIDE	HZ	FREQUENCY	SL	SEA LEVEL
CONC	CONCRETE	IAQ	INDOOR AIR QUALITY	SP	STATIC PRESSURE
COND	CONDENS(ER),(ING),(ATE),(ATION)	ID	INSIDE DIAMETER	SPEC	SPECIFICATION
CONT	CONTINUOUS	IE	INVERT ELEVATION	SQ	SQUARE
COP	COEFFICIENT OF PERFORMANCE, COPPER	IN	INCH	SS	SERVICE SINK, STAINLESS STEEL
COTG	CLEANOUT TO GRADE	IN WC	INCHES, WATER COLUMN	STC	SOUND TRANSMISSION CLASS
CPVC	CHLORINATED POLY VINYL CHLORIDE	INV	INVERT	STD	STANDARD
CT	COOLING TOWER	I/O	INPUT/OUTPUT	STRUCT	STRUCTUR(E),(AL)
CU	CONDENSING UNIT, CUBIC	JS	JANITORS SINK	SUCT	SUCTION
CV	CONTROL VALVE, CONSTANT VOLUME	KEC	KITCHEN EQUIPMENT CONTRACTOR	T	TEMPERATURE, TIME
CUH	CABINET UNIT HEATER	KW	KILOWATT	T&P	TEMPERATURE AND PRESSURE
CW	CONDENSER WATER, CLOCKWISE	KWH	KILOWATT HOUR	TAB	TEST, ADJUST AND BALANCE
DA	DISCHARGE AIR	LAT	LEAVING AIR TEMPERATURE	TDH	TOTAL DYNAMIC HEAD
dB	DECIBELS	LAV	LAVATORY	TEMP	TEMPERATURE, TEMPORARY
DB	DRY BULB TEMPERATURE	LBS	POUNDS	TONS	TONS OF REFRIGERATION
DDC	DIRECT DIGITAL CONTROL	LF	LINEAR FEET	TOD	TOP OF DUCT
DF	DRINKING FOUNTAIN	LVR	LOUVER	TOP	TOP OF PIPE
DIA	DIAMETER	LWT	LEAVING WATER TEMPERATURE	TSP	TOTAL STATIC PRESSURE
DMPR	DAMPER	MA	MEDICAL AIR, MIXED AIR	TSTAT	THERMOSTAT
DP	DEWPOINT, DIFFERENTIAL PRESSURE	MAT	MATERIAL, MIXED AIR TEMPERATURE	TYP	TYPICAL
DR	DRAIN	MAU	MAKE UP AIR HANDLING UNIT	U	URINAL
DSN	DOWNSPOUT NOZZLE	MAV	MANUAL AIR VENT	UH	UNIT HEATER
DW	DISHWASHER	MAX	MAXIMUM	UNO	UNLESS NOTED OTHERWISE
DWG	DRAWING	MBH	BTU/HR X 1,000	V	VENT, VALVE
DWV	DRAIN, WASTE, VENT	MC	MECHANICAL CONTRACTOR	VA	VOLT AMPERE
DX	DIRECT EXPANSION	MCC	MOTOR CONTROL CENTER	VAC	VACUUM
(E) EXIST	EXISTING	MECH	MECHANICAL	VAV	VARIABLE AIR VOLUME
EAT	ENTERING AIR TEMPERATURE	MH	MAN HOLE	VD	VOLUME DAMPER
EC	ELECTRICAL CONTRACTOR	MIN	MINIMUM, MINUTE	VFD	VARIABLE FREQUENCY DRIVE
ECON	ECONOMIZER	MVD	MANUAL VOLUME DAMPER	VI	VIBRATION ISOLATOR
EDH	ELECTRIC DUCT HEATER	NA	NOT APPLICABLE	VOL	VOLUME
EER	ENERGY EFFICIENCY RATIO	NC	NOISE CRITERIA, NORMALLY CLOSED	VP	VELOCITY PRESSURE
EF	EXHAUST FAN	NIC	NOT IN CONTRACT	VSC	VARIABLE SPEED CONTROLLER
EFF	EFFICIENCY	NO	NORMALLY OPEN, NITROUS OXIDE	VTR	VENT THROUGH ROOF
EL, ELEV	ELEVATION	NO.	NUMBER	W	WASTE
EMER	EMERGENCY	NOM	NOMINAL	W/	WITH
ENCL	ENCLOSURE	NR	NOISE REDUCTION	W/O	WITHOUT
ESP	EXTERNAL STATIC PRESSURE	NRC	NOISE REDUCTION COEFFICIENT	WB	WET BULB
ET	EXPANSION TANK	NTS	NOT TO SCALE	WC	WATER CLOSET
EUH	ELECTRIC UNIT HEATER	OA	OUTSIDE AIR	WCO	WALL CLEAN OUT
EVAP	EVAPORAT(E),(ING),(ED),(OR)	OBD	OPPOSED BLADE DAMPER	WHA	WATER HAMMER ARRESTOR
EWB	ENTERING WET BULB	OD	OVERFLOW DRAIN, OUTSIDE DIAMETER	WT	WEIGHT
EWC	ELECTRIC WATER COOLER	OF/CI	OWNER FURN./CONTRACTOR INSTALLED	YCO	YARD CLEANOUT
EWH	ELECTRIC WATER HEATER	OF/OI	OWNER FURNISHED/OWNER INSTALLED		
EWS	EYE WASH STATION	OS&Y	OPEN SCREW & YOLK		

MECHANICAL LEGEND

BALL VALVE
BUTTERFLY VALVE
GATE VALVE
GLOBE VALVE
3–WAY VALVE
ELECTRONIC/PNEUMATIC VALVE ACTUATOR
SOLENOID/DIAPHRAGM VALVE ACTUATOR
CHECK VALVE
SPRING CHECK VALVE
BALL VALVE W/HOSE END & CAP
NEEDLE VALVE
PRESSURE REDUCING VALVE
REDUCED PRESSURE BACKFLOW PREVENTER — RPBP
INLINE PUMP
PRESSURE & TEMPERATURE RELIEF VALVE
SQUARE HEAD COCK
STRAINER, W/BV HOSE END & CAP
TEMPERATURE & PRESSURE PLUG
CIRCUIT SETTER
AUTOMATIC FLOW CONTROL VALVE
AUTOMATIC/MANUAL AIR VENT — AV, MAV
VENTURI FLOW MEASURING DEVICE
THERMOMETER/PRESSURE GAGE W/COCK
TEMPERATURE SENSOR
CONCENTRIC/ECCENTRIC REDUCER
UNION
BUSHING/CAP
ELBOW UP/DOWN
TOP/BOTTOM CONNECTION, 45° OR 90°
TEE UP/SIDE/DOWN
FLOW/PITCH DOWN DIRECTION — 2%
ANCHOR/GUIDE
EXPANSION JOINT/FLEX CONNECTOR
HEATING WATER SUPPLY — HWS
HEATING WATER RETURN — HWR
NATURAL GAS — G
DETAIL TAG — DETAIL NO. 1, SHEET NO. M601

DUCT SIZE, (1ST FIGURE, SIDE SHOWN; 2ND FIGURE, OTHER SIDE) — 24/12
DIRECTION OF FLOW
LINED DUCT — 24/12
HIDDEN DUCT — (24/12)
WYE W/45° ENTRY
TEE W/45° ENTRY
ELBOW W/TURNING VANES
HELICAL FLEX DUCT
SUPPLY DUCT SECTION UP/DOWN — 24/12
RETURN DUCT SECTION UP/DOWN — 24/12
EXHAUST DUCT SECTION UP/DOWN — 24/12
SUPPLY DUCT SECTION UP/DOWN — 18ø
ROUND BRANCH — 12ø, 18ø
DUCT TRANSITION — 24/12, 18/12
SPIN–IN W/VOLUME DAMPER — 24/12
FIRE SMOKE DAMPER
FIRE DAMPER
SMOKE DAMPER
MOTORIZED DAMPER — M
GRAVITY BACKDRAFT DAMPER — G
MANUAL VOLUME DAMPER — VD
SIDE/PLAN ACCESS DOOR
SUPPLY AIR DEVICE
RETURN AIR DEVICE
EXHAUST AIR DEVICE
THERMOSTAT/HUMIDISTAT — T, H
POINT OF CONNECTION/REMOVAL
KEYED NOTE/REVISION — 1, 1
WALL SWITCH — $
EQUIPMENT CALLOUT — DESIGNATOR, CHARACTERISTIC
PLUMBING FIXTURE CALLOUT — FIXTURE

PROJECT NOTES

1. ALL WORK SHALL BE PERFORMED IN ACCORDANCE WITH, 2009 INTERNATIONAL BUILDING CODE, 2009 INTERNATIONAL MECHANICAL CODE, 2009 INTERNATIONAL PLUMBING CODE, 2009 INTERNATIONAL FUEL GAS CODE, AND 2009 INTERNATIONAL ENERGY CODE, INCLUDING STATE AND LOCAL AMENDMENTS, SUBJECT TO AUTHORITY HAVING JURISDICTION INTERPRETATION.
2. CLOSELY COORDINATE NEW MECHANICAL CONSTRUCTION WITH ALL MECHANICAL, ELECTRICAL, ARCHITECTURAL AND STRUCTURAL MEMBERS. DUCTWORK AND PIPE ROUTING IS APPROXIMATE, DIAGRAMMATIC AND IS NOT TO BE SCALED. PROVIDE ALTERNATE ROUTING, OFFSETS AND TRANSITIONS AS REQUIRED FOR COORDINATION OF ALL WORK WITHOUT ADDITIONAL COST.
3. PROVIDE SEISMIC RESTRAINT FOR ALL MECHANICAL EQUIPMENT AND PIPING IN ACCORDANCE WITH 2009 IBC, IMC, AND IPC.
4. RECORD ALL FIELD CHANGES ON RECORD DRAWINGS AND SUBMIT TO ENGINEER DURING PROJECT CLOSE OUT.
5. INSTALL ALL EQUIPMENT IN ACCORDANCE WITH MANUFACTURERS INSTALLATION INSTRUCTIONS.
6. PROJECT ELEVATION IS 5000 FT FOR EQUIPMENT SELECTION.
7. PROVIDE ALL DUCT IN ACCORDANCE WITH SMACNA STANDARDS FOR 2" WC PRESSURE CLASS. SEAL ALL TRANSVERSE AND LONGITUDINAL SEAMS AND JOINTS EXCEPT FOR WELDED OR LOCKING–TYPE LONGITUDINAL JOINTS.
8. LINE ALL RECTANGULAR DUCT WITH 1" THICK INSULATED DUCT LINER. GLUED AND STICK PINNED IN ACCORDANCE WITH MANUFACTURERS INSTALLATION INSTRUCTIONS.
9. INSULATE ALL SUPPLY ROUND DUCTWORK ABOVE CEILINGS WITH 1–1/2" THICK 1.5 LBS/CF FIBERGLASS DUCT WRAP. TRIM AND SEAL JOINTS.
10. PROVIDE 1–1/2" THICK INSULATED FLEXIBLE DUCT AS INDICATED ON DRAWINGS CONFORMING TO NFPA 90A, UL 181–CLASS 0 OR 1 STANDARDS. INSTALL FLEXIBLE DUCT AS SHORT AS POSSIBLE WITHOUT KINKS.
11. LOCATE DIFFUSERS AND RETURN GRILLES ACCORDING TO THE ARCHITECTURAL REFLECTED CEILING PLANS.
12. DUCT DIMENSIONS SHOWN ARE INSIDE CLEAR DIMENSIONS.
13. PROVIDE TEST AND BALANCE REPORT TO ENGINEER FOR REVIEW AND APPROVAL.
19. ALL HEATING WATER PIPE SHALL BE SCHEDULE 40 STEEL PIPE WITH SCREWED FITTINGS OR TYPE "L" COPPER PIPE WITH SOLDERED FITTINGS.
20. INSULATE ALL HEATING WATER PIPE WITH 1" INSULATION WITH ASJ.
21. PROVIDE ISOLATION VALVES SERVING EACH PIECE OF EQUIPMENT.
22. T–DRILL FITTINGS SHALL NOT BE USED IN THIS PROJECT.
23. ALL NATURAL GAS PIPE SHALL BE SCHEDULE 40 STEEL PIPE WITH SCREWED FITTINGS FOR 2 LB SERVICE. CONTRACTOR MAY USE CSST DOWNSTREAM OF REGULATORS FOR FINAL EQUIPMENT CONNECTION.
24. PROVIDE "DIRT LEG" AHEAD OF EACH PIECE OF FUEL FIRED EQUIPMENT.

SHEET LIST

MH001 – MECHANICAL LEGENDS AND NOTES
MD101 – MECHANICAL DEMO. UPPER LEVEL FLOOR PLAN PHASE 2&3
MH100 – MECHANICAL OVERALL FLOOR PLAN
MH101 – MECHANICAL MAIN LEVEL PHASE 2
MH102 – MECHANICAL UPPER LEVEL FLOOR PLAN PHASE 2
MH103 – MECHANICAL UPPER LEVEL FLOOR PLAN PHASE 3
MH104 – MECHANICAL MAIN LEVEL FLOOR PLAN PHASE 4
MP101 – MECHANICAL PIPING UPPER LEVEL FLOOR PLAN PHASE 2
MH501 – MECHANICAL DETAILS
MH502 – MECHANICAL DETAILS
MH601 – MECHANICAL SCHEDULES
MH602 – MECHANICAL SCHEDULES

CRSA
ARCHITECTURE
PLANNING
INTERIORS
649 E SOUTH TEMPLE
SALT LAKE CITY, UT 84102
801.355.5915
www.crsa-us.com

STRUCTURAL ENGINEER
CALDER RICHARDS CONSULTING ENGINEERS
634 SOUTH 400 WEST
SALT LAKE CITY, UTAH 84101
(801)466-1699 FAX (801)232-2297

MECHANICAL ENGINEER
SMD
986 WEST ATHERTON DRIVE STE. 200
TAYLORSVILLE, UTAH 84123
(801)268-3828 FAX (801)268-3297

ELECTRICAL ENGINEER
SPECTRUM
175 S MAIN STREET STE. 300
SALT LAKE CITY, UTAH 84111
(801)328-5151 (801)401-9471

PROJECT:
BUILDING 3030 REMODEL
UTAH NATIONAL GUARD
CAMP W.G. WILLIAMS
17800 South Redwood Road
Riverton, Utah 84065

UTAH NATIONAL GUARD
12953 SOUTH

PROJECT NO: 20100608
CAD DWG FILE:
DRAWN BY:
CHECKED BY: SMD

MECHANICAL LEGENDS AND NOTES

MH001

SMD ENGINEERING, PLLC
"Engineered Mechanical Solutions"
986 WEST ATHERTON DRIVE, SUITE 200
TAYLORSVILLE, UTAH 84123
(801) 268-3828, FAX (801) 268-3297
WWW.SMDENGINEERING.COM

THIS DRAWING, AS AN INSTRUMENT OF SERVICE, IS AND SHALL REMAIN THE PROPERTY OF SMD ENGINEERING, PLLC AND SHALL NOT BE REPRODUCED, PUBLISHED, OR USED IN ANY WAY WITHOUT THE PERMISSION OF SMD ENGINEERING, PLLC. THE INFORMATION, DESIGN, OR CONCEPTS REPRESENTED ON THIS DRAWING ARE CONFIDENTIAL AND ARE NOT FOR GENERAL DISTRIBUTION. © SMD ENGINEERING, PLLC 2010

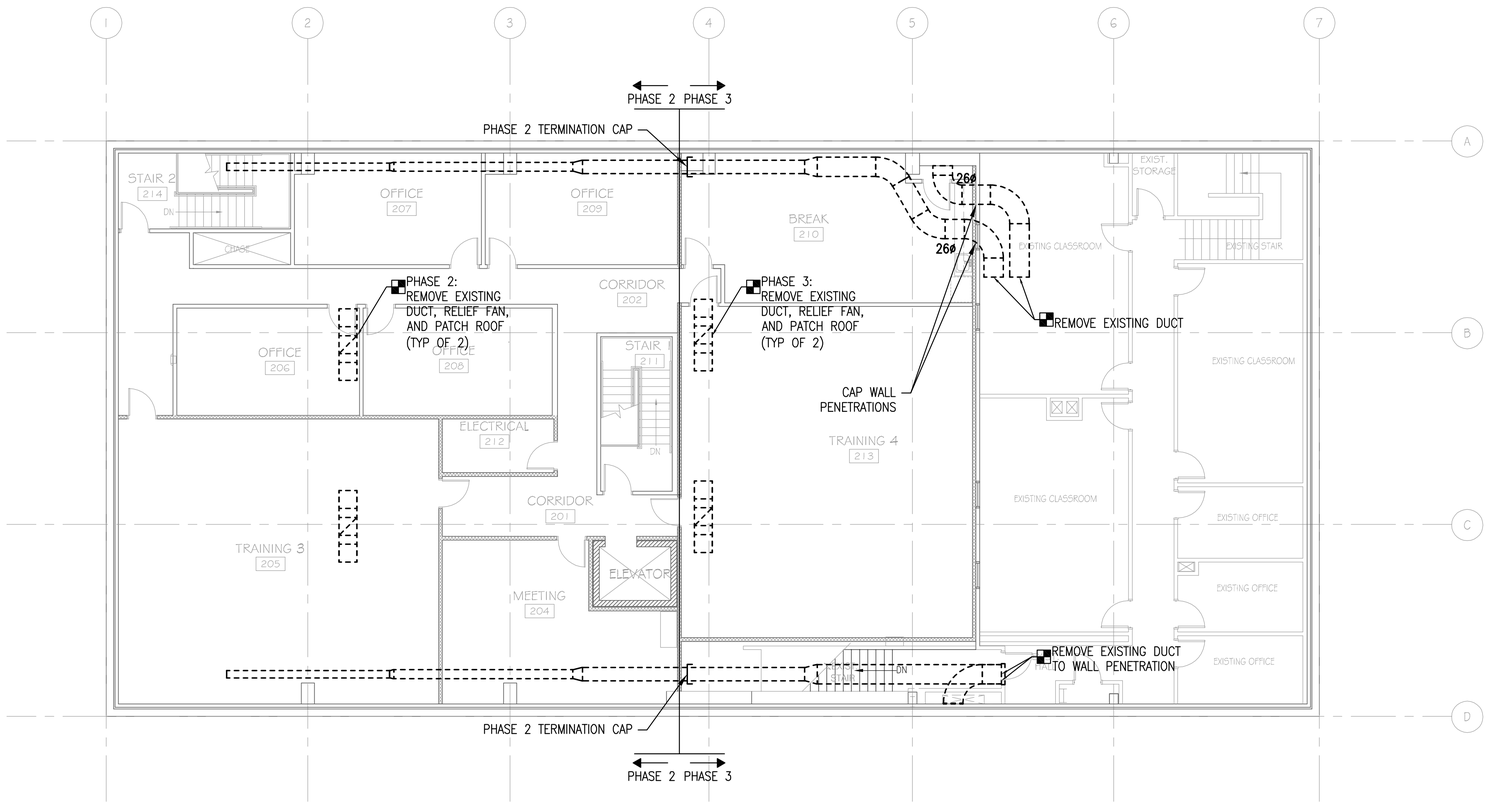

1
MD101

MECHANICAL DEMO. UPPER LEVEL FLOOR PLAN PHASE 2 & 3

NORTH

8' 4' 2' 0 8' 16'

SCALE: 1/8" = 1'-0"

SMD ENGINEERING, PLLC
"Engineered Mechanical Solutions"
986 WEST ATHERTON DRIVE, SUITE 200
TAYLORSVILLE, UTAH 84123
(801) 268-3828, FAX (801) 268-3297
WWW.SMDENGINEERING.COM

CRSA
ARCHITECTURE
PLANNING
INTERIORS
649 E SOUTH TEMPLE
SALT LAKE CITY, UT 84102
801.355.5915
www.crsa-us.com

STRUCTURAL ENGINEER
CALDER RICHARDS CONSULTING ENGINEERS
634 SOUTH 400 WEST
SALT LAKE CITY, UTAH 84101
(801)466-1639 FAX (801)232-2297

MECHANICAL ENGINEER
SMD
986 WEST ATHERTON DRIVE STE. 200
TAYLORSVILLE, UTAH 84123
(801)268-3828 FAX (801)268-3297

ELECTRICAL ENGINEER
SPECTRUM
175 S MAIN STREET STE. 300
SALT LAKE CITY, UTAH 84111
(801)328-5151 (801)401-9471

PROJECT:
BUILDING 3030 REMODEL
UTAH NATIONAL GUARD
CAMP W.G. WILLIAMS
17800 South Redwood Road
Riverton, Utah 84065

UTAH NATIONAL GUARD
12953 SOUTH

PROJECT NO: 201100608
CAD DWG FILE:
DRAWN BY:
CHECKED BY: SMD

MECHANICAL DEMO. UPPER LEVEL FLOOR PLAN PHASE 2 & 3

MD101

THIS DRAWING, AS AN INSTRUMENT OF SERVICE, IS AND SHALL REMAIN THE PROPERTY OF SMD ENGINEERING, PLLC AND SHALL NOT BE REPRODUCED, PUBLISHED, OR USED IN ANY WAY WITHOUT THE PERMISSION OF SMD ENGINEERING, PLLC. THE INFORMATION, DESIGN, OR CONCEPTS REPRESENTED ON THIS DRAWING ARE CONFIDENTIAL AND ARE NOT FOR GENERAL DISTRIBUTION. © SMD ENGINEERING, PLLC 2010

SHEET NOTES

1. REPLACE EXISTING FURNACES AND CONDENSING UNITS AS PART OF PHASE 3.

2 MH100 EXISTING SOUTH FURANCE

3 MH100 EXISTING NORTH FURNACE

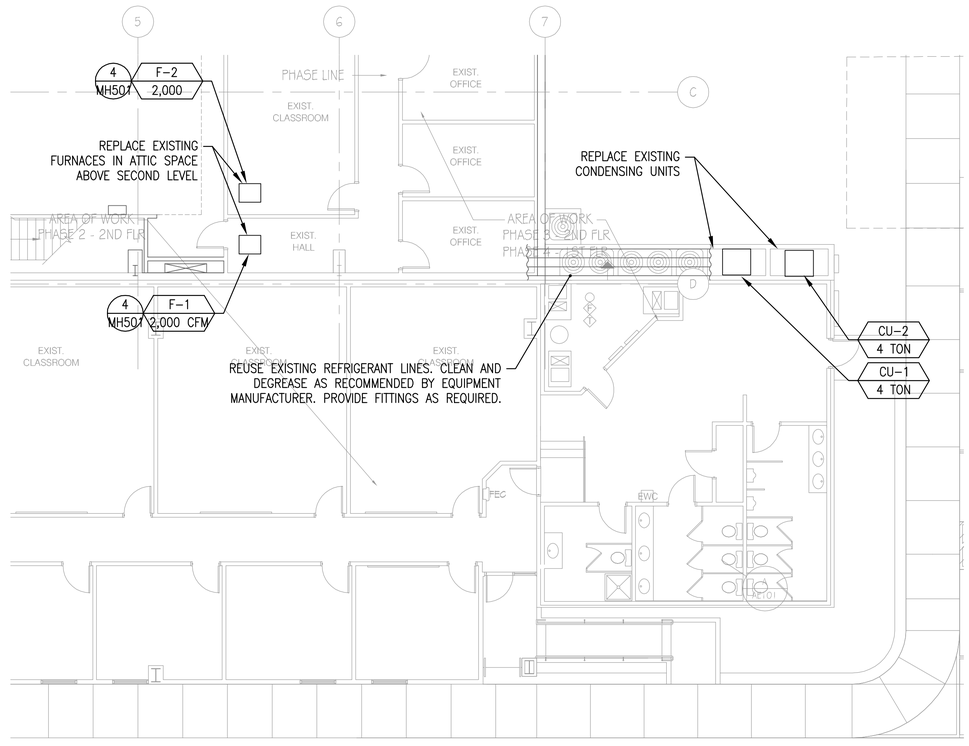

1 MH100 MECHANICAL OVERALL FLOOR PLAN

NORTH

8' 4' 2' 0 8' 16'

SCALE: 1/8" = 1'-0"

SMD ENGINEERING, PLLC
"Engineered Mechanical Solutions"
986 WEST ATHERTON DRIVE, SUITE 200
TAYLORSVILLE, UTAH 84123
(801) 268-3828, FAX (801) 268-3297
WWW.SMDENGINEERING.COM

CRSA
ARCHITECTURE
PLANNING
INTERIORS
649 E SOUTH TEMPLE
SALT LAKE CITY, UT 84102
801.355.5915
www.crsa-us.com

STRUCTURAL ENGINEER
CALDER RICHARDS CONSULTING ENGINEERS
634 SOUTH 400 WEST
SALT LAKE CITY, UTAH 84101
(801)466-1639 FAX (801)232-2297

MECHANICAL ENGINEER
SMD
986 WEST ATHERTON DRIVE STE. 200
TAYLORSVILLE, UTAH 84123
(801)268-3828 FAX (801)268-3297

ELECTRICAL ENGINEER
SPECTRUM
175 S MAIN STREET STE. 300
SALT LAKE CITY, UTAH 84111
(801)328-5151 (801)401-9471

PROJECT:
BUILDING 3030 REMODEL
UTAH NATIONAL GUARD
CAMP W.G. WILLIAMS
17800 South Redwood Road
Riverton, Utah 84065

UTAH NATIONAL GUARD
12953 SOUTH

PROJECT NO: 20100608
CAD DWG FILE:
DRAWN BY:
CHECKED BY: SMD

MECHANICAL OVERALL FLOOR PLAN

MH100

THIS DRAWING, AS AN INSTRUMENT OF SERVICE, IS AND SHALL REMAIN THE PROPERTY OF SMD ENGINEERING, PLLC AND SHALL NOT BE REPRODUCED, PUBLISHED, OR USED IN ANY WAY WITHOUT THE PERMISSION OF SMD ENGINEERING, PLLC. THE INFORMATION, DESIGN, OR CONCEPTS REPRESENTED ON THIS DRAWING ARE CONFIDENTIAL AND ARE NOT FOR GENERAL DISTRIBUTION. © SMD ENGINEERING, PLLC 2010

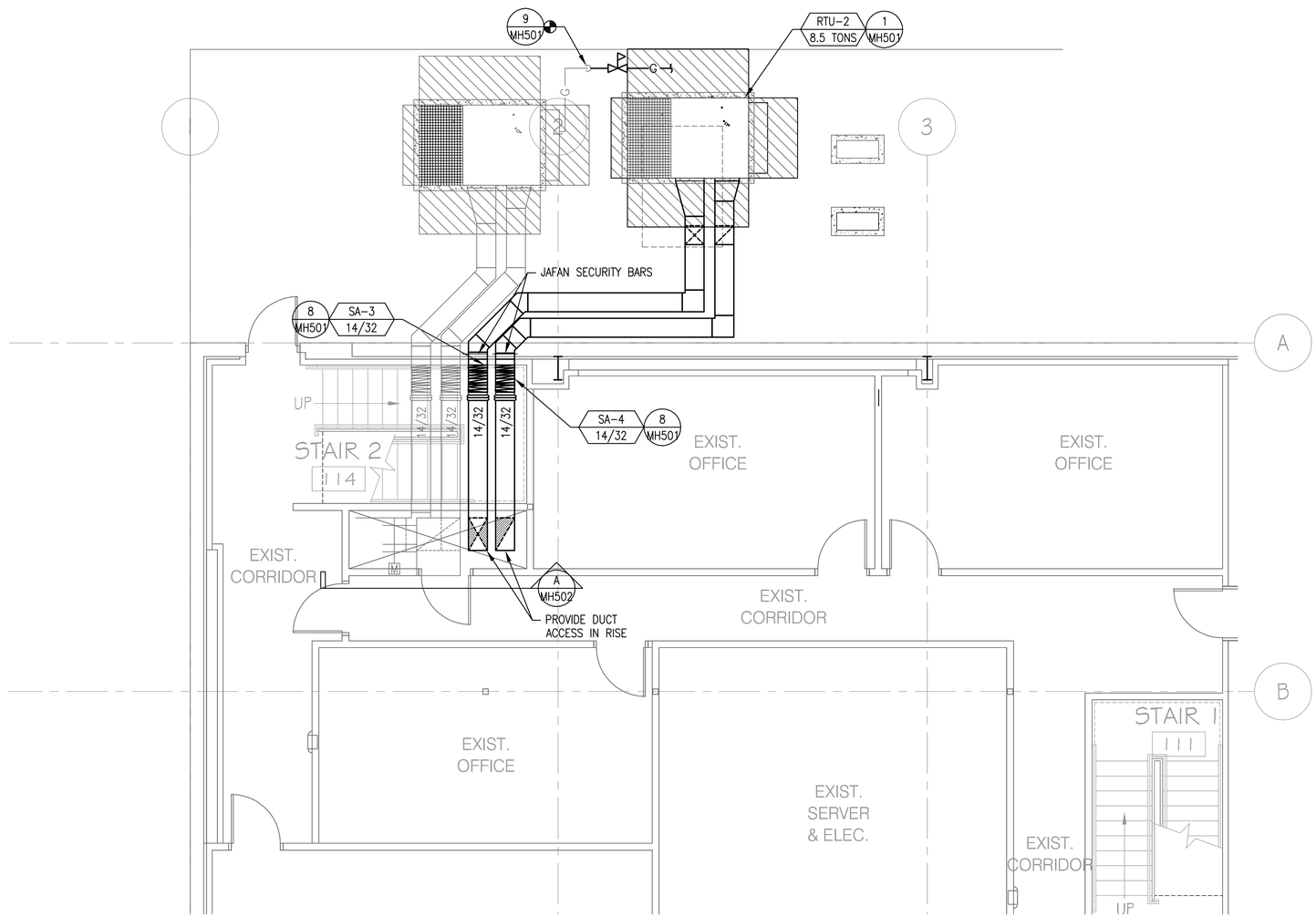

1 MH101 MECHANICAL MAIN LEVEL FLOOR PLAN PHASE 2

NORTH

4' 2' 1' 0 4' 8'
SCALE: 1/4" = 1'-0"

CRSA
ARCHITECTURE
PLANNING
INTERIORS
649 E SOUTH TEMPLE
SALT LAKE CITY, UT 84102
801.355.5915
www.crsa-us.com

STRUCTURAL ENGINEER
CALDER RICHARDS CONSULTING ENGINEERS
634 SOUTH 400 WEST
SALT LAKE CITY, UTAH 84101
(801)466-1639 FAX (801)232-2297

MECHANICAL ENGINEER
SMD
986 WEST ATHERTON DRIVE STE. 200
TAYLORSVILLE, UTAH 84123
(801)268-3828 FAX (801)268-3297

ELECTRICAL ENGINEER
SPECTRUM
175 S MAIN STREET STE. 300
SALT LAKE CITY, UTAH 84111
(801)328-5151 (801)401-9471

PROJECT:
BUILDING 3030 REMODEL
UTAH NATIONAL GUARD
CAMP W.G. WILLIAMS
17800 South Redwood Road
Riverton, Utah 84065

UTAH NATIONAL GUARD
12953 SOUTH

PROJECT NO: 20100608
CAD DWG FILE:
DRAWN BY:
CHECKED BY: SMD

MECHANICAL MAIN LEVEL FLOOR PLAN PHASE 2

SMD ENGINEERING, PLLC
"Engineered Mechanical Solutions"
986 WEST ATHERTON DRIVE, SUITE 200
TAYLORSVILLE, UTAH 84123
(801) 268-3828, FAX (801) 268-3297
WWW.SMDENGINEERING.COM

MH101

THIS DRAWING, AS AN INSTRUMENT OF SERVICE, IS AND SHALL REMAIN THE PROPERTY OF SMD ENGINEERING, PLLC AND SHALL NOT BE REPRODUCED, PUBLISHED, OR USED IN ANY WAY WITHOUT THE PERMISSION OF SMD ENGINEERING, PLLC. THE INFORMATION, DESIGN, OR CONCEPTS REPRESENTED ON THIS DRAWING ARE CONFIDENTIAL AND ARE NOT FOR GENERAL DISTRIBUTION. © SMD ENGINEERING, PLLC 2010

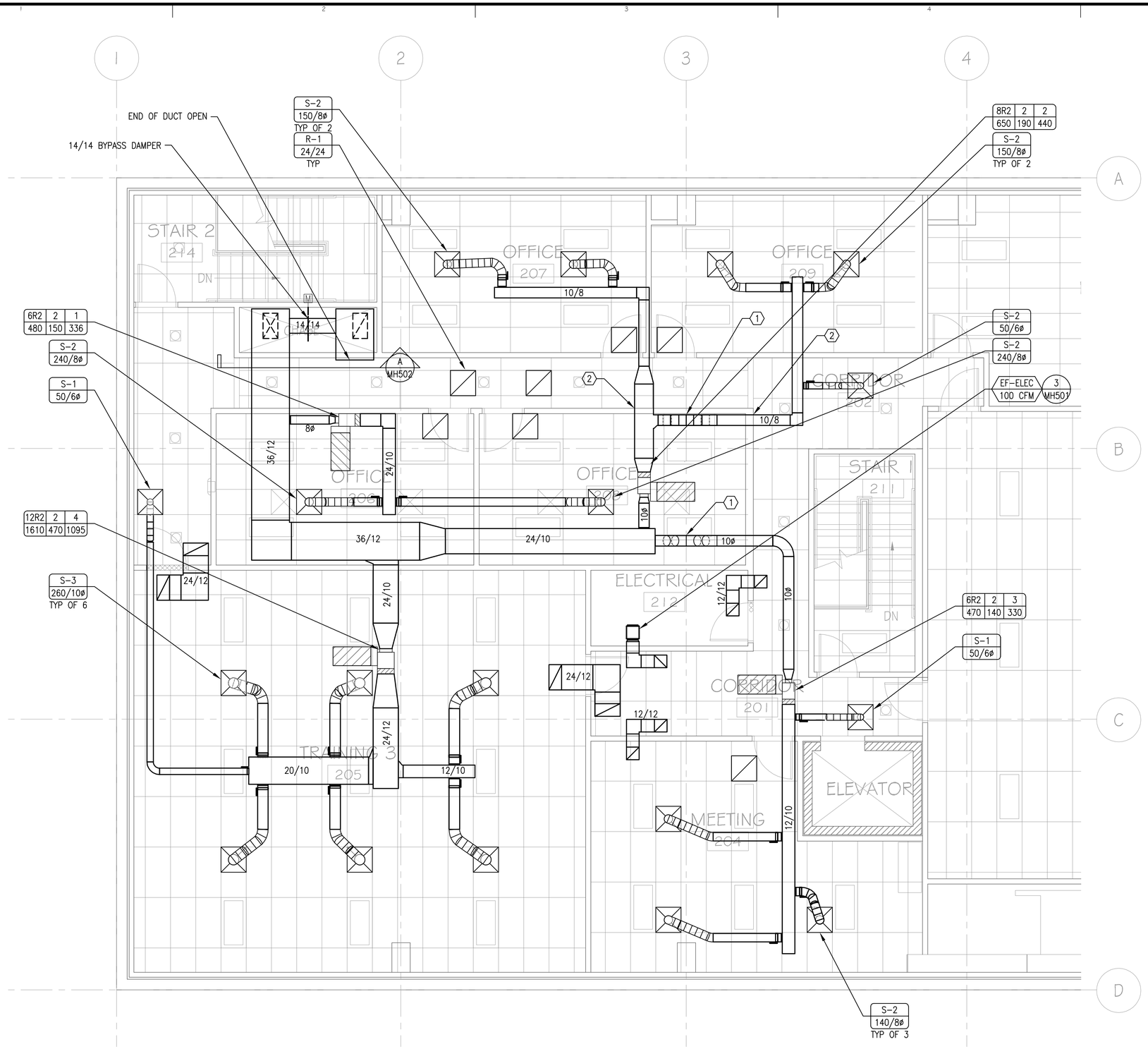

1
MH102

MECHANICAL UPPER LEVEL FLOOR PLAN PHASE 2

4' 2' 1' 0 4' 8'
SCALE: 1/4" = 1'-0"

NORTH

TYPICAL SHEET METAL DETAILS

- 2 / MH501 — VAV WITH REHEAT COIL
- 3 / MH501 — FLEX DUCT CONNECTION
- 5 / MH501 — 45° SMACNA ENTRY DUCT TAKE OFF
- 6 / MH501 — TRANSFER DUCT
- 7 / MH501 — RETURN AIR GRILLE SOUND BOOT

KEYED NOTES

1. INSTALL DUCT "TIGHT" TO GIRDER.
2. INSTALL DUCT "TIGHT" TO ROOF DECK OVER CABLE TRAY.

CRSA
ARCHITECTURE
PLANNING
INTERIORS
649 E SOUTH TEMPLE
SALT LAKE CITY, UT 84102
801.355.5915
www.crsa-us.com

STRUCTURAL ENGINEER
CALDER RICHARDS CONSULTING ENGINEERS
634 SOUTH 400 WEST
SALT LAKE CITY, UTAH 84101
(801)466-1639 FAX (801)232-2297

MECHANICAL ENGINEER
SMD
986 WEST ATHERTON DRIVE STE. 200
TAYLORSVILLE, UTAH 84123
(801)268-3828 FAX (801)268-3297

ELECTRICAL ENGINEER
SPECTRUM
175 S MAIN STREET STE. 300
SALT LAKE CITY, UTAH 84111
(801)328-5151 (801)401-9471

PROJECT:
BUILDING 3030 REMODEL
UTAH NATIONAL GUARD
CAMP W.G. WILLIAMS
17800 South Redwood Road
Riverton, Utah 84065

UTAH NATIONAL GUARD
12953 SOUTH

PROJECT NO: 20100608
CAD DWG FILE:
DRAWN BY:
CHECKED BY: SMD

MECHANICAL UPPER LEVEL FLOOR PLAN PHASE 2

SMD ENGINEERING, PLLC
"Engineered Mechanical Solutions"
986 WEST ATHERTON DRIVE, SUITE 200
TAYLORSVILLE, UTAH 84123
(801) 268-3828, FAX (801) 268-3297
WWW.SMDENGINEERING.COM

MH102

THIS DRAWING, AS AN INSTRUMENT OF SERVICE, IS AND SHALL REMAIN THE PROPERTY OF SMD ENGINEERING, PLLC AND SHALL NOT BE REPRODUCED, PUBLISHED, OR USED IN ANY WAY WITHOUT THE PERMISSION OF SMD ENGINEERING, PLLC. THE INFORMATION, DESIGN, OR CONCEPTS REPRESENTED ON THIS DRAWING ARE CONFIDENTIAL AND ARE NOT FOR GENERAL DISTRIBUTION. © SMD ENGINEERING, PLLC 2010

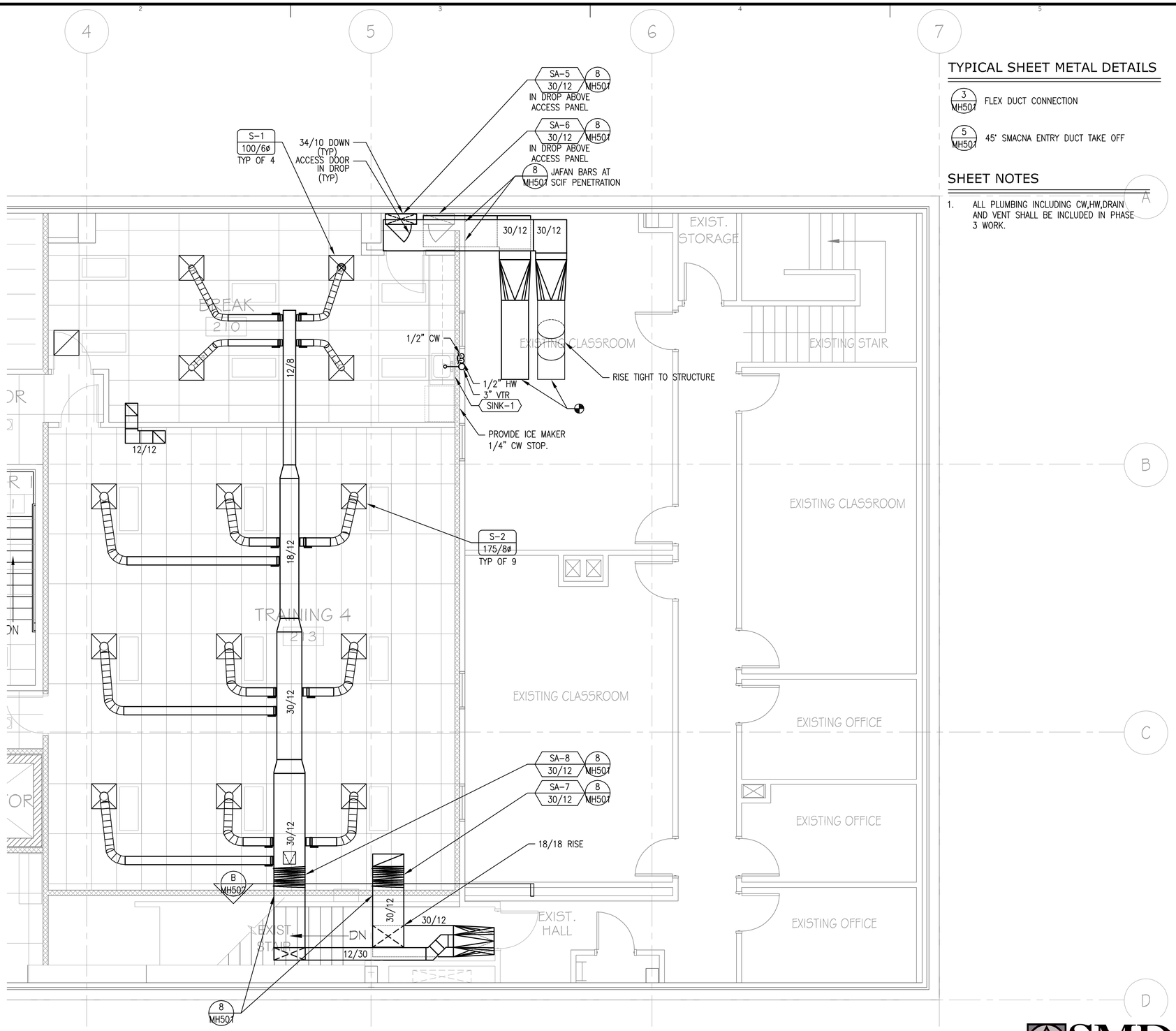

1
MH103

MECHANICAL UPPER LEVEL FLOOR PLAN PHASE 3

NORTH

4' 2' 1' 0 4' 8'

SCALE: 1/4" = 1'-0"

TYPICAL SHEET METAL DETAILS

3 MH501 — FLEX DUCT CONNECTION

5 MH501 — 45° SMACNA ENTRY DUCT TAKE OFF

SHEET NOTES

1. ALL PLUMBING INCLUDING CW,HW,DRAIN AND VENT SHALL BE INCLUDED IN PHASE 3 WORK.

CRSA
ARCHITECTURE
PLANNING
INTERIORS
649 E SOUTH TEMPLE
SALT LAKE CITY, UT 84102
801.355.5915
www.crsa-us.com

STRUCTURAL ENGINEER
CALDER RICHARDS CONSULTING ENGINEERS
634 SOUTH 400 WEST
SALT LAKE CITY, UTAH 84101
(801)466-1639 FAX (801)232-2297

MECHANICAL ENGINEER
SMD
986 WEST ATHERTON DRIVE STE. 200
TAYLORSVILLE, UTAH 84123
(801)268-3828 FAX (801)268-3297

ELECTRICAL ENGINEER
SPECTRUM
175 S MAIN STREET STE. 300
SALT LAKE CITY, UTAH 84111
(801)328-5151 (801)401-9471

PROJECT:
BUILDING 3030 REMODEL
UTAH NATIONAL GUARD
CAMP W.G. WILLIAMS
17800 South Redwood Road
Riverton, Utah 84065

UTAH NATIONAL GUARD
12953 SOUTH

PROJECT NO: 20100608
CAD DWG FILE:
DRAWN BY:
CHECKED BY: SMD

MECHANICAL UPPER LEVEL FLOOR PLAN PHASE 3

SMD ENGINEERING, PLLC
"Engineered Mechanical Solutions"
986 WEST ATHERTON DRIVE, SUITE 200
TAYLORSVILLE, UTAH 84123
(801) 268-3828, FAX (801) 268-3297
WWW.SMDENGINEERING.COM

MH103

THIS DRAWING, AS AN INSTRUMENT OF SERVICE, IS AND SHALL REMAIN THE PROPERTY OF SMD ENGINEERING, PLLC. AND SHALL NOT BE REPRODUCED, PUBLISHED, OR USED IN ANY WAY WITHOUT THE PERMISSION OF SMD ENGINEERING, PLLC. THE INFORMATION, DESIGN, OR CONCEPTS REPRESENTED ON THIS DRAWING ARE CONFIDENTIAL AND ARE NOT FOR GENERAL DISTRIBUTION. © SMD ENGINEERING, PLLC 2010

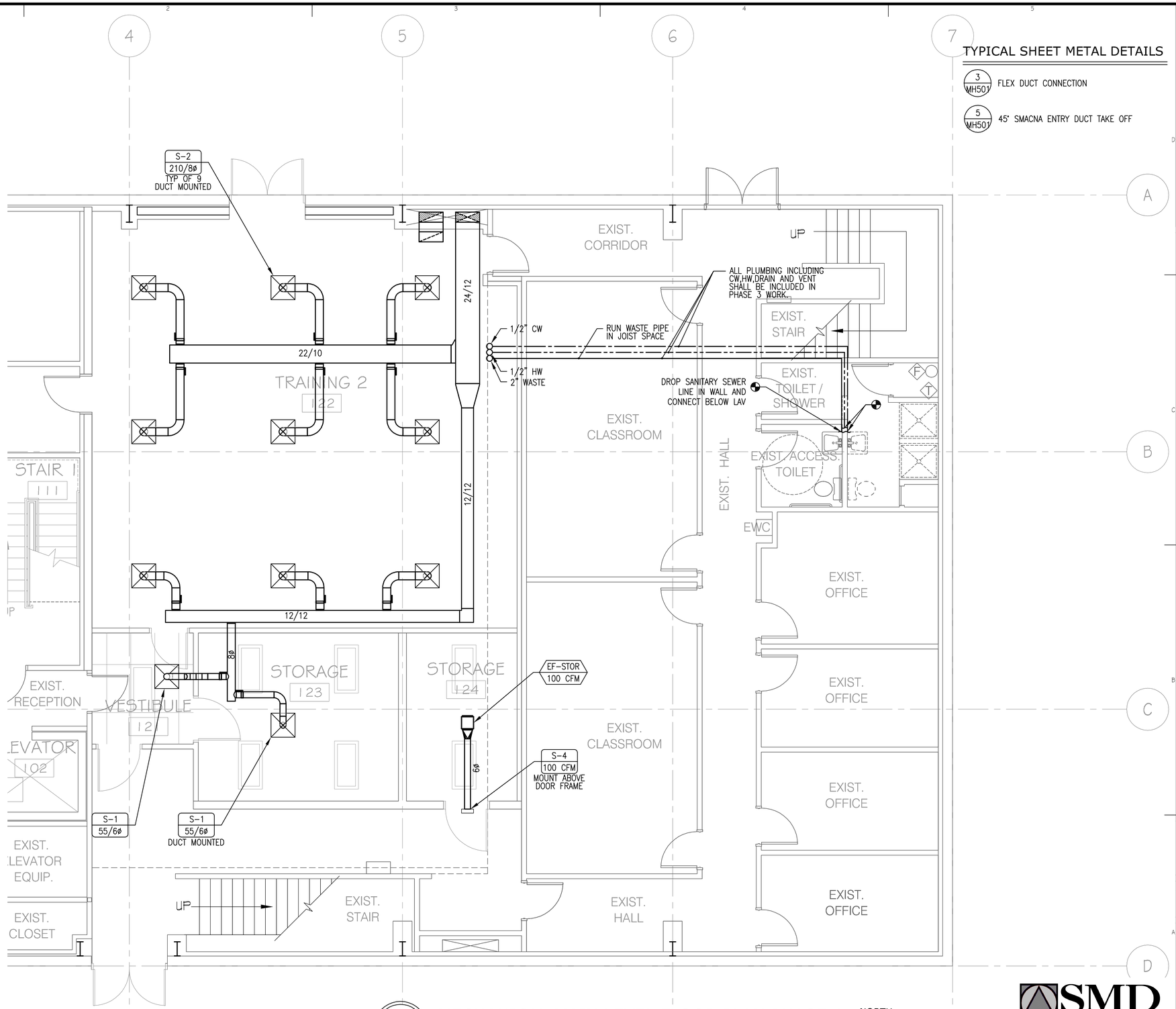

TYPICAL SHEET METAL DETAILS

3 / MH501 — FLEX DUCT CONNECTION

5 / MH501 — 45° SMACNA ENTRY DUCT TAKE OFF

1 / MH104 — MECHANICAL MAIN LEVEL FLOOR PLAN PHASE 4

NORTH

4' 2' 1' 0 4' 8'
SCALE: 1/4" = 1'-0"

CRSA
ARCHITECTURE
PLANNING
INTERIORS
649 E SOUTH TEMPLE
SALT LAKE CITY, UT 84102
801.355.5915
www.crsa-us.com

STRUCTURAL ENGINEER
CALDER RICHARDS CONSULTING ENGINEERS
634 SOUTH 400 WEST
SALT LAKE CITY, UTAH 84101
(801)466-1639 FAX (801)232-2297

MECHANICAL ENGINEER
SMD
986 WEST ATHERTON DRIVE STE. 200
TAYLORSVILLE, UTAH 84123
(801)268-3828 FAX (801)268-3297

ELECTRICAL ENGINEER
SPECTRUM
175 S MAIN STREET STE. 300
SALT LAKE CITY, UTAH 84111
(801)328-5151 (801)401-9471

PROJECT:
BUILDING 3030 REMODEL
UTAH NATIONAL GUARD
CAMP W.G. WILLIAMS
17800 South Redwood Road
Riverton, Utah 84065

UTAH NATIONAL GUARD
12953 SOUTH

PROJECT NO: 20100608
CAD DWG FILE:
DRAWN BY:
CHECKED BY: SMD

SMD ENGINEERING, PLLC
"Engineered Mechanical Solutions"
986 WEST ATHERTON DRIVE, SUITE 200
TAYLORSVILLE, UTAH 84123
(801) 268-3828, FAX (801) 268-3297
WWW.SMDENGINEERING.COM

MECHANICAL MAIN LEVEL FLOOR PLAN PHASE 4

MH104

THIS DRAWING, AS AN INSTRUMENT OF SERVICE, IS AND SHALL REMAIN THE PROPERTY OF SMD ENGINEERING, PLLC AND SHALL NOT BE REPRODUCED, PUBLISHED, OR USED IN ANY WAY WITHOUT THE PERMISSION OF SMD ENGINEERING, PLLC. THE INFORMATION, DESIGN, OR CONCEPTS REPRESENTED ON THIS DRAWING ARE CONFIDENTIAL AND ARE NOT FOR GENERAL DISTRIBUTION. © SMD ENGINEERING, PLLC 2010

TYPICAL MECHANICAL PIPING DETAILS

2 / MH501 VAV WITH REHEAT COIL

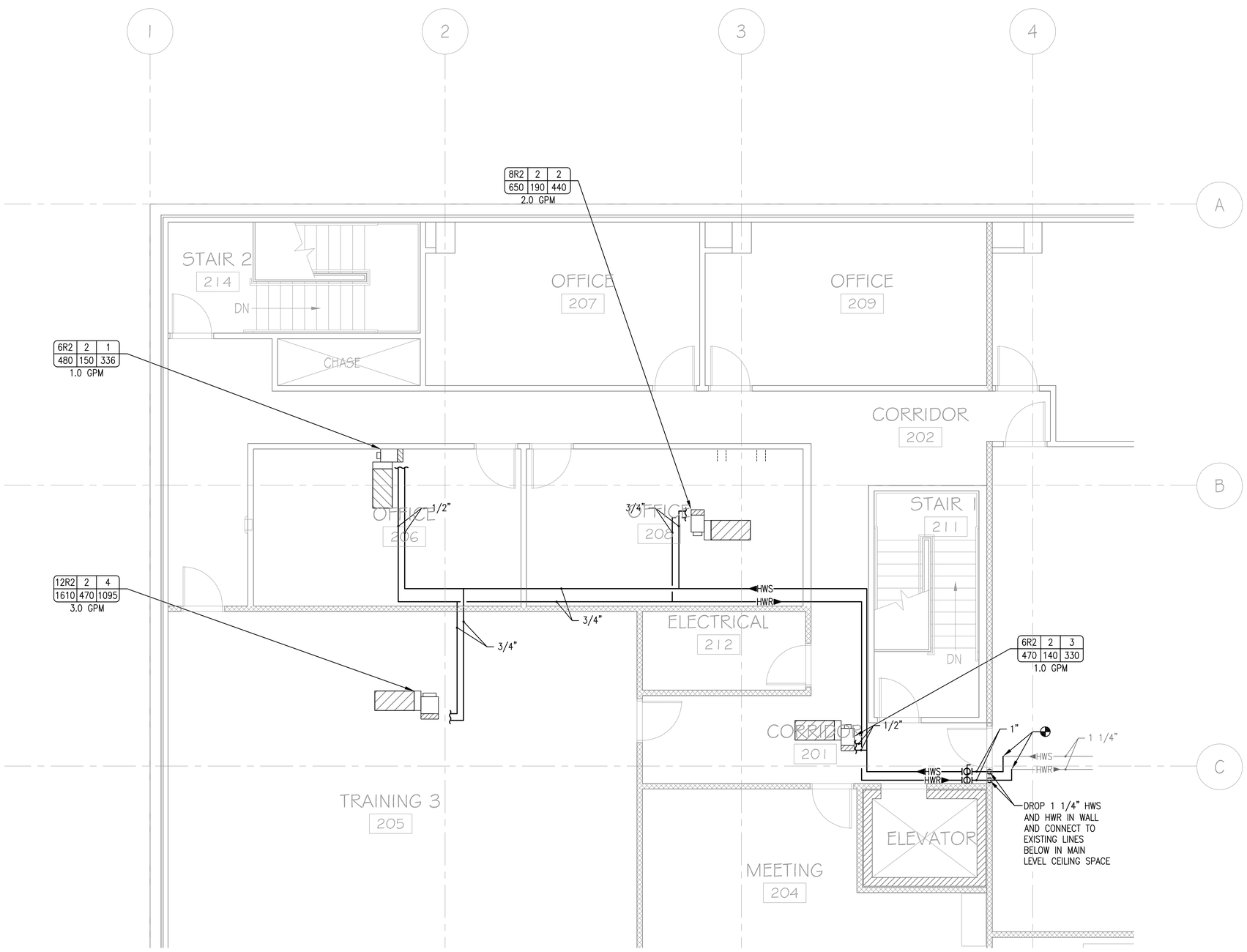

1 / MP101 MECHANICAL PIPING MAIN LEVEL FLOOR PLAN PHASE 2

NORTH

4' 2' 1' 0 4' 8'

SCALE: 1/4" = 1'-0"

CRSA
ARCHITECTURE
PLANNING
INTERIORS
649 E SOUTH TEMPLE
SALT LAKE CITY, UT 84102
801.355.5915
www.crsa-us.com

STRUCTURAL ENGINEER
CALDER RICHARDS CONSULTING ENGINEERS
634 SOUTH 400 WEST
SALT LAKE CITY, UTAH 84101
(801)466-1639 FAX (801)232-2297

MECHANICAL ENGINEER
SMD
986 WEST ATHERTON DRIVE STE. 200
TAYLORSVILLE, UTAH 84123
(801)268-3828 FAX (801)268-3297

ELECTRICAL ENGINEER
SPECTRUM
175 S MAIN STREET STE. 300
SALT LAKE CITY, UTAH 84111
(801)328-5151 (801)401-9471

PROJECT:
BUILDING 3030 REMODEL
UTAH NATIONAL GUARD
CAMP W.G. WILLIAMS
17800 South Redwood Road
Riverton, Utah 84065

UTAH NATIONAL GUARD
12953 SOUTH

SMD ENGINEERING, PLLC
"Engineered Mechanical Solutions"
986 WEST ATHERTON DRIVE, SUITE 200
TAYLORSVILLE, UTAH 84123
(801) 268-3828, FAX (801) 268-3297
WWW.SMDENGINEERING.COM

PROJECT NO: 20100608
CAD DWG FILE:
DRAWN BY:
CHECKED BY: SMD

MECHANICAL PIPING MAIN LEVEL FLOOR PLAN PHASE 2

MP101

This Drawing, as an instrument of service, is and shall remain the property of SMD Engineering, PLLC and shall not be reproduced, published, or used in any way without the permission of SMD Engineering, PLLC. The information, design, or concepts represented on this drawing are confidential and are not for general distribution. © SMD Engineering, PLLC 2010

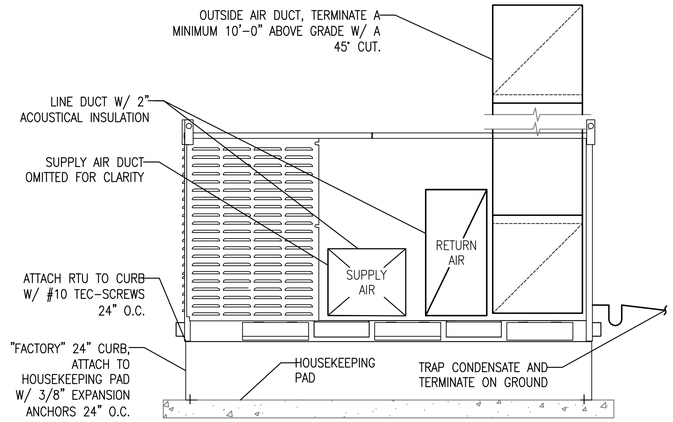

1 MH501 RTU-ON-GROUND

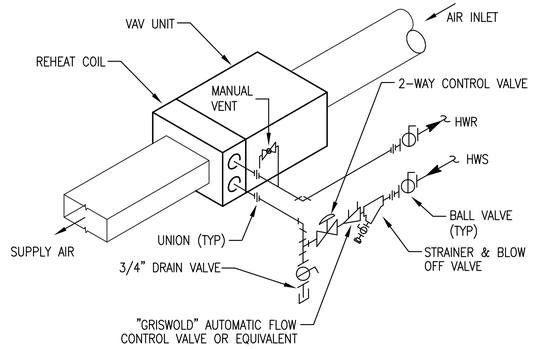

2 MH501 VAV BOX WITH REHEAT COIL

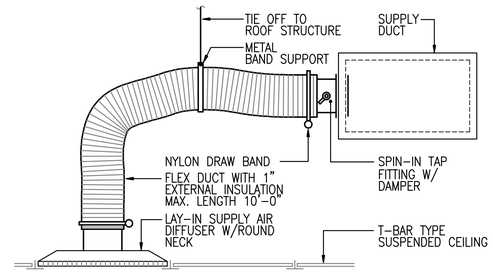

3 MH501 FLEX DUCT CONNECTION

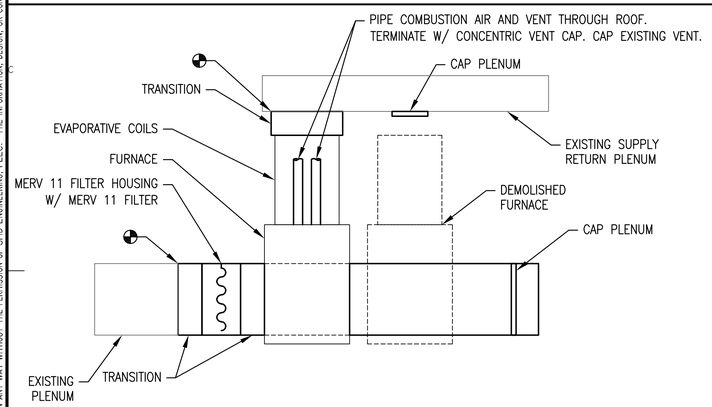

NOTE: CONNECT NEW FURNACE TO EXISTING GAS SUPPLY. PROVIDE NEW NATURAL GAS REGULATOR. PIPE CONDENSATE TO FLOOR DRAIN, TRAP CONDENSATE AS RECOMMENDED BY MANUFACTURER.

4 MH501 FURNACE REPLACEMENT

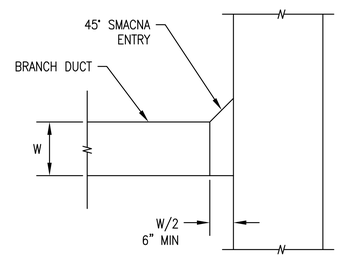

5 MH501 45° SMACNA ENTRY DUCT TAKE OFF

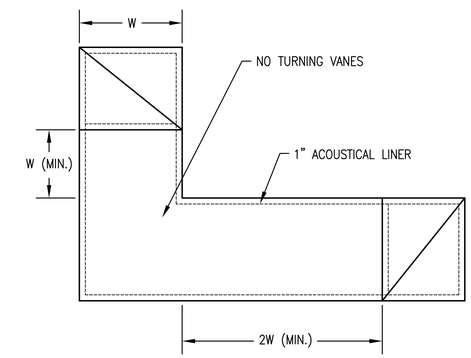

6 MH501 TRANSFER DUCT

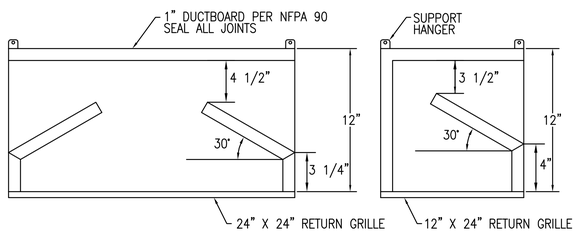

7 MH501 RETURN AIR GRILLE SOUND BOOT

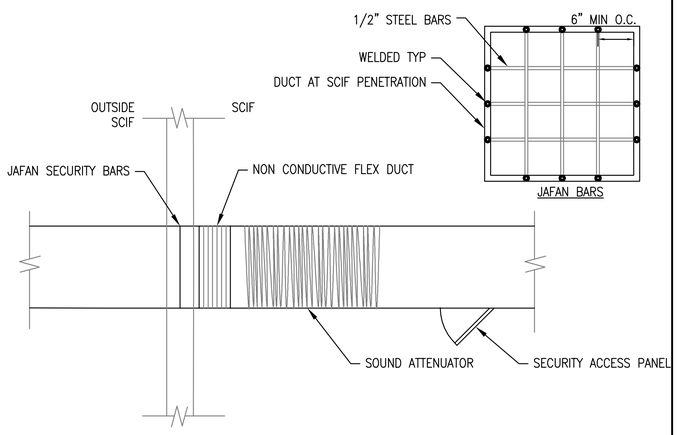

8 MH501 DUCT WORK AT SCIF PENETRATION

DESIGN CRITERIA

DESIGN LENGTH: 60'-0"
GAS HEAT: 890 BTU/CF
SYSTEM PRESSURE: 2 LB
REGULATORS: 2 LB TO 4 OZ

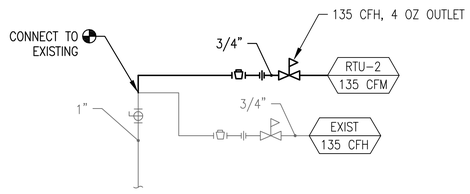

9 MH501 GAS PIPING DIAGRAM

SMD ENGINEERING, PLLC
"Engineered Mechanical Solutions"
986 WEST ATHERTON DRIVE, SUITE 200
TAYLORSVILLE, UTAH 84123
(801) 268-3828, FAX (801) 268-3297
WWW.SMDENGINEERING.COM

CRSA
ARCHITECTURE
PLANNING
INTERIORS
649 E SOUTH TEMPLE
SALT LAKE CITY, UT 84102
801.355.5915
www.crsa-us.com

STRUCTURAL ENGINEER
CALDER RICHARDS CONSULTING ENGINEERS
634 SOUTH 400 WEST
SALT LAKE CITY, UTAH 84101
(801)466-1699 FAX (801)232-2297

MECHANICAL ENGINEER
SMD
986 WEST ATHERTON DRIVE STE. 200
TAYLORSVILLE, UTAH 84123
(801)268-3828 FAX (801)268-3297

ELECTRICAL ENGINEER
SPECTRUM
175 S MAIN STREET STE. 300
SALT LAKE CITY, UTAH 84111
(801)328-5151 (801)401-9471

PROJECT:
BUILDING 3030 REMODEL
UTAH NATIONAL GUARD
CAMP W.G. WILLIAMS
17800 South Redwood Road
Riverton, Utah 84065

UTAH NATIONAL GUARD
12953 SOUTH

PROJECT NO: 20100608
CAD DWG FILE:
DRAWN BY:
CHECKED BY: SMD

MECHANICAL DETAILS

MH501

THE DRAWING, AS AN INSTRUMENT OF SERVICE, IS AND SHALL REMAIN THE PROPERTY OF SMD ENGINEERING, PLLC AND SHALL NOT BE REPRODUCED, PUBLISHED, OR USED IN ANY WAY WITHOUT THE PERMISSION OF SMD ENGINEERING, PLLC. THE INFORMATION, DESIGN, OR CONCEPTS REPRESENTED ON THIS DRAWING ARE CONFIDENTIAL AND ARE NOT FOR GENERAL DISTRIBUTION. © SMD ENGINEERING, PLLC 2010

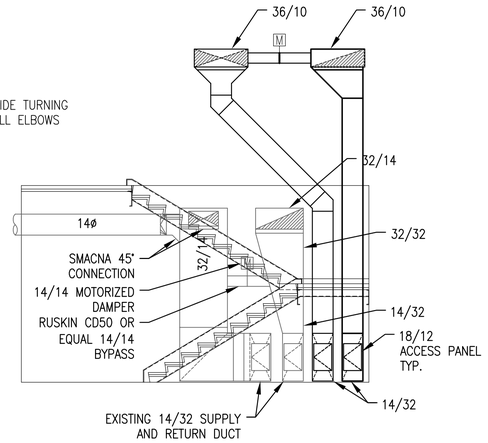

A MH502 SECTION A

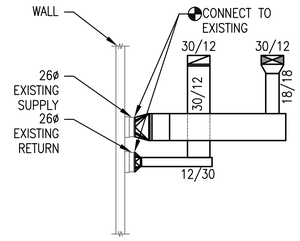

B MH502 SECTION B

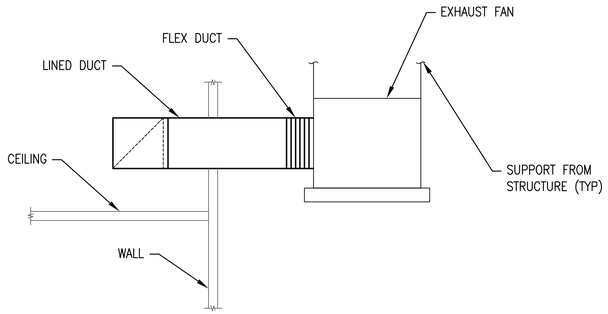

3 MH502 EXHAUST FAN

4 MH502 NOT USED

5 MH502 NOT USED

6 MH502 NOT USED

7 MH502 NOT USED

8 MH502 NOT USED

9 MH502 NOT USED

CRSA
ARCHITECTURE
PLANNING
INTERIORS
649 E SOUTH TEMPLE
SALT LAKE CITY, UT 84102
801.355.5915
www.crsa-us.com

STRUCTURAL ENGINEER
CALDER RICHARDS CONSULTING ENGINEERS
634 SOUTH 400 WEST
SALT LAKE CITY, UTAH 84101
(801)466-1639 FAX (801)232-2297

MECHANICAL ENGINEER
SMD
986 WEST ATHERTON DRIVE STE. 200
TAYLORSVILLE, UTAH 84123
(801)268-3828 FAX (801)268-3297

ELECTRICAL ENGINEER
SPECTRUM
175 S MAIN STREET STE. 300
SALT LAKE CITY, UTAH 84111
(801)328-5151 (801)401-9471

PROJECT:
BUILDING 3030 REMODEL
UTAH NATIONAL GUARD
CAMP W.G. WILLIAMS
17800 South Redwood Road
Riverton, Utah 84065

UTAH NATIONAL GUARD
12953 SOUTH

PROJECT NO: 20100608
CAD DWG FILE:
DRAWN BY:
CHECKED BY: SMD

SMD ENGINEERING, PLLC
"Engineered Mechanical Solutions"
986 WEST ATHERTON DRIVE, SUITE 200
TAYLORSVILLE, UTAH 84123
(801) 268-3828, FAX (801) 268-3297
WWW.SMDENGINEERING.COM

MECHANICAL DETAILS

MH502

THIS DRAWING, AS AN INSTRUMENT OF SERVICE, IS AND SHALL REMAIN THE PROPERTY OF SMD ENGINEERING, PLLC. AND SHALL NOT BE REPRODUCED, PUBLISHED, OR USED IN ANY WAY WITHOUT THE PERMISSION OF SMD ENGINEERING, PLLC. THE INFORMATION, DESIGN, OR CONCEPTS REPRESENTED ON THIS DRAWING ARE CONFIDENTIAL AND ARE NOT FOR GENERAL DISTRIBUTION. © SMD ENGINEERING, PLLC 2010

ROOF TOP UNIT SCHEDULE (RTU)

RTU / NOM. TON

MARK	AREA SERVED	NOM. TONS	EER	CFM @ ELEV.	ESP IN WC	COOLING CAPACITY						HEATING CAPACITY (PROJECT)						COMPRESSORS			CONDENSER FAN MOTORS			EVAPORATOR FAN MOTOR			ELECTRICAL			DIMENSIONS				MANUFACTURER MODEL	REMARKS
						TOTAL MBH	SENS. MBH	EAT °F DB/WB	LAT °F DB	AMB °F	REFRIG	STAGE	IN MBH	OUT MBH	TEMP RISE °F	MIN AFUE	FUEL	NO.	RLA	LRA	NO.	HP	FLA	NO.	HP	BHP	VOLT/ PHASE	MCA	MCOP	L IN	W IN	H IN	WT LBS		
RTU-2	PHASE 2	8.5	11.50	3,200	1.50	106	81	80/67	57.9	95	R410a	2	120	96	26.1	80	NAT. GAS	2	16	120	2	1/4	1.5	1	3	2.7	208/ 3ø	59.4	70	59	89	50	1,365	YORK ZH102N10Q2AAA4	NOTE 1

NOTE 1: ASHRAE 90.1 COMPLIANT, W/ THROUGH THE BOTTOM GAS AND ELECTRICAL KIT, "FACTORY" 36" DEEP ROOF CURB W/ SIDE INLET AND OUTLET, CONVENIENCE OUTLET, AND DISCONNECT. SET OUTSIDE AIR TO 1,000 CFM.

SOUND ATTENUATOR SCHEDULE (SA)

SA / FACE

MARK	SYSTEM SERVED	FACE SIZE IN/IN	LENGTH IN	FACE VELOCITY, FPM	PD IN WC	INSERTION LOSS DB								MANUFACTURER MODEL	REMARKS
						63 HZ	125 HZ	250 HZ	500 HZ	1000 HZ	2000 HZ	4000 HZ	8000 HZ		
SA-3	RTU-2	32/14	36	1400	0.15	2	4	10	18	22	18	15	13	VIBRO-ACOUSTICS RD-MHV-F8	
SA-4	RTU-2	32/14	36	1400	0.15	2	4	10	18	22	18	15	13	VIBRO-ACOUSTICS RD-MHV-F8	
SA-5	F-1	30/12	36	1400	0.15	2	4	10	18	22	18	15	13	VIBRO-ACOUSTICS RD-MHV-F8	
SA-6	F-1	30/12	36	1400	0.15	2	4	10	18	22	18	15	13	VIBRO-ACOUSTICS RD-MHV-F8	
SA-7	F-2	30/12	36	1400	0.15	2	4	10	18	22	18	15	13	VIBRO-ACOUSTICS RD-MHV-F8	
SA-8	F-2	30/12	36	1400	0.15	2	4	10	18	22	18	15	13	VIBRO-ACOUSTICS RD-MHV-F8	

EXHAUST FAN SCHEDULE (EF)

EF / CFM

MARK	AREA SERVED	TYPE	CFM	ESP (IN WC)	MOTOR				SONES	DAMPER	CONTROL	OPENING SIZE IN	MANUFACTURER MODEL	REMARKS
					RPM	BHP	HP	VOLT/ PHASE						
EF-ELEC	SECOND LEVEL ELECT RM	CEILING	100	0.25	917	59 WATTS	1.7 AMPS	120/ 1ø	1.9	GRAVITY	ALWAYS ON	N/A	COOK GC-162	
EF-STOR	STORAGE 124	CEILING	100	0.25	917	59 WATTS	1.7 AMPS	120/ 1ø	1.9	GRAVITY	ALWAYS ON	N/A	COOK GC-162	

AIR DEVICE SCHEDULE

DEVICE / CFM

MARK	TYPE & DUTY	FACE SIZE H X W	NECK SIZE H X W	CEILING TYPE	MAX. CFM	MAX. T.P. (IN WC)	MAX. NC LEVEL	MIN T50 THROW (FT)	PATTERN	MANUFACTURER MODEL	REMARKS
S-1	LOUVERED FACE DIFFUSER	24/24	6ø	LAY-IN	140	0.05	15	10	4-WAY	KRUEGER 1400	LAY-IN
S-2	LOUVERED FACE DIFFUSER	24/24	8ø	LAY-IN	250	0.07	16	13	4-WAY	KRUEGER 1400	LAY-IN
S-3	LOUVERED FACE DIFFUSER	24/24	10ø	LAY-IN	440	0.10	20	14	4-WAY	KRUEGER 1400	LAY-IN
S-4	ADJ. DOUBLE DEFLECTION SIDEWALL	14/8	12/6	WALL	200	0.08	14	26	ADJUSTABLE	KRUEGER AF880	SURFACE MOUNT FRAME AIRFOIL BLADES
R-1	PERFORATED RETURN	24/24	22/22	LAY-IN	1000	0.05	28	N/A	N/A	KRUEGER 6490	LAY-IN FRAME
R-2	PERFORATED RETURN	24/24	22/22	GYP.	1000	0.05	28	N/A	N/A	KRUEGER 6490	LAY-IN FRAME
R-3	PERFORATED EXHAUST	30/12	28/10	GYP.	750	0.020	13	N/A	N/A	KRUEGER EGC5	SURFACE MOUNT FRAME

SMD ENGINEERING, PLLC
"Engineered Mechanical Solutions"
986 WEST ATHERTON DRIVE, SUITE 200
TAYLORSVILLE, UTAH 84123
(801) 268-3828, FAX (801) 268-3297
WWW.SMDENGINEERING.COM

CRSA
ARCHITECTURE
PLANNING
INTERIORS
649 E SOUTH TEMPLE
SALT LAKE CITY, UT 84102
801.355.5915
www.crsa-us.com

STRUCTURAL ENGINEER
CALDER RICHARDS CONSULTING ENGINEERS
634 SOUTH 400 WEST
SALT LAKE CITY, UTAH 84101
(801)466-1639 FAX (801)232-2297

MECHANICAL ENGINEER
SMD
986 WEST ATHERTON DRIVE STE. 200
TAYLORSVILLE, UTAH 84123
(801)268-3828 FAX (801)268-3297

ELECTRICAL ENGINEER
SPECTRUM
175 S MAIN STREET STE. 300
SALT LAKE CITY, UTAH 84111
(801)328-5151 (801)401-9471

PROJECT:
BUILDING 3030 REMODEL
UTAH NATIONAL GUARD
CAMP W.G. WILLIAMS
17800 South Redwood Road
Riverton, Utah 84065

UTAH NATIONAL GUARD
12953 SOUTH

PROJECT NO: 20100608
CAD DWG FILE:
DRAWN BY:
CHECKED BY: SMD

MECHANICAL SCHEDULES

MH601

THIS DRAWING, AS AN INSTRUMENT OF SERVICE, IS AND SHALL REMAIN THE PROPERTY OF SMD ENGINEERING, PLLC AND SHALL NOT BE REPRODUCED, PUBLISHED, OR USED IN ANY WAY WITHOUT THE PERMISSION OF SMD ENGINEERING, PLLC. THE INFORMATION, DESIGN, OR CONCEPTS REPRESENTED ON THIS DRAWING ARE CONFIDENTIAL AND ARE NOT FOR GENERAL DISTRIBUTION. © SMD ENGINEERING, PLLC 2010

FURNACE SCHEDULE (F)

F / CFM

MARK	BURNER							AIRFLOW		EVAPORATOR COIL								ELECTRICAL			DIMENSIONS				MANUFACTURER MODEL	REMARKS
	GAS INPUT SL (MBH)	OUTPUT (MBH)	STAGE	AFUE	GAS CONNECT SIZE	COMB. AIR SIZE/MATL	VENT SIZE/MATL	CFM	ESP (IN WC)	ENTERING DB/WB	LEAVING DB	TOTAL (MBH)	SENS. (MBH)	PRESS. DROP (IN WC)	EVAPORATOR COIL MODEL NO.	CONDEN. UNIT	MOTOR HP	VOLTS/ PHASE	FLA	MCOP	W (IN)	H (IN)	D (IN)	WT (LBS)		
F-1	120	114	3	95	1/2"	3"/PVC	3"/PVC	2000	1.0	80/63	55	45	36	0.35	4TXCD009CC3HCA	CU-1	1	115/1ø	15.2	20	29	40	25	193	TRANE TUHMD120ACV5VA	PHASE 3
F-2	120	114	3	95	1/2"	3"/PVC	3"/PVC	2000	1.0	80/63	55	45	36	0.35	4TXCD009CC3HCA	CU-1	1	115/1ø	15.2	20	29	40	25	193	TRANE TUHMD120ACV5VA	PHASE 3

CONDENSING UNIT SCHEDULE (CU)

CU / TON

MARK	NOMINAL CAPACITY (TONS)	REFRIGERANT	AMBIENT	SEER	STEPS	ELECTRICAL						DIMENSIONS					FURNACE	MANUFACTURER MODEL	REMARKS
						VOLTS/ PHASE	MCA	MCOP	COMPRESSOR (EACH)		FAN (EACH)	L (IN)	W (IN)	H (IN)	WT (LBS)	MIN.PAD SIZE (IN)			
									LRA	RLA	FLA								
CU-1	4	R-410A	95	16	1	230/1ø	29	50	104	21.2	2.8	38	35	54	291	40/36	F-1	TRANE 4TTX6048E	PHASE 3
CU-2	4	R-410A	95	16	1	230/1ø	29	50	104	21.2	2.8	38	35	54	291	40/36	F-2	TRANE 4TTX6048E	PHASE 3

VAV REHEAT BOX SCHEDULE

MARK	FLR	##
MXC	MNC	MXH

MARK	INLET SIZE IN	TOTAL PRESS IN WC	MAX N.C. @ 1" Ps	MAX CFM	MIN CNTRL CFM	HEATING COIL							DIMENSIONS				MANUFACTURER MODEL	REMARKS
						EAT °F	LAT °F	MAX HEAT CFM	ROWS	GPM @ 180°	PD FT WC	MBH	L IN	H IN	W IN	WT LBS		
6R2	6	0.47	25	515	89	55	100	450	2	1.0	0.30	18.7	21	8	12	20	KRUEGER LMHS	
8R2	8	0.75	25	920	159	55	98	720	2	2.0	1.2	30.9	21	10	12	23	KRUEGER LMHS	
10R2	10	0.75	23	1350	248	55	94	1100	2	2.0	0.70	41.3	21	13	14	30	KRUEGER LMHS	
12R2	12	0.96	24	1880	357	55	94	1600	2	3.0	1.80	62.5	21	15	16	38	KRUEGER LMHS	
14R2	14	0.71	24	2690	486	55	93	2200	2	3.0	1.20	80.1	18	18	20	49	KRUEGER LMHS	

PLUMBING FIXTURE SCHEDULE

FIXTURE

MARK	FIXTURE	ROUGH IN SIZE					MANUFACTURER MODEL	REMARKS
		WASTE IN	TRAP IN	VENT IN	HW IN	CW IN		
SINK-1	ADA COMPLIANT SINGLE COMPARTMENT, STAINLESS STEEL COUNTER MOUNTED SINK, W/ OFFSET DRAIN	2	1 1/2	2	1/2	1/2	ELKAY "CELEBRITY" GECR25213 SINK, LK2443BH FAUCET, AND LK99 STRAINER	STAINLESS STEEL COUNTERTOP SINK, INSIDE BOWLS 21" X16" X5 3/8", CHROMED BRASS BALL ANGLE STOPS, CHROMED BRASS SUPPLIES, AND CHROMED BRASS "P" TRAP W/ ADA COMPLIANT DRAIN OFFSET.
STAND	STANDPIPE	2	2	2	N/A	N/A	N/A	PROVIDE TRAP PRIMER.

CRSA
ARCHITECTURE
PLANNING
INTERIORS
649 E SOUTH TEMPLE
SALT LAKE CITY, UT 84102
801.355.5915
www.crsa-us.com

STRUCTURAL ENGINEER
CALDER RICHARDS CONSULTING ENGINEERS
634 SOUTH 400 WEST
SALT LAKE CITY, UTAH 84101
(801)466-1639 FAX (801)232-2297

MECHANICAL ENGINEER
SMD
986 WEST ATHERTON DRIVE STE. 200
TAYLORSVILLE, UTAH 84123
(801)268-3828 FAX (801)268-3297

ELECTRICAL ENGINEER
SPECTRUM
175 S MAIN STREET STE. 300
SALT LAKE CITY, UTAH 84111
(801)328-5151 (801)401-9471

PROJECT:
BUILDING 3030 REMODEL
UTAH NATIONAL GUARD
CAMP W.G. WILLIAMS
17800 South Redwood Road
Riverton, Utah 84065

UTAH NATIONAL GUARD
12953 SOUTH

PROJECT NO: 20100608
CAD DWG FILE:
DRAWN BY:
CHECKED BY: SMD

SMD ENGINEERING, PLLC
"Engineered Mechanical Solutions"
986 WEST ATHERTON DRIVE, SUITE 200
TAYLORSVILLE, UTAH 84123
(801) 268-3828, FAX (801) 268-3297
WWW.SMDENGINEERING.COM

MECHANICAL SCHEDULES

MH602

SYMBOL LEGEND

SYMBOL	DESCRIPTION
REFERENCE AND LINE SYMBOLS	
A5 / E-501	DETAIL INDICATOR: A5 INDICATES DETAIL NUMBER, E-501 INDICATES DRAWING SHEET WHERE DETAIL IS SHOWN.
A5 / E-201	ELEVATION OR SECTION INDICATOR, INTERIOR: A5 INDICATES ELEVATION OR SECTION NUMBER, E-201 INDICATES DRAWING SHEET WHERE ELEVATION OR SECTION IS SHOWN.
100	ROOM OR SPACE NUMBER.
1	KEYNOTE INDICATOR.
1	REVISION INDICATOR.
CU-1	EQUIPMENT INDICATOR.
	BREAK, STRAIGHT: TO BREAK PARTS OF DRAWING.
	BREAK, ROUND.
	NEW LINE: MEDIUM LINE.
	HIDDEN FEATURES LINE: HIDDEN, THIN LINE.
WIRING METHODS	
	WIRING.
A-1,3,5	BRANCH CIRCUIT HOME RUN TO PANELBOARD: NUMBER OF ARROWS INDICATES NUMBER OF CIRCUITS. LETTER AND NUMBER NOTATIONS IDENTIFY PANEL AND CIRCUIT NUMBERS. USE #12 CONDUCTORS, EXCEPT #10 CONDUCTORS SHALL BE INSTALLED IF DISTANCES EXCEED THOSE SPECIFIED IN SECTION 16120.
1 A-1,3,5	BRANCH CIRCUIT HOME RUN TO PANELBOARD: NUMBER OF ARROWS INDICATES NUMBER OF CIRCUITS. LETTER AND NUMBER NOTATIONS IDENTIFY PANEL AND CIRCUIT NUMBERS. NUMBER IN BOX REFERS TO THE CONDUCTOR AND CONDUIT SCHEDULE. FOR BRANCH WIRING USE #12 CONDUCTORS, EXCEPT #10 CONDUCTORS SHALL BE INSTALLED IF DISTANCES EXCEED THOSE SPECIFIED IN SECTION 16120.
— X —	WIRING AND/OR RACEWAY: THIN LINE. WHERE "X" = : CATV = CABLE TELEVISION; CCTV = CLOSED CIRCUIT TELEVISION; FA = FIRE ALARM; FO = FIBER OPTICS; I = INTERCOM; NC = NURSE CALL; P = POWER; RC = RIGID CONDUIT; S = SOUND; T = TELEPHONE; TV = TELEVISION OTHERS AS NOTED IN OTHER SCHEDULES. RACEWAYS AND WIRING SHALL BE SIZED AS SHOWN AND/OR SPECIFIED.
	LOW VOLTAGE WIRING: DIVIDE, MEDIUM LINE.
	CONDUIT STUB. DIMENSION RECORD DRAWINGS AND MARK.
1	CONDUCTOR & CONDUIT ("CC") SCHEDULE INDICATOR. REFER TO ONE-LINE DIAGRAM.
	JUNCTION BOX.
	CABLE TRAY ABOVE ACCESSIBLE CEILING.
	EARTH GROUND (ONE-LINE DIAGRAM).
LIGHTING (REFER TO FIXTURE SCHEDULE FOR SYMBOLS)	
(W-3)	FIXTURE IDENTIFICATION: (W-3) INDICATES FIXTURE TYPE AS SCHEDULED.
(W-3)	FIXTURE IDENTIFICATION, EMERGENCY WITH BATTERY PACK, CONNECTED TO GENERATOR AS INDICATED: (W-3) INDICATES FIXTURE TYPE AS SCHEDULED.
LIGHTING CONTROL	
	OCCUPANCY SENSOR, DUAL TECHNOLOGY, OMNI-DIRECTIONAL, CEILING.
P	PHOTOCELL.
TC	TIME CLOCK.
STRUCTURED CABLING	
	OUTLET, BUILDING STANDARD COMBINATION TELEPHONE/ DATA COMMUNICATION.
N	OUTLET, BUILDING STANDARD COMBINATION TELEPHONE/ DATA COMMUNICATION.
X	OUTLET, DATA COMMUNICATION ("X" INDICATES QUANTITY OF CABLES).
S	OULET, SIPRNET COMM DEVICE.
	VERTICAL COMMUNICATIONS GUTTER.
	TELEPHONE TERMINAL BOARD, FIRE TREATED PLYWOOD PAINTED.
	LAN RACK, FLOOR STANDING.

SYMBOL LEGEND

SYMBOL	DESCRIPTION
ELECTRICAL POWER AND DISTRIBUTION	
	DISCONNECT, FUSED (ONE-LINE DIAGRAM).
	DISCONNECT, NONFUSED (ONE-LINE DIAGRAM).
	CIRCUIT BREAKER, MOLDED CASE (ONE-LINE DIAGRAM).
	MOTOR.
	TRANSFORMER (ONE-LINE DIAGRAM).
225/3 "1H"	PANELBOARD WITH MAIN LUGS ONLY. BUS SIZE AND PHASE AS SHOWN (ONE-LINE DIAGRAM).
225/3 "1H" 225/3 "1H"	PANELBOARD WITH SUB FEED LUGS (ONE-LINE DIAGRAM).
	TRANSITION CABINET (ONE-LINE DIAGRAM).
	SERVICE ENTRANCE SURGE PROTECTION (ONE-LINE DIAGRAM).
	DISCONNECT SWITCH, FUSED.
	DISCONNECT SWITCH, UNFUSED.
	STARTER, COMBINATION WITH DISCONNECT SWITCH.
	STARTER OR MOTOR CONTROLLER.
	PUSHBUTTON.
	PUSHBUTTONS, MOTOR CONTROL.
	PANELBOARD CABINET, SURFACE MOUNTED, 1 SECTION.
	PANELBOARD CABINET, SURFACE MOUNTED, 2 SECTION.
DP#	DISTRIBUTION PANEL OR SWITCHBOARD.
$ST	SWITCH, TOGGLE MOTOR STARTER WITH OVERLOAD PROTECTION.
75	TRANSFORMER: NUMBER INDICATES kVA.
WIRING DEVICES	
	RECEPTACLE, DUPLEX: NEMA 5-20R.
A	RECEPTACLE, DUPLEX, ABOVE COUNTER: NEMA 5-20R.
C	RECEPTACLE, DUPLEX, CEILING: NEMA 5-20R.
D	RECEPTACLE, DUPLEX, DEDICATED CIRCUIT: NEMA 5-20R.
	RECEPTACLE, DUPLEX WITH GROUND FAULT CIRCUIT INTERRUPTER: NEMA 5-20R.
	RECEPTACLE, QUADRAPLEX: NEMA 5-20R.
X $	SWITCH, SINGLE POLE ("x" INDICATES FIXTURES CONTROLLED).
X $3	SWITCH, THREE-WAY ("x" INDICATES FIXTURES CONTROLLED).
X $4	SWITCH, FOUR-WAY ("x" INDICATES FIXTURES CONTROLLED).

SYMBOL LEGEND

SYMBOL	DESCRIPTION
FIRE ALARM	
FCP	FIRE ALARM CONTROL PANEL, SEMI-RECESSED.
CM	CONTROL MODULE.
MM	MONITOR MODULE.
P	FIRE ALARM MANUAL PULL STATION.
R	SHUT DOWN RELAY: INSTALL RELAY IN CONTROL CIRCUIT OF EQUIPMENT TO BE CONTROLLED IN THE EVENT OF A FIRE.
	DETECTOR, SMOKE.
	DETECTOR, SMOKE, DUCT WITH HOUSING AND SAMPLING TUBE.
	DETECTOR, HEAT.
75	STROBE. SUBSCRIPT INDICATES CANDELA RATING.
75	ALARM, HORN/STROBE, ONE ASSEMBLY. SUBSCRIPT INDICATES CANDELA RATING.
SD	SMOKE DAMPER.
FSD	FIRE AND SMOKE DAMPER.
TECHNOLOGY SYSTEMS	
	PROJECTOR, CEILING MOUNTED.

ELECTRICAL SHEET INDEX

SHEET NO	SHEET TITLE
EE001	SYMBOL LEGEND, SHEET INDEX & ABBREVIATIONS
EE501	TYPICAL MOUNTING HEIGHT DETAILS
EE502	DETAILS
EE503	DETAILS
ED101	1ST FLOOR DEMOLITION PLAN
EP101	1ST FLOOR POWER PLAN
EP102	2ND FLOOR POWER PLAN
EP601	ONE-LINE DIAGRAM
EP602	MECHANICAL EQUIPMENT & PANEL SCHEDULES
EP603	MECHANICAL EQUIPMENT & PANEL SCHEDULES
EL101	1ST FLOOR LIGHTING PLAN
EL102	2ND FLOOR LIGHTING PLAN
EL601	LIGHTING FIXTURE SCHEDULE
ET101	1ST FLOOR TECHNOLOGY PLAN
ET102	2ND FLOOR TECHNOLOGY PLAN
ET601	TECHNOLOGY RISERS & DIAGRAMS
ET602	TECHNOLOGY DETAILS & SCHEDULE
FA101	1ST FLOOR FIRE ALARM PLAN
FA102	2ND FLOOR FIRE ALARM PLAN
FA601	FIRE ALARM RISER

ABBREVIATIONS

NOTE: ALL ABBREVIATIONS MAY NOT BE USED.

1P	SINGLE POLE	KVA	KILOVOLT AMPERE
1PH	SINGLE-PHASE	kVAR	KILOVOLT AMPERE REACTIVE
1WAY	ONE-WAY	kW	KILOWATT
2/C	TWO-CONDUCTOR	kWh	KILOWATT HOUR
2WAY	TWO-WAY	LCD	LIQUID CRYSTAL DISPLAY
3/C	THREE-CONDUCTOR	LED	LIGHT EMITTING DIODE
3PH	THREE-PHASE	LFMC	LIQUID TIGHT FLEXIBLE METAL CONDUIT
3WAY	THREE-WAY	LFNC	LIQUID TIGHT FLEXIBLE NONMETALLIC CONDUIT
4OUT	QUADRUPLE RECEPTACLE OUTLET	LPS	LOW PRESSURE SODIUM
4PDT	FOUR-POLE DOUBLE THROW	LRA	LOCKED ROTOR AMPS
4PST	FOUR-POLE SINGLE THROW	LTG	LIGHTING
4W	FOUR-WIRE	LV	LOW VOLTAGE
4WAY	FOUR-WAY	MATV	MASTER ANTENNA TELEVISION SYSTEM
A	ABOVE COUNTER	MAX	MAXIMUM
AC	ARMORED CABLE	MC	METAL CLAD
ADA	AMERICANS WITH DISABILITIES ACT	MCA	MINIMUM CIRCUIT AMPS
ADJ	ADJACENT	MCB	MAIN CIRCUIT BREAKER
AFF	ABOVE FINISHED FLOOR	MCC	MOTOR CONTROL CENTER
AFG	ABOVE FINISHED GRADE	MCP	MOTOR CIRCUIT PROTECTION
AIC	AMPERE INTERRUPTING CAPACITY	MDP	MAIN DISTRIBUTION PANEL
ALUM	ALUMINUM	MG	MOTOR GENERATOR
AMP	AMPERE	MH	MANHOLE
ANN	ANNUNCIATOR	MIN	MINIMUM
AP	ACCESS POINT (WIRELESS DATA)	MLO	MAIN LUGS ONLY
AR	AS REQUIRED	MOCP	MAXIMUM OVERCURRENT PROTECTION
ASC	AMPS SHORT CIRCUIT	NA	NOT APPLICABLE
ATS	AUTOMATIC TRANSFER SWITCH	NC	NORMALLY CLOSED
AV	AUDIO VISUAL	NEC	NATIONAL ELECTRICAL CODE
AWG	AMERICAN WIRE GAGE	NEMA	NATIONAL ELECTRICAL MANUFACTURERS ASSOCIATION
BB XFMR	BUCK-BOOST TRANSFORMER	NFC	NATIONAL FIRE CODE
C	CEILING MOUNTED	NFPA	NATIONAL FIRE PROTECTION ASSOCIATION
CATV	COMMUNITY ANTENNA TELEVISION	NIC	NOT IN CONTRACT
CB	CIRCUIT BREAKER	NL	NIGHT LIGHT
CCBA	CUSTOM COLOR AS SELECTED BY ARCHITECT	NO	NORMALLY OPEN
CCTV	CLOSED CIRCUIT TELEVISION	NTS	NOT TO SCALE
CFBA	CUSTOM FINISH AS SELECTED BY ARCHITECT	OC	ON CENTER
CF/CI	CONTRACTOR FURNISHED/ CONTRACTOR INSTALLED	OCP	OVER CURRENT PROTECTION
CF/OI	CONTRACTOR FURNISHED/ OWNER INSTALLED	OF/CI	OWNER FURNISHED/ CONTRACTOR INSTALLED
CKT	CIRCUIT	OF/OI	OWNER FURNISHED/ OWNER INSTALLED
CM	CONSTRUCTION MANAGER	OFP	OBTAIN FROM PLANS
CND	CONDUIT	OH DR	OVERHEAD (COILING) DOOR
CO	CONVENIENCE OUTLET	OL	OVERLOAD
COR	CONTRACTING OFFICER'S REPRESENTATIVE	PB	PUSHBUTTON
CP	CONTROL PANEL	PF	POWER FACTOR
CT	CURRENT TRANSFORMER	PH	PHASE
CTV	CABLE TELEVISION	PNL	PANEL
CU	COPPER	PT	POTENTIAL TRANSFORMER
dBA	UNIT OF SOUND LEVEL	PTZ	PAN/TILT/ZOOM
DPDT	DOUBLE POLE DOUBLE THROW	QTY	QUANTITY
DS	DISCONNECT SWITCH	R	REMOVE
EA	EACH	RCP	REFLECTED CEILING PLAN
EM	EMERGENCY	RMC	RIGID METAL CONDUIT
EMT	ELECTRICAL METALLIC TUBING	RNC	RIGID NONMETALLIC CONDUIT
ENT	ELECTRICAL NONMETALLIC TUBING	RPM	REVOLUTIONS PER MINUTE
EPO	EMERGENCY POWER OFF	RR	REMOVE AND RELOCATE
EQUIP	EQUIPMENT	SB	SMART BOARD
EX	EXISTING	SCA	SHORT CIRCUIT AMPS
F	FURNITURE MOUNTED	SCBA	STANDARD COLOR AS SELECTED BY ARCHITECT
FA	FIRE ALARM	SF	SQUARE FOOT (FEET)
FCP	FIRE ALARM CONTROL PANEL	SFBA	STANDARD FINISH AS SELECTED BY ARCHITECT
FLA	FULL LOAD AMPS	SPDT	SINGLE POLE, DOUBLE THROW
FMC	FLEXIBLE METALCONDUIT	SPEC	SPECIFICATION
FOB	FREIGHT ON BOARD	SPST	SINGLE POLE, SINGLE THROW
FVNR	FULL VOLTAGE NON-REVERSING	S/S	START/STOP
FVR	FULL VOLTAGE REVERSING	ST	SINGLE THROW
G	GROUND	SWBD	SWITCHBOARD
GEN	GENERATOR	SWGR	SWITCHGEAR
GFCI	GROUND FAULT CIRCUIT INTERRUPTER	TL	TWIST LOCK
GFP	GROUND FAULT PROTECTION	TP	TELEPHONE POLE
HD	HEAVY DUTY	TP	TWISTED PAIR
HID	HIGH INTENSITY DISCHARGE	TTB	TELEPHONE TERMINAL BOARD
HOA	HAND-OFF-AUTOMATIC	TV	TELEVISION
HP	HORSE POWER	TVSS	TRANSIENT VOLTAGE SURGE SUPPRESSER
HPF	HIGH POWER FACTOR	TYP	TYPICAL
HPS	HIGH PRESSURE SODIUM	UF	UNDERFLOOR
HV	HIGH VOLTAGE	UGND	UNDERGROUND
HZ	HERTZ	UPS	UNINTERRUPTIBLE POWER SUPPLY
IG	ISOLATED GROUND	V	VOLTS
IMC	INTERMEDIATE METAL CONDUIT	VA	VOLT AMPERE
IN/IS	INSULATED/ISOLATED	VFC/VFD	VARIABLE FREQUENCY MOTOR CONTROLLER
I/O	INPUT/OUTPUT	W/	WITH
IR	INFRARED	W/O	WITHOUT
J-BOX	JUNCTION BOX	WP	WEATHERPROOF
KV	KILOVOLT	XFMR	TRANSFORMER

GENERAL ELECTRICAL NOTES

1. CLARIFICATION METHODS: AT THE TIME OF BIDDING, BIDDERS SHALL FAMILIARIZE THEMSELVES WITH THE DRAWINGS AND SPECIFICATIONS. ANY QUESTIONS, MISUNDERSTANDINGS, CONFLICTS, DELETIONS, DISCONTINUED PRODUCTS, CATALOG NUMBER DISCREPANCIES, DISCREPANCIES BETWEEN THE EQUIPMENT SUPPLIED AND THE INTENT OR FUNCTION OF THE EQUIPMENT, ETC, SHALL BE SUBMITTED TO THE ARCHITECT/ENGINEER IN WRITING FOR CLARIFICATION PRIOR TO ISSUANCE OF THE FINAL ADDENDUM AND BIDDING OF THE PROJECT. WHERE DISCREPANCIES OR MULTIPLE INTERPRETATIONS OCCUR, THE MOST STRINGENT (WHICH IS GENERALLY RECOGNIZED AS THE MOST COSTLY) THAT MEETS THE INTENT OF THE DOCUMENTS SHALL BE ENFORCED.

2. OWNER FURNISHED ITEMS: THE OWNER WILL FURNISH MATERIAL AND EQUIPMENT AS INDICATED IN THE CONTRACT DOCUMENTS TO BE INCORPORATED INTO THE WORK. THESE ITEMS ARE ASSIGNED TO THE INSTALLER AND COSTS FOR RECEIVING, HANDLING, STORAGE, IF REQUIRED, AND INSTALLATION ARE INCLUDED IN THE CONTRACT SUM.

   A. THE INSTALLER'S RESPONSIBILITIES ARE THE SAME AS IF THE INSTALLER FURNISHED THE MATERIALS OR EQUIPMENT.

   B. THE OWNER WILL ARRANGE AND PAY FOR DELIVERY OF OWNER FURNISHED ITEMS FREIGHT ON BOARD JOB SITE AND THE INSTALLER WILL INSPECT DELIVERIES FOR DAMAGE. IF OWNER FURNISHED ITEMS ARE DAMAGED, DEFECTIVE OR MISSING, DOCUMENT DAMAGED ITEMS WITH THE TRANSPORT COMPANY AND THE OWNER WILL ARRANGE FOR REPLACEMENT. THE OWNER WILL ALSO ARRANGE FOR MANUFACTURER'S FIELD SERVICES, AND THE DELIVERY OF MANUFACTURER'S WARRANTIES AND BONDS TO THE INSTALLER.

   C. THE INSTALLER IS RESPONSIBLE FOR DESIGNATING THE DELIVERY DATES OF OWNER FURNISHED ITEMS AND FOR RECEIVING, UNLOADING AND HANDLING OWNER FURNISHED ITEMS AT THE SITE. THE INSTALLER IS RESPONSIBLE FOR PROTECTING OWNER FURNISHED ITEMS FROM DAMAGE, INCLUDING DAMAGE FROM EXPOSURE TO THE ELEMENTS, AND TO REPAIR OR REPLACE ITEMS DAMAGED AS A RESULT OF HIS OPERATIONS.

3. EXPOSED STRUCTURE AREAS (EXCLUDING MECHANICAL, ELECTRICAL, AND COMMUNICATION SPACES): INSTALL RACEWAYS BETWEEN DECK AND STRUCTURE WHEREVER POSSIBLE IN EXPOSED STRUCTURE CEILING AREAS. ROUTE RACEWAYS IN CONCEALED AREAS WHEREVER POSSIBLE. REFER ALL CONDITIONS WHERE RACEWAYS MUST BE INSTALLED WHICH CANNOT COMPLY WITH THESE REQUIREMENTS TO THE ARCHITECT.

4. SUBMITTALS: PROVIDE SUBMITTALS IN THREE RING BINDERS WITH JOB NAME, SUBCONTRACTOR, AND VOLUME ON THE BINDING. PREPARE TABS FOR EACH SPECIFICATION SECTION REQUIRING SUBMITTALS. PREPARE INDEX OF EQUIPMENT SUBMITTED IN EACH TAB.

5. REFLECTED CEILING PLANS: COORDINATE THE LOCATION OF LIGHT FIXTURES WITH THE ARCHITECTURAL REFLECTED CEILING PLANS. REFER ALL DISCREPANCIES TO THE ARCHITECT AND ENGINEER.

DEFINITIONS

NOTE: ALL DEFINITIONS MAY NOT BE USED.

INDICATED: THE TERM "INDICATED" REFERS TO GRAPHIC REPRESENTATIONS, NOTES, OR SCHEDULES ON THE DRAWINGS, OTHER PARAGRAPHS OR SCHEDULES IN THE SPECIFICATIONS, AND SIMILAR REQUIREMENTS IN THE CONTRACT DOCUMENTS. WHERE TERMS SUCH AS "SHOWN", "NOTED", "SCHEDULED", AND "SPECIFIED" ARE USED, IT IS TO HELP THE READER LOCATE THE REFERENCE, NO LIMITATION ON LOCATION IS INTENDED.

DIRECTED: TERMS SUCH AS "DIRECTED", "REQUESTED", AUTHORIZED", "SELECTED", "APPROVED", "REQUIRED", AND "PERMITTED" MEAN "DIRECTED BY THE ENGINEER", "REQUESTED BY THE ENGINEER", AND SIMILAR PHRASES.

APPROVED: THE TERM "APPROVED", WHERE USED IN CONJUNCTION WITH THE ENGINEER'S ACTION ON THE CONTRACTOR'S SUBMITTALS, APPLICATIONS, AND REQUESTS, IS LIMITED TO THE ENGINEER'S DUTIES AND RESPONSIBILITIES AS STATED IN GENERAL AND SUPPLEMENTARY CONDITIONS.

FURNISH: THE TERM "FURNISH" IS USED TO MEAN "SUPPLY AND DELIVER TO THE PROJECT SITE, READY FOR UNLOADING, UNPACKING, ASSEMBLY, INSTALLATION, AND SIMILAR OPERATIONS."

INSTALL: THE TERM "INSTALL" IS USED TO DESCRIBE OPERATIONS AT PROJECT SITE INCLUDING THE ACTUAL "UNLOADING, UNPACKING, ASSEMBLY, ERECTION, PLACING, ANCHORING, APPLYING, WORKING TO DIMENSION, FINISHING, CURING, PROTECTING, CLEANING, AND SIMILAR OPERATIONS."

PROVIDE: THE TERM "PROVIDE" MEANS "TO FURNISH AND INSTALL, COMPLETE AND READY FOR THE INTENDED USE."

INSTALLER: AN "INSTALLER" IS THE CONTRACTOR OR AN ENTITY ENGAGED BY THE CONTRACTOR, EITHER AS AN EMPLOYEE, SUBCONTRACTOR, OR SUB-SUBCONTRACTOR, FOR PERFORMANCE OF A PARTICULAR CONSTRUCTION ACTIVITY, INCLUDING INSTALLATION, ERECTION, APPLICATION, AND SIMILAR OPERATIONS. INSTALLERS ARE REQUIRED TO BE EXPERIENCED IN THE OPERATIONS THEY ARE ENGAGED TO PERFORM.

TECHNOLOGY SYSTEMS: THE TERM "TECHNOLOGY SYSTEMS" IS USED TO DESCRIBE ALL LOW VOLTAGE SYSTEMS GENERALLY REFERRED TO AS "SPECIAL SYSTEMS". THESE SYSTEMS INCLUDE BUT ARE NOT NECESSARILY LIMITED TO ALL SYSTEMS WHICH UTILIZE VOLTAGES OF LESS THAN 71 VOLTS SUCH AS SOUND SYSTEMS, VIDEO SYSTEMS, TV SYSTEMS, SECURITY SYSTEMS, VOICE AND DATA CABLING SYSTEMS, ETC...

CRSA
ARCHITECTURE
PLANNING
INTERIORS
649 E SOUTH TEMPLE
SALT LAKE CITY, UT 84102
801.355.5915
www.crsa-us.com

STRUCTURAL ENGINEER
CALDER RICHARDS CONSULTING ENGINEERS
634 South 400 West Suite 100
SALT LAKE CITY, UT 84101
(801) 466-1699 (801) 467-2495 FAX
stephen@crceng.com

MECHANICAL ENGINEER
SMD
986 WEST ATHERTON DRIVE STE. 200
TAYLORSVILLE, UTAH 84123
(801)268-3028 FAX (801)268-3297
# #

ELECTRICAL ENGINEER
SPECTRUM
324 S STATE STREET STE. 400
SALT LAKE CITY, UTAH 84111
(801)328-5151 (801)328-5155 FAX
# #

LICENSED PROFESSIONAL ENGINEER
No. 7083854
DAVID L. AFFLECK
STATE OF UTAH

PROJECT:
BUILDING 3030 REMODEL
UTAH NATIONAL GUARD
CAMP W.G. WILLIAMS
17800 South Redwood Road
Riverton, Utah 84065

UTAH NATIONAL GUARD
12953 SOUTH

BN	BID DOCUMENTS	8-30-2010
CD	PLAN CHECK	8-30-2010

PROJECT NO: B10-029
CAD DWG FILE:
DRAWN BY:
CHECKED BY:

SYMBOL LEGEND, SHEET INDEX & ABBREVIATIONS

EE001

File Name: P:\2010\20100297\1Drawings\3Sheet\97EE001.dwg Last Plotted: 2010/08/30 @ 1:07 PM By: cdn

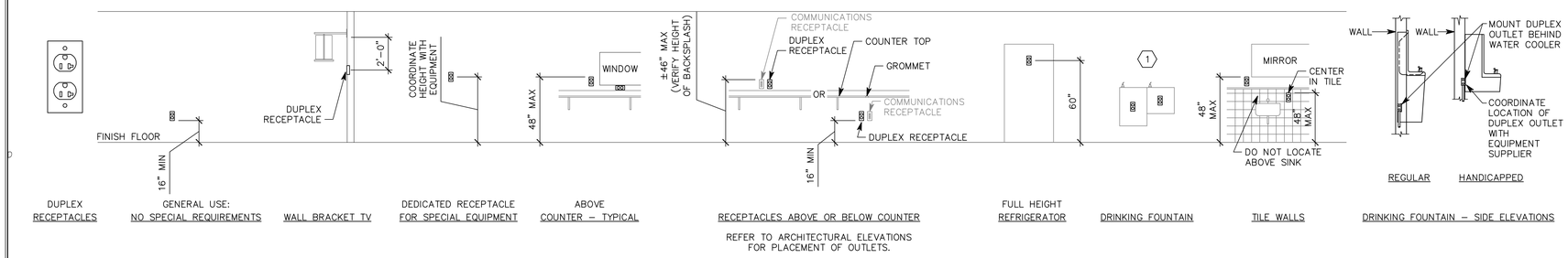

DUPLEX RECEPTACLES | GENERAL USE: NO SPECIAL REQUIREMENTS | WALL BRACKET TV | DEDICATED RECEPTACLE FOR SPECIAL EQUIPMENT | ABOVE COUNTER – TYPICAL | RECEPTACLES ABOVE OR BELOW COUNTER | FULL HEIGHT REFRIGERATOR | DRINKING FOUNTAIN | TILE WALLS | DRINKING FOUNTAIN – SIDE ELEVATIONS

REFER TO ARCHITECTURAL ELEVATIONS FOR PLACEMENT OF OUTLETS.

D1 RECEPTACLE MOUNTING DETAILS

NTS

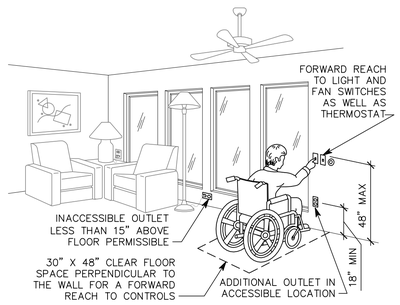

C1 ADA DETAIL

NTS

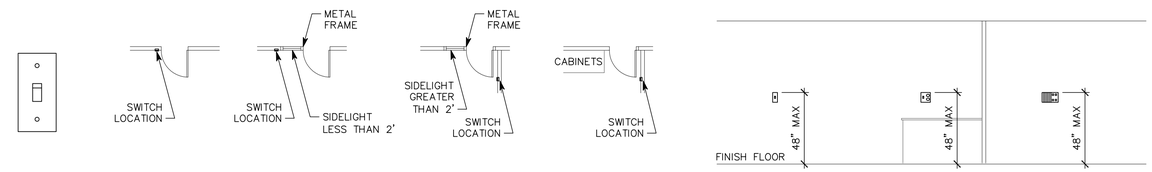

SWITCHES | STANDARD DOOR | DOOR WITH SIDELIGHT LESS THAN 2' | DOOR WITH SIDELIGHT GREATER THAN 2' | DOOR WITH NO PLACE FOR SWITCH AT LATCH SIDE | GENERAL USE: ADA | COMBINATION 48" MAX PLATE FOR SWITCH AND RECEPTACLE IN RESIDENTIAL BATHROOM | LIGHTING CONTROL STATION

C2 SWITCH MOUNTING DETAILS

NTS

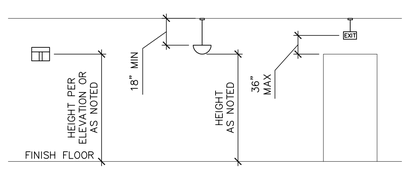

WALL MOUNTED LIGHT FIXTURE | PENDANT LIGHT FIXTURE | PENDANT EXIT SIGNS

B1 LIGHTING MOUNTING DETAILS

NTS

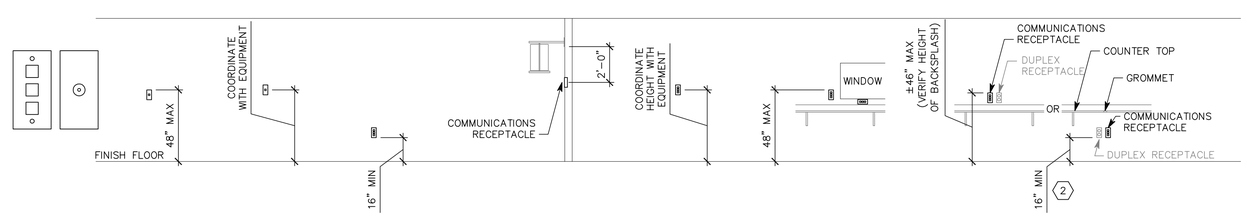

COMMUNICATION RECEPTACLES | WALL PHONE | PAY PHONE | GENERAL USE: NO SPECIAL REQUIREMENTS | WALL BRACKET TV | DEDICATED RECEPTACLE FOR SPECIAL EQUIPMENT | ABOVE COUNTER – TYPICAL | RECEPTACLES ABOVE OR BELOW COUNTER

B2 COMMUNICATION MOUNTING DETAILS

NTS

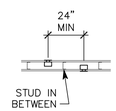

BOXES ON OPPOSITE SIDES OF WALL

B5 BOX MOUNTING DETAILS

NTS

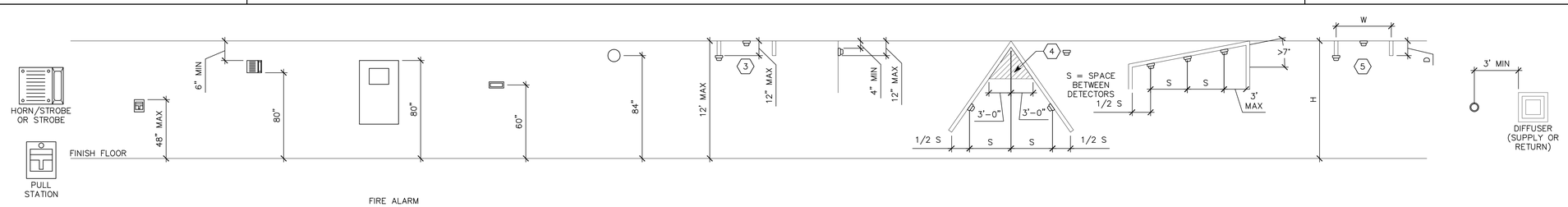

FIRE ALARM | PULL STATION | HORN, CHIME, OR STROBE | FIRE ALARM CONTROL PANEL "FCP" | FIRE SYSTEM ANNUNCIATOR "FSA" | BELL | SMOKE DETECTOR BETWEEN BEAMS | WALL MOUNTED SMOKE DETECTOR | SMOKE DETECTOR ON SLOPED CEILING (PEAKED) | SMOKE DETECTOR ON SLOPED CEILING (SHED) | HEAT DETECTOR BETWEEN BEAMS | SMOKE DETECTOR ADJACENT TO SUPPLY AIR

A1 FIRE ALARM MOUNTING DETAILS

NTS

GENERAL SHEET NOTES

1. DETERMINE MOUNTING HEIGHTS OF ELECTRICAL AND ELECTRONIC EQUIPMENT IN THE FOLLOWING ORDER OF PRIORITY:

   1 – ELEVATIONS (ARCHITECTURAL, ELECTRICAL, MECHANICAL, ETC).
   2 – EQUIPMENT SHOP DRAWINGS.
   3 – FIELD INSTRUCTIONS.

2. LOCATE RECEPTACLES SERVING THE SAME TYPE OF USE AT A UNIFORM HEIGHT UNLESS DIRECTED OTHERWISE.
3. MECHANICAL, ELECTRICAL, AND COMMUNICATION ROOMS: COORDINATE LOCATION OF LIGHTING AND POWER RECEPTACLES WITH EQUIPMENT, PIPING, AND DUCTWORK. DO NOT INSTALL RECEPTACLES BEHIND EQUIPMENT OR WHERE OTHERWISE INACCESSIBLE. POSITION LIGHTING REGARDLESS OF WHERE SHOWN ON DRAWING TO PROVIDE PROPER ILLUMINATION.
4. MOUNT RECEPTACLE BOXES FOR SWITCHES AND RECEPTACLES WITH LONG AXIS OF THE DEVICE VERTICAL UNLESS OTHERWISE INDICATED.
5. SET BOXES WITH PLASTER RINGS FLUSH WITH FINISHED SURFACE.
6. LOCATE BOX COVERS OR DEVICE PLATES SO THEY WILL NOT SPAN DIFFERENT TYPES OF BUILDING FINISHES EITHER VERTICALLY OR HORIZONTALLY.
7. VERIFY ALL DOOR CONDITIONS ON ARCHITECTURAL DRAWINGS PRIOR TO INSTALLING SWITCHES.
8. LOCATE WIRING DEVICES WHICH ARE ADJACENT AND ARE COMPATIBLE VOLTAGES IN ONE PLATE.

SHEET KEYNOTES

1. LOCATE RECEPTACLES BEHIND DRINKING FOUNTAINS.
2. REFER TO ARCHITECTURAL ELEVATIONS FOR PLACEMENT OF OUTLETS.
3. LOCATE AT BOTTOM OF BEAMS (OR JOISTS) OR AT CEILING. (REDUCE SPACING BY .5 PERPENDICULAR TO BEAM OR JOIST DIRECTION.) FOR OTHER CONDITIONS, REFER TO NFPA 72.
4. LOCATE SMOKE DETECTOR ANYWHERE IN SHADED AREA.
5. LOCATE AT BOTTOM OF BEAMS IF EITHER D/H < .1 OR W/H < .4; OTHERWISE, LOCATE IN BEAM POCKET.

CRSA
ARCHITECTURE
PLANNING
INTERIORS
649 E SOUTH TEMPLE
SALT LAKE CITY, UT 84102
801.355.5915
www.crsa-us.com

STRUCTURAL ENGINEER
CALDER RICHARDS CONSULTING ENGINEERS
634 South 400 West Suite 100
SALT LAKE CITY, UT 84101
(801) 466-1699 (801) 467-2495 FAX
stephen@crceng.com

MECHANICAL ENGINEER
SMD
986 WEST ATHERTON DRIVE STE. 200
TAYLORSVILLE, UTAH 84123
(801)268-3628 FAX (801)268-3297
# #

ELECTRICAL ENGINEER
SPECTRUM
324 S STATE STREET STE. 400
SALT LAKE CITY, UTAH 84111
(801)328-5151 (801)328-5155 FAX
# #

LICENSED PROFESSIONAL ENGINEER
No. 7083854
DAVID L. AFFLECK
STATE OF UTAH

PROJECT:
BUILDING 3030 REMODEL
UTAH NATIONAL GUARD
CAMP W.G. WILLIAMS
17800 South Redwood Road
Riverton, Utah 84065

UTAH NATIONAL GUARD
12953 SOUTH

BN	BID DOCUMENTS	8-30-2010
CD	PLAN CHECK	8-30-2010

PROJECT NO: B10-029
CAD DWG FILE:
DRAWN BY:
CHECKED BY:

TYPICAL MOUNTING HEIGHT DETAILS

EE501

File Name: P:\2010\20100297\1Drawings\3Sheet\97EE501.dwg Last Plotted: 2010/08/30 @ 1:07 PM By: pss

NOTE:
TIE WIRE SHALL NOT BE USED AS A COMPONENT OF ANY RACEWAY HANGER SYSTEM.

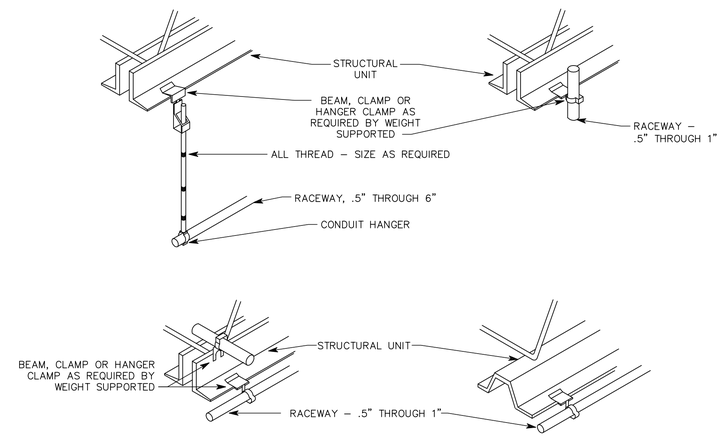

C4 TYPICAL RACEWAY SUPPORT METHODS DETAIL

NTS

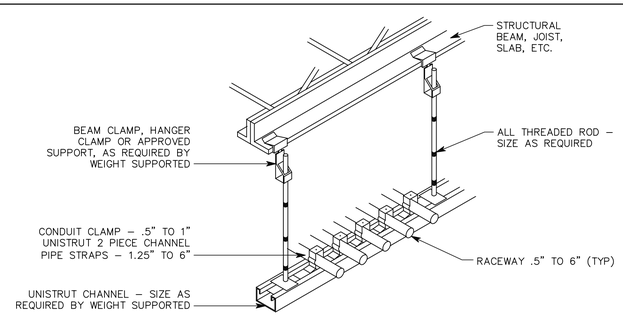

A2 TYPICAL CONDUIT RACK DETAIL

NTS

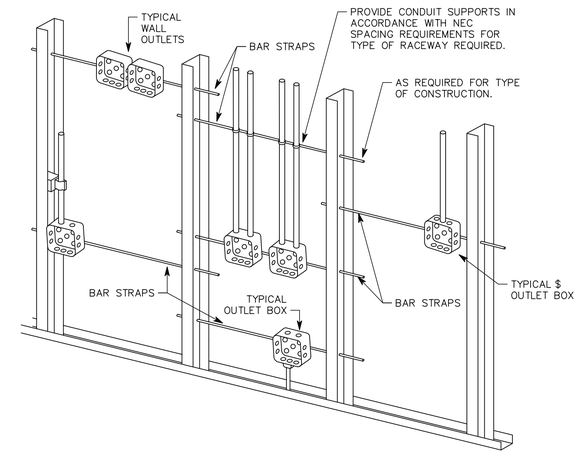

NOTES:

1. TYPICAL FOR WOOD AND METAL STUD ROUGH–IN.
2. PLASTER RINGS NOT SHOWN.
3. LOCATE ALL OUTLET BOXES IN ACCORDANCE WITH ARCHITECTURAL AND MECHANICAL DRAWINGS AND WITH ALL APPLICABLE SHOP DRAWINGS.
4. IN ACCORDANCE WITH IBC 711.3.2 EXCEPTION 1, OUTLETS ON OPPOSITE SIDES OF WALLS OR PARTITIONS IN THE SAME STUD SPACE IN A RATED FIRE SEPARATION WALL MUST BE SEPARATED BY A MINIMUM OF 24" HORIZONTAL DISTANCE.
5. IN NON–RATED WALLS, OUTLETS ON OPPOSITE SIDES OF WALLS OR PARTITIONS MUST BE SEPARATED BY 16" FOR SOUND ATTENUATION.

A4 TYPICAL ROUGH–IN REQUIREMENTS DETAIL

NTS

CRSA
ARCHITECTURE
PLANNING
INTERIORS
649 E SOUTH TEMPLE
SALT LAKE CITY, UT 84102
801.355.5915
www.crsa-us.com

STRUCTURAL ENGINEER
CALDER RICHARDS CONSULTING ENGINEERS
634 South 400 West Suite 100
SALT LAKE CITY, UT 84101
(801) 466-1699 (801) 467-2495 FAX
stephen@crceng.com

MECHANICAL ENGINEER
SMD
986 WEST ATHERTON DRIVE STE. 200
TAYLORSVILLE, UTAH 84123
(801)268-3628 FAX (801)268-3297
# #

ELECTRICAL ENGINEER
SPECTRUM
324 S STATE STREET STE. 400
SALT LAKE CITY, UTAH 84111
(801)328-5151 (801)328-5155 FAX
# #

LICENSED PROFESSIONAL ENGINEER
No. 7083854
DAVID L. AFFLECK
STATE OF UTAH

PROJECT:
BUILDING 3030 REMODEL
UTAH NATIONAL GUARD
CAMP W.G. WILLIAMS
17800 South Redwood Road
Riverton, Utah 84065

UTAH NATIONAL GUARD
12953 SOUTH

BN	BID DOCUMENTS	8-30-2010
CD	PLAN CHECK	8-30-2010

PROJECT NO: B10-029
CAD DWG FILE:
DRAWN BY:
CHECKED BY:

DETAILS

EE502

File Name: P:\2010\20100297\1Drawings\3Sheet\97EE502.dwg Last Plotted: 2010/08/30 @ 1:07 PM By: pss

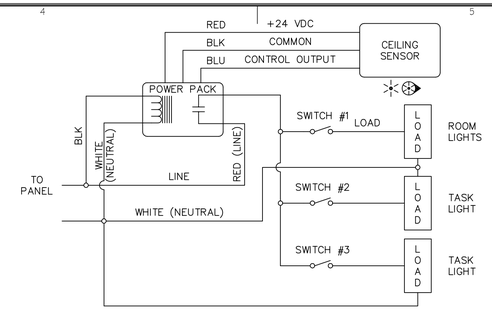

D4 TYPICAL ROOM WITH ONE CEILING SENSOR, ONE CIRCUIT AND MULTIPLE SWITCHED LOADS

NO SCALE

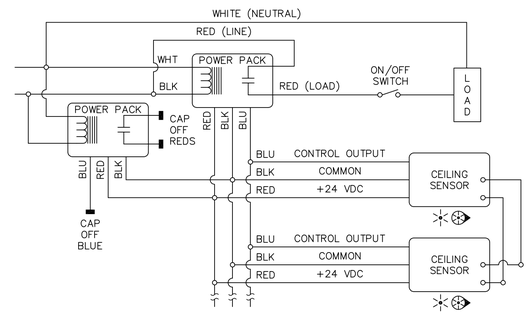

C4 TYPICAL ROOM WITH MULTIPLE CEILING SENSORS

NO SCALE

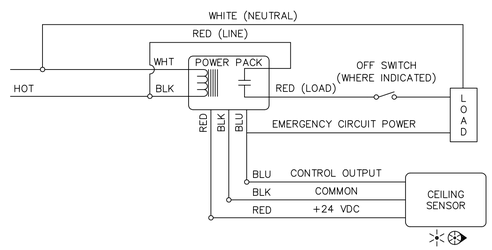

B2 TYPICAL ROOM WITH ONE CEILING SENSOR, WITH OR WITHOUT WALL SWITCH

NO SCALE

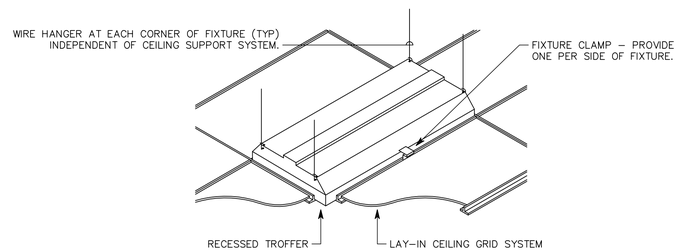

B4 RECESSED FIXTURE MOUNTING DETAIL

NTS

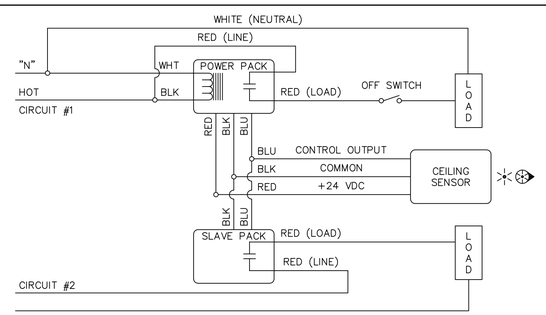

A2 TYPICAL ROOM WITH ONE CEILING SENSOR, CONTROLLING TWO CIRCUITS

NO SCALE

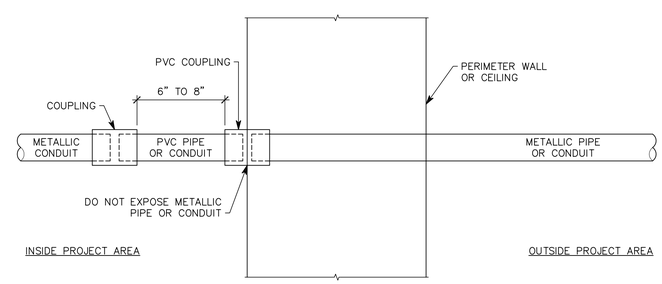

A4 PIPE AND/OR CONDUIT ISOLATION DETAIL

NTS

CRSA
ARCHITECTURE
PLANNING
INTERIORS
649 E SOUTH TEMPLE
SALT LAKE CITY, UT 84102
801.355.5915
www.crsa-us.com

STRUCTURAL ENGINEER
CALDER RICHARDS CONSULTING ENGINEERS
634 South 400 West Suite 100
SALT LAKE CITY, UT 84101
(801) 466-1699 (801) 467-2495 FAX
stephen@crceng.com

MECHANICAL ENGINEER
SMD
986 WEST ATHERTON DRIVE STE. 200
TAYLORSVILLE, UTAH 84123
(801)268-3628 FAX (801)268-3297
# #

ELECTRICAL ENGINEER
SPECTRUM
324 S STATE STREET STE. 400
SALT LAKE CITY, UTAH 84111
(801)328-5151 (801)328-5155 FAX
# #

LICENSED PROFESSIONAL ENGINEER
No. 7083854
DAVID L. AFFLECK
STATE OF UTAH

PROJECT:
BUILDING 3030 REMODEL
UTAH NATIONAL GUARD
CAMP W.G. WILLIAMS
17800 South Redwood Road
Riverton, Utah 84065

UTAH NATIONAL GUARD
12953 SOUTH

BN	BID DOCUMENTS	8-30-2010
CD	PLAN CHECK	8-30-2010

PROJECT NO: B10-029
CAD DWG FILE:
DRAWN BY:
CHECKED BY:

DETAILS

EE503

File Name: P:\2010\20100297\1Drawings\3Sheet\97EE503.dwg Last Plotted: 2010/08/30 @ 1:07 PM By: pss

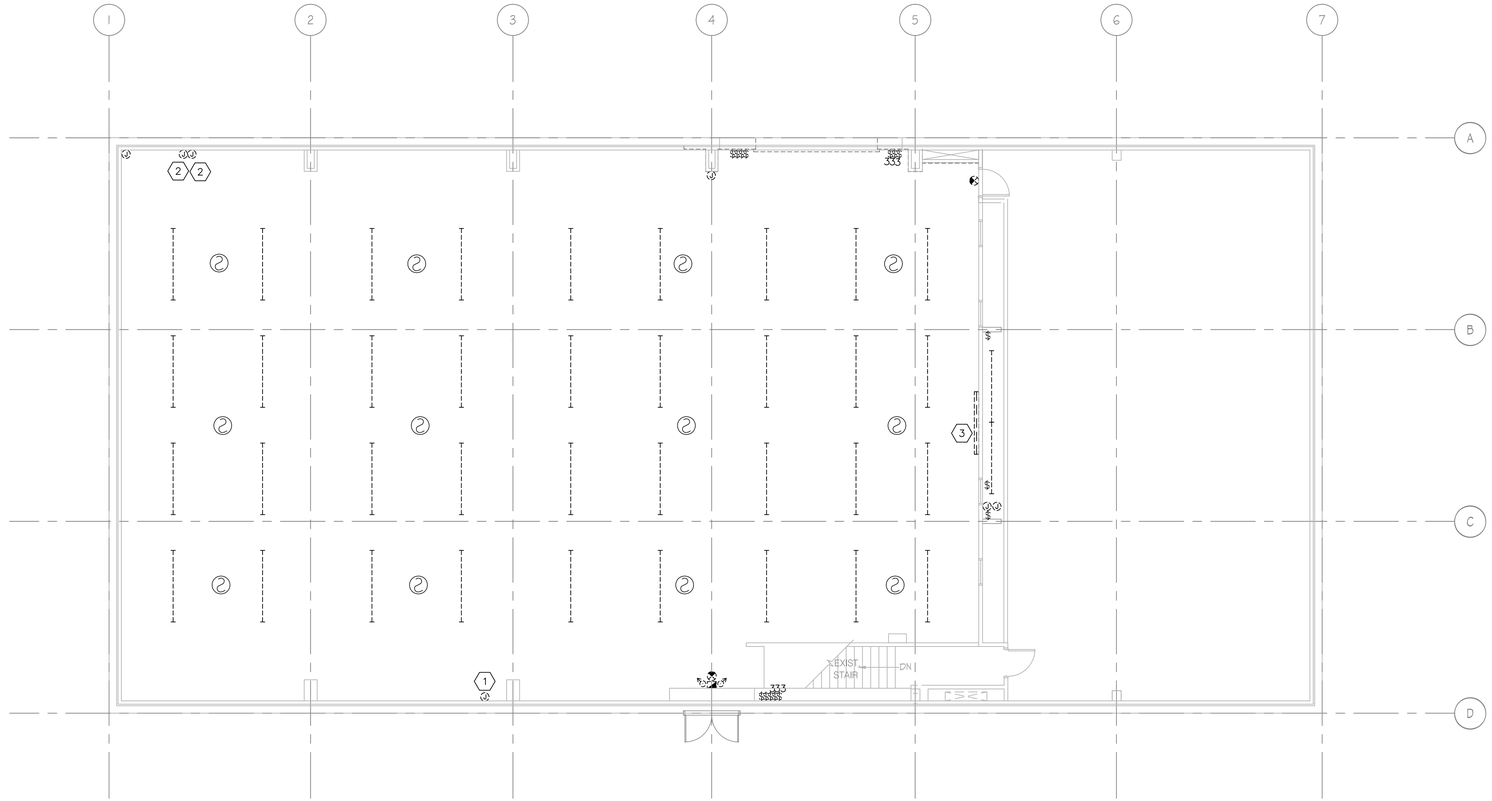

B1 DEMOLITION PLAN
1/8" = 1'-0"

0 4' 8' 16'

GENERAL SHEET NOTES

1. DISCONNECT MECHANICAL EQUIPMENT F-1, F-2, CU-1, AND CU-2 AS REQUIRED COORDINATE WITH THE MECHANICAL DRAWINGS AND INSTALLER.
2. THE CONTRACTOR SHALL MODIFY AND EXTEND ALL ELECTRICAL ACCESS POINTS TO THE NEW INTERIOR WALL TO PREVENT ELECTRICAL FROM BEING BURRED BEHIND THE NEW WALLS AND FINISHES.

SHEET KEYNOTES

1. DISCONNECT EXISTING COMMUNICATIONS CABLING. EXTEND RACEWAY BACK TO HEAD END EQUIPMENT. PULL IN EXISTING CABLING AND TERMINATE. IF THE EXISTING CABLING IS TOO SHORT OR IS DAMAGED THE CONTRACTOR SHALL PROVIDE NEW CABLE TO MATCH THE EXISTING. FIELD VERIFY PRIOR TO BID.
2. LIGHTING CIRCUIT JUNCTION BOX FOR EXISTING 3-WAY SWITCHES. FIELD VERIFY EXISTING CONDITIONS PRIOR TO BID AND REMOVAL.
3. REMOVE EXISTING PROJECTOR SCREEN AND RETURN TO THE OWNER. REMOVE POWER TO THE PROJECTOR SCREEN BACK TO THE NEAREST LIVE JUNCTION BOX. REMOVE CONTROLLER SWITCH TO RAISE AND LOWER THE PROJECTOR SCREEN. FIELD VERIFY PRIOR TO BID.

CRSA
ARCHITECTURE
PLANNING
INTERIORS
649 E SOUTH TEMPLE
SALT LAKE CITY, UT 84102
801.355.5915
www.crsa-us.com

STRUCTURAL ENGINEER
CALDER RICHARDS CONSULTING ENGINEERS
634 South 400 West Suite 100
SALT LAKE CITY, UT 84101
(801) 466-1699 (801) 467-2495 FAX
stephen@crceng.com

MECHANICAL ENGINEER
SMD
986 WEST ATHERTON DRIVE STE. 200
TAYLORSVILLE, UTAH 84123
(801)268-3828 FAX (801)268-3297
# #

ELECTRICAL ENGINEER
SPECTRUM
324 S STATE STREET STE. 400
SALT LAKE CITY, UTAH 84111
(801)328-5151 (801)328-5155 FAX
# #

LICENSED PROFESSIONAL ENGINEER
No. 7083854
DAVID L. AFFLECK
STATE OF UTAH

PROJECT:
BUILDING 3030 REMODEL
UTAH NATIONAL GUARD
CAMP W.G. WILLIAMS
17800 South Redwood Road
Riverton, Utah 84065

UTAH NATIONAL GUARD
12953 SOUTH

BN	BID DOCUMENTS	8-30-2010
CD	PLAN CHECK	8-30-2010

PROJECT NO: B10-029
CAD DWG FILE:
DRAWN BY:
CHECKED BY:

DEMOLITION PLAN

ED101

File Name: P:\2010\20100297\1Drawings\3Sheet\97ED101.dwg Last Plotted: 2010/08/30 @ 1:07 PM By: cdn

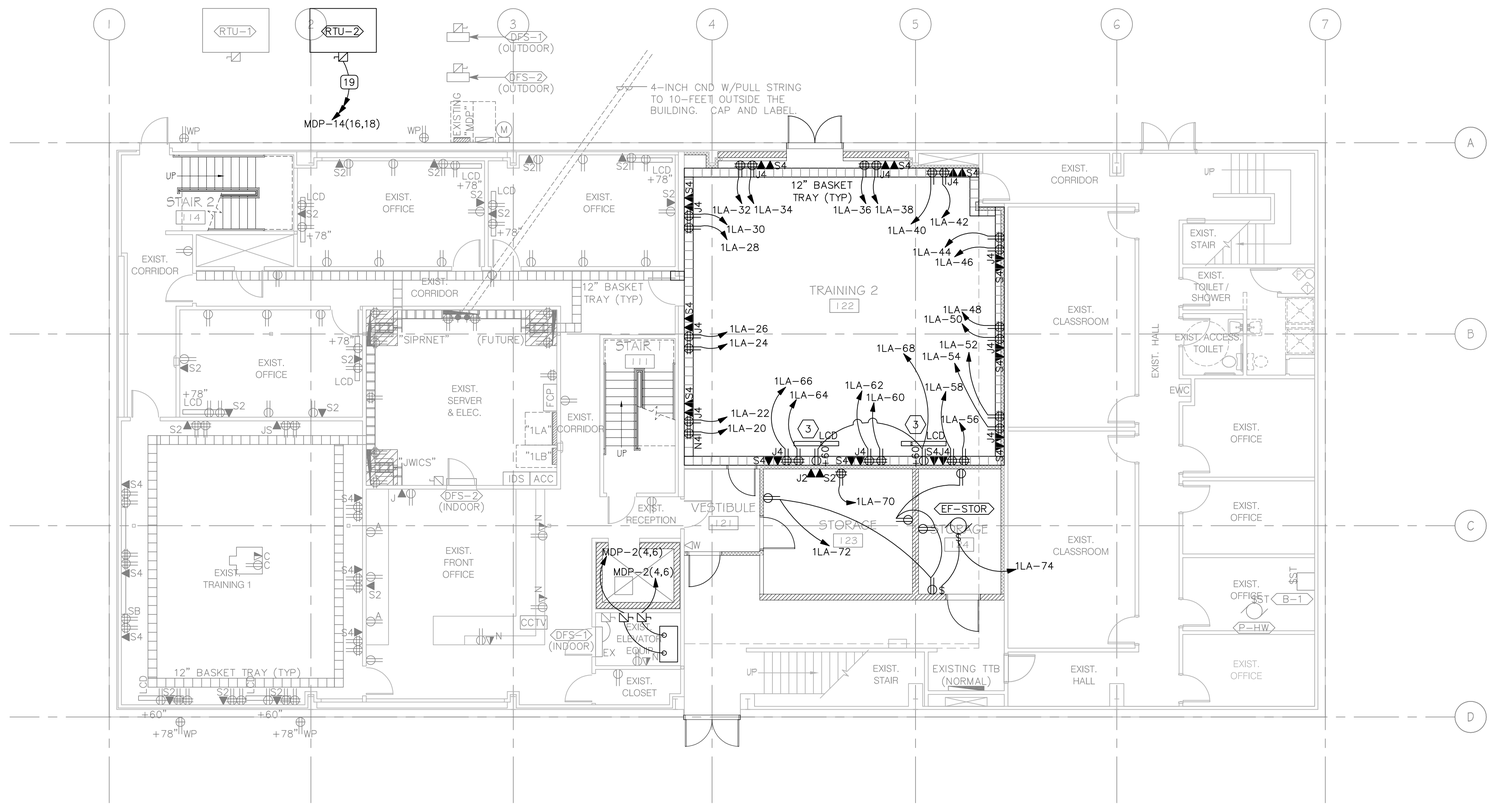

B1 1ST FLOOR POWER PLAN

1/8" = 1'-0"

0 4' 8' 16'

GENERAL SHEET NOTES

1. ALL CABLING INSTALLED ABOVE THE PROJECT AREA IS TO BE PLENUM RATED.
2. ALL CONDUIT AND WIRE PENETRATIONS TO THE PROJECT AREA SHALL BE FILTERED, GROUNDED OR AS SHOWN ON THE PIPE ISOLATION DETAIL.
3. ALL FOIL-BACKED WALLS SHALL BE GROUNDED EVERY 30-FEET USING #6 AWG.
4. ALL RACEWAY PENETRATIONS INTO THE SECURE AREA OF THE REMODEL REQUIRE A GROUNDING CONNECTION AT THE POINT OF ENTRY INTO THE SECURE SPACE. THE CONNECTION MUST BE VISIBLE FOR INSPECTION AND IS REQUIRED ON ALL NEW AND EXISTING PENETRATIONS INTO THE SECURE AREA.

SHEET KEYNOTES

1. CONNECT TO OUTDOOR SPLIT UNIT.
2. CONNECT TO INDOOR SPLIT UNIT.
3. LCD AND MOUNTING WILL BE PROVIDED BY OTHERS.

CRSA
ARCHITECTURE
PLANNING
INTERIORS
649 E SOUTH TEMPLE
SALT LAKE CITY, UT 84102
801.355.5915
www.crsa-us.com

STRUCTURAL ENGINEER
CALDER RICHARDS CONSULTING ENGINEERS
634 South 400 West Suite 100
SALT LAKE CITY, UT 84101
(801) 466-1699 (801) 467-2495 FAX
stephen@crceng.com

MECHANICAL ENGINEER
SMD
986 WEST ATHERTON DRIVE STE. 200
TAYLORSVILLE, UTAH 84123
(801)268-3028 FAX (801)268-3297
# #

ELECTRICAL ENGINEER
SPECTRUM
324 S STATE STREET STE. 400
SALT LAKE CITY, UTAH 84111
(801)328-5151 (801)328-5155 FAX
# #

LICENSED PROFESSIONAL ENGINEER
No. 7083854
DAVID L. AFFLECK
STATE OF UTAH

PROJECT:
BUILDING 3030 REMODEL
UTAH NATIONAL GUARD
CAMP W.G. WILLIAMS
17800 South Redwood Road
Riverton, Utah 84065

UTAH NATIONAL GUARD
12953 SOUTH

BN	BID DOCUMENTS	8-30-2010
CD	PLAN CHECK	8-30-2010

PROJECT NO: B10-029
CAD DWG FILE:
DRAWN BY:
CHECKED BY:

1ST FLOOR POWER PLAN

EP101

File Name: P:\2010\20100297\1Drawings\3Sheet\97EP101.dwg Last Plotted: 2010/08/30 @ 1:07 PM By: cdn

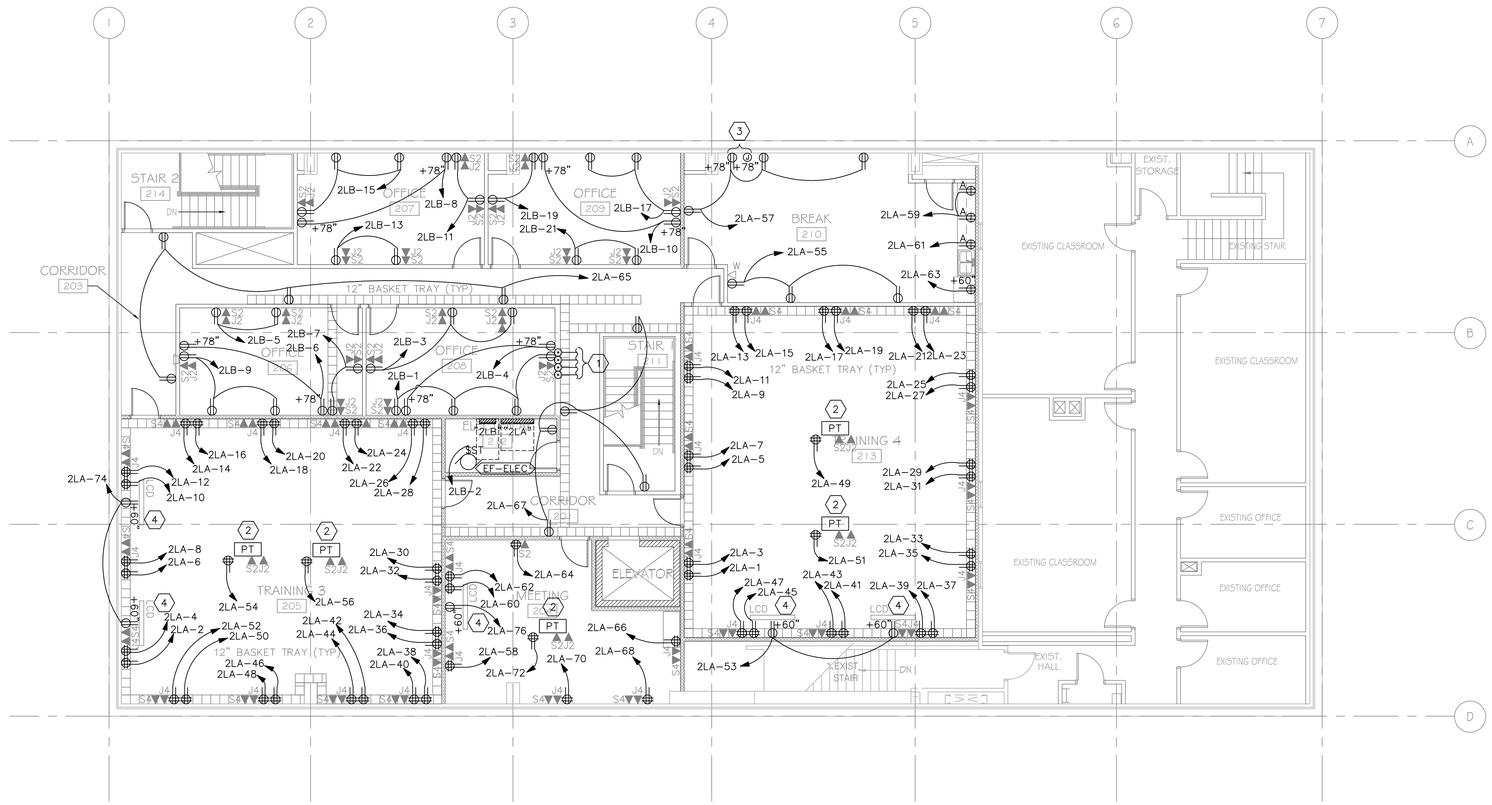

B1 2ND FLOOR POWER PLAN
1/8" = 1'-0"

0 4' 8' 16'

GENERAL SHEET NOTES

1. ALL CABLING INSTALLED ABOVE THE PROJECT AREA IS TO BE PLENUM RATED.
2. ALL CONDUIT AND WIRE PENETRATIONS TO THE PROJECT AREA SHALL BE FILTERED, GROUNDED OR AS SHOWN ON THE PIPE ISOLATION DETAIL.
3. ALL FOIL-BACKED WALLS SHALL BE GROUNDED EVERY 30-FEET USING #6 AWG.
4. ALL RACEWAY PENETRATIONS INTO THE SECURE AREA OF THE REMODEL REQUIRE A GROUNDING CONNECTION AT THE POINT OF ENTRY INTO THE SECURE SPACE. THE CONNECTION MUST BE VISIBLE FOR INSPECTION AND IS REQUIRED ON ALL NEW AND EXISTING PENETRATIONS INTO THE SECURE AREA.

⬡SHEET KEYNOTES

1. PROVIDE 4-EACH 4-INCH CONDUITS FROM MAIN TELECOMMUNICATIONS ROOM UP TO 2ND FLOOR CABLE TRAY.
2. COORDINATE EXACT LOCATION WITH OWNER AND ARCHITECT PRIOR TO CORE DRILLING.
3. COORDINATE EXACT LOCATION FOR POWER AND COMMUNICATIONS FOR OWNER PROVIDED AND INSTALLED FLAT PANEL TV.
4. FLAT PANEL LCD TV, MOUNTING BRACKET, AND HARDWARE IS OWNER PROVIDED AND CONTRACTOR INSTALLED. COORDINATE WITH OWNER.

CRSA
ARCHITECTURE
PLANNING
INTERIORS
649 E SOUTH TEMPLE
SALT LAKE CITY, UT 84102
801.355.5915
www.crsa-us.com

STRUCTURAL ENGINEER
CALDER RICHARDS CONSULTING ENGINEERS
634 South 400 West Suite 100
SALT LAKE CITY, UT 84101
(801) 466-1699 (801) 467-2495 FAX
stephen@crceng.com

MECHANICAL ENGINEER
SMD
986 WEST ATHERTON DRIVE STE. 200
TAYLORSVILLE, UTAH 84123
(801)268-3626 FAX (801)268-3297
# #

ELECTRICAL ENGINEER
SPECTRUM
324 S STATE STREET STE. 400
SALT LAKE CITY, UTAH 84111
(801)328-5151 (801)328-5155 FAX
# #

LICENSED PROFESSIONAL ENGINEER
No. 7083854
DAVID L. AFFLECK
STATE OF UTAH

PROJECT:
BUILDING 3030 REMODEL
UTAH NATIONAL GUARD
CAMP W.G. WILLIAMS
17800 South Redwood Road
Riverton, Utah 84065

UTAH NATIONAL GUARD
12953 SOUTH

BN	BID DOCUMENTS	8-30-2010
CD	PLAN CHECK	8-30-2010

PROJECT NO: B10-029
CAD DWG FILE:
DRAWN BY:
CHECKED BY:

2ND FLOOR
POWER PLAN

EP102

File Name: P:\2010\20100297\1Drawings\3Sheet\97EP102.dwg Last Plotted: 2010/08/30 @ 1:07 PM By: cdn

SHEET KEYNOTES

1. PROVIDE GROUND BOND TO EACH SHEET OF TEMPEST SHIELD FOIL MATERIAL LOCATED IN EACH WALL. PROVIDE MINIMUM OF 2 BONDING JUMPERS (#6 CU EQUIVALENT) BETWEEN ADJACENT PIECES OF TEMPEST SHIELD FOIL MATERIAL AT A MINIMUM EVERY 30-LINEAR FEET ALONG ADJACENT EDGES.
2. PROVIDE A FUSE DISCONNECT BASED ON NAME PLATE RATING OF EQUIPMENT.

GENERAL SHEET NOTES

1. PROVIDE NEMA 3R ENCLOSURES FOR EQUIPMENT LOCATED OUTDOORS. REFER TO PLANS FOR EQUIPMENT LOCATIONS.
2. REFER TO PLANS FOR CONSTRAINTS ON PHYSICAL DIMENSIONS AND CLEARANCE REQUIREMENTS OF EQUIPMENT. PROVIDE EQUIPMENT DIMENSIONS THAT FALL WITHIN THE CONSTRAINTS OF EACH SPECIFIC LOCATION.
3. ALL EQUIPMENT SHALL BE CONSTRUCTED AND BRACED FOR THE SEISMIC CONDITIONS OF THE PROJECT. REFER TO SPECIFICATIONS SECTION 16071 FOR REQUIREMENTS.

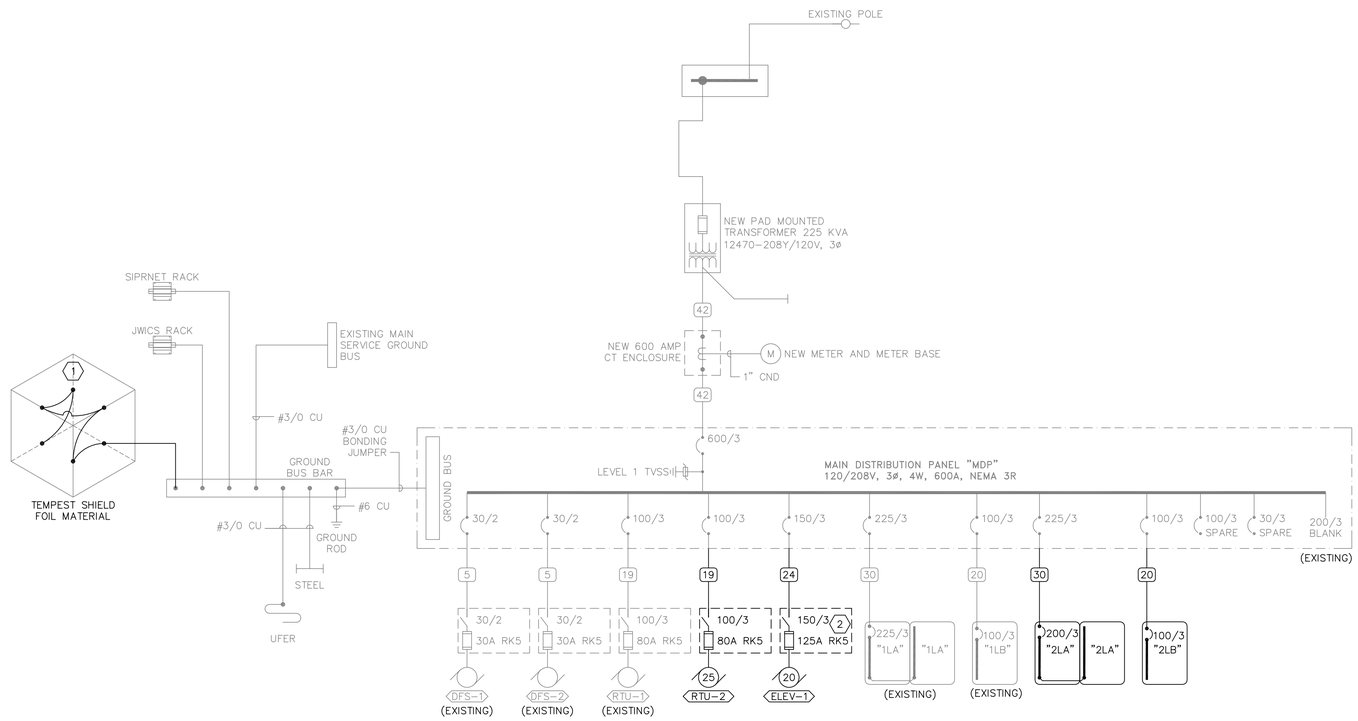

CONDUCTOR AND CONDUIT SCHEDULE

SCHEDULE NUMBER
SUBSCRIPT (NOTE 5)
(E.G.) 5 IG

SYM	AMP	CONDUIT SIZE	CONDUCTOR(NOTE 1) QTY	SIZE	G	IG	SE	NOTES
1	20	.75	2	12	12	12	8	2
2	20	.75	3	12	12	12	8	2,3
3	20	.75	4	12	12	12	8	2,3
4	30	.75	2	10	10	10	8	2
5	30	.75	3	10	10	10	8	2
6	30	.75	4	10	10	10	8	2
7	40	1	2	8	10	8	6	2
8	40	1	3	8	10	8	6	2
9	40	1	4	8	10	8	6	2
10	55	1	2	6	10	8	4	2
11	55	1	3	6	10	8	4	2
12	55	1.25	4	6	10	8	4	2
13	70	1	2	4	8	4	2	2
14	70	1.25	3	4	8	4	2	2
15	70	1.25	4	4	8	4	2	2
16	85	1.25	2	3	8	3	2	2
17	85	1.25	3	3	8	3	2	2
18	85	1.25	4	3	8	3	2	2
19	95	1.25	3	2	8	2	2	2
20	95	1.50	4	2	8	2	2	2
21	130	1.50	3	1	6	2	2	2
22	130	1.50	4	1	6	2	2	2
23	150	2	3	1/0	6	2	1/0	2
24	150	2	4	1/0	6	2	1/0	2
25	175	2	3	2/0	6	2	2/0	2
26	175	2	4	2/0	6	2	2/0	2
27	200	2	3	3/0	6	2	2/0	2
28	200	2.50	4	3/0	6	2	2/0	2
29	230	2.50	3	4/0	4	2	2/0	2
30	230	2.50	4	4/0	4	2	2/0	2
31	255	2.50	3	250	4	1	2/0	2
32	255	2.50	4	250	4	1	2/0	2
33	310	3	3	350	3	1/0	3/0	2
34	310	3	4	350	3	1/0	3/0	2
35	380	3.50	3	500	3	3/0	3/0	2
36	380	4	4	500	3	3/0	3/0	2
37	400	2 EA 2	3	3/0	3	3/0	3/0	2
38	400	2 EA 2.50	4	3/0	3	3/0	3/0	2
39	510	2 EA 2.50	3	250	1	4/0	3/0	2
40	510	2 EA 3	4	250	1	4/0	3/0	2
41	620	2 EA 3	3	350	1/0	4/0	3/0	2,4
42	620	2 EA 3	4	350	1/0	4/0	3/0	2,4
43	760	2 EA 3.50	3	500	1/0	4/0	3/0	2,4
44	760	2 EA 4	4	500	1/0	4/0	3/0	2,4
45	855	3 EA 3	3	300	2/0	4/0	3/0	2,4
46	855	3 EA 3	4	300	2/0	4/0	3/0	2,4
47	1000	3 EA 3.50	3	400	2/0	4/0	3/0	4
48	1000	3 EA 3.50	4	400	2/0	4/0	3/0	4
49	1140	3 EA 4	3	500	3/0	4/0	3/0	4
50	1140	3 EA 4	4	500	3/0	4/0	3/0	4
51	1240	4 EA 3	3	350	3/0	4/0	3/0	4
52	1240	4 EA 3	4	350	3/0	4/0	3/0	4
53	1675	5 EA 3.50	4	400	4/0	4/0	4/0	4
54	2010	6 EA 3.50	4	400	250	250	250	4
55	2660	7 EA 4	4	500	350	350	350	4
56	3040	8 EA 4	4	500	500	500	500	4
57	4180	11 EA 4	4	500	500	500	500	4
58		5 EA 4						6
59		5						6
60		10 EA 4						6

CONDUCTOR AND CONDUIT SCHEDULE NOTES

1. CONDUCTORS SHOWN ARE SHOWN FOR EACH CONDUIT WITH MODIFICATIONS AS NOTED IN NOTE 5. ALL CONDUCTORS SHOWN ARE THWN UNLESS OTHERWISE NOTED.
2. PROVIDE EQUIPMENT GROUND CONDUCTORS PER TABLE 250-122 WHEN CIRCUIT BREAKERS ARE SIZED GREATER THAN AMPERE RATING SHOWN IN TABLE.
3. PROVIDE #10 NEUTRALS FOR MULTIWIRE BRANCH CIRCUITS SERVING COMPUTERS.
4. GROUND (G) CONDUCTOR MAY BE DELETED ON SERVICE ENTRANCE CONDUCTORS.
5. WHEN SYMBOL SUBSCRIPT INDICATES "IG", INCLUDE "IG" OR INSULATED GROUND CONDUCTOR SCHEDULED ALONG WITH GROUND OR EQUIPMENT GROUND CONDUCTOR. WHEN SYMBOL SUBSCRIPT INDICATES "SE", SUBSTITUTE "SE" CONDUCTOR FOR "G" CONDUCTOR SHOWN WHICH IS SIZED FOR THE GROUNDING OF THE SECONDARY OF THE SEPARATELY DERIVED SYSTEMS.
6. RACEWAY ONLY. CONDUCTORS PROVIDED BY UTILITY.

A1 ONE-LINE DIAGRAM

NO SCALE

CRSA
ARCHITECTURE
PLANNING
INTERIORS
649 E SOUTH TEMPLE
SALT LAKE CITY, UT 84102
801.355.5915
www.crsa-us.com

STRUCTURAL ENGINEER
CALDER RICHARDS CONSULTING ENGINEERS
634 South 400 West Suite 100
SALT LAKE CITY, UT 84101
(801) 466-1699 (801) 467-2495 FAX
stephen@crceng.com

MECHANICAL ENGINEER
SMD
986 WEST ATHERTON DRIVE STE. 200
TAYLORSVILLE, UTAH 84123
(801)268-3628 FAX (801)268-3297
# #

ELECTRICAL ENGINEER
SPECTRUM
324 S STATE STREET STE. 400
SALT LAKE CITY, UTAH 84111
(801)328-5151 (801)328-5155 FAX
# #

LICENSED PROFESSIONAL ENGINEER
No. 7083854
DAVID L. AFFLECK
STATE OF UTAH

PROJECT:
BUILDING 3030 REMODEL
UTAH NATIONAL GUARD
CAMP W.G. WILLIAMS
17800 South Redwood Road
Riverton, Utah 84065

UTAH NATIONAL GUARD
12953 SOUTH

BN	BID DOCUMENTS	8-30-2010
CD	PLAN CHECK	8-30-2010

PROJECT NO: B10-029
CAD DWG FILE:
DRAWN BY:
CHECKED BY:

ONE-LINE DIAGRAM

EP601

File Name: P:\2010\20100297\1Drawings\3Sheet\97EP601.dwg Last Plotted: 2010/08/30 @ 1:07 PM By: cdn

EXISTING PANEL "1LB"

VOLTS/PHASE/WIRE:	PANEL SIZE & TYPE:	MAIN SIZE & TYPE:	LOCATION:	CABINET:	NOTES:
120/208 V, 3 PH 4 WIRE	22" W x 6" D, BOLT-ON	100 AMPERE MAIN LUG		SURFACE	

ACCESSORIES: PANEL DIRECTORY, IDENTIFICATION, GROUNDING BAR, SUBFEED LUGS, HINGED COVER

CKT	OCP		LOAD (kVA)			DESCRIPTION	LCL	PHASE LOAD			LCL	DESCRIPTION	LOAD (kVA)			OCP		CKT
NO	AMP	POLE	LTG	CO	PWR		kVA	A	B	C	kVA		LTG	CO	PWR	AMP	POLE	NO
1	20	1			1.5	COMMUNICATIONS RACK	1.5	2.5			1.0	CCTV PANEL			1.0	20	1	2
3	20	1			1.5	COMMUNICATIONS RACK	1.5		2.5		1.0	SECURITY PANEL			1.0	20	1	4
5	20	1		0.4		COMM ROOM WALL	0.4			1.4	1.0	ACCESS CONTROL PANEL			1.0	20	1	6
7	20	1			1.5	COMMUNICATIONS RACK	1.5	2.5			1.0	FIRE ALARM PANEL			1.0	20	1	8
9	20	1			1.5	COMMUNICATIONS RACK	1.5		1.7		0.2	FIRE ALARM RELAYS			0.2	20	1	10
11	20	1		0.4		COMM ROOM WALL	0.4			0.7	0.3	ELEVATOR PIT	0.1	0.2		20	1	12
13	20	1			1.5	COMMUNICATIONS RACK	1.5	1.5			0.0	SPARE				20	1	14
15	20	1			1.5	COMMUNICATIONS RACK	1.5		1.5		0.0	SPARE				20	1	16
17	20	1		0.4		COMM ROOM BACKBOARD	0.4			0.4	0.0	SPARE				20	1	18
19	20	1		0.4		COMM ROOM BACKBOARD	0.4	0.4			0.0	SPARE				20	1	20
21	20	1		0.2		FRONT OFFICE	0.2		0.2		0.0	SPARE				20	1	22
23	20	1				SPARE	0.0			0.0	0.0	SPARE				20	1	24
25	20	1				SPARE	0.0	0.0			0.0	SPARE				20	1	26
27	20	1				SPARE	0.0		0.0		0.0	SPARE				20	1	28
29	20	1				SPARE	0.0			0.0	0.0	SPARE				20	1	30
31	20	1				SPARE	0.0	0.0			0.0	SPARE				20	1	32
33	20	1				SPARE	0.0		0.0		0.0	SPARE				20	1	34
35	20	1				SPARE	0.0			0.0	0.0	SPARE				20	1	36
37	20	1				SPARE	0.0	0.0			0.0	SPARE				20	1	38
39	20	1				SPARE	0.0		0.0		0.0	SPARE				20	1	40
41	20	1				SPARE	0.0			0.0	0.0	SPARE				20	1	42
TOTALS:						CONNECTED kVA PER PHASE	7	6	3			CONNECTED TOTAL kVA	15					
						CONNECTED AMPS PER PHASE	58	49	21			CONNECTED AVERAGE AMPS PER PHASE	43					

NEC DIVERSIFIED LOAD CALCULATIONS

LIGHTING 0kVA @125% =	0 kVA	ALL OTHER LOADS @100% =	13 kVA	DIVERSIFIED TOTAL kVA =	15
RECEPTACLES 2kVA @100% =	2 kVA	25% OF LARGEST MOTOR =	0 kVA	AVERAGE AMPS PER PHASE =	43
REMAINDER 0kVA @ 50% =	0 kVA				

EXISTING PANEL "1LA"

VOLTS/PHASE/WIRE:	PANEL SIZE & TYPE:	MAIN SIZE & TYPE:	LOCATION:	CABINET:	NOTES:
120/208 V, 3 PH 4 WIRE	22" W x 6" D, BOLT-ON	225 AMPERE MAIN LUG		SURFACE	

ACCESSORIES: PANEL DIRECTORY, IDENTIFICATION, GROUNDING BAR, SUBFEED LUGS, HINGED COVER

CKT	OCP		LOAD (kVA)			DESCRIPTION	LCL	PHASE LOAD			LCL	DESCRIPTION	LOAD (kVA)			OCP		CKT
NO	AMP	POLE	LTG	CO	PWR		kVA	A	B	C	kVA		LTG	CO	PWR	AMP	POLE	NO
1	20	1		0.8		TRAINING ROOM	0.8	1.8			1.0	P-HW			1.0	20	1	2
3	20	1		0.8		TRAINING ROOM	0.8		2.0		1.2	B-1			1.2	20	1	4
5	20	1		0.8		TRAINING ROOM	0.8			2.0	1.5	TRAINING/COMM	1.2			20	1	6
7	20	1		0.8		TRAINING ROOM	0.8	2.1			1.6	FRONT OFFICE/CORRIDOR	1.3			20	1	8
9	20	1		0.8		TRAINING ROOM	0.8		1.6		1.0	OFFICES	0.8			20	1	10
11	20	1		0.8		TRAINING ROOM	0.8			1.6	0.8	TRAINING ROOM			0.8	20	1	12
13	20	1		0.8		TRAINING ROOM	0.8	1.6			0.8	TRAINING ROOM			0.8	20	1	14
15	20	1		0.8		TRAINING ROOM	0.8		1.0		0.2	FRONT OFFICE			0.2	20	1	16
17	20	1		0.8		TRAINING ROOM	0.8			1.0	0.2	STAIRWELL			0.2	20	1	18
19	20	1		0.8		TRAINING ROOM	0.8	1.2			0.4	TRAINING ROOM 2		0.4		20	1	20
21	20	1		0.8		TRAINING ROOM	0.8		1.2		0.4	TRAINING ROOM 2		0.4		20	1	22
23	20	1		0.8		TRAINING ROOM	0.8			1.2	0.4	TRAINING ROOM 2		0.4		20	1	24
25	20	1		0.8		TRAINING ROOM	0.8	1.2			0.4	TRAINING ROOM 2		0.4		20	1	26
27	20	1		0.8		TRAINING ROOM	0.8		1.2		0.4	TRAINING ROOM 2		0.4		20	1	28
29	20	1		0.8		TRAINING ROOM	0.8			1.2	0.4	TRAINING ROOM 2		0.4		20	1	30
31	20	1		0.8		TRAINING ROOM	0.8	1.2			0.4	TRAINING ROOM 2		0.4		20	1	32
33	20	1		0.8		TRAINING ROOM	0.8		1.2		0.4	TRAINING ROOM 2		0.4		20	1	34
35	20	1		0.8		TRAINING ROOM	0.8			1.2	0.4	TRAINING ROOM 2		0.4		20	1	36
37	20	1		0.8		TRAINING ROOM	0.8	1.2			0.4	TRAINING ROOM 2		0.4		20	1	38
39	20	1		0.8		TRAINING ROOM	0.8		1.2		0.4	TRAINING ROOM 2		0.4		20	1	40
41	20	1			1.5	TRAINING ROOM PROJ	1.5			1.9	0.4	TRAINING ROOM 2		0.4		20	1	42
43	20	1		0.4		FRONT OFFICE	0.4	0.8			0.4	TRAINING ROOM 2		0.4		20	1	44
45	20	1		0.8		FRONT OFFICE	0.8		1.2		0.4	TRAINING ROOM 2		0.4		20	1	46
47	20	1		0.6		FRONT OFFICE	0.6			1.0	0.4	TRAINING ROOM 2		0.4		20	1	48
49	20	1		0.6		OFFICE 108	0.6	1.0			0.4	TRAINING ROOM 2		0.4		20	1	50
51	20	1		0.6		OFFICE 108	0.6		1.0		0.4	TRAINING ROOM 2		0.4		20	1	52
53	20	1		0.8		OFFICE 107	0.8			1.2	0.4	TRAINING ROOM 2		0.4		20	1	54
55	20	1		0.6		OFFICE 116	0.6	1.0			0.4	TRAINING ROOM 2		0.4		20	1	56
57	20	1		0.6		OFFICE 115	0.6		1.0		0.4	TRAINING ROOM 2		0.4		20	1	58
59	20	1		0.8		OFFICE 115	0.8			1.2	0.4	TRAINING ROOM 2		0.4		20	1	60
61	20	1		0.6		OFFICE 118	0.6	1.0			0.4	TRAINING ROOM 2		0.4		20	1	62
63	20	1		0.6		OFFICE 118	0.6		1.0		0.4	TRAINING ROOM 2		0.4		20	1	64
65	20	1		0.8		OFFICE 117	0.8			1.2	0.4	TRAINING ROOM 2		0.4		20	1	66
67	20	1	2.0	0.2		SPARE	2.7	2.6			0.4	TRAINING ROOM 2		0.4		20	1	68
69	20	1	1.2			SPARE	1.5		1.6		0.4	STORAGE 123		0.4		20	1	70
71	20	1		1.0		CORRIDOR	1.0			2.0	1.0	STORAGE 123 & 124		1.0		20	1	72
73	20	1		0.4		EXTERIOR OUTLETS	0.4	0.6			0.2	EF-STOR			0.2	20	1	74
75	20	1	1.4			TRAINING 122 LGTS	1.8		1.4		0.0	SPARE				20	1	76
77	20	1				SPARE	0.0			0.0	0.0	SPARE				20	1	78
79	20	1				SPARE	0.0	0.0			0.0	BLANK				20	1	80
81	20	1				SPARE	0.0		0.0		0.0	BLANK				20	1	82
83	20	1	0.2			SECURITY LIGHTS	0.3			0.2	0.0	BLANK				20	1	84
TOTALS:						CONNECTED kVA PER PHASE	17	17				CONNECTED TOTAL kVA	51					
						CONNECTED AMPS PER PHASE	145	138	141			CONNECTED AVERAGE AMPS PER PHASE	141					

NEC DIVERSIFIED LOAD CALCULATIONS

LIGHTING 8kVA @125% =	10 kVA	ALL OTHER LOADS @100% =	6 kVA	DIVERSIFIED TOTAL kVA =	39
RECEPTACLES 10kVA @100% =	10 kVA	25% OF LARGEST MOTOR =	0 kVA	AVERAGE AMPS PER PHASE =	110
REMAINDER 27kVA @ 50% =	13 kVA				

EXISTING DISTRIBUTION PANELBOARD "MDP"

VOLTS/PHASE/WIRE:	MAIN SIZE & TYPE:	LOCATION:	NOTES:
120/208 V, 3 PH 4 WIRE	600 AMPERE MAIN BKR		65,000 AIC

ACCESSORIES: IDENTIFICATION, GROUNDING BAR, INSULATED GROUND BAR, SERVICE ENTRANCE RATED, TVSS, NEMA 3R

CKT	OCP		LOAD (kVA)			PANEL / EQUIPMENT	LCL	PHASE LOAD			LCL	PANEL / EQUIPMENT	LOAD (kVA)			OCP		CKT
NO	AMP	POLE	LTG	CO	PWR		kVA	A	B	C	kVA		LTG	CO	PWR	AMP	POLE	NO
1	225	3	3.3	12.0	2.0	1LA	18.2	24.5			7.2	ELEVATOR (20HP)			7.2	150	3	2
3	–	–	3.4	11.8	1.4	----	17.5		23.8		7.2	----			7.2	–	–	4
5	–	–	1.4	13.0	2.5	----	17.3			24.1	7.2	----			7.2	–	–	6
7	100	3	0.0	0.4	6.5	1LB	6.9	17.9			11.0	2LA	0.0	10.2	0.8	225	3	8
9	–	–	0.0	0.2	5.7	----	5.9		17.1		11.2	----	0.0	9.6	1.6	–	–	10
11	–	–	0.1	1.4	1.0	----	2.5			12.3	9.8	----	0.0	9.0	0.8	–	–	12
13	100	3			7.1	RTU-1	7.1	14.2			7.1	RTU-2			7.1	100	3	14
15	–	–			7.1	----	7.1		14.2		7.1	----			7.1	–	–	16
17	–	–			7.1	----	7.1			14.2	7.1	----			7.1	–	–	18
19	30	2			2.3	DFS-1	2.3	7.8			6.2	2LB	2.5	2.0	1.0	100	3	20
21	–	–			2.3	----	2.3		7.2		5.2	----	1.1	2.2	1.6	–	–	22
23	30	2			2.3	DFS-2	2.3			7.4	5.9	----	2.9	1.4	0.8	–	–	24
25	–	–			2.3	----	2.3	2.3			0.0	SPARE				200	3	26
27	30	2				SPARE	0.0		0.0		0.0	----				–	–	28
29	–	–				---	0.0			0.0	0.0	----				–	–	30
TOTALS:						CONNECTED kVA PER PHASE	67	62	58			CONNECTED TOTAL kVA	187					
						CONNECTED AMPS PER PHASE	557	519	484			CONNECTED AVERAGE AMPS PER PHASE	520					

NEC DIVERSIFIED LOAD CALCULATIONS

LIGHTING 15kVA @125% =	18 kVA	ALL OTHER LOADS @100% =	99 kVA	DIVERSIFIED TOTAL kVA =	159
RECEPTACLES 10kVA @100% =	10 kVA	25% OF LARGEST MOTOR =	0 kVA	AVERAGE AMPS PER PHASE =	442
REMAINDER 63kVA @ 50% =	32 kVA				

EQUIPMENT SCHEDULE KEY

E	DIVISION 16
Q	FURNISHED WITH THE EQUIPMENT
*	COORDINATE WITH THE DIVISION 15 TEMPERATURE CONTROL INSTALLER
**	AUTOMATIC CONTROL WIRING BY DIVISION 15

EQUIPMENT SCHEDULE

MARK	ITEM DESCRIPTION	LOAD DATA							WIRE AND CONDUIT SIZE (CC-INDICATES CONDUCTOR AND CONDUIT SCHEDULE)	OVERCURRENT PROTECTION									NOTES	MARK
												DISCONNECT SWITCH				CIRCUIT BREAKER				
		HP	KW	MCA	FLA	VOLT	PH	Hz		FURN BY	SWITCH TYPE	NEMA RATING	FUSED SWITCH	FUSE RATING	FUSE CLASS	CB	PANEL	RATING		
RTU-2	ROOF TOP UNIT			59.4		208	3	60	CC#14	E	100/3	1	YES	70A	RK5	100/3		HACR	1	RTU-2
EF-ELEC	EXHAUST FAN		0.1		1.7	120	1	60	CC#1	E	THERMAL SWITCH					20/1		HACR	1	EF-ELEC
EF-STOR	EXHAUST FAN		0.1		1.7	120	1	60	CC#1	E	THERMAL SWITCH					20/1		HACR	1	EF-STOR
F-1	FURNACE 1	1			15.2	120	1	60	CC#4	E	THERMAL SWITCH					30/1		HACR	1,2	F-1
F-2	FURNACE 2	1			15.2	120	1	60	CC#4	E	THERMAL SWITCH					30/1		HACR	1,2	F-2
CU-1	CONDENSING UNIT 1			29		208	1	60	CC#8	E	60/2	3R	YES	45A	RK5	50/2		HACR	1,2	CU-1
CU-2	CONDENSING UNIT 2			29		208	1	60	CC#8	E	60/2	3R	YES	45A	RK5	50/2		HACR	1,2	CU-2

NOTES:
1. LOCATE DISCONNECT ADJACENT TO UNIT.
2. THE CONTRACTOR SHALL DISCONNECT EXISTING MECHANICAL EQUIPMENT AND RECONNECT THE NEW EQUIPMENT AS REQUIRED. THE CONTRACTOR SHALL PROVIDE FUSED DISCONNECT, RACEWAY, CONDUCTORS, AND CIRCUIT BREAKERS BASED ON NAME PLATE RATING OF EQUIPMENT IF DIFFERENT THEN WHAT IS EXISTING OR IF THE EXISTING ELECTRIAL IS BEYOND IT USEFUL LIFE. COORDINATE WITH THE MECHANICAL DRAWINGS (SHEET MH100 FOR LOCATIONS) AND MECHANICAL EQUIPMENT INSTALLER.

CRSA
ARCHITECTURE
PLANNING
INTERIORS
649 E SOUTH TEMPLE
SALT LAKE CITY, UT 84102
801.355.5915
www.crsa-us.com

STRUCTURAL ENGINEER
CALDER RICHARDS CONSULTING ENGINEERS
634 South 400 West Suite 100
SALT LAKE CITY, UT 84101
(801) 466-1699 (801) 467-2495 FAX
stephen@crceng.com

MECHANICAL ENGINEER
SMD
986 WEST ATHERTON DRIVE STE. 200
TAYLORSVILLE, UTAH 84123
(801)268-3628 FAX (801)268-3297
# #

ELECTRICAL ENGINEER
SPECTRUM
324 S STATE STREET STE. 400
SALT LAKE CITY, UTAH 84111
(801)328-5151 (801)328-5155 FAX
# #

LICENSED PROFESSIONAL ENGINEER
No. 7083854
DAVID L. AFFLECK
STATE OF UTAH

PROJECT:
BUILDING 3030 REMODEL
UTAH NATIONAL GUARD
CAMP W.G. WILLIAMS
17800 South Redwood Road
Riverton, Utah 84065

UTAH NATIONAL GUARD
12953 SOUTH

BN	BID DOCUMENTS	8-30-2010
CD	PLAN CHECK	8-30-2010

PROJECT NO: B10-029
CAD DWG FILE:
DRAWN BY:
CHECKED BY:

MECHANICAL EQUIPMENT & PANEL SCHEDULES

EP602

File Name: P:\2010\20100297\1Drawings\3Sheet\97EP602.dwg Last Plotted: 2010/08/30 @ 1:08 PM By: pss

PANEL "2LA"

VOLTS/PHASE/WIRE:	PANEL SIZE & TYPE:	MAIN SIZE & TYPE:	LOCATION:	CABINET:	NOTES:
120/208 V, 3 PH 4 WIRE	22" W x 6" D, BOLT-ON	225 AMPERE MAIN LUG		SURFACE	

ACCESSORIES: PANEL DIRECTORY, IDENTIFICATION, GROUNDING BAR, SUBFEED LUGS, HINGED COVER

CKT	OCP		LOAD (kVA)			DESCRIPTION	LCL	PHASE LOAD			LCL	DESCRIPTION	LOAD (kVA)			OCP		CKT
NO	AMP	POLE	LTG	CO	PWR		kVA	A	B	C	kVA		LTG	CO	PWR	AMP	POLE	NO
1	20	1		0.4		TRAINING 4 R 213	0.4	0.8			0.4	TRAINING 3 R 205		0.4		20	1	2
3	20	1		0.4		TRAINING 4 R 213	0.4		0.8		0.4	TRAINING 3 R 205		0.4		20	1	4
5	20	1		0.4		TRAINING 4 R 213	0.4			0.8	0.4	TRAINING 3 R 205		0.4		20	1	6
7	20	1		0.4		TRAINING 4 R 213	0.4	0.8			0.4	TRAINING 3 R 205		0.4		20	1	8
9	20	1		0.4		TRAINING 4 R 213	0.4		0.8		0.4	TRAINING 3 R 205		0.4		20	1	10
11	20	1		0.4		TRAINING 4 R 213	0.4			0.8	0.4	TRAINING 3 R 205		0.4		20	1	12
13	20	1		0.4		TRAINING 4 R 213	0.4	0.8			0.4	TRAINING 3 R 205		0.4		20	1	14
15	20	1		0.4		TRAINING 4 R 213	0.4		0.8		0.4	TRAINING 3 R 205		0.4		20	1	16
17	20	1		0.4		TRAINING 4 R 213	0.4			0.8	0.4	TRAINING 3 R 205		0.4		20	1	18
19	20	1		0.4		TRAINING 4 R 213	0.4	0.8			0.4	TRAINING 3 R 205		0.4		20	1	20
21	20	1		0.4		TRAINING 4 R 213	0.4		0.8		0.4	TRAINING 3 R 205		0.4		20	1	22
23	20	1		0.4		TRAINING 4 R 213	0.4			0.8	0.4	TRAINING 3 R 205		0.4		20	1	24
25	20	1		0.4		TRAINING 4 R 213	0.4	0.8			0.4	TRAINING 3 R 205		0.4		20	1	26
27	20	1		0.4		TRAINING 4 R 213	0.4		0.8		0.4	TRAINING 3 R 205		0.4		20	1	28
29	20	1		0.4		TRAINING 4 R 213	0.4			0.8	0.4	TRAINING 3 R 205		0.4		20	1	30
31	20	1		0.4		TRAINING 4 R 213	0.4	0.8			0.4	TRAINING 3 R 205		0.4		20	1	32
33	20	1		0.4		TRAINING 4 R 213	0.4		0.8		0.4	TRAINING 3 R 205		0.4		20	1	34
35	20	1		0.4		TRAINING 4 R 213	0.4			0.8	0.4	TRAINING 3 R 205		0.4		20	1	36
37	20	1		0.4		TRAINING 4 R 213	0.4	0.8			0.4	TRAINING 3 R 205		0.4		20	1	38
39	20	1		0.4		TRAINING 4 R 213	0.4		0.8		0.4	TRAINING 3 R 205		0.4		20	1	40
41	20	1		0.4		TRAINING 4 R 213	0.4			0.8	0.4	TRAINING 3 R 205		0.4		20	1	42
43	20	1		0.4		TRAINING 4 R 213	0.4	0.8			0.4	TRAINING 3 R 205		0.4		20	1	44
45	20	1		0.4		TRAINING 4 R 213	0.4		0.8		0.4	TRAINING 3 R 205		0.4		20	1	46
47	20	1		0.4		TRAINING 4 R 213	0.4			0.8	0.4	TRAINING 3 R 205		0.4		20	1	48
49	20	1		0.4		PT TRAINING 4 R 213	0.4	0.8			0.4	TRAINING 3 R 205		0.4		20	1	50
51	20	1		0.4		PT TRAINING 4 R 213	0.4		0.8		0.4	TRAINING 3 R 205		0.4		20	1	52
53	20	1			0.8	TRAINING 4 R 213 LCD	0.8			1.2	0.4	PT TRAINING 3 R 205		0.4		20	1	54
55	20	1		0.6		BREAK 210	0.6	1.0			0.4	PT TRAINING 3 R 205		0.4		20	1	56
57	20	1		1.2		BREAK 210	1.2		1.6		0.4	MEETING 204		0.4		20	1	58
59	20	1		0.2		BREAK 210 COUNTER	0.2			0.6	0.4	MEETING 204		0.4		20	1	60
61	20	1		0.2		BREAK 210 COUNTER	0.2	0.6			0.4	MEETING 204		0.4		20	1	62
63	20	1			1.2	BREAK 210 REF	1.2		1.6		0.4	MEETING 204		0.4		20	1	64
65	20	1		0.8		CORRIDOR 202	0.8			1.2	0.4	MEETING 204		0.4		20	1	66
67	20	1		1.0		CORRIDOR 221 STAIR 211	1.0	1.4			0.4	MEETING 204		0.4		20	1	68
69	20	1				SPARE	0.0		0.4		0.4	MEETING 204		0.4		20	1	70
71	20	1				SPARE	0.0			0.4	0.4	PT MEETING 204		0.4		20	1	72
73	20	1				SPARE	0.0	0.8			0.8	TRAINING 3 R 205 LCD			0.8	20	1	74
75	20	1				SPARE	0.0		0.4		0.4	MEETING 204 LCD			0.4	20	1	76
77	20	1				SPARE	0.0			0.0	0.0	SPARE				20	1	78
79	20	1				SPARE	0.0	0.0			0.0	SPARE				20	1	80
81	20	1				SPARE	0.0		0.0		0.0	SPARE				20	1	82
83	20	1				SPARE	0.0			0.0	0.0	SPARE				20	1	84
TOTALS:						CONNECTED kVA PER PHASE	11		11		10	CONNECTED TOTAL kVA				32		
						CONNECTED AMPS PER PHASE	92		93		82	CONNECTED AVERAGE AMPS PER PHASE				89		

NEC DIVERSIFIED LOAD CALCULATIONS

LIGHTING 0kVA @125% =	0 kVA	ALL OTHER LOADS @100% =	3 kVA	DIVERSIFIED TOTAL kVA =	23
RECEPTACLES 10kVA @100% =	10 kVA	25% OF LARGEST MOTOR =	0 kVA	AVERAGE AMPS PER PHASE =	63
REMAINDER 19kVA @ 50% =	9 kVA				

PANEL "2LB"

VOLTS/PHASE/WIRE:	PANEL SIZE & TYPE:	MAIN SIZE & TYPE:	LOCATION:	CABINET:	NOTES:
120/208 V, 3 PH 4 WIRE	22" W x 6" D, BOLT-ON	100 AMPERE MAIN LUG		SURFACE	

ACCESSORIES: PANEL DIRECTORY, IDENTIFICATION, GROUNDING BAR, SUBFEED LUGS, HINGED COVER

CKT	OCP		LOAD (kVA)			DESCRIPTION	LCL	PHASE LOAD			LCL	DESCRIPTION	LOAD (kVA)			OCP		CKT
NO	AMP	POLE	LTG	CO	PWR		kVA	A	B	C	kVA		LTG	CO	PWR	AMP	POLE	NO
1	20	1		0.8		OFFICE 208	0.8	1.0			0.2	EF-ELEC			0.2	20	1	2
3	20	1		0.6		OFFICE 208	0.6		1.4		0.8	OFFICE 208 LCD			0.8	20	1	4
5	20	1		0.4		OFFICE 206	0.4			1.2	0.8	OFFICE 206 LCD			0.8	20	1	6
7	20	1		0.4		OFFICE 206	0.4	1.2			0.8	OFFICE 207 LCD			0.8	20	1	8
9	20	1		0.6		OFFICE 206	0.6		1.4		0.8	OFFICER 209 LCD			0.8	20	1	10
11	20	1		0.4		OFFICE 207	0.4			0.4	0.0	SPARE				20	1	12
13	20	1		0.4		OFFICE 207	0.4	0.4			0.0	SPARE				20	1	14
15	20	1		0.6		OFFICE 207	0.6		0.6		0.0	SPARE				20	1	16
17	20	1		0.6		OFFICE 209	0.6			0.6	0.0	SPARE				20	1	18
19	20	1		0.4		OFFICE 209	0.4	0.4			0.0	SPARE				20	1	20
21	20	1		0.4		OFFICE 209	0.4		0.4		0.0	SPARE				20	1	22
23	20	1	1.5			TRAINING 213 LGTS	1.9			1.5	0.0	SPARE				20	1	24
25	20	1	1.5			TRAINING 205 LGTS	1.9	1.5			0.0	SPARE				20	1	26
27	20	1	1.1			OFFICE 207, 209, BK 210	1.4		1.1		0.0	SPARE				20	1	28
29	20	1	1.4			204, 206, 208, 211, 212	1.8			1.4	0.0	SPARE				20	1	30
31	20	1	1.0			HALL 201, 202, STAIRS 214	1.3	1.0			0.0	SPARE				20	1	32
33	20	1				SPARE	0.0		0.0		0.0	SPARE				20	1	34
35	20	1				SPARE	0.0			0.0	0.0	SPARE				20	1	36
37	20	1				SPARE	0.0	0.0			0.0	SPARE				20	1	38
39	20	1				SPARE	0.0		0.0		0.0	SPARE				20	1	40
41	20	1				SPARE	0.0			0.0	0.0	SPARE				20	1	42
TOTALS:						CONNECTED kVA PER PHASE	6		5		5	CONNECTED TOTAL kVA				16		
						CONNECTED AMPS PER PHASE	46		41		43	CONNECTED AVERAGE AMPS PER PHASE				43		

NEC DIVERSIFIED LOAD CALCULATIONS

LIGHTING 7kVA @125% =	8 kVA	ALL OTHER LOADS @100% =	3 kVA	DIVERSIFIED TOTAL kVA =	17
RECEPTACLES 6kVA @100% =	6 kVA	25% OF LARGEST MOTOR =	0 kVA	AVERAGE AMPS PER PHASE =	48
REMAINDER 0kVA @ 50% =	0 kVA				

CRSA
ARCHITECTURE
PLANNING
INTERIORS
649 E SOUTH TEMPLE
SALT LAKE CITY, UT 84102
801.355.5915
www.crsa-us.com

STRUCTURAL ENGINEER
CALDER RICHARDS CONSULTING ENGINEERS
634 South 400 West Suite 100
SALT LAKE CITY, UT 84101
(801) 466-1699 (801) 467-2495 FAX
stephen@crceng.com

MECHANICAL ENGINEER
SMD
986 WEST ATHERTON DRIVE STE. 200
TAYLORSVILLE, UTAH 84123
(801)268-3628 FAX (801)268-3297
# #

ELECTRICAL ENGINEER
SPECTRUM
324 S STATE STREET STE. 400
SALT LAKE CITY, UTAH 84111
(801)328-5151 (801)328-5155 FAX
# #

LICENSED PROFESSIONAL ENGINEER
No. 7083854
DAVID L. AFFLECK
STATE OF UTAH

PROJECT:
BUILDING 3030 REMODEL
UTAH NATIONAL GUARD
CAMP W.G. WILLIAMS
17800 South Redwood Road
Riverton, Utah 84065

UTAH NATIONAL GUARD
12953 SOUTH

BN	BID DOCUMENTS	8-30-2010
CD	PLAN CHECK	8-30-2010

PROJECT NO: B10-029
CAD DWG FILE:
DRAWN BY:
CHECKED BY:

MECHANICAL EQUIPMENT & PANEL SCHEDULES

EP603

File Name: P:\2010\2010297\1Drawings\3Sheet\97EP603.dwg Last Plotted: 2010/08/30 @ 1:08 PM By: cdn

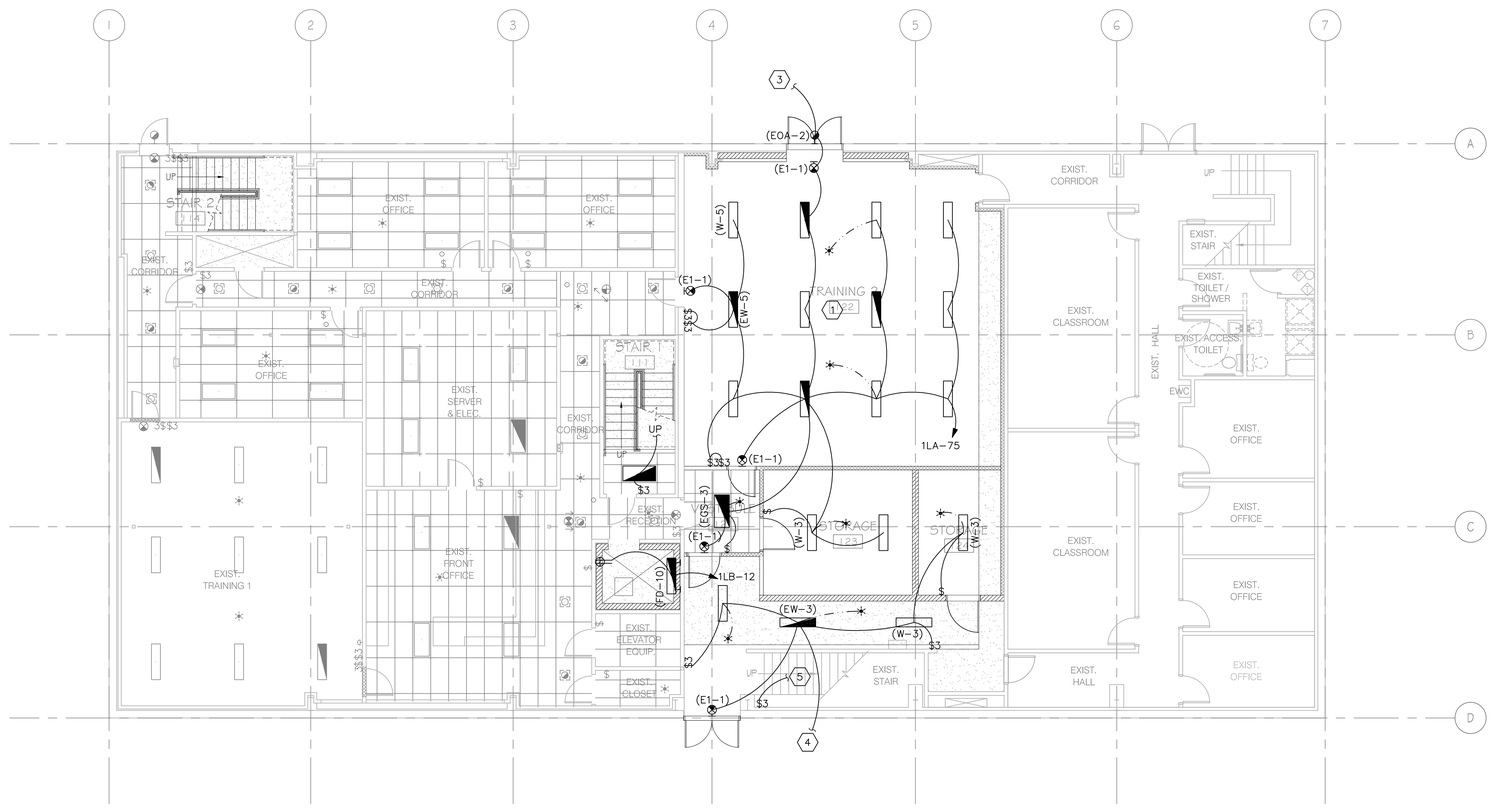

B1 1ST FLOOR LIGHTING PLAN

1/8" = 1'-0"

0 4' 8' 16'

GENERAL SHEET NOTES

1. ALL CABLING INSTALLED ABOVE THE PROJECT AREA IS TO BE PLENUM RATED.
2. ALL CONDUIT AND WIRE PENETRATIONS TO THE PROJECT AREA SHALL BE FILTERED, GROUNDED OR AS SHOWN ON THE PIPE ISOLATION DETAIL.
3. ALL FOIL-BACKED WALLS SHALL BE GROUNDED EVERY 30-FEET USING #6 AWG.
4. ALL RACEWAY PENETRATIONS INTO THE SECURE AREA OF THE REMODEL REQUIRE A GROUNDING CONNECTION AT THE POINT OF ENTRY INTO THE SECURE SPACE. THE CONNECTION MUST BE VISIBLE FOR INSPECTION AND IS REQUIRED ON ALL NEW AND EXISTING PENETRATIONS INTO THE SECURE AREA.

⬡SHEET KEYNOTES

1. PROVIDE 2 BALLASTS PER FIXTURE FOR DUAL LEVEL SWITCHING. SWITCH INNER LAMP(S) SEPARATE FROM OTHER LAMPS.
2. PROVIDE STUB UP FOR FUTURE STAIRWAY LIGHTS.
3. CONNECT TO EXISTING BUILDING MOUNTED LIGHTING AND CONTROLS. FIELD VERIFY LOCATION. DO NOT PENETRATE INTO THE MAIN AREA OF WORK WITH CONDUIT.
4. CONNECT LIGHTS TO EXISTING CIRCUIT SERVICING THE LIGHTS IN THE NON-SCIF AREA OF THE BUILDING.
5. CONNECT 3-WAY LIGHT SWITCH TO STAIR WAY LIGHTS, SEE SHEET EL102.

CRSA
ARCHITECTURE
PLANNING
INTERIORS
649 E SOUTH TEMPLE
SALT LAKE CITY, UT 84102
801.355.5915
www.crsa-us.com

STRUCTURAL ENGINEER
CALDER RICHARDS CONSULTING ENGINEERS
634 South 400 West Suite 100
SALT LAKE CITY, UT 84101
(801) 466-1699 (801) 467-2495 FAX
stephen@crceng.com

MECHANICAL ENGINEER
SMD
986 WEST ATHERTON DRIVE STE. 200
TAYLORSVILLE, UTAH 84123
(801)268-3828 FAX (801)268-3297
# #

ELECTRICAL ENGINEER
SPECTRUM
324 S STATE STREET STE. 400
SALT LAKE CITY, UTAH 84111
(801)328-5151 (801)328-5155 FAX
# #

LICENSED PROFESSIONAL ENGINEER
No. 7083854
DAVID L. AFFLECK
STATE OF UTAH

PROJECT:
BUILDING 3030 REMODEL
UTAH NATIONAL GUARD
CAMP W.G. WILLIAMS
17800 South Redwood Road
Riverton, Utah 84065

UTAH NATIONAL GUARD
12953 SOUTH

BN	BID DOCUMENTS	8-30-2010
CD	PLAN CHECK	8-30-2010

PROJECT NO: B10-029
CAD DWG FILE:
DRAWN BY:
CHECKED BY:

1ST FLOOR
LIGHTING PLAN

EL101

File Name: P:\2010\20100297\1Drawings\3Sheet\97EL101.dwg Last Plotted: 2010/08/30 @ 1:08 PM By: cdn

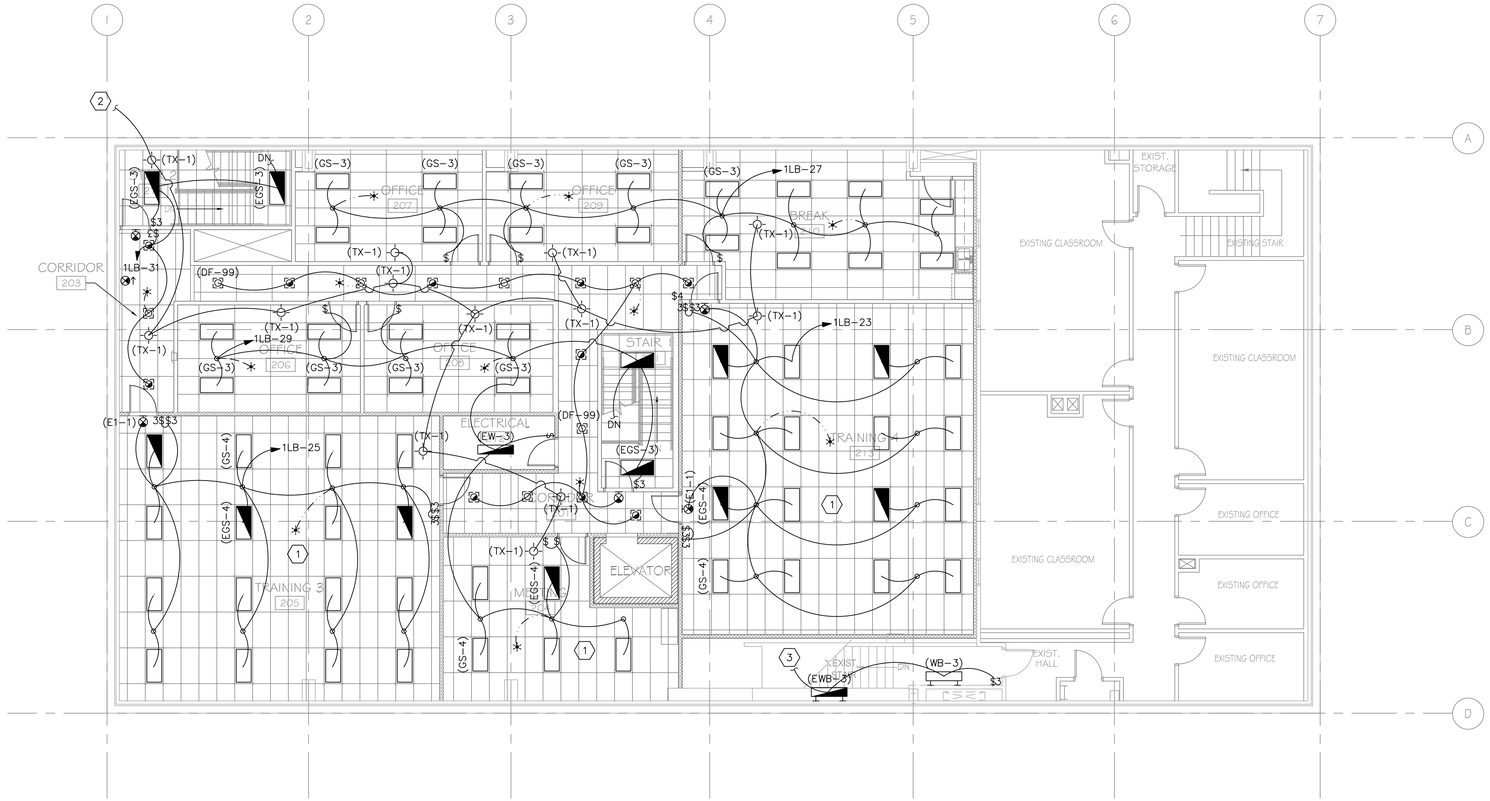

B1 2ND FLOOR LIGHTING PLAN

1/8" = 1'-0"

0 4' 8' 16'

GENERAL SHEET NOTES

1. ALL CABLING INSTALLED ABOVE THE PROJECT AREA IS TO BE PLENUM RATED.
2. ALL CONDUIT AND WIRE PENETRATIONS TO THE PROJECT AREA SHALL BE FILTERED, GROUNDED OR AS SHOWN ON THE PIPE ISOLATION DETAIL.
3. ALL FOIL-BACKED WALLS SHALL BE GROUNDED EVERY 30-FEET USING #6 AWG.
4. ALL RACEWAY PENETRATIONS INTO THE SECURE AREA OF THE REMODEL REQUIRE A GROUNDING CONNECTION AT THE POINT OF ENTRY INTO THE SECURE SPACE. THE CONNECTION MUST BE VISIBLE FOR INSPECTION AND IS REQUIRED ON ALL NEW AND EXISTING PENETRATIONS INTO THE SECURE AREA.

SHEET KEYNOTES

1. PROVIDE 2 BALLASTS PER FIXTURE FOR DUAL LEVEL SWITCHING. SWITCH INNER LAMP(S) SEPARATE FROM OTHER LAMPS.
2. CONNECT ALL TX-1 FIXTURES TO SWITCH ON THE FIRST FLOOR. FIELD VERIFY.
3. CONNECT TO 3-WAY LIGHT SWITCH AT THE BOTTOM OF THE STAIRS, SEE SHEET EL101. CONNECT THIS LIGHTING CIRCUIT TO THE NEAREST LIGHTING CIRCUIT WITH CAPACITY OUTSIDE OF THE SCIF AREA. FIELD VERIFY EXISTING CONDITIONS.

CRSA
ARCHITECTURE
PLANNING
INTERIORS
649 E SOUTH TEMPLE
SALT LAKE CITY, UT 84102
801.355.5915
www.crsa-us.com

STRUCTURAL ENGINEER
CALDER RICHARDS CONSULTING ENGINEERS
634 South 400 West Suite 100
SALT LAKE CITY, UT 84101
(801) 466-1699 (801) 467-2495 FAX
stephen@crceng.com

MECHANICAL ENGINEER
SMD
986 WEST ATHERTON DRIVE STE. 200
TAYLORSVILLE, UTAH 84123
(801)268-3626 FAX (801)268-3297
# #

ELECTRICAL ENGINEER
SPECTRUM
324 S STATE STREET STE. 400
SALT LAKE CITY, UTAH 84111
(801)328-5151 (801)328-5155 FAX
# #

LICENSED PROFESSIONAL ENGINEER
No. 7083854
DAVID L. AFFLECK
STATE OF UTAH

PROJECT:
BUILDING 3030 REMODEL
UTAH NATIONAL GUARD
CAMP W.G. WILLIAMS
17800 South Redwood Road
Riverton, Utah 84065

UTAH NATIONAL GUARD
12953 SOUTH

BN	BID DOCUMENTS	8-30-2010
CD	PLAN CHECK	8-30-2010

PROJECT NO: B10-029
CAD DWG FILE:
DRAWN BY:
CHECKED BY:

2ND FLOOR
LIGHTING PLAN

EL102

File Name: P:\2010\20100297\1Drawings\3Sheet\97EL102.dwg Last Plotted: 2010/08/30 @ 1:08 PM By: cdn

LIGHTING FIXTURE SCHEDULE

NOTE TO BIDDERS: COMPLY WITH SECTIONS 16511, 16521, AND 16570 OF THE SPECIFICATIONS.
REFER TO SPECIFICATIONS FOR IMPORTANT TECHNICAL REQUIREMENTS FOR LIGHTING FIXTURES, BALLASTS, AND LAMPS. THE CATALOG NUMBERS LISTED BELOW HAVE BEEN CAREFULLY PREPARED TO ASSIST BIDDERS IN SELECTING PRODUCTS TO ACHIEVE THE DESIGN CONCEPT, HOWEVER, PRIOR TO BIDDING, EACH MANUFACTURER SHALL COMPARE THE CATALOG NUMBERS SHOWN WITH THE DESCRIPTION AND REQUIREMENTS ON THE DRAWINGS, AND SHALL NOTIFY THE ARCHITECT/ENGINEER OF ANY DISCREPANCIES. SPECIFICALLY INCLUDED IN THIS EVALUATION SHALL BE THE VERIFYING OF PROPER MOUNTING KITS OR ACCESSORIES TO FACILITATE INSTALLATION AS SHOWN AT EACH LOCATION ON THE DRAWINGS. NO ALLOWANCE OR REDRESS WILL BE ALLOWED FOR DISCREPANCIES THAT WERE NOT REPORTED TO THE ARCHITECT/ENGINEER IN TIME FOR CORRECTION OR CLARIFICATION BEFORE THE BID. THE REPORTING OF ANY AMBIGUITY IS THE RESPONSIBILITY OF THE BIDDER. PROVIDE UNIT PRICES AND FIXTURE BRAND SELECTED FOR ADD/DELETE CHANGES FOR EACH FIXTURE TYPES SHOWN WITHIN 48 BUSINESS HOURS OF THE BID DATE. FAILURE TO COMPLY WITH THIS REQUIREMENT MAY DISQUALIFY THE PRODUCTS AND EMPOWER THE ENGINEER TO DETERMINE FAIR VALUE FOR FIXTURE AND INSTALLATION CHANGES, WITHOUT FURTHER INPUT FROM THE CONTRACTOR OR INSTALLER. SUBMITTAL PACKAGE SHALL INCLUDE LAMP MANUFACTURER AND CATALOG NUMBER ON EACH FIXTURE SHEET. ON ALL PENDANT MOUNTED FIXTURES, PROVIDE A SECOND SET OF PENDANTS, OF A DIFFERENT LENGTH, AS DIRECTED BY THE ARCHITECT/ENGINEER, PROVIDED AND INSTALLED AT NO ADDITIONAL CHARGE. ALL FIXTURES SHALL BE APPROVED BY UL OR ANOTHER ACCEPTABLE TESTING LAB FOR THE PURPOSE INTENDED AND WITH THE LAMP AND BALLAST PROPOSED. CONTRACTOR ALLOWANCE PRICES ARE ACCURATE WHEN THIS JOB WAS SPECIFIED, CONTRACTOR AND ELECTRICAL DISTRIBUTOR SHALL VERIFY THIS ALLOWANCE AND REPORT ANY PROBLEMS TO THE ENGINEER BEFORE THE BID. ALLOWANCE PRICE MAY OR MAY NOT INCLUDE LAMP(S) OR FREIGHT AS NOTED, AND DO NOT INCLUDE ANY TAXES. UNIVERSAL VOLTAGE (120/277) BALLASTS REQUIRED UNLESS NOTED OTHERWISE. DIMENSION SEQUENCE = (LENGTH X WIDTH X DEPTH) IN INCHES.

SYMBOL MARK	FIXTURE CHARACTERISTICS BODY / AIR / MOUNTING / DOOR LENS/LOUVER/REFLECTOR/OTHER	LAMP	WATTS	VOLTS	MANUFACTURER	CATALOG NUMBER	NOTES
DF	FLUORESCENT DOWNLIGHT; THERMALLY PROTECTED HOUSING: TO ACCOMMODATE MULTIPLE TRIMS AND REFLECTOR ASSEMBLIES FOR LAMPS AS LISTED BELOW; ELECTRONIC BALLASTS; LOW IRIDESCENT REFLECTOR FINISH (EVEN IF NOT SHOWN IN CATALOG #); SELF FLANGING TRIM UNLESS NOTED.						
DF-99	RECESSED DOWNLIGHT; HORIZONTAL, 6" APERTURE, 26W CF-AMALGAM LAMP, CLEAR. 4" MAX DEPTH	1-CF-A26 50W RE835		277/120V TBD			
EDF-99	RECESSED DOWNLIGHT; HORIZONTAL, 6" APERTURE, 26W CF-AMALGAM LAMP, CLEAR. 4" MAX DEPTH (EMERGENCY)	1-CF-A26 50W RE835		277/120V TBD			
E	E PREFIX INDICATES THAT FIXTURE IS PROVIDED WITH AN EMERGENCY BATTERY PACK TO PROVIDE POWER TO ANY 2, 3, 4 OR 8 FOOT FLOURESCENT LAMP COMPATIBLE WITH ALL STANDARD AND ELECTRONIC BALLASTS; COMPLETELY SELF-CONTAINED TO PROVIDE 90 MINUTES OF EMERGENCY POWER TO FIXTURE BALLAST; MINIMUM LIGHT OUTPUT FOR TYPICAL 4' LAMP SHALL BE 1100 LUMENS OR HIGHER;UNIVERSAL TRANSFORMER FOR 120 OR 277 VOLTS; LOW VOLTAGE PROTECTION, COMBINATION TEST SWITCH AND AC "ON" INDICATOR; 10 YEAR PRO-RATA WARRANTY; INSTALL TEST SWITCH IN A MANNER THAT REQUIRES NO DISASSEMBLY FOR TESTING.						
E	EMERGENCY BATTERY PACK.			120/277V3W	IOTA BODINE LITHONIA PRESCOLITE EELP CHLORIDE LIGHTOLIER SIDELITE	I-80 B50 PS-1400 EFPS-5 EB1400 (CONTRACTOR INSTALLED) CFP841 FBP50 S60F	
E1	EXIT SIGN: THERMOPLASTIC HOUSING; UNIVERSAL MOUNTING; UNIVERSAL ARROWS PER PLANS; EMERGENCY BATTERY PACK WITH 10 YEAR PRO-RATA WARRANTY; LED, DIFFUSE LENS PANEL; GREEN LETTERS ON WHITE BACKGROUND. MUST MEET NFPA ILLUMINATION STANDARDS.						
E1-1	SINGLE FACE:	LED	1W	120/277V	MCPHILBEN DUAL-LITE EELP LITHONIA SURE-LITES DAY-BRITE CHLORIDE LIGHTOLIER	CXXL-1-GW LXSGWE XE 1 GW EM LQM S W 1 G 120/277 ELN LPX70DGW CXL-1-GW-EM SLN1GW LTN1GW	
E1-2	DUAL FACE:	LED	2W	120/277V	DUAL-LITE EELP LITHONIA SURE-LITES DAY-BRITE CHLORIDE LIGHTOLIER MCPHILBEN	LXUGWE XE 2 GW EM LQM S W 3 G 120/277 ELN LPX70DGW CXL-3-GW-EM SLN2GW LTN2GW CXXL-3-GW	
FD	WET LOCATION FLUORESCENT; PLASTIC HOUSING; IMPACT RESISTANT ACRYLIC LENS.						
FD-10	4' 2 T8 FLUORESCENT LAMPS; INSTANT START BALLASTS; 0 DEGREE STARTING TEMPERATURE.	2-F32T8 RE835	70W	277/120V	LITHONIA METALUX HUBBELL COLUMBIA DAYBRITE LIGHTOLIER	DMW 232T8 AR 120/277 PROGRAM START VT2-232T8/DR-PROG-WL EWL042-SPDR-U LUN4-232T8-EB120/277 PROG V2WAB232T8-1/2EB-LT STW-232-U-SO	
GS	TROFFERS: RECESSED FOR LAY-IN GRID; STATIC; HINGED AND LATCHED STEEL DOOR; .125 ACRYLIC PRISMATIC LENS, MINIMUN 1/8"; EARTHQUAKE CLIPS; MAX 5" DEEP; SPECIFICATION GRADE; PROGRAM START ELECTRONIC BALLASTS, T8 LAMPS; ONE BALLAST PER FIXTURE WHERE POSSIBLE, UNLESS TWO LEVEL SWITCHING IS SHOWN ON THE PLANS.						
GS-3	2X4, 2 LAMP.	2-F32T8 RE835	65W	277/120V	LITHONIA METALUX DAYBRITE LSI LIGHTOLIER COLUMBIA	2 SP8G 232 A12125 MVOLT TUBRHP (4-1/2" DEPTH) 2GP-232A125-UNV-EB81-PROGRAM START (3-3/4" DEPTH) 2DPG232-FS21-UNV-1/2EB-SPEC (4-3/8" DEPTH) LA125 232 SD SS010PS UE (4" DEPTH) XT2GVI232-UNV-SOP (3-5/8" DEPTH) ST824-232G-FSA12.125-EB8LHPRUNV (3-3/4" DEPTH)	
GS-4	2X4, 3 LAMP.	3-F32T8 RE835	95W	277/120V	LITHONIA METALUX DAYBRITE COLUMBIA LIGHTOLIER LSI	2 SP8G 332 A12125 1/3 MVOLT TUBRHP (4-1/2" DEPTH) 2GP-332A125-UNV-EB81-PROGRAM START (3-3/4" DEPTH) 2DPG332-FS21-UNV-1/3EB-SPEC (4-3/8" DEPTH) ST824-332G-FSA12.125-3EB8LHPRUNV (3-3/4" DEPTH) XT2GVI332-UNV-03P (3-5/8" DEPTH) LA125 332 SD SS010PS UE (4" DEPTH)	
OA	SMALL RECTANGULAR WALL PACK: POLYCARBONATE HOUSING WITH POLYCARBONATE PRISMATIC DIFFUSER, RECESSED BOX MOUNTING; BRONZE.						
EOA-2	RECTANGULAR WALL PACK: APPROX 6" X 6" X 12"; WALL MOUNTED SEE ELEVATION. EMERGENCY BATTERY PACK.	1-42PLT RE741	50W	120V	HUBBELL TERON LITHONIA LUMARK LUMINAIRE DESIGN PLAN	NRG-304 (277 AVAILABLE)-EM CA42TBXE-EM TWL-42TRT-120-EM N/A DWL512-1PLT42-EM 207-8-H5-1-XX-0-9-P-0-EM	
TX	SPECIAL FIXTURES AS INDICATED. MEET ALL REQUIREMENTS OF SPECIFICATIONS AND FIXTURE SCHEDULE. VISUAL AND FINISH APPROVAL REQUIRED.						
TX-1	RED WARNING LIGHT	LED	6W	120V	FEDERAL SIGNAL	LP2-120R OR APPROVED EQUAL	

LIGHTING FIXTURE SCHEDULE

NOTE TO BIDDERS: COMPLY WITH SECTIONS 16511, 16521, AND 16570 OF THE SPECIFICATIONS.
REFER TO SPECIFICATIONS FOR IMPORTANT TECHNICAL REQUIREMENTS FOR LIGHTING FIXTURES, BALLASTS, AND LAMPS. THE CATALOG NUMBERS LISTED BELOW HAVE BEEN CAREFULLY PREPARED TO ASSIST BIDDERS IN SELECTING PRODUCTS TO ACHIEVE THE DESIGN CONCEPT, HOWEVER, PRIOR TO BIDDING, EACH MANUFACTURER SHALL COMPARE THE CATALOG NUMBERS SHOWN WITH THE DESCRIPTION AND REQUIREMENTS ON THE DRAWINGS, AND SHALL NOTIFY THE ARCHITECT/ENGINEER OF ANY DISCREPANCIES. SPECIFICALLY INCLUDED IN THIS EVALUATION SHALL BE THE VERIFYING OF PROPER MOUNTING KITS OR ACCESSORIES TO FACILITATE INSTALLATION AS SHOWN AT EACH LOCATION ON THE DRAWINGS. NO ALLOWANCE OR REDRESS WILL BE ALLOWED FOR DISCREPANCIES THAT WERE NOT REPORTED TO THE ARCHITECT/ENGINEER IN TIME FOR CORRECTION OR CLARIFICATION BEFORE THE BID. THE REPORTING OF ANY AMBIGUITY IS THE RESPONSIBILITY OF THE BIDDER. PROVIDE UNIT PRICES AND FIXTURE BRAND SELECTED FOR ADD/DELETE CHANGES FOR EACH FIXTURE TYPES SHOWN WITHIN 48 BUSINESS HOURS OF THE BID DATE. FAILURE TO COMPLY WITH THIS REQUIREMENT MAY DISQUALIFY THE PRODUCTS AND EMPOWER THE ENGINEER TO DETERMINE FAIR VALUE FOR FIXTURE AND INSTALLATION CHANGES, WITHOUT FURTHER INPUT FROM THE CONTRACTOR OR INSTALLER. SUBMITTAL PACKAGE SHALL INCLUDE LAMP MANUFACTURER AND CATALOG NUMBER ON EACH FIXTURE SHEET. ON ALL PENDANT MOUNTED FIXTURES, PROVIDE A SECOND SET OF PENDANTS, OF A DIFFERENT LENGTH, AS DIRECTED BY THE ARCHITECT/ENGINEER, PROVIDED AND INSTALLED AT NO ADDITIONAL CHARGE. ALL FIXTURES SHALL BE APPROVED BY UL OR ANOTHER ACCEPTABLE TESTING LAB FOR THE PURPOSE INTENDED AND WITH THE LAMP AND BALLAST PROPOSED. CONTRACTOR ALLOWANCE PRICES ARE ACCURATE WHEN THIS JOB WAS SPECIFIED, CONTRACTOR AND ELECTRICAL DISTRIBUTOR SHALL VERIFY THIS ALLOWANCE AND REPORT ANY PROBLEMS TO THE ENGINEER BEFORE THE BID. ALLOWANCE PRICE MAY OR MAY NOT INCLUDE LAMP(S) OR FREIGHT AS NOTED, AND DO NOT INCLUDE ANY TAXES. UNIVERSAL VOLTAGE (120/277) BALLASTS REQUIRED UNLESS NOTED OTHERWISE. DIMENSION SEQUENCE = (LENGTH X WIDTH X DEPTH) IN INCHES.

SYMBOL MARK	FIXTURE CHARACTERISTICS BODY / AIR / MOUNTING / DOOR LENS/LOUVER/REFLECTOR/OTHER	LAMP	WATTS	VOLTS	MANUFACTURER	CATALOG NUMBER	NOTES
W	LOW PROFILE WRAPAROUND: SURFACE MOUNTED SUITABLE FOR MOUNTING ON LOW DENSITY CEILINGS ACRYLIC PRISMATIC DIFFUSER; WHITE ENAMEL ENDPLATES; MINIMUM CU OF 70 @ 80/50/20 AND RCR=1; PROGRAM START ELECTRONIC BALLASTS; T8 LAMPS; ONE BALLAST PER FIXTURE WHERE POSSIBLE, UNLESS TWO LEVEL SWITCHING IS SHOWN ON THE PLANS.						WRAPAROUND
W-3	NARROW BODY WRAPAROUND; 2-LAMP, APPROX; 3" X 10" X 48".	2-F32T8 RE835	65W	277/120V	LITHONIA DAYBRITE METALUX LIGHTOLIER LSI COLUMBIA	LB232-MVOLT-TUBPHP CAN232-UNV-1/2-EB-SPEC WS-232A-UNV-PROGRAM START WA232-U-SOP PR 232 SS010PRS UE WC4-232-EBPS120/277	
W-5	WIDE BODY WRAPAROUND; 3-LAMP, APPROX; 3" X 16" X 48".	3-F32T8 RE835	95W	277/120V	LITHONIA DAYBRITE METALUX LIGHTOLIER LSI COLUMBIA	LB332-1/3MVOLT-TUBPHP CAW332-UNV-1/3-EB-SPEC WSA-332A-UNV-PROGRAM START WB332-U-03P PR 332 SS010PRS UE WCW4-332-3EBPS120/277	
WB	WALL MOUNTED FLUORESCENT LOCATED ABOVE WALL ELEMENT (MIRROR/WHITEBOARD, ETC.): AS INDICATED ON DRAWINGS; WITH ACRYLIC INJECTION MOLDED; PROGRAM START ELECTRONIC BALLASTS; T8 LAMPS; ONE BALLAST PER FIXTURE WHERE POSSIBLE, UNLESS TWO LEVEL SWITCHING IS SHOWN ON THE PLANS.						
WB-6	2-LAMP, WALL MOUNT, 48", WRAPAROUND; ACRYLIC INJECTION MOLDED PRISMATIC DIFFUSER.	2-F32T8 RE835	65W	277/120V	DAYBRITE LITHONIA WELLMADE METALUX LIGHTWAY DURAY LSI	WB232-CP-UNV-EB-SPEC WC 232 A12 MVOLT-TUBPHP 182-P-248T8-U-P BC-232-UNV-PROGRAM START VL232NL-120/277-PS WQ-6232-A-EBPS120/277 BR 232 SS010PRS UE	

CRSA
ARCHITECTURE
PLANNING
INTERIORS
649 E SOUTH TEMPLE
SALT LAKE CITY, UT 84102
801.355.5915
www.crsa-us.com

STRUCTURAL ENGINEER
CALDER RICHARDS CONSULTING ENGINEERS
634 South 400 West Suite 100
SALT LAKE CITY, UT 84101
(801) 466-1699 (801) 467-2495 FAX
stephen@crceng.com

MECHANICAL ENGINEER
SMD
986 WEST ATHERTON DRIVE STE. 200
TAYLORSVILLE, UTAH 84123
(801)268-3628 FAX (801)268-3297
# #

ELECTRICAL ENGINEER
SPECTRUM
324 S STATE STREET STE. 400
SALT LAKE CITY, UTAH 84111
(801)328-5151 (801)328-5155 FAX
# #

LICENSED PROFESSIONAL ENGINEER
No. 7083854
DAVID L. AFFLECK
STATE OF UTAH

PROJECT:
BUILDING 3030 REMODEL
UTAH NATIONAL GUARD
CAMP W.G. WILLIAMS
17800 South Redwood Road
Riverton, Utah 84065

UTAH NATIONAL GUARD
12953 SOUTH

BN	BID DOCUMENTS	8-30-2010
CD	PLAN CHECK	8-30-2010

PROJECT NO: B10-029
CAD DWG FILE:
DRAWN BY:
CHECKED BY:

LIGHTING FIXTURE SCHEDULE

EL601

File Name: P:\2010\20100297\1Drawings\3Sheet\97EL601.dwg Last Plotted: 2010/08/30 @ 1:08 PM By: pss

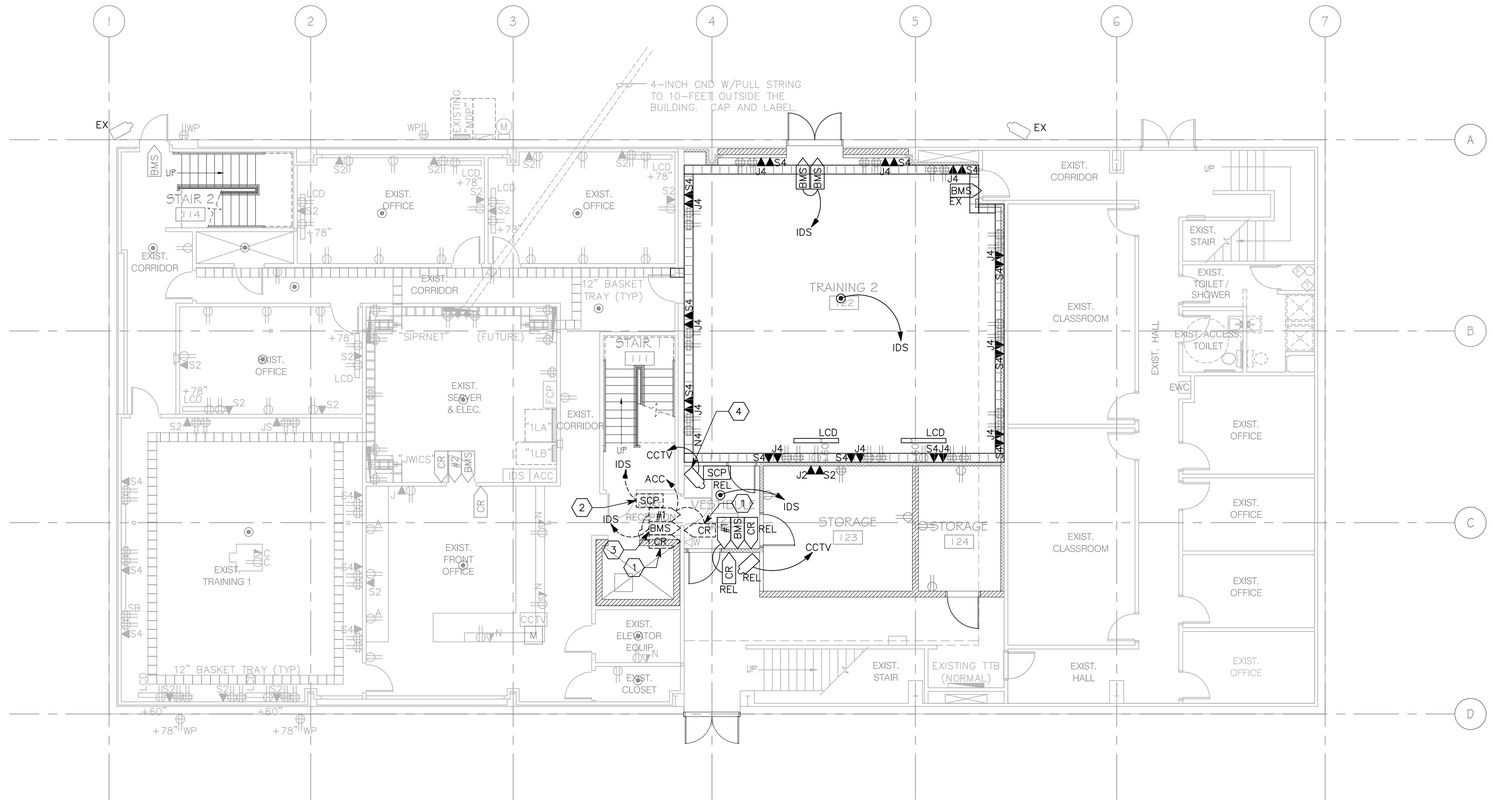

B1 1ST FLOOR TECHNOLOGY PLAN

1/8" = 1'-0"

0 4' 8' 16'

GENERAL SHEET NOTES

1. ALL CABLING INSTALLED ABOVE THE PROJECT AREA IS TO BE PLENUM RATED.
2. ALL CONDUIT AND WIRE PENETRATIONS TO THE PROJECT AREA SHALL BE FILTERED, GROUNDED OR AS SHOWN ON THE PIPE ISOLATION DETAIL.
3. ALL RACEWAY PENETRATIONS INTO THE SECURE AREA OF THE REMODEL REQUIRE A GROUNDING CONNECTION AT THE POINT OF ENTRY INTO THE SECURE SPACE. THE CONNECTION MUST BE VISIBLE FOR INSPECTION AND IS REQUIRED ON ALL NEW AND EXISTING PENETRATIONS INTO THE SECURE AREA.

SHEET KEYNOTES

1. RELOCATE EXISTING CARD READER TO NEW LOCATION. EXTEND CONDUIT AND CONDUCTORS AS REQUIRED.
2. RELOCATE EXISTING SECURITY CONTROL PAD TO NEW LOCATION. EXTEND CONDUIT AND CONDUCTORS AS REQUIRED.
3. RELOCATE EXISTING BMS TO NEW DOOR. EXTEND CONDUIT AND CONDUCTORS AS REQUIRED.
4. RELOCATE EXISTING CCTV CAMERA . EXTEND CONDUIT AND CONDUCTORS AS REQUIRED.

CRSA
ARCHITECTURE
PLANNING
INTERIORS
649 E SOUTH TEMPLE
SALT LAKE CITY, UT 84102
801.355.5915
www.crsa-us.com

STRUCTURAL ENGINEER
CALDER RICHARDS CONSULTING ENGINEERS
634 South 400 West Suite 100
SALT LAKE CITY, UT 84101
(801) 466-1699 (801) 467-2495 FAX
stephen@crceng.com

MECHANICAL ENGINEER
SMD
986 WEST ATHERTON DRIVE STE. 200
TAYLORSVILLE, UTAH 84123
(801)268-3626 FAX (801)268-3297
# #

ELECTRICAL ENGINEER
SPECTRUM
324 S STATE STREET STE. 400
SALT LAKE CITY, UTAH 84111
(801)328-5151 (801)328-5155 FAX
# #

LICENSED PROFESSIONAL ENGINEER
No. 7083854
DAVID L. AFFLECK
STATE OF UTAH

PROJECT:
BUILDING 3030 REMODEL
UTAH NATIONAL GUARD
CAMP W.G. WILLIAMS
17800 South Redwood Road
Riverton, Utah 84065

UTAH NATIONAL GUARD
12953 SOUTH

BN	BID DOCUMENTS	8-30-2010
CD	PLAN CHECK	8-30-2010

PROJECT NO: B10-029
CAD DWG FILE:
DRAWN BY:
CHECKED BY:

1ST FLOOR TECHNOLOGY PLAN

ET101

File Name: P:\2010\20100297\1Drawings\3Sheet\97ET101.dwg Last Plotted: 2010/08/30 @ 1:08 PM By: cdn

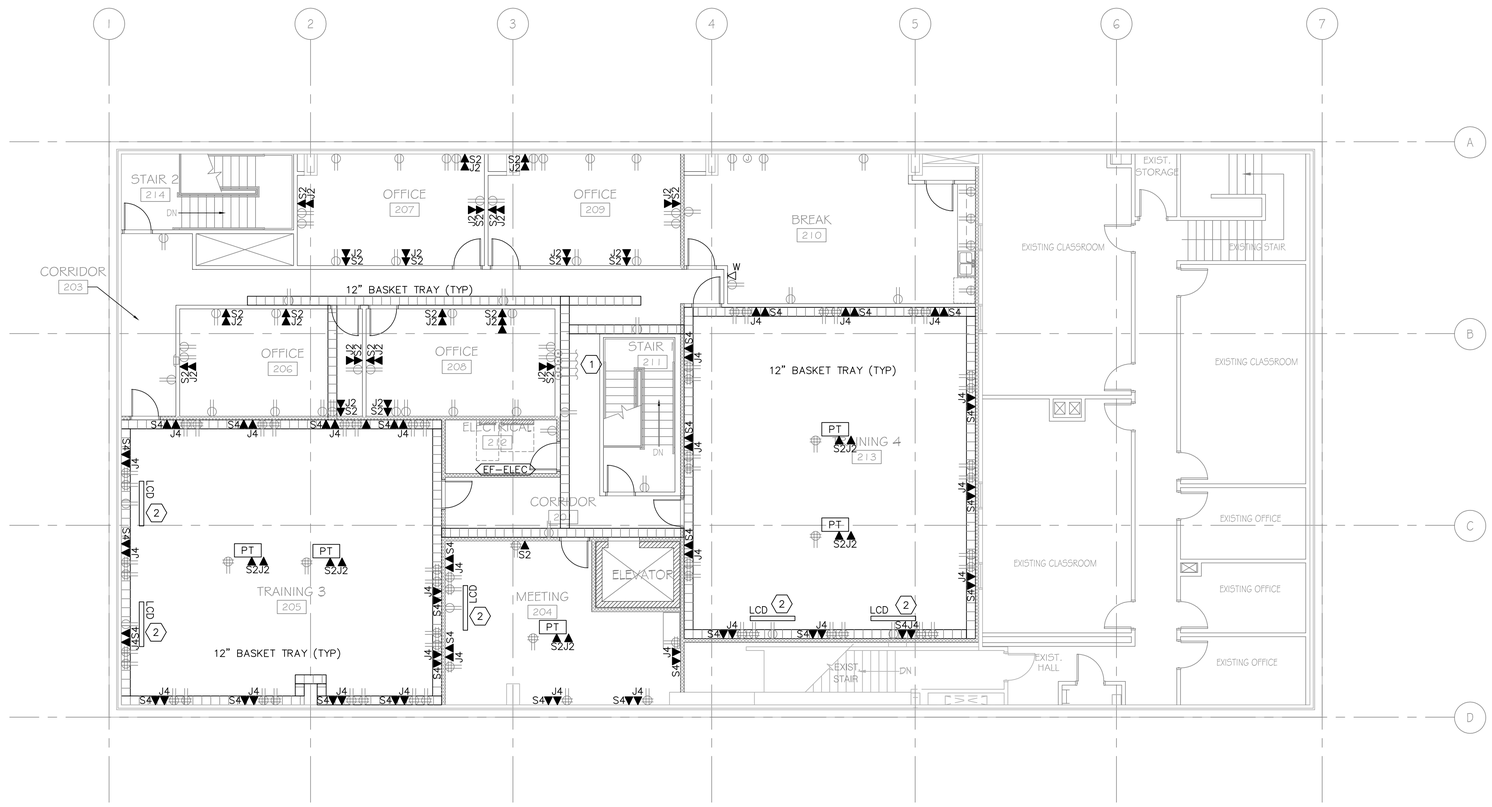

B1 2ND FLOOR TECHNOLOGY PLAN

1/8" = 1'-0"

0 4' 8' 16'

GENERAL SHEET NOTES

1. ALL CABLING INSTALLED ABOVE THE PROJECT AREA IS TO BE PLENUM RATED.
2. ALL CONDUIT AND WIRE PENETRATIONS TO THE PROJECT AREA SHALL BE FILTERED, GROUNDED OR AS SHOWN ON THE PIPE ISOLATION DETAIL.
3. ALL FOIL-BACKED WALLS SHALL BE GROUNDED EVERY 30-FEET USING #6 AWG.
4. ALL RACEWAY PENETRATIONS INTO THE SECURE AREA OF THE REMODEL REQUIRE A GROUNDING CONNECTION AT THE POINT OF ENTRY INTO THE SECURE SPACE. THE CONNECTION MUST BE VISIBLE FOR INSPECTION AND IS REQUIRED ON ALL NEW AND EXISTING PENETRATIONS INTO THE SECURE AREA.

SHEET KEYNOTES

1. PROVIDE 4-EACH, 4-INCH CONDUITS FROM MAIN TELECOMMUNICATIONS ROOM UP TO 2ND FLOOR CABLE TRAY.
2. FLAT PANEL LCD TV TO BE PROVIDED AND INSTALLED BY OTHERS.

CRSA
ARCHITECTURE
PLANNING
INTERIORS
649 E SOUTH TEMPLE
SALT LAKE CITY, UT 84102
801.355.5915
www.crsa-us.com

STRUCTURAL ENGINEER
CALDER RICHARDS CONSULTING ENGINEERS
634 South 400 West Suite 100
SALT LAKE CITY, UT 84101
(801) 466-1699 (801) 467-2495 FAX
stephen@crceng.com

MECHANICAL ENGINEER
SMD
986 WEST ATHERTON DRIVE STE. 200
TAYLORSVILLE, UTAH 84123
(801)268-3626 FAX (801)268-3297
# #

ELECTRICAL ENGINEER
SPECTRUM
324 S STATE STREET STE. 400
SALT LAKE CITY, UTAH 84111
(801)328-5151 (801)328-5155 FAX
# #

LICENSED PROFESSIONAL ENGINEER
No. 7083854
DAVID L. AFFLECK
STATE OF UTAH

PROJECT:
BUILDING 3030 REMODEL
UTAH NATIONAL GUARD
CAMP W.G. WILLIAMS
17800 South Redwood Road
Riverton, Utah 84065

UTAH NATIONAL GUARD
12953 SOUTH

BN	BID DOCUMENTS	8-30-2010
CD	PLAN CHECK	8-30-2010

PROJECT NO: B10-029
CAD DWG FILE:
DRAWN BY:
CHECKED BY:

2ND FLOOR
TECHNOLOGY PLAN

ET102

File Name: P:\2010\20100297\1Drawings\3Sheet\97ET102.dwg Last Plotted: 2010/08/30 @ 1:08 PM By: cdn

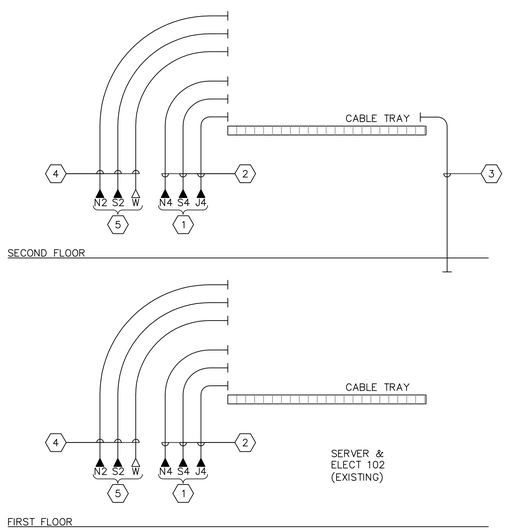

A1 COMMUNICATIONS RISER DIAGRAM
NTS

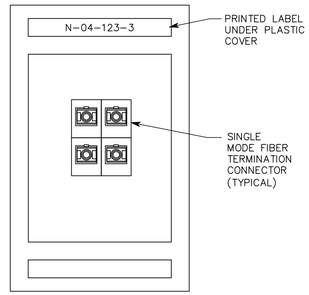

C3 JWICS DATA PLATE
NTS
▼J2

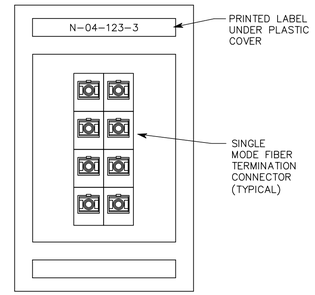

C4 JWICS DATA PLATE
NTS
▼J4

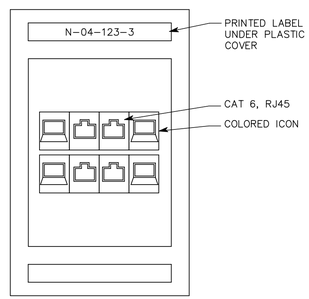

B3 SIPRNET JACK
NTS
▼S4

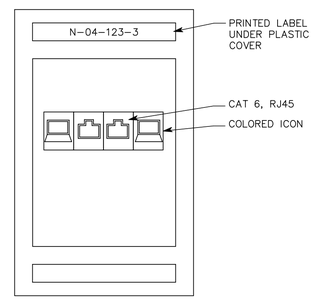

B4 SIPRNET JACK
NTS
▼S2

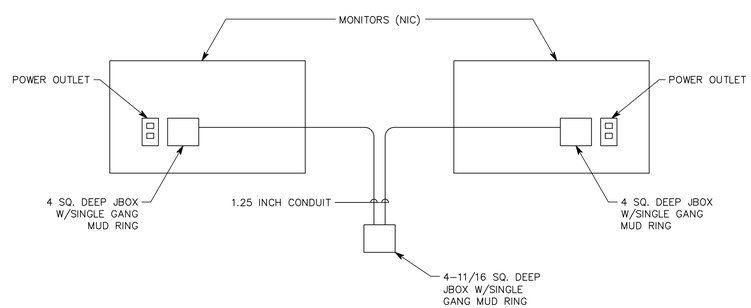

A3 PRESENTATION MONITOR RECEWAYS DETAIL
NTS

SHEET KEYNOTES

1. 4 SQ. DEEP BOX WITH SINGLE GANG MUD RING.
2. 2-EACH 1-INCH CONDUITS WITH PULL STRINGS.
3. 4-EACH 4-INCH CONDUITS WITH PULL STRINGS.
4. 1-EACH 1-INCH CONDUIT WITH PULL STRING.
5. 4 SQ. BOX WITH SINGLE GANG MUD RING.

CRSA
ARCHITECTURE
PLANNING
INTERIORS
649 E SOUTH TEMPLE
SALT LAKE CITY, UT 84102
801.355.5915
www.crsa-us.com

STRUCTURAL ENGINEER
CALDER RICHARDS CONSULTING ENGINEERS
634 South 400 West Suite 100
SALT LAKE CITY, UT 84101
(801) 466-1699 (801) 467-2495 FAX
stephen@crceng.com

MECHANICAL ENGINEER
SMD
986 WEST ATHERTON DRIVE STE. 200
TAYLORSVILLE, UTAH 84123
(801)268-3828 FAX (801)268-3297
# #

ELECTRICAL ENGINEER
SPECTRUM
324 S STATE STREET STE. 400
SALT LAKE CITY, UTAH 84111
(801)328-5151 (801)328-5155 FAX
# #

LICENSED PROFESSIONAL ENGINEER
No. 7083854
DAVID L. AFFLECK
STATE OF UTAH

PROJECT:
BUILDING 3030 REMODEL
UTAH NATIONAL GUARD
CAMP W.G. WILLIAMS
17800 South Redwood Road
Riverton, Utah 84065

UTAH NATIONAL GUARD
12953 SOUTH

BN	BID DOCUMENTS	8-30-2010
CD	PLAN CHECK	8-30-2010

PROJECT NO: B10-029
CAD DWG FILE:
DRAWN BY:
CHECKED BY:

TECHNOLOGY
RISERS &
DIAGRAMS

ET601

File Name: P:\2010\20100297\1Drawings\3Sheet\97ET601.dwg Last Plotted: 2010/08/30 @ 1:08 PM By: cdn

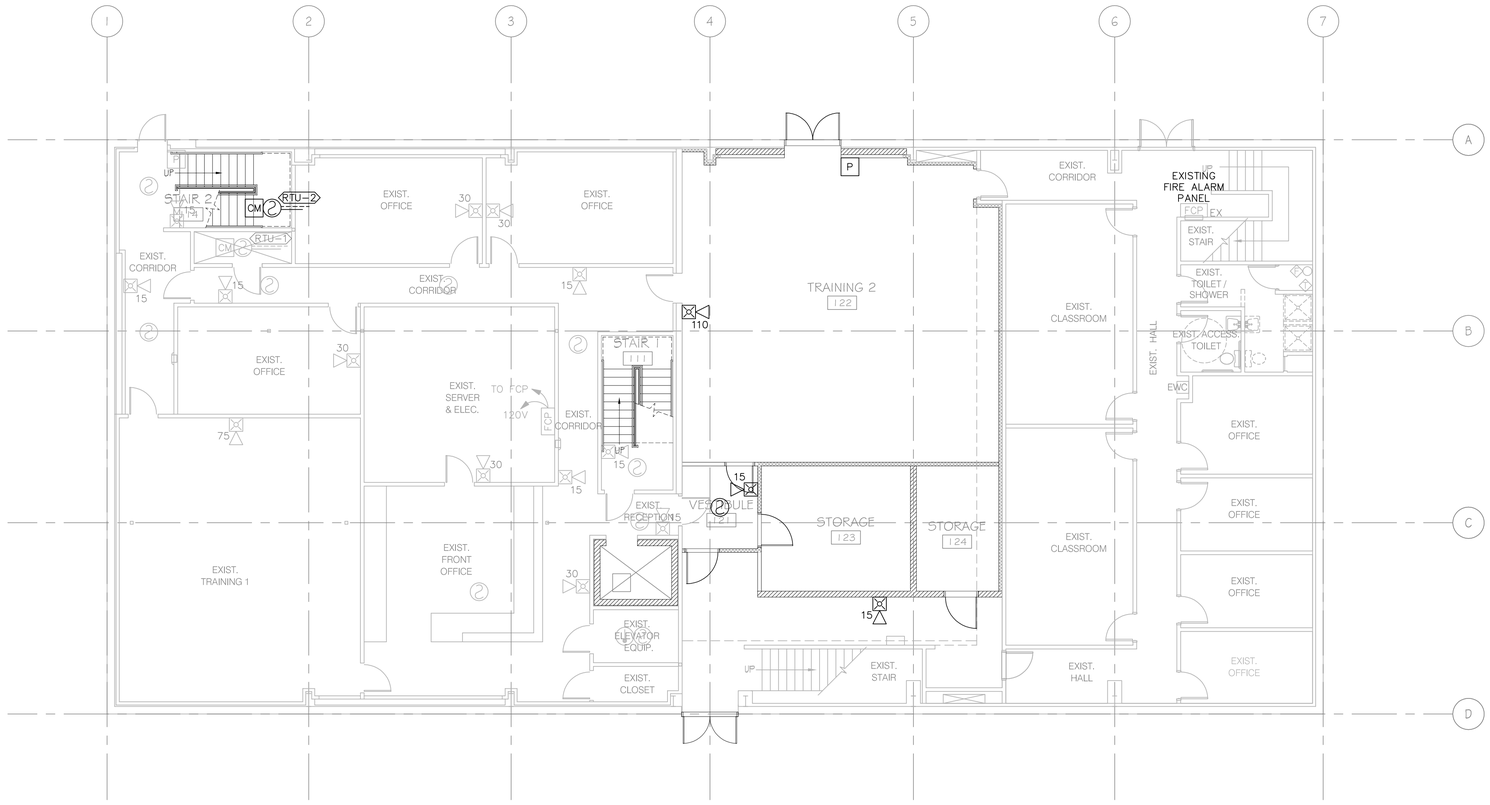

B1 1ST FLOOR FIRE ALARM PLAN

1/8" = 1'-0"

0 4' 8' 16'

GENERAL SHEET NOTES

1. ALL CABLING INSTALLED ABOVE THE PROJECT AREA IS TO BE PLENUM RATED.
2. ALL CONDUIT AND WIRE PENETRATIONS TO THE PROJECT AREA SHALL BE FILTERED, GROUNDED OR AS SHOWN ON THE PIPE ISOLATION DETAIL.
3. ALL FOIL-BACKED WALLS SHALL BE GROUNDED EVERY 30-FEET USING #6 AWG.
4. ALL RACEWAY PENETRATIONS INTO THE SECURE AREA OF THE REMODEL REQUIRE A GROUNDING CONNECTION AT THE POINT OF ENTRY INTO THE SECURE SPACE. THE CONNECTION MUST BE VISIBLE FOR INSPECTION AND IS REQUIRED ON ALL NEW AND EXISTING PENETRATIONS INTO THE SECURE AREA.

CRSA
ARCHITECTURE
PLANNING
INTERIORS
649 E SOUTH TEMPLE
SALT LAKE CITY, UT 84102
801.355.5915
www.crsa-us.com

STRUCTURAL ENGINEER
CALDER RICHARDS CONSULTING ENGINEERS
634 South 400 West Suite 100
SALT LAKE CITY, UT 84101
(801) 466-1699 (801) 467-2495 FAX
stephen@crceng.com

MECHANICAL ENGINEER
SMD
986 WEST ATHERTON DRIVE STE. 200
TAYLORSVILLE, UTAH 84123
(801)268-3626 FAX (801)268-3297
# #

ELECTRICAL ENGINEER
SPECTRUM
324 S STATE STREET STE. 400
SALT LAKE CITY, UTAH 84111
(801)328-5151 (801)328-5155 FAX
# #

LICENSED PROFESSIONAL ENGINEER
No. 7083854
DAVID L. AFFLECK
STATE OF UTAH

PROJECT:
BUILDING 3030 REMODEL
UTAH NATIONAL GUARD
CAMP W.G. WILLIAMS
17800 South Redwood Road
Riverton, Utah 84065

UTAH NATIONAL GUARD
12953 SOUTH

BN	BID DOCUMENTS	8-30-2010
CD	PLAN CHECK	8-30-2010

PROJECT NO: B10-029
CAD DWG FILE:
DRAWN BY:
CHECKED BY:

1ST FLOOR
FIRE ALARM PLAN

FA101

File Name: P:\2010\20100297\1Drawings\3Sheet\97FA101.dwg Last Plotted: 2010/08/30 @ 1:09 PM By: cdn

VOICE/DATA EQUIPMENT/CABLE LIST

SYMBOL	ITEM DESCRIPTION	MANUFACTURERS
X C6 VOICE	VOICE CABLING, CATEGORY 6	SEE SPECIFICATIONS (CAT6 YELLOW PLENUM RATED) ('X' INDICATES QUANTITY)
X C6 DATA	DATA CABLING, CATEGORY 6	SEE SPECIFICATIONS (CAT6 BLUE PLENUM RATED) ('X' INDICATES QUANTITY)
PPL	PATCH PANEL	SEE SPECIFICATIONS
V	BLUE METAL BACKBOARD (VOICE)	M183-B1 (VAR)
D	YELLOW METAL BACKBOARD (DATA)	M183-B5 (VAR)
SB	FULL SPOOL BOARDS	M187-B1 (VAR)
N	WORK STATION OUTLET (1-LAN, 1-VOICE)	SEE SPECIFICATIONS
	BUS BAR, 10", 20", W/ LUGS & MOUNTING ACCESSORIES	CHATSWORTH 10622-010/020
HWM	HORIZONTAL WIRE MANAGERS, BLACK, 2 RU	SEE SPECIFICATIONS
	COPPER CATEGORY 6 PATCH CABLES	SEE SPECIFICATIONS
	CAT 6 J-HOOKS	CADDY CAT32Z34
	CABLE TRAY	SEE SPECIFICATIONS
S2	SIPRNET JACK (2 OUTLET)	SEE SPECIFICATIONS
S4	SIPRNET JACK (4 OUTLET)	SEE SPECIFICATIONS
J2	JWICS JACK (2 OUTLET)	SEE SPECIFICATIONS
J4	JWICS JACK (4 OUTLET)	SEE SPECIFICATIONS

NOTE: ALL RACKS, LADDER, PATCH PANELS, AND ACCESSORIES SHALL BE BLACK IN COLOR.

GENERAL VOICE/DATA NOTES

1. PROVIDE PLENUM RATED CABLE IN ALL AIR PLENUMS. IF A PLENUM RATED CABLE IS NOT SPECIFIED, PROVIDE THE PLENUM RATED EQUIVALENT TO THE SPECIFIED CABLE.
2. ALL CABLE, REGARDLESS OF LENGTH, INSTALLED UNDER THIS CONTRACT ARE TO BE LABELED.
3. THE EQUIPMENT LABELING IDENTIFIED ON DETAILS IN THESE DRAWINGS ARE EXAMPLES ONLY OF THE ACTUAL LABELING WHICH IS REQUIRED AS PART OF THIS CONTRACT. PRIOR TO FABRICATION, SUBMIT THE NOMENCLATURE FOR ALL LABELS TO THE OWNER FOR REVIEW. THIS REQUIREMENT INCLUDES BUT IS NOT LIMITED TO ALL CABLE LABELING, AND ALL EQUIPMENT LABELING.
4. FOR EVERY CABLE PULL SPECIFIED, COIL 10' OF EXCESS CABLE AT THE AT THE CLOSET END, NEATLY COIL, AND LABEL.
5. GROUND ALL EQUIPMENT RACKS AS DETAILED.
6. ALL CABLE, FIBER, AND UTP TO TERMINATE ON BOTH ENDS.
7. COORDINATE RACK LAYOUTS WITH OWNER PRIOR TO INSTALLATION.
8. WELL IN ADVANCE OF INSTALLATION, COORDINATE WORK WITH ALL OTHER TRADES SO THAT ELECTRICAL EQUIPMENT, OR ITS INTENDED USE, IS NOT OBSTRUCTED BY EQUIPMENT BEING PROVIDED BY OTHER DIVISIONS.
9. INSTALL ALL ELECTRONIC SYSTEMS EQUIPMENT IN COMPLIANCE WITH THE MANUFACTURER'S WRITTEN INSTRUCTIONS, SEISMIC CODES, AND INDUSTRY WIDE ACCEPTED PRACTICES. SUPPORT EQUIPMENT WEIGHT FROM BUILDING STRUCTURE. DURING THE SUBMITTAL PROCESS, PROVIDE SHOP DRAWINGS WHICH DETAIL PROPOSED MOUNTING FOR ALL SUCH EQUIPMENT.
10. 'A' INDICATES MOUNTING ABOVE COUNTER. VERIFY HEIGHT OF POWER OUTLET AND MOUNT DATA OUTLET NEXT TO POWER OUTLET.
11. ALL WORK SHALL BE IN COMPLIANCE WITH UTNG STANDARD UT-G6-C.
12. ALL WORK SHALL BE COORDINATED WITH UTAH NATIONAL GUARD.
13. ALL CONDUIT FOR VOICE/DATA CABLE SHALL BE INSTALLED IN ACCORDANCE WITH ANSI/TIA/EIA569-A.

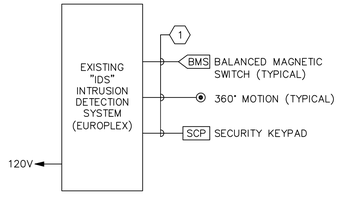

SYMBOL LEGEND

SYMBOL	DESCRIPTION
BMS	BALANCED MAGNETIC SWITCH SENTROL #2707A (WITH PRY OFF TAMPER)
	MOTION SENSOR BOSCH #DS9360
SCP	KEYPAD ENABLE/DISABLE EUROPLEX

NOTE:

1. SHALL COMPLY WITH ALL DCID 6/9 REQUIREMENTS.

A2 INTRUSION DETECTION CONTROL RISER DIAGRAM
NTS

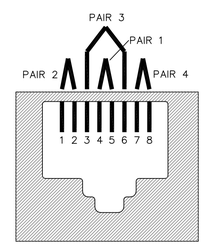

T568B

PAIR ID	PIN #
T1	5
R1	4
T2	1
R2	2
T3	3
R3	6
T4	7
R4	8

COLOR SCHEME
PAIR 1 – BLUE
PAIR 2 – ORANGE
PAIR 3 – GREEN
PAIR 4 – BROWN

A4 RJ45 WIRING DETAIL
NTS

CRSA
ARCHITECTURE
PLANNING
INTERIORS
649 E SOUTH TEMPLE
SALT LAKE CITY, UT 84102
801.355.5915
www.crsa-us.com

STRUCTURAL ENGINEER
CALDER RICHARDS CONSULTING ENGINEERS
634 South 400 West Suite 100
SALT LAKE CITY, UT 84101
(801) 466-1699 (801) 467-2495 FAX
stephen@crceng.com

MECHANICAL ENGINEER
SMD
986 WEST ATHERTON DRIVE STE. 200
TAYLORSVILLE, UTAH 84123
(801)268-3628 FAX (801)268-3297
# #

ELECTRICAL ENGINEER
SPECTRUM
324 S STATE STREET STE. 400
SALT LAKE CITY, UTAH 84111
(801)328-5151 (801)328-5155 FAX
# #

LICENSED PROFESSIONAL ENGINEER
No. 7083854
DAVID L. AFFLECK
STATE OF UTAH

PROJECT:
BUILDING 3030 REMODEL
UTAH NATIONAL GUARD
CAMP W.G. WILLIAMS
17800 South Redwood Road
Riverton, Utah 84065

UTAH NATIONAL GUARD
12953 SOUTH

BN	BID DOCUMENTS	8-30-2010
CD	PLAN CHECK	8-30-2010

PROJECT NO: B10-029
CAD DWG FILE:
DRAWN BY:
CHECKED BY:

TECHNOLOGY DETAILS & SCHEDULE

ET602

File Name: P:\2010\20100297\1Drawings\3Sheet\97ET602.dwg Last Plotted: 2010/08/30 @ 1:09 PM By: cdn

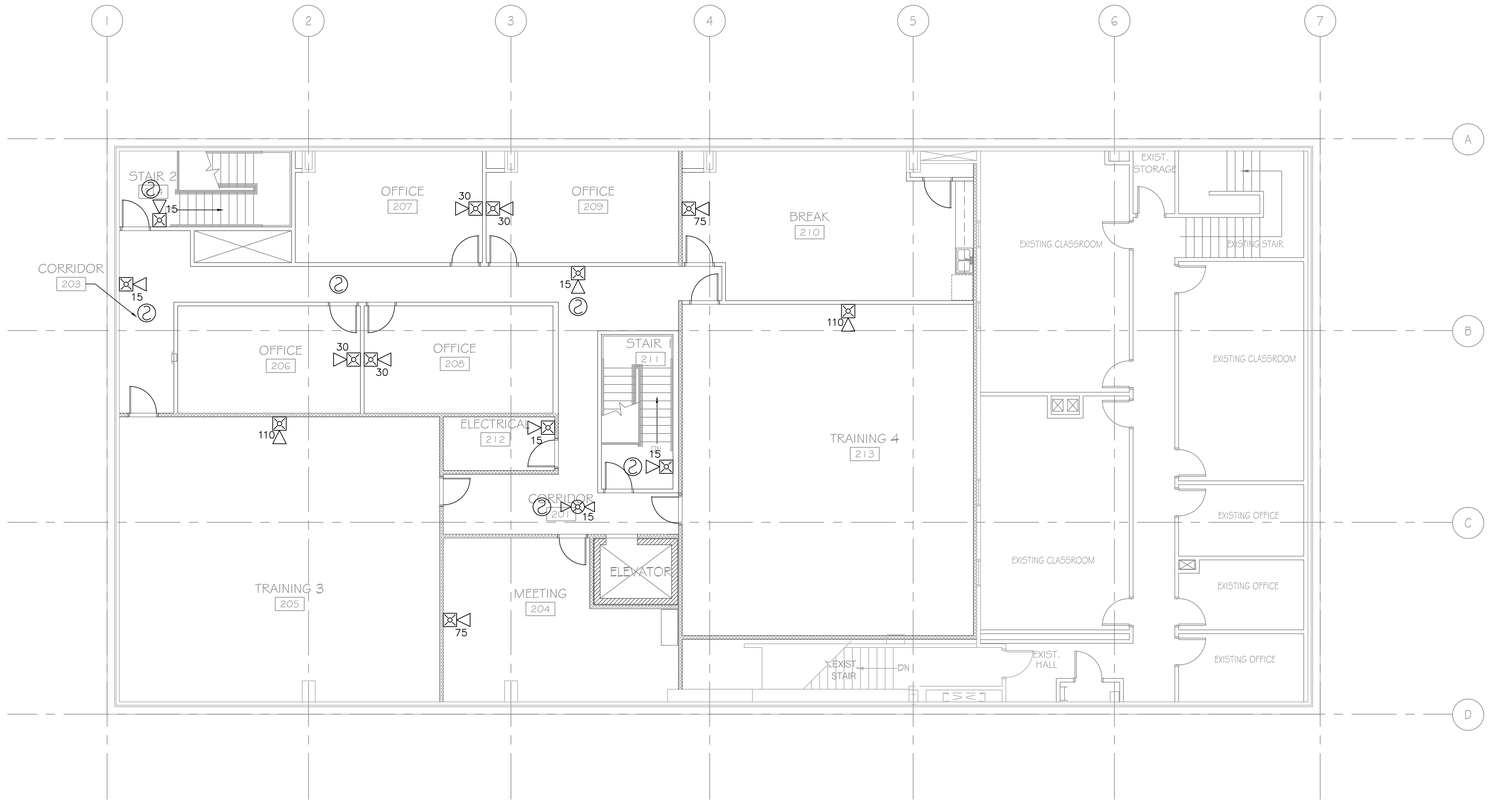

B1 2ND FLOOR FIRE ALARM PLAN
1/8" = 1'-0"

0 4' 8' 16'

GENERAL SHEET NOTES

1. ALL CABLING INSTALLED ABOVE THE PROJECT AREA IS TO BE PLENUM RATED.
2. ALL CONDUIT AND WIRE PENETRATIONS TO THE PROJECT AREA SHALL BE FILTERED, GROUNDED OR AS SHOWN ON THE PIPE ISOLATION DETAIL.
3. ALL FOIL-BACKED WALLS SHALL BE GROUNDED EVERY 30-FEET USING #6 AWG.
4. ALL RACEWAY PENETRATIONS INTO THE SECURE AREA OF THE REMODEL REQUIRE A GROUNDING CONNECTION AT THE POINT OF ENTRY INTO THE SECURE SPACE. THE CONNECTION MUST BE VISIBLE FOR INSPECTION AND IS REQUIRED ON ALL NEW AND EXISTING PENETRATIONS INTO THE SECURE AREA.

CRSA
ARCHITECTURE
PLANNING
INTERIORS
649 E SOUTH TEMPLE
SALT LAKE CITY, UT 84102
801.355.5915
www.crsa-us.com

STRUCTURAL ENGINEER
CALDER RICHARDS CONSULTING ENGINEERS
634 South 400 West Suite 100
SALT LAKE CITY, UT 84101
(801) 466-1699 (801) 467-2495 FAX
stephen@crceng.com

MECHANICAL ENGINEER
SMD
986 WEST ATHERTON DRIVE STE. 200
TAYLORSVILLE, UTAH 84123
(801)268-3626 FAX (801)268-3297
# #

ELECTRICAL ENGINEER
SPECTRUM
324 S STATE STREET STE. 400
SALT LAKE CITY, UTAH 84111
(801)328-5151 (801)328-5155 FAX
# #

LICENSED PROFESSIONAL ENGINEER
No. 7083854
DAVID L. AFFLECK
STATE OF UTAH

PROJECT:
BUILDING 3030 REMODEL
UTAH NATIONAL GUARD
CAMP W.G. WILLIAMS
17800 South Redwood Road
Riverton, Utah 84065

UTAH NATIONAL GUARD
12953 SOUTH

BN	BID DOCUMENTS	8-30-2010
CD	PLAN CHECK	8-30-2010

PROJECT NO: B10-029
CAD DWG FILE:
DRAWN BY:
CHECKED BY:

2ND FLOOR
FIRE ALARM PLAN

FA102

File Name: P:\2010\20100297\1Drawings\3Sheet\97FA102.dwg Last Plotted: 2010/08/30 @ 1:09 PM By: pss

WIRING SCHEDULE

FUNCTION	< 500'	< 1000'	1000'–3000'	> 3000'
ADDRESSABLE LOOP	#18 TSP	#18 TSP	#16 TSP	#14 TSP
POWER LOOP	#14 THWN	#14 THWN	#12 THWN	#10 THWN
SPARE LOOP	#14 THWN	#14 THWN	#12 THWN	#10 THWN
STROBE HORNS	#14 THWN	#14 THWN	#12 THWN	#10 THWN
MAGNETIC DOOR HOLDER	#12 THWN	#10 THWN		
SPEAKERS	#16 TSP	#16 TSP	#14 TSP	#14 TSP

NOTIFICATION SCHEDULE

SYMBOL	STROBE SIZE	COVERAGE	AVERAGE CURRENT	MAXIMUM PER CIRCUIT ALONE
15	15 CD	20'x20'	.085A	17
30	30 CD	30'x30'	.135A	11
75	75 CD	40'x40'	.200A	7
110	110 CD	50'x50'	.225A	6

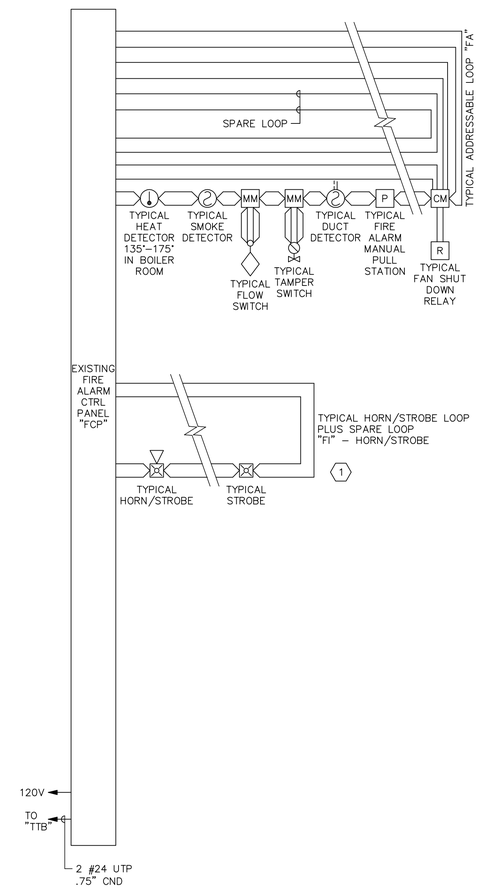

A3 ADDRESSABLE FIRE ALARM RISER
NO SCALE

GENERAL SHEET NOTES

1. PLANS ARE BASED UPON 99 MONITOR AND CONTROL DEVICES PER ADDRESSABLE LOOP. OTHER CONFIGURATIONS ARE ACCEPTABLE SUBJECT TO CONTRACTOR ALLOWING FOR INCREASED WIRING REQUIREMENTS AND SUBMITTAL DRAWINGS SHOWING NEW WIRING CONFIGURATION. MAXIMUM INITIAL DEVICES PER LOOP SHALL NOT EXCEED 75% MAXIMUM ALLOWABLE.
2. PLANS ARE BASED UPON THE WIRING SCHEDULE SHOWN. WHERE MANUFACTURER'S REQUIREMENTS EXCEED REQUIREMENTS SHOWN, INCLUDE ADDITIONAL ASSOCIATED COSTS AND SUBMITTAL DRAWINGS INDICATING NEW WIRING CONFIGURATION.
3. PLANS ARE BASED UPON 2 AMPS AT 24 VDC, NOT TO EXCEED 75% (1.50 AMPS AVAILABLE). POWER SUPPLY CAPACITY PER NOTIFICATION CIRCUIT. NOTIFICATION DEVICE LOADS ARE BASED UPON NOTIFICATION DEVICE SCHEDULE SHOWN. INCLUDE ADDITIONAL ASSOCIATED COSTS FOR INCREASED WIRING AND POWER SUPPLY CAPACITY IF LOADS OF ACTUAL DEVICES PROVIDED EXCEED CIRCUIT CAPACITY, OR IF LOAD OUTPUT OF ACTUAL POWER SUPPLIES PROVIDED IS SIZED DIFFERENTLY. PROVIDE SUBMITTAL DRAWINGS SHOWING NEW WIRING CONFIGURATION.
4. FLOW AND TAMPER CONFIGURATION BASED UPON FIRE SPRINKLER DESIGN CONCEPT. FIELD VERIFY ACTUAL REQUIREMENTS. INCLUDE ANY ADDITIONAL MONITOR MODULES REQUIRED BY ACTUAL DESIGN REQUIREMENTS.
5. HEAT DETECTORS WHEN INSTALLED IN ELEVATOR SHAFTS OR MECHANICAL ROOMS FOR ELEVATOR SHUT DOWN SHALL HAVE HEAT DETECTOR WITH LOWER RESPONSE TIME INDEX THAN SPRINKLER HEAD.
6. PROVIDE POWER SUPPLY CAPACITY AS REQUIRED FOR DOOR HOLD OPENS SHOWN.
7. BATTERY CAPACITY TO BE ADEQUATE TO OPERATE 15 MINUTES AFTER 24 HOURS PLUS 25% SPARE CAPACITY.
8. VFD REQUIRES TWO RELAYS, ONE FOR SMOKE CONTROL, ONE SPARE.
9. RUN SPARE LOOPS IN SAME CONDUIT. DO NOT EXCEED 40% AREA FILL OF CONDUITS.
10. PROVIDE DUCT DETECTORS FOR SUPPLY AND RETURN AIR SYSTEMS OVER 2000 CFM. INSTALL DUCT DETECTORS PER NFPA 72 REQUIREMENTS AND PROVIDE ADDITIONAL DUCT DETECTORS DEPENDING UPON FINAL DUCT ARRANGEMENT.
11. PROVIDE DUCT DETECTOR AT EACH FLOOR, PRIOR TO CONNECTION TO A COMMON RETURN AND PRIOR TO RECIRCULATING OR FRESH AIR INLET IN AIR RETURN SYSTEMS OVER 15,000 CFM CAPACITY AND SERVING MORE THAN ONE STORY.
12. PROVIDE MANUAL PULL STATIONS IN BOILER ROOMS AND KITCHENS.
13. PROVIDE ONE YEAR OFF SITE MONITORING INCLUDING ALL INTERFACE DEVICES AND MONITORING CHARGES. COORDINATE WITH BUILDING OWNER'S OFF SITE MONITORING COMPANY.
14. LOCATE SMOKE DETECTORS MINIMUM 3' FROM AIR SUPPLY AND RETURN LOUVERS.
15. PROVIDE SYNCHRONIZED STROBES THROUGHOUT FACILITY. PROVIDE SYNCHRONIZATION MODULES PER MANUFACTURER'S REQUIREMENTS. INCLUDE ADDITIONAL WIRING, IF REQUIRED.
16. INITIATING AND INDICATING LOOPS SHALL NOT SERVE AN AREA OF GREATER THAN 22,500 SQUARE FEET. PROVIDE ADDITIONAL LOOPS FOR AREAS LARGER THAN THIS.
17. ALL OUTPUT DEVICES ARE DESIGNED ON SYSTEMS WITH 2 AMP POWER SUPPLY.
18. HORN/STROBE BASED ON 120 MILLIAMPS, DOOR HOLDERS BASED ON 70 MILLIAMPS.
19. INSTALL DUCT DETECTORS PER NFPA 72 REQUIREMENTS AND PROVIDE ADDITIONAL DUCT DETECTORS DEPENDING UPON FINAL DUCT ARRANGEMENT.

SHEET KEYNOTES

1. CONNECT ALL NEW DEVICES TO EXISTING SILENT KNIGHT FIRE ALARM PANEL AND ASSOCIATED EQUIPMENT. PROVIDE NEW NAC EXTENDER PANELS AS REQUIRED TO ACCOMMODATE NEW DEVICES. REPROGRAM EXISTING FIRE ALARM SYSTEM.

CRSA
ARCHITECTURE
PLANNING
INTERIORS
649 E SOUTH TEMPLE
SALT LAKE CITY, UT 84102
801.355.5915
www.crsa-us.com

STRUCTURAL ENGINEER
CALDER RICHARDS CONSULTING ENGINEERS
634 South 400 West Suite 100
SALT LAKE CITY, UT 84101
(801) 466-1699 (801) 467-2495 FAX
stephen@crceng.com

MECHANICAL ENGINEER
SMD
986 WEST ATHERTON DRIVE STE. 200
TAYLORSVILLE, UTAH 84123
(801)268-3628 FAX (801)268-3297
# #

ELECTRICAL ENGINEER
SPECTRUM
324 S STATE STREET STE. 400
SALT LAKE CITY, UTAH 84111
(801)328-5151 (801)328-5155 FAX
# #

LICENSED PROFESSIONAL ENGINEER
No. 7083854
DAVID L. AFFLECK
STATE OF UTAH

PROJECT:
BUILDING 3030 REMODEL
UTAH NATIONAL GUARD
CAMP W.G. WILLIAMS
17800 South Redwood Road
Riverton, Utah 84065

UTAH NATIONAL GUARD
12953 SOUTH

BN	BID DOCUMENTS	8-30-2010
CD	PLAN CHECK	8-30-2010

PROJECT NO: B10-029
CAD DWG FILE:
DRAWN BY:
CHECKED BY:

FIRE ALARM RISER

FA601

File Name: P:\2010\20100297\1Drawings\3Sheet\97FA601.dwg Last Plotted: 2010/08/30 @ 1:09 PM By: cdn