STATE OF UTAH
UNIFIED STATE LABORATORIES SOLAR PROJECT
DFCM PROJECT 10237390
CONSTRUCTION DOCUMENTS

4431 SOUTH 2700 WEST
TAYLORSVILLE, UTAH

PROJECT TEAM

OWNER

DFCM
BRIAN BALES
4110 STATE OFICE BUILDING
SALT LAKE CITY UT, 84114
PHONE: 801-538-3018

ARCHITECT

VCBO ARCHITECTURE
PETER BRUNJES
524 SOUTH 600 EAST
SALT LAKE CITY, UT 84102
PHONE: 801.575.8800

STRUCTURAL ENGINEER

DUNN ASSOCIATES
CHRIS OLSON
380 WEST 800 SOUTH
SALT LAKE CITY, UT 84101
801-575-8877

ELECTRICAL ENGINEER

SPECTRUM ENGINEERS
SCOTT JENKINS
324 SOUTH STATE STREET
SALT LAKE CITY, UT 84111
PHONE: 801-328-5151

APPROVALS:

Prime Agency — Date

DFCM — Date

APPROVAL DOES NOT RELIEVE A/E OF DESIGN LIABILITY

APPROVALS:

Prime Agency — Date

DFCM — Date

APPROVAL DOES NOT RELIEVE A/E OF DESIGN LIABILITY

State of Utah - Department of Administrative Services

DIVISION OF FACILITIES
CONSTRUCTION AND MANAGEMENT
4110 State Office Building / Salt Lake City, Utah 84114 / 533-5561

ABBREVIATIONS

NOT ALL ABBREVATIONS MAY BE USED

&	AND
@	AT
ACT	ACOUSTICAL CEILING TILE
ADJ	ADJUSTABLE
AFF	ABOVE FINISH FLOOR
ALT	ALTERNATE
AL/ALUM	ALUMINUM
APPROX	APPROXIMATE
ARCH	ARCHITECTURAL
BD	BOARD
BLDG	BUILDING
BLK	BLOCK (ING)
BO	BOTTOM OF
BRG	BEARING
BSMT	BASEMENT
BS	BOTH SIDES
BW	BOTH WAYS
CAB	CABINET
CB	CATCH BASIN
CCSA	CUSTOM COLOR SELECTED BY ARCHITECT
CG	CORNER GUARD
CHAM	CHAMFER
CJ	CONTROL JOINT
CL	CENTER LINE
CLG	CEILING
CLR	CLEAR
CM	CONSTRUCTION MANAGER
COL	COLUMN
COMP	COMPUTER
CONC	CONCRETE
CONT	CONTINUOUS
CMU	CONCRETE MASONRY UNIT
CSBA	COLOR SELECTED BY ARCHITECT
CT	CERAMIC TILE
D	DEPTH
DB	DECK BEARING
DBL	DOUBLE
DEPT	DEPARTMENT
DF	DRINKING FOUNTAIN
DIA	DIAMETER
DIM	DIMENSION
DN	DOWN
DRN	DRAIN
DTL/ DET	DETAIL
DW	DISHWASHER
DWG	DRAWING
E	EAST
EA	EACH
EIFS	EXTERIOR INSULATION SYSTEM
EJ	EXPANSION JOINT
ELEC	ELECTRICAL
ELEV	ELEVATION
EQ	EQUAL
EQUIP	EQUIPMENT
EVAP	EVAPORATIVE
EXIST	EXISTING
EXP	EXPANSION
EXT	EXTERIOR
EWC	ELECTRIC WATER COOLER
FA	FIRE ALARM
FD	FLOOR DRAIN
FDN	FOUNDATION
FE	FIRE EXTINGUISHER
FEC	FIRE EXTINGUISHER CABINET
FG	FINISH GRADE
FH	FIRE HYDRANT
FIN	FINISHED
FLR	FLOOR
F.O.	FACE OF
FT	FOOT, FEET
FRP	FIBER REINFORCED PANEL
FRT	FIRE RETARDANT TREATED WOOD
FTG	FOOTING
FV	FIELD VERIFY
GA	GAUGE
GALV	GALVANIZED
GB	GRAB BAR
GC	GENERAL CONTRACTOR
GFRC	GLASSFIBER REINFORCED PANEL
GYP	GYPSUM
GWB	GYPSUM WALLBOARD
HB	HOSE BIBB
HC	HANDICAP ACCESSIBLE
HDW	HARDWARE
HDF	HIGH DENSITY FIBERBOARD
HM	HOLLOW METAL
H	HEIGHT
HOR	HORIZONTAL
ID	INSIDE DIAMETER
ICF	INSULATED CONCRETE FORM
IN	INCH
INCL	INCLUDE
INFO	INFORMATION
INT	INTERIOR
INSUL	INSULATE, (D), (ION)
INV	INVERT
JST	JOIST
JT	JOINT
LAV	LAVATORY
LB/ LBS	POUND (S)
MAT	MATERIAL (S)
MAX	MAXIMUM
MDF	MEDIUM DENSITY FIBERBOARD
MECH	MECHANICAL
MEMB	MEMBRANE
MEZZ	MEZZANINE
MFR	MANUFACTURER
MGR	MANAGER
MIN	MINIMUM
MIR	MIRROR
MISC	MISCELLANEOUS
MO	MASONRY OPENING
MTD	MOUNT, (ED)
MTL	METAL
MW	MICROWAVE
N	NORTH
NIC	NOT IN CONTRACT
NO.	NUMBER
NOM	NOMINAL
NRC	NOISE REDUCTION COEFFICIENT
NTS	NOT TO SCALE
OC	ON CENTER
OD	OUTSIDE DIAMETER
OFD	OVERFLOW DRAIN
OH	OVERHEAD
OPG	OPENING
OPP	OPPOSITE
OSB	ORIENTED STRAND BOARD
OZ	OUNCE
PERI	PERIMETER
PERM	PERMENANT
PL	PLATE
PLAM	PLASTIC LAMINATE
PNL	PANEL
P.O.	POINT OF
PR	PAIR
PT	POST TENSIONED
PART	PARTITION
PLY	PLYWOOD
QT	QUARRY TILE
R / RAD	RADIUS
RCP	REFLECTED CEILING PLAN
REC	RECESSED
REF	REFERENCE
REFG	REFRIGERATOR
REINF	REINFORCE (ED)
REM	REMOVE (ED)
REPL	REPLACE
REQD	REQUIRED
REV	REVISION (S)
RM	ROOM
RO	ROUGH OPEKING
S	SOUTH
SALV	SALVAGE (ED)
SECT	SECTION
SF	SQUARE FOOT
SIM	SIMILAR
SLNT	SEALANT
SPEC	SPECIFICATION (S)
SQ	SQUARE
SS	STAINLESS STEEL
STC	SOUND TRANSMISSION CLASS
STD	STANDARD
STL	STEEL
STOR	STORAGE
STRUC	STRUCTURE (AL)
SUSP	SUSPENDED
SYM	SYMMETRY (ICAL)
T	THICKNESS
T & B	TOP AND BOTTOM
T & G	TONGUE AND GROOVE
TBD	TO BE DETERMINED
TEMP	TEMPORARY
THRU	THROUGH
T.O.	TOP OF
TRANS	TRANSFORMER
TS	TUBE STEEL
TYP	TYPICAL
UNF	UNFINISHED
UNO	UNLESS OTHERWISE NOTED
VAR	VARIES
VB	VAPOR BARRIER
VCT	VINYL COMPOSITION TILE
VERT	VERTICAL
VEST	VESTIBULE
VWC	VINYL WALLCOVERING
W	WEST
W	WIDTH
WI	WITH
WC	WATER CLOSET
WD	WOOD
W/O	WITHOUT
WSCT	WAINSCOT
WWF	WELDED WIRE FABRIC

PROJECT TEAM

OWNER

DFCM
BRIAN BALES
4110 STATE OFICE BUILDING
SALT LAKE CITY UT, 84114
PHONE: 801-538-3018

ARCHITECT

VCBO ARCHITECTURE
PETER BRUNJES
524 SOUTH 600 EAST
SALT LAKE CITY, UT 84102
PHONE: 801.575.8800

STRUCTURAL ENGINEER

DUNN ASSOCIATES
CHRIS OLSON
380 WEST 800 SOUTH
SALT LAKE CITY, UT 84101
801-575-8877

ELECTRICAL ENGINEER

SPECTRUM ENGINEERS
SCOTT JENKINS
324 SOUTH STATE STREET
SALT LAKE CITY, UT 84111
PHONE: 801-328-5151

UTILITY CONTACTS

POWER
ROCKY MOUNTAIN POWER
1-800-662-4111
811

WATER
TAYLORSVILLE - BENNION
IMPROVEMENT DISTRICT
1800 WEST 4700 SOUTH
TAYLORSVILLE, UT 84118
801-968-9081
COMPANY@TBID.ORG

NATURAL GAS
QUESTAR GAS
CUSTOMER SERVICE
P.O. BOX 45360
SALT LAKE CITY, UT 84145
801-324-5111

BLUE STAKES OF UTAH
BLUE STAKES OF UTAH
148 EAST 13200 SOUTH
DRAPER, UT 84020
801-208-2100

VICINITY MAP

SHEET INDEX

SHEET NUMBER	SHEET NAME
GENERAL	
CVR	DFCM COVER
G001	GENERAL INFORMATION AND INDEX
ARCHITECTURAL	
AS101	OVERALL SITE PLAN
A010	SITE SOLAR ARRAY
STRUCTURAL	
S101	GENERAL STRUCTURAL NOTES
S201	PIER & FRAMING PLANS AND DETAILS
ELECTRICAL	
EE001	SYMBOL LEGEND, GENERAL NOTES AND SHEET INDEX
ES101	SITE ELECTRICAL PLAN
ELECTRICAL	
EP101	FIRST FLOOR POWER PLAN
EP105	ROOF POWER PLAN - ADD ALTERNATE
EP501	ELECTRICAL DETAILS
EP601	ONE-LINE DIAGRAMS

CODE ANALYSIS

APPLICABLE CODES

	Year		Year
International Building Code	2009 IBC	National Electrical Code	NEC 2009
International Mechanical Code	2009 IMC	Uniform Code for Building Conservation	N/A
International Plumbing Code	2009 IPC		
International Fire Code	2009 IFC	ADA Accessibility Guidelines	ANSI A117.1 2003
International Energy Conservation Code	2009 IEC		

EXISTING BUILDING DATA

A. Occupancy and Group: B AND S-1, NON-SEPERATED AND A-3 ACCESSORY USE

Change in Use: Yes ____No__X__ Mixed Occupancy: Yes_____No__X____

Special Use and Occupancy (e.g. High Rise, Covered Mall):_____NO_____

B. Seismic Design Category: D Design Wind Speed: 90 MPH, EXP. C

C. Type of Construction (circle one): Fully Sprinkled

I	I	II	II	III	III	IV	V	V
A	B	A	B	A	B	HT	A	B

K. Fire Resistance Rating Requirements for Building Elements (hours). Table 601

Element	Hours	Assembly Listing	Element	Hours	Assembly Listing
Exterior Bearing Walls	0		Floors - Ceiling Floors	1**	D925
Interior Bearing Walls	0		Roofs - Ceiling Roofs	0	
Exterior Non-Bearing Walls	0		Exterior Doors & Windows	0	
Structural Frame	1**	X771, 772	Shaft Enclosures	1	U469
Partitions - Permanent	0		Fire Walls	NA	U419
Fire Barriers	1	U465 *	Fire Partitions	NA	U451

e. An approved automatic sprinkler system in accordance with Section 903.3.1.1 shall be allowed to be substituted for 1-hour fire-resistance-rated construction, provided such system is not otherwise required by other provisions of the code or used for an allowable area increase in accordance with Section 506.3 or an allowable height increase in accordance with Section 504.2. The 1-hour substitution for the fire resistance of exterior walls shall not be permitted.

* Sprinkler glazing protection system at atrium per ICC Evaluation NER-516 (Except sprinkers shall be at 6' on center per IBC 106.3.4.2).

** Where 1 hour rating is required, per sheet G0003.

SPECIAL INSPECTION AND TESTING UNDER THE PROVISIONS OF 2009 IBC Section 1704 AND FOR MISCELLANEOUS AREAS

Indicate required Special inspections for project by checking the appropriate boxes and provide specific instructions as to the inspection requirements and the expectations of the architect, engineer and owner:

FABRICATORS (IBC 1704.2)

☐ Approved Fabricator	Yes	No	☐ Unapproved Fabricator	Yes	No

Approved fabricator to be used or contractor to pay inspection fees.

Fabricators Name:			
Fabricators plant location			
Required In-plant Inspections	☐ Steel Construction	☐ Welding	☐ Details

STEEL (IBC 1704.3)

Item			Detailed Instructions and Frequencies
High Strength Bolting(1704.3.3)	☐ Continuous	☒ Periodic	
WELDING (1704.3.1)			
Details (1704.3.2)			
Complete & partial penetration groove welds	☒ Continuous	☐ Periodic	
Multipass fillet welds	☐ Continuous	☒ Periodic	
Single-pass fillet welds > 5/16"	☐ Continuous	☒ Periodic	
Single-pass fillet welds ≤ 5/16"	☐ Continuous	☒ Periodic	
REINFORCEMENT STEEL			
Reinforcement placement	☐ Continuous	☒ Periodic	

CONCRETE CONSTRUCTION (IBC 1704.4)

Item			Detailed Instructions and Frequencies
Materials (1704.4.1)	☐ Continuous	☒ Periodic	
Steel placement	☐ Continuous	☒ Periodic	
Bolts prior & daring placement	☐ Continuous	☒ Periodic	
Use of required design mix	☐ Continuous	☒ Periodic	
Concrete sampling for strength test, slump, air content, and temperature of concrete	☐ Continuous	☒ Periodic	
Concrete placement	☐ Continuous	☒ Periodic	Pier concrete is to be tremmied or pumped so that it does not free-fall more than 3'-0"
Curing temperature and techniques	☐ Continuous	☒ Periodic	

PIER FOUNDATIONS (IBC 1704.9)

Item			Detailed Instructions and Frequencies
Observe drilling operation and reporting	☐ Continuous	☒ Periodic	
Verify placement & installation data	☐ Continuous	☒ Periodic	

EPOXY (IBC 1704.13)

Item			Detailed Instructions and Frequencies
Material and installation (specify locations)	☒ Continuous	☐ Periodic	

MISCELLANEOUS AREAS Detailed Instructions and Frequencies

These inspections are recommended by the Architect/Engineer and approved by DFCM.

Soils for curb and gutter (specify locations and frequency)	☐ Continuous	☒ Periodic	As needed where trenching occurs
Soils for parking lots (specify locations and frequency)	☐ Continuous	☒ Periodic	As needed where trenching occurs
Soils for utility trench backfill	☐ Continuous	☒ Periodic	
Reinforcement for slab on grade sidewalks and drive approaches (specify locations and frequency)	☐ Continuous	☒ Periodic	As needed where trenching occurs
Concrete testing for slab on grade sidewalks and drive approaches (specify locations and frequency)	☐ Continuous	☒ Periodic	As needed where trenching occurs
Asphalt inspection (specify locations and frequency)	☐ Continuous	☒ Periodic	As needed
Asphalt testing (specify locations and frequency)	☐ Continuous	☒ Periodic	As needed

Special Inspectors Shall:

- Be approved by the Building Official prior to performing any duties;
- Provide proof of licensure as a special inspector by the State of Utah for each type of inspection;
- Inspection reports are to meet the requirements of IBC 1704.1.2 and DFCM standards;
- Inspection reports are to be submitted to the code consultant, architect, DFCM project manager, and the State of Utah Building Official within 48 hrs. of inspections;
- A final inspection report shall be submitted following completion of the project documenting the types of special inspections performed and a statement indicating that the structure is in compliance with the drawings, specifications and applicable codes. IBC 1704.1.2

Updated July 29, 2010

SPECIAL INSPECTIONS

SPECIFICATION DIVISIONS REQUIRING SPECIAL INSPECTIONS

02300 SITE WORK - AS REQUIRED BY IBC 1704.7 "SOILS". SEE ALSO REQUIREMENTS ON GENERAL STRUCTURAL NOTES SHEETS; INSPECTION IS BY THE OWNERS AGENT.

03310 CONCRETE - AS REQUIRED BY IBC 1704.4 "CONCRETE CONSTRUCTION" AND IBC 1708.3 "REINFORCING AND PRESTRESSING STEEL". SEE ALSO REQUIREMENTS ON GENERAL STRUCTURAL NOTES SHEETS; INSPECTION IS BY THE OWNERS AGENT.

04810 METALS - SEE REQUIREMENTS ON GENERAL STRUCTURAL NOTES SHEETS PERTAINING TO SPECIAL INSPECTION FOR STEEL COMPONENTS; INSPECTION IS BY THE OWNERS AGENT.

DEFERRED SUBMITTALS

CONTRACTOR IS RESPONSIBLE TO SUBMIT DEFERRED SUBMITTALS IN ACCORDANCE WITH IBC 106.3.4.2. AS PART OF THE SUBMITTAL PROCESS, THE CONTRACTOR IS TO SUBMIT ALL ICC ERS REPORTS FOR ITEMS NOTED.

- METAL FABRICATIONS
- PHOTOVOLTAIC SYSTEM PRODUCT DATA

GENERAL NOTES

1. IT IS THE CONTRACTORS RESPONSIBILITY TO REVIEW AND COORDINATE THE WORK OF ALL SUB-CONTRACTORS, TRADES AND SUPPLIERS WITH THE REQUIREMENTS OF THE CONTRACT DOCUMENTS BEFORE COMMENCING CONSTRUCTION, AND TO ASSURE THAT ALL PARTIES ARE AWARE OF ALL REQUIREMENTS, REGARDLESS OF WHERE THE REQUIREMENTS OCCUR IN THE CONTRACT DOCUMENTS, WHICH MIGHT AFFECT THE WORK OF THAT PARTY.
2. AS PART OF THE CONTRACTOR'S RESPONSIBILITY TO COORDINATE THE WORK OF ALL SUB-CONTRACTORS, TRADES AND SUPPLIERS, THE CONTRACTOR SHALL ENDEAVOR TO IDENTIFY AND NOTIFY THE ARCHITECT OF ANY CONFLICTS BETWEEN THE WORK OF DIFFERENT PARTIES AT THE EARLIEST POSSIBLE DATE SO AS TO ALLOW REASONABLE AND ADEQUATE TIME FOR THE CONFLICT TO BE RESOLVED WITHOUT DELAYING THE WORK. ALL DEVIATIONS FROM THAT WHICH IS REQUIRED BY THE CONTRACT DOCUMENTS MUST BE APPROVED IN ADVANCE BY THE ARCHITECT.
3. THE ARCHITECTURAL DRAWINGS ESTABLISH AND COORDINATE THE FINISHED APPEARANCE AND EXACT LOCATION OF ALL EXPOSED ELEMENTS OF THE WORK OF ALL THE TRADES, INCLUDING THAT WORK WHICH IS ILLUSTRATED PRIMARILY ON DRAWINGS OF OTHER DISCIPLINES. QUANTITIES ARE TO BE PROVIDED AS SHOWN ON DRAWINGS OF OTHER DISCIPLINES BUT LOCATIONS SHOWN ON OTHER DRAWINGS ARE SCHEMATIC, UNLESS OTHERWISE NOTED ON THE ARCHITECTURAL DRAWINGS. THE ARCHITECTURAL DRAWINGS TAKE PRECEDENCE FOR THE FINISHED APPEARANCE AND EXACT LOCATION OF ALL PARTS OF THE WORK.
4. EXCEPT WHERE DIRECTED TO PLACE ITEMS OF WORK AT THE APPROXIMATE LOCATION SHOWN; DO NOT SCALE DRAWINGS FOR DIMENSIONAL INFORMATION. ALL ELEMENTS OF THE DRAWINGS MAY NOT BE DRAWN TO EXACT SCALE. ALL DIMENSIONS REQUIRED ARE SHOWN OR MAY BE DERIVED FROM THOSE SHOWN ON THE FLOOR PLANS, DETAIL PLANS, ELEVATIONS, SECTIONS, DETAILS, SCHEDULES AND SPECIFICATIONS. IF DIMENSIONS ARE NOT PRESENT, THE ARCHITECT IS TO BE NOTIFIED SO THAT A CLARIFICATION CAN BE ISSUED.

NOTES TO BIDDERS

1. THIS SHEET CONTAINS A LIST OF DRAWINGS WHICH COMPRISE A FULL SET OF DRAWINGS FOR THIS PROJECT. ANY CONTRACTOR, SUBCONTRACTOR, VENDOR OR ANY OTHER PERSON PARTICIPATING IN OR BIDDING ON THIS PROJECT SHALL BE RESPONSIBLE FOR THE INFORMATION CONTAINED IN ANY AND ALL SHEETS OF DRAWINGS AND SPECIFICATIONS. IF ANY PERSON, PARTY OR ENTITY ELECTS TO SUBMIT BIDS FOR ANY PORTION, OR ALL, OF THIS PROJECT, THAT PERSON, PARTY OR ENTITY SHALL BE RESPONSIBLE FOR ANY AND ALL INFORMATION CONTAINED IN THESE DRAWINGS AND SPECIFICATIONS, INCLUDING, BUT NOT LIMITED TO, ANY SUBSEQUENT ADDENDUMS OR CLARIFICATIONS THAT MAY BE ISSUED.
2. THESE DOCUMENTS SHOW THE DESIGN INTENT. IT IS THE CONTRACTORS RESPONSIBILITY TO PROVIDE EVERYTHING SHOWN ON THE DRAWINGS OR SPECIFIED REGARDLESS OF WHERE IT IS SHOWN ON THE DRAWINGS OR IN THE SPECIFICATIONS. FOR EXAMPLE: SOME MILLWORK DETAILS HAVE STEEL FRAMES WHICH MAY BE PROVIDED BY DIVISION 05 OR WITH THE MILLWORK AT THE CONTRACTOR'S DISCRETION, BUT IT SHALL BE PROVIDED AS PART OF THE CONTRACT.
3. EVERYTHING CALLED FOR IN THESE DOCUMENTS SHALL BE "NEW" AND PROVIDED BY THE CONTRACTOR, SUBCONTRACTOR, VENDOR OR ANY OTHER PERSON PARTICIPATING IN OR BIDDING ON THIS PROJECT UNLESS NOTED OTHERWISE AS EXISTING (EXIST), NOT IN CONTRACT (NIC) OR FOR REFERENCE ONLY.

ADD ALTERNATE SCHEDULE

TWO ADDITIVE ALTERNATES ARE INCLUDED IN THIS PROJECT. THESE ARE:

ADDITIVE ALTERNATE NO. 1
PROVIDE LIGHTWEIGHT, SELF-BALLASTING TUBULAR SOLAR ARRAY SYSTEM ON THE ROOF, AS SHOWN ON THE DRAWINGS. REFER TO THE SPECIFICATIONS, DIVISION 26 SECTION "SOLAR PHOTOVOLTAIC SYSTEMS FOR ADDITIONAL INFORMATION.

ADDITIVE ALTERNATE NO. 2
PROVIDE THE FOURTH PHOTOVOLTAIC ARRAY ON THE SITE, AS SHOWN ON THE DRAWINGS. REFER TO THE SPECIFICATIONS, DIVISION 26 SECTION "SOLAR PHOTOVOLTAIC SYSTEMS."

VCBO
ARCHITECTURE
VALENTINER
CRANE
BRUNJES
ONYON

VCBO ARCHITECTURE
524 SOUTH 600 EAST
SALT LAKE CITY, UTAH 84102
Phone: (801) 575-8800
Fax: (801) 531-9850
www: www.vcbo.com

SOLAR PARKING STRUCTURE

UNIFIED STATE LABS
10237390
4431 South 2700 West
Construction Documents

Rev #	Date	Description

Job # 10420
CAD File
Drawn Author Checked Checker
Date 23 March, 2011
Owner # 10237390
Ins. #

GENERAL INFORMATION AND INDEX

G001

3/29/2011 3:11:42 PM

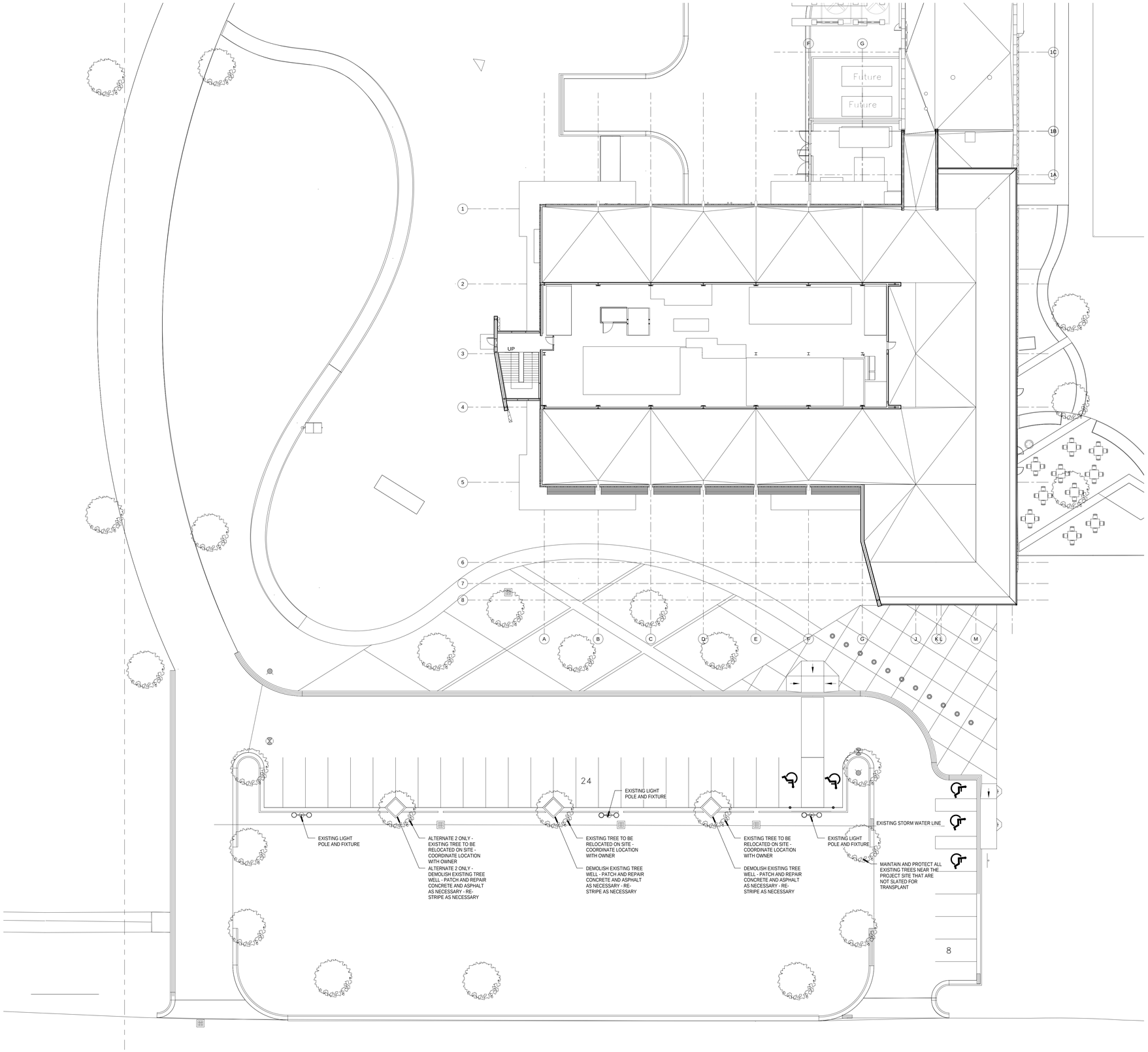

A2 Existing Site Plan

SCALE: 1/16" = 1'-0"

TREE PRESERVATION AND TRANSPLANT GUIDELINES AND NOTES

1. FENCES WILL BE ERECTED TO PROTECT TREES TO BE PRESERVED. FENCES DEFINE A SPECIFIC PROTECTION ZONE FOR EACH TREE OR GROUP OF TREES. FENCE TO BE AT A MINIMUM OF 20' FROM TRUNK OR AT DRIP LINE OF TREE, WHICHEVER IS GREATER. FENCES ARE TO REMAIN UNTIL ALL SITE WORK HAS BEEN COMPLETED. FENCES MAY NOT BE RELOCATED OR REMOVED WITHOUT THE WRITTEN PERMISSION OF THE CONSULTING ARBORIST OR THE ARCHITECT.
2. INSIDE ALL PROTECTED TREE FENCE AREAS, CONTRACTOR TO PROVIDE WOOD CHIPS, MINIMUM 4" DEEP.
3. CONSTRUCTION TRAILERS AND TRAFFIC AND STORAGE AREAS MUST REMAIN OUTSIDE FENCED AREAS AT ALL TIMES.
4. ALL UNDERGROUND UTILITIES AND DRAIN OR IRRIGATION LINES SHALL BE ROUTED OUTSIDE THE TREE PROTECTION ZONE. IF LINES MUST TRAVERSE THE PROTECTION AREA, THEY SHALL BE TUNNELED OR BORED UNDER THE TREE(S).
5. NO MATERIALS, EQUIPMENT, SPOIL OR WASTE OR WASHOUT WATER MAY BE DEPOSITED, STORED OR PARKED WITHIN THE TREE PROTECTION ZONE (FENCED AREA).
6. ADDITIONAL TREE PRUNING REQUIRED FOR CLEARANCE OR TREE HEALTH DURING CONSTRUCTION MUST BE PERFORMED BY A QUALIFIED ARBORIST AND NOT BY CONSTRUCTION PERSONNEL.
7. ANY HERBICIDES PLACED UNDER PAVING MATERIALS MUST BE SAFE FOR USE AROUND TREES AND LABELED FOR THAT USE. ANY PESTICIDES USED ON SITE MUST BE TREE-SAFE AND NOT EASILY WASHED OFF SITE, CAUSING POLLUTION.
8. IF INJURY SHOULD OCCUR TO ANY TREE DURING CONSTRUCTION IT SHOULD BE EVALUATED AS SOON AS POSSIBLE BY THE CONSULTING ARBORIST OR LANDSCAPE ARCHITECT SO THAT APPROPRIATE TREATMENTS CAN BE APPLIED.
9. ANY GRADING, CONSTRUCTION, DEMOLITION, OR OTHER WORK THAT IS EXPECTED TO ENCOUNTER TREE ROOTS MUST BE MONITORED BY THE CONSULTING ARBORIST/LANDSCAPE ARCHITECT. ALL TREES NOT BEING REMOVED AS INDICATED ON LANDSCAPE DEMOLITION PLAN SHALL BE PROTECTED / MONITORED.
10. IRRIGATION WATER TO THE TREES AND SHRUBS TO REMAIN SHOULD BE AT LEAST 1 INCH A WEEK DURING GROWING SEASON UNTIL PROJECT COMPLETION (MAY - OCT) THIS WILL BE APPLIED WITH SPRINKLERS EVENLY OVER THE WHOLE ROOT SYSTEM, TWICE A WEEK TWO DAYS APART WITH 1/2 INCH OF WATER DELIVERED EACH WATERING CYCLE. NEWLY PLANTED PLANTS THAT HAVE NOT BECOME ESTABLISHED (2 YEARS OR LESS) WILL ALSO NEED IRRIGATION TO ENSURE THEIR SURVIVAL. IT IS RECOMMENDED THAT A TEMPORARY IRRIGATION SYSTEM BE DESIGNED ACCORDING TO THE VOLUME AND FLOW OF THE WATER SOURCE TO WATER THE PLANT MATERIAL.
12. ANY ROOTS DAMAGED DURING GRADING, TRENCHING OR CONSTRUCTION SHALL BE EXPOSED TO SOUND TISSUE AND CUT CLEANLY WITH A SAW. CONTRACTOR SHALL HAVE A QUALIFIED ARBORIST OR LANDSCAPE ARCHITECT OBSERVE THIS WORK.
11. IF TEMPORARY HAUL OR ACCESS ROADS MUST PASS OVER THE ROOT AREA OF TREES TO BE RETAINED, A ROADBED OF 6 INCHES OF COURSE WOOD CHIP MULCH SHALL BE CREATED TO PROTECT THE SOIL AND ROOTS. THE ROAD BED MATERIAL SHALL BE REPLENISHED AS NECESSARY TO MAINTAIN A 6-INCH DEPTH. UNDER NO CIRCUMSTANCES SHALL SUCH ACCESS ROADS BE USED ON A FREQUENT BASIS.
12. SPOIL OR SUBSOIL FROM TRENCHES, BASEMENTS, OR OTHER EXCAVATIONS SHALL NOT BE PLACED WITHIN THE TREE PROTECTION ZONE, EITHER TEMPORARILY OR PERMANENTLY.
13. MONITORING ONCE A MONTH SHALL OCCUR NOW AND FOR AT LEAST ONE YEAR AFTER CONSTRUCTION IS COMPLETED. CONTRACTOR SHALL HAVE A QUALIFIED ARBORIST PERFORM THIS TASK.
14. A SOIL SAMPLE SHALL BE SENT TO USU SOILS LAB TO DETERMINE IF ANY NUTRIENTS CAN BE ADDED TO HELP RELIEVE SOME STRESS TO THE TREES.
15. TRANSPLANT LOCATIONS TO BE COORDINATED WITH THE OWNER. IT IS ASSUMED THAT ALL TREES WILL BE TRANSPLATED TO A LOCATION WITHIN 30 FEET OF AN IRRIGATION LINE. IT IS THE RESPONSIBILITY OF THE CONTRACTOR TO PROVIDE ADEQUATE IRRIGATION FOR THE TRANSPLATED TREES. SEE SPECIFICATION SECTION 31 1000.3.5 FOR MORE INFORMATION ON TRANSPLATING.

GENERAL LANDSCAPE AND IRRIGATION NOTES

1. NEW IRRIGATION SHOULD BE PROVIDED FOR ALL TRANSPLATED TREES.
2. EXISTING IRRIGATION LINES THAT ARE DAMAGED DURING CONSTRUCTION SHOULD BE REPAIRED AT THE EXPENSE OF THE CONTRACTOR.
3. IRRIGATION LINE TYPE AND LOCATION SHOULD BE COORDINATED WITH THE DFCM FACILITIES MANAGER.
4. ALL TRENCHING THAT OCCURS AT LANDSCAPED AREAS SHOULD BE TRENCHED, CONDUIT SET, INSPECTED, FILLED AND SOD LAID WITHIN 9 DAYS. THIS WILL ALLOW FOR EXISTING SOD TO BE RE-USED.
5. THE LANDSCAPE SHOULD BE REPLACED IN ALL AREAS WHERE TRENCHING OCCURS SUCH THAT THE TRENCH LOCATION IS NOT NOTICEABLE. THE QUALITY OF LANDSCAPE AND LANDSCAPE MATERIALS SHALL MATCH WHAT WAS IN PLACE PRIOR TO TRENCHING.

GENERAL STORMWATER POLLUTION PREVENTION REQUIREMENTS

1. ALL STORMWATER DRAIN INLET LOCATIONS SHOULD BE PROTECTED FROM CONSTRUCTION DEBRIS AND SEDIMENTATION, PER BEST PRACTICES.
2. ALL SOILS DISTURBED DURING CONSTRUCTION SHOULD BE STABILIZED TO REDUCE EROSION AND CONTROL DUST GENERATION.
3. ESTABLISH PERIMETER CONTROLS AND SEDIMENT BARRIERS AROUND THE PERIMETER OF THE PROJECT SITE TO MINIMIZE DUST AND POLLUTION FROM THE CONSTRUCTION AREA.
4. ESTABLISH STABILIZED CONSTRUCTION ENTRY AND EXIT LOCATIONS TO MINIMIZE CONSTRUCTION DEBRIS OFF SITE.

GENERAL SITE PLAN NOTES

1. CONCRETE PIERS TO BE 3'-0" ABOVE FINISHED GRADE TO PROTECT THE STEEL FROM VEHICULAR IMPACTS. CONCRETE SHOULD ALIGN WITH EXISTING CENTER LIGHT POLE BASE.
2. TREES IN TREE WELLS UNDER OR NEAR SOLAR CANOPIES SHALL BE RELOCATED ON THE PROJECT SITE. COORDINATE NEW TREE LOCATION WITH OWNER.
3. EXISTING CONCRETE TREE WELLS AT SOLAR CANOPY LOCATIONS TO BE DEMOLISHED AS A PART OF THIS PROJECT.
4. ALL EXTERIOR SIDEWALKS, STAIRS AND LANDINGS TO HAVE POSITIVE DRAINAGE BUT NO MORE THAN A MAXIMUM OF 1/4" SLOPE PER FOOT TO ALLOW POSITIVE DRAINAGE. ALL REBAR IN EXTERIOR APPLICATIONS TO BE EPOXY COATED.
6. FINISH GRADE OF SOFTSCAPE SHALL BE 2" UNIFORMLY BELOW PAVING SURFACES UNLESS NOTED OTHERWISE.
7. ALL TOPSOIL SHALL BE STRIPPED, STOCKPILED, PROTECTED & QUANTIFIED PRIOR TO ANY EXCAVATION PROCEDURES TO ENSURE VIABILITY OF TOPSOIL AND AVOID ANY CONTAMINATION. GENERAL CONTRACTOR IS TO INFORM ARCHITECT PROMPTLY IN WRITING OF THE TOTAL AMOUNT OF TOPSOIL STOCKPILED, AND IF THE AMOUNT OF TOPSOIL AVAILABLE IS SUFFICIENT FOR THE INTENDED DISTRIBUTION.

GENERAL NOTES

1. ALL EXPOSED STEEL TO BE PAINTED TO MATCH THE EXISTING LIGHT POLES AND FIXTURES
2. ALL PIER LOCATIONS TO BE VERIFIED ON SITE WITH THE OWNER AND ARCHITECT PRIOR TO EXCAVATION
3. EXISTING UTILITIES EXIST NEAR PIER LOCATIONS. ACCURATE BLUE STAKING IS REQUIRED AND ALL PIER EXCAVATIONS SHOULD BE HYDRO-VACUUMED, PER SPECIFICATIONS TO AVOID IMPACTING UTILITIES.
4. THE CONSTRUCTION SITE SHOULD BE KEPT CLEAN, PER SPECIFICATIONS. ALL WASTE AND EXCAVATION DEBRIS SHOULD BE DISPOSED OF BY THE CONTRACTOR
5. ANY DAMAGE TO SITE OUTSIDE OF CONSTRUCTION LIMIT LINE TO BE REPAIRED OR REPLACED AT CONTRACTORS EXPENSE.

VCBO
ARCHITECTURE
VALENTINER
CRANE
BRUNJES
ONYON

VCBO ARCHITECTURE
524 SOUTH 600 EAST
SALT LAKE CITY, UTAH 84102
Phone: (801) 575-8800
Fax: (801) 531-9850
www: www.vcbo.com

SOLAR PARKING STRUCTURE

UNIFIED STATE LABS
10237390
4431 South 2700 West
Construction Documents

Rev #	Date	Description

Job # 10420
CAD File
Drawn Author Checked Checker
Date 23 March, 2011
Owner # 10237390
Ins. #

OVERALL SITE PLAN

AS101

3/29/2011 3:11:39 PM

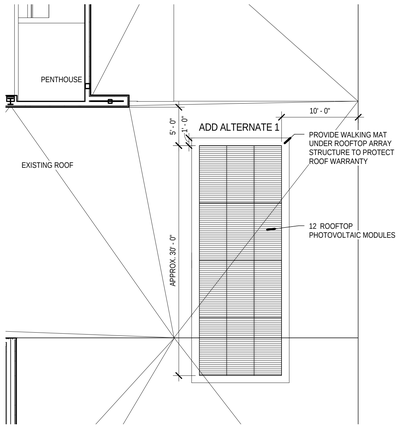

D1 Roof Plan

SCALE: 1/8" = 1'-0"

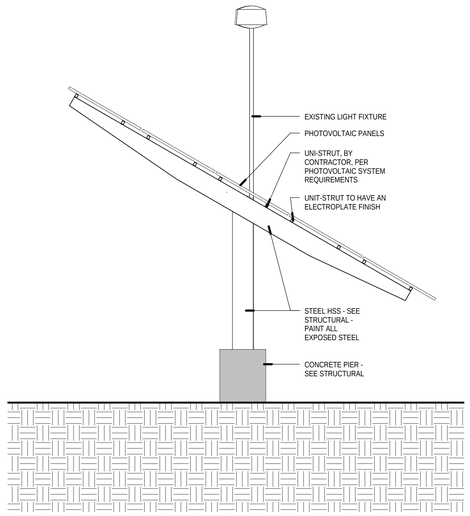

C1 West Elevation

SCALE: 1/4" = 1'-0"

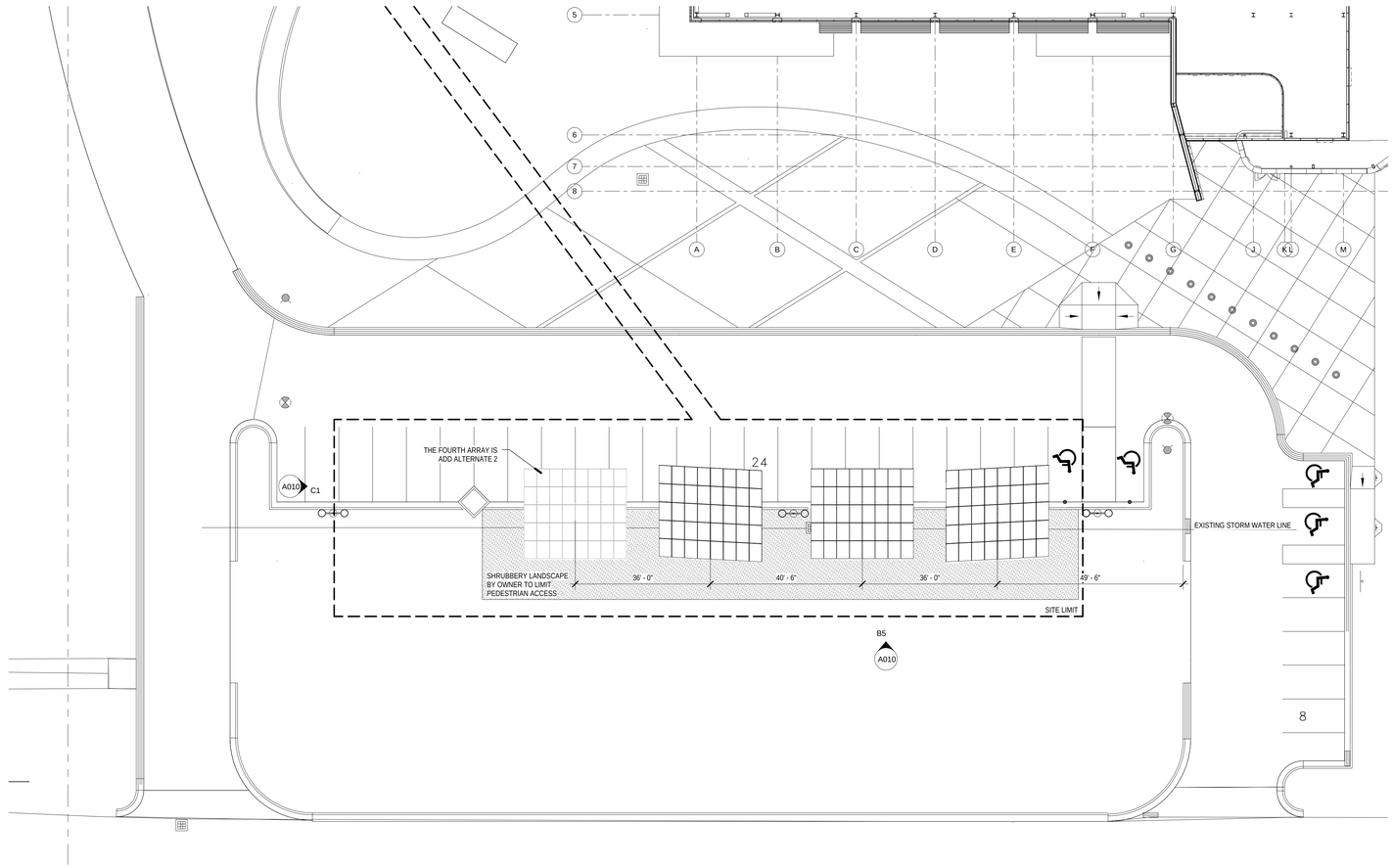

C5 Solar Shade Site Plan

SCALE: 1/16" = 1'-0"

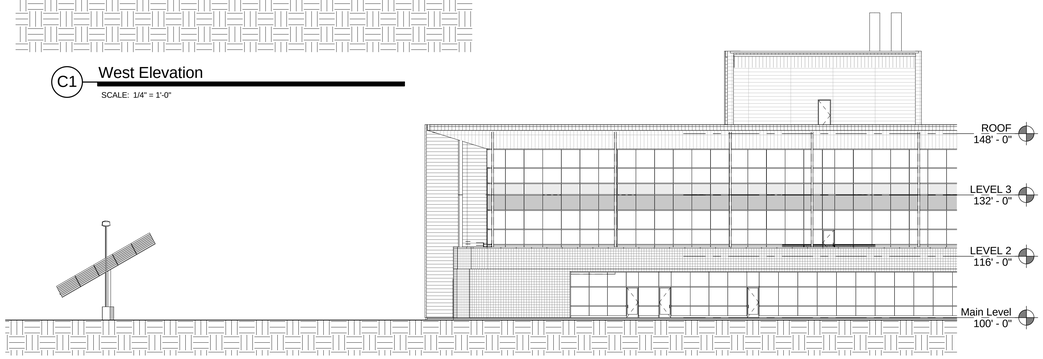

B1 East Elevation

SCALE: 1/16" = 1'-0"

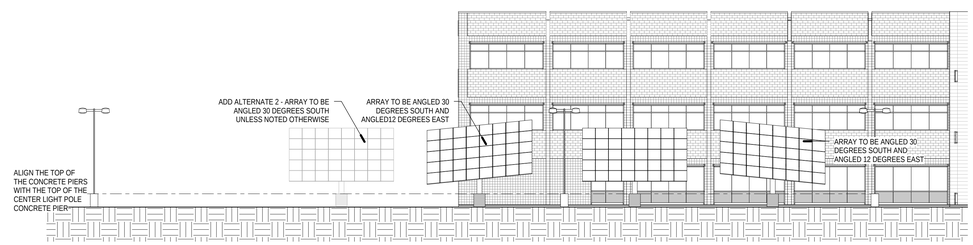

B5 South Elevation

SCALE: 1/16" = 1'-0"

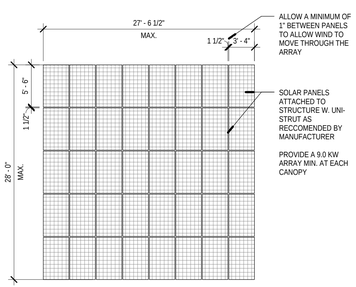

A3 Solar Shade Plan

SCALE: 1/8" = 1'-0"

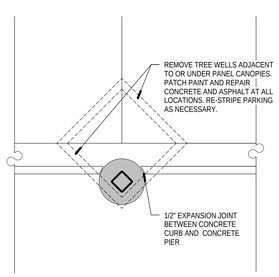

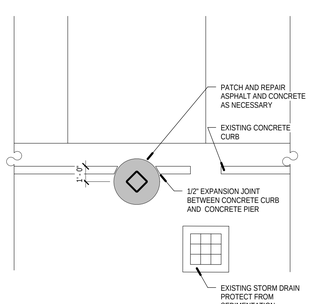

A4 Pier Plan

SCALE: 1/4" = 1'-0"

GENERAL SITE PLAN NOTES

1. CONCRETE PIERS TO BE 3'-0" ABOVE FINISHED GRADE TO PROTECT THE STEEL FROM VEHICULAR IMPACTS. CONCRETE SHOULD ALIGN WITH EXISTING CENTER LIGHT POLE BASE.
2. TREES IN TREE WELLS UNDER OR NEAR SOLAR CANOPIES SHALL BE RELOCATED ON THE PROJECT SITE. COORDINATE NEW TREE LOCATION WITH OWNER.
3. EXISTING CONCRETE TREE WELLS AT SOLAR CANOPY LOCATIONS TO BE DEMOLISHED AS A PART OF THIS PROJECT.
4. ALL EXTERIOR SIDEWALKS, STAIRS AND LANDINGS TO HAVE POSITIVE DRAINAGE BUT NO MORE THAN A MAXIMUM OF 1/4" SLOPE PER FOOT TO ALLOW POSITIVE DRAINAGE. ALL REBAR IN EXTERIOR APPLICATIONS TO BE EPOXY COATED.
6. FINISH GRADE OF SOFTSCAPE SHALL BE 2" UNIFORMLY BELOW PAVING SURFACES UNLESS NOTED OTHERWISE.
7. ALL TOPSOIL SHALL BE STRIPPED, STOCKPILED, PROTECTED & QUANTIFIED PRIOR TO ANY EXCAVATION PROCEEURES TO ENSURE VIABILITY OF TOPSOIL AND AVOID ANY CONTAMINATION. GENERAL CONTRACTOR IS TO INFORM ARCHITECT PROMPTLY IN WRITING OF THE TOTAL AMOUNT OF TOPSOIL STOCKPILED, AND IF THE AMOUNT OF TOPSOIL AVAILABLE IS SUFFICIENT FOR THE INTENDED DISTRIBUTION.

GENERAL NOTES

1. ALL EXPOSED STEEL TO BE PAINTED TO MATCH THE EXISTING LIGHT POLES AND FIXTURES
2. ALL PIER LOCATIONS TO BE VERIFIED ON SITE WITH THE OWNER AND ARCHITECT PRIOR TO EXCAVATION
3. EXISTING UTILITIES EXIST NEAR PIER LOCATIONS. ACCURATE BLUE STAKING IS REQUIRED AND ALL PIER EXCAVATIONS SHOULD BE HYDRO-VACUUMED, PER SPECIFICATIONS TO AVOID IMPACTING UTILITIES.
4. THE CONSTRUCTION SITE SHOULD BE KEPT CLEAN, PER SPECIFICATIONS. ALL WASTE AND EXCAVATION DEBRIS SHOULD BE DISPOSED OF BY THE CONTRACTOR
5. ANY DAMAGE TO SITE OUTSIDE OF CONSTRUCTION LIMIT LINE TO BE REPAIRED OR REPLACED AT CONTRACTORS EXPENSE.

VCBO
ARCHITECTURE
VALENTINER
CRANE
BRUNJES
ONYON

VCBO ARCHITECTURE
524 SOUTH 600 EAST
SALT LAKE CITY, UTAH 84102
Phone: (801) 575-8800
Fax: (801) 531-9850
www: www.vcbo.com

SOLAR PARKING STRUCTURE

UNIFIED STATE LABS
10237390
4431 South 2700 West
Construction Documents

Rev #	Date	Description

Job # 10420
CAD File
Drawn Author Checked Checker
Date 23 March, 2011
Owner # 10237390
Ins. #

SITE SOLAR ARRAY

A010

3/29/2011 3:11:37 PM

GENERAL STRUCTURAL NOTES

GENERAL

1. The structural notes are intended to complement the project specifications. Specific notes and details in the drawings shall govern over the structural notes and typical details.
2. Typical details and sections shall apply where specific details are not shown.
3. The contractor shall verify all site conditions and dimensions. If actual conditions differ from those shown in the contract drawings, the contractor shall immediately notify the architect/engineer before proceeding with the fabrication or construction of any affected elements.
4. Changes to these contract drawings may be made only by an authorized representative of Dunn Associates, Inc. Dunn Associates, Inc. shall not be held responsible or liable for any claims arising directly or indirectly from changes made without written authorization by an authorized representative of Dunn Associates, Inc.
5. Omissions or conflicts between the contract drawings and/or specifications shall be brought to the attention of the architect/engineer before proceeding with any work involved. In case of conflict, follow the most stringent requirement as directed by the architect/engineer at no additional cost to the owner.
6. The contractor shall submit a written request to the architect/engineer before proceeding with any changes, substitutions, or modifications. Any work done by the contractor before receiving written approval will be at the contractor's risk.
7. The contractor shall coordinate with all trades any items that are to be integrated into the structural system such as openings, penetrations, mechanical and electrical equipment, etc. Sizes and locations of mechanical and other equipment that differs from those shown on the contract drawings shall be reported to the architect/engineer.
8. The contractor shall be responsible for means, methods, techniques, sequences, and procedures in order to comply with the contract drawings and specifications. The contractor shall provide adequate shoring and bracing as required for the chosen method of erection. Shoring and bracing shall remain in place until final connections for the permanent members are completed. The building shall not be considered stable until all connections are completed.
9. Site observations by a field representative of Dunn Associates, Inc. shall not be construed as approval of construction, the procedures, nor special inspection.
10. Detailing and shop drawing production for structural elements will require information (including dimensions) contained in the architectural, structural and/or other consultants' drawings. The structural drawings shall be used in conjunction with the architectural and other consultant's drawings.
11. The Contractor may choose to submit shop drawings and submittals for review electronically. The Contractor may do this provided a minimum of one hard copy set is submitted for review. The submittal will be stamped as received by Dunn Associates, Inc. when the hard copy is received by our office. Hard copies of small submittals need not be submitted if the Contractor receives the approval for this exception by the Engineer of Record.
12. Review of shop drawing submittals by Dunn Associates, Inc. is for general compliance only and is not intended for approval. The shop drawing review shall not relieve the contractor from the responsibility of completing the project according to the contract documents.
13. Shop drawings made from reproductions of the structural drawings will be rejected unless the contractor signs a release agreement prior to the shop drawings being reviewed. The contractor may also obtain electronic files of the plan sheets after signing a release agreement. Electronic files of the detail sheets and schedule sheets will not be made available.
14. All work shall be done in accordance with OSHA requirements. Potential conflicts between these documents and OSHA requirements shall be brought to the attention of the structural engineer before proceeding with the work.

BASIS OF DESIGN

1.	Governing Building Code	International Building Code 2009
2.	Occupancy Category	II
3.	Roof Live Load (Not concurrent with Roof Snow Load)	20 psf
4.	Roof Snow Load	
4.1.	Ground Snow Load	Pg = 43 psf
4.2.	Flat Roof Snow Load	Pf = 36 psf
4.3.	Snow Exposure Factor	Ce = 1.0
4.4.	Thermal Factor	Ct = 1.2
4.5.	Roof Slope Factor	Cs=0.8
4.6.	Snow Load Importance Factor	Is = 1.0
5.	Wind Load	
5.1.	Basic Wind Speed (3 Second Gust)	90 mph
5.2.	Wind Importance Factor	1.00
5.3.	Wind Exposure	C
5.4.	Internal Pressure Coefficient	± 0.18
6.	Seismic Design Criteria	
6.1.	Mapped Spectral Response Accelerations	
6.1.1.	Short Period Acceleration	SS = 1.52
6.1.2.	1-Second Acceleration	S1 = 0.60
6.2.	Spectral Response Coefficients	
6.2.1.	Short Period Acceleration	SDS = 1.016
6.2.2.	1-Second Acceleration	SD1 = 0.600
6.2.	Site Class (Soil Profile)	D
6.3.	Seismic Importance Factor	1.0
6.4.	Seismic Design Category	D
6.5.	Effective Structural Seismic Weight	W
6.6.	Basic Seismic Force Resisting System	Cantilevered Steel Column (Sign or Billboard)
6.6.1.	Component Amplification Factor	Ap=2.5
6.6.2.	Component Response Modification Factor	Rp=2.5
6.6.3.	Design Base Shear	V = Cs*W = 0.406Wp
6.7.	Analysis Procedure	Equivalent Lateral Force

FOUNDATION

1.	Soils Report by:	GSH Geotechnical Consultants, Inc.
2.	Report Number & Date:	0066-014-10
3.	Soil Bearing Pressure:	4000 psf, for piers deeper than 15'-6"
4.	Pier Skin Friction:	650 psf
5.	The soils engineer shall review all excavations and fill placement prior to placing concrete.	

EARTHWORK

1. Consult the project specifications and soils report for earthwork requirements.

CONCRETE

1. Concrete shall be supplied in accordance with the following requirements:

Concrete Use	Comp. Strength f'c (psi)	Exposure Classes	Cement Type[a]	Max. W/CM Ratio	Max. Flyash	Air Content[b]	Aggregate Size, Max.	Slump Limit[c]
Exterior Footings	5000	F1, S0, P0, C0	I, II	0.45	25%	5%	1 1/2"	4"
All Site Concrete (curb, gutter and sidewalk)	5000	F3, S0, P0, C2	I, II	0.40	25%	6%	3/4"	4"
Site Retaining Walls								

Table Footnotes:

a. Cement to comply with ASTM C150. Use Type V cement where required by soils report.
b. Air content ± 1.5%, measured at point of final placement. Air-entraining admixtures shall comply with ASTM C260 (when used). Calcium chloride shall not be added to the concrete mix. Unreinforced concrete slabs on grade may have calcium chloride not exceeding one percent. Air entrainment shall be adjusted for the use of admixtures and fly ash.
c. Slump limit ± 1" applies to non-plasticized concrete. Test shall be conducted prior to adding plasticizer if used.

2. Materials unless noted otherwise:
   - 2.1. Normal Weight aggregates — ASTM C33
   - 2.2. Fly Ash, Class F Pozzolan — ASTM C618
   - 2.3. Reinforcing Steel
     - 2.3.1. General — ASTM 615 Grade 60-60ksi
   - 2.4. Anchor Bolts: See steel of general notes.
   - 2.5. No aluminum conduit or product containing aluminum or any other material injurious to concrete shall be embedded in concrete.
3. The contractor shall be responsible for the design, detailing, care, placement and removal of all formwork and shores.
   - 3.1. Supporting forms and shoring shall not be removed until structural members have acquired sufficient strength to safely support their own weight and any construction load to which they may be subjected. In no case, however, shall forms and shoring be removed in less than 24 hours after concrete placement.
4. Reinforcement shall have the following concrete cover: — Clear Cover
   - 4.1. Cast-in-place Concrete
     - 4.1.1. Cast against and permanently exposed to earth — 3"
     - 4.1.2. Formed concrete exposed to earth or weather:
     - 4.1.3. #6 thru #18 bars — 2"
     - 4.1.4. #5 and smaller bars — 1 1/2"
5. Construction
   - 5.1. Use chairs or other support devices recommended by the CRSI to support bar and tie reinforcement bars.
   - 5.2. Contractor shall coordinate placement of all openings, curbs, dowels, sleeves, conduits, bolts, inserts and other embedded items prior to concrete placement.
   - 5.3. All embeds and dowels shall be securely tied to formwork or to adjacent reinforcing prior to the placement of concrete.
   - 5.4. No pipes, ducts, sleeves, etc. shall be placed in structural concrete unless specifically detailed or approved by the structural engineer. Penetrations through walls when approved shall be built into the wall prior to concrete placement. Penetrations will not be allowed in footings or grade beams unless detailed. Piping shall be routed around these elements and footings stepped to avoid piping.
   - 5.5. Reinforcing bars shall not be welded. Do not substitute reinforcing bars for DBAs or HSAs.
6. Detailing:
   - 6.1. Lap splice lengths shall be per industry standards.
     - 6.1.1. Do not splice stirrups and ties.
     - 6.1.2. Splices may be made with mechanical splices capable of 125% tension capacity of the bar being spliced. Mechanical splices shall be the positive connecting type coupler and shall meet all ACI requirements. Use "Cadweld", "Lenton" Standard Couplers, "Bar-Lock" or equal with internal protector. If mechanical splices are used, splices or couplers on adjacent bars shall be staggered a minimum of 24" apart along the longitudinal axis of the reinforcing bars.
   - 6.2. Contractor required to submit concrete mix design for review by the engineer prior to any placement of concrete.

POST-INSTALLED ANCHORS

1. Post-installed anchors shall only be used where specifically detailed or called for on the design drawings. If circumstances arise during construction where the Contractor desires to substitute a post-installed anchor in place of a cast-in-place anchor, the Contractor shall submit a formal written request for each circumstance to the Architect and Engineer for review.
2. Follow all ICC Evaluation Report and manufacturers' requirements and recommendations for post-installed anchor installation. Where conflicts may exist, the most stringent requirement applies.
3. Follow manufacturer and ICC evaluation report requirements for installation temperature of adhesive anchors. Adhesive anchors shall not be installed or cured outside of approved temperature ranges.
   - 3.1. Adhesive anchors in concrete (normal weight only) shall be
     - 3.1.1. HIT RE-500 SD by Hilti (ESR-2322)
     - 3.1.2. HIT HY-150 MAX-SD by Hilti (ESR-3013)
     - 3.2.3. SET-XP by Simpson (ESR-2508)
     - 3.2.4. PE1000+ by Powers Fasteners (ESR-2583) - 1/2" to 7/8" diameter only
4. The Contractor may submit, for review and approval, the manufacturer's ICC evaluation report of alternate anchor systems. The alternate method shall provide minimum capacities equal to or greater than those in the above noted anchors. The alternate method shall be approved by the engineer of record prior to the substitution.
5. Special Inspection and Testing
   - 5.1. Special inspection shall be performed according to the requirements of the ICC evaluation report, per section 1704.13 of the IBC. Periodic inspection is allowed for mechanical anchors per section 6.6 of ICC-ES AC193.

STRUCTURAL STEEL

1. Codes and Standards: Fabrication and installation shall comply with the latest edition of the following:
   - 1.1. American Institute of Steel Construction (AISC), "Specification for the Design, Fabrication and Erection of Structural Steel for Buildings," with "Commentary".
   - 1.2. AISC "Code of Standard Practice" excluding sections 3.4. 4.4 and 4.4.1.
   - 1.3. AISC "Specification for Structural Joints Using ASTM A325 or A490 Bolts"
   - 1.4. AISC "Seismic Provisions for Structural Steel Buildings."
   - 1.5. American Welding Society (AWS). Structural Welding Codes D1.1, D1.3, D1.4, and D1.8, except as modified by the "Steel Construction Manual".
2. Material:
   - 2.1. Wide Flange Sections — ASTM A992 (50 ksi)
   - 2.2. Plate
     - 2.2.1. Typical — ASTM A36
   - 2.3. Hollow Structural Shapes
     - 2.3.1. Rectangular — ASTM A500 Grade B (46 ksi)
     - 2.3.2. Round — ASTM A500 Grade B (42 ksi)
   - 2.4. Other Structural Shapes (M, C, etc) — ASTM A36
   - 2.5. Bolted Connections — ASTM A325
   - 2.6. Anchor Bolts
     - 2.6.1. All Columns unless noted otherwise: ASTM F1554 Grade 36 (Fu=120 ksi) with ASTM A563 heavy hex nuts with Grade A hardened washers.
     - 2.6.2. Weld Filler Metal
     - 2.6.1. Shielded Metal Arc Welding — AWS A5.1, low-hydrogen only
     - 2.6.2. Gas-Metal & Metal-Cored Arc Welding — AWS A5.18
     - 2.6.3. Flux-Cored Arc Welding — AWS A5.20
       E7XT-4 or E7XT-11 electrodes are not permitted.
   - 2.7. Headed Stud Anchors (HSA) — ASTM A108
   - 2.8. Non-Shrink Grout — ASTM C1107 Grade B
     Non-shrink grout shall be prepackaged, non-metallic and non-gaseous.
     Furnish certified independent test data to Structural Engineer.
     Fluid Consistency (flow cone) = 20 to 30 seconds
     Compressive Strength in 28 days = 7,500 psi
3. Structural Detailing
   - 3.1. Bolting and Fasteners
     - 3.1.1. Fasteners and washers shall not be reused. Scrap dirty, rusted, or water-contaminated bolt assemblies.
   - 3.2. Weld Access Holes and Temporary Attachments
     - 3.2.1. Fabricate beam copes and weld access holes using the geometry described in AISC 360 Section J1.6.
     - 3.2.2. Runoff tabs are to be removed unless noted otherwise.
   - 3.3. Backup Bars: Remove backup bars from all beam bottom flange connections in demand critical welds, unless noted otherwise. Backgouge the root and weld fo sound metal. Reweld the gouged area and add a 5/16" reinforcing fillet weld.
   - 3.4. Field weld symbols indicate welds that may be performed in the field. The general contractor shall coordinate shop and field welds between the fabricator and erector.

SPECIAL INSPECTION REQUIREMENTS

1. Seismic/Wind-force-resisting systems:
   - 1.1. Steel cantilevered columns

   See specific discipline drawings for additional designated seismic systems requiring special inspection which are not contained in the structural drawings.
2. Special inspection and testing as required by the IBC shall be provided by an independent agency employed by the owner unless waived by the building official. The contractor shall coordinate and cooperate with the required inspections/tests as indicated below, referring to the IBC section indicated as appropriate.
3. Special inspection reports from the inspector shall be sent to the architect/engineer and building official.
   - 3.1. Bring any discrepancies to the contractor's immediate attention.
   - 3.2. Notify the engineer of any non-passing work that the contractor cannot readily correct.
   - 3.3. Any uncorrected discrepancies shall be brought to the attention of the architect/engineer and building official prior to completion of that phase of the work.
   - 3.4. A final report documenting required special inspections and corrections of any discrepancies shall be provided.
4. Quality Control Submittals for Structural Steel
   - 4.1. Furnish Level III nondestructive testing (NDT) personnel certifications.
   - 4.2. Furnish welder qualification records to verify project welders are tested and qualified in accordance with AWS D1.1 before welding structural or miscellaneous steels, D1.3 before welding sheet steels (10 ga and thinner), and D1.4 before welding reinforcing steel. Submit documentation to the approved inspection agency for review before welding.
   - 4.3. Furnish welding procedures that comply with AWS D1.1, D1.3, D1.4, D1.8, as required by the project. Welding procedures shall be made available to welders and inspectors.
     - 4.3.1. Furnish weld filler metal product data sheets identifying optimum welding parameters and storage conditions with each welding procedure submittal.
     - 4.3.2. Identify the maximum welding heat input per inch of weld (KJ/in) permitted by the welding procedures.
     - 4.3.3. Identify the maximum deposition rate that will be used while welding on any demand critical weld.
     - 4.3.4. Furnish typical welding filler metal Certificates of Conformance that identify the WPS Heat Input Envelope.
   - 4.4. Provide bolt storage and installation procedures to the approved inspection agency for review.
   - 4.5. Provide mill/material test reports (MTR) or certificates of conformance (CofC) that verify compliance of furnished materials to the requirements of the approved contract documents. MTRs or CofCs are required for structural shapes, plate, metal deck, fasteners, headed studs, DBAs, weld filler metal, and bolt assemblies used as primary, load-bearing members. Maintain the heat number traceability of structural shapes and plate used as primary, load bearing members.
5. Special Inspectors
   - 5.1. Special inspectors shall be qualified persons who shall demonstrate competence, to the satisfaction of the building official, for inspection of the particular type of construction or operation requiring special inspection.
   - 5.2. Structural Steel Non-Destructive Testing (NDT)
     - 5.2.1. NDT personnel will:
       - 5.2.1.1. Qualify in accordance with the recommended practices of the American Society of Nondestructive Testing, SNT-TC-1A, latest edition.
       - 5.2.1.2. Pass eye examinations meeting: (1) ASTM requirements at least once a year, and (2) AWS D1.1 every three years.
       - 5.2.1.3. Be certified in accordance with the AWS QC-1, latest edition.
       - 5.2.1.4. Level III must be qualified by ASNT testing in the applicable method under review.
     - 5.2.2. Only Level II and Level III technicians, qualified by testing in the applicable method, are permitted to interpret nondestructive testing results.
     - 5.2.3. Only Senior Certified or Certified Welding Inspectors (SCWI, CWI) are permitted to evaluate welds. Certified Associate Welding Inspectors may evaluate welds when under the direct supervision of a SCWI and/or CWI.
   - 5.3. Approved Inspection Agency will certify the following:
     - 5.3.1. Level III inspector has reviewed the NDT procedures
     - 5.3.2. Project ultrasonic testing technicians, testing demand critical welds, are trained and qualified in accordance with AWS D1.8, Annex E
     - 5.3.3. That the Inspection Agencies' ultrasonic testing procedures are qualified by weld mockups similar to AWS D1.1, Annex S
6. Section 1704: Special Inspections
   - 6.1. Fabricators (1704.2): All offsite fabrication of structural Steel members shall be special inspected as required by the IBC, except work performed by fabricators registered and approved to perform work without special inspection. Approved fabricators shall submit a certificate of compliance to building official at the completion of fabrication. All fabricators shall be on the DFCM approved fabricator list.
   - 6.2. Steel (1704.3): Special inspection is required during the fabrication of any load-bearing members and assemblies, unless the fabricator and/or erector demonstrate prior approval by the jurisdiction where fabricated steel will be installed.
     - 6.2.1. Perform all welding and welding special inspection activities in accordance with AWS D1.1, D1.3, D1.4, and D1.8 as appropriate for the material form and welding methods employed. Approved methods and acceptance criteria are established in these codes.
     - 6.2.2. Perform all bolting and bolting inspection in accordance with AISC Specification for Structural Joints Using A325 and A490 Bolts.
     - 6.2.3. Continuous Special Inspection of welding is required for:
       - 6.2.3.1. Complete and partial penetration welds, except flare-bevel groove welds
       - 6.2.3.2. Multi-pass fillet welds
       - 6.2.3.3. Single-pass fillet welds larger than 5/16"
     - 6.2.4. Periodic Special Inspection of welding is required for (Inspect 25% of welds while welding operations are taking place):
       - 6.2.4.1. Single-pass fillet welds equal to or smaller than 5/16"
     - 6.2.5. Periodic Special Inspection of all bolts is required as follows:
       - 6.2.5.1. Verify the proper grade of fasteners are installed where indicated in the approved construction drawings.
       - 6.2.5.2. Verify the storage and cleanliness of high strength fasteners meets AISC requirements.
       - 6.2.5.3. Store fasteners in protected storage until released for use. Temperature control is not required. Do not use fastener components showing rust, dirt, or grit. Cleaning or modifying fastener components from the as-delivered condition is not permitted.
       - 6.2.5.4. Verify the faying surfaces have been brought into firm contact, the bolts are in a snug tight condition, and that washers have been used as required.
     - 6.2.6. Non-Destructive Testing (NDT) of Welds is required as follows:
       - 6.2.6.1. Fabricators will visually inspect all welds for conformance to the approved construction drawings before releasing items for installation.
       - 6.2.6.2. Test all complete joint penetration welds joining primary structural members 5/16" or thicker, by radiographic or ultrasonic testing. Test in accordance with AWS D1.1, Section 6.
       - 6.2.6.3. Ultrasonically test base metal thicker than 1 1/2" for material discontinuities when that material is subjected to through-thickness weld shrinkage strains. (e.g. column flange of the beam-to-column, or column to base plate, complete joint penetration welds)
       - 6.2.6.4. Magnetic Particle Test is required for the following items:
         - 6.2.6.4.1. 25% of all beam-to-column complete joint penetration welds
         - 6.2.6.4.2. Beam copes and weld access holes made in rolled shapes with flange thickness greater than 1 1/2" or in built-up shapes with webs thicker than 1 1/2"
         - 6.2.6.4.3. Weld tab removal sites.
       - 6.2.6.5. Amount of NDT is permitted to be reduced according to AISC 341, Appendix Q5.2(g) and (h) if appropriate criteria are met and if approved by the building official and engineer of record.
   - 6.3. Concrete (1704.4): Concrete construction shall be special inspected according to Table 1704.4. In the absence of sufficient data or documentation showing conformance to quality standards for materials, testing shall be required to determine material properties under the direction of the building official according to Chapter 3 of ACI 318.
   - 6.4. Soils (1704.7): Existing site soil conditions, fill placement and procedure and load-bearing requirements shall be special inspected to verify compliance with the approved soils report and Table 1704.7. Where total depth of controlled fill is 12" or less, the special inspector shall verify that the in-place dry density of the compacted fill is not less than the 90% of the maximum dry density at optimum moisture content according to ASTM D 1557.
   - 6.5. Cast-in-place foundations (1704.9): Special inspections shall be performed during installation and testing to verify compliance with the approved soils report and Table 1704.9.
   - 6.6. Special Cases (1704.15): Special inspect all post-installed anchors per ICC report.
7. Section 1707: Special Inspections for Seismic Resistance
   - 7.1. Structural steel (1707.2): See special inspections for steel above.
   - 7.2. See specific discipline drawings for anchorage of architectural components (1707.6), and mechanical/electrical components (1707.7).
8. Section 1708: Structural Testing for Seismic Resistance
   - 8.1. Structural steel (1708.3): See special inspections for steel above.
   - 8.2. See manufacturer's seismic certification of compliance for non-structural components.
9. Structural Observations for Seismic Resistance: Contractor shall notify the engineer at least 2 days prior to the following stages of construction so the engineer may have the opportunity to review the work. Observation reports shall be sent to architect, contractor and building official.
   - 9.1. Initial placing of any concrete.
   - 9.2. Initial erection of structural steel.

Drawing List

Sheet Number	Sheet Name
S101	GENERAL STRUCTURAL NOTES
S201	PIER AND FRAMING PLAN AND DETAILS

March 29, 2011
CONSTRUCTION SET

NOTE:
THESE STRUCTURAL DRAWINGS ARE BASED ON ARCHITECTURAL DRAWINGS DATED 03.23.2011

DIMENSIONS AND ELEVATIONS, AS THEY RELATE TO THE BUILDING IN GENERAL, i.e. GRID TO GRID DIMENSIONS OR DECK BEARING ELEVATIONS, ARE SUPPLIED BY THE ARCHITECT. THEY ARE PROVIDED ON THE STRUCTURAL PLANS AND DETAILS FOR THE CONVENIENCE OF THE CONTRACTOR. VERIFY DIMENSIONS AND ELEVATIONS WITH ARCHITECTURAL DRAWINGS.

DUNN
DUNN ASSOCIATES, INC
Consulting Structural Engineers
EMAIL: ENG@DUNN-SE.COM
PH: 801-575-8877 FAX: 801-575-8875

This drawing, as an instrument of professional service, is the property of DUNN ASSOCIATES INC., and shall not be used, in whole or part for any other project without the written permission of an authorized representative of DUNN ASSOCIATES INC. Unauthorized use will be prosecuted to the fullest extent of the law. Copyright © 2009 by DUNN ASSOCIATES INC.

VCBO
ARCHITECTURE
VALENTINER
CRANE
BRUNJES
ONYON

VCBO ARCHITECTURE
524 SOUTH 600 EAST
SALT LAKE CITY, UTAH 84102
Phone: (801) 575-8800
Fax: (801) 531-9850
WWW: www.vcbo.com

SOLAR PARKING STRUCTURE
UNIFIED STATE LABS
4431 SOUTH 2700 WEST, TAYLORSVILLE, UT
CONSTRUCTION SET

Rev #	Date	Description

Dunn Project #: 10128
Drawn By: Clayton E. Coster
Design By: Chris Olson
Review By: Curtis Earl
Client Project #:
Date: March 29, 2011

GENERAL STRUCTURAL NOTES

S101

3/29/2011 10:53:08 AM

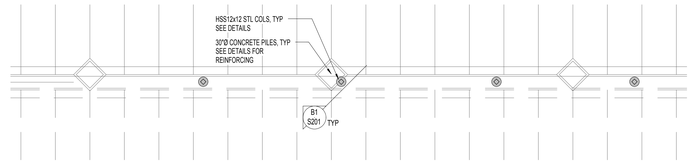

E3 / S201 SOLAR SHADES SITE PLAN - FOOTING AND FOUNDATION PLAN
SCALE: 1/16" = 1'-0"

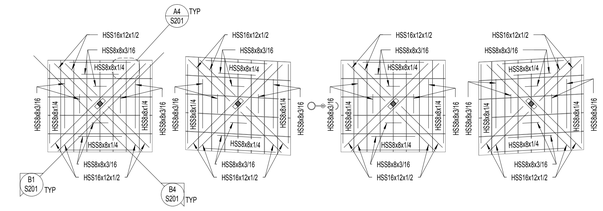

E5 / S201 PANEL SUPPORT FRAMING PLANS
SCALE: 1/16" = 1'-0"

PLAN NOTES:

1. SEE ARCHITECTURAL DRAWINGS AND CIVIL DRAWINGS FOR EXTERIOR CONCRETE WORK AT, SIDEWALKS, CURBS, ETC.
2. CENTER ALL PILES UNDER COLUMNS AS SHOWN ON PLAN, TYPICAL UNO.
3. SEE ARCHITECTURAL DRAWINGS FOR DIMENSIONS TO ALL STEEL COLUMNS SUPPORTING SOLAR PANELS.
4. CONCRETE FOR THE DRILLED PIERS IS TO BE TREMMIED OR PUMPED SO THAT IT DOES NOT FREE FALL MORE THAN 3'-0".
5. MAXIMUM PERMISSIBLE WEIGHT OF SOLAR ARRAYS, SUPPORT AND ATTACHMENTS IS 7 psf. VERIFY WITH STRUCTURAL ENGINEER PRIOR TO INSTALLATION.

MARKS AND SYMBOL LEGEND

- SECTION MARK / SHEET NUMBER
- CONCRETE PILE
- STEEL COLUMN SUPPORTING SOLAR PANEL

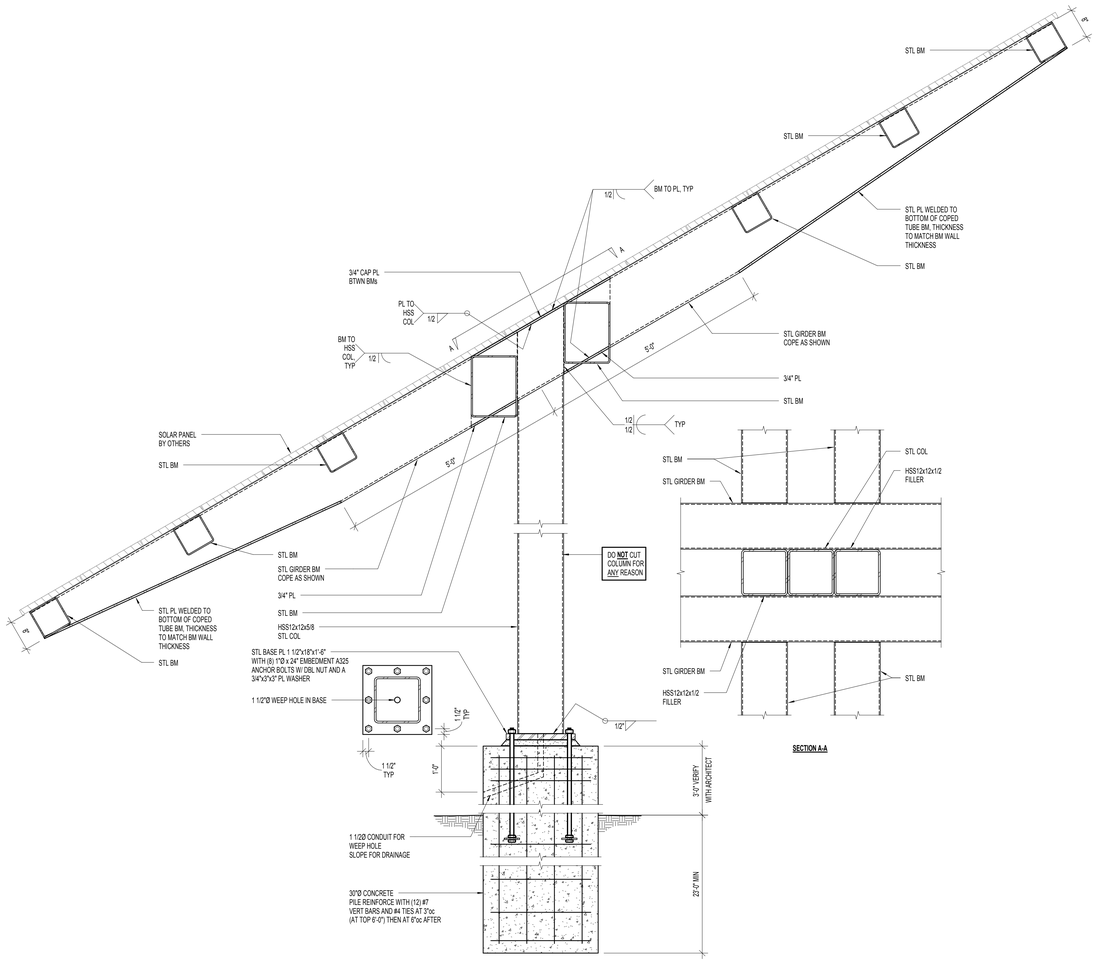

B1 / S201 DETAIL AT SOLAR PANEL POST
NO SCALE:

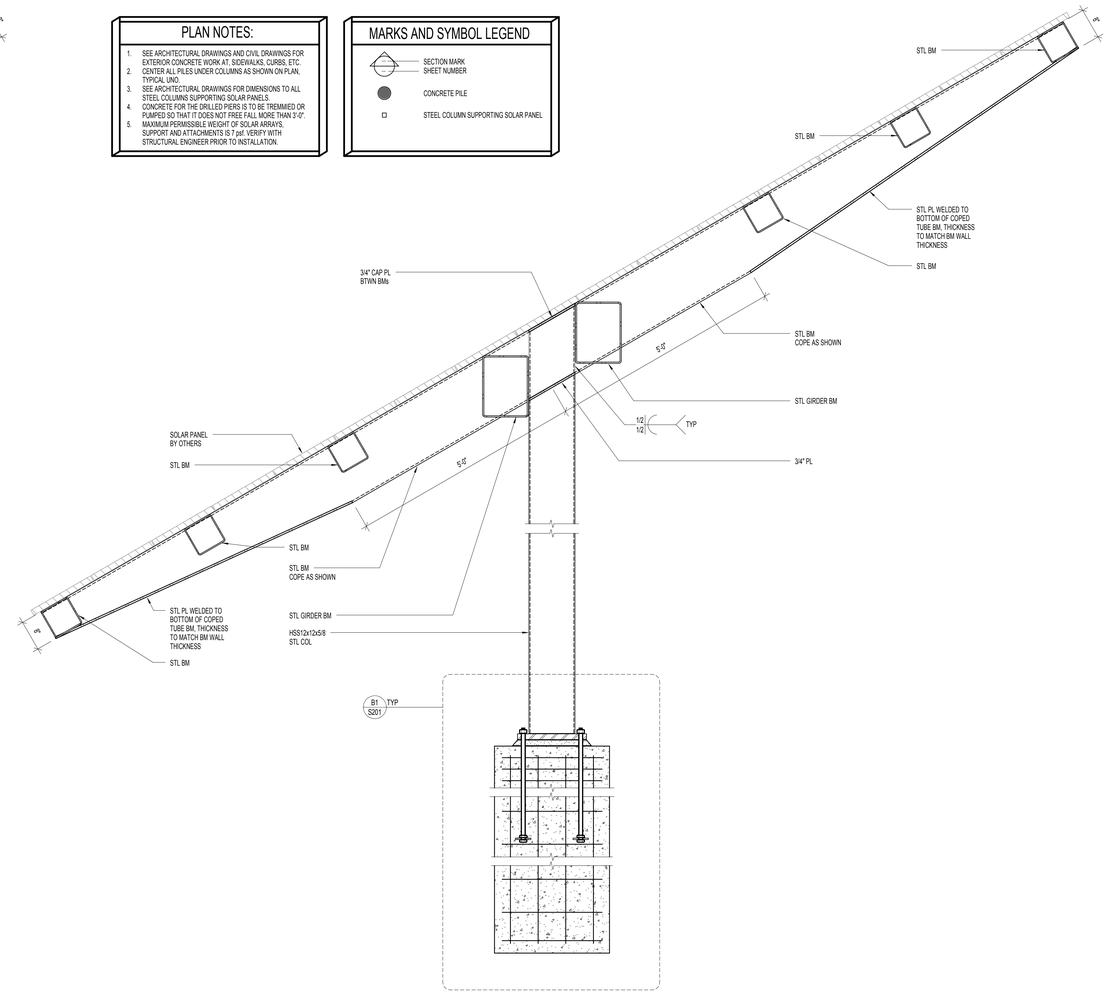

B4 / S201 DETAIL AT SOLAR PANEL POST
NO SCALE:

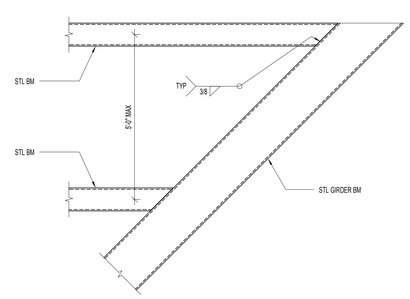

A4 / S201 SOLAR PANEL SUPPORT FRAME CONNECTION DETAIL
NO SCALE:

March 29, 2011
CONSTRUCTION SET

NOTE:
THESE STRUCTURAL DRAWINGS ARE BASED ON ARCHITECTURAL DRAWINGS DATED 03.23.2011

DIMENSIONS AND ELEVATIONS, AS THEY RELATE TO THE BUILDING IN GENERAL, i.e. GRID TO GRID DIMENSIONS OR DECK BEARING ELEVATIONS, ARE SUPPLIED BY THE ARCHITECT. THEY ARE PROVIDED ON THE STRUCTURAL PLANS AND DETAILS FOR THE CONVENIENCE OF THE CONTRACTOR. VERIFY DIMENSIONS AND ELEVATIONS WITH ARCHITECTURAL DRAWINGS.

DUNN ASSOCIATES, INC
Consulting Structural Engineers
EMAIL: ENG@DUNN-SE.COM
PH: 801-575-8877 FAX: 801-575-8875

VCBO
ARCHITECTURE
VALENTINER
CRANE
BRUNJES
ONYON

VCBO ARCHITECTURE
524 SOUTH 600 EAST
SALT LAKE CITY, UTAH 84102
Phone: (801) 575-8800
Fax: (801) 531-9850
www: www.vcbo.com

This drawing, as an instrument of professional service, is the property of DUNN ASSOCIATES INC, and shall not be used, in whole or part for any other project without the written permission of an authorized representative of DUNN ASSOCIATES INC. Unauthorized use will be prosecuted to the fullest extent of the law. Copyright © 2009 by DUNN ASSOCIATES INC.

SOLAR PARKING STRUCTURE
UNIFIED STATE LABS
4431 SOUTH 2700 WEST, TAYLORSVILLE, UT
CONSTRUCTION SET

Rev #	Date	Description

Dunn Project #: 10128
Drawn By: Clayton E. Coster
Design By: Chris Olson
Review By: Curtis Earl
Client Project #:
Date: March 29, 2011

PIER AND FRAMING PLAN AND DETAILS

S201

3/29/2011 10:53:09 AM

SYMBOL LEGEND

SYMBOL	DESCRIPTION
REFERENCE AND LINE SYMBOLS	
A5 / E-501	DETAIL INDICATOR: A5 INDICATES DETAIL NUMBER, E-501 INDICATES DRAWING SHEET WHERE DETAIL IS SHOWN.
1	KEYNOTE INDICATOR.
1	REVISION INDICATOR.
CU-1	EQUIPMENT INDICATOR.
	BREAK, STRAIGHT: TO BREAK PARTS OF DRAWING.
	BREAK, ROUND.
	NEW LINE: MEDIUM LINE.
	HIDDEN FEATURES LINE: HIDDEN, THIN LINE.
	EXISTING TO REMAIN LINE: THIN LINE.
	DEMOLITION LINE: DASHED, MEDIUM LINE.
WIRING METHODS	
	WIRING.
	WIRING TURNED UP OR TOWARDS OBSERVER.
1 A-1,3,5	BRANCH CIRCUIT HOME RUN TO PANELBOARD: NUMBER OF ARROWS INDICATES NUMBER OF CIRCUITS. LETTER AND NUMBER NOTATIONS IDENTIFY PANEL AND CIRCUIT NUMBERS. NUMBER IN BOX REFERS TO THE CONDUCTOR AND CONDUIT SCHEDULE. FOR BRANCH WIRING USE #12 CONDUCTORS, EXCEPT #10 CONDUCTORS SHALL BE INSTALLED IF DISTANCES EXCEED THOSE SPECIFIED IN THE ELECTRICAL SPECIFICATIONS.
	CONDUIT STUB. DIMENSION RECORD DRAWINGS AND MARK.
	JUNCTION BOX.
JB1	IN GROUND JUNCTION BOX SEE DETAILS.
	EARTH GROUND (ONE-LINE DIAGRAM).
ELECTRICAL POWER AND DISTRIBUTION	
	CIRCUIT BREAKER, MOLDED CASE (ONE-LINE DIAGRAM).
225/3 "1H"	PANELBOARD WITH MAIN CIRCUIT BREAKER. SIZE AND PHASE AS SHOWN (ONE-LINE DIAGRAM).
225/3 "1H" 60/3	PANELBOARD WITH MAIN AND SUB FEED CIRCUIT BREAKER (ONE-LINE DIAGRAM).
M	METER.
	DISCONNECT SWITCH, FUSED.
	DISCONNECT SWITCH, UNFUSED.
	PANELBOARD CABINET, SURFACE MOUNTED, 1 SECTION.
PV SYSTEM	
	PHOTOVOLTAIC MODULE
	PHOTOVOLTAIC SYSTEM INVERTER.

ABBREVIATIONS

NOTE: ALL ABBREVIATIONS MAY NOT BE USED.

1P	SINGLE POLE	KV	KILOVOLT
1PH	SINGLE-PHASE	KVA	KILOVOLT AMPERE
1WAY	ONE-WAY	kVAR	KILOVOLT AMPERE REACTIVE
2/C	TWO-CONDUCTOR	kW	KILOWATT
2WAY	TWO-WAY	kWh	KILOWATT HOUR
3/C	THREE-CONDUCTOR	LED	LIGHT EMITTING DIODE
3PH	THREE-PHASE	LFMC	LIQUID TIGHT FLEXIBLE METAL CONDUIT
3WAY	THREE-WAY	LFNC	LIQUID TIGHT FLEXIBLE NONMETALLIC CONDUIT
4OUT	QUADRUPLE RECEPTACLE OUTLET	LPS	LOW PRESSURE SODIUM
4PDT	FOUR-POLE DOUBLE THROW	LRA	LOCKED ROTOR AMPS
4PST	FOUR-POLE SINGLE THROW	LTG	LIGHTING
4W	FOUR-WIRE	LV	LOW VOLTAGE
4WAY	FOUR-WAY	MATV	MASTER ANTENNA TELEVISION SYSTEM
A	ABOVE COUNTER	MAX	MAXIMUM
AC	ARMORED CABLE	MC	METAL CLAD
ADA	AMERICANS WITH DISABILITIES ACT	MCA	MINIMUM CIRCUIT AMPS
ADJ	ADJACENT	MCB	MAIN CIRCUIT BREAKER
AFF	ABOVE FINISHED FLOOR	MCC	MOTOR CONTROL CENTER
AFG	ABOVE FINISHED GRADE	MCP	MOTOR CIRCUIT PROTECTION
AIC	AMPERE INTERRUPTING CAPACITY	MDP	MAIN DISTRIBUTION PANEL
ALUM	ALUMINUM	MG	MOTOR GENERATOR
AMP	AMPERE	MH	MANHOLE
ANN	ANNUNCIATOR	MIN	MINIMUM
AP	ACCESS POINT (WIRELESS DATA)	MLO	MAIN LUGS ONLY
AR	AS REQUIRED	MOCP	MAXIMUM OVERCURRENT PROTECTION
ASC	AMPS SHORT CIRCUIT	NA	NOT APPLICABLE
ATS	AUTOMATIC TRANSFER SWITCH	NC	NORMALLY CLOSED
AV	AUDIO VISUAL	NEC	NATIONAL ELECTRICAL CODE
AWG	AMERICAN WIRE GAGE	NEMA	NATIONAL ELECTRICAL MANUFACTURERS ASSOCIATION
BB XFMR	BUCK-BOOST TRANSFORMER	NFC	NATIONAL FIRE CODE
C	CEILING MOUNTED	NFPA	NATIONAL FIRE PROTECTION ASSOCIATION
CATV	COMMUNITY ANTENNA TELEVISION	NIC	NOT IN CONTRACT
CB	CIRCUIT BREAKER	NL	NIGHT LIGHT
CCBA	CUSTOM COLOR AS SELECTED BY ARCHITECT	NO	NORMALLY OPEN
CCTV	CLOSED CIRCUIT TELEVISION	NTS	NOT TO SCALE
CFBA	CUSTOM FINISH AS SELECTED BY ARCHITECT	OC	ON CENTER
CF/CI	CONTRACTOR FURNISHED/ CONTRACTOR INSTALLED	OCP	OVER CURRENT PROTECTION
CF/OI	CONTRACTOR FURNISHED/ OWNER INSTALLED	OF/CI	OWNER FURNISHED/ CONTRACTOR INSTALLED
CKT	CIRCUIT	OF/OI	OWNER FURNISHED/ OWNER INSTALLED
CM	CONSTRUCTION MANAGER	OFP	OBTAIN FROM PLANS
CND	CONDUIT	OH DR	OVERHEAD (COILING) DOOR
CO	CONVENIENCE OUTLET	OL	OVERLOAD
COR	CONTRACTING OFFICER'S REPRESENTATIVE	PB	PUSHBUTTON
CP	CONTROL PANEL	PF	POWER FACTOR
CT	CURRENT TRANSFORMER	PH	PHASE
CTV	CABLE TELEVISION	PNL	PANEL
CU	COPPER	PT	POTENTIAL TRANSFORMER
dBA	UNIT OF SOUND LEVEL	PTZ	PAN/TILT/ZOOM
DPDT	DOUBLE POLE DOUBLE THROW	QTY	QUANTITY
DS	DISCONNECT SWITCH	R	REMOVE
EA	EACH	RCP	REFLECTED CEILING PLAN
EM	EMERGENCY	RMC	RIGID METAL CONDUIT
EMT	ELECTRICAL METALLIC TUBING	RNC	RIGID NONMETALLIC CONDUIT
ENT	ELECTRICAL NONMETALLIC TUBING	RPM	REVOLUTIONS PER MINUTE
EPO	EMERGENCY POWER OFF	RR	REMOVE AND RELOCATE
EQUIP	EQUIPMENT	SCA	SHORT CIRCUIT AMPS
EX	EXISTING	SCBA	STANDARD COLOR AS SELECTED BY ARCHITECT
F	FURNITURE MOUNTED	SF	SQUARE FOOT (FEET)
FA	FIRE ALARM	SFBA	STANDARD FINISH AS SELECTED BY ARCHITECT
FCP	FIRE ALARM CONTROL PANEL	SPDT	SINGLE POLE, DOUBLE THROW
FLA	FULL LOAD AMPS	SPEC	SPECIFICATION
FMC	FLEXIBLE METALCONDUIT	SPST	SINGLE POLE, SINGLE THROW
FOB	FREIGHT ON BOARD	S/S	START/STOP
FVNR	FULL VOLTAGE NON-REVERSING	ST	SINGLE THROW
FVR	FULL VOLTAGE REVERSING	SWBD	SWITCHBOARD
G	GROUND	SWGR	SWITCHGEAR
GEN	GENERATOR	TL	TWIST LOCK
GFCI	GROUND FAULT CIRCUIT INTERRUPTER	TP	TELEPHONE POLE
GFP	GROUND FAULT PROTECTION	TP	TWISTED PAIR
HD	HEAVY DUTY	TTB	TELEPHONE TERMINAL BOARD
HID	HIGH INTENSITY DISCHARGE	TV	TELEVISION
HOA	HAND-OFF-AUTOMATIC	TVSS	TRANSIENT VOLTAGE SURGE SUPPRESSER
HP	HORSE POWER	TYP	TYPICAL
HPF	HIGH POWER FACTOR	UF	UNDERFLOOR
HPS	HIGH PRESSURE SODIUM	UGND	UNDERGROUND
HV	HIGH VOLTAGE	UPS	UNINTERRUPTIBLE POWER SUPPLY
HZ	HERTZ	V	VOLTS
IG	ISOLATED GROUND	VA	VOLT AMPERE
IMC	INTERMEDIATE METAL CONDUIT	VFC/VFD	VARIABLE FREQUENCY MOTOR CONTROLLER
IN/S	INSULATED/ISOLATED	W/	WITH
I/O	INPUT/OUTPUT	W/O	WITHOUT
IR	INFRARED	WP	WEATHERPROOF
J-BOX	JUNCTION BOX	XFMR	TRANSFORMER

DEFINITIONS

NOTE: ALL DEFINITIONS MAY NOT BE USED.

INDICATED: THE TERM "INDICATED" REFERS TO GRAPHIC REPRESENTATIONS, NOTES, OR SCHEDULES ON THE DRAWINGS, OTHER PARAGRAPHS OR SCHEDULES IN THE SPECIFICATIONS, AND SIMILAR REQUIREMENTS IN THE CONTRACT DOCUMENTS. WHERE TERMS SUCH AS "SHOWN", "NOTED", "SCHEDULED", AND "SPECIFIED" ARE USED, IT IS TO HELP THE READER LOCATE THE REFERENCE, NO LIMITATION ON LOCATION IS INTENDED.

DIRECTED: TERMS SUCH AS "DIRECTED", "REQUESTED", AUTHORIZED", "SELECTED", "APPROVED", "REQUIRED", AND "PERMITTED" MEAN "DIRECTED BY THE ENGINEER", "REQUESTED BY THE ENGINEER", AND SIMILAR PHRASES.

APPROVED: THE TERM "APPROVED", WHERE USED IN CONJUNCTION WITH THE ENGINEER'S ACTION ON THE CONTRACTOR'S SUBMITTALS, APPLICATIONS, AND REQUESTS, IS LIMITED TO THE ENGINEER'S DUTIES AND RESPONSIBILITIES AS STATED IN GENERAL AND SUPPLEMENTARY CONDITIONS.

FURNISH: THE TERM "FURNISH" IS USED TO MEAN "SUPPLY AND DELIVER TO THE PROJECT SITE, READY FOR UNLOADING, UNPACKING, ASSEMBLY, INSTALLATION, AND SIMILAR OPERATIONS."

INSTALL: THE TERM "INSTALL" IS USED TO DESCRIBE OPERATIONS AT PROJECT SITE INCLUDING THE ACTUAL "UNLOADING, UNPACKING, ASSEMBLY, ERECTION, PLACING, ANCHORING, APPLYING, WORKING TO DIMENSION, FINISHING, CURING, PROTECTING, CLEANING, AND SIMILAR OPERATIONS."

PROVIDE: THE TERM "PROVIDE" MEANS "TO FURNISH AND INSTALL, COMPLETE AND READY FOR THE INTENDED USE."

INSTALLER: AN "INSTALLER" IS THE CONTRACTOR OR AN ENTITY ENGAGED BY THE CONTRACTOR, EITHER AS AN EMPLOYEE, SUBCONTRACTOR, OR SUB-SUBCONTRACTOR, FOR PERFORMANCE OF A PARTICULAR CONSTRUCTION ACTIVITY, INCLUDING INSTALLATION, ERECTION, APPLICATION, AND SIMILAR OPERATIONS. INSTALLERS ARE REQUIRED TO BE EXPERIENCED IN THE OPERATIONS THEY ARE ENGAGED TO PERFORM.

TECHNOLOGY SYSTEMS: THE TERM "TECHNOLOGY SYSTEMS" IS USED TO DESCRIBE ALL LOW VOLTAGE SYSTEMS GENERALLY REFERRED TO AS "SPECIAL SYSTEMS". THESE SYSTEMS INCLUDE BUT ARE NOT NECESSARILY LIMITED TO ALL SYSTEMS WHICH UTILIZE VOLTAGES OF LESS THAN 71 VOLTS SUCH AS SOUND SYSTEMS, VIDEO SYSTEMS, TV SYSTEMS, SECURITY SYSTEMS, VOICE AND DATA CABLING SYSTEMS, ETC...

GENERAL ELECTRICAL NOTES

1. CLARIFICATION METHODS: AT THE TIME OF BIDDING, BIDDERS SHALL FAMILIARIZE THEMSELVES WITH THE DRAWINGS AND SPECIFICATIONS. ANY QUESTIONS, MISUNDERSTANDINGS, CONFLICTS, DELETIONS, DISCONTINUED PRODUCTS, CATALOG NUMBER DISCREPANCIES, DISCREPANCIES BETWEEN THE EQUIPMENT SUPPLIED AND THE INTENT OR FUNCTION OF THE EQUIPMENT, ETC, SHALL BE SUBMITTED TO THE ARCHITECT/ENGINEER IN WRITING FOR CLARIFICATION PRIOR TO ISSUANCE OF THE FINAL ADDENDUM AND BIDDING OF THE PROJECT. WHERE DISCREPANCIES OR MULTIPLE INTERPRETATIONS OCCUR, THE MOST STRINGENT (WHICH IS GENERALLY RECOGNIZED AS THE MOST COSTLY) THAT MEETS THE INTENT OF THE DOCUMENTS SHALL BE ENFORCED.

2. OWNER FURNISHED ITEMS: THE OWNER WILL FURNISH MATERIAL AND EQUIPMENT AS INDICATED IN THE CONTRACT DOCUMENTS TO BE INCORPORATED INTO THE WORK. THESE ITEMS ARE ASSIGNED TO THE INSTALLER AND COSTS FOR RECEIVING, HANDLING, STORAGE, IF REQUIRED, AND INSTALLATION ARE INCLUDED IN THE CONTRACT SUM.
   A. THE INSTALLER'S RESPONSIBILITIES ARE THE SAME AS IF THE INSTALLER FURNISHED THE MATERIALS OR EQUIPMENT.
   B. THE OWNER WILL ARRANGE AND PAY FOR DELIVERY OF OWNER FURNISHED ITEMS FREIGHT ON BOARD JOB SITE AND THE INSTALLER WILL INSPECT DELIVERIES FOR DAMAGE. IF OWNER FURNISHED ITEMS ARE DAMAGED, DEFECTIVE OR MISSING, DOCUMENT DAMAGED ITEMS WITH THE TRANSPORT COMPANY AND THE OWNER WILL ARRANGE FOR REPLACEMENT. THE OWNER WILL ALSO ARRANGE FOR MANUFACTURER'S FIELD SERVICES, AND THE DELIVERY OF MANUFACTURER'S WARRANTIES AND BONDS TO THE INSTALLER.
   C. THE INSTALLER IS RESPONSIBLE FOR DESIGNATING THE DELIVERY DATES OF OWNER FURNISHED ITEMS AND FOR RECEIVING, UNLOADING AND HANDLING OWNER FURNISHED ITEMS AT THE SITE. THE INSTALLER IS RESPONSIBLE FOR PROTECTING OWNER FURNISHED ITEMS FROM DAMAGE, INCLUDING DAMAGE FROM EXPOSURE TO THE ELEMENTS, AND TO REPAIR OR REPLACE ITEMS DAMAGED AS A RESULT OF HIS OPERATIONS.

3. EXPOSED STRUCTURE AREAS (EXCLUDING MECHANICAL, ELECTRICAL, AND COMMUNICATION SPACES): INSTALL RACEWAYS BETWEEN DECK AND STRUCTURE WHEREVER POSSIBLE IN EXPOSED STRUCTURE CEILING AREAS. ROUTE RACEWAYS IN CONCEALED AREAS WHEREVER POSSIBLE. REFER ALL CONDITIONS WHERE RACEWAYS MUST BE INSTALLED WHICH CANNOT COMPLY WITH THESE REQUIREMENTS TO THE ARCHITECT.

4. SUBMITTALS: PROVIDE SUBMITTALS IN THREE RING BINDERS WITH JOB NAME, SUBCONTRACTOR, AND VOLUME ON THE BINDING. PREPARE TABS FOR EACH SPECIFICATION SECTION REQUIRING SUBMITTALS. PREPARE INDEX OF EQUIPMENT SUBMITTED IN EACH TAB.

5. REFLECTED CEILING PLANS: COORDINATE THE LOCATION OF LIGHT FIXTURES WITH THE ARCHITECTURAL REFLECTED CEILING PLANS. REFER ALL DISCREPANCIES TO THE ARCHITECT AND ENGINEER.

ELECTRICAL SHEET INDEX

SHEET NO	SHEET TITLE
EE001	SYMBOL LEGEND, GENERAL NOTES AND SHEET INDEX
ES101	SITE ELECTRICAL PLAN
EP101	FIRST FLOOR POWER PLAN
EP105	ROOF POWER PLAN – ADD ALTERNATE #2
EP501	ELECTRICAL DETAILS
EP601	ONE-LINE DIAGRAMS

LIGHTING FIXTURE SCHEDULE

USL PV SOLAR SHADES

NOTE TO BIDDERS: COMPLY WITH SECTIONS 16511, 16521, AND 16570 OF THE SPECIFICATIONS.
REFER TO SPECIFICATIONS FOR IMPORTANT TECHNICAL REQUIREMENTS FOR LIGHTING FIXTURES, BALLASTS, AND LAMPS. THE CATALOG NUMBERS LISTED BELOW HAVE BEEN CAREFULLY PREPARED TO ASSIST BIDDERS IN SELECTING PRODUCTS TO ACHIEVE THE DESIGN CONCEPT, HOWEVER, PRIOR TO BIDDING, EACH MANUFACTURER SHALL COMPARE THE CATALOG NUMBERS SHOWN WITH THE DESCRIPTION AND REQUIREMENTS ON THE DRAWINGS, AND SHALL NOTIFY THE ARCHITECT/ENGINEER OF ANY DISCREPANCIES. SPECIFICALLY INCLUDED IN THIS EVALUATION SHALL BE THE VERIFYING OF PROPER MOUNTING KITS OR ACCESSORIES TO FACILITATE INSTALLATION AS SHOWN AT EACH LOCATION ON THE DRAWINGS. NO ALLOWANCE OR REDRESS WILL BE ALLOWED FOR DISCREPANCIES THAT WERE NOT REPORTED TO THE ARCHITECT/ENGINEER IN TIME FOR CORRECTION OR CLARIFICATION BEFORE THE BID. THE REPORTING OF ANY AMBIGUITY IS THE RESPONSIBILITY OF THE BIDDER. PROVIDE UNIT PRICES AND FIXTURE BRAND SELECTED FOR ADD/DELETE CHANGES FOR EACH FIXTURE TYPES SHOWN WITHIN 48 BUSINESS HOURS OF THE BID DATE. FAILURE TO COMPLY WITH THIS REQUIREMENT MAY DISQUALIFY THE PRODUCTS AND EMPOWER THE ENGINEER TO DETERMINE FAIR VALUE FOR FIXTURE AND INSTALLATION CHANGES, WITHOUT FURTHER INPUT FROM THE CONTRACTOR OR INSTALLER. SUBMITTAL PACKAGE SHALL INCLUDE LAMP MANUFACTURER AND CATALOG NUMBER ON EACH FIXTURE SHEET. ON ALL PENDANT MOUNTED FIXTURES, PROVIDE A SECOND SET OF PENDANTS, OF A DIFFERENT LENGTH, AS DIRECTED BY THE ARCHITECT/ENGINEER, PROVIDED AND INSTALLED AT NO ADDITIONAL CHARGE. ALL FIXTURES SHALL BE APPROVED BY UL OR ANOTHER ACCEPTABLE TESTING LAB FOR THE PURPOSE INTENDED AND WITH THE LAMP AND BALLAST PROPOSED. CONTRACTOR ALLOWANCE PRICES ARE ACCURATE WHEN THIS JOB WAS SPECIFIED, CONTRACTOR AND ELECTRICAL DISTRIBUTOR SHALL VERIFY THIS ALLOWANCE AND REPORT ANY PROBLEMS TO THE ENGINEER BEFORE THE BID. ALLOWANCE PRICE MAY OR MAY NOT INCLUDE LAMP(S) OR FREIGHT AS NOTED, AND DO NOT INCLUDE ANY TAXES. UNIVERSAL VOLTAGE (120/277) BALLASTS REQUIRED UNLESS NOTED OTHERWISE. DIMENSION SEQUENCE = (LENGTH X WIDTH X DEPTH) IN INCHES.

SYMBOL	MARK	FIXTURE CHARACTERISTICS BODY / AIR / MOUNTING / DOOR LENS/LOUVER/REFLECTOR/OTHER	LAMP	WATTS	VOLTS	MANUFACTURER	CATALOG NUMBER	NOTES
	TX	SPECIAL FIXTURES AS INDICATED. MEET ALL REQUIREMENTS OF SPECIFICATIONS AND FIXTURE SCHEDULE. VISUAL AND FINISH APPROVAL REQUIRED.						
	TX-1	SOLAR SHADE CANOPY LIGHT LED, TYPE 3 DISTRIBUTION, WET LABELED, PENDENT OR JUNCTION BOX MOUNT. BLACK PAINTED HOUSING	LED	55W	277V	MCGRAW	VPLA02LED-E1-GL3-BK-TR OR APPROVED EQUALS	

VCBO
ARCHITECTURE
VALENTINER
CRANE
BRUNJES
ONYON

LICENSED PROFESSIONAL ENGINEER
No. 7395110
SCOTT E. JENKINS
STATE OF UTAH

VCBO ARCHITECTURE
524 SOUTH 600 EAST
SALT LAKE CITY, UTAH 84102
Phone: (801) 575-8800
Fax: (801) 531-9850
WWW: www.vcbo.com

SPECTRUM ENGINEERS
324 S. State St., Suite 400
Salt Lake City, UT 84111
800-678-7077
801-328-5151
fax: 801-328-5155
www.spectrum-engineers.com

SOLAR PARKING STRUCTURE
UNIFIED STATE LABS
Client Project Number
Project Address
Construction Documents

Rev #	Date	Description

Job # 107420
CAD File
Drawn STS Checked SEJ
Date 30 MARCH 2011
Owner # XXX
Ins. #

SYMBOL LEGEND, GENERAL NOTES AND SHEET INDEX

EE001

File Name: P:\2010\20100520\1Drawings\3Sheet\20EE001.dwg Last Plotted: 2011/03/29 @ 2:29 PM By: sej

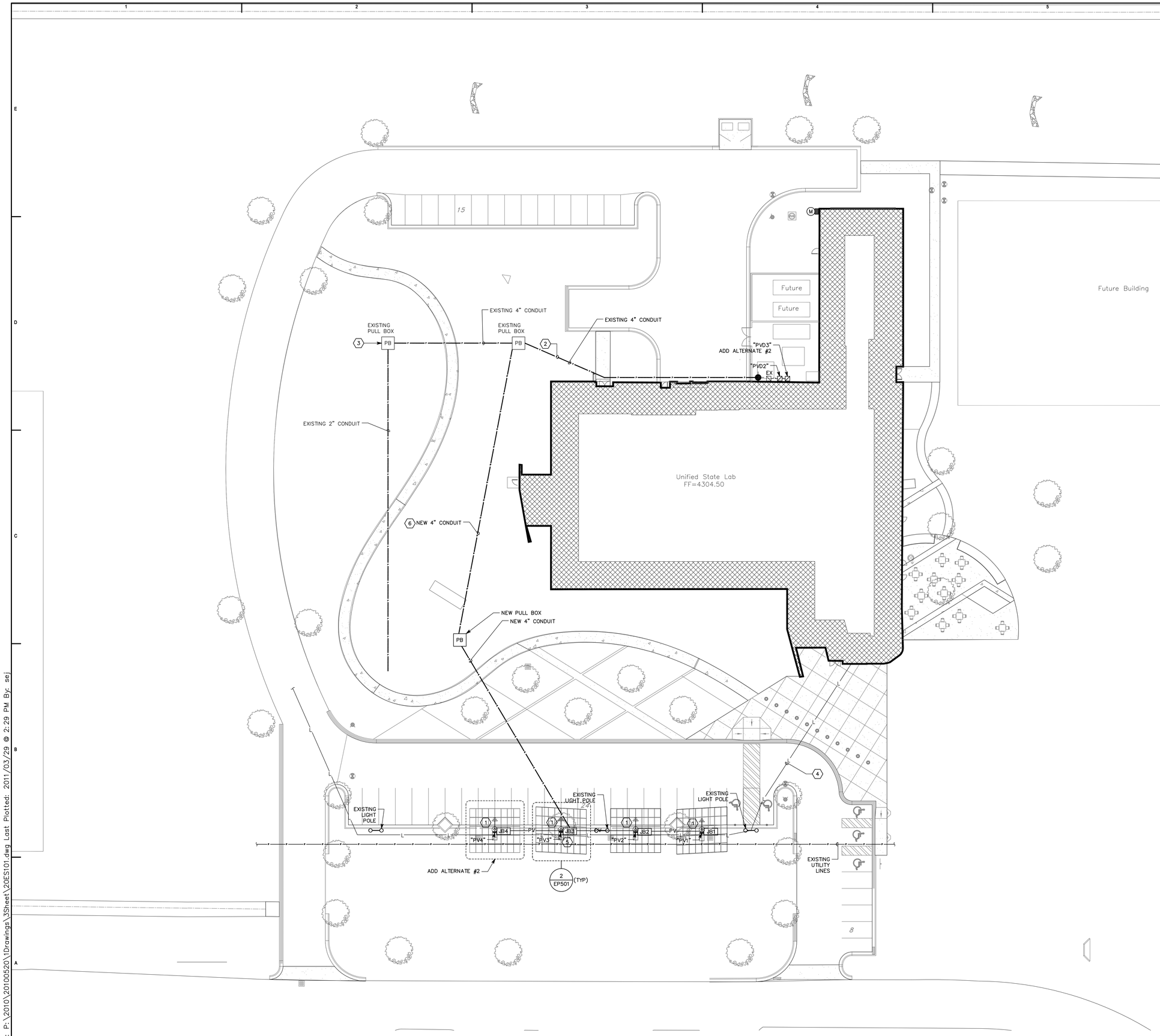

1 ELECTRICAL SITE PLAN

SCALE: 1" = 20'-0"

GENERAL SHEET NOTES

1. ALL NEW CONDUIT SHALL BE BORED UNDER PAVED AREAS AND TRENCHED IN ALL LANDSCAPE AREAS. ALL LANDSCAPE AREAS ARE TO BE RESTORED TO ORIGINAL CONDITION.
2. NEW SYSTEM MONITORING EQUIPMENT SHALL BE COMPATIBLE WITH EXISTING ENPHASE ENVOY SYSTEM. ALL PROGRAMING TO INCORPORATE THE NEW INSTALLATION INTO THE EXISTING MONITORING SYSTEM SHALL BE INCLUDED.

SHEET KEYNOTES

1. PROVIDE UFER GROUND AT EACH SOLAR SHADE AND BOND TO SHADE BRANCH PANEL.
2. EXISTING 4" CONDUIT. CARE SHOULD BE TAKEN WHEN INSTALLING NEW CONDUCTORS TO PROTECT THE ONES ALL READY IN PLACE.
3. LOCATION OF EXISTING ENPHASE ENERGY ENVOY METER. COORDINATE MAXIMUM NUMBER OF MICRO-INVERTERS ALLOWED WITH MANUFACTURERS INSTRUCTIONS AND PROVIDE ADDITIONAL ENVOY METER IF REQUIRED TO SUPPORT NEW SOLAR SHADES.
4. EXISTING 277V PARKING LOT LIGHTING CIRCUIT. CIRCUIT CONDUCTORS AND CONDUIT WILL CONFLICT WITH SOLAR CANOPY BASES. RE-ROUTE CIRCUIT CONDUCTORS AS REQUIRED. TAP INTO THIS LIGHTING CIRCUIT TO SUPPLY POWER TO THE UNDER CANOPY LIGHTING BEING ADDED AS PART OF THIS PROJECT.
5. LOCATION OF NEW SYSTEM MONITORING EQUIPMENT. PROVIDE FIBER OPTIC CABLE AND FIBER CONVERTERS AS REQUIRED TO TIE NEW MONITORING EQUIPMENT INTO THE NETWORK.
6. PROVIDE .75" INNER DUCT IN NEW 4" CONDUIT FOR NEW FIBER OPTIC CABLE TO MONITORING EQUIPMENT.

VCBO
ARCHITECTURE
VALENTINER
CRANE
BRUNJES
ONYON

LICENSED PROFESSIONAL ENGINEER
No. 7395110
SCOTT E. JENKINS
STATE OF UTAH

VCBO ARCHITECTURE
524 SOUTH 600 EAST
SALT LAKE CITY, UTAH 84102
Phone: (801) 575-8800
Fax: (801) 531-9850
WWW: www.vcbo.com

SPECTRUM ENGINEERS
324 S. State St., Suite 400
Salt Lake City, UT 84111
800-678-7077
801-328-5151
fax: 801-328-5155
www.spectrum-engineers.com

SOLAR PARKING STRUCTURE

UNIFIED STATE LABS

Client Project Number

Project Address

Construction Documents

Rev #	Date	Description

Job # 107420
CAD File
Drawn STS Checked SEJ
Date 30 MARCH 2011
Owner # XXX
Ins. #

ELECTRICAL SITE PLAN

ES101

File Name: P:\2010\20100520\1Drawings\3Sheet\20ES101.dwg Last Plotted: 2011/03/29 @ 2:29 PM By: sej

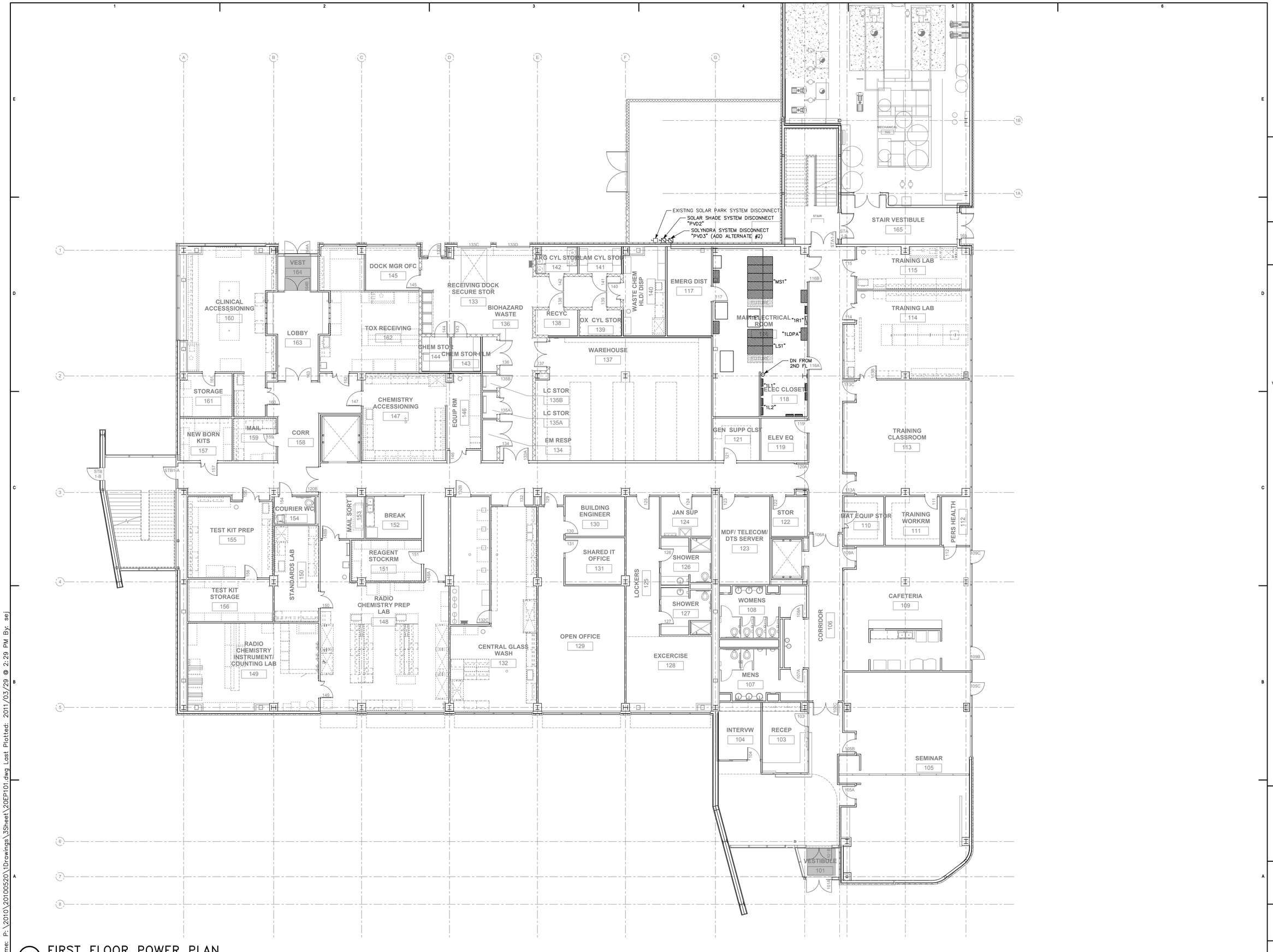

1 FIRST FLOOR POWER PLAN
SCALE: 1/8" = 1'-0"

File Name: P:\2010\20100520\1Drawings\3Sheet\20EP101.dwg Last Plotted: 2011/03/29 @ 2:29 PM By: sej

VCBO
ARCHITECTURE
VALENTINER
CRANE
BRUNJES
ONYON

LICENSED PROFESSIONAL ENGINEER
No. 7395110
SCOTT E. JENKINS
STATE OF UTAH

VCBO ARCHITECTURE
524 SOUTH 600 EAST
SALT LAKE CITY, UTAH 84102
Phone: (801) 575-8800
Fax: (801) 531-9850
WWW: www.vcbo.com

SPECTRUM ENGINEERS
324 S. State St., Suite 400
Salt Lake City, UT 84111
800-678-7077
801-328-5151
fax: 801-328-5155
www.spectrum-engineers.com

SOLAR PARKING STRUCTURE

UNIFIED STATE LABS
Client Project Number
Project Address
Construction Documents

Rev #	Date	Description

Job # 107420
CAD File
Drawn STS Checked SEJ
Date 30 MARCH 2011
Owner # XXX
Ins. #

FIRST FLOOR POWER PLAN

EP101

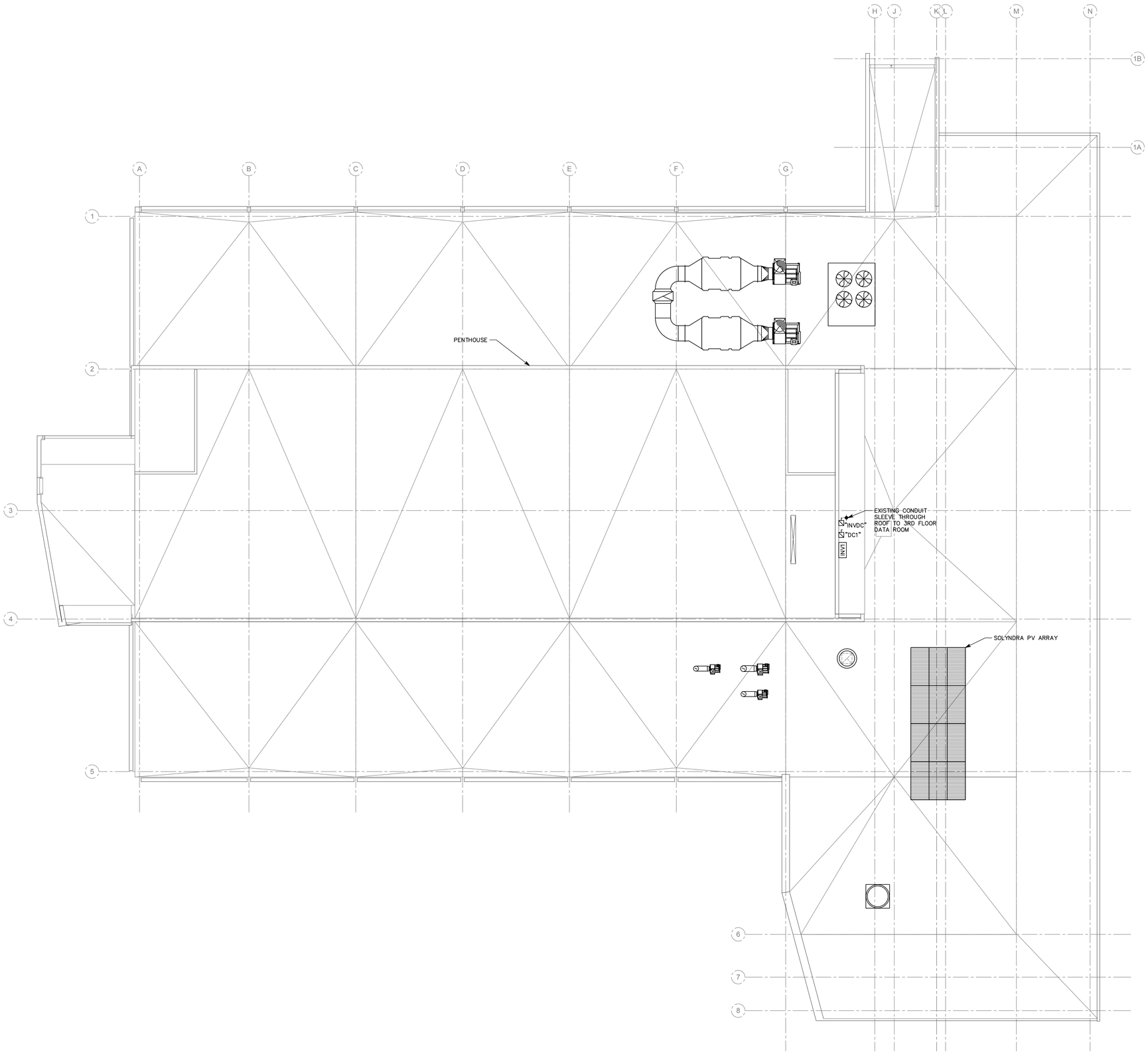

1 ROOF POWER PLAN – ADD ALTERNATE

SCALE: 1/8" = 1'-0"

File Name: P:\2010\20100520\1Drawings\3Sheet\20EP105.dwg Last Plotted: 2011/03/29 @ 2:29 PM By: sej

VCBO
ARCHITECTURE
VALENTINER
CRANE
BRUNJES
ONYON

LICENSED PROFESSIONAL ENGINEER
No. 7395110
SCOTT E. JENKINS
STATE OF UTAH

VCBO ARCHITECTURE
524 SOUTH 600 EAST
SALT LAKE CITY, UTAH 84102
Phone: (801) 575-8800
Fax: (801) 531-9850
WWW: www.vcbo.com

SPECTRUM ENGINEERS
324 S. State St., Suite 400
Salt Lake City, UT 84111
800-678-7077
801-328-5151
fax: 801-328-5155
www.spectrum-engineers.com

SOLAR PARKING STRUCTURE

UNIFIED STATE LABS

Client Project Number

Project Address

Construction Documents

Rev #	Date	Description

Job # 107420
CAD File
Drawn STS Checked SEJ
Date 30 MARCH 2011
Owner # XXX
Ins. #

ROOF POWER PLAN - ADD ALTERNATE #2

EP105

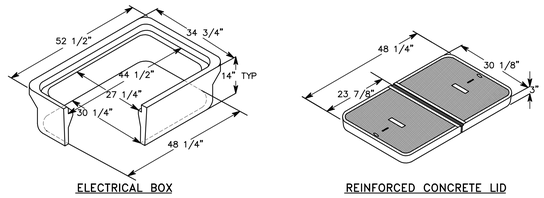

ELECTRICAL BOX

REINFORCED CONCRETE LID

5 TYPICAL ELECTRICAL INGRADE JUNCTION BOX DETAIL JB

NTS

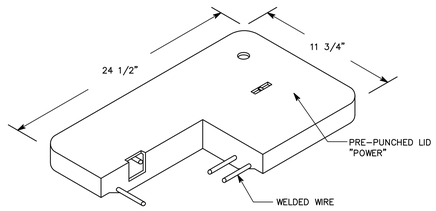

PULLBOX

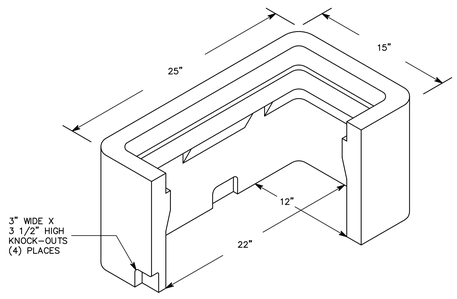

PULLBOX BODY

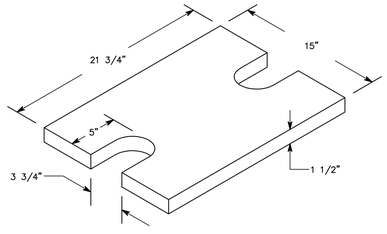

PULLBOX BASE

4 TYPICAL PULL BOX DETAIL PB

NTS

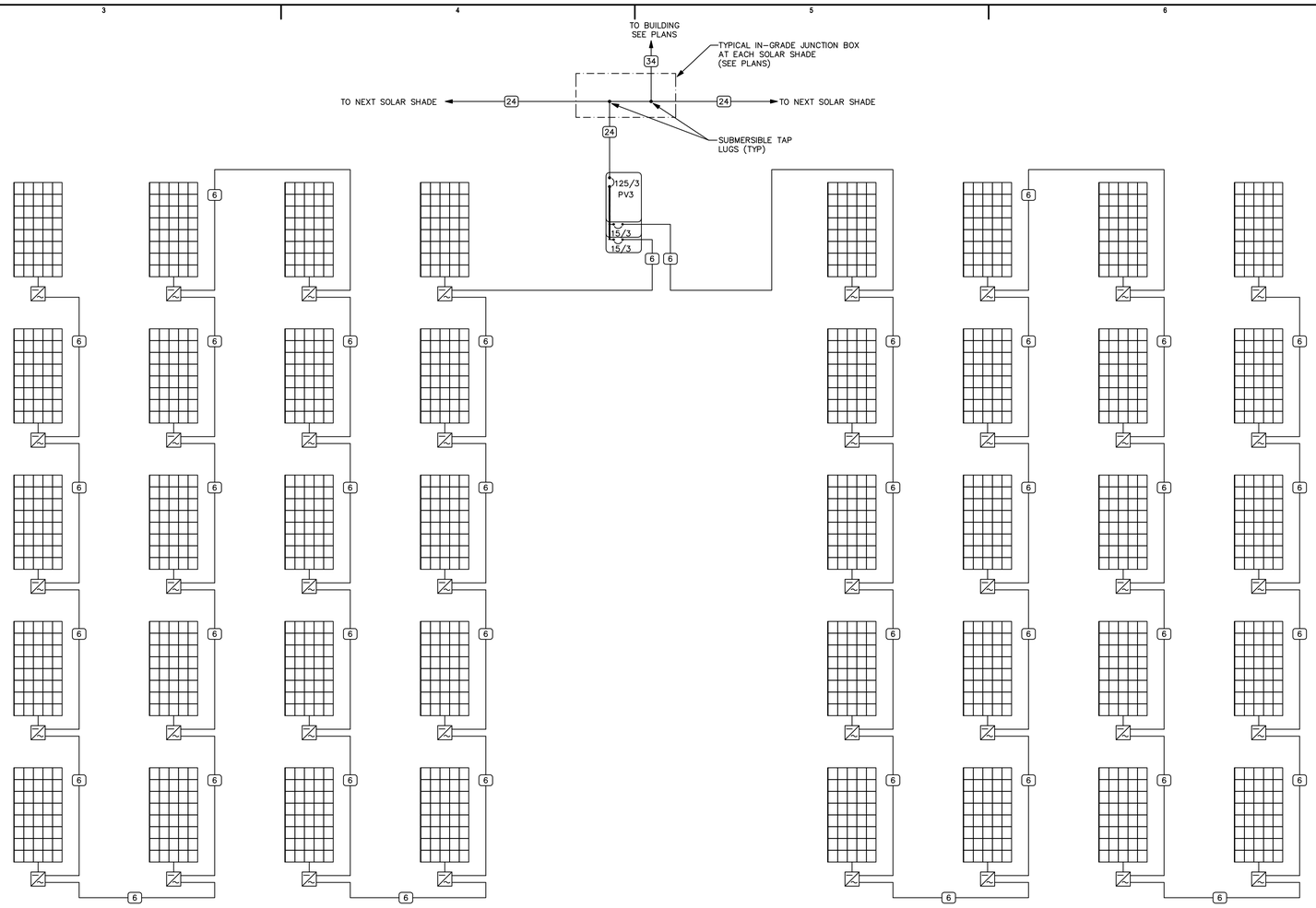

1 TYPICAL SOLAR SHADE ONE LINE DIAGRAM

NTS

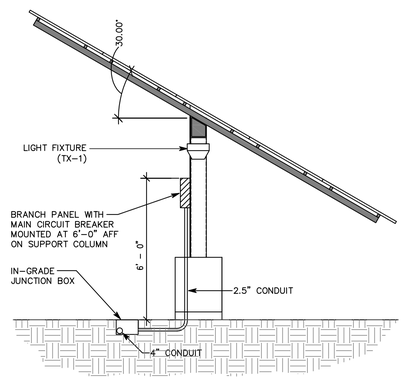

3 TYPICAL SOLAR SHADE ELEVATION

NTS

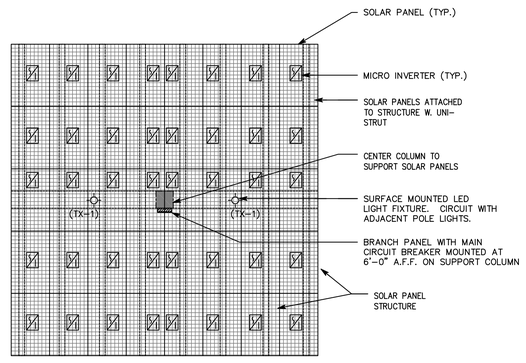

NOTES:

1. ROUTE ALL WIRING ON THE UNDERSIDE OF THE SOLAR PANEL CANOPY PARALLEL AND PERPENDICULAR TO THE STRUCTURE.
2. GROUND ALL METAL STRUCTURE AND PANEL SUPPORTS PER NEC REQUIREMENTS WITH A #6 GROUND MINIMUM.
3. FOLLOW MANUFACTURERS RECOMMENDATIONS WHEN MOUNTING PANELS TO UNISTRUT SUPPORT AND PROVIDING ADEQUATE SPACING BETWEEN PANELS.
4. EACH SOLAR SHADE SHALL HAVE A MINIMUM 9KW ARRAY.

2 SOLAR SHADE PLAN

NTS

VCBO
ARCHITECTURE
VALENTINER
CRANE
BRUNJES
ONYON

LICENSED PROFESSIONAL ENGINEER
No. 7395110
SCOTT E. JENKINS
STATE OF UTAH

VCBO ARCHITECTURE
524 SOUTH 600 EAST
SALT LAKE CITY, UTAH 84102
Phone: (801) 575-8800
Fax: (801) 531-9850
WWW: www.vcbo.com

SPECTRUM
ENGINEERS
324 S. State St., Suite 400
Salt Lake City, UT 84111
800-678-7077
801-328-5151
fax: 801-328-5155
www.spectrum-engineers.com

SOLAR PARKING STRUCTURE

UNIFIED STATE LABS

Client Project Number

Project Address

Construction Documents

Rev #	Date	Description

Job # 107420
CAD File
Drawn STS Checked SEJ
Date 30 MARCH 2011
Owner # XXX
Ins. #

DETAILS

EP501

File Name: P:\2010\20100520\1Drawings\3Sheet\20EP501.dwg Last Plotted: 2011/03/29 @ 2:29 PM By: sts

BASIS OF DESIGN

SOLAR PANELS: SOLYNDRA 220W PANEL WITH ROOF RACKING

INVERTER: SUNNY BOY 3000US.

MONITORING: PROVIDE A WEB BASED MONITORING SYSTEM COMPATIBLE WITH THE PROVIDED INVERTER. INCLUDE ANY SUBSCRIPTION COSTS SUFFICIENT FOR 5 YEARS OF MONITORING SERVICES. ADD ALTERNATE #1 PRICE SHALL ALSO INCLUDE ALL CAT 5E CABLING REQUIRED FOR SYSTEM CONNECTION TO BUILDING NETWORK.

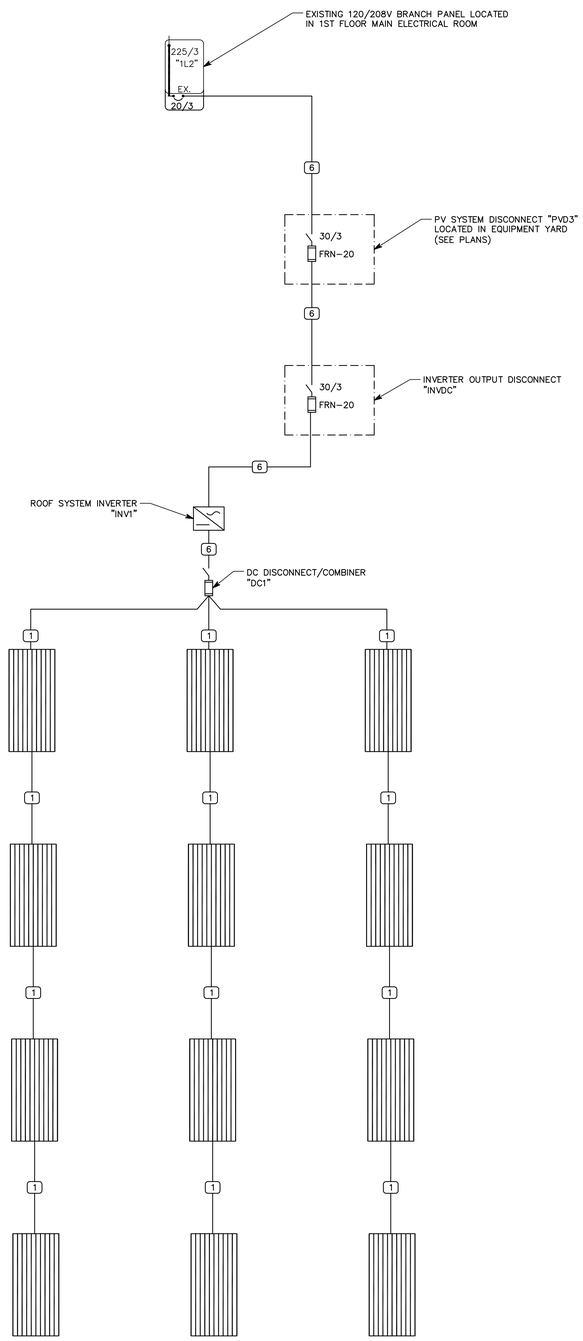

2 ONE-LINE DIAGRAM – ADD ALTERNATE #1

NTS

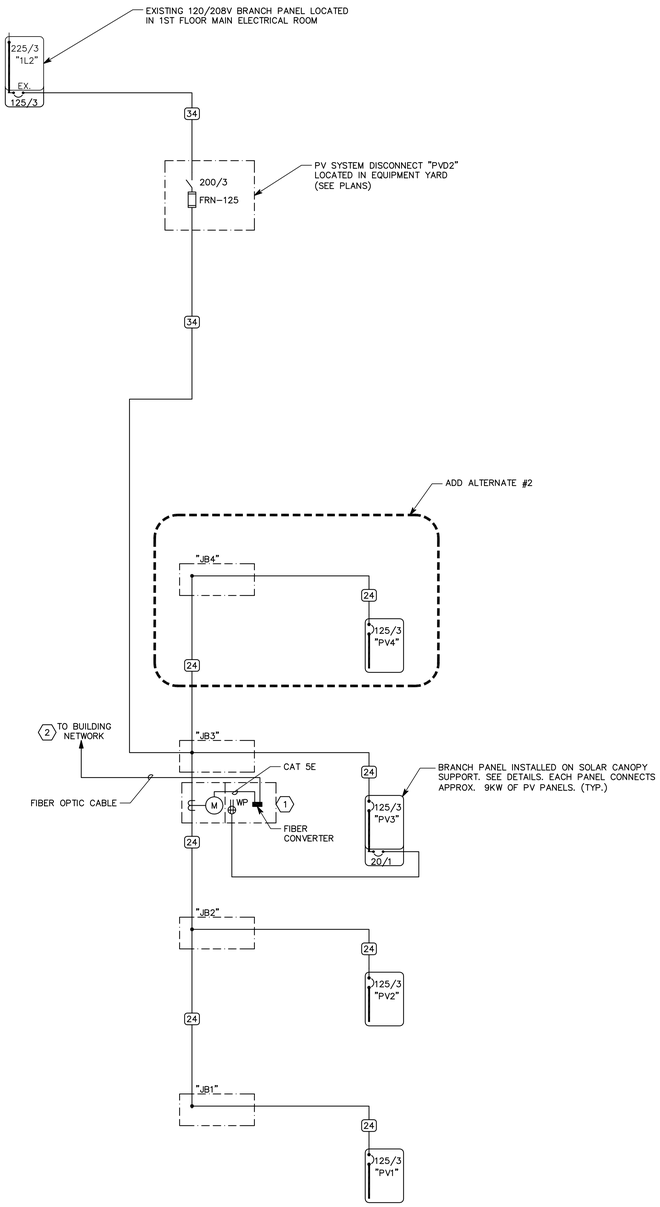

1 ONE-LINE DIAGRAM

NTS

⬡SHEET KEYNOTES

1. NEW SYSTEM MONITORING EQUIPMENT SHALL BE COMPATIBLE WITH EXISTING ENPHASE ENVOY SYSTEM. ALL PROGRAMING TO INCORPORATE THE NEW INSTALLATION INTO THE EXISTING MONITORING SYSTEM SHALL BE INCLUDED. PROVIDE WEATHER PROOF ENCLOSURE MOUNTED TO POLE TO CONTAIN RECEPTACLE AND FIBER OPTIC CABLE CONVERTERS FOR METERING EQUIPMENT COMMUNICATION TO BUILDING NETWORK.
2. PROVIDE FIBER OPTIC CABLE CONVERTER INSIDE BUILDING AND RUN CAT 5E CABLE TO NEAREST NETWORK CONNECTION LOCATION.

CONDUCTOR AND CONDUIT SCHEDULE

** — SCHEDULE NUMBER; SUBSCRIPT (NOTE 5)

(E.G.) 5 IG

SYM	AMP	CONDUIT SIZE	CONDUCTOR(NOTE 1) QTY	SIZE	G	IG	SE	NOTES
1	20	.75	2	12	12	12	8	2
2	20	.75	3	12	12	12	8	2,3
3	20	.75	4	12	12	12	8	2,3
4	30	.75	2	10	10	10	8	2
5	30	.75	3	10	10	10	8	2
6	30	.75	4	10	10	10	8	2
7	40	1	2	8	10	8	6	2
8	40	1	3	8	10	8	6	2
9	40	1	4	8	10	8	6	2
10	55	1	2	6	10	8	4	2
11	55	1	3	6	10	8	4	2
12	55	1.25	4	6	10	8	4	2
13	70	1	2	4	8	4	2	2
14	70	1.25	3	4	8	4	2	2
15	70	1.25	4	4	8	4	2	2
16	85	1.25	2	3	8	3	2	2
17	85	1.25	3	3	8	3	2	2
18	85	1.25	4	3	8	3	2	2
19	95	1.25	3	2	8	2	2	2
20	95	1.50	4	2	8	2	2	2
21	130	1.50	3	1	6	2	2	2
22	130	1.50	4	1	6	2	2	2
23	150	2	3	1/0	6	2	1/0	2
24	150	2	4	1/0	6	2	1/0	2
25	175	2	3	2/0	6	2	2/0	2
26	175	2	4	2/0	6	2	2/0	2
27	200	2	3	3/0	6	2	2/0	2
28	200	2.50	4	3/0	6	2	2/0	2
29	230	2.50	3	4/0	4	2	2/0	2
30	230	2.50	4	4/0	4	2	2/0	2
31	255	2.50	3	250	4	1	2/0	2
32	255	2.50	4	250	4	1	2/0	2
33	310	3	3	350	3	1/0	3/0	2
34	310	3	4	350	3	1/0	3/0	2
35	380	3.50	3	500	3	3/0	3/0	2
36	380	4	4	500	3	3/0	3/0	2
37	400	2 EA 2	3	3/0	3	3/0	3/0	2
38	400	2 EA 2.50	4	3/0	3	3/0	3/0	2
39	510	2 EA 2.50	3	250	1	4/0	3/0	2
40	510	2 EA 3	4	250	1	4/0	3/0	2
41	620	2 EA 3	3	350	1/0	4/0	3/0	2,4
42	620	2 EA 3	4	350	1/0	4/0	3/0	2,4
43	760	2 EA 3.50	3	500	1/0	4/0	3/0	2,4
44	760	2 EA 4	4	500	1/0	4/0	3/0	2,4
45	855	3 EA 3	3	300	2/0	4/0	3/0	2,4
46	855	3 EA 3	4	300	2/0	4/0	3/0	2,4
47	1000	3 EA 3.50	3	400	2/0	4/0	3/0	4
48	1000	3 EA 3.50	4	400	2/0	4/0	3/0	4
49	1140	3 EA 4	3	500	3/0	4/0	3/0	4
50	1140	3 EA 4	4	500	3/0	4/0	3/0	4
51	1240	4 EA 3	3	350	3/0	4/0	3/0	4
52	1240	4 EA 3	4	350	3/0	4/0	3/0	4
53	1675	5 EA 3.50	4	400	4/0	4/0	4/0	4
54	2010	6 EA 3.50	4	400	250	250	250	4
55	2660	7 EA 4	4	500	350	350	350	4
56	3040	8 EA 4	4	500	500	500	500	4
57	4180	11 EA 4	4	500	500	500	500	4
58		5 EA 4						6
59		5						6
60		10 EA 4						6

CONDUCTOR AND CONDUIT SCHEDULE NOTES

1. CONDUCTORS SHOWN ARE SHOWN FOR EACH CONDUIT WITH MODIFICATIONS AS NOTED IN NOTE 5. ALL CONDUCTORS SHOWN ARE THWN UNLESS OTHERWISE NOTED.
2. PROVIDE EQUIPMENT GROUND CONDUCTORS PER TABLE 250-122 WHEN CIRCUIT BREAKERS ARE SIZED GREATER THAN AMPERE RATING SHOWN IN TABLE.
3. PROVIDE #10 NEUTRALS FOR MULTIWIRE BRANCH CIRCUITS SERVING COMPUTERS.
4. GROUND (G) CONDUCTOR MAY BE DELETED ON SERVICE ENTRANCE CONDUCTORS.
5. WHEN SYMBOL SUBSCRIPT INDICATES "IG", INCLUDE "IG" OR INSULATED GROUND CONDUCTOR SCHEDULED ALONG WITH GROUND OR EQUIPMENT GROUND CONDUCTOR. WHEN SYMBOL SUBSCRIPT INDICATES "SE", SUBSTITUTE "SE" CONDUCTOR FOR "G" CONDUCTOR SHOWN WHICH IS SIZED FOR THE GROUNDING OF THE SECONDARY OF THE SEPARATELY DERIVED SYSTEMS.
6. RACEWAY ONLY. CONDUCTORS PROVIDED BY UTILITY.

VCBO
ARCHITECTURE
VALENTINER
CRANE
BRUNJES
ONYON

LICENSED PROFESSIONAL ENGINEER
No. 7395110
SCOTT E. JENKINS
STATE OF UTAH

VCBO ARCHITECTURE
524 SOUTH 600 EAST
SALT LAKE CITY, UTAH 84102
Phone: (801) 575-8800
Fax: (801) 531-9850
WWW: www.vcbo.com

SPECTRUM ENGINEERS
324 S. State St., Suite 400
Salt Lake City, UT 84111
800-678-7077
801-328-5151
fax: 801-328-5155
www.spectrum-engineers.com

SOLAR PARKING STRUCTURE

UNIFIED STATE LABS

Client Project Number

Project Address

Construction Documents

Rev #	Date	Description

Job # 107420
CAD File
Drawn STS Checked SEJ
Date 30 MARCH 2011
Owner # XXX
Ins. #

ONE-LINE DIAGRAMS

EP601

File Name: P:\2010\20100520\1Drawings\3Sheet\20EP601.dwg Last Plotted: 2011/03/29 @ 2:29 PM By: sej