WEBER STATE UNIVERSITY

STEWART STADIUM FOOTBALL FIELD RENOVATION

OGDEN, UTAH

UTAH STATE DIVISION OF FACILITIES CONSTRUCTION & MANAGEMENT - DFCM PROJECT NO. 10280810

CONSTRUCTION DOCUMENT REVIEW

03 FEBRUARY 2011

ABBREVIATIONS

AC	Air Conditioning	EIFS	Exterior Insulation, & Finish System	OC	On Center
AFF	Above Finish Floor			OPP	Opposite
ALT	Alternate	FT	Feet	OD	Outside Diameter
APPROX	Approximate	FLR	Floor	OA	Overall
ARCH	Architect	FIN FLR	Finish Floor	OH DR	Overhead Door
BD	Board	FE	Fire Extinguisher	PR	Pair
BRG	Bearing	FIN	Finish	PERP	Perpendicular
BLKG	Blocking	FD	Floor Drain	PLAM	Plastic Laminate
BLDG	Building	FR	Frame	PL GL	Plate Glass
BOT	Bottom	FTG	Footing	PLBG	Plumbing
CLG	Ceiling	FDTN	Foundation	PREFAB	Prefabricate
CL	CenterLine	GA	Gage	PL	Property Line
CO	Cleanout	GALV	Galvanize	REFR	Refrigeration
CONC	Concrete	GI	Galvanized Iron	REINF	Reinforce
CONF	Conference	GLU-LAM	Glue Laminated	REQD	Required
CONSTR	Construction	GYP BD	Gypsum Board	RD	Roof Drain
CONT	Continue	HDW	Hardware	SCHED	Schedule
CONTR	Contractor	HC	Handicap	SIM	Similar
CJ	Control Joint	HVAC	Heating Ventilation & Air Conditioning	SPEC	Specification
COORD	Coordinate			SQ	Square
CORR	Corridor	HORIZ	Horizontal	STD	Standard
CSK	Countersunk	HM	Hollow Metal	STRUCT	Structural
COMM	Communication	ID	Inside Diameter	SUSP CLG	Suspended Ceiling
CIP	Cast in Place	INT	Interior	THK	Thick
CMU	Concrete Masonry Unit	ISO	Isometric	T&G	Tongue and Groove
		JAN	Janitor	TO	Top Of
DEM0	Demolition	KOP	Knockout Panel	TOB	Top of Beam
DIAG	Diagonal	KD	Knock Down	TOS	Top of Slab
DIA	Diameter	LAB	Laboratory	TOW	Top of PARTITION
DIM	Dimension	LAV	Lavatory	XFMR	Transformer
DN	Down	MAINT	Maintenance	TYP	Typical
DS	Downspout	MH	Manhole	UNO	Unless Noted
DWG	Drawing	MFR	Manufacturer		Otherwise
ELEC	Electric	MO	Masonry Opening	VTR	Vent Through Roof
EL	Elevation	MAX	Maximum	VERT	Vertical
ELEV	Elevator	MECH	Mechanical	VEST	Vestibule
EQ	Equal	MEZZ	Mezzanine	VCT	Vinyl Composition Tile
EQUIP	Equipment	MIN	Minimum	WC	Water Closet
EXIST	Existing	MISC	Miscellaneous	WH	Water Heater
EXP	Expansion	NOM	Nominal	WWF	Welded Wire Fabric
EJ	Expansion Joint	NIC	Not In Contract	W/	With
EXT	Exterior	NO	Number		
EWC	Electric Water Cooler	NTS	Not to Scale		

GENERAL SYMBOLS

SEE PLUMBING, MECHANICAL AND ELECTRICAL FOR DISCIPLINE SYMBOLS

- AE302 — SHEET NUMBER; Sheet Number Sequence; Sheet Type; Discipline
- 1 / A — GRID REFERENCE MARK; A1 Starts at lower left corner; Number Horizontal; Letters Vertical
- B2 / AE303 — BUILDING SECTION; SHEET WHERE DRAWN
- T.O. DECK EL. 108'-0" — SPOT ELEVATION
- B3 / AE301 — WALL SECTION; SHEET WHERE DRAWN
- LEVEL 1 EL. 100'-0" — VERTICAL ELEVATION
- D2 / AE501 — DETAIL; SHEET WHERE DRAWN
- N — NORTH ARROW
- B2 / AE303 — EXTERIOR ELEVATION; SHEET WHERE DRAWN
- 4 / A1 / AE401 — INTERIOR ELEVATION; SHEET WHERE DRAWN
- 1 — DRAWING REVISION; Revision Number
- 101A — DOOR NUMBER
- OFFICE 101 — ROOM NAME; ROOM NUMBER
- 10 — WINDOW NUMBER
- 1 — KEYED NOTES
- 8 — PARTITION TYPE

MATERIALS

EARTH, BRICK, GYPSUM BOARD, GRAVEL, STONE, EIFS, CONCRETE, PRE-CAST CONCRETE, BATT INSULATION, CMU, WOOD & BLOCKING, RIGID INSULATION

APPLICABLE CODES

	Year		Year
International Building Code	2009	ADA Accessibility	1994
American National Standard ICC/ANSI A117.1	2003	Guidelines	

A. Occupancy and Group A5

Change in Use: Yes ____ No X Mixed Occupancy: Yes ____ No X

B. Seismic Design Category: _.__ Design Wind Speed: __.__ mph

C. Type of Construction (circle one):

I/A I/B II/A (II/B) III/A III/B IV/HT V/A V/B

D. Fire Resistance Rating Requirements for the Exterior Walls based on the fire separation distance (in hours):

North: 0 South: 0 East: 0 West: 0

E. Mixed Occupancies: _____

Nonseparated Uses: _____

F: Sprinklers:

Required: NO Provided: ____ Type of Sprinkler System: _____

Number of Stories: ____ Building Height: _____

H: Actual Area per Floor (square feet): _____

Tabular Area: _____

J: Area Modifications:

d) Unlimited Area Building: Yes X No ____ Code Section: Table 503

K. Fire Resistance Rating Requirements for Building Elements (hours).

Element	Hours	Assembly Listing	Element	Hours	Assembly Listing
Exterior Bearing Walls	0		Floors - Ceiling Floors	0	
Interior Bearing Walls	0		Roofs - Ceiling Roofs	0	
Exterior Non-Bearing Walls	0		Exterior Doors and Windows		
Structural Frame	0		Shaft Enclosures		
Partitions - Permanent	0		Fire Walls		
Fire Barriers	0		Fire Partitions (Corr.)		
			Smoke Partitions		

L. Design Occupant Load: * = NO CHANGE IN OCC. LOAD OR EXIT WIDTH.

Exit Width Required: ____ Exit Width Provided: ____

M. Minimum Number of Required Plumbing Facilities * : NUMBER OF EXIST. FIXTURES TO REMAIN THE SAME

a) Water Closets - Required (m) ____ (f) ____ Provided (m) ____ (f) ____

b) Lavatories - Required (m) ____ (f) ____ Provided (m) ____ (f) ____

c) Bath Tubs or Showers: ____

d) Drinking Fountains: ____ Service Sinks: ____

FOOTNOTES:

1) In case of conflict with the U.S. Department of Justice Federal Registers Parts through V - ADA Guidelines and specific reference to the International Building Code Accessibility Chapters, the more restrictive requirement shall govern.

2) Additional Code Information shall be provided at the discretion of the Building Official for Complex Buildings. Including, but not limited to:

a) Performance Based Criteria.
b) Means or Egress Analysis.
c) Fire Assembly Locator Sheet.
d) Exterior and Interior Accessibility Route.
e) Fire Stopping, Including Tested Design Number.

3) Renovation work is necessitated by total building hazardous materials abatement (covered in Bid Package No. 1), and partial accessibility upgrade. Only those areas affected by the abatement are being remodeled.

4) To the best of our knowledge, these plans meet the DFCM standards.

VICINITY MAP

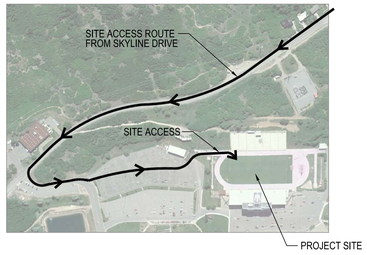

INDEX TO DRAWINGS - CONSTRUCTION DOCUMENTS

GENERAL
GI001 COVER SHEET

CIVIL
CD101 DEMOLITION PLAN
CD102 DEMOLITION PLAN
CS101 SITE PLAN
CS102 SITE PLAN
CG101 GRADINIG AND DRAINAGE PLAN
CG102 GRADINIG AND DRAINAGE PLAN
CU101 UTILITY PLAN
CD501 DETAIL SHEET
CW101 SWPP PLAN
CW102 SWPP NOTES

IRRIGATION
DL100 IRRIGATION DEMOLITION PLAN
LI101 IRRIGATION PLAN
LI501 IRRIGATION DETAILS
LI501 IRRIGATION NOTES

SITE
AS501 FOOTBALL FIELD DETAILS
AS502 FOOTBALL FIELD DETAILS

ELECTRICAL
EE001 ELECTRICAL NOTES AND DETAILS
ED001 DEMOLITION SITE PLAN - ELECTRICAL
EE100 SITE PLAN - ELECTRICAL

SPECIAL INSPECTION AND TESTING UNDER THE PROVISIONS OF 2009 IBC Section 1704 AND FOR MISCELLANEOUS AREAS

Indicate required Special inspections for project by checking the appropriate boxes and provide specific instructions as to the inspection requirements and the expectations of the architect, engineer and owner:

STEEL (IBC 1704.3)

Item			Detailed Instructions and Frequencies
High Strength Bolting(1704.3.3)	☐ Continuous	☐ Periodic	
WELDING (1704.3.1)			
Details (1704.3.2)			
Complete & partial penetration groove welds	☐ Continuous	☐ Periodic	
Multipass fillet welds	☐ Continuous	X Periodic	All welds shall be visually inspected. All materials, welding procedures and qualifications of welders shall be verified prior to the start of the work.
Single-pass fillet welds > 5/16"	☐ Continuous	☐ Periodic	
Single-pass fillet welds ≤ 5/16"	☐ Continuous	☐ Periodic	
Floor & roof deck welds	☐ Continuous	☐ Periodic	
REINFORCEMENT STEEL	☐ Continuous		
Verification of weldability	☐ Continuous	☐ Periodic	
Shear wall and shear reinforcement	☐ Continuous	☐ Periodic	
Other reinforcement	☐ Continuous	☐ Periodic	
Steel frame joint details	☐ Continuous	☐ Periodic	

CONCRETE CONSTRUCTION (IBC 1704.4)

Item			Detailed Instructions and Frequencies
Materials (1704.4.1)	☐ Continuous	X Periodic	
Steel placement	☐ Continuous	X Periodic	
Steel welding	☐ Continuous	☐ Periodic	
Bolts prior & during placement	☐ Continuous	☐ Periodic	
Use of required design mix	☐ Continuous	X Periodic	
Concrete sampling for strength test, slump, air content, and temperature of concrete	☐ Continuous	X Periodic	
Concrete & shotcrete placement	☐ Continuous	☐ Periodic	
Curing temperature and techniques	☐ Continuous	☐ Periodic	
Pre-stressed concrete	☐ Continuous	☐ Periodic	
Pre-cast concrete	☐ Continuous	☐ Periodic	
Posttensioned concrete	☐ Continuous	☐ Periodic	
Form work	☐ Continuous	☐ Periodic	

Page 1 of 3

SOILS CONSTRUCTION (IBC 1704.7)

Item			Detailed Instructions and Frequencies
Site preparation	☐ Continuous	X Periodic	Per the approved soils report.
Structural fill material	☐ Continuous	X Periodic	Per the approved soils report.
Structural fill lift thickness	☐ Continuous	X Periodic	Special inspection is not required during placement of controlled fill having a total depth of 12" or less.
Structural fill soil densities	X Continuous	☐ Periodic	Per the approved soils report.
Backfill soils materials	☐ Continuous	X Periodic	Per the approved soils report.
Backfill soil densities	☐ Continuous	X Periodic	Per the approved soils report.

MISCELLANEOUS AREAS

These inspections are recommended by the Architect/Engineer and approved by DFCM.

			Detailed Instructions and Frequencies
Suspended Ceiling Grid Clips	☐ Continuous	☐ Periodic	
Suspended Ceiling wire spacing (Seismic)	☐ Continuous	☐ Periodic	
Soils backfill (specify locations and frequency)	☐ Continuous	X Periodic	Test compaction of the football field crusher course.
Soils for curb and gutter (specify locations and frequency)	☐ Continuous	X Periodic	
Soils for parking lots (specify locations and frequency)	☐ Continuous	X Periodic	
Soils for utility trench backfill	☐ Continuous	X Periodic	
Reinforcement for slab on grade sidewalks and drive approaches (specify locations and frequency)	☐ Continuous	☐ Periodic	
Reinforcement for interior slab on grade (specify locations and frequency)	☐ Continuous	☐ Periodic	
Concrete testing for slab on grade sidewalks and drive approaches (specify locations and frequency)	☐ Continuous	☐ Periodic	
Concrete testing for interior slab on grade (specify locations and frequency)	☐ Continuous	☐ Periodic	
Masonry Veneer (specify locations and frequency)	☐ Continuous	☐ Periodic	
Asphalt inspection (specify locations and frequency)	☐ Continuous	X Periodic	
Asphalt testing (specify locations and frequency)	☐ Continuous	X Periodic	
Inspection of seismic resistance (specify locations and frequency)	☐ Continuous	☐ Periodic	
Steam and water line welding (specify locations and frequency)	☐ Continuous	☐ Periodic	
Seismic supports for duct work and sealing of joints for duct work	☐ Continuous	☐ Periodic	
Seismic supports for electrical raceways, cable trays and lights	☐ Continuous	☐ Periodic	
Seismic supports for plumbing lines including gas, water and steam and condensation	☐ Continuous	☐ Periodic	
Seismic bracing for mechanical units both on slab and suspended	☐ Continuous	☐ Periodic	

Page 2 of 3

Special Inspectors Shall:

- Be approved by the Building Official prior to performing any duties;
- Provide proof of licensure as a special inspector by the State of Utah for each type of inspection;
- Inspection reports are to meet the requirements of IBC 1704.1.2 and DFCM standards;
- Inspection reports are to be submitted to the code consultant, architect, DFCM project manager, and the State of Utah Building Official within 48 hrs. of inspections;
- A final inspection report shall be submitted following completion of the project documenting the types of special inspections performed and a statement indicating that the structure is in compliance with the drawings, specifications and applicable codes. IBC 1704.1.2

Updated July 29, 2010

Page 3 of 3

CONSULTANTS

CIVIL

GREAT BASIN ENGINEERS
5746 SOUTH 1475 EAST
SALT LAKE CITY, UT 84111
PHONE: (801) 521.0222
FAX: (801) 932.7544

ELECTRICAL

ECE ENGINEERS
939 SOUTH WEST TEMPLE
SALT LAKE CITY, UT 84111
PHONE: (801)521.8007
FAX: (801)521.8057

MHTN ARCHITECTS
MHTN Architects, Inc.
420 East South Temple
Suite 100
Salt Lake City, Utah 84111
Telephone (801) 595-6700
Telefax (801) 595-6717
www.mhtn.com

WEBER STATE UNIVERSITY
STEWART STADIUM FIELD RENOVATION
DFCM PROJECT NUMBER: 10280810
WEBER STATE UNIVERSITY
OGDEN, UTAH 84408

SEAL

MHTN PROJECT NO. 2010575

DRAWN BY: JZ CHECKED BY: RB

ISSUED:

NO.	DATE	DESCRIPTION
01	03 FEB. 2011	CONSTRUCTION DOCUMENTS

CONTRACTOR TO VERIFY DRAWINGS IN FIELD USE REFLECT LAST REVISION DATE:

NO.	DATE	DESCRIPTION

SHEET NAME

COVER SHEET

CONSTRUCTION DOCUMENTS
03 FEBRUARY 2011

SHEET NUMBER

GI001

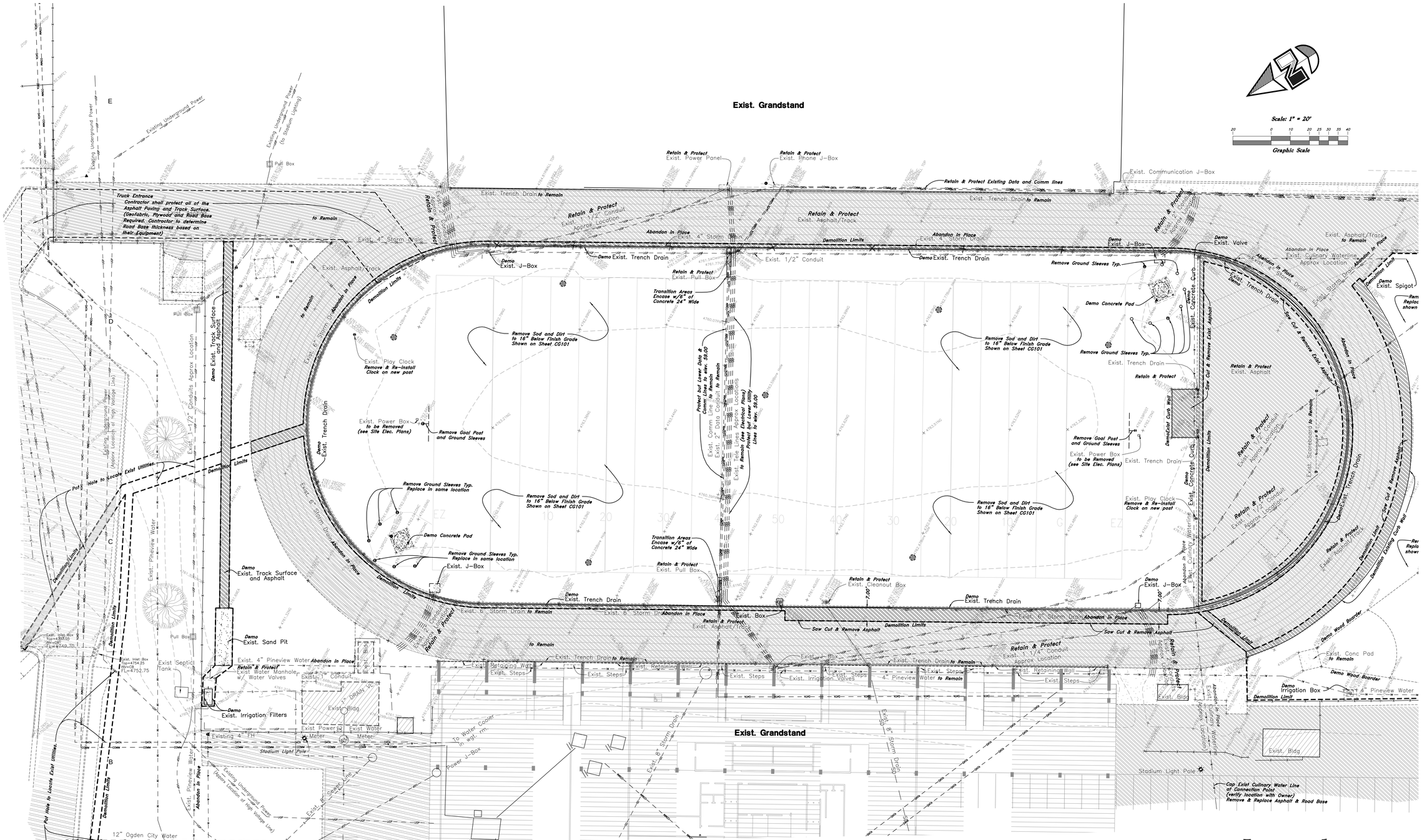

Note:
Soil removed from site will be hauled to area South of Hammer Throw on Old Post Road.

Stockpile Topsoil separate from Sub-Soil as directed by owner.

General Demolition Notes:

1. Demolition and site clearing for this contract are to include all areas shown within demolition limits or by note.
2. Refer to site improvement plans for more details on limits of removal.
3. Excavated areas to be backfilled with clean granular material compacted to 95% of maximum lab density as determined by ASTM D 1557-78. (Test results to be given to owner)
4. DO NOT interrupt any services or disrupt the operation of any businesses shown outside the demolition limits.
5. Remove debris, rubbish, and other materials resulting from the demolition and site clearing operations from the site and dispose of in a legal manner.
6. The location and/or elevation of existing utilities as shown on these plans is based on records of the various utility companies and, where possible, measurements taken in the field. The information is not to be relied upon as being exact or complete. Contractor shall contact authorities having jurisdiction for field locations. Contractor shall be responsible for protection of in place and relocated utilities during construction.
7. Contractor shall be responsible for disposal of all waste material. Disposal shall be at an approved site for such material. Burning onsite is not permitted.
8. Contractor shall verify with Weber State University any street removal, curb cuts, and any restoration required for utility line removal.
9. Contractor shall obtain all permits necessary for demolition from City, County, State or Federal Agencies as required.

CAUTION NOTICE TO CONTRACTOR

The contractor is specifically cautioned that the location and/or elevation of existing utilities as shown on these plans are based on records of the various utility companies and, where possible, measurements taken in the field. The information is not to be relied on as being exact or complete. The contractor must call the appropriate utility company at least 48 hours before any excavation to request exact field location of utilities. It shall be the responsibility of the contractor to relocate all existing utilities which conflict with the propose improvements shown on the plans.

PRIVATE ENGINEER'S NOTICE TO CONTRACTORS

The Contractor agrees that he shall assume sole and complete responsibility for job site conditions during the course of construction of this project, including safety of all persons and property; that this requirement shall apply continuously and not be limited to normal working hours; and that the contractor shall defend, indemnify, and hold the owner and the engineer harmless from any and all liability, real or alleged, in connection with the performance of work on this project, excepting for liability arising from the sole negligence of the owner or the engineer.

ALL CONSTRUCTION TO CONFORM TO WEBER STATE UNIVERSITY STANDARDS AND SPECIFICATIONS

Legend

(Note: All items may not appear on drawing)

San. Sewer Manhole	S	Ductile Iron	DI
Water Manhole	W	Polyvinyl Chloride	PVC
Storm Drain Manhole	S	Top of Asphalt	TA
		Edge of Asphalt	EA
Electrical Manhole	E	Centerline	CL
Catch Basins		Flowline	FL
Exist. Fire Hydrant		Finish Floor	FF
Fire Hydrant		Top of Curb	TC
Exist. Water Valve	WV	Top of Wall	TWL
Water Valve	WV	Top of Walk	TW
Sanitary Sewer	S	Top of Concrete	TCN
Culinary Water	W	Natural Ground	NG
Gas Line	G	Finish Contour	90
Irrigation Line	IW	Exist. Contour	90
Storm Drain	SD	Finish Grade	95.33TA
Telephone Line	T	Exist. Grade	95.72TA
Secondary Waterline	SD	Ridge Line	R
Power Line	P	Direction of Flow	
Fire Line	F	Existing Asphalt	
Land Drain	LD		
Power pole		Concrete	
Power pole w/guy			
Light Pole			
Fence	X X X		
Flowline of ditch			
Overhead Power line	OHP		
Corrugated Metal Pipe	CMP		
Concrete Pipe	CP		
Reinforced Concrete Pipe	RCP		

MHTN
ARCHITECTS
MHTN Architects, Inc.
420 East South Temple
Suite 100
Salt Lake City, Utah 84111
Telephone (801) 595-6700
Telefax (801) 595-6717
www.mhtn.com

GREAT BASIN ENGINEERING
5746 SOUTH 1475 EAST · SUITE 200
OGDEN, UTAH 84403 · MAIN (801)394-4515
S.L.C (801)521-0222 FAX 801-392-7544
WWW.GREATBASINENGINEERING.COM

WEBER STATE UNIVERSITY
STEWART STADIUM FIELD RENOVATION

DFCM PROJECT NUMBER: 10280810

WEBER STATE UNIVERSITY
OGDEN, UTAH 84408

SEAL

MHTN PROJECT NO. 2010576

DRAWN BY: TK CHECKED BY: MEB

ISSUED:

NO.	DATE	DESCRIPTION
1	03 FEB 2011	CONSTRUCTION DOCUMENTS

CONTRACTOR TO VERIFY DRAWINGS IN FIELD USE REFLECT LAST REVISION DATE:

NO.	DATE	DESCRIPTION

SHEET NAME

DEMOLITION PLAN

CONSTRUCTION DOCUMENTS
3 FEBRUARY 2011

SHEET NUMBER

CD101

W:\10N246 MHTN - WSU Football\DWG\10N24652.dwg, 2/7/2011 5:16:17 PM, DWG To PDF.pc3, 1:1

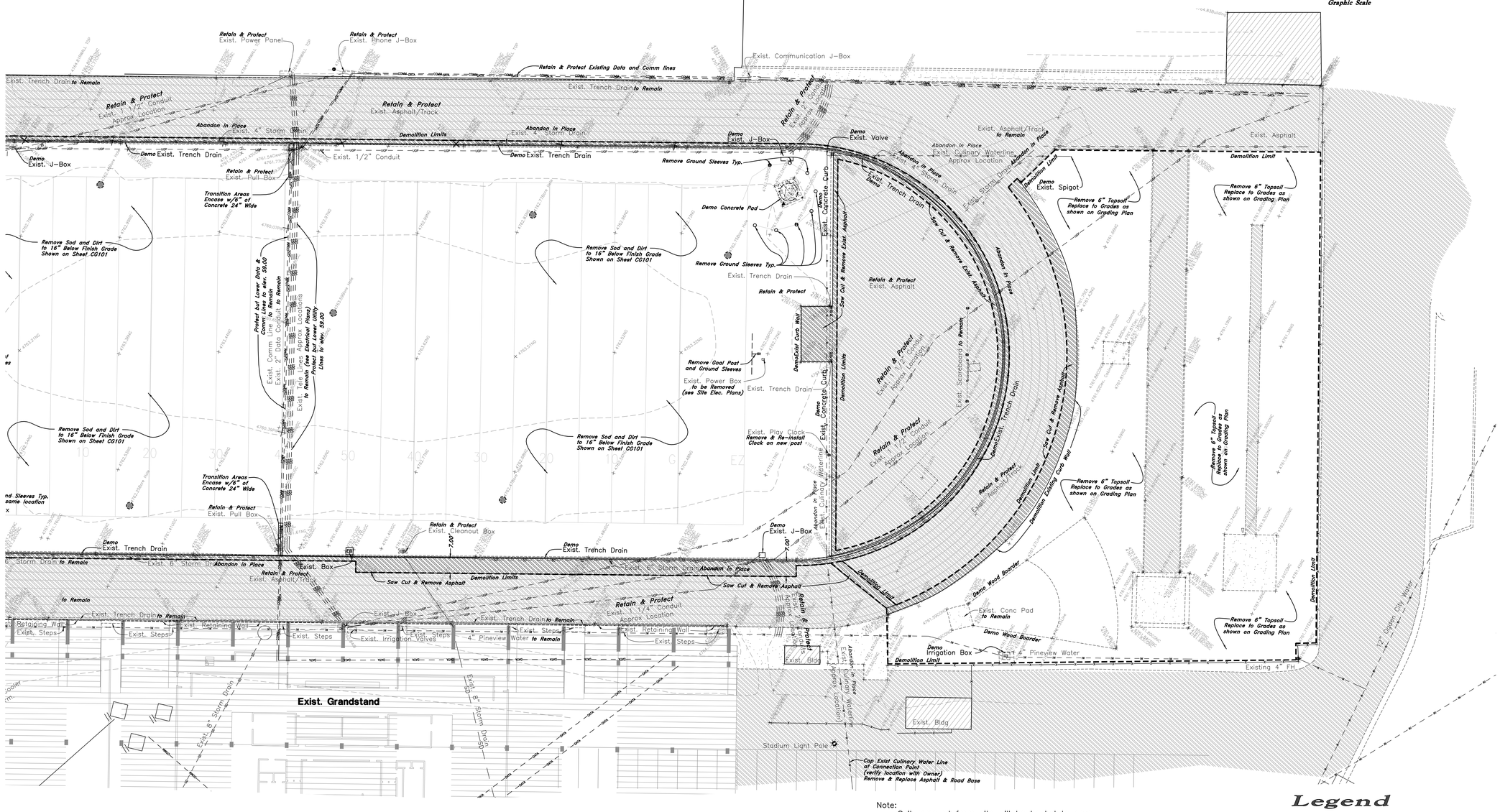

Note:
Soil removed from site will be hauled to area South of Hammer Throw on Old Post Road.

Stockpile Topsoil separate from Sub-Soil as directed by owner.

General Demolition Notes:

1. Demolition and site clearing for this contract are to include all areas shown within demolition limits or by note.
2. Refer to site improvement plans for more details on limits of removal.
3. Excavated areas to be backfilled with clean granular material compacted to 95% of maximum lab density as determined by ASTM D 1557-78. (Test results to be given to owner)
4. DO NOT interrupt any services or disrupt the operation of any businesses shown outside the demolition limits.
5. Remove debris, rubbish, and other materials resulting from the demolition and site clearing operations from the site and dispose of in a legal manner.
6. The location and/or elevation of existing utilities as shown on these plans is based on records of the various utility companies and, where possible, measurements taken in the field. The information is not to be relied upon as being exact or complete. Contractor shall contact authorities having jurisdiction for field locations. Contractor shall be responsible for protection of in place and relocated utilities during construction.
7. Contractor shall be responsible for disposal of all waste material. Disposal shall be at an approved site for such material. Burning onsite is not permitted.
8. Contractor shall verify with Weber State University any street removal, curb cuts, and any restoration required for utility line removal.
9. Contractor shall obtain all permits necessary for demolition from City, County, State or Federal Agencies as required.

CAUTION NOTICE TO CONTRACTOR

The contractor is specifically cautioned that the location and/or elevation of existing utilities as shown on these plans are based on records of the various utility companies and, where possible, measurements taken in the field. The information is not to be relied on as being exact or complete. The contractor must call the appropriate utility company at least 48 hours before any excavation to request exact field location of utilities. It shall be the responsibility of the contractor to relocate all existing utilities which conflict with the propose improvements shown on the plans.

PRIVATE ENGINEER'S NOTICE TO CONTRACTORS

The Contractor agrees that he shall assume sole and complete responsibility for job site conditions during the course of construction of this project, including safety of all persons and property; that this requirement shall apply continuously and not be limited to normal working hours; and that the contractor shall defend, indemnify, and hold the owner and the engineer harmless from any and all liability, real or alleged, in connection with the performance of work on this project, excepting for liability arising from the sole negligence of the owner or the engineer.

ALL CONSTRUCTION TO CONFORM TO WEBER STATE UNIVERSITY STANDARDS AND SPECIFICATIONS

Legend

(Note: All Items may not appear on drawing)

San. Sewer Manhole	S	Ductile Iron	DI
Water Manhole	W	Polyvinyl Chloride	PVC
Storm Drain Manhole	D	Top of Asphalt	TA
		Edge of Asphalt	EA
Electrical Manhole	E	Centerline	CL
Catch Basins		Flowline	FL
Exist. Fire Hydrant		Finish Floor	FF
Fire Hydrant		Top of Curb	TC
Exist. Water Valve		Top of Wall	TWL
Water Valve		Top of Walk	TW
Sanitary Sewer	—S—	Top Of Concrete	TCN
Culinary Water	—W—	Natural Ground	NG
Gas Line	—G—	Finish Contour	—90—
Irrigation Line	—IW—	Exist. Contour	--90--
Storm Drain	—SD—	Finish Grade	95.33TA
Telephone Line	—T—	Exist. Grade	95.32TA
Secondary Waterline	—SD—	Ridge Line	—R—
Power Line	—P—	Direction of Flow	
Fire Line	—F—	Existing Asphalt	
Land Drain	—LD—		
Power pole		Concrete	
Power pole w/guy			
Light Pole			
Fence	x x x		
Flowline of ditch			
Overhead Power line	OHP		
Corrugated Metal Pipe	CMP		
Concrete Pipe	CP		
Reinforced Concrete Pipe	RCP		

MHTN ARCHITECTS
MHTN Architects, Inc.
420 East South Temple
Suite 100
Salt Lake City, Utah 84111
Telephone (801) 595-6700
Telefax (801) 595-6717
www.mhtn.com

GREAT BASIN ENGINEERING
5746 South 1475 East · Suite 200
Ogden, Utah 84403 · Main (801)394-4515
S.L.C (801)521-0222 FAX 801-393-7544
WWW.GREATBASINENGINEERING.COM

WEBER STATE UNIVERSITY
STEWART STADIUM FIELD RENOVATION

DFCM PROJECT NUMBER: 10280810

WEBER STATE UNIVERSITY
OGDEN, UTAH 84408

SEAL

MHTN PROJECT NO. 2010576

DRAWN BY: TK CHECKED BY: MEB

ISSUED:

NO.	DATE	DESCRIPTION
1	03 FEB 2011	CONSTRUCTION DOCUMENTS

CONTRACTOR TO VERIFY DRAWINGS IN FIELD USE REFLECT LAST REVISION DATE.

NO.	DATE	DESCRIPTION

SHEET NAME

DEMOLITION PLAN

CONSTRUCTION DOCUMENTS
3 FEBRUARY 2011

SHEET NUMBER

CD102

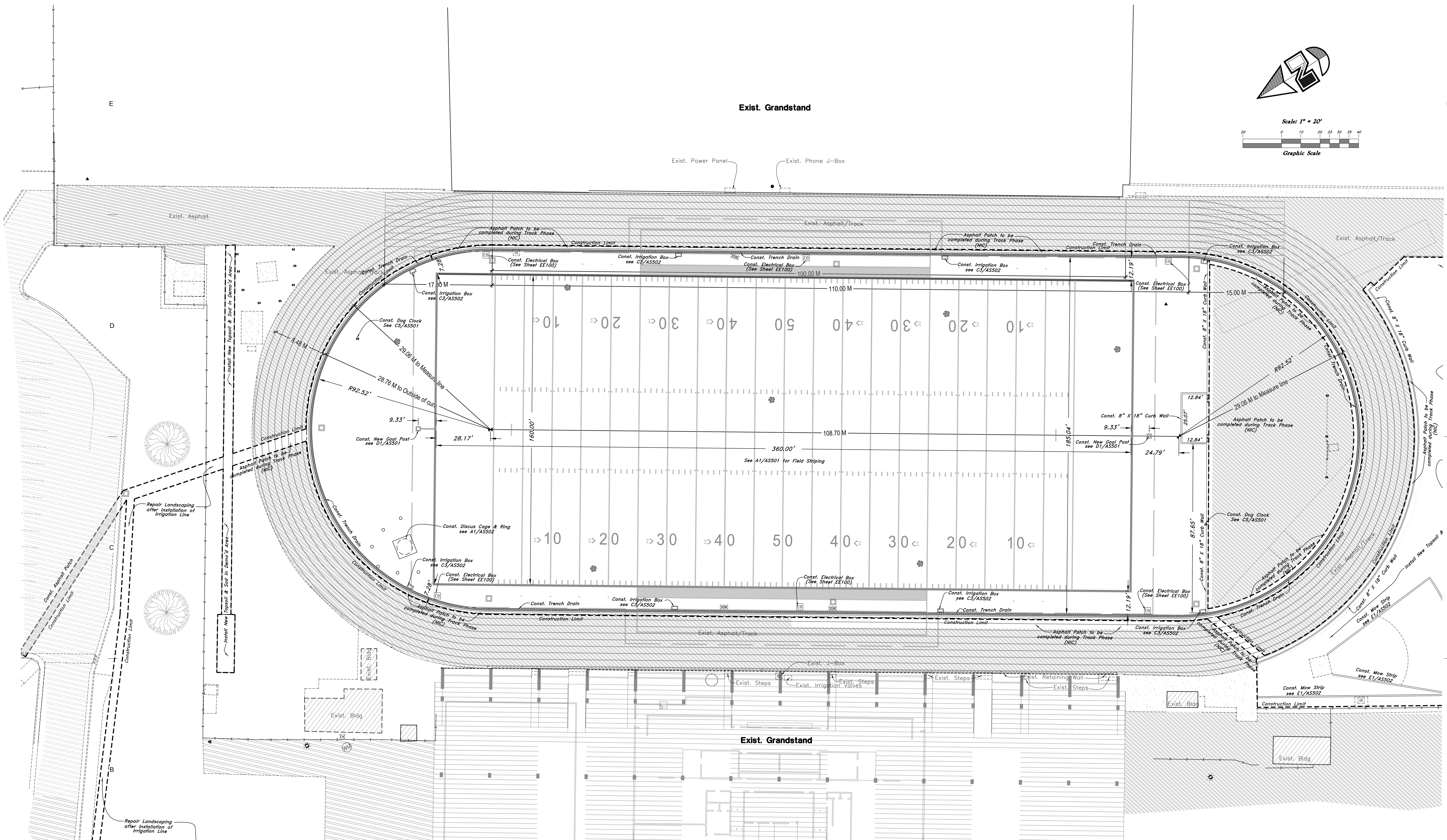

General Site Notes:
1. Stalls designated as handicap will require a painted handicap symbol and sign. (See Details)
2. Fire lane markings and signs to be installed as directed by the Fire Marshall.
3. Aisle markings, directional arrows and stop bars will be painted at each driveway as shown on the plans.
4. See Horizontal Control plan for coordinates, radiuses and detailed dimensions of site improvements.
5. Building sidewalks, ramps, and bollards are building contractor responsible items. See architectural plans.
6. All dimensions are to back of curb unless otherwise noted.

Legend

(Note: All Items may not appear on drawing)

San. Sewer Manhole	(S)
Water Manhole	(W)
Storm Drain Manhole	(SD)
Electrical Manhole	(E)
Catch Basins	
Exist. Fire Hydrant	
Fire Hydrant	
Exist. Water Valve	
Water Valve	
Sanitary Sewer	—S—
Culinary Water	—W—
Gas Line	—G—
Irrigation Line	—IW—
Storm Drain	—SD—
Telephone Line	—T—
Secondary Waterline	—SD—
Power Line	—P—
Fire Line	—F—
Land Drain	—LD—
Power pole	
Power pole w/guy	→
Light Pole	
Fence	—x—x—x—
Flowline of ditch	
Overhead Power line	OHP
Corrugated Metal Pipe	CMP
Concrete Pipe	CP
Reinforced Concrete Pipe	RCP
Ductile Iron	DI
Polyvinyl Chloride	PVC
Top of Asphalt	TA
Edge of Asphalt	EA
Centerline	CL
Flowline	FL
Finish Floor	FF
Top of Curb	TC
Top of Wall	TWL
Top of Walk	TW
Top of Concrete	TCN
Natural Ground	NG
Finish Contour	—90—
Exist. Contour	--90--
Finish Grade	95.33TA
Exist. Grade	95.72TA
Ridge Line	— R —
Direction of Flow	→
Existing Asphalt	
Concrete	

PRIVATE ENGINEER'S NOTICE TO CONTRACTORS

The Contractor agrees that he shall assume sole and complete responsibility for job site conditions during the course of construction of this project, including safety of all persons and property: that this requirement shall apply continuously and not be limited to normal working hours; and that the contractor shall defend, indemnify, and hold the owner and the engineer harmless from any and all liability, real or alleged, in connection with the performance of work on this project, excepting for liability arising from the sole negligence of the owner or the engineer.

ALL CONSTRUCTION TO CONFORM TO WEBER STATE UNIVERSITY STANDARDS AND SPECIFICATIONS

MHTN ARCHITECTS
MHTN Architects, Inc.
420 East South Temple
Suite 100
Salt Lake City, Utah 84111
Telephone (801) 595-6700
Telefax (801) 595-6717
www.mhtn.com

GREAT BASIN ENGINEERING INC
5746 South 1475 East · Suite 200
Ogden, Utah 84403 Main (801)394-4515
S.L.C (801)521-0222 Fax (801)392-7544
www.greatbasinengineering.com

WEBER STATE UNIVERSITY
STEWART STADIUM FIELD RENOVATION
DFCM PROJECT NUMBER: 10280810
WEBER STATE UNIVERSITY
OGDEN, UTAH 84408

SEAL

MHTN PROJECT NO. 2010576
DRAWN BY: TK CHECKED BY: MEB

ISSUED:

NO.	DATE	DESCRIPTION
1	03 FEB 2011	CONSTRUCTION DOCUMENTS

CONTRACTOR TO VERIFY DRAWINGS IN FIELD USE REFLECT LAST REVISION DATE.

NO.	DATE	DESCRIPTION

SHEET NAME
SITE PLAN

CONSTRUCTION DOCUMENTS
3 FEBRUARY 2011

SHEET NUMBER
CS101

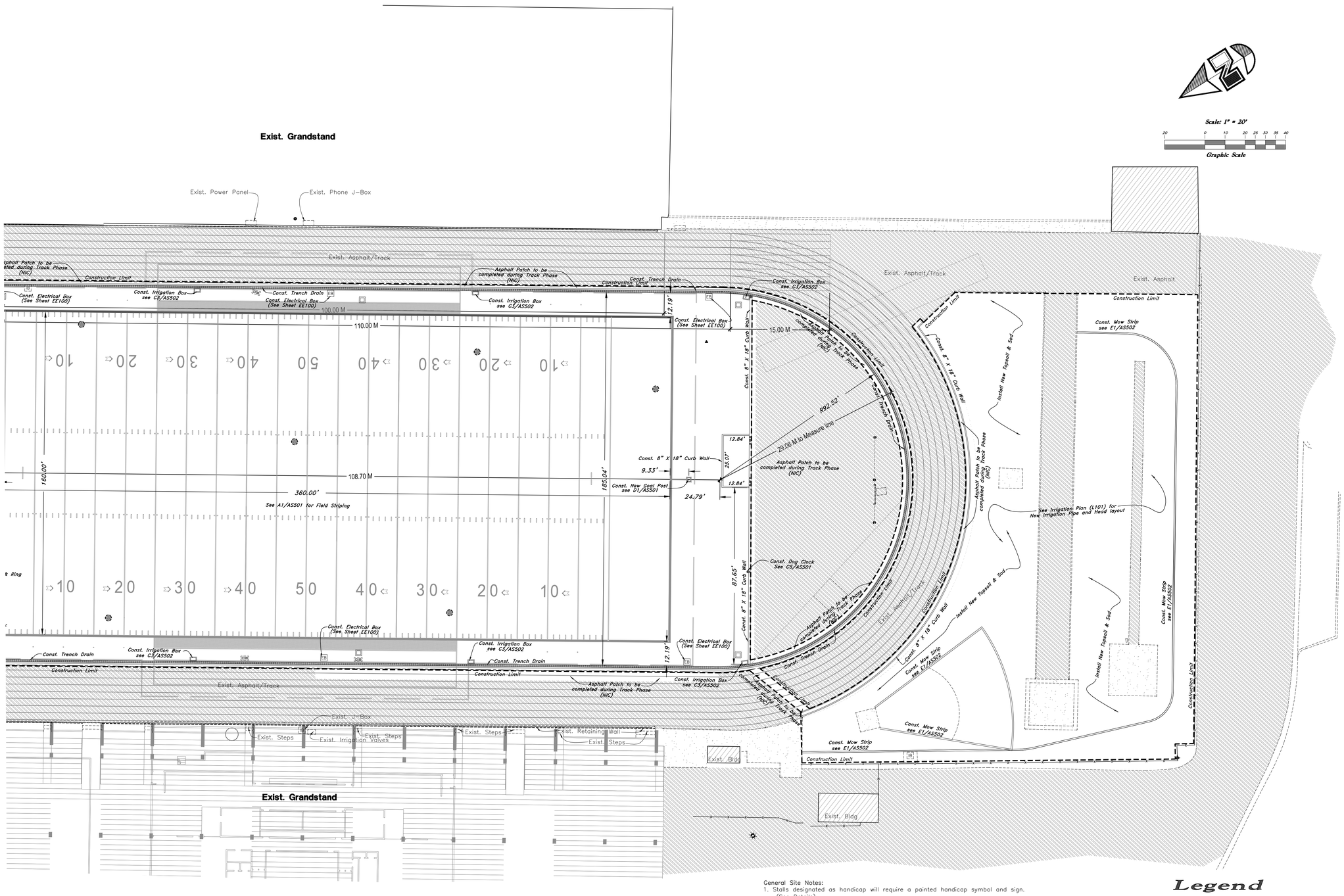

General Site Notes:

1. Stalls designated as handicap will require a painted handicap symbol and sign. (See Details)
2. Fire lane markings and signs to be installed as directed by the Fire Marshall.
3. Aisle markings, directional arrows and stop bars will be painted at each driveway as shown on the plans.
4. See Horizontal Control plan for coordinates, radiuses and detailed dimensions of site improvements.
5. Building sidewalks, ramps, and bollards are building contractor responsible items. See architectural plans.
6. All dimensions are to back of curb unless otherwise noted.

PRIVATE ENGINEER'S NOTICE TO CONTRACTORS

The Contractor agrees that he shall assume sole and complete responsibility for job site conditions during the course of construction of this project, including safety of all persons and property; that this requirement shall apply continuously and not be limited to normal working hours; and that the contractor shall defend, indemnify, and hold the owner and the engineer harmless from any and all liability, real or alleged, in connection with the performance of work on this project, excepting for liability arising from the sole negligence of the owner or the engineer.

ALL CONSTRUCTION TO CONFORM TO WEBER STATE UNIVERSITY STANDARDS AND SPECIFICATIONS

Legend

(Note: All Items may not appear on drawing)

San. Sewer Manhole	S	Ductile Iron	DI
Water Manhole	W	Polyvinyl Chloride	PVC
Storm Drain Manhole	D	Top of Asphalt	TA
		Edge of Asphalt	EA
Electrical Manhole	E	Centerline	CL
Catch Basins		Flowline	FL
Exist. Fire Hydrant		Finish Floor	FF
Fire Hydrant		Top of Curb	TC
Exist. Water Valve		Top of Wall	TWL
Water Valve		Top of Walk	TW
Sanitary Sewer	S	Top of Concrete	TCN
Culinary Water	W	Natural Ground	NG
Gas Line	G	Finish Contour	90
Irrigation Line	IW	Exist. Contour	90
Storm Drain	SD	Finish Grade	95.33TA
Telephone Line	T	Exist. Grade	95.72TA
Secondary Waterline	P	Ridge Line	R
Power Line	P	Direction of Flow	
Fire Line	F	Existing Asphalt	
Land Drain	LD		
Power pole			
Power pole w/guy		Concrete	
Light Pole			
Fence			
Flowline of ditch			
Overhead Power line	OHP		
Corrugated Metal Pipe	CMP		
Concrete Pipe	CP		
Reinforced Concrete Pipe	RCP		

MHTN
ARCHITECTS
MHTN Architects, Inc.
420 East South Temple
Suite 100
Salt Lake City, Utah 84111
Telephone (801) 595-6700
Telefax (801) 595-6717
www.mhtn.com

GREAT BASIN ENGINEERING
5746 South 1475 East · Suite 200
Ogden, Utah 84403 Main (801)394-4515
S.L.C (801)521-0222 FAX 801-393-7544
WWW.GREATBASINENGINEERING.COM

WEBER STATE UNIVERSITY
STEWART STADIUM FIELD RENOVATION

DFCM PROJECT NUMBER: 10280810

WEBER STATE UNIVERSITY
OGDEN, UTAH 84408

SEAL

MHTN PROJECT NO. 2010576

DRAWN BY: TK CHECKED BY: MEB

ISSUED:

NO.	DATE	DESCRIPTION
1	03 FEB 2011	CONSTRUCTION DOCUMENTS

CONTRACTOR TO VERIFY DRAWINGS IN FIELD USE REFLECT LAST REVISION DATE.

NO.	DATE	DESCRIPTION

SHEET NAME

SITE PLAN

CONSTRUCTION DOCUMENTS
3 FEBRUARY 2011

SHEET NUMBER

CS102

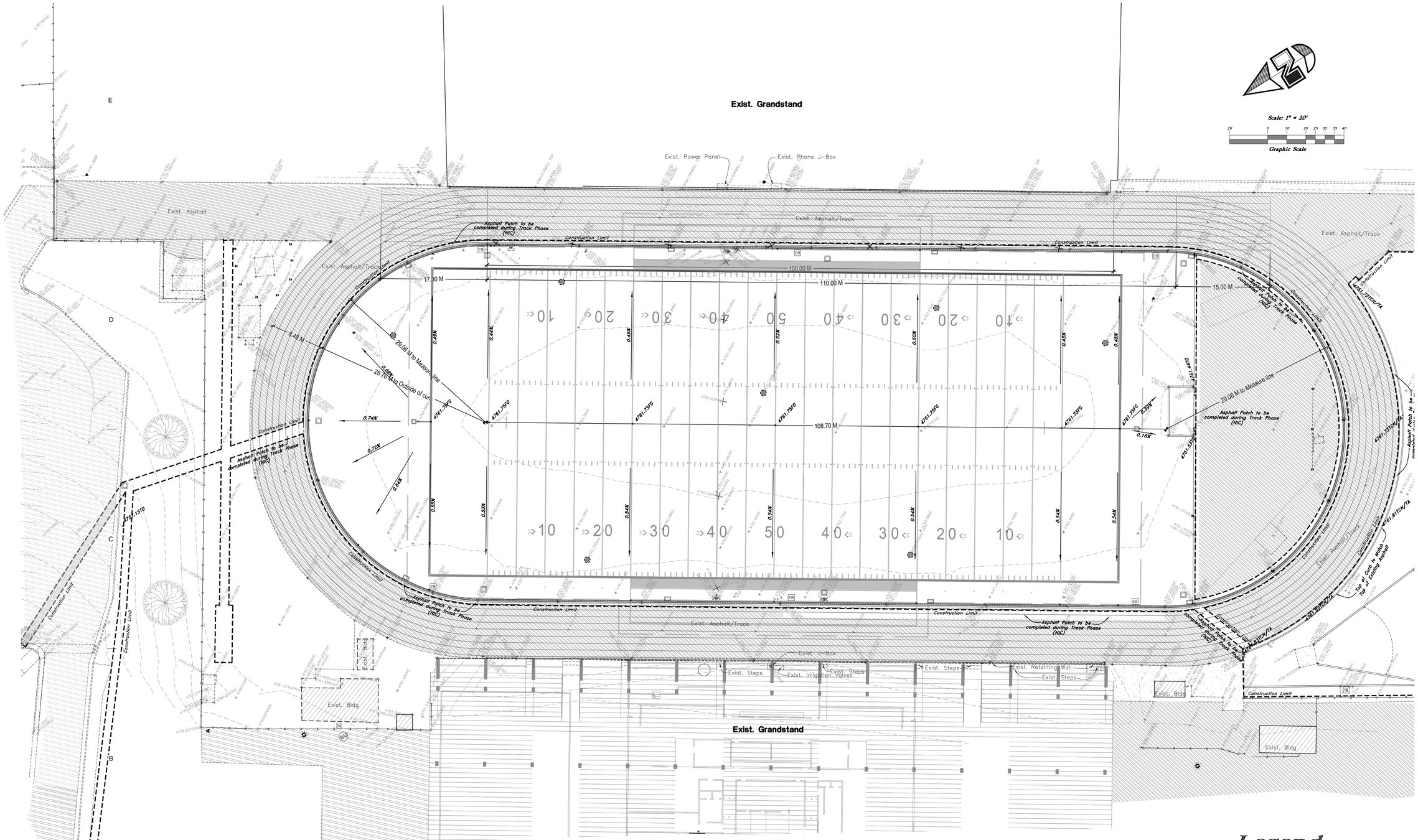

General Grading Notes:

1. All work shall be in accordance with the City Public Works Standard.
2. Cut slopes shall be no steeper than 2 horizontal to 1 vertical.
3. Fill slopes shall be no steeper than 2 horizontal to 1 vertical.
4. Fills shall be compacted per the recommendations of the geotechnical report prepared for the project and shall be certified by the geotechnical engineer.
5. Areas to receive fill shall be properly prepared and approved by the City inspector and geotechnical Engineer prior to placing fill.
6. Fills shall be benched into competent material as per specifications and geotechnical report.
7. All trench backfill shall be tested and certified by the site geotechnical engineer per the grading code.
8. A geotechnical engineer shall perform periodic inspections and submit a complete report and map upon completion of the rough grading.
9. The final compaction report and certification from the geotechnical engineer shall contain the type of field testing performed. Each test shall be identified with the method of obtaining the in-place density, whether sand cone or drive ring and shall be so noted for each test. Sufficient maximum density determinations shall be performed to verify the accuracy of the maximum density curves used by the field technician.
10. Dust shall be controlled by watering.
11. The location and protection of all utilities is the responsibility of the permitee.
12. Approved protective measures and temporary drainage provisions must be used to protect adjoining properties during the grading project.
13. All public roadways must be cleared daily of all dirt, mud and debris deposited on them as a result of the grading operation. Cleaning is to be done to the satisfaction of the city engineer.
14. The site shall be cleared and grubbed of all vegetation and deleterious matter prior to grading.
15. The contractor shall provide shoring in accordance with OSHA requirements for trench walls.
16. Aggregate base shall be compacted per the geotechnical report prepared for the project.
17. Elevations shown on this plan are finish grades. Rough grades are the subgrades of the improvements shown hereon.
18. The recommendations in the following Geotechnical Engineering Report by xxxx are included in the requirements of grading and site preparation.
    The report is titled "GEOTECHNICAL INVESTIGATION "
    Job No.: Address
    Dated:
19 As part of the construction documents, owner has provided contractor with a topographic survey performed by manual or aerial means. Such survey was prepared for project design purposes and is provided to the contractor as a courtesy. It is expressly understood that such survey may not accurately reflect existing topographic conditions.
20. Erosion Control: Protect all inlet boxes, catch basins, etc. with straw bales or other approved method to strain the strom water during construction. Protect surrounding properties and streets from site runoff with sandbags and earth berms.

Curb and Gutter Construction Notes:

1. Open face gutter shall be constructed where drainage is directed away from curb.
2. Open face gutter locations are indicated by shading and notes on site and grading plan.
3. It is the responsibility of the surveyor to adjust top of curb grades at the time construction staking.
4. Refer to the typical details for a standard and open face curb and gutter for dimensions.
5. Transitions between open face and standard curb and gutter are to be smooth. Hand form these areas if necessary.

ADA Notes:

Contractor must maintain a running slope on Accessible routes no steeper than 5.0% (1:20). The cross slope for Accessible routs must be no steeper than 2.0% (1:50). All Accessible routes must have a minimum clear width of 36". If grades on plans do not meet this requirement notify Consultants immediately.

The Client, Contractor, and Subcontractor should immediately notify the Consultant of any conditions of the project that they believe do not comply with the current state of the ADA and/or FHAA.

PRIVATE ENGINEER'S NOTICE TO CONTRACTORS

The Contractor agrees that he shall assume sole and complete responsibility for job site conditions during the course of construction of this project, including safety of all persons and property; that this requirement shall apply continuously and not be limited to normal working hours; and that the contractor shall defend, indemnify, and hold the owner and the engineer harmless from any and all liability, real or alleged, in connection with the performance of work on this project, excepting for liability arising from the sole negligence of the owner or the engineer.

ALL CONSTRUCTION TO CONFORM TO CITY STANDARDS AND SPECIFICATIONS IN RIGHT OF WAY

Legend

(Note: All Items may not appear on drawing)

San. Sewer Manhole	S	Ductile Iron	DI
Water Manhole	W	Polyvinyl Chloride	PVC
Storm Drain Manhole	D	Top of Asphalt	TA
		Edge of Asphalt	EA
Electrical Manhole	E	Centerline	CL
Catch Basins		Flowline	FL
Exist. Fire Hydrant		Finish Floor	FF
Fire Hydrant		Top of Curb	TC
Exist. Water Valve	WV	Top of Wall	TWL
Water Valve	WV	Top of Walk	TW
Sanitary Sewer	—S—	Top Of Concrete	TCN
Culinary Water	—W—	Natural Ground	NG
Gas Line	—G—	Finish Contour	—90—
Irrigation Line	—IW—	Exist. Contour	- -90- -
Storm Drain	—SD—	Finish Grade	95.33TA
Telephone Line	—T—	Exist. Grade	95.12TA
Secondary Waterline	—SD—	Ridge Line	—R—
Power Line	—P—	Direction of Flow	→
Fire Line	—F—	Existing Asphalt	
Land Drain	—LD—		
Power pole			
Power pole w/guy	→	Concrete	
Light Pole			
Fence	—x—x—x—		
Flowline of ditch			
Overhead Power line	OHP		
Corrugated Metal Pipe	CMP		
Concrete Pipe	CP		
Reinforced Concrete Pipe	RCP		

MHTN ARCHITECTS
MHTN Architects, Inc.
420 East South Temple
Suite 100
Salt Lake City, Utah 84111
Telephone (801) 595-6700
Telefax (801) 595-6717
www.mhtn.com

GREAT BASIN ENGINEERING
5746 SOUTH 1475 EAST · SUITE 200
OGDEN, UTAH 84403 · MAIN (801)394-4515
S.L.C (801)521-8222 FAX 801-392-7544
WWW.GREATBASINENGINEERING.COM

WEBER STATE UNIVERSITY
STEWART STADIUM FIELD RENOVATION

DFCM PROJECT NUMBER: 10280810

WEBER STATE UNIVERSITY
OGDEN, UTAH 84408

SEAL

MHTN PROJECT NO. 2010576

DRAWN BY: TK CHECKED BY: MEB

ISSUED:

NO.	DATE	DESCRIPTION
1	03 FEB 2011	CONSTRUCTION DOCUMENTS

CONTRACTOR TO VERIFY DRAWINGS IN FIELD USE REFLECT LAST REVISION DATE:

NO.	DATE	DESCRIPTION

SHEET NAME

GRADING & DRAINAGE PLAN

CONSTRUCTION DOCUMENTS
3 FEBRUARY 2011

SHEET NUMBER

CG101

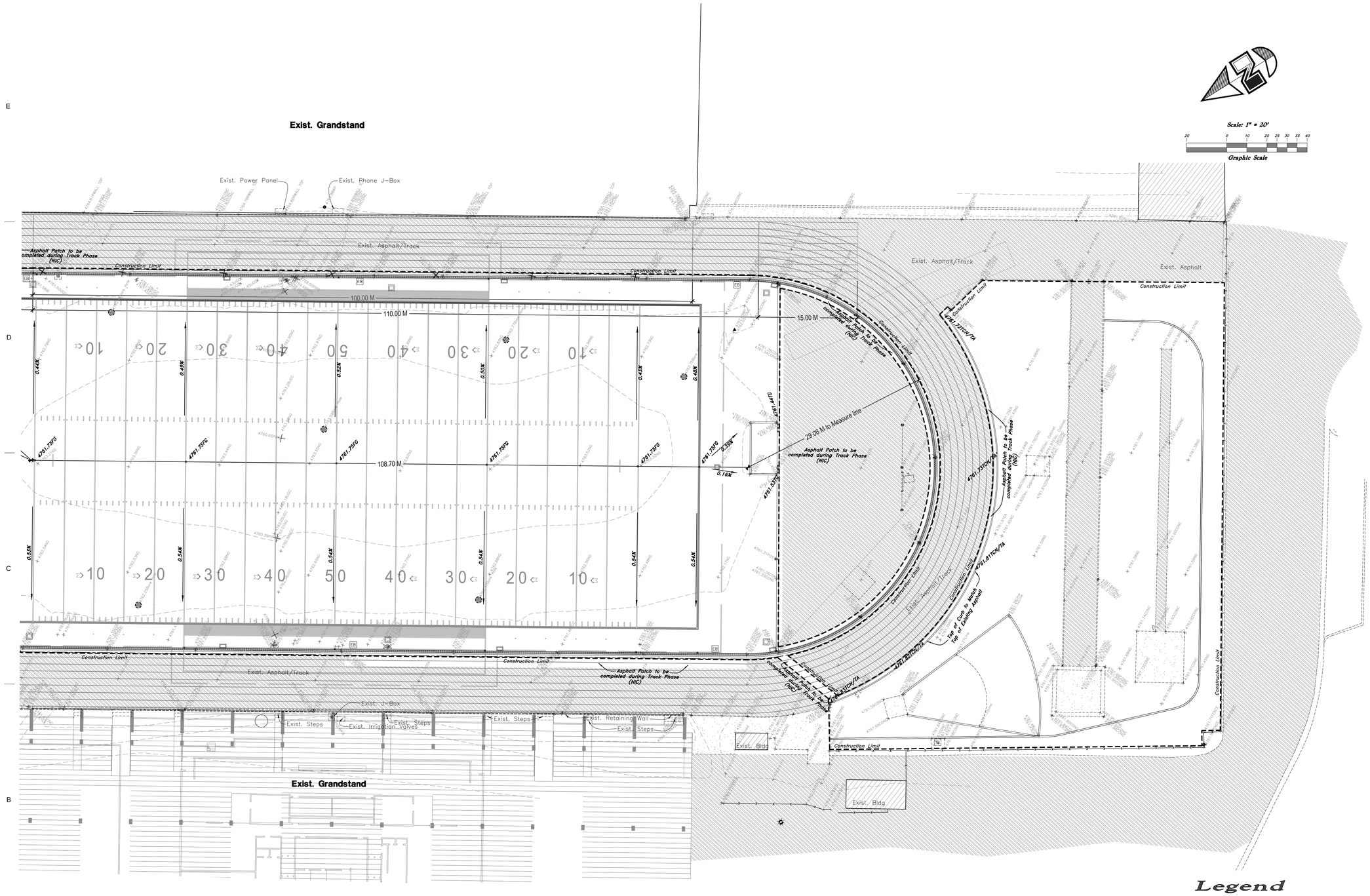

General Grading Notes:

1. All work shall be in accordance with the City Public Works Standard.
2. Cut slopes shall be no steeper than 2 horizontal to 1 vertical.
3. Fill slopes shall be no steeper than 2 horizontal to 1 vertical.
4. Fills shall be compacted per the recommendations of the geotechnical report prepared for the project and shall be certified by the geotechnical engineer.
5. Areas to receive fill shall be properly prepared and approved by the City inspector and geotechnical Engineer prior to placing fill.
6. Fills shall be benched into competent material as per specifications and geotechnical report.
7. All trench backfill shall be tested and certified by the site geotechnical engineer per the grading code.
8. A geotechnical engineer shall perform periodic inspections and submit a complete report and map upon completion of the rough grading.
9. The final compaction report and certification from the geotechnical engineer shall contain the type of field testing performed. Each test shall be identified with the method of obtaining the in-place density, whether sand cone or drive ring and shall be so noted for each test. Sufficient maximum density determinations shall be performed to verify the accuracy of the maximum density curves used by the field technician.
10. Dust shall be controlled by watering.
11. The location and protection of all utilities is the responsibility of the permitee.
12. Approved protective measures and temporary drainage provisions must be used to protect adjoining properties during the grading project.
13. All public roadways must be cleared daily of all dirt, mud and debris deposited on them as a result of the grading operation. Cleaning is to be done to the satisfaction of the city engineer.
14. The site shall be cleared and grubbed of all vegetation and deleterious matter prior to grading.
15. The contractor shall provide shoring in accordance with OSHA requirements for trench walls.
16. Aggregate base shall be compacted per the geotechnical report prepared for the project.
17. Elevations shown on this plan are finish grades. Rough grades are the subgrades of the improvements shown hereon.
18. The recommendations in the following Geotechnical Engineering Report by xxxx are included in the requirements of grading and site preparation.
    The report is titled "GEOTECHNICAL INVESTIGATION "
    Job No.: Address
    Dated:
19 As part of the construction documents, owner has provided contractor with a topographic survey performed by manual or aerial means. Such survey was prepared for project design purposes and is provided to the contractor as a courtesy. It is expressly understood that such survey may not accurately reflect existing topographic conditions.
20. Erosion Control: Protect all inlet boxes, catch basins, etc. with straw bales or other approved method to strain the strom water during construction. Protect surrounding properties and streets from site runoff with sandbags and earth berms.

Curb and Gutter Construction Notes:

1. Open face gutter shall be constructed where drainage is directed away from curb.
2. Open face gutter locations are indicated by shading and notes on site and grading plan.
3. It is the responsibility of the surveyor to adjust top of curb grades at the time construction staking.
4. Refer to the typical details for a standard and open face curb and gutter for dimensions.
5. Transitions between open face and standard curb and gutter are to be smooth. Hand form these areas if necessary.

ADA Notes:

Contractor must maintain a running slope on Accessible routes no steeper than 5.0% (1:20). The cross slope for Accessible routs must be no steeper than 2.0% (1:50). All Accessible routes must have a minimum clear width of 36". If grades on plans do not meet this requirement notify Consultants immediately.

The Client, Contractor, and Subcontractor should immediately notify the Consultant of any conditions of the project that they believe do not comply with the current state of the ADA and/or FHAA.

PRIVATE ENGINEER'S NOTICE TO CONTRACTORS

The Contractor agrees that he shall assume sole and complete responsibility for job site conditions during the course of construction of this project, including safety of all persons and property; that this requirement shall apply continuously and not be limited to normal working hours; and that the contractor shall defend, indemnify, and hold the owner and the engineer harmless from any and all liability, real or alleged, in connection with the performance of work on this project, excepting for liability arising from the sole negligence of the owner or the engineer.

ALL CONSTRUCTION TO CONFORM TO CITY STANDARDS AND SPECIFICATIONS IN RIGHT OF WAY

Legend

(Note: All items may not appear on drawing)

San. Sewer Manhole	S	Ductile Iron	DI
Water Manhole	W	Polyvinyl Chloride	PVC
Storm Drain Manhole	D	Top of Asphalt	TA
		Edge of Asphalt	EA
Electrical Manhole	E	Centerline	CL
Catch Basins		Flowline	FL
Exist. Fire Hydrant		Finish Floor	FF
Fire Hydrant		Top of Curb	TC
Exist. Water Valve		Top of Wall	TWL
Water Valve		Top of Walk	TW
Gas Line	—G—	Top of Concrete	TCN
Irrigation Line	—IW—	Natural Ground	NG
Sanitary Sewer	—S—	Finish Contour	—90—
Culinary Water	—W—	Exist. Contour	--90--
Storm Drain	—SD—	Finish Grade	95.33TA
Telephone Line	—T—	Exist. Grade	95.72TA
Secondary Waterline	—SD—	Ridge Line	—R—
Power Line	—P—	Direction of Flow	
Fire Line	—F—	Existing Asphalt	
Land Drain	—LD—		
Power pole			
Power pole w/guy		Concrete	
Light Pole			
Fence			
Flowline of ditch			
Overhead Power line	OHP		
Corrugated Metal Pipe	CMP		
Concrete Pipe	CP		
Reinforced Concrete Pipe	RCP		

MHTN
ARCHITECTS
MHTN Architects, Inc.
420 East South Temple
Suite 100
Salt Lake City, Utah 84111
Telephone (801) 595-6700
Telefax (801) 595-6717
www.mhtn.com

GREAT BASIN ENGINEERING
5746 South 1475 East · Suite 200
Ogden, Utah 84403 · Main (801)394-4515
S.L.C (801)521-0222 FAX 801-393-7544
WWW.GREATBASINENGINEERING.COM

WEBER STATE UNIVERSITY
STEWART STADIUM FIELD RENOVATION

DFCM PROJECT NUMBER: 10280810

WEBER STATE UNIVERSITY
OGDEN, UTAH 84408

SEAL

MHTN PROJECT NO. 2010576

DRAWN BY: TK CHECKED BY: MEB

ISSUED:

NO.	DATE	DESCRIPTION
1	03 FEB 2011	CONSTRUCTION DOCUMENTS

CONTRACTOR TO VERIFY DRAWINGS IN FIELD USE REFLECT LAST REVISION DATE.

NO.	DATE	DESCRIPTION

SHEET NAME

GRADING & DRAINAGE PLAN

CONSTRUCTION DOCUMENTS
3 FEBRUARY 2011

SHEET NUMBER

CG102

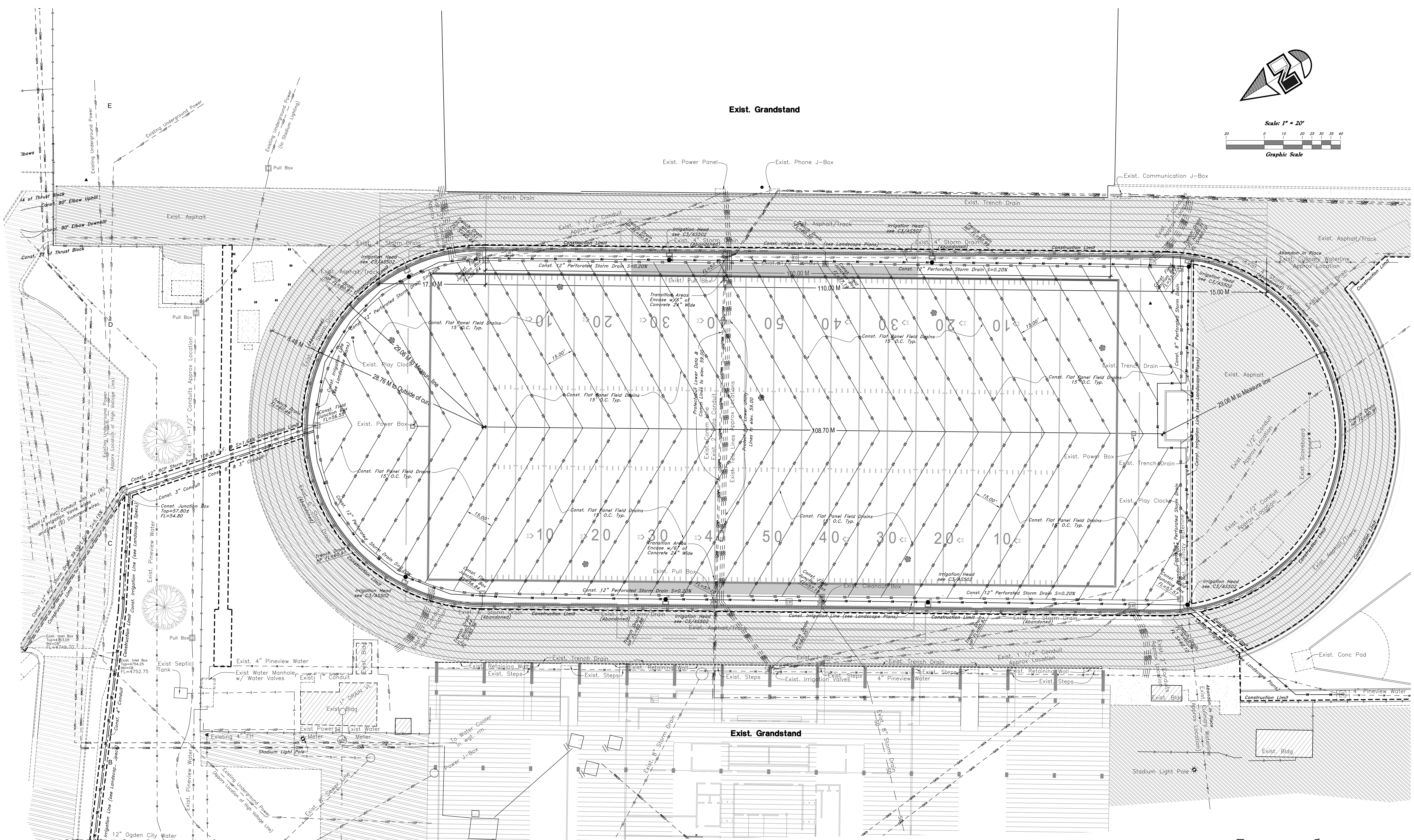

Note:
Prior to construction of Trench Drain, physically verify Track width dimensions from Trench Drain to Stadium Walls.

General Utility Notes:
1. Coordinate all utility connections to building with plumbing plans and building contractor.
2. Verify depth and location of all existing utilities prior to constructing any new utility lines. Notify Civil Engineer of any discrepancies or conflicts prior to any connections being made.
3. All catch basin and inlet box grates are to be bicycle proof.
4. All inlet boxes located in curb and gutter are to be placed parallel to the curb and gutter and set under the frame and grate. Improperly placed boxes will be removed and replaced at no additional cost to the owner. Precast or cast in place boxes are acceptable.
5. Refer to the site electrical plan for details and locations of electrical lines, transformers and light poles.
6. Gas lines, telephone lines, and cable TV lines are not a part of these plans unless otherwise noted.
7. Water meters are to be installed per city standards and specifications. It will be the contractor's responsibility to install all items required.
8. Water lines, valves, fire hydrants, fittings etc. are to be constructed as shown. Contractor is responsible to construct any vertical adjustments necessary to clear sewer, storm drain or other utilities as necessary including valve boxes and hydrant spools to proper grade.
9. Field verify all existing and/or proposed Roof Drain/Roof Drain down spout connections to Storm Water System with Civil, Plumbing & Architectural plans. Notify Engineer of any discrepancies.

Utility Piping Materials:
All piping to be installed per manufacturers recommendations. Refer to project specifications for more detailed information regarding materials, installation, etc.

Culinary Service Laterals
1. 3/4" to 2" diameter pipe – copper tube ASTM B, Type K, Soft Temper
2. Over 2" diameter pipe – AWWA C-900 Class 150 pipe

Water Main Lines and Fire Lines
1. Pipe material as shown on utility plan view or to meet city standards.

Sanitary Sewer Lines
1. All sewer piping to be Polyvinyl Chloride (PVC) sewer pipe, ASTM D 3034, Type PSM, SDR 35

Storm Drain Lines
1. 10" pipes or smaller – Polyvinyl Chloride (PVC) sewer pipe, ASTM D3034, Type PSM, SDR 35
2. 12" to 21" pipes – Concrete Pipe, ASTM C14, Class III up to 13' of cover. For greater than 13' feet of cover, use reinforced concrete pipe and classes listed below.
3. 24" pipes or larger – Reinforced Concrete Pipe, ASTM C76, Class III up to 13' of cover, Class IV for 13' to 21' of cover, Class V for 21' to 32' of cover, and Special Design for cover greater than 32 feet.

CAUTION NOTICE TO CONTRACTOR

The contractor is specifically cautioned that the location and/or elevation of existing utilities as shown on these plans are based on records of the various utility companies and, where possible, measurements taken in the field. The information is not to be relied on as being exact or complete. The contractor must call the appropriate utility company at least 48 hours before any excavation to request exact field location of utilities. It shall be the responsibility of the contractor to relocate all existing utilities which conflict with the propose improvements shown on the plans.

PRIVATE ENGINEER'S NOTICE TO CONTRACTORS

The Contractor agrees that he shall assume sole and complete responsibility for job site conditions during the course of construction of this project, including safety of all persons and property: that this requirement shall apply continuously and not be limited to normal working hours; and that the contractor shall defend, indemnify, and hold the owner and the engineer harmless from any and all liability, real or alleged, in connection with the performance of work on this project, excepting for liability arising from the sole negligence of the owner or the engineer.

ALL CONSTRUCTION TO CONFORM TO CITY STANDARDS AND SPECIFICATIONS IN RIGHT OF WAY

Legend

(Note: All Items may not appear on drawing)

Item	Symbol	Item	Symbol
San. Sewer Manhole	(S)	Ductile Iron	DI
Water Manhole	(W)	Polyvinyl Chloride	PVC
Storm Drain Manhole	(SD)	Top of Asphalt	TA
Electrical Manhole	(E)	Edge of Asphalt	EA
Catch Basins		Centerline	CL
Exist. Fire Hydrant		Flowline	FL
Fire Hydrant		Finish Floor	FF
Exist. Water Valve		Top of Curb	TC
Water Valve		Top of Wall	TWL
Sanitary Sewer	—S—	Top of Walk	TW
Culinary Water	—W—	Top of Concrete	TCN
Gas Line	—G—	Natural Ground	NG
Irrigation Line	—IW—	Finish Contour	—90—
Storm Drain	—SD—	Exist. Contour	--90--
Telephone Line	—T—	Finish Grade	95.33TA
Secondary Waterline	—SD—	Exist. Grade	95.72TA
Power Line	—P—	Ridge Line	— R —
Fire Line	— F —	Direction of Flow	→
Land Drain	—LD—	Existing Asphalt	
Power pole		Concrete	
Power pole w/guy	→		
Light Pole			
Fence	—x—x—x—		
Flowline of ditch			
Overhead Power line	OHP		
Corrugated Metal Pipe	CMP		
Concrete Pipe	CP		
Reinforced Concrete Pipe	RCP		

MHTN ARCHITECTS
MHTN Architects, Inc.
420 East South Temple
Suite 100
Salt Lake City, Utah 84111
Telephone (801) 595-6700
Telefax (801) 595-6717
www.mhtn.com

GREAT BASIN ENGINEERING INC
5746 South 1475 East - Suite 200
Ogden, Utah 84403 Main (801)394-4515
S.L.C (801)521-0222 FAX 801-392-7544
WWW.GREATBASINENGINEERING.COM

WEBER STATE UNIVERSITY
STEWART STADIUM FIELD RENOVATION
DFCM PROJECT NUMBER: 10280810

WEBER STATE UNIVERSITY
OGDEN, UTAH 84408

SEAL

MHTN PROJECT NO. 2010576

DRAWN BY: TK CHECKED BY: MEB

ISSUED:

NO.	DATE	DESCRIPTION
1	03 FEB 2011	CONSTRUCTION DOCUMENTS

CONTRACTOR TO VERIFY DRAWINGS IN FIELD USE REFLECT LAST REVISION DATE.

NO.	DATE	DESCRIPTION

SHEET NAME:
UTILITY PLAN

CONSTRUCTION DOCUMENTS
3 FEBRUARY 2011

SHEET NUMBER
CU101

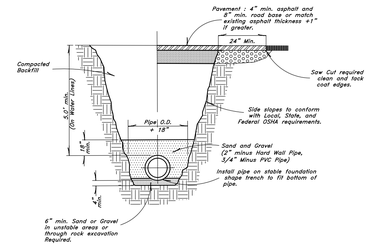

Typical Trench Detail

Not to Scale

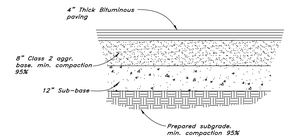

Typical Bituminous Pavement Section
Light Traffic Areas

Not to Scale

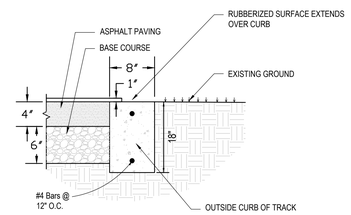

OUTSIDE TRACK CURB

Not to Scale

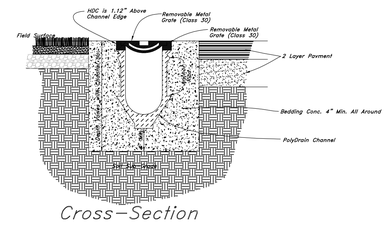

Trench Drain Detail

Not to Scale

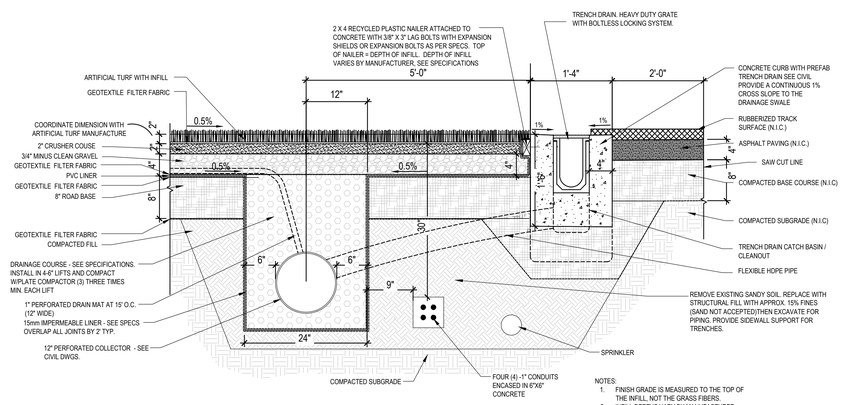

NOTES:
1. FINISH GRADE IS MEASURED TO THE TOP OF THE INFILL, NOT THE GRASS FIBERS.
2. INFILL DEPTHS VARY BY MANUFACTURER, COORDINATE WITH SELECTED MANUFACTURER.
3. ELEVATION OF SUBGRADE SHALL BE DETERMINED BY CONTRACTOR DEPENDING ON MANUFACTURER OF ARTIFICIAL TURF.

TRACK AND CURB DETAIL

Not to Scale

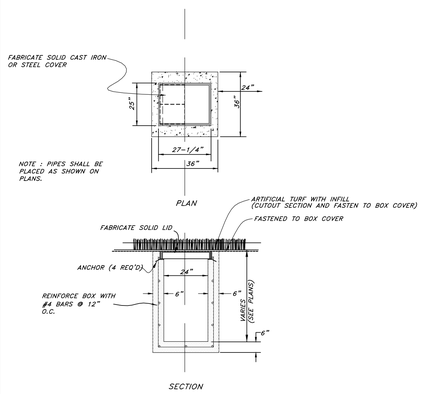

Field Junction Box

Not to Scale

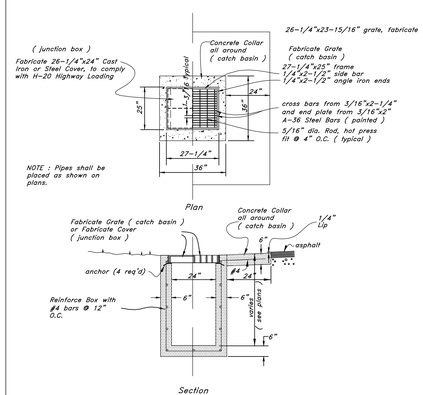

Catch Basin/Junction Box (Parking Lot)

Not to Scale

MHTN
ARCHITECTS
MHTN Architects, Inc.
420 East South Temple
Suite 100
Salt Lake City, Utah 84111
Telephone (801) 595-6700
Telefax (801) 595-6717
www.mhtn.com

GREAT BASIN ENGINEERING
5746 SOUTH 1475 EAST · SUITE 200
OGDEN, UTAH 84403 MAIN (801)394-4515
S.L.C (801)521-0222 FAX 801-393-7544
WWW.GREATBASINENGINEERING.COM

WEBER STATE UNIVERSITY
STEWART STADIUM FIELD RENOVATION

DFCM PROJECT NUMBER: 10280810

WEBER STATE UNIVERSITY
OGDEN, UTAH 84408

SEAL

MHTN PROJECT NO. 2010576

DRAWN BY: TK CHECKED BY: MEB

ISSUED:

NO.	DATE	DESCRIPTION
1	03 FEB 2011	CONSTRUCTION DOCUMENTS

CONTRACTOR TO VERIFY DRAWINGS IN FIELD.USE REFLECT LAST REVISION DATE.

NO.	DATE	DESCRIPTION

SHEET NAME
CONSTRUCTION DETAILS

CONSTRUCTION DOCUMENTS
3 FEBRUARY 2011

SHEET NUMBER
CD501

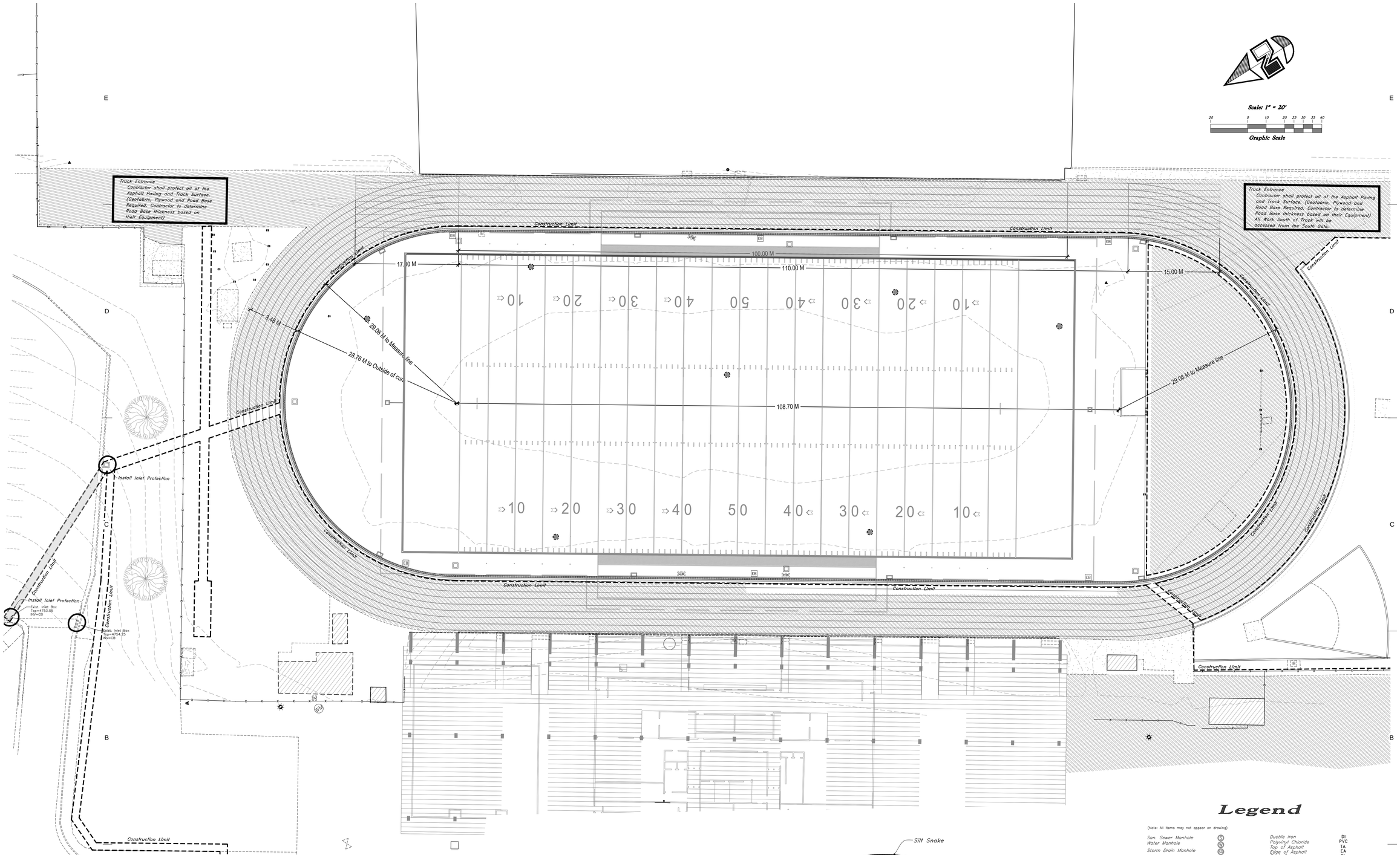

Scale: 1" = 20'

Graphic Scale

MHTN
ARCHITECTS
MHTN Architects, Inc.
420 East South Temple
Suite 100
Salt Lake City, Utah 84111
Telephone (801) 595-6700
Telefax (801) 595-6717
www.mhtn.com

GREAT BASIN ENGINEERING
5746 South 1475 East · Suite 200
Ogden, Utah 84403 · Main (801)394-4515
S.L.C (801)521-0222 · Fax 801-392-7544
www.greatbasinengineering.com

WEBER STATE UNIVERSITY
STEWART STADIUM FIELD RENOVATION

DFCM PROJECT NUMBER: 10280810

WEBER STATE UNIVERSITY
OGDEN, UTAH 84408

SEAL

MHTN PROJECT NO. 2010576

DRAWN BY: TK CHECKED BY: MEB

ISSUED:

NO.	DATE	DESCRIPTION
1	03 FEB 2011	CONSTRUCTION DOCUMENTS

CONTRACTOR TO VERIFY DRAWINGS IN FIELD USE REFLECT LAST REVISION DATE.

NO.	DATE	DESCRIPTION

SHEET NAME

SWPP PLAN

CONSTRUCTION DOCUMENTS
3 FEBRUARY 2011

SHEET NUMBER

CW101

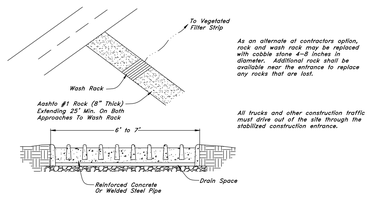

As an alternate at contractors option, rock and wash rock may be replaced with cobble stone 4-8 inches in diameter. Additional rock shall be available near the entrance to replace any rocks that are lost.

All trucks and other construction traffic must drive out of the site through the stabilized construction entrance.

Maintenance: Rock construction entrance thickness shall be constantly maintained to the specified dimensions by adding rock. A stockpile of rock material shall be maintained on site for this purpose. Drain space under pipe shall be kept free of mud and other debris. Any lost rock shall be repaired prior to further use of the rock. At the end of each construction day, all sediment deposited on paved roadways shall be removed and returned to the construction site.

Rock Construction Entrance With Wash Rack

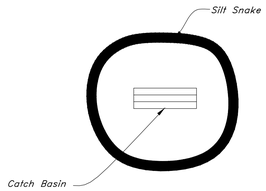

Note:
Inspect the silt snakes on a weekly basis. If silt snake is showing signs of failure remove and replace those sections of the silt snake.

Silt Snake Detail

Not to Scale

Note: the details shown are not meant to be the final details used for any given project. The contractor shall use such means and methods as needed to keep the storm drainage system clean and free of debris, contaminants, and pollutants. The contractor shall attach details as needed to show the various means and methods used.

Legend

(Note: All Items may not appear on drawing)

San. Sewer Manhole	S	Ductile Iron	DI
Water Manhole	W	Polyvinyl Chloride	PVC
Storm Drain Manhole	D	Top of Asphalt	TA
		Edge of Asphalt	EA
Electrical Manhole	E	Centerline	CL
Catch Basins		Flowline	FL
Exist. Fire Hydrant		Finish Floor	FF
Fire Hydrant		Top of Curb	TC
Exist. Water Valve		Top of Wall	TWL
Water Valve		Top of Walk	TW
Sanitary Sewer	—S—	Top of Concrete	TC
Culinary Water	—W—	Natural Ground	NG
Gas Line	—G—	Finish Contour	—90—
Irrigation Line	—IW—	Exist. Contour	--90--
Storm Drain	—SD—	Finish Grade	95.33TA
Telephone Line	—T—	Exist. Grade	95.72TA
Secondary Waterline	—SD—	Ridge Line	—R—
Power Line	—P—	Direction of Flow	
Fire Line	—F—	Existing Asphalt	
Land Drain	—LD—		
Power pole			
Power pole w/guy		Concrete	
Light Pole			
Fence	—x—x—x—		
Flowline of ditch			
Overhead Power line	OHP		
Corrugated Metal Pipe	CMP		
Concrete Pipe	CP		
Reinforced Concrete Pipe	RCP		

W:\10N246 MHTN - WSU Football\DWG\10N246SZ.dwg, 2/7/2011 5:17:37 PM, DWG To PDF.pc3, 1:1

STORMWATER POLLUTION PREVENTION PLAN
WEBER STATE UNIVERSITY
STEWART STADIUM FIELD RENOVATION
OGDEN, UTAH 84408

STORM WATER POLLUTION PREVENTION PLAN SPECIFIC NOTES

1. THIS STORM WATER POLLUTION PREVENTION PLAN (SWPPP) WAS DEVELOPED AT THE REQUEST OF THE OWNER, WEBER STATE UNIVERSITY, FOR THE STEWART STADIUM FIELD RENOVATION IN THE CITY OF OGDEN, COUNTY OF WEBER, STATE OF UTAH. THIS PLAN IDENTIFIES POTENTIAL SOURCES OF POLLUTANTS OF STORM WATER, PRESENTS POLLUTION CONTROL MEASURES, AND ASSISTS IN INSURING IMPLEMENTATION AND MAINTENANCE OF THE BEST MANAGEMENT PRACTICES (BMP'S) INDICATED HEREIN.

2. A NOTICE OF INTENT HAS BEEN FILED WITH THE STATE OF UTAH DEQ WATER QUALITY DIVISION BY THE OWNER SO THAT THIS CONSTRUCTION PROJECT MAY BE COVERED UNDER THE STATE GENERAL PERMIT. THE PERMIT IS NATIONAL POLLUTION DISCHARGE ELIMINATION SYSTEM (NPDES) GENERAL PERMIT (NO. UTR 100000) FOR STORM WATER DISCHARGES ASSOCIATED WITH CONSTRUCTION ACTIVITY.

3. IN THE EVENT OF A CHANGE IN OWNERSHIP, A NEW NOTICE OF INTENT SHALL BE FILED WITH THE UTAH DEQ WATER QUALITY DIVISION.

4. IN THE EVENT OF A RELEASE OF A REPORTABLE QUANTITY OF A POLLUTANT, THE CONTRACTOR SHALL ADVISE THE OWNER TO NOTIFY THE NATIONAL RESPONSE CENTER, OGDEN CITY AND GREAT BASIN ENGINEERING, INC. IF NECESSARY, THIS POLLUTION PREVENTION PLAN SHOULD BE REVISED TO REFLECT THE CHANGE IN CONDITIONS OF THE CONSTRUCTION ACTIVITY. A REPORTABLE QUANTITY IS ESTABLISHED BY 40 CODE OF FEDERAL REGULATIONS (CFR) 117.3 OR 40 CFR 302.4.

5. ALL CONTRACTORS AND THEIR PERSONNEL WHOSE WORK CAN CONTRIBUTE TO OR CAUSE POLLUTION OF STORM WATER SHOULD BE MADE FAMILIAR WITH THIS POLLUTION PREVENTION PLAN. ADEQUATE TRAINING PROVIDED BY THE PERMITEE FOR IMPLEMENTATION OF THE MEASURES PRESENTED HEREIN SHALL BE PROVIDED TO THE CONTRACTORS AND THEIR PERSONNEL.

6. CHANGES IN CONSTRUCTION OR IN CONDITIONS WHICH ARE NOT COVERED BY THIS PLAN SHOULD BE BROUGHT TO THE ATTENTION OF THE OWNER AND GREAT BASIN ENGINEERING, INC. IF NECESSARY, THIS POLLUTION PREVENTION PLAN WILL BE REVISED TO REFLECT THE CHANGE IN CONSTRUCTION OR IN CONDITIONS.

7. ALL PREVENTION AND CLEAN UP MEASURES SHOULD BE CONDUCTED IN ACCORDANCE WITH OGDEN CITY ORDINANCES, AS WELL AS STATE AND FEDERAL REGULATIONS. WASTE MATERIALS SHOULD BE DISPOSED OF IN A LEGAL MANNER. ALL DISCHARGERS OF STORM WATER MUST COMPLY WITH THE LAWFUL REQUIREMENTS OF OGDEN CITY, WEBER COUNTY AND OTHER LOCAL AGENCIES REGARDING THE DISCHARGES OF STORM WATER TO STORM DRAINS.

8. THIS PLAN DOES NOT COVER THE REMOVAL OF HAZARDOUS OR TOXIC WASTE. IN THE EVENT OF A DISCHARGE OR RELEASE OF A REPORTABLE QUANTITY OF TOXIC WASTE, WORK SHOULD BE STOPPED UNTIL THE SPILL CAN BE ASSESSED AND A MITIGATION REPORT PREPARED BY A QUALIFIED ENVIRONMENTAL CONSULTANT, AND IF NECESSARY, REVIEWED BY WEBER COUNTY, OGDEN CITY AND ANY OTHER AGENCY HAVING JURISDICTION.

9. THIS SWPPP SHALL BE MADE AVAILABLE TO THE PUBLIC UNDER SECTION 308(B) OF THE CLEAN WATER ACT. UPON REQUEST BY MEMBERS OF THE PUBLIC, THE DISCHARGER SHALL MAKE AVAILABLE FOR REVIEW A COPY OF THIS SWPPP EITHER TO DEQ OR DIRECTLY TO THE REQUESTER. THIS SWPPP MUST BE KEPT ON SITE DURING CONSTRUCTION ACTIVITY AND MADE AVAILABLE UPON REQUEST OF A REPRESENTATIVE OF THE UTAH DEQ WATER QUALITY DIVISION/OR THE LOCAL AGENCY.

10. CONTACTS

OWNER WEBER STATE UNIVERSITY 3848 HARRISON BLVD. OGDEN, UTAH 84408	TIFFANY ANDERSON PROJECT MANAGER (801) 626-6616
CIVIL ENGINEER GREAT BASIN ENGINEERING, INC. 5746 SOUTH 1475 EAST, SUITE 200 OGDEN, UTAH 84403	MARK E. BABBITT PROJECT MANAGER (801) 394-4515
OGDEN CITY ENGINEERING DEPARTMENT 2549 WASHINGTON BLVD OGDEN, UTAH 84401	DAVID DANIELS ENGINEERING (801) 629-8986
STATE OF UTAH DEPARTMENT OF ENVIRONMENTAL QUALITY DIVISION OF WATER QUALITY 288 NORTH 10 WEST P.O. BOX 144870 SALT LAKE CITY, UTAH 84114-4870	RAND FISHER (801) 533-6065
U.S. EPA ENVIRONMENTAL PROTECTION AGENCY DENVER, COLORADO	REGION VIII 800-759-4372
ENVIRONMENTAL PROTECTION AGENCY WASHINGTON, D.C. 20460	202-475-9518

11. REFERENCES
    A. PLAN / PROFILE PLAN PER GREAT BASIN ENGINEERING, INC., DATED FEBRUARY 3, 2011.
    B. STORMWATER POLLUTION PREVENTION PLAN PREPARED BY GREAT BASIN ENGINEERING, INC., DATED FEBRUARY 3, 2011.

12. THE PROPOSED CONSTRUCTION ACTIVITY IS REPLACEMENT OF AN EXISTING FOOTBALL FIELD WITH ARTIFICIAL TURF.

13. LOCATION OF THE SITE: THE PROJECT IS LOCATED AT APPROXIMATELY 3848 HARRISON BLVD. IN OGDEN CITY, WEBER COUNTY, UTAH. A PART OF THE SOUTHEAST QUARTER OF SECTION 3. T5N, R1W, SLB&M. GPS COORDINATES: LATITUDE-41°11'31" N, LONGITUDE-111°56'24" W.

14. A MINIMAL AMOUNT OF WATER FLOWS ONTO THE SITE. A PUBLIC STORM DRAIN SYSTEM COLLECTS ALL THE WATER VIA PIPE WHICH CONTINUES WEST IN A PRIVATE STORM DRAIN SYSTEM MAINTAINED BY WEBER STATE UNIVERSITY.

15.
    A. THE EXISTING SITE CONSISTS OF GRASSES, CONCRETE AND TRACK SURFACE. EXISTING DRAINAGE TO THE WEST TO EXISTING STORM DRAIN PIPE. PRE-CONSTRUCTION RUNOFF COEFFICIENT =0.15

    B. THE PROPOSED SITE WILL CONSIST OF ARTIFICIAL TURF, CONCRETE AND TRACK SURFACE, AND LANDSCAPE AREAS. DRAINAGE WILL BE COLLECTED IN STORM DRAIN PIPES, WHICH FLOWS TO THE WEST INTO AN EXISTING STORM DRAINAGE SYSTEM. POST-CONSTRUCTION RUNOFF COEFFICIENT =0.40

16. SEE IMPROVEMENT PLANS FOR SITE DRAINAGE

    START DATE _____

    FINISH DATE _____

STORM WATER POLLUTION PREVENTION PLAN GENERAL NOTES

A. PROHIBITION ON MOST NON-STORM WATER DISCHARGES

ONLY STORM WATER FROM THE PROJECT SITE SHALL BE ALLOWED TO FLOW INTO THE ON-SITE STORM DRAIN SYSTEM. CLEAN, NON-CHLORINATED WATER FROM THE FLUSHING OF FIRE HYDRANTS, WATER MAINS, AND STORM DRAINS MAY BE DISCHARGED TO THE STORM DRAIN IF IT IS NOT ALLOWED TO COLLECT DIRT, DEBRIS, AND TRASH WHILE FLOWING TO A STORM DRAIN INLET.

B. SOURCES OF STORM WATER POLLUTANTS

STORM WATER POLLUTANTS INCLUDE SOIL SEDIMENT AND NUTRIENTS, OIL, GREASE, TOXIC POLLUTANTS, AND HEAVY METALS. SOURCES OF STORM WATER POLLUTANTS INCLUDE BUT ARE NOT LIMITED TO SOIL EROSION BY WATER AND/OR WIND; CLEARING OF VEGETATION; GRADING; VEHICLE AND EQUIPMENT REFUELING AND MAINTENANCE; WASHING OF CONCRETE TRUCKS, MIXERS AND HANDLING EQUIPMENT; PAINTS, SOLVENTS AND ADHESIVES; AND LANDSCAPING WORK.

C. EROSION AND SEDIMENT CONTROLS

1. COVER EXPOSED STOCKPILES OF SOILS, CONSTRUCTION AND LANDSCAPING MATERIALS WITH HEAVY PLASTIC SHEETING.

2. IN LANDSCAPING AREAS WHERE THE VEGETATION HAS NOT ESTABLISHED GROWTH AND TAKEN HOLD, CONSTRUCT SANDBAG OR DIRT BERMS AROUND THEIR PERIMETER TO INSURE THAT WATER WILL BE CONTAINED INSIDE THE LANDSCAPING AREA AND THAT IT WILL NOT BE CONVEYED TO A STORM DRAIN INLET.

3. RE-VEGETATE AREAS WHERE LANDSCAPING HAS DIED OR NOT TAKEN HOLD.

4. DIVERT STORM WATER RUNOFF AROUND DISTURBED SOILS WITH BERMS OR DIRT SWALES.

D. OTHER CONTROLS

1. WASTE DISPOSAL

   A. KEEP WASTE DISPOSAL CONTAINERS COVERED.

   B. PROVIDE FOR THE WEEKLY (OR MORE FREQUENT, IF NECESSARY) DISPOSAL OF WASTE CONTAINERS.

   C. PROVIDE CONTAINERS AT CONVENIENT LOCATIONS AROUND THE SITE.

2. SWEEPING OF SITE

   A. PROVIDE DAILY SWEEPING BY HAND OR MECHANICAL MEANS (IF NEEDED) TO KEEP THE PAVED AREAS OF THE SITE FREE OF DUST, DIRT, AND DEBRIS.

   B. DISPOSE OF ACCUMULATED DIRT IN WASTE CONTAINERS, OR HAUL IT OFF THE SITE TO A LANDFILL.

3. SANITARY/SEPTIC DISPOSAL

PORTABLE TOILETS AND OTHER SANITARY FACILITIES SHALL BE SERVICED WEEKLY AND PUMPED CLEAN BY A WASTE DISPOSAL COMPANY. NO TOXIC OR HAZARDOUS WASTE SHALL BE DISPOSED IN A PORTABLE TOILET OR IN THE ON-SITE SANITARY SEWER.

4. SPILLS

   A. STORE ADEQUATE ABSORBENT MATERIALS, RAGS, BROOMS, SHOVELS, AND WASTE CONTAINERS ON THE SITE TO CLEAN-UP SPILLS OF MATERIALS SUCH AS FUEL, PAINT, SOLVENTS, OR CLEANERS. CLEAN UP MINOR SPILLS IMMEDIATELY.

   B. FOR REPORTABLE QUANTITY OF HAZARDOUS OR TOXIC SUBSTANCE, SECURE THE SERVICES OF QUALIFIED PERSONNEL OR CLEAN-UP AND DISPOSAL.

5. VEHICLES AND EQUIPMENT

   A. FIX LEAKS OF FUEL, OIL AND OTHER SUBSTANCES IMMEDIATELY.

   B. PERFORM REFUELING AND SERVICE OF VEHICLES OR EQUIPMENT OFF-SITE WHEN POSSIBLE. IF REFUELING OR SERVICE OF EQUIPMENT IS PERFORMED ON-SITE, THEN PROVIDE AN IMPERVIOUS, CONTAINED AREA WHERE ANY SPILLS CAN BE CONTAINED WITHOUT FLOWING TO A STORM WATER INLET OR INTO THE GROUND.

   C. USE DRIP PANS TO CATCH LEAKS AND SMALL SPILLS.

6. CONCRETE TRUCKS, MIXERS AND HANDLING EQUIPMENT

   A. DO NOT DISPOSE OF WASHOUT FROM THE WASHING OF CONCRETE TRUCKS, MIXERS, AND HANDLING EQUIPMENT WHERE IT WILL FLOW INTO A STORM WATER INLET OR INTO A PUBLIC STREET.

   B. PROVIDE A HOLDING TANK TO RECEIVE ANY WASHOUT FROM CONCRETE EQUIPMENT. DISPOSAL OF TANK CONTENTS SHOULD BE CONDUCTED BY A WASTE HANDLING FIRM.

   C. PROVIDE A DESIGNATED AREA FOR WASHING ANY VEHICLES OR EQUIPMENT. DRAINAGE FROM THIS AREA SHOULD FLOW TO THE HOLDING TANK.

7. LANDSCAPING OPERATIONS

   A. USE ONLY THE MINIMUM AMOUNT OF LANDSCAPING FERTILIZES, NUTRIENTS, AND OTHER CHEMICALS THAT ARE NEEDED.

   B. DO NOT OVER WATER FERTILIZED OR TREATED LANDSCAPE AREAS. MINIMIZE RUNOFF OF IRRIGATION WATER FROM LANDSCAPING.

8. STORM WATER INLETS

KEEP ALL ON-SITE STORM WATER INLETS CLEAN AND FREE OF DIRT AND DEBRIS. IN THE EVENT THAT SEDIMENT AND DEBRIS MAY FLOW TO AN INLET, PROVIDE AN 18-INCH (MINIMUM) STRAIN BARRIER AROUND THE INLET TO TRAP THE DIRT AND DEBRIS AND ALLOW ONLY CLEAN STORM WATER TO ENTER THE INLET.

E. INSPECTION

1. REGULAR INTERVAL INSPECTION AND INSPECTION BEFORE AND AFTER STORMS

   A. VISUALLY INSPECT THE SITE WEEKLY TO INSURE THAT STORM WATER INLETS ARE FREE OF DIRT AND DEBRIS.

   B. BEFORE A STORM, INSPECT THE SITE TO INSURE THAT STORM WATER POLLUTION CONTROL MEASURES ARE IN PLACE.

   C. AFTER A STORM, INSPECT ALL STORM WATER INLETS TO INSURE THAT THEY ARE CLEAR OF DIRT AND DEBRIS. CLEAN THOSE STORM WATER INLETS THAT ARE NOT CLEAR AND FREE OF DEBRIS.

   D. THE UTAD DEQ WATER QUALITY DIVISION MAY REQUIRE THE DISCHARGER TO CONDUCT ADDITIONAL SITE INSPECTIONS, SUBMIT REPORTS AND CERTIFICATIONS, OR TO PERFORM SAMPLING AND ANALYSIS.

2. ALL DISCHARGERS ARE REQUIRED TO CONDUCT INSPECTIONS OF THE CONSTRUCTION SITE PRIOR TO ANTICIPATED STORM EVENTS AND AFTER ACTUAL STORM EVENTS, TO IDENTIFY AREAS CONTRIBUTING TO A STORM WATER DISCHARGE, TO EVALUATE WHETHER MEASURES TO REDUCE POLLUTANT LOADINGS IDENTIFIED IN THIS SWPPP ARE ADEQUATE, TO PROPERLY IMPLEMENT IN ACCORDANCE WITH THE TERMS OF THE GENERAL PERMIT, AND TO DETERMINE WHETHER ADDITIONAL CONTROL PRACTICES ARE NEEDED.

3. PREPARATION OF REPORTS AND RETENTION OF RECORDS

   A. EACH DISCHARGER MUST CERTIFY ANNUALLY THAT ITS CONSTRUCTION ACTIVITY IS IN COMPLIANCE WITH THE REQUIREMENTS OF THE GENERAL PERMIT AND THIS SWPPP. THIS CERTIFICATION MUST BE BASED ON ON SITE INSPECTIONS. THE FIRST CERTIFICATION MUST BE COMPLETED BY JULY 1, 2002, AND EACH JULY 1 THEREAFTER.

   B. THE DISCHARGER IS REQUIRED TO RETAIN RECORDS OF ALL MONITORING INFORMATION, COPIES OF ALL REPORTS REQUIRED BY THIS GENERAL PERMIT, AND RECORDS OF ALL DATA USED TO COMPLETE THE NOTICE OF INTENT FOR CONSTRUCTION ACTIVITY FOR A PERIOD OF AT LEAST THREE YEARS. THIS PERIOD MAY BE EXTENDED BY REQUEST OF THE STATE. WITH THE EXCEPTION OF NONCOMPLIANCE REPORTING, DISCHARGERS ARE NOT REQUIRED TO SUBMIT THE RECORDS EXCEPT UPON SPECIFIC REQUEST BY THE STATE DEQ DIVISION OF WATER QUALITY.

   C. DISCHARGERS WHO CANNOT CERTIFY COMPLIANCE MUST NOTIFY THE STATE DEQ DIVISION OF WATER QUALITY. THIS NOTIFICATION SHALL IDENTIFY THE TYPE OR TYPES OF NONCOMPLIANCE, DESCRIBE THE ACTIONS NECESSARY TO ACHIEVE COMPLIANCE, AND INCLUDE A TIME SCHEDULE, SUBJECT TO THE MODIFICATIONS BY THE STATE DEQ DIVISION OF WATER QUALITY, INDICATING WHEN COMPLIANCE WILL BE ACHIEVED. NONCOMPLIANCE REPORTS MUST BE SUBMITTED WITHIN 30 DAYS OF THE IDENTIFICATION OF THE NONCOMPLIANCE.

F. MAINTENANCE OF CONTROLS

1. MAINTENANCE AND REPAIR

ALL CONTROLS AND MEASURES INDICATED ON THIS PLAN SHOULD BE MAINTAINED IN GOOD AND EFFECTIVE CONDITION. IF ANY CONTROLS OR MEASURES ARE DAMAGED OR REMOVED, THEY SHOULD BE PROMPTLY REPAIRED OR RESTORED.

2. PLAN REVISIONS

IF CONSTRUCTION ACTIVITY OR CONDITIONS CHANGE FROM THOSE SHOWN IN THIS PLAN, THEN THE PLAN SHALL BE REVISED TO REFLECT THE CURRENT CONDITIONS.

G. STABILIZATION PRACTICES

1. STABILIZATION PRACTICES MAY INCLUDE: TEMPORARY SEEDING, PERMANEBT SEEDING, MULCHING, GEOTEXTILES, SOD STABILIZATION, VEGETATIVE BUFFER STRIPS, PROTECTION OF TREES, PRESERVATION OF MATURE VEGETATION AND OTHER APPROPRIATE MEASURES. STABILIZATION MEASURES SHALL BE INITIATED AS SOON AS PRACTICABLE IN PORTIONS OF THE SITE WHERE CONSTRUCTION ACTIVITIES HAVE TEMPORARILY OR PERMANENTLY CEASED, BUT IN NO CASE MORE THAN 14 DAYS AFTER THE CONSTRUCTION ACTIVITY IN THAT PORTION OF THE SITR HAS TEMPORARILY OR PERMANENTLY CEASED EXCEPT AS NOTED BELOW.

- WHERE THE INITIATION OF STABILIZED MEASURES BY THE 14TH DAY AFTER CONSTRUCTION ACTIVITY TEMPORARILY OR PERMANENTLY CEASED IS PRECLUDED BY SNOW COVER OR FROZEN GROUND CONDITIONS, STABILIZATION MEASURES SHALL BE INITIATED AS SOON AS PRACTICALBE
- WHERE CONSTRUCTION ACTIVITY ON A PORTION OF THE SITE IS TEMPORARILY CEASED, AND EARTH DISTURBING ACTIVITIES WILL BE RESUMED WITHIN 21 DAYS. TEMPORARY STABILIZATION MEASURES DO NOT HAVE TO BE INITIATED ON THAT PORTION OF THE SITE.

H. FINAL STABILIZATION AND POST-CONSTRUCTION CONTROLS

1. AFTER CONSTRUCTION HAS BEEN COMPLETED, THE SITE SHALL BE SWEPT CLEAN, STORM WATER INLETS (GRATES AND BASINS) SHALL BE CLEANED, AND ALL WASTE AND LEFTOVER MATERIALS SHALL BE REMOVED FROM THE SITE.

2. ALL LANDSCAPING AND PLANTING AREAS SHOULD BE WELL MAINTAINED TO PREVENT EROSION. AVOID OVER WATERING OF LANDSCAPING.

3. ALL PAVED AREAS SHOULD BE SWEPT WEEKLY EITHER BY HAND OR BY MECHANICAL MEANS TO KEEP THE SITE CLEAR OF DIRT, DUST, AND DEBRIS.

4. WASTE MATERIALS ON-SITE SHOULD BE STORED IN COVERED CONTAINERS WHICH ARE CLEANED OUT REGULARLY.

5. TESTING OF FIRE HYDRANTS ON-SITE SHALL NOT BE CONDUCTED UNTIL THE AREA WHERE THE WATER DISCHARGES HAS BEEN SWEPT CLEAN OF DIRT AND DEBRIS.

6. STORM DRAIN LINES SHOULD BE CHECKED AND CLEANED ANNUALLY TO KEEP THEM CLEAN AND CLEAR OF DEBRIS.

7. ALL ON-SITE STORM WATER INLETS SHOULD BE CLEARLY MARKED "STORM WATER ONLY".

I. COMPLETION OF CONSTRUCTION ACTIVITIES AND NOTICE OF TERMINATION

WHEN CONSTRUCTION ACTIVITIES HAVE BEEN COMPLETED ON THIS SITE, THE OWNER SHALL FILE A LETTER WITH THE STATE DEQ DIVISION OF WATER QUALITY. THIS LETTER SHALL CERTIFY THAT THE CONSTRUCTION ACTIVITY HAS BEEN COMPLETED, THAT ALL ELEMENTS OF THE SWPPP HAVE BEEN IMPLEMENTED, THAT CONSTRUCTION AND EQUIPMENT MAINTENANCE WASTES HAVE BEEN DISPOSED OF PROPERLY, THAT THE SITE IS IN COMPLIANCE WITH ALL LOCAL STORM WATER REQUIREMENTS INCLUDING EROSION/SEDIMENT CONTROL REQUIREMENTS, POLICIES, AND GUIDELINES.

DEFINITIONS

1. "BEST MANAGEMENT PRACTICES" ("BMP'S") MEANS SCHEDULES OF ACTIVITIES, PROHIBITIONS OF PRACTICES, MAINTENANCE PROCEDURES, AND OTHER MANAGEMENT PRACTICES TO PREVENT OR REDUCE THE POLLUTION OF WATERS OF THE UNITED STATES. BMP'S ALSO INCLUDE TREATMENT REQUIREMENTS, OPERATING PROCEDURES, AND PRACTICES TO CONTROL SITE RUNOFF, SPILLAGE OR LEAKS, WASTE DISPOSAL, OR DRAINAGE FROM RAW MATERIAL STORAGE.

2. "CLEAN WATER ACT" ("CWA") MEANS THE FEDERAL WATER POLLUTION CONTROL ACT ENACTED BY PUBLIC LAW 92-500 AS AMENDED BY PUBLIC LAWS 95-217, 95-576, 96-483, AND 97-111; 33 USC 1251 ET SEQ.

3. "CONSTRUCTION SITE" IS THE LOCATION OF THE CONSTRUCTION ACTIVITY.

4. "NON-STORM WATER DISCHARGE" MEANS ANY DISCHARGE TO STORM DRAIN SYSTEMS THAT IS NOT COMPOSED ENTIRELY OF STORM WATER EXCEPT DISCHARGE PURSUANT TO AN NPDES PERMIT AND DISCHARGES RESULTING FROM FIRE FIGHTING ACTIVITIES.

5. "SIGNIFICANT MATERIALS" INCLUDES, BUT IS NOT LIMITED TO RAW MATERIALS; FUELS; MATERIALS SUCH AS SOLVENTS, DETERGENTS, AND PLASTIC PELLETS; FINISHED MATERIALS SUCH AS METALLIC PRODUCTS; RAW MATERIALS USED IN FOOD PROCESSING OR PRODUCTION HAZARDOUS SUBSTANCES DESIGNATED UNDER SECTION 101(14) OF THE COMPREHENSIVE ENVIRONMENTAL RESPONSE, COMPENSATION, AND LIABILITY ACT (CERLCA); ANY CHEMICAL THE FACILITY IS REQUIRED TO REPORT PURSUANT TO SECTION 313 OF TITLE III OF SUPERFUND AMENDMENTS AND REAUTHORIZATION ACT (SARA); FERTILIZERS; PESTICIDES; AND WASTE PRODUCTS SUCH AS ASHES, SLAG, AND SLUDGE THAT HAVE THE POTENTIAL TO BE RELEASED WITH STORM WATER DISCHARGES.

6. "SIGNIFICANT QUANTITIES" IS THE VOLUME, CONCENTRATIONS, OR MASS OF A POLLUTANT IN STORM WATER DISCHARGE THAT CAN CAUSE OR THREATEN TO CAUSE POLLUTION, CONTAMINATION, OR NUISANCE; ADVERSELY IMPACT HUMAN HEALTH OR THE ENVIRONMENT; AND CAUSE OR CONTRIBUTE TO A VIOLATION OF ANY APPLICABLE WATER QUALITY STANDARDS FOR THE RECEIVING WATER.

7. "STORM WATER" MEANS STORM WATER RUNOFF, SNOW MELT RUNOFF, SURFACE RUNOFF AND DRAINAGE. IT EXCLUDES INFILTRATION AND RUNOFF FROM AGRICULTURAL LAND.

8. "POLLUTION" MEANS THE "MAN-MADE OR MAN-INDUCED ALTERATION OF THE CHEMICAL, PHYSICAL, BIOLOGICAL, AND RADIOLOGICAL INTEGRITY OF WATER" [CLEAN WATER ACT SECTION 502(19)]. POLLUTION ALSO MEANS "AN ALTERATION OF THE QUALITY OF THE WATERS OF THE STATE BY WASTE TO A DEGREE WHICH UNREASONABLY AFFECTS EITHER... THE WATERS FOR BENEFICIAL USES... OR FACILITIES WHICH SERVE THESE BENEFICIAL USES." [CALIFORNIA WATER CODE SECTION 13050(l)].

9. "CONTAMINATION" MEANS "AN IMPAIRMENT OF THE QUALITY OF THE WATERS OF THE STATE BY WASTE TO A DEGREE WHICH CREATES A HAZARD TO THE PUBLIC HEALTH THROUGH POISONING OR THROUGH THE SPREAD OF DISEASE...INCLUDING ANY EQUIVALENT EFFECT RESULTING FROM THE DISPOSAL OF WASTE, WHETHER OR NOT WATERS OF THE STATE ARE AFFECTED."

10. "NUISANCE" MEANS "ANYTHING WHICH MEETS ALL OF THE FOLLOWING REQUIREMENTS: (1) IS INJURIOUS TO HEALTH , OR IS INDECENT OR OFFENSIVE TO THE SENSES, OR AN OBSTRUCTION TO THE FREE USE OF PROPERTY, SO AS TO INTERFERE WITH THE COMFORTABLE ENJOYMENT OF LIFE AND PROPERTY; (2) AFFECTS AT THE SAME TIME AN ENTIRE COMMUNITY OR NEIGHBORHOOD, OR ANY CONSIDERABLE NUMBER OF PERSONS, ALTHOUGH THE EXTENT OF THE ANNOYANCE OR DAMAGE INFLICTED UPON INDIVIDUALS MAY BE UNEQUAL; (3) OCCURS DURING OR AS A RESULT OF THE TREATMENT OR DISPOSAL OF WASTES."

11. "LOCAL AGENCY" MEANS ANY AGENCY THAT IS INVOLVED WITH REVIEW, APPROVAL, OR OVERSIGHT OF THE CONSTRUCTION SITES' (a) CONSTRUCTION ACTIVITY, (b) EROSION AND SEDIMENT CONTROLS, (c) STORM WATER DISCHARGE.

CERTIFICATION

I CERTIFY UNDER PENALTY OF PERJURY THAT THIS DOCUMENT AND ALL ATTACHMENTS WERE PREPARED UNDER MY DIRECTION OR SUPERVISION IN ACCORDANCE WITH A SYSTEM DESIGNED TO ASSURE THAT QUALIFIED PERSONNEL PROPERLY GATHER AND EVALUATE THE INFORMATION SUBMITTED. BASED ON MY INQUIRY OF THE PERSON OR PERSONS WHO MANAGE THE SYSTEM OR THOSE PERSONS DIRECTLY RESPONSIBLE FOR GATHERING THE INFORMATION, THE INFORMATION SUBMITTED IS TO THE BEST OF MY KNOWLEDGE AND BELIEF, TRUE, ACCURATE, AND COMPLETE. I AM AWARE THAT THERE ARE SIGNIFICANT PENALTIES FOR SUBMITTING FALSE INFORMATION, INCLUDING THE POSSIBILITY OF FINE AND IMPRISONMENT FOR KNOWING VIOLATIONS.

_____ MARK E. BABBITT, REGISTERED CIVIL ENGINEER NO. 166484, GREAT BASIN ENGINEERING, INC.

_____ Developer Signature & Date

CONTRACTORS

NAME	SIGNATURE	ROLE-COMPANY	DEFINITION OF OPERATION

NPDES I.D. NUMBER _____

MHTN
ARCHITECTS
MHTN Architects, Inc.
420 East South Temple
Suite 100
Salt Lake City, Utah 84111
Telephone (801) 595-6700
Telefax (801) 595-6717
www.mhtn.com

GREAT BASIN ENGINEERING
5746 SOUTH 1475 EAST · SUITE 200
OGDEN, UTAH 84403 MAIN (801)394-4515
S.L.C (801)521-0222 FAX 801-393-7544
WWW.GREATBASINENGINEERING.COM

WEBER STATE UNIVERSITY
STEWART STADIUM FIELD RENOVATION
DFCM PROJECT NUMBER: 10280810
WEBER STATE UNIVERSITY
OGDEN, UTAH 84408

SEAL

MHTN PROJECT NO. 2010576

DRAWN BY: TK CHECKED BY: MEB

ISSUED:

NO.	DATE	DESCRIPTION
1	03 FEB 2011	CONSTRUCTION DOCUMENTS

CONTRACTOR TO VERIFY DRAWINGS IN FIELD USE REFLECT LAST REVISION DATE.

NO.	DATE	DESCRIPTION

SHEET NAME
SWPP NOTES

CONSTRUCTION DOCUMENTS
3 FEBRUARY 2011

SHEET NUMBER
CW102

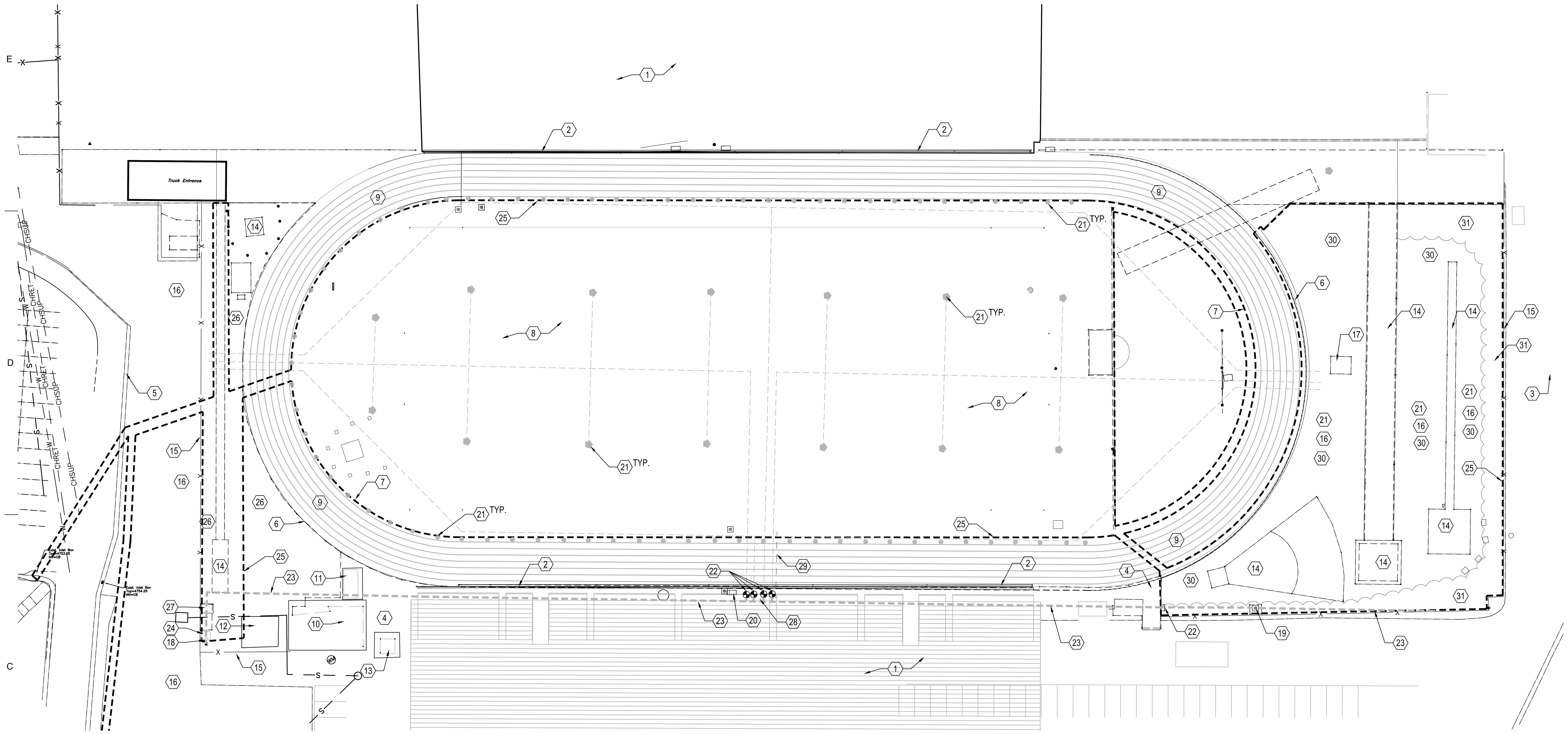

IRRIGATION DEMOLITION PLAN

0 15' 30' 60'

SCALE: 1" = 30'-0"

KEYNOTES

1. STADIUM SEATING
2. CONCRETE WALL
3. ASPHALT PAVING
4. CONCRETE PAVING
5. CURB & GUTTER
6. TRACK CURB
7. TRACK CURB WITH DRAIN
8. FOOTBALL FIELD
9. SYNTHETIC TRACK SURFACE
10. RESTROOM BUILDING
11. CONCESSION BUILDING
12. STORAGE BUILDING
13. TICKET BOOTH
14. TRACK EVENT
15. FENCE
16. EXISTING LANDSCAPE AREA
17. ELECTRICAL TRANSFORMER
18. CUT AND CAP MAINLINE AT THIS LOCATION.
19. REMOVE CONCRETE VALVE BOX AND VALVES
20. EXISTING CONTROLLER.
21. REMOVE IRRIGATION HEADS AND LATERAL LINES THIS AREA
22. CAP EXISTING SYSTEM AT THIS LOCATION
23. ABANDON EXISTING MAINLINE
24. REMOVE EXISTING FILTERS AND GATE VALVES
25. CONTRACT LIMIT LINE
26. MAINTAIN EXISTING IRRIGATION SYSTEM THIS AREA
27. EXISTING CONCRETE VALVE BOX - MAINTAIN EXISTING VALVES. RECONNECT MAIN TO EXISTING VALVE MANIFOLD. REPLACE 3 VALVES FEEDING LAWN AREA NORTH OF FENCE.
28. EXISTING VALVE MANIFOLD TO BE ABANDONED
29. ABANDON EXISTING CONDUIT
30. REMOVE 6" TOPSOIL AND SOD THIS AREA
31. EXISTING SHRUBS - MAINTAIN AND PROTECT

LEGEND

- IRRIGATION HEAD TO BE REMOVED
- EXISTING LATERAL LINE TO BE REMOVED
- EXISTING MAINLINE TO BE ABANDONED

MHTN ARCHITECTS

MHTN Architects, Inc.
420 East South Temple
Suite 100
Salt Lake City, Utah 84111
Telephone (801) 595-6700
Telefax (801) 595-6717
www.mhtn.com

WEBER STATE UNIVERSITY
STEWART STADIUM FIELD RENOVATION

DFCM PROJECT NUMBER: 10280810

WEBER STATE UNIVERSITY
OGDEN, UTAH 84408

SEAL

MHTN PROJECT NO. 2010575

DRAWN BY: JZ CHECKED BY: RB

ISSUED:

NO.	DATE	DESCRIPTION
01	03 FEB. 2011	CONSTRUCTION DOCUMENTS

CONTRACTOR TO VERIFY DRAWINGS IN FIELD USE REFLECT LAST REVISION DATE.

NO.	DATE	DESCRIPTION

SHEET NAME

IRRIGATION DEMO PLAN

CONSTRUCTION DOCUMENTS
03 FEBRUARY 2011

SHEET NUMBER

DL100

C:\Users\randyk\Documents\A11_2010543 WSU RESIDENTIAL LIFE BUILDING III_CENTRAL_randyk.rvt
11/29/2010 9:23:45 AM

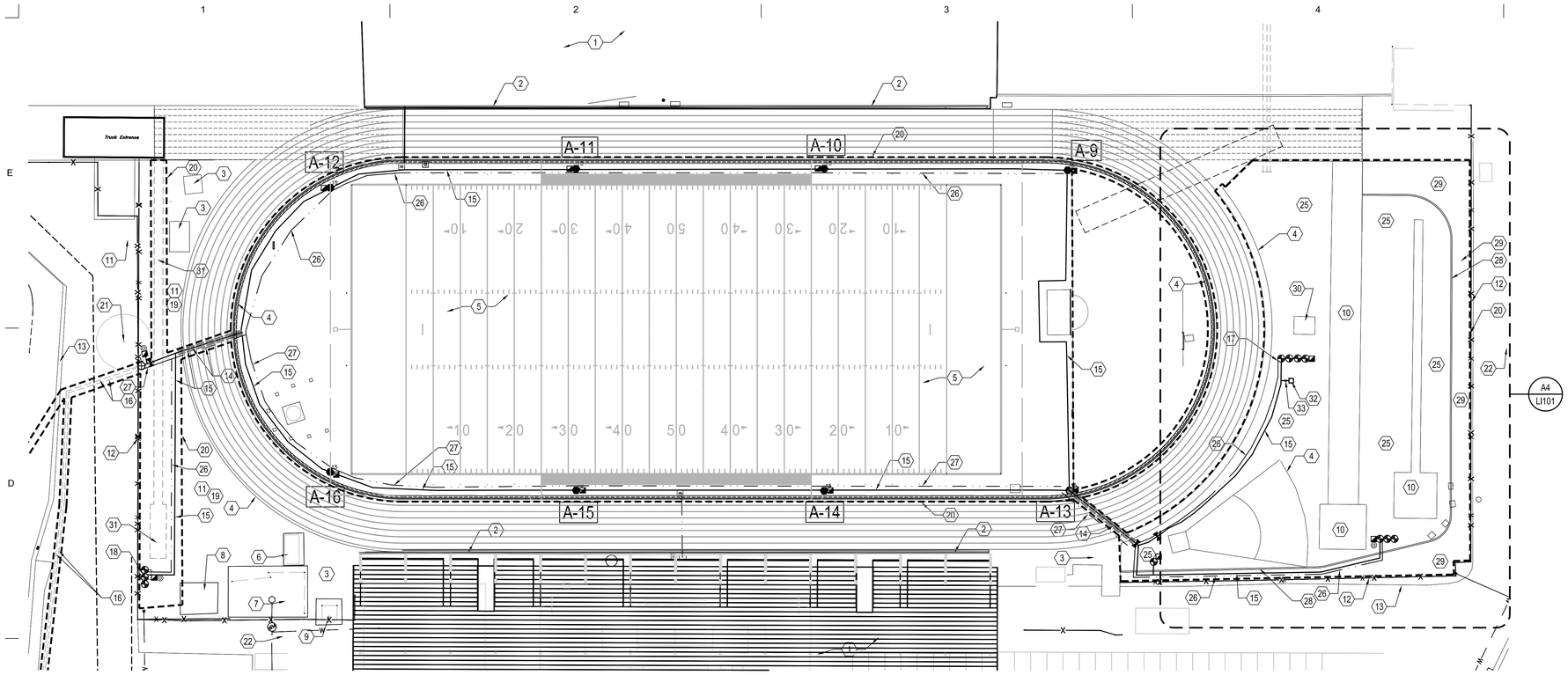

IRRIGATION PLAN / LANDSCAPE PLAN

0 15' 30' 60'

SCALE: 1" = 30'-0"

KEYNOTES

1. STADIUM SEATING
2. CONCRETE WALL
3. CONCRETE PAVING
4. TRACK CURB
5. SYNTHETIC FOOTBALL FIELD
6. CONCESSION BUILDING
7. RESTROOM BUILDING
8. STORAGE BUILDING
9. TICKET BOOTH
10. TRACK EVENT
11. EXISTING LANDSCAPE AREA
12. EXISTING FENCE
13. CURB AND GUTTER
14. 8" SLEEVE AND 3" CONDUIT BY CIVIL - SEE CIVIL
15. NEW 4" MAINLINE
16. 4" PRESSURE IRRIGATION LINE AND 3' PVC CONDUIT BY CIVIL - SEE CIVIL
17. RUN 5 SPARE VALVE WIRES FROM CONTROLLER 'A' TO THIS LOCATION
18. EXISTING VALVE BOX, FIELD VERIFY EXISTING SYSTEMS, INSTALL 3 NEW VALVES TO OPERATE ZONE NORTH OF FENCE, SIZE TO MATCH EXISTING, AND RUN NEW WIRE TO NEW CONTROLLER 'A'.
19. NO IRRIGATION WORK THIS AREA
20. CONTRACT LIMIT LINE
21. EXISTING TREE - MAINTAIN AND PROTECT
22. ASPHALT PAVING
23. INSTALL 6" TOPSOIL FROM FOOTBALL FIELD
24. CONNECT TO EXISTING LATERAL LINES, FIELD VERIFY LOCATIONS AND SIZE
25. LAWN SOD
26. 2" PVC CONDUIT
27. 3" PVC CONDUIT
28. CONCRETE MOWSTRIP
29. EXISTING SHRUBS AND TREES TO BE PROTECTED
30. EXISTING ELECTRICAL TRANSFORMER
31. REPAIR EXISTING SOD DUE TO CONSTRUCTION OPERATIONS
32. CONCRETE SUMP - SEE CIVIL
33. FULL SIZE DRAIN VALVE - SEE IRRIGATION NOTES - PIPE TO SUMP

IRRIGATION SCHEDULE

SYMBOL	MANUFACTURER/MODEL/DESCRIPTION
ES LCS RCS CS SS	Hunter INST-06-CV-R 5` strip spray Turf Spray, pressure regulated 6" popup with factory installed drain check valve and reclaimed body cap.
Q H F	Hunter INST-06-CV-R 5` radius Turf Spray, pressure regulated 6" popup with factory installed drain check valve and reclaimed body cap.
Q H F	Hunter INST-06-CV-R 8` radius Turf Spray, pressure regulated 6" popup with factory installed drain check valve and reclaimed body cap.
Q T H F	Hunter INST-06-CV-R 10` radius Turf Spray, pressure regulated 6" popup with factory installed drain check valve and reclaimed body cap.
Q T H TT TQ F	Hunter INST-06-CV-R 12` radius Turf Spray, pressure regulated 6" popup with factory installed drain check valve and reclaimed body cap.
Q T H TT TQ F	Hunter INST-06-CV-R 15` radius Turf Spray, pressure regulated 6" popup with factory installed drain check valve and reclaimed body cap.
7 10 12 15 17	Hunter INST-06-CV-R ADJ Turf Spray, pressure regulated 6" popup with factory installed drain check valve and reclaimed body cap.
M O	Hunter MP1000 w/ MPR40-06-CV-R Turf Rotator, 6" pop-up with check valve, reclaimed body cap, MP Rotator nozzle. M=Maroon adj arc 90 to 210, L=Light Blue 210 to 270 arc, O=Olive 360 arc, on MPR40 6" pop-up body.
K G A	Hunter MP2000 w/ MPR40-06-CV-R Turf Rotator, 6" pop-up with check valve, reclaimed body cap, MP Rotator nozzle. K=Black adj arc 90-210, G=Green adj arc 210-270, R=Red 360 arc, on MPR40 6" popup body.
B Y A	Hunter MP3000 w/ MPR40-06-CV-R Turf Rotator, 6" pop-up with factory installed check valve, reclaimed body cap, MP Rotator nozzle. B=Blue adj arc 90-210, Y=Yellow adj arc 210-270, A=Gray 360 arc, on MPR40 6" pop-up body.

SYMBOL	MANUFACTURER/MODEL/DESCRIPTION
15	Underhill M-115-E-P-15-B-D-B-N Adjustable Arc Part Circle Impact Valve-In-Head, nozzle as indicated, with BSP British Std Pipe thread inlet, ductile iron swing joint, BSP swing joint thread, and NPT National Pipe Thread (US) swing joint thread to lateral.

SYMBOL	MANUFACTURER/MODEL/DESCRIPTION
	Rain Bird EFB-CP-PRS-D Brass Electric Remote Control Valve, with pressure regulator
F	Amiad Filter 4" AMIAD 4" STEEL INLINE FILTER ASSEMBLY WITH A BRUSHAWAY CLEANING SYSTEM AND WEAVEWIRE SCREEN (50 MESH 300 MICRON) IN ALUMINUM ENCLOSURE - Place at POC - See Civil

Irrigation Lateral Line: PVC Schedule 40

Irrigation Mainline: 4" PVC Class 200 SDR 21 With deep socket fittings. All fittings shall be installed with Joint Restraints and Thrust Blocks

Pipe Sleeve: PVC Class 200 SDR 21
Typical pipe sleeve for irrigation pipe. Pipe sleeve size shall allow for irrigation piping and their related couplings to easily slide through sleeving material. Extend sleeves 18 inches beyond edges of paving or construction.

Valve Callout
- Valve Number
- Valve GPM
- Valve Size

A-13 — ROTOR VALVE IN HEAD VALVE NUMBER CALLOUT

Rain Bird 44LRC
1" Quick Coupler Valve, two piece body, locking cover

NIBCO RESILIENT SEAT GATE VALVE, NON-RISING STEM

M — NETAFIM LHM4FG1-PRMEL, 4" NORMALLY CLOSED, PRESSURE REDUCING HYDROMETER

A — RAINMASTER SA6-RM4-48T/RFL-RHG/FSB/PMR-CAC/LLP
48 STATION IRRIGATION CONTROLLER WITH STAINLESS STEEL WALL MOUNT BOX. USE COMMUNICATION CABLE PE-393 TO INSTALL THE FLOW SENSOR.
INSTALL CONTROLLER WITH THE FOLLOWING EQUIPMENT:
- 8' GROUNDING ROD W/ #8 DC COPPER WIRE
- FLOW SENSING BOARD
- RADIO AND HIGH GAIN ANTENNA
- PROMAX PERMANENT MOUNT RECEIVER
- LINE PRIMARY PROTECTION

MOUNT CONTROLLER NEAR EXISTING PUMP BUILDING NEAR POINT OF CONNECTION - SEE CIVIL AND ELECTRICAL
MOUNT HIGH GAIN ANTENNA ON ROOF OF BUILDING, ALL WIRE IN CONDUIT - SEE ELECTRICAL

3/4" MANUAL DRAIN VALVE - SEE DETAILS AND SPECIFICATIONS

CONNECT TO 4" PRESSURE IRRIGATION LINE - SEE CIVIL

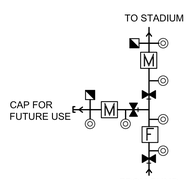

POINT OF CONNECTION SCHEMATIC
INSTALL EQUIPMENT AT THE PUMPHOUSE
SEE CIVIL FOR LOCATION
SEE DETAIL

LANDSCAPE/IRRIGATION RESTORATION

LANDSCAPE AND IRRIGATION SYSTEM RESTORATION IS REQUIRED AS PART OF THIS CONTRACT. THE AREA OF RESTORATION INCLUDES THE AREA SOUTH AND NORTH OF THE FOOTBALL FIELD AND EXTENDS WEST TO THE PUMP STATION SEE CIVIL DRAWINGS FOR UTILITY DEMOLITION LIMITS.

AS PART OF THIS CONTRACT, THE IRRIGATION CONTRACTOR SHALL FIELD VERIFY AND MAP ALL HEAD LOCATIONS IN THE AREA OF DEMOLITION. THIS CONTRACT SHALL REMOVE AND REPLACE ALL IRRIGATION MAINLINE, HEADS, MANUAL VALVES, QUICK COUPLERS AND IRRIGATION EQUIPMENT LOCATED IN THIS ZONE. RECONNECT EXISTING HEADS TO THE SAME ZONE TO WHICH THEY WERE PREVIOUSLY ATTACHED. PROVIDE 6" OF TOPSOIL AND SOD AS REQUIRED TO RESTORE TO ORIGINAL CONDITION.

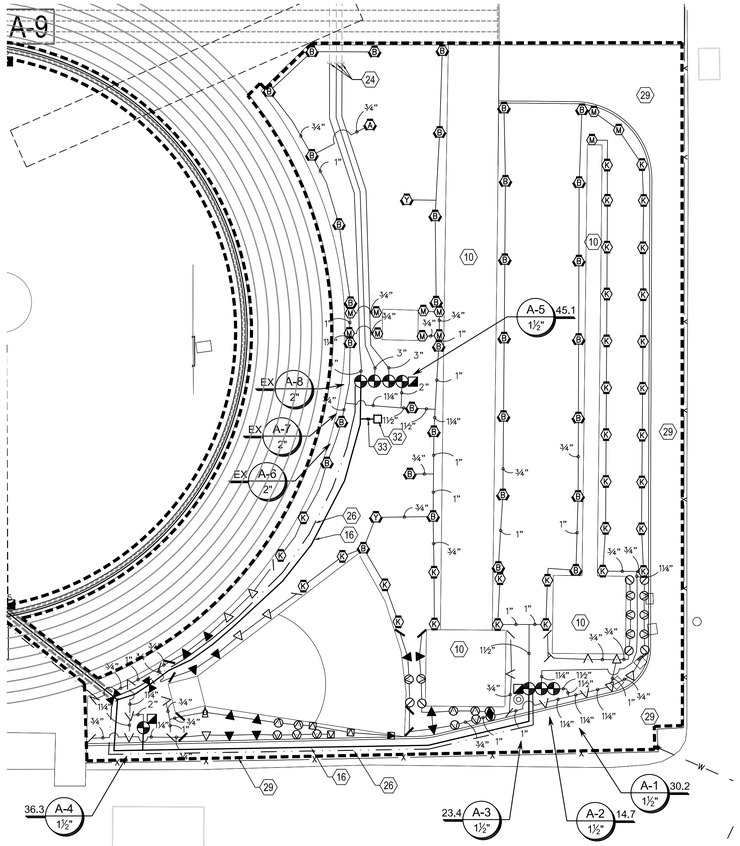

A4 IRRIGATION PLAN / LANDSCAPE PLAN

0 10' 20' 40'

SCALE: 1" = 20'-0"

MHTN ARCHITECTS
MHTN Architects, Inc.
420 East South Temple
Suite 100
Salt Lake City, Utah 84111
Telephone (801) 595-6700
Telefax (801) 595-6717
www.mhtn.com

WEBER STATE UNIVERSITY
STEWART STADIUM FIELD RENOVATION

DFCM PROJECT NUMBER: 10280810

WEBER STATE UNIVERSITY
OGDEN, UTAH 84408

SEAL

MHTN PROJECT NO. 2010575

DRAWN BY: JZ CHECKED BY: RB

ISSUED:

NO.	DATE	DESCRIPTION
01	03 FEB. 2011	CONSTRUCTION DOCUMENTS

CONTRACTOR TO VERIFY DRAWINGS IN FIELD USE REFLECT LAST REVISION DATE.

NO.	DATE	DESCRIPTION

SHEET NAME
IRRIGATION PLAN

CONSTRUCTION DOCUMENTS
03 FEBRUARY 2011

SHEET NUMBER
LI101

C:\Users\randyk\Documents\A11_2010543 WSU RESIDENTIAL LIFE BUILDING III_CENTRAL_randyk.rvt
11/29/2010 9:23:45 AM

NOTE:
THE ALUMINUM ENCLOSURE FOR THE FILTER SHALL BE A CUSTOM SIZED BACKFLOW ENCLOSURE. ENCLOSURE SHALL BE WEATHER AND VANDAL RESISTANT, MANUFACTURED OF MARINE GRADE ALUMINUM ALLOY 5052-H32 WITH A WALL THICKNESS OF A MINIMUM OF 1/8". THE MOUNTING BASE SHALL BE STAINLESS STEEL. THE MAIN HOUSING SHALL BE OF SOLID SHEET CONSTRUCTION WITH A MINIMUM R-6 INSULATION ON THE TOP AND SIDES. THE ENCLOSURE SHALL HAVE MOUNTING BRACKETS AND A LOCKING MECHANISM TO MEET THE CAMPUS STANDARD ENCLOSURE.

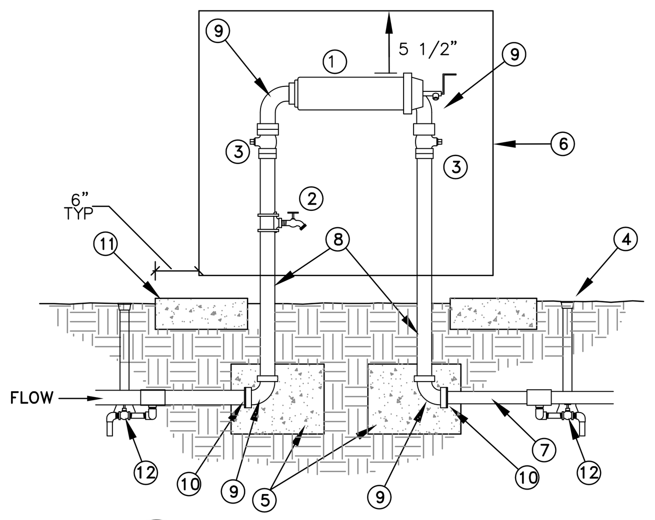

1. STEEL INLINE FILTER WITH WEAVEWIRE SCREEN (300 MICRON) SEE PLAN FOR SIZE
2. 3/4" BRASS HOSE BIB AND SADDLE
3. FL WAFER BUTTERFLY VALVE—SAME AS LINE SIZE
4. FINISH GRADE
5. CONCRETE THRUST BLOCKS (TYP.). WRAP PIPES W/ 10 MIL TAPE. CAST AGAINST UNDISTURBED SOIL
6. BACKFLOW ENCLOSURE — SEE IRRIGATION EQUIPMENT SCHEDULE (FILTER) (INSTALL PER MANUFACTURER'S SPECIFICATIONS)
7. FL CAST PIPE—SAME AS LINE SIZE
8. FL X PE, SPOOL LENGTH AS REQUIRED (TYP.)
9. FL ELL (TYP.)—SAME AS LINE SIZE
10. INSTA-FLANGE ADAPTER—SAME AS LINE SIZE
11. 4" THICK CONCRETE PAD (SIZE AS REQUIRED)
12. MANUAL DRAIN — SEE DETAIL

I FILTER ASSEMBLY
NTS

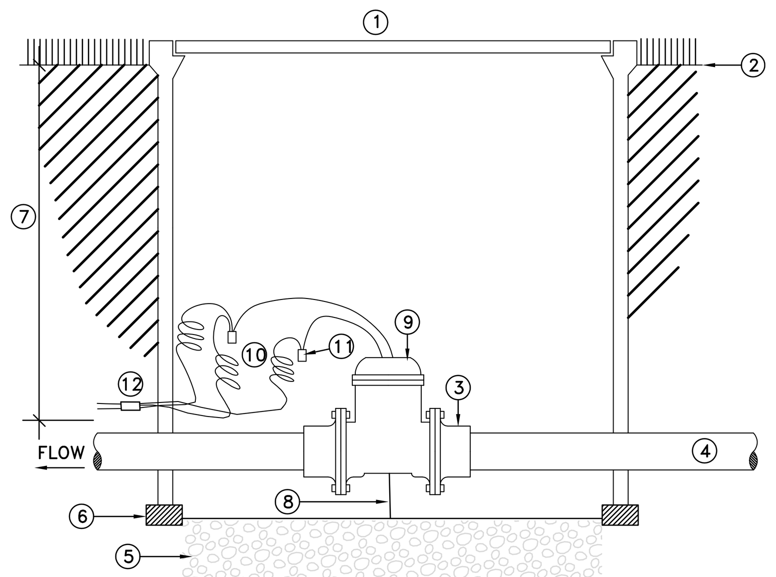

1. GREEN PLASTIC VALVE BOX W/BOLT LOCK CARSON-BROOKS OR APPROVED EQUAL, SIZE AND EXTENTIONS AS REQUIRED TO EASILY MAINTAIN ALL PARTS OF THE VALVE
2. FINISH GRADE
3. BELL x FLANGE METAL ADAPTER (TYP.)
4. PVC MAINLINE
5. 4" MIN. DEPTH CLEAN PEA GRAVEL
6. 2"x4" REDWOOD OR BRICK BLOCKING (TYP.)
7. DEPTH SAME AS MAINLINE — SEE NOTES
8. 4" MINIMUM CLEARANCE REQUIRED
9. MASTER VALVE HYDROMETER SEE EQUIPMENT SCHEDULE
10. PROVIDE 30" EXPANSION LOOP AT EACH WIRE CONNECTOR IN BOX
11. WATER TIGHT WIRE CONNECTORS (TYP.)
12. WIRES TO CONTROLLER, TAPE AND BUNDLE EVERY 10' — SEE TRENCH DETAIL

F MASTER VALVE HYDROMETER
NTS

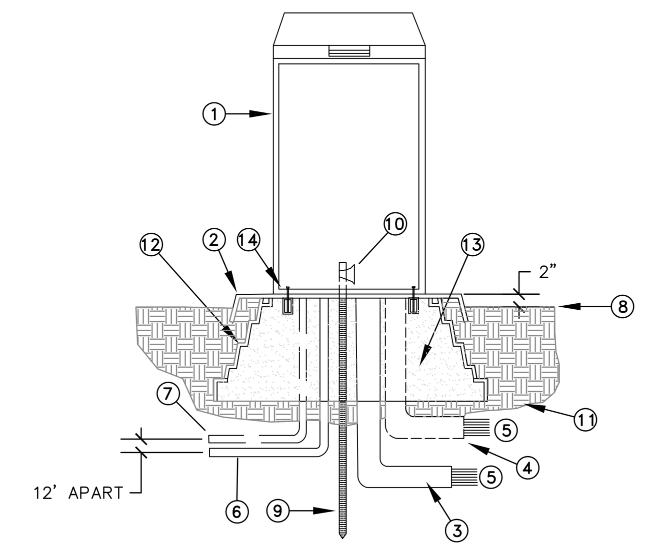

1. CONTROLLER AND CONTROLLER ENCLOSURE — SEE IRRIGATION EQUIPMENT SCHEDULE
2. QUICKPAD 3/16" MIN. THICKNESS ALUMINUM POWDER COATED PERFORMED PAD
3. PVC SWEEP ELL STATIONS 1-24
4. PVC SWEEP ELL STATIONS 25-40 (IF APPLICABLE)
5. DIRECT BURIAL CONTROL WIRES TO CONTROL VALVES
6. 110-VOLT SERVICE IN CONDUIT
7. EV-CAB-COM CABLE 1" CONDUIT
8. FINISH GRADE
9. 5/8" X 8' COPPER GROUND ROD
10. BRONZE GROUND CLAMP
11. UBGRADE COMPACTED TO 90%
12. PREFORMED PAD SUPPORT BASE
13. FILL INSIDE BASE WITH PEA GRAVEL
14. QUICKPAD FASTENING BRACKET (2)

H CONTROLLER & ENCLOSURE
NTS

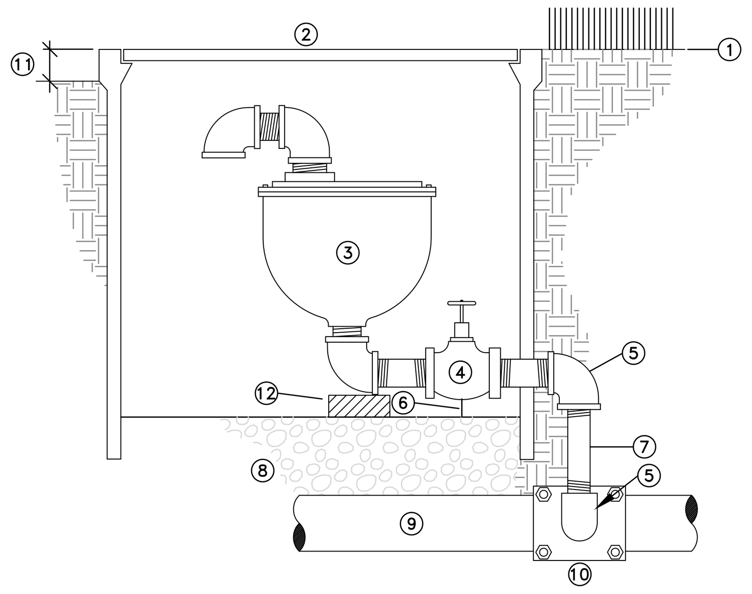

1. FINISH GRADE
2. JUMBO PLASTIC VALVE BOX W/ LOCK BOLT, AND EXTENSION. CARSON-BROOKS OR EQUAL.
3. COMBINATION AIR VALVE — SEE IRRIGATION EQUIPMENT SCHEDULE (INSTALL PER MANUFAC. SPECS.)
4. BRASS BALL VALVE, SIZE AS REQUIRED
5. 90° BRASS OR GALV. ELL (TYP.)
6. 2" MIN. CLEARANCE REQUIRED
7. BRASS OR GALV. NIPPLE, LENGTH AS REQUIRED (TYP.)
8. 6" MIN. DEPTH WASHED PEA GRAVEL
9. MAIN LINE
10. MJ OR SS DOUBLE STRAPPED SERVICE SADDLE
11. HEIGHT AT FINISHED GRADE OR AT 2" IN PLANTING BEDS
12. SUPPORT BLOCK FOR VALVE RECOMMENDED

J COMBINATION AIR VALVE ASSEMBLY
NTS

THRUST BLOCKING INSTRUCTIONS

1. PROVIDE THRUST BLOCKS AT ALL CHANGES IN SIZE OR DIRECTION. BENDS, REDUCERS, PLUGS, AND THE OPPOSITE SIDE OF TEE BRANCHES ALL REQUIRE THRUST BLOCKS.
2. THE SIZES OF THE BLOCKS ARE DETERMINED BY THE WORKING PRESSURE, THE SIZE AND TYPE OF FITTING, AND SOIL CONDITIONS AT THE JOB SITE. TO CALCULATE THE AREA OF CONTACT WITH THE SOIL, FOLLOW THESE STEPS:
   CALCULATE THE THRUST BY SELECTING THRUST/100 BY SIZE AND TYPE OF FITTING FROM TABLE 1 AND MULTIPLYING THRUST/100 BY SYSTEM PRESSURE DIVIDED BY 100.
3. DIVIDE THE TOTAL THRUST BY BEARING CAPACITY OF THE SOIL IN EXCAVATION (FROM TABLE 2) TO DETERMINE THE AREA IN SQUARE FEET OF THRUST BLOCK REQUIRED TO BE IN CONTACT WITH THE UNDISTURBED SOIL.

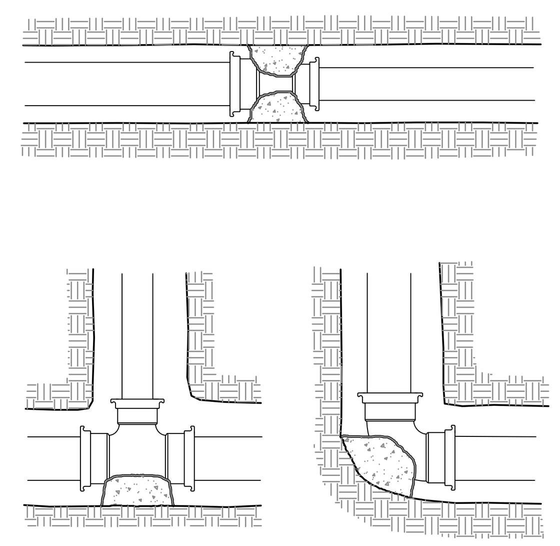

TABLE 1 — THRUST/100

Size	Tees. Plugs	90° Bends	45° Bends	22.5° Bends
2	363	513	259	141
2 1/2	531	751	379	207
3	788	1,114	562	307
4	1,302	1,841	928	508
6	2,822	3,990	2,012	1,101
8	4,783	6,763	3,410	1,865
10	7,430	10,506	5,297	2,898
12	10,452	14,778	7,452	4,076

FOR REDUCERS, SUBTRACT SMALL OPENING PLUG THRUST FROM LARGE OPENING PLUG THRUST TO CALCULATE THRUST/100.

TABLE 2 — SAFE BEARING LOAD

SOIL TYPE	LBS PER SQ FT*
Soft Clay	1,000
Sand	2,000
Sand & Gravel	3,000
Sand & Gravel cemented w/Clay	4,000
Hard Pan	10,000

*HARCO ASSUMES NO RESPONSIBILITY FOR THE ABOVE BEARING LOAD DATA. THE ENGINEER IS RESPONSIBLE FOR DETERMINING SAFE BEARING LOADS, AND WHEN DOUBT EXISTS, SOIL BEARING TESTS SHOULD BE SPECIFIED. THE BEARING LOADS GIVEN ARE FOR HORIZONTAL THRUSTS WHEN DEPTH OF COVER EXCEEDS 2 FEET.

N THRUST BLOCKING INSTRUCTIONS
NTS

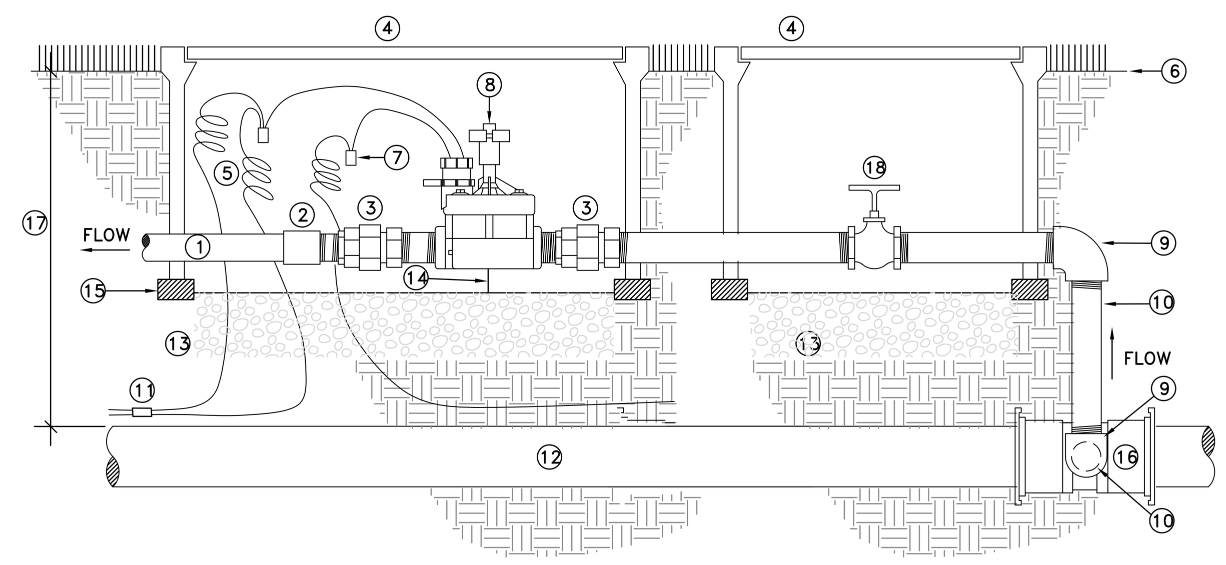

1. LATERAL LINE
2. PVC SCH. 80 FEMALE ADAPTER
3. PVC SCH. 80 UNION
4. GREEN PLASTIC VALVE BOX W/ BOLT LOCK (CARSON-BROOKS OR APPROVED EQUAL), SIZE AS REQUIRED
5. PROVIDE 12" EXPANSION LOOP AT EACH WIRE CONNECTOR IN BOX
6. FINISH GRADE
7. WATER TIGHT WIRE CONNECTORS (TYP.)
8. ELECTRIC CONTROL VALVE — SEE IRRIGATION EQUIPMENT SCHEDULE
9. SCH. 80 PVC ELL
10. SCH. 80 PVC TOE NIPPLE, LENGTH AS REQ'D
11. WIRES TO CONTROLLER, TAPE AND BUNDLE EVERY 10' — SEE TRENCH DETAIL
12. PVC MAIN LINE
13. 4" MIN. DEPTH PEA GRAVEL
14. 2" MIN. CLEARANCE REQUIRED
15. 2"x4" REDWOOD OR BRICK BLOCKING (TYP.)
16. DUCTILE IRON SERVICE TEE, SIZE AS REQ'D
17. DEPTH — SEE NOTES
18. GATE VALVE (LINE SIZE)

E CONTROL VALVE ASSEMBLY
NTS

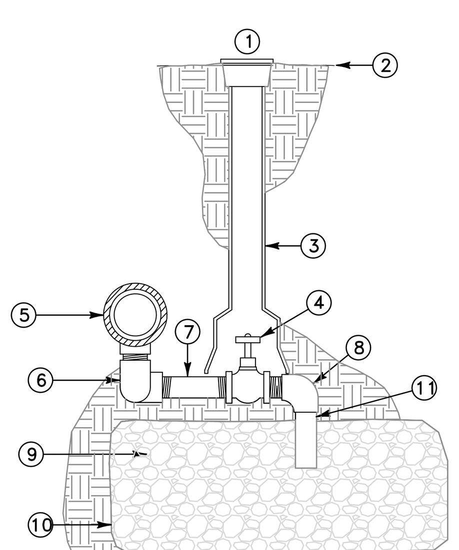

1. ADJUSTABLE CURB BOX W/ BOLT LID, CARSON-BROOKS 250 OR EQUAL
2. FINISH GRADE
3. ADJUST HEIGHT AS REQUIRED
4. 3/4" BRASS GLOBE VALVE W/ CROSS HANDLE — SEE IRRIGATION EQUIPMENT SCHEDULE
5. PVC MAINLINE & D. I. SERVICE TEE
6. (2)-FIPTxFIPT 90° ELL (2)-3/4" x CLOSE PVC NIPPLE
7. 3/4"x6" PVC NIPPLE
8. 3/4" 90° STREET ELL
9. 3/4" ROCK SUMP — 6 C.F. MIN. SIZE
10. FILTER FABRIC COVERING ROCK SUMP
11. 3/4" x 6" PVC NIPPLE

NOTE:
1) ALL PVC NIPPLES TO BE SCHEDULE 80.
2) PROVIDE VALVE KEY TO OWNER

D MANUAL DRAIN VALVE
NTS

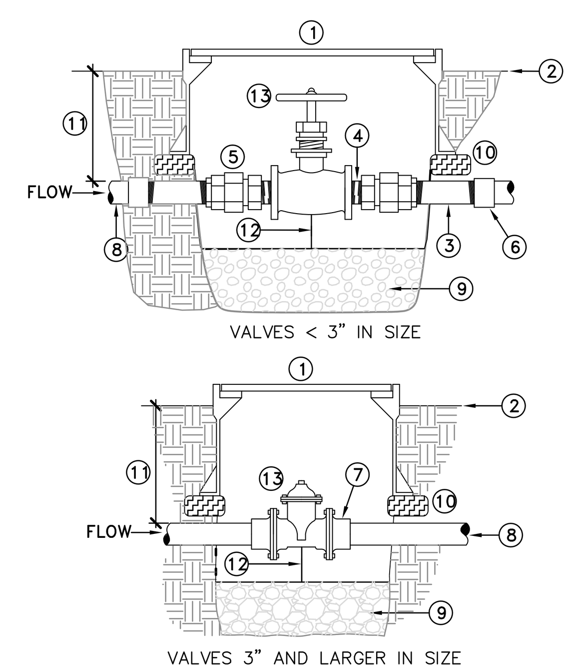

1. 10" ROUND PLASTIC VALVE BOX, W/ LOCK BOLT, CARSON-BROOKS 910 OR EQUAL, MARKED "G.V." WITH 2" WHITE LETTERS
2. FINISH GRADE
3. METAL NIPPLE, 12" MIN. LENGTH, PER BELOW: 1" — 1 1/4" DIA. = GALVANIZED STEEL NIPPLE 1 1/2" — 3" DIA. = DUCTILE IRON NIPPLE
4. 2" NIPPLE, DIA. AS REQUIRED
5. BRASS UNION (TYP.)
6. PVC SCH. 80 FEMALE ADAPTOR (TYP.)
7. BELL x FLANGE METAL ADAPTER (TYP.)
8. PVC MAINLINE
9. 4" MIN. DEPTH PEA GRAVEL
10. 2"x4" REDWOOD OR BRICK BLOCKING (TYP.)
11. DEPTH — SEE NOTES
12. 2" MINIMUM CLEARANCE REQUIRED
13. GATE VALVE (LINE SIZE) — SEE EQUIPMENT SCHEDULE

NOTES:
VALVES ≥ 2" ø SHALL HAVE 2" SQUARE OPERATING NUTS.
MEGA LUG FITTINGS MAY BE USED AS REQUIRED.

F ISOLATION GATE VALVE
NTS

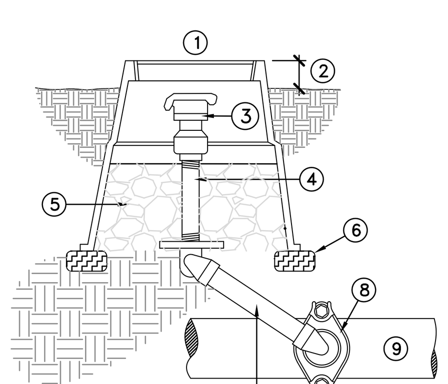

1. 10" ROUND GREEN PLASTIC VALVE BOX, CARSON-BROOKS 910 OR EQUAL
2. HEIGHT ABOVE FINISH GRADE: 1 1/2" IN TURF AREAS (SODDED); 1" IN TURF AREAS (SEEDED); 2" IN PLANTING AREAS
3. QUICK COUPLER VALVE — SEE EQUIPMENT SCHEDULE
4. BRASS NIPPLE, LENGTH AS REQUIRED
5. 6" MIN. DEPTH CLEAN PEA GRAVEL
6. REDWOOD OR BRICK BLOCKING, TYPICAL
7. 12" LASCO UNITIZED SWING JOINT W/ BRASS INSERT STABILIZER ELBOW, OR 12" SPEARS SWING JOINT RISER ASSEMBLY W/ BRASS FEMALE THREAD 90° ELL OUTLET
8. DUCTILE IRON SERVICE SADDLE W/ S.S. STRAP (SIDE MOUNTED, SIZE AS REQUIRED)
9. PVC MAIN LINE

C QUICK COUPLING VALVE
NTS

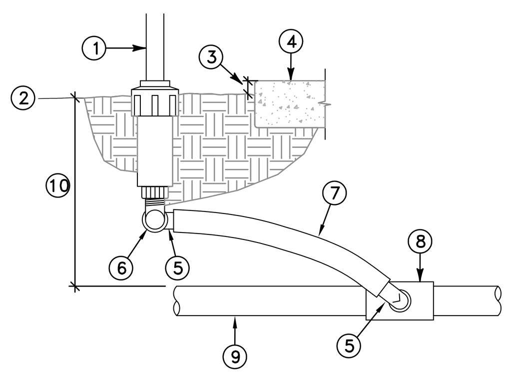

1. POP-UP SPRAY HEAD — SEE LEGEND
2. FINISH GRADE
3. 1" — 1 1/2"
4. NOTE: ALL SPRAY HEADS TO BE PLACED 2" CLEAR OF ALL HARDSCAPE SURFACES
5. SWING PIPE ELL WITH SPIRAL BARB FITTING (TYP.)
6. MARLEX STREET ELL
7. FLEXIBLE SWING PIPE, 12" MIN. LENGTH
8. PVC SCH 40 SxSxT TEE (OR ELL)
9. PVC LATERAL LINE, SIZE AS NOTED ON PLAN
10. DEPTH — SEE NOTES & TRENCH DETAIL

A 6" POP-UP SPRAY SPRINKLER
NTS

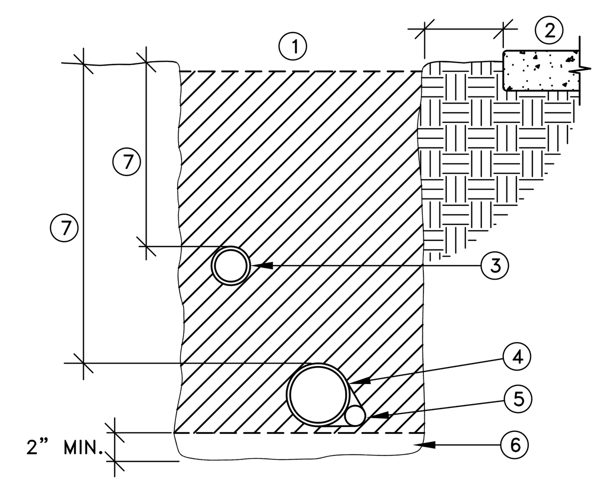

1. BACKFILL MATERIAL — SEE NOTES, COMPACT TO 90% MIN.
2. ADJACENT HARD SURFACE
3. NON-PRESSURE LATERAL LINE
4. PRESSURE MAIN LINE
5. DIRECT BURIAL, LOW VOLTAGE CONTROL WIRES; TAPE AND BUNDLE AT 10 FT. O.C.
6. BEDDING MATERIAL — SEE NOTES
7. PIPE DEPTHS — SEE NOTES

SEE SLEEVING DETAIL FOR TRENCHING IN PAVED AREAS.
NOTE:

H TRENCH DETAIL
NTS

NOTE:
RUN ONE EXTRA WIRE FROM THE ADJACENT CONTROLLER TO EACH GROUP OF VALVES FOR FUTURE USE AND STUB INTO THE VALVE BOX.

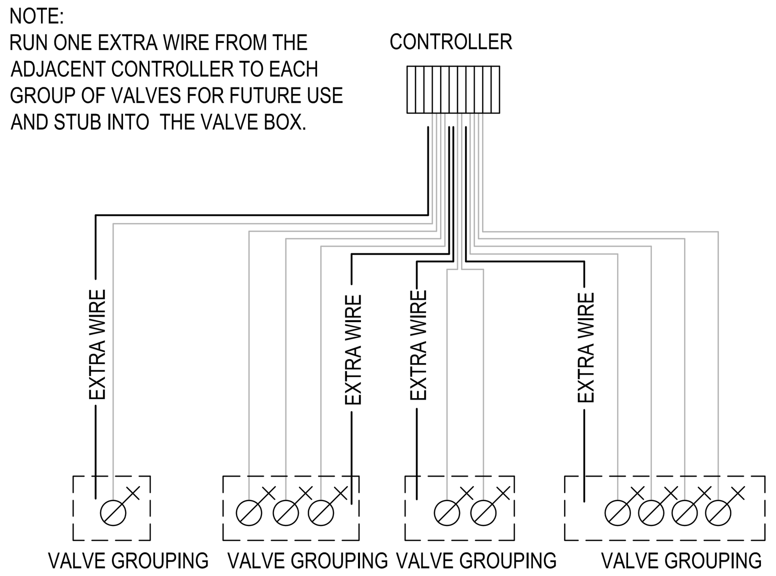

A4 SPARE WIRE DETAIL
NTS

#####
i-dsi07

MHTN
ARCHITECTS
MHTN Architects, Inc.
420 East South Temple
Suite 100
Salt Lake City, Utah 84111
Telephone (801) 595-6700
Telefax (801) 595-6717
www.mhtn.com

WEBER STATE UNIVERSITY
STEWART STADIUM FIELDRENOVATION
DFCM PROJECT NUMBER: 10280810

WEBER STATE UNIVERSITY
OGDEN, UTAH 84408

SEAL

MHTN PROJECT NO. 2010575
DRAWN BY: JZ CHECKED BY: RB

ISSUED:

NO.	DATE	DESCRIPTION
01	03 FEB. 2011	CONSTRUCTION DOCUMENTS

CONTRACTOR TO VERIFY DRAWINGS IN FIELD USE REFLECT LAST REVISION DATE.

NO.	DATE	DESCRIPTION

SHEET NAME
IRRIGATION DETAILS

CONSTRUCTION DOCUMENTS
03 FEBRUARY 2011

SHEET NUMBER
LI501

IRRIGATION NOTES

ALL MAIN LINE PIPE SHALL BE NEW CLASS 200 RING-TITE PVC PIPE WITH DUCTILE IRON DEEP SOCKET FITTINGS ON ALL TEES, ELBOWS AND 90'S. DEEP SOCKET FITTINGS SHALL INCLUDE JOINT RESTRAINTS AND THRUST BLOCKS. ALL SECONDARY LATERAL LINE PIPE SHALL BE SCHEDULE 40 PVC PIPE. FITTINGS ON ALL SECONDARY LATERAL LINES SHALL BE SCHEDULE 40 FITTINGS.

THIS CONTRACTOR SHALL PROVIDE AND INSTALL AIR RELIEF VALVES ON THE MAINLINE AT ALL DEAD END RUNS AND AT ALL HIGH POINTS THROUGHOUT.

THE CONTRACTOR SHALL PRESSURE TEST THE MAINLINE AT 150 P.S.I. PRIOR TO INSTALLING ANY LATERAL LINES.

IRRIGATION SYSTEM IS DESIGNED SO THAT THE SYSTEM CAN BE WINTERIZED USING COMPRESSED AIR. DO NOT INSTALL AUTOMATIC DRAINS ANYWHERE ON THE SYSTEM.

THIS DRAWING IS DIAGRAMMATIC ONLY AND IS INTENDED TO CONVEY THE IDEA OF FULL COVERAGE OF THE IRRIGATION SPRINKLER SYSTEM. PRINTS SHALL NOT BE SCALED. THE IRRIGATION SYSTEM CONTRACTOR SHALL BE RESPONSIBLE FOR THE INSTALLATION LAYOUT OF THE SYSTEM IN ACCORDANCE WITH THE DRAWINGS TO PROPORTIONALLY COVER A GIVEN AREA AS SHOWN. THE LAYOUT MAY BE MODIFIED IF NECESSARY TO OBTAIN COVERAGE TO SUIT THE MANUFACTURERS STANDARD HEADS INDICATED. DO NOT DECREASE THE NUMBER OF HEADS INDICATED UNLESS THIS IS ACCEPTABLE TO THE LANDSCAPE ARCHITECT. THE SYSTEM SHALL BE TESTED FOR COMPLETE COVERAGE AND ALL NECESSARY PROPER ADJUSTMENTS MADE TO GET FULL AND PROPER COVERAGE PRIOR TO ACCEPTANCE BY THE OWNER.

CONNECT NEW MAINLINE TO EXISTING VALVE MANIFOLDS ON THE NORTH END OF THE STADIUM. VERIFY OPERATION OF TECH ENTIRE NORTH AREA IRRIGATION BEFORE AND AFTER CONSTRUCTION.

IRRIGATION REMODEL NOTES

THE CONTRACTOR SHALL BE RESPONSIBLE FOR FIELD VERIFICATION OF THE EXISTING SPRINKLER IRRIGATION SYSTEM IN TERMS OF FLOW CAPACITY, VALVE WIRING, VALVE AND HEAD LAYOUT AND CONTROLLER CAPACITY.

THE CONTRACTOR SHALL BE RESPONSIBLE FOR THE COMPLETE REMODEL OF A SECTION OF THE EXISTING IRRIGATION SYSTEM AS SHOWN AND FOR PROVIDING FOR FULL COVERAGE OF ALL SYSTEM HEADS AND FOR THE FULL AND COMPLETE OPERATION OF BOTH THE NEW AND EXISTING SYSTEM IN THE AREAS BEING MODIFIED.

THE CONTRACTOR SHALL COORDINATE ALL DEMOLITION WORK AND TIMES WITH THE OWNER.

MAINTAIN AND PROTECT AS MUCH OF THE EXISTING IRRIGATION SYSTEM AS POSSIBLE AND FEASIBLE AND STILL PROVIDE FOR FULL COVERAGE OF THE ENTIRE AREA. KEEP ALL LAWN AREA HEADS ON A SEPARATE CIRCUIT FROM SHRUB AREA HEADS.

THE EXISTING IRRIGATION SYSTEMS NOTED TO REMAIN IN USE SHALL BE PATCHED AND REPAIRED AS NECESSARY. MAINTAIN OPERATION OF THE EXISTING SYSTEM AS REQUIRED TO PROTECT EXISTING PLANT MATERIAL. CONTRACTOR SHALL BE RESPONSIBLE FOR DAMAGE OR DEATH OF EXISTING PLANT MATERIAL.

ALL SALVAGED HEADS SHALL BE RETURNED TO THE OWNER.

THIS CONTRACTOR SHALL BE RESPONSIBLE FOR PROTECTING THE EXISTING VALVE WIRING AND RE-ROUTING AS SHOWN AND AS REQUIRED. MINIMIZE THE USE OF WIRE SPLICES. PROVIDE TEMPORARY WIRING AS REQUIRED TO KEEP THE EXISTING SYSTEM IN OPERATION.

REPAIR DAMAGE TO EXISTING IRRIGATION SYSTEM AND LAWN RESULTING FROM CONSTRUCTION OPERATIONS.

THIS CONTRACTOR SHALL MAINTIAN OPERATION OF THE EXISTING SYSTEM DURING CONSTRUCTION. ALL EXISTING LANDSCAPE PLANTING TO BE PROTECTED AND MAINTAINED DURING CONSTRUCTION.

THIS CONTRACTOR SHALL MAINTIAN OPERATION OF THE EXISTING SYSTEM DURING CONSTRUCTION. ALL EXISTING LANDSCAPE PLANTING TO BE PROTECTED AND MAINTAINED DURING CONSTRUCTION.

IRRIGATION NOTES

1. IRRIGATION PLAN IS DIAGRAMMATIC. ALL IRRIGATION EQUIPMENT SHALL BE LOCATED IN PLANTING AREAS ONLY, UNLESS NOTED OTHERWISE. REFER TO THE IRRIGATION LEGEND, DETAILS, AND SPECIFICATIONS FOR EQUIPMENT AND INSTALLATION. SPECIFICATIONS SHALL TAKE PRECEDENCE OVER INSTALLATION DETAILS.

2. LANDSCAPE CONTRACTOR SHALL VERIFY LOCATION OF IRRIGATION POINT OF CONNECTION (POC) AND THE STATIC WATER PRESSURE AT THAT LOCATION PRIOR TO BEGINNING ANY IRRIGATION WORK. IF THE LOCATION OR WATER PRESSURE IS DIFFERENT THAN THAT EXPRESSED BY THE LANDSCAPE ARCHITECT, OR IF THE PRESSURE APPEARS TO BE UNUSUALLY HIGH OR LOW, THE CONTRACTOR SHALL NOTIFY THE LANDSCAPE ARCHITECT IMMEDIATELY.

3. CONTRACTOR SHALL KEEP THE PREMISES CLEAN AND FREE OF EXCESS EQUIPMENT, MATERIALS AND RUBBISH INCIDENTAL TO WORK OF THIS SECTION.

4. PIPE FITTINGS SHALL BE AS FOLLOWS:
A. ALL RISERS AND EXPOSED FITTINGS SHALL BE P.V.C. SCHEDULE 80.
B. ALL UNDERGROUND FITTINGS SHALL BE P.V.C. SCHEDULE 40.
C. ALL MAIN LINE TWO AND HALF (2 ½) INCH OR GREATER SHALL USE DUCTILE IRON FITTINGS. ALL MAINLINE TWO (2) INCH OR SMALLER SHALL USE PVC FITTINGS.

5. IRRIGATION CONTROL WIRES SHALL CONFORM TO THE FOLLOWING:
A. ALL WIRE SHALL BE TYPE UF, 600 VOLT, SOLID COPPER , SINGLE CONDUCTOR WIRE. IT SHALL BE UL LISTED, DIRECT BURIAL TYPE, AND MINIMUM SIZE OF 14 GAUGE. ALL SPLICES AND CONNECTIONS SHALL BE WATER-TIGHT. ALL WIRES SHALL BE INSTALLED WITH TWO (2) FEET OF EXCESS WIRE (COILED) AT THE END OF EACH WIRE RUN, WIRE SPLICE, AND AT EACH CONTROLLER.
B. CONTROL WIRE SHALL BE BUNDLED EVERY 10' AND PLACED ADJACENT TO MAIN LINE.
C. ALL WIRE SPLICES SHALL BE LOCATED IN VALVE BOXES.

6. MANUAL DRAIN VALVES SHALL BE PLACED ON THE MAIN LINE AT ALL LOW SPOTS TO ENSURE COMPLETE DRAINAGE AND WINTERIZATION OF MAIN LINE. ALL MANUAL DRAINS SHALL BE PLACE IN SEPARATE VALVE BOXES PER INSTALLATION DETAILS, FULL SIZE DRAIN VALVE AT END OF MAINLINE.

7. CHECK VALVES SHALL BE USED WHERE INDICATED AND WHERE NECESSARY TO PREVENT WATER FLOW FROM LOWER ELEVATION HEADS WHEN SYSTEM IS TURNED OFF. INSTALL PER MANUFACTURE'S RECOMMENDATION, WITH A ONE (1) CU. FT. MIN. GRAVEL SUMP AROUND EACH DRAIN. .

8. ALL POP-UP SPRAY SPRINKLERS SHALL CONFORM TO THE FOLLOWING UNLESS SPECIFICALLY NOTED OTHERWISE ON THE PLANS:
A. SPRINKLERS LOCATED IN GRASS AREAS SHALL BE FOUR (6) INCHES IN HEIGHT.
B. SPRINKLERS LOCATED IN PLANTING BEDS SHALL BE TWELVE (12) INCHES IN HEIGHT.

9. DRIP IRRIGATION SHALL CONFORM TO THE FOLLOWING:
(DRIP LINES AT GRADE UNDER MULCH)
A. DRIP TUBING WITH PRESSURE COMPENSATING EMITTERS SHALL CONFORM TO THE FOLLOWING:
1. TUBING SHALL BE CONSTRUCTED OF HIGH QUALITY LINEAR, LOW DENSITY, UV-RESISTANT, POLYETHYLENE RESIN MATERIALS WITH INTERNAL, INTEGRAL DRIPPERS AT SPECIFIED INTERVALS.
2. DRIPPERS OR EMITTERS SHALL BE OF THE INDIVIDUAL, SELF-CLEANING, PRESSURE-COMPENSATING TYPE.

B. INLINE DRIP TUBING SHALL BE SPACED AT A DISTANCE EQUAL TO OR LESS THAN THE INLINE EMITTER SPACING. FOR SLOPE APPLICATIONS PLACE DRIP TUBING LATERALS PARALLEL TO THE SLOPE CONTOUR. WHEN SLOPES EXCEED 3% INCREASE THE RECOMMENDED LATERAL SPACING BY 25% ON THE LOWER 1/3 OF THE SLOPE.

C. ALL INSERT BARBED FITTINGS SHALL BE CONSTRUCTED OF MOLDED, UV-RESISTANT PLASTIC. EACH FITTING SHALL BE A MINIMUM OF TWO RIDGES OR BARBS PER OUTLET. ALL FITTINGS SHALL BE OF ONE MANUFACTURER AND SHALL BE AVAILABLE ON ONE OF THE FOLLOWING END CONFIGURATIONS:
1. BARBED INSERT FITTINGS
2. MALE PIPE THREADS (MPT) WITH BARBED INSERT FITTINGS
3. FEMALE PIPE THREADS (FPT) WITH BARBED INSERT FITTINGS

D. ALL DRIP TUBING SHALL BE SHALL BE HELD IN PLACE BY SOIL STAPLES AND SHALL CONFORM TO THE FOLLOWING:
1. SANDY SOIL - ONE STAPLE EVERY THREE (3') FEET AND TWO (2) STAPLES ON EACH CHANGE OF DIRECTION (TEE, ELBOW, OR CROSS)
2. LOAM SOIL - ONE STAPLE VERY FOUR (4') FEET AND TWO (2) STAPLES ON EACH CHANGE OF DIRECTION (TEE, ELBOW, OR CROSS)
3. CLAY SOIL - ONE STAPLE VERY FIVE (5') FEET AND TWO (2) STAPLES ON EACH CHANGE OF DIRECTION (TEE, ELBOW, OR CROSS)

E. REMOTE CONTROL VALVE ASSEMBLY SHALL CONTAIN THE FOLLOWING COMPONENTS:
1. PVC BALL VALVE
2. INLINE DISC OR SCREEN FILTER WITH 100 MICRON / 150 MESH FILTER ELEMENTS.
3. REMOTE CONTROL VALVE - CAPABLE OF OPERATING AT VERY LOW FLOWS
4. INLINE PRESSURE REGULATOR
ALL COMPONENTS SHALL BE INSTALLED ACCORDING TO MANUFACTURER'S RECOMMENDATIONS, AND LOCATED WITHIN A SINGLE VALVE BOX, ONE VALVE ASSEMBLY PER BOX.

F. PROVIDE THE FOLLOWING EQUIPMENT TO EACH VALVE CIRCUIT, LOCATED AND INSTALLED PER MANUFACTURER'S RECOMMENDATIONS:
1. LINE FLUSHING VALVE(S); MINIMUM OF ONE ON EACH EXHAUST HEADER AND ONE FOR EVERY 15 GPM IN THE CIRCUIT.
2. AIR/VACUUM RELIEF VALVE(S) AT ALL HIGH POINTS IN THE SYSTEM.
3. AUTOMATIC DRAINS AT ALL LOW POINTS ON THE SUPPLY AND EXHAUST HEADERS, WITH ONE LOCATED 2 FEET FROM THE CONTROL VALVE ASSEMBLY. THE DRAINS SHALL BE ANGLED DOWN AT 30 TO 45 DEGREES FROM HORIZONTAL .

G. INLINE DRIPPER TUBING SHALL BE INSTALLED AT FINISHED GRADE WITH SOIL STAPLES AND COVERED WITH THREE (3) INCHES OF SPECIFIED MULCH. SUPPLY AND EXHAUST HEADERS SHALL BE INSTALLED AT NORMAL LATERAL LINE DEPTHS.

H. INSTALLATION OF INLINE DRIP CIRCUITS SHALL GENERALLY CONFORM TO THE FOLLOWING STEPS:
1. ASSEMBLE AND INSTALL FILTER, REMOTE CONTROL VALVE AND PRESSURE REGULATING VALVE ASSEMBLY(S) IN ACCORDANCE WITH INSTALLATION DETAILS.
2. ASSEMBLE AND INSTALL SUPPLY HEADER(S) IN ACCORDANCE WITH INSTALLATION DETAILS. INCLUDE AUTOMATIC DRAIN AT LOW POINTS. TAPE OR PLUG ALL OPEN CONNECTIONS TO PREVENT DEBRIS CONTAMINATION.
3. INSTALL LATERAL DRIP LINES IN ACCORDANCE WITH DETAILS AND RELEVANT SPECIFICATIONS AND MANUFACTURER'S RECOMMENDATIONS. TAPE OR PLUG ALL OPEN ENDS WHILE INSTALLING TO PREVENT DEBRIS CONTAMINATION.
4. ASSEMBLE AND INSTALL EXHAUST HEADER(S) IN ACCORDANCE WITH INSTALLATION DETAILS. INCLUDE FLUSHING VALVE(S) AND AUTOMATIC DRAIN(S) AT LOW POINTS. TAPE OR PLUG ALL OPEN CONNECTIONS TO PREVENT DEBRIS CONTAMINATION.
5. INSTALL AIR/VACUUM RELIEF VALVE(S) AT THE ZONES HIGHEST POINT(S) IN ACCORDANCE WITH DETAILS.
6. THOROUGHLY FLUSH SUPPLY HEADER(S) AND CONNECT DRIP LATERAL LINES WHILE FLUSHING.
7. THOROUGHLY FLUSH DRIP LATERAL LINES AND CONNECT TO EXHAUST HEADER(S) AND ANY INTERCONNECTING DRIP LATERAL LINES WHILE FLUSHING.
8. THOROUGHLY FLUSH EXHAUST HEADER(S) AND INSTALL LINE FLUSHING VALVES IN ACCORDANCE WITH DETAILS.

10. ALL PRESSURE MAIN LINES SHALL HAVE EIGHTEEN (18) INCHES TO THIRTY (30) INCHES OF COVER, AND ALL LATERAL LINES SHALL HAVE EIGHT (8) INCHES TO FOURTEEN (14) INCHES OF COVER. TRENCH BEDDING AND BACKFILL MATERIAL SHALL BE EXISTING SITE SOIL FREE OF ROCKS, DEBRIS, ETC. GREATER THAN ONE (1) INCH IN ANY DIMENSION THAT MAY DAMAGE IRRIGATION PIPE OR EQUIPMENT. IN THE EVENT OF BACKFILL SETTLEMENT, CONTRACTOR SHALL PERFORM REQUIRED REPAIRS AT HIS OWN COST.

11. <u>WHERE POSSIBLE, ALL AUTOMATIC VALVES SHALL BE LOCATED WITHIN SHRUB AREAS AND INSTALLED IN GREEN VALVE BOXES, ONE VALVE PER BOX, WITH FOUR (4) INCHES OF 3/4" GRAVEL BENEATH THE VALVE. NO VALVE MANIFOLDS SHALL BE ALLOWED. GATE VALVES SHALL BE LOCATED IN SEPARATE VALVE BOXES. WIRE SPLICES SHALL ALSO BE LOCATED IN SEPARATE VALVE BOXES.</u>

12. ALL MAIN LINE AND LATERAL LINES SHALL BE SLEEVED WITH P.V.C. SCHEDULE 40 PIPE (4" AND UNDER) OR CLASS 200 (GREATER THAN 4") WHERE THEY PASS UNDER PAVED AREAS. SLEEVE SIZE SHALL BE TWICE THE DIAMETER OF THE LINE TO BE SLEEVED UNLESS OTHERWISE NOTED ON THE PLANS.

13. AUTOMATIC CONTROLLERS SHALL BE OF THE SIZE AND TYPE NOTED, AND INSTALLED WHERE INDICATED ON IRRIGATION PLAN. CONTROL WIRES SHALL BE SLEEVED IN ELECTRICAL CONDUIT TO MAINLINE. 120-VOLT ELECTRICAL SERVICE TO CONTROLLERS SHALL BE PROVIDED BY THE LANDSCAPE CONTRACTOR. COORDINATE THIS WORK WITH ELECTRICAL AND OTHER CONTRACTORS FOR THIS PROJECT.

14. A MASTER VALVE SHALL BE INSTALLED ALONG WITH APPROPRIATE FLOW SENSING EQUIPMENT TO ELIMINATE EXCESS SYSTEM FLOW SHOULD A VALVE STICK OPEN AFTER A CYCLE HAS BEEN COMPLETED OR A MAIN LINE BREAK OCCURS.

15. PRIOR TO BACKFILLING IRRIGATION TRENCHES:
A. ALL MAIN LINES IN THE SYSTEM SHALL BE CAPPED AND PRESSURE TESTED AT 125 P.S.I. FOR A PERIOD OF FOUR (4) HOURS. ANY LEAKS FOUND SHALL BE CORRECTED BY REMOVING THE LEAKING PIPE OR FITTINGS AND INSTALLING NEW MATERIAL IN ITS PLACE. REPEAT PRESSURE TEST TO ASSURE ABSENCE OF LEAKS.
B. THE CONTRACTOR SHALL NOT ALLOW NOR CAUSE ANY OF HIS WORK TO BE COVERED UNTIL IT HAS BEEN INSPECTED, TESTED AND APPROVED BY THE OWNER/OWNER'S AUTHORIZED REPRESENTATIVE.
C. WHERE MAIN LINE WILL BE ALLOWED TO SIT UNCOVERED FOR ANY LENGTH OF TIME IN THE TRENCH PRIOR TO TESTING, SHADE MAIN LINE WITH A THIN COVERING OF SOIL TO MINIMIZE WEATHER-RELATED EXPANSION OR CONTRACTION OF PIPE.

16. IRRIGATION CONTRACTOR SHALL ADJUST ALL HEADS TO PROVIDE A UNIFORM COVERAGE AND TO KEEP SPRAY OFF BUILDINGS, WALKWAYS, WALLS, PARKING AREAS, AND DRIVES.

17. WHEN THE SPRINKLER SYSTEM IS COMPLETED THE CONTRACTOR SHALL, IN THE PRESENCE OF THE OWNER/OWNER'S AUTHORIZED REPRESENTATIVE, PERFORM A COVERAGE TEST OF WATER PROVIDED TO THE PLANTING AREAS TO ENSURE IT IS CONSISTENT AND UNIFORM. THE CONTRACTOR SHALL FURNISH ALL MATERIALS AND PERFORM ALL WORK REQUIRED TO CORRECT ANY INADEQUACIES OF COVERAGE AT HIS OWN COST.

18. THE CONTRACTOR SHALL FURNISH TO THE OWNER A COMPLETE "AS BUILT" DRAWING ON MYLAR AND TWO PRINTS SHOWING EXACT LOCATIONS OF ALL ITEMS INSTALLED. THESE ARE TO BE DELIVERED ON OR BEFORE FINAL INSPECTION.

19.A REDUCED IRRIGATION PLAN INDICATING ALL SYSTEMS AND THEIR APPROPRIATE SEQUENCED VALVES SHALL BE LAMINATED IN MYLAR AND MOUNTED ON THE INSIDE COVER OF THE IRRIGATION CONTROLLER(S), ALSO PROVIDE A DIGITAL COPY.

20. IRRIGATION CONTRACTOR SHALL MAINTAIN THE SYSTEM FOR THE DURATION OF THE MAINTENANCE PERIOD AND SHALL WATER ON A DAILY BASIS.

21. IRRIGATION CONTRACTOR SHALL GUARANTEE THE ENTIRE IRRIGATION SYSTEM TO BE FREE OF DEFECTS IN WORKMANSHIP AND MATERIALS FOR A PERIOD OF ONE (1) YEAR FROM FINAL ACCEPTANCE BY THE OWNER.
22. THE CONTRACTOR IS TO INSTALL TWO 12" SHRUB POP UP HEADS ON EACH DRIP ZONE WITH A CLOSED SET SCREW FOR NOTIFICATION OF DRIP SYSTEM OPERATION.

23. THE CONTRACTOR IS TO PROVIDE MAINLINE DRAINS AND A FULL SIZE DRAIN VALVE AT THE END OF THE MAINLINE AND QUICK COUPLERS AS SHOWN TO DRAIN AND WINTERIZE THE SYSTEM USING COMPRESSED AIR.

24. SPACING OF ALL SMALL AREA HEADS SHALL BE 1' LESS THAN MANUFACTURE STANDARDS TO ASSURE SUCCESSFUL IRRIGATION WATER AUDIT. FOR EXAMPLE 15' SPRAY HEADS SHALL BE SPACED AT NO MORE THAN 14' APART.

25. THE IRRIGATION CONTROLLER ASSEMBLY SHALL BE CERTIFIED BY JOHN DEERE GREEN TECH.

26. ALL IRRIGATION EQUIPMENT INCLUDING THE CONTROLLER ASSEMBLY SHALL BE FULLY OPERABLE AND IN CONNECTION WITH THE UNIVERSITY CENTRAL CONTROL SYSTEM PRIOR TO FINAL INSPECTION.

27. CONTRACTOR TO CONTACT UNIVERSITY FACILITIES AT TIME OF BID AWARD TO OBTAIN A CONTROLLER NUMBER, SEQUENCE & FREQUENCY.

MHTN
ARCHITECTS
MHTN Architects, Inc.
420 East South Temple
Suite 100
Salt Lake City, Utah 84111
Telephone (801) 595-6700
Telefax (801) 595-6717
www.mhtn.com

WEBER STATE UNIVERSITY
STEWART STADIUM FIELD RENOVATION
DFCM PROJECT NUMBER: 10280810
WEBER STATE UNIVERSITY
OGDEN, UTAH 84408

SEAL

MHTN PROJECT NO. 2010575

DRAWN BY: JZ CHECKED BY: RB

ISSUED:

NO.	DATE	DESCRIPTION
01	03 FEB. 2011	CONSTRUCTION DOCUMENTS

CONTRACTOR TO VERIFY DRAWINGS IN FIELD USE REFLECT LAST REVISION DATE.

NO.	DATE	DESCRIPTION

SHEET NAME
IRRIGATION NOTES

CONSTRUCTION DOCUMENTS
03 FEBRUARY 2011

SHEET NUMBER
LI502

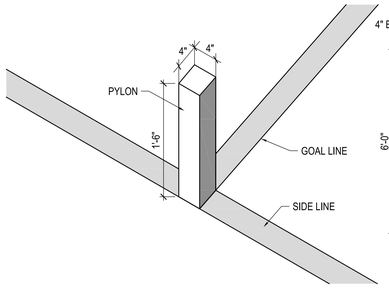

E1 PYLON
NTS
A-DTXX00

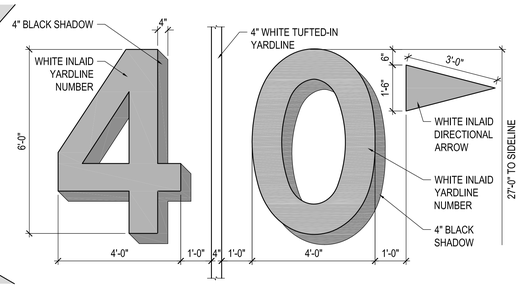

E2 YARD LINE NUMBER
1/2"=1'-0"
A-DTXX00

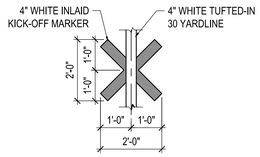

E3 KICK-OFF MARKER
1/2"=1'-0"
A-DTXX00

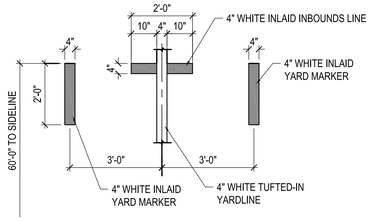

E4 INBOUNDS LINE
1/2"=1'-0"
A-DTXX00

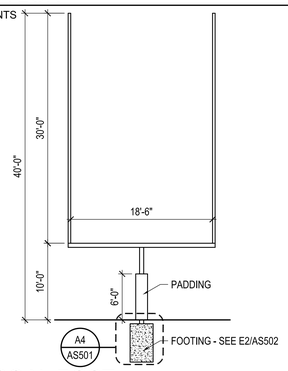

D1 GOAL POST
1/8"=1'-0"
A-DTXX00

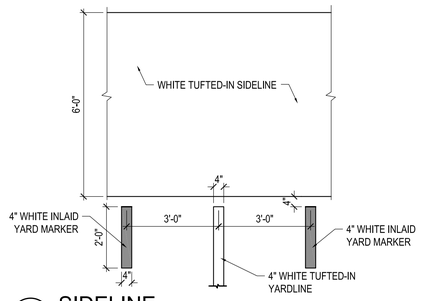

D2 SIDELINE
1/2"=1'-0"
A-DTXX00

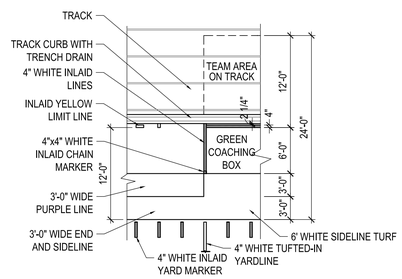

D3 COACHES BOX
1/8"=1'-0"
A-DTXX00

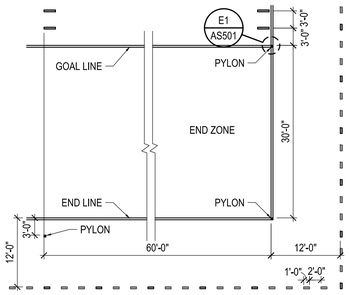

D4 END ZONE TYPICAL
3/32"=1'-0"
A-DTXX00

NOTE:
TURF MANUFACTURER SHALL MANUFACTURE AND INSTALL ALL FIELD LAYOUT, LINES AND MARKINGS TO MEET NCAA RULES

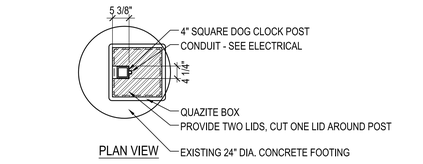

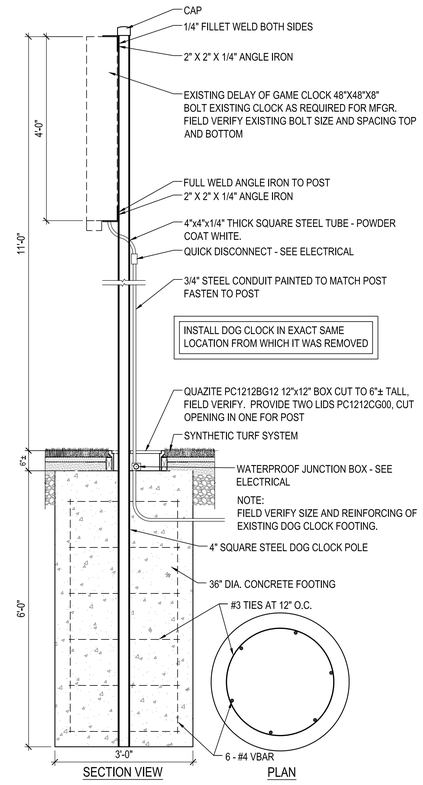

C5 DOG CLOCK
3/4"=1'-0"
#####

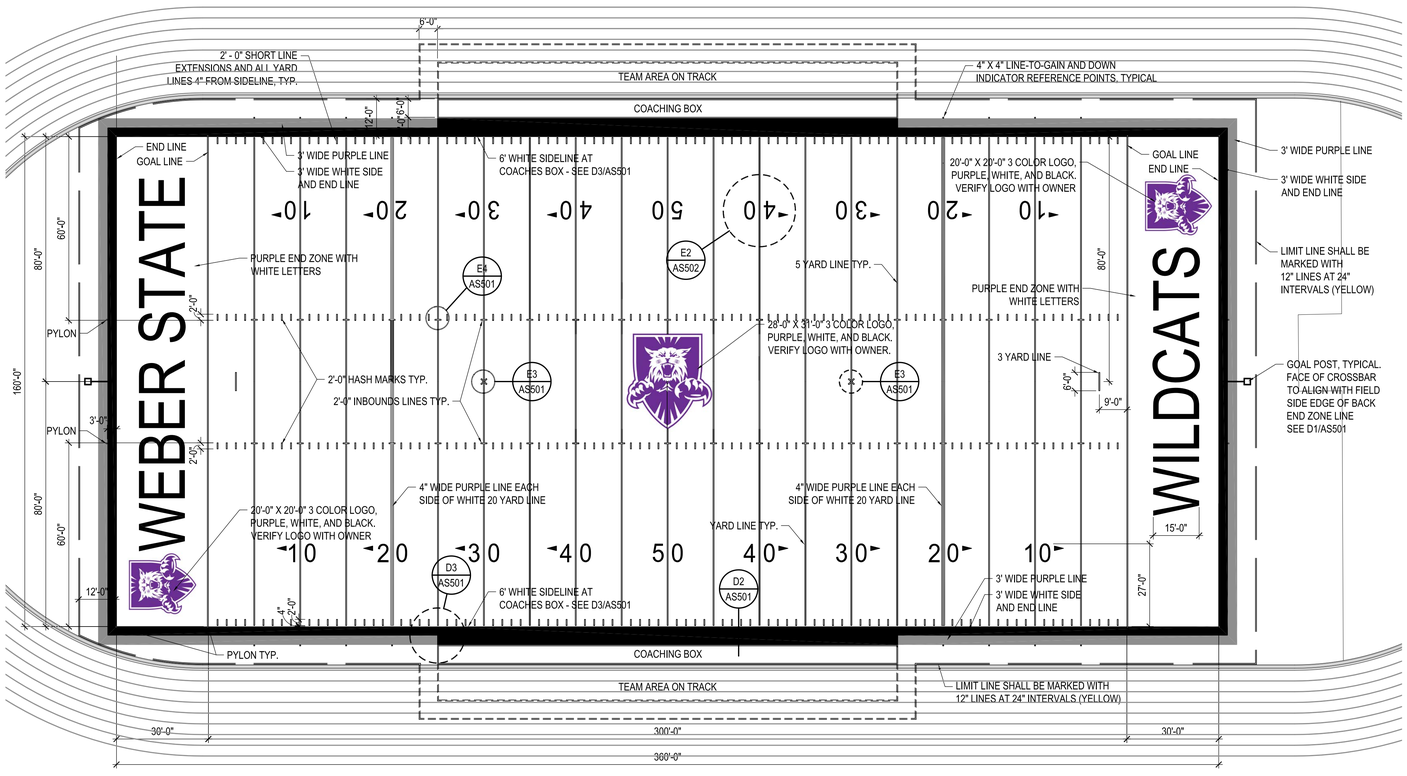

A1 FOOTBALL FIELD LAYOUT
1"=20'
#####

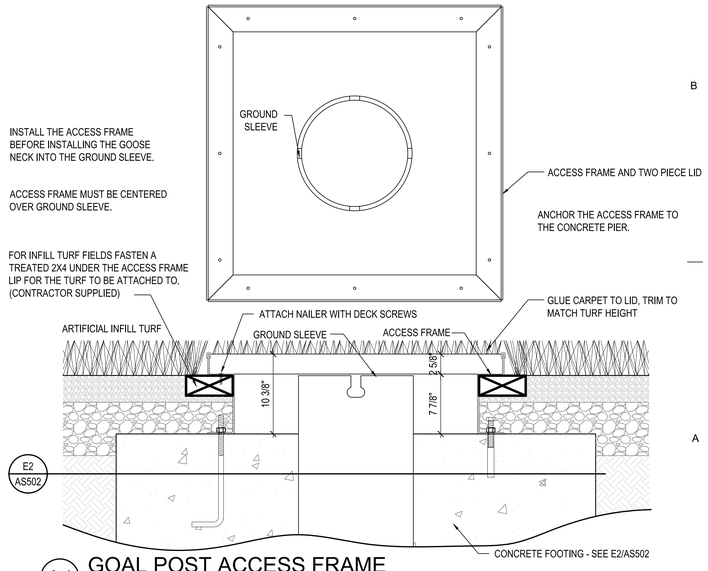

A4 GOAL POST ACCESS FRAME
1-1/2"=1'
#####

MHTN
ARCHITECTS
MHTN Architects, Inc.
420 East South Temple
Suite 100
Salt Lake City, Utah 84111
Telephone (801) 595-6700
Telefax (801) 595-6717
www.mhtn.com

WEBER STATE UNIVERSITY
STEWART STADIUM FIELD RENOVATION

DFCM PROJECT NUMBER: 10280810

WEBER STATE UNIVERSITY
OGDEN, UTAH 84408

SEAL

MHTN PROJECT NO. 2010575

DRAWN BY: JZ CHECKED BY: RB

ISSUED:

NO.	DATE	DESCRIPTION
01	03 FEB. 2011	CONSTRUCTION DOCUMENTS

CONTRACTOR TO VERIFY DRAWINGS IN FIELD USE REFLECT LAST REVISION DATE.

NO.	DATE	DESCRIPTION

SHEET NAME
FOOTBALL FIELD DETAILS

CONSTRUCTION DOCUMENTS
03 FEBRUARY 2011

SHEET NUMBER
AS501

C:\Users\randyk\Documents\A11_20105431 WSU RESIDENTIAL LIFE BUILDING III_CENTRAL_randyk.rvt
11/29/2010 9:23:45 AM

NOTE: PROVIDE 1/4" RADIUS
FINISH AT ALL EDGES - TYPICAL.

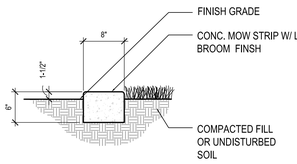

E1 MOWSTRIP
1"=1'-0"
A-DTSI-07

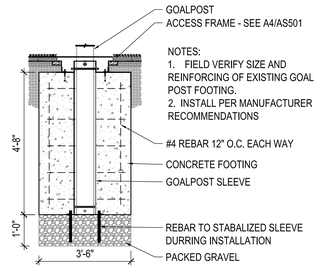

E2 GOALPOST FOOTING
1/2"=1'-0"
A-DTXX00

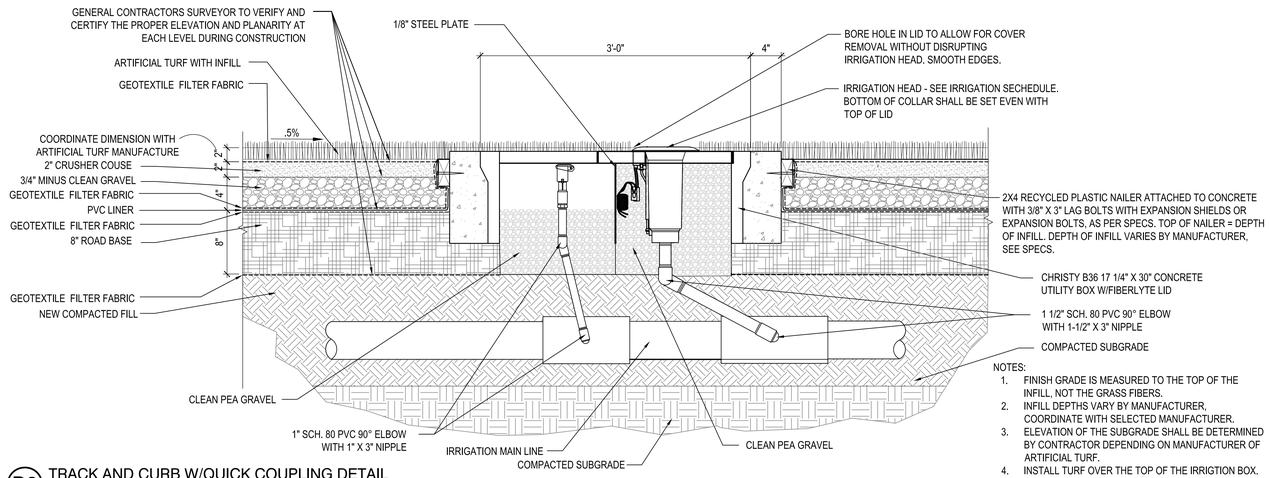

NOTES:
1. FINISH GRADE IS MEASURED TO THE TOP OF THE INFILL, NOT THE GRASS FIBERS.
2. INFILL DEPTHS VARY BY MANUFACTURER, COORDINATE WITH SELECTED MANUFACTURER.
3. ELEVATION OF THE SUBGRADE SHALL BE DETERMINED BY CONTRACTOR DEPENDING ON MANUFACTURER OF ARTIFICIAL TURF.
4. INSTALL TURF OVER THE TOP OF THE IRRIGTION BOX.

D3 TRACK AND CURB W/QUICK COUPLING DETAIL
1 1/2" = 1'-0"
11 6833.43-12

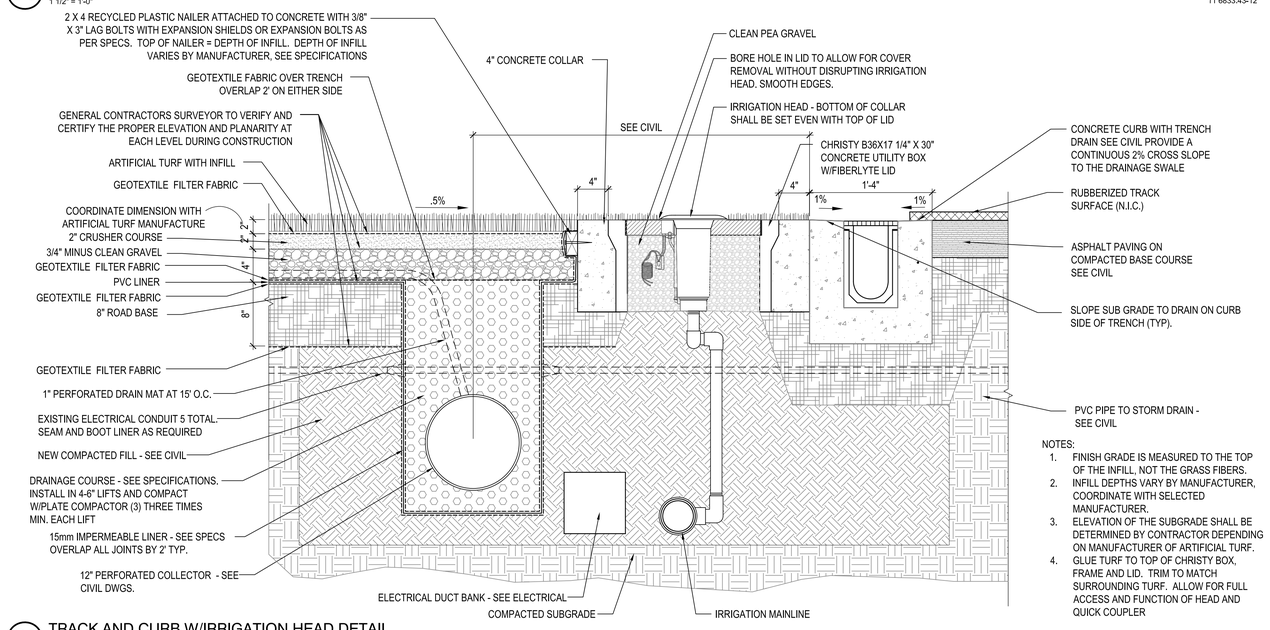

NOTES:
1. FINISH GRADE IS MEASURED TO THE TOP OF THE INFILL, NOT THE GRASS FIBERS.
2. INFILL DEPTHS VARY BY MANUFACTURER, COORDINATE WITH SELECTED MANUFACTURER.
3. ELEVATION OF THE SUBGRADE SHALL BE DETERMINED BY CONTRACTOR DEPENDING ON MANUFACTURER OF ARTIFICIAL TURF.
4. GLUE TURF TO TOP OF CHRISTY BOX, FRAME AND LID. TRIM TO MATCH SURROUNDING TURF. ALLOW FOR FULL ACCESS AND FUNCTION OF HEAD AND QUICK COUPLER

C3 TRACK AND CURB W/IRRIGATION HEAD DETAIL
1 1/2" = 1'-0"
11 6833.43-11

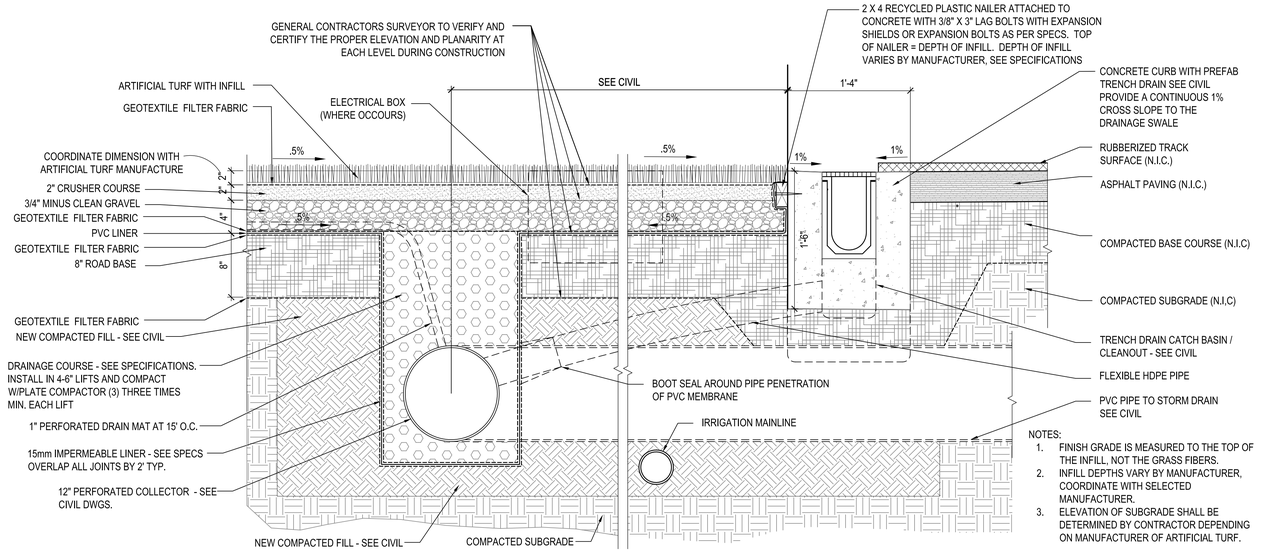

NOTES:
1. FINISH GRADE IS MEASURED TO THE TOP OF THE INFILL, NOT THE GRASS FIBERS.
2. INFILL DEPTHS VARY BY MANUFACTURER, COORDINATE WITH SELECTED MANUFACTURER.
3. ELEVATION OF SUBGRADE SHALL BE DETERMINED BY CONTRACTOR DEPENDING ON MANUFACTURER OF ARTIFICIAL TURF.

A3 TRACK AND CURB DETAIL
1 1/2" = 1'-0"

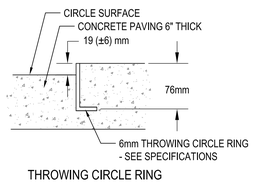

THROWING CIRCLE RING

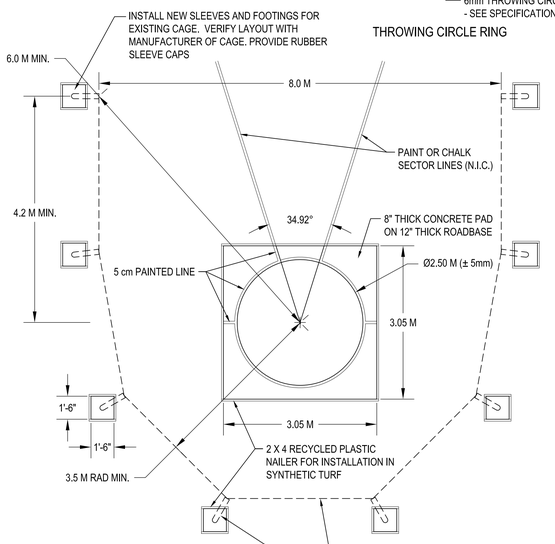

NOTES:
FIELD VERIFY SIZE OF FOOTING AND REINFORCING DURING DEMOLITION.
NEW FOOTING SIZE AND REINFORCING TO MATCH EXISTING.

A1 DISCUS CAGE AND RING
1/4" = 1'-0"
TRAK-THROW-3201

C:\Users\randyk\Documents\A11_2010543 WSU RESIDENTIAL LIFE BUILDING IIL_CENTRAL_randyk.rvt
11/28/2010 9:23:45 AM

MHTN ARCHITECTS
MHTN Architects, Inc.
420 East South Temple
Suite 100
Salt Lake City, Utah 84111
Telephone (801) 595-6700
Telefax (801) 595-6717
www.mhtn.com

WEBER STATE UNIVERSITY
STEWART STADIUM FIELD RENOVATION
DFCM PROJECT NUMBER: 10280810
WEBER STATE UNIVERSITY
OGDEN, UTAH 84408

SEAL

MHTN PROJECT NO. 2010575
DRAWN BY: JZ CHECKED BY: RB

ISSUED:

NO.	DATE	DESCRIPTION
01	03 FEB. 2011	CONSTRUCTION DOCUMENTS

CONTRACTOR TO VERIFY DRAWINGS IN FIELD USE REFLECT LAST REVISION DATE.

NO.	DATE	DESCRIPTION

SHEET NAME
FOOTBALL FIELD DETAILS

CONSTRUCTION DOCUMENTS
03 FEBRUARY 2011

SHEET NUMBER
AS502

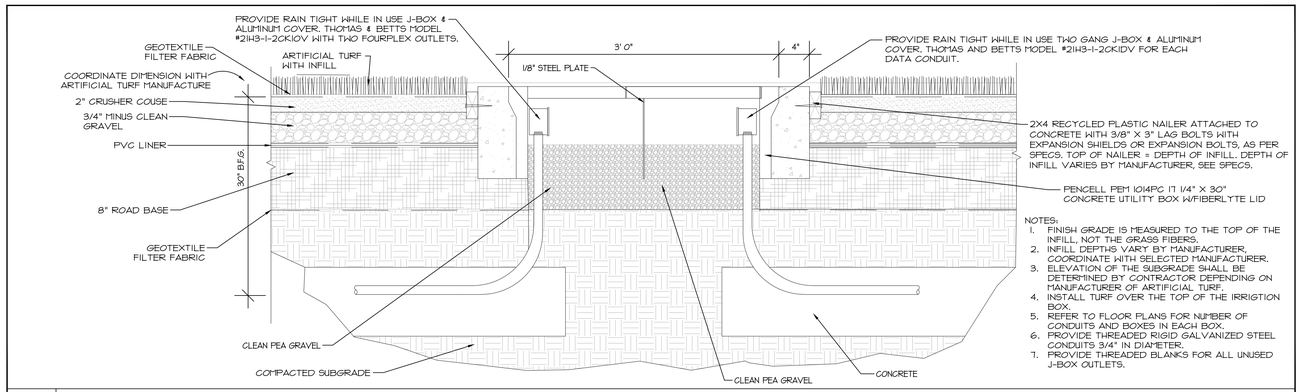

NOTES:
1. FINISH GRADE IS MEASURED TO THE TOP OF THE INFILL, NOT THE GRASS FIBERS.
2. INFILL DEPTHS VARY BY MANUFACTURER, COORDINATE WITH SELECTED MANUFACTURER.
3. ELEVATION OF THE SUBGRADE SHALL BE DETERMINED BY CONTRACTOR DEPENDING ON MANUFACTURER OF ARTIFICIAL TURF.
4. INSTALL TURF OVER THE TOP OF THE IRRIGTION BOX.
5. REFER TO FLOOR PLANS FOR NUMBER OF CONDUITS AND BOXES IN EACH BOX.
6. PROVIDE THREADED RIGID GALVANIZED STEEL CONDUITS 3/4" IN DIAMETER.
7. PROVIDE THREADED BLANKS FOR ALL UNUSED J-BOX OUTLETS.

SCALE: N.T.S.

TRACK AND CURB POWER AND DATA OUTLETS DETAIL

ABBREVIATIONS SYMBOL LIST

SYMBOL	DESCRIPTION
TYP	TYPICAL
D.O.G.	DELAY OF GAME
SCBA	STANDARD COLOR BY ARCHITECT

CONDUITS SYMBOL LIST

SYMBOL	DESCRIPTION
----------	CONDUITS CONCEALED IN FLOOR OR BELOW GRADE
————	CONDUITS CONCEALED IN CEILING AND WALLS
——►►	ARROWS INDICATE THE NUMBER OF HOME RUNS

CALLOUT SYMBOL LIST

SYMBOL	DESCRIPTION
(T-X) X	LIGHTING FIXTURE CALLOUT NUMBER INDICATES A SUGGESTED QUANTITY- TO BE VERIFIED
<X> X	REFERENCE NOTE CALLOUT

SWITCHES SYMBOL LIST

SYMBOL	DESCRIPTION
$	SINGLE POLE TOGGLE SWITCH - 20 AMP

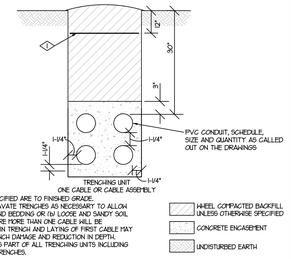

NOTES:
1. DEPTHS SPECIFIED ARE TO FINISHED GRADE.
2. OVER-EXCAVATE TRENCHES AS NECESSARY TO ALLOW FOR (a) SAND BEDDING OR (b) LOOSE AND SANDY SOIL OR (c) WHERE MORE THAN ONE CABLE WILL BE INSTALLED IN TRENCH AND LAYING OF FIRST CABLE MAY CAUSE TRENCH DAMAGE AND REDUCTION IN DEPTH.
3. BACKFILL IS PART OF ALL TRENCHING UNITS INCLUDING JOINT-USE TRENCHES.

<1> PROVIDE DETECTABLE WARNING TAPE FOR ALL UNDERGROUND UTILITIES. TAPE SHALL BE ACID AND ALKALI RESISTANT POLYETHYLENE FILM (6") WIDE AND (4 MILS) THICK, MINIMUM, WITH METALLIC CORE PROTECTED FROM CORROSION AND DETECTABLE BY METAL DETECTOR UP TO 30" DEEP.

SCALE: N.T.S.

TRENCH DETAIL

GENERAL NOTES:

1. MINIMUM SIZE OF CONDUIT TO BE 3/4". ALUMINUM CONDUITS SHALL NOT BE USED.
2. USE RIGID STEEL SET SCREW TYPE FITTINGS ONLY. DIE CAST FITTINGS SHALL NOT BE USED INCLUDING ANY FLEX FITTINGS. NO SCREW IN FLEX FITTINGS.
3. ALL NEW WORK MUST MEET THE CURRENT ADOPTED NATIONAL ELECTRICAL CODE (NEC 2008) AND INTERNATIONAL BUILDING CODE (IBC 2009).
4. NOT MORE THAN THREE (3) CIRCUITS, SHALL BE INSTALLED IN A CONDUIT. EACH CIRCUIT SHALL CONSIST OF (1) CONDUCTOR FOR EACH PHASE, (1) NEUTRAL PER PHASE, AND (1) GROUND, FOR A TOTAL OF SEVEN (7) CONDUCTORS.
5. ALL J-BOXES SHALL HAVE MINIMUM DEPTH OF 2-1/8" UNLESS OTHERWISE SPECIFIED. SECURE ALL J-BOXES AS SHOWN IN THE DETAILS. FURNISH AND INSTALL PROPER MUD RINGS.
6. ALL METALLIC CONDUITS, JOINTS, FITTINGS, ETC., IN CONTACT WITH THE GROUND SHALL BE SPIRALLY WRAPPED WITH 3M SCOTCHRAP-51, 20 MIL TAPE (OR APPROVED EQUAL). 1/2" OVERLAP IS REQUIRED.
7. ALL NEW EXPOSED CONDUIT MUST RUN AGAINST THE WALLS OR CEILING DECK. DO NOT PENDANT MOUNT ANY CONDUIT FROM THE CEILINGS.
8. THE FIRST 10' LENGTH OF ALL BURIED CONDUIT 1" AND LARGER SHALL BE RIGID GALVANIZED STEEL WHERE THEY ARE LEAVING OR ENTERING THE BUILDING, MANHOLE, VAULT, ETC.
9. ALL UNDERGROUND CONDUIT SHALL BE BURIED 36" MINIMUM UNDER THE GROUND UNLESS INDICATED OTHERWISE.
10. USE EPOXY ANCHORS TO SUPPORT THE ELECTRICAL EQUIPMENT. EXPANSION ANCHOR BOLTS ARE NOT ACCEPTED. ALL EPOXY ANCHORS SHALL HAVE AN ICC-ES APPROVAL FOR THE PROPOSED APPLICATION. USE HILTI HIT-RE 500-SD OR SIMPSON EQUIVALENT.
11. ALL DISCONNECTS, J-BOXES AND CONDUITS EXPOSED TO THE OUTSIDE WEATHER SHALL BE NON-CORROSIVE, WEATHER PROOF TYPE.
12. ALL MATERIALS USED IN THIS INSTALLATION SHALL BE U.L. APPROVED AND NEW.
13. ALL ELECTRICAL WIRING MUST BE IN CONDUIT (ROMEX AND MC CABLE NOT PERMITTED).
14. FLEXIBLE CONDUITS CAN ONLY BE USED FOR SHORT RUNS (6' MAXIMUM). NO MC CABLE ALLOWED.
15. TEMPORARY ELECTRICAL SERVICE IS TO BE PROVIDED BY THE ELECTRICAL CONTRACTOR AND REMOVED BY THE ELECTRICAL CONTRACTOR.
16. PRIOR TO SUBMITTING A BID THE ELECTRICAL CONTRACTOR SHALL INSPECT THE SITE AND INCLUDE IN HIS BID PACKAGE ALL CHARGES DUE TO EXISTING CONDITIONS. SHOP DRAWINGS ARE REQUIRED.
17. ALL DUPLEX OUTLETS AND SWITCHES SHALL BE 20 AMP., 120 VOLT SPEC GRADE. HUBBELL AND PASS & SEYMOUR AND LEVITON ARE APPROVED MANUFACTURERS.
18. THE CONTRACTOR SHALL INFORM THE ARCHITECT/ENGINEER IN WRITING OF ANY DISCREPANCIES FOUND BETWEEN THE INTENDED FUNCTION OF EQUIPMENT AND EQUIPMENT SPECIFIED IN THE CONTRACT DOCUMENTS A MINIMUM OF TEN (10) WORKING DAYS PRIOR TO ISSUANCE OF THE FINAL BID. FAILURE TO REPORT ANY DISCREPANCY (CATALOG NUMBERS, DISCONTINUED ITEMS, ETC.) DOES NOT RELIEVE THE CONTRACTOR FROM PROVIDING EQUIPMENT WHICH SHALL CONFORM TO AND FULFILL THE INTENT OF THE CONTRACT DOCUMENTS. NOR SHALL IT BE USED AS A CONDITION TO OBTAIN ADDITIONAL FUNDS FROM THE OWNER AFTER THE CONTRACT IS AWARDED. THE CONTRACTOR SHALL REQUEST ALL CLARIFICATIONS OF CONTRACT DOCUMENT REQUIREMENTS IN WRITING TO THE ARCHITECT/ENGINEER A MINIMUM OF TEN (10) WORKING DAYS PRIOR TO ISSUANCE OF THE FINAL ADDENDUM.
19. CONTRACT DOCUMENTS SHALL TAKE PRECEDENCE OVER SHOP DRAWINGS UNLESS SPECIFICALLY NOTED OTHERWISE.
20. A ONE YEAR MINIMUM WARRANTY SHALL BE PROVIDED TO COVER ALL LABOR AND MATERIAL FURNISHED AND INSTALLED AS PART OF THIS CONTRACT. REPAIR, REPLACE, PROVIDE ALL LABOR AND MATERIAL NECESSARY TO REMEDY ALL DEFECTS DURING THE WARRANTY PERIOD. THE WARRANTY PERIOD SHALL START FROM THE DATE SHOWN IN THE SUBSTANTIAL COMPLETION CERTIFICATE.
21. OWNER WILL LOCATE ALL MEDIUM VOLTAGE LINES. COORDINATE THIS WORK WITH THE OWNER SO THAT THE MEDIUM VOLTAGE LINES ARE NOT DAMAGED DURING CONSTRUCTION.
22. RUN POWER AND DATA IN SEPARATE CONDUITS.

MHTN ARCHITECTS
MHTN Architects, Inc.
420 East South Temple
Suite 100
Salt Lake City, Utah 84111
Telephone (801) 595-6700
Telefax (801) 595-6717
www.mhtn.com

E.C.E. LLC
Electrical Consulting Engineers
939 So. West Temple
Salt Lake City, Utah 84101
Telephone (801) 521-8007
Email Admin@eceonline.com

WEBER STATE UNIVERSITY
STEWART STADIUM FIELD RENOVATION

DFCM PROJECT NUMBER: 10280810

WEBER STATE UNIVERSITY
OGDEN, UTAH 84408

SEAL

ECE PROJECT NO. 4110

DRAWN BY: CC CHECKED BY: GAOV

ISSUED:

NO.	DATE	DESCRIPTION

CONTRACTOR TO VERIFY DRAWINGS IN FIELD USE REFLECT LAST REVISION DATE.

NO.	DATE	DESCRIPTION

SHEET NAME

GENERAL NOTES, DETAILS AND SCHEDULES

CONSTRUCTION DOCUMENTS

03 FEBRUARY 2011

SHEET NUMBER

EE001

EXISTING PANEL	"A"		AIC RATING	22K	AMPS
PHASE/WIRE	3/4		RATING	120/208	VOLTS
MAIN LUG	225	AMPS	SUBFEED LUGS	NO	
MAIN BREAKER	--	AMPS	COMMENT	GE GB STYLE	

CKT	LOCATION	RECEPT	LTG	OTHER	POLE	SIZE	PHASE	SIZE	POLE	OTHER	LTG	RECEPT	LOCATION	CKT
1	EXISTING LOAD				1	20	A	20	1				FROSH LOCKER LTG	2
3	EXISTING LOAD				1	20	B	20	1		1000		EAST D.O.G. *	4
5	EXISTING LOAD				1	20	C	20	1		1000		WEST D.O.G. *	6
7	EAST BALL FIELD REC. *	1080			1	20	A	20	1				EQP. STORAGE LTG	8
9	EAST BALL FIELD REC. *	1080			1	20	B	20	1				SPARE	10
11	EXISTING LOAD				1	20	C	20	1				SPARE	12
13	EXISTING LOAD				1	20	A	20	1				SOUTH STORAGE ROOM LTG	14
15	EXISTING LOAD				1	20	B	20	1				FROSH LOCKER REC.	16
17	SPARE				1	20	C	20	1				FOYER REC.	18
19	TRAINING ROOM REC.				1	20	A	20	1				SPARE	20
21							B	20	1				TELE REC.	22
23							C	20	1				SPARE	24
25	ELEVATOR				3	60	A	20	1				SHOWER AREA REC.	26
27	HAIR DRYER SOUTH				1	30	B	20	1				VARSITY AREA REC.	28
29	WEST BALL FIELD REC. *	1080			1	20	C	20	1				NORTH SIDE LTG	30
31	WEST BALL FIELD REC. *	1080			1	20	A	20	1				AIR COMPRESSOR	32
33	SOUTH OUTSIDE LIGHTS				1	20	B	20	1				NORTH OUTSIDE CKT.	34
35							C	20	1				LOOP RF MON	36
37	ELEVATOR HEATERS				2	20	A							38
39	SPARE				1	20	B							40
41	ICE				1	30	C	30	3				5 HP FAN UNIT	42
		VA	VA	VA		AMPS		KVA		VA	VA	VA		
		2160	0	0	A	18.00	A	2.160	A	0	0	0		
* = NEW CIRCUIT		1080	0	0	B	11.33	B	2.080	B	0	1000	0		
		1080	0	0	C	11.33	C	2.080	C	0	1000	0		
		4320	0	0		11.54	TOTAL	6.32		0	2000	0		

REFERENCE NOTES:

1. EXISTING DATA LINES SHALL REMAIN. RE-LAY THE CONDUITS SO THAT THEY SIT 30" BELLOW THE FIELD GROWN. REFER TO CIVIL DETAILS FOR MORE REQUIREMENTS. COORDINATE WITH WSU ALL CONDUCTOR AND FIBER WORK AT LEAST TWO WEEKS IN ADVANCE.
2. REMOVE THE EXISTING CONDUITS ALL THE WAY BACK TO THE POINT WHERE THEY ENTER THE STANDS. REMOVE THE EXISTING CONDUCTORS ALL THE WAY BACK TO THE PANEL. RE-USE THE REMAINING CONDUITS TO RUN THE NEW FIELD CIRCUITS.
3. EXISTING BOXES SHALL BE REMOVED AND REPLACED WITH NEW ONES. REFER TO THE NEW SITE PLAN ELECTRICAL FOR MORE REQUIREMENTS.
4. EXISTING JENCTION BOX SHALL REMAIN. PROTECT ITS INTEGRITY DURING CONSTRUCTION.

SPECIAL NOTES:

1. WSU WILL LOCATE ALL UNDERGROUND UTILITY LINES. THE CONTRACTOR SHALL TAKE EXTRA PREGAUTIONS WHEN DIGGING AROUND THESE LINES. ANY DAMAGE INCURRED AS A RESULT OF THE CONTRACTOR'S ACTIVITIES SHALL BE REPAIRED OR REPLACED AT CONTRACTOR'S EXPENSE. COORDINATE THE WORK WITH THE OWNER.
2. THESE DRAWINGS ARE ONLY SCHEMATIC. THE CONTRACTOR SHALL FIELD VERIFY THE LOCATIONS AND ELEVATIONS OF ALL EXISTING DEVICES, STRUCTURES, ETC. PRIOR TO ROUGH-IN.

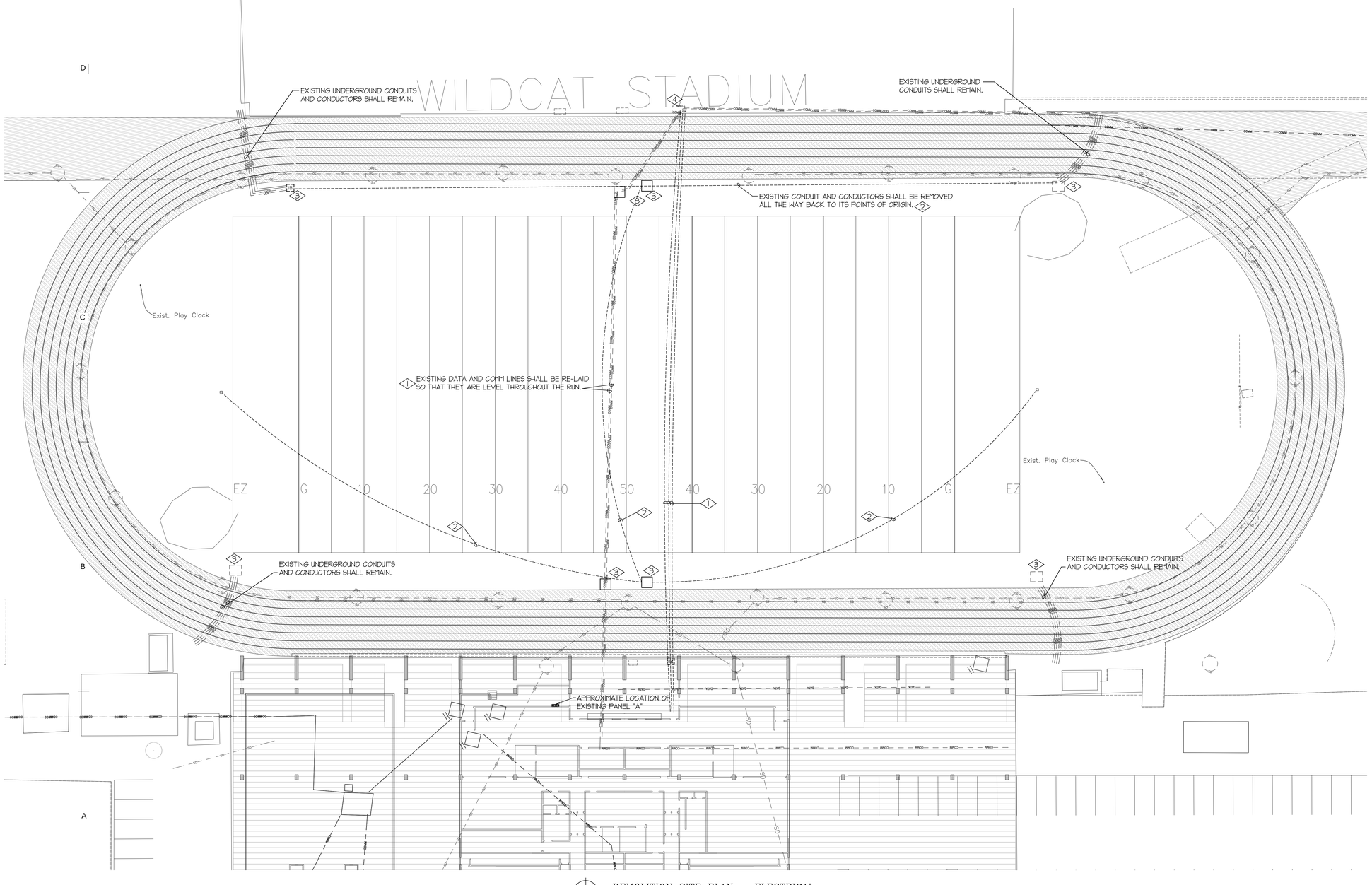

N

DEMOLITION SITE PLAN – ELECTRICAL

SCALE: 1" = 20'-0"

MHTN ARCHITECTS
MHTN Architects, Inc.
420 East South Temple
Suite 100
Salt Lake City, Utah 84111
Telephone (801) 595-6700
Telefax (801) 595-6717
www.mhtn.com

E.C.E. LLC
Electrical Consulting Engineers
939 So. West Temple
Salt Lake City, Utah 84101
Telephone (801) 521-8007
Email Admin@eceonline.com

WEBER STATE UNIVERSITY
STEWART STADIUM FIELD RENOVATION

DFCM PROJECT NUMBER: 10280810

WEBER STATE UNIVERSITY
OGDEN, UTAH 84408

SEAL

ECE PROJECT NO. 4110

DRAWN BY: CC CHECKED BY: GAOV

ISSUED:

NO.	DATE	DESCRIPTION

CONTRACTOR TO VERIFY DRAWINGS IN FIELD USE REFLECT LAST REVISION DATE.

NO.	DATE	DESCRIPTION

SHEET NAME

DEMOLITION SITE PLAN - ELECTRICAL

CONSTRUCTION DOCUMENTS
03 FEBRUARY 2011

SHEET NUMBER

ED101

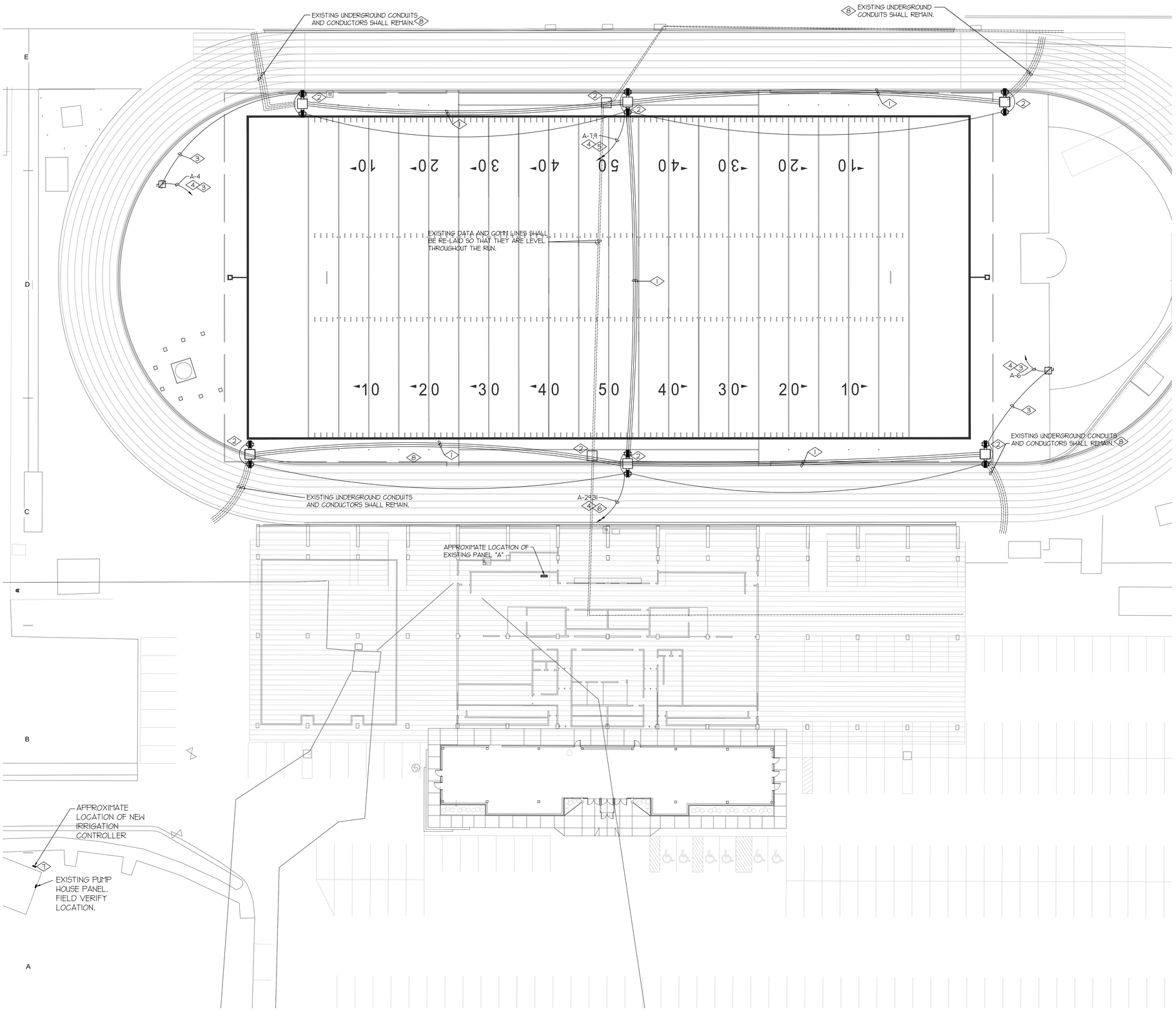

N

NEW SITE PLAN – ELECTRICAL

SCALE: 1" = 20'-0"

REFERENCE NOTES:

1. RUN (3) 1" CONDUITS 30" BELOW GRADE FOR FUTURE DATA RUNS. UTILIZE RIGID GALVANIZED STEEL CONDUITS WITH 2' SWEEP BENDS. INSERT PULL CORDS AND LABEL PER THE ORIGIN OF THE CORDS. TERMINATE THE CONDUITS IN THE NEW IN-GROUND BOXES PER THE TRACK AND CURB POWER AND DATA OUTLETS DETAIL. COORDINATE CONDUIT ROUTE WITH ARCHITECTURAL AND GENERAL CONTRACTOR TO AVOID CONFLICTS WITH OTHER UTILITIES AND FOR TRENCHING DETAILS.
2. FURNISH AND INSTALL A NEW IN-GROUND BOX PER THE TRACK AND CURB POWER AND DATA OUTLETS DETAIL. COORDINATE THE EXACT LOCATION, ELEVATIONS AND FINISHING WITH ARCHITECT.
3. RE-ROUTE THE POWER FOR THE EXISTING D.O.G. CLOCKS. TIE THE CLOCKS TO THE CIRCUIT SHOWN. PROVIDE A SPARE 1" CONDUIT FOR DATA WITH PULL CORD. PROVIDE A NEW NEMA 3R 20 AMP LOCKABLE DISCONNECT WITH 15 A FUSES ON THE D.O.G. POLE. REFER TO ARCHITECT'S CS-A9501 DETAIL AND INSTALLER FOR MORE INSTALLATION AND CONNECTION REQUIREMENTS.
4. RUN ALL CONDUITS TO PANEL "A" 30" BELLOW GRADE PER THE TRACK AND CURB POWER AND DATA OUTLETS AND TRENCHING DETAILS THROUGH THE STANDS' WALL AND UNDER THE STANDS. RE-USE EXISTING STAND PENETRATIONS. PROVIDE ADDITIONAL PENETRATIONS AS NECESSARY FOR A COMPLETE INSTALLATION.
5. TIE ALL THE FOURPLEX OUTLETS TO THE INDICATED CIRCUITS. UTILIZE #8 THWN COPPER CONDUCTORS FOR ALL PHASES, NEUTRAL AND GROUND IN 1" CONDUIT. EVENLY DISTRIBUTE THE LOADS BETWEEN THE TWO CIRCUITS. RUN ALL THE CONDUITS 30" BELLOW GROUND PER TRENCHING DETAIL.
6. TIE ALL THE FOURPLEX OUTLETS TO THE INDICATED CIRCUITS. RUN #10 THWN COPPER CONDUCTORS FOR ALL PHASES, NEUTRAL AND GROUND IN 1" CONDUIT. REFER TO THE NEW ELECTRICAL LAYOUT. EVENLY DISTRIBUTE THE LOADS BETWEEN THE TWO CIRCUITS. RUN ALL CONDUITS 30" BELLOW GROUND PER TRENCHING DETAIL.
7. FEED THE IRRIGATION CONTROLLER FROM A SPARE 20A CIRCUIT BREAKER FROM THE 120V PANEL IN THE PUMP HOUSE. PROVIDE ALL CONDUIT, CONDUCTORS, J-BOXES, CONCRETE CORING, ETC. NECESSARY FOR A COMPLETE FUNCTIONING INSTALLATION. PROVIDE A 1-3/4" CONDUIT TO THE PUMP HOUSE ROOF WITH PULL CORD FOR ANTENNA CONDUCTORS. REFER TO OWNER AND INSTALLER FOR ADDITIONAL REQUIREMENTS, LOCATIONS AND ELEVATIONS. RUN THE CONDUIT FROM THE PUMP HOUSE PANEL TO THE IRRIGATION CONTROLLER 24" BELLOW GROUND AND STUB THE CONDUIT TO THE CONTROLLER THROUGH THE CONTROLLER CONCRETE PAD. FIELD LOCATE THE EXACT LOCATION OF THE PUMP HOUSE PANEL.
8. RE-TERMINATE THE EXISTING CONDUITS INSIDE THE NEW-INGROUND BOX PER TRACK AND CURB POWER AND DATA DETAIL.

SPECIAL NOTES:

1. WSU WILL LOCATE ALL UNDERGROUND UTILITY LINES. THE CONTRACTOR SHALL TAKE EXTRA PRECAUTIONS WHEN DIGGING AROUND THESE LINES. ANY DAMAGE INCURRED AS A RESULT OF THE CONTRACTOR'S ACTIVITIES SHALL BE REPAIRED OR REPLACED AT CONTRACTOR'S EXPENSE. COORDINATE THE WORK WITH THE OWNER.
2. THESE DRAWINGS ARE ONLY SCHEMATIC. THE CONTRACTOR SHALL FIELD VERIFY THE LOCATIONS AND ELEVATIONS OF ALL EXISTING DEVICES, STRUCTURES, ETC. PRIOR TO ROUGH-IN.
3. THE CONTRACTOR SHALL REFER TO CIVIL AND ARCHITECTURAL DRAWINGS FOR THE LOCATION, ELEVATION AND ADDITIONAL INSTALLATION REQUIREMENTS OF ALL ELECTRICAL ITEMS.

MHTN ARCHITECTS
MHTN Architects, Inc.
420 East South Temple
Suite 100
Salt Lake City, Utah 84111
Telephone (801) 595-6700
Telefax (801) 595-6717
www.mhtn.com

E.C.E. LLC
Electrical Consulting Engineers
939 So. West Temple
Salt Lake City, Utah 84101
Telephone (801) 521-8007
Email Admin@eceonline.com

WEBER STATE UNIVERSITY
STEWART STADIUM FIELD RENOVATION

DFCM PROJECT NUMBER: 10280810

WEBER STATE UNIVERSITY
OGDEN, UTAH 84408

SEAL

ECE PROJECT NO. 4110

DRAWN BY: CC CHECKED BY: GAOV

ISSUED:

NO.	DATE	DESCRIPTION

CONTRACTOR: TO VERIFY DRAWINGS IN FIELD USE REFLECT LAST REVISION DATE:

NO.	DATE	DESCRIPTION

SHEET NAME

NEW SITE PLAN - ELECTRICAL

CONSTRUCTION DOCUMENTS
03 FEBRUARY 2011

SHEET NUMBER

EE100