State of Utah

GARY R. HERBERT
Governor

GREGORY S. BELL
Lt. Governor

Department of Administrative Services
KIMBERLY K. HOOD
Executive Director

Division of Facilities Construction and Management
DAVID G. BUXTON
Director

ADDENDUM NO. 2

Date: May 7, 2012

To: Contractors

From: Kurt Baxter - Project Manager

Reference: UVU Student Life Center & Parking Structure
Orem, Utah
DFCM Project No. 10289790

Subject: **Addendum No. 2**

Addendum	1 page
Architects Addendum	231 pages
Total	232 pages

Note: This Addendum shall be included as part of the Contract Documents. Items in this Addendum apply to all drawings and specification sections whether referenced or not involving the portion of the work added, deleted, modified, or otherwise addressed in the Addendum. Acknowledge receipt of this Addendum in the space provided on the Bid Form, if applicable. Failure to do so may subject the Bidder to Disqualification.

2.0 SCHEDULE CHANGES: There are no changes to the project schedule.

2.1 GENERAL: GSBS Architects, please see attached sheets.

Utah Valley University

STUDENT LIFE CENTER & PARKING STRUCTURE

ADDENDUM NO. 2

May 4, 2012

The original specifications and drawings, dated April 27, 2012 for the project referenced above are amended in this Addendum No. 2, dated May 04, 2012.

Receipt of this addendum shall be acknowledged by inserting its number and date in the space provided on the bid form.

This addendum consists of 231 total pages.

Attachments: This addendum includes the following attachments:

Revised architectural specifications and drawings (144 pages) as referred to in addendum items.

Structural Addendum (32 Pages)
Mechanical Addendum (27 Pages)
Electrical Addendum (24 Pages)

ITEM No.	REFERENCE Spec or Page	DESCRIPTION
2-01	Spec Index	The index is updated to reflect corrections, deletions and additions
2-02	033000	Waterproofing additive for elevator pits. Section 2.14.D – Add 5. Use Xypex C series product or equal at the floor and walls of all elevator pits.
2-03	040516	Entire specification removed
2-04	051250	Entire specification added
2-05	061600	Entire specification added
2-06	064113	Cabinet hardware components added
2-07	064116	Cabinet hardware and LED lighting added
2-08	077129	Entire specification added
2-09	079500	Entire specification added
2-10	083326	Entire specification added
2-11	092100	Entire specification added
2-12	096766	Section 2.2 A – Basis of Design shall be 9+2 system, not 5+2 system.
2-13	102600	Entire specification added

2-14	110100	Entire specification added
2-15	111400	Section 2.1 – Section to be renamed AUTOMATIC SECURITY BARRIER
2-16	323113	Entire specification added
2-17	GI-040	Revised special inspections and moved building code analysis to new sheet GI-050.
2-18	GI-050	New sheet issued for building code analysis
2-19	AE-111a	Renumbered old door 200F-1 to 101A-2, definition to concrete topping slab in Student Council Chamber 114, updated wall tags on exterior wall furring.
2-20	AE-111b	Definition to concrete topping slab, add door tag 119-1 to the coiling security grill, added new wall tags.
2-21	AE-111c	Furring in IT rooms, updated wall tags.
2-22	AE-121	New detail references and sections, tie-off anchor system added, notation in the legend.
2-23	AE-135	Update to window treatment schedule
2-24	AE-315	Detail 1-Update to visible items and topping slab. Detail 3-Add topping slab and detail bubble.
2-25	AE-316	Add joint filler at floor slab.
2-25	AE-411	Detail 1-Aligned Walls.
2-26	AE-412	Detail 1-Changed wood laminate notation to SS-1, added detail reference, Detail 2-Detail reference added, Detail 3- Added callout, Detail 4- Removed detail reference, Detail 6- Added detail reference, Detail 7-Added detail reference, General note. Detail 10 added.
2-27	AE-413	Details 2,4,6,8,10-Added and corrected detail references, Additional general note. Details 3 and 7-Corrected References.
2-28	AE-414	Details 11 and 12-Added detail references, General note to sheet. Added new detail 10.
2-29	AE-415	Detail 5-Corrected detail reference, added general note.
2-30	AE-416	Detail 12-Added detail reference, general note.
2-31	AE-417	Detail 5-Added detail references
2-32	AE-420	Add general note #6 to read as follows: “STAIR TREAD AND LANDING DIMENSIONS TO INSIDE OF STRINGER U.N.O.”
2-33	AE-421	Details 1,2,3,5,6-Updated, general note about stair stringer dimensions, Sump in elevator pit noted.
2-34	AE-422	Add general note #6 to read as follows: “STAIR TREAD AND LANDING DIMENSIONS TO INSIDE OF STRINGER U.N.O.”
2-35	AE-423	Details 1-Removed wall and added detail reference, Detail 2-Refined, Detail 3-Resized ceiling plane and detail reference added, General note about stair stringer dimensions added.
2-36	AE-425	General note about stair stringer dimensions added, added wall tags, elevator pit notes regarding additive and sump pit.
2-37	AE-426	Updated general notes, detail bubble and wall tags, Elevator pit

		notes regarding additive and sump pit.
2-38	AE-427	Add general note #6 to read as follows: “STAIR TREAD AND LANDING DIMENSIONS TO INSIDE OF STRINGER U.N.O.”
2-39	AE-428	Details 3,4,5,6,7 – Clarification of elements and new components, elevator pit notes regarding additive and sump pit, general note about stair stringer dimensions.
2-40	AE-444	Details 2,3-New references
2-41	AE-445	New Elevations 16,17,18
2-42	AE-446	Added glass, reference details and notes at Gaming Desk.
2-43	AE-481	Detail 1-Added millwork and reference, modified material notes, Detail 3-Added detail reference, modified material notes Detail 4-Added detail reference Detail 5 – New enlarged plan Details 6,7 – New elevations
2-44	AE-501	Details 2,8,11 – Added dimensions
2-45	AE-503, 510	Sheet AE-503 has been renamed AE-510. Added rigid roof insulation
2-46	AE-513	Detail 1,2 – Add spray insulation and modify at window sill, Detail 10-Update notes.
2-47	AE-516	Detail 11- Add topping slab and bench, removed brick.
2-48	AE-543	Detail 20-Duplicate Detail deleted.
2-49	AE-544	Detail 1-Text to indicate Phenolic Locker, not metal. Add rebar indications to the detail, Detail 10-Duplicate detail deleted and new detail added, Detail 13 revised.
2-50	AE-545	Adjustments or addition of details 4,7,8,12,15,16,17.
2-51	AE-562	Details 3,4,5 added showing cove lights in Bowling Alley.
2-52	AE-601	Elevations 1,4,9-Modified CP and DL locations, Updated glazing on SF1.
2-53	AE-602	Detail 1,3,4,7-Modified CD and DL locations.
2-54	AE-603	Detail 1,3- Added CP location, Changed glazing type at CW9.
2-55	AE-604	Detail 3- Added CP location.
2-56	AE-605	Detail 3,4-Added CP and DL locations, Added two new glazing type to the legend IG-1A - 1” Insulated Clear Non-High Performance IG-1AT - 1” Insulated Clear Non-High Performance Tempered Modified glazing type at CW22-a,b,c.
2-57	AE-606	SLC Door Schedule - Revise door number 118 to read 118-1 Revise door number 200F-1 to read 101A-2. Shower doors added to schedule (
2-58	AE-611	Change glazing type at L1A-Wa,b,c L1A-W3 L2B-W1a,b L2B-W2

		L2B-W3 Added applied window film at several locations. This film is to be applied to the entire pane – Hatched pattern indicates which panes receive the film.
2-59	AE-612	Changed glazing type at L2C-W13 L2C-W14 Dimension changes at L3C-W8.

END OF ADENDUM

Table of Contents

Division	Section Title	Pages
SPECIFICATIONS GROUP		
General Requirements Subgroup		
VOLUME I		
DIVISION 00 – DFCM DOCUMENTS		
	GENERAL CONDITIONS	51
	SUPPLEMENTAL GENERAL CONDITIONS – FOR HEALTH INSURANCE	4
	SUPPLEMENTAL GENERAL CONDITIONS – FOR ILLEGAL IMMIGRATION	4
	SUPPLEMENTAL GENERAL CONDITIONS – FOR DRUG AND ALCOHOL TESTING	2
	CONTRACTOR'S AGREEMENT	5
	SUPPLEMENTAL GENERAL CONDITIONS – FOR CONSTRUCTION AGREEMENTS	2
DIVISION 01 - GENERAL REQUIREMENTS		
011000	SUMMARY	6
012100	ALLOWANCES	4
012300	ALTERNATES	3
012500	SUBSTITUTION PROCEDURES	4
012600	CONTRACT MODIFICATION PROCEDURES	3
012900	PAYMENT PROCEDURES	6
013100	PROJECT MANAGEMENT AND COORDINATION	13
013200	CONSTRUCTION PROGRESS DOCUMENTATION	11
013300	SUBMITTAL PROCEDURES	13
014000	QUALITY REQUIREMENTS	11
014200	REFERENCES	19
015000	TEMPORARY FACILITIES AND CONTROLS	12
015639	TEMPORARY TREE AND PLANT PROTECTION	8
016000	PRODUCT REQUIREMENTS	6
017300	EXECUTION	11
017419	CONSTRUCTION WASTE MANAGEMENT AND DISPOSAL	16
017700	CLOSEOUT PROCEDURES	7
017823	OPERATION AND MAINTENANCE DATA	9
017839	PROJECT RECORD DOCUMENTS	5
017900	DEMONSTRATION AND TRAINING	7
018113.13	SUSTAINABLE DESIGN REQUIREMENTS - LEED FOR NEW CONSTRUCTION AND MAJOR RENOVATIONS	10
019113	GENERAL COMMISSIONING REQUIREMENTS	10
Facility Construction Subgroup		
DIVISION 02 - EXISTING CONDITIONS		
024113	SELECTIVE SITE DEMOLITION	3

024114	PAVEMENT REMOVAL	3
024119	SELECTIVE DEMOLITION	8

DIVISION 03 - CONCRETE

032000	CONCRETE REINFORCING	4
033000	CAST-IN-PLACE CONCRETE	24
033004	CONCRETE	10
033005	CONCRETE TESTING	5
033010	CONCRETE PLACEMENT	6
033300	ARCHITECTURAL CONCRETE	8
033500	CONCRETE FINISHING	5
033816	UNBONDED POST-TENSIONED CONCRETE	13
033900	CONCRETE CURING	3
034000	SITE PRECAST CONCRETE	5
034900	GLASS-FIBER-REINFORCED CONCRETE (GFRC)	11
036100	CEMENTITIOUS GROUTING	3

DIVISION 04 - MASONRY

~~040516~~	~~MASONRY MORTAR AND GROUT~~	~~3~~
042113	BRICK MASONRY	15
042200	CONCRETE UNIT MASONRY	16

DIVISION 05 - METALS

051200	STRUCTURAL STEEL FRAMING	11
051250	**BUCKLING RESTRAINED BRACES**	**9**
052100	STEEL JOIST FRAMING	7
053100	STEEL DECKING	7
054000	COLD-FORMED METAL FRAMING	13
055100	METAL STAIRS	11
055213	PIPE AND TUBE RAILINGS	9
057300	DECORATIVE METAL RAILINGS	11

DIVISION 06 - WOOD, PLASTICS, AND COMPOSITES

061053	MISCELLANEOUS ROUGH CARPENTRY	8
061600	**GYPSUM SHEATHING**	**4**
062023	INTERIOR FINISH CARPENTRY	9
064113	**WOOD-VENEER-FACED ARCHITECTURAL CABINETS**	**10**
064116	**PLASTIC-LAMINATE-FACED ARCHITECTURAL CABINETS**	**9**
064216	FLUSH WOOD PANELING	8

DIVISION 07 - THERMAL AND MOISTURE PROTECTION

071326	SELF-ADHERING SHEET WATERPROOFING	7
072100	THERMAL INSULATION	7
072413	POLYMER-BASED EXTERIOR INSULATION AND FINISH SYSTEM (EIFS)	10
072500	WEATHER BARRIERS	2
074213.13	FORMED METAL WALL PANELS	9
075419	**POLYVINYL-CHLORIDE (PVC) ROOFING**	**11**
075556	FLUID-APPLIED PROTECTED MEMBRANE ROOFING	11

076200	SHEET METAL FLASHING AND TRIM	9
077129	**MANUFACTURED ROOF EXPANSION JOINTS**	**10**
078100	APPLIED FIREPROOFING	7
078123	INTUMESCENT FIREPROOFING	6
078413	PENETRATION FIRESTOPPING	7
078446	FIRE-RESISTIVE JOINT SYSTEMS	5
079200	JOINT SEALANTS	12
079500	**EXPANSION CONTROL**	**16**

VOLUME II

DIVISION 08 - OPENINGS

081113	HOLLOW METAL DOORS AND FRAMES	9
081416	FLUSH WOOD DOORS	7
083113	ACCESS DOORS AND FRAMES	6
083300	HORIZONTAL FIRE AND SMOKE RATED SHUTERS	5
083323	OVERHEAD COILING DOORS	10
083513	FOLDING DOORS	5
084113	ALUMINUM-FRAMED ENTRANCES AND STOREFRONTS	13
084226	ALL-GLASS ENTRANCES	6
084413	GLAZED ALUMINUM CURTAIN WALLS	14
084513	STRUCTURED-POLYCARBONATE-PANEL ASSEMBLIES	8
086200	UNIT SKYLIGHTS	5
087100	DOOR HARDWARE	53
088000	GLAZING	16
088810	FIRE RATED GLASS & FRAMING	5

DIVISION 09 - FINISHES

092100	**SPRAY APPLIED ACOUSTICAL CEMENT PLASTER**	**4**
092116.23	GYPSUM BOARD SHAFT WALL ASSEMBLIES	5
092216	NON-STRUCTURAL METAL FRAMING	9
092900	GYPSUM BOARD	11
093000	TILING	18
095113	ACOUSTICAL PANEL CEILINGS	14
096466	WOOD ATHLETIC FLOORING	10
096513	RESILIENT BASE AND ACCESSORIES	7
096516	RESILIENT SHEET FLOORING	6
096566	RESILIENT ATHLETIC FLOORING	6
096766	FLUID-APPLIED ATHLETIC FLOORING	7
096813	TILE CARPETING	9
098433	SOUND ABSORBING WALL PANELS	4
098436	SOUND-ABSORBING CEILING UNITS	6
099113	EXTERIOR PAINTING	7
099123	INTERIOR PAINTING	11
099600	HIGH-PERFORMANCE COATINGS	5

DIVISION 10 - SPECIALTIES

102113	TOILET COMPARTMENTS	5

102238	OPERABLE PANEL PARTITIONS	10
102239	**OPERABLE GLASS-PANEL PARTITIONS**	**7**
102600	**WALL AND DOOR PROTECTION**	**4**
104413	FIRE EXTINGUISHER CABINETS	6
104416	FIRE EXTINGUISHERS	4
105100	CLASS A FIRE RATED PHENOLIC LOCKERS	7
105113	METAL LOCKERS	7

DIVISION 11 - EQUIPMENT

111400	PEDESTRIAN CONTROL EQUIPMENT	3
116643	INTERIOR SCOREBOARDS	5
116653	GYMNASIUM DIVIDERS	6
116733	CLIMBING WALLS	3

DIVISION 12 - FURNISHINGS

122413	ROLLER WINDOW SHADES	6
123661	SIMULATED STONE COUNTERTOPS	3
124813	ENTRANCE FLOOR MATS AND FRAMES	2
126600	TELESCOPING STANDS	6
129300	SITE FURNISHINGS	6

DIVISION 14 - CONVEYING EQUIPMENT

142100	ELECTRIC TRACTION ELEVATORS	11
142400	HYDRAULIC ELEVATORS	10

Facility Services Subgroup

DIVISION 21 – FIRE PROTECTION

211000	FIRE PROTECTION	29

DIVISION 22 – PLUMBING

221410	PLUMBING PIPING	8
221411	DISINFECTING WATER SUPPLY SYSTEM	6
221430	PLUMBING SPECIALTIES	14
224440	PLUMBING FIXTURES	9
224450	PLUMBING EQUIPMENT	4
224460	SPECIAL PLUMBING EQUIPMENT SYSTEMS	5

DIVISION 23 - HEATING VENTILATING AND AIR CONDITIONING

230500	BASIC MECHANICAL REQUIREMENTS	18
230529	BASIC MECHANICAL MATERIALS AND METHODS	33
230540	MECHANICAL SOUND AND VIBRATION CONTROL	23
230548	MECHANICAL SEISMIC CONTROL	8
230593	TESTING, ADJUSTING AND BALANCING	6
230595	MECHANICAL SYSTEMS COMMISSIONING (BY COMMISSIONING AGENT)	
230700	MECHANICAL INSULATION	10
230800	MECHANICAL SYSTEMS COMMISSIONING	12
230810	VARIABLE FREQUENCY DRIVES	1

230900	ELECTRONIC CONTROLS	30
231123	NATURAL GAS SYSTEM	8
232113	HVAC PIPING & SPECIALTIES	17
232123	HVAC PUMPS	6
232500	HVAC WATER TREATMENT	7
233300	DUCTWORK AND ACCESSORIES	18
233400	AIR HANDLING FANS	8
233600	AIR TERMINAL UNITS	3
233713	AIR INLETS AND OUTLETS	5
234100	AIR CLEANING	3
235100	BREECHINGS, CHIMNEYS, STACKS AND FLUES	4
235200	BOILERS	6
235700	HEAT TRANSFER	9
236400	REFRIGERATION	16
237410	AIR HANDLING UNIT WITH COILS	13

VOLUME III

DIVISION 26 - ELECTRICAL

260500	COMMON WORK RESULTS FOR ELECTRICAL	5
260513	MEDIUM-VOLTAGE CABLES	6
260516	OVERHEAD MEDIUM-VOLTAGE WIRING	11
260519	LOW-VOLTAGE ELECTRICAL POWER CONDUCTORS AND CABLES	5
260526	GROUNDING AND BONDING FOR ELECTRICAL SYSTEMS	6
260529	HANGERS AND SUPPORTS FOR ELECTRICAL SYSTEMS	5
260533	RACEWAY AND BOXES FOR ELECTRICAL SYSTEMS	10
260536	CABLE TRAYS FOR ELECTRICAL SYSTEMS	5
260539	UNDERFLOOR RACEWAYS FOR ELECTRICAL SYSTEMS	7
260543	UNDERGROUND DUCTS AND RACEWAYS FOR ELECTRICAL SYSTEMS	11
260548	VIBRATION AND SEISMIC CONTROLS FOR ELECTRICAL SYSTEMS	8
260553	IDENTIFICATION FOR ELECTRICAL SYSTEMS	8
260573	OVERCURRENT PROTECTIVE DEVICE COORDINATION STUDY	5
260800	COMMISSIONING FOR ELECTRICAL	9
260913	ELECTRICAL POWER MONITORING AND CONTROL	20
260923	LIGHTING CONTROL DEVICES	6
260936	MODULAR DIMMING CONTROLS	6
260943	NETWORK LIGHTING CONTROLS	9
261200	MEDIUM-VOLTAGE TRANSFORMERS	6
261350	MEDIUM-VOLTAGE SWITCHGEAR, PAD OR VAULT MOUNTED	9
262200	LOW-VOLTAGE TRANSFORMERS	5
262413	SWITCHBOARDS	11
262416	PANELBOARDS	9
262419	MOTOR-CONTROL CENTERS	14
262726	WIRING DEVICES	9
262726SC	WIRING DEVICE SCHEDULE	3
262813	FUSES	3
262816	ENCLOSED SWITCHES AND CIRCUIT BREAKERS	8
262913	ENCLOSED CONTROLLERS	10

262923	VARIABLE-FREQUENCY MOTOR CONTROLLERS	15
263213	ENGINE GENERATORS	14
263600	TRANSFER SWITCHES	8
264113	LIGHTNING PROTECTION FOR STRUCTURES	3
264313	TRANSIENT-VOLTAGE SUPPRESSION FOR LOW-VOLTAGE ELECTRICAL POWER CIRCUITS	6
265100	INTERIOR LIGHTING	11
265600	EXTERIOR LIGHTING	11
268313	ELECTRIC HEATING CABLES	7

DIVISION 27 - COMMUNICATIONS

270500	COMMON WORK RESULTS FOR COMMUNICATIONS	22
271300	COMMUNICATIONS BACKBONE CABLING	14
271500	COMMUNICATIONS HORIZONTAL CABLING	17
274113	AUDIO SYSTEMS	10
274115	CONTROL SYSTEMS	16
274133	MASTER ANTENNA TELEVISION SYSTEM	11
275313	CLOCK SYSTEMS	4

DIVISION 28 - ELECTRONIC SAFETY AND SECURITY

281300	ACCESS CONTROL	14
283111	DIGITAL, ADDRESSABLE FIRE-ALARM SYSTEM	15

Site and Infrastructure Subgroup

DIVISION 31 – EARTHWORK

310513	COMMON FILL	4
310519	GEOTEXTILES	12
311100	SITE CLEARING	2
312316	EXCAVATION	4
312323	EPS BLOCK FOR EARTHWORK	6
312326	COMPACTION	2
312500	EROSION AND SEDIMENTATION CONTROL	4
316100	GROUND IMPROVEMENT USING AGGREGATE PIERS / STONE COLUMNS	6

DIVISION 32 - EXTERIOR IMPROVEMENTS

321123	CRUSHED AGGREAGE BASE	7
321203	PAVING ASPHALTS	4
321205	ASPHALT CONCRETE	10
321213	PRIME COAT	2
321214	TACK COAT	2
321216	PLANT MIX – ASPHALT PAVING	9
321313	CONCRETE PAVING	11
321373	CONCRETE PAVING JOINT SEALANTS	6
321613	DRIVEWAY, SIDEWALK, CURB, GUTTER	6
321614	CURB RAMP	3
321723	PAVEMENT MARKINGS	8

328400	PLANTING IRRIGATION	13
329200	TURF AND GRASSES	12
329300	PLANTS	18

DIVISION 33 – UTILITIES

330506	POLYETHYLENE PIPE	4
330507	POLYVINYL CHLORIDE PIPE	3
330514	UTILITY GRADE ADJUSTMENT	3
330520	BACKFILLING TRENCHES	6
330525	PAVEMENT RESTORATION	5
330800	COMMISSIONING OF WATER UTILITES	4
331100	WATER DISTRIBUTION AND TRANSMISSION	7
331111	RELOCATE WATER METERS AND FIRE HYDRANTS	3
331216	WATER VALVES	4
331219	HYDRANTS	4
331233	WATER METER	3
331300	DISINFECTION	4
333100	SANITARY SEWERAGE SYSTEMS	4
334100	STORM DRAINAGE SYSTEMS	5

END OF TABLE OF CONTENTS

SECTION 051250 – BUCKLING RESTRAINED BRACES

PART 1 – GENERAL

1.01 SUMMARY

A. Section Includes:

1. Provide all parts, materials, and labor required for the design, delivery, testing and erection of buckling-restrained braces, which are designed by the manufacturer to meet stiffness, yield strength, and elongation requirements as indicated on the Drawings and other requirements specified Herein.
2. Engineering design of BRB's.
3. Qualification of BRB's by uniaxial and subassemblage cyclic testing. If a pin and collar connection is used the subassemblage test need not be performed.

B. Related Sections:

1. Section 05120 - Structural Steel: For installation of BRB's and furnishing of connection hardware for BRB's, including loose plates and fasteners.

1.02 REFERENCES

A. Standards listed below apply where designation is cited in this Section. Where the applicable year of adoption or revision is not listed below, the latest edition applies.

B. AISC - American Institute of Steel Construction

1. American Institute of Steel Construction's "Manual of Steel Construction", Thirteenth Edition (AISC)

a. "Specification for the Design, Fabrication, and Erection of Structural Steel for Buildings", 2005 Edition (AISC 360).
b. "Code of Standard Practice for Steel Buildings and Bridges", 2005 Edition (AISC 303).
c. "Specification for Structural Joints Using ASTM A325 or A490 Bolts", June 30, 2004 (RCSC).
d. 2005 Seismic Provisions for Structural Steel Buildings (ANSI/AISC 341-05)

2. American Institute of Steel Construction: "Seismic Provisions for Structural Steel Buildings", 2005 edition including Supplement 1 dated 2006 (AISC 341).

B. ASTM - American Society for Testing and Materials

1. A6 - Specification for General Requirements for Rolled Steel Plates, Shapes, Sheet Piling and Bars for Structural Use.
2. A36 - Specification for Steel.
3. A500 - Specification for Cold-Formed Welded and Seamless Carbon Steel Structural Tubing.
4. A325 – Specification for Structural Steel Bolts
5. A490 – Specification for Heat-Treated Steel Structural Bolts, 150 ksi min. tensile strength.
6. A572 – High-Strength Low-Alloy Columbium-Vanadium Steel, latest edition.
7. F959 – Direct Tension Indicators, latest edition.
8. F1852 – Twist-off Bolts, latest edition.

C. AWS - American Welding Society

1. “Structural Welding Code – Steel”, 2006 Edition (AWS D1.1).
2. “Structural Welding Code – Seismic Supplement”, 2005 edition (AWS D1.8).

D. JIS - Japanese Industrial Standard

1. G 3136 SN400 B - Rolled Steels for Building Structure.

G 3466 STKR 400 - Carbon Steel Square Pipes for General Structural Purposes.

E. Steel Structures Painting Council (SSPC):

1. Steel Structures Painting Manual, latest edition.

1.03 DEFINITIONS

A. Buckling Restrained Brace (BRB): Specialty structural brace element consisting of an axial force resisting steel core encased by a system that prevents buckling of the steel core.

1.04 SUBMITTALS

A. Submit the following in accordance with requirements of Division 1.

1. All requested submittals shall be furnished in English language.

B. Qualification Testing Report evidencing manufacturer's compliance with Article 2.01 D.

1. The Qualification Testing Report shall conform to requirements of Appendix T of the American Institute of Steel Construction “Seismic Provisions for Structural Steel Buildings”, (AISC 341-2005).
2. If project specific testing is required to supplement available test data, include schedule for fabrication of BRB test specimens, description of proposed testing program and name of test facility and schedule for testing and reporting.

C. Manufacturer’s Quality Assurance Plan: Conform to requirements of Article 1.05A, "Quality Assurance".

D. Engineering Design: Refer to Article 2.01A for design requirements.

1. Design Drawings: Show size and configuration of steel core for full length of BRB. Indicate casing size, thickness and length.
2. Calculations: Provide design calculations showing the adequacy of proposed BRB's to achieve Performance Requirements specified herein.
3. Certification: In accordance with Article 2.01A, Design Requirements.
4. Preliminary Design: At Contractor's option, make an initial submittal of the items listed above, based on assumed material properties, prior to delivery of materials to be employed in work.
5. Final Design: Submit final drawings, calculations and certifications that include the final dimensions of steel core plates based on results of coupon testing of steel to be employed in Work.

    a. The Design Drawings and Calculations shall be sealed and stamped by a Structural/Professional Engineer (S/P.E.) licensed in the State of the Project.
    b. Submittal shall be accompanied by the results of coupon testing.

E. Erection Drawings:

1. Show location and size and of BRB’s. Give complete information necessary for fabrication of elements of structural steel frame to receive braces and fabrication of connection plates. Show methods of assembly, including type and size of bolts and/or pins, hole diameter, and preparation and finish of faying surfaces. Identify tolerances for fabrication and erection.

F. Submit certified material test reports to Testing Laboratory for record purposes.

1. All steel: Tensile tests and chemical analysis. Include trace elements for steel core plates.
2. Steel Core Plates:

    a. Coupon test results for each lot of steel used in fabrication showing initial yield, ultimate tensile stress, and ultimate elongation.

    b. Charpy V-Notch testing for plates 2 inches (50 mm) and thicker.

3. Welding Electrodes: Include tensile, elongation, and CVN toughness tests. Identify diffusible hydrogen.

G. Submit Quality Assurance test and inspection reports to Testing Laboratory for record purposes prior to shipping of braces.

H. The Manufacturer shall submit a BRB testing report. The testing configurations used, and the results obtained shall meet the criteria found in the AISC 2005 Seismic Provisions (341-05) including Appendix T.

I. LEED Submittals:Product Data for Credit MR 4: For products having recycled content, documentation indicating percentages by weight of postconsumer and preconsumer recycled content. Include statement indicating cost for each product having recycled content.

1.05 QUALITY ASSURANCE

A. Manufacturer Qualifications: Shall have manufactured and successfully tested braces in accordance with Article 2.01D, "Qualification Tests" prior to opening of bids.

B. Design Engineer Qualifications: Civil Engineer, registered in the State where the project is located, that is knowledgeable with the results of cyclic testing of BRB's and experienced in the design of BRB’s based on engineering analysis.

C. Quality Assurance Plan: The manufacturer shall have a detailed Quality Assurance Plan to evidence that the BRB's being manufactured continue to be the same as those tested. The Plan shall include the following elements:

1. Indicate how the product is to be identified, such that it can be traced back to production quality assurance records.
2. Include a flow chart of the process by which the product is manufactured, including description of production methods.
3. List tests for materials, including the applicable recognized standard for each test and the qualifications of testing agency and/or personnel.
4. Identify manufacturing tolerances for each production process.
5. In-process quality control, including all points of internal inspection for control and monitoring of the fabrication and assembly process.

    a. Include copies of forms and checklists used to document inspections.
    b. Include required qualifications of personnel performing each inspection.
    c. Identify how inspection reports are reviewed and approved.

6. Plan shall also include manufacturer furnished quality assurance for erection, including, at a minimum, attendance at pre-erection conference and a minimum of one visit thereafter to observe installation of braces.
7. Design Engineer Requirements: The Design Engineer shall be registered in the State of the Project, have experience with designing buckling-restrained braced frame systems, and have a thorough knowledge of the submitted BRB test report.

D. Qualification Testing: Refer to Article 2.01D, "Qualification Tests" for requirements.

E. Extrapolation of Qualification Testing: All deviations from materials, details of fabrication, and quality assurance controls used for the fabrication of tested prototype braces shall be identified by manufacturer and reviewed by Design Engineer to ensure that production braces meet or exceed the level of quality used in fabrication of prototype braces. Include the following items:

    a. Weld filler material, including CVN toughness.
    b. Welding procedures and details, including weld terminations.

c. Shape and finish of plate edges at transitions.
d. Finish of plate edges, including roughness and treatment of occasional notches.
e. Tolerances for flatness and straightness of plates.
f. Details of isolation between plates and core at transitions, to accommodate lengthening and shortening.
g. Type and thickness of coating materials.

F. Pre-Erection Conference: Contractor shall schedule meeting with Owner's Representative, BRB-manufacturer, and the steel erector's personnel supervising installation of buckling restrained braces to review installation procedures including handling, fit-up and fastening.

PART 2 PRODUCTS

2.01 DESIGN AND PERFORMANCE REQUIREMENTS

A. Design Requirements:

1. Engage an Engineer, licensed in the State where the project is located, to design braces to achieve the Performance Criteria. Design shall be based on detailed examination and understanding of the results of qualifying cyclic tests and interpolation of results to project conditions.
2. Interpolation of test results for different member sizes shall be justified by rational analysis that demonstrates stress distributions and magnitudes of internal strains that are consistent with or less severe than the tested assemblies and that considers the adverse effects of larger material and variations in material properties.
3. Consider the effect of imposed end rotations.

B. Performance Criteria:

1. Initial "BRB" yield force or area shall be as indicated, within the tolerances specified on the Contract Documents.
2. Braces shall provide for stable cyclic displacement within the ranges required per AISC 341.

   a. Hysteretic behavior in the non-linear range shall show no sign of degradation or loss of strength.
   b. Graphs of test results shall show no signs of pinched hysteretic behavior.

3. The portion of the steel core that projects beyond the casing shall provide for stable cyclic loading.
4. Tension and compression shall be resisted entirely by the steel core. The buckling restraining system shall prevent brace buckling and control plate buckling without restraining the steel core from transverse expansion and longitudinal shortening for deformations corresponding to 2 times the design interstory drift.
5. End connections and connection configuration, including gusset stiffeners, must be similar to the tested conditions.

C. Coupon Tests: Perform coupon test results for each lot of steel used in fabrication of steel core areas showing initial yield, ultimate tensile stress, and ultimate elongation. Coupons shall be taken from plates at point of brace manufacture and shall be used as the basis for brace design.

D. Qualification Tests: The design of braces shall be based on results from qualifying cyclic tests. Tests shall consist of at least two successful cyclic tests: one is required to be a test of a brace subassemblage that includes brace connection imposed rotations and the other may be either a uniaxial or subassemblage test. If a pin and collar connection is used the subassemblage test is not be required.

1. Qualification Tests shall conform to requirements of Appendix T of the AISC 341.
2. Qualification tests are permitted to be based on documented full-scale cyclic tests performed for other projects or tests reported in research, provided that there is sufficient basis for extrapolation to project conditions.
3. Extrapolation of previous test results beyond the limitations AISC 341 Appendix T will not be permitted.

2.02 ACCEPTABLE MANUFACTURERS

A. The following manufacturer's, which have successfully completed qualification testing of braces similar to those required for the project, will be considered acceptable manufacturers, subject to compliance with other requirements of the Contract Documents, including limitations on maximum brace dimensions.

1. Nippon Steel Corporation; Tokyo, Japan
2. STAR Seismic; Park City, UT.
3. Core Brace, Salt Lake City, UT

2.03 MATERIALS

A. Steel Core Areas: JIS G 3136 SN400 B or ASTM A36; except initial yield stress shall be within the tolerances shown on the Contract Documents, as evidenced by coupon testing of plates to be incorporated in work. If the contract documents do not state the initial yield stress it shall be 42.0 ksi with the averages of the coupon tests be between 38 ksi and 46 ksi.

1. Plates 2 inches (50 mm) and thicker shall be supplied with Charpy V-Notch testing in accordance with ASTM A6 Supplementary Requirement S5, or approved equal. The impact test shall meet a minimum average value of 20 ft-lbs absorbed energy at +70 degrees F and shall be conducted in accordance with AISC Specification, or approved equal.

B. Casing: JIS G3466 STKR 400 or ASTM A500, Grade B.

C. Welding Filler Material: Meet or exceed CVN toughness and elongation of material used for fabrication of tested assemblies.

1. H16 (diffusible hydrogen), AWS A4.3.

D. Shop Primer – Standard Shop Primer.

E. Finish – All exterior exposed metal shall receive a high performance coating per specification 099600 High Performance Coatings.

F. Debonding Agent: Manufacturer's standard; demonstrated suitable to maintain separation of steel core and grout encasement when subjected to a minimum of 30 cycles of inelastic yielding at 2.0 percent strain; resistant to aging effects for a life cycle of 50 years.

G. Fill Material: Manufacturer's standard cementitious grout; demonstrated suitable for function as a confining in-fill material by uniaxial or subassemblage qualification testing.

2.04 FABRICATION

A. Fabricate steel in accordance with Section 05120, "Structural Steel".

1. Cut core plates to profile shown on Design Drawings. Conform to tolerances of Quality Assurance Manual, except tolerance on plate width shall not exceed plus or minus 0.2 inches (5 mm).
2. Splices in the steel core are not acceptable.
3. Roughness: After cutting, edges of core plates shall have roughness less than 1000 micro-inches.
4. Gouges and Notches: Occasional gouges and notches less than 0.2 inches (5 mm) deep in edges of core plates may be repaired by grinding to a smooth transition. The length of transition shall be a minimum of 10 times the depth of gouge. The area shall be inspected by MT after grinding to ensure the entire depth of gouge has been removed. Deeper gouges shall be cause for rejection of piece.

B. The maximum dimensions of the casing of the buckling restrained brace shall be as indicated on the Contract Documents.

C. Bolted Connections: All holes for bolted connections shall be drilled and burrs removed.

D. Pin Connections: All holes for pinned connections shall be machined 1/32 in larger than the pin diameter.

E. Welding: Continuously weld joints, using procedures intended to minimize distortion.

1. Where cruciform plates are terminated in core, pay particular attention to the detailing and finishing of weld termination; meet or exceed qualification tested assembly as minimum standard.

F. Assembly: Assemble components of the Buckling Restrained Brace in a manner to ensure proper performance of the brace.

1. Examine steel core areas for straightness prior to coating with debonding agent or pouring with concrete.
2. Provide end-confining plates to ensure confinement of the fill material while allowing for non-restricting movement of the steel core.
3. For braces exposed to exterior or corrosive conditions, interior of brace shall be sealed or otherwise protected from moisture/corrosive element infiltration into the interior core region.

2.05 **SHIPPING**

A. Manufacturer to package BRB's for protection against shipping damage.

B. Manufacturer shall coordinate delivery dates and quantities with Contractor/Owner. Contractor/Owner shall provide adequate storage space and proper lay-down areas.

C. Braces shall be stored on dunnage not touching the ground.

D. Coordinate erection aid requirements with contractor/Owner.

2.06 SOURCE QUALITY CONTROL

A. Testing Laboratory will:

1. Review Manufacturer's Quality Assurance Plan, mill certificates and results of coupon testing.
2. Review Manufacturer's quality assurance test and inspection reports.
3. Observe fabrication and assembly as requested by Owner's Representative.

B. Contractor shall:

1. Notify Owner's Representative no less than 30 days before the start of fabrication of the buckling restrained braces, to allow Owner's Representative to observe fabrication and assembly process.
2. Perform testing and inspection in accordance with approved Quality Assurance Plan and requirements of Contract Documents.

PART 3 EXECUTION

3.01 ERECTION

A. Braces are erected under Section 05120, "Structural Steel".

B. Prior to erection, clean faying surfaces of brace to be in contact with bolted connections to remove temporary coatings applied for transport and surface contaminants.

C. Buckling restrained braces shall not be field cut or altered. Alterations to structural steel components to receive Buckling Restrained Braces shall be as permitted by Section 05120.

D. No field welding to buckling restrained brace members will be permitted, including attachment of nonstructural components.

END OF SECTION 051250

SECTION 061600 - SHEATHING

PART 1 - GENERAL

1.1 RELATED DOCUMENTS

A. Drawings and general provisions of the Contract, including General and Supplementary Conditions and Division 01 Specification Sections, apply to this Section.

1.2 SUMMARY

A. Section Includes:

1. Wall sheathing.
2. Sheathing joint and penetration treatment.

B. Related Requirements:
1. Section 072500 "Weather Barriers" for water-resistive barrier applied over wall sheathing.

1.3 ACTION SUBMITTALS

A. Product Data: For each type of process and factory-fabricated product. Indicate component materials and dimensions and include construction and application details.

1.4 QUALITY ASSURANCE

A. Testing Agency Qualifications: For testing agency providing classification marking for fire-retardant-treated material, an inspection agency acceptable to authorities having jurisdiction that periodically performs inspections to verify that the material bearing the classification marking is representative of the material tested.

1.5 DELIVERY, STORAGE, AND HANDLING

A. Stack panels flat with spacers beneath and between each bundle to provide air circulation. Protect sheathing from weather by covering with waterproof sheeting, securely anchored. Provide for air circulation around stacks and under coverings.

PART 2 - PRODUCTS

2.1 PERFORMANCE REQUIREMENTS

A. Fire-Test-Response Characteristics: For assemblies with fire-resistance ratings, provide materials and construction identical to those of assemblies tested for fire resistance per ASTM E 119 by a testing and inspecting agency acceptable to authorities having jurisdiction.

1. Fire-Resistance Ratings: Indicated by design designations from UL's "Fire Resistance Directory." .

2.2 WALL SHEATHING

A. Glass-Mat Gypsum Wall Sheathing: ASTM C 1177/1177M.

1. Type and Thickness: Type X, 5/8 inch thick.

2.3 FASTENERS

A. General: Provide fasteners of size and type indicated that comply with requirements specified in this article for material and manufacture.

B. Screws for Fastening Gypsum Sheathing to Cold-Formed Metal Framing: Steel drill screws, in length recommended by sheathing manufacturer for thickness of sheathing to be attached, with organic-polymer or other corrosion-protective coating having a salt-spray resistance of more than 800 hours according to ASTM B 117.

1. For steel framing less than 0.0329 inch thick, use screws that comply with ASTM C 1002.
2. For steel framing from 0.033 to 0.112 inch thick, use screws that comply with ASTM C 954.

2.4 SHEATHING JOINT-AND-PENETRATION TREATMENT MATERIALS

A. Sealant for Glass-Mat Gypsum Sheathing: Silicone emulsion sealant complying with ASTM C 834, compatible with sheathing tape and sheathing and recommended by tape and sheathing manufacturers for use with glass-fiber sheathing tape and for covering exposed fasteners.

1. Sheathing Tape: Self-adhering glass-fiber tape, minimum 2 inches wide, 10 by 10 or 10 by 20 threads/inch, of type recommended by sheathing and tape manufacturers for use with silicone emulsion sealant in sealing joints in glass-mat gypsum sheathing and with a history of successful in-service use.

PART 3 - EXECUTION

3.1 INSTALLATION, GENERAL

A. Do not use materials with defects that impair quality of sheathing or pieces that are too small to use with minimum number of joints or optimum joint arrangement. Arrange joints so that pieces do not span between fewer than three support members.

B. Cut panels at penetrations, edges, and other obstructions of work; fit tightly against abutting construction unless otherwise indicated.

C. Coordinate wall sheathing installation with flashing and joint-sealant installation so these materials are installed in sequence and manner that prevent exterior moisture from passing through completed assembly.

D. Do not bridge building expansion joints; cut and space edges of panels to match spacing of structural support elements.

E. Coordinate sheathing installation with installation of materials installed over sheathing so sheathing is not exposed to precipitation or left exposed at end of the workday when rain is forecast.

3.2 GYPSUM SHEATHING INSTALLATION

A. Comply with GA-253 and with manufacturer's written instructions.

1. Fasten gypsum sheathing to cold-formed metal framing with screws.
2. Install boards with a 3/8-inch gap where non-load-bearing construction abuts structural elements.
3. Install boards with a 1/4-inch gap where they abut masonry or similar materials that might retain moisture, to prevent wicking.

B. Apply fasteners so heads bear tightly against face of sheathing, but do not cut into facing.

C. Horizontal Installation: Install sheathing with V-grooved edge down and tongue edge up. Interlock tongue with groove to bring long edges in contact with edges of adjacent boards without forcing. Abut ends of boards over centers of studs, and stagger end joints of adjacent boards not less than one stud spacing. Attach boards at perimeter and within field of board to each steel stud.

1. Space fasteners approximately 8 inches o.c. and set back a minimum of 3/8 inch from edges and ends of boards.
2. For sheathing under stucco cladding, boards may be initially tacked in place with screws if overlying self-furring metal lath is screw-attached through sheathing to studs immediately after sheathing is installed.

D. Vertical Installation: Install board vertical edges centered over studs. Abut ends and edges of each board with those of adjacent boards. Attach boards at perimeter and within field of board to each stud.

1. Space fasteners approximately 8 inches o.c. and set back a minimum of 3/8 inch from edges and ends of boards.
2. For sheathing under stucco cladding, boards may be initially tacked in place with screws if overlying self-furring metal lath is screw-attached through sheathing to studs immediately after sheathing is installed.

E. Seal sheathing joints according to sheathing manufacturer's written instructions.
1. Apply glass-fiber sheathing tape to glass-mat gypsum sheathing joints and apply and trowel silicone emulsion sealant to embed entire face of tape in sealant. Apply sealant to exposed fasteners with a trowel so fasteners are completely covered. Seal other penetrations and openings.

END OF SECTION 061600

SECTION 064113 - WOOD-VENEER-FACED ARCHITECTURAL CABINETS

PART 1 - GENERAL

1.1 RELATED DOCUMENTS

A. Drawings and general provisions of the Contract, including General and Supplementary Conditions and Division 01 Specification Sections, apply to this Section.

1.2 SUMMARY

A. Section Includes:

1. Architectural wood cabinets.
2. Wood furring, blocking, shims, and hanging strips for installing architectural wood cabinets unless concealed within other construction before cabinet installation.
3. Shop finishing of architectural wood cabinets.
4. Back-painted glass-backsplash.
5. **Cabinet Hardware**

B. Related Requirements:

1. Section 061000 "Rough Carpentry" for wood furring, blocking, shims, and hanging strips required for installing cabinets and concealed within other construction before cabinet installation.

1.3 PREINSTALLATION MEETINGS

A. Preinstallation Conference: Conduct conference at Project site.

1.4 ACTION SUBMITTALS

A. Product Data: For each type of product, including panel products, cabinet hardware and accessories and finishing materials and processes.

1. Include data for fire-retardant treatment from chemical-treatment manufacturer and certification by treating plant that treated materials comply with requirements.

B. LEED Submittals:

1. Product Data for Credit MR 4: For products having recycled content, documentation indicating percentages by weight of postconsumer and preconsumer recycled content. Include statement indicating cost for each product having recycled content.

2. Product Certificates for Credit MR 5: For products and materials required to comply with requirements for regional materials, certificates indicating location of material manufacturer and point of extraction, harvest, or recovery for each raw material. Include statement indicating distance to Project, cost for each regional material, and fraction by weight that is considered regional.
3. Product Certificates for Credit MR 5: For products and materials required to comply with requirements for regionally manufactured and regionally extracted and manufactured materials. Include statement indicating cost for each regionally manufactured material.

    a. Include statement indicating location of manufacturer and distance to Project for each regionally manufactured material.
    b. Include statement indicating location of manufacturer and point of extraction, harvest, or recovery for each raw material used in regionally extracted and manufactured materials. Indicate distance to Project and fraction by weight of each regionally manufactured material that is regionally extracted.

4. Certificates for Credit MR 6 and Credit MR 7: Chain-of-custody certificates indicating that products specified to be made from certified wood comply with forest certification and chain-of-custody requirements. Include statement indicating cost for each certified wood product.
5. Product Data for Credit IEQ 4.4: For adhesives and composite wood products, documentation indicating that products contain no urea formaldehyde.

C. Shop Drawings: Show location of each item, dimensioned plans and elevations, large-scale details, attachment devices, and other components.

1. Show details full size.
2. Show locations and sizes of furring, blocking, and hanging strips, including concealed blocking and reinforcement specified in other Sections.
3. Show locations and sizes of cutouts and holes for electrical switches and outlets and other items installed in architectural wood cabinets.
4. Show veneer leaves with dimensions, grain direction, exposed face, and identification numbers indicating the flitch and sequence within the flitch for each leaf.
5. Apply AWI Quality Certification Program label to Shop Drawings.

D. Samples for Initial Selection:

1. Shop-applied transparent finishes.
2. Thermoset decorative panels.

E. Samples for Verification:

1. Lumber for transparent finish, not less than 5 inches wide by 12 inches long, for each species and cut, finished on one side and one edge.
2. Veneer leaves representative of and selected from flitches to be used for transparent-finished cabinets.

3. Thermoset decorative panels, 8 by 10 inches, for each color, pattern, and surface finish, with edge banding on one edge.
4. Corner pieces as follows:

    a. Cabinet-front frame joints between stiles and rails, as well as exposed end pieces, 18 inches high by 18 inches wide by 6 inches deep.
    b. Miter joints for standing trim.

5. Exposed cabinet hardware and accessories, one unit for each type and finish.

1.5 INFORMATIONAL SUBMITTALS

A. Qualification Data: For Installer and fabricator.

B. Product Certificates: For the following:

1. Composite wood and agrifiber products.
2. Thermoset decorative panels.
3. Glass.
4. Adhesives.

C. Woodwork Quality Standard Compliance Certificates: AWI Quality Certification Program certificates.

D. Evaluation Reports: For fire-retardant-treated materials, from ICC-ES.

1.6 QUALITY ASSURANCE

A. Fabricator Qualifications: Shop that employs skilled workers who custom fabricate products similar to those required for this Project and whose products have a record of successful in-service performance. Shop is a certified participant in AWI's Quality Certification Program.

B. Installer Qualifications: Fabricator of products.

C. Testing Agency Qualifications: For testing agency providing classification marking for fire-retardant-treated material, an inspection agency acceptable to authorities having jurisdiction that periodically performs inspections to verify that the material bearing the classification marking is representative of the material tested.

1.7 DELIVERY, STORAGE, AND HANDLING

A. Do not deliver cabinets until painting and similar operations that could damage woodwork have been completed in installation areas. If cabinets must be stored in other than installation areas, store only in areas where environmental conditions comply with requirements specified in "Field Conditions" Article.

1.8 FIELD CONDITIONS

A. Environmental Limitations: Do not deliver or install cabinets until building is enclosed, wet work is complete, and HVAC system is operating and maintaining temperature and relative humidity at occupancy levels during the remainder of the construction period.

B. Field Measurements: Where cabinets are indicated to fit to other construction, verify dimensions of other construction by field measurements before fabrication, and indicate measurements on Shop Drawings. Coordinate fabrication schedule with construction progress to avoid delaying the Work.

1. Locate concealed framing, blocking, and reinforcements that support cabinets by field measurements before being enclosed, and indicate measurements on Shop Drawings.

C. Established Dimensions: Where cabinets are indicated to fit to other construction, establish dimensions for areas where cabinets are to fit. Provide allowance for trimming at site, and coordinate construction to ensure that actual dimensions correspond to established dimensions.

1.9 COORDINATION

A. Coordinate sizes and locations of framing, blocking, furring, reinforcements, and other related units of Work specified in other Sections to ensure that wood-veneer-faced architectural cabinets can be supported and installed as indicated.

B. Hardware Coordination: Distribute copies of approved hardware schedule specified in Section 087111 "Door Hardware (Descriptive Specification)" to fabricator of architectural woodwork; coordinate Shop Drawings and fabrication with hardware requirements.

PART 2 - PRODUCTS

2.1 ARCHITECTURAL CABINET FABRICATORS

A. Source Limitations: Engage a qualified woodworking firm to assume undivided responsibility for production of architectural wood cabinets with sequence-matched wood veneers wood paneling, wood doors with face veneers that are sequence matched with woodwork and transparent-finished wood doors that are required to be of same species as woodwork.

2.2 ARCHITECTURAL WOOD CABINETS, GENERAL

A. Quality Standard: Unless otherwise indicated, comply with the "Architectural Woodwork Standards" for grades of architectural wood cabinets indicated for construction, finishes, installation, and other requirements.

1. Provide labels and certificates from AWI certification program indicating that woodwork, including installation, complies with requirements of grades specified.
2. The Contract Documents contain selections chosen from options in the quality standard and additional requirements beyond those of the quality standard. Comply with those selections and requirements in addition to the quality standard.

2.3 WOOD CABINETS FOR TRANSPARENT FINISH

A. Grade: Custom.

B. Regional Materials: Wood cabinets for transparent finish shall be manufactured within 500 miles of Project site.

C. Certified Wood: Wood cabinets for transparent finish shall be produced from wood certified as "FSC Pure" or "FSC Mixed Credit" according to FSC STD-01-001, "FSC Principles and Criteria for Forest Stewardship," and FSC STD-40-004, "FSC Standard for Chain of Custody Certification."

D. Type of Construction: Face frame.

E. Cabinet and Door and Drawer Front Interface Style: Flush overlay.

F. Reveal Dimension: As indicated.

G. Wood for Exposed Surfaces:

1. Species: White oak.
2. Cut: Rift cut/rift sawn.
3. Grain Direction: Vertically for doors and fixed panels, horizontally for drawer fronts.
4. Matching of Veneer Leaves: Book match.
5. Veneer Matching within Panel Face: Center-balance match.
6. Veneer Matching within Room: Provide cabinet veneers in each room or other space from a single flitch with doors, drawer fronts, and other surfaces matched in a sequenced set with continuous match where veneers are interrupted perpendicular to the grain.
7. Comply with veneer and other matching requirements indicated for blueprint-matched paneling.

H. Semiexposed Surfaces: Provide surface materials indicated below:

1. Surfaces Other Than Drawer Bodies: Same species and cut indicated for exposed surfaces.
2. Drawer Subfronts, Backs, and Sides: Solid-hardwood lumber.
3. Drawer Bottoms: Thermoset decorative panels.

I. Dust Panels: 1/4-inch plywood or tempered hardboard above compartments and drawers unless located directly under tops.

J. Drawer Construction: Fabricate with exposed fronts fastened to subfront with mounting screws from interior of body.

1. Join subfronts, backs, and sides with glued rabbeted joints supplemented by mechanical fasteners.

2.4 WOOD MATERIALS

A. Wood Products: Provide materials that comply with requirements of referenced quality standard for each type of woodwork and quality grade specified unless otherwise indicated.

1. Do not use plain-sawn softwood lumber with exposed, flat surfaces more than 3 inches wide.
2. Wood Moisture Content: 4 to 9 percent.

B. Composite Wood and Agrifiber Products: Provide materials that comply with requirements of referenced quality standard for each type of woodwork and quality grade specified unless otherwise indicated.

1. Recycled Content of Medium-Density Fiberboard and Particleboard: Postconsumer recycled content plus one-half of preconsumer recycled content not less than 20 percent.
2. Medium-Density Fiberboard: ANSI A208.2, Grade 130, made with binder containing no urea formaldehyde.
3. Particleboard: ANSI A208.1, Grade M-2, made with binder containing no urea formaldehyde.
4. Veneer-Faced Panel Products (Hardwood Plywood): HPVA HP-1, made with adhesive containing no urea formaldehyde.
5. Thermoset Decorative Panels: Particleboard or medium-density fiberboard finished with thermally fused, melamine-impregnated decorative paper and complying with requirements of NEMA LD 3, Grade VGL, for test methods 3.3, 3.4, 3.6, 3.8, and 3.10.

2.5 CABINET HARDWARE AND ACCESSORIES

A. General: Provide cabinet hardware and accessory materials associated with architectural cabinets except for items specified in Section 087111 "Door Hardware (Descriptive Specification)."

B. Frameless Concealed Hinges (European Type): BHMA A156.9, B01602, 135 degrees of opening.

1. Basis-of-Design: Grass institutional hinges.

C. Back-Mounted Pulls: BHMA A156.9, B02011.

D. Wire Pulls: Back mounted, solid metal, 4 inches long, 5/16 inch in diameter.

E. Catches: Roller catches, BHMA A156.9, B03071.

F. **Handles: Back mounted, solid stainless steel, sizes as indicated.**

1. **Basis-of-Design: Sugatsune 27 series.**

a. **Material: 304 stainless steel.**
b. **Finish: Satin.**

G. Adjustable Shelf Standards and Supports: BHMA A156.9, B04071; with shelf rests, B04081.

H. Shelf Rests: BHMA A156.9, B04013; metal.

I. Drawer Slides: BHMA A156.9.

1. Grade 1HD-100 and Grade 1HD-200: Side mounted; full-extension type; zinc-plated-steel ball-bearing slides.
2. For drawers not more than 3 inches high and not more than 24 inches wide, provide Grade 2.
3. For drawers more than 3 inches high but not more than 6 inches high and not more than 24 inches wide, provide Grade 1HD-100.
4. For drawers more than 6 inches high or more than 24 inches wide, provide Grade 1HD-200.

J. Handles: Back Mounted, solid stainless steel, sizes as indicated.

1. Basis-of-Design: Sugatsune 27 series.

a. Material: 304 stainless steel.
b. Finish: Satin.

K. Door Locks: BHMA A156.11, E07121.

L. Drawer Locks: BHMA A156.11, E07041.

M. Door and Drawer Silencers: BHMA A156.16, L03011.

N. Back – Painted Glass for Backsplash: ASTM C 1036, glass for color coatings.

1. Nominal Thickness: 1/4 inch.

O. Exposed Hardware Finishes: For exposed hardware, provide finish that complies with BHMA A156.18 for BHMA finish number indicated.

1. Satin Stainless Steel: BHMA 630.

P. For concealed hardware, provide manufacturer's standard finish that complies with product class requirements in BHMA A156.9.

2.6 MISCELLANEOUS MATERIALS

A. Furring, Blocking, Shims, and Hanging Strips: Fire-retardant-treated softwood lumber, kiln dried to less than 15 percent moisture content.

B. Anchors: Select material, type, size, and finish required for each substrate for secure anchorage. Provide metal expansion sleeves or expansion bolts for post-installed anchors. Use nonferrous-metal or hot-dip galvanized anchors and inserts at inside face of exterior walls and at floors.

C. Adhesives: Do not use adhesives that contain urea formaldehyde.

2.7 FABRICATION

A. Fabricate woodwork to dimensions, profiles, and details indicated. Ease edges to radius indicated for the following:

1. Corners of Cabinets: 1/16 inch unless otherwise indicated.

B. Complete fabrication, including assembly, finishing, and hardware application, to maximum extent possible before shipment to Project site. Disassemble components only as necessary for shipment and installation. Where necessary for fitting at site, provide ample allowance for scribing, trimming, and fitting.

1. Notify Architect seven days in advance of the dates and times woodwork fabrication will be complete.
2. Trial fit assemblies at fabrication shop that cannot be shipped completely assembled. Install dowels, screws, bolted connectors, and other fastening devices that can be removed after trial fitting. Verify that various parts fit as intended and check measurements of assemblies against field measurements before disassembling for shipment.

C. Shop-cut openings to maximum extent possible to receive hardware, appliances, electrical work, and similar items. Locate openings accurately and use templates or roughing-in diagrams to produce accurately sized and shaped openings. Sand edges of cutouts to remove splinters and burrs.

D. Install glass to comply with applicable requirements in Section 088000 "Glazing" and in GANA's "Glazing Manual."

2.8 SHOP FINISHING

A. General: Drawings indicate items that are required to be shop finished. Finish such items at fabrication shop as specified in this Section. Refer to Section 099123 "Interior Painting" and Section 099300 "Staining and Transparent Finishing" for field finishing architectural woodwork not indicated to be shop finished.

B. Shop Priming: Shop apply the prime coat including backpriming, if any, for transparent-finished items specified to be field finished. Refer to Section 099123 "Interior Painting" and Section 099300 "Staining and Transparent Finishing" for material and application requirements.

C. Preparation for Finishing: Comply with referenced quality standard for sanding, filling countersunk fasteners, sealing concealed surfaces, and similar preparations for finishing architectural wood cabinets, as applicable to each unit of work.

1. Backpriming: Apply one coat of sealer or primer, compatible with finish coats, to concealed surfaces of cabinets.

D. Transparent Finish:

1. Grade: Custom.
2. Finish: System - 12, water-based polyurethane.
3. Wash Coat for Closed-Grain Woods: Apply wash-coat sealer to cabinets made from closed-grain wood before staining and finishing.
4. Staining: None required.
5. Sheen: Satin, 31-45 gloss units measured on 60-degree gloss meter per ASTM D 523.

PART 3 - EXECUTION

3.1 PREPARATION

A. Before installation, condition cabinets to average prevailing humidity conditions in installation areas.

B. Before installing cabinets, examine shop-fabricated work for completion and complete work as required, including removal of packing and backpriming.

3.2 INSTALLATION

A. Grade: Install cabinets to comply with same grade as item to be installed.

B. Assemble cabinets and complete fabrication at Project site to the extent that it was not completed in the shop.

C. Install cabinets level, plumb, true, and straight. Shim as required with concealed shims. Install level and plumb to a tolerance of 1/8 inch in 96 inches.

D. Scribe and cut cabinets to fit adjoining work, refinish cut surfaces, and repair damaged finish at cuts.

E. Anchor cabinets to anchors or blocking built in or directly attached to substrates. Secure with countersunk, concealed fasteners and blind nailing. Use fine finishing nails or finishing screws for exposed fastening, countersunk and filled flush with woodwork.

1. For shop finished items use filler matching finish of items being installed.

F. Cabinets: Install without distortion so doors and drawers fit openings properly and are accurately aligned. Adjust hardware to center doors and drawers in openings and to provide unencumbered operation. Complete installation of hardware and accessory items as indicated.

1. Install cabinets with no more than 1/8 inch in 96-inch sag, bow, or other variation from a straight line.
2. Maintain veneer sequence matching of cabinets with transparent finish.
3. Fasten wall cabinets through back, near top and bottom, and at ends not more than 16 inches o.c. with No. 10 wafer-head sheet metal screws through metal backing or metal framing behind wall finish.

G. Touch up finishing work specified in this Section after installation of woodwork. Fill nail holes with matching filler where exposed.

1. Apply specified finish coats, including stains and paste fillers if any, to exposed surfaces where only sealer/prime coats are applied in shop.

H. Refer to Section 099123 "Interior Painting" and Section 099300 "Staining and Transparent Finishing" for final finishing of installed architectural woodwork not indicated to be shop finished.

3.3 ADJUSTING AND CLEANING

A. Repair damaged and defective cabinets, where possible, to eliminate functional and visual defects; where not possible to repair, replace woodwork. Adjust joinery for uniform appearance.

B. Clean, lubricate, and adjust hardware.

C. Clean cabinets on exposed and semiexposed surfaces. Touch up shop-applied finishes to restore damaged or soiled areas.

END OF SECTION 064113

SECTION 064116 - PLASTIC-LAMINATE-FACED ARCHITECTURAL CABINETS

PART 1 - GENERAL

1.1 RELATED DOCUMENTS

A. Drawings and general provisions of the Contract, including General and Supplementary Conditions and Division 01 Specification Sections, apply to this Section.

1.2 SUMMARY

A. Section Includes:

1. Plastic-laminate-faced architectural cabinets.
2. Wood furring, blocking, shims, and hanging strips for installing plastic-laminate-faced architectural cabinets unless concealed within other construction before cabinet installation.
3. **Cabinet hardware and accessories.**
4. **LED strip lighting.**

B. Related Requirements:

1. Section 061000 "Rough Carpentry" for wood furring, blocking, shims, and hanging strips required for installing cabinets and concealed within other construction before cabinet installation.
2. Section 123623.13 "Plastic-Laminate-Clad Countertops."
3. Section 123661 “Simulated Stone Countertops.”
4. Section 108100 “Wood-Faced Architectural Cabinets.”

1.3 PREINSTALLATION MEETINGS

A. Preinstallation Conference: Conduct conference at Project site.

1.4 ACTION SUBMITTALS

A. Product Data: For each type of product, including panel products high-pressure decorative laminate adhesive for bonding plastic laminate fire-retardant-treated materials and cabinet hardware and accessories.

1. Include data for fire-retardant treatment from chemical-treatment manufacturer and certification by treating plant that treated materials comply with requirements.

B. LEED Submittals:

1. Product Data for Credit MR 4: For products having recycled content, documentation indicating percentages by weight of postconsumer and preconsumer recycled content. Include statement indicating cost for each product having recycled content.
2. Product Certificates for Credit MR 5: For products and materials required to comply with requirements for regionally manufactured materials. Include statement indicating cost for each regionally manufactured material.

    a. Include statement indicating location of manufacturer and distance to Project for each regionally manufactured material.

3. Certificates for Credit MR 6 and Credit MR 7: Chain-of-custody certificates indicating that products specified to be made from certified wood comply with forest certification and chain-of-custody requirements. Include statement indicating cost for each certified wood product.
4. Product Data for Credit IEQ 4.4: For adhesives and composite wood products, documentation indicating that products contain no urea formaldehyde.

C. Shop Drawings: Show location of each item, dimensioned plans and elevations, large-scale details, attachment devices, and other components.

1. Show details full size.
2. Show locations and sizes of furring, blocking, and hanging strips, including concealed blocking and reinforcement specified in other Sections.
3. Show locations and sizes of cutouts and holes for electrical switches and outlets and other items installed in architectural plastic-laminate cabinets.
4. Apply AWI Quality Certification Program label to Shop Drawings.

D. Samples for Initial Selection:

1. Plastic laminates.
2. PVC edge material.
3. Thermoset decorative panels.

E. Samples for Verification:

1. Plastic laminates, 8 by 10 inches, for each type, color, pattern, and surface finish, with one sample applied to core material and specified edge material applied to one edge.
2. Thermoset decorative panels, 8 by 10 inches, for each color, pattern, and surface finish, with edge banding on one edge.
3. Corner pieces as follows:

    a. Cabinet-front frame joints between stiles and rails, as well as exposed end pieces, 18 inches high by 18 inches wide by 6 inches deep.
    b. Miter joints for standing trim.

4. Exposed cabinet hardware and accessories, one unit for each type and finish.

1.5 INFORMATIONAL SUBMITTALS

A. Qualification Data: For Installer and/or fabricator.

B. Product Certificates: For the following:

1. Composite wood and agrifiber products.
2. Thermoset decorative panels.
3. High-pressure decorative laminate.
4. Glass.
5. Adhesives.

C. Woodwork Quality Standard Compliance Certificates: AWI Quality Certification Program certificates.

D. Evaluation Reports: For fire-retardant-treated materials, from ICC-ES.

1.6 QUALITY ASSURANCE

A. Fabricator Qualifications: Shop that employs skilled workers who custom fabricate products similar to those required for this Project and whose products have a record of successful in-service performance. Shop is a certified participant in AWI's Quality Certification Program.

B. Installer Qualifications: Fabricator of products.

C. Testing Agency Qualifications: For testing agency providing classification marking for fire-retardant-treated material, an inspection agency acceptable to authorities having jurisdiction that periodically performs inspections to verify that the material bearing the classification marking is representative of the material tested.

1.7 DELIVERY, STORAGE, AND HANDLING

A. Do not deliver cabinets until painting and similar operations that could damage woodwork have been completed in installation areas. If cabinets must be stored in other than installation areas, store only in areas where environmental conditions comply with requirements specified in "Field Conditions" Article.

1.8 FIELD CONDITIONS

A. Environmental Limitations: Do not deliver or install cabinets until building is enclosed, wet work is complete, and HVAC system is operating and maintaining temperature and relative humidity at occupancy levels during the remainder of the construction period.

B. Field Measurements: Where cabinets are indicated to fit to other construction, verify dimensions of other construction by field measurements before fabrication, and indicate

measurements on Shop Drawings. Coordinate fabrication schedule with construction progress to avoid delaying the Work.

1. Locate concealed framing, blocking, and reinforcements that support cabinets by field measurements before being enclosed, and indicate measurements on Shop Drawings.

C. Established Dimensions: Where cabinets are indicated to fit to other construction, establish dimensions for areas where cabinets are to fit. Provide allowance for trimming at site, and coordinate construction to ensure that actual dimensions correspond to established dimensions.

1.9 COORDINATION

A. Coordinate sizes and locations of framing, blocking, furring, reinforcements, and other related units of Work specified in other Sections to ensure that cabinets can be supported and installed as indicated.

B. Hardware Coordination: Distribute copies of approved hardware schedule specified in Section 087111 "Door Hardware (Descriptive Specification)" to fabricator of architectural woodwork; coordinate Shop Drawings and fabrication with hardware requirements.

PART 2 - PRODUCTS

2.1 PLASTIC-LAMINATE-FACED ARCHITECTURAL CABINETS

A. Quality Standard: Unless otherwise indicated, comply with the "Architectural Woodwork Standards" for grades of architectural plastic-laminate cabinets indicated for construction, finishes, installation, and other requirements.

B. Grade: Custom.

C. Regional Materials: Plastic-laminate cabinets shall be manufactured within 500 miles of Project site.

D. Certified Wood: Plastic-laminate cabinets shall be made from wood products certified as "FSC Pure" according to FSC STD-01-001, "FSC Principles and Criteria for Forest Stewardship," and FSC STD-40-004, "FSC Standard for Chain of Custody Certification."

E. Type of Construction: Face frame.

F. Cabinet, Door, and Drawer Front Interface Style: Flush overlay.

G. Reveal Dimension: 1/2 inch.

H. High-Pressure Decorative Laminate: NEMA LD 3, grades as indicated or if not indicated, as required by woodwork quality standard.

1. Manufacturers: Subject to compliance with requirements, provide products by one of the following:

    a. Abet Laminati, Inc.
    b. Formica Corporation.
    c. Lamin-Art, Inc.
    d. Panolam Industries International, Inc.
    e. Wilsonart International; Div. of Premark International, Inc.

I. High Pressure Through-Color Decorative Laminate:

1. Manufacturer:

    a. Formica.
    b. Nevamar.

J. Laminate Cladding for Exposed Surfaces:

1. Horizontal Surfaces: Grade HGL.
2. Vertical Surfaces: Grade VGS.
3. Edges: PVC edge banding, 0.12 inch thick, matching laminate in color, pattern, and finish.
4. Pattern Direction: Vertically for doors and fixed panels, horizontally for drawer fronts.

K. Materials for Semiexposed Surfaces:

1. Surfaces Other Than Drawer Bodies: High-pressure decorative laminate, NEMA LD 3, Grade VGS.

    a. Edges of Plastic-Laminate Shelves: PVC edge banding, 0.12 inch thick, matching laminate in color, pattern, and finish.
    b. Edges of Thermoset Decorative Panel Shelves: PVC or polyester edge banding.
    c. For semiexposed backs of panels with exposed plastic-laminate surfaces, provide surface of high-pressure decorative laminate, NEMA LD 3, Grade VGS.

2. Drawer Sides and Backs: Thermoset decorative panels with PVC or polyester edge banding.
3. Drawer Bottoms: Thermoset decorative panels.

L. Dust Panels: 1/4-inch plywood or tempered hardboard above compartments and drawers unless located directly under tops.

M. Concealed Backs of Panels with Exposed Plastic-Laminate Surfaces: High-pressure decorative laminate, NEMA LD 3, Grade BKL.

N. Drawer Construction: Fabricate with exposed fronts fastened to subfront with mounting screws from interior of body.

1. Join subfronts, backs, and sides with glued rabbeted joints supplemented by mechanical fasteners or glued dovetail joints.

O. Colors, Patterns, and Finishes: Provide materials and products that result in colors and textures of exposed laminate surfaces complying with the following requirements:

1. Match Architect's sample.

2.2 WOOD MATERIALS

A. Wood Products: Provide materials that comply with requirements of referenced quality standard for each type of woodwork and quality grade specified unless otherwise indicated.

1. Wood Moisture Content: 4 to 9 percent.

B. Composite Wood and Agrifiber Products: Provide materials that comply with requirements of referenced quality standard for each type of woodwork and quality grade specified unless otherwise indicated.

1. Medium-Density Fiberboard: ANSI A208.2, Grade 130, made with binder containing no urea formaldehyde.
2. Particleboard: ANSI A208.1, Grade M-2, made with binder containing no urea formaldehyde.
3. Particleboard: Straw-based particleboard complying with requirements in ANSI A208.1, Grade M-2, except for density.
4. Softwood Plywood: DOC PS 1, medium-density overlay.
5. Veneer-Faced Panel Products (Hardwood Plywood): HPVA HP-1, made with adhesive containing no urea formaldehyde.
6. Thermoset Decorative Panels: Particleboard or medium-density fiberboard finished with thermally fused, melamine-impregnated decorative paper and complying with requirements of NEMA LD 3, Grade VGL, for test methods 3.3, 3.4, 3.6, 3.8, and 3.10.

2.3 CABINET HARDWARE AND ACCESSORIES

A. General: Provide cabinet hardware and accessory materials associated with architectural cabinets except for items specified in Section 087111 "Door Hardware (Descriptive Specification)."

B. Frameless Concealed Hinges (European Type): BHMA A156.9, B01602, 135 degrees of opening.

1. **Basis-of-Design: Grass institutional hinges.**

C. Wire Pulls: Back mounted, solid metal, 4 inches long, 5/16 inch in diameter.

D. Stainless Steel Pulls.

E. Catches: Ball friction catches, BHMA A156.9, B03013.

F. **Grommet: 12 inches by 3 inches stainless steel polished.**

G. **Pullout wire pantry storage at gaming and climbing.**

1. **Basis-of-Design: Rev-A-Shelf pullout wire tall pantry accessories.**

H. **LED Strip Lighting: Basis-of-Design: Specialty LED; RFX series.**

I. Adjustable Shelf Standards and Supports: BHMA A156.9, B04071; with shelf rests, B04081.

J. Shelf Rests: BHMA A156.9, B04013; metal.

K. Drawer Slides: BHMA A156.9.

1. Grade 1HD-100 and Grade 1HD-200: Side mounted; full-extension type; zinc-plated-steel ball-bearing slides.
2. For drawers not more than 3 inches high and not more than 24 inches wide, provide Grade 1.
3. For drawers more than 3 inches high but not more than 6 inches high and not more than 24 inches wide, provide Grade 1HD-100.
4. For drawers more than 6 inches high or more than 24 inches wide, provide Grade 1HD-200.

L. Door Locks: BHMA A156.11, E07121.

M. Drawer Locks: BHMA A156.11, E07041.

N. Door and Drawer Silencers: BHMA A156.16, L03011.

O. Exposed Hardware Finishes: For exposed hardware, provide finish that complies with BHMA A156.18 for BHMA finish number indicated.

1. Satin Stainless Steel: BHMA 630.

P. For concealed hardware, provide manufacturer's standard finish that complies with product class requirements in BHMA A156.9.

Q. **Handles: Back Mounted Solid stainless steel, sizes as indicated.**

1. **Basis-of-Design: Sugatsune 27 series.**

a. **Material: 304 stainless steel.**
b. **Finish: Stain.**

2.4 MISCELLANEOUS MATERIALS

A. Furring, Blocking, Shims, and Hanging Strips: Softwood or hardwood lumber and Fire-retardant-treated softwood lumber, kiln dried to less than 15 percent moisture content.

B. Anchors: Select material, type, size, and finish required for each substrate for secure anchorage. Provide metal expansion sleeves or expansion bolts for post-installed anchors. Use nonferrous-metal or hot-dip galvanized anchors and inserts at inside face of exterior walls and at floors.

C. Adhesives: Do not use adhesives that contain urea formaldehyde.

D. Adhesive for Bonding Plastic Laminate: Unpigmented contact cement.

1. Adhesive for Bonding Edges: Hot-melt adhesive or adhesive specified above for faces.

2.5 FABRICATION

A. Fabricate cabinets to dimensions, profiles, and details indicated.

B. Complete fabrication, including assembly and hardware application, to maximum extent possible before shipment to Project site. Disassemble components only as necessary for shipment and installation. Where necessary for fitting at site, provide ample allowance for scribing, trimming, and fitting.

1. Notify Architect seven days in advance of the dates and times woodwork fabrication will be complete.
2. Trial fit assemblies at fabrication shop that cannot be shipped completely assembled. Install dowels, screws, bolted connectors, and other fastening devices that can be removed after trial fitting. Verify that various parts fit as intended and check measurements of assemblies against field measurements before disassembling for shipment.

C. Shop-cut openings to maximum extent possible to receive hardware, appliances, electrical work, and similar items. Locate openings accurately and use templates or roughing-in diagrams to produce accurately sized and shaped openings. Sand edges of cutouts to remove splinters and burrs.

PART 3 - EXECUTION

3.1 PREPARATION

A. Before installation, condition cabinets to average prevailing humidity conditions in installation areas.

B. Before installing cabinets, examine shop-fabricated work for completion and complete work as required.

3.2 INSTALLATION

A. Grade: Install cabinets to comply with same grade as item to be installed.

B. Assemble cabinets and complete fabrication at Project site to the extent that it was not completed in the shop.

C. Install cabinets level, plumb, true, and straight. Shim as required with concealed shims. Install level and plumb to a tolerance of 1/8 inch in 96 inches.

D. Scribe and cut cabinets to fit adjoining work, refinish cut surfaces, and repair damaged finish at cuts.

E. Anchor cabinets to anchors or blocking built in or directly attached to substrates. Secure with countersunk, concealed fasteners and blind nailing. Use fine finishing nails or finishing screws for exposed fastening, countersunk and filled flush with woodwork.

1. Use filler matching finish of items being installed.

F. Cabinets: Install without distortion so doors and drawers fit openings properly and are accurately aligned. Adjust hardware to center doors and drawers in openings and to provide unencumbered operation. Complete installation of hardware and accessory items as indicated.

1. Install cabinets with no more than 1/8 inch in 96-inch sag, bow, or other variation from a straight line.
2. Fasten wall cabinets through back, near top and bottom, and at ends not more than 16 inches o.c. with No. 10 wafer-head sheet metal screws through metal backing or metal framing behind wall finish.

3.3 ADJUSTING AND CLEANING

A. Repair damaged and defective cabinets, where possible, to eliminate functional and visual defects; where not possible to repair, replace woodwork. Adjust joinery for uniform appearance.

B. Clean, lubricate, and adjust hardware.

C. Clean cabinets on exposed and semiexposed surfaces.

END OF SECTION 064116

SECTION 077129 - MANUFACTURED ROOF EXPANSION JOINTS

PART 1 - GENERAL

1.1 RELATED DOCUMENTS

A. Drawings and general provisions of the Contract, including General and Supplementary Conditions and Division 01 Specification Sections, apply to this Section.

1.2 SUMMARY

A. Section Includes:

1. Bellows-type roof expansion joints.
2. Aluminum roof expansion joints.

B. Related Requirements:

1. Section 061000 "Rough Carpentry" for wooden curbs or cants for mounting roof expansion joints.
2. Section 075419 “PVC Roofing” for roofing system.

1.3 PREINSTALLATION MEETINGS

A. Preinstallation Conference: Conduct conference at Project site.

1.4 ACTION SUBMITTALS

A. Product Data: For each type of product.

B. LEED Submittals:

1. Product Data for Credit EQ 4.1: For installation adhesives, documentation including printed statement of VOC content.
2. Laboratory Test Reports for Credit EQ 4: For adhesives, documentation indicating that products comply with the testing and product requirements of the California Department of Health Services' "Standard Practice for the Testing of Volatile Organic Emissions from Various Sources Using Small-Scale Environmental Chambers."

C. Shop Drawings: For roof expansion joints.

1. Include plans, elevations, sections, and attachment details.

2. Include details of splices, intersections, transitions, fittings, method of field assembly, and location and size of each field splice.
3. Provide isometric drawings of intersections, terminations, and changes in joint direction or planes, depicting how components interconnect with each other and adjacent construction to allow movement and achieve waterproof continuity.

D. Samples: For each exposed product and for each color specified, 6 inches (150 mm) in size.

1.5 INFORMATIONAL SUBMITTALS

A. Qualification Data: For Installer.

B. Product Test Reports: For each fire-barrier provided as part of a roof-expansion-joint assembly, for tests performed by a qualified testing agency.

C. Sample Warranties: For special warranties.

1.6 QUALITY ASSURANCE

A. Installer Qualifications: Installer of roofing membrane.

1.7 WARRANTY

A. Special Warranty: Manufacturer and Installer agree to repair or replace roof expansion joints and components that leak, deteriorate beyond normal weathering, or otherwise fail in materials or workmanship within specified warranty period.

1. Warranty Period: Five years from date of Substantial Completion.

B. Special Warranty on Painted Finishes: Manufacturer's standard form in which manufacturer agrees to repair finish or replace roof expansion joints that show evidence of deterioration of factory-applied finishes within specified warranty period.

1. Fluoropolymer Finish: Deterioration includes, but is not limited to, the following:

a. Color fading more than five Hunter units when tested according to ASTM D 2244.
b. Chalking in excess of a No. 8 rating when tested according to ASTM D 4214.
c. Cracking, checking, peeling, or failure of paint to adhere to bare metal.

2. Warranty Period: **20** years from date of Substantial Completion.

PART 2 - PRODUCTS

2.1 PERFORMANCE REQUIREMENTS

A. General: Roof expansion joints shall withstand exposure to weather, remain watertight, and resist the movements indicated without failure, rattling, leaking, or fastener disengagement due to defective manufacture, fabrication, installation, or other defects in construction.

B. Thermal Movements: Allow for thermal movements from ambient and surface temperature changes to prevent buckling, opening of joints, hole elongation, overstressing of components, failure of joint seals, failure of connections, and other detrimental effects.

1. Temperature Change: 180 deg F (100 deg C), material surfaces.

C. Fire-Test-Response Characteristics: Provide fire-barrier assemblies with fire-test-response characteristics as determined by testing identical products, per test method indicated, by UL or another testing agency acceptable to authorities having jurisdiction. Assemblies shall be capable of anticipated movement while maintaining fire rating. Fire-barrier products shall bear classification marking of qualified testing agency.

2.2 BELLOWS-TYPE ROOF EXPANSION JOINTS

A. Source Limitations: Obtain bellows-type roof expansion joints approved by roofing manufacturer and that are part of roofing membrane warranty.

B. Flanged Bellows Roof Expansion Joint **EJ-R3**:

1. Manufactured, continuous, waterproof, joint-cover assembly, consisting of exposed membrane bellows, laminated to flexible, closed-cell support foam, and secured along each edge to a 3- to 4-inch- (76- to 100-mm-) wide metal flange for nailing to substrate. Provide each size and type indicated, factory-fabricated units for corner and joint intersections and horizontal and vertical transitions including those to other building expansion joints, splicing units, adhesives, and other components as recommended by roof-expansion-joint manufacturer for complete installation. Fabricate each assembly specifically for installation configuration indicated on Drawings.

2. Basis-of-Design Product: Subject to compliance with requirements, provide Balco BRBG-CSE or comparable product by one of the following:

a. Architectural Art Manufacturing Inc.; a division of Pittcon Architectural Metals, LLC.
b. Balco, Inc.
c. Building Materials Corporation of America; GAF Materials Corporation.
d. C/S Group.
e. InPro Corporation.

f. Johns Manville; a Berkshire Hathaway company.
g. MM Systems Corporation.
h. Watson Bowman Acme Corp.

3. Joint Movement Capability: 100%t of joint size.
4. Bellows: Neoprene flexible membrane, nominal 60 mils (1.5 mm) thick.

   a. Color: Black.

5. Flanges: Stainless steel, 0.019 inch (0.48 mm) thick.

   a. Form: Angle formed to fit curbs as indicated on Drawings.
   b. Mortar Flanges: Where flanges will be embedded in concrete or mortar, provide perforated-metal mortar flanges.

6. Cover Membrane: PVC flexible membrane, factory laminated to bellows and covering entire joint assembly and curbs.

   a. Color: White.

7. Secondary Seal: Continuous, waterproof PVC membrane within joint and attached to substrate on sides of joint below the primary bellows assembly.

   a. Drain-Tube Assemblies: Equip secondary seal with drain tubes and seals to direct collected moisture to exterior-wall expansion joint cover.
   b. Thermal Insulation: Fill space above secondary seal with mineral-fiber blanket insulation; with maximum flame-spread and smoke-developed indexes of 25 and 50, respectively, per ASTM E 84.

1. Fire Barrier: Manufacturer's standard fire-resistive joint system with ratings determined per ASTM E 1966 to resist spread of fire and accommodate building thermal and seismic movements without impairing its ability to resist the passage of fire and hot gases.

   a. Fire-Resistance Rating: Not less than fire-resistance rating of adjacent construction.

C. Flanged Bellows Roof Expansion Joint **EJ-R4**:

1. Manufactured, continuous, waterproof, joint-cover assembly, consisting of exposed membrane bellows, laminated to flexible, closed-cell support foam, and secured along each edge to a 3- to 4-inch- (76- to 100-mm-) wide metal flange for nailing to substrate. Provide each size and type indicated, factory-fabricated units for corner and joint intersections and horizontal and vertical transitions including those to other building expansion joints, splicing units, adhesives, and other components as recommended by roof-expansion-joint manufacturer for complete installation. Fabricate each assembly specifically for installation configuration indicated on Drawings.

2. Basis-of-Design Product: Subject to compliance with requirements, provide Balco BRBG-CE or comparable product by one of the following:

    a. Architectural Art Manufacturing Inc.; a division of Pittcon Architectural Metals, LLC.
    b. Balco, Inc.
    c. Building Materials Corporation of America; GAF Materials Corporation.
    d. C/S Group.
    e. InPro Corporation.
    f. Johns Manville; a Berkshire Hathaway company.
    g. MM Systems Corporation.
    h. Watson Bowman Acme Corp.

3. Joint Movement Capability: 100%t of joint size.
4. Bellows: Neoprene flexible membrane, nominal 60 mils (1.5 mm) thick.

    a. Color: Black.

5. Flanges: Stainless steel, 0.019 inch (0.48 mm) thick.

    a. Form: Angle formed to fit curbs as indicated on Drawings.
    b. Mortar Flanges: Where flanges will be embedded in concrete or mortar, provide perforated-metal mortar flanges.

6. Cover Membrane: PVC flexible membrane, factory laminated to bellows and covering entire joint assembly and curbs.

    a. Color: White.

7. Secondary Seal: Continuous, waterproof PVC membrane within joint and attached to substrate on sides of joint below the primary bellows assembly.

    a. Drain-Tube Assemblies: Equip secondary seal with drain tubes and seals to direct collected moisture to exterior-wall expansion joint cover.
    b. Thermal Insulation: Fill space above secondary seal with mineral-fiber blanket insulation; with maximum flame-spread and smoke-developed indexes of 25 and 50, respectively, per ASTM E 84.

8. Fire Barrier: Manufacturer's standard fire-resistive joint system with ratings determined per ASTM E 1966 to resist spread of fire and accommodate building thermal and seismic movements without impairing its ability to resist the passage of fire and hot gases.

    a. Fire-Resistance Rating: Not less than fire-resistance rating of adjacent construction.

2.3 ALUMINUM ROOF EXPANSION JOINTS

A. Aluminum Roof Expansion Joint **EJ-R1**

1. Manufactured, continuous, waterproof, joint-cover assembly; consisting of a formed or extruded metal cover secured to extruded aluminum frames, with water-resistant gasketing between cover and frames, and with provision for securing assembly to substrate and sealing assembly to roofing membrane or flashing. Provide each size and type indicated, factory-fabricated units for corner and joint intersections and horizontal and vertical transitions including those to other building expansion joints, splicing units, adhesives, and other components as recommended by roof-expansion-joint manufacturer for complete installation. Fabricate each assembly specifically for installation configuration indicated on Drawings.

2. Basis-of-Design Product: Subject to compliance with requirements, Balco LPRE or comparable product by one of the following:

   a. Architectural Art Manufacturing Inc.; a division of Pittcon Architectural Metals, LLC.
   b. Balco, Inc.
   c. C/S Group.
   d. Nystrom Building Products.
   e. Watson Bowman Acme Corp.

3. Joint Movement Capability: 100%.
4. Frame Members: Extruded aluminum configured for sloped cants as indicated; with exposed finish matching cover.
5. Cover: Extruded aluminum; thickness as recommended by manufacturer.

   a. Aluminum Finish: Clear anodic.

6. Centering Devices: Centering bars.
7. Secondary Seal: Continuous, waterproof PVC membrane within joint and attached to substrate on sides of joint below the cover.

   a. Drain-Tube Assemblies: Equip secondary seal with drain tubes and seals to direct collected moisture to exterior-wall expansion joint cover.
   b. Thermal Insulation: Fill space above secondary seal with mineral-fiber blanket insulation; with maximum flame-spread and smoke-developed indexes of 25 and 50, respectively, per ASTM E 84.

8. Fire Barrier: Manufacturer's standard fire-resistive joint system with ratings determined per ASTM E 1966 to resist spread of fire and accommodate building thermal and seismic movements without impairing its ability to resist the passage of fire and hot gases.

a. Fire-Resistance Rating: Not less than fire-resistance rating of adjacent construction.

B. Aluminum Roof Expansion Joint **EJ-R2**

1. Manufactured, continuous, waterproof, joint-cover assembly; consisting of a formed or extruded metal cover secured to extruded aluminum frames, with water-resistant gasketing between cover and frames, and with provision for securing assembly to substrate and sealing assembly to roofing membrane or flashing. Provide each size and type indicated, factory-fabricated units for corner and joint intersections and horizontal and vertical transitions including those to other building expansion joints, splicing units, adhesives, and other components as recommended by roof-expansion-joint manufacturer for complete installation. Fabricate each assembly specifically for installation configuration indicated on Drawings.

2. Basis-of-Design Product: Subject to compliance with requirements, Balco LPRR or comparable product by one of the following:

   a. Architectural Art Manufacturing Inc.; a division of Pittcon Architectural Metals, LLC.
   b. Balco, Inc.
   c. C/S Group.
   d. Nystrom Building Products.
   e. Watson Bowman Acme Corp.

3. Joint Movement Capability: 100%.
4. Frame Members: Extruded aluminum configured for sloped cants as indicated; with exposed finish matching cover.
5. Cover: Extruded aluminum; thickness as recommended by manufacturer.

   a. Aluminum Finish: Clear anodic.

6. Centering Devices: Centering bars.
7. Secondary Seal: Continuous, waterproof PVC membrane within joint and attached to substrate on sides of joint below the cover.

   a. Drain-Tube Assemblies: Equip secondary seal with drain tubes and seals to direct collected moisture to exterior-wall expansion joint cover.
   b. Thermal Insulation: Fill space above secondary seal with mineral-fiber blanket insulation; with maximum flame-spread and smoke-developed indexes of 25 and 50, respectively, per ASTM E 84.

1. Fire Barrier: Manufacturer's standard fire-resistive joint system with ratings determined per ASTM E 1966 to resist spread of fire and accommodate building thermal and seismic movements without impairing its ability to resist the passage of fire and hot gases.

a. Fire-Resistance Rating: Not less than fire-resistance rating of adjacent construction.

2.4 MATERIALS

A. Galvanized-Steel Sheet: ASTM A 653/A 653M, hot-dip zinc-coating designation G90 (Z275).

B. Copper Sheet: ASTM B 370, cold-rolled copper sheet, H00 or H01 temper.

C. Stainless-Steel Sheet: ASTM A 240/A 240M or ASTM A 666, Type 304.

D. Aluminum: ASTM B 209 (ASTM B 209M) for sheet and plate, ASTM B 221 (ASTM B 221M) for extrusions; alloy as standard with manufacturer for finish required, with temper to suit forming operations and performance required.

1. Apply manufacturer's standard protective coating on aluminum surfaces to be placed in contact with cementitious or preservative-treated wood materials.
2. Mill Finish: As manufactured.
3. Class II, Clear Anodic Finish: Architectural Class II, clear coating 0.010 mm or thicker, complying with AAMA 611.
4. Class I, Clear Anodic Finish: Architectural Class I, clear coating 0.018 mm or thicker, complying with AAMA 611.
5. Class I, Color Anodic Finish: Architectural Class I, integrally colored or electrolytically deposited color coating 0.018 mm or thicker, complying with AAMA 611.
6. High-Performance Organic Finish: Prepare, pretreat, and apply coating to exposed metal surfaces to comply with coating and resin manufacturers' written instructions.

a. Two-Coat Fluoropolymer: System consisting of primer and fluoropolymer color topcoat containing not less than 70 percent PVDF resin by weight.
b. Three-Coat Fluoropolymer: System consisting of primer, fluoropolymer color coat, and clear fluoropolymer topcoat, with both color coat and clear topcoat containing not less than 70 percent PVDF resin by weight.

E. EPDM Membrane: ASTM D 4637, Type standard with manufacturer for application.

F. Neoprene Membrane: Neoprene sheet recommended by EPDM manufacturer for resistance to hydrocarbons, non-aromatic solvents, grease, and oil; and as standard with roof-expansion-joint manufacturer for application.

G. PVC Membrane: ASTM D 4434, Type standard with manufacturer for application.

H. Silicone Extrusions: ASTM D 2000, UV stabilized, and that does not propagate flame.

I. Adhesives: As recommended by roof-expansion-joint manufacturer and with a VOC content of **70**g/L or less when calculated according to 40 CFR 59, Subpart D (EPA Method 24).

J. Adhesives: As recommended by roof-expansion-joint manufacturer and that comply with the testing and product requirements of the California Department of Health Services' "Standard Practice for the Testing of Volatile Organic Emissions from Various Sources Using Small-Scale Environmental Chambers."

K. Fasteners: Manufacturer's recommended fasteners, suitable for application and designed to withstand design loads.

1. Exposed Fasteners: Gasketed. Use screws with hex washer heads matching color of material being fastened.

L. Mineral-Fiber Blanket: ASTM C 665.

M. Bituminous Coating: Cold-applied asphalt emulsion complying with ASTM D 1187.

PART 3 - EXECUTION

3.1 EXAMINATION

A. Examine substrates, areas, and conditions, with Installer present, to verify actual locations, dimensions, and other conditions affecting performance of the Work.

B. Examine roof-joint openings, inside surfaces of parapets, and expansion-control joint systems that interface with roof expansion joints, for suitable conditions where roof expansion joints will be installed.

C. Verify that substrate is sound, dry, smooth, clean, sloped for drainage, and securely anchored.

D. Proceed with installation only after unsatisfactory conditions have been corrected.

3.2 INSTALLATION

A. General: Comply with manufacturer's written instructions for handling and installing roof expansion joints.

1. Anchor roof expansion joints securely in place, with provisions for required movement. Use fasteners, protective coatings, sealants, and miscellaneous items as required to complete roof expansion joints.
2. Install roof expansion joints true to line and elevation; with limited oil-canning and without warping, jogs in alignment, buckling, or tool marks.
3. Provide for linear thermal expansion of roof expansion joint materials.
4. Provide uniform profile of roof expansion joint throughout its length; do not stretch or squeeze membranes.
5. Provide uniform, neat seams.
6. Install roof expansion joints to fit substrates and to result in watertight performance.

7. Torch cutting of roof expansion joints is not permitted.
8. Do not use graphite pencils to mark aluminum surfaces.

B. Directional Changes and Other Expansion-Control Joint Systems: Coordinate installation of roof expansion joints with other expansion-control joint systems to result in watertight performance. Install factory-fabricated units at directional changes and at transitions between roof expansion joints and exterior expansion-control joint systems specified in Section 079500 "Expansion Control" to provide continuous, uninterrupted, and watertight joints.

C. Splices: Splice roof expansion joints with materials provided by roof-expansion-joint manufacturer for this purpose, to provide continuous, uninterrupted, and waterproof joints.

1. Install waterproof splices and prefabricated end dams to prevent leakage of secondary-seal membrane.

D. Fire Barrier: Install fire barrier where indicated to provide continuous, uninterrupted fire resistance throughout length of roof expansion joint, including transitions and end joints.

E. Metal Protection: Protect metals against galvanic action by separating dissimilar metals from contact with each other or with corrosive substrates by painting contact surfaces with bituminous coating or by other permanent separation as recommended by manufacturer.

3.3 PROTECTION

A. Protect roof expansion joints from foot traffic, displacement, or other damage.

B. Remove and replace roof expansion joints and components that become damaged by moisture or otherwise.

END OF SECTION 077129

SECTION 079500 - EXPANSION CONTROL

PART 1 - GENERAL

1.1 RELATED DOCUMENTS

A. Drawings and general provisions of the Contract, including General and Supplementary Conditions and Division 01 Specification Sections, apply to this Section.

1.2 SUMMARY

A. Section Includes:

1. Interior expansion control systems.
2. Exterior wall expansion control systems.
3. Parking and open-air structure expansion control systems.

B. Related Requirements:

1. Section 077129 "Manufactured Roof Expansion Joints" for factory-fabricated roof expansion control.
2. Section 078446 "Fire-Resistive Joint Systems" for liquid-applied joint sealants in fire-resistive building joints.
3. Section 079200 "Joint Sealants" for liquid-applied joint sealants and for elastomeric sealants without metal frames.

1.3 ACTION SUBMITTALS

A. Shop Drawings: For each expansion control system specified. Include plans, elevations, sections, details, splices, blockout requirement, attachments to other work, and line diagrams showing entire route of each expansion control system. Where expansion control systems change planes, provide isometric or clearly detailed drawing depicting how components interconnect.

B. Samples: For each exposed expansion control system and for each color and texture specified, full width by 6 inches (150 mm) long in size.

C. Samples for Initial Selection: For each type of expansion control system indicated.

1. Include manufacturer's color charts showing the full range of colors and finishes available for each exposed metal and elastomeric seal material.

D. Samples for Verification: For each type of expansion control system indicated, full width by 6 inches (150 mm) long in size.

E. Product Schedule: Prepared by or under the supervision of the supplier. Include the following information in tabular form:

1. Manufacturer and model number for each expansion control system.
2. Expansion control system location cross-referenced to Drawings.
3. Nominal joint width.
4. Movement capability.
5. Classification as thermal or seismic.
6. Materials, colors, and finishes.
7. Product options.
8. Fire-resistance ratings.

1.4 INFORMATIONAL SUBMITTALS

A. Product Test Reports: For each fire barrier provided as part of an expansion control system, for tests performed by a qualified testing agency.

PART 2 - PRODUCTS

2.1 SYSTEM DESCRIPTION

A. General: Provide expansion control systems of design, basic profile, materials, and operation indicated. Provide units with capability to accommodate variations in adjacent surfaces.

1. Furnish units in longest practicable lengths to minimize field splicing. Install with hairline mitered corners where expansion control systems change direction or abut other materials.
2. Include factory-fabricated closure materials and transition pieces, T-joints, corners, curbs, cross-connections, and other accessories as required to provide continuous expansion control systems.

B. Coordination: Coordinate installation of exterior wall and soffit expansion control systems with roof expansion control systems to ensure that wall transitions are watertight. Roof expansion joint assemblies are specified elsewhere.

2.2 PERFORMANCE REQUIREMENTS

A. Fire-Resistance Ratings: Where indicated, provide expansion control systems with fire barriers identical to those of systems tested for fire resistance per UL 2079 or ASTM E 1966 by a testing and inspecting agency acceptable to authorities having jurisdiction.

1. Hose Stream Test: Wall-to-wall and wall-to-ceiling systems shall be subjected to hose stream testing.

B. Seismic Performance: Expansion control systems shall withstand the effects of earthquake motions determined according to **ASCE/SEI 7**.

1. The term "withstand" means "the system will remain in place without separation of any parts when subjected to the seismic forces specified."
2. Component Importance Factor:
   a. Parking Garage: 1.0
   b. Student Life Center 1.25.

2.3 INTERIOR EXPANSION CONTROL SYSTEMS

A. Basis-of-Design Product: Subject to compliance with requirements, provide product indicated or a comparable product by one of the following:

1. Architectural Art Mfg., Inc.; Division of Pittcon Industries.
2. Balco, Inc.
3. Construction Specialties, Inc.
4. JointMaster/InPro Corporation.
5. Michael Rizza Company, LLC.
6. MM Systems Corporation.
7. Nystrom, Inc.
8. Watson Bowman Acme Corp.; a BASF Construction Chemicals business.

B. Source Limitations: Obtain expansion control systems from single source from single manufacturer.

C. Floor-to-Floor – **EJ-F1**

1. Basis-of-Design Product: Balco EXB.
2. Design Criteria:
   a. Minimum Joint Width: As indicated on Drawings.
   b. Movement Capability 100%.
   c. Type of Movement: Seismic.
   d. Load Capacity:

      1) Uniform Load: 150 lb/sq. ft. (732 kg/sq. m).
      2) Concentrated Load: 2000 lb (907 kg).
      3) Maximum Deflection: 0.5 inch (13 mm).

   e. Fire-Resistance Rating: Provide expansion control system and fire-barrier assembly with a rating not less than that of adjacent construction.

   f. Location: This joint assembly is to be used in support spaces or concealed spaces only.

3. Type: Center plate.

   a. Cover-Plate Design: Plain.

   b. Metal: Aluminum.

      1) Finish: Mill.

D. Floor-to-Floor – **EJ-F2**

1. Basis-of-Design Product: Balco NBR.
2. Design Criteria:
   a. Minimum Joint Width: As indicated on Drawings.
   b. Movement Capability: 100%.
   c. Type of Movement Seismic.
   d. Load Capacity:

      1) Uniform Load: 150 lb/sq. ft. (732 kg/sq. m).
      2) Concentrated Load: 2000 lb (907 kg).
      3) Maximum Deflection: 0.5 inch (13 mm).

   e. Fire-Resistance Rating: Provide expansion control system and fire-barrier assembly with a rating not less than that of adjacent construction.

3. Type: Pan.

   a. Cover-Plate Design: Recessed to accept field-applied finish materials.

      1) Cover-Plate Recess Depth: As required to accommodate adjacent flooring.

   b. Metal: Aluminum.

      1) Finish: Clear anodic, Class I.

E. Floor-to-Floor – **EJ-F3**

1. Basis-of-Design Product: Balco PS
2. Design Criteria:

   a. Minimum Joint Width: As indicated on Drawings.
   b. Movement Capability: 100%.
   c. Type of Movement: Seismic.
   d. Load Capacity:

      1) Uniform Load: 150 lb/sq. ft. (732 kg/sq. m).
      2) Concentrated Load: 2000 lb (907 kg).
      3) Maximum Deflection: 0.5 inch (13 mm).

e. Fire-Resistance Rating: Provide expansion control system and fire-barrier assembly with a rating not less than that of adjacent construction.

3. Type: Pan.

a. Cover-Plate Design: Recessed to accept field-applied finish materials.

1) Cover-Plate Recess Depth: As required to accommodate adjacent flooring.

b. Metal: Aluminum.

1) Finish: Clear anodic, Class I

F. Floor-to-Wall – **EJ-FW1**:

1. Basis-of-Design Product: Balco EXBL.
2. Design Criteria:
   a. Minimum Joint Width: As indicated on Drawings.
   b. Movement Capability 100%.
   c. Type of Movement: Seismic.
   d. Load Capacity:

      1) Uniform Load: 150 lb/sq. ft. (732 kg/sq. m).
      2) Concentrated Load: 2000 lb (907 kg).
      3) Maximum Deflection: 0.5 inch (13 mm).

   e. Fire-Resistance Rating: Provide expansion control system and fire-barrier assembly with a rating not less than that of adjacent construction.

   f. Location: This joint assembly is to be used in support spaces or concealed spaces only.

3. Type: Center plate.

   a. Cover-Plate Design: Plain.

   b. Metal: Aluminum.

      1) Finish: Mill.

G. Floor-to-Wall – **EJ-FW2**

1. Basis-of-Design Product: Balco NBRL.
2. Design Criteria:

   a. Minimum Joint Width: As indicated on Drawings.

b. Movement Capability: 100%.
c. Type of Movement Seismic.
d. Load Capacity:

1) Uniform Load: 150 lb/sq. ft. (732 kg/sq. m).
2) Concentrated Load: 2000 lb (907 kg).
3) Maximum Deflection: 0.5 inch (13 mm).

e. Fire-Resistance Rating: Provide expansion control system and fire-barrier assembly with a rating not less than that of adjacent construction.

3. Type: Pan.

a. Cover-Plate Design: Recessed to accept field-applied finish materials.

1) Cover-Plate Recess Depth: As required to accommodate adjacent flooring.

b. Metal: Aluminum.

1) Finish: Clear anodic, Class I.

H. Wall-to-Wall -- **EJ-W1**

1. Basis-of-Design Product:
a. Balco GCVS
2. Design Criteria:
a. Minimum Joint Width: As indicated on Drawings.
b. Movement Capability: 100%
c. Type of Movement: Seismic.
d. Substrate: Gypsum board on steel studs.
e. Fire-Resistance Rating: Provide expansion control system and fire-barrier assembly with a rating not less than that of adjacent construction.

3. Type: Elastomeric seal.

a. Metal: Aluminum.

1) Finish: Clear anodic, Class I

b. Seal Material: Santoprene.

1) Color: As selected by Architect from manufacturer's full range.

I. Wall-to-Wall -- **EJ-W2**

1. Basis-of-Design Product: Balco TCVS
2. Design Criteria:

a. Minimum Joint Width: As indicated on Drawings.
b. Movement Capability: 100%
c. Type of Movement: Seismic.
d. Substrate: Cast in place concrete or concrete masonry units.
e. Fire-Resistance Rating: Provide expansion control system and fire-barrier assembly with a rating not less than that of adjacent construction.

3. Type: Elastomeric seal.

a. Metal: Aluminum.

1) Finish: Clear anodic, Class I

b. Seal Material: Santoprene.

1) Color: As selected by Architect from manufacturer's full range.

J. Wall Corner – **EJ-W3**

1. Basis-of-Design Product: Balco GCVSC
2. Design Criteria:
   a. Minimum Joint Width: As indicated on Drawings.
   b. Movement Capability: 100%
   c. Type of Movement Seismic.
   d. Substrate: Gypsum board on steel studs.
   e. Fire-Resistance Rating: Provide expansion control system and fire-barrier assembly with a rating not less than that of adjacent construction.

3. Type: Elastomeric seal.

a. Metal: Aluminum.

1) Finish: Clear anodic, Class I.

b. Seal Material: Santoprene.

1) Color: As selected by Architect from manufacturer's full range.

K. Wall-to-Ceiling -- **EJ-WC1**

1. Basis-of-Design Product: Balco GCVSC.
2. Design Criteria:

a. Minimum Joint Width: As indicated on Drawings.
b. Movement Capability: 100%.
c. Type of Movement: Seismic.
d. Substrate: Gypsum board on steel studs.

e. Fire-Resistance Rating: Provide expansion control system and fire-barrier assembly with a rating not less than that of adjacent construction

3. Type: Elastomeric seal.

a. Metal: Aluminum.

1) Finish: Clear anodic, Class I.

b. Seal Material: Santoprene.

1) Color: As selected by Architect from manufacturer's full range.

L. Wall-to-Ceiling -- **EJ-WC2**

1. Basis-of-Design Product: Balco ACW.
2. Design Criteria:

a. Minimum Joint Width: As indicated on Drawings.
b. Movement Capability: 100%.
c. Type of Movement: Seismic.
d. Substrate: Acoustic ceiling panel in ceiling grid to gypsum board on steel studs..
e. Fire-Resistance Rating: Provide expansion control system and fire-barrier assembly with a rating not less than that of adjacent construction

3. Type: Elastomeric seal.

a. Metal: Aluminum.

1) Finish: Clear anodic, Class I.

b. Seal Material: Santoprene.

1) Color: As selected by Architect from manufacturer's full range.

M. Ceiling-to-Ceiling – **EJ-C1**

1. Basis-of-Design Product: Balco GCVS.
2. Design Criteria:

a. Minimum Joint Width: As indicated on Drawings.
b. Movement Capability: 100%.
c. Type of Movement: Seismic.
d. Substrate: Gypsum board on steel studs.
e. Fire-Resistance Rating: Provide expansion control system and fire-barrier assembly with a rating not less than that of adjacent construction

3. Type: Elastomeric seal.

   a. Metal: Aluminum.

      1) Finish: Clear anodic, Class I.

   b. Seal Material: Santoprene.

      1) Color: As selected by Architect from manufacturer's full range.

N. Ceiling-to-Ceiling – **EJ-C2**

1. Basis-of-Design Product: Balco ACW.
2. Design Criteria:

   a. Minimum Joint Width: As indicated on Drawings.
   b. Movement Capability: 100%.
   c. Type of Movement: Seismic.
   d. Substrate: Acoustic ceiling panel in ceiling grid.
   e. Fire-Resistance Rating: Provide expansion control system and fire-barrier assembly with a rating not less than that of adjacent construction

3. Type: Elastomeric seal.

   a. Metal: Aluminum.

      1) Finish: Clear anodic, Class I.

   b. Seal Material: Santoprene.

      1) Color: As selected by Architect from manufacturer's full range.

2.4 EXTERIOR WALL EXPANSION CONTROL SYSTEMS

A. Basis-of-Design Product: Subject to compliance with requirements, provide product indicated or a comparable product by one of the following:

1. Architectural Art Mfg., Inc.; Division of Pittcon Industries.
2. Balco, Inc.
3. Construction Specialties, Inc.
4. JointMaster/InPro Corporation.
5. Michael Rizza Company, LLC.
6. MM Systems Corporation.
7. Nystrom, Inc.
8. Watson Bowman Acme Corp.; a BASF Construction Chemicals business.

B. Source Limitations: Obtain expansion control systems from single source from single manufacturer.

C. Wall-to-Wall – **EJ-EW1**:

1. Basis-of-Design Product: Balco FCVS.
2. Design Criteria:

   a. Minimum Joint Width: As indicated on Drawings.
   b. Movement Capability: 100%
   c. Type of Movement: Seismic.
   d. Fire-Resistance Rating: Provide expansion control system and fire-barrier assembly with a rating not less than that of adjacent construction.

3. Type: Flat seal.

   a. Seal Material: Santoprene.

      1) Color: As selected by Architect from manufacturer's full range.

   b. Pantograph Mechanism: Manufacturer's standard pantographic wind-load support mechanism with stainless-steel fasteners.

D. Wall-to-Corner – **EJ-EW3**:

1. Basis-of-Design Product: Balco FCVS.
2. Design Criteria:

   a. Minimum Joint Width: As indicated on Drawings.
   b. Movement Capability: 100%
   c. Type of Movement: Seismic.
   d. Fire-Resistance Rating: Provide expansion control system and fire-barrier assembly with a rating not less than that of adjacent construction.

3. Type: Flat seal.

   a. Seal Material: Santoprene.

      1) Color: As selected by Architect from manufacturer's full range.

   b. Pantograph Mechanism: Manufacturer's standard pantographic wind-load support mechanism with stainless-steel fasteners.

E. Wall-to-Soffit – **EJ-EW5**:

1. Basis-of-Design Product: Balco FCVS.
2. Design Criteria:

   a. Minimum Joint Width: As indicated on Drawings.
   b. Movement Capability: 100%
   c. Type of Movement: Seismic.
   d. Fire-Resistance Rating: Provide expansion control system and fire-barrier assembly with a rating not less than that of adjacent construction.

3. Type: Flat seal.

   a. Seal Material: Santoprene.

      1) Color: As selected by Architect from manufacturer's full range.

   b. Pantograph Mechanism: Manufacturer's standard pantographic wind-load support mechanism with stainless-steel fasteners.

F. Soffit-to-Soffit **– EJ-EC1:**

1. Basis-of-Design Product: Balco FCVS.
2. Design Criteria:

   a. Minimum Joint Width: As indicated on Drawings.
   b. Movement Capability: 100%
   c. Type of Movement: Seismic.
   d. Fire-Resistance Rating: Provide expansion control system and fire-barrier assembly with a rating not less than that of adjacent construction.

3. Type: Flat seal.

   a. Seal Material: Santoprene.

      1) Color: As selected by Architect from manufacturer's full range.

   b. Pantograph Mechanism: Manufacturer's standard pantographic wind-load support mechanism with stainless-steel fasteners.

2.5 PARKING AND OPEN-AIR STRUCTURE EXPANSION CONTROL SYSTEMS

A. Basis-of-Design Product: Subject to compliance with requirements, provide product indicated or a comparable product by one of the following:

1. Architectural Art Mfg., Inc.; Division of Pittcon Industries.
2. Balco, Inc.

3. Construction Specialties, Inc.
4. JointMaster/InPro Corporation.
5. Michael Rizza Company, LLC.
6. MM Systems Corporation.
7. Nystrom, Inc.
8. Watson Bowman Acme Corp.; a BASF Construction Chemicals business.

B. Source Limitations: Obtain expansion control systems from single source from single manufacturer.

C. Slab-to-Slab – **EJ-PF1**:

1. Basis-of-Design Product: Balco SCPQ.
2. Design Criteria:

a. Minimum Joint Width: As indicated on Drawings
b. Movement Capability: 100%
c. Type of Movement: Seismic.
d. Load Capacity:

1) Uniform Load: 150 lb/sq. ft. (732 kg/sq. m).
2) Concentrated Load: 2000 lb (907 kg).
3) Maximum Deflection: 0.5 inch (13 mm).

e. Fire-Resistance Rating: Provide expansion control system and fire-barrier assembly with a rating not less than that of adjacent construction.

f. Moisture Barrier: Provide flexible elastomeric material as defined under 2.7 Materials.

3. Type: Metal plate.

a. Metal: Aluminum.

1) Finish: Mill.

b. Attachment Method: Cast in.

D. Slab-to-Wall -- **EJ-PF1**:

1. Basis-of-Design Product: Balco SCPQL.
2. Design Criteria:

a. Minimum Joint Width: As indicated on Drawings
b. Movement Capability: 100%
c. Type of Movement: Seismic.
d. Load Capacity:

1) Uniform Load: 150 lb/sq. ft. (732 kg/sq. m).
2) Concentrated Load: 2000 lb (907 kg).
3) Maximum Deflection: 0.5 inch (13 mm).

e. Fire-Resistance Rating: Provide expansion control system and fire-barrier assembly with a rating not less than that of adjacent construction.

f. Moisture Barrier: Provide flexible elastomeric material as defined under 2.7 Materials.

3. Type: Metal plate.

a. Metal: Aluminum.

1) Finish: Mill.

b. Attachment Method: Cast in.

2.6 ACCESSORIES

A. Moisture Barriers: Manufacturer's standard moisture barrier consisting of a continuous, waterproof membrane within joint and attached to substrate on sides of joint below the primary cover.

1. Drain-Tube Assemblies: Equip moisture barrier with drain tubes and seals to direct collected moisture to exterior-wall expansion control system.

2.7 MATERIALS

A. Aluminum: ASTM B 221 (ASTM B 221M), Alloy 6063-T5 for extrusions; ASTM B 209 (ASTM B 209M), Alloy 6061-T6 for sheet and plate.

1. Apply manufacturer's standard protective coating on aluminum surfaces to be placed in contact with cementitious materials.

B. Stainless Steel: ASTM A 240/A 240M or ASTM A 666, Type 304 for plates, sheet, and strips.

1. Remove tool and die marks and stretch lines or blend into finish.

C. Brass: ASTM B 36/B 36M, UNS Alloy C26000 for half hard sheet and coil.

D. Bronze: ASTM B 455, Alloy C38500 for extrusions; Alloy C23000 red brass for plates.

E. Elastomeric Seals: ASTM E 1783; preformed elastomeric membranes or extrusions to be installed in metal frames.

F. Compression Seals: ASTM E 1612; preformed elastomeric extrusions having an internal baffle system and designed to function under compression.

G. Cellular Foam Seals: Extruded, compressible foam designed to function under compression.

H. Elastomeric Concrete: Modified epoxy or polyurethane extended into a prepackaged aggregate blend, specifically designed for bonding to concrete substrates.

I. Fire Barriers: Any material or material combination, when fire tested after cycling, designated to resist the passage of flame and hot gases through a movement joint and to meet performance criteria for required fire-resistance rating.

J. Moisture Barrier: Flexible elastomeric material, PVC, minimum 30 mils thick.

K. Nonmetallic, Shrinkage-Resistant Grout: ASTM C 1107/C 1107M, factory-packaged, nonmetallic aggregate grout, noncorrosive, nonstaining, mixed with water to consistency suitable for application and a 30-minute working time.

L. Accessories: Manufacturer's standard anchors, clips, fasteners, set screws, spacers, and other accessories compatible with material in contact, as indicated or required for complete installations.

2.8 GENERAL FINISH REQUIREMENTS

A. Comply with NAAMM's "Metal Finishes Manual for Architectural and Metal Products" for recommendations for applying and designating finishes.

B. Protect mechanical finishes on exposed surfaces from damage by applying a strippable, temporary protective covering before shipping.

C. Appearance of Finished Work: Noticeable variations in same piece are not acceptable. Variations in appearance of adjoining components are acceptable if they are within the range of approved Samples and are assembled or installed to minimize contrast.

2.9 ALUMINUM FINISHES

A. Mill finish.

B. Clear Anodic Finish: AAMA 611, AA-M12C22A41, Class I, 0.018 mm or thicker.

2.10 STAINLESS-STEEL FINISHES

A. Surface Preparation: Remove tool and die marks and stretch lines, or blend into finish.

B. Polished Finishes: Grind and polish surfaces to produce uniform finish, free of cross scratches.

1. Run grain of directional finishes with long dimension of each piece.
2. When polishing is completed, passivate and rinse surfaces. Remove embedded foreign matter and leave surfaces chemically clean.
3. Directional Satin Finish: No. 4.

C. Bright, Cold-Rolled, Unpolished Finish: No. 2B.

PART 3 - EXECUTION

3.1 EXAMINATION

A. Examine surfaces where expansion control systems will be installed for installation tolerances and other conditions affecting performance of work.

1. Proceed with installation only after unsatisfactory conditions have been corrected.

3.2 PREPARATION

A. Prepare substrates according to expansion control system manufacturer's written instructions.

B. Coordinate and furnish anchorages, setting drawings, and instructions for installing expansion control systems. Provide fasteners of metal, type, and size to suit type of construction indicated and to provide for secure attachment of expansion control systems.

C. Cast-In Frames: Coordinate and furnish frames to be cast into concrete.

3.3 INSTALLATION

A. Comply with manufacturer's written instructions for storing, handling, and installing expansion control systems and materials unless more stringent requirements are indicated.

B. Metal Frames: Perform cutting, drilling, and fitting required to install expansion control systems.

1. Install in true alignment and proper relationship to joints and adjoining finished surfaces measured from established lines and levels.
2. Adjust for differences between actual structural gap and nominal design gap due to ambient temperature at time of installation. Notify Architect where discrepancies occur that will affect proper expansion control system installation and performance.
3. Cut and fit ends to accommodate thermal expansion and contraction of metal without buckling of frames.
4. Repair or grout blockout as required for continuous frame support using nonmetallic, shrinkage-resistant grout.
5. Install frames in continuous contact with adjacent surfaces.

a. Shimming is not permitted.

6. Locate anchors at interval recommended by manufacturer, but not less than 3 inches (75 mm) from each end and not more than 24 inches (600 mm) o.c.

C. Seals in Metal Frames: Install elastomeric seals and membranes in frames to comply with manufacturer's written instructions. Install with minimum number of end joints.

1. Provide in continuous lengths for straight sections.
2. Seal transitions according to manufacturer's written instructions. Vulcanize or heat-weld field-spliced joints as recommended by manufacturer.
3. Installation: Mechanically lock seals into frames or adhere to frames with adhesive or pressure-sensitive tape as recommended by manufacturer.

D. Compression Seals: Apply adhesive or lubricant adhesive as recommended by manufacturer to both sides of slabs before installing compression seals.

E. Foam Seals: Install with adhesive recommended by manufacturer.

F. Epoxy-Bonded Seals: Pressurize seal for time period and to pressure recommended by manufacturer. Do not overpressurize.

G. Terminate exposed ends of expansion control systems with field- or factory-fabricated termination devices.

H. Fire-Resistance-Rated Assemblies: Coordinate installation of expansion control system materials and associated work so complete assemblies comply with assembly performance requirements.

1. Fire Barriers: Install fire barriers to provide continuous, uninterrupted fire resistance throughout length of joint, including transitions and field splices.

I. Moisture Barrier: Provide at all exterior joints and where indicated on Drawings. Provide drainage fittings at a maximum of 50 feet (15.2 m) or where indicated on Drawings.

3.4 PROTECTION

A. Do not remove protective covering until finish work in adjacent areas is complete. When protective covering is removed, clean exposed metal surfaces to comply with manufacturer's written instructions.

B. Protect the installation from damage by work of other Sections. Where necessary due to heavy construction traffic, remove and properly store cover plates or seals and install temporary protection over expansion control systems. Reinstall cover plates or seals prior to Substantial Completion of the Work.

END OF SECTION 079500

SECTION 083326 - OVERHEAD COILING GRILLES

PART 1 - GENERAL

1.1 RELATED DOCUMENTS

A. Drawings and general provisions of the Contract, including General and Supplementary Conditions and Division 01 Specification Sections, apply to this Section.

1.2 SUMMARY

A. Section Includes:

1. Open-curtain overhead coiling grilles.

B. Related Sections:

1. Section 055000 "Metal Fabrications" for miscellaneous steel supports.

1.3 PERFORMANCE REQUIREMENTS

A. Delegated Design: Design overhead coiling grilles, including comprehensive engineering analysis by a qualified professional engineer, using performance requirements and design criteria indicated.

B. Seismic Performance: Overhead coiling grilles shall withstand the effects of earthquake motions determined according to SEI/ASCE 7.

1. The term "withstand" means "the unit will remain in place without separation of any parts from the device when subjected to the seismic forces specified."
2. Seismic Component Importance Factor: 1.25.

C. Operation Cycles: Provide overhead coiling grille components and operators capable of operating for not less than number of cycles indicated for each grille. One operation cycle is complete when a grille is opened from the closed position to the fully open position and returned to the closed position.

1.4 ACTION SUBMITTALS

A. Product Data: For each type and size of overhead coiling grille and accessory. Include the following:

1. Construction details, material descriptions, dimensions of individual components, profiles for curtain components, and finishes.
2. Rated capacities, operating characteristics, electrical characteristics, and furnished accessories.

B. Shop Drawings: For each installation and for special components not dimensioned or detailed in manufacturer's product data. Include plans, elevations, sections, details, and attachments to other work.

1. Detail equipment assemblies and indicate dimensions, weights, loads, required clearances, method of field assembly, components, and location and size of each field connection.
2. Wiring Diagrams: For power, signal, and control wiring.

C. Samples for Initial Selection: Manufacturer's finish charts showing full range of colors and textures available for units with factory-applied finishes.

1. Include similar Samples of accessories involving color selection.

D. Samples for Verification: For each type of exposed finish required, prepared on Samples of size indicated below.

1. Open-Curtain Grille: 18-inch- square assembly with full-size components consisting of rods, spacers, and links as required to illustrate each assembly.
2. Bottom Bar: 6 inches long with sensor edge.
3. Guides: 6 inches long.
4. Mounting Frame: 6 inches long.
5. Brackets: 6 inches square.
6. Hood: 6 inches square.

1.5 INFORMATIONAL SUBMITTALS

A. Qualification Data: For qualified Installer.

B. Seismic Qualification Certificates: For overhead coiling grilles**,** accessories, and components, from manufacturer.

1.6 CLOSEOUT SUBMITTALS

A. Maintenance Data: For overhead coiling grilles to include in maintenance manuals.

1.7 QUALITY ASSURANCE

A. Installer Qualifications: Manufacturer's authorized representative who is trained and approved for both installation and maintenance of units required for this Project.

B. Source Limitations: Obtain overhead coiling grilles from single source from single manufacturer.

1. Obtain operators and controls from overhead coiling grille manufacturer.

C. Electrical Components, Devices, and Accessories: Listed and labeled as defined in NFPA 70, by a qualified testing agency, and marked for intended location and application.

D. Regulatory Requirements: Comply with applicable provisions in the U.S. Architectural & Transportation Barriers Compliance Board's ADA-ABA Accessibility Guidelines and ICC/ANSI A117.1.

PART 2 - PRODUCTS

2.1 GRILLE CURTAIN MATERIALS AND CONSTRUCTION

A. Open-Curtain Grilles: Fabricate metal grille curtain as an open network of horizontal rods, spaced at regular intervals, that are interconnected with vertical links, which are formed and spaced as indicated and are free to rotate on the rods.

1. Aluminum Grille Curtain: ASTM B 221, alloy and temper recommended by aluminum producer and finisher for type of use and finish indicated.
2. Stainless-Steel Grille Curtain: ASTM A 666, Type 300 series.
3. Steel Grille Curtain: Hot-dip zinc-coated (galvanized) complying with ASTM A 123/A 123M, or electrogalvanized complying with ASTM 653/A 653M, and phosphatized before fabrication.
4. Glazing Insert: Manufacturer's standard glazing of clear polycarbonate sheet secured by the curtain links.

B. Endlocks: Continuous end links, chains, or other devices at ends of rods; locking and retaining grille curtain in guides against excessive pressures, maintaining grille curtain alignment, and preventing lateral movement.

C. Bottom Bar: Manufacturer's standard continuous channel or tubular shape, finished to match grille.

1. Astragal: Equip each grille bottom bar with a replaceable, adjustable, continuous, compressible gasket of flexible vinyl, rubber, or neoprene as a cushion bumper.
2. Provide motor-operated grilles with combination bottom astragal and sensor edge.

D. Grille Curtain Jamb Guides: Manufacturer's standard shape having curtain groove with return lips or bars to retain curtain. Provide continuous integral wear strips to prevent metal-to-metal contact and to minimize operational noise; with removable stops on guides to prevent overtravel of curtain.

1. Removable Posts and Jamb Guides: Manufacturer's standard.

2.2 HOODS AND ACCESSORIES

A. General: Form sheet metal hood to entirely enclose coiled curtain and operating mechanism at opening head. Contour to fit end brackets to which hood is attached. Roll and reinforce top and bottom edges for stiffness. Form closed ends for surface-mounted hoods and fascia for any portion of between-jamb mounting that projects beyond wall face. Equip hood with intermediate support brackets as required to prevent sagging.

1. Galvanized Steel: Nominal 0.028-inch- thick, hot-dip galvanized steel sheet with G90 (Z275) zinc coating, complying with ASTM A 653/A 653M.
2. Stainless Steel: 0.025-inch- thick stainless-steel sheet, Type 304, complying with ASTM A 666.
3. Aluminum: 0.040-inch- thick aluminum sheet complying with ASTM B 209, of alloy and temper recommended by manufacturer and finisher for type of use and finish indicated.

B. Removable Metal Soffit: Formed or extruded from same metal and with same finish as curtain if hood is mounted above ceiling, unless otherwise indicated.

C. Mounting Frame: Manufacturer's standard mounting frame designed to support grille; factory fabricated from ASTM A 36/A 36M structural-steel tubes or shapes, hot-dip galvanized per ASTM A 123/A 123M; fastened to floor and structure above grille; to be built into wall construction; and complete with anchors, connections, and fasteners.

D. Push/Pull Handles: Equip each push-up-operated or emergency-operated grille with lifting handles on each side of grille, finished to match grille.

1. Provide pull-down straps or pole hooks for grilles more than 84 inches high.

2.3 LOCKING DEVICES

A. Slide Bolt: Fabricate with side-locking bolts to engage through slots in tracks for locking by padlock, located on both left and right jamb sides, operable from coil side.

B. Locking Device Assembly: Fabricate with cylinder lock, spring-loaded dead bolt, operating handle, cam plate, and adjustable locking bars to engage through slots in tracks.

1. Lock Cylinders: Provide cylinders standard with manufacturer and keyed to building keying system.
2. Keys: Provide 3 keys for each cylinder.

C. Chain Lock Keeper: Suitable for padlock.

D. Safety Interlock Switch: Equip power-operated grilles with safety interlock switch to disengage power supply when grille is locked.

2.4 COUNTERBALANCING MECHANISM

A. General: Counterbalance grilles by means of manufacturer's standard mechanism with an adjustable-tension, steel helical torsion spring mounted around a steel shaft and contained in a spring barrel connected to top of curtain with barrel rings. Use grease-sealed bearings or self-lubricating graphite bearings for rotating members.

B. Counterbalance Barrel: Fabricate spring barrel of manufacturer's standard hot-formed, structural-quality, welded or seamless carbon-steel pipe, of sufficient diameter and wall thickness to support rolled-up curtain without distortion of parts and to limit barrel deflection to not more than 0.03 in./ft. of span under full load.

C. Spring Balance: One or more oil-tempered, heat-treated steel helical torsion springs. Size springs to counterbalance weight of curtain, with uniform adjustment accessible from outside barrel. Secure ends of springs to barrel and shaft with cast-steel barrel plugs.

D. Torsion Rod for Counterbalance Shaft: Fabricate of manufacturer's standard cold-rolled steel, sized to hold fixed spring ends and carry torsional load.

E. Brackets: Manufacturer's standard mounting brackets of either cast iron or cold-rolled steel plate.

2.5 MANUAL GRILLE OPERATORS

A. Equip grille with manufacturer's recommended manual grille operator unless another type of grille operator is indicated.

B. Push-up Grille Operation: Design counterbalance mechanism so required lift or pull for grille operation does not exceed 25 lbf.

C. Chain-Hoist Operator: Consisting of endless steel hand chain, chain-pocket wheel and guard, and gear-reduction unit with a maximum 25 lbf force for grille operation. Provide alloy-steel hand chain with chain holder secured to operator guide.

D. Crank Operator: Consisting of crank and crank gearbox, steel crank drive shaft, and gear-reduction unit, of type indicated. Size gears to require not more than 25 lbf force to turn crank. Fabricate gearbox to be oil tight and to completely enclose operating mechanism. Provide manufacturer's standard crank-locking device.

2.6 ELECTRIC GRILLE OPERATORS

A. General: Electric grille operator assembly of size and capacity recommended and provided by grille manufacturer for grille and operation-cycles requirement specified, with electric motor and factory-prewired motor controls, starter, gear-reduction unit, solenoid-operated brake, clutch, remote-control stations, control devices, integral gearing for locking grille, and accessories required for proper operation.

1. Comply with NFPA 70.
2. Provide control equipment complying with NEMA ICS 1, NEMA ICS 2, and NEMA ICS 6, with NFPA 70 Class 2 control circuit, maximum 24 V, ac or dc.

B. Usage Classification: Electric operator and components capable of operating for not less than number of cycles per hour indicated for each grille.

C. Grille Operator Location(s): Operator location indicated for each grille.

1. Top-of-Hood Mounted: Operator is mounted to the right or left grille head plate with the operator on top of the grille-hood assembly and connected to the grille drive shaft with drive chain and sprockets. Headroom is required for this type of mounting.
2. Front-of-Hood Mounted: Operator is mounted to the right or left grille head plate with the operator on coil side of the grille-hood assembly and connected to the grille drive

shaft with drive chain and sprockets. Front clearance is required for this type of mounting.

D. Electric Motors: Comply with NEMA designation, temperature rating, service factor, enclosure type, and efficiency requirements specified in Section 110513 "Common Motor Requirements for Equipment" unless otherwise indicated.

1. Electrical Characteristics:

a. Phase: Coordinate with electrical drawings and specifications.
b. Volts: Coordinate with electrical drawings and specifications.
c. Hertz: 60.

2. Motor Type and Controller: Reversible motor and controller (disconnect switch) for motor exposure indicated.
3. Motor Size: Minimum size as indicated. If not indicated, large enough to start, accelerate, and operate grille in either direction from any position, at a speed not less than 8 in./sec. and not more than 12 in./sec., without exceeding nameplate ratings or service factor.
4. Operating Controls, Controllers (Disconnect Switches), Wiring Devices, and Wiring: Manufacturer's standard unless otherwise indicated.
5. Coordinate wiring requirements and electrical characteristics of motors and other electrical devices with building electrical system and each location where installed.

E. Limit Switches: Equip each motorized grille with adjustable switches interlocked with motor controls and set to automatically stop grille at fully opened and fully closed positions.

F. Obstruction Detection Device: Equip motorized grille with indicated external automatic safety sensor capable of protecting full width of grille opening. Activation of sensor immediately stops and reverses downward grille travel.

1. Photoelectric Sensor: Manufacturer's standard system designed to detect an obstruction in grille opening without contact between grille and obstruction.

a. Self-Monitoring Type: Designed to interface with grille operator control circuit to detect damage to or disconnection of sensing device. When self-monitoring feature is activated, grille closes only with sustained pressure on close button.

G. Remote-Control Station: Momentary-contact, three-button control station with push-button controls labeled "Open," "Close," and "Stop."

1. Interior units, full-guarded, surface-mounted, heavy-duty type, with general-purpose NEMA ICS 6, Type 1 enclosure.
2. Exterior units, full-guarded, standard-duty, surface-mounted, weatherproof type; NEMA ICS 6, Type 4 enclosure, key operated.

H. Emergency Manual Operation: Equip each electrically powered grille with capability for emergency manual operation. Design manual mechanism so required force for grille operation does not exceed 25 lbf.

I. Emergency Operation Disconnect Device: Equip operator with hand-operated disconnect mechanism for automatically engaging manual operator and releasing brake for emergency manual operation while disconnecting motor without affecting timing of limit switch. Mount mechanism so it is accessible from floor level. Include interlock device to automatically prevent motor from operating when emergency operator is engaged.

J. Motor Removal: Design operator so motor may be removed without disturbing limit-switch adjustment and without affecting emergency manual operation.

K. Audible and Visual Signals: Audible alarm and visual indicator lights in compliance with regulatory requirements for accessibility.

L. Emergency-Egress Release: Flush, wall-mounted handle mechanism, for ADA-ABA-compliant egress feature, not dependent on electric power. The release allows an unlocked grille to partially open without affecting limit switches to permit passage, and it automatically resets motor drive upon return of handle to original position.

M. Self-Opening Mechanism: Automatic release mechanism triggered by smoke detector, fire alarm or power failure. When activated, the grille self opens by means of a fail-safe operator to the fully open position without the need of power operation or battery backup systems. When the alarm is cleared and power is restored, the grille will operate normally.

2.7 OPEN-CURTAIN GRILLE ASSEMBLY – DOORS 119-1, 227-2

A. Open-Curtain Grille: Overhead coiling grille with a curtain having a network of horizontal rods that interconnect with vertical links.

B. Operation Cycles: Not less than 50,000.

1. Include tamperproof cycle counter.

C. Grille Curtain Material: Aluminum.

1. Space rods at approximately 1-1/2 inches o.c.
2. Space links approximately 3 inches apart in a straight in-line pattern.
3. Spacers: Metal tubes matching curtain material.

D. Curtain Jamb Guides: Aluminum or Stainless steel with exposed finish matching curtain slats. Provide continuous integral wear strips to prevent metal-to-metal contact and to minimize operational noise.

E. Hood: Match curtain material and finish.

F. Locking Devices: Equip grille with locking device assembly.

1. Locking Device Assembly: Cremone type, both jamb sides locking bars, operable from inside and outside with cylinders.

G. Manual Grille Operator: Push-up operation or Manufacturer's standard crank operator.

H. Electric Grille Operator:

1. Usage Classification: Standard duty, up to 60 cycles per hour.
2. Operator Location: As shown on Drawings.
3. Motor Exposure: Interior.
4. Emergency Manual Operation: Push-up type.
5. Remote-Control Station: Interior Where shown on Drawings.

I. Grille Finish:

1. Aluminum Finish: Anodized color as selected by Architect from full range of industry colors and color densities.

2.8 GENERAL FINISH REQUIREMENTS

A. Comply with NAAMM's "Metal Finishes Manual for Architectural and Metal Products" for recommendations for applying and designating finishes.

B. Appearance of Finished Work: Noticeable variations in same piece are not acceptable. Variations in appearance of adjoining components are acceptable if they are within the range of approved Samples and are assembled or installed to minimize contrast.

2.9 ALUMINUM FINISHES

A. Architect select from manufacturers standard.

PART 3 - EXECUTION

3.1 EXAMINATION

A. Examine substrates areas and conditions, with Installer present, for compliance with requirements for substrate construction and other conditions affecting performance of the Work.

B. Examine locations of electrical connections.

C. Proceed with installation only after unsatisfactory conditions have been corrected.

3.2 INSTALLATION

A. Install overhead coiling grilles and operating equipment complete with necessary hardware, anchors, inserts, hangers, and equipment supports; according to manufacturer's written instructions and as specified.

B. Install overhead coiling grilles, hoods, and operators at the mounting locations indicated for each grille.

C. Accessibility: Install overhead coiling grilles, switches, and controls along accessible routes in compliance with regulatory requirements for accessibility.

3.3 STARTUP SERVICE

A. Engage a factory-authorized service representative to perform startup service.

1. Perform installation and startup checks according to manufacturer's written instructions.
2. Test and adjust controls and safeties. Replace damaged and malfunctioning controls and equipment.
3. Test grille opening when activated by detector, fire-alarm system, emergency-egress release, or self-opening mechanism as required. Reset grille-opening mechanism after successful test.

3.4 ADJUSTING

A. Adjust hardware and moving parts to function smoothly so that grilles operate easily, free of warp, twist, or distortion.

B. Lubricate bearings and sliding parts as recommended by manufacturer.

3.5 DEMONSTRATION

A. Engage a factory-authorized service representative to train Owner's maintenance personnel to adjust, operate, and maintain overhead coiling grilles.

END OF SECTION 083326

SECTION 092100 – SPRAY-APPLIED ACOUSTICAL CEMENT PLASTER

PART 1 - GENERAL

1.1 RELATED DOCUMENTS

A. Drawings and general provisions of the Contract, including General and Supplementary Conditions and Division 01 Specification Sections, apply to this Section.

1.2 WORK INCLUDED

A. Extent of sprayed-on decorative / acoustical insulation is indicated on drawings.

B. Plaster over cementitious backer units.

1.3 QUALITY ASSURANCE

A. Provide Portland cement-vermiculite material which has been tested to and achieved the following values:

TEST METHOD/AUTHORITY	PROPERTY	VALUE
ASTM E605	Density	41 Lbs./Cu.Ft.
ASTM E761	Compressive Strength	300 psi.
ASTM E736-86	Bond Strength	5000 Lbs./Sq.Ft.
ASTM E84-87	Surface Burning Characteristics	0 Flame Spread 0 Smoke Developed
ASTM C423-84A	Sound Absorption	0.60 NRC@1” Thick 0.50 NRC@.5” Thick
Univ. of Pittsburgh Toxicity Test	Toxicity	LC_{50}>300 Grams
ASTM E136	Combustibility	Non-Combustible
ASTM D2240	Hardness	70

B. Provide testing results and procedures which have been certified by Cedar Knolls Acoustical Labs or other accredited independent testing laboratories. Peak thickness of test samples must be determined and reported by acoustical laboratory. Nominal thicknesses are not acceptable unless peak thicknesses are also reported.

1. NRC not less than 0.60 at 1 inch thickness and coefficient not less than .035 (+ or - .01) at 250 Hz. Conduct testing on solid backing with no air gap.

C. Installer: Certified by manufacturer.

D. Control Sample: Prior to installation of final coat, apply an area of 50 sq. ft. in presence of Architect, for approval of finish texture, as selected from samples.

1.4 SUBMITTALS

A. LEED Submittals:

1. Product Data for Credit MR 4: For products having recycled content, documentation indicating percentages by weight of postconsumer and preconsumer recycled content. Include statement indicating cost for each product having recycled content.
2. Product Data for Credit IEQ 4.1: For sealants, documentation including printed statement of VOC content.

B. Shop Drawings: Show locations and installation of control and expansion joints, reveals, and trim; including plans, elevations, sections, details of components, and attachments to other work.

C. Samples: For the following products

1. Trim Accessories: Full-size sample in 12 inch lengths for each trim accessory including prefabricated corner and intersection trim.

D. Submit manufacturer's installation instructions, test data substantiating compliance with quality assurance.

E. Submit 12 inch square sample of sprayed-on acoustical material showing texture variations for approval. Resubmit as required until approved. All samples must be certified by manufacture that they are representative o the texture which was acoustically tested in supporting acoustical test reports.

F. Submit test reports from all suppliers showing material to be 100% free of asbestor, mineral fiber, polystyrene and cellulose.

1.5 WARRANTY

A. Manufacturer shall warrant the material to be supplied, agreeing to repair / replace that which has cracked, flaked, dusted excessively, peeled or fallen from substrate, or otherwise deteriorated to a condition where it would no perform effectively as intended for a sound absorbent purpose; due to defective materials and not due to abuse, improper maintenance, unforeseeable ambient exposures, or other causes beyond anticipated conditions by the manufacturer. The period will be 10 years from the date of substantial completion.

PART 2 - PRODUCTS

2.1 MATERIALS

A. Manufacturers: Subject to compliance with requirements, provide Acoustement 40 manufactured by Pyrok, Inc. or approved equal.

B. Color shall selected by the Architect.

C. Texture shall be semi-smooth troweled finish.

D. Thickness shall be ½ inch thick.

E. Control Joints:

1. Subject to compliance with requirements, provide products by one of the following:

a. Plastic Components, Inc., part number 2050 PVC.
b. Vinyl Corp., part number 1550 PVC
c. Approved Equal.

F. Cementitious Backer Units: ANSI A118.9 and ASTM C 1288 and approved by backer unit manufacturer for use as veneer plaster substrate.

1. Thickness 5/8”
2. Mold Resistance: ASTM D3273, score of 10 as rated according to ASTM D 3274.

PART 3 - EXECUTION

3.1 INSPECTION AND PREPARATION

A. Examine all substrates and conditions.

B. Assure substrate is free of oil, grease, dirt, paint, or other matter which would impair bond or install metal lath as recommended by manufacturer.

C. Do not proceed until said substrate and conditions are acceptable.

D. Prepare substrate by filling voids and cracks and offsets, remove projections that result in telegraphing presence of imperfections.

E. Prime substrate with primer or bonding agent as recommend by manufacturer.

F. Do not apply when temperature is below 40 degrees F.

G. Mask all adjoining surfaces in order to minimize damage from overspray.

H. Provide ventilation if required, and avoid excess drying rates.

I. Provide tarps or temporary enclosures as necessary to confine operations.

J. Perform all patching and repairing of insulation required to be done due to cutting, etc., by other trades.

3.2 APPLICATION

A. Apply in accordance with manufacture's instructions (except no spray pass shall exceed ¼" thickness) using any rotary-stator plastering pump or other spray equipment approved by the manufacturer.

B. Install to thickness indicated or thickness require to achieve NRC specified.

C. Ensure the texture and color are all as per control sample.

3.3 CLEANING AND PATCHING

A. Remove overspray and fall out material immediately upon completion of the work in each area. Clean surfaces to remove evidence of soiling. Repair or replace damaged work surfaces to acceptable conditions.

B. Coordinate work with other work to minimize possibility of damage to insulation resulting from performance of subsequent work. As other units of work are complete in each area, patch damaged areas or surfaces of insulation by over spraying to match original installations or by patching procedures as required to provide acceptable results.

END OF SECTION 092100

SECTION 102600 - WALL AND DOOR PROTECTION

PART 1 - GENERAL

1.1 RELATED DOCUMENTS

A. Drawings and general provisions of the Contract, including General and Supplementary Conditions and Division 01 Specification Sections, apply to this Section.

1.2 SUMMARY

A. Section Includes:
   1. Stainless steel corner guards.

B. Related Sections:
   1. Section 087100 "Door Hardware" for metal armor, kick, mop, and push plates.

1.3 ACTION SUBMITTALS

A. Product Data: Include construction details, material descriptions, impact strength, dimensions of individual components and profiles, and finishes for each impact-resistant wall protection unit.

B. Shop Drawings: Show locations of each product . Include details of attachment to other work.

C. Samples for Verification: For each type of exposed finish required, prepared on Samples of size indicated below Corner Guards: 12 inches long. Include examples of joinery, corners, end caps, top caps.

1.4 DELIVERY, STORAGE, AND HANDLING

A. Store impact-resistant wall protection units in original undamaged packages and containers inside well-ventilated area protected from weather, moisture, soiling, extreme temperatures, and humidity.

1.5 WARRANTY

A. Special Warranty: Manufacturer's standard form in which manufacturer agrees to repair or replace components of impact-resistant wall protection units that fail in materials or workmanship within specified warranty period.

   1. Failures include, but are not limited to, the following:

a. Structural failures.

2. Warranty Period: Five years from date of Substantial Completion.

PART 2 - PRODUCTS

2.1 MATERIALS

A. Stainless-Steel Sheet: ASTM A 240/A 240M.

B. Fasteners: Nonmagnetic stainless-steel metal screws, bolts, and other fasteners compatible with items being fastened. Use security-type fasteners where exposed to view.

2.2 CORNER GUARDS

A. Surface-Mounted, Metal Corner Guards CG-1: Fabricated from one-piece, formed or extruded metal with formed edges; with 90- or 135-degree turn to match wall condition.

1. Material: Stainless steel

a. Thickness: Minimum 0.0625 inch.
b. Finish: Directional satin, No. 4.

2. Wing Size: Nominal 3-1/2 by 3-1/2 inches.
3. Height: 48”
4. Mounting: Flat-head, countersunk screws through factory-drilled mounting holes.
5. Edges: All edges eased; top, bottom and sides.

B. Flush-Mounted, Metal Corner Guards CG-2: Formed metal shape attached to aluminum retainer.

1. Basis-of-Design Product: Subject to compliance with requirements, provide Wallguard.com product 2330C.1 or comparable product.

2. Material: Stainless steel

a. Thickness: Minimum 0.0625 inch.
b. Finish: Directional satin, No. 4.
c. Wing Size: Nominal 2-inch- long leg and 1/4-inch corner radius.
d. Height: 120”.

2.3 FABRICATION

A. Fabricate impact-resistant wall protection units to comply with requirements indicated for design, dimensions, and member sizes, including thicknesses of components.

B. Assemble components in factory to greatest extent possible to minimize field assembly. Disassemble only as necessary for shipping and handling.

2.4 METAL FINISHES

A. Comply with NAAMM's "Metal Finishes Manual for Architectural and Metal Products" for recommendations for applying and designating finishes.

1. Remove tool and die marks and stretch lines, or blend into finish.
2. Grind and polish surfaces to produce uniform finish, free of cross scratches.
3. Run grain of directional finishes with long dimension of each piece.
4. When polishing is completed, passivate and rinse surfaces. Remove embedded foreign matter and leave surfaces chemically clean.

B. Protect finishes on exposed surfaces from damage by applying a strippable, temporary protective covering before shipping.

PART 3 - EXECUTION

3.1 EXAMINATION

A. Examine substrates and wall areas, with Installer present, for compliance with requirements for installation tolerances and other conditions affecting performance of work.

B. Examine walls to which impact-resistant wall protection will be attached for blocking, grounds, and other solid backing that have been installed in the locations required for secure attachment of support fasteners.

C. Proceed with installation only after unsatisfactory conditions have been corrected.

3.2 PREPARATION

A. Complete finishing operations, including painting, before installing impact-resistant wall protection system components.

B. Before installation, clean substrate to remove dust, debris, and loose particles.

3.3 INSTALLATION

A. General: Install impact-resistant wall protection units level, plumb, and true to line without distortions. Do not use materials with chips, cracks, voids, stains, or other defects that might be visible in the finished Work.

1. Provide splices, mounting hardware, anchors, and other accessories required for a complete installation.

    a. Provide anchoring devices to withstand imposed loads.

3.4 CLEANING

A. Immediately after completion of installation, clean plastic covers and accessories using a standard, ammonia-based, household cleaning agent.

B. Remove excess adhesive using methods and materials recommended in writing by manufacturer.

END OF SECTION 102600

SECTION 110100 – ROOF MOUNTED TIE-OFF ANCHOR SYSTEM

PART 1 - GENERAL

1.1 RELATED DOCUMENTS

A. Drawings and general provisions of the Contract, including General and Supplementary Conditions and Division 01 Specification Sections, apply to this Section.

1.2 SUMMARY

A. Section Includes:

1. Design, supply and installation of roof mounted tie-off anchors.

B. Related Sections:

1. Division 05 Section "Metal Fabrications" for miscellaneous steel supports.

1.3 PERFORMANCE REQUIREMENTS

A. Delegated Design: Design tie off anchors, including comprehensive engineering analysis by a qualified professional engineer, using performance requirements and design criteria indicated.

B. Design window cleaning/suspended maintenance system to suit building and in accordance with plans, specifications, standards, and regulations/codes contained in section 1.5.

C. Locate tie-back anchors to suit suspension equipment which will be used on the building with respect to items such as spacing, roof edge condition and similar items.

D. Design all anchor components to provide adequate attachment to the building and suited to current window cleaning/suspended maintenance practices. Ensure compatibility with industry standard equipment.

E. Design system fall arrest safety anchors to comply with the following structural requirements:
1. Fall arrest safety anchors are designed to a typical maximum fall arresting force of 1800 lbs(8.0 kN) when wearing a body harness with a factor of safety of 2 without any permanent deformation and to 5000 lbs (22.2 kN) against fracture or detachment.

1.4 ACTION SUBMITTALS

A. Shop Drawings: Showing complete layout and configuration of roof mounted tie-off anchors system, including all components and accessories. Clearly indicate design and fabrication

details, hardware, and installation details. Shop drawings to include installation and rigging instructions and all necessary Restrictive and Non-Restrictive Working Usage Notes and General Safety Notes.

B. Delegated-Design Submittal: For roof mounted tie-off anchor system and design criteria, including analysis data signed and sealed by the qualified professional engineer responsible for their preparation.

1.5 QUALITY ASSURANCE

A. Manufacturer: Work of this Section to be executed by manufacturer specializing in the design, fabrication and installation of window cleaning/ suspended maintenance systems having a minimum of 5 years documented experience.

B. Loading and safety assurance: Work of this Section to meet the requirements of governing codes and jurisdiction and to comply with properly engineered loading and safety criteria for the intended use.

C. Welding to be executed by certified welders in accordance with AWS requirements.

D. Comply with the following OSHA regulations:
   1. 1910, Subpart D (Walking and Working Surfaces).
   2. Appendix C to 1910 Subpart F (Personal Fall Arrest Systems).

PART 2 - PRODUCTS

2.1 MANUFACTURERS

A. Basis-of-Design Product: Subject to compliance with requirements, provide PRO-BEL MODEL # PB Series or comparable product.

B. Companies, such as miscellaneous metal fabricators, who are not normally engaged in the design and manufacture of window cleaning/suspended maintenance equipment are not allowed.

2.2 MATERIALS

A. Safety U-bars: [Type 304 stainless steel with yield strength of 35 Ksi (240 MPa)] [mild steel, Type 300W with yield strength of 44 Ksi (300 MPa), hotdip galvanized to ASTM A123/A 123M-2000]. Ubar to be not less than 3/4" (19 mm) diameter material with 1-1/2" (38 mm) eye opening.

B. Securement bolts: mild steel, Type 300W with yield strength of 44 Ksi (300 MPa), hot-dip galvanized to ASTM A123/A 123M-2000.

C. Hollow steel section (HSS) piers: mild steel, Type 300W with yield strength of 50 Ksi (350 MPa). Wall thickness to suit application, hot dipped galvanized to ASTM A123/A 123M-2000.

D. Base plate and all other sections: galvanized mild steel as above with yield strength of 44 Ksi (300 MPa). Thickness and securement to suit application.

E. Seamless spun aluminum flashing (for steel pier anchors): Type 6061-T6 alloy to ASTM B2212000 with deck flange flashed in to NRCA or CRCA recommendations. Seal top of aluminum flashing with detachable watertight stainless steel cap.

F. Miscellaneous bolts, nuts and washers: mild steel, Type 300W with yield strength of 44 Ksi (300 MPa), hot-dip galvanized to ASTM A123/A 123M-2000 or Type 304 stainless steel with yieldstrength of 35 Ksi (240 MPa).

PART 3 - EXECUTION

3.1 EXAMINATION

A. Examine surfaces and areas upon which the work of this Section depends. Report to the Contractor in writing, defects of work prepared by other trades and other unsatisfactory site conditions which would cause defective installation of products, or cause latent defects in workmanship and function.

B. Verify site dimensions.

3.2 INSTALLATION

A. Install equipment in accordance with approved shop drawings and manufacturer's recommendations.

B. Co-ordinate installation with work of relate trades.

C. Install all work true, level, tightly fitted and flush with adjacent surfaces as required.

D. Deform threads of tail end of anchor studs after nuts have been tightened to prevent accidental removal or vandalism.

E. Structural steel to receive safety anchors to have adequate bearing surface as indicated on shop drawings and/or to ensure 100% weld.

3.3 TESTING

A. All anchors relying upon chemical adhesive fasteners to be 100% tested on site using load cell test apparatus in accordance with manufacturer's recommendations.

END OF SECTION 110100

SECTION 323113 - CHAIN LINK FENCES AND GATES

PART 1 - GENERAL

1.1 RELATED DOCUMENTS

A. Drawings and general provisions of the Contract, including General and Supplementary Conditions and Division 01 Specification Sections, apply to this Section.

1.2 SUMMARY

A. Section Includes:

1. Chain-link fences.
2. Gates: Swing.

1.3 PERFORMANCE REQUIREMENTS

A. Delegated Design: Design chain-link fences and gates, including comprehensive engineering analysis by a qualified professional engineer, using performance requirements and design criteria indicated.

B. Structural Performance: Chain-link fence and gate framework shall withstand the effects of gravity loads and the following loads and stresses within limits and under conditions indicated according to ASCE/SEI 7 :

1. Minimum Post Size and Maximum Spacing: Determine according to CLFMI WLG 2445, based on mesh size and pattern specified and on the following:

   a. Wind Loads: As indicated in Drawings.
   b. Exposure Category: As indicated in Drawings.
   c. Fence Height: 8 feet.
   d. Material Group: IA, ASTM F 1043, Schedule 40 steel pipe .

C. Lightning Protection System: Maximum grounding-resistance value of 25 ohms under normal dry conditions.

1.4 ACTION SUBMITTALS

A. Product Data: For each type of product indicated.

1. Fence and gate posts, rails, and fittings.
2. Chain-link fabric, reinforcements, and attachments.
3. Accessories: [Privacy slats] Gates and hardware.

B. Shop Drawings: Include plans, elevations, sections, details, and attachments to other work. Show accessories, hardware, gate operation, and operational clearances.

C. Samples for Initial Selection: For components with factory-applied color finishes.

D. Samples for Verification: Prepared on Samples of size indicated below:

1. Polymer-Coated Components: In 6-inch lengths for components and on full-sized units for accessories.

E. Delegated-Design Submittal: For chain-link fences and gate framework indicated to comply with performance requirements and design criteria, including analysis data signed and sealed by the qualified professional engineer responsible for their preparation.

1.5 INFORMATIONAL SUBMITTALS

A. Warranty: Sample of special warranty.

1.6 QUALITY ASSURANCE

1.7 PROJECT CONDITIONS

A. Field Measurements: Verify layout information for chain-link fences and gates shown on Drawings in relation to property survey and existing structures. Verify dimensions by field measurements.

1.8 WARRANTY

A. Special Warranty: Manufacturer's standard form in which manufacturer agrees to repair or replace components of chain-link fences and gates that fail in materials or workmanship within specified warranty period.

1. Failures include, but are not limited to, the following:

a. Faulty operation of gate operators and controls.
b. Deterioration of metals, metal finishes, and other materials beyond normal weathering.

2. Warranty Period: 15 years from date of Substantial Completion.

PART 2 - PRODUCTS

2.1 CHAIN-LINK FENCE FABRIC

A. General: Provide fabric in one-piece heights measured between top and bottom of outer edge of selvage knuckle or twist. Comply with CLFMI Product Manual and with requirements indicated below:

B. Fabric Height: 8 feet.

C. Polymer-Coated Fabric: ASTM F 668, Class 2b over zinc -coated steel wire.
   1. Color: As selected by Architect from manufacturer's full range, complying with ASTM F 934.
   2. Coat selvage ends of fabric that is metallic coated before the weaving process with manufacturer's standard clear protective coating.

   3. Selvage: Knuckled at both selvages.

2.2 FENCE FRAMING

A. Posts and Rails: Comply with ASTM F 1043 for framing, including rails, braces, and line; terminal; and corner posts. Provide members with minimum dimensions and wall thickness according to ASTM F 1043 or ASTM F 1083.

   1. Heavy Industrial Strength: Material Group IA, round steel pipe, Schedule 40.

   2. Horizontal Framework Members: top and bottom rails complying with ASTM F 1043.
   3. Brace Rails: Comply with ASTM F 1043.

   4. Polymer coating over metallic coating.

      a. Color: Match chain-link fabric, complying with ASTM F 934.

2.3 TENSION WIRE

A. Polymer-Coated Steel Wire: 0.177-inch- diameter, tension wire complying with ASTM F 1664, Class 2b over zinc-coated steel wire.

   1. Color: Match chain-link fabric, complying with ASTM F 934.

2.4 SWING GATES

A. General: Comply with ASTM F 900 for gate posts and double swing gate types.

   1. Gate Leaf Width: 48 inches.
   2. Gate Fabric Height: More than 72 inches.

B. Pipe and Tubing:

   1. Zinc-Coated Steel: Comply with ASTM F 1043 and ASTM F 1083; protective coating and finish to match fence framing.
   2. Gate Posts: Round tubular steel.
   3. Gate Frames and Bracing: Rectangular tubular steel.

C. Frame Corner Construction: Welded.

D. Hardware:

   1. Hinges: 180-degree outward swing.

2. Latches permitting operation from both sides of gate with provision for padlocking accessible from both sides of gate.

2.5 FITTINGS

A. General: Comply with ASTM F 626.

2.6 PRIVACY SLATS

A. Material: PVC, UV-light stabilized, not less than 0.023 inch thick; sized to fit mesh specified for direction indicated.

B. Color: Grey.

2.7 GROUT AND ANCHORING CEMENT

A. Nonshrink, Nonmetallic Grout: Premixed, factory-packaged, nonstaining, noncorrosive, nongaseous grout complying with ASTM C 1107. Provide grout, recommended in writing by manufacturer, for exterior applications.

B. Erosion-Resistant Anchoring Cement: Factory-packaged, nonshrink, nonstaining, hydraulic-controlled expansion cement formulation for mixing with potable water at Project site to create pourable anchoring, patching, and grouting compound. Provide formulation that is resistant to erosion from water exposure without needing protection by a sealer or waterproof coating and that is recommended in writing by manufacturer, for exterior applications.

PART 3 - EXECUTION

3.1 EXAMINATION

A. Examine areas and conditions, with Installer present, for compliance with requirements for site clearing, earthwork, pavement work, and other conditions affecting performance of the Work.

1. Do not begin installation before final grading is completed unless otherwise permitted by Architect.

B. Proceed with installation only after unsatisfactory conditions have been corrected.

3.2 INSTALLATION, GENERAL

A. Install chain-link fencing to comply with ASTM F 567 and more stringent requirements indicated.

3.3 CHAIN-LINK FENCE INSTALLATION

A. Tension Wire: Install according to ASTM F 567, maintaining plumb position and alignment of fencing. Pull wire taut, without sags. Fasten fabric to tension wire with 0.120-inch- diameter hog rings of same material and finish as fabric wire, spaced a maximum of 24 inches o.c. Install tension wire in locations indicated before stretching fabric. Provide horizontal tension wire at the following locations:

   1. Extended along top and bottom of fence fabric. Install top tension wire through post cap loops. Install bottom tension wire within 6 inches of bottom of fabric and tie to each post with not less than same diameter and type of wire.

B. Top Rail: Install according to ASTM F 567, maintaining plumb position and alignment of fencing. Run rail continuously through line post caps, bending to radius for curved runs and terminating into rail end attached to posts or post caps fabricated to receive rail at terminal posts. Provide expansion couplings as recommended in writing by fencing manufacturer.

C. Intermediate and Bottom Rails: Install and secure to posts with fittings.

D. Chain-Link Fabric: Apply fabric to outside of enclosing framework. Leave 1 inch between finish grade or surface and bottom selvage unless otherwise indicated. Pull fabric taut and tie to posts, rails, and tension wires. Anchor to framework so fabric remains under tension after pulling force is released.

E. Tension or Stretcher Bars: Thread through fabric and secure to end, corner, pull, and gate posts with tension bands spaced not more than 15 inches o.c.

F. Tie Wires: Use wire of proper length to firmly secure fabric to line posts and rails. Attach wire at one end to chain-link fabric, wrap wire around post a minimum of 180 degrees, and attach other end to chain-link fabric per ASTM F 626. Bend ends of wire to minimize hazard to individuals and clothing.

   1. Maximum Spacing: Tie fabric to line posts at 12 inches o.c. and to braces at 24 inches o.c.

G. Fasteners: Install nuts for tension bands and carriage bolts on the side of the fence opposite the fabric side. Peen ends of bolts or score threads to prevent removal of nuts.

H. Privacy Slats: Install slats in direction indicated, securely locked in place.
   1. Diagonally, for privacy factor of 80 to 85.

3.4 GATE INSTALLATION

A. Install gates according to manufacturer's written instructions, level, plumb, and secure for full opening without interference. Attach fabric as for fencing. Attach hardware using tamper-resistant or concealed means. Install ground-set items in concrete for anchorage. Adjust hardware for smooth operation and lubricate where necessary.

3.5 GATE OPERATOR INSTALLATION

3.6 FIELD QUALITY CONTROL

3.7 ADJUSTING

A. Gates: Adjust gates to operate smoothly, easily, and quietly, free of binding, warp, excessive deflection, distortion, nonalignment, misplacement, disruption, or malfunction, throughout entire operational range. Confirm that latches and locks engage accurately and securely without forcing or binding.

B. Lubricate hardware and other moving parts.

END OF SECTION 323113

NONSTRUCTURAL COMPONENT CHECKLIST

ITEM DESCRIPTION	NOT REQUIRED	ON CONST. DOCUMENTS	DEFERRED SUBMITTAL	COMMENTS
ARCHITECTURAL COMPONENTS:				
INTERIOR NONSTRUCTURAL WALLS & PARTITIONS		X		
CANTILEVER ELEMENTS (I.E. PARAPETS, ETC.)		X		
EXTERIOR NONSTRUCTURAL WALL ELEMENTS			X	METAL PANEL SYSTEM / CURTAIN WALL SYSTEM
VENEER		X	X	GFRC, BRICK, METAL PANELS
PENTHOUSE		X		
CEILINGS (I.E. SUSPENDED GRID OR HARD LID)		X		
CABINETS (I.E. STORAGE CABINETS, EQUIP, ETC.)			X	
ACCESS FLOOR	X			
STORAGE RACKS			X	
APPENDAGES & ORNAMENTATIONS	X			
SIGNS & BILLBOARDS			X	
OTHER: SUSPENDED CEILING CLOUDS		X		
OTHER: CLIMBING WALL			X	
MEP COMPONENTS:				
FIRE SPRINKLERS			X	TO MECHANICAL CONTRACTOR.\SEE SPEC SECT. 21100
MECHANICAL EQUIPMENT (I.E. HVAC, FANS, AIR HANDLERS, BOILERS, FURNACES, TANKS, CHILLERS, WATER HEATERS, HEAT EXCHANGERS, EVAPORATORS,ENGINES, TURBINES, PUMPS, COMPRESSORS, MFR EQUIPMENT, ETC.)			X	SEE SHEETS MH-C510, MH-C520, MH-C530 & SPEC SECT. 230548
ELECTRICAL EQUIPMENT (I.E.GENERATORS, BATTERIES, INVERTERS, TRANSFORMERS, MCC, PANEL BOARDS, SWITCH GEAR, CABINETS, PROJECTION SCREENS, ETC...)			X	ELECTRICAL SUBMITTAL
ELEVATOR & ESCALATOR COMPONENTS			X	ELEVATOR SUBMITTAL
COMMUNICATION EQUIPMENT, COMPUTERS, INSTRUMENTATION & CONTROLS			X	AV SUBMITTAL
ROOF MOUNTED CHIMNEYS, STACKS, COOLING & ELECTRICAL TOWERS			X	SEE SPEC SECT. 230548
LIGHTING FIXTURES			X	ELECTRICAL SUBMITTAL
VIBRATION ISOLATED COMPONENTS			X	SEE SPEC SECT. 230548
PIPING & CONDUIT SYSTEM			X	SEE SPEC SECT. 230548
DUCTWORK (INCLUDING IN-LINE COMPONENTS)			X	SEE SPEC SECT. 230548
CONVEYORS	X			
CABLE TRAYS			X	ELECTRICAL SUBMITTAL
OTHER: REFRIGERATION EQUIPMENT			X	SEE SPEC SECT. 236400
OTHER: CLIMBING WALL				

NOTES:

1. SUBMITTALS SHALL BE CONSOLIDATED INTO GROUPS FOR EFFICIENT REVIEW.
2. DEFERRED SUBMITTALS FOR SEISMIC RESTRAINT OF NONSTRUCTURAL COMPONENTS MUST BE SUBMITTED TO THE DFCM BUILDING OFFICIAL A MINIMUM OF TWO WEEKS PRIOR TO THE PLANNED INSTALLATION IN ORDER TO ALLOW FOR PLAN REVIEW AND FORWARDING TO INSPECTORS. IN THE EVENT THAT THE SUBMITTAL IS DEFICIENT ADDITIONAL TIME MAY BECOME NECESSARY.
3. IF SEISMIC RESTRAINTS OF NON-STRUCTURAL COMPONENTS ARE INSTALLED PRIOR TO RECEIVING DFCM APPROVAL THEY SHALL NOT BE COVERED OR CONCEALED UNTIL RECEIVING BOTH PLAN REVIEW AND INSPECTION APPROVAL. FURTHER, INSTALLERS ARE PROCEEDING AT THEIR OWN RISK UNTIL PLAN REVIEW AND INSPECTION APPROVAL OCCURS.
4. THE REQUIREMENTS FOR SEISMIC RESTRAINT OF NONSTRUCTURAL COMPONENTS CANNOT BE SATISFIED BY A GENERAL REFERENCE TO DESIGN MANUALS. THE DESIGN PROFESSIONAL MAY UTILIZE THESE MANUALS AS A BASIS OF THEIR DESIGN, BUT MUST PROVIDE ALL SUPPORTING DOCUMENTATION TO ENSURE THAT THE DESIGN CONFORMS TO THE REQUIREMENTS OF ASCE 7-05, CHAPTER 13.
5. SUBMITTALS MUST INCLUDE DETAILS OF THE PROPOSED SEISMIC RESTRAINT OF NONSTRUCTURAL COMPONENTS. THESE DETAILS MUST SHOW SPECIFIC INFORMATION RELATING TO THE MATERIALS, TYPE, SIZE, AND LOCATIONS OF ANCHORAGES; MATERIALS USED FOR BRACING, ATTACHMENT REQUIREMENTS OF BRACING TO STRUCTURE AND COMPONENT; AND LOCATIONS OF TRANSVERSE AND LONGITUDINAL SWAY BRACING AND ROD STIFFENERS. SUBMITTALS MAY ALSO REQUIRE STRUCTURAL CALCULATIONS, ENGINEERING REPORTS, TEST DATA, AND/OR SPECIFICATIONS TO ENSURE CODE COMPLIANCE.
6. ASCE 7-05 SECTION 13.1.4 SPECIFIES IMPORTANT EXEMPTIONS TO THE CHAPTER 13 REQUIREMENTS.

DEFERRED SUBMITTALS

DEFERRED SUBMITTAL	APPROXIMATE DATE
A. ARCHITECTURAL (NONSTRUCTURAL COMPONENT CHECKLIST) 1. GFRC 2. CURTAIN WALL INCLUDING VERTICAL FINS / NFRC RATING 3. OPERABLE PARTITIONS 4. GUARDRAIL SYSTEM 5. STORAGE RACKS AND CABINETS PROVIDED AS PART OF THIS CONTRACT. 6. CLIMBING WALL 7. METAL PANEL 8. METAL STAIRS 9. FIRE SHUTTERS 10. SUSPENDED OR WALL HUNG ATHLETIC EQUIPMENT AS PART OF THIS CONTRACT.	12/01/2012
B. STRUCTURAL 1. FOUNDATION ELEMENTS: STONE COLUMNS, HELICAL PEIRS, SHORING WALLS, MICROPILES & PILE CAPS 2. GRADE BEAMS 3. ROOF JOISTS	12/01/2012
C. MECHANICAL (NONSTRUCTURAL COMPONENT CHECKLIST) 1. FIRE PROTECTION SYSTEM 2. SEISMIC BRACING FOR MECHANICAL SYSTEM / EQUIPMENT / DUCTS 3. SEISMIC BRACING FOR PLUMBING	12/01/2012
D. ELECTRICAL (NONSTRUCTURAL COMPONENT CHECKLIST) 1. SEISMIC BRACING FOR ELECTRICAL EQUIPMENT / LIGHTS / RACEWAY 2. SEISMIC BRACING FOR AV EQUIPMENT 3. PIPING & CONDUIT SYSTEM 4. FIRE ALARM AND BATTERY CALCS.	12/01/2012

NOTE: The following documents are required before a certificate of occupancy is issued.
1. A code inspection report recommending that a certificate of occupancy be issued.
2. Final report from the special inspection agency.
3. Certificate of fire clearance from the State Fire Marshall.
4. Final approval from the State Elevator inspector, if applicable.
5. Final approval from the State boiler inspector, if applicable.
6. Report of the disinfection of the potable water system. IPC 610
7. A Certificate of Compliance from the approved fabricator, if applicable. IBC 1704.2.2
8. A stamped and signed final report from the structural engineer when structural observation is required by IBC 1710.
9. Final report from the special inspector and the mechanical engineer when smoke control is required. The reports must comply with IBC 909.18.8.3.

SPECIAL INSPECTIONS AND TESTING ITEMS REQUIRED BY CHAPTER 17 OF THE 2009 IBC & MISCELLANEOUS AREAS

SPECIAL INSPECTION AND TESTING ITEMS REQUIRED BY CHAPTER 17 OF THE 2009 IBC

Indicate items requiring special inspection or structural testing by checking the appropriate box. All items not requiring inspection/testing should be removed from the form. For items requiring continuous inspection, a special inspector must be present onsite during the performance of that task. In most cases "periodic" inspections/tests shall be performed prior to commencing the task, intermittently during the task, and at the completion of the task. The "Detailed Instructions & Frequency" provides a description of the presumed requirements for tasks requiring "periodic" inspections. The design professional in responsible should revise the requirements as needed on a project-specific basis.

Steel Construction per IBC Sections 1704.3, 1707.2 & 1708.3

Item	Frequency	Detailed Instructions
Material Verification (IBC Table 1704.3)		
Material verification of structural steel and cold-formed steel deck	Periodic	Verify identification markings of steel conform to ASTM standards noted in General Structural Notes. Verify manufacturer's certified test reports.
Material verification of high-strength bolts, nuts and washers	Periodic	Verify identification markings to conform to ASTM standards noted in General Structural Notes. Manufacturer's certificate of compliance is required.
Material verification of weld filler materials	Periodic	Verify identification markings to conform to AWS specification. Manufacturer's certificate of compliance is required.
Welding (IBC 1704.3.1)		
Complete & partial penetration groove welds	Continuous	Pre-welding inspections are to be performed to ensure that proper materials, welding procedures, and welding personnel qualifications are appropriate and comply with AWS D1.1. A visual inspection of all welds must be provided with periodic inspections made of work in progress.
Multi-pass fillet welds	Continuous	
Single-pass fillet welds > 5/16"	Continuous	
Plug, slot, seam or flange welds	Continuous	
Single-pass fillet welds ≤ 5/16"	Periodic	
Floor & roof deck welds	Periodic	
Shear connector (i.e. stud) welds	Periodic	
Cold-formed steel welds	Periodic	
Welds of stairs & railing systems	Periodic	
Details of Steel Frame (IBC 1704.3.2)		
Member locations, bracing, gusset plates, stiffeners and other connection components	Periodic	All steel frames shall be inspected to verify compliance with the approved construction documents, such as bracing, stiffening, member size and location, and proper application of joint details at each connection.
High-Strength Bolting (IBC 1704.3.3)		
Pretensioned & slip-critical joints	Periodic	See steel section of the General Structural Notes and Section 9.2 and 9.3 of the RCSC Specification.
Snug-tightened joints	Periodic	Verify that all joints use proper fastener components, connected elements are fabricated properly, the bolted joint is drawn into firm contact, and that the nuts cannot be removed without the use of a wrench. (See Section 9.1 of RCSC Specification).
Structural Steel in Seismic-Force-Resisting Systems (IBC 1707.2 & 1708.3 and AISC 341 Appendix Q)		
Visual inspection prior to welding	Continuous	Verify materials, fit-up of groove welds, configuration and finish of access holes and fit-up of fillet welds.

Item	Frequency	Detailed Instructions
Visual inspection during welding	Continuous	Verify: WPS followed, use of qualified welders, control and handling of welding consumables, environmental conditions, welding techniques and no welding over cracked tacks.
Visual inspection after welding	Periodic	Verify: welds are cleaned; welder identification is legible; size, length and location of welds; verify that welds meet acceptance criteria; placement of reinforcement fillets; removal of backing bars and weld tabs as required; and repair activities.
Nondestructive testing of welds Ultrasonic testing		(1) All complete joint penetration (CJP) groove welds in materials 5/16" thick or greater. (2) For base metal thickness greater than 1-1/2" and connected material greater than 3/4" thick containing CJP groove welds loaded in tension in the through thickness direction in tee and corner joints. (3) Where approved by the Engineer and the Building Official, the amount of required ultrasonic testing may be reduced to 25% provided the demonstrated reject rate of a welder or welding operator is 5% or less and at least 40 completed welds have been used to calculate reject rate.
Nondestructive testing of welds Magnetic particle testing (MT)		(1) When welding of doubler plates, continuity plates or stiffeners has been done in the k-area, the web shall be tested for cracks using magnetic particle testing (MT). Inspection area shall include the k-area base metal within 3 in. of the weld. (2) 25 percent of all beam-to-column CJP groove welds. (3) At welded splices and connections, thermally cut surfaces of beam copes and access holes shall be tested when the flange thickness exceeds 1½" for rolled shapes or when the web thickness exceeds 1½" for built-up shapes. (4) Any weld and adjacent area of the RBS plastic hinge region that has been repaired by welding, or on the base metal of the RBS plastic hinge region if a sharp notch has been removed by grinding. (5) The ends of welds from which the weld tabs have been removed, except for continuity plate weld tabs. (6) Where approved by the Engineer and the Building Official, the amount of required MT on CJP groove welds may be reduced to 10% provided the demonstrated reject rate of a welder or welding operator is 5% or less and at least 20 completed welds have been used to calculate reject rate. This reduction only applies to welds in item (2) above, and is not permitted on other welds requiring MT.
Inspection prior to bolting	Periodic	Verify: proper bolts and bolting procedure are selected for joint detail; connecting elements are fabricated properly, including faying surface and hole preparation; pre-installation verification testing of fastener assemblies and methods; and proper storage is provided for bolts, nuts, washers and fastener components.
Inspection during bolting	Periodic	Verify: fastener assemblies placed in all holes and washers are properly positioned, joint brought to snug-tight condition prior to pretensioning, fastener components not turned by the wrench are prevented from rotating, bolts are progressing systematically from most rigid point toward free edges.
Inspection after bolting	Continuous	Document accepted and rejected connections.
Reduced beam sections (RBS)	Continuous	Verify contour and finish as well as dimensional tolerances.
Protected zones	Continuous	Verify that no holes or unapproved attachments are made within the protected zone.

Concrete Construction per IBC Sections 1704.4 & 1708.2

Item	Frequency	Detailed Instructions
Reinforcing steel, including prestressing tendons	Periodic	Verify prior to placing concrete that reinforcing is of specified type, grade and size; that it is free of oil, dirt and rust; that it is located and spaced properly; that hooks, bends, ties, stirrups and supplemental reinforcement are placed correctly; that lap lengths, stagger and offsets are provided; and that all mechanical connections are installed per the manufacturer's instructions and/or evaluation report.
Welding of reinforcing steel	Periodic	Verify weldability of reinforcing steel other than A706. Continuous inspection is required for welding of reinforcing steel used in intermediate or special concrete moment frames, boundary elements of special structural walls or shear reinforcement.
Cast-in bolts & embeds	Continuous	
Post-installed anchors or dowels		All post-installed anchors/dowels shall be specially inspected as required by the approved ICC-ES report.
Use of required mix design	Periodic	Verify that all mixes used comply with the approved construction documents; ACI 318: Ch. 4, 5.2-5.4; and IBC 1904.3, 1913.2, 1913.3.
Concrete sampling for strength tests, slump, air content, and temperature	Continuous	Samples for strength tests shall be taken in accordance with ASTM C172, cured per ASTM C31 and tested in accordance with ASTM C39. Acceptance criteria for strength tests shall be per ACI 318 Section 5.6.3.3. For each mix placed, samples shall be taken not less than once a day, nor less than once for each 150 yd^3 of concrete, nor less than once for each 5000 ft^2 of surface area for slabs or walls. At the time fresh concrete is is sampled to fabricate specimens for strength tests, perform slump and air content tests and determine the temperature of the concrete.
Concrete & shotcrete placement	Continuous	
Curing temperature and techniques	Periodic	Verify that the ambient temperature for concrete is kept at > 50°F for at least 7 days after placement. High-early-strength concrete shall be kept at > 50°F for at least 3 days. Accelerated curing methods may be used (see ACI 318: 5.11.3). The ambient temperature for shotcrete shall be > 40°F for the same period of time as noted for concrete. Shotcrete shall be kept continuously moist for at least 24 hours after shotcreting. All concrete materials, reinforcement, forms, fillers, and ground shall be free from frost. In hot weather conditions ensure that appropriate measures are taken to avoid plastic shrinkage cracking and that the specified water/cement ratio is not exceeded.
Pre-stressed concrete	Continuous	Verify application of prestressing forces and grouting of bonded prestressing tendons.
Erection of precast concrete	Periodic	Verify that all precast elements are lifted, assembled and braced in accordance with the approved construction documents.
In-situ strength verification	Periodic	Verify that adequate strength has been achieved prior to the removal of shores and forms or the stressing of post-tensioned tendons.
Formwork	Periodic	Verify that the forms are placed plumb and conform to the shapes, lines, and dimensions of the members as required by the approved construction documents.
Reinforcement in special moment frames, special structural walls and coupling beams	Periodic	Verify that ASTM A 615 reinforcing steel used in these areas complies with ACI 318: 21.1.5.2 by means of certified mill test reports.

Masonry Construction per IBC Section 1704.5

Item	Frequency	Detailed Instructions
Review material certificates, mix designs, test results and construction procedures	Periodic	It shall be confirmed that materials used conform to the requirements of the approved construction documents. Mortar mix designs shall show compliance with the proportion or property specification of ASTM C270. Grout shall comply with the proportion or strength requirements of ASTM C476 or be based upon compressive strength tests in accordance with ASTM C1019. Material certificates shall be provided for the following: reinforcement; anchors, ties, fasteners, and metal accessories; masonry units; mortar and grout materials. Construction procedures for cold-weather or hot-weather construction shall be reviewed.
Verify f'_m and f'_{AAC} prior to construction	Periodic	Determine the compressive strength for each wythe by the "unit strength method" or by the "prism test method" as specified in Section 1.4B of ACI 530.1-08 prior to construction.
Self-consolidating grout	Continuous	
Grout placement	Continuous	
Preparation of required grout specimens, mortar specimens and/or prisms shall be observed	Periodic	If the prism test method is used a minimum of three prisms shall be constructed in accordance with ASTM C1314. If the unit strength method is selected the compressive strength of the grout shall be determined per ASTM C1019 (not required if grout complies with ASTM C476).
Post-installed anchors or dowels		All post-installed anchors/dowels shall be specially inspected as required by the approved ICC-ES report.
Prior to Grouting:		
Grout space is clean	Periodic	Verify that grout space is free of mortar droppings, debris, loose aggregate, and material deleterious to masonry grout.
Placement of reinforcement an connectors	Periodic	Verify that reinforcement, joint reinforcement, wall ties, anchor bolts and veneer anchors are installed in accordance with Section 3.4 of ACI 530.1-08.
Proportions of site-prepared grout	Periodic	Verify that grout is proportioned per ASTM C476 and has a slump between 8-11 inches. Self-consolidated grout shall not be proportioned onsite.
As Masonry Construction Begins:		
Proportions of site-prepared mortar	Periodic	Ensure that mortar that begins to stiffen or is not used within 2½ hours is discarded. No admixtures containing > 0.2% chlorides shall be used. Jobsite pigments shall meet the limitations of Section 2.6A of ACI 530.1-08.
Construction of mortar joints	Periodic	Unless specified otherwise construct 3/8" bed and head joints, except at foundation or glass unit masonry. Bed joint at foundation shall be >1/4" and ≤ 3/4". Tool joints with a round jointer when mortar is thumbprint hard. Remove masonry protrusions extending ≥ 1/2" into cells to be grouted. Solidify fill collar joints < 3/4" with mortar during construction.
Location of reinforcement and connectors	Periodic	Verify compliance with approved construction documents. Do not place dissimilar metals in contact with each other.
Prestressing technique	N/A	
Grade and Size of prestressing tendons and anchorages.	N/A	
During Construction:		
Size and location of structural elements	Periodic	Verify that structural elements are placed in locations specified on the approved construction documents and to the tolerances noted in Section 3.3F of ACI 530.1-08.
Type, size and location of anchors and other details of masonry anchorages to structural members	Periodic	Verify that structural elements are placed in locations specified on the approved construction documents. Headed or bent bar anchor bolts shall be embedded in grout.

Item	Frequency	Detailed Instructions
Size, grade and type of reinforcement, and metal accessories	Periodic	Verify that materials meet the requirements of Section 2.4 of ACI 530.1-08. All reinforcement shall be placed in grout with minimum grout cover of 1/2" for coarse grout and 1/4" for fine grout. Verify that reinforcement protection, standard hooks and minimum bend diameters comply with Section 1.15 of ACI 530-08.
Welding of reinforcing bars	Not Allowed	
Preparation, construction and protection of masonry during cold or hot weather construction	Periodic	When the ambient air temperature is <40°F ensure that construction complies with Section 1.8C of ACI 530.1-08. When the ambient air temperature is >100°F, or >90°F with a wind velocity >8mph, ensure that construction complies with Section 1.8D of ACI 530.1-08.
Application and measurement of prestressing force	N/A	
Occupancy Category IV:		
Verification of proportions of materials in premixed or pre-blended mortar and grout as delivered to the site	Periodic	Verify that proportions for mortar meet ASTM C270 and proportions for grout meet ASTM C476.
Placement of masonry units	Periodic	Verify that face shells and head joints are fully mortared and that vertical cells are aligned and unobstructed openings for grout are provided. All units are to be clean and placed while mortar is soft and plastic.

Soils per IBC Section 1704.7

Item	Frequency	Detailed Instructions
Verify subgrade is adequate to achieve design bearing capacity	Periodic	Prior to placement of concrete.
Verify excavations extend to proper depth and material	Periodic	Prior to placement of compacted fill, concrete and micropile installation.
Verify that subgrade has been appropriately prepared prior to placing compacted fill	Periodic	Prior to placement of compacted fill.
Perform classification and testing of compacted fill materials	Periodic	All materials shall be checked at each lift for proper classifications and gradations not less than once for each 10,000ft^2 of surface area.
Verify proper materials, densities and lift thicknesses during placement and compaction.	Continuous	Density tests shall be performed at a frequency of at least one per lift beneath each spot footing, and at least once per lift at intervals no larger than 50 feet along the length of continuous footings.

Driven Deep Foundations per IBC Section 1704.8

Item	Frequency	Detailed Instructions
Verify materials, sizes and lengths	Continuous	
Determine capacities and conduct necessary load tests	Continuous	
Observe drilling operations	Continuous	
Verify placement locations & plumbness, confirm type & size of hammer, record number of blows per foot, record tip and butt elevations and document any damage to element	Continuous	

Item	Frequency	Detailed Instructions
Perform additional inspections for steel, concrete or other specialty elements.		Steel and concrete as indicated above. Specialty items per ICC-ES report.

Cast-In-Place Deep Foundations - Micropiles per IBC Section 1704.9

Item	Frequency	Detailed Instructions
Observe drilling operation and reporting	Continuous	
Verify placement locations & plumbness, confirm element diameters, lengths, embedment and adequate end-bearing capacity. Record concrete or grout volumes.	Continuous	
Perform additional inspections for concrete elements.	Continuous	As indicated for concrete, above.
Observe load tests and review Specialty Contractor's load test data and interpretation.	Continuous	Report load test observations and provide data and interpretations to Geotechnical and Structural Engineers.

Cold-Formed Steel Light-Frame Construction per IBC Sections 1704.3.4, 1706.3 & 1707.4

Item	Frequency	Detailed Instructions
Trusses spanning > 60-feet	Periodic	Verify that temporary and permanent truss bracing is installed in accordance with approved truss package.
Wind-force-resisting systems or seismic-force-resisting systems	Periodic	Periodic inspections of welding operations. If fastener spacing is < 4"o.c.: Verify that proper screw attachment, bolting, anchoring and other fastening of shearwalls, diaphragms, drag struts, braces, shear panels and holdowns has occurred.

SPRAYED FIRE-RESISTANT MATERIALS (IBC 1704.12)

Item	Frequency	Detailed Instructions
Surface preparation	Periodic	1704.12.1, 1704.12.2, 1704.12.3
Material thickness	Periodic	1704.12.4
Material density	Periodic	1704.12.5
Bonding strength	Periodic	1704.12.6

MASTIC AND INTUMESCENT FIRE-RESISTANT COATINGS (IBC 1704.13)

Item	Frequency	Detailed Instructions
Surface preparation	Periodic	AWCI 12-B
Thickness	Periodic	AWCI 12.B

EXTERIOR INSULATION AND FINISH SYSTEMS (EFIS) (IBC 1704.14)

Item	Frequency	Detailed Instructions
Material and installation	N/A	No inspection is required if a "water-resistive barrier" is provided. Exception #2.

STORAGE RACKS & ACCESS FLOORS (IBC 1707.5)

Item	Frequency	Detailed Instructions
Verify anchorage	Periodic	Only required on storage racks 8'-0" or greater in height.

ARCHITECTURAL COMPONENTS (IBC 1707.6)

Item	Frequency	Detailed Instructions
Erection and fastening of exterior cladding or interior and exterior veneers	Periodic	Exceptions: 1. Special inspection is not required for exterior cladding, interior and exterior nonbearing walls and interior and exterior veneer 30 feet or less in height above grade or walking surface. 2. Special inspection is not required for exterior cladding and interior and exterior veneer weighing 5 psf or less 3. Special inspection is not required for interior nonbearing walls weighing 15 psf or less.
Erection and fastening of interior and exterior nonbearing walls	Periodic	

MECHANICAL & ELECTRICAL COMPONENTS (IBC 1707.7, 1707.8 & 1708.4)

Item	Frequency	Detailed Instructions
Anchorage of emergency or standby power systems	Periodic	
Installation of piping systems carrying flammable, combustible, or highly toxic materials	Periodic	Natural gas.
Installation of HVAC ductwork containing hazardous materials	N/A	
Installation of vibration isolation systems having a clearance of <=1/4	N/A	
Designated seismic systems	N/A	

MISCELLANEOUS AREAS

Item	Frequency	Detailed Instructions
Suspended Ceiling Grid Clips	Periodic	During installation before items are concealed.
Suspended Ceiling wire spacing (Seismic)	Periodic	During installation before items are concealed.
Soils backfill (specify locations and frequency)	Periodic	See specifications
Soils for curb and gutter (specify locations and frequency)	Periodic	See specifications
Soils for parking lots (specify locations and frequency)	Periodic	See specifications
Soils for utility trench backfill	Periodic	See specifications
Reinforcement for slab on grade sidewalks and drive approaches (specify locations and frequency)	N/A	
Reinforcement for interior slab on grade (specify locations and frequency)	Periodic	Verify prior to placing concrete that reinforcing is of specified type, grade and size; that it is free of oil, dirt and rust; that it is located and spaced properly; that hooks, bends, ties, stirrups and supplemental reinforcement are placed correctly; that lap lengths, stagger and offsets are provided; and that all mechanical connections are installed per the manufacturer's instructions and/or evaluation report.

Item	Frequency	Detailed Instructions
Concrete testing for slab on grade sidewalks and drive approaches (specify locations and frequency)	Periodic	See specifications
Concrete testing for interior slab on grade (specify locations and frequency)	Continuous	Samples for strength tests shall be taken in accordance with ASTM C172, cured per ASTM C31 and tested in accordance with ASTM C39. Acceptance criteria for strength tests shall be per ACI 318 Section 5.6.3.3. For each mix placed, samples shall be taken not less than once a day, nor less than once for each 150 yd^3 of concrete, nor less than once for each 5000 ft^2 of surface area for slabs or walls. At the time fresh concrete is is sampled to fabricate specimens for strength tests, perform slump and air content tests and determine the temperature of the concrete.
Asphalt inspection (specify locations and frequency)	Periodic	See specifications
Asphalt testing (specify locations and frequency)	Periodic	See specifications
Steam and water line welding (specify locations and frequency)		Not Required
Seismic supports for duct work and sealing of joints for duct work		Not Required
Seismic supports for electrical raceways, cable trays and lights	Periodic	
Seismic supports for plumbing lines including gas, water and steam and condensation	Periodic	Gas piping
Seismic bracing for mechanical units both on slab and suspended		Not required

GROUND IMPROVEMENT USING AGGREGATE PIERS/STONE COLUMNS

Item	Frequency	Detailed Instructions
Observe installation operation and reporting of stone quantities vs depth, and densification procedures including vibration/tamping parameters	Continuous	Provide daily installation records to Geotechnical Engineer
Verify placement locations & plumbness, confirm bottom elevations.	Continuous	
Observe load tests and review Specialty Contractor's load test data and interpretation.	Continuous	Report load test observations and provide data and interpretations to Geotechnical and Structural Engineers.

GEOFOAM FILL

Item	Frequency	Detailed Instructions
Verify compliance of delivered geofoam products and certification documents		Prior to commencing geofoam work, and with each lot delivered.
Verify subgrade is prepared for geofoam placement and bedding material placed as required by drawings and specification		Prior to placing first level of geofoam blocks.

Item	Frequency	Detailed Instructions
Observe geofoam construction and procedures to protect geofoam material, and document any damage		
Verify that geofoam and specified shear keys and/or connectors are installed in accordance with geofoam drawings		Before installing each level of geofoam blocks.
Verify completion of geofoam finished surface to specified tolerances		Prior to placing fill, pavements, and/or flatwork on geofoam surface.

Special Inspectors Shall:
- Be approved by the Building Official prior to performing any duties;
- Provide proof of licensure as a special inspector by the State of Utah for each type of inspection;
- Inspection reports are to meet the requirements of IBC 1704.1.2 and DFCM standards;
- Inspection reports are to be submitted to the code consultant, architect, DFCM project manager, and the State of Utah Building Official within 48 hours of performing inspections;
- A final inspection report shall be submitted following completion of the project documenting the types of special inspections performed and a statement indicating that the structure is in compliance with the approved construction documents and applicable codes (see IBC 1704.1.2).

Updated May 16, 2011

GSBS ARCHITECTS
375 WEST 200 SOUTH
SALT LAKE CITY, UT 84101
P 801.521.8600
F 801.521.7913
www.gsbsarchitects.com

CANNONDESIGN
CANNON DESIGN
829 NORTH 1st AVENUE
PHOENIX, AZ 85003
602.294.6500

REVISIONS:

1	05.04.2012	Addendum-02

STATE OF UTAH
JOHN BRANSON
NO. 134955
04.27.2012
LICENSED ARCHITECT

UTAH VALLEY UNIVERSITY STUDENT LIFE CENTER & PARKING STRUCTURE

800 WEST UNIVERSITY PARKWAY
OREM, UT 84058

DFCM

4110 STATE OFFICE BUILDING
SALT LAKE CITY, UT 84112

DRAWN BY:	JB
CHECKED BY:	TY
OWNER PROJECT NO.:	#10289790
GSBS PROJECT NO.:	2011.045.00
ISSUED DATE:	04.27.2012

SPECIAL INSPECTIONS / DEFERRED SUBMITTALS

CONSTRUCTION DOCUMENTS

GI-040

BUILDING CODE ANAYSIS
PARKING STRUCTURE

APPLICABLE CODES	Year		Year
International Building Code	2009	National Electrical Code	2008
International Mechanical Code	2009	Uniform Code for	
International Plumbing Code	2009	Building Conservation	2009
International Fire Code	2009	ADA Accessibility Guidelines	ANSI 11.1 2003.
International Energy Conservation Code	2009		

A. Occupancy and Group: **S-2**

Change in Use: Yes **N/A** No **N/A** Mixed Occupancy: Yes _____ No **X**
Special Use and Occupancy (e.g. High Rise, Covered Mall): **N/A**

B. Seismic Design Category: **Refer to Structural Design Criteria (Sheet SE-001) .**
Design Wind Speed: **90 MPH .**

C. Type of Construction (circle one):

I	I	II	II	III	III	IV	V	V
A	B	A	B	A	B	HT	A	B

D. Fire Resistance Rating Requirements for the Exterior Walls based on the fire separation distance (in hours): Table 706.4

North: **0** South: **VARIES** East: **3HR** West: **2HR .**
REFER TO FOOTNOTES AND CODE ANALISYS PLANS

E. Mixed Occupancies: **NO** Nonseparated Uses: **NO**

F. Sprinklers:
Required: **YES** Provided: **YES** Type of Sprinkler System: **NFPA 13**

G. Number of Stories: **5** Building Height: **56'-8" .**

H. Automatic Sprinker Height Increase (504.2): 20' + 1 Story:

a) Total allowable height: **180'**

b) Total allowable stories: **12**

I. Actual Area per Floor (square feet):

First Floor:	27,054
Second Floor:	29,033
Third Floor:	28,681
Fourth Floor:	28,681
Fifth Floor:	28,681
Sixth Floor:	11,138
Total:	**153,268**

J. Tabular Area (Table 503): **79,000**

K. Area Modifications (506.1): **256,750 = (79,000) + (79,000 x .25) + (79,000 x 2)**

a) Frontage Increase (506.2): **25%**

Sprinkler Increase (506.3): **200%**

b) Sum of the Ratio Calculations for Mixed Occupancies: **N/A**

c) Total Allowable Area for:
1) One Story: **N/A**
2) Two Story: **N/A**

d) Unlimited Area Building: Yes ___ No **X** Code Section: **N/A**

L. Fire Resistance Rating Requirements for Building Elements (hours).

Element	Hrs	Assembly Listing	Element	Hrs	Assembly Listing
Exterior Bearing Walls	0	-	Roofs - Ceiling Roofs	0	-
Interior Bearing Walls	0	-	Exterior Doors and Windows	-	-
Exterior Non-Bearing Walls	0	-	Shaft Enclosures - CMU	-	-
Structural Frame *	3	IBC 720 4-1.1	Shaft Enclosures - GYP BD	-	-
			Fire Door and Fire Shutters	2	-
Fire Barriers *	1	UL-U419	Fire Walls	2	UL-U419
	2	UL-U906		3	IBC 720 4-1.1
Floors - Ceiling Floors *	0	-	* Where required to support fire-rated const.		

M. Design Occupant Load: **REFER TO CODE ANALISYS PLANS**
Exit Width Required: **REFER TO CODE ANALISYS PLANS**
Exit Width Provided: **REFER TO CODE ANALISYS PLANS**

N. Minimum Number of Required Plumbing Facilities: **N/A**

a) Water Closets: Required: **(M) 0.0** **(F) 0.0**
Provided: **(M) 00** **(F) 00 (00 + 0 unisex)**

b) Lavatories: Required: **(M) 0.0** **(F) 0.0**
Provided: **(M) 00** **(F) 00**

c) Bath Tubs or Showers: **0 .**

d) Drinking Fountains: Required: **0.0** Provided: **00**

e) Service Sinks: Required: **0** Provided: **0**

FOOTNOTES:

1) In case of conflict with the U.S. Department of Justice Federal Registers Parts 1 through 5 - ADA guidelines and specific reference to the International Building Code Accessibility Chapters, the more restrictive requirement shall govern.

2) This is an open parking garage. Refer to AE-P013 for a calculation of openness of perimeter walls.

3) The east wall of the garage is to be equivalent to a 3-hour wall. This rating is achieved with a combination of 3-hour constrction and a deluge sprinkler system. Refer to AE-P011.

4) Refer to Drawing Sheets AE-P011 and AE-P012 for Code Analysis Plans.

BUILDING CODE ANALYSIS
STUDENT LIFE CENTER

APPLICABLE CODES	Year		Year
International Building Code	2009	National Electrical Code	2008
International Mechanical Code	2009	Uniform Code for	
International Plumbing Code	2009	Building Conservation	2009
International Fire Code	2009	ADA AccessibilityGuidelines	
International Energy Conservation Code	2009	Guidelines	ANSI 11.1 2003.

A. Occupancy and Group: **A-2** **A-3** **B** **M .**

Change in Use: Yes **N/A** No **N/A** Mixed Occupancy: Yes **X** No **.**
Special Use and Occupancy (e.g. High Rise, Covered Mall): **Covered Mall .**

B. Seismic Design Category: **Refer to Structural Design Criteria (Sheet SE-001) .**
Design Wind Speed: **Refer to Structural Design Criteria (Sheet SE-001) .**

C. Type of Construction (circle one):

I	I	II	II	III	III	IV	V	V
A	B	A	B	A	B	HT	A	B

D. Fire Resistance Rating Requirements for the Exterior Walls based on the fire separation distance (in hours): Table 706.4

North: **0** South: **3HR** East: **0** West: **3HR .**

E. Mixed Occupancies: **Yes** Nonseparated Uses: **Yes .**

F. Sprinklers:
Required: **Yes** Provided: **Yes** Type of Sprinkler System: **NFPA 13 .**

G. Number of Stories: **4** Building Height: **60'-0" .**

H. Actual Area per Floor (square feet):

First Floor:	51,798
Second Floor:	37,856
Third Floor:	56,278
Fourth Floor:	24,294
Total:	170,226

I. Tabular Area (Table 503):

A-2	= Unlimited
A-3	= Unlimited
B	= Unlimited
M	= Unlimited

J. Area Modifications (506.1): **Not required since area is ulimited**

a) Frontage Increase (506.2): **N/A**

Sprinkler Increase (506.3): **N/A**

b) Sum of the Ratio Calculations for Mixed Occupancies: **N/A**

c) Total Allowable Area for:
1) One Story: **N/A .**
2) Two Story: **N/A .**

d) Unlimited Area Building: Yes **X** No ___ Code Section: **Table 503 .**

K. Fire Resistance Rating Requirements for Building Elements (hours).

Element	Hrs	UL	Comments
Primary Structural Frame*	2/3	- - - >	Columns: X790, IBC Table 721.5.1 (5) for concrete wraped columns Beams: N624
Bearing Walls - Exterior	2	N/A	No exterior bearing walls in design
Bearing Walls - Interior	2	N/A	No interior bearing walls in design
Non-Bearing Walls - Exterior	1	U465	IBC Table 602, see plan for locations
Non-Bearing Walls - Interior	N/A	N/A	
Partitions - Permanent	N/A	N/A	
Fire Barriers	N/A	N/A	
Floors - Ceiling Floors *	2/3	D902	
Roofs - Ceiling Roofs	1	P801	20' or higher no rating
Exterior Doors and Windows	N/A	N/A	
Shaft Enclosures - CMU*	2/3	U905	IBC Table 721.3.2 for 3hr
Shaft Enclosures - GYP BD*	2/3	U415	
Fire Door and Fire Shutters*	2/3	-	
Fire Walls	3	U905	IBC Table 721.3.2 for 3hr
Smoke Partitions	N/A	N/A	

* 3hr rating required if element occurs in 3hr rated bay to support fire wall

L. Design Occupant Load: **2,559 Totoal (A-2 = 83, A-3 = 1853, B = 570, M = 53)**

Exit Width Required: **512 inches** Exit Width Provided: **684 inches**

M. Minimum Number of Required Plumbing Facilities:

a) Water Closets: Required: **(M) 13** **(F) 21**
Provided: **(M) 19** **(F) 21 (19+2 in unisex)**

b) Lavatories: Required: **(M) 17** **(F) 17**
Provided: **(M) 18** **(F) 20 (18+2 in unisex)**

c) Bath Tubs or Showers: **(M) 7** **(F) 7**

d) Drinking Fountains: Required: **10** Provided: **12**

e) Service Sinks: Required: 4 Provided: **5**

FOOTNOTES:

1) In case of conflict with the U.S. Department of Justice Federal Registers Parts 1 through 5 - ADA guidelines and specific reference to the International Building Code Accessibility Chapters, the more restrictive requirement shall govern.

2) Additional Code Information shall be provided at the discretion of the Building Official for Complex Buildings. Including, but not limited to:

a) High Rise Requirements.
b) Atriums.
c) Performance Based Criteria.
d) Means or Egress Analysis.
e) Fire Assembly Locator Sheet.
f) Exterior and Interior Accessibility Route.
g) Fire Stopping, Including Tested Design Number.

GSBS ARCHITECTS
375 WEST 200 SOUTH
SALT LAKE CITY, UT 84101
P 801.521.8600
F 801.521.7913
www.gsbsarchitects.com

CANNONDESIGN
CANNON DESIGN
829 NORTH 1st AVENUE
PHOENIX, AZ 85003
602.294.6500

REVISIONS:

1	05.04.2012	Addendum-02

STATE OF UTAH
JOHN BRANSON
NO. 134865
04.27.2012
LICENSED ARCHITECT

UTAH VALLEY UNIVERSITY
STUDENT LIFE CENTER &
PARKING STRUCTURE

800 WEST UNIVERSITY PARKWAY
OREM, UT 84058

DFCM

4110 STATE OFFICE BUILDING
SALT LAKE CITY, UT 84112

DRAWN BY:	Author
CHECKED BY:	Checker
OWNER PROJECT NO.:	#10289790
GSBS PROJECT NO.:	2011.045.00
ISSUED DATE:	04.27.2012

BUILDING CODE ANALYSIS

CONSTRUCTION DOCUMENTS

1 GI-050

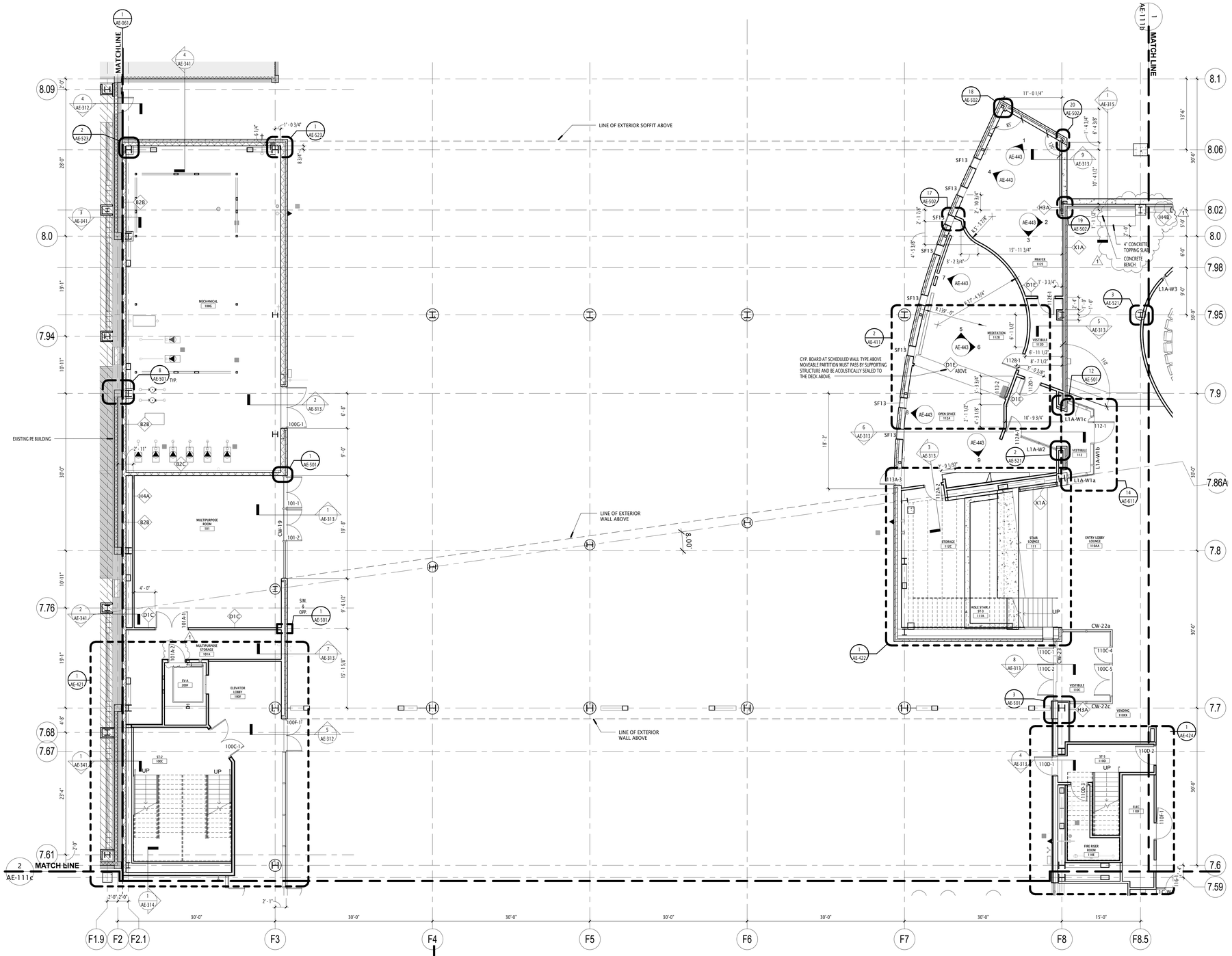

1 AE-111a FLOORPLAN - LEVEL 1 ZONE A
1/8" = 1'-0"

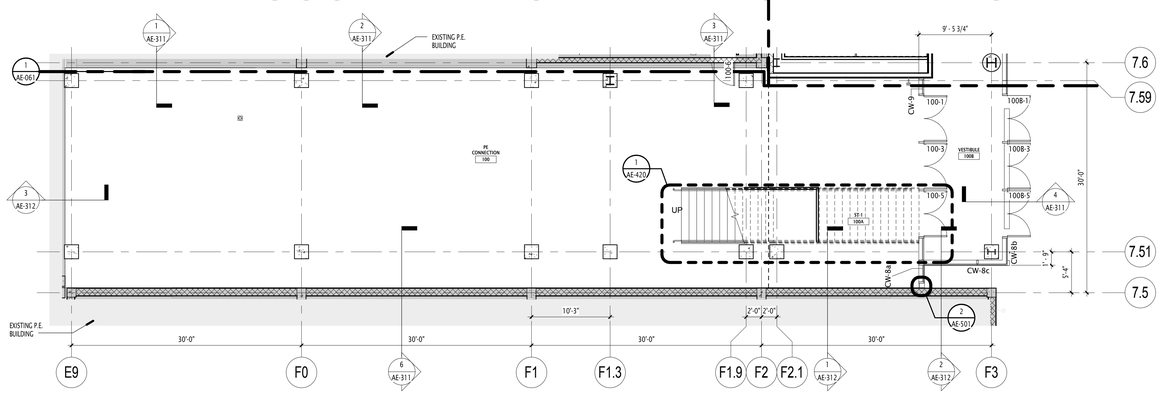

GENERAL NOTE - PLANS:

1. REFER TO SHEET AE-115 FOR PARTITION TYPES / SCHEDULE.
2. ALL MTL. STUD INTERIOR & EXTERIOR WALL DIMENSIONS ARE GIVEN TO CENTERLINE OF STUD, U.N.O.
3. ALL MASONRY & CONCRETE WALL DIMENSIONS ARE GIVEN TO FACE OF WALL U.N.O.
4. ALL DOOR & GLAZING SYSTEM WALL OPENING DIMENSIONS ARE GIVEN TO EDGE OF ROUGH OPENING U.N.O.
5. ALL INTERIOR DOOR ROUGH OPENING TO BE LOCATED 4" FROM FINISHED FACE OF ADJACENT WALL U.N.O.
6. ALL CURTAINWALL / STOREFRONT DIMENSIONS ARE GIVEN TO FACE OF GLAZING SYSTEM U.N.O.
7. DIMENSIONS GIVEN FOR CURVED / ANGLED INTERIOR / EXTERIOR WALLS ARE TO FACE OF MTL. STUD.
8. WALL TYPE SHOWN AT COLUMN WRAP IS TYP. FOR ALL EXPOSED SIDES U.N.O.
   COLUMN WRAP WALL DIMENSIONS GIVEN ARE TO FINISHED FACE OF WALL U.N.O.
9. WALL TYPES TO CONTINUE AT DOOR & GLAZING SYSTEM OPENINGS (TOP & BOTTOM) U.N.O.
10. SEE TOILET ROOM ACCESSORY KEY ON AE-415

RAILING TYPE LEGEND

TAG	DESCRIPTION
GR-1	Perf Metal Guardrail
GR-2	Stair Guardrail - Pipe w Extensions
GR-3	Guardrail - Pipe
HR-1	Perf Guardrail w/Handrail
HR-2	Stair Guardrail - Pipe w Handrail
HR-3	Handrail - Pipe - Wall
HR-4	Handrail - Pipe w Extensions/Posts
HR-5	Handrail - Pipe w Extensions
HR-P	Handrail - Pipe Only

GSBS ARCHITECTS
375 WEST 200 SOUTH
SALT LAKE CITY, UT 84101
P 801.521.8600
F 801.521.7913
www.gsbsarchitects.com

CANNONDESIGN
CANNON DESIGN
829 NORTH 1st AVENUE
PHOENIX, AZ 85003
602.294.6500

REVISIONS:

1	05.04.2012	Addendum-02

STATE OF UTAH
JOHN BRANSON
NO. 134955
04.27.2012
LICENSED ARCHITECT

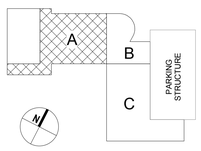

KEYPLAN - NTS

UTAH VALLEY UNIVERSITY
STUDENT LIFE CENTER &
PARKING STRUCTURE

800 WEST UNIVERSITY PARKWAY
OREM, UT 84058

DFCM

4110 STATE OFFICE BUILDING
SALT LAKE CITY, UT 84112

DRAWN BY:	JB
CHECKED BY:	AS
OWNER PROJECT NO.:	#10289790
GSBS PROJECT NO.:	2011.045.00
ISSUED DATE:	04.27.2012

FLOORPLAN - LEVEL 1 - ZONE A

CONSTRUCTION DOCUMENTS

AE-111a

GENERAL NOTE - PLANS:

1. REFER TO SHEET AE-115 FOR PARTITION TYPES / SCHEDULE.
2. ALL MTL. STUD INTERIOR & EXTERIOR WALL DIMENSIONS ARE GIVEN TO CENTERLINE OF STUD, U.N.O.
3. ALL MASONRY & CONCRETE WALL DIMENSIONS ARE GIVEN TO FACE OF WALL U.N.O.
4. ALL DOOR & GLAZING SYSTEM WALL OPENING DIMENSIONS ARE GIVEN TO EDGE OF ROUGH OPENING U.N.O.
5. ALL INTERIOR DOOR ROUGH OPENING TO BE LOCATED 4" FROM FINISHED FACE OF ADJACENT WALL U.N.O.
6. ALL CURTAINWALL / STOREFRONT DIMENSIONS ARE GIVEN TO FACE OF GLAZING SYSTEM U.N.O.
7. DIMENSIONS GIVEN FOR CURVED / ANGLED INTERIOR / EXTERIOR WALLS ARE TO FACE OF MTL. STUD.
8. WALL TYPE SHOWN AT COLUMN WRAP IS TYP. FOR ALL EXPOSED SIDES U.N.O. COLUMN WRAP WALL DIMENSIONS GIVEN ARE TO FINISHED FACE OF WALL U.N.O.
9. WALL TYPES TO CONTINUE AT DOOR & GLAZING SYSTEM OPENINGS (TOP & BOTTOM) U.N.O.
10. SEE TOILET ROOM ACCESSORY KEY ON AE-415

RAILING TYPE LEGEND	
TAG	DESCRIPTION
GR-1	Perf Metal Guardrail
GR-2	Stair Guardrail - Pipe w Extensions
GR-3	Guardrail - Pipe
HR-1	Perf Guardrail w/Handrail
HR-2	Stair Guardrail - Pipe w Handrail
HR-3	Handrail - Pipe - Wall
HR-4	Handrail - Pipe w Extensions/Posts
HR-5	Handrail - Pipe w Extensions
HR-P	Handrail - Pipe Only

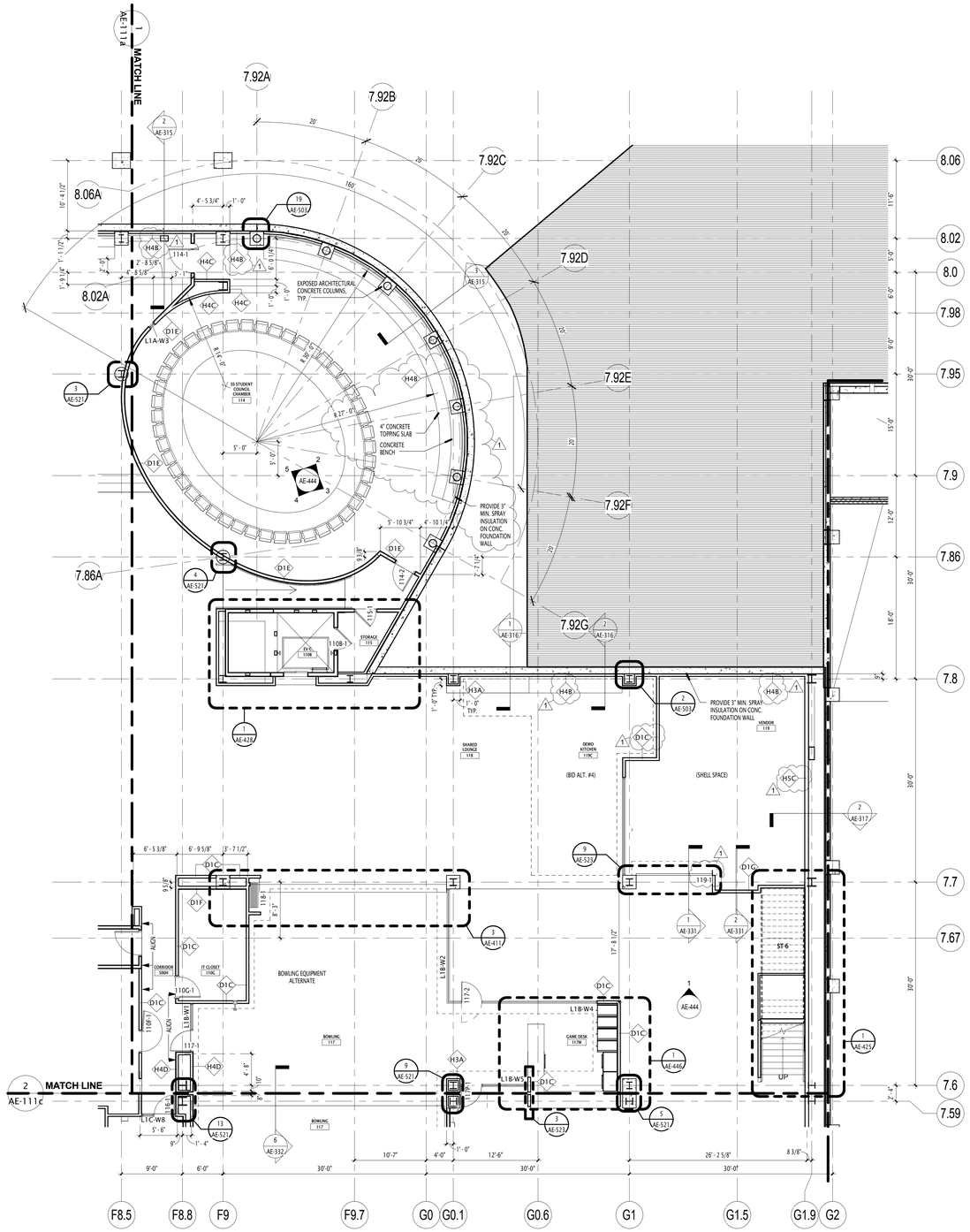

1 AE-111b FLOORPLAN - LEVEL 1 ZONE B 1/8" = 1'-0"

GSBS ARCHITECTS
375 WEST 200 SOUTH
SALT LAKE CITY, UT 84101
P 801.521.8600
F 801.521.7913
www.gsbsarchitects.com

CANNONDESIGN
CANNON DESIGN
829 NORTH 1st AVENUE
PHOENIX, AZ 85003
602.294.6500

REVISIONS:

1	05.04.2012	Addendum-02

STATE OF UTAH
JOHN BRANSON
NO. 134955
04.27.2012
LICENSED ARCHITECT

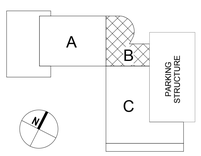

KEYPLAN - NTS

UTAH VALLEY UNIVERSITY
STUDENT LIFE CENTER &
PARKING STRUCTURE

800 WEST UNIVERSITY PARKWAY
OREM, UT 84058

DFCM

4110 STATE OFFICE BUILDING
SALT LAKE CITY, UT 84112

DRAWN BY:	JB
CHECKED BY:	AS
OWNER PROJECT NO.:	#10289790
GSBS PROJECT NO.:	2011.045.00
ISSUED DATE:	04.27.2012

FLOORPLAN - LEVEL 1 - ZONE B

CONSTRUCTION DOCUMENTS

AE-111b

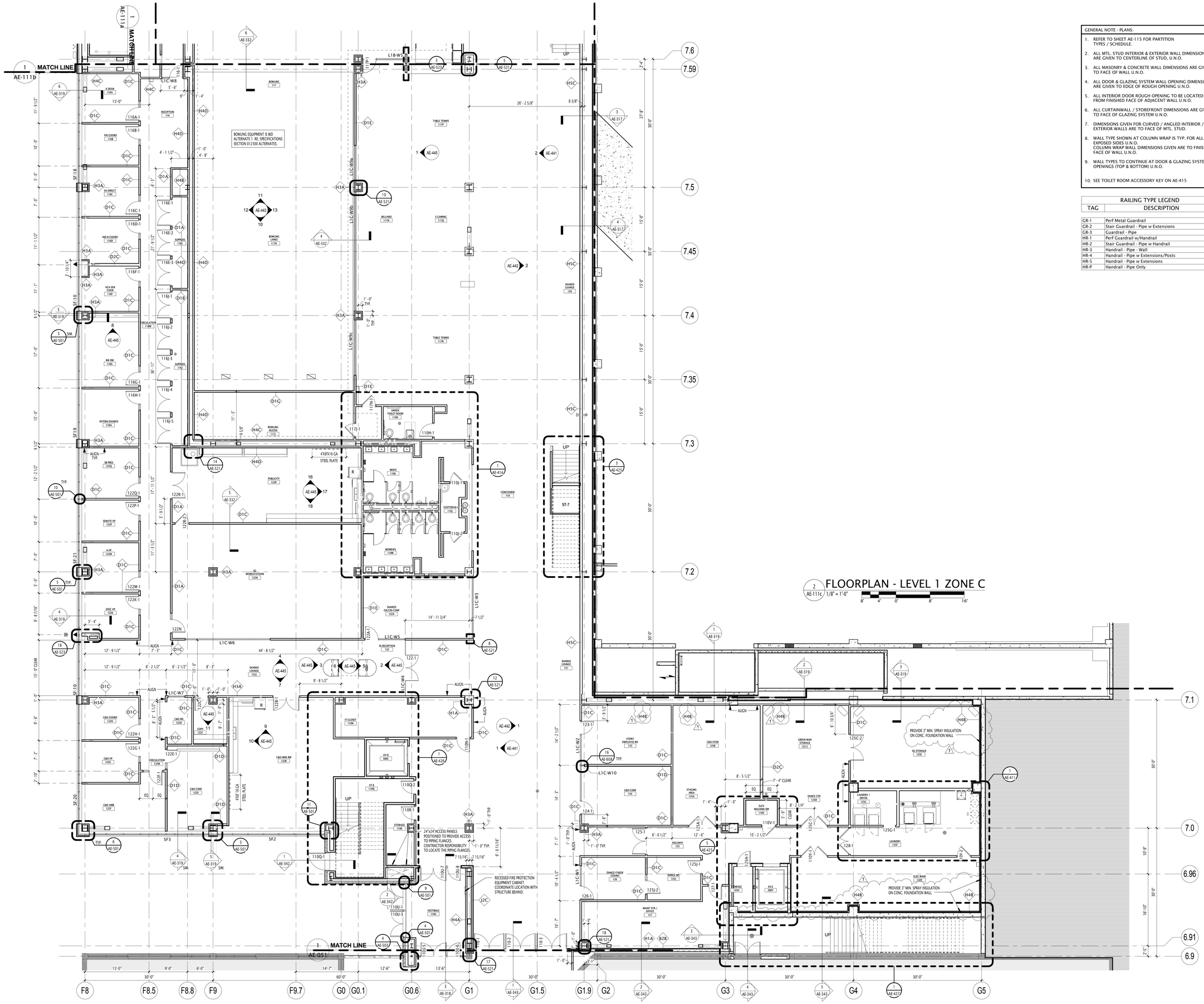

2 FLOORPLAN - LEVEL 1 ZONE C
AE-111c 1/8" = 1'-0"

GENERAL NOTE - PLANS:

1. REFER TO SHEET AE-115 FOR PARTITION TYPES / SCHEDULE.
2. ALL MTL. STUD INTERIOR & EXTERIOR WALL DIMENSIONS ARE GIVEN TO CENTERLINE OF STUD, U.N.O.
3. ALL MASONRY & CONCRETE WALL DIMENSIONS ARE GIVEN TO FACE OF WALL U.N.O.
4. ALL DOOR & GLAZING SYSTEM WALL OPENING DIMENSIONS ARE GIVEN TO EDGE OF ROUGH OPENING U.N.O.
5. ALL INTERIOR DOOR ROUGH OPENING TO BE LOCATED 4" FROM FINISHED FACE OF ADJACENT WALL U.N.O.
6. ALL CURTAINWALL / STOREFRONT DIMENSIONS ARE GIVEN TO FACE OF GLAZING SYSTEM U.N.O.
7. DIMENSIONS GIVEN FOR CURVED / ANGLED INTERIOR / EXTERIOR WALLS ARE TO FACE OF MTL. STUD.
8. WALL TYPE SHOWN AT COLUMN WRAP IS TYP. FOR ALL EXPOSED SIDES U.N.O. COLUMN WRAP WALL DIMENSIONS GIVEN ARE TO FINISHED FACE OF WALL U.N.O.
9. WALL TYPES TO CONTINUE AT DOOR & GLAZING SYSTEM OPENINGS (TOP & BOTTOM) U.N.O.
10. SEE TOILET ROOM ACCESSORY KEY ON AE-415

RAILING TYPE LEGEND	
TAG	DESCRIPTION
GR-1	Perf Metal Guardrail
GR-2	Stair Guardrail - Pipe w Extensions
GR-3	Guardrail - Pipe
HR-1	Perf Guardrail w/Handrail
HR-2	Stair Guardrail - Pipe w Handrail
HR-3	Handrail - Pipe - Wall
HR-4	Handrail - Pipe w Extensions/Posts
HR-5	Handrail - Pipe w Extensions
HR-P	Handrail - Pipe Only

GSBS ARCHITECTS
375 WEST 200 SOUTH
SALT LAKE CITY, UT 84101
P 801.521.8600
F 801.521.7913
www.gsbsarchitects.com

CANNONDESIGN
CANNON DESIGN
829 NORTH 1st AVENUE
PHOENIX, AZ 85003
602.294.6500

REVISIONS:

1	05.04.2012	Addendum-02

STATE OF UTAH
JOHN BRANSON
NO. 134955
04.27.2012
LICENSED ARCHITECT

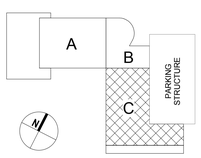

KEYPLAN - NTS

UTAH VALLEY UNIVERSITY STUDENT LIFE CENTER & PARKING STRUCTURE

800 WEST UNIVERSITY PARKWAY
OREM, UT 84058

DFCM

4110 STATE OFFICE BUILDING
SALT LAKE CITY, UT 84112

DRAWN BY:	JB
CHECKED BY:	AS
OWNER PROJECT NO.:	#10289790
GSBS PROJECT NO.:	2011.045.00
ISSUED DATE:	04.27.2012

FLOORPLAN - LEVEL 1 - ZONE C

CONSTRUCTION DOCUMENTS

AE-111c

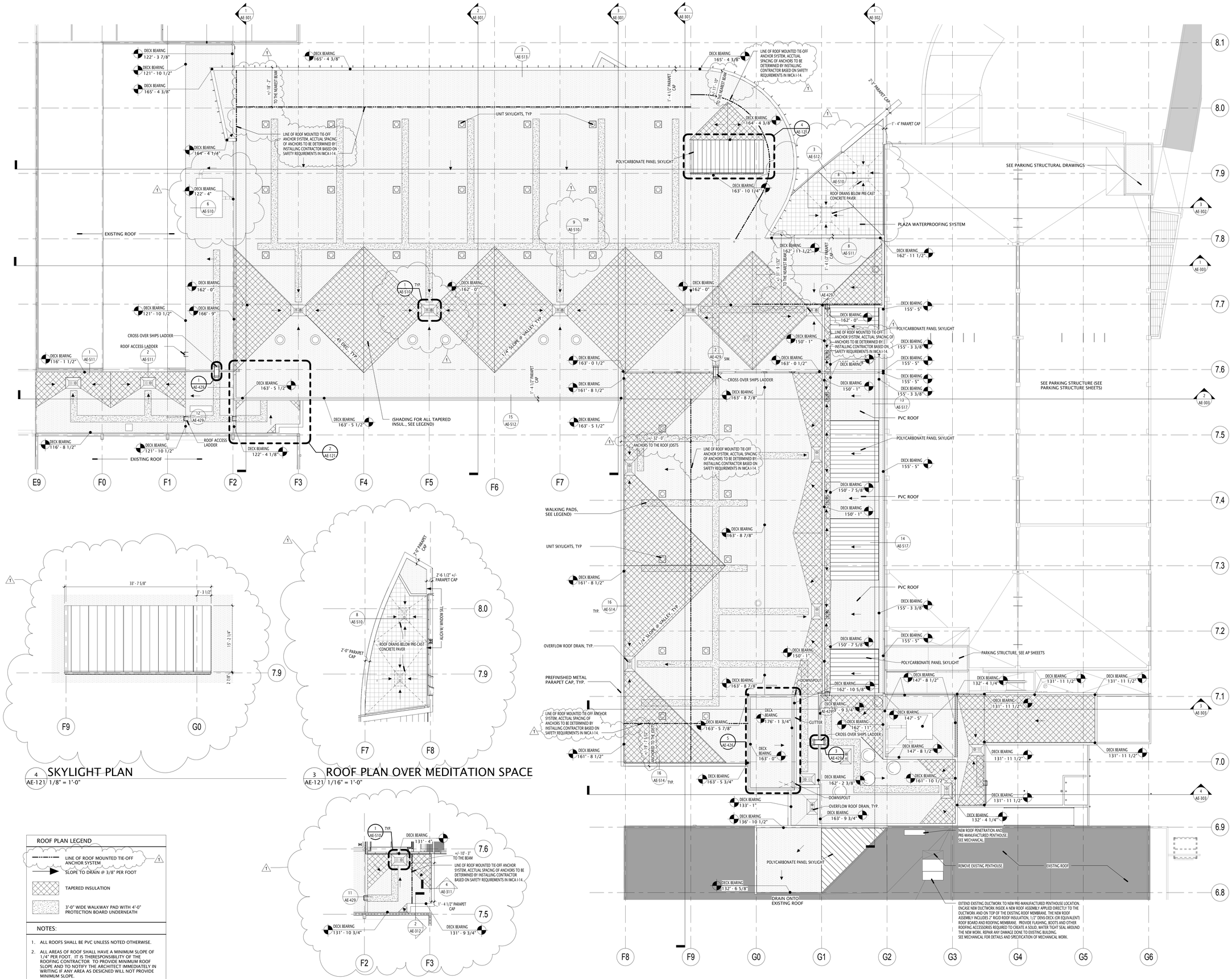

1 AE-121 ROOF PLAN
1/16" = 1'-0"

4 AE-121 SKYLIGHT PLAN
1/8" = 1'-0"

3 AE-121 ROOF PLAN OVER MEDITATION SPACE
1/16" = 1'-0"

2 AE-121 ROOF PLAN OVER VESTIBULE
1/16" = 1'-0"

ROOF PLAN LEGEND

- LINE OF ROOF MOUNTED TIE-OFF ANCHOR SYSTEM
- SLOPE TO DRAIN @ 3/8" PER FOOT
- TAPERED INSULATION
- 3'-0" WIDE WALKWAY PAD WITH 4'-0" PROTECTION BOARD UNDERNEATH

NOTES:

1. ALL ROOFS SHALL BE PVC UNLESS NOTED OTHERWISE.
2. ALL AREAS OF ROOF SHALL HAVE A MINIMUM SLOPE OF 1/4" PER FOOT. IT IS THERESPONSIBILITY OF THE ROOFING CONTRACTOR TO PROVIDE MINIMUM ROOF SLOPE AND TO NOTIFY THE ARCHITECT IMMEDIATELY IN WRITING IF ANY AREA AS DESIGNED WILL NOT PROVIDE MINIMUM SLOPE.

GSBS ARCHITECTS
375 WEST 200 SOUTH
SALT LAKE CITY, UT 84101
P 801.521.8600
F 801.521.7913
www.gsbsarchitects.com

CANNONDESIGN
CANNON DESIGN
829 NORTH 1st AVENUE
PHOENIX, AZ 85003
602.294.6500

REVISIONS:

1	05.04.2012	Addendum-02

STATE OF UTAH
JOHN BRANSON
NO. 134955
04.27.2012
LICENSED ARCHITECT

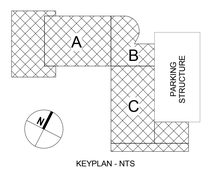

KEYPLAN - NTS

UTAH VALLEY UNIVERSITY STUDENT LIFE CENTER & PARKING STRUCTURE

800 WEST UNIVERSITY PARKWAY
OREM, UT 84058

DFCM

4110 STATE OFFICE BUILDING
SALT LAKE CITY, UT 84112

DRAWN BY:	JB
CHECKED BY:	TY
OWNER PROJECT NO.:	#10289790
GSBS PROJECT NO.:	2011.045.00
ISSUED DATE:	04.27.2012

ROOF PLAN - OVERALL

CONSTRUCTION DOCUMENTS

AE-121

WINDOW TREATMENT SCHEDULE (ALTERNATE #3)

TAG	ROOM NUMBER	ROOM NAME	OPENING COUNT	FURNISHED BY	INSTALLED BY	SERVICES	NOTES
ROLLER SHADE - MANUAL							
WT-1a			5	GC	GC	NONE	FREE WEIGHTS RM 407
WT-1a			2	GC	GC	NONE	MAC GYM RM 306
WT-1a			1	GC	GC	NONE	MACHINE WEIGHTS RM 303
WT-1a	112E	PRAYER	1	GC	GC	NONE	
WT-1a	116A	A DEAN	1	GC	GC	NONE	
WT-1a	116B	FIN COORD	1	GC	GC	NONE	
WT-1a	116C	SA DIRECT	2	GC	GC	NONE	
WT-1a	116D	IND B COORD	1	GC	GC	NONE	
WT-1a	116F	ACA SEN COOR	1	GC	GC	NONE	
WT-1a	116G	WK RM	1	GC	GC	NONE	
WT-1a	116H	INTERN/SHARED	1	GC	GC	NONE	
WT-1a	122A	SHARED (SA/CR) CONF	2	GC	GC	NONE	
WT-1a	122B	C&O WRK RM	1	GC	GC	NONE	
WT-1a	122E	C&O CONF	1	GC	GC	NONE	
WT-1a	122F	C&O AMB	2	GC	GC	NONE	
WT-1a	122G	C&O VP	1	GC	GC	NONE	
WT-1a	122H	C&O COORD	1	GC	GC	NONE	
WT-1a	122J	SHARED LOUNGE	1	GC	GC	NONE	
WT-1a	122K	EXEC VP	1	GC	GC	NONE	
WT-1a	122M	A VP	2	GC	GC	NONE	
WT-1a	122N	SG WORKSTATIONS	1	GC	GC	NONE	
WT-1a	122P	SENATE VP	1	GC	GC	NONE	
WT-1a	122Q	SB PRES	1	GC	GC	NONE	
WT-1a	201B	JUDCL AF	1	GC	GC	NONE	
WT-1a	201C	A DEAN	1	GC	GC	NONE	
WT-1a	201D	DEAN	5	GC	GC	NONE	
WT-1a	211H	CR WS	1	GC	GC	NONE	
WT-1a	211M	W OFFICE	1	GC	GC	NONE	
WT-1a	222B	OMBUDS	1	GC	GC	NONE	
WT-1a	222D	COLLAB	1	GC	GC	NONE	

1

GSBS ARCHITECTS
375 WEST 200 SOUTH
SALT LAKE CITY, UT 84101
P 801.521.8600
F 801.521.7913
www.gsbsarchitects.com

UTAH VALLEY UNIVERSITY
STUDENT LIFE CENTER & PARKING STRUCTURE

800 WEST UNIVERSITY PARKWAY
OREM, UT 84058

DFCM
4110 STATE OFFICE BUILDING
SALT LAKE CITY, UT 84112

REV.: Addendum- 2
BY: ty

AE-135-01

DFCM PROJECT NO.: #10289790
GSBS PROJECT NO.: 2011.045.00
ISSUED DATE: 05/04/12

WT-1a	201C	A DEAN	1	GC	GC	NONE	
WT-1a	201D	DEAN	5	GC	GC	NONE	
WT-1a	211H	CR WS	1	GC	GC	NONE	
WT-1a	211M	W OFFICE	1	GC	GC	NONE	
WT-1a	222B	OMBUDS	1	GC	GC	NONE	
WT-1a	222D	COLLAB	1	GC	GC	NONE	
WT-1a	223A	FIT COOR	1	GC	GC	NONE	
WT-1a	223B	FUTURE OFF	1	GC	GC	NONE	
WT-1a	223C	AS DIR	1	GC	GC	NONE	
WT-1a	223H	DIR CR	1	GC	GC	NONE	
WT-1a	223J	IM COORD	2	GC	GC	NONE	
WT-1a	223K	IM COORD	1	GC	GC	NONE	
WT-1a	223M	COLLAB	1	GC	GC	NONE	
WT-1a	224E	OSI COORD	1	GC	GC	NONE	
WT-1a	224F	OSI DIR	1	GC	GC	NONE	
WT-1a	224G	AD DIRECT	1	GC	GC	NONE	
WT-1a	224H	COLLAB	1	GC	GC	NONE	
WT-1a	224J	NEWS RM	2	GC	GC	NONE	
WT-1a	224K	ADV OFF	1	GC	GC	NONE	
WT-1a	224M	A COORD	1	GC	GC	NONE	
WT-1a	224N	COORD	1	GC	GC	NONE	
WT-1a	224P	SM EDITOR	1	GC	GC	NONE	
WT-1a	224Q	LAYOUT	1	GC	GC	NONE	
WT-1a	225	SM CONFERENCE	1	GC	GC	NONE	
WT-1a	301	CARDIO THEATER	2	GC	GC	NONE	
WT-1a	306	MAC GYM	1	GC	GC	NONE	
WT-1a	311	MP ROOM - DANCE 1	1	GC	GC	NONE	
WT-1a	312	MP ROOM - DANCE 2	3	GC	GC	NONE	
WT-1a	404	STRETCH	1	GC	GC	NONE	
WT-1a	406	MACHINE WEIGHTS	2	GC	GC	NONE	
Grand total			73				

NOTE: THE COUNTS ON THE WINDOW TREATMENT SCHEDULES ARE FOR THE NUMBER OF OPENINGS THAT NEEDS WINDOW TREATMENT. IT IS THE CONTRATORS RESPONSIBILITY TO DETERMINE LENGTH AND NUMBER OF WINDOW TREATMENT SEGMENTS REQUIRED TO COVER THE OPENING. THIS SCHEDULE IS PROVIDED TO ASSIST WITH WINDOW TREATMENT LOCATIONS AND MAY NOT CONTAIN ALL WINDOW TREATMENTS REQUIRED ON THE PROJECT. REFLECTED CEILING PLANS AND ELEVATIONS MAY SHOW ADDITIONAL LOCATIONS.

GSBS ARCHITECTS
375 WEST 200 SOUTH
SALT LAKE CITY, UT 84101
P 801.521.8600
F 801.521.7913
www.gsbsarchitects.com

UTAH VALLEY UNIVERSITY
STUDENT LIFE CENTER & PARKING STRUCTURE

800 WEST UNIVERSITY PARKWAY
OREM, UT 84058

DFCM
4110 STATE OFFICE BUILDING
SALT LAKE CITY, UT 84112

REV.: Addendum 2
BY: ty

AE-135-02

DFCM PROJECT NO.: #10289790
GSBS PROJECT NO.: 2011.045.00
ISSUED DATE: 05/04/12

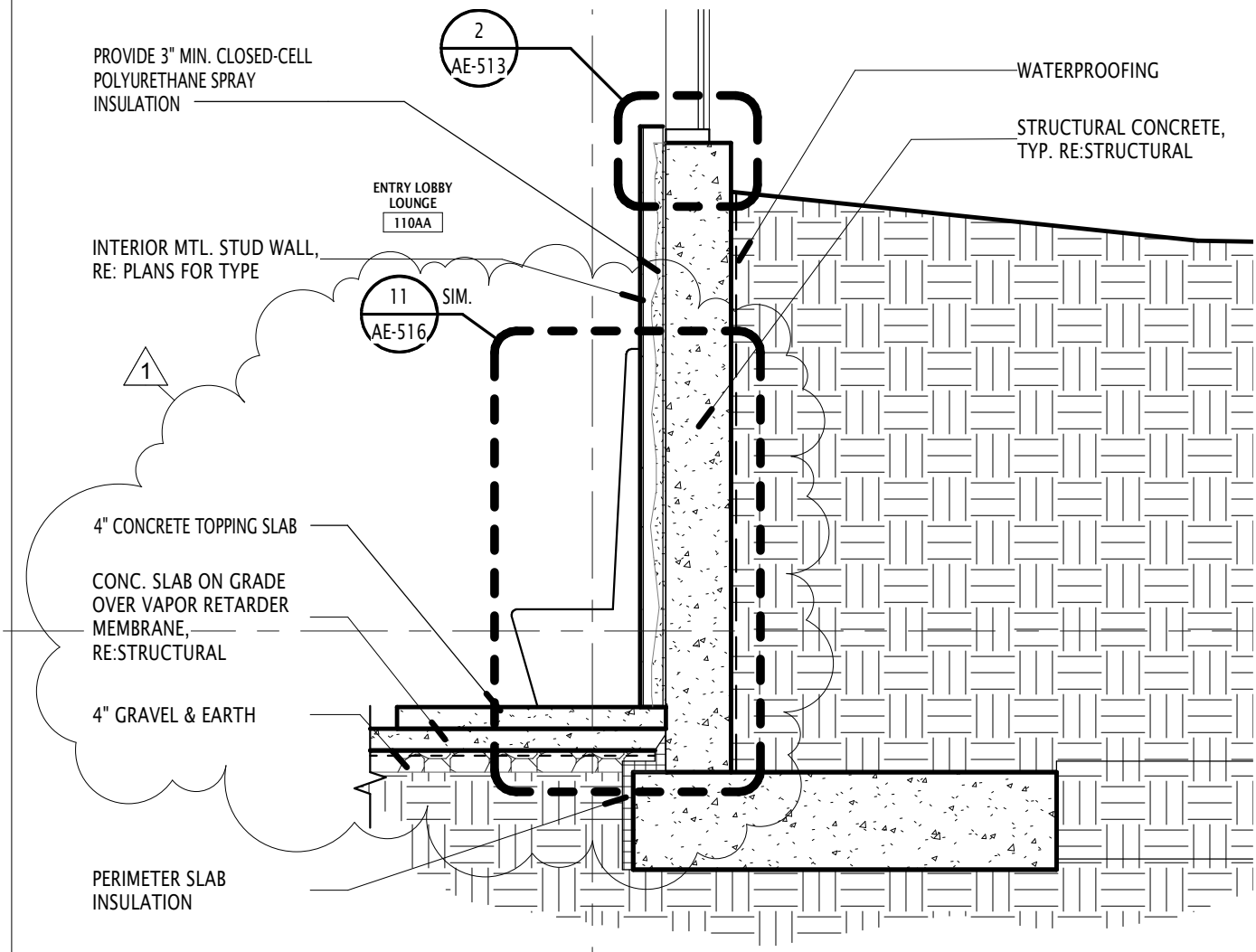

1 WALL SECTION - ZONE A_N7

AE-315 3/8" = 1'-0"

C:\Users\tyang\Documents\2011.045.00 UVU Student Life Center_Central_tyang.rvt

5/3/2012 2:40:55 PM

GSBS ARCHITECTS
375 WEST 200 SOUTH
SALT LAKE CITY, UT 84101
P: 801.521.8600 F: 801.521.7913
www.gsbsarchitects.com

UTAH VALLEY UNIVERSITY
STUDENT LIFE CENTER &
PARKING STRUCTURE
BID PACKAGE (C.2)

800 WEST UNIVERSITY PARKWAY
OREM, UT 84058

REV.: ADD#2
BY: JL

AE-315-01

DFCM PROJECT NO.: #10289790
GSBS PROJECT NO.: 2011.045.00
ISSUED DATE: 05/04/12

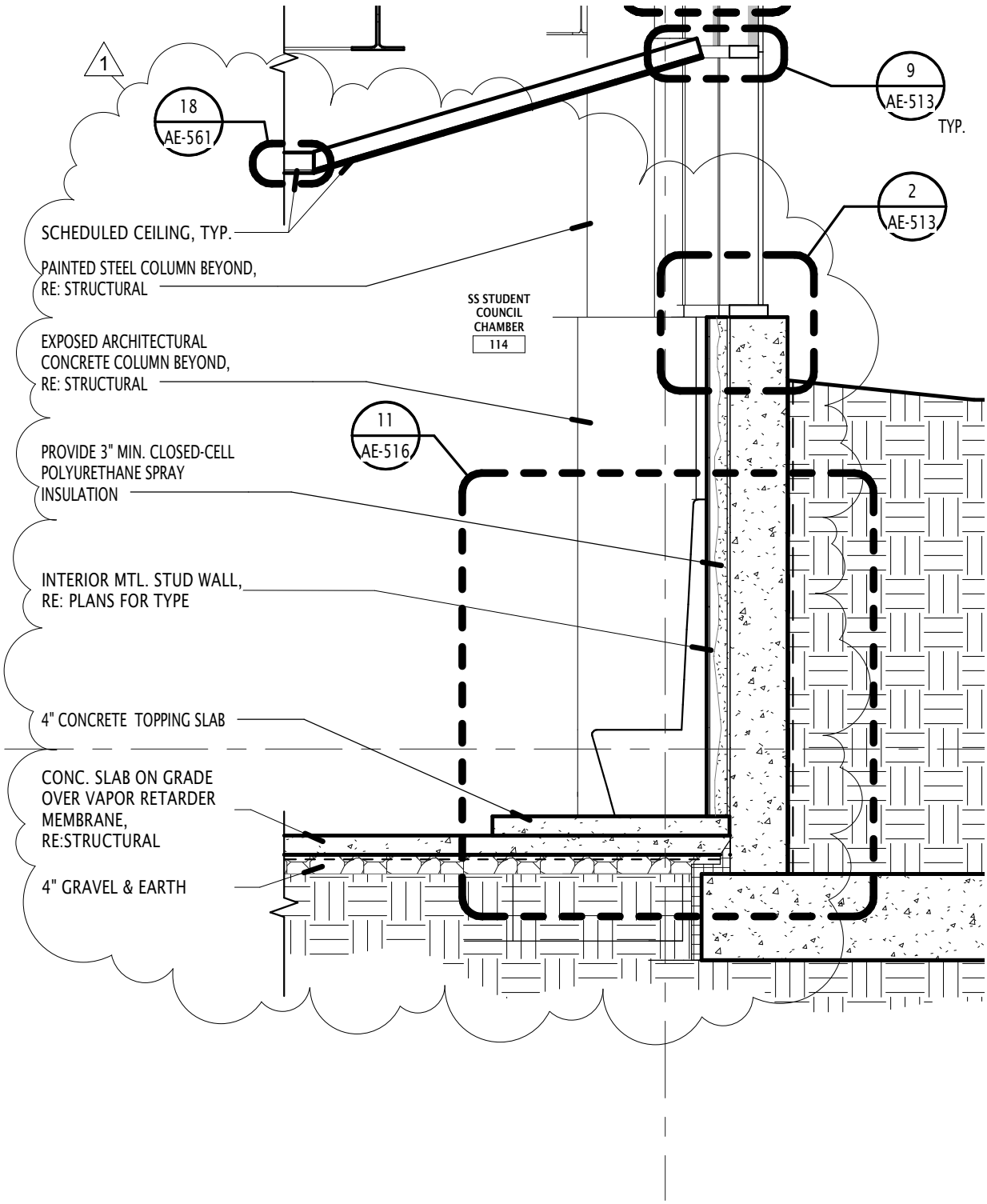

3 AE-315 WALL SECTION - ZONE B _N2

3/8" = 1'-0"

C:\Users\tyang\Documents\2011.045.00 UVU Student Life Center_Central_tyang.rvt

5/3/2012 2:40:55 PM

GSBS ARCHITECTS
375 WEST 200 SOUTH
SALT LAKE CITY, UT 84101
P: 801.521.8600 F: 801.521.7913
www.gsbsarchitects.com

UTAH VALLEY UNIVERSITY
STUDENT LIFE CENTER &
PARKING STRUCTURE
BID PACKAGE (C.2)

800 WEST UNIVERSITY PARKWAY
OREM, UT 84058

REV.: ADD#2
BY: JL

AE-315-02

DFCM PROJECT NO.: #10289790
GSBS PROJECT NO.: 2011.045.00
ISSUED DATE: 05/04/12

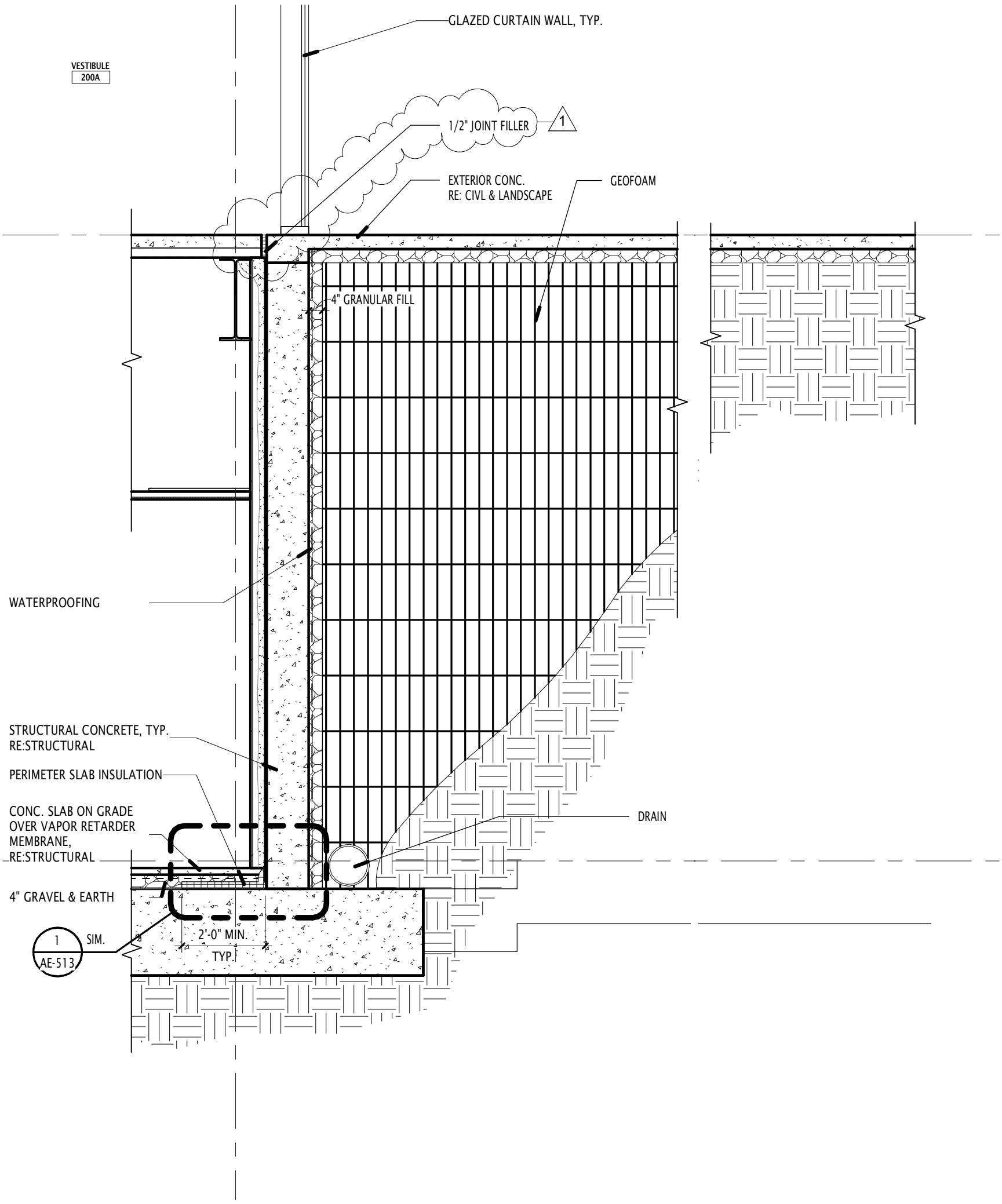

2
AE-316

WALL SECTION - ZONE B _N4

3/8" = 1'-0"

C:\Users\tyang\Documents\2011.045.00 UVU Student Life Center_Central_tyang.rvt

5/3/2012 2:42:51 PM

GSBS ARCHITECTS
375 WEST 200 SOUTH
SALT LAKE CITY, UT 84101
P: 801.521.8600 F: 801.521.7913
www.gsbsarchitects.com

UTAH VALLEY UNIVERSITY
STUDENT LIFE CENTER &
PARKING STRUCTURE

800 WEST UNIVERSITY PARKWAY
OREM, UT 84058

DFCM

4110 STATE OFFICE BUILDING
SALT LAKE CITY, UT 84112

REV.: Addendum- 2
BY: jl

AE-316-01

DFCM PROJECT NO.: #10289790
GSBS PROJECT NO.: 2011.045.00
ISSUED DATE: 05/04/12

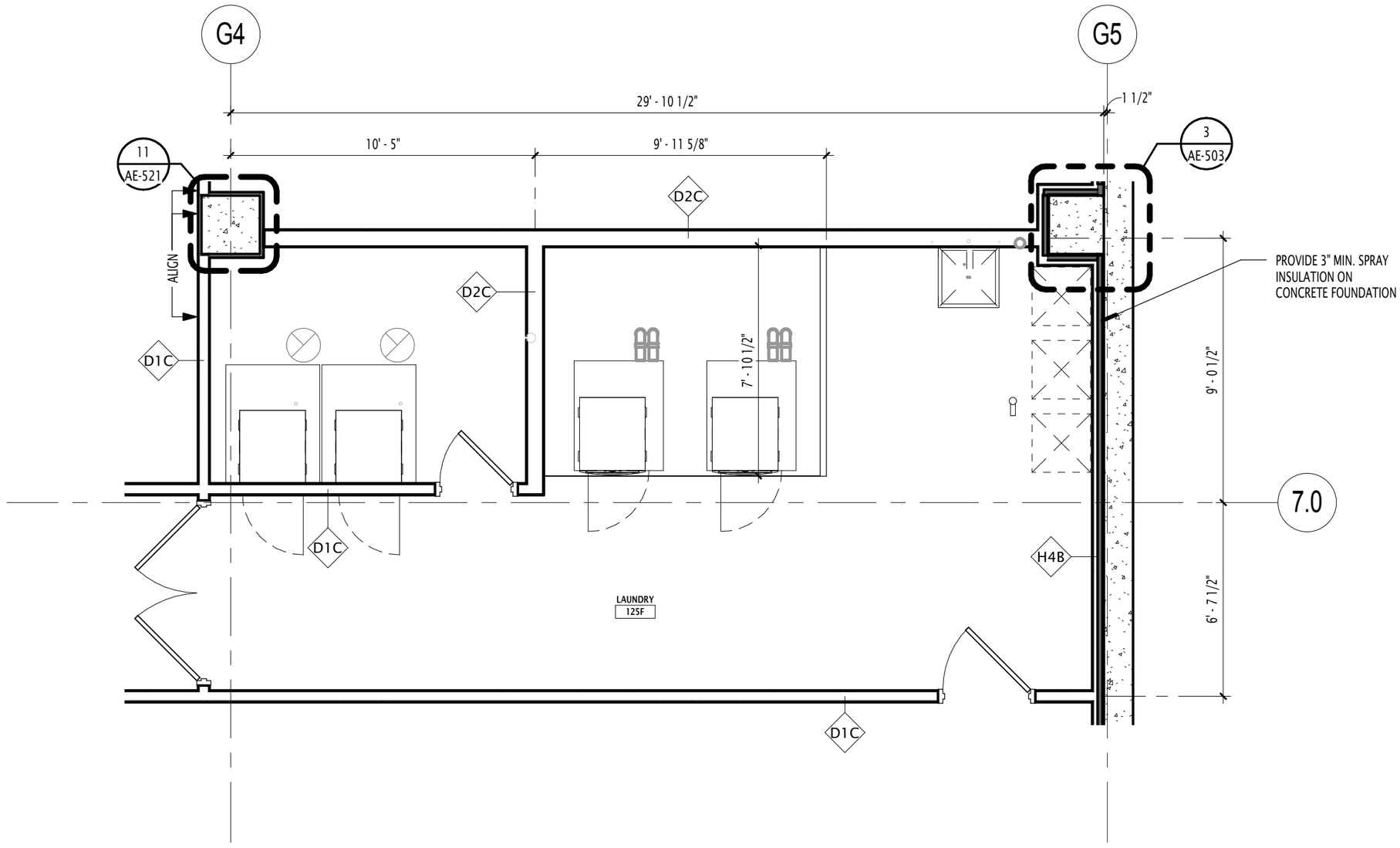

1
AE-411

ENLARGED LAUNDRY ROOM PLAN

1/4" = 1'-0"

4' 2' 0' 4' 8'

C:\Users\tyang\Documents\2011.045.00 UVU Student Life Center_Central_tyang.rvt

5/3/2012 2:42:11 PM

GSBS ARCHITECTS
375 WEST 200 SOUTH
SALT LAKE CITY, UT 84101
P 801.521.8600
F 801.521.7913
www.gsbsarchitects.com

UTAH VALLEY UNIVERSITY
STUDENT LIFE CENTER & PARKING STRUCTURE

800 WEST UNIVERSITY PARKWAY
OREM, UT 84058

DFCM
4110 STATE OFFICE BUILDING
SALT LAKE CITY, UT 84112

REV.: Addendum 2
BY: JB

AE-411-01

DFCM PROJECT NO.: #10289790
GSBS PROJECT NO.: 2011.045.00
ISSUED DATE: 5/4/12

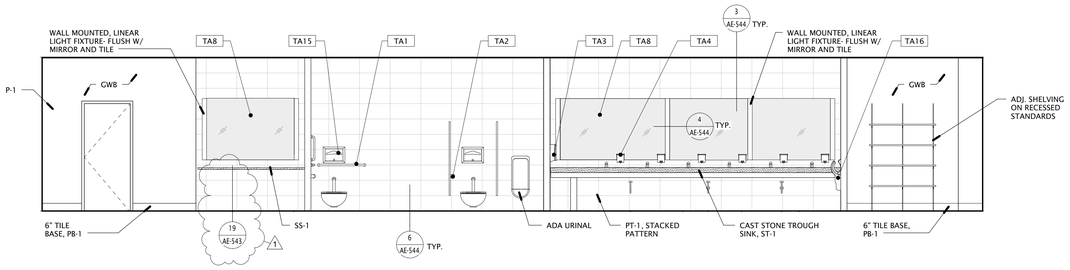

7 AE-412 (RM. 313) MEN'S LOCKER - SOUTH
1/4" = 1'-0"

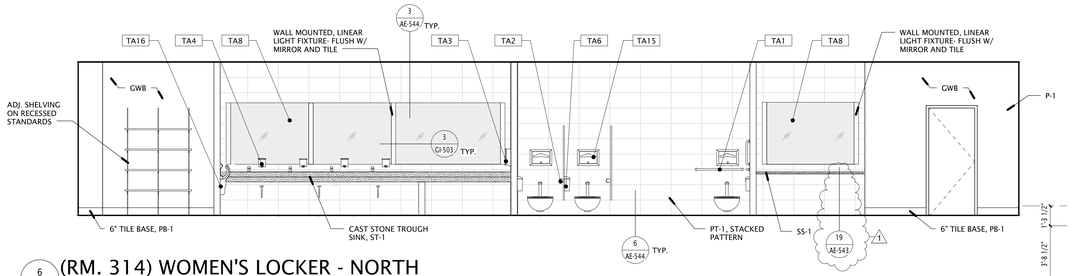

6 AE-412 (RM. 314) WOMEN'S LOCKER - NORTH
1/4" = 1'-0"

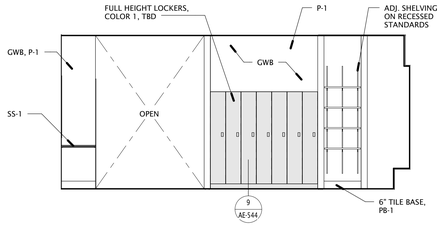

(RM. 314) - WOMEN'S LOCKER - EAST / (RM. 313) MEN'S LOCKER - EAST, MIRRORED

5 AE-412 1/4" = 1'-0"

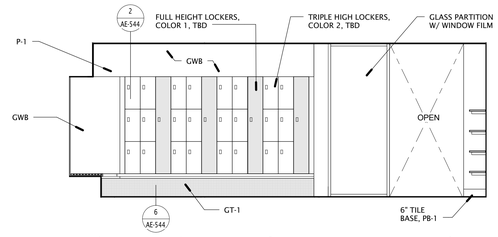

(RM. 314) WOMEN'S LOCKER - WEST / (RM. 313) MEN'S LOCKER - WEST, MIRRORED

4 AE-412 1/4" = 1'-0"

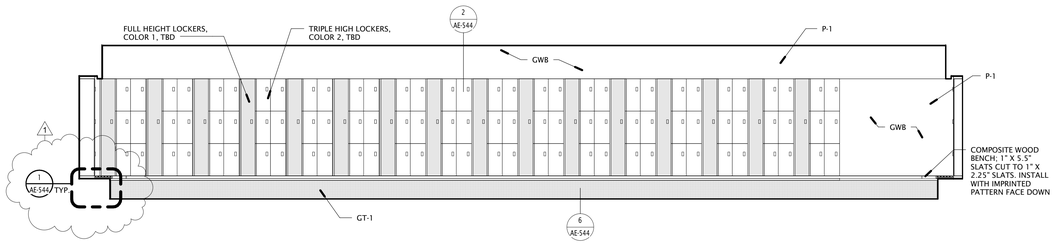

3 AE-412 (RM. 314) WOMEN'S LOCKER - SOUTH / (RM. 313) MEN'S LOCKER - NORTH, MIRRORED
1/4" = 1'-0"

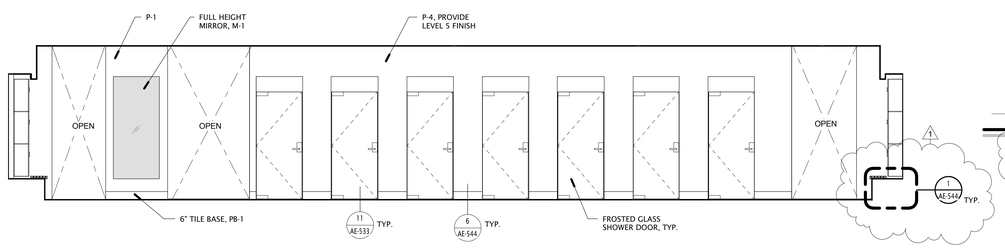

2 AE-412 (RM. 313) MEN'S LOCKER - SHOWERS / (RM. 314) WOMEN'S LOCKER - SHOWERS
1/4" = 1'-0"

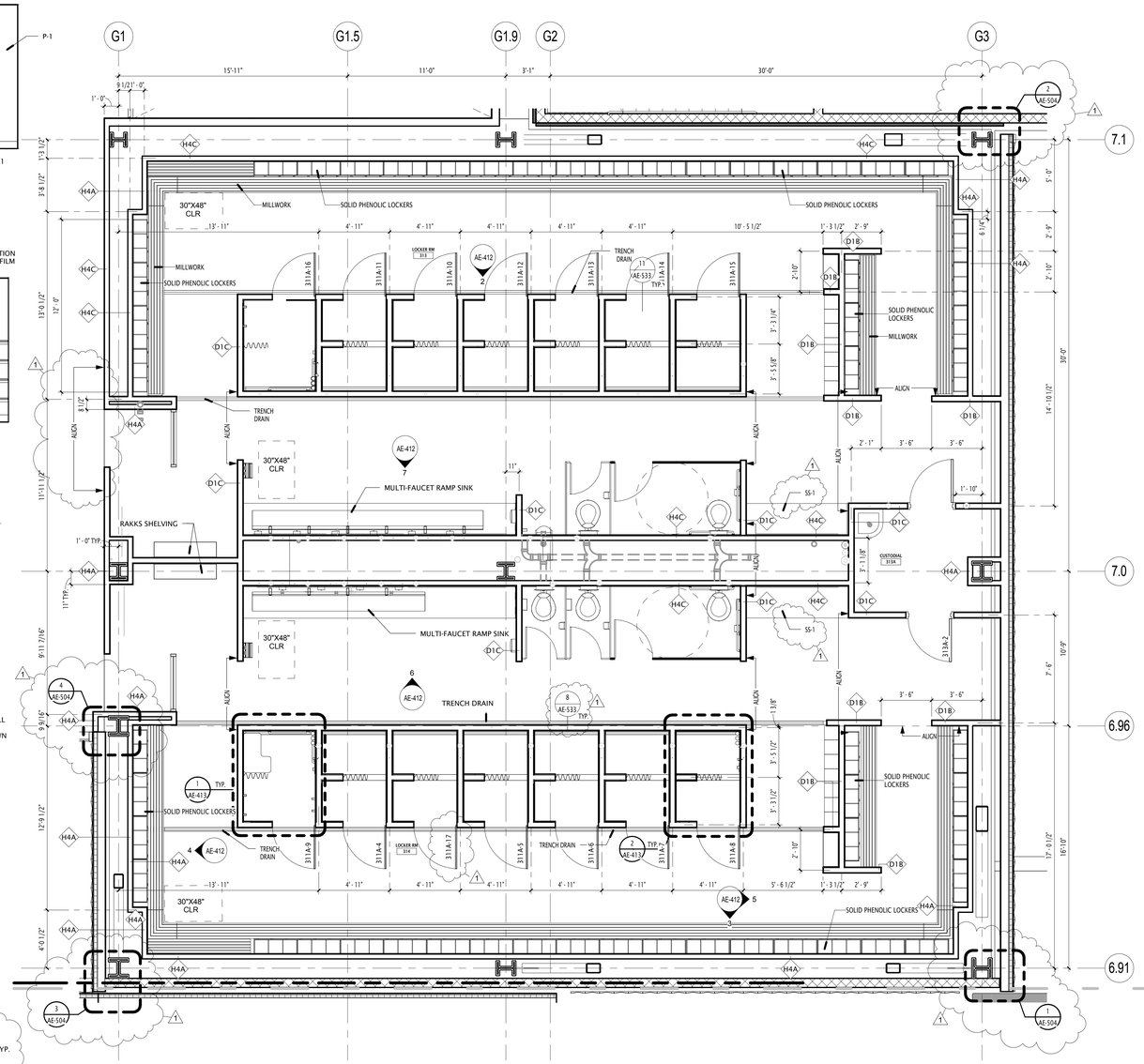

1 AE-412 ENLARGED PLAN - LEVEL 3 MEN'S / WOMEN'S LOCKER ROOMS
1/4" = 1'-0"

GENERAL NOTE - PLANS:

1. REFER TO SHEET AE-115 FOR PARTITION TYPES / SCHEDULE.
2. ALL MTL. STUD INTERIOR & EXTERIOR WALL DIMENSIONS ARE GIVEN TO CENTERLINE OF STUD, U.N.O.
3. ALL MASONRY & CONCRETE WALL DIMENSIONS ARE GIVEN TO FACE OF WALL U.N.O.
4. ALL DOOR & GLAZING SYSTEM WALL OPENING DIMENSIONS ARE GIVEN TO EDGE OF ROUGH OPENING U.N.O.
5. ALL INTERIOR DOOR ROUGH OPENING TO BE LOCATED 4" FROM FINISHED FACE OF ADJACENT WALL U.N.O.
6. ALL CURTAINWALL / STOREFRONT DIMENSIONS ARE GIVEN TO FACE OF GLAZING SYSTEM U.N.O.
7. DIMENSIONS GIVEN FOR CURVED / ANGLED INTERIOR / EXTERIOR WALLS ARE TO FACE OF MTL. STUD.
8. WALL TYPE SHOWN AT COLUMN WRAP IS TYP. FOR ALL EXPOSED SIDES U.N.O. COLUMN WRAP WALL DIMENSIONS GIVEN ARE TO FINISHED FACE OF WALL U.N.O.
9. WALL TYPES TO CONTINUE AT DOOR & GLAZING SYSTEM OPENINGS (TOP & BOTTOM) U.N.O.
10. SEE TOILET ROOM ACCESSORY KEY ON AE-415

GSBS ARCHITECTS
375 WEST 200 SOUTH
SALT LAKE CITY, UT 84101
P 801.521.8600
F 801.521.7913
www.gsbsarchitects.com

CANNONDESIGN
CANNON DESIGN
829 NORTH 1st AVENUE
PHOENIX, AZ 85003
602.294.6500

REVISIONS:

1	05.04.2012	Addendum-02

STATE OF UTAH
JOHN BRANSON
NO. 134955
04.27.2012
LICENSED ARCHITECT

UTAH VALLEY UNIVERSITY
STUDENT LIFE CENTER & PARKING STRUCTURE

800 WEST UNIVERSITY PARKWAY
OREM, UT 84058

DFCM

4110 STATE OFFICE BUILDING
SALT LAKE CITY, UT 84112

DRAWN BY:	JB
CHECKED BY:	AS
OWNER PROJECT NO.:	#10289790
GSBS PROJECT NO.:	2011.045.00
ISSUED DATE:	04.27.2012

ENLARGED PLANS / ELEVATIONS - LOCKER ROOMS & SHOWERS

CONSTRUCTION DOCUMENTS

AE-412

GSBS ARCHITECTS
375 WEST 200 SOUTH
SALT LAKE CITY, UT 84101
P 801.521.8600
F 801.521.7913
www.gsbsarchitects.com

CANNONDESIGN
CANNON DESIGN
829 NORTH 1st AVENUE
PHOENIX, AZ 85003
602.294.6500

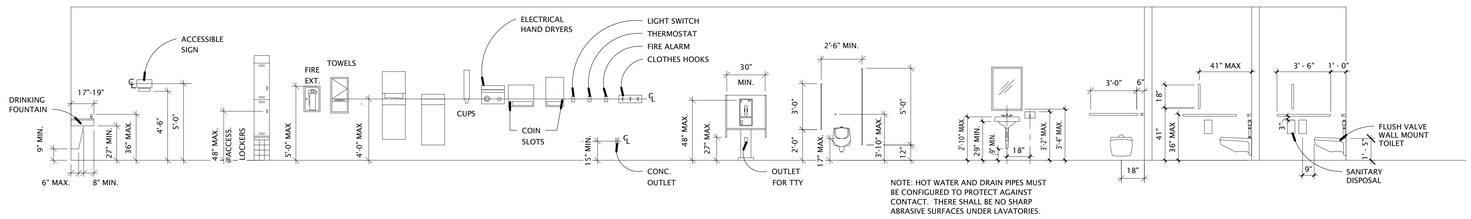

NOTE: HOT WATER AND DRAIN PIPES MUST BE CONFIGURED TO PROTECT AGAINST CONTACT. THERE SHALL BE NO SHARP ABRASIVE SURFACES UNDER LAVATORIES.

11 / AE-413 TYPICAL MOUNTING HEIGHTS
1/4" = 1'-0"

1

GENERAL NOTE - PLANS:

1. REFER TO SHEET AE-115 FOR PARTITION TYPES / SCHEDULE.
2. ALL MTL. STUD INTERIOR & EXTERIOR WALL DIMENSIONS ARE GIVEN TO CENTERLINE OF STUD, U.N.O.
3. ALL MASONRY & CONCRETE WALL DIMENSIONS ARE GIVEN TO FACE OF WALL U.N.O.
4. ALL DOOR & GLAZING SYSTEM WALL OPENING DIMENSIONS ARE GIVEN TO EDGE OF ROUGH OPENING U.N.O.
5. ALL INTERIOR DOOR ROUGH OPENING TO BE LOCATED 4" FROM FINISHED FACE OF ADJACENT WALL U.N.O.
6. ALL CURTAINWALL / STOREFRONT DIMENSIONS ARE GIVEN TO FACE OF GLAZING SYSTEM U.N.O.
7. DIMENSIONS GIVEN FOR CURVED / ANGLED INTERIOR / EXTERIOR WALLS ARE TO FACE OF MTL. STUD.
8. WALL TYPE SHOWN AT COLUMN WRAP IS TYP. FOR ALL EXPOSED SIDES U.N.O. COLUMN WRAP WALL DIMENSIONS GIVEN ARE TO FINISHED FACE OF WALL U.N.O.
9. WALL TYPES TO CONTINUE AT DOOR & GLAZING SYSTEM OPENINGS (TOP & BOTTOM) U.N.O.
10. SEE TOILET ROOM ACCESSORY KEY ON AE-415

REVISIONS:

1	05.04.2012	Addendum-02

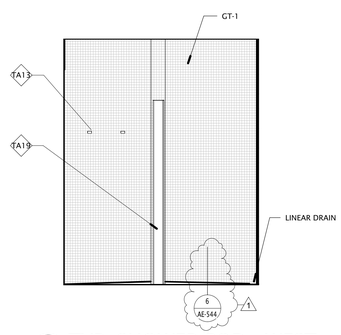

10 / AE-413 TYP. SHOWER POD - WEST
1/2" = 1'-0"

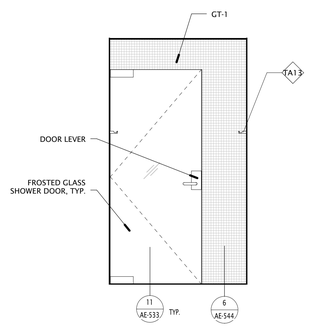

9 / AE-413 TYP. SHOWER POD - SOUTH
1/2" = 1'-0"

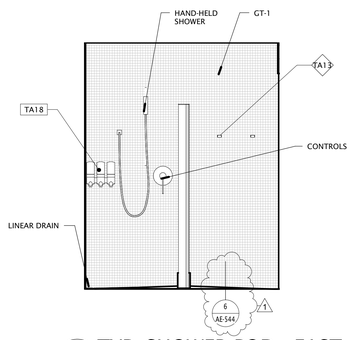

8 / AE-413 TYP. SHOWER POD - EAST
1/2" = 1'-0"

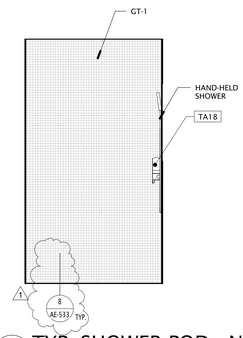

7 / AE-413 TYP. SHOWER POD - NORTH
1/2" = 1'-0"

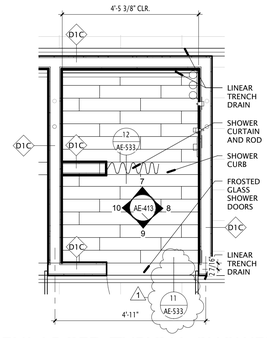

2 / AE-413 ENLARGED TYPICAL SHOWER POD
1/2" = 1'-0"

2' 1' 0' 2' 4'

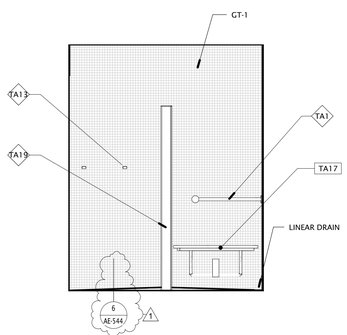

6 / AE-413 TYP. ADA SHOWER POD - WEST
1/2" = 1'-0"

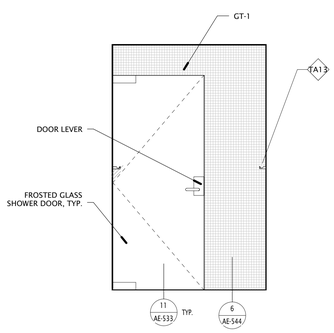

5 / AE-413 TYP. ADA SHOWER POD - SOUTH
1/2" = 1'-0"

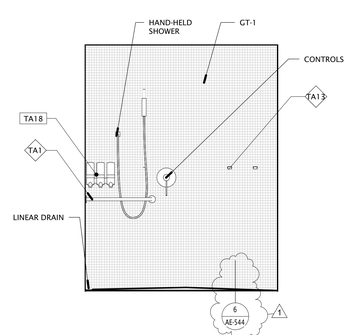

4 / AE-413 TYP. ADA SHOWER POD - EAST
1/2" = 1'-0"

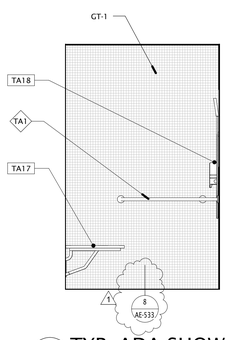

3 / AE-413 TYP. ADA SHOWER POD - NORTH
1/2" = 1'-0"

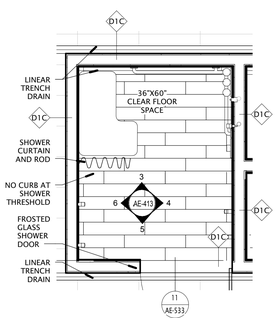

1 / AE-413 ENLARGED ADA SHOWER POD
1/2" = 1'-0"

2' 1' 0' 2' 4'

UTAH VALLEY UNIVERSITY
STUDENT LIFE CENTER & PARKING STRUCTURE

800 WEST UNIVERSITY PARKWAY
OREM, UT 84058

DFCM

4110 STATE OFFICE BUILDING
SALT LAKE CITY, UT 84112

DRAWN BY:	Author
CHECKED BY:	Checker
OWNER PROJECT NO.:	#10289790
GSBS PROJECT NO.:	2011.045.00
ISSUED DATE:	04.27.2012

ENLARGED PLANS / ELEVATIONS - LOCKER ROOMS & SHOWERS

CONSTRUCTION DOCUMENTS

1 AE-413

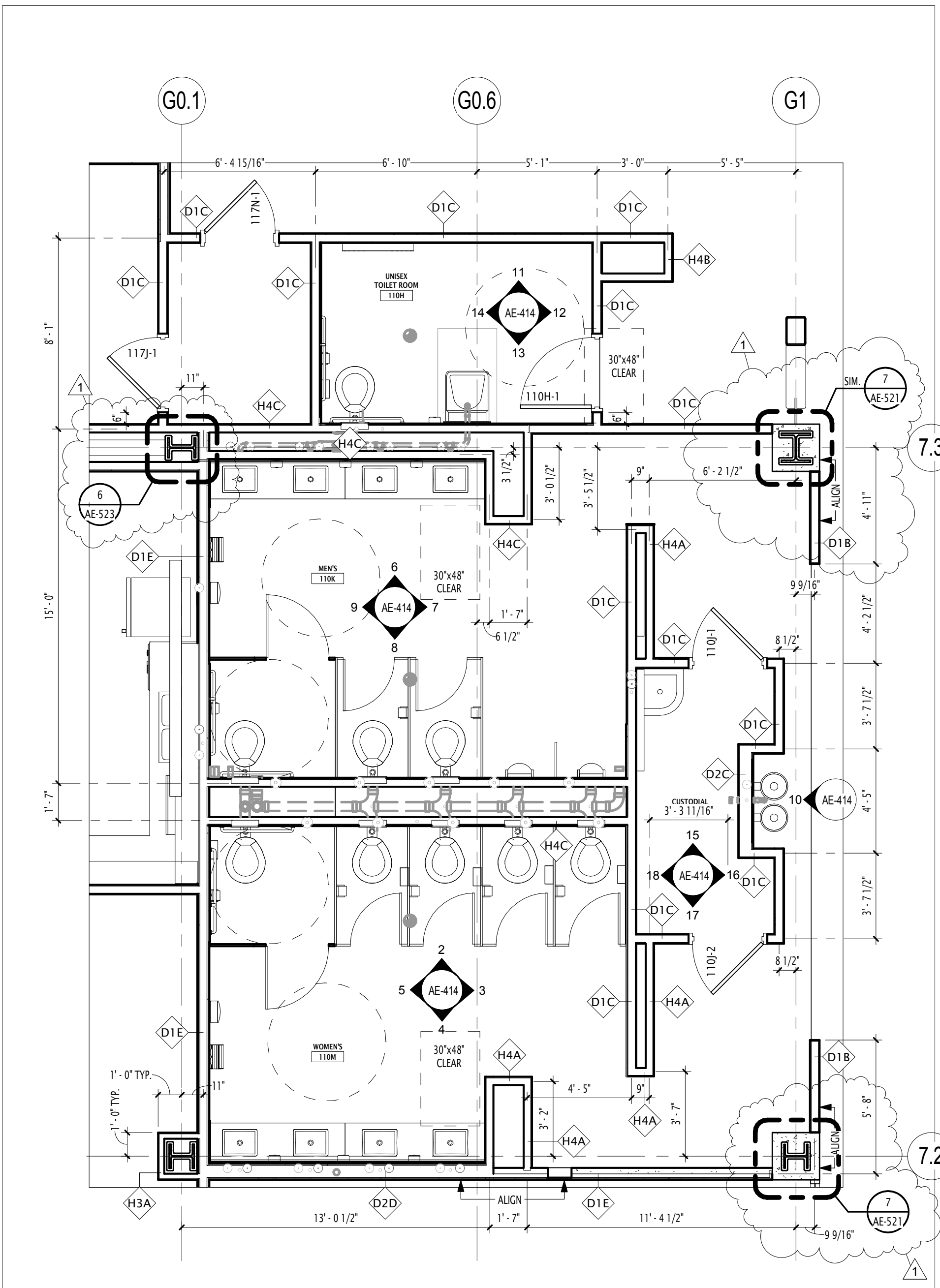

1 ENLARGED PLAN - LEVEL 1 MEN'S / WOMEN'S RESTROOMS

1 / AE-414 1/4" = 1'-0"

4' 2' 0' 4' 8'

C:\Users\tyang\Documents\2011.045.00 UVU Student Life Center_Central_tyang.rvt

5/3/2012 2:42:51 PM

GSBS ARCHITECTS
375 WEST 200 SOUTH
SALT LAKE CITY, UT 84101
P: 801.521.8600 F: 801.521.7913
www.gsbsarchitects.com

UTAH VALLEY UNIVERSITY
STUDENT LIFE CENTER &
PARKING STRUCTURE

800 WEST UNIVERSITY PARKWAY
OREM, UT 84058

DFCM
4110 STATE OFFICE BUILDING
SALT LAKE CITY, UT 84112

REV.: Addendum 2
BY: JB

AE-414-01

DFCM PROJECT NO.: #10289790
GSBS PROJECT NO.: 2011.045.00
ISSUED DATE: 5/4/12

GENERAL NOTE - PLANS:

1. REFER TO SHEET AE-115 FOR PARTITION TYPES / SCHEDULE.
2. ALL MTL. STUD INTERIOR & EXTERIOR WALL DIMENSIONS ARE GIVEN TO CENTERLINE OF STUD, U.N.O.
3. ALL MASONRY & CONCRETE WALL DIMENSIONS ARE GIVEN TO FACE OF WALL U.N.O.
4. ALL DOOR & GLAZING SYSTEM WALL OPENING DIMENSIONS ARE GIVEN TO EDGE OF ROUGH OPENING U.N.O.
5. ALL INTERIOR DOOR ROUGH OPENING TO BE LOCATED 4" FROM FINISHED FACE OF ADJACENT WALL U.N.O.
6. ALL CURTAINWALL / STOREFRONT DIMENSIONS ARE GIVEN TO FACE OF GLAZING SYSTEM U.N.O.
7. DIMENSIONS GIVEN FOR CURVED / ANGLED INTERIOR / EXTERIOR WALLS ARE TO FACE OF MTL. STUD.
8. WALL TYPE SHOWN AT COLUMN WRAP IS TYP. FOR ALL EXPOSED SIDES U.N.O.
   COLUMN WRAP WALL DIMENSIONS GIVEN ARE TO FINISHED FACE OF WALL U.N.O.
9. WALL TYPES TO CONTINUE AT DOOR & GLAZING SYSTEM OPENINGS (TOP & BOTTOM) U.N.O.
10. SEE TOILET ROOM ACCESSORY KEY ON AE-415

1

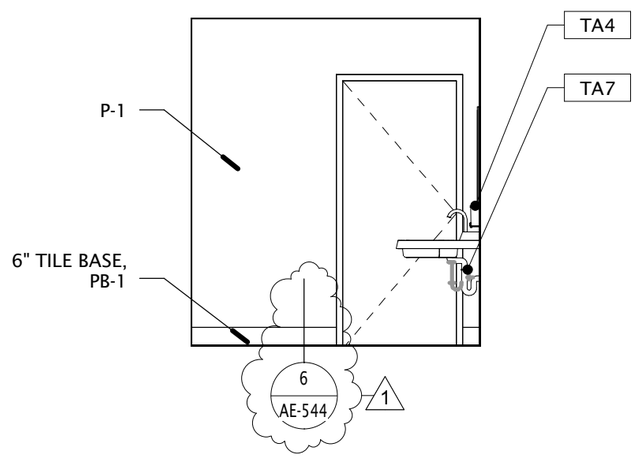

12 AE-414 (RM. 110H) UNISEX - EAST
1/4" = 1'-0"

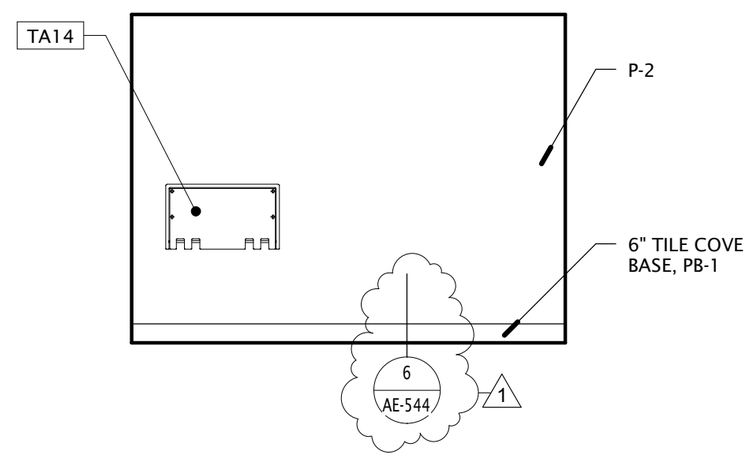

11 AE-414 (RM. 110H) UNISEX - NORTH
1/4" = 1'-0"

C:\Users\tyang\Documents\2011.045.00 UVU Student Life Center_Central_tyang.rvt

5/3/2012 2:42:11 PM

GSBS ARCHITECTS
375 WEST 200 SOUTH
SALT LAKE CITY, UT 84101
P 801.521.8600
F 801.521.7913
www.gsbsarchitects.com

UTAH VALLEY UNIVERSITY
STUDENT LIFE CENTER & PARKING STRUCTURE

800 WEST UNIVERSITY PARKWAY
OREM, UT 84058

DFCM
4110 STATE OFFICE BUILDING
SALT LAKE CITY, UT 84112

REV.: Addendum 2
BY: BM

AE-414-02

DFCM PROJECT NO.: #10289790
GSBS PROJECT NO.: 2011.045.00
ISSUED DATE: 05/04/12

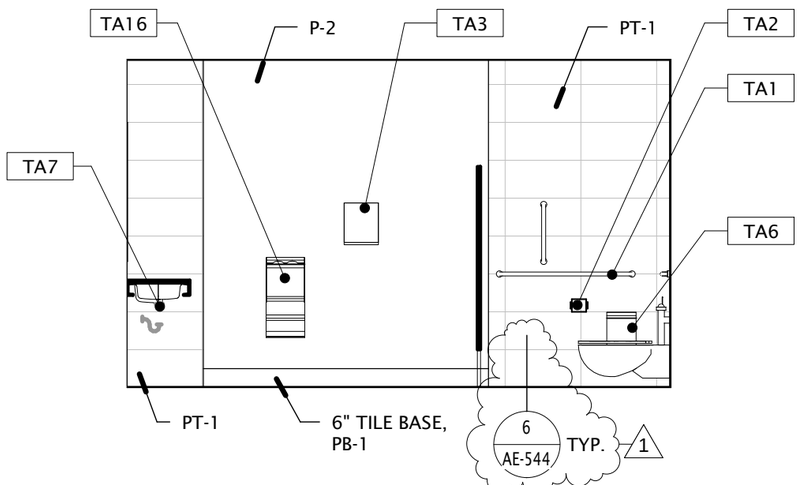

5
AE-415

(RM. 200Q) WOMEN'S - WEST

1/4" = 1'-0"

GENERAL NOTE - PLANS:

1. REFER TO SHEET AE-115 FOR PARTITION TYPES / SCHEDULE.
2. ALL MTL. STUD INTERIOR & EXTERIOR WALL DIMENSIONS ARE GIVEN TO CENTERLINE OF STUD, U.N.O.
3. ALL MASONRY & CONCRETE WALL DIMENSIONS ARE GIVEN TO FACE OF WALL U.N.O.
4. ALL DOOR & GLAZING SYSTEM WALL OPENING DIMENSIONS ARE GIVEN TO EDGE OF ROUGH OPENING U.N.O.
5. ALL INTERIOR DOOR ROUGH OPENING TO BE LOCATED 4" FROM FINISHED FACE OF ADJACENT WALL U.N.O.
6. ALL CURTAINWALL / STOREFRONT DIMENSIONS ARE GIVEN TO FACE OF GLAZING SYSTEM U.N.O.
7. DIMENSIONS GIVEN FOR CURVED / ANGLED INTERIOR / EXTERIOR WALLS ARE TO FACE OF MTL. STUD.
8. WALL TYPE SHOWN AT COLUMN WRAP IS TYP. FOR ALL EXPOSED SIDES U.N.O.
   COLUMN WRAP WALL DIMENSIONS GIVEN ARE TO FINISHED FACE OF WALL U.N.O.
9. WALL TYPES TO CONTINUE AT DOOR & GLAZING SYSTEM OPENINGS (TOP & BOTTOM) U.N.O.
10. SEE TOILET ROOM ACCESSORY KEY ON AE-415

1

GSBS ARCHITECTS
375 WEST 200 SOUTH
SALT LAKE CITY, UT 84101
P 801.521.8600
F 801.521.7913
www.gsbsarchitects.com

UTAH VALLEY UNIVERSITY
STUDENT LIFE CENTER & PARKING STRUCTURE

800 WEST UNIVERSITY PARKWAY
OREM, UT 84058

DFCM
4110 STATE OFFICE BUILDING
SALT LAKE CITY, UT 84112

REV.: Addendum 2
BY: BM

AE-415-01

DFCM PROJECT NO.:	#10289790
GSBS PROJECT NO.:	2011.045.00
ISSUED DATE:	05/04/12

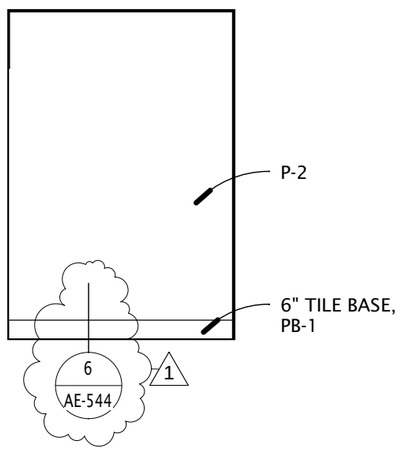

12
AE-416

(RM. 300J) UNISEX - NORTH

1/4" = 1'-0"

GENERAL NOTE - PLANS:

1. REFER TO SHEET AE-115 FOR PARTITION TYPES / SCHEDULE.
2. ALL MTL. STUD INTERIOR & EXTERIOR WALL DIMENSIONS ARE GIVEN TO CENTERLINE OF STUD, U.N.O.
3. ALL MASONRY & CONCRETE WALL DIMENSIONS ARE GIVEN TO FACE OF WALL U.N.O.
4. ALL DOOR & GLAZING SYSTEM WALL OPENING DIMENSIONS ARE GIVEN TO EDGE OF ROUGH OPENING U.N.O.
5. ALL INTERIOR DOOR ROUGH OPENING TO BE LOCATED 4" FROM FINISHED FACE OF ADJACENT WALL U.N.O.
6. ALL CURTAINWALL / STOREFRONT DIMENSIONS ARE GIVEN TO FACE OF GLAZING SYSTEM U.N.O.
7. DIMENSIONS GIVEN FOR CURVED / ANGLED INTERIOR / EXTERIOR WALLS ARE TO FACE OF MTL. STUD.
8. WALL TYPE SHOWN AT COLUMN WRAP IS TYP. FOR ALL EXPOSED SIDES U.N.O.
   COLUMN WRAP WALL DIMENSIONS GIVEN ARE TO FINISHED FACE OF WALL U.N.O.
9. WALL TYPES TO CONTINUE AT DOOR & GLAZING SYSTEM OPENINGS (TOP & BOTTOM) U.N.O.
10. SEE TOILET ROOM ACCESSORY KEY ON AE-415

1

C:\Users\tyang\Documents\2011.045.00 UVU Student Life Center_Central_tyang.rvt

5/3/2012 2:42:11 PM

GSBS ARCHITECTS
375 WEST 200 SOUTH
SALT LAKE CITY, UT 84101
P 801.521.8600
F 801.521.7913
www.gsbsarchitects.com

UTAH VALLEY UNIVERSITY
STUDENT LIFE CENTER & PARKING STRUCTURE

800 WEST UNIVERSITY PARKWAY
OREM, UT 84058

DFCM
4110 STATE OFFICE BUILDING
SALT LAKE CITY, UT 84112

REV.: Addendum 2
BY: BM

AE-416-01

DFCM PROJECT NO.:	#10289790
GSBS PROJECT NO.:	2011.045.00
ISSUED DATE:	05/04/12

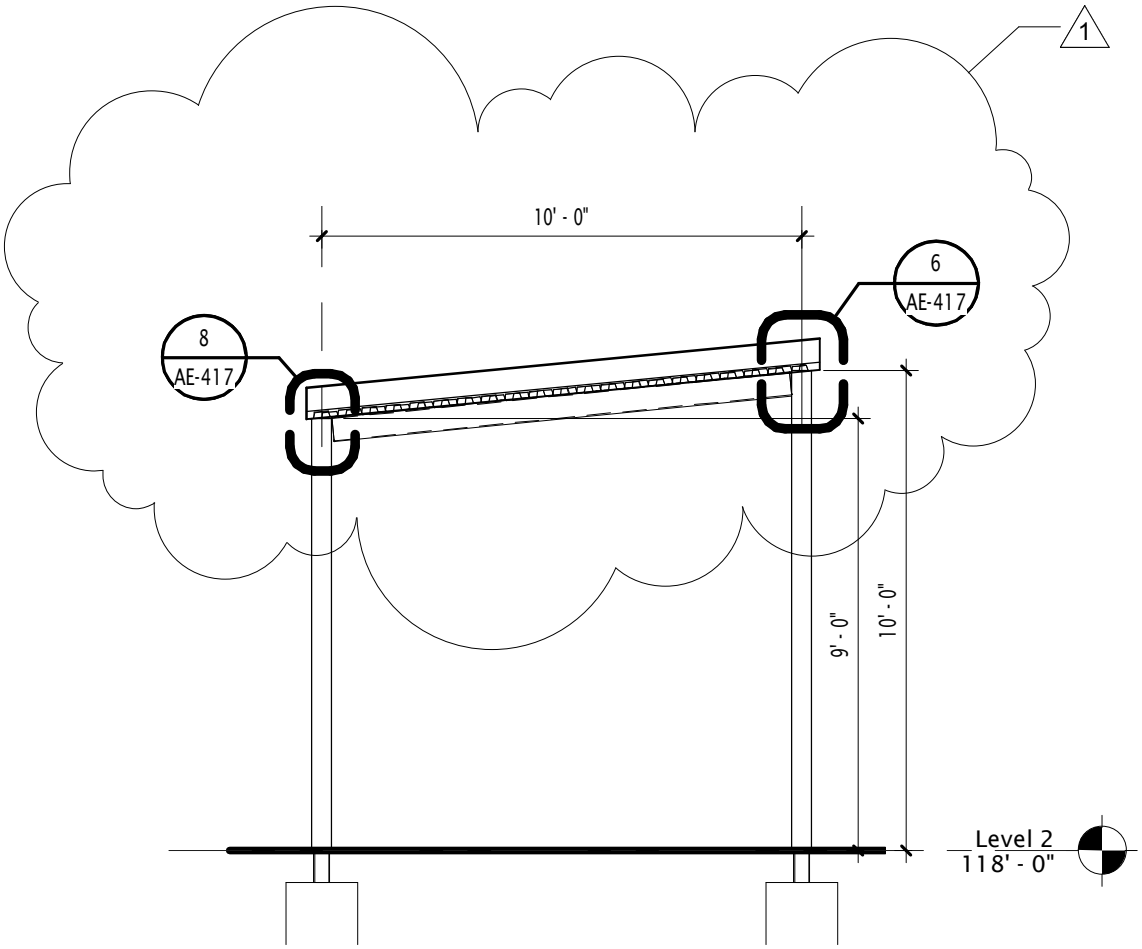

5
AE-417

FREE STANDING ROOF STRUCTURE ELEV.

1/4" = 1'-0"

C:\Users\tyang\Documents\2011.045.00 UVU Student Life Center_Central_tyang.rvt

5/3/2012 2:40:55 PM

GSBS ARCHITECTS
375 WEST 200 SOUTH
SALT LAKE CITY, UT 84101
P: 801.521.8600 F: 801.521.7913
www.gsbsarchitects.com

UTAH VALLEY UNIVERSITY
STUDENT LIFE CENTER &
PARKING STRUCTURE

800 WEST UNIVERSITY PARKWAY
OREM, UT 84058

REV.: Addendum-02
BY: jb

AE-417-01

DFCM PROJECT NO.: #10289790
GSBS PROJECT NO.: 2011.045.00
ISSUED DATE: 05/04/12

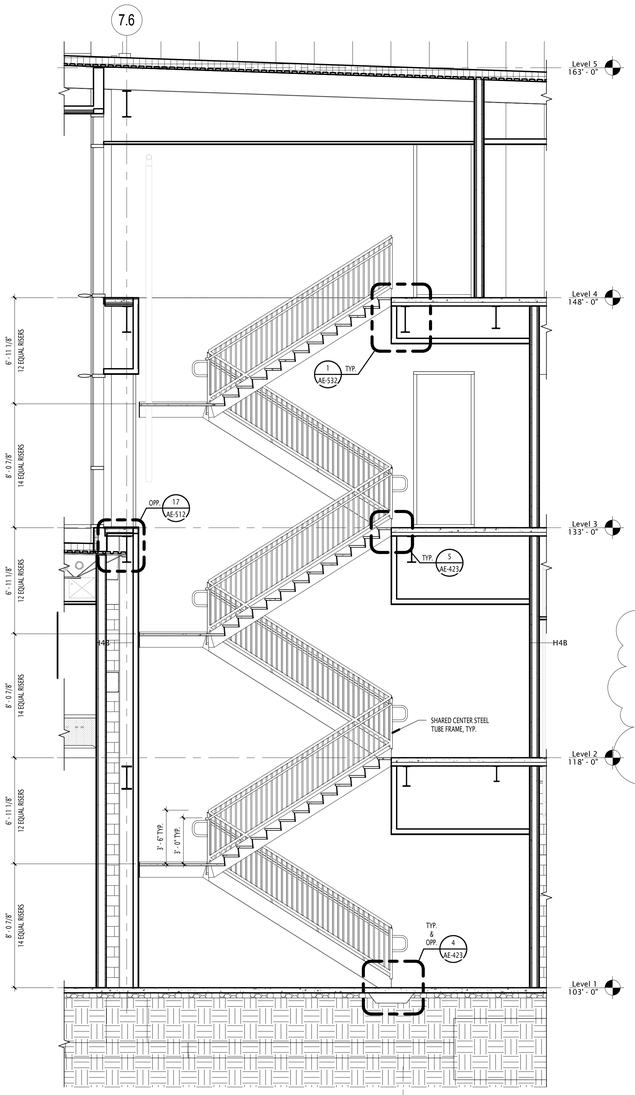

7 AE-421 SECTION @ STAIR-2, ELEVATOR-A1
1/4" = 1'-0"

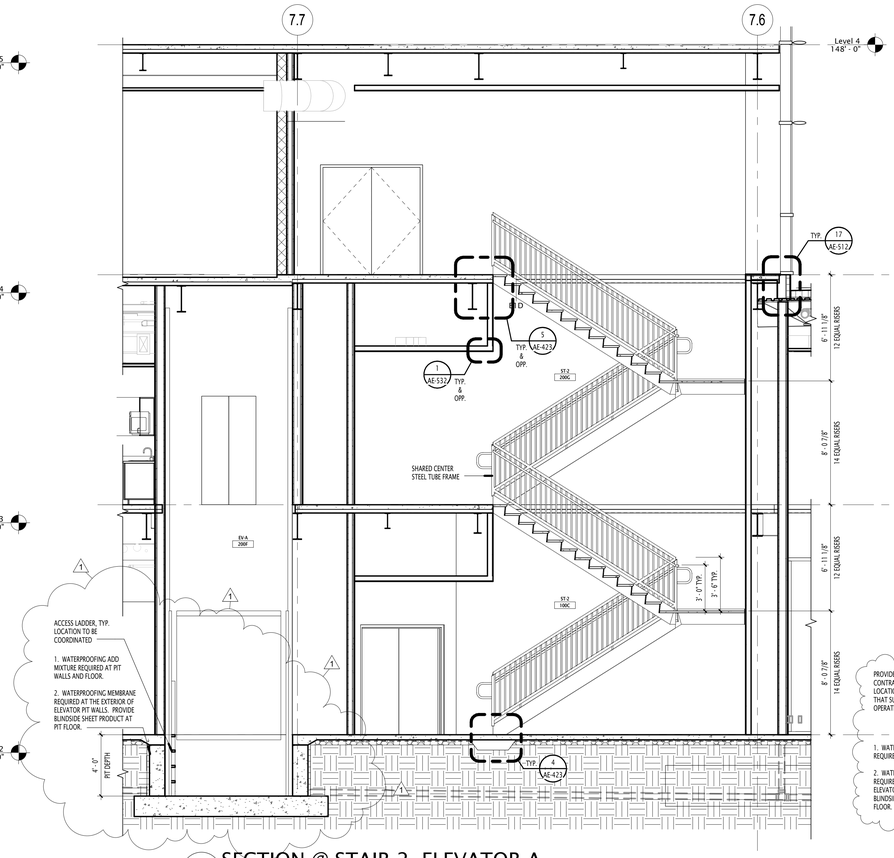

6 AE-421 SECTION @ STAIR-2, ELEVATOR-A
1/4" = 1'-0"

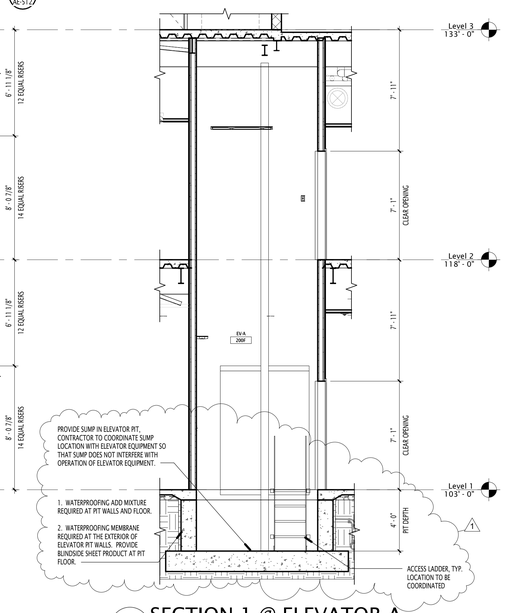

5 AE-421 SECTION 1 @ ELEVATOR-A
1/4" = 1'-0"

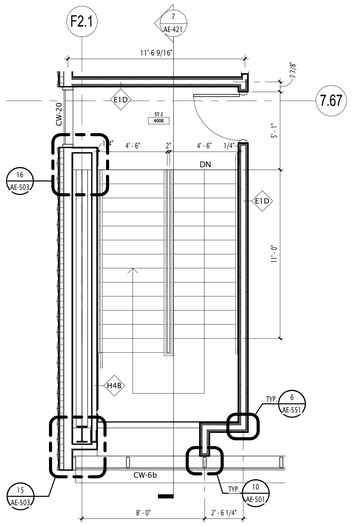

4 AE-421 STAIR-2 @ LEVEL 4 PLAN
1/4" = 1'-0"

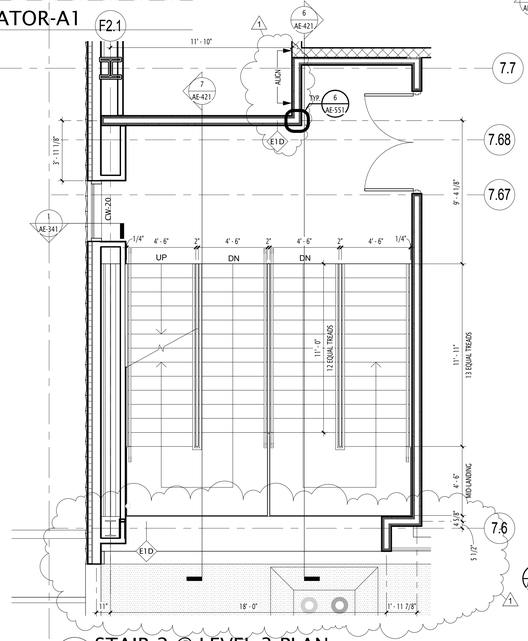

3 AE-421 STAIR-2 @ LEVEL 3 PLAN
1/4" = 1'-0"

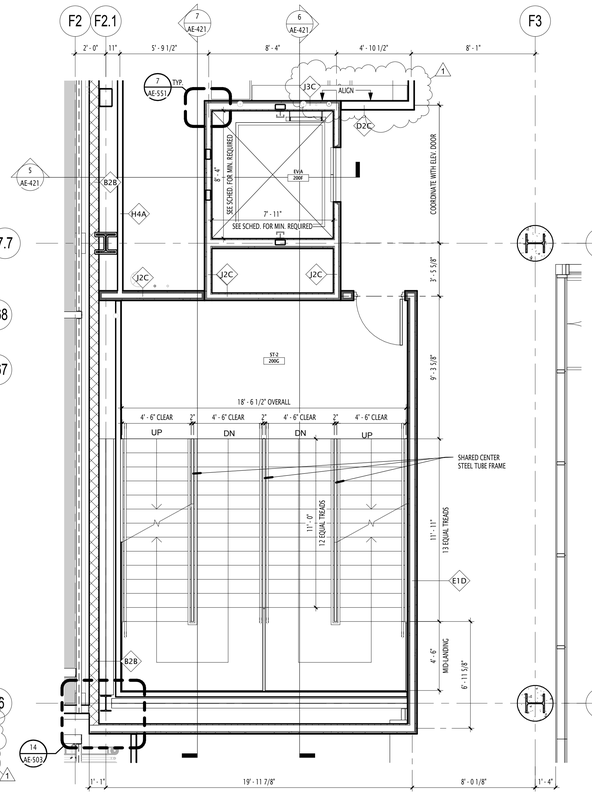

2 AE-421 STAIR-1, STAIR-2, ELEVATOR-A @ LEVEL 2 PLAN
1/4" = 1'-0"

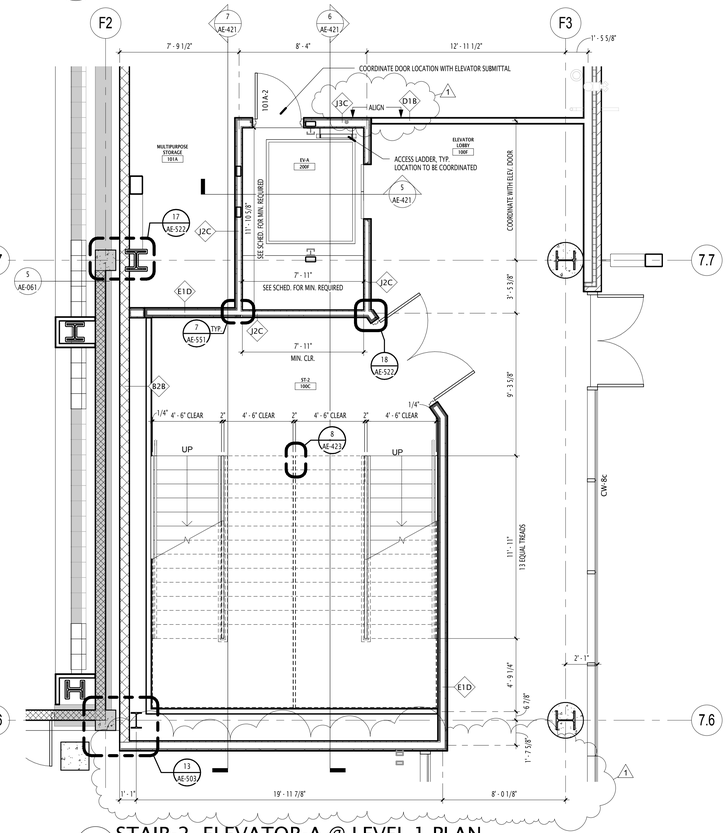

1 AE-421 STAIR-2, ELEVATOR-A @ LEVEL 1 PLAN
1/4" = 1'-0"

F1.9

GENERAL NOTE - VERTICAL CIRCULATION
1. REFER TO SHEET AE-115 FOR PARTITION TYPES / SCHEDULE.
2. ALL MTL. STUD INTERIOR & EXTERIOR WALL DIMENSIONS ARE GIVEN TO CENTERLINE OF STUD, U.N.O.
3. ALL MASONRY & CONCRETE WALL DIMENSIONS ARE GIVEN TO FACE OF WALL U.N.O.
4. ALL DOOR & GLAZING SYSTEM WALL OPENING DIMENSIONS ARE GIVEN TO EDGE OF ROUGH OPENING U.N.O.
5. WALL TYPES TO CONTINUE AT DOOR & GLAZING SYSTEM OPENINGS (TOP & BOTTOM) U.N.O.
6. STAIR TREAD AND LANDING DIMENSIONS TO INSIDE OF STRINGER U.N.O.

RAILING TYPE LEGEND	
TAG	DESCRIPTION
GR-1	Perf Metal Guardrail
GR-2	Stair Guardrail - Pipe w Extensions
GR-3	Guardrail - Pipe
HR-1	Perf Guardrail w/Handrail
HR-2	Stair Guardrail - Pipe w Handrail
HR-3	Handrail - Pipe - Wall
HR-4	Handrail - Pipe w Extensions/Posts
HR-5	Handrail - Pipe w Extensions
HR-P	Handrail - Pipe Only

GSBS ARCHITECTS
375 WEST 200 SOUTH
SALT LAKE CITY, UT 84101
P 801.521.8600
F 801.521.7913
www.gsbsarchitects.com

CANNONDESIGN
CANNON DESIGN
829 NORTH 1st AVENUE
PHOENIX, AZ 85003
602.294.6500

REVISIONS:

1	05.04.2012	Addendum-02

STATE OF UTAH
JOHN BRANSON
NO. 134955
04.27.2012
LICENSED ARCHITECT

UTAH VALLEY UNIVERSITY STUDENT LIFE CENTER & PARKING STRUCTURE

800 WEST UNIVERSITY PARKWAY
OREM, UT 84058

DFCM
4110 STATE OFFICE BUILDING
SALT LAKE CITY, UT 84112

DRAWN BY:	JB
CHECKED BY:	NE
OWNER PROJECT NO.:	#10289790
GSBS PROJECT NO.:	2011.045.00
ISSUED DATE:	04.27.2012

VERTICAL CIRCULATION - STAIR 2 / ELEVATOR A

CONSTRUCTION DOCUMENTS

1 AE-421

GENERAL NOTE - VERTICAL CIRCULATION

1. REFER TO SHEET AE-115 FOR PARTITION TYPES / SCHEDULE.
2. ALL MTL. STUD INTERIOR & EXTERIOR WALL DIMENSIONS ARE GIVEN TO CENTERLINE OF STUD, U.N.O.
3. ALL MASONRY & CONCRETE WALL DIMENSIONS ARE GIVEN TO FACE OF WALL U.N.O.
4. ALL DOOR & GLAZING SYSTEM WALL OPENING DIMENSIONS ARE GIVEN TO EDGE OF ROUGH OPENING U.N.O.
5. WALL TYPES TO CONTINUE AT DOOR & GLAZING SYSTEM OPENINGS (TOP & BOTTOM) U.N.O.
6. STAIR TREAD AND LANDING DIMENSIONS TO INSIDE OF STRINGER U.N.O.

RAILING TYPE LEGEND

TAG	DESCRIPTION
GR-1	Perf Metal Guardrail
GR-2	Stair Guardrail - Pipe w Extensions
GR-3	Guardrail - Pipe
HR-1	Perf Guardrail w/Handrail
HR-2	Stair Guardrail - Pipe w Handrail
HR-3	Handrail - Pipe - Wall
HR-4	Handrail - Pipe w Extensions/Posts
HR-5	Handrail - Pipe w Extensions
HR-P	Handrail - Pipe Only

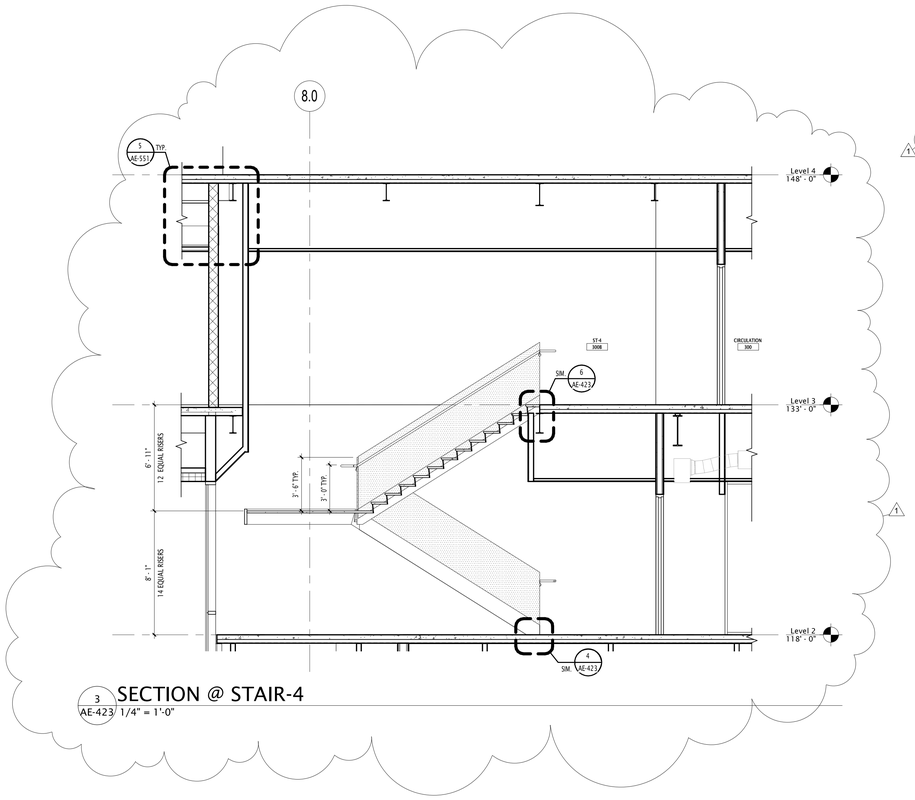

3 AE-423 SECTION @ STAIR-4
1/4" = 1'-0"

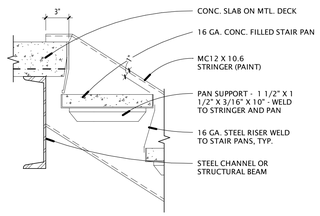

6 AE-423 METAL PAN - TOP OF STAIR
1 1/2" = 1'-0"

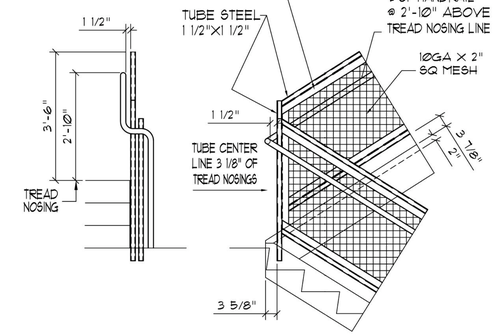

8 AE-423 STAIR 2 GUARDRAIL DTL. 2
NTS

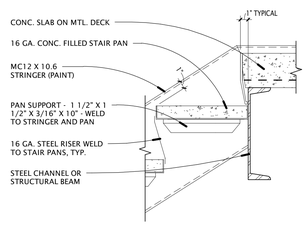

5 AE-423 METAL PAN - TOP OF LANDING
1 1/2" = 1'-0"

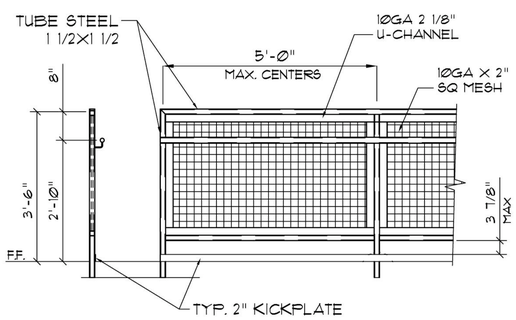

7 AE-423 STAIR 2 GUARDRAIL DTL. 1
NTS

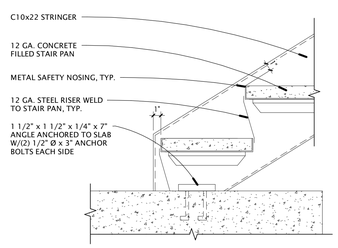

4 AE-423 METAL PAN - BOTTOM OF STAIR
1 1/2" = 1'-0"

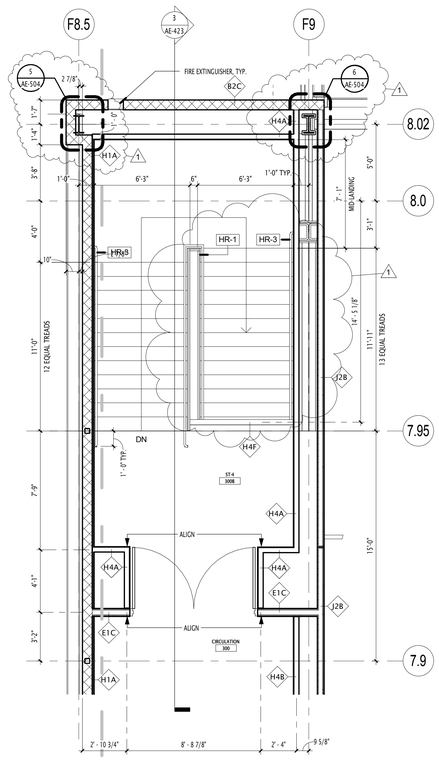

2 AE-423 STAIR-4 LEVEL 3 PLAN
1/4" = 1'-0"
4' 2' 0' 4' 8'

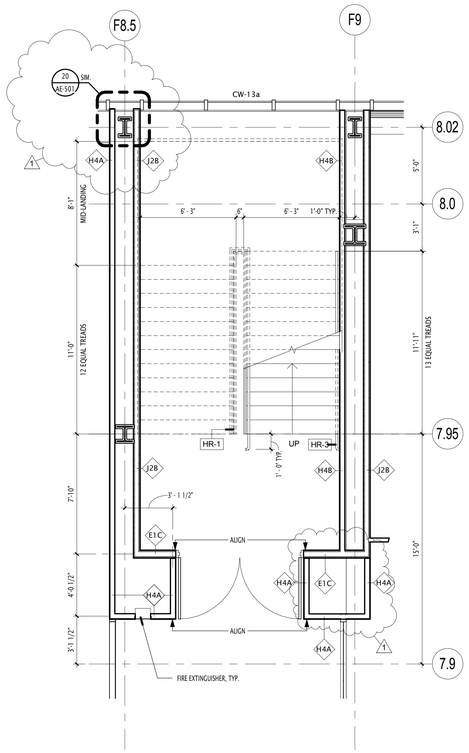

1 AE-423 STAIR-4 LEVEL 2 PLAN
1/4" = 1'-0"
4' 2' 0' 4' 8'

GSBS ARCHITECTS
375 WEST 200 SOUTH
SALT LAKE CITY, UT 84101
P 801.521.8600
F 801.521.7913
www.gsbsarchitects.com

CANNONDESIGN
CANNON DESIGN
829 NORTH 1st AVENUE
PHOENIX, AZ 85003
602.294.6500

REVISIONS:

1	05.04.2012	Addendum-02

STATE OF UTAH
JOHN BRANSON
NO. 134955
04.27.2012
LICENSED ARCHITECT

UTAH VALLEY UNIVERSITY
STUDENT LIFE CENTER & PARKING STRUCTURE

800 WEST UNIVERSITY PARKWAY
OREM, UT 84058

DFCM

4110 STATE OFFICE BUILDING
SALT LAKE CITY, UT 84112

DRAWN BY:	JB
CHECKED BY:	NE
OWNER PROJECT NO.:	#10289790
GSBS PROJECT NO.:	2011.045.00
ISSUED DATE:	04.27.2012

VERTICAL CIRCULATION - STAIR 4 & DETAILS

CONSTRUCTION DOCUMENTS

AE-423

GENERAL NOTE - VERTICAL CIRCULATION
1. REFER TO SHEET AE-115 FOR PARTITION TYPES / SCHEDULE.
2. ALL MTL. STUD INTERIOR & EXTERIOR WALL DIMENSIONS ARE GIVEN TO CENTERLINE OF STUD, U.N.O.
3. ALL MASONRY & CONCRETE WALL DIMENSIONS ARE GIVEN TO FACE OF WALL U.N.O.
4. ALL DOOR & GLAZING SYSTEM WALL OPENING DIMENSIONS ARE GIVEN TO EDGE OF ROUGH OPENING U.N.O.
5. WALL TYPES TO CONTINUE AT DOOR & GLAZING SYSTEM OPENINGS (TOP & BOTTOM) U.N.O.
6. STAIR TREAD AND LANDING DIMENSIONS TO INSIDE OF STRINGER U.N.O.

RAILING TYPE LEGEND	
TAG	DESCRIPTION
GR-1	Perf Metal Guardrail
GR-2	Stair Guardrail - Pipe w Extensions
GR-3	Guardrail - Pipe
HR-1	Perf Guardrail w/Handrail
HR-2	Stair Guardrail - Pipe w Handrail
HR-3	Handrail - Pipe - Wall
HR-4	Handrail - Pipe w Extensions/Posts
HR-5	Handrail - Pipe w Extensions
HR-P	Handrail - Pipe Only

GSBS ARCHITECTS
375 WEST 200 SOUTH
SALT LAKE CITY, UT 84101
P 801.521.8600
F 801.521.7913
www.gsbsarchitects.com

CANNONDESIGN
CANNON DESIGN
829 NORTH 1st AVENUE
PHOENIX, AZ 85003
602.294.6500

REVISIONS:

1	05.04.2012	Addendum-02

STATE OF UTAH
JOHN BRANSON
NO. 134955
04.27.2012
LICENSED ARCHITECT

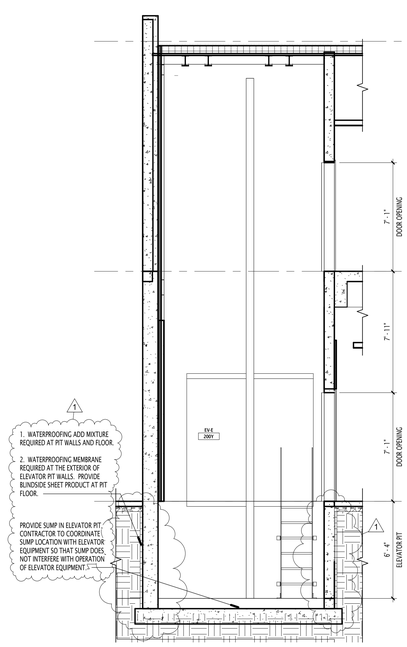

10 AE-425 SECTION 2 @ ELEVATOR-E1
1/4" = 1'-0"

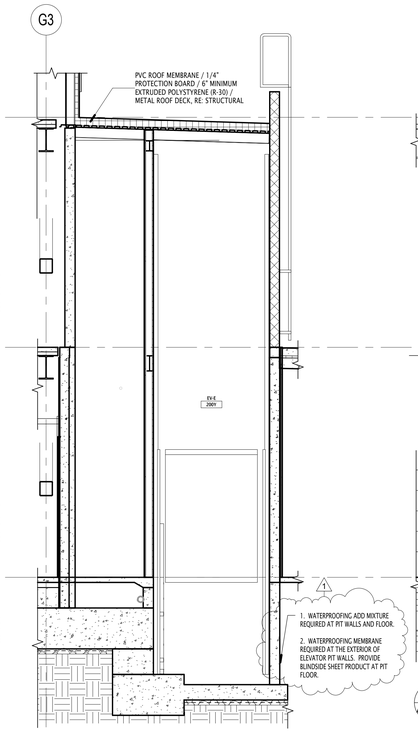

9 AE-425 SECTION @ ELEVATOR-E
1/4" = 1'-0"

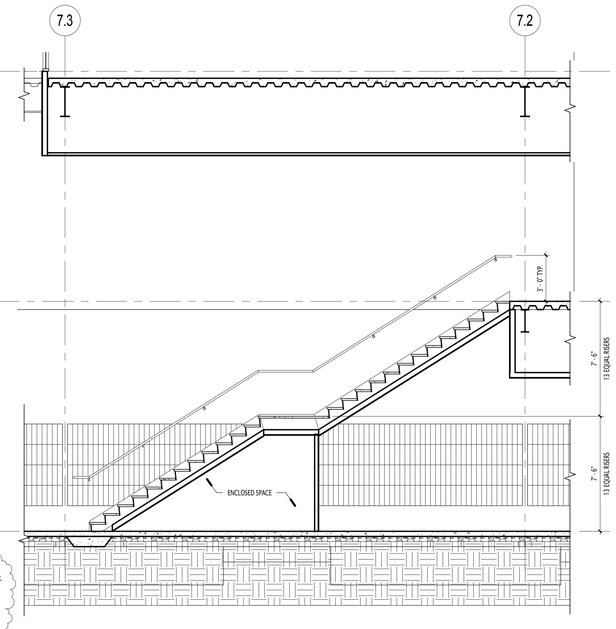

8 AE-425 SECTION @ STAIR-7
1/4" = 1'-0"

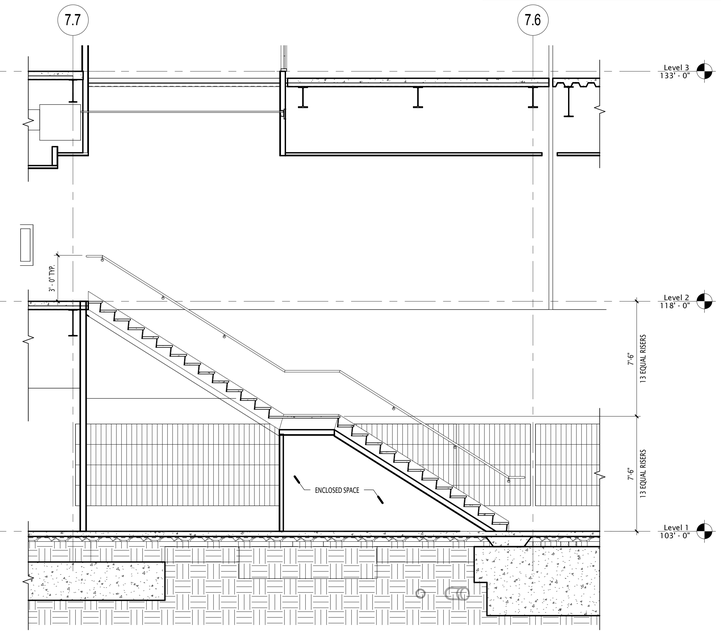

7 AE-425 SECTION @ STAIR-6
1/4" = 1'-0"

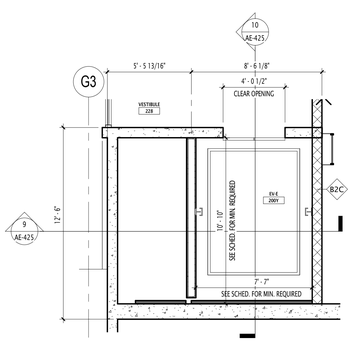

6 AE-425 ELEVATOR-E @ LEVEL 2 PLAN
1/4" = 1'-0"

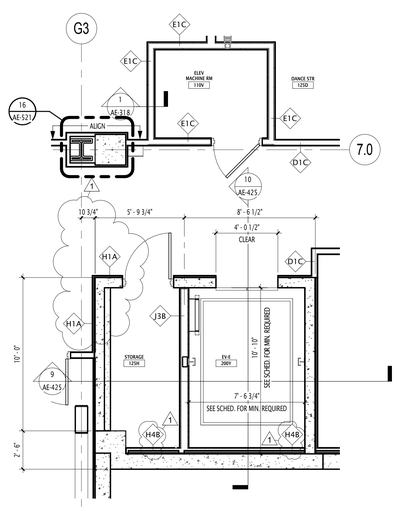

5 AE-425 ELEVATOR-E @ LEVEL 1 PLAN
1/4" = 1'-0"

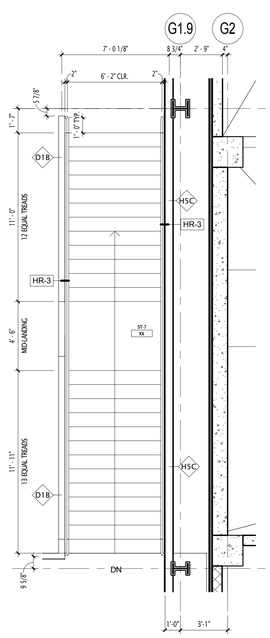

4 AE-425 STAIR-7 LEVEL 2 PLAN
1/4" = 1'-0"

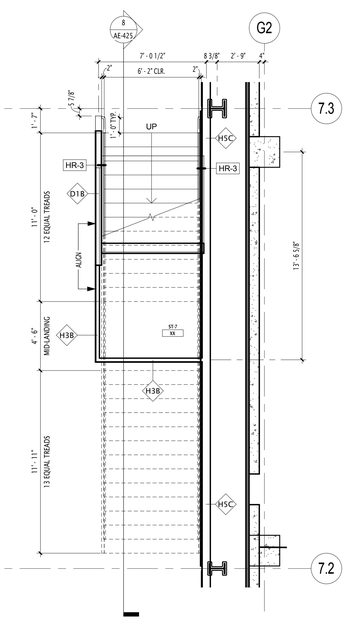

3 AE-425 STAIR-7 LEVEL 1 PLAN
1/4" = 1'-0"

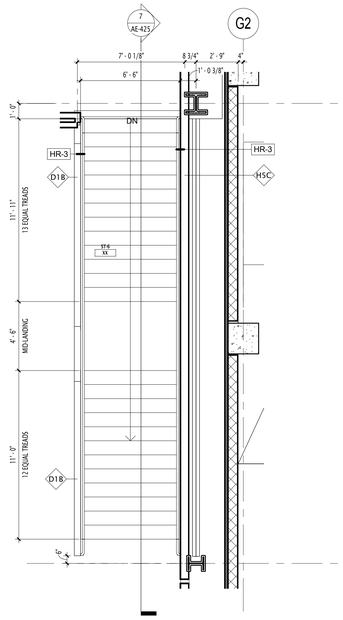

2 AE-425 STAIR-6 LEVEL 2 PLAN
1/4" = 1'-0"

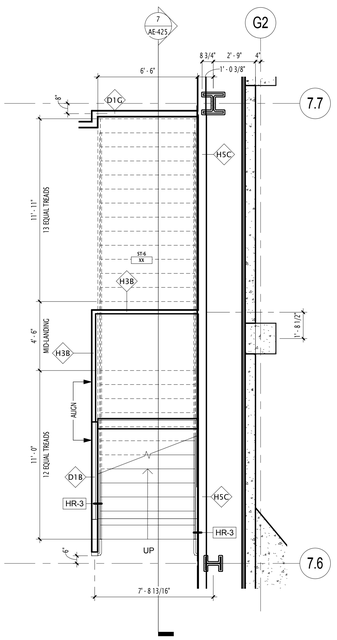

1 AE-425 STAIR-6 LEVEL 1 PLAN
1/4" = 1'-0"

UTAH VALLEY UNIVERSITY
STUDENT LIFE CENTER &
PARKING STRUCTURE

800 WEST UNIVERSITY PARKWAY
OREM, UT 84058

DFCM

4110 STATE OFFICE BUILDING
SALT LAKE CITY, UT 84112

DRAWN BY:	JB
CHECKED BY:	NE
OWNER PROJECT NO.:	#10289790
GSBS PROJECT NO.:	2011.045.00
ISSUED DATE:	04.27.2012

VERTICAL CIRCULATION -
STAIR 6 & 7, ELEVATOR E

CONSTRUCTION DOCUMENTS

AE-425

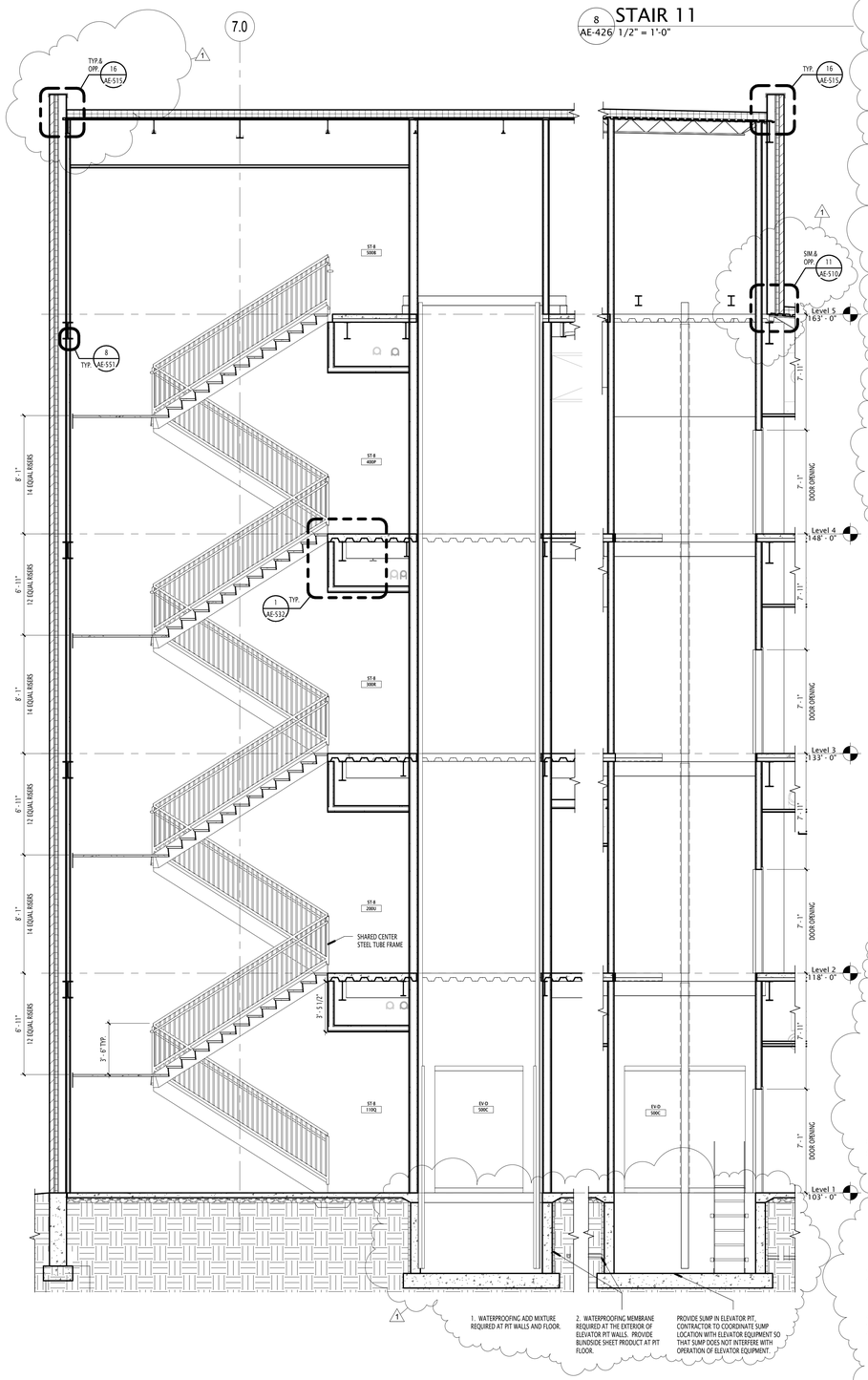

6 AE-426 SECTION @ STAIR-8 & ELEVATOR-D 1/4" = 1'-0"

8 AE-426 STAIR 11 1/2" = 1'-0"

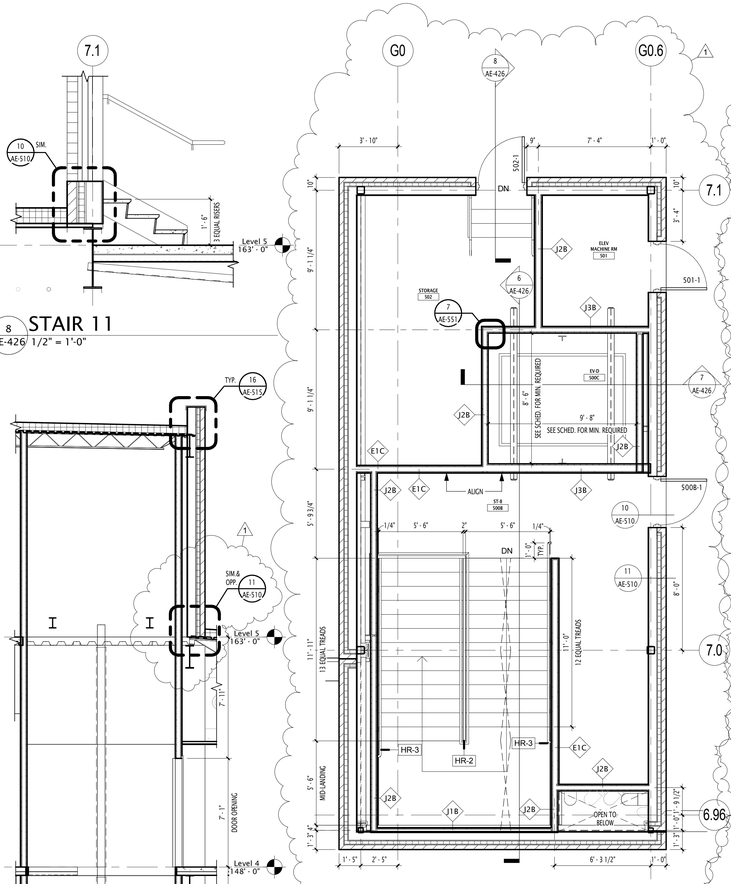

5 AE-426 STAIR-8, ELEVATOR-D @ ROOF 1/4" = 1'-0"

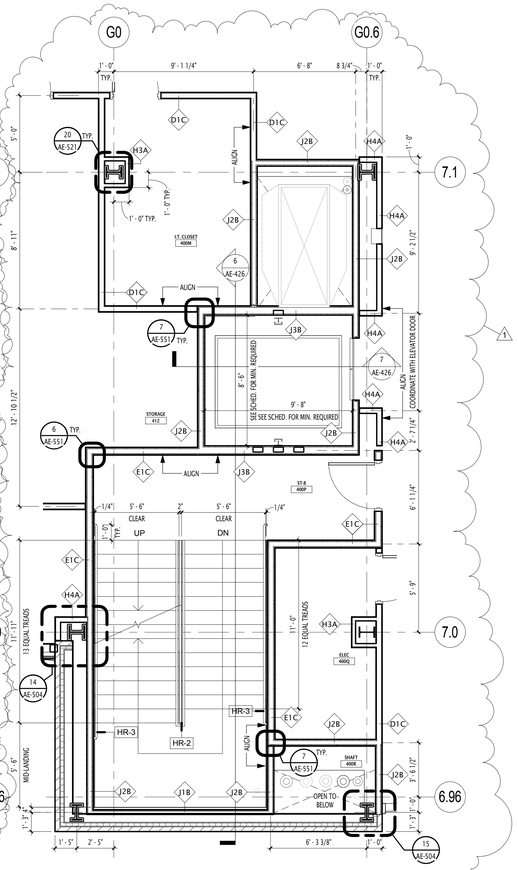

4 AE-426 STAIR-8, ELEVATOR-D @ LEVEL 4 PLAN 1/4" = 1'-0"

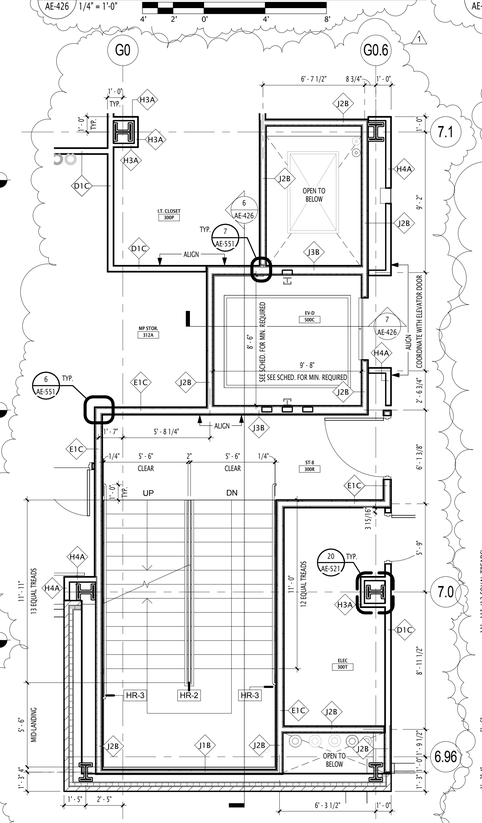

3 AE-426 STAIR-8, ELEVATOR-D @ LEVEL 3 PLAN 1/4" = 1'-0"

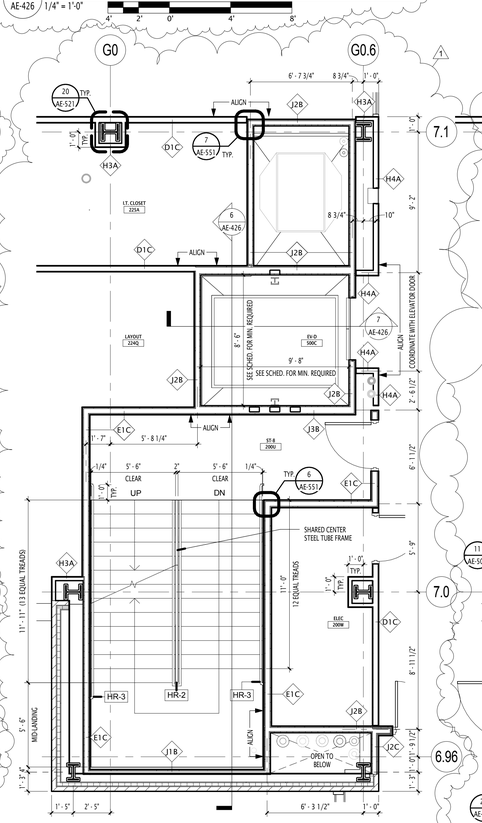

2 AE-426 STAIR-8,ELEATOR-D @ LEVEL 2 PLAN 1/4" = 1'-0"

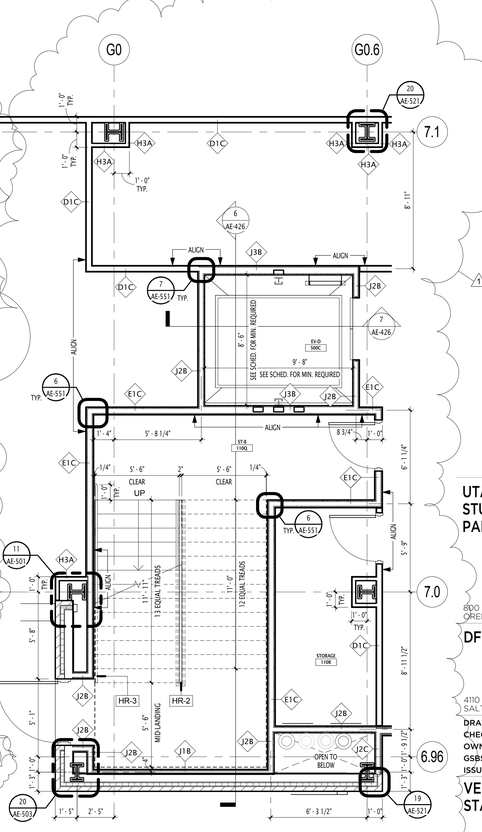

1 AE-426 STAIR-8, ELEVATOR-D @ LEVEL 1 PLAN 1/4" = 1'-0"

7 AE-426 SECTION @ ELEVATOR-D 1/4" = 1'-0"

GENERAL NOTE - VERTICAL CIRCULATION

1. REFER TO SHEET AE-115 FOR PARTITION TYPES / SCHEDULE.
2. ALL MTL. STUD INTERIOR & EXTERIOR WALL DIMENSIONS ARE GIVEN TO CENTERLINE OF STUD, U.N.O.
3. ALL MASONRY & CONCRETE WALL DIMENSIONS ARE GIVEN TO FACE OF WALL U.N.O.
4. ALL DOOR & GLAZING SYSTEM WALL OPENING DIMENSIONS ARE GIVEN TO EDGE OF ROUGH OPENING U.N.O.
5. WALL TYPES TO CONTINUE AT DOOR & GLAZING SYSTEM OPENINGS (TOP & BOTTOM) U.N.O.
6. STAIR TREAD AND LANDING DIMENSIONS TO INSIDE OF STRINGER U.N.O.

RAILING TYPE LEGEND

TAG	DESCRIPTION
GR-1	Perf Metal Guardrail
GR-2	Stair Guardrail - Pipe w Extensions
GR-3	Guardrail - Pipe
HR-1	Perf Guardrail w/Handrail
HR-2	Stair Guardrail - Pipe w Handrail
HR-3	Handrail - Pipe - Wall
HR-4	Handrail - Pipe w Extensions/Posts
HR-5	Handrail - Pipe w Extensions
HR-P	Handrail - Pipe Only

GSBS ARCHITECTS
375 WEST 200 SOUTH
SALT LAKE CITY, UT 84101
P 801.521.8600
F 801.521.7913
www.gsbsarchitects.com

CANNONDESIGN
CANNON DESIGN
829 NORTH 1st AVENUE
PHOENIX, AZ 85003
602.294.6500

REVISIONS:

1	05.04.2012	Addendum-02

STATE OF UTAH
JOHN BRANSON
NO. 134955
04.27.2012
LICENSED ARCHITECT

UTAH VALLEY UNIVERSITY
STUDENT LIFE CENTER & PARKING STRUCTURE

800 WEST UNIVERSITY PARKWAY
OREM, UT 84058

DFCM

4110 STATE OFFICE BUILDING
SALT LAKE CITY, UT 84112

DRAWN BY:	JB
CHECKED BY:	NE
OWNER PROJECT NO.:	#10289790
GSBS PROJECT NO.:	2011.045.00
ISSUED DATE:	04.27.2012

VERTICAL CIRCULATION - STAIR 8 & ELEVATOR D

CONSTRUCTION DOCUMENTS

AE-426

ELEVATOR SCHEDULE

ELEV	MAKE & MODEL (BASIS OF DESIGN)	SPEED (ft/min.)	WEIGHT CAPACITY	# OF STOPS	CAR DOOR WIDTH	CAR INTERIOR DEPTH	CAR INTERIOR HEIGHT	CAR INTERIOR WIDTH	HOISTWAY DEPTH	HOISTWAY WIDTH	PIT DEPTH	OVERRUN HEIGHT	CONTROL RM DEPTH	CONTROL RM WIDTH	MACHINE RM DEPTH	MACHINE RM WIDTH	EMERGENCY POWER	Elev_Notes
EV-A	Otis - Hydrofit 3500	125	3500 lb	2	3' - 6"	5' - 5 5/8"	7' - 9"	6' - 5 1/2"	6' - 11"	8' - 4"	4' - 0"	12' - 10"	0"	0"	0"	0"	No	AUTOMATIC RECOVERY
EV-B	Otis - Gen 2, 150 Series	200	2500 lb	3	3' - 6"	4' - 3 5/8"	7' - 9"	6' - 5 5/8"	5' - 9"	8' - 6"	4' - 0"	12' - 11"	0"	0"	0"	0"	No	AUTOMATIC RECOVERY
EV-C	Otis - Hydrofit 2500	125	2500 lb	2	3' - 6"	4' - 3 5/8"	7' - 9"	6' - 5 1/2"	5' - 9"	8' - 4"	4' - 0"	12' - 10"	0"	0"	0"	0"	No	AUTOMATIC RECOVERY
EV-D	Otis - Gen 2, 500 Series, Service Elevator	350	4500 lb	4	4' - 0"	7' - 11"	8' - 0"	5' - 8 3/8"	9' - 8"	8' - 4"	5' - 6"	15' - 5 5/8"	8' - 4"	5' - 9"	0"	0"	Yes	STRETCHER CAPABLE, SECURITY CARD ACCESS FOR 3RD AND 4TH FLOOR
EV-E	Otis - Holess Hydraulic, Service Elevator	125	4500 lb	2	4' - 0"	7' - 11"	8' - 0"	5' - 8"	9' - 8"	7' - 7"	6' - 4"	12' - 7"	0"	0"	5' - 9"	7' - 4"	No	AUTOMATIC RECOVERY
EV-F	Otis - Gen 2, 150 Series	200	3500 lb	5	3' - 6"	5' - 5 5/8"	7' - 9"	6' - 5 5/8"	6' - 11"	8' - 6"	4' - 0"	12' - 11"	0"	0"	0"	0"	Yes	PARKING STRUCTURE, STRETCHER CAPABLE
EV-G	Otis - Gen 2, 150 Series	200	3500 lb	5	3' - 6"	5' - 5 5/8"	7' - 9"	6' - 5 5/8"	6' - 11"	8' - 6"	4' - 0"	12' - 11"	0"	0"	0"	0"	Yes	PARKING STRUCTURE, STRETCHER CAPABLE

NOTE: THE CONSTRUCTION DOCUMENTS HAVE BEEN DEVELOPED AROUND THE BASIS OF DESIGN ELEVATORS LISTED IN THE ELEVATOR SCHEDULE. INCLUDING BUT NOT LIMITED TO SHAFT SIZE, CONTROL ROOM, MACHINE ROOM, SUPPORTING STRUCTURE, SERVICES AND ADJACENT CONSTRUCTION. DURING THE BIDDING PROCESS, IF ELEVATORS OTHER THAN THE BASIS OF DESIGN ELEVATORS ARE CARRIED IN THE BID, THE CONTRACTORS SHALL PROVIDE A SUBSTITUTION REQUEST TO THE ARCHITECT AND OWNER FOR REVIEW AND APPROVAL. ONLY BASIS OF DESIGN ELEVATORS OR APPROVED SUBSTITUTIONS ARE ALLOWED. AFTER THE BID HAS BEEN AWARDED, ANY CHANGES TO THE SHAFT SIZE, CONTROL ROOM, MACHINE ROOM, SUPPORTING STRUCTURE, SERVICES AND ADJACENT CONSTRUCTION DUE TO THE USE OF A NON-APPROVED ELEVATOR WILL BE THE RESPONSIBILITY OF THE CONTRACTOR.

GENERAL NOTE - VERTICAL CIRCULATION

1. REFER TO SHEET AE-115 FOR PARTITION TYPES / SCHEDULE.
2. ALL MTL. STUD INTERIOR & EXTERIOR WALL DIMENSIONS ARE GIVEN TO CENTERLINE OF STUD, U.N.O.
3. ALL MASONRY & CONCRETE WALL DIMENSIONS ARE GIVEN TO FACE OF WALL U.N.O.
4. ALL DOOR & GLAZING SYSTEM WALL OPENING DIMENSIONS ARE GIVEN TO EDGE OF ROUGH OPENING U.N.O.
5. WALL TYPES TO CONTINUE AT DOOR & GLAZING SYSTEM OPENINGS (TOP & BOTTOM) U.N.O.
6. STAIR TREAD AND LANDING DIMENSIONS TO INSIDE OF STRINGER U.N.O.

GSBS ARCHITECTS
375 WEST 200 SOUTH
SALT LAKE CITY, UT 84101
P 801.521.8600
F 801.521.7913
www.gsbsarchitects.com

CANNONDESIGN
CANNON DESIGN
829 NORTH 1st AVENUE
PHOENIX, AZ 85003
602.294.6500

REVISIONS:

1	05.04.2012	Addendum-02
2	05.14.2012	Addendum-03

STATE OF UTAH — JOHN BRANSON NO. 134955 04.27.2012 LICENSED ARCHITECT

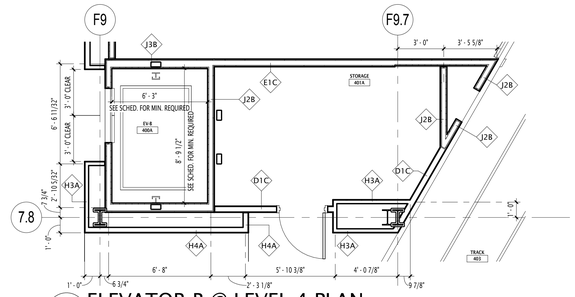

4 AE-428 ELEVATOR-B @ LEVEL 4 PLAN
1/4" = 1'-0"

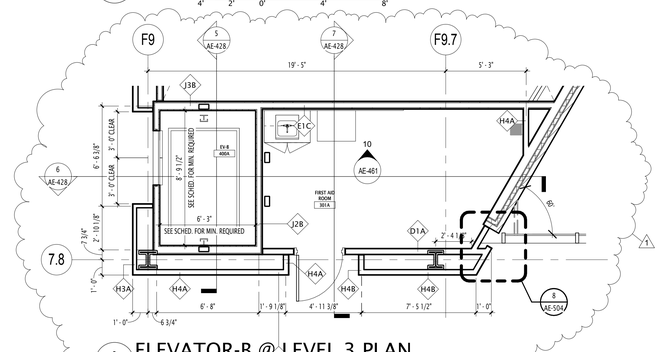

3 AE-428 ELEVATOR-B @ LEVEL 3 PLAN
1/4" = 1'-0"

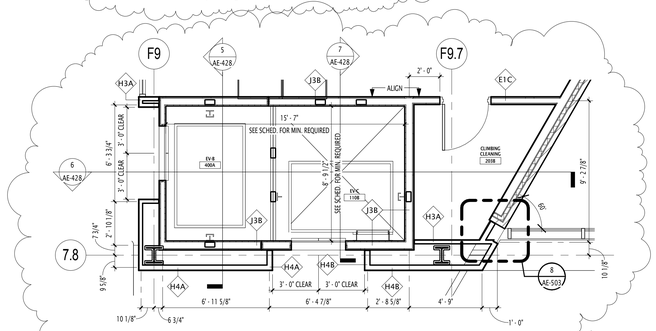

2 AE-428 ELEVATOR-B & C @ LEVEL 2 PLAN
1/4" = 1'-0"

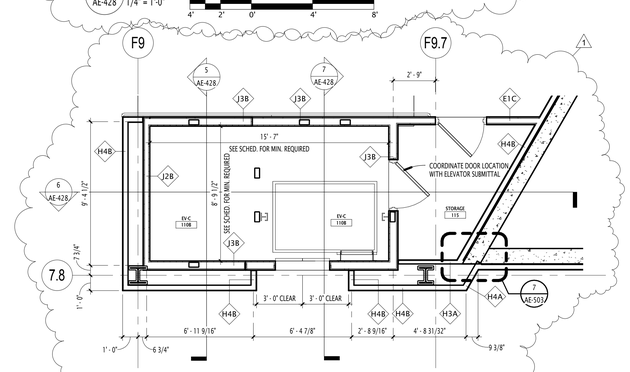

1 AE-428 ELEVATOR-C @ LEVEL 1 PLAN
1/4" = 1'-0"

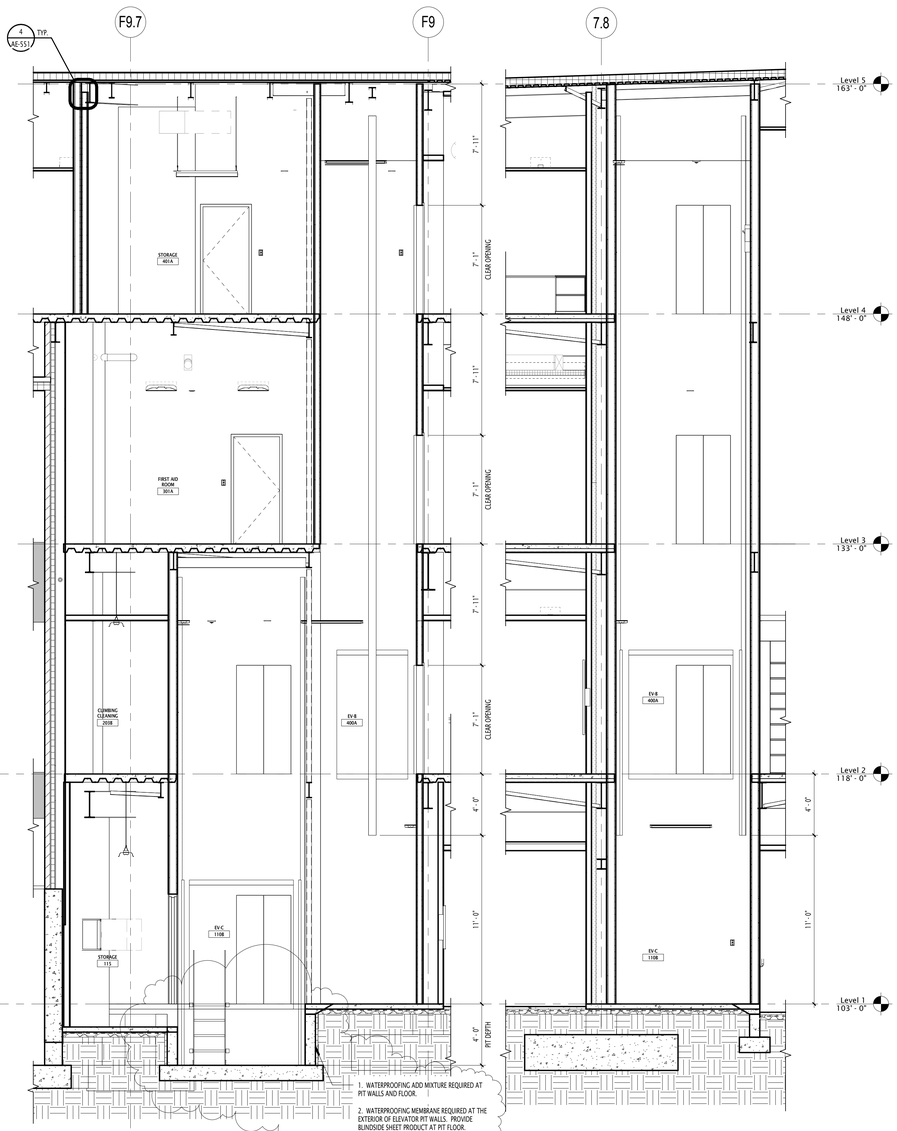

6 AE-428 SECTION @ ELEVATOR-B & C
1/4" = 1'-0"

5 AE-428 SECTION @ ELEVATOR-B
1/4" = 1'-0"

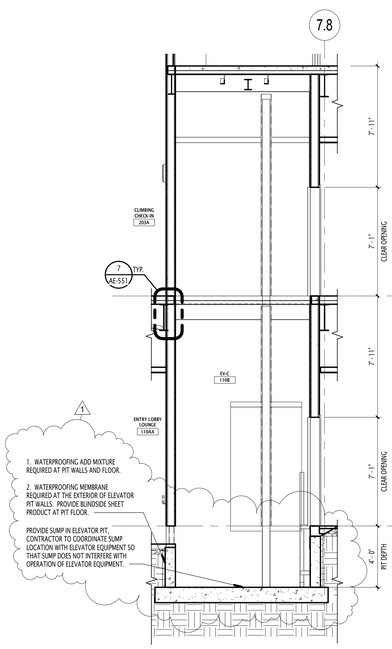

7 AE-428 SECTION @ ELEVATOR-C
1/4" = 1'-0"

UTAH VALLEY UNIVERSITY
STUDENT LIFE CENTER &
PARKING STRUCTURE

800 WEST UNIVERSITY PARKWAY
OREM, UT 84058

DFCM

4110 STATE OFFICE BUILDING
SALT LAKE CITY, UT 84112

DRAWN BY:	JB
CHECKED BY:	NE
OWNER PROJECT NO.:	#10289790
GSBS PROJECT NO.:	2011.045.00
ISSUED DATE:	04.27.2012

VERTICAL CIRCULATION - ELEVATOR B & C / ELEVATOR SCHEDULE

CONSTRUCTION DOCUMENTS

AE-428

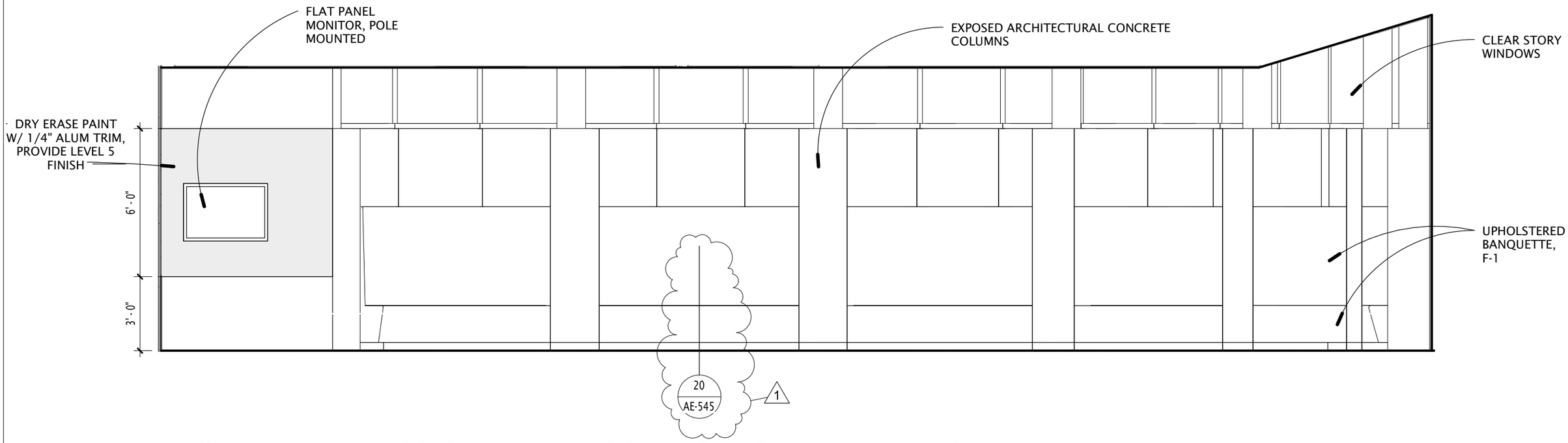

2 AE-444 (RM. 114) SS STUDENT COUNCIL CHAMBER EAST

1/4" = 1'-0"

C:\Users\tyang\Documents\2011.045.00 UVU Student Life Center_Central_tyang.rvt

5/3/2012 2:42:11 PM

GSBS ARCHITECTS
375 WEST 200 SOUTH
SALT LAKE CITY, UT 84101
P 801.521.8600
F 801.521.7913
www.gsbsarchitects.com

UTAH VALLEY UNIVERSITY
STUDENT LIFE CENTER & PARKING STRUCTURE

800 WEST UNIVERSITY PARKWAY
OREM, UT 84058

DFCM
4110 STATE OFFICE BUILDING
SALT LAKE CITY, UT 84112

REV.: Addendum 2
BY: BM

AE-444-01

DFCM PROJECT NO.: #10289790
GSBS PROJECT NO.: 2011.045.00
ISSUED DATE: 05/04/12

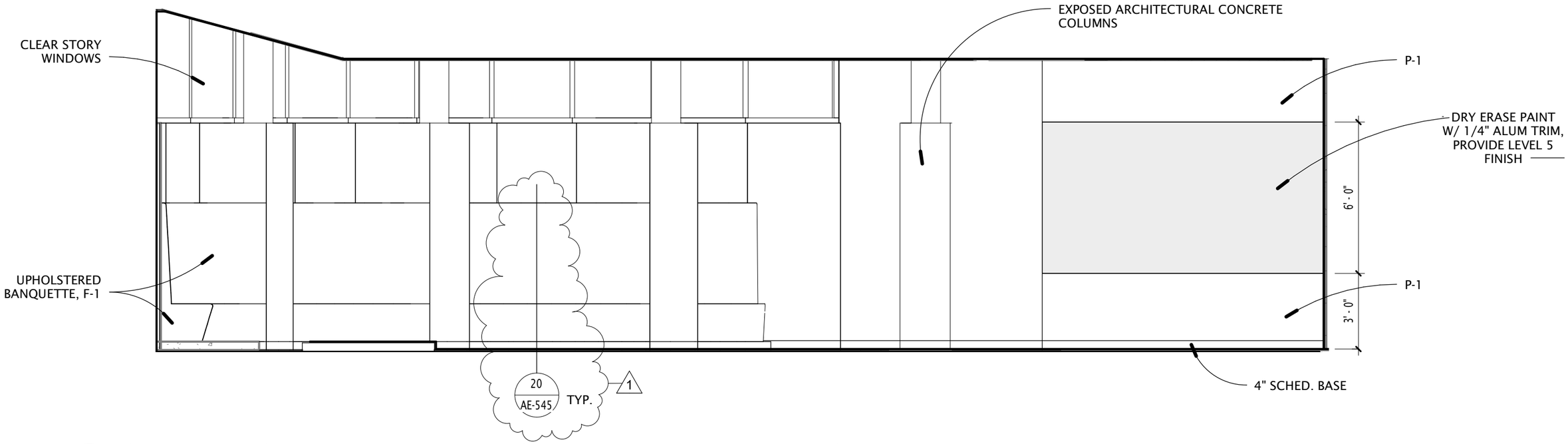

3 AE-444 (RM. 114) SS STUDENT COUNCIL CHAMBER SOUTH

1/4" = 1'-0"

C:\Users\tyang\Documents\2011.045.00 UVU Student Life Center_Central_tyang.rvt

5/3/2012 2:42:11 PM

GSBS ARCHITECTS
375 WEST 200 SOUTH
SALT LAKE CITY, UT 84101
P 801.521.8600
F 801.521.7913
www.gsbsarchitects.com

UTAH VALLEY UNIVERSITY
STUDENT LIFE CENTER & PARKING STRUCTURE

800 WEST UNIVERSITY PARKWAY
OREM, UT 84058

DFCM
4110 STATE OFFICE BUILDING
SALT LAKE CITY, UT 84112

REV.: Addendum 2
BY: BM

AE-444-02

DFCM PROJECT NO.: #10289790
GSBS PROJECT NO.: 2011.045.00
ISSUED DATE: 05/04/12

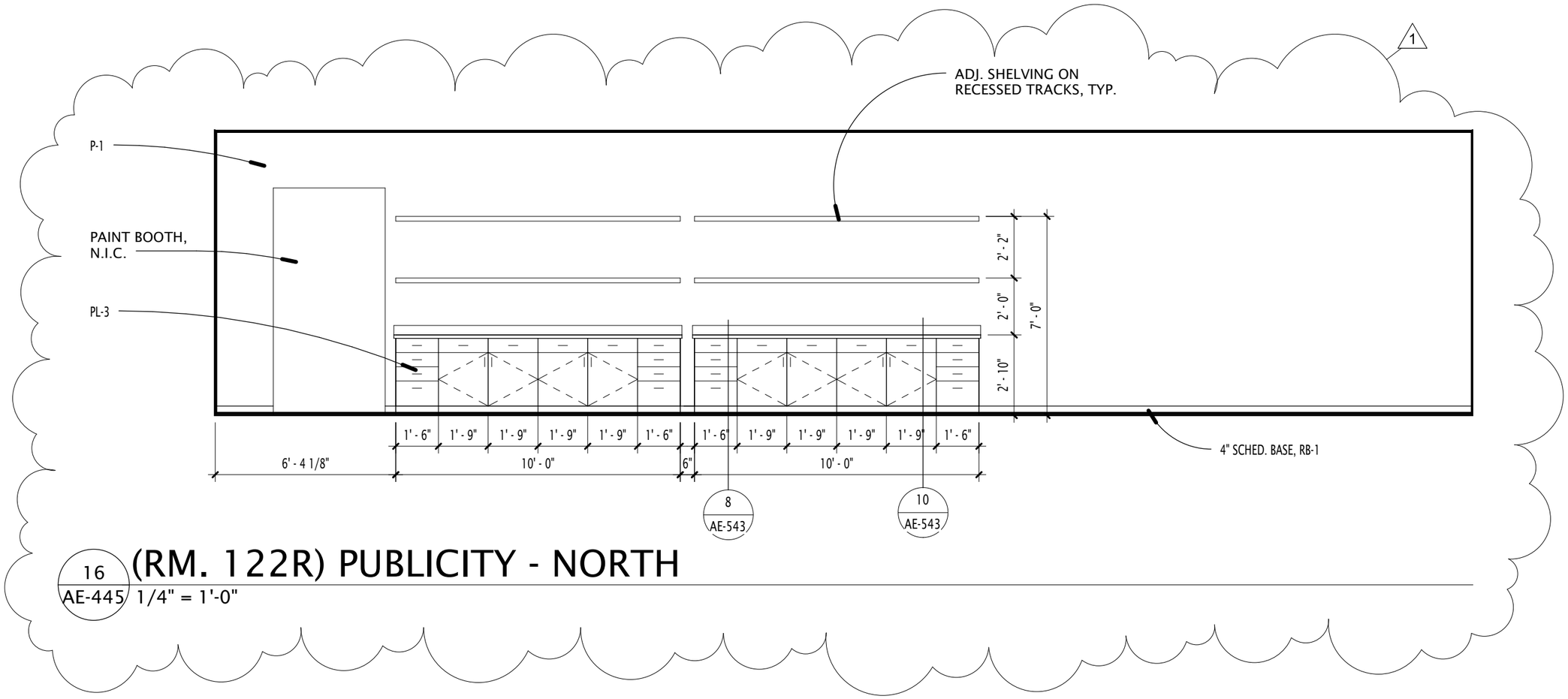

16
AE-445

(RM. 122R) PUBLICITY - NORTH

1/4" = 1'-0"

C:\Users\tyang\Documents\2011.045.00 UVU Student Life Center_Central_tyang.rvt

5/3/2012 2:42:11 PM

GSBS ARCHITECTS
375 WEST 200 SOUTH
SALT LAKE CITY, UT 84101
P 801.521.8600
F 801.521.7913
www.gsbsarchitects.com

UTAH VALLEY UNIVERSITY
STUDENT LIFE CENTER & PARKING STRUCTURE

800 WEST UNIVERSITY PARKWAY
OREM, UT 84058

DFCM
4110 STATE OFFICE BUILDING
SALT LAKE CITY, UT 84112

REV.: Addendum 2
BY: BM

AE-445-01

DFCM PROJECT NO.: #10289790
GSBS PROJECT NO.: 2011.045.00
ISSUED DATE: 05/04/12

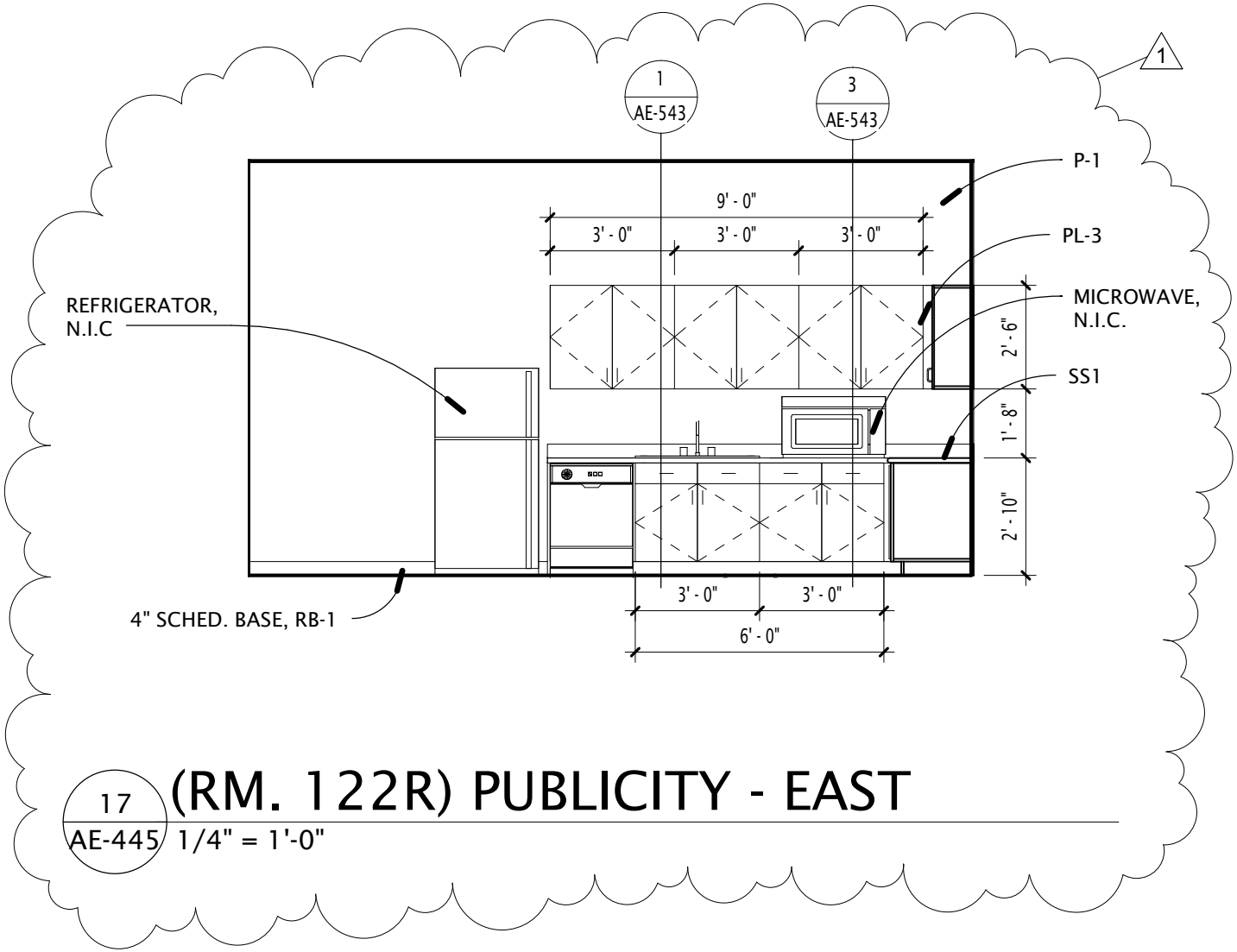

17
AE-445

(RM. 122R) PUBLICITY - EAST

1/4" = 1'-0"

C:\Users\tyang\Documents\2011.045.00 UVU Student Life Center_Central_tyang.rvt

5/3/2012 2:38:35 PM

GSBS ARCHITECTS
375 WEST 200 SOUTH
SALT LAKE CITY, UT 84101
P: 801.521.8600 F: 801.521.7913
www.gsbsarchitects.com

UTAH VALLEY UNIVERSITY
STUDENT LIFE CENTER &
PARKING STRUCTURE

800 WEST UNIVERSITY PARKWAY
OREM, UT 84058

DFCM

4110 STATE OFFICE BUILDING
SALT LAKE CITY, UT 84112

REV.: Addendum 2
BY: BM

AE-445-02

DFCM PROJECT NO.: #10289790
GSBS PROJECT NO.: 2011.045.00
ISSUED DATE: 05/04/12

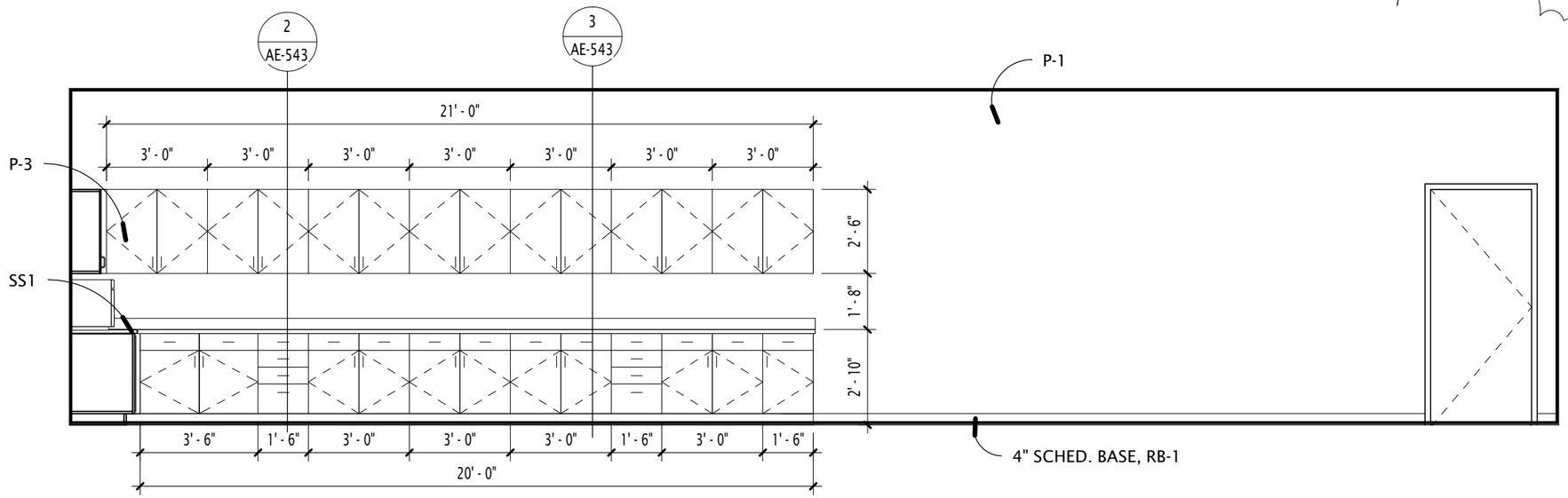

18
AE-445

(RM. 122R) PUBLICITY - SOUTH

1/4" = 1'-0"

C:\Users\tyang\Documents\2011.045.00 UVU Student Life Center_Central_tyang.rvt

5/3/2012 2:42:11 PM

GSBS ARCHITECTS
375 WEST 200 SOUTH
SALT LAKE CITY, UT 84101
P 801.521.8600
F 801.521.7913
www.gsbsarchitects.com

UTAH VALLEY UNIVERSITY
STUDENT LIFE CENTER & PARKING STRUCTURE

800 WEST UNIVERSITY PARKWAY
OREM, UT 84058

DFCM
4110 STATE OFFICE BUILDING
SALT LAKE CITY, UT 84112

REV.: Addendum 2
BY: BM

AE-445-03

DFCM PROJECT NO.: #10289790
GSBS PROJECT NO.: 2011.045.00
ISSUED DATE: 05/04/12

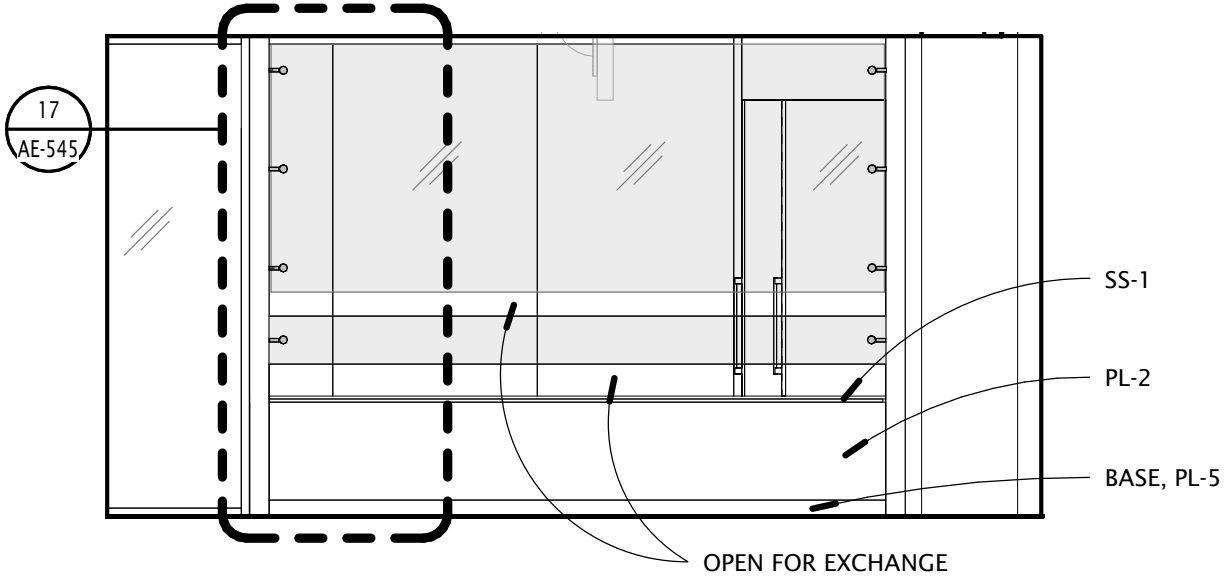

NOTE: MIND EXPANSION JOINT, ATTACH DESK ONLY AT FLOOR

2 AE-446 (RM. 117M) GAMES DESK NORTH OUTSIDE

1/4" = 1'-0"

C:\Users\tyang\Documents\2011.045.00 UVU Student Life Center_Central_tyang.rvt

5/3/2012 2:38:35 PM

GSBS ARCHITECTS
375 WEST 200 SOUTH
SALT LAKE CITY, UT 84101
P: 801.521.8600 F: 801.521.7913
www.gsbsarchitects.com

UTAH VALLEY UNIVERSITY
STUDENT LIFE CENTER &
PARKING STRUCTURE

800 WEST UNIVERSITY PARKWAY
OREM, UT 84058

DFCM

4110 STATE OFFICE BUILDING
SALT LAKE CITY, UT 84112

REV.: Addendum 2
BY: BM

AE-446-01

DFCM PROJECT NO.: #10289790
GSBS PROJECT NO.: 2011.045.00
ISSUED DATE: 05/04/12

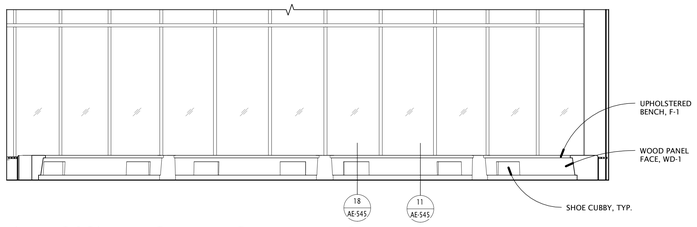

4 AE-481 (RM. 203) TYPICAL BENCH ELEVATION
1/4" = 1'-0"

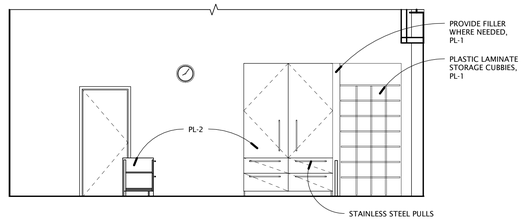

7 AE-481 (RM. 203A) CLIMBING CHECK- IN SOUTH INSIDE
1/4" = 1'-0"

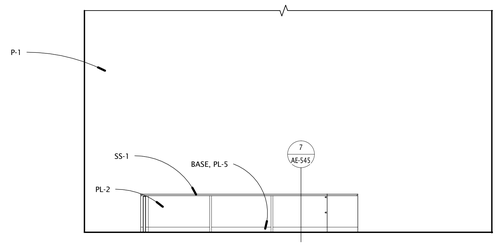

3 AE-481 (RM. 203A) CLIMBING CHECK-IN INSIDE- NORTH
1/4" = 1'-0"

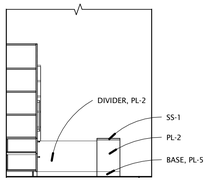

6 AE-481 (RM. 203A) CLIMBING CHECK- IN WEST INSIDE
1/4" = 1'-0"

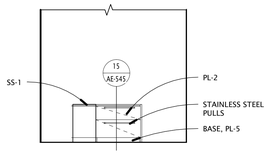

8 AE-481 (RM. 203A) CLIMBING CHECK- IN EAST INSIDE
1/4" = 1'-0"

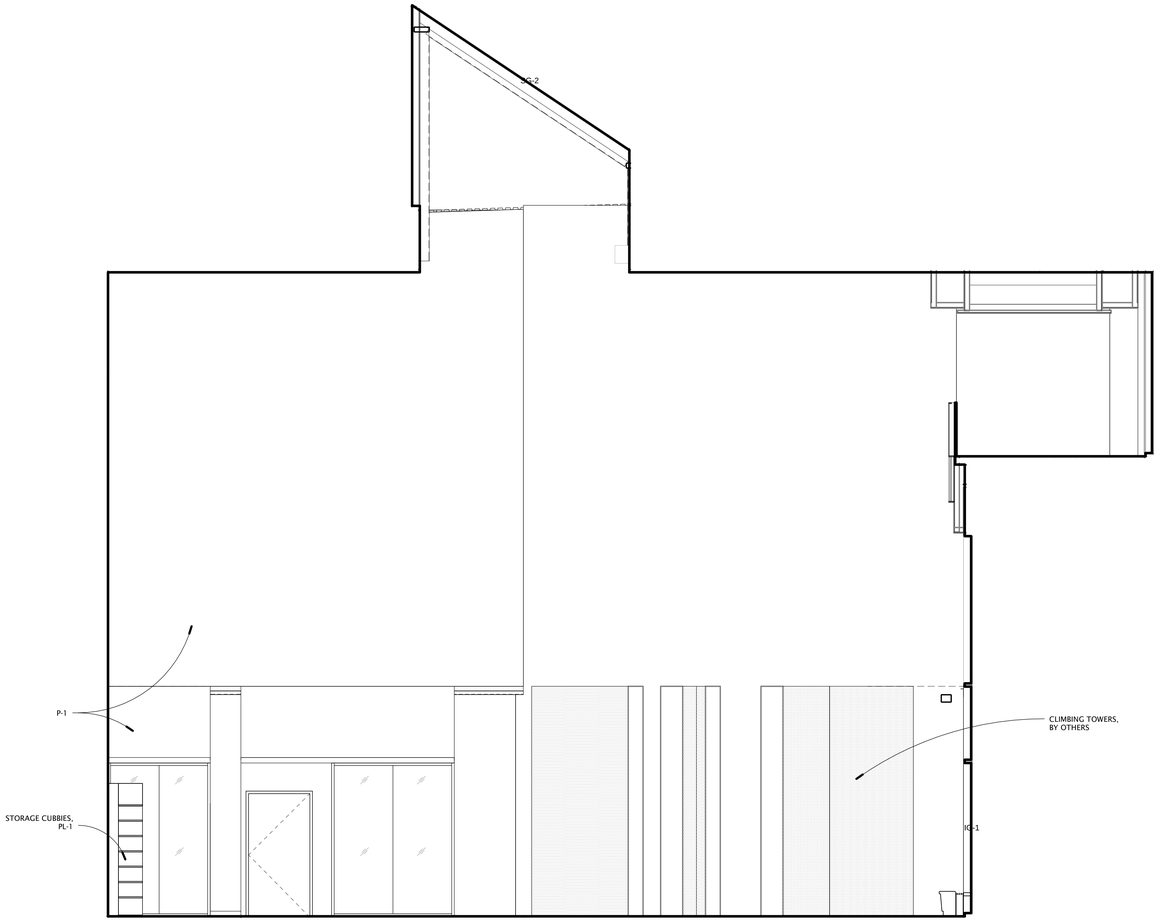

2 AE-481 (RM. 203) CLIMBING & BOULDERING WEST
1/4" = 1'-0"

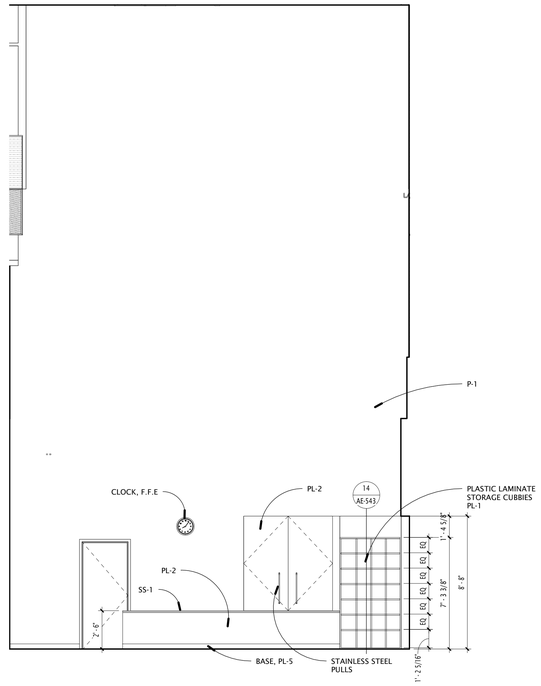

1 AE-481 (RM. 203A) CLIMBING CHECK- IN OUTSIDE- SOUTH
1/4" = 1'-0"

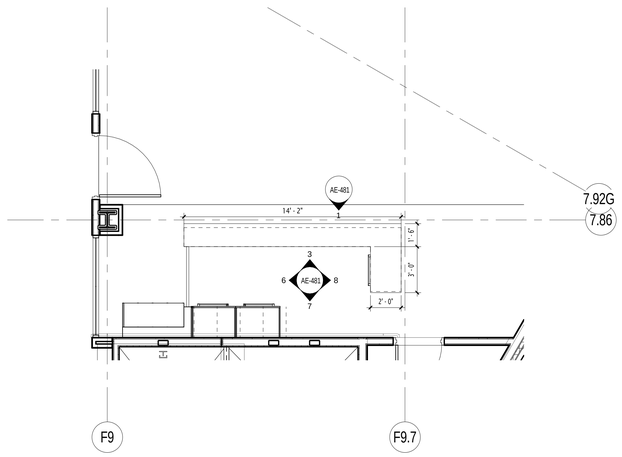

5 AE-481 ENLARGED PLAN - CLIMBING DESK 203A
1/4" = 1'-0"

GSBS ARCHITECTS
375 WEST 200 SOUTH
SALT LAKE CITY, UT 84101
P 801.521.8600
F 801.521.7913
www.gsbsarchitects.com

CANNONDESIGN
CANNON DESIGN
829 NORTH 1st AVENUE
PHOENIX, AZ 85003
602.294.6500

REVISIONS:

1	05.04.2012	Addendum-02

STATE OF UTAH
JOHN BRANSON
NO. 134865
04.27.2012
LICENSED ARCHITECT

UTAH VALLEY UNIVERSITY
STUDENT LIFE CENTER &
PARKING STRUCTURE

800 WEST UNIVERSITY PARKWAY
OREM, UT 84058

DFCM
4110 STATE OFFICE BUILDING
SALT LAKE CITY, UT 84112

DRAWN BY:	JB
CHECKED BY:	AM
OWNER PROJECT NO.:	#10289790
GSBS PROJECT NO.:	2011.045.00
ISSUED DATE:	04.27.2012

INTERIOR ELEVATIONS - CLIMBING / BOULDERING

CONSTRUCTION DOCUMENTS

1

AE-481

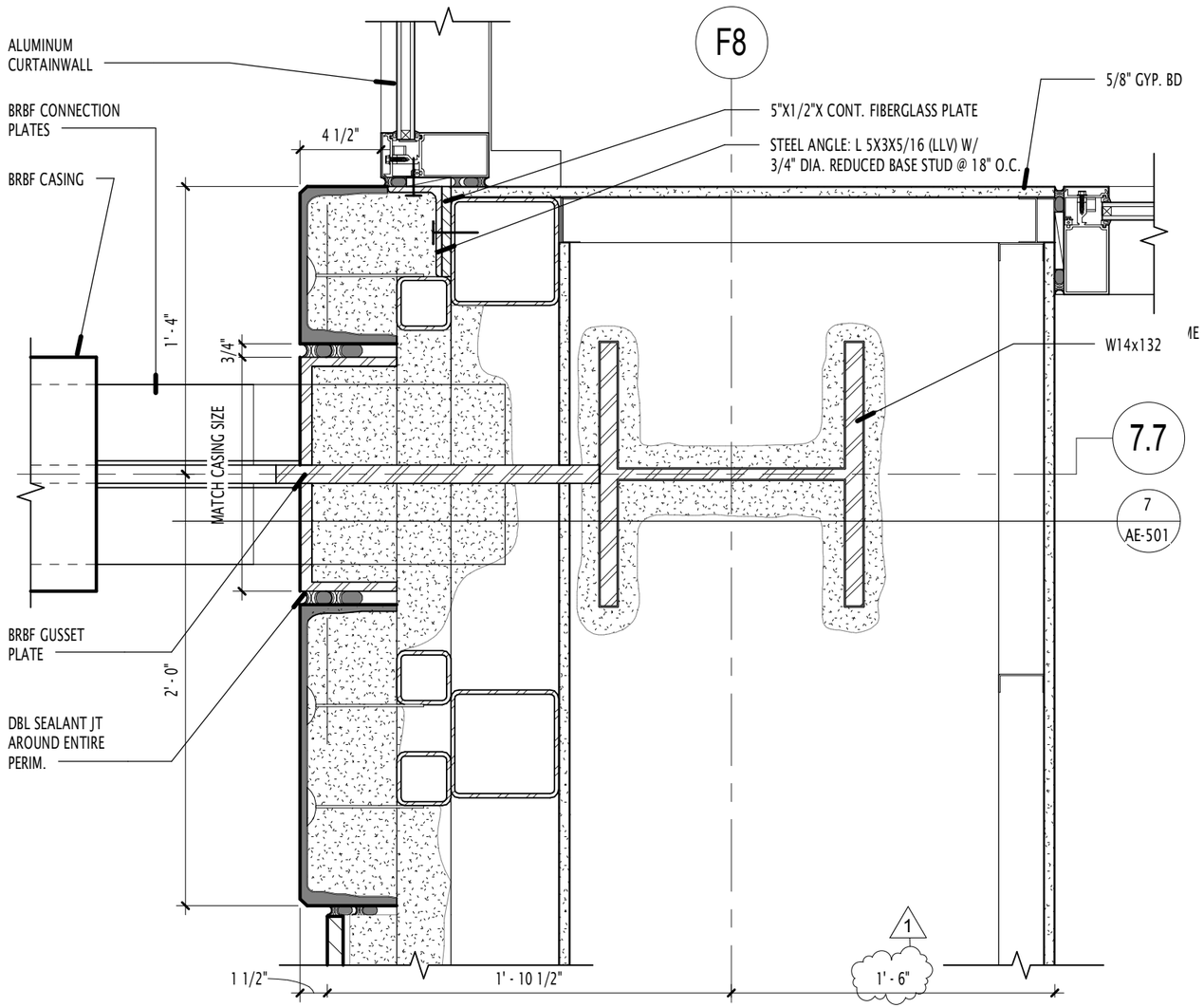

3 AE-501 BRBF ENVELOPE PENETRATION PLAN DTL

1 1/2" = 1'-0"

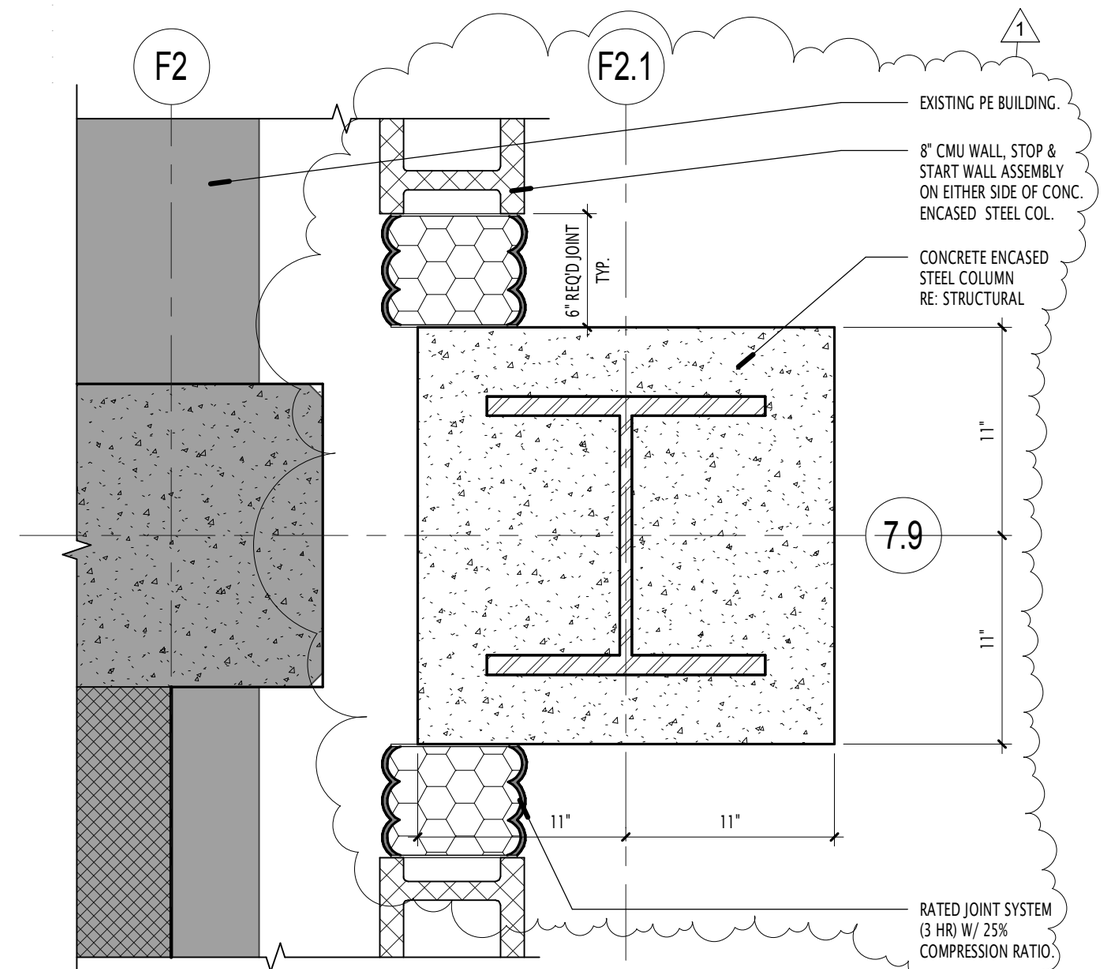

8 AE-501 COLUMN DETAIL @ CMU WALL

1 1/2" = 1'-0"

C:\Users\tyang\Documents\2011.045.00 UVU Student Life Center_Central_tyang.rvt

5/3/2012 2:42:11 PM

GSBS ARCHITECTS
375 WEST 200 SOUTH
SALT LAKE CITY, UT 84101
P 801.521.8600
F 801.521.7913
www.gsbsarchitects.com

UTAH VALLEY UNIVERSITY
STUDENT LIFE CENTER & PARKING STRUCTURE

800 WEST UNIVERSITY PARKWAY
OREM, UT 84058

DFCM
4110 STATE OFFICE BUILDING
SALT LAKE CITY, UT 84112

REV.: Addendum-02
BY: JB

AE-501-01

DFCM PROJECT NO.: #10289790
GSBS PROJECT NO.: 2011.045.00
ISSUED DATE: 05/04/12

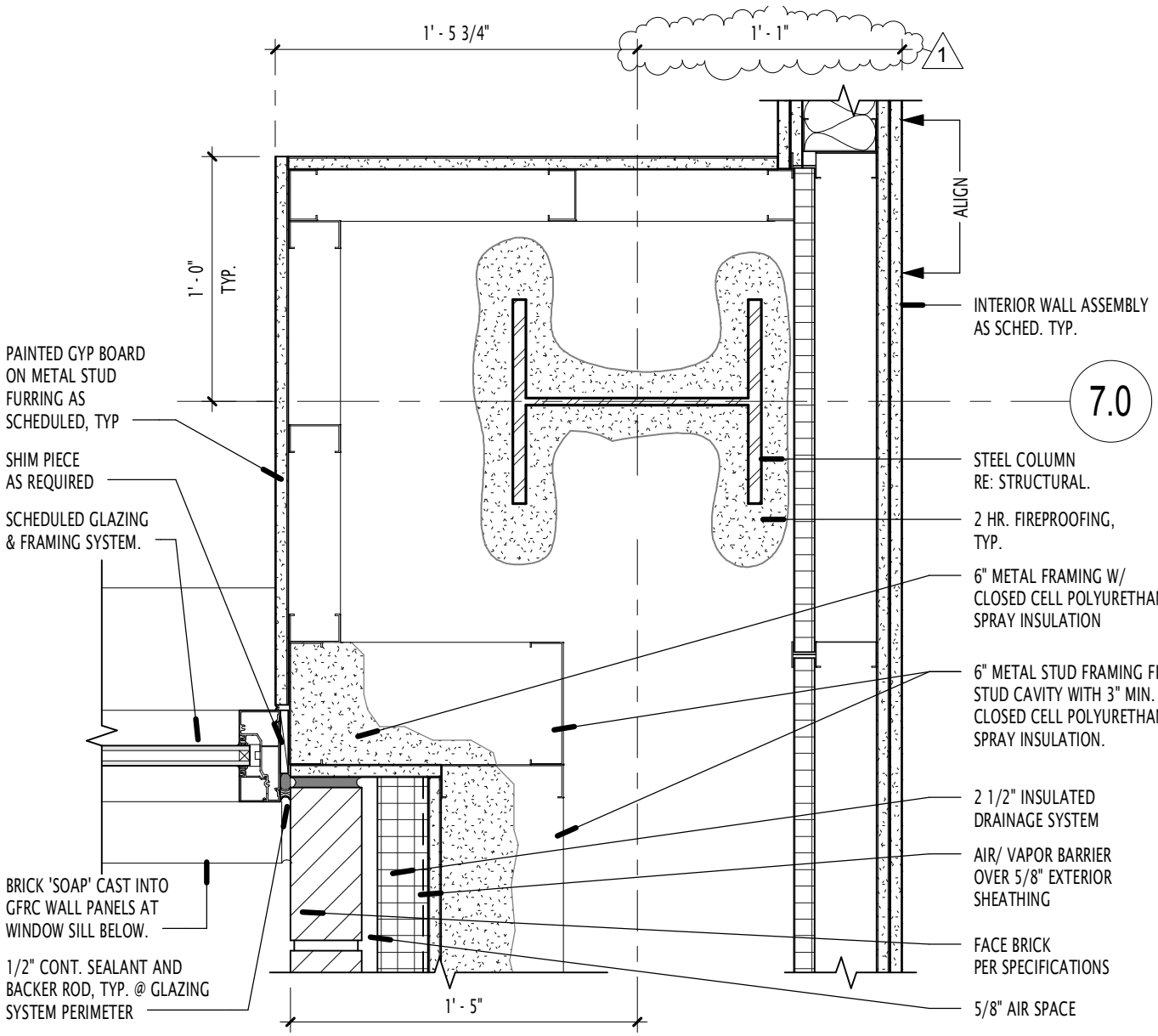

11
AE-501

BRICK/ WD SILL @ GFRC WALL DTL

1 1/2" = 1'-0"

C:\Users\tyang\Documents\2011.045.00 UVU Student Life Center_Central_tyang.rvt

5/3/2012 2:40:55 PM

GSBS ARCHITECTS
375 WEST 200 SOUTH
SALT LAKE CITY, UT 84101
P: 801.521.8600 F: 801.521.7913
www.gsbsarchitects.com

UTAH VALLEY UNIVERSITY
STUDENT LIFE CENTER &
PARKING STRUCTURE

800 WEST UNIVERSITY PARKWAY
OREM, UT 84058

REV.: Addendum-02
BY: JB

AE-501-02

DFCM PROJECT NO.: #10289790
GSBS PROJECT NO.: 2011.045.00
ISSUED DATE: 05/04/12

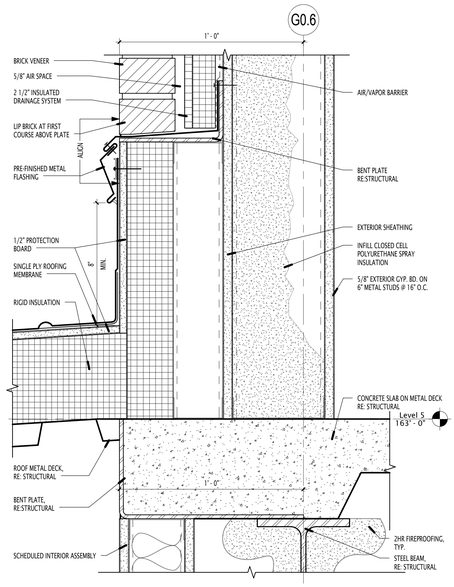

11 AE-510 BRICK WALL / ROOF FLASHING DETAIL
3" = 1'-0"

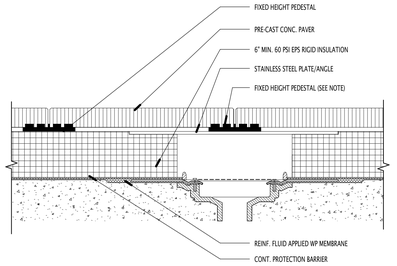

NOTE:
REFER TO APPLICABLE MM 6125-FR ROOFING OR WATERPROOFING GUIDELINE DETAILS FOR PROPER MEMBRANE/FLASHING DETAILS AND ALTERNATIVES.

8 AE-510 PAVER INSTALLATION DETAIL @ DRAIN
1 1/2" = 1'-0"

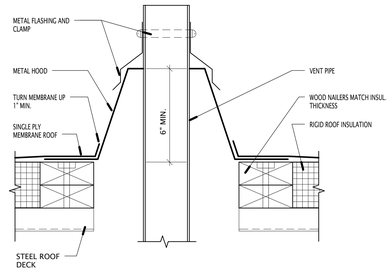

4 AE-510 WARM PIPE VENT DETAIL
3" = 1'-0"

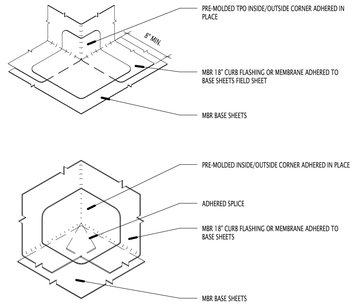

7 AE-510 TYPICAL CORNER
3" = 1'-0"

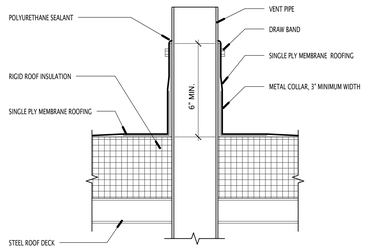

3 AE-510 PENETRATION DETAIL
3" = 1'-0"

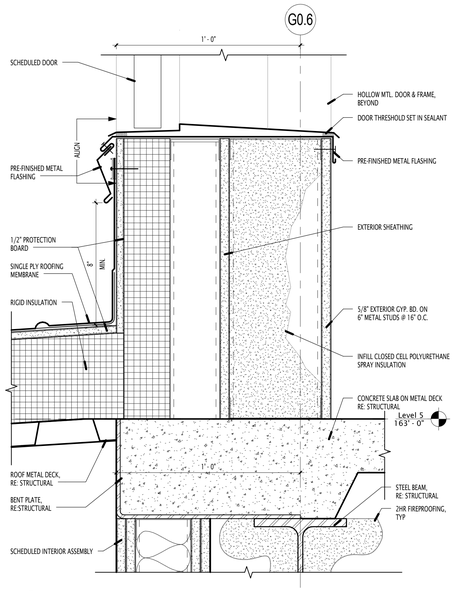

10 AE-510 DOOR THRESHOLD @ ROOF
3" = 1'-0"

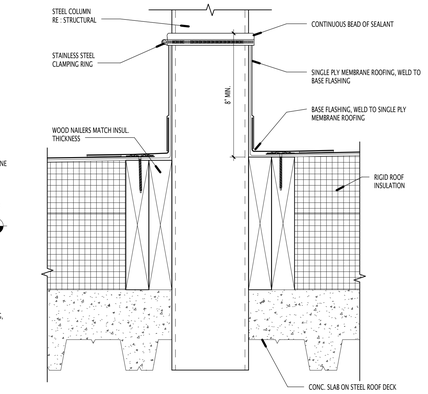

6 AE-510 MECH. EQUIPMENT BASE DETAIL
3" = 1'-0"

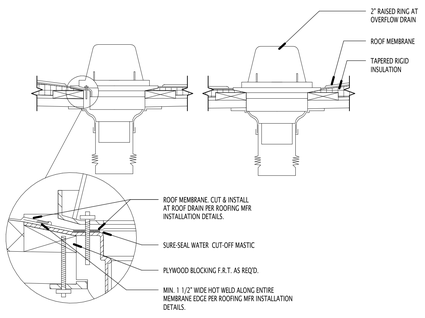

2 AE-510 ROOF DRAIN SECTION
1" = 1'-0"

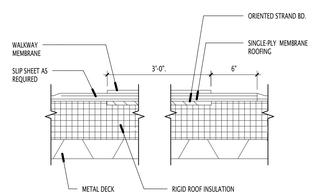

9 AE-510 ROOF WALKWAY PAD
1 1/2" = 1'-0"

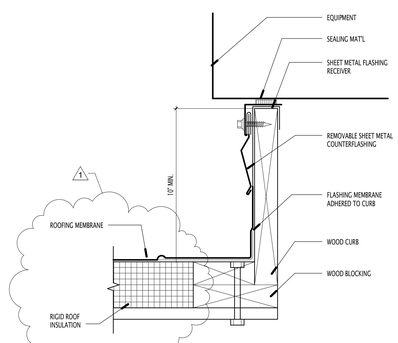

5 AE-510 EQUIPMENT CURB DETAIL
3" = 1'-0"

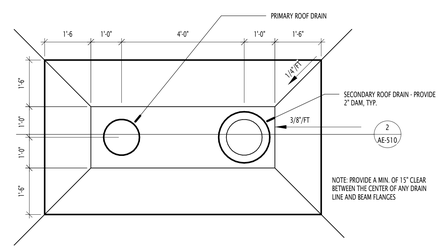

1 AE-510 ROOF DRAIN PLAN
1/2" = 1'-0"

GSBS ARCHITECTS
375 WEST 200 SOUTH
SALT LAKE CITY, UT 84101
P 801.521.8600
F 801.521.7913
www.gsbsarchitects.com

CANNONDESIGN
CANNON DESIGN
829 NORTH 1st AVENUE
PHOENIX, AZ 85003
602.294.6500

REVISIONS:

1	05.04.2012	Addendum-02

STATE OF UTAH
JOHN BRANSON
NO. 134955
04.27.2012
LICENSED ARCHITECT

UTAH VALLEY UNIVERSITY
STUDENT LIFE CENTER &
PARKING STRUCTURE

800 WEST UNIVERSITY PARKWAY
OREM, UT 84058

DFCM

4110 STATE OFFICE BUILDING
SALT LAKE CITY, UT 84112

DRAWN BY:	JB
CHECKED BY:	AS
OWNER PROJECT NO.:	#10289790
GSBS PROJECT NO.:	2011.045.00
ISSUED DATE:	04.27.2012

EXTERIOR DETAILS - ROOF

CONSTRUCTION DOCUMENTS

AE-510

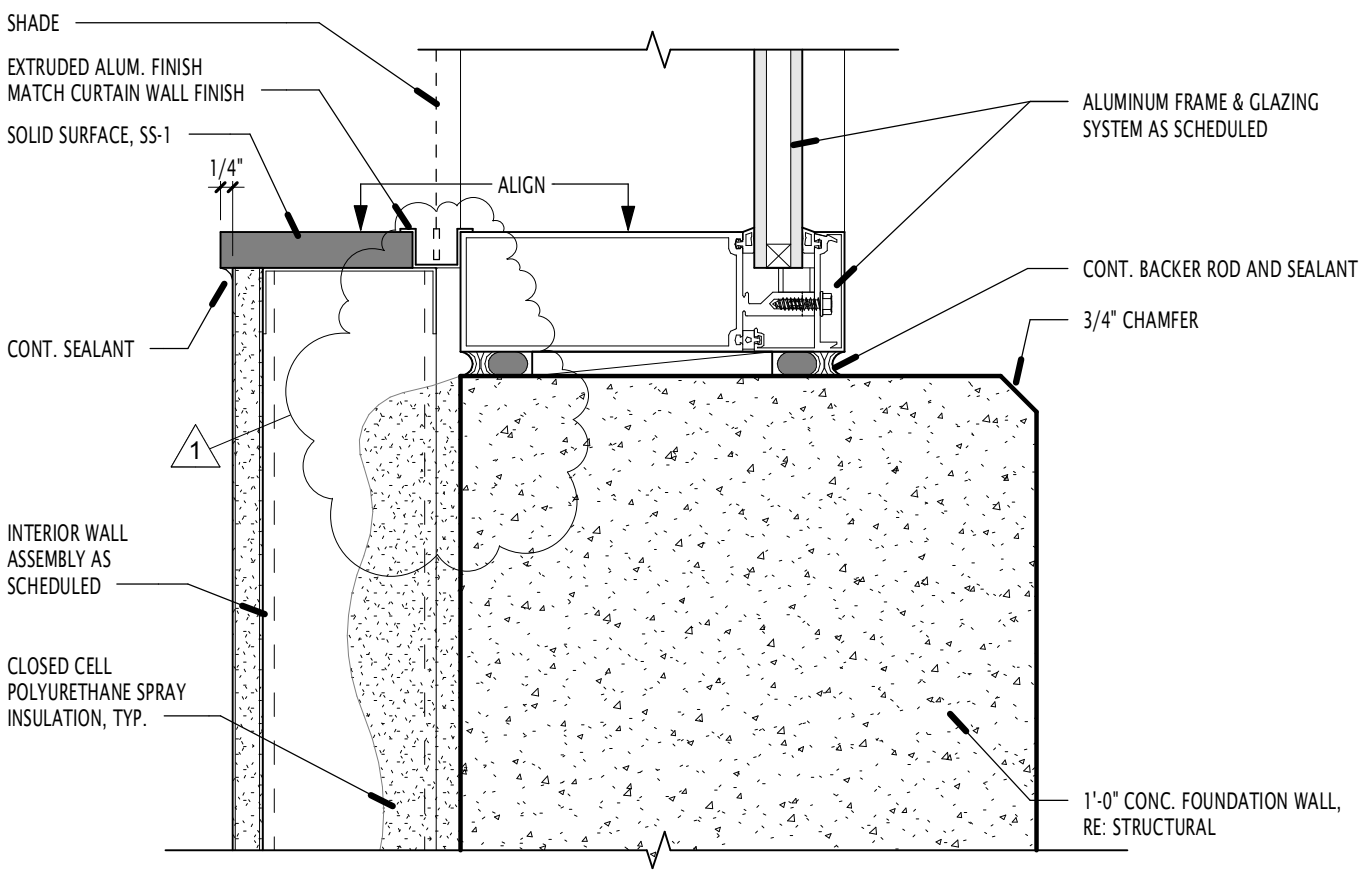

2 / AE-513 STUDENT COUNCIL WINDOW SILL DTL

3" = 1'-0"

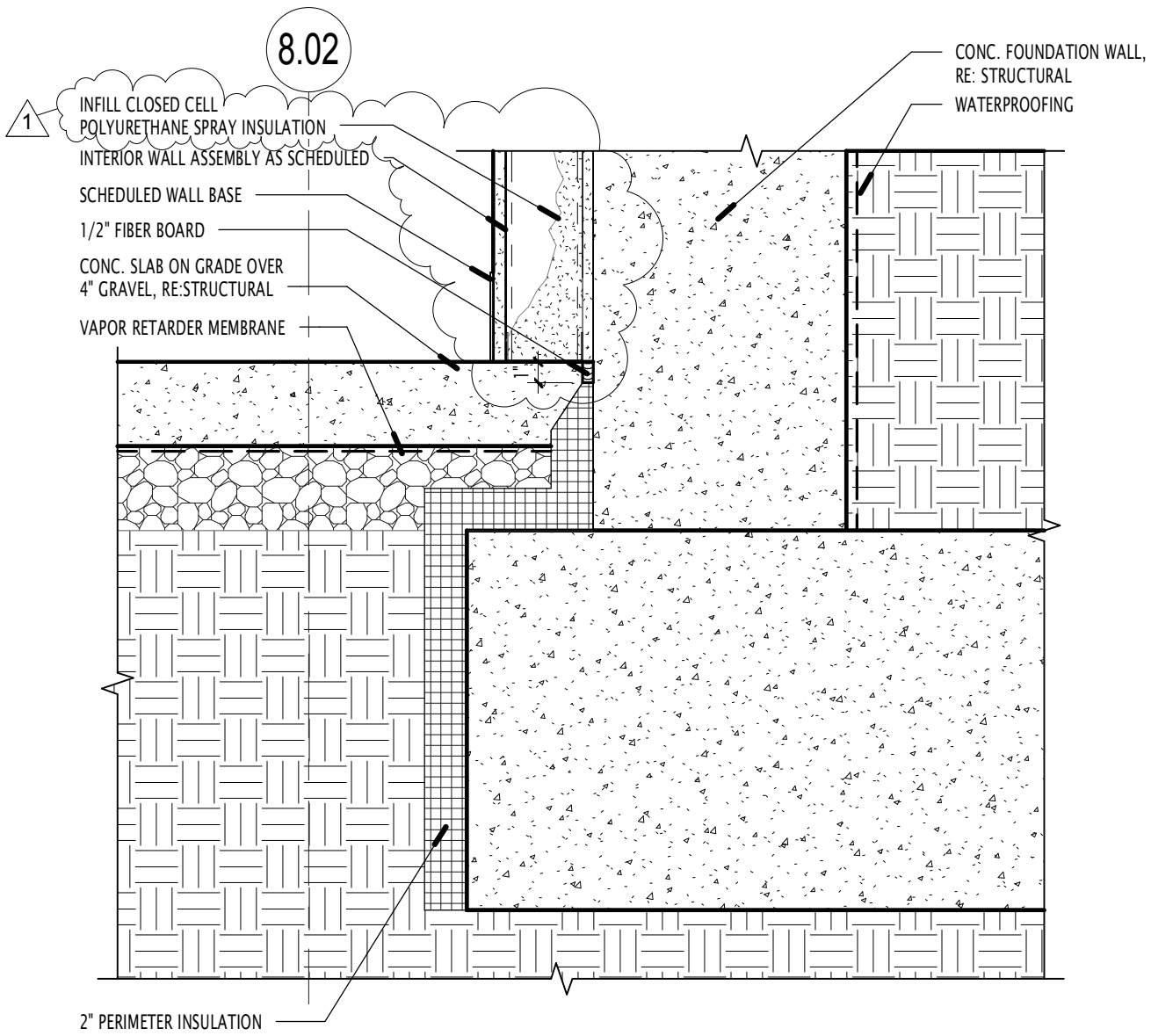

1 / AE-513 SLAB EDGE DTL @ CONC & BRICK WALL

1 1/2" = 1'-0"

C:\Users\tyang\Documents\2011.045.00 UVU Student Life Center_Central_tyang.rvt

5/3/2012 2:42:51 PM

GSBS ARCHITECTS
375 WEST 200 SOUTH
SALT LAKE CITY, UT 84101
P: 801.521.8600 F: 801.521.7913
www.gsbsarchitects.com

UTAH VALLEY UNIVERSITY
STUDENT LIFE CENTER &
PARKING STRUCTURE

800 WEST UNIVERSITY PARKWAY
OREM, UT 84058

DFCM
4110 STATE OFFICE BUILDING
SALT LAKE CITY, UT 84112

REV.: Addendum-02
BY: JL

AE-513-01

DFCM PROJECT NO.: #10289790
GSBS PROJECT NO.: 2011.045.00
ISSUED DATE: 05/04/12

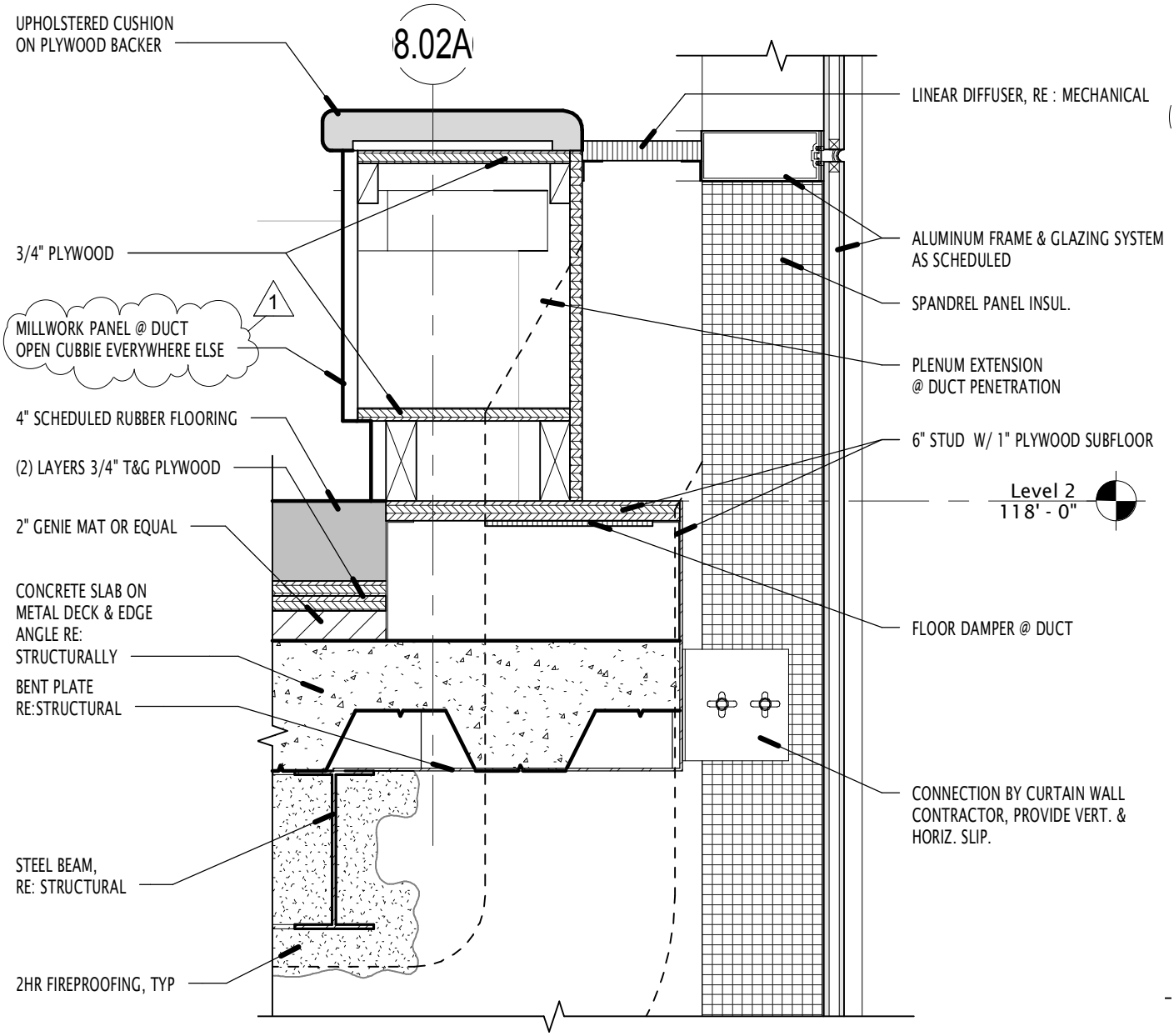

10
AE-513

SLAB EDGE DTL W/ PLENUM

1 1/2" = 1'-0"

C:\Users\tyang\Documents\2011.045.00 UVU Student Life Center_Central_tyang.rvt

5/3/2012 2:40:55 PM

GSBS ARCHITECTS
375 WEST 200 SOUTH
SALT LAKE CITY, UT 84101
P: 801.521.8600 F: 801.521.7913
www.gsbsarchitects.com

UTAH VALLEY UNIVERSITY
STUDENT LIFE CENTER &
PARKING STRUCTURE

800 WEST UNIVERSITY PARKWAY
OREM, UT 84058

REV.: Addendum-02
BY: JL

AE-513-02

DFCM PROJECT NO.: #10289790
GSBS PROJECT NO.: 2011.045.00
ISSUED DATE: 05/04/12

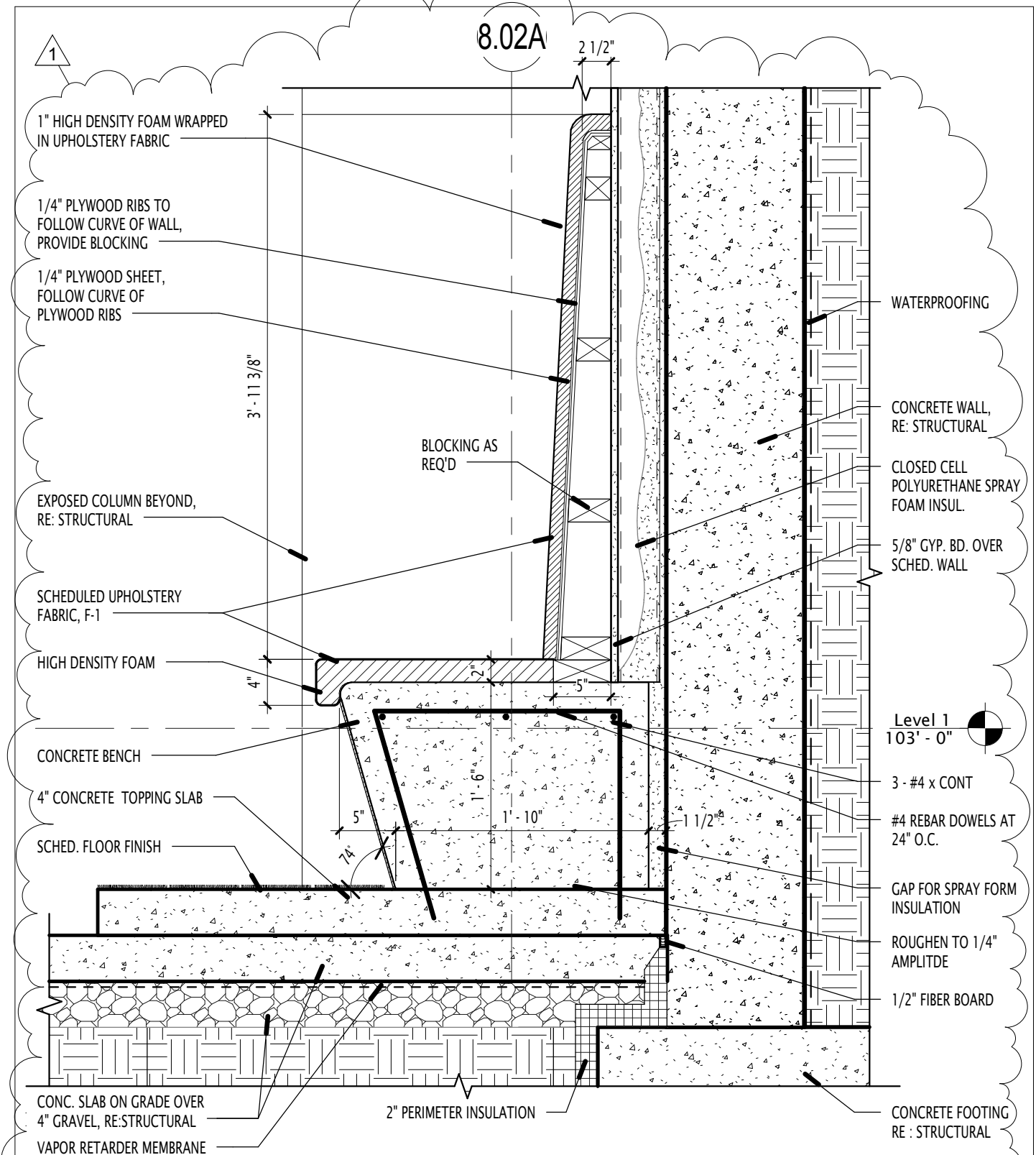

STUDENT COUNCIL CHAMBER BENCH

11
AE-516 1" = 1'-0"

C:\Users\tyang\Documents\2011.045.00 UVU Student Life Center_Central_tyang.rvt

5/3/2012 2:40:55 PM

GSBS ARCHITECTS
375 WEST 200 SOUTH
SALT LAKE CITY, UT 84101
P: 801.521.8600 F: 801.521.7913
www.gsbsarchitects.com

UTAH VALLEY UNIVERSITY
STUDENT LIFE CENTER &
PARKING STRUCTURE
BID PACKAGE (C.2)
800 WEST UNIVERSITY PARKWAY
OREM, UT 84058

REV.: Addendum 2
BY:

AE-516-01

DFCM PROJECT NO.: #10289790
GSBS PROJECT NO.: 2011.045.00
ISSUED DATE: 00/00/12

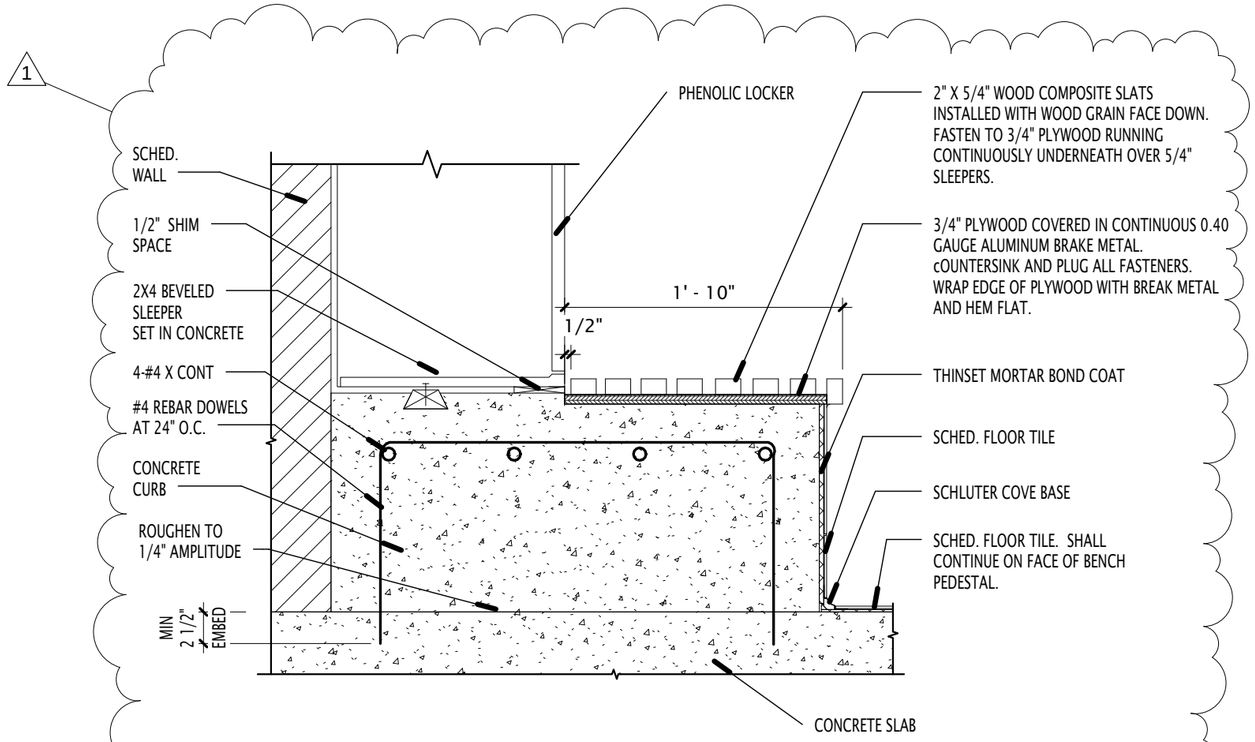

1
AE-544

LOCKER BENCH

1" = 1'-0"

C:\Users\tyang\Documents\2011.045.00 UVU Student Life Center_Central_tyang.rvt

5/3/2012 2:42:11 PM

GSBS ARCHITECTS
375 WEST 200 SOUTH
SALT LAKE CITY, UT 84101
P 801.521.8600
F 801.521.7913
www.gsbsarchitects.com

UTAH VALLEY UNIVERSITY
STUDENT LIFE CENTER & PARKING STRUCTURE

800 WEST UNIVERSITY PARKWAY
OREM, UT 84058

DFCM
4110 STATE OFFICE BUILDING
SALT LAKE CITY, UT 84112

REV.: Addendum-02
BY: LM

AE-544-01

DFCM PROJECT NO.: #10289790
GSBS PROJECT NO.: 2011.045.00
ISSUED DATE: 05/04/12

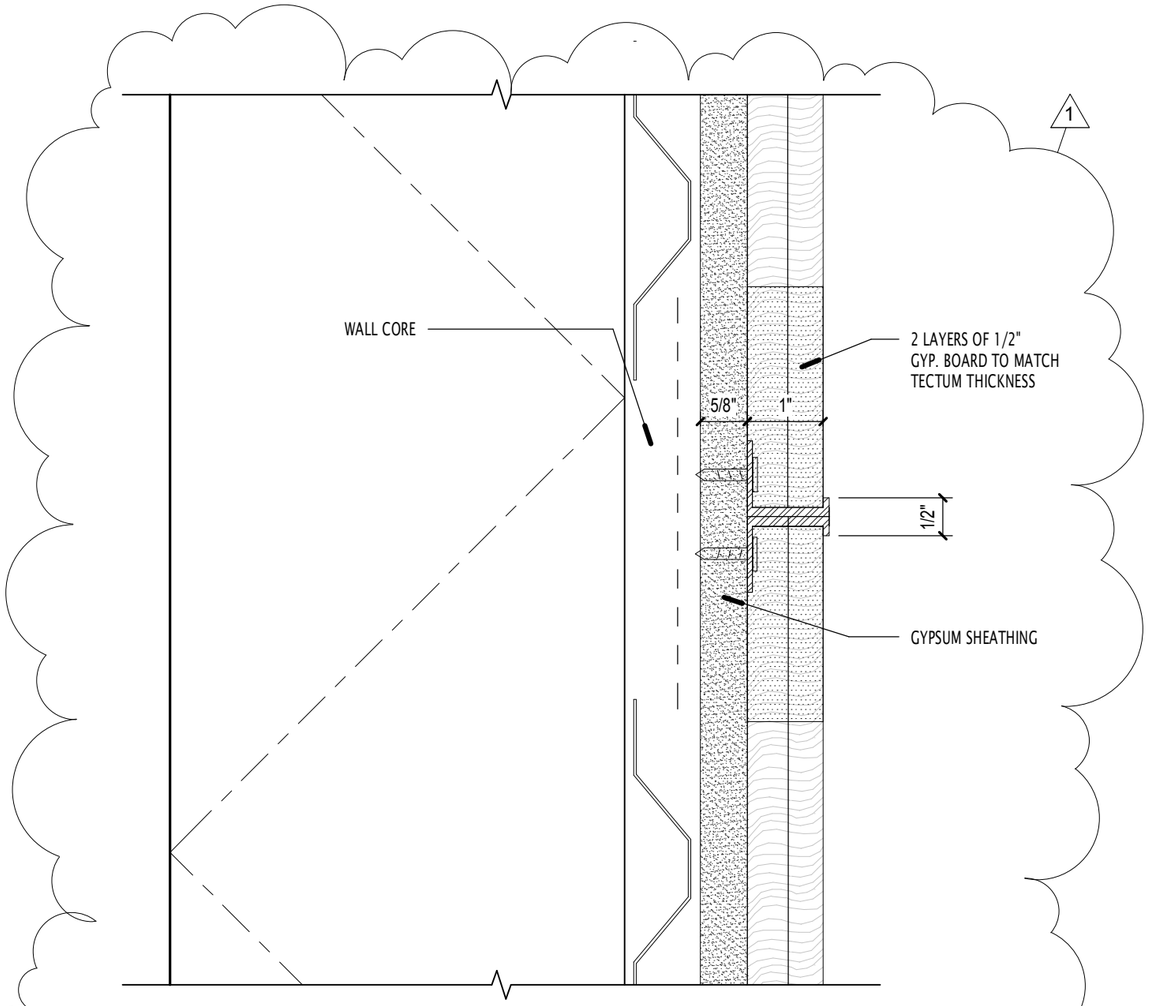

10 AE-544 GYP. BOARD HORIZONTAL REVEALS
6" = 1'-0"

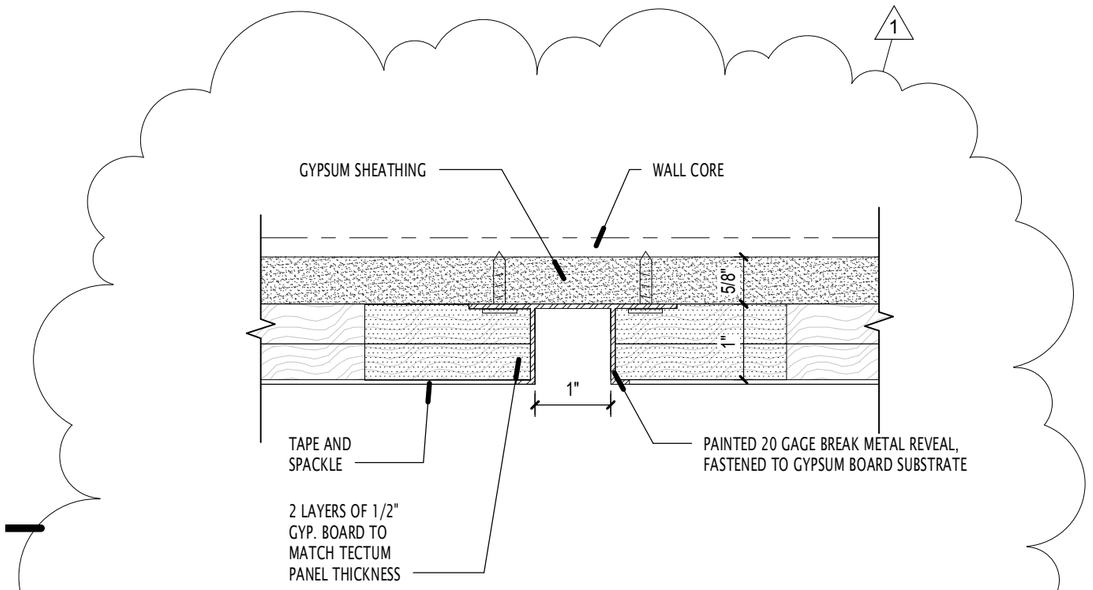

13 AE-544 GYP. BOARD VERTICAL REVEALS
6" = 1'-0"

C:\Users\tyang\Documents\2011.045.00 UVU Student Life Center_Central_tyang.rvt

5/3/2012 2:42:11 PM

GSBS ARCHITECTS
375 WEST 200 SOUTH
SALT LAKE CITY, UT 84101
P 801.521.8600
F 801.521.7913
www.gsbsarchitects.com

UTAH VALLEY UNIVERSITY
STUDENT LIFE CENTER & PARKING STRUCTURE

800 WEST UNIVERSITY PARKWAY
OREM, UT 84058

DFCM
4110 STATE OFFICE BUILDING
SALT LAKE CITY, UT 84112

REV.: Addendum-02
BY: BM

AE-544-02

DFCM PROJECT NO.: #10289790
GSBS PROJECT NO.: 2011.045.00
ISSUED DATE: 05/04/12

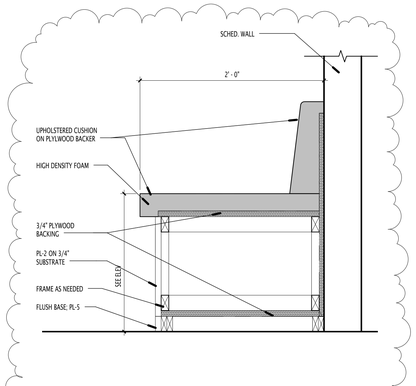

16 AE-545 BENCH @ CNTRL. COUNTER 202
1 1/2" = 1'-0"

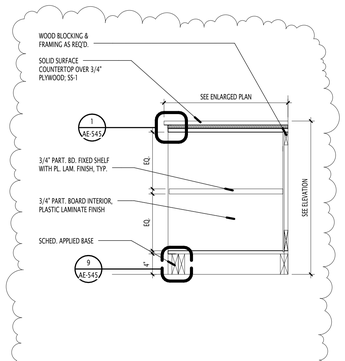

12 AE-545 OPEN SHELVES @ DESKS
1" = 1'-0"

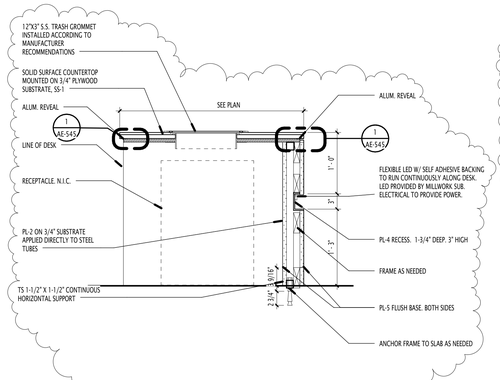

8 AE-545 DESK W/ GROMMET
1" = 1'-0"

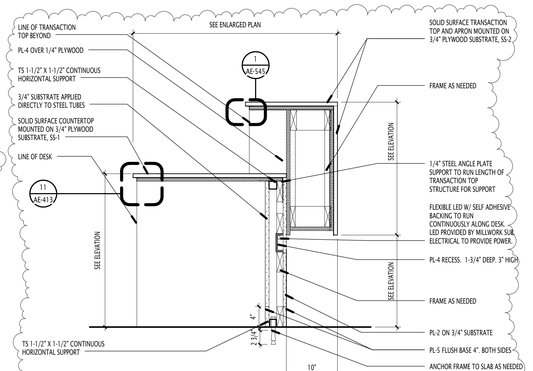

4 AE-545 DESK WITH TRANS. TOP
1" = 1'-0"

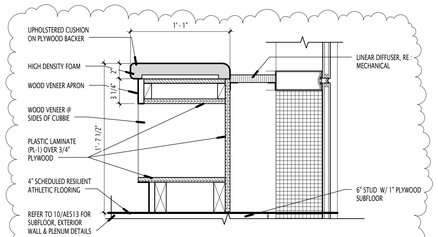

19 AE-545 BENCH DETAIL 2 @ CLIMBING
1 1/2" = 1'-0"

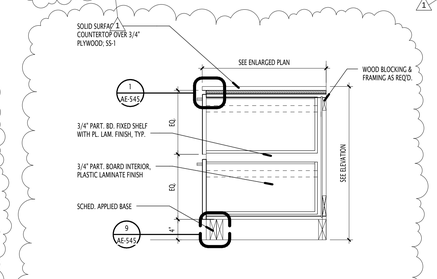

15 AE-545 BASE CABINET - DOUBLE DWRS
1" = 1'-0"

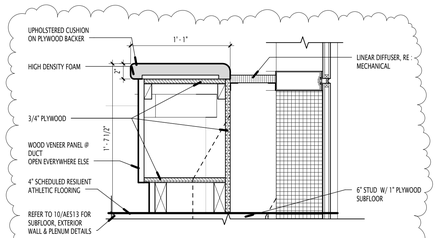

11 AE-545 BENCH DETAIL @ CLIMBING
1 1/2" = 1'-0"

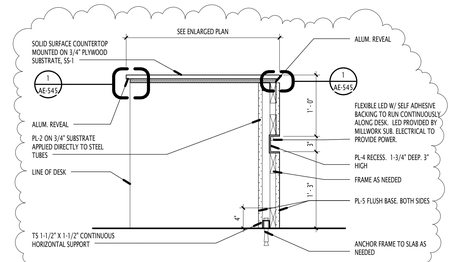

7 AE-545 DESK W/O TRANS. TOP
1" = 1'-0"

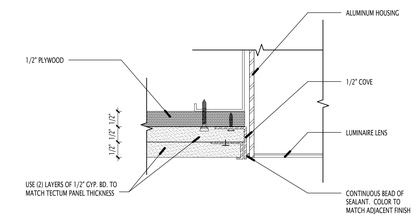

3 AE-545 ENLARGED MID ZONE LUMINAIRE
6" = 1'-0"

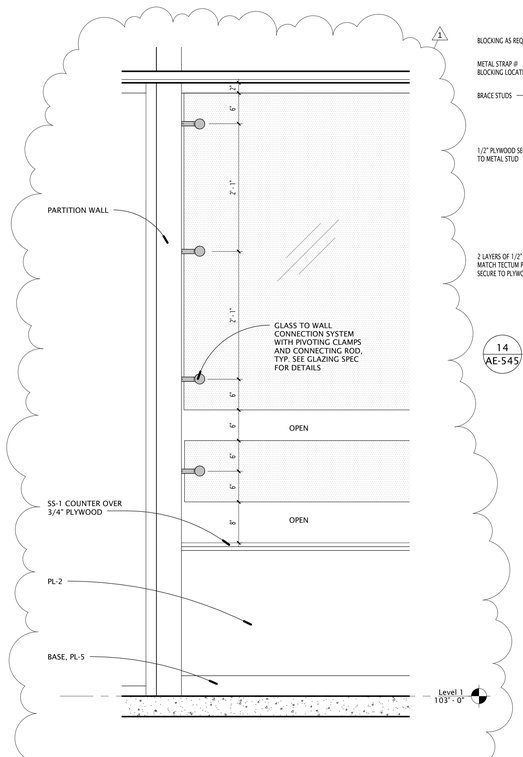

17 AE-545 GAMING DESK GLASS- SECTION
1" = 1'-0"

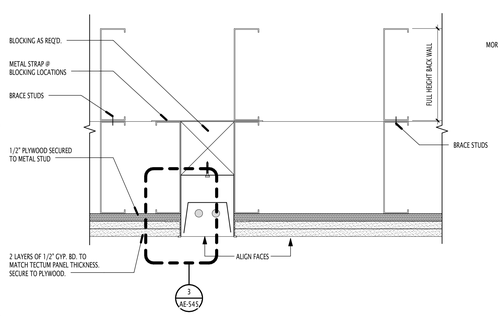

14 AE-545 CONCOURSE LUMINARE @ MID ZONE
3" = 1'-0"

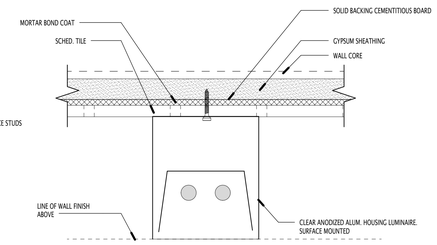

10 AE-545 CONCOURSE LUMINARE @ LOWER ZONE
6" = 1'-0"

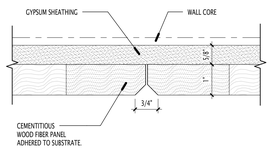

6 AE-545 TECTUM BEVELED REVEALS
6" = 1'-0"

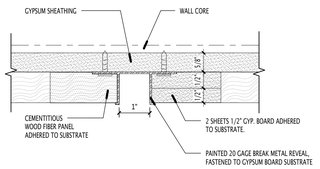

2 AE-545 TECTUM - GYP. VERTICAL REVEALS
6" = 1'-0"

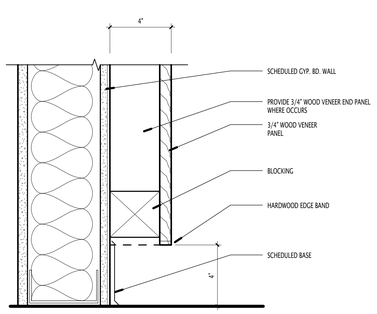

13 AE-545 WOOD WAINSCOT DETAIL
3" = 1'-0"

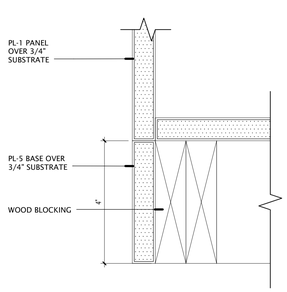

9 AE-545 TYP. FLUSH BASE DETAIL
6" = 1'-0"

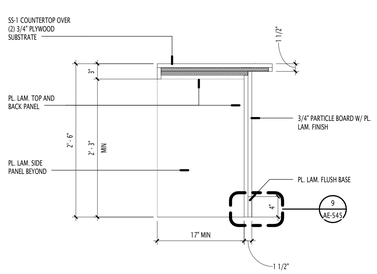

5 AE-545 KNEE SPACE SECTION
1" = 1'-0"

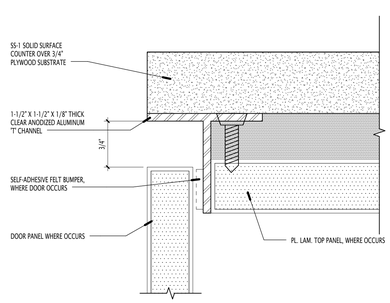

1 AE-545 TYPICAL ALUM. REVEAL @ COUNTERTOPS
12" = 1'-0"

GSBS ARCHITECTS
375 WEST 200 SOUTH
SALT LAKE CITY, UT 84101
P 801.521.8600
F 801.521.7915
www.gsbsarchitects.com

CANNONDESIGN
CANNON DESIGN
829 NORTH 1st AVENUE
PHOENIX, AZ 85003
602.294.6500

REVISIONS:

1	05.04.2012	Addendum-02

STATE OF UTAH
JOHN BRANSON
NO. 134955
04.27.2012
LICENSED ARCHITECT

UTAH VALLEY UNIVERSITY
STUDENT LIFE CENTER & PARKING STRUCTURE

800 WEST UNIVERSITY PARKWAY
OREM, UT 84058

DFCM

4110 STATE OFFICE BUILDING
SALT LAKE CITY, UT 84112

DRAWN BY:	Author
CHECKED BY:	Checker
OWNER PROJECT NO.:	#10289790
GSBS PROJECT NO.:	2011.045.00
ISSUED DATE:	04.27.2012

INTERIOR MILLWORK & FINISH DETAILS

CONSTRUCTION DOCUMENTS

AE-545

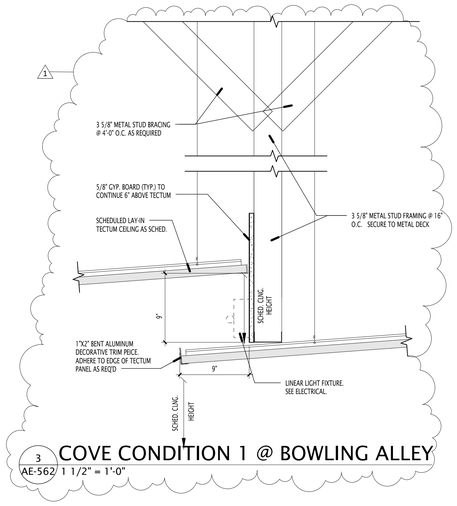

3 AE-562 COVE CONDITION 1 @ BOWLING ALLEY
1 1/2" = 1'-0"

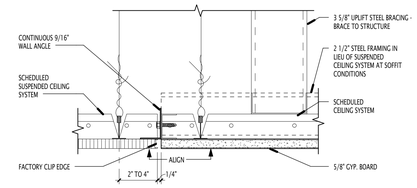

2 AE-562 SUSPENDED GYP. TO ACOUSTIC ALIGNED
3" = 1'-0"

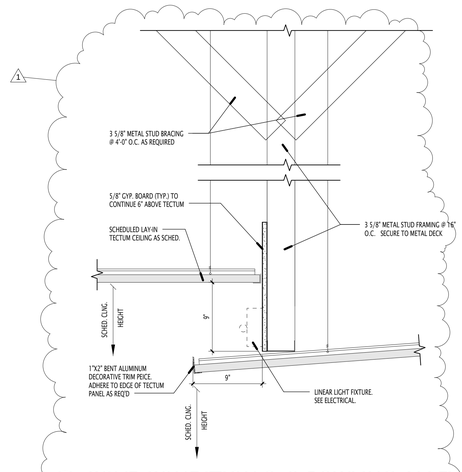

5 AE-562 COVE CONDITION 3 @ BOWLING ALLEY
1 1/2" = 1'-0"

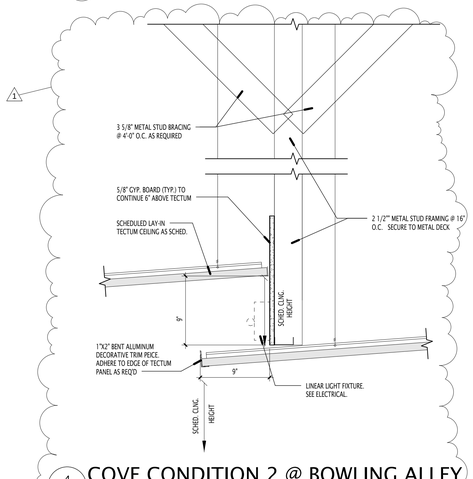

4 AE-562 COVE CONDITION 2 @ BOWLING ALLEY
1 1/2" = 1'-0"

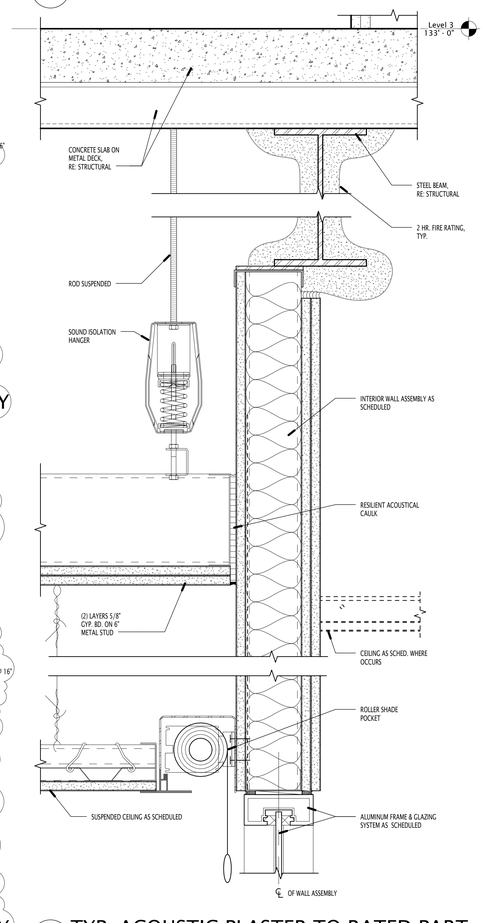

1 AE-562 TYP. ACOUSTIC PLASTER TO RATED PART.
3" = 1'-0"

GSBS ARCHITECTS
375 WEST 200 SOUTH
SALT LAKE CITY, UT 84101
P 801.521.8600
F 801.521.7915
www.gsbsarchitects.com

CANNONDESIGN
CANNON DESIGN
829 NORTH 1st AVENUE
PHOENIX, AZ 85003
602.294.6500

REVISIONS:

1	05.04.2012	Addendum-02

STATE OF UTAH
JOHN BRANSON
NO. 134955
04.27.2012
LICENSED ARCHITECT

UTAH VALLEY UNIVERSITY
STUDENT LIFE CENTER &
PARKING STRUCTURE

800 WEST UNIVERSITY PARKWAY
OREM, UT 84058

DFCM

4110 STATE OFFICE BUILDING
SALT LAKE CITY, UT 84112

DRAWN BY:	Author
CHECKED BY:	AS
OWNER PROJECT NO.:	#10289790
GSBS PROJECT NO.:	2011.045.00
ISSUED DATE:	04.27.2012

CEILING DETAILS

CONSTRUCTION DOCUMENTS

1 AE-562

NOTE: SEE SHEET AE-605 FOR GLAZING LEGEND AND GENERAL NOTES FOR GLAZING SYSTEMS

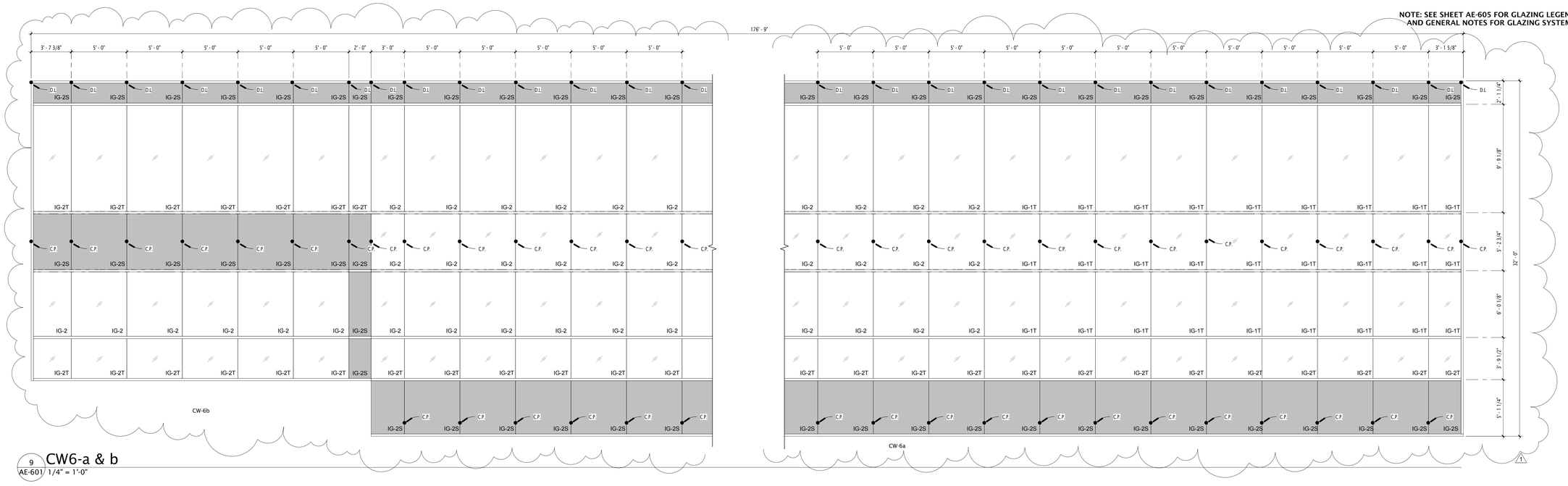

9 AE-601 CW6-a & b
1/4" = 1'-0"

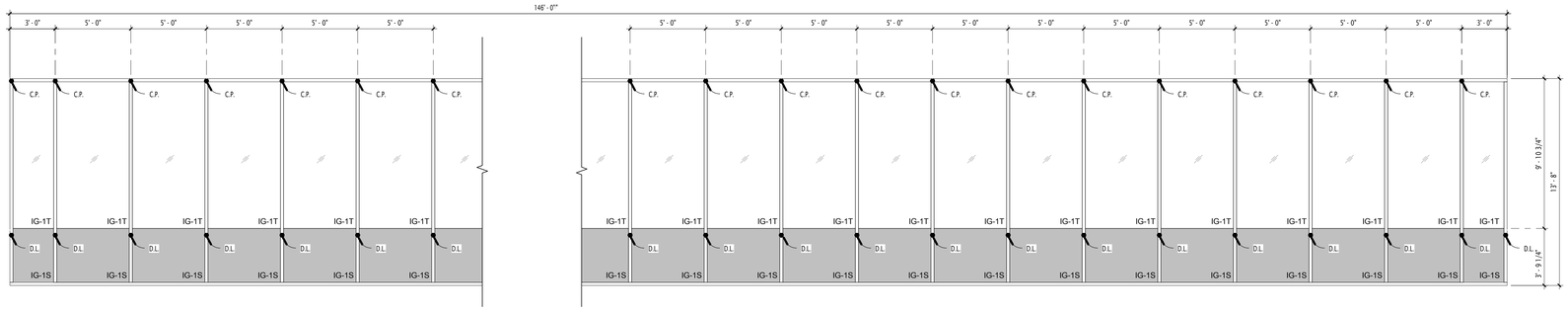

8 AE-601 CW5
1/4" = 1'-0"

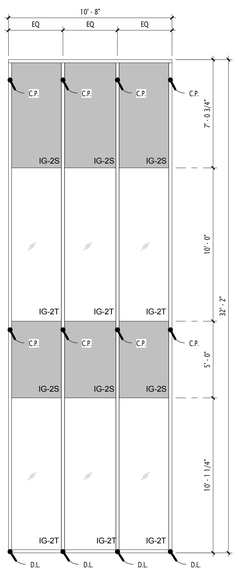

5 AE-601 CW2
1/4" = 1'-0"

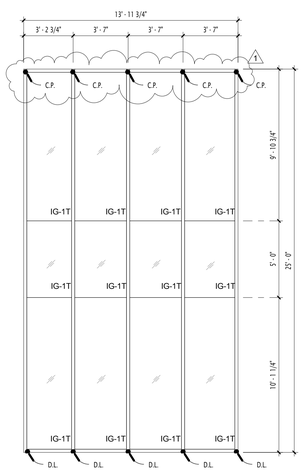

4 AE-601 CW1
1/4" = 1'-0"

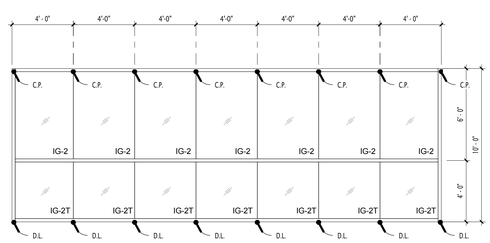

7 AE-601 CW4
1/4" = 1'-0"

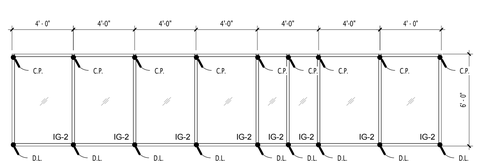

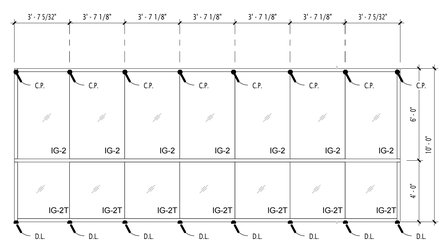

6 AE-601 CW3
1/4" = 1'-0"

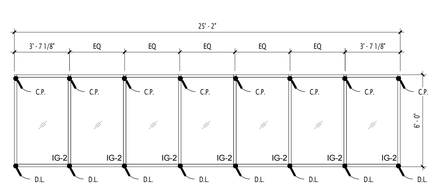

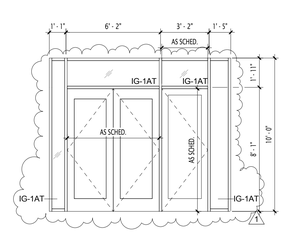

1 AE-601 SF1
1/4" = 1'-0"

3 AE-601 SF3
1/4" = 1'-0"

2 AE-601 SF2
1/4" = 1'-0"

GSBS ARCHITECTS
375 WEST 200 SOUTH
SALT LAKE CITY, UT 84101
P 801.521.8600
F 801.521.7913
www.gsbsarchitects.com

CANNONDESIGN
CANNON DESIGN
829 NORTH 1st AVENUE
PHOENIX, AZ 85003
602.294.6500

REVISIONS:

1	05.04.2012	Addendum-02

STATE OF UTAH
JOHN BRANSON
NO. 134955
04.27.2012
LICENSED ARCHITECT

UTAH VALLEY UNIVERSITY
STUDENT LIFE CENTER &
PARKING STRUCTURE

800 WEST UNIVERSITY PARKWAY
OREM, UT 84058

DFCM

4110 STATE OFFICE BUILDING
SALT LAKE CITY, UT 84112

DRAWN BY:	AK
CHECKED BY:	TY
OWNER PROJECT NO.:	#10289790
GSBS PROJECT NO.:	2011.045.00
ISSUED DATE:	04.27.2012

CURTAINWALL,STOREFRONT
& EXTERIOR WINDOWS
SOUTH ELEV.

CONSTRUCTION DOCUMENTS

AE-601

NOTE: SEE SHEET AE-605 FOR GLAZING LEGEND AND GENERAL NOTES FOR GLAZING SYSTEMS

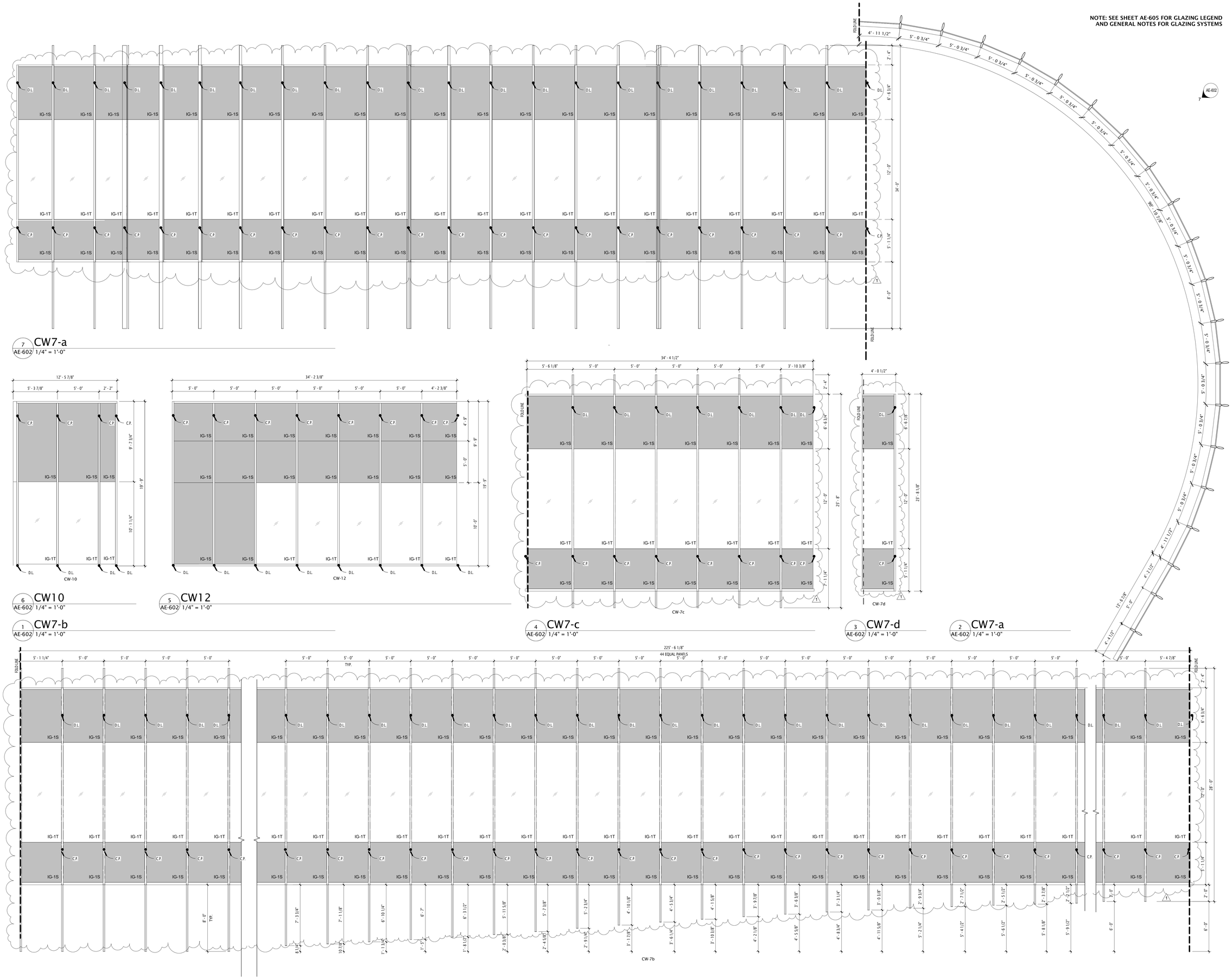

GSBS ARCHITECTS

375 WEST 200 SOUTH
SALT LAKE CITY, UT 84101

P 801.521.8600
F 801.521.7913

www.gsbsarchitects.com

CANNONDESIGN

CANNON DESIGN
829 NORTH 1st AVENUE
PHOENIX, AZ 85003
602.294.6500

REVISIONS:

1	05.04.2012	Addendum-02

STATE OF UTAH
JOHN BRANSON
NO. 134655
04.27.2012
LICENSED ARCHITECT

UTAH VALLEY UNIVERSITY STUDENT LIFE CENTER & PARKING STRUCTURE

800 WEST UNIVERSITY PARKWAY
OREM, UT 84058

DFCM

4110 STATE OFFICE BUILDING
SALT LAKE CITY, UT 84112

DRAWN BY:	AK
CHECKED BY:	TY
OWNER PROJECT NO.:	#10289790
GSBS PROJECT NO.:	2011.045.00
ISSUED DATE:	04.27.2012

CURTAINWALL,STOREFRONT & EXTERIOR WINDOWS NORTH & EAST ELEV.

CONSTRUCTION DOCUMENTS

AE-602

NOTE: SEE SHEET AE-605 FOR GLAZING LEGEND AND GENERAL NOTES FOR GLAZING SYSTEMS

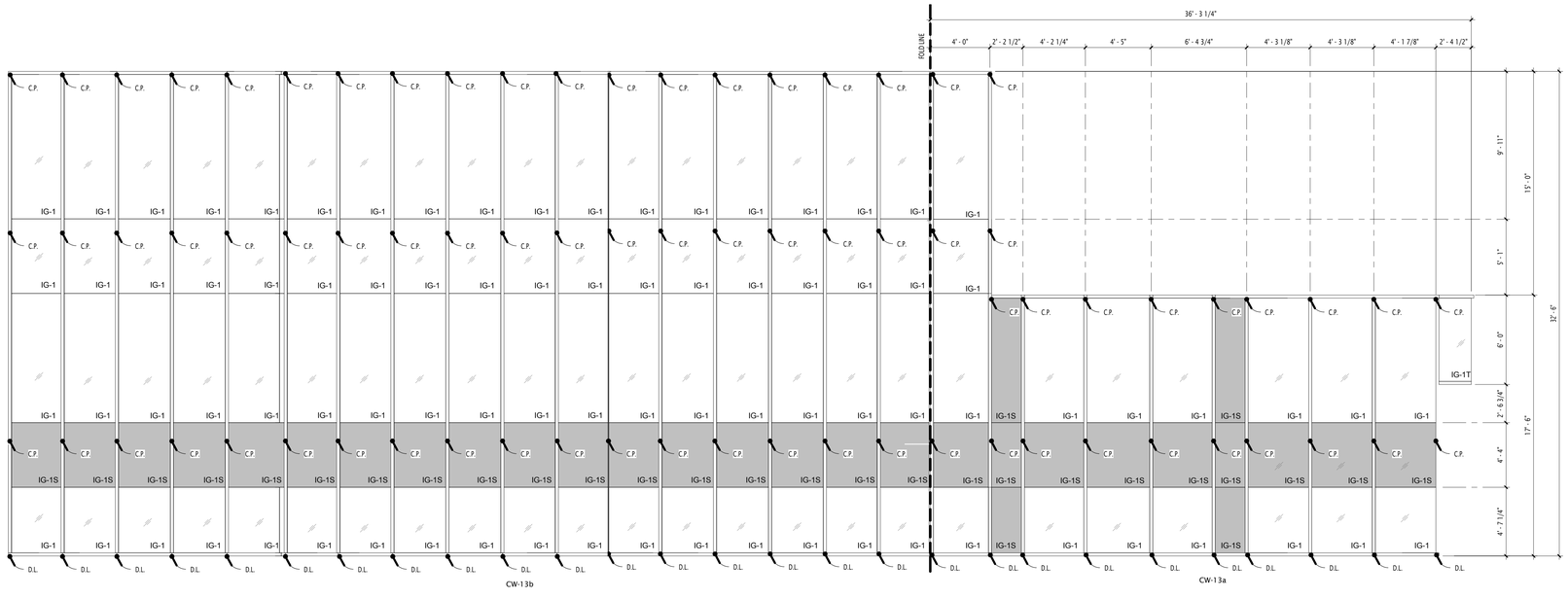

13 AE-603 CW13a &b
1/4" = 1'-0"

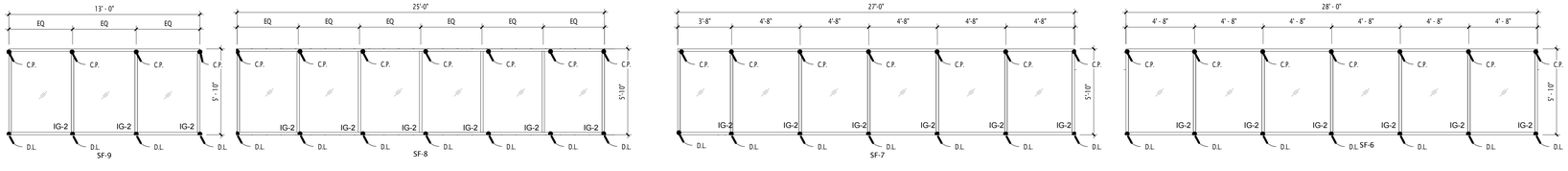

11 AE-603 SF9
1/4" = 1'-0"

10 AE-603 SF8
1/4" = 1'-0"

9 AE-603 SF7
1/4" = 1'-0"

8 AE-603 SF6
1/4" = 1'-0"

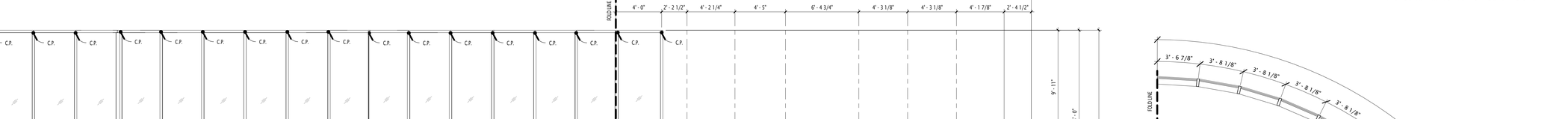

6 AE-603 SF4-a,b,& c
1/4" = 1'-0"

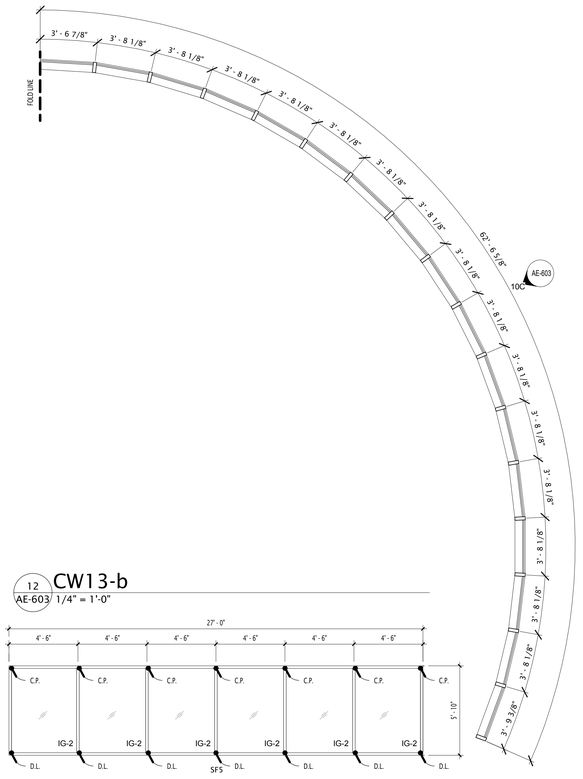

12 AE-603 CW13-b
1/4" = 1'-0"

7 AE-603 SF5
1/4" = 1'-0"

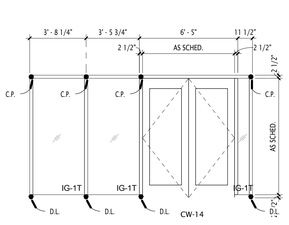

5 AE-603 CW14
1/4" = 1'-0"

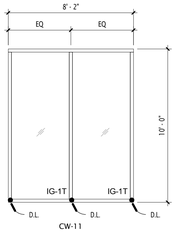

4 AE-603 CW11
1/4" = 1'-0"

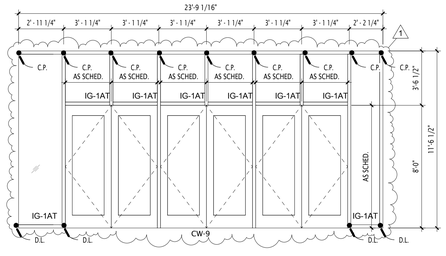

3 AE-603 CW9
1/4" = 1'-0"

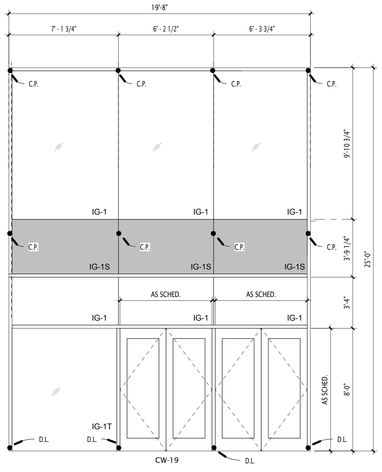

2 AE-603 CW19
1/4" = 1'-0"

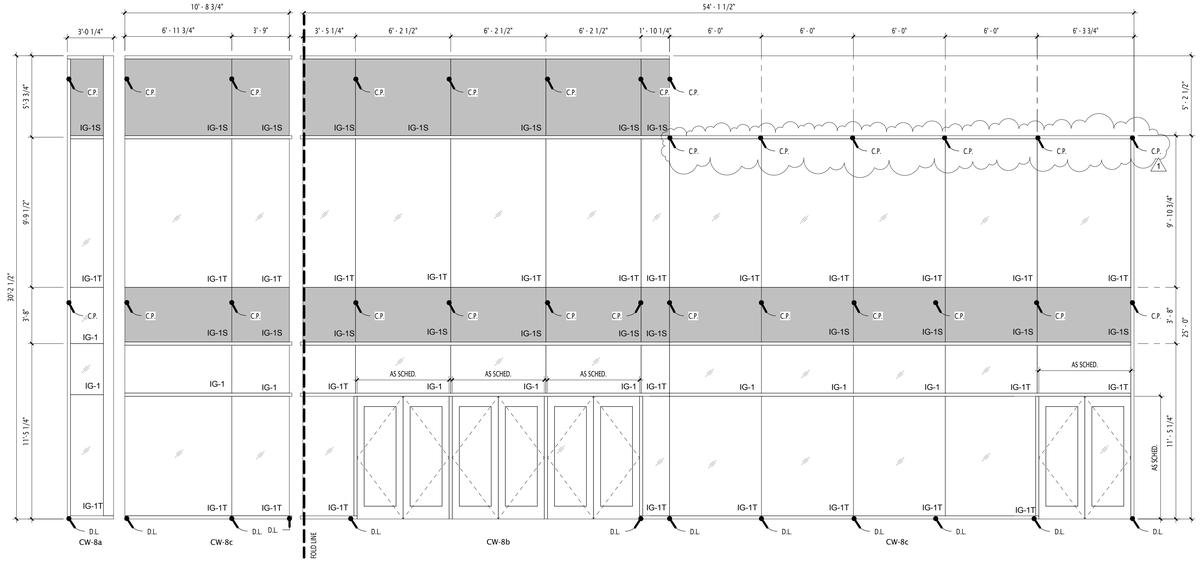

1 AE-603 CW8
1/4" = 1'-0"

GSBS ARCHITECTS
375 WEST 200 SOUTH
SALT LAKE CITY, UT 84101
P 801.521.8600
F 801.521.7913
www.gsbsarchitects.com

CANNONDESIGN
CANNON DESIGN
829 NORTH 1st AVENUE
PHOENIX, AZ 85003
602.294.6500

REVISIONS:

1	05.04.2012	Addendum-02

STATE OF UTAH
JOHN BRANSON
NO. 134955
04.27.2012
LICENSED ARCHITECT

UTAH VALLEY UNIVERSITY
STUDENT LIFE CENTER &
PARKING STRUCTURE

800 WEST UNIVERSITY PARKWAY
OREM, UT 84058

DFCM
4110 STATE OFFICE BUILDING
SALT LAKE CITY, UT 84112

DRAWN BY:	AK
CHECKED BY:	TY
OWNER PROJECT NO.:	#10289790
GSBS PROJECT NO.:	2011.045.00
ISSUED DATE:	04.27.2012

CURTAINWALL,STOREFRONT
& EXTERIOR WINDOWS
NORTH & EAST ELEV.

CONSTRUCTION DOCUMENTS

AE-603

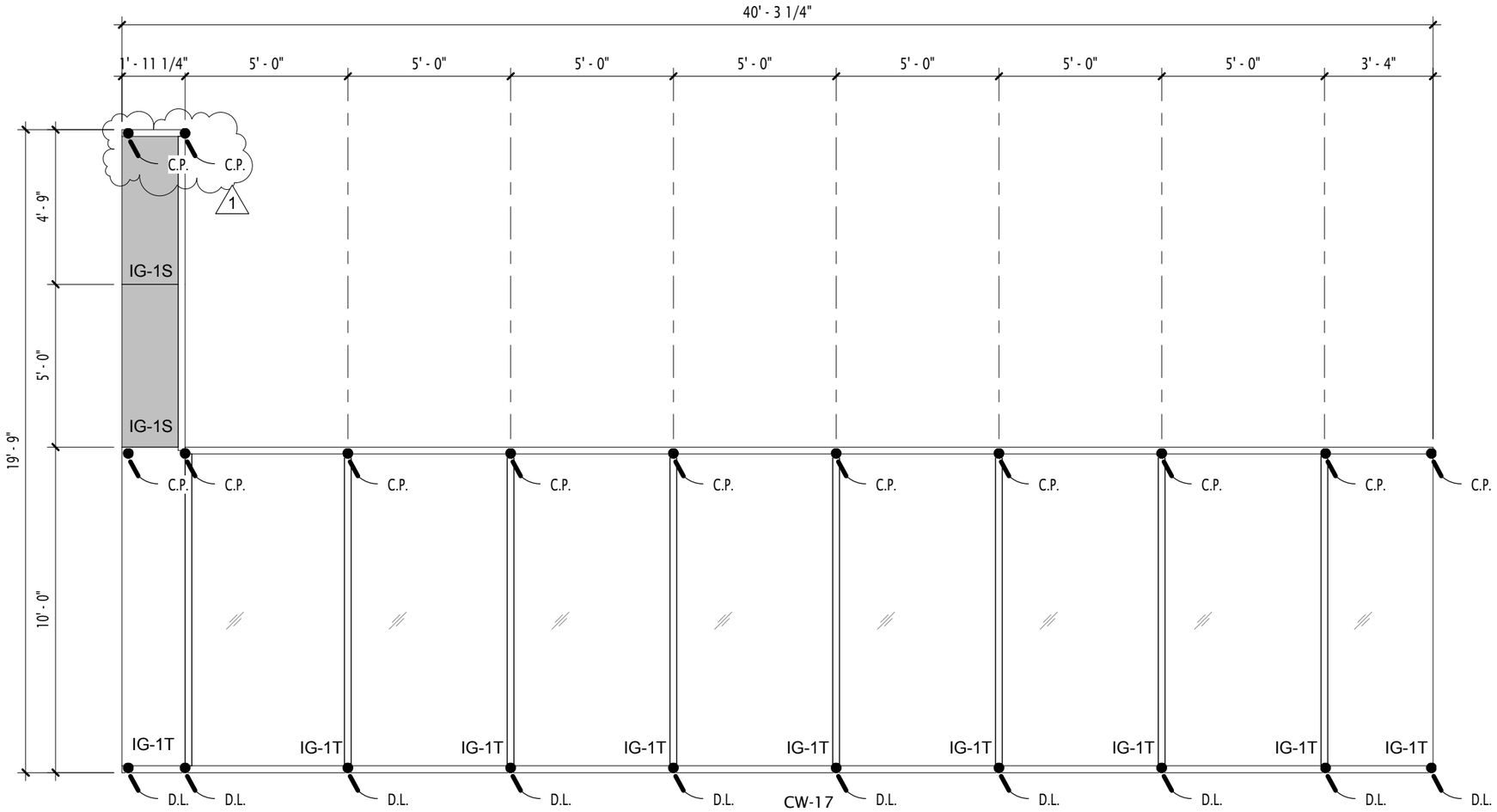

3
AE-604

CW17

1/4" = 1'-0"

C:\Users\tyang\Documents\2011.045.00 UVU Student Life Center_Central_tyang.rvt

5/3/2012 2:42:11 PM

GSBS ARCHITECTS
375 WEST 200 SOUTH
SALT LAKE CITY, UT 84101
P 801.521.8600
F 801.521.7913
www.gsbsarchitects.com

UTAH VALLEY UNIVERSITY
STUDENT LIFE CENTER & PARKING STRUCTURE

800 WEST UNIVERSITY PARKWAY
OREM, UT 84058

DFCM
4110 STATE OFFICE BUILDING
SALT LAKE CITY, UT 84112

REV.: Addendum 2
BY: AK

AE-604-03

DFCM PROJECT NO.: #10289790
GSBS PROJECT NO.: 2011.045.00
ISSUED DATE: 05/04/12

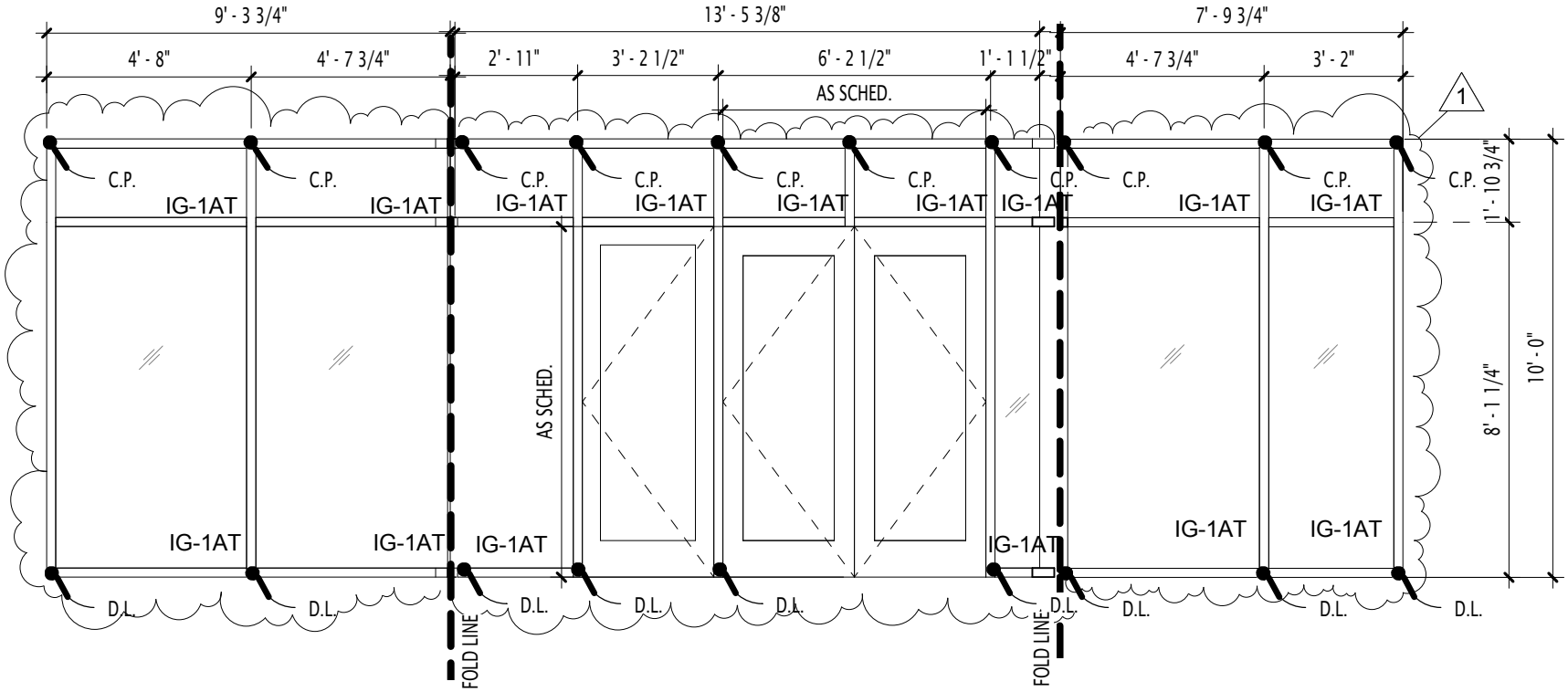

3
AE-605

CW22-a, b & c

1/4" = 1'-0"

C:\Users\tyang\Documents\2011.045.00 UVU Student Life Center_Central_tyang.rvt

5/3/2012 2:38:35 PM

GSBS ARCHITECTS
375 WEST 200 SOUTH
SALT LAKE CITY, UT 84101
P: 801.521.8600 F: 801.521.7913
www.gsbsarchitects.com

UTAH VALLEY UNIVERSITY
STUDENT LIFE CENTER &
PARKING STRUCTURE

800 WEST UNIVERSITY PARKWAY
OREM, UT 84058

DFCM

4110 STATE OFFICE BUILDING
SALT LAKE CITY, UT 84112

REV.: Addendum 2
BY: AK

AE-605-03

DFCM PROJECT NO.: #10289790
GSBS PROJECT NO.: 2011.045.00
ISSUED DATE: 05/04/12

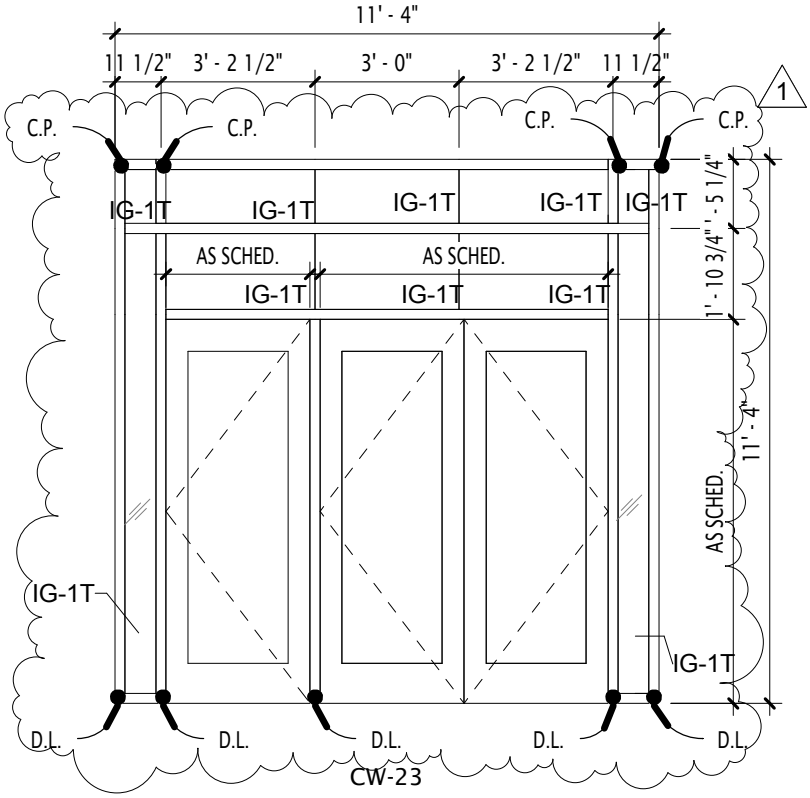

4
AE-605

CW23

1/4" = 1'-0"

C:\Users\tyang\Documents\2011.045.00 UVU Student Life Center_Central_tyang.rvt

5/3/2012 2:40:55 PM

GSBS ARCHITECTS
375 WEST 200 SOUTH
SALT LAKE CITY, UT 84101
P: 801.521.8600 F: 801.521.7913
www.gsbsarchitects.com

UTAH VALLEY UNIVERSITY
STUDENT LIFE CENTER &
PARKING STRUCTURE
BID PACKAGE (C.2)

800 WEST UNIVERSITY PARKWAY
OREM, UT 84058

REV.: Addendum 2
BY: AK

AE-605-04

DFCM PROJECT NO.: #10289790
GSBS PROJECT NO.: 2011.045.00
ISSUED DATE: 05/04/12

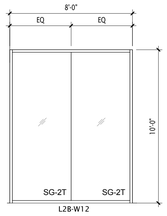

38 AE-611 L2B-W12 1/4" = 1'-0"

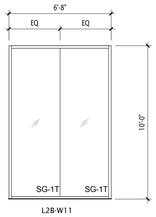

37 AE-611 L2B-W11 1/4" = 1'-0"

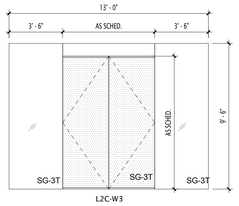

36 AE-611 L2C-W3 1/4" = 1'-0"

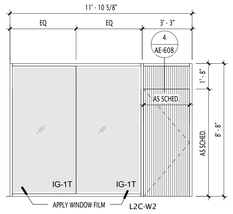

35 AE-611 L2C-W2 1/4" = 1'-0"

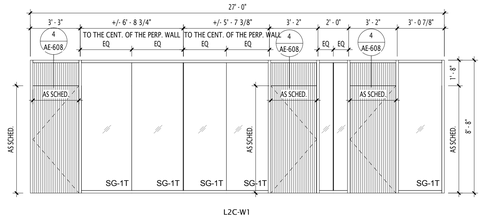

34 AE-611 L2C-W1 1/4" = 1'-0"

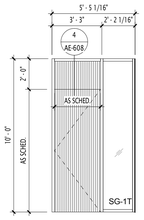

33 AE-611 L2B-W10 1/4" = 1'-0"

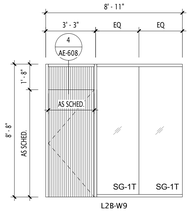

32 AE-611 L2B-W9 1/4" = 1'-0"

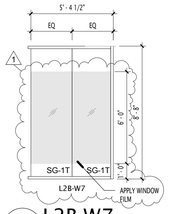

31 AE-611 L2B-W7 1/4" = 1'-0"

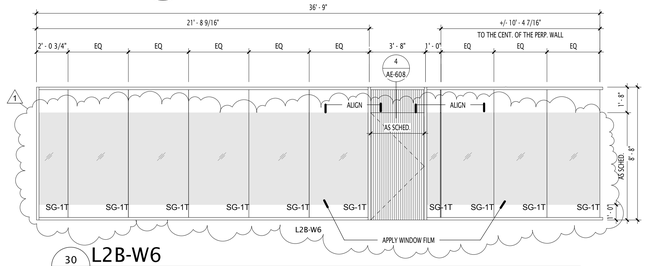

30 AE-611 L2B-W6 1/4" = 1'-0"

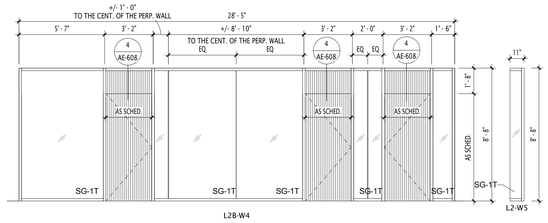

29 AE-611 L2B-W4 1/4" = 1'-0"

28 AE-611 L2-W5 1/4" = 1'-0"

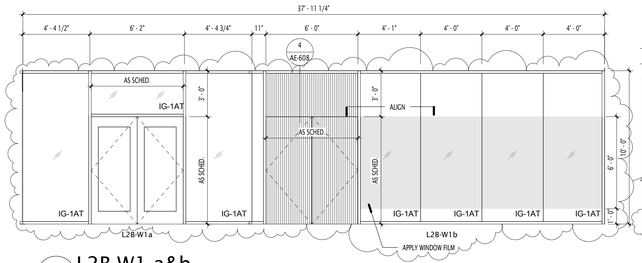

27 AE-611 L2B-W1 a&b 1/4" = 1'-0"

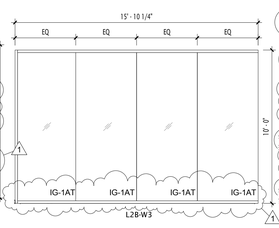

26 AE-611 L2B-W3 1/4" = 1'-0"

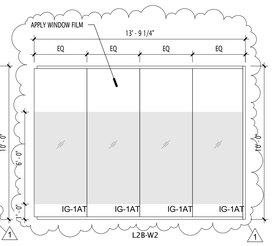

25 AE-611 L2B-W2 1/4" = 1'-0"

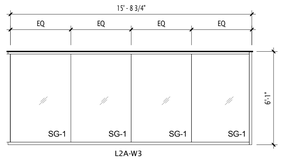

24 AE-611 L2A-W3 1/4" = 1'-0"

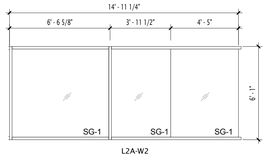

23 AE-611 L2A-W2 1/4" = 1'-0"

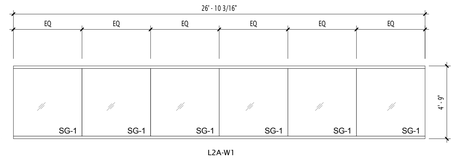

22 AE-611 L2A-W1 1/4" = 1'-0"

21 AE-611 L1C-W10 1/4" = 1'-0"

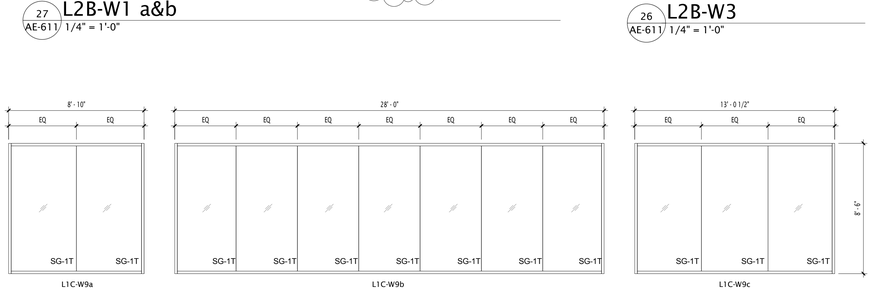

20 AE-611 L1C-W9a, b & c 1/4" = 1'-0"

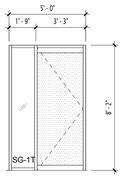

19 AE-611 L1C-W8 1/4" = 1'-0"

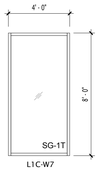

18 AE-611 L1C-W7 1/4" = 1'-0"

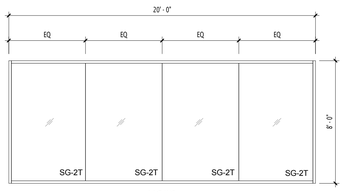

17 AE-611 L1C-W6 1/4" = 1'-0"

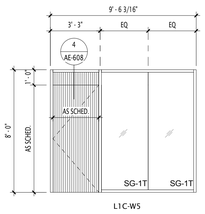

16 AE-611 L1C-W5 1/4" = 1'-0"

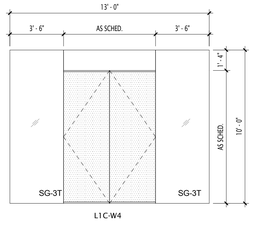

15 AE-611 L1C-W4 1/4" = 1'-0"

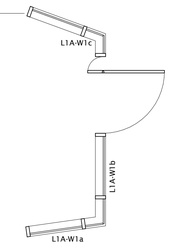

14 AE-611 L1A-W1a,b &c - PLAN 1/4" = 1'-0"

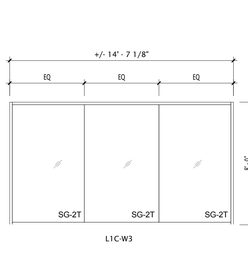

13 AE-611 L1C-W3 1/4" = 1'-0"

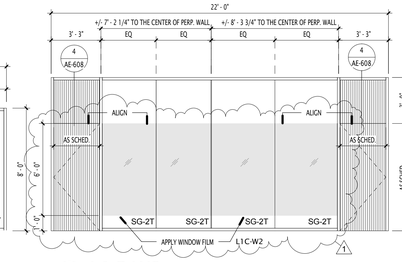

12 AE-611 L1C-W2 1/4" = 1'-0"

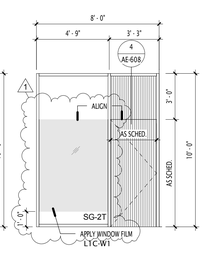

11 AE-611 L1C-W1 1/4" = 1'-0"

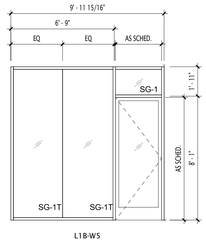

10 AE-611 L1B-W5 1/4" = 1'-0"

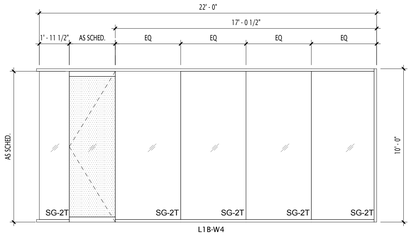

9 AE-611 L1B-W4 1/4" = 1'-0"

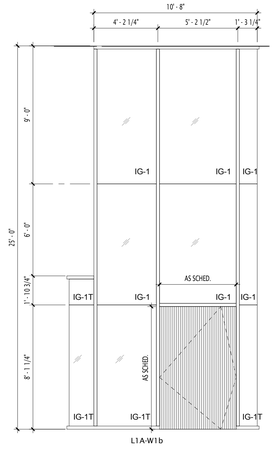

2 AE-611 L1A-W1b 1/4" = 1'-0"

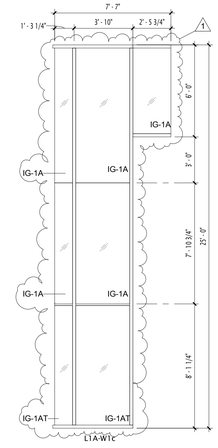

1 AE-611 L1A-W1c 1/4" = 1'-0"

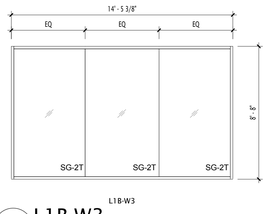

8 AE-611 L1B-W3 1/4" = 1'-0"

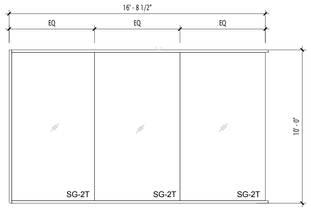

7 AE-611 L1B-W2 1/4" = 1'-0"

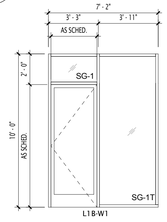

6 AE-611 L1B-W1 1/4" = 1'-0"

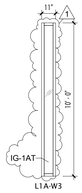

5 AE-611 L1A-W3 1/4" = 1'-0"

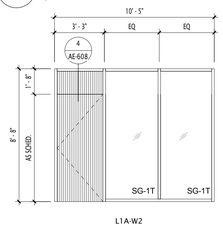

4 AE-611 L1A-W2 1/4" = 1'-0"

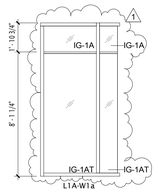

3 AE-611 L1A-W1a 1/4" = 1'-0"

GSBS ARCHITECTS

375 WEST 200 SOUTH
SALT LAKE CITY, UT 84101

P 801.521.8600
F 801.521.7913

www.gsbsarchitects.com

CANNONDESIGN

CANNON DESIGN
829 NORTH 1st AVENUE
PHOENIX, AZ 85003
602.294.6500

REVISIONS:

1	05.04.2012	Addendum-02

STATE OF UTAH
JOHN BRANSON
NO. 134955
04.27.2012
LICENSED ARCHITECT

UTAH VALLEY UNIVERSITY
STUDENT LIFE CENTER &
PARKING STRUCTURE

800 WEST UNIVERSITY PARKWAY
OREM, UT 84058

DFCM

4110 STATE OFFICE BUILDING
SALT LAKE CITY, UT 84112

DRAWN BY:	Author
CHECKED BY:	Checker
OWNER PROJECT NO.:	#10289790
GSBS PROJECT NO.:	2011.045.00
ISSUED DATE:	04.27.2012

INTERIOR GLAZING
ELEVATIONS

CONSTRUCTION DOCUMENTS

AE-611

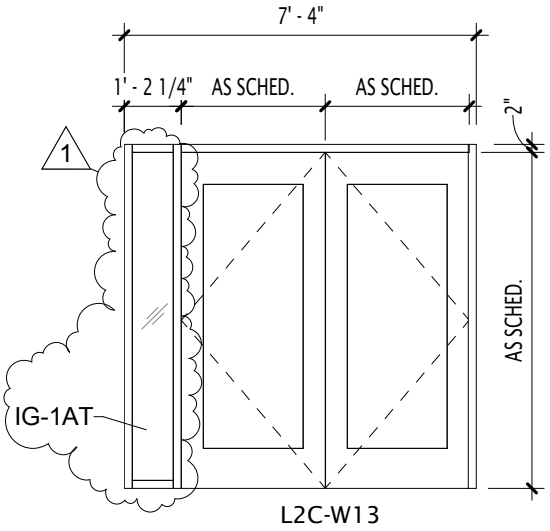

10 AE-612 **L2C-W13**
1/4" = 1'-0"

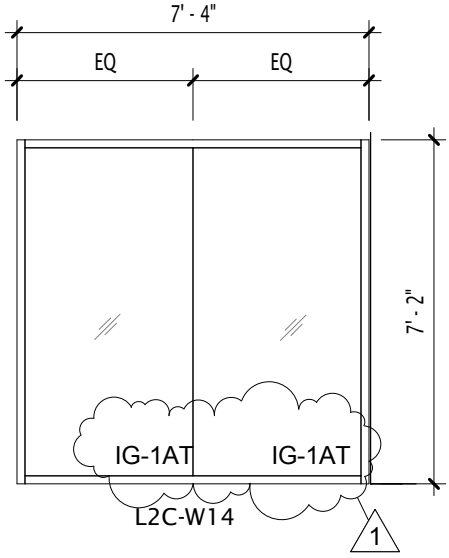

11 AE-612 **L2C-W14**
1/4" = 1'-0"

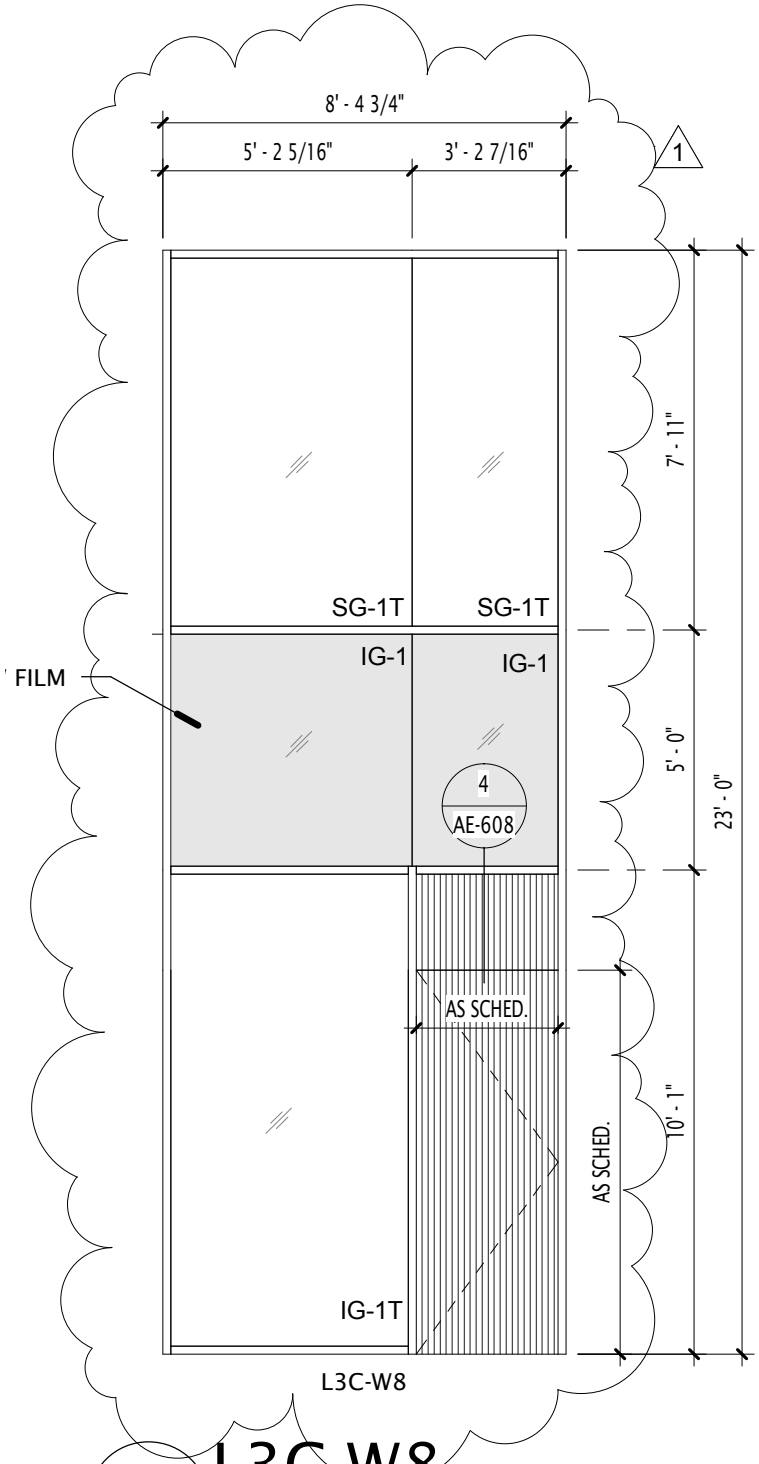

23 AE-612 **L3C-W8**
1/4" = 1'-0"

C:\Users\tyang\Documents\2011.045.00 UVU Student Life Center_Central_tyang.rvt

5/3/2012 2:40:55 PM

GSBS ARCHITECTS
375 WEST 200 SOUTH
SALT LAKE CITY, UT 84101
P: 801.521.8600 F: 801.521.7913
www.gsbsarchitects.com

UTAH VALLEY UNIVERSITY
STUDENT LIFE CENTER &
PARKING STRUCTURE
BID PACKAGE (C.2)

800 WEST UNIVERSITY PARKWAY
OREM, UT 84058

REV.: Addendum-02
BY: AK

AE-612-01

DFCM PROJECT NO.: #10289790
GSBS PROJECT NO.: 2011.045.00
ISSUED DATE: 05/04/12

REAVELEY ENGINEERS + ASSOCIATES
40 YEAR ANNIVERSARY

P: 801.486.3883
F: 801.485.0911

675 E. 500 S. Suite 400
Salt Lake City, Utah 84102
www.reaveley.com

Utah Valley University Parking Structure
Addendum #2

May 4, 2012

Sheet SB-P101

1. Show sump pit at center of south elevator shaft. See revised Sheet SB-P101.

Sheet SF-P102

1. Add chord reinforcing steel at deck edges. See revised Sheet SF-P102.
2. Modify PT forces for PTB-2 and 6 on Grid 7.94, PTB-8 on Grid G6, and PTB-9 on Grid &.7.14. See revised Sheet SF-P102.
3. Move construction joint previously shown on Grid 7.58 between Grids G4 and G6 one-half bay to the north. See revised Sheet SF-P102.

Sheet SF-P103

1. Add chord reinforcing steel at deck edges. See revised Sheet SF-P103.
2. Modify PT forces for PTB-8 on Grid G6 and PTB-5 on Grid &.7.14. See revised Sheet SF-P103.

Sheet SF-P104

1. Add chord reinforcing steel at deck edges. See revised Sheet SF-P104.
2. Modify PT forces for PTB-8 on Grid G6 and PTB-5 on Grid &.7.14. See revised Sheet SF-P104.

Sheet SF-P105

1. Add chord reinforcing steel at deck edges. See revised Sheet SF-P105.
2. Modify PT forces for PTB-8 on Grid G6 and PTB-5 on Grid &.7.14. See revised Sheet SF-P105.

Sheet SF-P601

1. Add PTB-7 to Concrete Post Tensioned Beam Schedule. See revised Sheet SF-P601.
2. Reinforcing for PTB-8 is modified. See revised Sheet SF-P601.

Sheet SF-P905

1. Add chord reinforcing steel at deck edges. See revised Sheet SF-P905.
2. Modify PT forces for PTB-8 on Grid G6 and PTB-5 on Grid &.7.14. See revised Sheet SF-P905.

Sheet SF-P906

1. Add chord reinforcing steel at deck edges. See revised Sheet SF-P906.
2. Show PT forces and tendon drapes for PTB-7
3. Modify PT forces for PTB-8 on Grid G6 and PTB-5 on Grid &.7.14. See revised Sheet SF-P104.

REAVELEY
ENGINEERS + ASSOCIATES
Consulting Structural Engineers

Utah Valley University
Student Life Center

Addendum #2
Structural Revisions
May 4, 2012

Sheets SB-101a:
1. See revised partial footing and foundation plan area A.

Sheets SB-101b:
1. See revised partial first floor footing and foundation plan area B.

Sheets SB-101c:
1. See revised partial first floor footing and foundation plan area C.

Sheets SB-504:
1. Detail A1/SB-504 has been revised.

Sheets SB-602:
1. Masonry wall and lintel schedules have been updated.

Sheets SF-102a:
1. See revised partial second floor and low roof framing plan area A.

Sheets SF-102b:
1. See revised partial second floor and low roof framing plan area B.

Sheets SF-102c:
1. See revised partial second floor and low roof framing plan area C.

Sheets SF-103a:
1. See revised partial third floor and low roof framing plan area A.

Sheets SF-103c:
1. See revised partial third floor and low roof framing plan area C.

Sheets SF-104c:
1. See revised partial fourth floor framing plan area C.

Sheets SF-105c:
1. See revised partial roof framing plan area C.

P: 801.486.3883
F: 801.485.0911

675 E. 500 S. Suite 400
Salt Lake City, Utah 84102
www.reaveley.com

Sheets SF-201:

1. Detail C3/SF-201 has been updated.

Sheets SF-203:

1. Notes have been added to detail C4/SF-203.

Sheets SF-210:

1. Note #9 has been added to Buckling Restrained Brace Schedule.

Sheets SF-401:

1. C1/SF-401 Floor Framing Plan has been updated

Sheets SF-402:

1. Details C2 and C4/SF-402 have been modified.

Sheets SF-505:

1. New detail A5/SF-505 has been added.

Sheets SF-515:

1. Detail A3/SF-515 has been modified.

Sheets SF-520:

1. Details D1, D2, and B1/SF-520 have been modified.

Sheets SF-602:

1. Steel Column Schedule has been updated.

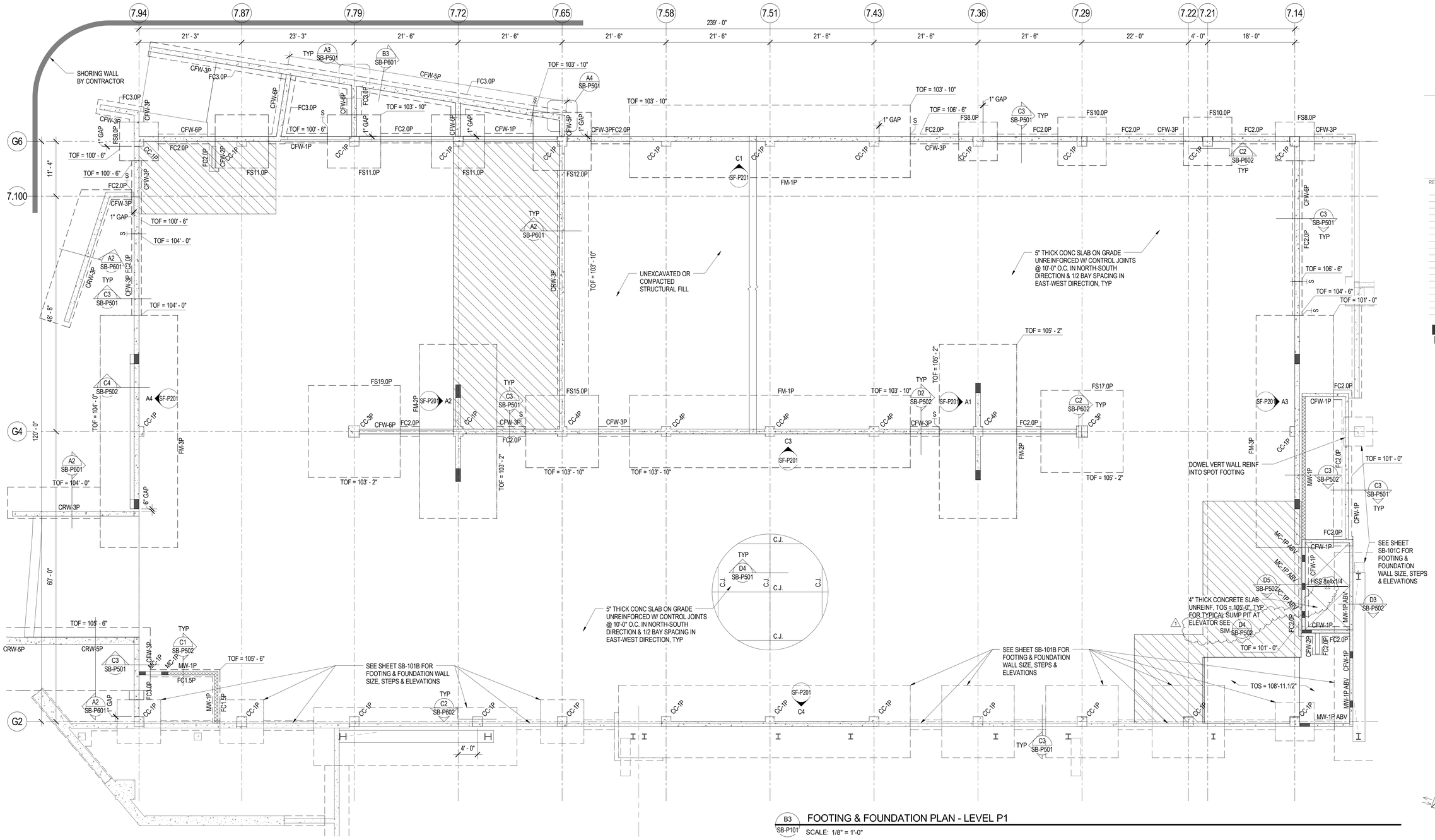

B3 / SB-P101 FOOTING & FOUNDATION PLAN - LEVEL P1

SCALE: 1/8" = 1'-0"

PLAN NOTES:

1. 1" GAPS CALLED-OUT ALONG GRID 'G2' OCCUR AT THE CONCRETE WALL AT LEVEL P1 TO P2 AT SLIP CONNECTIONS. 1" GAPS CALLED-OUT ALONG GRID 'G2' OCCUR AT THE CONCRETE & MASONRY WALL AT LEVEL P2 AND ABOVE.

2. 1" GAPS CALLED-OUT ALONG GRID 'G6' OCCUR AT CONCRETE WALLS FROM LEVEL P1 TO LEVEL P2 AT SLIP CONNECTIONS.

3. 1" GAPS CALLED-OUT ALONG GRID '7.94' OCCUR AT CONCRETE WALLS FROM LEVEL P1 TO P2 AT SLIP CONNECTIONS.

4. SEE C5/SF-P503 FOR TYPICAL METAL PANEL SUPPORT ANCHORAGE DETAIL.

FOOTING & FOUNDATION PLAN LEGEND

LEG-FOOTING

- FOOTING STEP
- FOOTING - CONTINUOUS
- FOOTING - THICKENED SLAB
- FOOTING - SQUARE FOOTING - RECTANGULAR FOOTING - MAT FOOTING
- CONCRETE WALL, CONCRETE FOUNDATION WALL, OR CONCRETE RETAINING WALL
- CONCRETE FOUNDATION WALL - RECESSED
- CONCRETE COLUMN IN CONCRETE WALL
- CONCRETE COLUMN
- CONCRETE JAMB COLUMN POURED MONOLITHIC WITH CONCRETE WALL
- MASONRY WALL
- MASONRY WALL - RECESSED
- MASONRY COLUMN IN MASONRY WALL
- 0" CHANGE IN ELEVATION
- SLAB BLOCK-OUT AT CONCRETE COLUMN
- CJ / CJ SLAB CONTROL/CONSTRUCTION JOINT
- SPECIAL SLAB AREA
- 3" TOPPING SLAB POUR MONOLITHICALLY WITH STRUCTURAL SLAB
- OPENING

FOOTING & FOUNDATION PLAN NOTES

NTS-FOOTING

1. SEE ARCHITECTURAL, CIVIL AND LANDSCAPE DRAWINGS FOR EXTERIOR CONCRETE WORK AT DOORS, SIDEWALKS ETC.

2. SEE ARCHITECTURAL DRAWINGS AND FINISH SCHEDULE FOR SLAB AREAS TO RECEIVE FLOOR TILE.

3. SEE ARCHITECTURAL DRAWINGS FOR SLAB DEPRESSIONS AND SLOPES TO DRAINS, ETC.

4. SEE ARCHITECTURAL, CIVIL AND LANDSCAPE DRAWINGS FOR ADDITIONAL EXTERIOR CONCRETE RETAINING AND / OR SITE WALLS NOT SHOWN ON THE STRUCTURAL DRAWINGS.

5. SEE TYPICAL STEP DETAIL AT CONTINUOUS FOOTING AND TYPICAL STEP DETAIL AT MAT FOOTING FOR CHANGES IN FOOTING ELEVATIONS.

6. SEE TYPICAL CONCRETE WALL REINFORCING DETAILS FOR REINFORCEMENT AT INTERSECTIONS CORNERS AND ENDS.

7. SEE TYPICAL CONCRETE SLAB ON GRADE DETAILS FOR CONSTRUCTION JOINTS, CONTROL JOINTS AND ADDITIONAL SLAB REINFORCING.

8. SEE TYPICAL CONCRETE SLAB ON GRADE PROFILE DETAIL FOR SUBGRADE REQUIREMENTS.

9. PROVIDE COMPACTED STRUCTURAL FILL UNDER ALL CONCRETE FOOTINGS PER TYPICAL COMPACTED STRUCTURAL FILL DETAIL.

10. EE A1/SB-P501 FOR TYPICAL CONTROL JOINTS IN 8" MASONRY WALLS.

11. SEE A2/SB-P501 FOR TYPICAL RECESS IN 8" MASONRY WALL.

12. SEE B2/SB-P602 FOR TYPICAL OPENINGS THROUGH CONCRETE WALLS.

13. CONTRACTOR SHALL COORDINATE LOCATION OF ELEVATOR SUMP PITS WITH ELEVATOR EQUIPMENT DRAWINGS. 1

GSBS ARCHITECTS
375 WEST 200 SOUTH
SALT LAKE CITY, UT 84101
P 801.521.8600
F 801.521.7913
www.gsbsarchitects.com

CANNONDESIGN
CANNON DESIGN
829 NORTH 1st AVENUE
PHOENIX, AZ 85003
602.294.6500

REVISIONS:

1	05/04/2012	ADDENDUM #2

REAVELEY ENGINEERS + ASSOCIATES
Consulting Structural Engineers
P:801.486.3883
F:801.485.0911
675 E.500 S. Suite 400
Salt Lake City, Utah 84102
www.reaveley.com

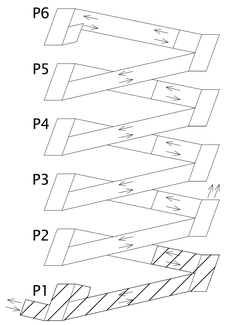

KEYPLAN

NOTE : PARKING LEVEL P2 = MAIN BUILDING LEVEL 2

UTAH VALLEY UNIVERSITY STUDENT LIFE CENTER & PARKING STRUCTURE

800 WEST UNIVERSITY PARKWAY
OREM, UT 84058

DFCM

4110 STATE OFFICE BUILDING
SALT LAKE CITY, UT 84112

DRAWN BY:	YW
CHECKED BY:	MB
OWNER PROJECT NO.:	#10289790
GSBS PROJECT NO.:	2011.045.00
ISSUED DATE:	04.27.2012

FOOTING & FOUNDATION PLAN

CONSTRUCTION DOCUMENTATION

SB-P101

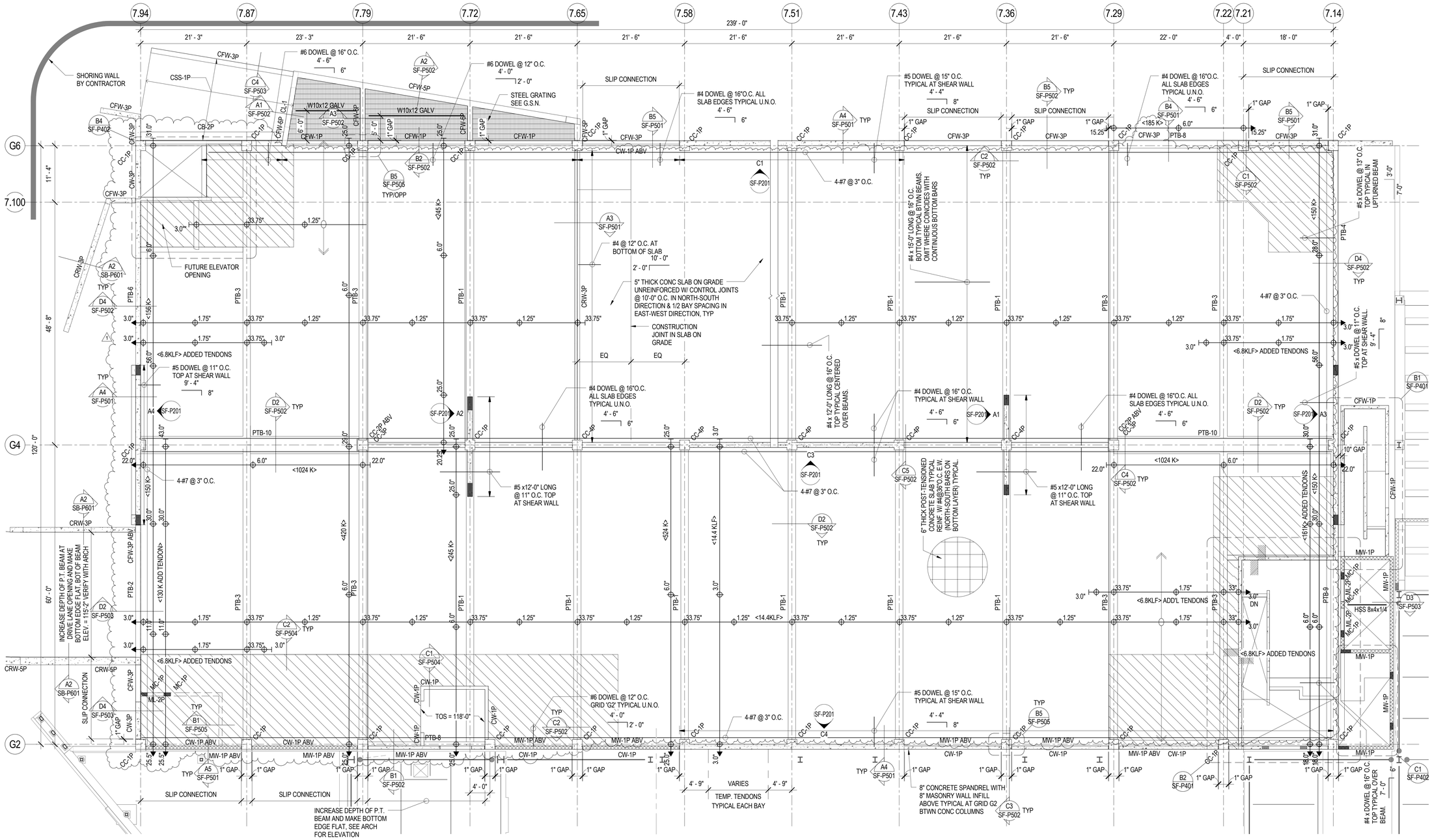

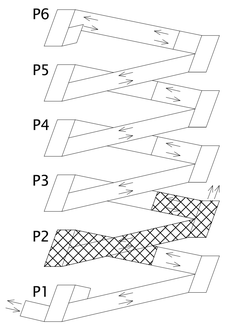

KEYPLAN

NOTE : PARKING LEVEL P2 = MAIN BUILDING LEVEL 2

FRAMING PLAN LEGEND

- CONCRETE WALL
- CONCRETE LINTEL IN CONCRETE WALL
- CONCRETE COLUMN IN CONCRETE WALL
- CONCRETE COLUMN
- CONCRETE JAMB COLUMN POURED MONOLITHIC WITH CONCRETE WALL
- MASONRY WALL
- MASONRY LINTEL IN MASONRY WALL
- MASONRY COLUMN IN MASONRY WALL
- STEEL BEAM OR GIRDER
- STEEL JOIST OR PURLIN
- CONCRETE BEAM
- CONCRETE POST TENSIONED BEAM
- 6" CONCRETE SLAB OVER 1'-4" RIGID FOAM INSULATION
- 3" TOPPING SLAB POUR MONOLITHICALLY WITH STRUCTURAL SLAB
- RECESSED/DEPRESSED SLAB
- OPENING

POST-TENSIONED NOTES

1. UNLESS NOTED OTHERWISE, ALL P.T. SLABS SHALL BE 6" THICK.
2. ALL REINFORCING SHALL BE EPOXY COATED EXCEPT AT CONCRETE FOOTINGS & MASONRY WALLS.
3. SEE GENERAL STRUCTURAL NOTES & PROJECT SPECIFICATIONS FOR DETAILED POST-TENSION SYSTEM INFORMATION.
4. TENDONS SHALL BE PLACED AT MID-HEIGHT OF SLAB AT ALL SLAB EDGES AND CONSTRUCTION JOINTS UNLESS NOTED OTHERWISE.
5. PROVIDE SUPPORT BARS FOR TENDONS AND REBAR AS REQUIRED.
6. PROVIDE REINFORCEMENT AT ANCHORAGE OF DISTRIBUTED TENDONS PER DETAIL.
7. TWO TENDONS, MINIMUM, SHALL PASS THROUGH COLUMN CAGE EACH DIRECTION.
8. SEE DETAIL FOR TYPICAL P.T. TENDON PROFILE DIAGRAM.
9. SEE ARCHITECTURAL DRAWINGS FOR TOP OF SLAB ELEVATIONS.
10. PROVIDE REINFORCEMENT AND SWEEP TENDONS AROUND OPENINGS IN SLABS PER DETAIL.
11. SEE DETAIL FOR SLEEVES AND BLOCK-OUTS NEAR P.T. TENDON ANCHORS.
12. DENOTES POST-TENSION TENDON STRESSING END ANCHORAGE, W/ ELEVATION MARK AT CENTERLINE OF TENDON.
13. DENOTES POST-TENSION TENDON W/ ELEVATION MARK AT CENTERLINE OF TENDON. MEASURED FROM BOTTOM OF SLAB OR BEAM, U.N.O.
14. DENOTES POST-TENSION TENDON DEAD END ANCHORAGE W/ ELEVATION MARK AT CENTERLINE OF TENDON.
15. SEE A1/SF-P504 FOR TYPICAL CABLE BARRIER ATTACHMENT/ANCHORAGE TO CONCRETE WALL/COLUMNS - PLAN VIEWS.
16. SEE A3/SF-P505 FOR TYPICAL SLEEVED OPENINGS IN POST-TENSIONED CONCRETE BEAM

B3 / SF-P102 LEVEL P2 FLOOR FRAMING PLAN

SCALE: 1/8" = 1'-0"

PLAN NOTES:

1. 1" GAPS CALLED-OUT ALONG GRID 'G2' OCCUR AT THE CONCRETE WALL AT LEVEL P1 TO P2 AT SLIP CONNECTIONS. 1" GAPS CALLED-OUT ALONG GRID 'G2' OCCUR AT THE CONCRETE & MASONRY WALL AT LEVEL P2 AND ABOVE.
2. 1" GAPS CALLED-OUT ALONG GRID 'G6' OCCUR AT CONCRETE WALLS FROM LEVEL P1 TO LEVEL P2 AT SLIP CONNECTIONS.
3. 1" GAPS CALLED-OUT ALONG GRID '7.94' OCCUR AT CONCRETE WALLS FROM LEVEL P1 TO P2 AT SLIP CONNECTIONS.
4. SEE C5/SF-P503 FOR TYPICAL METAL PANEL SUPPORT ANCHORAGE DETAIL.

GSBS ARCHITECTS
375 WEST 200 SOUTH
SALT LAKE CITY, UT 84101
P 801.521.8600
F 801.521.7913
www.gsbsarchitects.com

CANNONDESIGN
CANNON DESIGN
829 NORTH 1st AVENUE
PHOENIX, AZ 85003
602.294.6500

REVISIONS:

1	05/04/2012	ADDENDUM #2

REAVELEY ENGINEERS + ASSOCIATES
Consulting Structural Engineers
P:801.486.3883
F:801.485.0911
675 E.500 S. Suite 400
Salt Lake City, Utah 84102
www.reaveley.com

PROFESSIONAL STRUCTURAL ENGINEER #144210 4/27/2012 Ronald J. Reaveley STATE OF UTAH

NOTE : PARKING LEVEL P2 = MAIN BUILDING LEVEL 2

UTAH VALLEY UNIVERSITY STUDENT LIFE CENTER & PARKING STRUCTURE

800 WEST UNIVERSITY PARKWAY
OREM, UT 84058

DFCM

4110 STATE OFFICE BUILDING
SALT LAKE CITY, UT 84112

DRAWN BY:	YW
CHECKED BY:	MB
OWNER PROJECT NO.:	#10289790
GSBS PROJECT NO.:	2011.045.00
ISSUED DATE:	04.27.2012

LEVEL P2 FLOOR FRAMING PLAN

CONSTRUCTION DOCUMENTATION

SF-P102

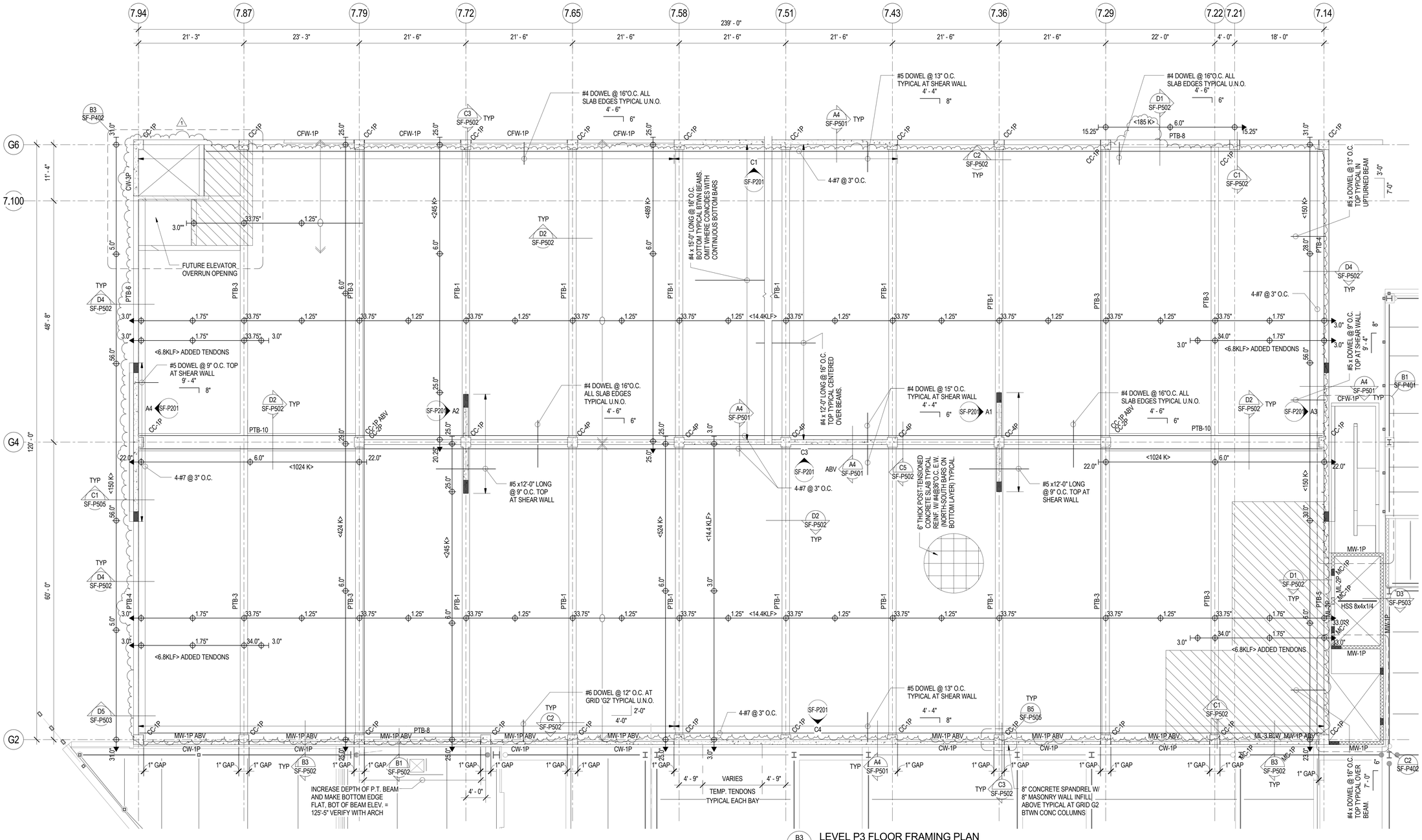

B3 / SF-P103 LEVEL P3 FLOOR FRAMING PLAN

SCALE: 1/8" = 1'-0"

FRAMING PLAN LEGEND

P1-NOTES

- CONCRETE WALL
- CONCRETE LINTEL IN CONCRETE WALL
- CONCRETE COLUMN IN CONCRETE WALL
- CONCRETE COLUMN
- CONCRETE JAMB COLUMN POURED MONOLITHIC WITH CONCRETE WALL
- MASONRY WALL
- MASONRY LINTEL IN MASONRY WALL
- MASONRY COLUMN IN MASONRY WALL
- STEEL BEAM OR GIRDER
- STEEL JOIST OR PURLIN
- CONCRETE BEAM
- CONCRETE POST TENSIONED BEAM
- 6" CONCRETE SLAB OVER 1'-4" RIGID FOAM INSULATION
- 3" TOPPING SLAB POUR MONOLITHICALLY WITH STRUCTURAL SLAB
- RECESSED/DEPRESSED SLAB
- OPENING

POST-TENSIONED NOTES

1. UNLESS NOTED OTHERWISE, ALL P.T. SLABS SHALL BE 6" THICK.

2. ALL REINFORCING SHALL BE EPOXY COATED EXCEPT AT CONCRETE FOOTINGS & MASONRY WALLS.

3. SEE GENERAL STRUCTURAL NOTES & PROJECT SPECIFICATIONS FOR DETAILED POST-TENSION SYSTEM INFORMATION.

4. TENDONS SHALL BE PLACED AT MID-HEIGHT OF SLAB AT ALL SLAB EDGES AND CONSTRUCTION JOINTS UNLESS NOTED OTHERWISE.

5. PROVIDE SUPPORT BARS FOR TENDONS AND REBAR AS REQUIRED.

6. PROVIDE REINFORCEMENT AT ANCHORAGE OF DISTRIBUTED TENDONS PER DETAIL.

7. TWO TENDONS, MINIMUM, SHALL PASS THROUGH COLUMN CAGE EACH DIRECTION.

8. SEE DETAIL FOR TYPICAL P.T. TENDON PROFILE DIAGRAM.

9. SEE ARCHITECTURAL DRAWINGS FOR TOP OF SLAB ELEVATIONS.

10. PROVIDE REINFORCEMENT AND SWEEP TENDONS AROUND OPENINGS IN SLABS PER DETAIL.

11. SEE DETAIL FOR SLEEVES AND BLOCK-OUTS NEAR P.T. TENDON ANCHORS.

12. DENOTES POST-TENSION TENDON STRESSING END ANCHORAGE, W/ ELEVATION MARK AT CENTERLINE OF TENDON.

13. DENOTES POST-TENSION TENDON W/ ELEVATION MARK AT CENTERLINE OF TENDON. MEASURED FROM BOTTOM OF SLAB OR BEAM, U.N.O.

14. DENOTES POST-TENSION TENDON DEAD END ANCHORAGE W/ ELEVATION MARK AT CENTERLINE OF TENDON.

15. SEE A1/SF-P504 FOR TYPICAL CABLE BARRIER ATTACHMENT/ANCHORAGE TO CONCRETE WALL/COLUMNS - PLAN VIEWS.

16. SEE A3/SF-P505 FOR TYPICAL SLEEVED OPENINGS IN POST-TENSIONED CONCRETE BEAM

PLAN NOTES:

1. 1" GAPS CALLED-OUT ALONG GRID 'G2' OCCUR AT THE CONCRETE WALL AT LEVEL P1 TO P2 AT SLIP CONNECTIONS. 1" GAPS CALLED-OUT ALONG GRID 'G2' OCCUR AT THE CONCRETE & MASONRY WALL AT LEVEL P2 AND ABOVE.

2. 1" GAPS CALLED-OUT ALONG GRID 'G6' OCCUR AT CONCRETE WALLS FROM LEVEL P1 TO LEVEL P2 AT SLIP CONNECTIONS.

3. 1" GAPS CALLED-OUT ALONG GRID '7.94' OCCUR AT CONCRETE WALLS FROM LEVEL P1 TO P2 AT SLIP CONNECTIONS.

4. SEE C5/SF-P503 FOR TYPICAL METAL PANEL SUPPORT ANCHORAGE DETAIL.

GSBS ARCHITECTS
375 WEST 200 SOUTH
SALT LAKE CITY, UT 84101
P 801.521.8600
F 801.521.7913
www.gsbsarchitects.com

CANNONDESIGN
CANNON DESIGN
829 NORTH 1st AVENUE
PHOENIX, AZ 85003
602.294.6500

REVISIONS:

1	05/04/2012	ADDENDUM #2

REAVELEY ENGINEERS + ASSOCIATES
Consulting Structural Engineers
P:801.486.3883
F:801.485.0911
675 E.500 S. Suite 400
Salt Lake City, Utah 84102
www.reaveley.com

PROFESSIONAL STRUCTURAL ENGINEER #144210 4/27/2012 Ronald J. Reaveley STATE OF UTAH

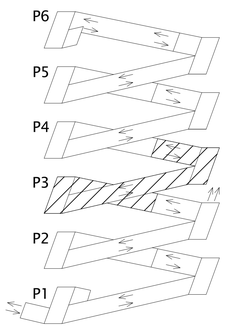

KEYPLAN

NOTE : PARKING LEVEL P2 = MAIN BUILDING LEVEL 2

UTAH VALLEY UNIVERSITY STUDENT LIFE CENTER & PARKING STRUCTURE

800 WEST UNIVERSITY PARKWAY
OREM, UT 84058

DFCM

4110 STATE OFFICE BUILDING
SALT LAKE CITY, UT 84112

DRAWN BY:	YW
CHECKED BY:	MB
OWNER PROJECT NO.:	#10289790
GSBS PROJECT NO.:	2011.045.00
ISSUED DATE:	04.27.2012

LEVEL P3 FLOOR FRAMING PLAN

CONSTRUCTION DOCUMENTATION

SF-P103

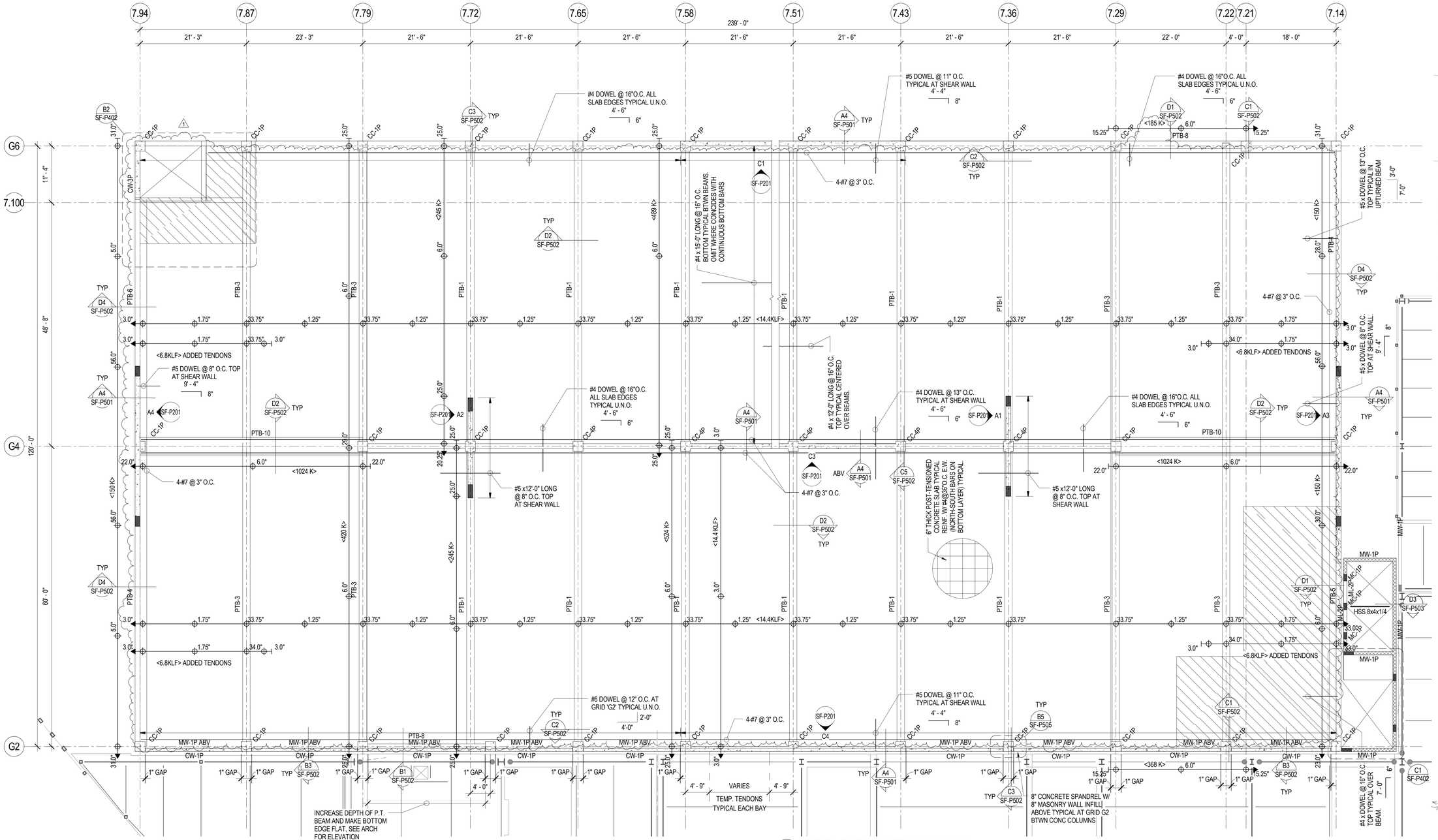

LEVEL P4 FLOOR FRAMING PLAN

B3 / SF-P104

SCALE: 1/8" = 1'-0"

FRAMING PLAN LEGEND

- CONCRETE WALL
- CONCRETE LINTEL IN CONCRETE WALL
- CONCRETE COLUMN IN CONCRETE WALL
- CONCRETE COLUMN
- CONCRETE JAMB COLUMN POURED MONOLITHIC WITH CONCRETE WALL
- MASONRY WALL
- MASONRY LINTEL IN MASONRY WALL
- MASONRY COLUMN IN MASONRY WALL
- STEEL BEAM OR GIRDER
- STEEL JOIST OR PURLIN
- CONCRETE BEAM
- CONCRETE POST TENSIONED BEAM
- 6" CONCRETE SLAB OVER 1'-4" RIGID FOAM INSULATION
- 3" TOPPING SLAB POUR MONOLITHICALLY WITH STRUCTURAL SLAB
- RECESSED/DEPRESSED SLAB
- OPENING

POST-TENSIONED NOTES

1. UNLESS NOTED OTHERWISE, ALL P.T. SLABS SHALL BE 6" THICK.
2. ALL REINFORCING SHALL BE EPOXY COATED EXCEPT AT CONCRETE FOOTINGS & MASONRY WALLS.
3. SEE GENERAL STRUCTURAL NOTES & PROJECT SPECIFICATIONS FOR DETAILED POST-TENSION SYSTEM INFORMATION.
4. TENDONS SHALL BE PLACED AT MID-HEIGHT OF SLAB AT ALL SLAB EDGES AND CONSTRUCTION JOINTS UNLESS NOTED OTHERWISE.
5. PROVIDE SUPPORT BARS FOR TENDONS AND REBAR AS REQUIRED.
6. PROVIDE REINFORCEMENT AT ANCHORAGE OF DISTRIBUTED TENDONS PER DETAIL.
7. TWO TENDONS, MINIMUM, SHALL PASS THROUGH COLUMN CAGE EACH DIRECTION.
8. SEE DETAIL FOR TYPICAL P.T. TENDON PROFILE DIAGRAM.
9. SEE ARCHITECTURAL DRAWINGS FOR TOP OF SLAB ELEVATIONS.
10. PROVIDE REINFORCEMENT AND SWEEP TENDONS AROUND OPENINGS IN SLABS PER DETAIL.
11. SEE DETAIL FOR SLEEVES AND BLOCK-OUTS NEAR P.T. TENDON ANCHORS.
12. DENOTES POST-TENSION TENDON STRESSING END ANCHORAGE, W/ ELEVATION MARK AT CENTERLINE OF TENDON.
13. DENOTES POST-TENSION TENDON W/ ELEVATION MARK AT CENTERLINE OF TENDON. MEASURED FROM BOTTOM OF SLAB OR BEAM, U.N.O.
14. DENOTES POST-TENSION TENDON DEAD END ANCHORAGE W/ ELEVATION MARK AT CENTERLINE OF TENDON.
15. SEE A1/SF-P504 FOR TYPICAL CABLE BARRIER ATTACHMENT/ANCHORAGE TO CONCRETE WALL/COLUMNS - PLAN VIEWS.
16. SEE A3/SF-P505 FOR TYPICAL SLEEVED OPENINGS IN POST-TENSIONED CONCRETE BEAM

PLAN NOTES:

1. 1" GAPS CALLED-OUT ALONG GRID 'G2' OCCUR AT THE CONCRETE WALL AT LEVEL P1 TO P2 AT SLIP CONNECTIONS. 1" GAPS CALLED-OUT ALONG GRID 'G2' OCCUR AT THE CONCRETE & MASONRY WALL AT LEVEL P2 AND ABOVE.
2. 1" GAPS CALLED-OUT ALONG GRID 'G6' OCCUR AT CONCRETE WALLS FROM LEVEL P1 TO LEVEL P2 AT SLIP CONNECTIONS.
3. 1" GAPS CALLED-OUT ALONG GRID '7.94' OCCUR AT CONCRETE WALLS FROM LEVEL P1 TO P2 AT SLIP CONNECTIONS.
4. SEE C5/SF-P503 FOR TYPICAL METAL PANEL SUPPORT ANCHORAGE DETAIL.

GSBS ARCHITECTS
375 WEST 200 SOUTH
SALT LAKE CITY, UT 84101
P 801.521.8600
F 801.521.7913
www.gsbsarchitects.com

CANNONDESIGN
CANNON DESIGN
829 NORTH 1st AVENUE
PHOENIX, AZ 85003
602.294.6500

REVISIONS:

1	05/04/2012	ADDENDUM #2

REAVELEY ENGINEERS + ASSOCIATES
Consulting Structural Engineers
P:801.486.3883
F:801.485.0911
675 E.500 S. Suite 400
Salt Lake City, Utah 84102
www.reaveley.com

Ronald J. Reaveley
PROFESSIONAL STRUCTURAL ENGINEER #144210
4/27/2012
Ronald J. Reaveley
STATE OF UTAH

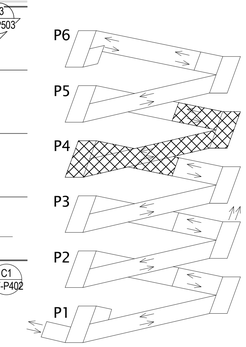

KEYPLAN

NOTE : PARKING LEVEL P2 = MAIN BUILDING LEVEL 2

UTAH VALLEY UNIVERSITY STUDENT LIFE CENTER & PARKING STRUCTURE

800 WEST UNIVERSITY PARKWAY
OREM, UT 84058

DFCM

4110 STATE OFFICE BUILDING
SALT LAKE CITY, UT 84112

DRAWN BY:	YW
CHECKED BY:	MB
OWNER PROJECT NO.:	#10289790
GSBS PROJECT NO.:	2011.045.00
ISSUED DATE:	04.27.2012

LEVEL P4 FLOOR FRAMING PLAN

CONSTRUCTION DOCUMENTATION

SF-P104

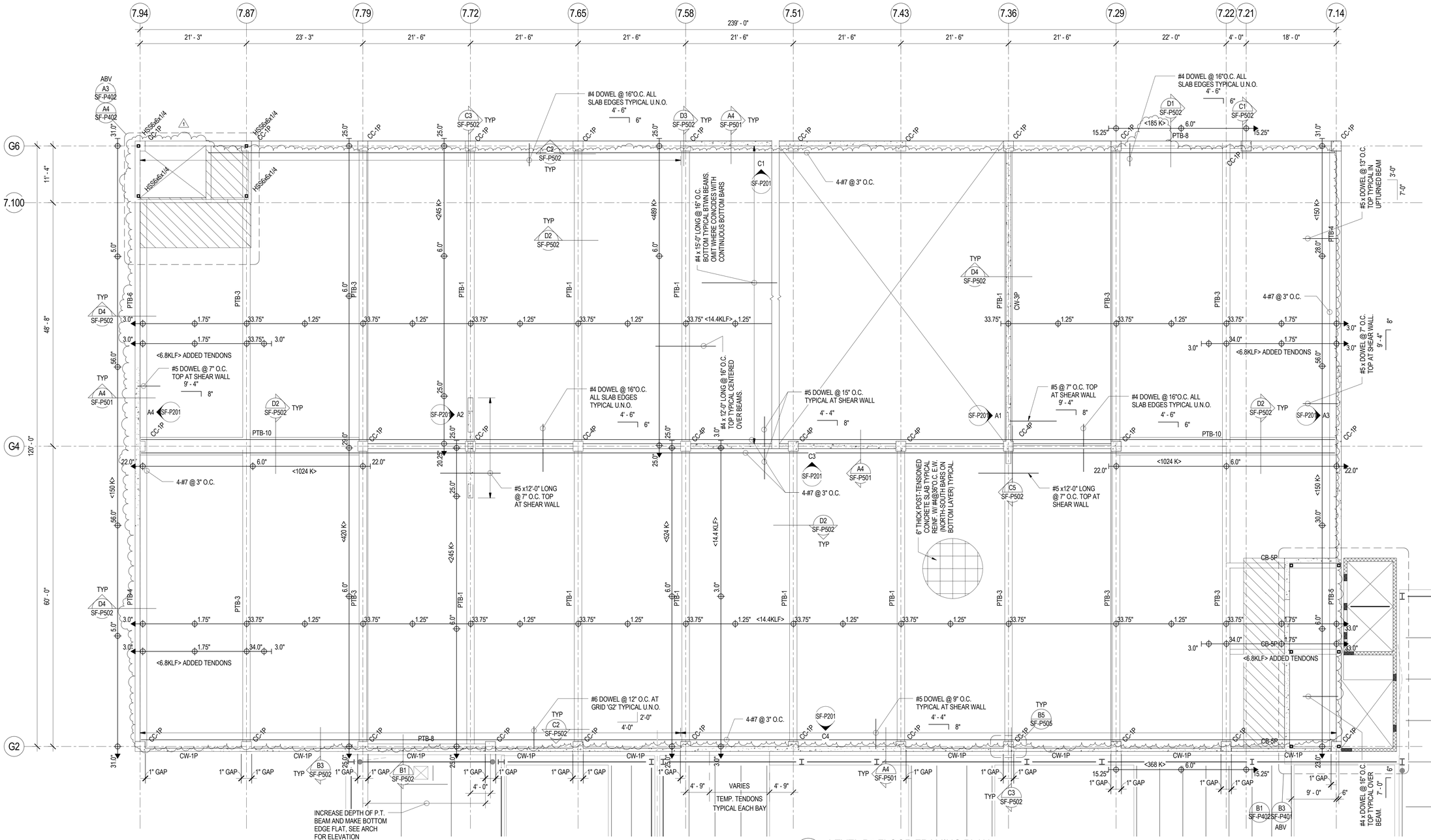

B3 / SF-P105 LEVEL P5 FLOOR FRAMING PLAN

SCALE: 1/8" = 1'-0"

FRAMING PLAN LEGEND

- CONCRETE WALL
- CONCRETE LINTEL IN CONCRETE WALL
- CONCRETE COLUMN IN CONCRETE WALL
- CONCRETE COLUMN
- CONCRETE JAMB COLUMN POURED MONOLITHIC WITH CONCRETE WALL
- MASONRY WALL
- MASONRY LINTEL IN MASONRY WALL
- MASONRY COLUMN IN MASONRY WALL
- STEEL BEAM OR GIRDER
- STEEL JOIST OR PURLIN
- CONCRETE BEAM
- CONCRETE POST TENSIONED BEAM
- 6" CONCRETE SLAB OVER 1'-4" RIGID FOAM INSULATION
- 3" TOPPING SLAB POUR MONOLITHICALLY WITH STRUCTURAL SLAB
- RECESSED/DEPRESSED SLAB
- OPENING

POST-TENSIONED NOTES

1. UNLESS NOTED OTHERWISE, ALL P.T. SLABS SHALL BE 6" THICK.
2. ALL REINFORCING SHALL BE EPOXY COATED EXCEPT AT CONCRETE FOOTINGS & MASONRY WALLS.
3. SEE GENERAL STRUCTURAL NOTES & PROJECT SPECIFICATIONS FOR DETAILED POST-TENSION SYSTEM INFORMATION.
4. TENDONS SHALL BE PLACED AT MID-HEIGHT OF SLAB AT ALL SLAB EDGES AND CONSTRUCTION JOINTS UNLESS NOTED OTHERWISE.
5. PROVIDE SUPPORT BARS FOR TENDONS AND REBAR AS REQUIRED.
6. PROVIDE REINFORCEMENT AT ANCHORAGE OF DISTRIBUTED TENDONS PER DETAIL.
7. TWO TENDONS, MINIMUM, SHALL PASS THROUGH COLUMN CAGE EACH DIRECTION.
8. SEE DETAIL FOR TYPICAL P.T. TENDON PROFILE DIAGRAM.
9. SEE ARCHITECTURAL DRAWINGS FOR TOP OF SLAB ELEVATIONS.
10. PROVIDE REINFORCEMENT AND SWEEP TENDONS AROUND OPENINGS IN SLABS PER DETAIL.
11. SEE DETAIL FOR SLEEVES AND BLOCK-OUTS NEAR P.T. TENDON ANCHORS.
12. DENOTES POST-TENSION TENDON STRESSING END ANCHORAGE, W/ ELEVATION MARK AT CENTERLINE OF TENDON.
13. DENOTES POST-TENSION TENDON W/ ELEVATION MARK AT CENTERLINE OF TENDON. MEASURED FROM BOTTOM OF SLAB OR BEAM, U.N.O.
14. DENOTES POST-TENSION TENDON DEAD END ANCHORAGE W/ ELEVATION MARK AT CENTERLINE OF TENDON.
15. SEE A1/SF-P504 FOR TYPICAL CABLE BARRIER ATTACHMENT/ANCHORAGE TO CONCRETE WALL/COLUMNS - PLAN VIEWS.
16. SEE A3/SF-P505 FOR TYPICAL SLEEVED OPENINGS IN POST-TENSIONED CONCRETE BEAM

PLAN NOTES:

1. 1" GAPS CALLED-OUT ALONG GRID 'G2' OCCUR AT THE CONCRETE WALL AT LEVEL P1 TO P2 AT SLIP CONNECTIONS. 1" GAPS CALLED-OUT ALONG GRID 'G2' OCCUR AT THE CONCRETE & MASONRY WALL AT LEVEL P2 AND ABOVE.
2. 1" GAPS CALLED-OUT ALONG GRID 'G6' OCCUR AT CONCRETE WALLS FROM LEVEL P1 TO LEVEL P2 AT SLIP CONNECTIONS.
3. 1" GAPS CALLED-OUT ALONG GRID '7.94' OCCUR AT CONCRETE WALLS FROM LEVEL P1 TO P2 AT SLIP CONNECTIONS.
4. SEE C5/SF-P503 FOR TYPICAL METAL PANEL SUPPORT ANCHORAGE DETAIL.

GSBS ARCHITECTS
375 WEST 200 SOUTH
SALT LAKE CITY, UT 84101
P 801.521.8600
F 801.521.7913
www.gsbsarchitects.com

CANNONDESIGN
CANNON DESIGN
829 NORTH 1st AVENUE
PHOENIX, AZ 85003
602.294.6500

REVISIONS:

1	05/04/2012	ADDENDUM #2

REAVELEY ENGINEERS + ASSOCIATES
Consulting Structural Engineers
P:801.486.3883
F:801.485.0911
675 E.500 S. Suite 400
Salt Lake City, Utah 84102
www.reaveley.com

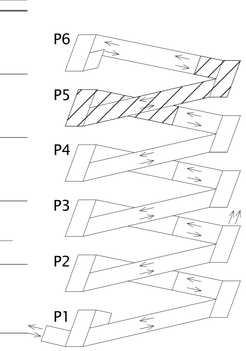

KEYPLAN

NOTE : PARKING LEVEL P2 = MAIN BUILDING LEVEL 2

UTAH VALLEY UNIVERSITY
STUDENT LIFE CENTER & PARKING STRUCTURE

800 WEST UNIVERSITY PARKWAY
OREM, UT 84058

DFCM

4110 STATE OFFICE BUILDING
SALT LAKE CITY, UT 84112

DRAWN BY:	YW
CHECKED BY:	MB
OWNER PROJECT NO.:	#10289790
GSBS PROJECT NO.:	2011.045.00
ISSUED DATE:	04.27.2012

LEVEL P5 FLOOR FRAMING PLAN

CONSTRUCTION DOCUMENTATION

SF-P105

REINFORCING BAR TYPE SCHEDULE

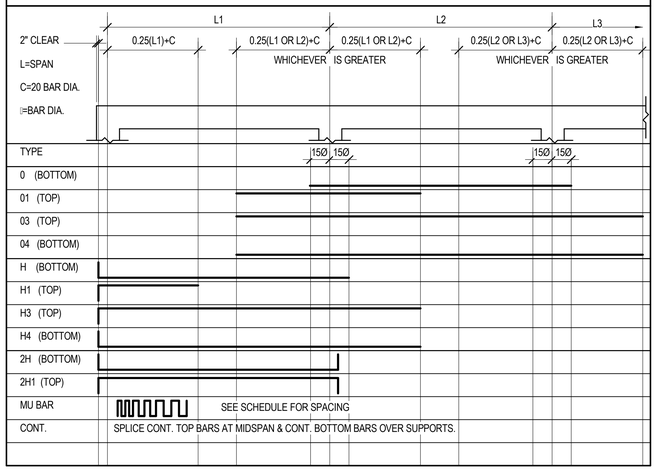

CONCRETE POST TENSIONED BEAM SCHEDULE

BEAM			REINFORCEMENT HR1				REINFORCEMENT HR2				REINFORCEMENT HR3				REINFORCEMENT HR4					STIRRUPS				
MARK	WIDTH	DEPTH	NO.	SIZE	LOCATION	TYPE	NO.	SIZE	LOCATION	TYPE	NO.	SIZE	LOCATION	TYPE	NO.	SIZE	LOCATION	TYPE	NOTES	NO.	SIZE	TYPE	END	SPACING
PTB-1	1' - 6"	3' - 0"	2	#8	EAST & WEST	H1	2	#8	WEST	2H1	2	#9	WEST	2H						--	#4	1	EA	2", 20" O.C. TO CENTER
PTB-2	1' - 0"	2' - 6"	2	#8	WEST	H1	2	#8	WEST	2H1	3	#9	WEST	2H						--	#4	1	EA	2", 20" O.C. TO CENTER
PTB-3	1' - 6"	3' - 0"	4	#8	EXT COLS	H1	4	#8	INT COL	01	2	#9	EXT COLS	H						--	#4	1	EA	2", 20" O.C. TO CENTER
PTB-4	1' - 0"	5' - 2"	3	#7	EXT COL	H3	3	#7	EXT COL	H										--	#4	1	EA	2", 24" O.C. TO CENTER
PTB-5	1' - 0"	3' - 0"	4	#7	EXT COL	H3	4	#7	EXT COL	H										--	#4	1	EA	2", 12" O.C. TO CENTER
PTB-6	1' - 0"	5' - 2"	3	#7	EAST	H3	3	#8	EAST	H										--	#4	1	EA	2", 24" O.C. TO CENTER
PTB-7	1' - 0"	4' - 6"	2	#7		2H1	1	#7	EA END	H1	3	#7		2H						--	#4	1	EA	2", 20" O.C. TO CENTER
PTB-8	1' - 6"	3' - 0"	2	#8		2H1	3	#8		2H	1	#8	EA END	H1						--	#4	1	EA	2", 20" O.C. TO CENTER
PTB-9	1' - 6"	3' - 0"	3	#7	WEST	H3	3	#7	WEST	H										--	#4	1	EA	2", 20" O.C. TO CENTER
PTB-10	3' - 6"	3' - 0"	6	#9		2H1	6	#9		2H										--	#4	1	EA	2", 20" O.C. TO CENTER

STIRRUP TIES :
TYPE 1

CONCRETE BEAM SCHEDULE

BEAM				
MARK	WIDTH	DEPTH	HORIZ. REINF.	TIE REINF.
CB-1P	1' - 0"	1' - 4"	3-#7 TOP & BOT	#4 @ 7" O.C.
CB-2P	1' - 8"	2' - 6"	2-#5 TOP 5-#9 BOT	#4 @ 12" O.C.
CB-3P	1' - 0"	3' - 0"	2-#6 TOP & BOT	#4 @ 18" O.C.
CB-4P	1' - 0"	5' - 2"	2-#7 TOP & BOT	#4 @ 18" O.C.
CB-5P	1' - 0"	1' - 6"	2-#5 TOP 3-#7 BOT	#4 @ 9" O.C.

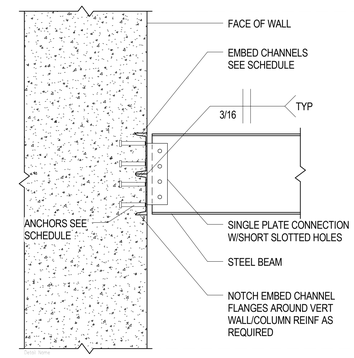

CONNECTION SCHEDULE

BEAM DEPTH	EMBED CHANNEL	ANCHORS
TO 10"	1-C8x18.75x12"	4-3/4"Ø x 5" LONG HSA
TO 12"	2-C8x18.75x12"	8-3/4"Ø x 5" LONG HSA

NOTES:
1. WELD MULTIPLE EMBEDS TOGETHER WITH BUTT WELD EACH SIDE, FULL LENGTH.

C4 / SF-P601 TYPICAL EMBED CHANNEL CONNECTION SCHEDULE
NO SCALE

GSBS ARCHITECTS
375 WEST 200 SOUTH
SALT LAKE CITY, UT 84101
P 801.521.8600
F 801.521.7913
www.gsbsarchitects.com

CANNONDESIGN
CANNON DESIGN
829 NORTH 1st AVENUE
PHOENIX, AZ 85003
602.294.6500

REVISIONS:

1	05/04/2012	ADDENDUM #2

REAVELEY
ENGINEERS + ASSOCIATES
Consulting Structural Engineers
P: 801.486.3883
F: 801.485.0911
675 E. 500 S. Suite 400
Salt Lake City, Utah 84102
www.reaveley.com

PROFESSIONAL STRUCTURAL ENGINEER #144210 4/27/2012 Ronald J. Reaveley STATE OF UTAH

UTAH VALLEY UNIVERSITY
STUDENT LIFE CENTER &
PARKING STRUCTURE

800 WEST UNIVERSITY PARKWAY
OREM, UT 84058

DFCM

4110 STATE OFFICE BUILDING
SALT LAKE CITY, UT 84112

DRAWN BY:	YW
CHECKED BY:	MB
OWNER PROJECT NO.:	#10289790
GSBS PROJECT NO.:	2011.045.00
ISSUED DATE:	04.27.2012

SCHEDULES

CONSTRUCTION DOCUMENTATION

SF-P601

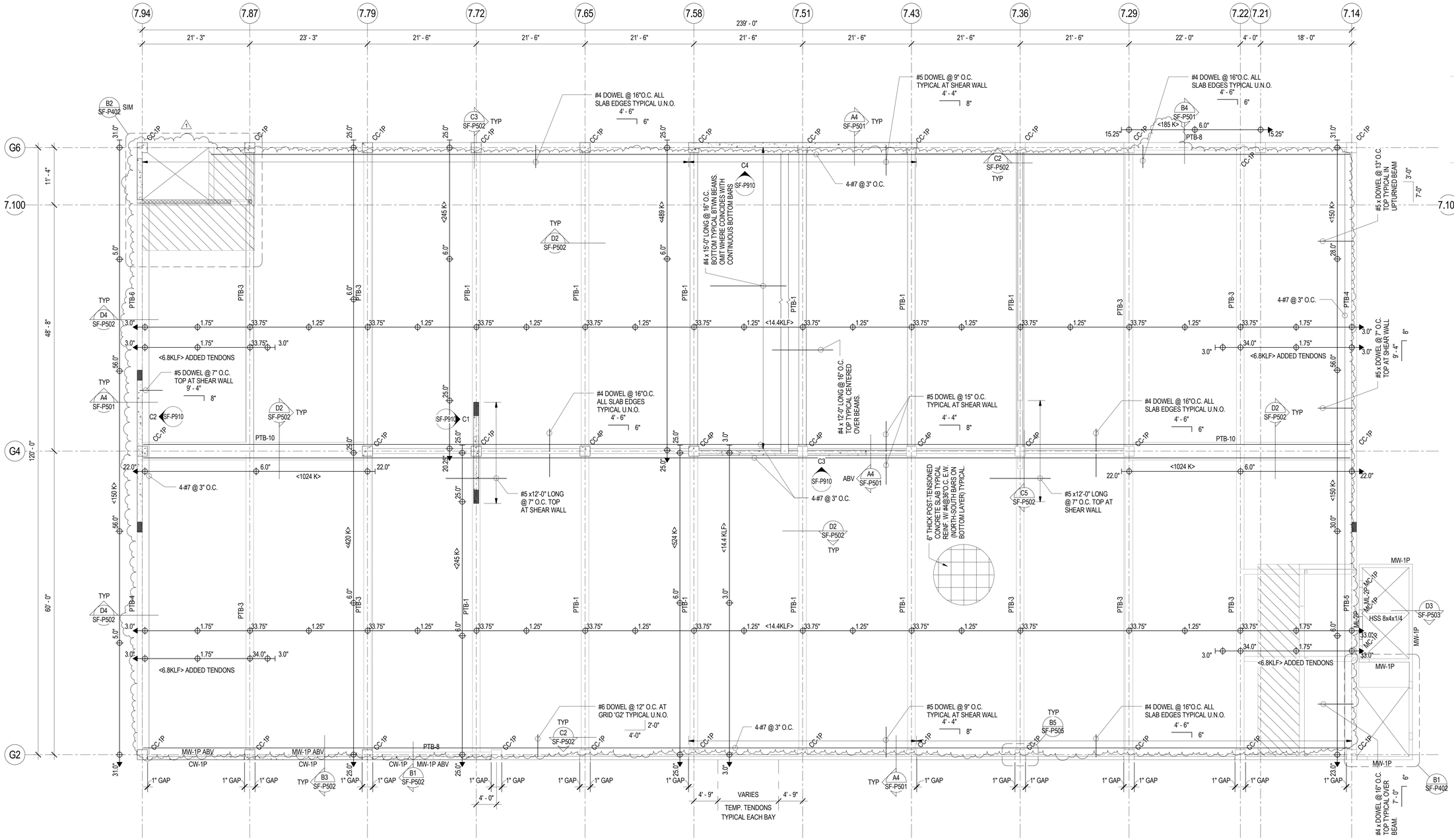

B3 / SF-P905 LEVEL P5 FLOOR FRAMING PLAN - ALTERNATE 1

SCALE: 1/8" = 1'-0"

FRAMING PLAN LEGEND

- CONCRETE WALL
- CONCRETE LINTEL IN CONCRETE WALL
- CONCRETE COLUMN IN CONCRETE WALL
- CONCRETE COLUMN
- CONCRETE JAMB COLUMN POURED MONOLITHIC WITH CONCRETE WALL
- MASONRY WALL
- MASONRY LINTEL IN MASONRY WALL
- MASONRY COLUMN IN MASONRY WALL
- STEEL BEAM OR GIRDER
- STEEL JOIST OR PURLIN
- CONCRETE BEAM
- CONCRETE POST TENSIONED BEAM
- 6" CONCRETE SLAB OVER 1'-4" RIGID FOAM INSULATION
- 3" TOPPING SLAB POUR MONOLITHICALLY WITH STRUCTURAL SLAB
- RECESSED/DEPRESSED SLAB
- OPENING

POST-TENSIONED NOTES

1. UNLESS NOTED OTHERWISE, ALL P.T. SLABS SHALL BE 6" THICK.
2. ALL REINFORCING SHALL BE EPOXY COATED EXCEPT AT CONCRETE FOOTINGS & MASONRY WALLS.
3. SEE GENERAL STRUCTURAL NOTES & PROJECT SPECIFICATIONS FOR DETAILED POST-TENSION SYSTEM INFORMATION.
4. TENDONS SHALL BE PLACED AT MID-HEIGHT OF SLAB AT ALL SLAB EDGES AND CONSTRUCTION JOINTS UNLESS NOTED OTHERWISE.
5. PROVIDE SUPPORT BARS FOR TENDONS AND REBAR AS REQUIRED.
6. PROVIDE REINFORCEMENT AT ANCHORAGE OF DISTRIBUTED TENDONS PER DETAIL.
7. TWO TENDONS, MINIMUM, SHALL PASS THROUGH COLUMN CAGE EACH DIRECTION.
8. SEE DETAIL FOR TYPICAL P.T. TENDON PROFILE DIAGRAM.
9. SEE ARCHITECTURAL DRAWINGS FOR TOP OF SLAB ELEVATIONS.
10. PROVIDE REINFORCEMENT AND SWEEP TENDONS AROUND OPENINGS IN SLABS PER DETAIL.
11. SEE DETAIL FOR SLEEVES AND BLOCK-OUTS NEAR P.T. TENDON ANCHORS.
12. DENOTES POST-TENSION TENDON STRESSING END ANCHORAGE, W/ ELEVATION MARK AT CENTERLINE OF TENDON.
13. DENOTES POST-TENSION TENDON W/ ELEVATION MARK AT CENTERLINE OF TENDON. MEASURED FROM BOTTOM OF SLAB OR BEAM, U.N.O.
14. DENOTES POST-TENSION TENDON DEAD END ANCHORAGE W/ ELEVATION MARK AT CENTERLINE OF TENDON.
15. SEE A1/SF-P504 FOR TYPICAL CABLE BARRIER ATTACHMENT/ANCHORAGE TO CONCRETE WALL/COLUMNS - PLAN VIEWS.
16. SEE A3/SF-P505 FOR TYPICAL SLEEVED OPENINGS IN POST-TENSIONED CONCRETE BEAM

PLAN NOTES:

1. 1" GAPS CALLED-OUT ALONG GRID 'G2' OCCUR AT THE CONCRETE WALL AT LEVEL P1 TO P2 AT SLIP CONNECTIONS. 1" GAPS CALLED-OUT ALONG GRID 'G2' OCCUR AT THE CONCRETE & MASONRY WALL AT LEVEL P2 AND ABOVE.
2. 1" GAPS CALLED-OUT ALONG GRID 'G6' OCCUR AT CONCRETE WALLS FROM LEVEL P1 TO LEVEL P2 AT SLIP CONNECTIONS.
3. 1" GAPS CALLED-OUT ALONG GRID '7.94' OCCUR AT CONCRETE WALLS FROM LEVEL P1 TO P2 AT SLIP CONNECTIONS.
4. SEE C5/SF-P503 FOR TYPICAL METAL PANEL SUPPORT ANCHORAGE DETAIL.

GSBS ARCHITECTS
375 WEST 200 SOUTH
SALT LAKE CITY, UT 84101
P 801.521.8600
F 801.521.7913
www.gsbsarchitects.com

CANNONDESIGN
CANNON DESIGN
829 NORTH 1st AVENUE
PHOENIX, AZ 85003
602.294.6500

REVISIONS:

1	05/04/2012	ADDENDUM #2

REAVELEY ENGINEERS + ASSOCIATES
Consulting Structural Engineers
P: 801.486.3883
F: 801.485.0911
675 E. 500 S. Suite 400
Salt Lake City, Utah 84102
www.reaveley.com

PROFESSIONAL STRUCTURAL ENGINEER #144210 4/27/2012 Ronald J. Reaveley STATE OF UTAH

UTAH VALLEY UNIVERSITY
STUDENT LIFE CENTER & PARKING STRUCTURE

800 WEST UNIVERSITY PARKWAY
OREM, UT 84058

DFCM

4110 STATE OFFICE BUILDING
SALT LAKE CITY, UT 84112

DRAWN BY:	YW
CHECKED BY:	MB
OWNER PROJECT NO.:	#10289790
GSBS PROJECT NO.:	2011.045.00
ISSUED DATE:	04.27.2012

LEVEL P5 FLOOR FRAMING PLAN - ALTERNATE 1

CONSTRUCTION DOCUMENTATION

SF-P905

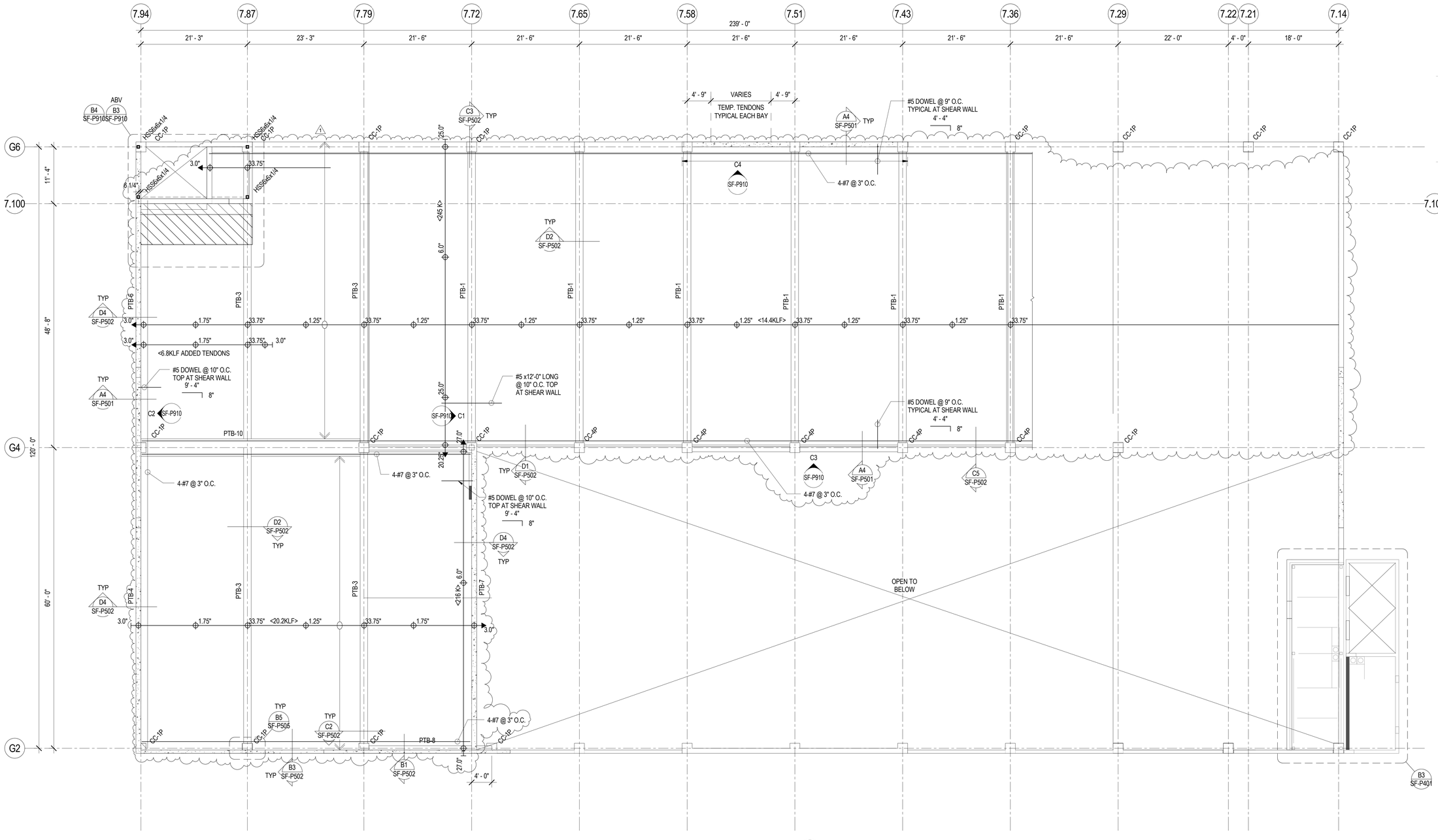

B3 / SF-P906 LEVEL P6 FLOOR FRAMING PLAN - ALTERNATE 1

SCALE: 1/8" = 1'-0"

FRAMING PLAN LEGEND

- CONCRETE WALL
- CONCRETE LINTEL IN CONCRETE WALL
- CONCRETE COLUMN IN CONCRETE WALL
- CONCRETE COLUMN
- CONCRETE JAMB COLUMN POURED MONOLITHIC WITH CONCRETE WALL
- MASONRY WALL
- MASONRY LINTEL IN MASONRY WALL
- MASONRY COLUMN IN MASONRY WALL
- STEEL BEAM OR GIRDER
- STEEL JOIST OR PURLIN
- CONCRETE BEAM
- CONCRETE POST TENSIONED BEAM
- 6" CONCRETE SLAB OVER 1'-4" RIGID FOAM INSULATION
- 3" TOPPING SLAB POUR MONOLITHICALLY WITH STRUCTURAL SLAB
- RECESSED/DEPRESSED SLAB
- OPENING

POST-TENSIONED NOTES

1. UNLESS NOTED OTHERWISE, ALL P.T. SLABS SHALL BE 6" THICK.

2. ALL REINFORCING SHALL BE EPOXY COATED EXCEPT AT CONCRETE FOOTINGS & MASONRY WALLS.

3. SEE GENERAL STRUCTURAL NOTES & PROJECT SPECIFICATIONS FOR DETAILED POST-TENSION SYSTEM INFORMATION.

4. TENDONS SHALL BE PLACED AT MID-HEIGHT OF SLAB AT ALL SLAB EDGES AND CONSTRUCTION JOINTS UNLESS NOTED OTHERWISE.

5. PROVIDE SUPPORT BARS FOR TENDONS AND REBAR AS REQUIRED.

6. PROVIDE REINFORCEMENT AT ANCHORAGE OF DISTRIBUTED TENDONS PER DETAIL.

7. TWO TENDONS, MINIMUM, SHALL PASS THROUGH COLUMN CAGE EACH DIRECTION.

8. SEE DETAIL FOR TYPICAL P.T. TENDON PROFILE DIAGRAM.

9. SEE ARCHITECTURAL DRAWINGS FOR TOP OF SLAB ELEVATIONS.

10. PROVIDE REINFORCEMENT AND SWEEP TENDONS AROUND OPENINGS IN SLABS PER DETAIL.

11. SEE DETAIL FOR SLEEVES AND BLOCK-OUTS NEAR P.T. TENDON ANCHORS.

12. DENOTES POST-TENSION TENDON STRESSING END ANCHORAGE, W/ ELEVATION MARK AT CENTERLINE OF TENDON.

13. DENOTES POST-TENSION TENDON W/ ELEVATION MARK AT CENTERLINE OF TENDON. MEASURED FROM BOTTOM OF SLAB OR BEAM, U.N.O.

14. DENOTES POST-TENSION TENDON DEAD END ANCHORAGE W/ ELEVATION MARK AT CENTERLINE OF TENDON.

15. SEE A1/SF-P504 FOR TYPICAL CABLE BARRIER ATTACHMENT/ANCHORAGE TO CONCRETE WALL/COLUMNS - PLAN VIEWS.

16. SEE A3/SF-P505 FOR TYPICAL SLEEVED OPENINGS IN POST-TENSIONED CONCRETE BEAM

PLAN NOTES:

1. 1" GAPS CALLED-OUT ALONG GRID 'G2' OCCUR AT THE CONCRETE WALL AT LEVEL P1 TO P2 AT SLIP CONNECTIONS. 1" GAPS CALLED-OUT ALONG GRID 'G2' OCCUR AT THE CONCRETE & MASONRY WALL AT LEVEL P2 AND ABOVE.

2. 1" GAPS CALLED-OUT ALONG GRID 'G6' OCCUR AT CONCRETE WALLS FROM LEVEL P1 TO LEVEL P2 AT SLIP CONNECTIONS.

3. 1" GAPS CALLED-OUT ALONG GRID '7.94' OCCUR AT CONCRETE WALLS FROM LEVEL P1 TO P2 AT SLIP CONNECTIONS.

4. SEE C5/SF-P503 FOR TYPICAL METAL PANEL SUPPORT ANCHORAGE DETAIL.

GSBS ARCHITECTS
375 WEST 200 SOUTH
SALT LAKE CITY, UT 84101
P 801.521.8600
F 801.521.7913
www.gsbsarchitects.com

CANNONDESIGN
CANNON DESIGN
829 NORTH 1st AVENUE
PHOENIX, AZ 85003
602.294.6500

REVISIONS:

1	05/04/2012	ADDENDUM #2

REAVELEY
ENGINEERS + ASSOCIATES
Consulting Structural Engineers
P: 801.486.3883
F: 801.485.0911
675 E. 500 S. Suite 400
Salt Lake City, Utah 84102
www.reaveley.com

PROFESSIONAL STRUCTURAL ENGINEER #144210 4/27/2012 Ronald J. Reaveley STATE OF UTAH

UTAH VALLEY UNIVERSITY
STUDENT LIFE CENTER &
PARKING STRUCTURE

800 WEST UNIVERSITY PARKWAY
OREM, UT 84058

DFCM

4110 STATE OFFICE BUILDING
SALT LAKE CITY, UT 84112

DRAWN BY:	YW
CHECKED BY:	MB
OWNER PROJECT NO.:	#10289790
GSBS PROJECT NO.:	2011.045.00
ISSUED DATE:	04.27.2012

LEVEL P6 FLOOR FRAMING PLAN - ALTERNATE 1

CONSTRUCTION DOCUMENTATION

SF-P906

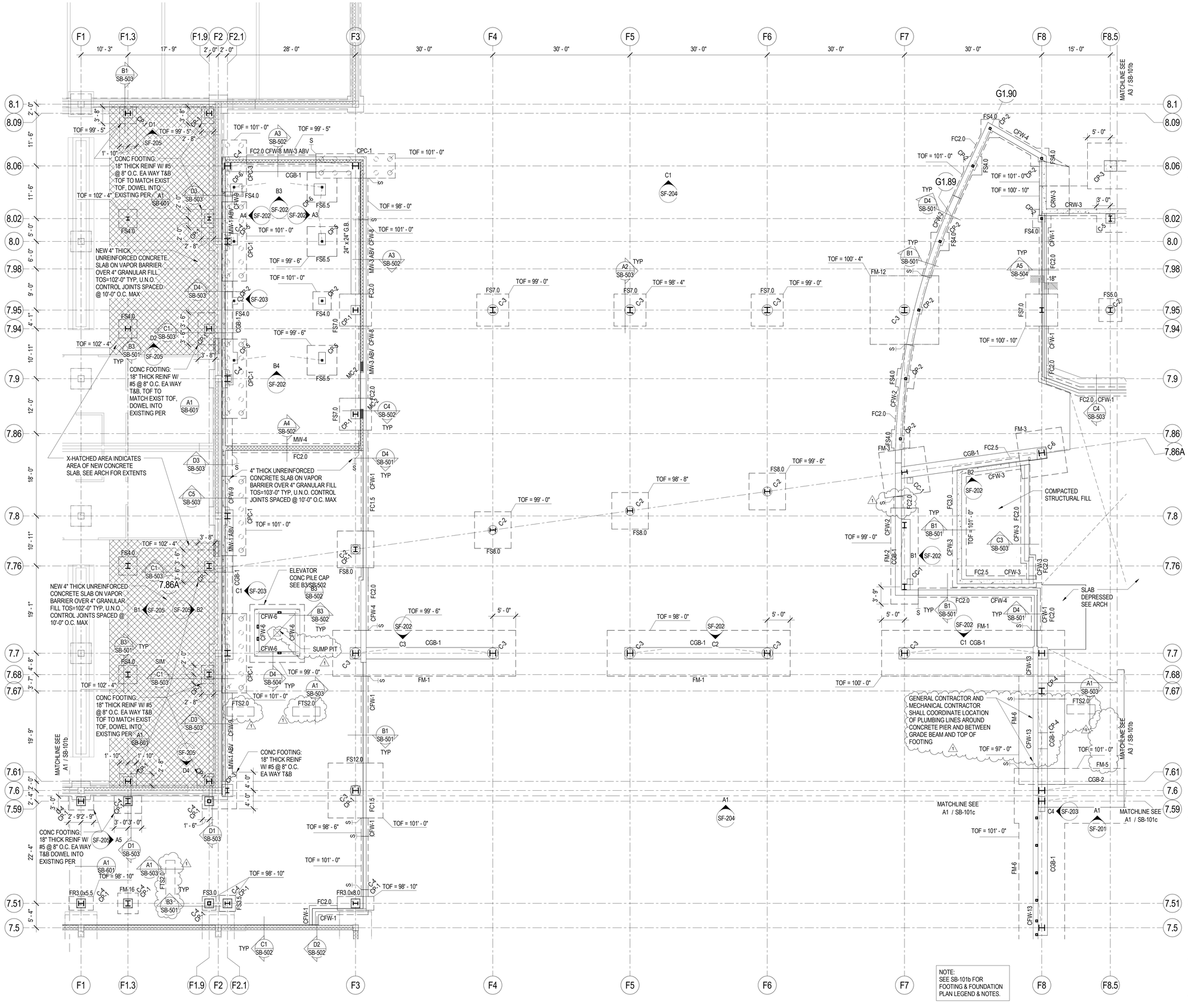

NOTE:
SEE SB-101b FOR FOOTING & FOUNDATION PLAN LEGEND & NOTES.

A1 / SB-101a FOOTING & FOUNDATION PLAN - ZONE A

SCALE: 1/8" = 1'-0"

GSBS ARCHITECTS
375 WEST 200 SOUTH
SALT LAKE CITY, UT 84101
P 801.521.8600
F 801.521.7913
www.gsbsarchitects.com

CANNONDESIGN
CANNON DESIGN
829 NORTH 1st AVENUE
PHOENIX, AZ 85003
602.294.6500

REVISIONS:

1	05/04/2012	ADDENDUM #2

REAVELEY ENGINEERS + ASSOCIATES
Consulting Structural Engineers
P: 801.486.3883
F: 801.485.0911
675 E. 500 S. Suite 400
Salt Lake City, Utah 84102
www.reaveley.com

Ronald J. Reaveley
PROFESSIONAL STRUCTURAL ENGINEER #144210
4/27/2012
Ronald J. Reaveley
STATE OF UTAH

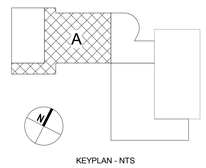

KEYPLAN - NTS

UTAH VALLEY UNIVERSITY
STUDENT LIFE CENTER & PARKING STRUCTURE

800 WEST UNIVERSITY PARKWAY
OREM, UT 84058

DFCM

4110 STATE OFFICE BUILDING
SALT LAKE CITY, UT 84112

DRAWN BY:	RH/RE+A
CHECKED BY:	OB/RE+A
OWNER PROJECT NO.:	#10289790
GSBS PROJECT NO.:	2011.045.00
ISSUED DATE:	04.27.2012

FOOTING & FOUNDATION PLAN - ZONE A

CONSTRUCTION DOCUMENTS

SB-101a

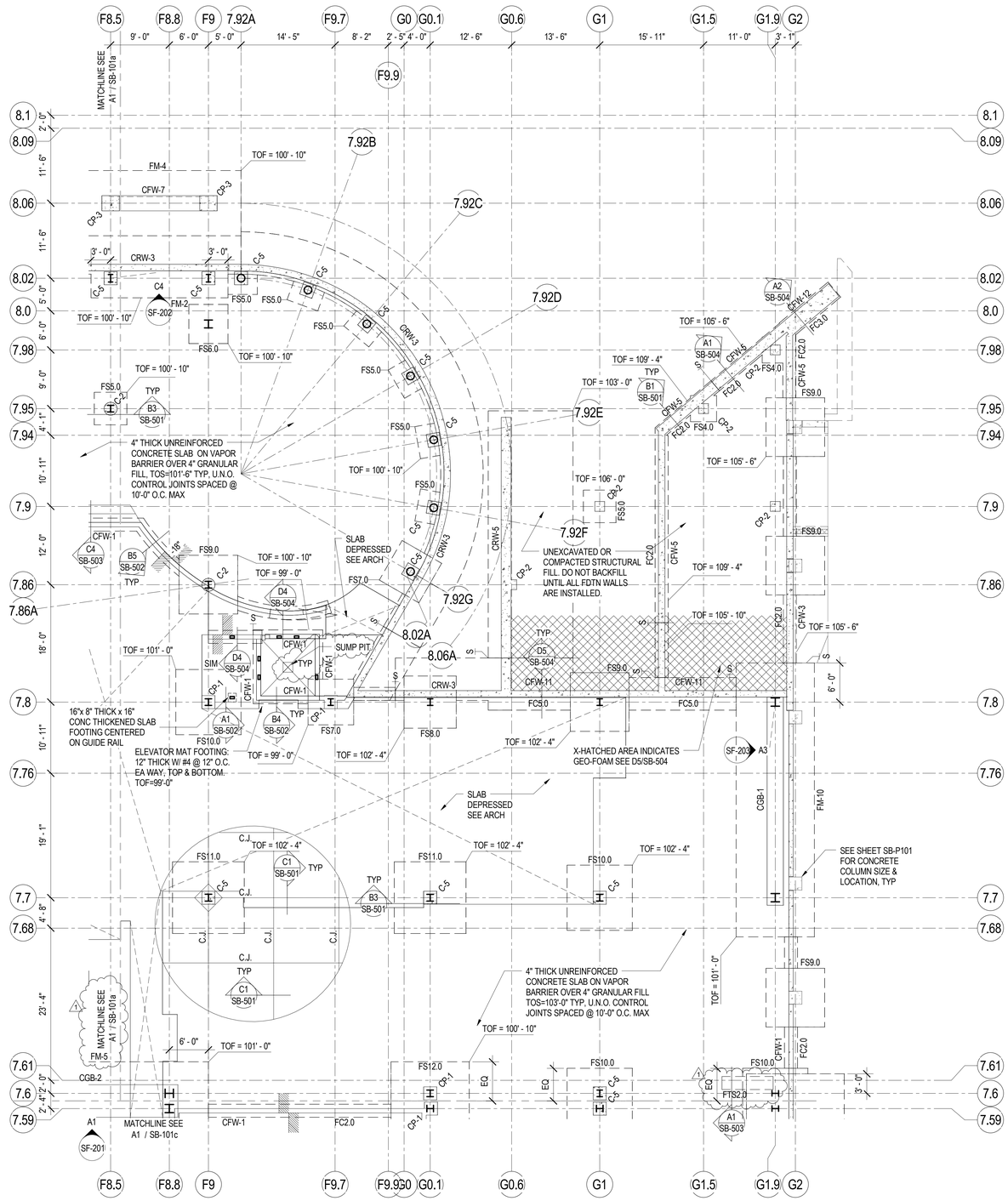

A1 SB-101b FOOTING & FOUNDATION PLAN - ZONE A CORRIDOR

SCALE: 1/8" = 1'-0"

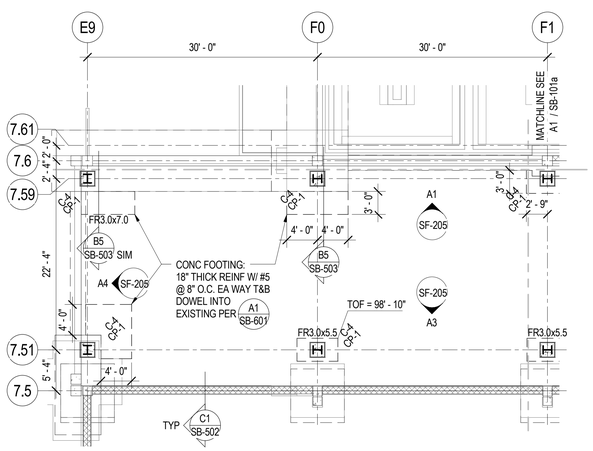

A3 SB-101b FOOTING & FOUNDATION PLAN - ZONE B

SCALE: 1/8" = 1'-0"

FOOTING & FOUNDATION PLAN LEGEND

- FOOTING STEP
- FOOTING - CONTINUOUS
- FOOTING - THICKENED SLAB
- FOOTING - SQUARE FOOTING - RECTANGULAR FOOTING - MAT FOOTING
- CONCRETE WALL, CONCRETE FOUNDATION WALL, OR CONCRETE RETAINING WALL
- CONCRETE FOUNDATION WALL - RECESSED
- CONCRETE PIER IN CONCRETE WALL. TOP OF PIER RECESSED 8" BELOW SLAB. TYP U.N.O.
- CONCRETE COLUMN
- CONCRETE JAMB COLUMN POURED MONOLITHIC WITH CONCRETE WALL
- MASONRY WALL
- MASONRY WALL - RECESSED
- MASONRY COLUMN IN MASONRY WALL
- STEEL COLUMN - TUBE
- STEEL COLUMN - WIDE FLANGE
- STEEL COLUMN - PIPE
- STEEL BRACED FRAME - ABOVE
- 0" CHANGE IN ELEVATION
- SLAB BLOCK-OUT AT COLUMN
- CJ SLAB CONTROL/CONSTRUCTION JOINT
- SPECIAL SLAB AREA
- RECESSED/DEPRESSED SLAB
- OPENING

FOOTING & FOUNDATION PLAN NOTES

1. SEE ARCHITECTURAL, CIVIL AND LANDSCAPE DRAWINGS FOR EXTERIOR CONCRETE WORK AT DOORS, SIDEWALKS ETC.

2. SEE ARCHITECTURAL DRAWINGS AND FINISH SCHEDULE FOR SLAB AREAS TO RECEIVE FLOOR TILE.

3. SEE ARCHITECTURAL DRAWINGS FOR SLAB DEPRESSIONS AND SLOPES TO DRAINS, ETC.

4. SEE ARCHITECTURAL, CIVIL AND LANDSCAPE DRAWINGS FOR ADDITIONAL EXTERIOR CONCRETE RETAINING AND / OR SITE WALLS NOT SHOWN ON THE STRUCTURAL DRAWINGS.

5. SEE TYPICAL STEP DETAIL AT CONTINUOUS FOOTING AND TYPICAL STEP DETAIL AT MAT FOOTING FOR CHANGES IN FOOTING ELEVATIONS.

6. SEE TYPICAL CONCRETE WALL REINFORCING DETAILS FOR REINFORCEMENT AT INTERSECTIONS CORNERS AND ENDS.

7. SEE TYPICAL CONCRETE SLAB ON GRADE DETAILS FOR CONSTRUCTION JOINTS, CONTROL JOINTS AND ADDITIONAL SLAB REINFORCING.

8. SEE TYPICAL CONCRETE SLAB ON GRADE PROFILE DETAIL FOR SUBGRADE REQUIREMENTS.

9. PROVIDE COMPACTED STRUCTURAL FILL UNDER ALL CONCRETE FOOTINGS PER TYPICAL COMPACTED STRUCTURAL FILL DETAIL.

10. SEE TYPICAL RECESS IN MASONRY WALL DETAIL FOR RECESS IN MASONRY WALLS.

11. SEE TYPICAL CONTROL JOINTS IN MASONRY WALLS DETAIL FOR CONTROL JOINTS IN MASONRY WALLS.

12. REFER TO DETAIL C4/SB-501 FOR TYPICAL STAIR LANDING COLUMN AND FOOTING. PROVIDE 4 COLUMNS MIN. AT EACH LANDING.

13. CONTRACTOR SHALL COORDINATE LOCATION OF ELEVATOR SUMP PITS WITH ELEVATOR EQUIPMENT DRAWINGS.

GSBS ARCHITECTS
375 WEST 200 SOUTH
SALT LAKE CITY, UT 84101
P 801.521.8600
F 801.521.7913
www.gsbsarchitects.com

CANNONDESIGN
CANNON DESIGN
829 NORTH 1st AVENUE
PHOENIX, AZ 85003
602.294.6500

REVISIONS:

1	05/04/2012	ADDENDUM #2

REAVELEY ENGINEERS + ASSOCIATES
Consulting Structural Engineers
P 801.486.3883
F 801.485.0911
675 E. 500 S. Suite 400
Salt Lake City, Utah 84102
www.reaveley.com

PROFESSIONAL STRUCTURAL ENGINEER #144210 4/27/2012 Ronald J. Reaveley STATE OF UTAH

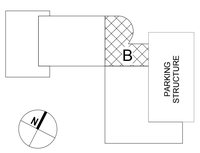

KEYPLAN - NTS

UTAH VALLEY UNIVERSITY STUDENT LIFE CENTER & PARKING STRUCTURE

800 WEST UNIVERSITY PARKWAY
OREM, UT 84058

DFCM

4110 STATE OFFICE BUILDING
SALT LAKE CITY, UT 84112

DRAWN BY:	RH/RE+A
CHECKED BY:	OB/RE+A
OWNER PROJECT NO.:	#10289790
GSBS PROJECT NO.:	2011.045.00
ISSUED DATE:	04.27.2012

FOOTING & FOUNDATION PLAN - ZONE B

CONSTRUCTION DOCUMENTS

SB-101b

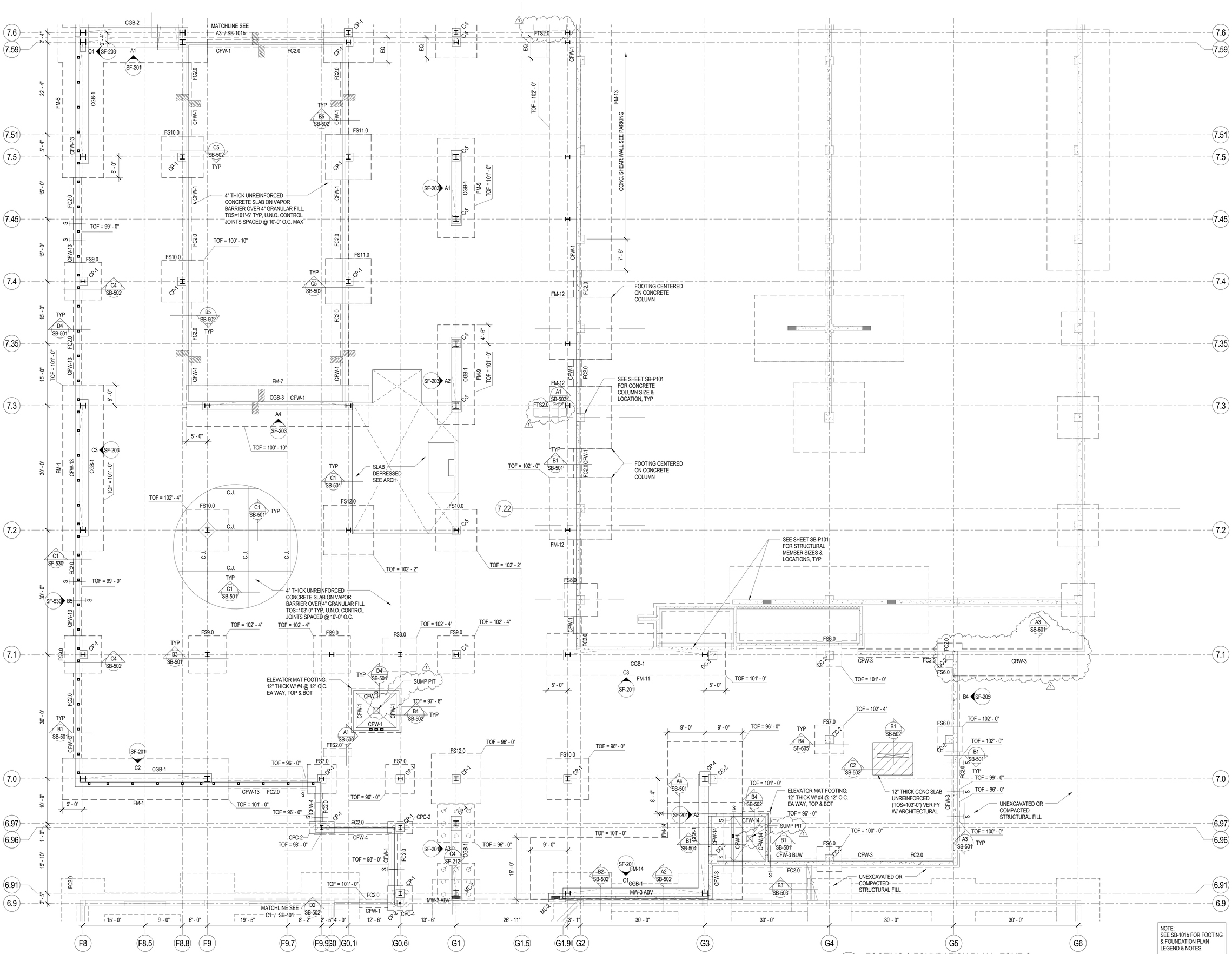

A1 SB-101c FOOTING & FOUNDATION PLAN - ZONE C

SCALE: 1/8" = 1'-0"

NOTE:
SEE SB-101b FOR FOOTING & FOUNDATION PLAN LEGEND & NOTES.

GSBS ARCHITECTS
375 WEST 200 SOUTH
SALT LAKE CITY, UT 84101
P 801.521.8600
F 801.521.7913
www.gsbsarchitects.com

CANNONDESIGN
CANNON DESIGN
829 NORTH 1st AVENUE
PHOENIX, AZ 85003
602.294.6500

REVISIONS:

1	05/04/2012	ADDENDUM #2

REAVELEY ENGINEERS + ASSOCIATES
Consulting Structural Engineers
P 801.486.3883
F 801.485.0911
675 E. 500 S. Suite 400
Salt Lake City, Utah 84102
www.reaveley.com

PROFESSIONAL STRUCTURAL ENGINEER #144210 4/27/2012 Ronald J. Reaveley STATE OF UTAH

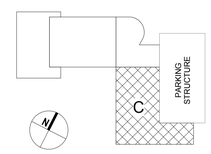

KEYPLAN - NTS

UTAH VALLEY UNIVERSITY STUDENT LIFE CENTER & PARKING STRUCTURE

800 WEST UNIVERSITY PARKWAY
OREM, UT 84058

DFCM

4110 STATE OFFICE BUILDING
SALT LAKE CITY, UT 84112

DRAWN BY:	RH/RE+A
CHECKED BY:	OB/RE+A
OWNER PROJECT NO.:	#110289790
GSBS PROJECT NO.:	2011.045.00
ISSUED DATE:	04.27.2012

FOOTING & FOUNDATION PLAN - ZONE C

CONSTRUCTION DOCUMENTS

SB-101c

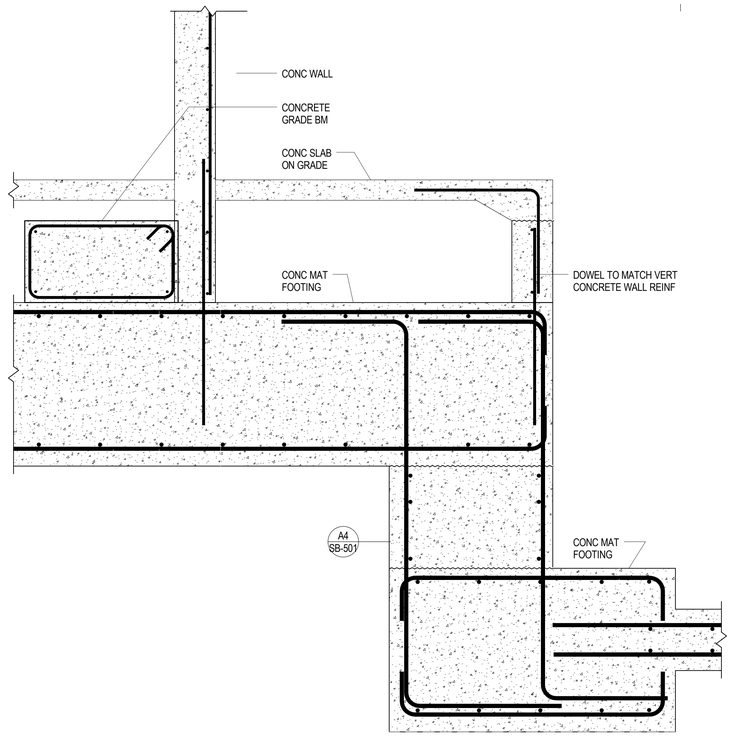

B1 / SB-504 CONC MAT FOOTING STEP AT ELEVATOR
NO SCALE

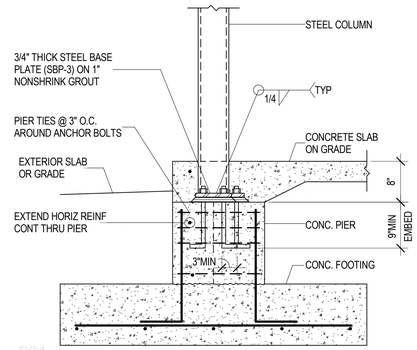

D3 / SB-504 TYP STEEL COLUMN BASE AT CONC PIER IN FOUNDATION WALL
NO SCALE

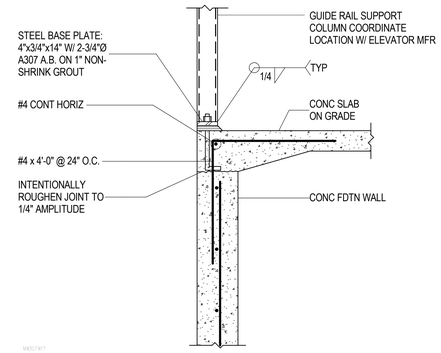

D4 / SB-504 TYP ELEVATOR GUIDE RAIL SUPPORT COLUMN BEARING ON CONC FDTN WALL
NO SCALE

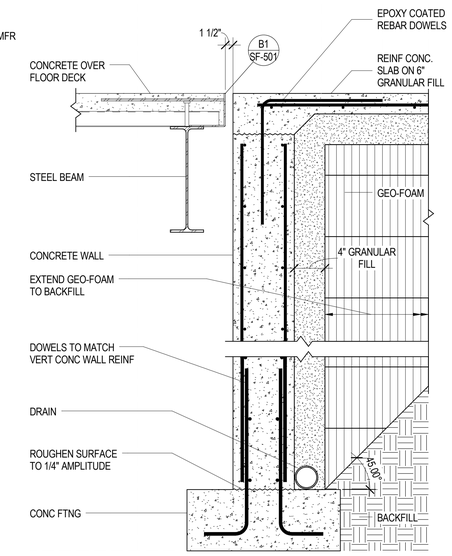

D5 / SB-504 CONCRETE FOUNDATION WALL W/ BUILT-UP GEO-FOAM - ONE SIDE
NO SCALE

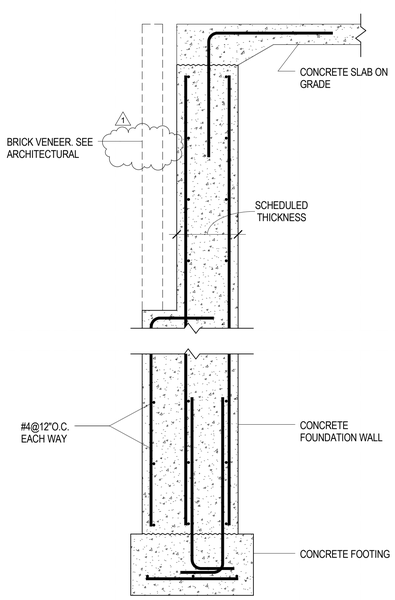

A1 / SB-504 CONCRETE FOUNDATION WALL W/ BRICK VENEER
NO SCALE

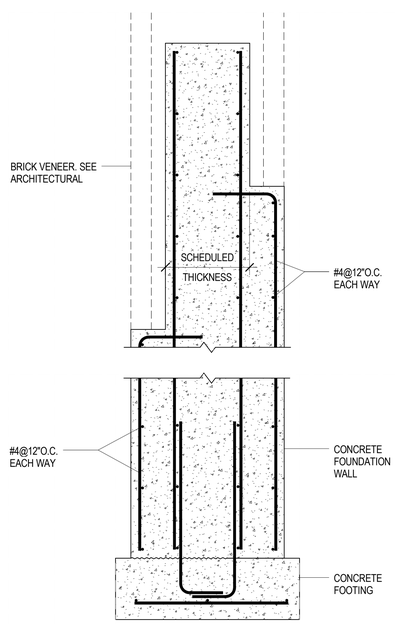

A2 / SB-504 CONCRETE FOUNDATION WALL W/ BRICK VENEER
NO SCALE

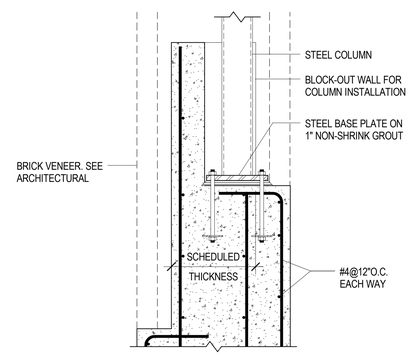

C3 / SB-504 STEEL COLUMN BEARING AT FOUNDATION WALL
NO SCALE

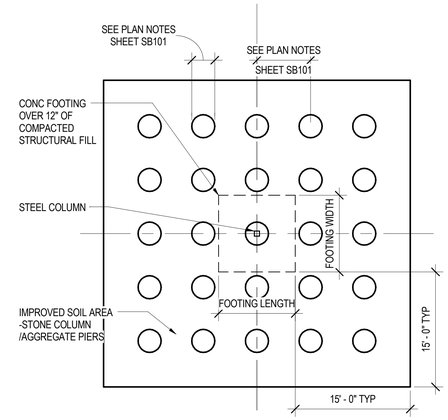

C4 / SB-504 AREA-2 TYPICAL UNDER FOOTINGS & IN-FIELD
NO SCALE

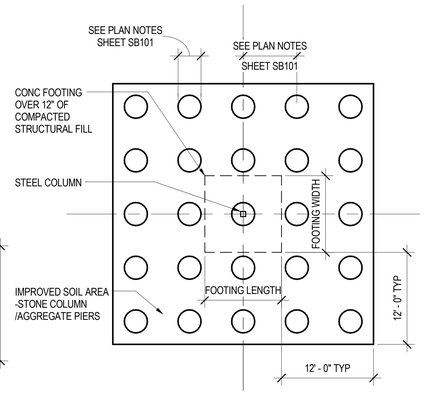

C5 / SB-504 AREA-1 TYPICAL UNDER FOOTINGS & IN-FIELD
NO SCALE

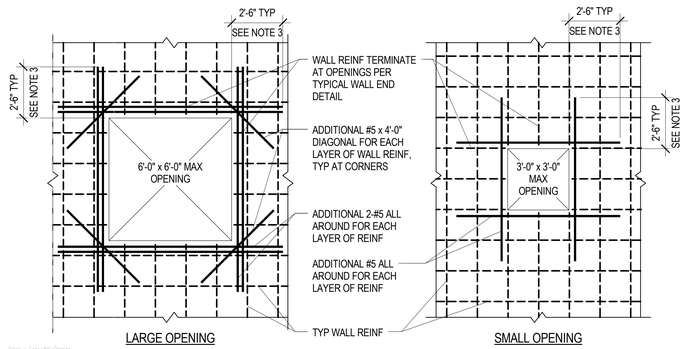

NOTES:
1. OMIT ADDED REINFORCEMENT SHOWN WHEN SPECIAL REINFORCEMENT INDICATED ON PLANS OR DETAILS, EXCEEDS THIS REINFORCEMENT.
2. CONTRACTOR SHALL VERIFY ALL OPENINGS NOT SHOWN ON THE STRUCTURAL DRAWINGS WITH THE STRUCTURAL ENGINEER BEFORE PLACEMENT.
3. WHEN EDGE OF CONCRETE CLOSE TO OPENING WILL NOT ALLOW THIS LENGTH TERMINATE AT EDGE WITH STANDARD HOOK.
4. WHERE MULTIPLE OPENINGS OCCUR WITHIN TWO TIMES THE OPENING DIMENSION, THE GROUP OF OPENINGS SHALL BE TREATED AS A SINGLE OPENING

A3 / SB-504 TYPICAL OPENINGS THROUGH CONCRETE WALLS
NO SCALE

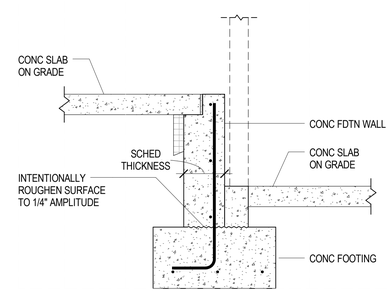

A5 / SB-504 CONCRETE FOUNDATION WALL BEARING ON CONCRETE FOOTING AT SLAB STEP
NO SCALE

GSBS ARCHITECTS
375 WEST 200 SOUTH
SALT LAKE CITY, UT 84101
P 801.521.8600
F 801.521.7913
www.gsbsarchitects.com

CANNONDESIGN
CANNON DESIGN
829 NORTH 1st AVENUE
PHOENIX, AZ 85003
602.294.6500

REVISIONS:

1	05/04/2012	ADDENDUM #2

REAVELEY ENGINEERS + ASSOCIATES
Consulting Structural Engineers
P 801.486.3883
F 801.485.0911
675 E. 500 S. Suite 400
Salt Lake City, Utah 84102
www.reaveley.com

PROFESSIONAL STRUCTURAL ENGINEER #144210 4/27/2012 Ronald J. Reaveley STATE OF UTAH

UTAH VALLEY UNIVERSITY
STUDENT LIFE CENTER & PARKING STRUCTURE

800 WEST UNIVERSITY PARKWAY
OREM, UT 84058

DFCM
4110 STATE OFFICE BUILDING
SALT LAKE CITY, UT 84112

DRAWN BY:	RH/RE+A
CHECKED BY:	OB/RE+A
OWNER PROJECT NO.:	#10289790
GSBS PROJECT NO.:	2011.045.00
ISSUED DATE:	04.27.2012

FOOTING AND FOUNDATION DETAILS

CONSTRUCTION DOCUMENTS

SB-504

MASONRY REINFORCING BAR LAP SPLICE SCHEDULE

BAR SIZE	f'm = 1500 psi									
	6" CMU	8" CMU		10" CMU		12" CMU				
	CLASS	CLASS		CLASS		CLASS				
	A	A	B	A	B	A	B			
#3	19"	19"	19"	19"	19"	19"	19"			
#4	25"	25"	30"	25"	28"	25"	28"			
#5	35"	31"	49"	31"	45"	31"	45"			
#6	81"	57"	**	53"	92"	53"	92"			
#7	-	79"	**	61"	**	61"	**			
#8	-	**	**	87"	**	75"	**			
#9	-	-	-	**	**	90"	**			

NOTES:

1. CLASS A SPLICES MAY BE USED WHEN ONLY ONE BAR IS CONTINUOUS IN THE MASONRY CELL OR COURSE.
2. CLASS B SPLICES SHALL BE USED WHEN TWO BARS ARE CONTINUOUS IN THE MASONRY CELL OR COURSE.
3. ** INDICATES THAT A LAP SPLICE IS NOT ALLOWED AND MECHANICAL BAR COUPLERS ARE REQUIRED FOR THE BAR SPLICES.
4. WHERE VERTICAL BARS HAVE A REQUIRED LAP SPLICE GREATER THAN THE HEIGHT OF THE GROUT POUR, THE BAR SPLICE SHALL BE MADE WITH A MECHANICAL BAR COUPLER. WHERE THE HEIGHT OF THE GROUT POUR EXCEEDS 60 INCHES, HIGH LIFT GROUTING PROCEDURES SHALL BE FOLLOWED.
5. WHERE MECHANICAL BAR COUPLERS ARE USED, THE CONNECTOR SHALL DEVELOP 125% OF THE SPECIFIED YIELD STRENGTH OF THE BAR IN TENSION AND COMPRESSION.

C4 / SB-602 TYPICAL MASONRY COLUMN DIAGRAMS
NO SCALE

MASONRY WALL SCHEDULE

MARK	THICKNESS	MATERIAL	REINFORCING VERTICAL	REINFORCING HORIZONTAL	REMARKS
MW-1	8"	CMU	#5 @ 32" O.C.	#5 @ 48" O.C.	
MW-2	6"	CMU	#5 @ 32" O.C.	#4 @ 48" O.C.	
MW-3	8"	CMU	#5 @ 24" O.C.	#5 @ 48" O.C.	
MW-4	12"	CMU	2-#4 @ 32" O.C. 1	#5 @ 48" O.C.	

1. PROVIDE SCHEDULED VERTICAL REINFORCING BARS AT ALL CORNERS, ENDS OF WALLS, AND SPACED AS SCHEDULED, UNLESS NOTED OTHERWISE.
2. HORIZONTAL REINFORCING BARS SHALL BE CONTINUOUS AT ALL CORNERS AND AT INTERSECTING WALLS. PROVIDE CORNER BARS WITH THE REQUIRED LAP SPLICE LENGTH.
3. TERMINATE ALL HORIZONTAL REINFORCING BARS AT ENDS OF WALLS AND EDGES OF OPENINGS WITH A STANDARD HOOK AROUND VERTICAL REINFORCING BARS.
4. SEE PLANS, DETAILS AND GENERAL STRUCTURAL NOTES FOR ADDITIONAL REINFORCING REQUIREMENTS.
5. GROUT SOLID ALL CELLS BELOW GRADE, CELLS CONTAINING EMBEDS (HSA'S, DBA'S, ANCHOR BOLTS, ETC.), AND CELLS CONTAINING REINFORCING. CONSOLIDATE GROUT AS PER THE GENERAL STRUCTURAL NOTES.
6. HORIZONTAL WALL REINFORCING SHALL BE PLACED INSIDE THE VERTICALS OF MASONRY COLUMNS.
7. HORIZONTAL WALL REINFORCING SHALL CONTINUE THROUGH MASONRY LINTELS. WHERE BOTH HORIZONTAL WALL REINFORCING AND LINTEL REINFORCING OCCUR IN THE SAME COURSE, THE LARGER BARS ARE TO REPLACE THE SMALLER BARS.

MASONRY COLUMN SCHEDULE

MARK	DIMENSIONS WIDTH	DIMENSIONS DEPTH	REINFORCING VERTICAL	REINFORCING TIES	REMARKS
MC-1	1' - 4"	8"	4-#4	NONE	SEE C4/SB-602
MC-2	2' - 0"	8"	4-#4	NONE	

1. THE CENTERLINE OF VERTICAL BARS SHALL BE LOCATED 2.1/2" FROM THE FACE OF THE MASONRY. HORIZONTAL BARS SHALL BE LOCATED TO THE INSIDE OF THE VERTICAL BARS.
2. UNLESS NOTED OTHERWISE, VERTICAL REINFORCING AND TIES SHALL EXTEND FULL HEIGHT OF THE WALL.
3. MASONRY COLUMN VERTICAL BARS OR DOWELS IN CONCRETE FOUNDATION WALLS SHALL BE TIED WITH #3 TIES @ 8" O.C.

MASONRY LINTEL SCHEDULE

MARK	LINTEL DEPTH	LINTEL WIDTH	MASONRY TYPE	LINTEL HORIZONTAL	LINTEL STIRRUPS	MAXIMUM SPAN	REMARKS
ML-1	8"	6" OR 8"	CMU	1- #7 CONT.	-----	3'-4"	
ML-2	16"	6" OR 8"	CMU	1- #7 CONT. TOP & BOT.	#3 @ 6" O.C. 1	5'-4"	
ML-3	24"	6" OR 8"	CMU	1- #7 CONT. TOP & BOT.	#3 @ 8" O.C.	8'-0"	
ML-4	32"	6" OR 8"	CMU	1- #7 CONT. TOP & BOT.	#3 @ 8" O.C.	15'-0"	
ML-5	40"	8"	CMU	1- #7 CONT. TOP & BOT.	#3 @ 8" O.C.	SEE PLAN	

NOTES:

1. MASONRY LINTELS ML-1 THROUGH ML-4 SHALL BE USED OVER OPENINGS IN MASONRY WALLS WHEN A SPECIFIC MASONRY LINTEL IS NOT OTHERWISE SPECIFIED. THE MASONRY LINTEL TO BE USED SHALL BE DETERMINED BY THE MAXIMUM SPAN AS SPECIFIED IN THIS SCHEDULE. WHEN A SPECIFIC MASONRY LINTEL IS CALLED OUT ON THE PLAN, THE MAXIMUM SPAN AS NOTED IN THIS SCHEDULE SHALL NOT APPLY

2. MASONRY LINTELS ML-1 THROUGH ML-4 SHALL NOT BE LOCATED BELOW ANY FLOOR, OR ROOF BEAM, OR GIRDER, OR ANY OTHER CONCENTRATED LOAD UNLESS SHOWN SPECIFICALLY ON THE PLAN SHEET. JOISTS SHALL NOT BEAR ON ANY LINTEL LESS THAN 16" DEEP.

3. FOR MASONRY LINTELS NOT SHOWN ON THE DRAWINGS THAT CARRY ANY FLOOR, OR ROOF BEAM, OR GIRDER, OR ANY OTHER CONCENTRATED LOAD, OR THAT SPAN GREATER THAN 10'-0" CONSULT THE STRUCTURAL ENGINEER.

4. EXTEND ALL HORIZONTAL REINFORCING 48 BAR DIAMETERS BEYOND THE EDGE OF THE OPENING. IF HORIZONTAL REINFORCING CANNOT BE EXTENDED 48 BAR DIAMETERS BEYOND THE EDGE OF THE OPENING, PROVIDE 90 DEGREE STANDARD HOOK.

5. GROUT MASONRY LINTELS MONOLITHICALLY WITH THE SUPPORT WALL OR COLUMN AT EACH END.

6. SPLICE TOP BARS AT MIDSPAN OF LINTEL ONLY.

7. SPLICE BOTTOM BARS OVER SUPPORTS ONLY.

8. FOR WALL ABOVE LINTEL, DOWEL VERTICAL REINFORCING INTO FULL DEPTH OF THE LINTEL OR 48 BAR DIAMETERS, WHICHEVER IS LESS.

9. HORIZONTAL WALL REINFORCING SHALL CONTINUE THROUGH MASONRY LINTELS. WHERE BOTH HORIZONTAL WALL REINFORCING AND LINTEL REINFORCING WOULD OCCUR IN THE SAME COURSE, THE LARGER BARS ARE TO REPLACE THE SMALLER BARS.

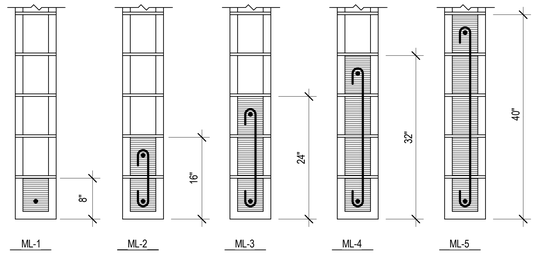

A5 / SB-602 TYPICAL MASONRY LINTEL DETAILS
NO SCALE

GSBS ARCHITECTS
375 WEST 200 SOUTH
SALT LAKE CITY, UT 84101
P 801.521.8600
F 801.521.7913
www.gsbsarchitects.com

CANNONDESIGN
CANNON DESIGN
829 NORTH 1st AVENUE
PHOENIX, AZ 85003
602.294.6500

REVISIONS:

1	05/04/2012	ADDENDUM #2

REAVELEY ENGINEERS + ASSOCIATES
Consulting Structural Engineers
P: 801.486.3883
F: 801.485.0911
675 E. 500 S. Suite 400
Salt Lake City, Utah 84102
www.reaveley.com

PROFESSIONAL STRUCTURAL ENGINEER #144210 4/27/2012 Ronald J. Reaveley STATE OF UTAH

UTAH VALLEY UNIVERSITY
STUDENT LIFE CENTER &
PARKING STRUCTURE

800 WEST UNIVERSITY PARKWAY
OREM, UT 84058

DFCM

4110 STATE OFFICE BUILDING
SALT LAKE CITY, UT 84112

DRAWN BY:	RH/RE+A
CHECKED BY:	OB/RE+A
OWNER PROJECT NO.:	#10289790
GSBS PROJECT NO.:	2011.045.00
ISSUED DATE:	04.27.2012

SCHEDULES

CONSTRUCTION DOCUMENTS

SB-602

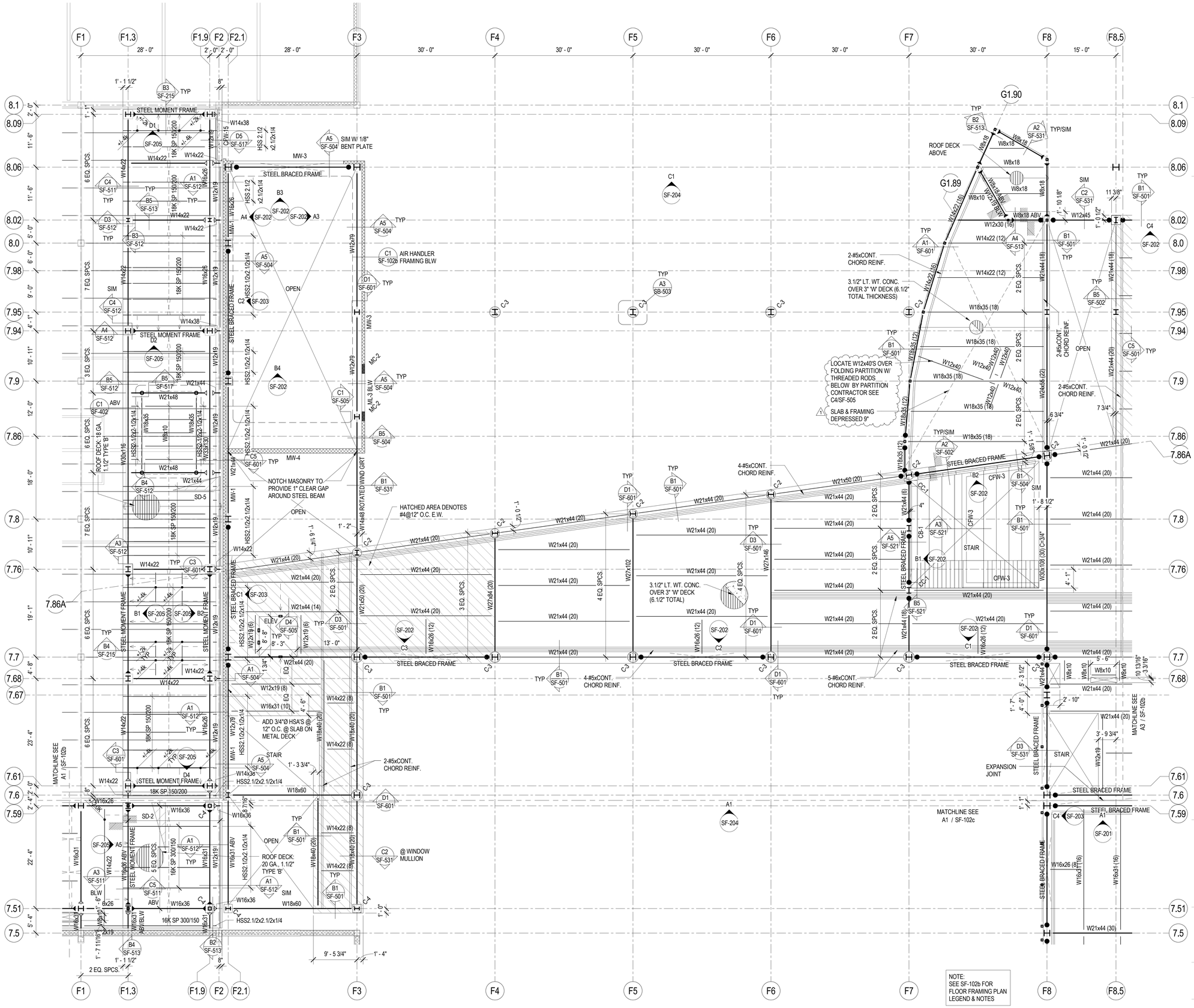

NOTE:
SEE SF-102b FOR FLOOR FRAMING PLAN LEGEND & NOTES

A1 / SF-102a FLOOR & LOW ROOF FRAMING PLAN - LEVEL 2 ZONE A

SCALE: 1/8" = 1'-0"

GSBS ARCHITECTS
375 WEST 200 SOUTH
SALT LAKE CITY, UT 84101
P 801.521.8600
F 801.521.7913
www.gsbsarchitects.com

CANNONDESIGN
CANNON DESIGN
829 NORTH 1st AVENUE
PHOENIX, AZ 85003
602.294.6500

REVISIONS:

1	05/04/2012	ADDENDUM #2

REAVELEY ENGINEERS + ASSOCIATES
Consulting Structural Engineers
P 801.486.3883
F 801.485.0911
675 E. 500 S. Suite 400
Salt Lake City, Utah 84102
www.reaveley.com

Ronald J. Reaveley
PROFESSIONAL STRUCTURAL ENGINEER #144210
4/27/2012
Ronald J. Reaveley
STATE OF UTAH

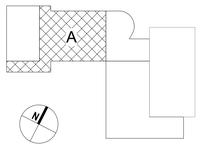

KEYPLAN - NTS

UTAH VALLEY UNIVERSITY
STUDENT LIFE CENTER & PARKING STRUCTURE

800 WEST UNIVERSITY PARKWAY
OREM, UT 84058

DFCM

4110 STATE OFFICE BUILDING
SALT LAKE CITY, UT 84112

DRAWN BY:	RH/RE+A
CHECKED BY:	OB/RE+A
OWNER PROJECT NO.:	#10289790
GSBS PROJECT NO.:	2011.045.00
ISSUED DATE:	04.27.2012

FLOOR & LOW ROOF FRAMING PLAN - LEVEL 2 ZONE A

CONSTRUCTION DOCUMENTS

SF-102a

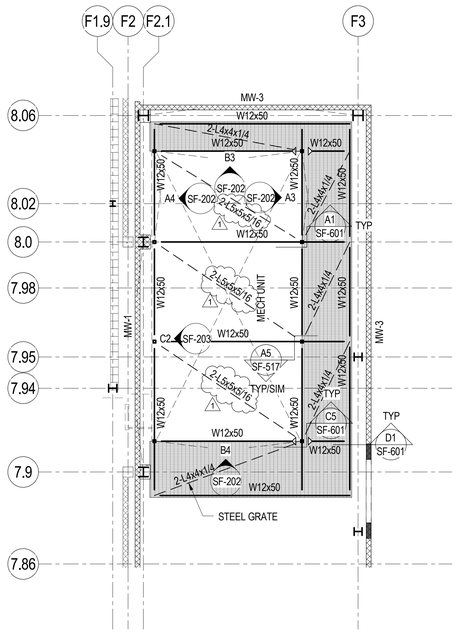

C1 SF-102b AIR HANDLER FRAMING PLAN

SCALE: 1/8" = 1'-0"

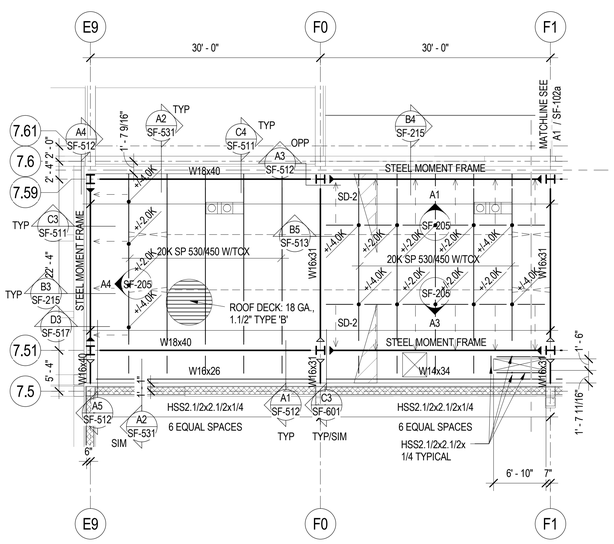

A1 SF-102b LOW ROOF FRAMING PLAN - LEVEL 2 ZONE A CORRIDOR

SCALE: 1/8" = 1'-0"

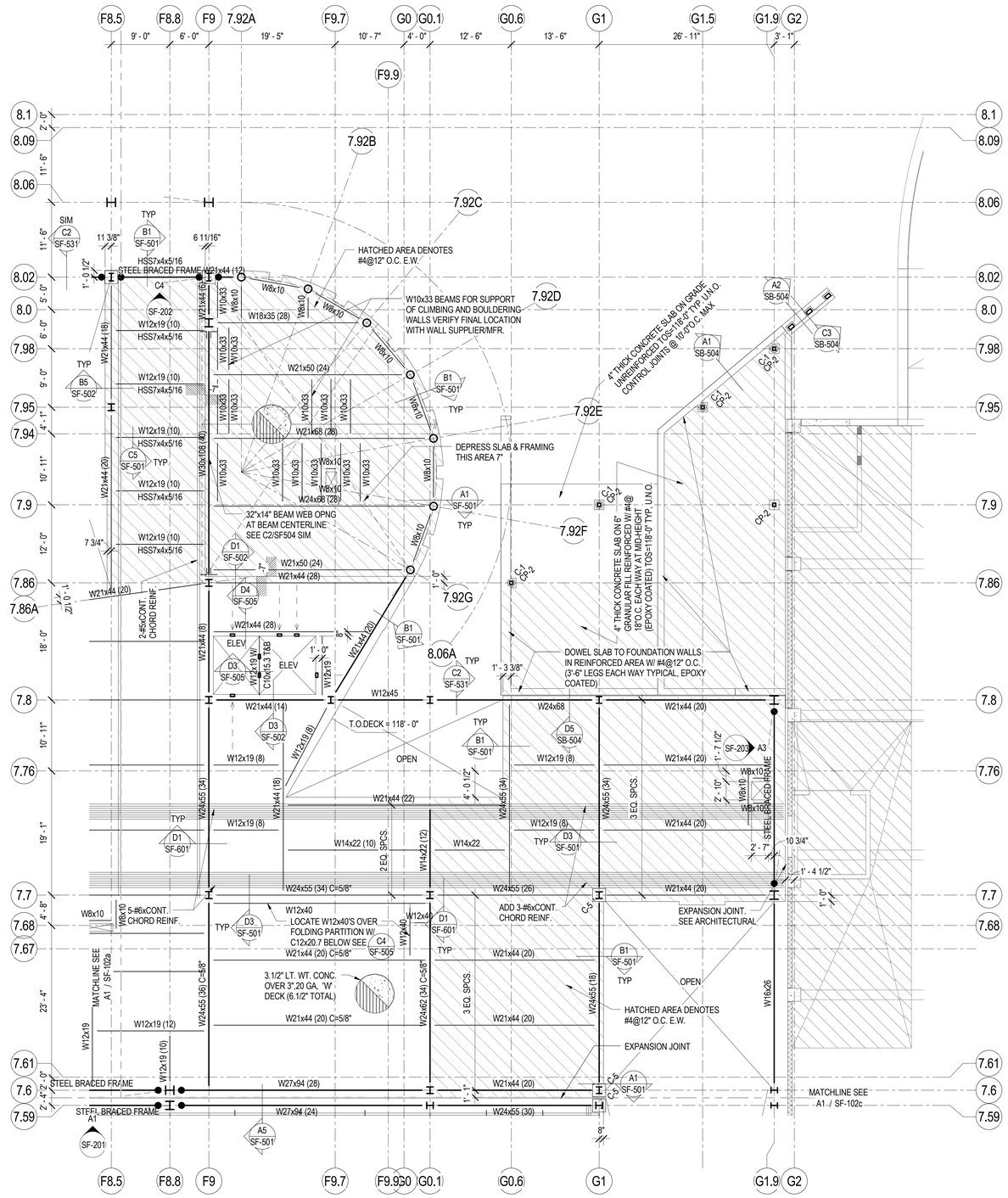

A3 SF-102b FLOOR FRAMING PLAN - LEVEL 2 ZONE B

SCALE: 1/8" = 1'-0"

FLOOR FRAMING PLAN LEGEND

- CONCRETE WALL
- CONCRETE LINTEL IN CONCRETE WALL
- CONCRETE COLUMN IN CONCRETE WALL
- CONCRETE COLUMN
- CONCRETE JAMB COLUMN POURED MONOLITHIC WITH CONCRETE WALL
- MASONRY WALL
- MASONRY LINTEL IN MASONRY WALL
- MASONRY COLUMN IN MASONRY WALL
- STEEL COLUMN - TUBE
- STEEL COLUMN - WIDE FLANGE
- STEEL COLUMN - PIPE
- STEEL BRACED FRAME
- MOMENT CONNECTION
- CANTILEVER FULL PEN CONNECTION
- COLLECTOR CONNECTION SEE B1/SF601
- DOUBLE SHEAR CONNECTION SEE C1/SF601
- STEEL BEAM OR GIRDER
- STEEL JOIST OR PURLIN
- STEEL ANGLE BRACE / KICKER. SEE B1/SF501 FOR SLAB EDGE KICKER. SEE D1/SF215 FOR FRAME BRACE
- CROSS BRIDGING
- HORIZONTAL BRIDGING
- 0" CHANGE IN ELEVATION
- CONCRETE ON METAL DECK
- ROOF DECK
- THICKENED SLAB - SEE PLAN
- SLAB REINFORCING - SEE PLAN
- RECESSED/DEPRESSED SLAB ON METAL DECK
- OPENING

FLOOR FRAMING PLAN NOTES

1. SEE GENERAL STRUCTURAL NOTE (III.D.8) AND DETAILS D3/SF501 FOR CONTROL JOINTS IN SUSPENDED SLABS OVER STEEL DECK.

2. SEE DETAILS D1/SF501 FOR MISCELLANEOUS FLOOR OPENINGS.

3. SEE GENERAL STRUCTURAL NOTE (5.10) FOR STEEL DECK REQUIREMENTS WHERE 3-SPAN CONDITIONS ARE NOT POSSIBLE.

4. PROVIDE 4.1/2" LONG HEADED STUD ANCHORS ON COMPOSITE BEAMS IN THE AREAS OF 1" SLAB RECESSES.

5. SEE DETAILS C1 & C2/SF501 FOR TYPICAL HEADED STUD PLACEMENT AND COMPOSITE DECK BEARING DETAILS.

6. REFR TO DETAIL C4/SF501 FOR TYPICAL HOUSEKEEPING PADS AND CURBS ON FLOOR DECK.

7. REFER TO DETAILS A3 & A5/SF502 FOR MASONRY WALL BRACING AND SLAB REINF. REQUIREMENTS.

8. REINFORCEMENT SHOWN ON PLANS SHALL BE LOCATED AT MID-HEIGHT OF CONCRETE. LOCATED BETWEEN THE TOP OF METAL DECK AND THE TOP OF CONCRETE.

9. CONTRACTOR SHALL FIELD VERIFY EXISTING CONDITIONS PRIOR TO DETAILING MANUFACTURING, ERECTING OR INSTALLING ANT STRUCTURAL ELEMENT. EXISTING DIMENSIONS ARE PROVIDED FOR INFORMATION PURPOSES ONLY. IF CONDITIONS SHOWN DO NOT MATCH ACTUAL CONDITIONS, CONTACT THE ENGINEER AS SOON AS POSSIBLE.

10. ALL CHORD REINFORCING IN SLABS SHALL HAVE STAGGERED LAP SPLICES AT 4"O.C.

11. SEE DETAIL A3/SB-503 FOR CONCRETE COLUMN COVER REINFORCING AROUND STEEL COLUMNS.

12. REFER TO DETAIL B2/SF-505 FOR TYPICAL STAIR LANDING COLUMN AND CONNECTION. PROVIDE 4 COLUMNS MIN. AT EACH LANDING.

GSBS ARCHITECTS
375 WEST 200 SOUTH
SALT LAKE CITY, UT 84101
P 801.521.8600
F 801.521.7913
www.gsbsarchitects.com

CANNONDESIGN
CANNON DESIGN
829 NORTH 1st AVENUE
PHOENIX, AZ 85003
602.294.6500

REVISIONS:

1	05/04/2012	ADDENDUM #2

REAVELEY ENGINEERS + ASSOCIATES
Consulting Structural Engineers
P 801.486.3883
F 801.485.0911
675 E. 500 S. Suite 400
Salt Lake City, Utah 84102
www.reaveley.com

PROFESSIONAL STRUCTURAL ENGINEER #144210 4/27/2012 Ronald J. Reaveley STATE OF UTAH

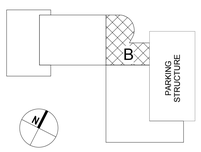

KEYPLAN - NTS

UTAH VALLEY UNIVERSITY STUDENT LIFE CENTER & PARKING STRUCTURE

800 WEST UNIVERSITY PARKWAY
OREM, UT 84058

DFCM

4110 STATE OFFICE BUILDING
SALT LAKE CITY, UT 84112

DRAWN BY:	RH/RE+A
CHECKED BY:	OB/RE+A
OWNER PROJECT NO.:	#102897790
GSBS PROJECT NO.:	2011.045.00
ISSUED DATE:	04.27.2012

FLOOR & LOW ROOF FRAMING PLAN - LEVEL 2 ZONE B

CONSTRUCTION DOCUMENTS

SF-102b

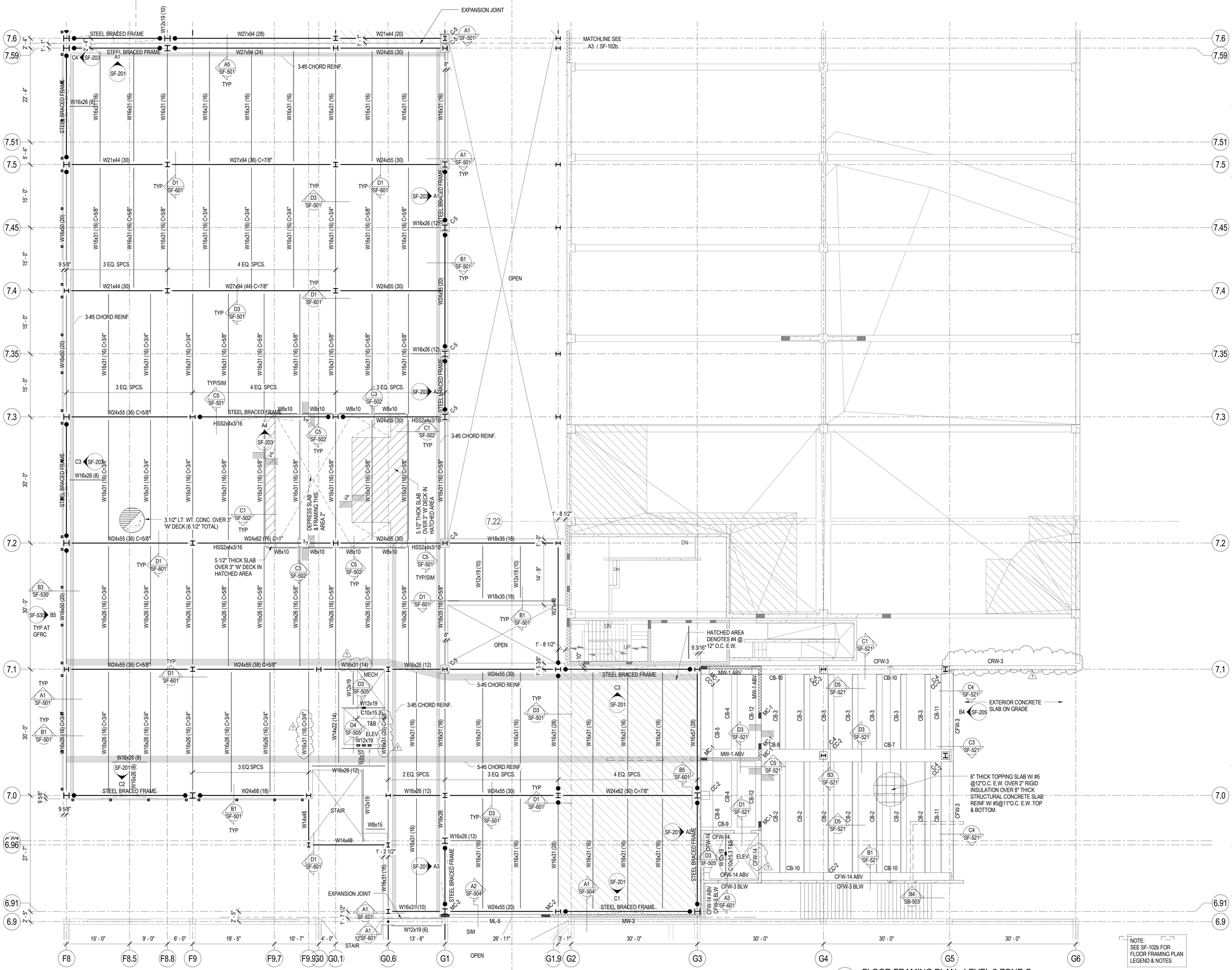

A1 SF-102c FLOOR FRAMING PLAN - LEVEL 2 ZONE C

SCALE: 1/8" = 1'-0"

NOTE:
SEE SF-102b FOR FLOOR FRAMING PLAN LEGEND & NOTES

GSBS ARCHITECTS
375 WEST 200 SOUTH
SALT LAKE CITY, UT 84101
P 801.521.8600
F 801.521.7913
www.gsbsarchitects.com

CANNONDESIGN
CANNON DESIGN
829 NORTH 1st AVENUE
PHOENIX, AZ 85003
602.294.6500

REVISIONS:

1	05/04/2012	ADDENDUM #2

REAVELEY ENGINEERS + ASSOCIATES
Consulting Structural Engineers
P:801.486.3883
F:801.485.0911
675 E. 500 S. Suite 400
Salt Lake City, Utah 84102
www.reaveley.com

PROFESSIONAL STRUCTURAL ENGINEER #144210 5/27/2012 Ronald J. Reaveley STATE OF UTAH

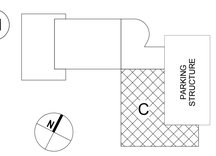

KEYPLAN - NTS

UTAH VALLEY UNIVERSITY STUDENT LIFE CENTER & PARKING STRUCTURE

800 WEST UNIVERSITY PARKWAY
OREM, UT 84058

DFCM

4110 STATE OFFICE BUILDING
SALT LAKE CITY, UT 84112

DRAWN BY:	RH/RE+A
CHECKED BY:	OB/RE+A
OWNER PROJECT NO.:	#10289790
GSBS PROJECT NO.:	2011.045.00
ISSUED DATE:	04.27.2012

FLOOR FRAMING PLAN - LEVEL 2 ZONE C

CONSTRUCTION DOCUMENTS

SF-102c

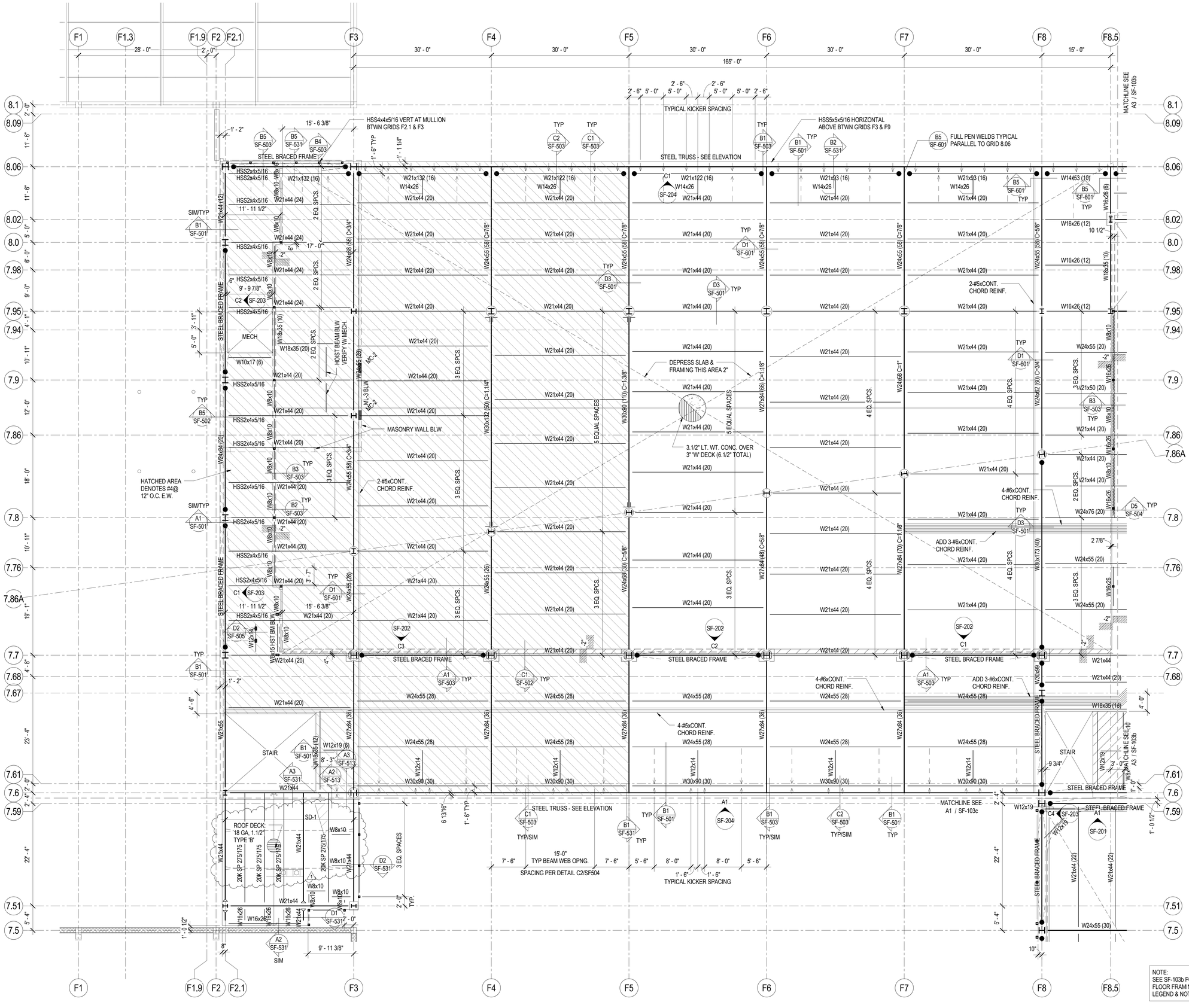

NOTE:
SEE SF-103b FOR FLOOR FRAMING PLAN LEGEND & NOTES

A1 / SF-103a FLOOR & LOW ROOF FRAMING PLAN - LEVEL 3 ZONE A

SCALE: 1/8" = 1'-0"

GSBS ARCHITECTS
375 WEST 200 SOUTH
SALT LAKE CITY, UT 84101
P 801.521.8600
F 801.521.7913
www.gsbsarchitects.com

CANNONDESIGN
CANNON DESIGN
829 NORTH 1st AVENUE
PHOENIX, AZ 85003
602.294.6500

REVISIONS:

1	05/04/2012	ADDENDUM #2

REAVELEY ENGINEERS + ASSOCIATES
Consulting Structural Engineers
P 801.486.3883
F 801.485.0911
675 E. 500 S. Suite 400
Salt Lake City, Utah 84102
www.reaveley.com

PROFESSIONAL STRUCTURAL ENGINEER #144210 5/27/2012 Ronald J. Reaveley STATE OF UTAH

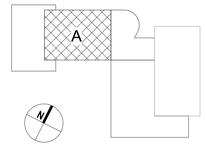

KEYPLAN - NTS

UTAH VALLEY UNIVERSITY
STUDENT LIFE CENTER & PARKING STRUCTURE

800 WEST UNIVERSITY PARKWAY
OREM, UT 84058

DFCM

4110 STATE OFFICE BUILDING
SALT LAKE CITY, UT 84112

DRAWN BY:	RH/RE+A
CHECKED BY:	OB/RE+A
OWNER PROJECT NO.:	#10289790
GSBS PROJECT NO.:	2011.045.00
ISSUED DATE:	04.27.2012

FLOOR & LOW ROOF FRAMING PLAN - LEVEL 3 ZONE A

CONSTRUCTION DOCUMENTS

SF-103a

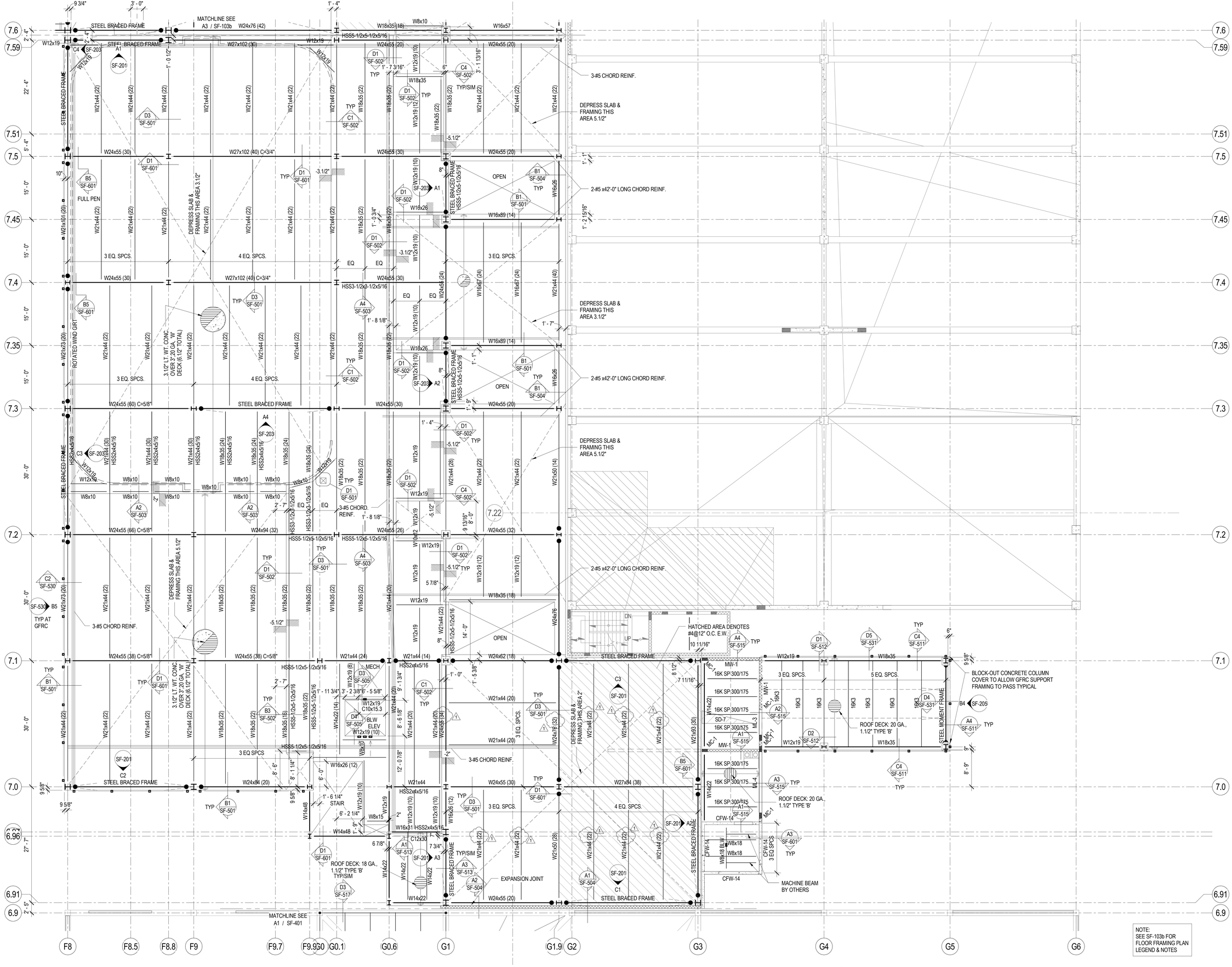

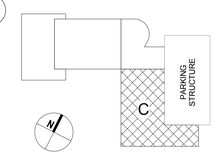

KEYPLAN - NTS

GSBS ARCHITECTS
375 WEST 200 SOUTH
SALT LAKE CITY, UT 84101
P 801.521.8600
F 801.521.7913
www.gsbsarchitects.com

CANNONDESIGN
CANNON DESIGN
829 NORTH 1st AVENUE
PHOENIX, AZ 85003
602.294.6500

REVISIONS:

1	05/04/2012	ADDENDUM #2

REAVELEY ENGINEERS + ASSOCIATES
Consulting Structural Engineers
P 801.486.3883
F 801.485.0911
675 E. 500 S. Suite 400
Salt Lake City, Utah 84102
www.reaveley.com

PROFESSIONAL STRUCTURAL ENGINEER #144210 5/27/2012 Ronald J. Reaveley STATE OF UTAH

UTAH VALLEY UNIVERSITY
STUDENT LIFE CENTER & PARKING STRUCTURE

800 WEST UNIVERSITY PARKWAY
OREM, UT 84058

DFCM

4110 STATE OFFICE BUILDING
SALT LAKE CITY, UT 84112

DRAWN BY:	RH/RE+A
CHECKED BY:	OB/RE+A
OWNER PROJECT NO.:	#10289790
GSBS PROJECT NO.:	2011.045.00
ISSUED DATE:	04.27.2012

FLOOR & LOW ROOF FRAMING PLAN - LEVEL 3 ZONE C

CONSTRUCTION DOCUMENTS

SF-103c

A1 / SF-103c FLOOR & LOW ROOF FRAMING PLAN - LEVEL 3 ZONE C

SCALE: 1/8" = 1'-0"

GSBS ARCHITECTS
375 WEST 200 SOUTH
SALT LAKE CITY, UT 84101
P 801.521.8600
F 801.521.7913
www.gsbsarchitects.com

CANNONDESIGN
CANNON DESIGN
829 NORTH 1st AVENUE
PHOENIX, AZ 85003
602.294.6500

REVISIONS:

1	05/04/2012	ADDENDUM #2

REAVELEY ENGINEERS + ASSOCIATES
Consulting Structural Engineers
P 801.486.3883
F 801.485.0911
675 E. 500 S. Suite 400
Salt Lake City, Utah 84102
www.reaveley.com

PROFESSIONAL STRUCTURAL ENGINEER #144210 5/27/2012 Ronald J. Reaveley STATE OF UTAH

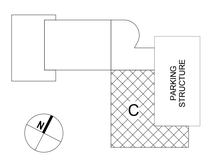

KEYPLAN - NTS

UTAH VALLEY UNIVERSITY STUDENT LIFE CENTER & PARKING STRUCTURE

800 WEST UNIVERSITY PARKWAY
OREM, UT 84058

DFCM

4110 STATE OFFICE BUILDING
SALT LAKE CITY, UT 84112

DRAWN BY:	RH/RE+A
CHECKED BY:	OB/RE+A
OWNER PROJECT NO.:	#10289790
GSBS PROJECT NO.:	2011.045.00
ISSUED DATE:	04.27.2012

FLOOR FRAMING PLAN - LEVEL 4 ZONE C

CONSTRUCTION DOCUMENTS

SF-104c

NOTE:
SEE SF-104b FOR FLOOR FRAMING PLAN LEGEND & NOTES

A1 / SF-104c FLOOR FRAMING PLAN - LEVEL 4 ZONE C
SCALE: 1/8" = 1'-0"

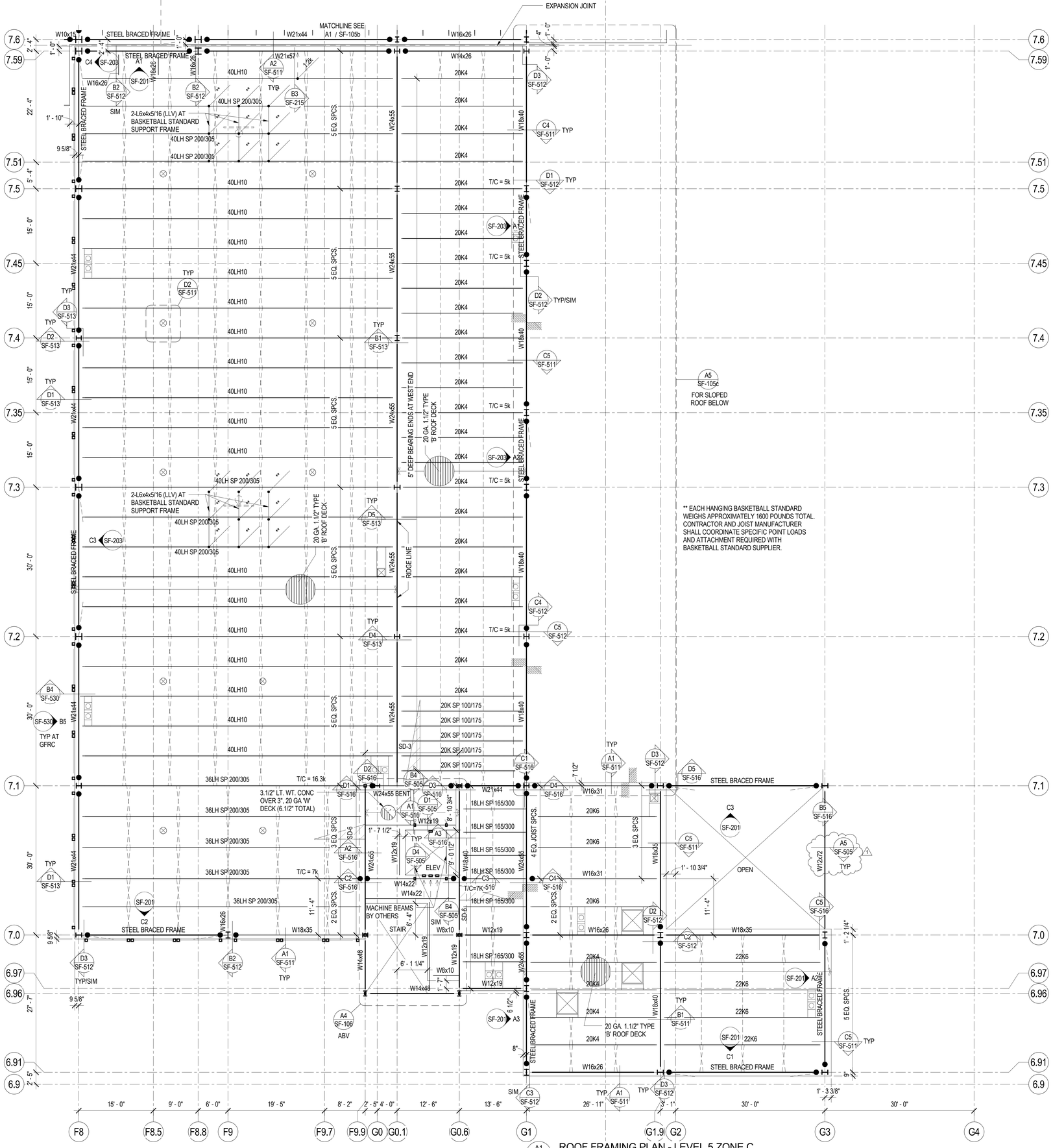

A1 SF-105c ROOF FRAMING PLAN - LEVEL 5 ZONE C

SCALE: 1/8" = 1'-0"

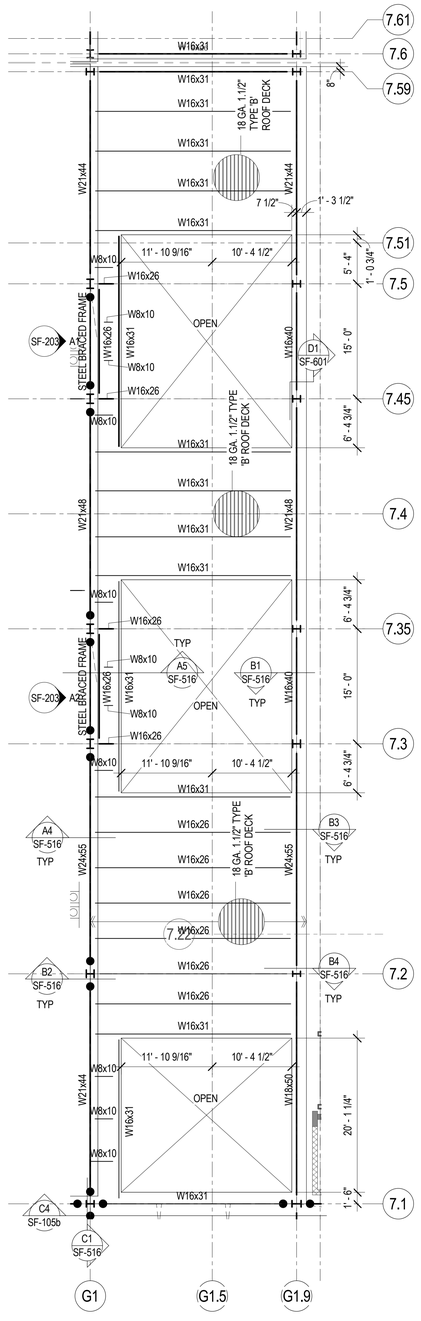

A5 SF-105c LOW ROOF FRAMING PLAN - SLOPED ROOF

SCALE: 1/8" = 1'-0"

NOTE:
SEE SF-105b FOR ROOF FRAMING PLAN LEGEND & NOTES

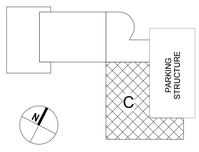

KEYPLAN - NTS

UTAH VALLEY UNIVERSITY
STUDENT LIFE CENTER & PARKING STRUCTURE

800 WEST UNIVERSITY PARKWAY
OREM, UT 84058

DFCM

4110 STATE OFFICE BUILDING
SALT LAKE CITY, UT 84112

DRAWN BY:	RH/RE+A
CHECKED BY:	OB/RE+A
OWNER PROJECT NO.:	#10289790
GSBS PROJECT NO.:	2011.045.00
ISSUED DATE:	04.27.2012

ROOF FRAMING PLAN - ZONE C

CONSTRUCTION DOCUMENTS

SF-105c

GSBS ARCHITECTS
375 WEST 200 SOUTH
SALT LAKE CITY, UT 84101
P 801.521.8600
F 801.521.7913
www.gsbsarchitects.com

CANNONDESIGN
CANNON DESIGN
829 NORTH 1st AVENUE
PHOENIX, AZ 85003
602.294.6500

REVISIONS:

1	05/04/2012	ADDENDUM #2

REAVELEY
ENGINEERS + ASSOCIATES
Consulting Structural Engineers
P 801.486.3883
F 801.485.0911
675 E. 500 S. Suite 400
Salt Lake City, Utah 84102
www.reaveley.com

PROFESSIONAL STRUCTURAL ENGINEER #144210 4/27/2012 Ronald J. Reaveley STATE OF UTAH

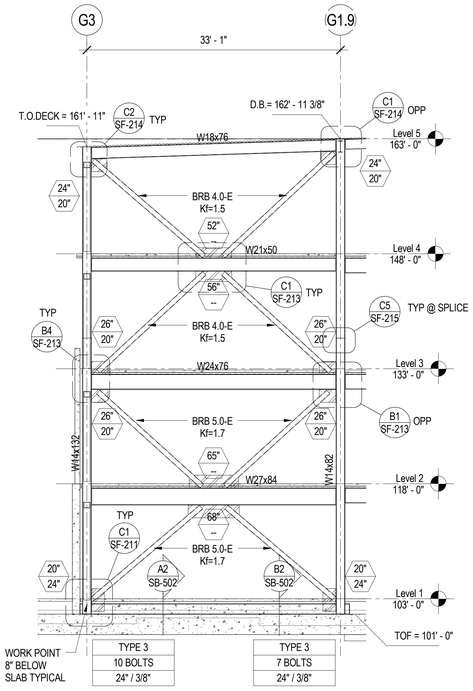

C1 / SF-201 BRBF ELEVATION GRID 6.9

SCALE: 1/8" = 1'-0"

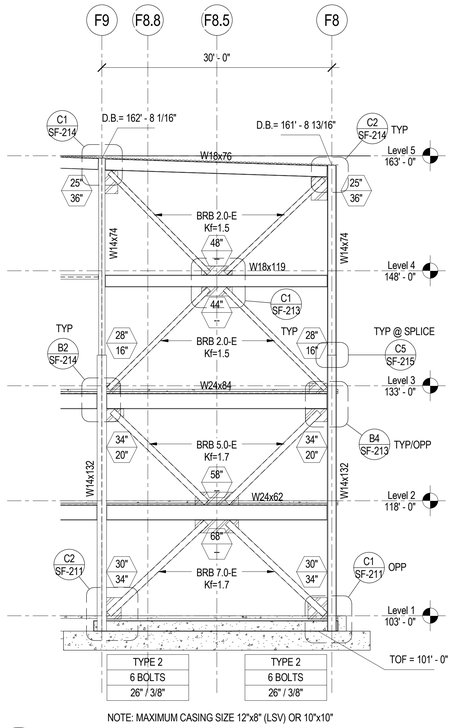

C2 / SF-201 BRBF ELEVATION ALONG GRID 7.0

SCALE: 1/8" = 1'-0"

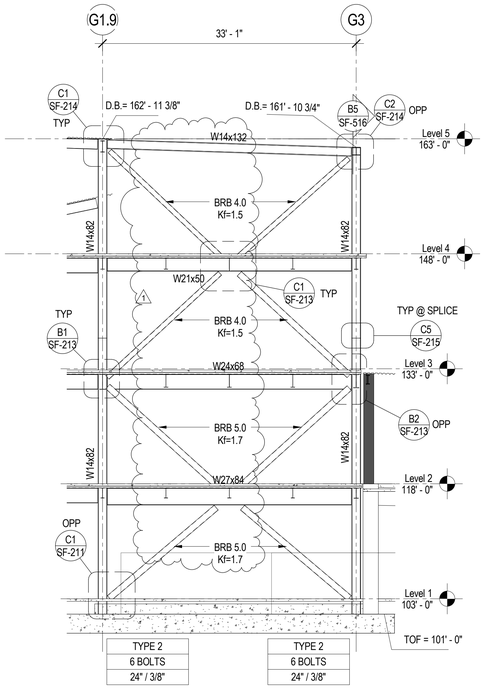

C3 / SF-201 BRBF ELEVATION GRID 7.1

SCALE: 1/8" = 1'-0"

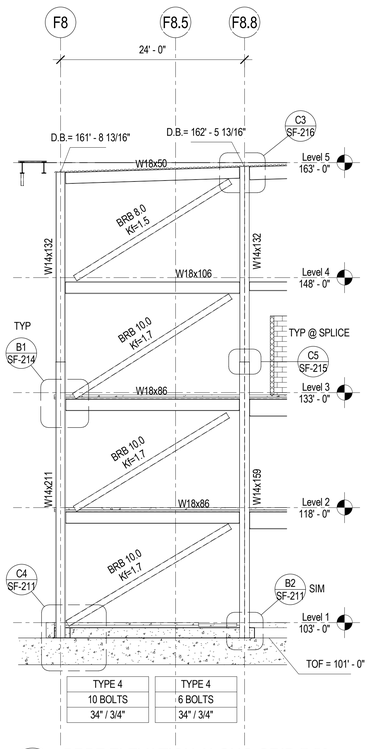

A1 / SF-201 BRBF ELEVATION ALONG GRID 7.59

SCALE: 1/8" = 1'-0"

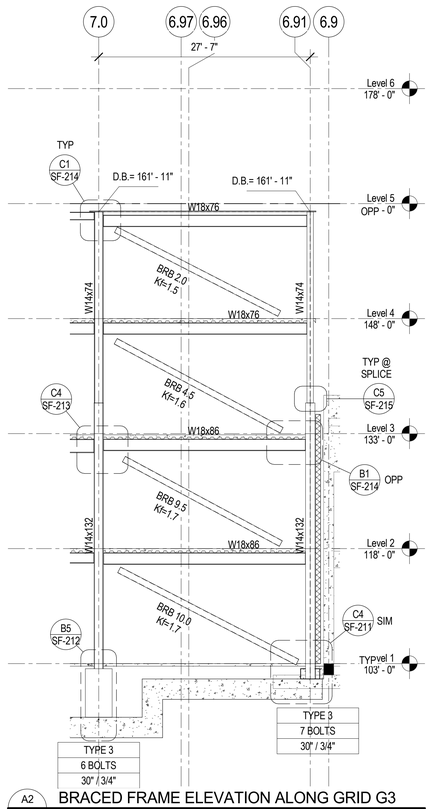

A2 / SF-201 BRACED FRAME ELEVATION ALONG GRID G3

SCALE: 1/8" = 1'-0"

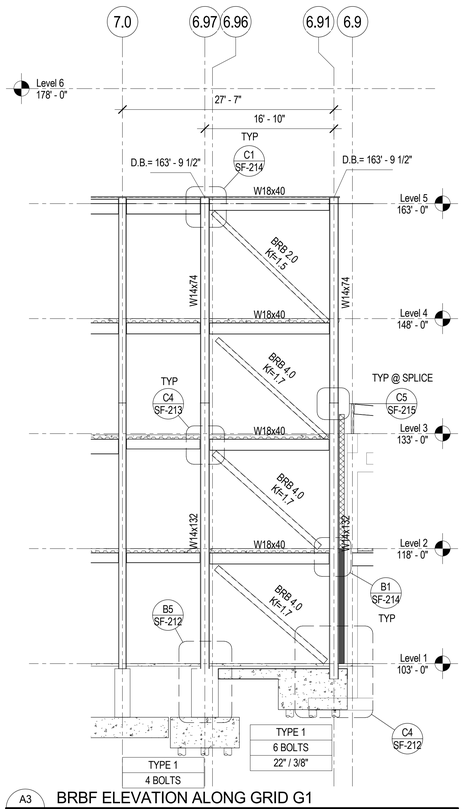

A3 / SF-201 BRBF ELEVATION ALONG GRID G1

SCALE: 1/8" = 1'-0"

BRACED FRAME ELEVATION NOTES AND LEGEND

1. ALL W-SHAPED BRACED FRAME MEMBERS SHALL BE ASTM A992 (Fy = 50KSI) STEEL, U.N.O.

2. ADD 3/4" Ø x 5" LONG HEADED STUD ANCHOR AT 24" O.C. TO ALL BRACED FRAME HORIZONTAL FRAMING MEMBERS (BEAMS) EXCEPT ROOF BEAMS.

3. BRACED FRAME BASE PLATE SYMBOL

TYPE
NO. OF A.B.
EMBED./PLATE

TYPE = BASE PLATE TYPE. SEE A1/SF211 FOR ADDITIONAL BASE PLATE AND ANCHOR BOLT INFORMATION.
AB = QUANTITY OF ANCHOR BOLTS
EMBED./PLATE = ANCHOR ROD EMBEDMENT LENGTH / ANCHOR BOLTS PLATE WASHER THICKNESS. (X") INDICATES FOOTING THICKNESS INCREASED TO ACCOMODATE ANCHOR BOLT EMBEDMENT LENGTH.

4. GUSSET DIMENSION PLATE SYMBOL

X MAX. GUSSET WIDTH
Y MAX. GUSSET HEIGHT

5. VERIFY ALL DATUM ELEVATIONS W/ ARCHITECTURAL DRAWINGS.

6. SEE PLANS FOR LOCATIONS WHERE CHORD/ COLLECTOR CONNECTIONS ARE REQUIRED.

7. SEE DETAIL B3 & B4/SF-211 FOR PROTECTED ZONES OF BRB FRAME.

8. REFER TO DETAIL A4/SF-213 FOR MAXIMUM FRAME BEAM TO COLUMN REACTIONS.

9. "BRB X.X" INDICATES MINIMUM BUCKLING RESTRAINED BRACE CROSS SECTIONAL AREA OF YIELDING CORE (Asc) THAT SHALL BE PROVIDED BY BRB SUPPLIER.

10. BRB SUPPLIER SHALL PROVIDE DESIGN OF THE BRB GUSSET PLATES AND CONNECTIONS TO THE FRAME BEAMS AND COLUMNS INCLUDING DETAILS AND SCHEDULES. INFORMATION SHOWN IN THE CONSTRUCTION DOCUMENTS RELATING TO BRB'S, GUSSET PLATES AND CONNECTIONS OF SUCH ARE INCLUDED FOR GENERAL DESIGN CONCEPT.

11. BRB SUPPLIER SHALL DESIGN GUSSET PLATE AND CONNECTIONS TO TRANSFER ALL VERTICAL FORCES THROUGH THE GUSSET TO COLUMN CONNECTION.

12. CORE PLATE MATERIAL SHALL HAVE A YIELD RANGE OF Fysc=42 KSI (+/- 4 KSI) COUPON TESTS SHALL BE TAKEN FROM PLATES AT POINT OF MANUFACTURE OF BRB'S AND SHALL BE USED TO VERIFY CONFORMANCE.

13. BRB CASINGS SHALL HAVE A SQUARE OR RECTANGULAR PROFILE AND SHALL NOT HAVE A ROUND OR CIRCULAR PROFILE.

14. CONNECTION TYPES (BOLTED, WELDED OR PINNED) ARE ALLOWED BY BRB SUPPLIER EXCEPT AT EXPOSED BRACE LOCATIONS "E". AT THESE LOCATIONS WELDED CONNECTIONS ARE REQUIRED AND SHALL MEET THE GUSSET PLATE DIMENSIONS INDICATED ON THE FRAME ELEVATIONS.

15. BRB'S SHALL BE DESIGNED ACCORDING TO THE FOLLOWING PARAMETERS:
- β max = 1.05
- ρ = 1.3
- βω max = 1.35
- I e = 1.25
- Asc = SEE FRAME ELEVATIONS
- Kf = STIFFNESS MODIFICATION FACTOR SEE FRAME ELEVATIONS

16. FOR REQUIRED DESIGN ELASTIC DRIFT AT BUCKLING RESTRAINED BRACED FRAMES SEE A5/SF212

17. BRB BRACES, CONNECTIONS AND GUSSET PLATES SHALL BE DESIGNED IN ACCORDANCE WITH AISC 341-05 SEISMIC PROVISIONS FOR STRUCTURAL STEEL BUILDINGS.

18. WHERE BOLTED CONNECTIONS ARE USED FOR BRB CONNECTION. BRB SUPPLIER SHALL DESIGN BOLTS AS A SLIP-CRITICAL CONNECTION FOR Pysc LOAD CONDITION AND SHALL ALSO DESIGN BOLTED CONNECTION FOR BEARING FOR THE ULTIMATE CONDITION (1.1 • βω • Pysc).

19. FINAL STIFFNESS MODIFICATION FACTORS SHALL BE WITHIN +/-10% OF THOSE INDICATED.

GSBS ARCHITECTS
375 WEST 200 SOUTH
SALT LAKE CITY, UT 84101
P 801.521.8600
F 801.521.7913
www.gsbsarchitects.com

CANNONDESIGN
CANNON DESIGN
829 NORTH 1st AVENUE
PHOENIX, AZ 85003
602.294.6500

REVISIONS:

1	05/04/2012	ADDENDUM #2

REAVELEY ENGINEERS + ASSOCIATES
Consulting Structural Engineers
P 801.486.3883
F 801.485.0911
675 E. 500 S. Suite 400
Salt Lake City, Utah 84102
www.reaveley.com

PROFESSIONAL STRUCTURAL ENGINEER #144210 5/27/2012 Ronald J. Reaveley STATE OF UTAH

UTAH VALLEY UNIVERSITY
STUDENT LIFE CENTER & PARKING STRUCTURE

800 WEST UNIVERSITY PARKWAY
OREM, UT 84058

DFCM

4110 STATE OFFICE BUILDING
SALT LAKE CITY, UT 84112

DRAWN BY:	RH/RE+A
CHECKED BY:	OB/RE+A
OWNER PROJECT NO.:	#10289790
GSBS PROJECT NO.:	2011.045.00
ISSUED DATE:	04.27.2012

BRACED FRAME ELEVATIONS

CONSTRUCTION DOCUMENTS

SF-201

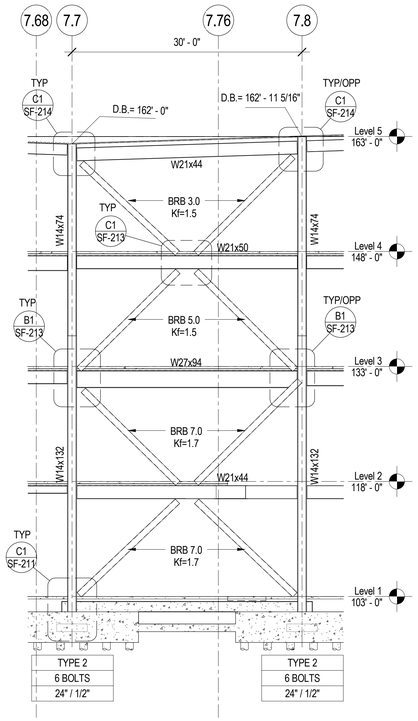

C1 SF-203 BRBF ELEVATION ALONG GRID F2.1

SCALE: 1/8" = 1'-0"

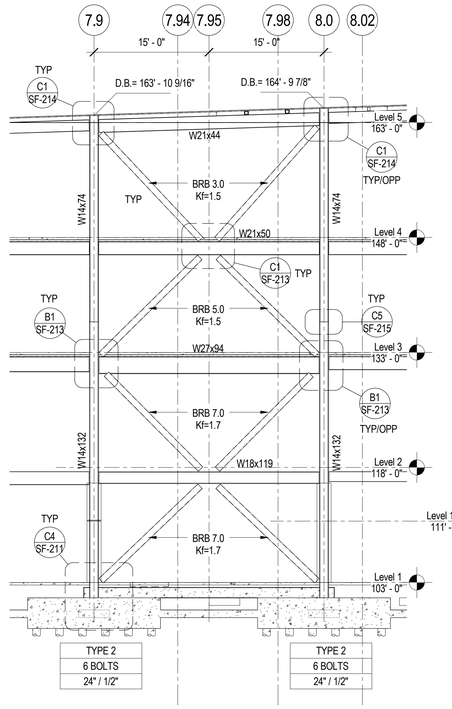

C2 SF-203 BRBF ELEVATION ALONG GRID F2.1

SCALE: 1/8" = 1'-0"

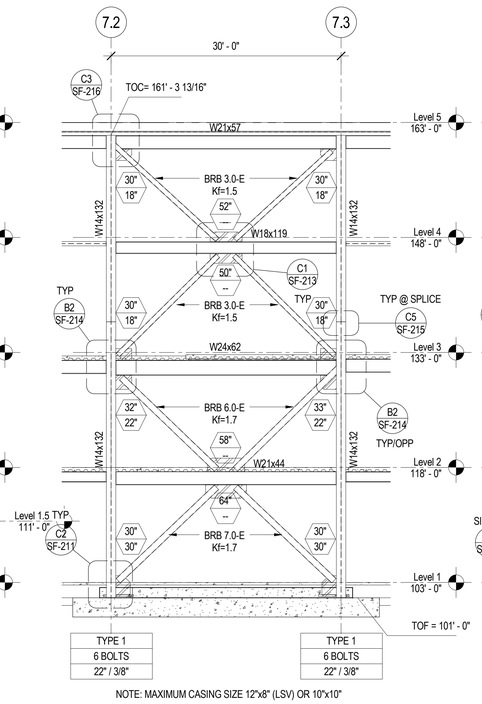

NOTE: MAXIMUM CASING SIZE 12"x8" (LSV) OR 10"x10"

C3 SF-203 BRBF ELEVATION ALONG GRID F8

SCALE: 1/8" = 1'-0"

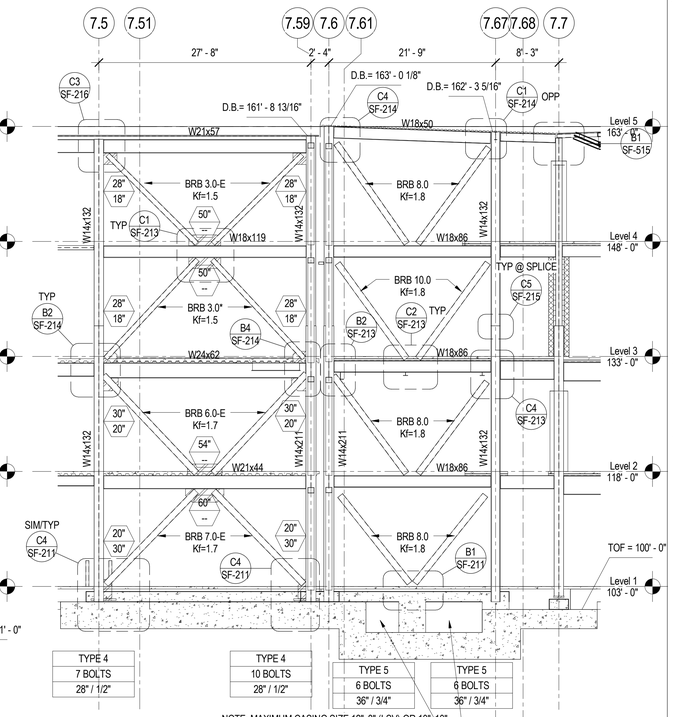

NOTE: MAXIMUM CASING SIZE 12"x8" (LSV) OR 10"x10"

C4 SF-203 BRBF ELEVATION ALONG GRID F8

SCALE: 1/8" = 1'-0"

GENERAL CONTRACTOR AND MECHANICAL CONTRACTOR SHALL COORDINATE LOCATION OF PLUMBING LINES AROUND CONCRETE PIER AND BETWEEN GRADE BEAM AND TOP OF FOOTING

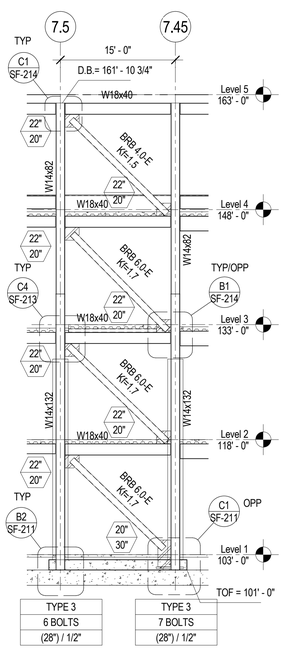

NOTE: MAXIMUM CASING SIZE 12"x8" (LSV) OR 10"x10"

A1 SF-203 BRBF ELEVATION ALONG GRID G1

SCALE: 1/8" = 1'-0"

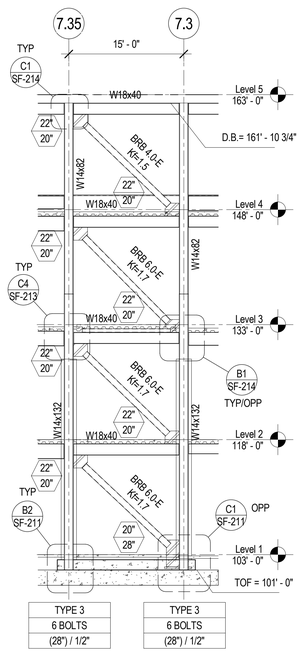

NOTE: MAXIMUM CASING SIZE 12"x8" (LSV) OR 10"x10"

A2 SF-203 BRBF ELEVATION ALONG GRID G1

SCALE: 1/8" = 1'-0"

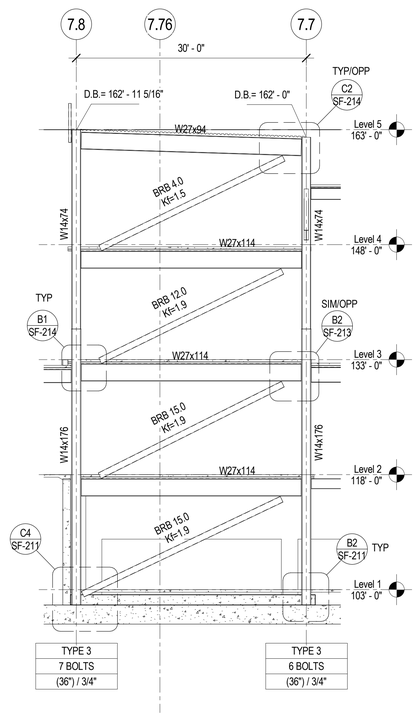

A3 SF-203 BRBF ELEVATION ALONG GRID G1.9

SCALE: 1/8" = 1'-0"

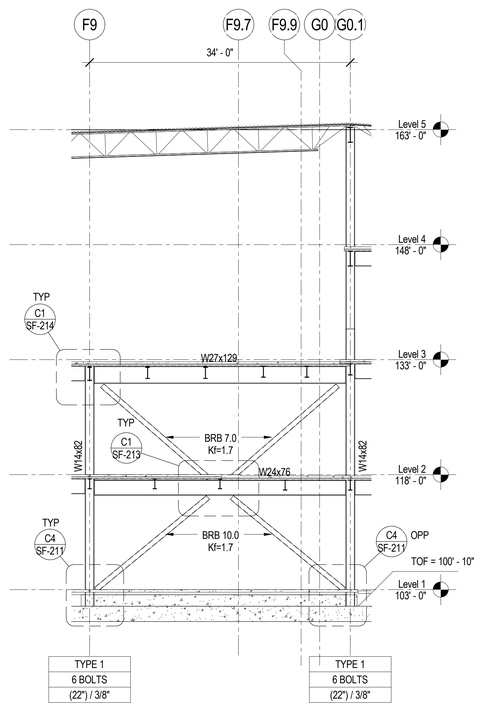

A4 SF-203 BRACED FRAME ELEVATION ALONG GRID 7.3

SCALE: 1/8" = 1'-0"

BRACED FRAME ELEVATION NOTES AND LEGEND

NTS-BRBF

1. ALL W-SHAPED BRACED FRAME MEMBERS SHALL BE ASTM A992 (Fy = 50KSI) STEEL, U.N.O.

2. ADD 3/4" Ø x 5" LONG HEADED STUD ANCHOR AT 24" O.C. TO ALL BRACED FRAME HORIZONTAL FRAMING MEMBERS (BEAMS) EXCEPT ROOF BEAMS.

3. BRACED FRAME BASE PLATE SYMBOL

TYPE
NO. OF A.B.
EMBED./PLATE

TYPE = BASE PLATE TYPE. SEE A1/SF211 FOR ADDITIONAL BASE PLATE AND ANCHOR BOLT INFORMATION.
AB = QUANTITY OF ANCHOR BOLTS
EMBED./PLATE = ANCHOR ROD EMBEDMENT LENGTH / ANCHOR BOLTS PLATE WASHER THICKNESS. (X") INDICATES FOOTING THICKNESS INCREASED TO ACCOMODATE ANCHOR BOLT EMBEDMENT LENGTH.

4. GUSSET DIMENSION PLATE SYMBOL

X — MAX. GUSSET WIDTH
Y — MAX. GUSSET HEIGHT

5. VERIFY ALL DATUM ELEVATIONS W/ ARCHITECTURAL DRAWINGS.

6. SEE PLANS FOR LOCATIONS WHERE CHORD/ COLLECTOR CONNECTIONS ARE REQUIRED.

7. SEE DETAIL B3 & B4/SF-211 FOR PROTECTED ZONES OF BRB FRAME.

8. REFER TO DETAIL A4/SF-213 FOR MAXIMUM FRAME BEAM TO COLUMN REACTIONS.

9. "BRB X.X" INDICATES MINIMUM BUCKLING RESTRAINED BRACE CROSS SECTIONAL AREA OF YIELDING CORE (Asc) THAT SHALL BE PROVIDED BY BRB SUPPLIER.

10. BRB SUPPLIER SHALL PROVIDE DESIGN OF THE BRB GUSSET PLATES AND CONNECTIONS TO THE FRAME BEAMS AND COLUMNS INCLUDING DETAILS AND SCHEDULES. INFORMATION SHOWN IN THE CONSTRUCTION DOCUMENTS RELATING TO BRB'S, GUSSET PLATES AND CONNECTIONS OF SUCH ARE INCLUDED FOR GENERAL DESIGN CONCEPT.

11. BRB SUPPLIER SHALL DESIGN GUSSET PLATE AND CONNECTIONS TO TRANSFER ALL VERTICAL FORCES THROUGH THE GUSSET TO COLUMN CONNECTION.

12. CORE PLATE MATERIAL SHALL HAVE A YIELD RANGE OF Fysc=42 KSI (+/- 4 KSI) COUPON TESTS SHALL BE TAKEN FROM PLATES AT POINT OF MANUFACTURE OF BRB'S AND SHALL BE USED TO VERIFY CONFORMANCE.

13. BRB CASINGS SHALL HAVE A SQUARE OR RECTANGULAR PROFILE AND SHALL NOT HAVE A ROUND OR CIRCULAR PROFILE.

14. CONNECTION TYPES (BOLTED, WELDED OR PINNED) ARE ALLOWED BY BRB SUPPLIER EXCEPT AT EXPOSED BRACE LOCATIONS "E". AT THESE LOCATIONS WELDED CONNECTIONS ARE REQUIRED AND SHALL MEET THE GUSSET PLATE DIMENSIONS INDICATED ON THE FRAME ELEVATIONS.

15. BRB'S SHALL BE DESIGNED ACCORDING TO THE FOLLOWING PARAMETERS:
- β max = 1.05
- ρ = 1.3
- βω max = 1.35
- ι e = 1.25
- Asc = SEE FRAME ELEVATIONS
- Kf = STIFFNESS MODIFICATION FACTOR SEE FRAME ELEVATIONS

16. FOR REQUIRED DESIGN ELASTIC DRIFT AT BUCKLING RESTRAINED BRACED FRAMES SEE A5/SF212

17. BRB BRACES, CONNECTIONS AND GUSSET PLATES SHALL BE DESIGNED IN ACCORDANCE WITH AISC 341-05 SEISMIC PROVISIONS FOR STRUCTURAL STEEL BUILDINGS.

18. WHERE BOLTED CONNECTIONS ARE USED FOR BRB CONNECTION. BRB SUPPLIER SHALL DESIGN BOLTS AS A SLIP-CRITICAL CONNECTION FOR Pysc LOAD CONDITION AND SHALL ALSO DESIGN BOLTED CONNECTION FOR BEARING FOR THE ULTIMATE CONDITION (1.1 • βω • Pysc).

19. FINAL STIFFNESS MODIFICATION FACTORS SHALL BE WITHIN +/-10% OF THOSE INDICATED.

GSBS ARCHITECTS
375 WEST 200 SOUTH
SALT LAKE CITY, UT 84101
P 801.521.8600
F 801.521.7913
www.gsbsarchitects.com

CANNONDESIGN
CANNON DESIGN
829 NORTH 1st AVENUE
PHOENIX, AZ 85003
602.294.6500

REVISIONS:

1	05/04/2012	ADDENDUM #2

REAVELEY ENGINEERS + ASSOCIATES
Consulting Structural Engineers
P 801.486.3883
F 801.485.0911
675 E. 500 S. Suite 400
Salt Lake City, Utah 84102
www.reaveley.com

Ronald J. Reaveley
PROFESSIONAL STRUCTURAL ENGINEER #144210
4/27/2012
Ronald J. Reaveley
STATE OF UTAH

UTAH VALLEY UNIVERSITY
STUDENT LIFE CENTER &
PARKING STRUCTURE

800 WEST UNIVERSITY PARKWAY
OREM, UT 84058

DFCM

4110 STATE OFFICE BUILDING
SALT LAKE CITY, UT 84112

DRAWN BY:	RH/RE+A
CHECKED BY:	OB/RE+A
OWNER PROJECT NO.:	#10289790
GSBS PROJECT NO.:	2011.045.00
ISSUED DATE:	04.27.2012

BRACED FRAME ELEVATIONS

CONSTRUCTION DOCUMENTS

SF-203

BUCKLING RESTRAINED BRACE (BRB) CONNECTION SCHEDULE

Brace ID #	Frame #	Line #	Grids #	Lvls #	Qty #	Core Area (in^2)	Stiffness Modification Factor	Minimum Stroke (in)	D_{reg} #/16"	D_{wsg} #/16"	d_b in	Gusset Info at Lower End of BRB: t_g in	D_{wb} #	L_{wb} in	D_{wc} #	L_{wc} in	L_{gb} in	L_{gc} in	Gusset Info at Upper End of BRB: t_g in	D_{wb} #	L_{wb} in	D_{wc} #	L_{wc} in	L_{gb} in	L_{gc} in
BRB_6.5	E1	8.06	F2.1-F2.5	4	1	6.50	1.58	3.00	6	7	7/8	1	5	20	-	-	21	18	1	6	13	5	17	14	19
BRB_6.5	E1	8.06	F2.5-F3	4	1	6.50	1.58	3.00	6	7	7/8	1	5	20	-	-	21	18	1	6	13	5	18	14	19
BRB_6.5	E1	8.06	F2.1-F3	3	2	6.50	1.56	3.00	6	7	7/8	1	7	19	6	15	21	17	1	5	26	-	-	27	17
BRB_22.0	E1	8.06	F2.1-F3	2	2	22.00	1.79	3.00	10	10	7/8	2	11	36	-	-	37	28	2	14	31	13	27	33	29
BRB_22.0	E1	8.06	F2.1-F2.5	1	1	22.00	1.78	3.00	10	10	7/8	2	9	27	11	34	29	36	2	10	38	-	-	39	29
BRB_22.0	E1	8.06	F2.5-F3	1	1	22.00	1.78	3.00	10	10	7/8	2	9	27	11	34	29	36	2	10	38	-	-	39	29
BRB_23.0	E3	8.06	F8.5-F9	1	1	23.00	1.51	3.00	10	11	7/8	2	8	24	11	41	26	43	2	11	24	12	34	26	35
BRB_2.0	E0	8.02	F8.5-F9	1	1	2.00	1.49	3.00	3	4	1/2	1/2	3	13	3	14	15	16	1/2	3	16	3	10	18	11
BRB_3.3	E4	7.86A	F7-F8	1	1	3.25	1.38	3.00	5	5	5/8	3/4	4	12	5	11	14	13	3/4	4	28	4	9	30	10
BRB_4.0	E5,E6,E7	7.7	F3-F4, F5-F6, F7-F8	4	6	4.00	1.61	3.00	5	6	5/8	3/4	4	23	-	-	24	13	3/4	4	21	4	11	22	12
BRB_4.3	E5,E6,E7	7.7	F3-F4, F5-F6, F7-F8	3	6	4.25	1.49	3.00	5	6	5/8	3/4	6	15	5	12	17	14	3/4	4	22	-	-	23	14
BRB_6.3	E5,E6,E7	7.7	F3-F4, F5-F6, F7-F8	2	6	6.25	1.60	3.00	6	6	7/8	1	5	25	-	-	26	17	1	7	18	6	15	19	16
BRB_6.5	E5,E6,E7	7.7	F3-F4, F5-F6, F7-F8	1	6	6.50	1.54	3.00	6	6	7/8	1	5	25	6	23	17	25	1	5	24	-	-	25	17
BRB_3.3	E8	7.6	F2.1-F3	4	1	3.25	1.39	3.00	5	5	5/8	3/4	4	24	4	12	26	14	3/4	4	25	4	10	26	11
BRB_4.3	E8	7.6	F2.1-F3	3	1	4.25	1.52	3.00	5	7	5/8	3/4	4	29	4	13	31	15	3/4	4	22	4	11	23	12
BRB_4.3	E8	7.6	F2.1-F3	2	1	4.25	1.51	3.00	5	7	5/8	3/4	4	28	4	15	30	17	3/4	4	27	5	11	28	12
BRB_4.3	E8	7.6	F2.1-F3	1	1	4.25	1.52	3.00	5	7	5/8	3/4	4	13	6	15	15	17	3/4	4	21	4	11	23	12
BRB_3.3	E10	F2.1	7.9-7.95	4	1	3.25	1.38	3.00	5	5	5/8	3/4	4	21	-	-	22	13	3/4	4	12	4	11	14	12
BRB_3.3	E10	F2.1	7.95-8	4	1	3.25	1.39	3.00	5	5	5/8	3/4	4	20	-	-	21	13	3/4	4	12	4	11	13	12
BRB_5.0	E10	F2.1	7.9-8	3	2	5.00	1.50	3.00	6	6	5/8	1	7	18	5	12	20	14	1	5	23	-	-	24	14
BRB_7.0	E10	F2.1	7.9-8	2	2	7.00	1.68	3.00	6	7	7/8	1	5	25	-	-	26	16	1	7	22	7	15	23	16
BRB_7.5	E10	F2.1	7.9-8	1	2	7.50	1.58	3.00	6	7	7/8	1	5	16	6	24	18	26	1	5	27	-	-	28	19
BRB_3.0	E11	F2.1	7.7-7.75	4	1	3.00	1.50	3.00	4	5	5/8	3/4	4	23	-	-	24	13	3/4	4	14	4	10	16	12
BRB_3.0	E11	F2.1	7.75-7.8	4	1	3.00	1.49	3.00	4	5	5/8	3/4	4	22	-	-	23	13	3/4	4	13	4	10	15	12
BRB_5.0	E11	F2.1	7.7-7.75	3	1	5.00	1.51	3.00	6	6	5/8	1	7	18	5	12	20	14	1	5	23	-	-	24	14
BRB_5.0	E11	F2.1	7.75-7.8	3	1	5.00	1.51	3.00	6	6	5/8	1	7	18	5	12	20	14	1	5	23	-	-	24	14
BRB_7.0	E11	F2.1	7.7-7.75	2	1	7.00	1.69	3.00	6	7	7/8	1	5	27	-	-	28	17	1	8	21	7	15	23	16
BRB_7.0	E11	F2.1	7.75-7.8	2	1	7.00	1.69	3.00	6	7	7/8	1	5	27	-	-	28	17	1	8	21	7	15	23	16
BRB_7.5	E11	F2.1	7.7-7.75	1	1	7.50	1.59	3.00	6	7	7/8	1	5	16	6	24	18	26	1	5	27	-	-	28	18
BRB_7.5	E11	F2.1	7.75-7.8	1	1	7.50	1.59	3.00	6	7	7/8	1	5	16	6	24	18	26	1	5	27	-	-	28	18
BRB_5.0	E12	F7	-	1	1	5.00	1.50	3.00	6	6	5/8	1	5	12	5	21	14	23	1	6	13	5	12	15	14
BRB_8.3	E14	F8	7.6-7.63	4	1	8.25	1.75	3.00	6	7	7/8	1 1/4	6	21	-	-	22	20	1 1/4	7	22	6	21	24	22
BRB_8.3	E14	F8	7.63-7.67	4	1	8.25	1.74	3.00	6	7	7/8	1 1/4	6	22	-	-	23	19	1 1/4	8	15	6	20	17	22
BRB_10.3	E14	F8	7.6-7.63	3	1	10.25	1.74	3.00	8	7	7/8	1 1/4	7	23	-	-	24	20	1 1/4	8	23	7	21	25	23
BRB_10.3	E14	F8	7.63-7.67	3	1	10.25	1.74	3.00	8	7	7/8	1 1/4	7	23	-	-	24	20	1 1/4	8	16	7	21	18	23
BRB_8.5	E14	F8	7.6-7.63	2	1	8.50	1.69	3.00	6	9	7/8	1 1/4	6	22	-	-	23	19	1 1/4	8	23	7	21	24	22
BRB_8.5	E14	F8	7.63-7.67	2	1	8.50	1.68	3.00	6	9	7/8	1 1/4	6	22	-	-	23	19	1 1/4	10	15	8	20	17	21
BRB_8.8	E14	F8	7.6-7.63	1	1	8.75	1.64	3.00	6	8	7/8	1 1/4	8	16	-	-	17	22	1 1/4	7	22	6	21	24	23
BRB_8.8	E14	F8	7.63-7.67	1	1	8.75	1.64	3.00	6	8	7/8	1 1/4	8	16	-	-	17	22	1 1/4	7	15	6	20	17	22
BRB_4.0	E15	G1.9	7.7-7.8	4	1	4.00	1.47	3.00	5	6	5/8	3/4	4	38	4	10	40	12	3/4	4	37	4	9	38	11
BRB_13.0	E15	G1.9	7.7-7.8	3	1	13.00	1.76	3.00	8	8	7/8	1 1/2	6	45	8	15	47	17	1 1/2	6	46	5	16	47	17
BRB_16.0	E15	G1.9	7.7-7.8	2	1	16.00	1.78	3.00	10	10	7/8	1 1/2	7	47	6	17	49	19	1 1/2	7	48	9	18	49	19
BRB_16.5	E15	G1.9	7.7-7.8	1	1	16.50	1.69	3.00	10	10	7/8	1 1/2	10	24	10	19	26	21	1 1/2	7	49	6	17	50	19
BRB_8.0	SL1	7.59	F8-F8.8	4	1	8.00	1.47	3.00	6	7	7/8	1	5	27	5	14	29	16	1	6	34	5	14	36	16
BRB_11.0	SL1	7.59	F8-F8.8	3	1	11.00	1.53	3.00	7	8	7/8	1 1/4	7	30	8	16	32	18	1 1/4	6	38	5	17	40	19
BRB_11.0	SL1	7.59	F8-F8.8	2	1	11.00	1.53	3.00	7	8	7/8	1 1/4	6	30	6	16	32	18	1 1/4	7	38	8	17	39	18
BRB_11.0	SL1	7.59	F8-F8.8	1	1	11.00	1.54	3.00	7	8	7/8	1 1/4	7	21	8	19	23	21	1 1/4	6	40	5	16	41	18
BRB_7.0	SL2	7.3	F9-G0.1	2	2	7.00	1.68	3.00	6	7	7/8	1	5	31	-	-	32	17	1	5	25	5	15	26	16
BRB_11.0	SL2	7.3	F9-G0.1	1	2	11.00	1.55	3.00	7	8	7/8	1 1/4	6	20	8	25	22	27	1 1/4	6	34	-	-	35	21

BUCKLING RESTRAINED BRACE (BRB) CONNECTION SCHEDULE

Brace ID #	Frame #	Line in	Grids #	Lvls #	Qty #	Core Area (in^2)	Stiffness Modification Factor	Minimum Stroke (in)	D_{reg} #/16"	D_{wsg} #/16"	d_b in	Gusset Info at Lower End of BRB: t_g in	D_{wb} #	L_{wb} in	D_{wc} #	L_{wc} in	L_{gb} in	L_{gc} in	Gusset Info at Upper End of BRB: t_g in	D_{wb} #	L_{wb} in	D_{wc} #	L_{wc} in	L_{gb} in	L_{gc} in
BRB_6.5	E1	8.06	F2.1-F2.5	4	1	6.50	1.58	3.00	6	7	7/8	1	5	20	-	-	21	18	1	6	13	5	17	14	19
BRB_6.5	E1	8.06	F2.5-F3	4	1	6.50	1.58	3.00	6	7	7/8	1	5	20	-	-	21	18	1	6	13	5	18	14	19
BRB_6.5	E1	8.06	F2.1-F3	3	2	6.50	1.56	3.00	6	7	7/8	1	7	19	6	15	21	17	1	5	26	-	-	27	17
BRB_22.0	E1	8.06	F2.1-F3	2	2	22.00	1.79	3.00	10	10	7/8	2	11	36	-	-	37	28	2	14	31	13	27	33	29
BRB_4.3	SL3	7.1	G3-G2	4	1	4.25	1.41	3.00	5	6	5/8	3/4	4	26	-	-	27	14	3/4	4	14	4	12	16	14
BRB_4.3	SL3	7.1	G2-G1.9	4	1	4.25	1.41	3.00	5	6	5/8	3/4	4	24	-	-	25	14	3/4	4	13	4	12	15	14
BRB_4.0	SL3	7.1	G3-G1.9	3	2	4.00	1.50	3.00	5	6	5/8	3/4	4	18	4	11	20	13	3/4	4	24	-	-	25	13
BRB_5.5	SL3	7.1	G3-G1.9	2	2	5.50	1.57	3.00	5	6	7/8	1	5	31	-	-	32	16	1	5	21	5	14	22	16
BRB_5.5	SL3	7.1	G3-G1.9	1	2	5.50	1.55	3.00	5	6	7/8	1	5	15	5	20	17	22	1	5	31	-	-	32	16
BRB_4.0	SL5	6.9	G3-G2	4	1	4.00	1.50	3.00	5	6	5/8	3/4	4	26	-	-	27	13	3/4	5	16	5	11	17	13
BRB_4.0	SL5	6.9	G2-G1.9	4	1	4.00	1.49	3.00	5	6	5/8	3/4	4	24	-	-	25	13	3/4	6	14	5	11	16	13
BRB_4.0	SL5	6.9	G3-G2	3	1	4.00	1.50	3.00	5	6	5/8	3/4	4	18	4	11	20	13	3/4	4	24	-	-	25	13
BRB_4.0	SL5	6.9	G2-G1.9	3	1	4.00	1.50	3.00	5	6	5/8	3/4	4	18	4	11	20	13	3/4	4	24	-	-	25	13
BRB_5.5	SL5	6.9	G3-G2	2	1	5.50	1.58	3.00	5	6	7/8	1	5	31	-	-	32	16	1	6	21	6	14	22	16
BRB_5.5	SL5	6.9	G2-G1.9	2	1	5.50	1.58	3.00	5	6	7/8	1	5	31	-	-	32	16	1	6	21	6	14	23	16
BRB_5.5	SL5	6.9	G3-G2	1	1	5.50	1.56	3.00	5	6	7/8	1	5	15	5	21	17	23	1	5	31	-	-	32	16
BRB_5.5	SL5	6.9	G2-G1.9	1	1	5.50	1.56	3.00	5	6	7/8	1	5	15	5	20	17	22	1	5	31	-	-	32	16
BRB_2.0	SL4	7	F9-F8.5	4	1	2.00	1.49	3.00	3	4	1/2	1/2	3	20	-	-	21	12	1/2	3	18	3	10	20	11
BRB_2.0	SL4	7	F8.5-F8	4	1	2.00	1.50	3.00	3	4	1/2	1/2	3	22	-	-	23	12	1/2	3	12	3	10	14	11
BRB_2.0	SL4	7	F9-F8.5	3	1	2.00	1.50	3.00	3	4	1/2	1/2	3	23	3	10	25	12	1/2	3	20	-	-	21	12
BRB_2.0	SL4	7	F8.5-F8	3	1	2.00	1.50	3.00	3	4	1/2	1/2	3	16	3	10	18	12	1/2	3	20	-	-	21	12
BRB_5.5	SL4	7	F9-F8.5	2	1	5.50	1.53	3.00	5	6	7/8	1	5	28	-	-	29	17	1	6	28	5	14	29	16
BRB_5.5	SL4	7	F8.5-F8	2	1	5.50	1.53	3.00	5	6	7/8	1	5	28	-	-	29	17	1	6	21	5	14	22	16
BRB_7.5	SL4	7	F9-F8.5	1	1	7.50	1.59	3.00	6	7	7/8	1	6	23	6	24	25	26	1	5	29	-	-	30	18
BRB_7.5	SL4	7	F8.5-F8	1	1	7.50	1.59	3.00	6	7	7/8	1	5	16	6	24	18	26	1	5	29	-	-	30	18
BRB_3.0	SL6	F8	7.2-7.3	4	2	3.00	1.51	3.00	4	5	5/8	3/4	4	23	-	-	24	13	3/4	4	22	4	10	24	12
BRB_3.0	SL6	F8	7.2-7.3	3	2	3.00	1.50	3.00	4	5	5/8	3/4	4	22	-	11	24	13	3/4	4	21	-	-	22	13
BRB_6.5	SL6	F8	7.2-7.3	2	2	6.50	1.57	3.00	6	6	7/8	1	5	26	-	-	27	17	1	7	26	7	15	28	16
BRB_7.5	SL6	F8	7.2-7.3	1	2	7.50	1.59	3.00	6	7	7/8	1	6	23	6	24	25	26	1	5	27	-	-	28	18
BRB_3.0	SL7	F8	7.5-7.55	4	1	3.00	1.50	3.00	4	5	5/8	3/4	4	21	-	-	22	13	3/4	4	21	4	11	22	12
BRB_3.0	SL7	F8	7.55-7.59	4	1	3.00	1.50	3.00	4	5	5/8	3/4	4	20	-	-	21	12	3/4	4	20	4	11	22	12
BRB_3.0	SL7	F8	7.5-7.55	3	1	3.00	1.51	3.00	4	5	5/8	3/4	5	21	4	11	23	13	3/4	4	20	-	-	21	13
BRB_3.0	SL7	F8	7.55-7.59	3	1	3.00	1.51	3.00	4	5	5/8	3/4	5	20	4	11	22	13	3/4	4	20	-	-	21	13
BRB_6.0	SL7	F8	7.5-7.55	2	1	6.00	1.67	3.00	5	6	7/8	1	5	25	-	-	26	17	1	7	25	7	15	26	16
BRB_6.0	SL7	F8	7.55-7.59	2	1	6.00	1.67	3.00	5	6	7/8	1	5	25	-	-	26	17	1	7	24	7	15	26	16
BRB_7.5	SL7	F8	7.5-7.55	1	1	7.50	1.60	3.00	6	7	7/8	1	6	23	6	25	25	27	1	5	26	-	-	27	19
BRB_7.5	SL7	F8	7.55-7.59	1	1	7.50	1.60	3.00	6	7	7/8	1	6	23	6	26	25	28	1	5	26	-	-	27	19
BRB_4.0	SL8, SL9	G1	7.35-7.45, 7.5-7.45	4	2	4.00	1.49	3.00	5	6	5/8	3/4	4	14	4	11	16	13	3/4	5	14	4	11	15	13
BRB_6.5	SL8, SL9	G1	7.35-7.45, 7.5-7.45	3	2	6.50	1.59	3.00	6	6	7/8	1	6	16	6	15	18	17	1	6	17	6	15	18	16
BRB_6.5	SL8, SL9	G1	7.35-7.45, 7.5-7.45	2	2	6.50	1.56	3.00	6	6	7/8	1	6	16	6	15	18	17	1	6	16	6	15	18	16
BRB_6.5	SL8, SL9	G1	7.35-7.45, 7.5-7.45	1	2	6.50	1.56	3.00	6	6	7/8	1	5	15	6	22	17	24	1	7	16	6	15	17	16
BRB_2.0	SL10	G1	6.97-6.91	4	1	2.00	1.48	3.00	3	4	1/2	1/2	3	14	3	11	16	13	1/2	3	12	3	9	13	11
BRB_4.3	SL10	G1	6.97-6.91	3	1	4.25	1.58	3.00	5	7	5/8	3/4	4	16	4	12	18	14	3/4	4	16	4	12	17	13
BRB_4.3	SL10	G1	6.97-6.91	2	1	4.25	1.59	3.00	5	7	5/8	3/4	4	17	4	13	19	15	3/4	4	15	4	12	17	13
BRB_4.3	SL10	G1	6.97-6.91	1	1	4.25	1.57	3.00	5	7	5/8	3/4	4	13	5	17	15	19	3/4	4	17	4	12	18	13
BRB_2.0	SL11	G3	7-6.91	1	1	2.00	1.48	3.00	3	4	1/2	1/2	3	39	3	13	41	15	1/2	3	24	3	8	25	10
BRB_4.8	SL11	G3	7-6.91	1	1	4.75	1.51	3.00	5	7	5/8	1	5	39	5	14	41	16	1	5	26	5	10	27	12
BRB_10.3	SL11	G3	7-6.91	1	1	10.25	1.59	3.00	8	7	7/8	1 1/4	5	45	5	18	47	20	1 1/4	6	32	6	15	34	16
BRB_11.0	SL11	G3	7-6.91	1	1	11.00	1.51	3.00	7	8	7/8	1 1/4	9	28	8	17	30	19	1 1/4	6	36	6	16	38	17

BUCKLING RESTRAINED BRACE (BRB) CONNECTION SCHEDULE

Brace ID #	Frame #	Line in	Grids #	Lvls #	Qty #	Core Area (in^2)	Stiffness Modification Factor	Minimum Stroke (in)	D_{reg} #/16"	D_{wsg} #/16"	d_b in	Gusset Info at Lower End of BRB: t_g in	D_{wb} #	L_{wb} in	D_{wc} #	L_{wc} in	L_{gb} in	L_{gc} in	Gusset Info at Upper End of BRB: t_g in	D_{wb} #	L_{wb} in	D_{wc} #	L_{wc} in	L_{gb} in	L_{gc} in
BRB_6.5	E1	8.06	F2.1-F2.5	4	1	6.50	1.58	3.00	6	7	7/8	1	5	20	-	-	21	18	1	6	13	5	17	14	19
BRB_6.5	E1	8.06	F2.5-F3	4	1	6.50	1.58	3.00	6	7	7/8	1	5	20	-	-	21	18	1	6	13	5	18	14	19
BRB_6.5	E1	8.06	F2.1-F3	3	2	6.50	1.56	3.00	6	7	7/8	1	7	19	6	15	21	17	1	5	26	-	-	27	17
BRB_22.0	E1	8.06	F2.1-F3	2	2	22.00	1.79	3.00	10	10	7/8	2	11	36	-	-	37	28	2	14	31	13	27	33	29

Table of Symbols

D_{wb} = Minimum # of 16ths of beam weld
L_{wb} = Minimum length of beam weld
t_g = Thickness of gusset
d_b = Diameter of erection bolts
D_{wc} = Minimum # of 16ths of column weld
L_{wc} = Minimum length of column weld
D_{reg} = Size of weld for BRB core to gusset
D_{wsg} = Sized of weld for BRB core stiffener to gusset
L_{gc} = Approximate height of gusset (not for detailing)
L_{gb} = Approximate width of gusset (not for detailing)
(At V or Chev, equal to 1/2 gusset width)

NOTES:

1. CORE MATERIAL SHALL BE ASTM A36 MATERIAL SELECTED TO PROVIDE A MINIMUM TENSILE YIELD STRENGTH OF 38 KSI AND A MAXIMUM TENSILE YIELD STRENGTH OF 46 KSI.
2. BRB SUPPLIER SHALL DESIGN BRACE CONNECTIONS IN ACCORDANCE WITH AISC 341-05.
3. BRB SUPPLIER SHALL PROVIDE TEST RESULTS FOR SIMILAR BRACES IN ACCORDANCE WITH AISC 341-05.
4. BRB SUPPLIER SHALL PROVIDE TESTED MATERIAL ADJUSTMENT FACTORS FOR COMPRESSION STRENGTH (β) AND STRAIN HARDENING (ω).
   MAXIMUM β = 1.05, MAXIMUM ω =1.35.
5. FOR GUSSET GEOMETRY NOTATIONS, SEE BRB FAME ELEVATIONS ON SF-201 THRU SF-204.
6. GUSSET AND WELD SIZES SHOWN ARE APPROXIMATE VALUES. FINAL VALUES TO BE COORDINATED WITH BRB MANUFACTURER.
7. STIFFNESS MODIFICATION FACTORS (Kf) ARE DESIGN VALUES. ACTUAL VALUES TO BE WITHIN ±10%. ACTUAL STIFFNESS WP TO WP (Keff) CALUCLATED AS: Keff = Kf*Asc*E/Lwp
   WHERE Lwp IS THE WP TO WP LENGTH AND Asc IS THE SPECIFIED CORE AREA.
8. MINIMUM STROKE TO OCCUR AT EACH END OF BRACE IN TENSION AND COMPRESSION DIRECTIONS. CORE EXTENSION TO REMAIN STABLE OVER 2X THIS LENGTH.
9. BRB SUPPLIER SHALL PROVIDE DESIGN OF THE BRB GUSSET PLATES AND CONNECTIONS TO THE FRAME BEAMS AND COLUMNS INCLUDING DETAILS AND SCHEDULES. INFORMATION SHOWN IN THE CONSTRUCTION DOCUMENTS RELATING TO BRB'S, GUSSET PLATES AND CONNECTIONS OF SUCH ARE INCLUDED FOR GENERAL DESIGN CONCEPT.

1

GSBS ARCHITECTS
375 WEST 200 SOUTH
SALT LAKE CITY, UT 84101
P 801.521.8600
F 801.521.7913
www.gsbsarchitects.com

CANNONDESIGN
CANNON DESIGN
829 NORTH 1st AVENUE
PHOENIX, AZ 85003
602.294.6500

REVISIONS:

1	05/04/2012	ADDENDUM #2

REAVELEY ENGINEERS + ASSOCIATES
Consulting Structural Engineers
P 801.486.3883
F 801.485.0911
675 E. 500 S. Suite 400
Salt Lake City, Utah 84102
www.reaveley.com

PROFESSIONAL STRUCTURAL ENGINEER #144210 4/27/2012 Ronald J. Reaveley STATE OF UTAH

UTAH VALLEY UNIVERSITY
STUDENT LIFE CENTER &
PARKING STRUCTURE

800 WEST UNIVERSITY PARKWAY
OREM, UT 84058

DFCM

4110 STATE OFFICE BUILDING
SALT LAKE CITY, UT 84112

DRAWN BY:	RH/RE+A
CHECKED BY:	OB/RE+A
OWNER PROJECT NO.:	#10289790
GSBS PROJECT NO.:	2011.045.00
ISSUED DATE:	04.27.2012

BUCKLING RESTRAINED BRACE SCHEDULE

CONSTRUCTION DOCUMENTS

SF-210

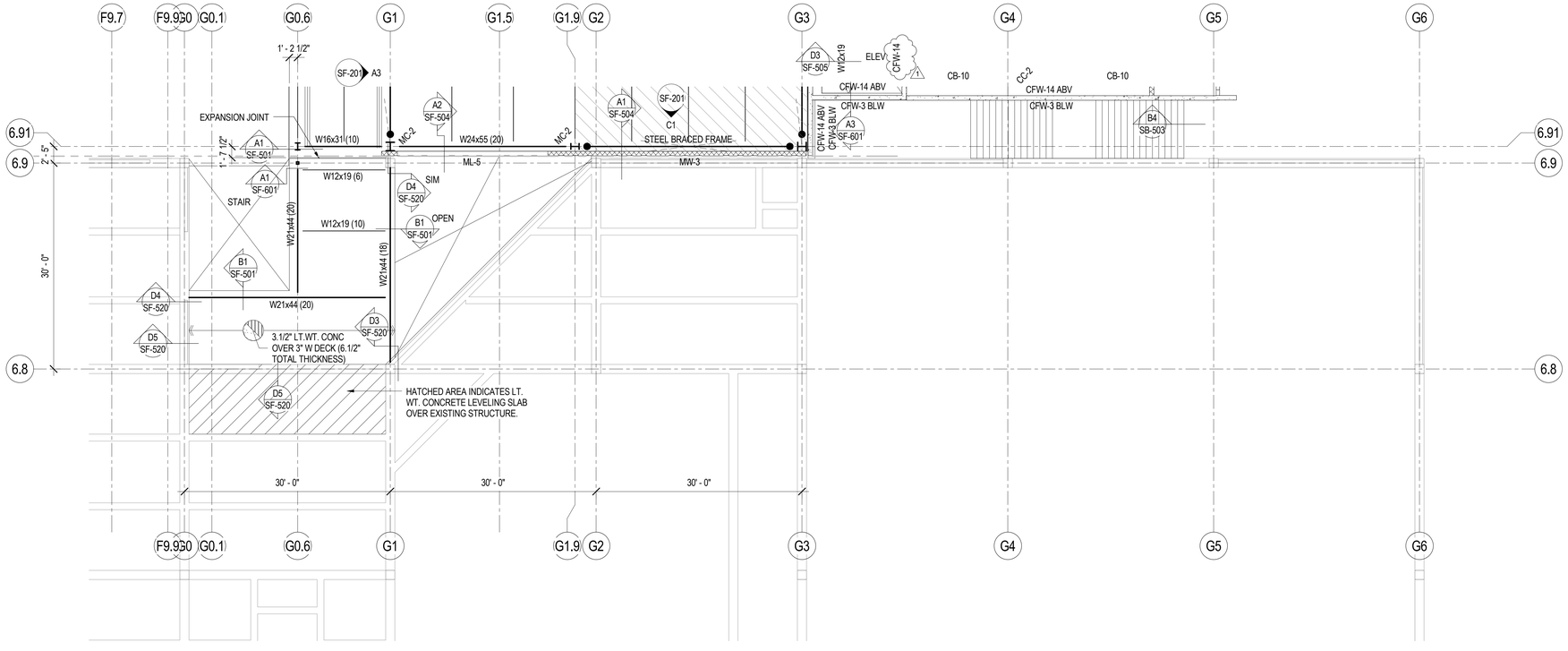

C1 SF-401 FLOOR FRAMING PLAN

SCALE: 1/8" = 1'-0"

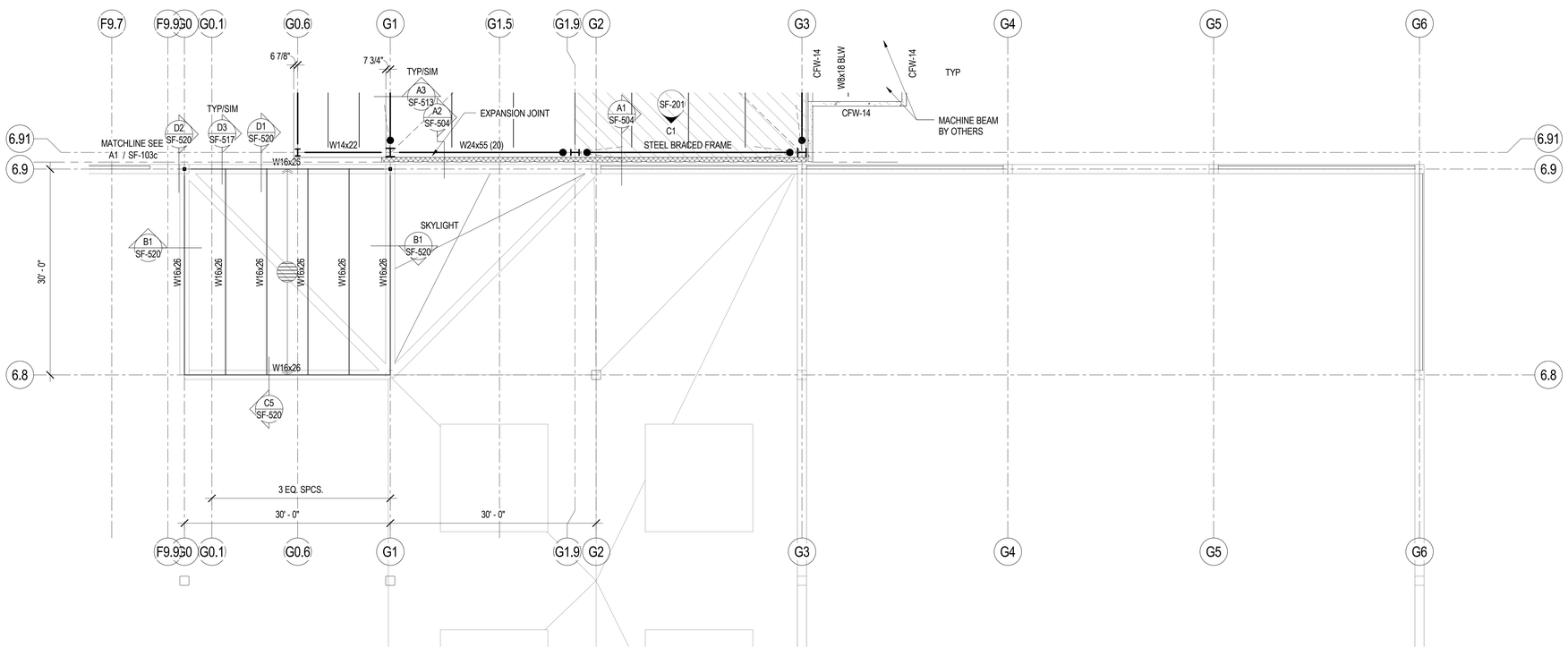

A1 SF-401 ROOF FRAMING PLAN

SCALE: 1/8" = 1'-0"

GSBS ARCHITECTS

375 WEST 200 SOUTH
SALT LAKE CITY, UT 84101

P 801.521.8600
F 801.521.7913

www.gsbsarchitects.com

CANNONDESIGN

CANNON DESIGN
829 NORTH 1st AVENUE
PHOENIX, AZ 85003
602.294.6500

REVISIONS:

1	05/04/2012	ADDENDUM #2

REAVELEY
ENGINEERS + ASSOCIATES
Consulting Structural Engineers

P:801.486.3883
F:801.485.0911

675 E. 500 S. Suite 400
Salt Lake City, Utah 84102
www.reaveley.com

PROFESSIONAL STRUCTURAL ENGINEER #144210 4/27/2012 Ronald J. Reaveley STATE OF UTAH

UTAH VALLEY UNIVERSITY
STUDENT LIFE CENTER &
PARKING STRUCTURE

800 WEST UNIVERSITY PARKWAY
OREM, UT 84058

DFCM

4110 STATE OFFICE BUILDING
SALT LAKE CITY, UT 84112

DRAWN BY:	RH/RE+A
CHECKED BY:	OB/RE+A
OWNER PROJECT NO.:	#10289790
GSBS PROJECT NO.:	2011.045.00
ISSUED DATE:	04.27.2012

FRAMING PLANS AT
SORENSEN BUILDING

CONSTRUCTION DOCUMENTS

SF-401

NOTE:
1. SEE SB-101b FOR FOOTING & FOUNDATION PLAN LEGEND & NOTES.

2. SEE SF-105b FOR ROOF FRAMING PLAN LEGEND & NOTES.

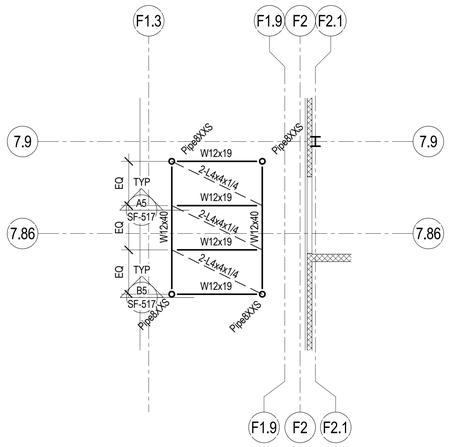

C1 / SF-402 COOLING TOWER SUPPORT FRAME
SCALE: 1/8" = 1'-0"

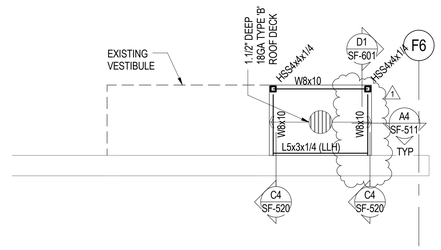

C2 / SF-402 ROOF FRAMING PLAN - SORENSEN BLDG ATTACHMENT
SCALE: 1/4" = 1'-0"

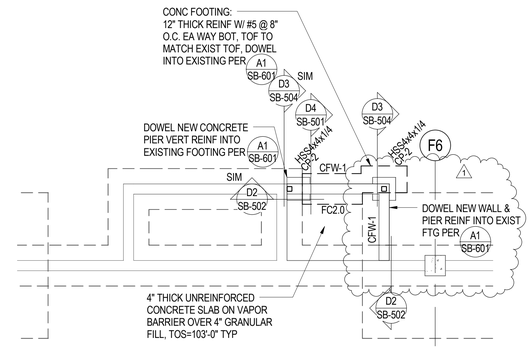

C4 / SF-402 FOOTING & FOUNDATION PLAN - SORENSEN BLDG ATTACHMENT
SCALE: 1/4" = 1'-0"

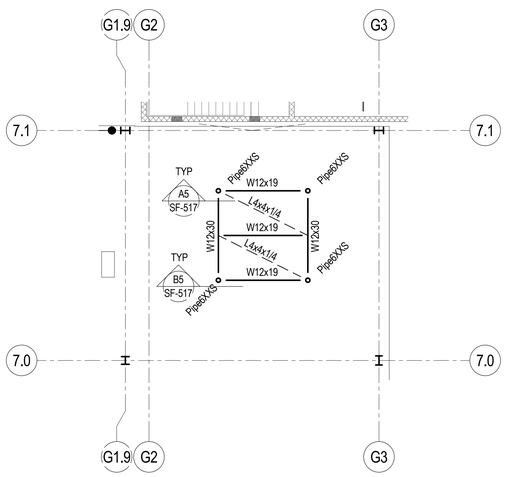

B1 / SF-402 COOLING TOWER SUPPORT FRAME
SCALE: 1/8" = 1'-0"

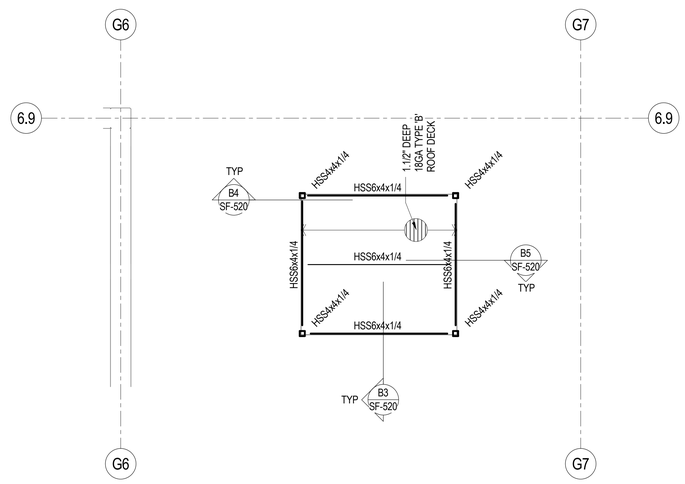

B2 / SF-402 ROOF FRAMING PLAN - FREE STANDING STRUCTURE
SCALE: 1/4" = 1'-0"

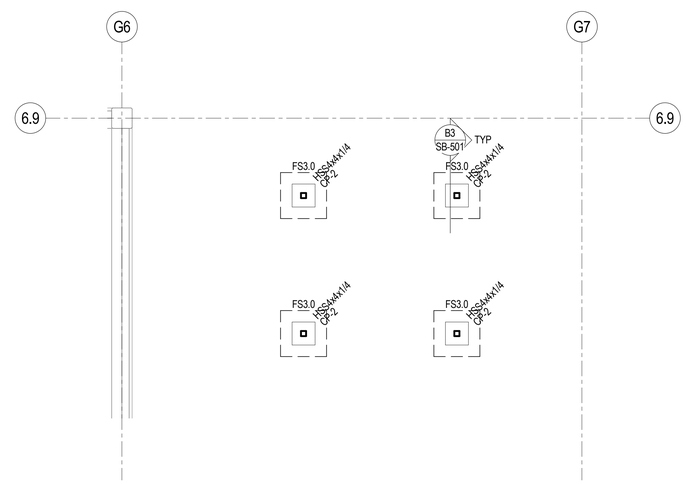

B4 / SF-402 FOOTING & FOUNDATION PLAN - FREE STANDING STRUCTURE
SCALE: 1/4" = 1'-0"

GSBS ARCHITECTS
375 WEST 200 SOUTH
SALT LAKE CITY, UT 84101
P 801.521.8600
F 801.521.7913
www.gsbsarchitects.com

CANNONDESIGN
CANNON DESIGN
829 NORTH 1st AVENUE
PHOENIX, AZ 85003
602.294.6500

REVISIONS:

1	05/04/2012	ADDENDUM #2

REAVELEY
ENGINEERS + ASSOCIATES
Consulting Structural Engineers
P 801.486.3883
F 801.485.0911
675 E. 500 S. Suite 400
Salt Lake City, Utah 84102
www.reaveley.com

PROFESSIONAL STRUCTURAL ENGINEER #144210 4/27/2012 Ronald J. Reaveley STATE OF UTAH

UTAH VALLEY UNIVERSITY
STUDENT LIFE CENTER &
PARKING STRUCTURE

800 WEST UNIVERSITY PARKWAY
OREM, UT 84058

DFCM

4110 STATE OFFICE BUILDING
SALT LAKE CITY, UT 84112

DRAWN BY:	RH/RE+A
CHECKED BY:	OB/RE+A
OWNER PROJECT NO.:	#10289790
GSBS PROJECT NO.:	2011.045.00
ISSUED DATE:	04.27.2012

ENLARGED FRAMING PLANS

CONSTRUCTION DOCUMENTS

SF-402

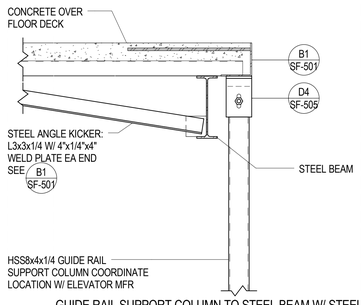

D1 / SF-505 GUIDE RAIL SUPPORT COLUMN TO STEEL BEAM W/ STEEL ANGLE KICKER

NO SCALE

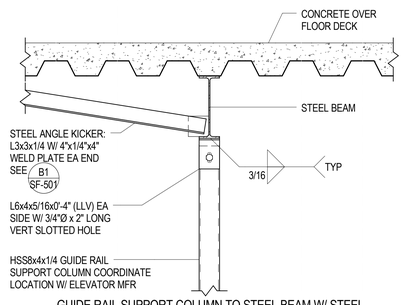

D2 / SF-505 GUIDE RAIL SUPPORT COLUMN TO STEEL BEAM W/ STEEL ANGLE KICKER

NO SCALE

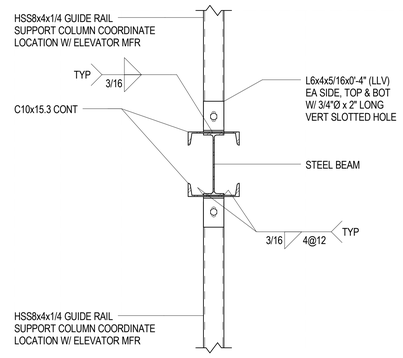

D3 / SF-505 GUIDE RAIL SUPPORT COLUMN TO STEEL BEAM

NO SCALE

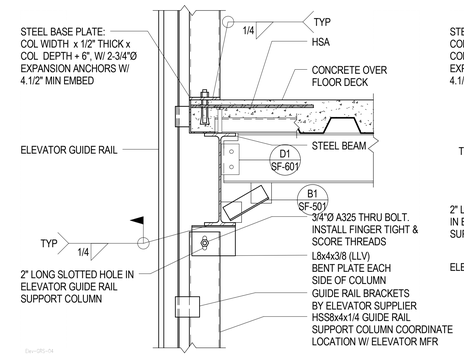

D4 / SF-505 TYPICAL ELEVATOR GUIDE RAIL SUPPORT CONNECTION TO STEEL BEAM

NO SCALE

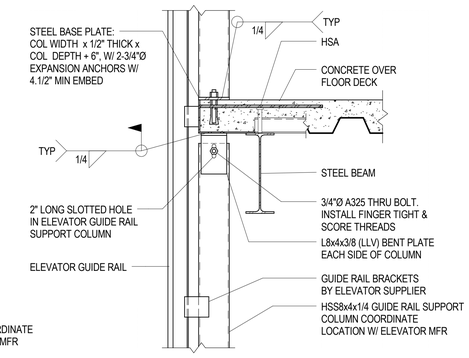

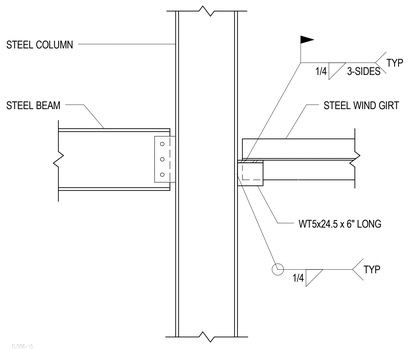

C1 / SF-505 TYPICAL WIND GIRT CONNECTION TO STEEL COLUMN

NO SCALE

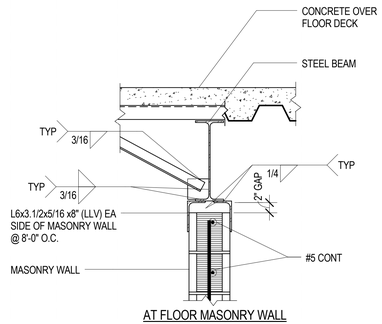

AT FLOOR MASONRY WALL CENTERED ON STEEL BEAM

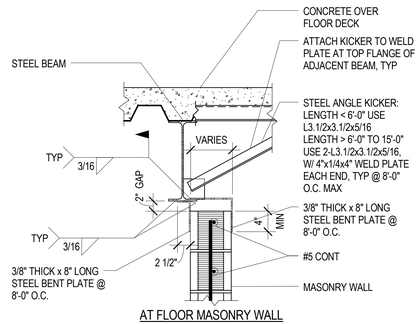

AT FLOOR MASONRY WALL OFFSET FROM STEEL BEAM

C2 / SF-505 TYPICAL NON-BEARING MASONRY WALL CONNECTION TO FLOOR

NO SCALE

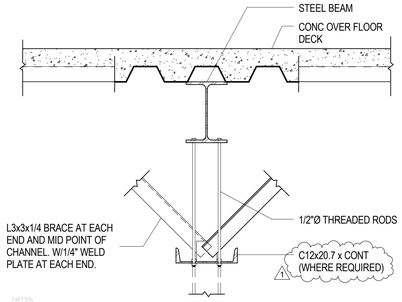

C4 / SF-505 TYPICAL HANGING PARTITION SUPPORT DETAIL

NO SCALE

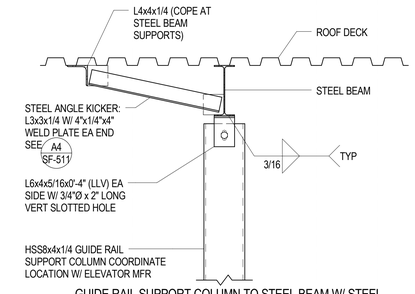

C5 / SF-505 GUIDE RAIL SUPPORT COLUMN TO STEEL BEAM W/ STEEL ANGLE KICKER

NO SCALE

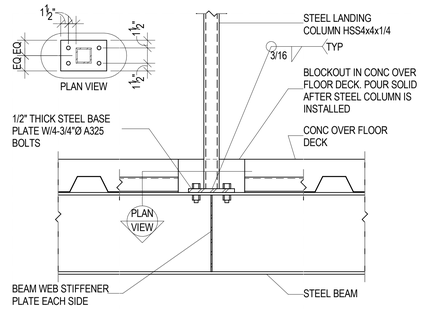

B2 / SF-505 TYPICAL STAIR LANDING COLUMN DETAIL

NO SCALE

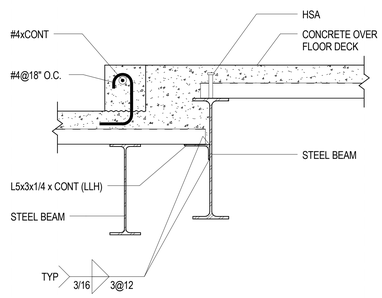

B3 / SF-505 TYPICAL DETAIL AT FLOOR STEP AT STEEL BEAM

NO SCALE

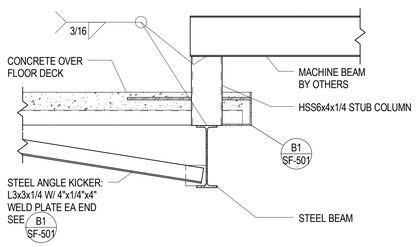

B4 / SF-505 MACHINE BEAM TO STEEL STUB COLUMN TO STEEL BEAM W/ STEEL ANGLE KICKER

NO SCALE

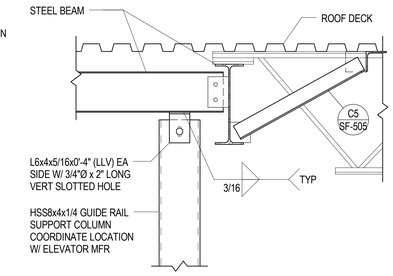

B5 / SF-505 GUIDE RAIL SUPPORT COLUMN TO STEEL BEAM W/ STEEL ANGLE KICKER

NO SCALE

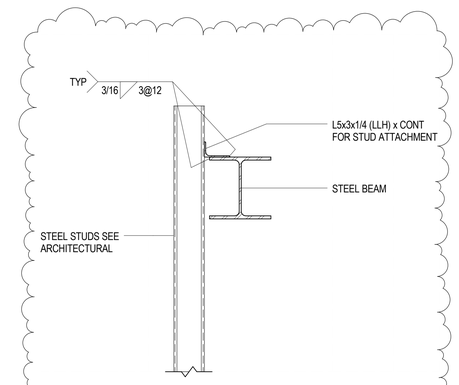

A5 / SF-505 TYPICAL STEEL STUD CONNECTION AT SCREEN WALL

NO SCALE

GSBS ARCHITECTS
375 WEST 200 SOUTH
SALT LAKE CITY, UT 84101
P 801.521.8600
F 801.521.7913
www.gsbsarchitects.com

CANNONDESIGN
CANNON DESIGN
829 NORTH 1st AVENUE
PHOENIX, AZ 85003
602.294.6500

REVISIONS:

1	05/04/2012	ADDENDUM #2

REAVELEY ENGINEERS + ASSOCIATES
Consulting Structural Engineers
P 801.486.3883
F 801.485.0911
675 E. 500 S. Suite 400
Salt Lake City, Utah 84102
www.reaveley.com

PROFESSIONAL STRUCTURAL ENGINEER #144210 4/27/2012 Ronald J. Reaveley STATE OF UTAH

UTAH VALLEY UNIVERSITY
STUDENT LIFE CENTER & PARKING STRUCTURE

800 WEST UNIVERSITY PARKWAY
OREM, UT 84058

DFCM

4110 STATE OFFICE BUILDING
SALT LAKE CITY, UT 84112

DRAWN BY:	RH/RE+A
CHECKED BY:	OB/RE+A
OWNER PROJECT NO.:	#10289790
GSBS PROJECT NO.:	2011.045.00
ISSUED DATE:	04.27.2012

TYPICAL FLOOR FRAMING DETAILS

CONSTRUCTION DOCUMENTS

SF-505

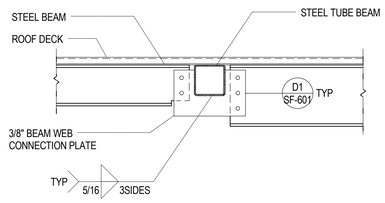

D1 / SF-515 STEEL BEAM CONNECTION TO STEEL TUBE
NO SCALE

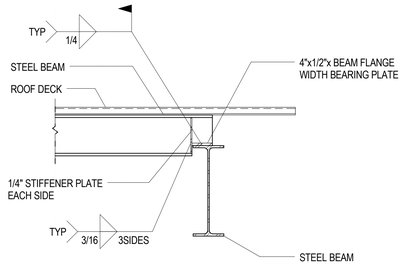

D2 / SF-515 STEEL BEAM BEARING ON STEEL BEAM
NO SCALE

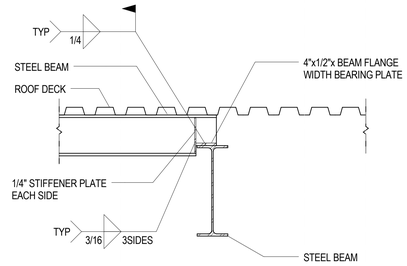

D3 / SF-515 STEEL BEAM BEARING ON STEEL BEAM
NO SCALE

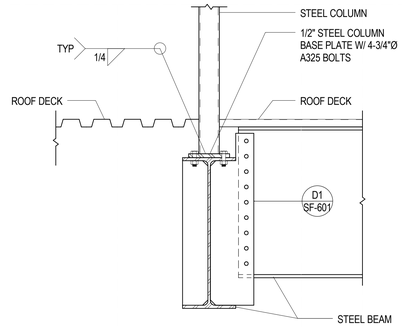

D4 / SF-515 TYPICAL STEEL TUBE PURLIN TO BEAM CONNECTION
NO SCALE

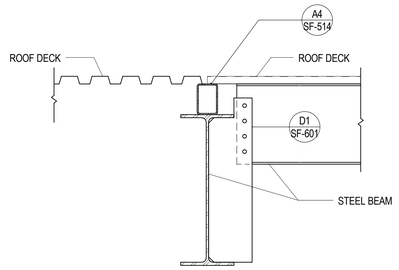

D5 / SF-515 TYPICAL STEEL TUBE PURLIN TO BEAM CONNECTION
NO SCALE

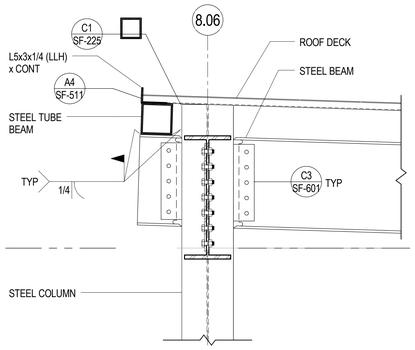

C1 / SF-515 STEEL BEAM CONNECTION TO STEEL COLUMN
NO SCALE

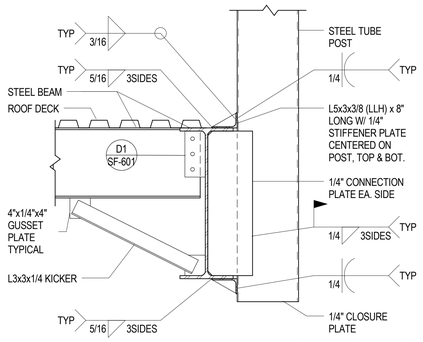

C2 / SF-515 SKLIGHT SUPPORT TUBE DETAIL
NO SCALE

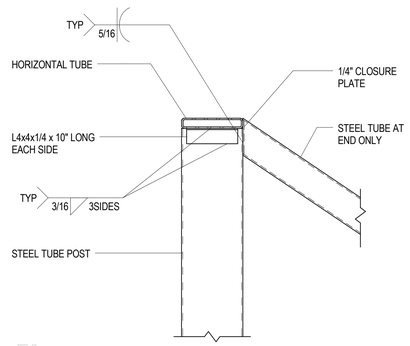

C3 / SF-515 SKYLIGHT SUPPORT TUBE DETAIL
NO SCALE

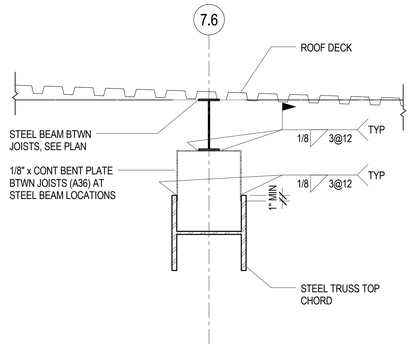

C5 / SF-515 TYPICAL DECK BEARING AT STEEL TRUSS TOP CHORD
NO SCALE

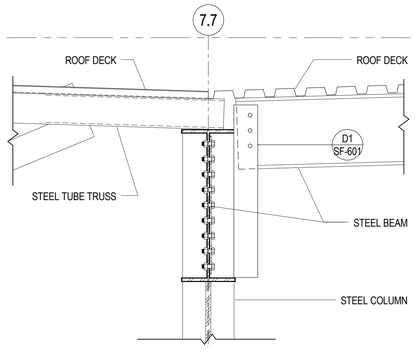

B1 / SF-515 TYPICAL STEEL TUBE TRUSS BEARING AT STEEL COLUMN
NO SCALE

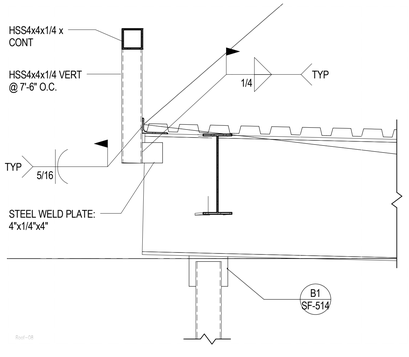

B2 / SF-515 PARAPET SUPPORT FRAMING DETAIL
NO SCALE

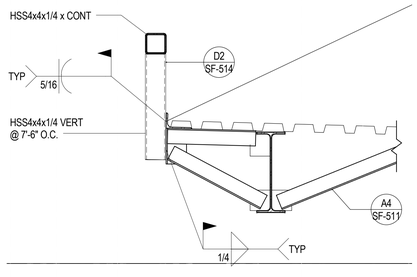

B3 / SF-515 PARAPET SUPPORT FRAMING DETAIL
NO SCALE

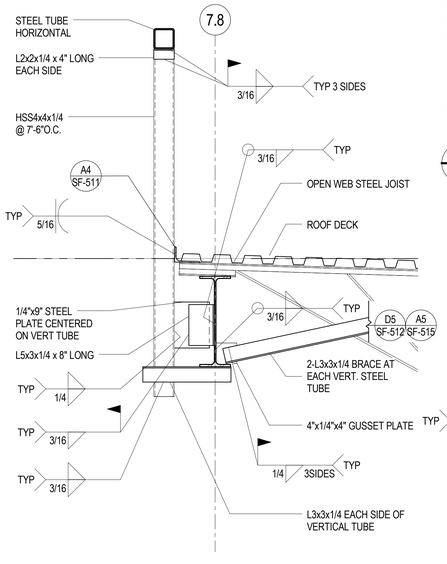

B4 / SF-515 PARAPET SUPPORT FRAMING DETAIL
NO SCALE

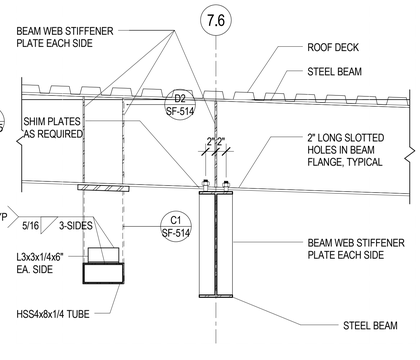

B5 / SF-515 CURTAIN WALL SUPPORT DETAIL
NO SCALE

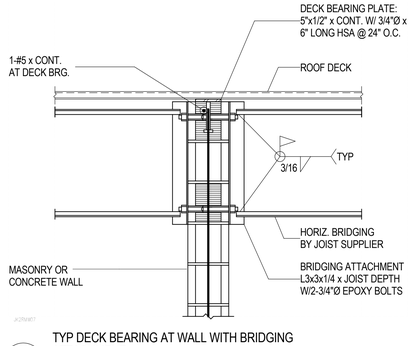

A1 / SF-515 TYP DECK BEARING AT WALL WITH BRIDGING ATTACHMENT
NO SCALE

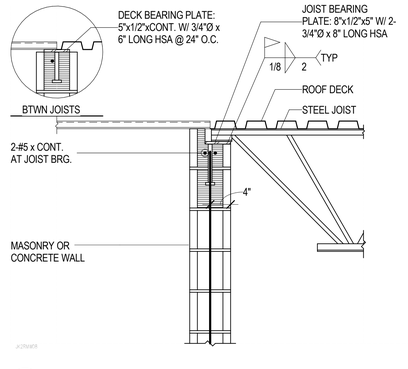

A2 / SF-515 TYPICAL JOIST/DECK BEARING AT WALL
NO SCALE

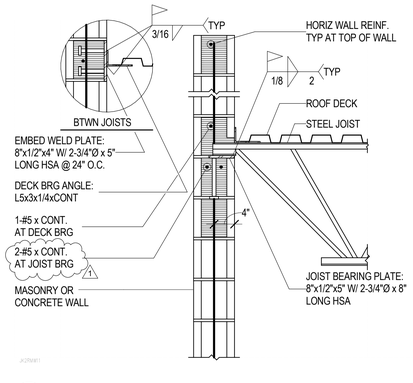

A3 / SF-515 TYPICAL JOIST/DECK BEARING AT WALL
NO SCALE

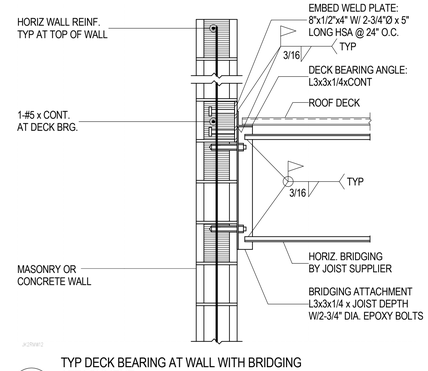

A4 / SF-515 TYP DECK BEARING AT WALL WITH BRIDGING ATTACHMENT
NO SCALE

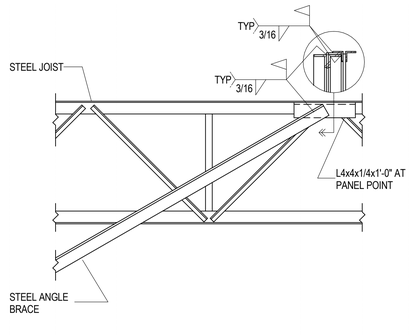

A5 / SF-515 TYPICAL BRACE TO TOP CHORD DETAIL
NO SCALE

GSBS ARCHITECTS
375 WEST 200 SOUTH
SALT LAKE CITY, UT 84101
P 801.521.8600
F 801.521.7913
www.gsbsarchitects.com

CANNONDESIGN
CANNON DESIGN
829 NORTH 1st AVENUE
PHOENIX, AZ 85003
602.294.6500

REVISIONS:

1	05/04/2012	ADDENDUM #2

REAVELEY
ENGINEERS + ASSOCIATES
Consulting Structural Engineers
P 801.486.3883
F 801.485.0911
675 E. 500 S. Suite 400
Salt Lake City, Utah 84102
www.reaveley.com

PROFESSIONAL STRUCTURAL ENGINEER #144210 4/27/2012 Ronald J. Reaveley STATE OF UTAH

UTAH VALLEY UNIVERSITY
STUDENT LIFE CENTER &
PARKING STRUCTURE

800 WEST UNIVERSITY PARKWAY
OREM, UT 84058

DFCM

4110 STATE OFFICE BUILDING
SALT LAKE CITY, UT 84112

DRAWN BY:	RH/RE+A
CHECKED BY:	OB/RE+A
OWNER PROJECT NO.:	#10289790
GSBS PROJECT NO.:	2011.045.00
ISSUED DATE:	04.27.2012

TYPICAL ROOF FRAMING
DETAILS

CONSTRUCTION DOCUMENTS

SF-515

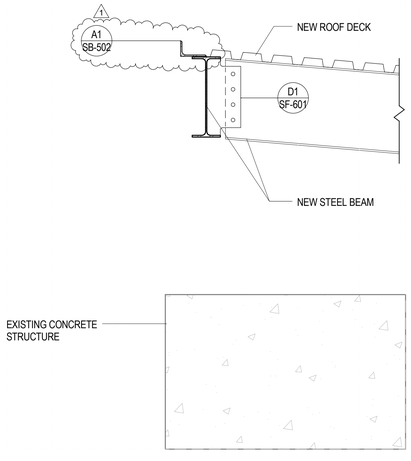

D1 / SF-520 NEW ROOF ABOVE EXISTING STRUCTURE
NO SCALE

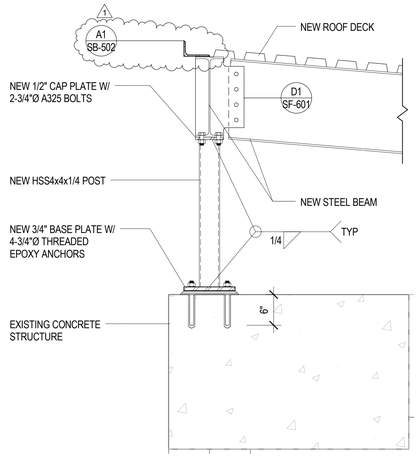

D2 / SF-520 NEW ROOF ABOVE EXISTING STRUCTURE
NO SCALE

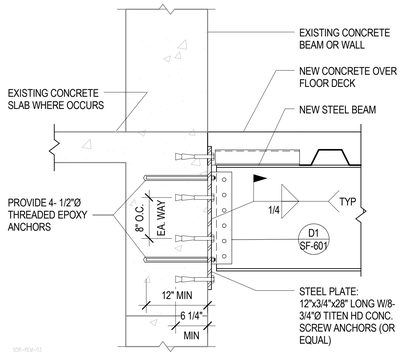

D3 / SF-520 NEW STEEL BEAM CONNECTION TO EXISTING STRUCTURE
NO SCALE

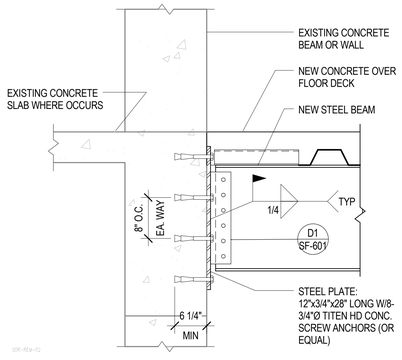

D4 / SF-520 NEW STEEL BEAM CONNECTION TO EXISTING STRUCTURE
NO SCALE

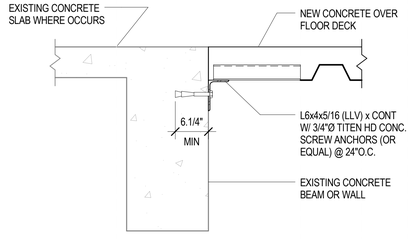

D5 / SF-520 NEW FLOOR DECK CONNECTION TO EXISTING STRUCTURE
NO SCALE

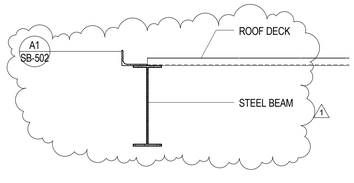

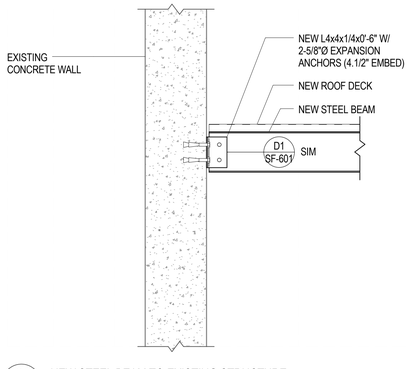

C4 / SF-520 NEW STEEL BEAM TO EXISTING STRUCTURE
NO SCALE

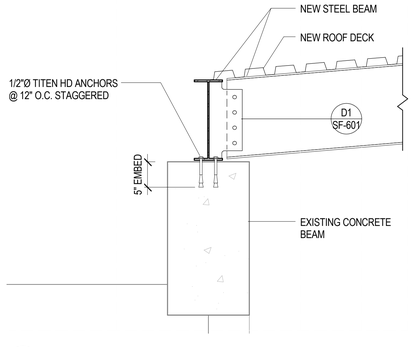

C5 / SF-520 NEW STEEL BEAM BEARING AT EXISTING
NO SCALE

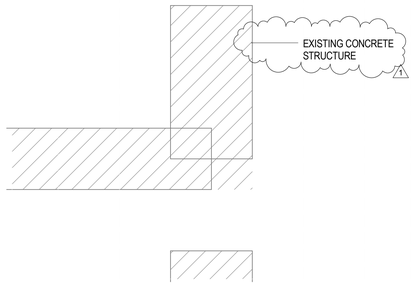

B1 / SF-520 NEW ROOF ABOVE EXISTING STRUCTURE
NO SCALE

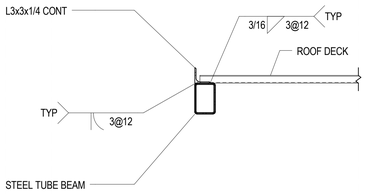

B3 / SF-520 STEEL TUBE BEAM EDGE CONDITION
NO SCALE

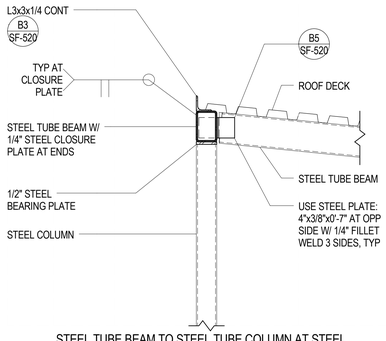

B4 / SF-520 STEEL TUBE BEAM TO STEEL TUBE COLUMN AT STEEL COLUMN
NO SCALE

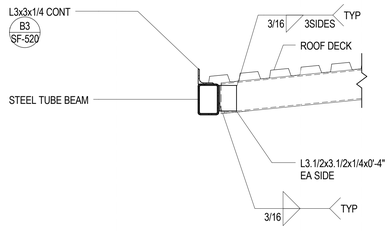

B5 / SF-520 STEEL TUBE BEAM TO STEEL TUBE BEAM
NO SCALE

GSBS ARCHITECTS
375 WEST 200 SOUTH
SALT LAKE CITY, UT 84101
P 801.521.8600
F 801.521.7913
www.gsbsarchitects.com

CANNONDESIGN
CANNON DESIGN
829 NORTH 1st AVENUE
PHOENIX, AZ 85003
602.294.6500

REVISIONS:

1	05/04/2012	ADDENDUM #2

REAVELEY
ENGINEERS + ASSOCIATES
Consulting Structural Engineers
P 801.486.3883
F 801.485.0911
675 E. 500 S. Suite 400
Salt Lake City, Utah 84102
www.reaveley.com

PROFESSIONAL STRUCTURAL ENGINEER #144210 4/27/2012 Ronald J. Reaveley STATE OF UTAH

UTAH VALLEY UNIVERSITY
STUDENT LIFE CENTER &
PARKING STRUCTURE

800 WEST UNIVERSITY PARKWAY
OREM, UT 84058

DFCM

4110 STATE OFFICE BUILDING
SALT LAKE CITY, UT 84112

DRAWN BY:	RH/RE+A
CHECKED BY:	OB/RE+A
OWNER PROJECT NO.:	#10289790
GSBS PROJECT NO.:	2011.045.00
ISSUED DATE:	04.27.2012

SORENSON REMODEL
DETAILS

CONSTRUCTION DOCUMENTS

SF-520

Column Locations	Level 1.5	Level 2	Level 3	Level 4	Level 5	Level 6
F1.3-8.02	W8x35					
F1.9-7.51, F1.9-7.59	HSS8x8x38					
F1.9-8.02	W8x35					
F2.1-7.51		W12x40				
F2.1-7.6		W12x50	W12x50			
F2.1(10' - 8 3/16")-7.8			HSS4x4x5/16			
F2.1(10' - 8 3/16")-7.86(-3' - 0"), F2.1(10' - 8 3/16")-7.9, F2.1(10' - 8 3/16")-7.95(10 1/2"), F2.1(12' - 1 13/16")-8.0, F8.5(6 11/16")-7.76(-4' - 1"), F8.5(6 11/16")-7.8(2' - 0"), F8.5(6 11/16")-7.86A(-11 1/2"), F8.5(6 11/16")-7.9, F8.5(6 11/16")-7.95, 7.76(-4' - 1")-7.86A(-5' - 5 1/16")			HSS4x4x1/4			
F3-7.51		W12x40				
F3-7.6		W14x132				
F3-7.86(4' - 2 13/16"), F3-7.95, F8.8-7.4		W12x79				
F3-7.86A		W12x53				
F4-7.67(-4' - 6")			HSS4x4x1/4			
F4-7.86A		W14x82				
F4-7.95, F6-7.95		W14x90				
F5-7.67(-4' - 6")			HSS4x4x1/4			
F5-7.86A		W14x82				
F5-7.95		W14x90				
F6-7.67(-4' - 6"), F7-7.67(-4' - 6")			HSS4x4x1/4			
F6-7.86A		W14x82				
F7(-10 3/4")-7.86(-1' - 1 3/4"), G1.89-7.95, G1.89-8.0		HSS5x5x1/4				
F7-7.95		W14x90				
F8-7.1		W12x65	W12x65			
F8-7.4		W12x58	W12x58			
F8(-1' - 1 1/8")-7.5(1' - 6"), F9(1' - 6")-7.0(-1' - 1 1/8")		HSS5x5x5/16				
F8-7.95		W12x53				
F8-8.02		HSS5x5x5/16				
F8(-8' - 4 15/16")-8.02		HSS4x4x1/4				
F8-8.06(1' - 7 3/4"), G1.90-8.06, G1.90-8.0(-3' - 3 7/8")		HSS5x5x1/4				
F8.5-7.95		W12x65				
F8.8-7.5		W12x72				
F9-7.1, F9-7.2		W12x65				
F9-7.3		W14x82				
F9-7.7		W12x96	W12x58			
F9-7.8		W12x65	W12x40			
F9-7.86		W12x72				
F9-8.0(-2' - 0 1/4")		W14x120				
F9.7(-8")-7.8		W12x58				
F9.9-6.96		W12x40				
F9.9-7.0		W12x58				
F9.9-7.1			HSS6x6x3/8			
G0-6.9			HSS4x4x1/4			
G0-7.1		W12x72	W12x50			
G0.1-7.2		W12x96	W12x58			
G0.1-7.4		W12x96	W12x53			
G0.1-7.5		W12x96	W12x58			
G0.1-7.59		W12x65	W12x58			
G0.1-7.6		W12x65	W12x50			
G0.1-7.7		W12x87	W12x53			
G0.1-7.8, G1-7.8		W12x58	W12x40			
G0.6-6.9	HSS4x4x5/16					
G0.6-6.91	W12x40					
G0.6-6.96		W12x45				
G0.6-7.0		W12x50				
G0.6-7.1		W12x58	HSS6x6x3/8			
G0.6-7.86, G1.5-7.95, G1.9-7.98		HSS6x6x1/4				
G1-6.9			HSS4x4x1/4			
G1-7.0		W12x65	W12x65			
G1-7.1		W12x58	W12x58			
G1-7.2		W12x65	W12x65			
G1-7.59		W12x65	W12x58			
G1-7.6		W12x53	W12x53			
G1-7.7		W12x72	W12x50			
G1-7.9, G1.9-7.9		HSS6x6x1/2				
G1.89-7.9		HSS5x5x5/16				
G1.9-7.0		W12x96	W12x65			
G1.9-7.2		W12x50	W14x82			
G1.9-7.3		W12x65	W12x96	W12x58		
G1.9-7.35, G1.9-7.45, G1.9-7.5, G1.9-7.59		W12x53	W12x65	W12x40		

Column Locations	Level 1	Level 1.5	Level 2	Level 3	Level 4	Level 5	Level 6
F1.3-8.02	1.1/4", SBP-5						
F1.9-7.51, F1.9-7.59	1.1/4", SBP-1 (1)						
F1.9-8.02	1.1/4", SBP-5						
F2.1-7.51	1.1/4", SBP-5						
F2.1-7.6	1.1/4", SBP-5						
F2.1(10' - 8 3/16")-7.8	SEE DETAIL (1)						
F2.1(10' - 8 3/16")-7.86(-3' - 0"), F2.1(10' - 8 3/16")-7.9, F2.1(10' - 8 3/16")-7.95(10 1/2"), F2.1(12' - 1 13/16")-8.0, F8.5(6 11/16")-7.76(-4' - 1"), F8.5(6 11/16")-7.8(2' - 0"), F8.5(6 11/16")-7.86A(-11 1/2"), F8.5(6 11/16")-7.9, F8.5(6 11/16")-7.95, 7.76(-4' - 1")-7.86A(-5' - 5 1/16")							
F3-7.51	1.1/4", SBP-5						
F3-7.6	1.1/4", SBP-5						
F3-7.86(4' - 2 13/16"), F3-7.95, F8.8-7.4	1.3/4", SBP-5						
F3-7.86A	1.1/2", SBP-5						
F4-7.67(-4' - 6")	SEE DETAIL (1)						
F4-7.86A	1.1/4", SBP-5						
F4-7.95, F6-7.95	1.1/4", SBP-5						
F5-7.67(-4' - 6")	SEE DETAIL (1)						
F5-7.86A	1.1/4", SBP-5						
F5-7.95	1.1/4", SBP-5						
F6-7.67(-4' - 6"), F7-7.67(-4' - 6")	SEE DETAIL (1)						
F6-7.86A	1.1/4", SBP-5						
F7(-10 3/4")-7.86(-1' - 1 3/4"), G1.89-7.95, G1.89-8.0	1", SBP-2						
F7-7.95	1.1/4", SBP-5						
F8-7.1	1.3/4", SBP-5						
F8-7.4	1.1/2", SBP-5						
F8(-1' - 1 1/8")-7.5(1' - 6"), F9(1' - 6")-7.0(-1' - 1 1/8")	SEE DETAIL (1)						
F8-7.95	1.1/2", SBP-5						
F8-8.02	1", SBP-1						
F8(-8' - 4 15/16")-8.02	1", SBP-2						
F8-8.06(1' - 7 3/4"), G1.90-8.06, G1.90-8.0(-3' - 3 7/8")	1", SBP-2						
F8.5-7.95	1.1/4", SBP-5						
F8.8-7.5	1.3/4", SBP-5						
F9-7.1, F9-7.2	1.3/4", SBP-5						
F9-7.3	1.1/4", SBP-5						
F9-7.7	1.3/4", SBP-5						
F9-7.8	1.3/4", SBP-5						
F9-7.86	1.3/4", SBP-5						
F9-8.0(-2' - 0 1/4")	1.1/4", SBP-5						
F9.7(-8")-7.8	1.1/2", SBP-5 (1)						
F9.9-6.96	1.1/4", SBP-5						
F9.9-7.0	1.1/2", SBP-5						
F9.9-7.1	1", SBP-2 (1)						
G0-6.9	SEE DETAIL						
G0-7.1	1.3/4", SBP-5						
G0.1-7.2	1.3/4", SBP-5						
G0.1-7.4	1.3/4", SBP-5						
G0.1-7.5	1.3/4", SBP-5						
G0.1-7.59	1.1/2", SBP-5						
G0.1-7.6	1.3/4", SBP-5						
G0.1-7.7	1.3/4", SBP-5						
G0.1-7.8, G1-7.8	1.1/2", SBP-5						
G0.6-6.9	3/4", SBP-1 (1)						
G0.6-6.91	1.1/4", SBP-5						
G0.6-6.96	1.1/4", SBP-5						
G0.6-7.0	1.1/4", SBP-5						
G0.6-7.1	1.1/2", SBP-5						
G0.6-7.86, G1.5-7.95, G1.9-7.98	1", SBP-1						
G1-6.9	SEE DETAIL (1)						
G1-7.0	1.3/4", SBP-5						
G1-7.1	1.1/2", SBP-5						
G1-7.2	1.3/4", SBP-5						
G1-7.59	1.1/2", SBP-5						
G1-7.6	1.1/2", SBP-5						
G1-7.7	1.3/4", SBP-5						
G1-7.9, G1.9-7.9	1", SBP-1						
G1.89-7.9	1", SBP-2						
G1.9-7.0	1.3/4", SBP-5						
G1.9-7.2	1.1/4", SBP-5						
G1.9-7.3	1.3/4", SBP-5						
G1.9-7.35, G1.9-7.45, G1.9-7.5, G1.9-7.59	1.1/2", SBP-5						

STEEL COLUMN SCHEDULE

SCALE: 1/8" = 1'-0"

STEEL COLUMN SCHEDULE NOTES

1. UNLESS NOTED OTHERWISE ALL COLUMNS SHALL BE INSTALLED W/ 4-3/4" DIAMETER A.B. W/ 3" (MIN.) HOOKS. PROJECT ANCHOR BOLTS 3" (MIN.) ABOVE THE TOP OF THE BASE PLATE. EMBEDMENT SHALL BE 9" (MIN.). ALL BOLTS SHALL BE INSTALLED W/ HARDENED WASHERS BENEATH THE NUT. ANY BOLT HOLES LARGER THAN THE BOLT DIAMETER PLUS 5/16" SHALL HAVE 5/16" PLATE WASHERS INSTALLED BENEATH THE HARDENED WASHERS.
2. ALL BOLTS IN CAP PLATES SHALL BE 3/4" DIA, A325M BOLTS TYPICAL U.N.O.
3. COLUMN SPLICES SHALL BE LOCATED PER SPLICE DETAILS, TYPICAL, U.N.O.
4. WELDS SHALL NOT BE MADE TO ANCHOR BOLTS.
5. ALL STEEL CAP PLATES SHALL BE 3/4" THICK UNO ON DETAILS. SEE DETAILS FOR ALL STEEL CAP PLATE TYPES.

GSBS ARCHITECTS
375 WEST 200 SOUTH
SALT LAKE CITY, UT 84101
P 801.521.8600
F 801.521.7913
www.gsbsarchitects.com

CANNONDESIGN
CANNON DESIGN
829 NORTH 1st AVENUE
PHOENIX, AZ 85003
602.294.6500

REVISIONS:

1	05/04/2012	ADDENDUM #2

REAVELEY ENGINEERS + ASSOCIATES
Consulting Structural Engineers
P:801.486.3883
F:801.485.0911
675 E. 500 S. Suite 400
Salt Lake City, Utah 84102
www.reaveley.com

PROFESSIONAL STRUCTURAL ENGINEER #144210 4/27/2012 Ronald J. Reaveley STATE OF UTAH

UTAH VALLEY UNIVERSITY
STUDENT LIFE CENTER &
PARKING STRUCTURE

800 WEST UNIVERSITY PARKWAY
OREM, UT 84058

DFCM

4110 STATE OFFICE BUILDING
SALT LAKE CITY, UT 84112

DRAWN BY:	RH/RE+A
CHECKED BY:	OB/RE+A
OWNER PROJECT NO.:	#10289790
GSBS PROJECT NO.:	2011.045.00
ISSUED DATE:	04.27.2012

STEEL COLUMN SCHEDULE

CONSTRUCTION DOCUMENTS

SF-602

Colvin Engineering Associates, Inc.
HIGH PERFORMANCE DESIGN

MECHANICAL PORTION OF ADDENDUM NO. 2

UVU SLC & Parking Structure

CEA PROJECT NO. 2011-009.00

May 4, 2012

All contractors submitting proposals for this project shall be governed by the following addendum, changes, and explanations to the bidding documents. Bids shall be submitted in accordance with the following:

Item No.	Add, Delete or Clarify	Specification Section or Drawing No.	Reference / Description:
1	Clarify	221410	-Eliminate reference to acid waste pipe from specification section 221410, part 2.2 A 2. See revised specification page at the end of this narrative.
2	Clarify	237410	-Modify specification for air handlers in part 2.1. Includes specification for fan arrays, added pressure relief doors, added supply fan variable frequency drives to scope of air handlers, and other items. See revised specification page at the end of this narrative.
3	Add/Clarify	MH6.01	-Add Sound Attenuator Schedule -Clarify Pump Schedule
4	Add	MH1.14A	-Add sound attenuator to relief fan ductwork.
5	Clarify	MP1.12A	-Modify heating water supply/return piping.
6	Add/Clarify	MP4.01	-Add general and keyed notes. -Modify heating water supply/return piping.
7	Add	MH1.12B	-Cabinet Unit Heater CUH-3
8	Add	MP1.12B	-Cabinet Unit Heater CUH-3 and associated piping and accessories.
9	Add	MP1.11B	-Piping for CUH-1 and FC-1.
10	Add	PL1.11A PL1.11B PL1.11C PL-P101	-Add sump pump at elevator pit. -Add oil interceptors INT-2 & INT-3.
11	Add/Clarify	PL1.11A	-Add notes about existing water valves and salt intake. -Add keyed note 14. Clarify location of domestic cold water serve entry into building.
12	Add	PL1.11B	-Add keyed note 7 at gas regulator.
13	Add	PL1.12A	-Add piping from elevator sump pump.
14	Add	PL4.01	-Add piping from elevator sump pump. -Add oil interceptor INT-1.
15	Add	PL6.01	-Add grey water pump schedule and oil interceptor schedule.

HVAC / Energy Efficient Solutions / CFD Modeling / Air Pollution Control
244 West 300 North, Suite 200 / Salt Lake City, Utah 84103-1147 / 801.322.2400 / FAX 801.322.2416

PRODUCT SUBSTITUTIONS / PRIOR APPROVALS

Item No.	Specification Section	Product Type	Alternate Manufacturers
1	235700	Fan Coil Units	Greenheck, Temtrol, IEC, Magic Air
2	230540	Sound Attenuators	Aerosonics
3	233300	Insulated Flexible Ductwork	Quietflex
4	235100	Positive Pressure Chimney/Vent System	Protech Systems
5	235700	Cabinet Unit Heaters, Unit Heaters	Williams, Sigma
6	235700	Duct Mounted Coils	Greenheck
7	235700	Electric Unit Heaters	Heatrex

The above named alternate equipment manufacturers stand approved in name only. Approval here in no way relieves the supplier from complying with all other engineering, weight spatial, and quality requirements of equipment indicated in the contract documents. Contractors using products from the above named alternate manufacturers shall refer to Specification Section 15010 for detailed contractor responsibilities related to the use of alternate brands not used as the Basis of Design.

END OF MECHANICAL NARRATIVE FOR ADDENDUM NO. 2

Modifications to specification section 237410, part 2.1, issued as part of Addendum 2.

B. Handle air handling units carefully to avoid damage to components, enclosures, and finish. Do not install damaged components; replace and return damaged components to air handling unit manufacturer.

C. Store air handling units in clean place and protect from weather and construction traffic.

D. Comply with Manufacturer's rigging and installation instructions for unloading air handling units, and moving them to final location.

1.6 EXTRA STOCK

A. Provide one complete extra set of filters for each air handling unit.

B. Provide one spare set of belts for each belt-driven air handling unit.

C. Provide one spare sump pump for each evaporative media sump.

PART 2 - PRODUCTS

2.1 CUSTOM AIR HANDLING UNITS

A. Approved manufacturers: Subject to compliance with requirements, provide products by one of the following:

1. Governair
2. Haakon
3. Mammoth
4. Hunt Air
5. Racan
6. Energy Labs
7. Unitech

B. Manufactured Units:

1. General Description: Factory assembled, consisting of fans, motor and drive assembly, coils, dampers, plenums, filters, drip pans, and mixing dampers. Provide factory-fabricated and factory-tested air-handling units of sizes and capacities as scheduled, and as specified herein.

C. Casing:

1. Walls and roof of each unit shall have a support framework constructed of steel to which all exterior and interior panels are mechanically fastened. All walls shall be constructed of minimum 2-inch thick “double wall” acoustical thermal panels. Exterior wall panels shall be a minimum of 16 gauge G90 galvanized steel. The inner wall shall be a minimum of 22 gauge, perforated G90 galvanized steel. The insulation shall be minimum 2 inch 3.0 or 4.5 lb/cu ft. density fiberglass. All permanently joined flanged panel surfaces shall be sealed with an individual strip of tape sealer and caulked with a high grade silicone sealant. Wall (and roof) seams shall be turned inward to provide a clean flush exterior finish. All panel seams shall be sealed during assembly to produce an airtight unit.

2. All insulation edges shall be protected with metal lagging.

3. Stiffeners of angle steel shall be supplied as required to maintain casing deflection criteria of 1/200 at 1.5 times the working pressure.

4. Units shall ship as one single piece whenever feasible. If multiple sections are required, the units shall be engineered for simple demount and field assembly. Mating frames of each section shall be fabricated with a flanged perimeter which is predrilled with assembly clearance bolting holes and is continuously gasketed. Demount gasket supplied with the unit shall be a high quality weather resistant closed cell neoprene sponge rubber. Assembly lugs, fabricated from structural steel with appropriate assembly clearance holes shall be welded to the base frame. All gasket and necessary assembly hardware shall ship with the unit sections, boxed separately, and clearly marked.

5. The AHU framework and casing construction shall be fabricated in such a manner as to comply with the following requirements:

    a. Provide an airtight unit that will not leak greater than 1% of the specified airflow at the rated static pressures.
    b. Should it become necessary to remove casing panels to facilitate removal, replacement or repair of internal equipment components such as fan wheels, shafts, motors or coils, the unit must be able to be disassembled and supported without the use of external or supplemental bracing. If this is not possible, then access doors must be provided of sufficient size to allow for removal of any components without structural degradation of the unit.

6. AHU's shall be rated and capable of passing a maximum 1% air leakage rate test. The AHU manufacturer shall conduct a cabinet air leakage test at no additional cost as outlined below:

   a. The cabinet shall be tested at the unit design operating static pressures. Cabinet leakage is not to exceed 1% of the specified air flow.
   b. Leak testing shall be performed by measuring the airflow into (or out of) the air handling unit at the designed operating static pressures. A chambered nozzle with a variable supply system, as described in AMCA STANDARD 210-85, must be used as the airflow measurement system.
   c. All supply and return air openings are to be sealed along with the air seal at the supply fan to isolate the high and low side of the unit.
   d. The airflow measurement system shall be ducted to the unit. The airflow pumped into (or out of) the unit is to be measured at the appropriate operating pressures.
   e. The pressure drop across the chambered nozzle shall be measured with a manometer. The airflow will then be calculated using the AMCA Standard 210 equation 9.3.2.8 Flow Rate for Chamber Nozzles.
   f. **Leakage test shall be performed by air handler manufacturer at the jobsite after air handler has been installed and all sections assembled.**

D. Base Construction:

1. Base shall be constructed from a minimum 2" X 5" X 10 gauge steel tubes, channels, or I-beams fitted with cross members to support all interior components. Frame to be continuously welded at all joints. Units less than or equal to 20 ft. long shall have a minimum 5 inch base, and units greater than 20 ft. shall have a minimum of 6 inch base. Base shall be provided with lifting lugs, minimum four (4) per unit section.

2. A 12 gauge G90 galvanized steel or powder coated checker plate floor shall be installed on the base. Floor shall be flat, reinforced from below, with all seams continuously welded. The floor shall be insulated with minimum 3 inch fiberglass insulation and sheeted with a 20 gauge galvanized exterior steel liner. Provide safety pipe railing on all floor openings larger than 3 sq.ft.

3. Provide auxiliary drains in fan sections downstream of cooling coils and humidifiers, and in mixing sections. Drain pans shall be 3" deep fabricated of 16 gauge, 304 stainless steel with 1-1/4" MPT connections mounted below the bottom of the drain pan and the 20 gauge subfloor of the unit. Drain pan shall be sloped to the outlet in the pan floor so as to prevent any standing water to accumulate in the drain pan.

4. All drain connections on floor mounted air handling units shall terminate at the side of the unit. **Drains from AH-1 can terminate out the bottom of the unit as this unit is installed on an elevated steel platform.**

5. Maximum base deflection shall be ¼” on 240” unsupported span.

6. Units shall be designed to be supported by perimeter steel (AH-1) and a concrete housekeeping pad (AH-2).

E. Access Doors:

1. Access doors shall be manufactured from 16 gauge G90 galvanized steel. The doors shall be double wall construction with 20 gauge solid metal liner on the inside. Corners of the doors shall be continuously welded for rigidity. Minimum two inch 3.0 or 4.5 lb/cu ft. density insulation shall be sandwiched between the 16 gauge outer layer and the 20 gauge inner layer.

2. Two metal latches operable from either side of door shall be provided. Door opening shall be fully gasketed with continuous neoprene/EPDM rubber bulb type gasket rated for a constant exposure temperature range of -20°F to 160°F. All doors shall swing open against the AHU component section pressure except on outdoor units and unless leakage rate specified can be achieved otherwise. Doors shall have door tie backs to secure an open position. Door frames shall be made from 16 gauge galvanized steel or extruded aluminum with the outside of the door flush with the unit. Minimum door opening size shall be 24 in. x 60 in. (where unit height permits) unless otherwise noted on drawings. Provide 10" x 10" wire - reinforced glass window in each access door.

F. Fans - Supply and Return:

~~1. Fans shall be backward inclined, forward curved, DWDI or plug type as indicated in the schedules or as implied by the specified equipment.~~

~~2. All fans shall be tested in accordance with AMCA Standard 210-70 Test Code for Air Moving Devices.~~

~~3. Backward inclined fans shall bear the AMCA sticker. Backward inclined wheels over 22 inches diameter shall have double thickness airfoil shaped fan blades.~~

~~4. Fan housing shall be constructed of steel, adequately braced with structural steel for rigidity. Plug fans shall be encased by a protective steel screen. Plug fan inlets shall be protected by an OSHA-approved inlet screen.~~

~~5. Fan shafts are to be solid, ground and polished, carbon steel, SAE 1045 materials, machined to close tolerances, keyed to the fan wheel. Coat the fan shaft with a rust inhibitor after machining. Hollow shafts will not be acceptable.~~

~~6. Fan bearings shall be in self aligning pillow block, grease lubricated, extra heavy duty antifriction ball or spherical roller type, selected for an AFBMA L-50 average life of 400,000 hours at the maximum RPM of the fan Class. Bearings are to be mounted on the fan structural bracing. On units with casings less than 54”~~

~~high, provide extended lubrication lines to permit lubrication for both bearings to be performed from the access door side of the air handling unit.~~

~~7. Fan motors shall be in accordance with Section 230529. Provide variable frequency drive and matched motor, where indicated, in accordance with Section 230810.~~

~~8. Fan and motor are to be mounted on all welded, structural steel, prime coated, internal isolation base with springs. The outlet of the fan shall be separated from the unit casing by means of a factory installed flexible fabric connection. The internally mounted motor shall be mounted on a slide rail base to allow proper adjustment of belt tension.~~

~~9. Drive sheaves are to be machined cast iron. Provide an adjustable motor sheave on motors of 10 HP and less. Sheave selections and belt lengths are to be in accordance with the drive manufacturer's recommendations based on the specific motor nameplate HP including a 1.2 service factor for fans served by VFD's and a 1.5 service factor for constant volume fans.~~

~~10. Provide an OSHA-approved metal belt guard having sides of galvanized steel and expanded metal face with openings for fan tachometer readings. Belt guard shall be sized to allow either sheave to be increased by two sizes.~~

1. Fans shall be backward inclined, forward curved, direct-drive plug type. Air handler AH-1 has a fan array two fans tall by four fans wide, for a total of 8 fans. Air handler AH-2 has a fan array two fans tall by three fans wide, for a total of 6 fans.

2. **All fans shall be tested in accordance with AMCA Standard 210-70 Test Code for Air Moving Devices.**

3. **Backward inclined fans shall bear the AMCA sticker. Backward inclined wheels over 22 inches diameter shall have double thickness airfoil shaped fan blades.**

4. **Plug fans shall be encased by a protective steel screen. Plug fan inlets shall be protected by an OSHA-approved inlet screen.**

5. **Fan shafts are to be solid, ground and polished, carbon steel, SAE 1045 materials, machined to close tolerances, keyed to the fan wheel. Coat the fan shaft with a rust inhibitor after machining. Hollow shafts will not be acceptable.**

6. **Fan bearings shall be in self aligning pillow block, grease lubricated, extra heavy duty antifriction ball or spherical roller type, selected for an AFBMA L-50 average life of 400,000 hours at the maximum RPM of the fan Class. Bearings are to be mounted on the fan structural bracing. On units with casings less than 54" high, provide extended lubrication lines to permit**

lubrication for both bearings to be performed from the access door side of the air handling unit.

7. **Fan motors shall be in accordance with Section 230529. Provide variable frequency drive and matched motor, in accordance with Section 230810. On AH-1 there are a total of 8 supply fans in the air handler. Provide 4 variable frequency drives, one for every two fans. On AH-2 there are a total of 6 supply fans in the air handler. Provide 3 variable frequency drives, one for every two fans. Provide motor shaft grounding kit on all fan motors. Include a current transformer with relay on each fan motor to signal when a supply fan has failed.**

8. **Fan and motor are to be mounted on all welded, structural steel, prime coated, internal isolation base with springs. The outlet of the fan shall be separated from the unit casing by means of a factory installed flexible fabric connection. Provide 4" double wall perforated casing around each fan wheel to reduce noise and minimize system effect.**

9. **An "I-Beam" shall be factory installed at the roof, inside the AHU casing, above all motors. This "I-Beam" shall serve as a permanent device from which the fan and motor can be lifted from its mounting position by cable or chain and then easily moved to the access door for removal from the AHU.**

10. **Provide integral backdraft dampers at all supply fans.**

G. Vibration Isolation:

1. An integral all welded steel vibration isolation base shall be provided for the fan and motor.
2. Seismic certified spring isolators shall be free standing with sound deadening pads and leveling bolts. Spring diameter to compressed operating height ratio shall be 1 to 1. Spring deflection shall be per Section 230540 requirements. Isolators shall have integral seismic restraints. If isolators are not a seismic rated assembly, then the restraint device must be approved and stamped by a licensed engineer duly registered in the state of the project site for this specific job.

H. Electrical:

1. Starters, Electrical Devices, and Wiring: Electrical devices and connections shall comply with Division 26.

I. Coils:

1. Coils shall be fully enclosed within casing and mounted on galvanized steel angle iron racks manufactured to allow coils to slide out individually. Removable coil access panels shall be provided to remove coils through casing wall.

2. Provide drain pans for all cooling coils except indirect cooling coils. Drain pans shall be 16 gauge, 304 stainless steel. Stacked coils shall have intermediate drain pans interconnected with 1 inch copper drain lines.

3. Coils shall be designed for chilled water or hot water service with 5/8" dia. tubing of 0.035" wall thickness. Maximum fins per inch shall be as indicated on schedule sheets. Coils shall be hydrostatically tested at 400 psig, and shall be suitable for working pressures and temperatures up to 200 psig and 220 degrees F. Fin thickness shall be 0.0075 inch minimum. Coils must have brazed U-bend return bends. Hairpin construction type coils will not be accepted.

4. Coils shall be selected with the aid of a computer program certified to provide ratings in accordance with ARI Standard 410 and at job site elevation.

5. Pipe connections shall be on the same end, and shall be threaded.

6. Water coils shall be fully drainable by removing a single threaded plug for each coil row.

7. ~~Maximum air face velocity across cooling coils shall be 550 fpm~~. **Coils shall have width and height not less than the dimensions indicated on the schedule sheet.**

J. Filters:

1. Filters shall be as specified in Section 234100-Air Cleaning.

K. Filter Gauges:

1. Provide Dwyer 2000 Magnehelic gauges factory installed on casing of AHU. Gauges shall be accurate to ±2% of full range. Sensing probes and shut-off valves shall be provided for each gauge. One gauge shall be provided for each filter bank.

L. Finish:

1. Unit shall be powder coated or finished painted with two component etch bond primer and finish painted with alkyd enamel, or powder coated. All uncoated steel shall be painted with red oxide primer. All metal surfaces shall be pre-painted with vinyl wash primer to ensure paint bond to metal.

M. Lights:

1. Marine lights with protective metal cage, glass or plastic globe, and compact fluorescent bulb shall be installed in all accessible sections on the wall across from the access doors for units less than 144” wide. For units greater than or equal to 144” wide, provide two lights or a single 4-foot fluorescent light with an

acrylic diffuser and a continuous neoprene gasket in the center of each section. One switch for all the lights with an indicator light and a duplex outlet shall be installed on the exterior of the unit. Electrical power shall be 120/1/60.

N. Dampers:

1. Dampers shall be Ruskin CD60 (galvanized steel airfoil blades, 4000 fpm max. velocity for 48" blade, 2.0 CFM/SF leakage at 1.0" w.c., max. section 60"x72") or Engineer accepted equal.
2. Position damper parallel blades so that return air and outside air streams are directed toward each other to promote better mixing of the air.
3. Damper actuators to be provided with the dampers. Actuators shall be Belimo Brand.

O. Direct Evaporative Cooling Section:

1. AirWasher shall consist of a stainless steel basin, casing top panel, and casing side panels, wetted surface fill, upper distribution pad, recirculating pump, water distribution pipe and header, fresh water make-up system, and overflow and drain pipe connections.

2. The basin shall be constructed of 16 gauge 304 stainless steel, formed and welded on both sides. The basin shall include continuous welded stainless steel supports for the fill material and 2-1/2" minimum threaded pipe connections for drain, and 4" threaded pipe connection for overflow. Both drain and overflow shall exit side of basin. Provide threaded port in low point of overflow pipe for installation of a water detector by the div. 230900 contractor. The basin shall be 18" deep and extend a minimum of 24" downstream of the leaving air side of the media. Bottom of basin shall slope in two directions to drain connection at 1/2" per ft. Drain connection shall be at lowest point to allow all water to be drained. Low point of sump shall be mid-width of media. Refer to details 1 and 2 on sheet MH5.02.

3. The casing side panels and top panel shall be fabricated from 14 and 16 gauge 304 stainless steel with perforated angle flanges at panel edges and formed intermediate reinforcing ribs for rigidity. Perforated panel edges are required to allow airflow through edges of media to dry media after circulation pump is turned off. Joints between panels and between panels and basin shall be gasketed and caulked to be water and airtight. Removable panels, with stainless steel bolts and wing nuts, shall be furnished as necessary to provide access to all portions of the water distribution header/nozzles, and to allow for distribution headers to be removed for cleaning.

4. The wetted surface fill shall be Munter's Glasdek with TUFedg rubberized edge. Fill materials shall be formed and laid up using a cross fluted design to produce a highly turbulent mixing of air and water for optimum evaporation and heat transfer. Media fill sections shall not be more than 6 feet tall. Upper media shall be supported by horizontal stainless steel angles with intermediate vertical supports at 4 feet o.c. Design shall provide flushing during water circulation to

minimize fouling due to mineral buildup, sand, or atmospheric dust. The upper section of the fill consists of a 2" thick distribution pad of the same material as the fill. Fill depth shall be as scheduled on drawings. Fill face area shall be sized to the nominal dimensions scheduled for operation at no greater than 500 fpm at full airflow to prevent water carryover.

5. The water recirculation system shall consist of a factory furnished and mounted vertical submersible pump, located in the basin. Pump manufacturer Ebara Model NO. EPD The pump shall be protected against entry of debris by removable brass or stainless steel suction screens in stainless steel frames. Pump shall operate on 120v/1 ph./60 Hz power. Provide disconnect switch and low water cutoff to de-energize the pump if water level becomes low enough to damage the pump. Low water cut-off shall automatically reset when sufficient water is present for safe pump operation. Consider using Little Giant low level pressure switch for low level cutoff. Construction and flow rate for the pump discharge piping and distribution header shall be in accordance with Munter's recommendations. A balancing cock and rotometer/flowmeter with flow indication in GPM (King Series 7200 or equal, flow range 3-30.5 GPM) shall be furnished for adjustment of flow. Ports shall be furnished in the pump discharge pipe for use with bleed valve. Provide exposed ball valves with hose connections at both ends of header for periodic manual flushing of header piping. Provide bleed valve and ¼" copper tube to drain.

6. Make-up water flow is regulated by a ½" non-modulating float valve, Cla-Val 124-01A or equal by OCV Control Valve with float. A fitting and hose bib shall be furnished for use as a quick-fill means and for periodic flushing cleaning of sump. Provide balance valve with locking stop on makeup line. Adjust balance valve to limit maximum fill rate to less than overflow piping flowrate to prevent over-flowing basin if float valve fails. Overflow to be minimum Ø 4".

7. Water drain down/flush valves and controls shall be by 230900 Contractor.

8. Provide one spare sump pump per unit.

P. Electrical Service:

1. ~~In addition to the~~ **Provide a** 120/1/60 single point connection for lights and outlets, ~~the unit shall have factory installed conduit and wiring to a single point exterior to the AHU casing for each motor.~~ All wiring and components shall comply with the current National Electrical Code and Division 26.
2. Provide motor starters, disconnects, transformers and all required accessories complying with Division 26 **requirements** ~~unless these are specified to be by Division 26 or unless a remotely located VFD is to be used~~.
3. ~~Units in which the supply and/or return fan is controlled by an external variable frequency drive shall have a separate 120/1/60 circuit for lights and outlets~~. **Provide the variable frequency drives for the supply fans in each unit. Mount drives in a power distribution cabinet on the side of the air handler. Power distribution cabinet shall include variable frequency drives, and all**

necessary relays, fuses, and disconnects for each individual fan motor. Include all wiring from each fan motor to the variable frequency drive serving that fan.

4. GFI outlet for evaporative media pump shall be located a minimum 36" downstream of media or outside air handler to prevent nuisance trips.

Q. **Pressure Relief Doors:**

1. **Provide pressure relief doors in the septum wall that separates the supply fan inlet plenum from the supply fan discharge plenum. Doors shall include stainless steel springs to close door upon pressure relief and system shutdown. Door leakage rate shall not exceed 7 CFM per square foot at 1.0 inch w.g. Relief pressure shall be set at 7" w.c.**
2. **Each pressure relief door shall include a factory-mounted end switch that indicates when the door is fully closed. The 230900 contractor will connect to each end switch to monitor relief door position on the DDC control system.**
3. **Pressure relief doors shall be Ruskin PRD18, Greenheck PRAD, or equal from Kees or Pottorff.**

R. **Variable Frequency Drives:**

1. **Provide the variable frequency drives for the supply fans in each air handler. Drives are scheduled on sheet MH6.02. Note each variable frequency drive will serve two fans in each air handler. Variable frequency drives shall comply with the requirements of specification sections 230810 and 262923. Provide drives from the manufacturers listed in those sections, and include a BACnet interface on each drive for communication with the 230900 controls system.**

PART 3 - EXECUTION

3.1 INSTALLATION, GENERAL

A. Install air-handling units level and plumb, in accordance with manufacturer's written instructions and recognized industry practices. Maintain manufacturer's recommended clearances.

1. Unless otherwise noted on the drawings or in Part 2, support floor-mounted units on concrete equipment bases 4" high and 4" larger than equipment base on each side, in accordance with Section 230529. Secure units to anchor bolts installed in concrete equipment base. Provide seismic restraint in accordance with Section 230548.
2. Unless otherwise noted on the drawings or in Part 2, support roof-mounted units on factory-fabricated insulated galvanized steel roof curbs nominal 12" high. Construct with integral slope for mounting on sloped roof. Secure units to roof curb. Provide seismic restraint in accordance with Section 230548.

B. Interior Buried:

1. Provide type K annealed (soft) copper water tube conforming to ASTM B-88 with 95% tin 5% antimony solder joints using wrought fittings. No joints below grade. Provide continuous tube for all buried tubing using tube bends in lieu of fittings. Exterior tube may be coupled where requirements are in excess of standard mill lengths by using wrought pressure couplings with stops and silver solder brazed Joints. Lengths coupled in this manner, where necessary and acceptable to the Engineer, will meet the intent of the no fitting requirement of this Specification. Interior buried tube shall meet the same criteria and requirements.

C. Interior Tube Supported by Hangers and Clamps:

1. Provide ASTM B88 Type L hard drawn copper tube for all water distribution piping inside building/structure, with wrought copper fittings and couplers up to 6", cast brass or bronze fittings and couplers for sizes 6" and larger. Joints shall be 95-5 Class SnSb solder or Victaulic CTS roll-grooved couplers and fittings for 3” and larger tube.

2.2 SOIL DRAIN WASTE, VENT AND STORM PIPE FITTINGS AND JOINTS

A. General:

1. Cast iron pipe centrifugally cast service weight (SV) soil pipe with cast iron drainage fittings conforming to ASTM A 74. Joint materials and systems may be hub and spigot with neoprene gaskets and lubricant conforming to ASA-021 and ASTM C-564 SV pattern. Gaskets shall be equal to U.S. Pipe Company Veri-tite conforming to ASTM-C564 and/or CISPI HSN75 and be certified in writing to the Engineer that the following criteria has been met, thru testing by a recognized independent testing laboratory. Cast iron hubless pipe and fittings conforming to ASTM A 888 or CISPI 301. Hubless couplings shall conform to ASTM C 1277 for standard and ASTM C 1540 for heavy duty or CISPI 310. **All cast iron pipe, fittings, and joints to be manufactured in USA.**
Criteria: Sizes 2" thru 6" shall withstand 15 psig hydrostatic pressure for 10 minutes with unrestrained joints, and no leakage, and using restrained joints must be able to withstand 25 psig air pressure and 40 psig hydrostatic pressure with no leakage. Offset joints shall withstand 1056 pounds of horizontal force without joint separation or detectable leakage.
2. ~~Cast iron pipe is only allowed to serve branch soil drain waste and vent lines serving restrooms, janitor’s closets, and mechanical penthouse. Use acid resistant drain, waste, and vent piping for all other spaces and for common lines serving any space not a restroom, janitor’s closet, or mechanical penthouse~~. All **soil drain waste, vent, and** storm drainage piping to be cast iron.

GSBS ARCHITECTS
375 WEST 200 SOUTH
SALT LAKE CITY, UT 84101
P 801.521.8600
F 801.521.7913
www.gsbsarchitects.com

CANNONDESIGN
CANNON DESIGN
829 NORTH 1st AVENUE
PHOENIX, AZ 85003
602.294.6500

REVISIONS:

1	05.04.2012	ADDENDUM 2

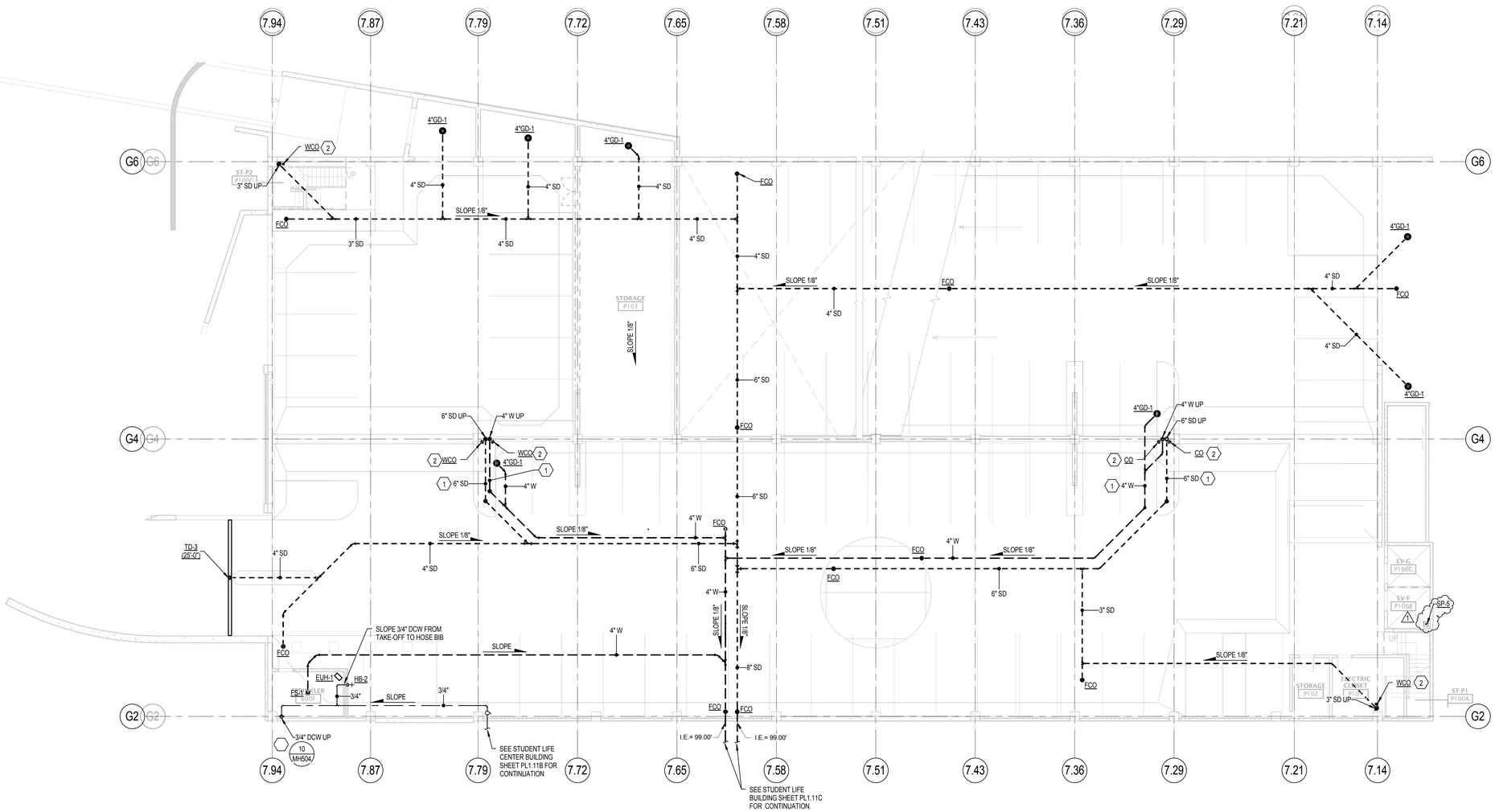

1 OVERALL P1 PLUMBING FLOOR PLAN
SCALE: 3/32" = 1'-0"

KEYED NOTES

1. ROUTE PIPE BELOW SLAB ABOVE FOOTING AT THIS LOCATION. DROP DOWN TO CONNECT TO ROOF DRAIN PIPE AT EDGE OF FOOTING.
2. PROVIDE CLEANOUT AT THE BASE OF ROOF DRAIN/WASTE RISER.

GENERAL NOTES

A. SLOPE ALL HORIZONTAL ROOF DRAIN AND WASTE PIPING AT 1/8" PER FOOT MINIMUM. TYPICAL.
B. ALL DRAINS ON UPPERMOST LEVEL SHALL DRAIN TO THE STORM DRAIN SYSTEM.
C. CONTRACTOR TO PROVIDE IMBEDDED ANCHORS IN OVERHEAD POST TENSION SLAB TO SUPPORT ALL OVERHEAD PIPING. DO NOT DRILL INTO POST TENSION SLAB.

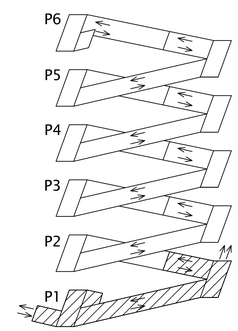

KEYPLAN

NOTE : PARKING LEVEL P2 = MAIN BUILDING LEVEL 2

UTAH VALLEY UNIVERSITY STUDENT LIFE CENTER & PARKING STRUCTURE

800 WEST UNIVERSITY PARKWAY
OREM, UT 84058

DFCM

4110 STATE OFFICE BUILDING
SALT LAKE CITY, UT 84112

DRAWN BY:	Author
CHECKED BY:	Checker
OWNER PROJECT NO.:	#10289790
GSBS PROJECT NO.:	2011.045.00
ISSUED DATE:	04.27.2012

OVERALL P1 PLUMBING FLOOR PLAN

CONSTRUCTION DOCUMENTS

Colvin Engineering Associates, Inc.
244 West 300 North Suite 200
Salt Lake City, Utah 84103
Phone: (801) 322-2400 / Fax: (801) 322-2416

PL-P101

Copyright (C) 2010 by Colvin Engineering Associates, Inc. Salt Lake City, Utah. All rights reserved. Unauthorized copying and/or use is illegal and subject to prosecution.

Copyright (C) 2011 by Colvin Engineering Associates, Inc. Salt Lake City, Utah. All rights reserved. Unauthorized copying and/or use is illegal and subject to prosecution.

GREASE INTERCEPTOR (GI) / SAND OIL SEPARATOR (SOS)

PLAN CODE	DESCRIPTION	SERVICE	EXTERIOR DIMENSIONS (IN) LENGTH	WIDTH	DEPTH	MANHOLE COVERS DIA (IN)	COUNT	WASTE/ STORM	VENT	MANUFACTURER & MODEL NO
GI-1	1,800 GALLON GREASE INTERCEPTOR	KITCHEN	162	60	74	32	2	4"	3"	DURACRETE 1,800 GALLONS. PROVIDE EPOXY COATING IN INTERCEPTOR AND MANHOLE EXTENSIONS, GASKETED SOLID MANHOLE LID WITH STAINLESS STEEL BOLTS.
SOS-1	3,000 GALLON SAND-OIL SEPARATOR	PARKING STRUCTURE COVERED LEVELS	174	96	74	32	2	6"	4"	DURACRETE 3,000 GALLONS. PROVIDE EPOXY COATING IN SEPARATORS AND MANHOLE EXTENSIONS, GASKETED SOLID MANHOLE LID WITH STAINLESS STEEL BOLTS.
SOS-2	5,000 GALLON SAND-OIL SEPARATOR	PARKING STRUCTURE OPEN LEVELS	216	96	98	32	2	8"	6"	DURACRETE 5,000 GALLONS. PROVIDE EPOXY COATING IN SEPARATOR AND MANHOLE EXTENSIONS, GASKETED SOLID MANHOLE LID WITH STAINLESS STEEL BOLTS.

SAMPLING MANHOLE (SM)

PLAN CODE	DESCRIPTION	EXTERIOR DIMENSIONS (IN) LENGTH	WIDTH	DEPTH	MANHOLE COVERS DIA (IN)	COUNT	MANUFACTURER & MODEL NO
SM-1	SAMPLING MANHOLE	60	60	46	32	1	DURACRETE PROVIDE EXTENSION, GASKETED SOLID MANHOLE LID WITH STAINLESS STEEL BOLTS.

CIRCULATOR PUMP SCHEDULE (DCP)

PLAN CODE	TYPE	DUTY	FLOW (GPM)	PRESSURE (FT)	FLUID	MOTOR LOAD (BHP)	SIZE (HP)	EFF. (%)	VOLTAGE & PHASE	PUMP & MOTOR WT. (LBS)	MANUFACTURER & MODEL NO.	REMARKS
DCP-1	INLINE	DOMESTIC HOT WATER	4.5	30	WATER	FRAC.	FRAC.	PREM.	115/1	20	GRUNDFOS UP26-99BF	-

GAS FIRED WATER HEATER SCHEDULE (WH)

PLAN CODE	INPUT (BTUH)	EFFICIENY (%)	FUEL	CAPACITY (GAL)	RECOVERY RATE (GPH)	TEMPERATURE RISE (°F)	FLUE DIA	FLUE TYPE	MAXIMUM DIMENSIONS DIAMETER (IN)	HEIGHT (IN)	ELECTRICAL VOLTAGE & PHASE	BLOWER FLA	IGNITER AMPS	WEIGHT (LBS)	MANUFACTURER & MODEL NO.	REMARKS
WH-1	300,000	95	NG	130	349	100	4"	PVC	34	76	120/1	2.2	4.0	1,500	A.O. SMITH BTH-300	PROVIDE W/ CONENTRIC VENT KIT AND CONDENSATE NEUTRALIZATION KIT
WH-2	300,000	95	NG	130	349	100	4"	PVC	34	76	120/1	2.2	4.0	1,500	A.O. SMITH BTH-300	PROVIDE W/ CONENTRIC VENT KIT AND CONDENSATE NEUTRALIZATION KIT
WH-3	300,000	95	NG	130	349	100	4"	PVC	34	76	120/1	2.2	4.0	1,500	A.O. SMITH BTH-300	PROVIDE W/ CONENTRIC VENT KIT AND CONDENSATE NEUTRALIZATION KIT

GREY WATER SUMP PUMP (SP)

PLAN CODE	AREA SERVED	PUMP FLOW (GPM)	HEAD (FT)	CONFIGURATION	MANUFACTURER & MODEL NO	MOTOR VOLTAGE/ PHASE	SIZE (HP)	REMARKS
SP-1	ELEVATOR A	10	20	SIMPLEX SUBMERSIBLE GREY WATER SUMP PUMP	WEIL 1409	115/1	-	CARBON CERAMIC SEAL AND FACTORY DISCONNECT AND CONTROLLER #8244 DIAPHRAGM LOW LEVEL CONTROL SWITCH, TEST BUTTON AND GREEN LIGHT POWER TO PUMP MOTOR WITH 15 FOOT CORD
SP-2	ELEVATOR B & C	10	20	SIMPLEX SUBMERSIBLE GREY WATER SUMP PUMP	WEIL 1409	115/1	-	CARBON CERAMIC SEAL AND FACTORY DISCONNECT AND CONTROLLER #8244 DIAPHRAGM LOW LEVEL CONTROL SWITCH, TEST BUTTON AND GREEN LIGHT POWER TO PUMP MOTOR WITH 15 FOOT CORD
SP-3	ELEVATOR D	10	20	SIMPLEX SUBMERSIBLE GREY WATER SUMP PUMP	WEIL 1409	115/1	-	CARBON CERAMIC SEAL AND FACTORY DISCONNECT AND CONTROLLER #8244 DIAPHRAGM LOW LEVEL CONTROL SWITCH, TEST BUTTON AND GREEN LIGHT POWER TO PUMP MOTOR WITH 15 FOOT CORD
SP-4	ELEVATOR E	10	20	SIMPLEX SUBMERSIBLE GREY WATER SUMP PUMP	WEIL 1409	115/1	-	CARBON CERAMIC SEAL AND FACTORY DISCONNECT AND CONTROLLER #8244 DIAPHRAGM LOW LEVEL CONTROL SWITCH, TEST BUTTON AND GREEN LIGHT POWER TO PUMP MOTOR WITH 15 FOOT CORD
SP-5	ELEVATOR F & G	10	20	SIMPLEX SUBMERSIBLE GREY WATER SUMP PUMP	WEIL 1409	115/1	-	CARBON CERAMIC SEAL AND FACTORY DISCONNECT AND CONTROLLER #8244 DIAPHRAGM LOW LEVEL CONTROL SWITCH, TEST BUTTON AND GREEN LIGHT POWER TO PUMP MOTOR WITH 15 FOOT CORD

1

OIL INTERCEPTOR (INT)

PLAN CODE	SERVICE	DIMENSIONS (IN) LENGTH	WIDTH	DEPTH	WASTE/ STORM	VENT	MANUFACTURER & MODEL NO
INT-1	SP-1	22	12	14	4"	3"	JR SMITH 8510-NO-HUB
INT-2	SP-2	22	12	14	4"	3"	JR SMITH 8510-NO-HUB
INT-3	SP-4	22	12	14	4"	3"	JR SMITH 8510-NO-HUB

PLUMBING EXPANSION TANK SCHEDULE (PET)

PLAN CODE	SYSTEM SERVED	WATER TEMP (°F)	TANK VOL (GAL)	ACCEPTANCE VOL (GAL)	PRE-CHARGE (PSI)	MAX DIMENSIONS DIA (IN)	H (IN)	OPERATING WT (LBS)	MANUFACTURER & MODEL NO	REMARKS
PET-1	WH-1	140	6	3	60	12	12	40	AMTROL THERM-X-TROL ST-12C	PROVIDE WITH POTABLE WATER BLADDER ASME COMPLIANT
PET-2	WH-2	140	6	3	60	12	12	40	AMTROL THERM-X-TROL ST-12C	PROVIDE WITH POTABLE WATER BLADDER ASME COMPLIANT
PET-3	WH-3	140	6	3	60	12	12	40	AMTROL THERM-X-TROL ST-12C	PROVIDE WITH POTABLE WATER BLADDER ASME COMPLIANT

FACTORY BUILT MIXING VALVE STATION SCHEDULE (MV)

PLAN CODE	MINIMUM GPM	MAXIMUM GPM	INLET SIZE	OUTLET SIZE	RETURN SIZE	DIMENSION HxWxD (IN)	RECIRC. PUMP FLOW GPM	PRESSURE (FT)	HP	VOLTAGE/ PHASE	MANUF. & MODEL	MANUFACTURER & MODEL NO
MV-1	1	113 @ 10 PSI DROP	2"	2"	1 1/4"	62 X 40 X 7	3.5	100	1/3	115/1	TACO 0013	LEONARD MEGATRON MODEL 6N

CONDENSATE REMOVAL PUMP (CRP)

PLAN CODE	DUTY	PRESSURE (FT)	MOTOR SIZE (HP)	AMPS	WATTS	VOLT/ PH	MANUFACTURER & MODEL NO	REMARKS
CRP-1	FC-3 LEVEL 1	20	1/30	1.5	93	115/1	LITTLE GIANT VCMX-20ULS	PROVIDE WITH SAFETY SWITCH
CRP-2	FC-11 LEVEL 1	20	1/30	1.5	93	115/1	LITTLE GIANT VCMX-20ULS	PROVIDE WITH SAFETY SWITCH
CRP-3	FC-5 LEVEL 2	20	1/30	1.5	93	115/1	LITTLE GIANT VCMX-20ULS	PROVIDE WITH SAFETY SWITCH

NATURAL GAS PRESSURE REGULATOR SCHEDULE (REG)

PLAN CODE	SERVICE	INLET PRESSURE (PSIG)	OUTLET PRESSURE	PROJECT LOAD (MBH)	REMARKS
REG-1	KITCHEN	5	4 OZ.	183	SPRING LOADED, VENT LIMITING
REG-2	LAUNDRY	5	4 OZ.	600	SPRING LOADED, VENT LIMITING
REG-3	WH-1, 2 & 3	5	4 OZ.	900	SPRING LOADED, VENT LIMITING

PLUMBING FIXTURE SCHEDULE

PLAN CODE	DESCRIPTION	CONNECTION SIZE DCW	DHW	WASTE	VENT	STORM	REMARKS
WC-1	WATER CLOSET- WALL MOUNTED	1"	-	4"	2"	-	KOHLER MODEL K-4330 "KINGSTON" WALL MOUNTED WATER CLOSET. WATER CLOSET SHALL BE PROVIDED WITH A SIPHON JET OPERATING SYSTEM AND AN ELONGATED BOWL. PROVIDE WITH KOHLER MODEL K-4670-SA LUSTRA ELONGATED OPEN FRONT ANTI-MICROBIAL SOLID PLASTIC TOILET SEAT WITH SELF-SUSTAINING CHECK HINGE. WATER CLOSET AND TOILET SEAT TO BE COLOR WHITE. PROVIDE WATER CLOSET WITH WALL CARRIER (VERTICAL OR HORIZONTAL) AND SLOAN ECOS MODEL 8111-1.6/1.1 ELECTRONIC DUAL FLUSH FLUSHOMETER VALVE, WITH BUMPER ON ANGLE STOP. OR EQUAL.
WC-2A	WATER CLOSET- WALL MOUNTED (ADA COMPLIANT)	1"	-	4"	2"	-	KOHLER MODEL K-4330 "KINGSTON" WALL MOUNTED WATER CLOSET. WATER CLOSET SHALL BE PROVIDED WITH A SIPHON JET OPERATING SYSTEM AND AN ELONGATED BOWL. PROVIDE WITH KOHLER MODEL K-4670-SA LUSTRA ELONGATED OPEN FRONT ANTI-MICROBIAL SOLID PLASTIC TOILET SEAT WITH SELF-SUSTAINING CHECK HINGE. WATER CLOSET AND TOILET SEAT TO BE COLOR WHITE. PROVIDE WATER CLOSET WITH WALL CARRIER (VERTICAL OR HORIZONTAL) AND SLOAN ECOS MODEL 8111-1.6/1.1 ELECTRONIC DUAL FLUSH FLUSHOMETER VALVE, WITH BUMPER ON ANGLE STOP AND TRAP PRIMER. WATER CLOSET TO BE INSTALLED AT ADA APPROVED FLOOR TO RIM HEIGHT. OR EQUAL.
U-1A	URINAL - WALL MOUNTED (ADA COMPLIANT)	3/4"	-	2"	1 1/2"	-	KOHLER MODEL K-4904-ET "BARDON" 1/8TH GPF WALL MOUNTED URINAL. URINAL SHALL BE OF VITREOUS CHINA CONSTRUCTION, COLOR WHITE, AND SHALL BE PROVIDED WITH A BLOWOUT OPERATING SYSTEM. URINAL SHALL BE PROVIDED WITH SLOAN ECOS MODEL 8186 ELECTRONIC FLUSH VALVE (0.13 GPF) WITH ADJUSTABLE SENSOR EYES , ANTI-BACKSPLASH WALL, 14" ELONGATED RIM, WALL HANGERS, REMOVABLE BEEHIVE STRAINER, AND THREE COMPLETE SETS OF SPARE BATTERIES. ADDITIONALLY, PROVIDE CARRIER WALL SUPPORT SYSTEM. URINAL SHALL BE INSTALLED AT ADA COMPLIANT FLOOR TO RIM HEIGHT. ENTIRE INSTALLATION SHALL BE ADA COMPLIANT. OR EQUAL.
L-1A	LAVATORY - WALL MOUNT (ADA COMPLIANT)	1/2"	1/2"	1 1/2"	1 1/2"	-	KOHLER MODEL K-1728 "CHESAPEAKE" WALL MOUNTED THREE HOLE DRILLING LAVATORY WITH OVERFLOW. LAVATORY SHALL BE OF VITREOUS CHINA CONSTRUCTION, AND COLOR WHITE. LAVATORY IS TO BE PROVIDED WITH MOEN MODEL 8413 WITH PIVOT ACTION SINGLE LEVER HANDLE, ADJUSTABLE TEMPERATURE LIMIT STOP, 0.5 GPM AERATOR. WILKINS MODEL 1070 THERMOSTIC MIXING VALVE. BRASSCRAFT MODEL KTSR19-C 1/4 TURN BALL STOP WITH LOOSE KEY AND BRAIDED STAINLESS STEEL SUPPLY HOSES. KOHLER MODEL K-8998 1 1/4" CAST BRASS P-TRAP, AND K-7715 LAVATORY DRAIN WITH 1 1/4" DIAMETER TAILPIECE. ADDITIONALLY PROVIDE ADA COMPLIANT SUPPLY AND DRAIN INSULATION KIT TO ENSURE THAT ENTIRE INSTALLATION SHALL BE ADA COMPLIANT. OR EQUAL.
L-2A	LAVATORY - UNDERCOUNTER RECTANGULAR (ADA COMPLIANT)	1/2"	1/2"	1 1/2"	1 1/2"	-	KOHLER MODEL K-2330 "KATHRYN" UNDERCOUNTER MOUNTED THREE HOLE DRILLING LAVATORY WITH OVERFLOW. LAVATORY SHALL BE OF VITROUS CHINA CONSTRUCTION., AND COLOR WHITE. LAVATORY IS TO BE PROVIDED WITH MOEN MODEL 8413 WITH PIVOT ACTION SINGLE LEVER HANDLE, ADJUSTABLE TEMPERATURE LIMIT STOP, 0.5 GPM AERATOR. WILKINS MODEL 1070 THERMOSTIC MIXING VALVE. BRASSCRAFT MODEL KTSR19-C 1/4 TURN BALL STOP WITH LOOSE KEY AND BRAIDED STAINLESS STEEL SUPPLY HOSES. KOHLER MODEL K-8998 1 1/4" CAST BRASS P-TRAP, AND K-7715 LAVATORY DRAIN WITH 1 1/4" DIAMETER TAILPIECE. ADDITIONALLY PROVIDE ADA COMPLIANT SUPPLY AND DRAIN INSULATION KIT TO ENSURE THAT ENTIRE INSTALLATION SHALL BE ADA COMPLIANT. OR EQUAL.
L-3A	LAVATORY - RAMP SINK CUSTOM SIZE, MULTIPLE FAUCETS (ADA COMPLIANT)	1/2"	1/2"	1 1/2"	1 1/2"	-	SONOMA CAST STONE P-SERIES RAMP SINK P-RMP WITH SLOT DRAIN, 3 HOLE DRILLING, LAVATORY SHALL BE CAST STONE. OVERALL DIMENSION AND COLOR BY ARCHITECT. LAVATORY IS TO BE PROVIDED WITH MULTIPLE (SEE PLANS FOR COUNT) MOEN MODEL 8413 WITH PIVOT ACTION SINGLE LEVER HANDLE, ADJUSTABLE TEMPERATURE LIMIT STOP, 0.5 GPM AERATOR. WILKINS MODEL 1070 THERMOSTIC MIXING VALVE. BRASSCRAFT MODEL KTSR19-C 1/4 TURN BALL STOP WITH LOOSE KEY AND BRAIDED STAINLESS STEEL SUPPLY HOSES. KOHLER MODEL K-8998 1 1/4" CAST BRASS P-TRAP. ADDITIONALLY PROVIDE ADA COMPLIANT SUPPLY AND DRAIN INSULATION KIT TO ENSURE THAT ENTIRE INSTALLATION SHALL BE ADA COMPLIANT. OR EQUAL.
S-1A	SINK-SINGLE COMPARTMENT (ADA COMPLIANT)	1/2"	1/2"	1 1/2"	1 1/2"	-	MOEN MODEL 22131 21"x16"x5.5" DEEP SINGLE BOWL 20 GUAGE STAINLESS STEEL SINK, FULLY ADA COMPLIANT. SINK SHALL BE PROVIDED WITH THREE HOLE FAUCET DRILLING ON FOUR INCH CENTERS. SINK BOWL TO BE FULLY SOUND DEADENED. PROVIDE WITH MOEN MODEL 14750 DRAIN/STRAINER, BRASSCRAFT MODEL KTSR19-C 1/4-TURN LOOSE KEY STOP WITH BRAIDED STAINLESS STEEL SUPPLY HOSES FOR HOT AND COLD WATER CONNECTIONS AND KOHLER MODEL K-9000 1-1/2" CAST BRASS P-TRAP. PROVIDE WITH MOEN MODEL CA87485 SINGLE HANDLE LEVER STYLE KITCHEN FAUCET LESS SIDE SPRAY WITH 1.5 GPM AERATOR (MAXIMUM). PROVIDE FAUCET FOR THREE HOLE DRILLING ON FOUR INCH CENTERS. OR EQUAL
S-2A	SINK-DOUBLE COMPARTMENT (ADA COMPLIANT)	1/2"	1/2"	1 1/2"	1 1/2"	-	MOEN MODEL 22213 33" X 22" X 8" DEEP DOUBLE BOWL 20 GUAGE STAINLESS STEEL SINK, FULLY ADA COMPLIANT. SINK SHALL BE PROVIDED WITH THREE HOLE FAUCET DRILLING ON FOUR INCH CENTERS. SINK BOWL TO BE FULLY SOUND DEADENED. PROVIDE WITH MOEN MODEL 14750 DRAIN/STRAINER, BRASSCRAFT MODEL KTSR19-C 1/4-TURN LOOSE KEY STOP WITH BRAIDED STAINLESS STEEL SUPPLY HOSES FOR HOT AND COLD WATER CONNECTIONS AND KOHLER MODEL K-9000 1-1/2" CAST BRASS P-TRAP. PROVIDE WITH MOEN MODEL CA87485 SINGLE HANDLE LEVER STYLE KITCHEN FAUCET LESS SIDE SPRAY WITH 1.5 GPM AERATOR (MAXIMUM). PROVIDE FAUCET FOR THREE HOLE DRILLING ON FOUR INCH CENTERS. PROVIDE IN-SINK-ERATOR BADGER 5 DISPOSER WITH DISHWASHER CONNECTOR KIT. DISPOSER ELECTRICAL: 3/4" HP, 120/1, 9.5 AMPS. OR EQUAL.
S-3	LAUNDRY TUB	1/2"	1/2"	1 1/2"	1 1/2"	-	FIAT FL-1 FLOOR MOUNTED SERV-A-SINK WITH LEGS. 22" X 23" X 14" DEEP, MOLDED STONE PROVIDE WITH CHICAGO FAUCETS DECK MOUNTED 4" FIXED CENTERS HOT AND COLD WATER SWING FAUCET MODEL 895-L5VBCP WITH ATMOSPHERIC VACUUM BREAKER. MOEN MODEL 14750 DRAIN/STRAINER, BRASSCRAFT MODEL KTSR19-C 1/4-TURN LOOSE KEY STOP WITH BRAIDED STAINLESS STEEL SUPPLY HOSES FOR HOT AND COLD WATER CONNECTIONS AND KOHLER MODEL K-9000 1-1/2" CAST BRASS P-TRAP.
SS-1	SERVICE SINK - FLOOR MOUNTED	3/4"	3/4"	3"	1 1/2"	-	KOHLER MODEL K-6710 "WHITBY" 28"x28" FLOOR MOUNTED SERVICE SINK FOR CORNER INSTALLATIONS. SERVICE SINK SHALL BE OF CAST IRON CONSTRUCTION WITH WHITE ENAMELED FINISH. SINK SHALL BE PROVIDED WITH COATED WIRE RIM GUARD MODEL K-8940 AND 3" I.P.S. STRAINER MODEL K-9146. SERVICE SINK SHALL ALSO BE PROVIDED WITH CHICAGO FAUCETS MODEL 540-LD-897S-WXF WITH 8" CENTERS, VACUUM BREAKER SPOUT, 369, HANDLES, POLISHED CHROME PLATE EXTERIOR FINISH, WALL FLANGE, AND PAIL HOOK WITH WALL SUPPORT. OR EQUAL.
DF-1A	BI-LEVEL, SURFACE MOUNT ELECTRIC WATER COOLER	1/2"	-	2"	1 1/2"	-	HAWS MODEL 1011 HI-LO BARRIER FREE WALL MOUNTED DUAL SATIN FINISH STAINLESS STEEL DRINKING FOUNTAIN.
BF-1A	BOTTLE FILLING STATION	1/2"	-	2"	1 1/2"	-	ELKAY EZWSM8PK EZH20 IN WALL BOTTLE FILLING STATION. PROVIDE WITH A JUNCTION BOX FOR A 10 AMP BRACH CIRCUIT. 115/1.
FD-1	FLOOR DRAIN	-	-	2"	1 1/2"	-	J.R. SMITH MANUFACTURING COMPANY FIG. 2005Y-CP DUCO CAST IRON FLOOR DRAIN. DRAIN TO BE PROVIDED WITH ROUND CHROME PLATED NICKEL BRONZE STRAINER HEAD, DEEP SEAL TRAP. SEE PLANS FOR OUTLET SIZE. STRAINER HEAD MUST BE HEEL PROOF. OR EQUAL.
FD-2	FLOOR DRAIN (MECHANICAL/LAUNDRY ROOM USE)	-	-	4"	2"	-	JAY R. SMITH MANUFACTURING COMPANY FIG. 2120Y-B-M-XP DUCO CAST IRON FLOOR DRAIN. DRAIN TO BE PROVIDED WITH 4" OUTLET, DUCTILE IRON GRATE, DEEP SEAL TRAP, SEDIMENT BUCKET, AND CLOSURE PLUG. OR EQUAL.
FS-1	FLOOR SINK (MECHANICAL ROOM USE)	-	-	4"	2"	-	JAY R. SMITH MANUFACTURING COMPANY FIG. 3150-Y-ASB SQUARE FLOOR SINK. FLOOR SINK SHALL BE OF CAST IRON CONSTRUCTION WITH ENAMEL INTERIOR FINISH, MINIMUM INTERIOR DIMENSIONS OF 12"x12"x8"D. PROVIDE WITH DEEP SEAL TRAP AND HEAVY DUTY NICKEL BRONZE HALF GRATE. OR EQUAL.
RD-1	ROOF DRAIN - PRIMARY	-	-	-	-	SEE PLANS	JAY R. SMITH MANUFACTURING COMPANY FIG. 1015Y-E-R-C-CID-U LARGE GENERAL PURPOSE ROOF DRAIN WITH ADJUSTABLE EXTENSION. ROOF DRAIN SHALL BE PROVIDED WITH DUCO CAST IRON BODY WITH ADJUSTABE EXTENSION SLEEVE, REVERSIBLE COLLAR, COMBINED FLASHING CLAMP AND GRAVEL STOP, CAST IRON DOME - FACTORY PAINTED BLACK, SUMP RECEIVER, UNDERDECK CLAMP AND VANDAL PROOF SECURITY SCREWS, OR EQUAL.
OD-1	ROOF DRAIN - SECONDARY	-	-	-	-	SEE PLANS	JAY R. SMITH MANUFACTURING COMPANY FIG. 1080Y-R-C-CID-U LARGE GENERAL PURPOSE ROOF DRAIN W/ADJUSTABLE EXTENSION. PROVIDE W/DUCO CAST IRON BODY FLASHING CLAMP W/GRAVEL STOP, 2" CAST IRON WATER DAM, CAST IRON DOME, UNDERDECK CLAMP, SUMP RECEIVER, VANDAL PROOF SECURITY SCREWS, OR EQUAL. DAM AND DOME FACTORY PAINTED BLACK.
RD-2	ROOF DRAIN - LOW PROFILE	-	-	-	-	SEE PLANS	JAY R. SMITH MANUFACTURING COMPANY FIG. 1330Y-R-C-CID-U LOW PROFILE GENERAL PURPOSE ROOF DRAIN W/ADJUSTABLE EXTENSION. ROOF DRAIN SHALL BE PROVIDED WITH DUCO CAST IRON BODY WITH ADJUSTABE EXTENSION SLEEVE, REVERSIBLE COLLAR, COMBINED FLASHING CLAMP AND GRAVEL STOP, CAST IRON DOME - FACTORY PAINTED BLACK, SUMP RECEIVER, UNDERDECK CLAMP AND VANDAL PROOF SECURITY SCREWS, OR EQUAL.
DSN-1	DOWNSPOUT NOZZLE - SECONDARY	-	-	-	-	SEE PLANS	JAY R. SMITH MANUFACTURING COMPANY FIG. 1770-BS BRONZE DOWNSPOUT NOZZLE WITH BIRD SCREEN. OR EQUAL. ROUGH BRASS FINISH.
HB-1	HOSE BIBB - WALL MOUNTED (INDOOR FINISHED AREA USE)	3/4"	-	-	-	-	WOODFORD MANUFACTURING CO. MODEL 26 WALL MOUNTED BACKFLOW PROTECTED WALL FAUCET. HOSE BIBB TO BE PROVIDED WITH LOOSE KEY SHUTOFF, 3/4" INLET AND 3/4" MALE HOSE THREAD OUTLET. EXTERIOR FINISH TO BE POLISHED CHROME. OR EQUAL.
HB-2	HOSE BIBB - WALL MOUNTED (INDOOR UNFINISHED AREA USE)	3/4"	-	-	-	-	WOODFORD MANUFACTURING CO. MODEL 26 WALL MOUNTED BACKFLOW PROTECTED WALL FAUCET. HOSE BIBB TO BE PROVIDED WITH LOOSE KEY SHUTOFF, 3/4" INLET AND 3/4" MALE HOSE THREAD OUTLET. EXTERIOR FINISH TO BE BRASS. OR EQUAL.
SC-1	SILLCOCK (OUTDOOR FREEZEPROOF USE)	3/4"	-	-	-	-	WOODFORD MANUFACTURING CO. MODEL B65-BR (OR EQUAL) WALL MOUNTED, CONCEALED BOX TYPE, ANTI-SIPHON AUTOMATIC DRAINING FREEZELESS WALL HYDRANT. WALL HYDRANT SHALL BE PROVIDED WITH LOOSE KEE SHUTOFF, 3/4" INLET AND 3/4" MALE HOSE THREAD OUTLET. EXTERIOR FINISH SHALL BE ROUGH BRASS.
SH-1	SHOWER SYSTEM W/ STATIONARY HEAD - LOW FLOW	1/2"	1/2"	2"	1 1/2"	-	AMERICAN STANDARD T675.507 COLONY SOFT SHOWER ONLY TRIM KIT WITH R120 PRESSURE BALANCE ROUGH VALVE BODY. WITH FLOWISE 1.5 GPM HOWER HEAD, WILKINS MODEL 1070 THERMOSTATIC MIXING VALVE, JR SMITH 2005Y-F-U-CP SHOWER DRAIN WITH TILE FLANGE. ENTIRE INSTALLATION SHALL BE ADA COMPLIANT. OR EQUAL.
SH-2A	SHOWER SYSTEM W/ HAND SPRAY LOW FLOW - (ADA COMPLIANT)	1/2"	1/2"	2"	1 1/2"	-	AMERICAN STANDARD 1662.211 SHOWER SYSTEM KIT WITH COLONY SOFT VALVE ONLY TRIM KIT , R120 PRESSURE BALANCE ROUGH VALVE BODY, FLOWISE 1.5 GPM HAND SHOWER, IN-LINE VACUUM BREAKER, METAL HOSE, WALL SUPPLY, AND 36" SLIDE BAR. PROVIDE WILKINS MODEL 1070 THERMOSTATIC MIXING VALVE, JR SMITH 2005Y-F-U-CP SHOWERDRAIN WITH TILE FLANGE. ENTIRE INSTALLATION SHALL BE ADA COMPLIANT. OR EQUAL.
GD-1	GARAGE DRAIN	-	-	SEE PLANS	-		JAY R. SMITH MANUFACTURING COMPANY FIG.2141-B-U ROUND GARAGE DRAIN. GARAGE DRAIN SHALL BE OF CAST IRON CONSTRUCTION. PROVIDE WITH HEAVY DUTY GRATE. OR EQUAL.
TD-1	TRENCH DRAIN LOCKER ROOMS	-	-	2"	-	-	PROLINE DRAIN CMDB CUSTOM DRAINS. SEE PLANS FOR TOTAL LENGTH OF EACH DRAIN. PROVIDE WITH STANDARD DOT STRAINER.
TD-2	TRENCH DRAIN LAUNDRY	-	-	4"	-	-	PROVIDE CONCRETE TRENCH DRAIN WITH 4" THICK WALLS AND BOTTOM. INSIDE DIMENSIONS: 108" X 24" X 12" DEEP TO PROVIDE TRENCH VOLUME OF 18 CU. FT. TOTAL. PROVIDE WIDE REVEAL FRAME AND GRATE SYSTEM WITH GALVANIZED STEEL FRAME. GRATE SHALL BE 112" LONG X 28" WIDE WITH 24" CLEAR OPENING AND MECHANICALLY LOCK INTO THE CONCRETE SURROUND EVERY 10". GRATE SHALL BE DUCTILE IRON SLOTTED GRATE WITH VANDAL PROOF LOCK DOWN. COORDINATE FINAL CONCRETE DETAILS WITH STRUCTURAL SLAB PLANS
DD-1	DECK DRAIN SURFACE	-	-	-	-	SEE PLANS	JAY R. SMITH MFG CO. 1469C-E-U-NB, PROMENADE DECK DRAIN, DUCO CAST IRON, MEMBRANE CLAMP, NICKEL BRONZE TOP. PROVIDE EXTENSION AS REQUIRED. MOUNT FLUSH WITH PAVERS. OR EQUAL.
DD-2	DECK DRAIN SUB-SURFACE	-	-	-	-	SEE PLANS	JAY R. SMITH MFG CO. 1469C-E-U-NB, PROMENADE DECK DRAIN, DUCO CAST IRON, MEMBRANE CLAMP, NICKEL BRONZE TOP. PROVIDE EXTENDSION AS REQUIRED. DRAIN IS SUB SURFACE DRAIN TO BE INSTALLED BELOW PAVERS AS A SECONDARY DRAIN. OR EQUAL.
IMB-1	ICE MAKER BOX	1/2"	-	-	-	*	GUY GRAY MIB1HA METAL ICE MAKER BOX. POWDER COATED METAL ICE MAKER BOX WITH CHROME PLATED QUARTER TURN VALVES AND ARRESTER. OR EQUAL.
WB-1	WASHER BOX	1/2"	1/2"	-	-	*	GUY GRAY T200TPPVCHA WASHER BOX. POWDER COATED METAL WASHER BOX WITH CHROME PLATED QUARTER TURN VALVES AND ARRESTER AND GALVANIZED CENTER DRAIN. OR EQUAL.
SLT-1	STEEL LINT TRAP	-	-	4"	2"	*	ZURN 1185-10-E-RS STEEL LINT TRAP. ACID RESISTANT INTERIOR COATING, NO SKID COVER, STAINLESS STEEL SOLIDS INTERCEPTING SECONDARY SCREEN ASSEMBLY. PERMANENT PRIMARY STRAINING BAFFLE.

JOB SITE ELEVATION = 4,500 FT
JOB SITE PRESSURE = 12.32 PSI
SELECT ALL EQUIPMENT FOR OPERATION AT JOB SITE ELEVATION

ALL MOTORS TO BE PREMIUM EFFICIENCY

Colvin Engineering Associates, Inc.
244 West 300 North Suite 200
Salt Lake City, Utah 84103
Phone: (801) 322-2400 / Fax: (801) 322-2416

GSBS ARCHITECTS
375 WEST 200 SOUTH
SALT LAKE CITY, UT 84101
P 801.521.8600
F 801.521.7913
www.gsbsarchitects.com

CANNONDESIGN
CANNON DESIGN
829 NORTH 1st AVENUE
PHOENIX, AZ 85003
602.294.6500

REVISIONS:

1	05.04.2012	ADDENDUM 2

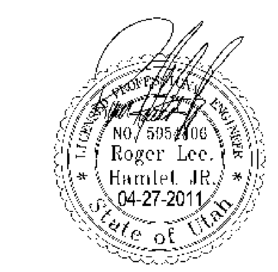

STUDENT LIFE CENTER & PARKING STRUCTURE

Orem, Utah

UTAH VALLEY UNIVERSITY

DRAWN BY:	Author
CHECKED BY:	Checker
OWNER PROJECT NO.:	
GSBS PROJECT NO.:	2011.045.00
ISSUED DATE:	04.27.2012

PLUMBING SCHEDULES

CONSTRUCTION DOCUMENTS

PL6.01

GSBS ARCHITECTS
375 WEST 200 SOUTH
SALT LAKE CITY, UT 84101
P 801.521.8600
F 801.521.7913
www.gsbsarchitects.com

CANNONDESIGN
CANNON DESIGN
829 NORTH 1st AVENUE
PHOENIX, AZ 85003
602.294.6500

REVISIONS:

1	05.04.2012	ADDENDUM 2

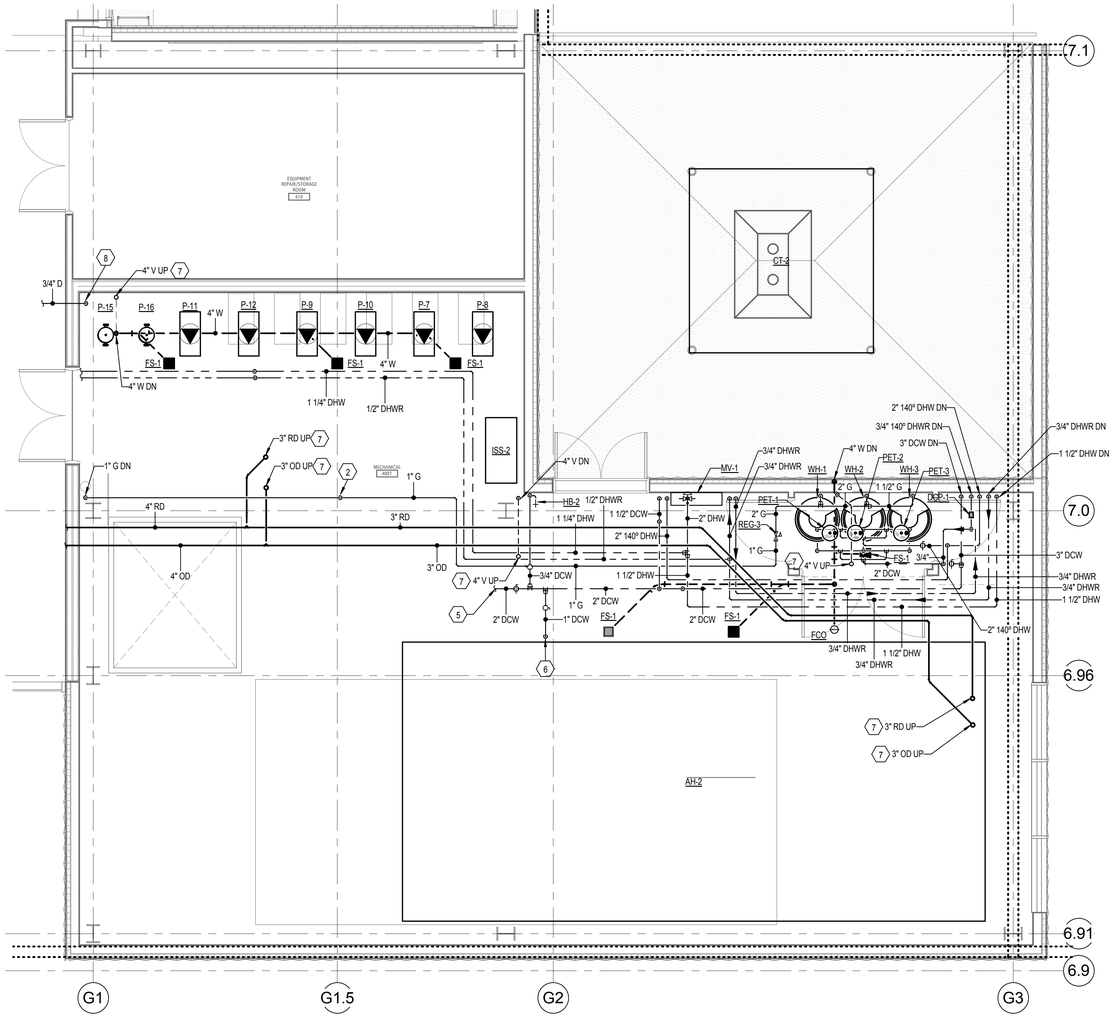

LEVEL 4 - ENLARGED MECHANICAL ROOM PLUMBING - ZONE C

2 SCALE: 1/4" = 1'-0"

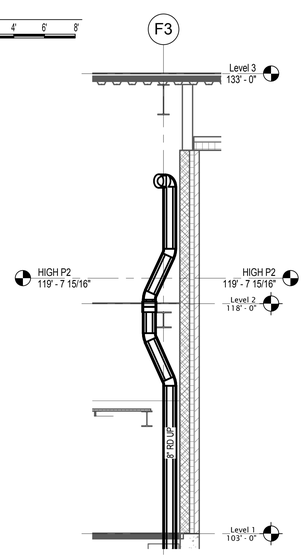

ROOF DRAIN VERTICAL OFFSET

3 PL4.01 1/4" = 1'-0"

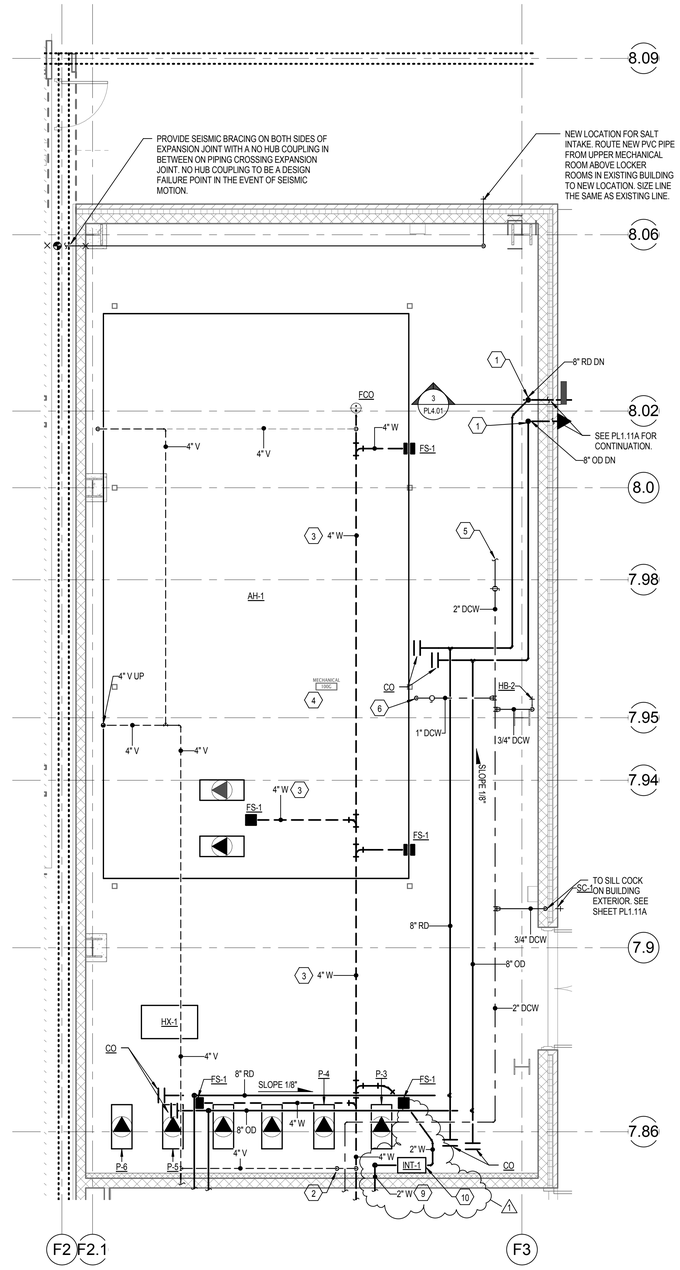

LEVEL 1 - ENLARGED MECHANICAL ROOM PLUMBING - ZONE A

1 SCALE: 1/4" = 1'-0"

KEYED NOTES

1. PROVIDE OFFSETS IN VERTICAL PIPE AS REQUIRED TO AVOID CONFLICT WITH STRUCTURE ALONG EXTERIOR WALL. SEE SECTION ON THIS SHEET.
2. PROVIDE OFFSETS IN PIPE AS REQUIRED TO AVOID CONFLICT WITH DUCT WORK. COORDINATE WITH HVAC PLANS AND IN THE FIELD. TYPICAL.
3. COMBINATION WASTE AND VENT.
4.
5. ROUTE 2" COOLING TOWER MAKE-UP TO CONDENSER WATER SUPPLY. PROVIDE BACK FLOW PREVENTER AND ISOLATION VALVES. COORDINATE TIE-IN LOCATION WITH MECHANICAL PIPING SCHEMATICS.
6. PROVIDE 1" COLD WATER CONNECTION TO EVAPORATIVE MEDIA IN AIR HANDLER. COORDINATE CONNECTION LOCATION WITH HVAC/MECHANICAL CONTRACTOR.
7. SEE ROOF PLAN ON SHEET MH1.21 FOR CONTINUATION.
8. DROP CONDENSATE DRAIN TO FLOOR DRAIN/SINK, SERVICE SINK OR SINK TAIL PIECE. PROVIDE AIR GAP AS REQUIRED.
9. 2" PUMPED WASTE FROM ELEVATOR PIT SUMP. PUMP TO INDIRECT RECEPTOR AS SHOWN. PROVIDE AIR GAP AS REQUIRED.
10. PROVIDE OIL INTERCEPTOR ON FLOOR. ROUTE WASTE LINE FROM INTERCEPTOR TO FLOOR SINK/SEVICE SINK AS SHOWN.

GENERAL NOTES

A. DO NOT ROUTE ANY PIPING ABOVE ELECTRICAL, IT ROOMS OR ELEVATOR MACHINE ROOMS.

B. ALL SANITARY SEWER AND ROOF DRAIN PIPING SHALL BE SLOPED AT 1/8" PER FOOT MINIMUM.

STUDENT LIFE CENTER & PARKING STRUCTURE

Orem, Utah

UTAH VALLEY UNIVERSITY

DRAWN BY:	Author
CHECKED BY:	Checker
OWNER PROJECT NO.:	
GSBS PROJECT NO.:	2011.045.00
ISSUED DATE:	04.27.2012

ENLARGED MECHANICAL ROOMS PLUMBING PLANS

CONSTRUCTION DOCUMENTS

Colvin Engineering Associates, Inc.
244 West 300 North Suite 200
Salt Lake City, Utah 84103
Phone: (801) 322-2400 | Fax: (801) 322-2416

PL4.01

Copyright (C) 2011 by Colvin Engineering Associates, Inc. Salt Lake City, Utah. All rights reserved. Unauthorized copying and/or use is illegal and subject to prosecution.

Copyright (C) 2011 by Colvin Engineering Associates, Inc. Salt Lake City, Utah. All rights reserved. Unauthorized copying and/or use is illegal and subject to prosecution.

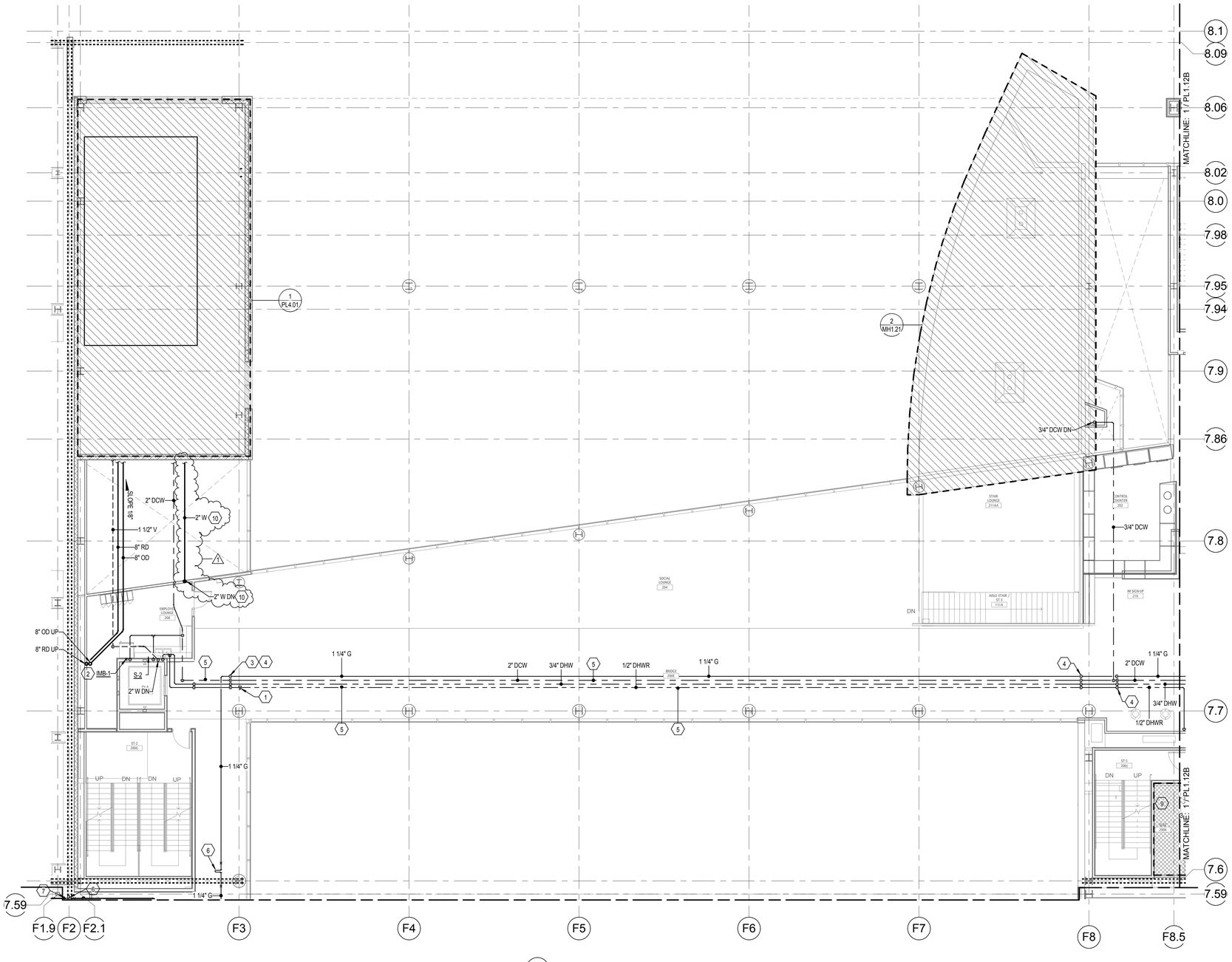

KEYED NOTES

1. PROVIDE CIRCUIT SETTER IN AN ACCESSIBLE LOCATION. COORDINATE WITH CEILING PLANS. ALL CIRCUIT SETTERS ARE TO BE INSTALLED ABOVE ACCESSIBLE CEILINGS UNLESS OTHERWISE NOTED. BALANCE TO 0.5 GPM.
2. PROVIDE 1/2" COLD WATER CONNECTION TO ICE MAKER AT REFRIGERATOR WITH ICE MAKER BOX. SEE PLUMBING FIXTURE SCHEDULE FOR MODEL NUMBER. PROVIDE VACUUM BREAKER AND ISOLATION VALVE IN AN ACCESSIBLE LOCATION.
3. PROVIDE OFFSETS IN PIPE AS REQUIRED TO AVOID CONFLICT WITH DUCT WORK. COORDINATE WITH HVAC PLANS AND IN THE FIELD. TYPICAL.
4. PROVIDE OFFSETS IN PIPE AS REQUIRED TO AVOID CONFLICT WITH STRUCTURE. TYPICAL.
5. PLUMBING PIPES IN THIS AREA ARE TO BE CLOSELY COORDINATED WITH MECHANICAL PIPING AND DUCTWORK. PROVIDE OFFSETS AS REQUIRED.
6. PROVIDE METRAFLEX METRALOOP EXPANSION JOINT IN GAS PIPING DESIGNED FOR 7" OF MOVEMENT ACROSS SEISMIC EXPANSION JOINT. PROVIDE SEISMIC BRACING ON BOTH SIDES OF EXPANSION JOINT.
7. PROVIDE SEISMIC BRACING ON BOTH SIDES OF EXPANSION JOINT WITH A NO HUB COUPLING IN BETWEEN ON ALL DOMESTIC WASTE, VENT AND ROOF DRAIN PIPING CROSSING ANY EXPANSION JOINT. NO HUB COUPLING TO BE A DESIGN FAILURE POINT IN THE EVENT OF SEISMIC MOTION.
8. SEE ROOF PLAN ON SHEET MH1.21 FOR CONTINUATION.
9. DO NOT ROUTE ANY PIPING ABOVE ELECTRICAL OR IT ROOMS. TYPICAL.
10. 2" PUMPED WASTE FROM ELEVATOR PIT SUMP. PUMP TO INDIRECT RECEPTOR AS SHOWED. PROVIDE AIR GAP AS REQUIRED.

GENERAL NOTES

A. DO NOT ROUTE ANY PIPING ABOVE ELECTRICAL, IT ROOMS OR ELEVATOR MACHINE ROOMS.

B. ALL SANITARY SEWER AND ROOF DRAIN PIPING SHALL BE SLOPED AT 1/8" PER FOOT MINIMUM.

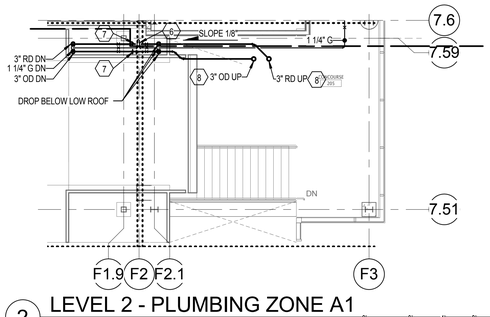

2 LEVEL 2 - PLUMBING ZONE A1
SCALE: 1/8" = 1'-0"

1 LEVEL 2 - PLUMBING ZONE A
SCALE: 1/8" = 1'-0"

GSBS ARCHITECTS
375 WEST 200 SOUTH
SALT LAKE CITY, UT 84101
P 801.521.8600
F 801.521.7913
www.gsbsarchitects.com

CANNONDESIGN
CANNON DESIGN
829 NORTH 1st AVENUE
PHOENIX, AZ 85003
602.294.6500

REVISIONS:

1	05.04..2012	ADDENDUM 2

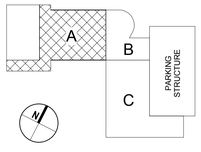

KEYPLAN - NTS

STUDENT LIFE CENTER & PARKING STRUCTURE

Orem, Utah

UTAH VALLEY UNIVERSITY

DRAWN BY:	Author
CHECKED BY:	Checker
OWNER PROJECT NO.:	
GSBS PROJECT NO.:	2011.045.00
ISSUED DATE:	04.27.2012

PLUMBING FLOOR PLAN LEVEL 2 ZONE A

CONSTRUCTION DOCUMENTS

Colvin Engineering Associates, Inc.
244 West 300 North Suite 200
Salt Lake City, Utah 84103
Phone: (801) 322-2400 / Fax: (801) 322-2416

PL1.12A

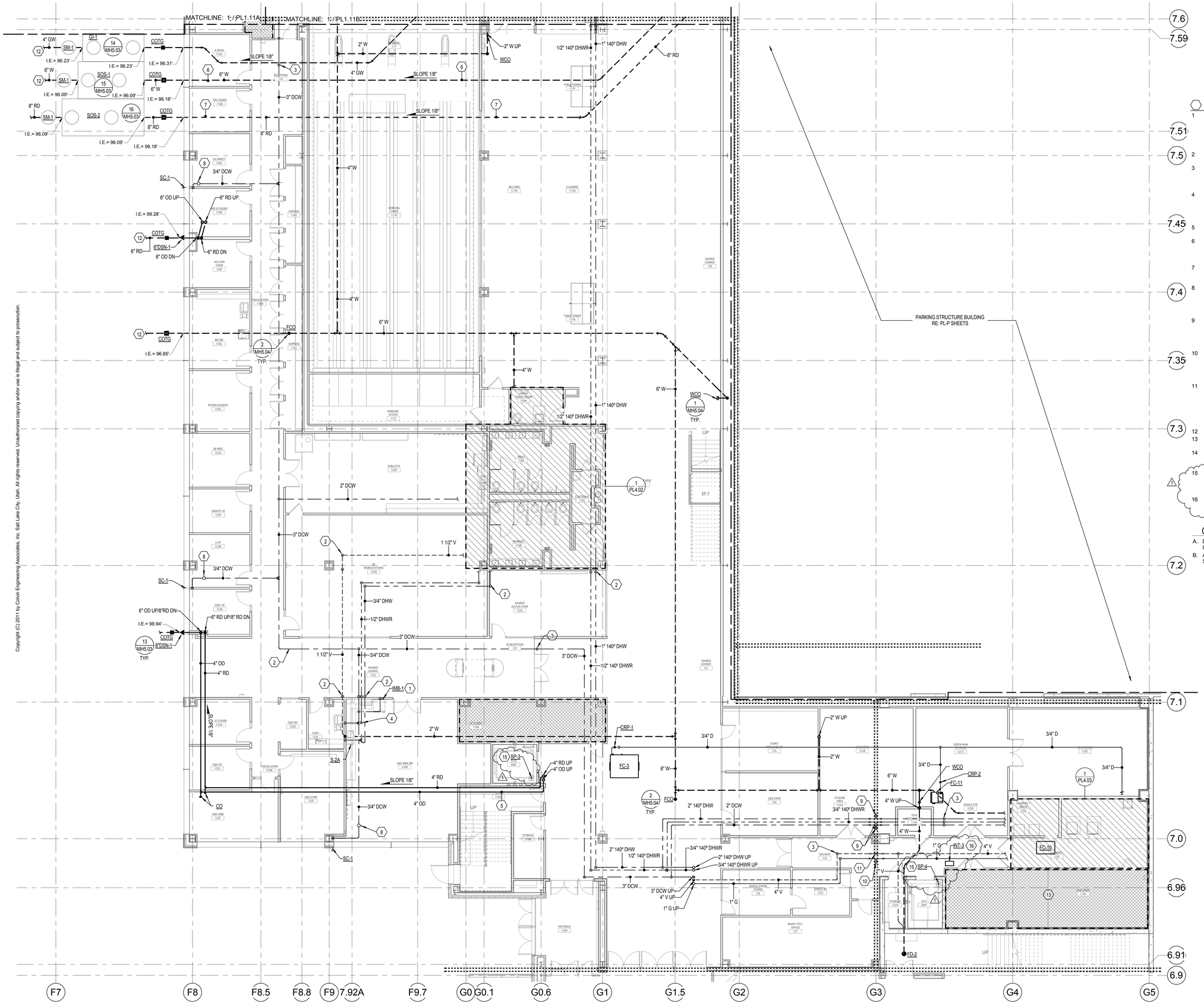

1 LEVEL 1 - PLUMBING ZONE C

SCALE: 1/8" = 1'-0"

KEYED NOTES

1. PROVIDE 1/2" COLD WATER CONNECTION TO ICE MAKER AT REFRIGERATOR WITH ICE MAKER BOX. SEE PLUMBING FIXTURE SCHEDULE FOR MODEL NUMBER. PROVIDE VACUUM BREAKER AND ISOLATION VALVE IN AN ACCESSIBLE LOCATION.
2. PROVIDE OFFSETS IN PIPE AS REQUIRED TO AVOID CONFLICT WITH STRUCTURE. TYPICAL.
3. PROVIDE OFFSETS IN PIPE AS REQUIRED TO AVOID CONFLICT WITH DUCT WORK. COORDINATE WITH HVAC PLANS AND IN THE FIELD. TYPICAL.
4. PROVIDE CIRCUIT SETTER IN AN ACCESSIBLE LOCATION. COORDINATE WITH CEILING PLANS. ALL CIRCUIT SETTERS ARE TO BE INSTALLED ABOVE ACCESSIBLE CEILINGS UNLESS OTHERWISE NOTED. BALANCE TO 0.5 GPM.
5. ROUTE PLUMBING PIPING WITHIN FIRE RATED CHASE PROVIDED BY ARCHITECT.
6. WASTE LINE FROM PARKING STRUCTURE TO SAND OIL INTERCEPTOR. DO NOT CONNECT ANY UTILITIES FROM STUDENT LIFE CENTER BUILDING.
7. ROOF DRAIN LINE FROM PARKING STRUCTURE. DO NOT CONNECT ANY UTILITIES FROM STUDENT LIFE CENTER BUILDING.
8. PROVIDE ISOLATION VALVE AS REQUIRED IN AN ACCESSIBLE LOCATION. COORDINATE LOCATION WITH CEILING PLANS. ALL VALVES SHALL BE LOCATED ABOVE AN ACCESSIBLE CEILING UNLESS OTHERWISE NOTED. TYPICAL.
9. PROVIDE METRAFLEX METRALOOP COPPER EXPANSION JOINT DESIGNED FOR 7" OF MOVEMENT ACROSS SEISMIC EXPANSION JOINT. PROVIDE SEISMIC BRACING ON BOTH SIDES OF EXPANSION JOINT.
10. PROVIDE METRAFLEX METRALOOP EXPANSION JOINT IN GAS PIPING DESIGNED FOR 7" OF MOVEMENT ACROSS SEISMIC EXPANSION JOINT. PROVIDE SEISMIC BRACING ON BOTH SIDES OF EXPANSION JOINT.
11. PROVIDE SEISMIC BRACING ON BOTH SIDES OF EXPANSION JOINT WITH A NO HUB COUPLING IN BETWEEN ON ALL DOMESTIC WASTE, VENT AND ROOF DRAIN PIPING CROSSING ANY EXPANSION JOINT. NO HUB COUPLING TO BE A DESIGN FAILURE POINT IN THE EVENT OF SEISMIC MOTION.
12. SEE CIVIL FOR CONTINUATION.
13. DO NOT ROUTE ANY PIPING ABOVE ELECTRICAL OR IT ROOMS. TYPICAL.
14. DROP CONDENSATE DRAIN TO FLOOR DRAIN/SINK. SERVICE SINK OR SINK TAIL PIECE. PROVIDE AIR GAP AS REQUIRED.
15. PROVIDE SUMP PUMP INSIDE 12" X 12" X18" DEEP PIT SPECIFIED BY ARCHITECT. COORDINATE LOCATION WITH ARCHITECTRAL PLANS. .
16. PROVIDE OIL INTERCEPTOR ABOVE CEILING. ROUTE WASTE LINE FROM INTERCEPTOR TO FLOOR SINK/SEVICE SINK AS SHOWN.

GENERAL NOTES

A. DO NOT ROUTE ANY PIPING ABOVE ELECTRICAL, IT ROOMS OR ELEVATOR MACHINE ROOMS.
B. ALL SANITARY SEWER AND ROOF DRAIN PIPING SHALL BE SLOPED AT 1/8" PER FOOT MINIMUM.

GSBS ARCHITECTS
375 WEST 200 SOUTH
SALT LAKE CITY, UT 84101
P 801.521.8600
F 801.521.7913
www.gsbsarchitects.com

CANNONDESIGN
CANNON DESIGN
829 NORTH 1st AVENUE
PHOENIX, AZ 85003
602.294.6500

REVISIONS:

1	05.04..2012	ADDENDUM 2

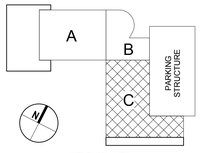

KEYPLAN - NTS

STUDENT LIFE CENTER & PARKING STRUCTURE

Orem, Utah

UTAH VALLEY UNIVERSITY

DRAWN BY:	Author
CHECKED BY:	TDC
OWNER PROJECT NO.:	
GSBS PROJECT NO.:	2011.045.00
ISSUED DATE:	04.27.2012

PLUMBING FLOOR PLAN LEVEL 1 ZONE C

CONSTRUCTION DOCUMENTS

PL1.11C

Colvin Engineering Associates, Inc.
244 West 300 North Suite 200
Salt Lake City, Utah 84103
Phone: (801) 322-2400 / Fax: (801) 322-2416

Copyright (C) 2011 by Colvin Engineering Associates, Inc. Salt Lake City, Utah. All rights reserved. Unauthorized copying and/or use is illegal and subject to prosecution.

Copyright (C) 2011 by Colvin Engineering Associates, Inc. Salt Lake City, Utah. All rights reserved. Unauthorized copying and/or use is illegal and subject to prosecution.

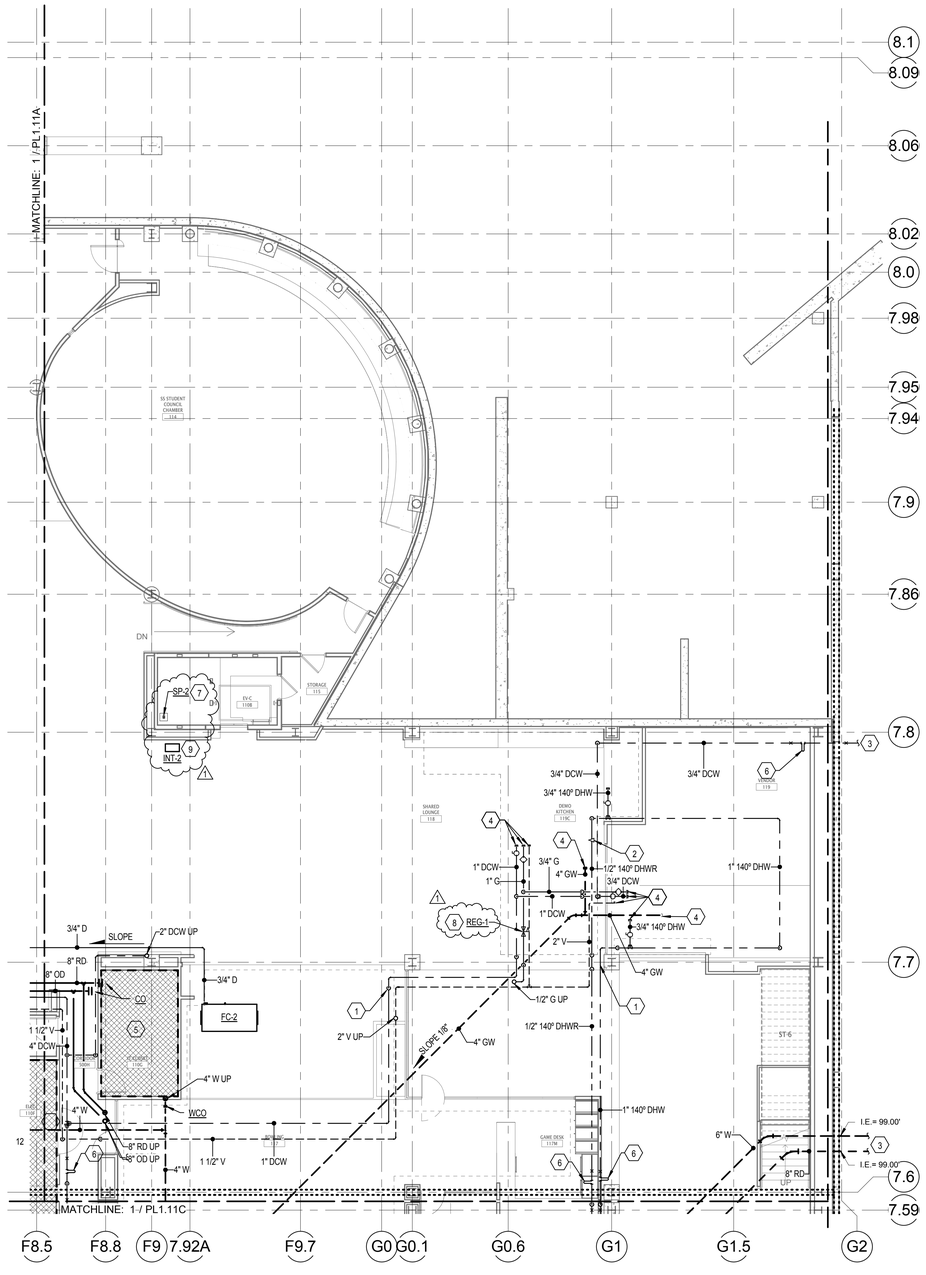

1 LEVEL 1 - PLUMBING ZONE B

SCALE: 1/8" = 1'-0"

KEYED NOTES

1. PROVIDE OFFSETS IN PIPE AS REQUIRED TO AVOID CONFLICT WITH STRUCTURE. TYPICAL.
2. PROVIDE CIRCUIT SETTER IN AN ACCESSIBLE LOCATION. COORDINATE WITH CEILING PLANS. ALL CIRCUIT SETTERS ARE TO BE INSTALLED ABOVE ACCESSIBLE CEILINGS UNLESS OTHERWISE NOTED. BALANCE TO 0.5 GPM.
3. SEE PARKING STRUCTURE PLANS FOR CONTINUATION.
4. PROVIDE DOMESTIC HOT AND COLD WATER, VENT, WASTE AND NATURAL GAS STUB OUTS FOR TENANT SPACE/DEMO KITCHEN. PROVIDE ISOLATION VALVES AND CAP WATER AND AIR TIGHT ABOVE CEILING.
5. DO NOT ROUTE ANY PIPING ABOVE ELECTRICAL OR IT ROOMS. TYPICAL.
6. PROVIDE METRAFLEX METRALOOP COPPER EXPANSION JOINT DESIGNED FOR 7" OF MOVEMENT ACROSS SEISMIC EXPANSION JOINT. PROVIDE SEISMIC BRACING ON BOTH SIDES OF EXPANSION JOINT.
7. PROVIDE SUMP PUMP INSIDE 12" X 12" X18" DEEP PIT SPECIFIED BY ARCHITECT. COORDINATE LOCATION WITH ARCHITECTRAL PLANS.
8. INSTALL NATURAL GAS PRESSURE REGULATOR IN AN ACCESSIBLE LOCATION. VENT AS REQUIRED.
9. PROVIDE OIL INTERCEPTOR ABOVE CEILING. ROUTE WASTE LINE FROM INTERCEPTOR TO FLOOR SINK/SEVICE SINK AS SHOWN.

GENERAL NOTES

A. DO NOT ROUTE ANY PIPING ABOVE ELECTRICAL, IT ROOMS OR ELEVATOR MACHINE ROOMS.
B. ALL SANITARY SEWER AND ROOF DRAIN PIPING SHALL BE SLOPED AT 1/8" PER FOOT MINIMUM.

GSBS ARCHITECTS
375 WEST 200 SOUTH
SALT LAKE CITY, UT 84101
P 801.521.8600
F 801.521.7913
www.gsbsarchitects.com

CANNONDESIGN
CANNON DESIGN
829 NORTH 1st AVENUE
PHOENIX, AZ 85003
602.294.6500

REVISIONS:

1	05.04..2012	ADDENDUM 2

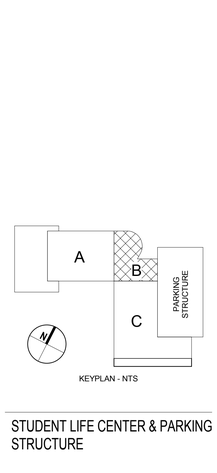

KEYPLAN - NTS

STUDENT LIFE CENTER & PARKING STRUCTURE

Orem, Utah

UTAH VALLEY UNIVERSITY

DRAWN BY:	Author
CHECKED BY:	TDC
OWNER PROJECT NO.:	
GSBS PROJECT NO.:	2011.045.00
ISSUED DATE:	04.27.2012

PLUMBING FLOOR PLAN LEVEL 1 ZONE B

CONSTRUCTION DOCUMENTS

Colvin Engineering Associates, Inc.
244 West 300 North Suite 200
Salt Lake City, Utah 84103
Phone: (801) 322-2400 / Fax: (801) 322-2416

PL1.11B

GSBS ARCHITECTS
375 WEST 200 SOUTH
SALT LAKE CITY, UT 84101
P 801.521.8600
F 801.521.7913
www.gsbsarchitects.com

CANNONDESIGN
CANNON DESIGN
829 NORTH 1st AVENUE
PHOENIX, AZ 85003
602.294.6500

REVISIONS:

1	05.04..2012	ADDENDUM 2

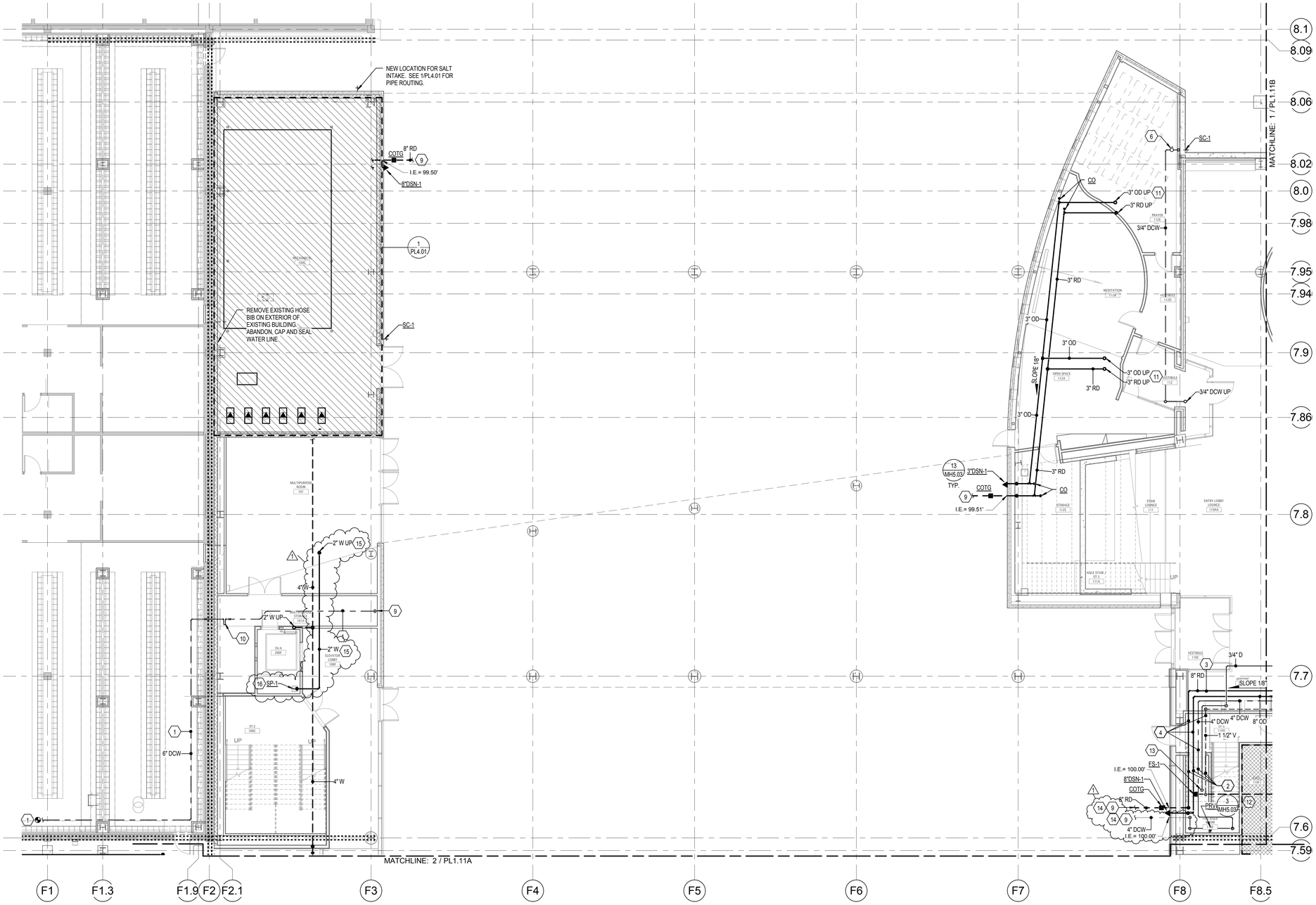

1 LEVEL 1 - PLUMBING ZONE A

SCALE: 1/8" = 1'-0"

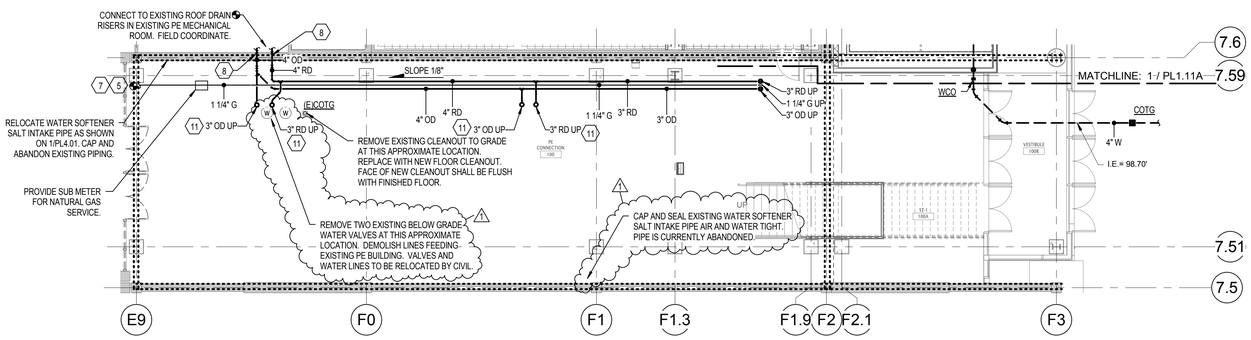

2 LEVEL 1 - PLUMBING ZONE A1

SCALE: 1/8" = 1'-0"

KEYED NOTES

1. ROUTE NEW HIGH PRESSURE WATER LINE FROM EXISTING PRV IN PE BUILDING MECHANICAL ROOM INTO LOCKER ROOM ABOVE CEILING AREA THAT IS GOING TO BE DEMOLISHED. SEE ARCHITECTURAL PLANS FOR DEMOLISHED CEILING AREA. ROUTE WATER LINE THROUGH LOCKER ROOM INTO MULTIPURPOSE STORAGE ROOM 101A IN NEW STUDENT LIFE BUILDING. DROP LINE DOWN BELOW GRADE AND CONNEC TO NEW WATER LINE PROVIDED BY CIVIL.
2. PIPING IS TO SLOPE DOWN ALONG AND TIGHT TO BOTTOM OF STAIR RISERS.
3. PLUMBING PIPES IN THIS AREA ARE TO BE CLOSELY COORDINATED WITH MECHANICAL PIPING AND DUCTWORK. PLUMBING IS TO BE ROUTED BELOW MECHANICAL PIPING. AND DUCTWORK.
4. ROUTE PLUMBING PIPING WITHIN FIRE RATED CHASE PROVIDED BY ARCHITECT.
5. ROUTE 1 1/4" 5 PSI NATURAL GAS TO CONCOURSE. CONNECT TO EXISTING CAMPUS NATURAL GAS SYSTEM. FIELD COORDINATE EXACT TIE IN LOCATION.
6. PROVIDE ISOLATION VALVE AS REQUIRED IN AN ACCESSIBLE LOCATION. COORDINATE LOCATION WITH CEILING PLANS. ALL VALVES SHALL BE LOCATED ABOVE AN ACCESSIBLE CEILING UNLESS OTHERWISE NOTED. TYPICAL.
7. PROVIDE METRAFLEX METRALOOP EXPANSION JOINT IN GAS PIPING DESIGNED FOR 7" OF MOVEMENT ACROSS SEISMIC EXPANSION JOINT. PROVIDE SEISMIC BRACING ON BOTH SIDES OF EXPANSION JOINT.
8. PROVIDE SEISMIC BRACING ON BOTH SIDES OF EXPANSION JOINT WITH A NO HUB COUPLING IN BETWEEN ON ALL DOMESTIC WASTE, VENT AND ROOF DRAIN PIPING CROSSING ANY EXPANSION JOINT. NO HUB COUPLING TO BE A DESIGN FAILURE POINT IN THE EVENT OF SEISMIC MOTION.
9. SEE CIVIL FOR CONTINUATION.
10. PROVIDE METRAFLEX METRALOOP COPPER EXPANSION JOINT DESIGNED FOR 7" OF MOVEMENT ACROSS SEISMIC EXPANSION JOINT. PROVIDE SEISMIC BRACING ON BOTH SIDES OF EXPANSION JOINT.
11. SEE ROOF PLAN ON SHEET MH1.21 FOR CONTINUATION.
12. DO NOT ROUTE ANY PIPING ABOVE ELECTRICAL OR IT ROOMS. TYPICAL.
13. DROP CONDENSATE DRAIN TO FLOOR DRAIN/SINK. SERVICE SINK OR SINK TAIL PIECE PROVIDE AIR GAP AS REQUIRED.
14. COORDINATE LOCATION OF DOMESTIC COLD WATER, FIRE AND ROOF DRAIN AS IT ENTERS THE BUILDING WITH GENERAL CONTRACTOR. PIPES ARE TO BE ROUTED THROUGH VOID SPACE CREATED BY FOOTINGS. SEE STRUCTURAL PLANS AND DETAIL C4/SF203 FOR LOCATION.
15. 2" PUMPED WASTE FROM ELEVATOR PIT SUMP. PUMP TO INDIRECT RECEPTOR AS SHOWN. PROVIDE AIR GAP AS REQUIRED.
16. PROVIDE SUMP PUMP INSIDE 12" X 12" X18" DEEP PIT SPECIFIED BY ARCHITECT. COORDINATE LOCATION WITH ARCHITECTRAL PLANS.

GENERAL NOTES

A. DO NOT ROUTE ANY PIPING ABOVE ELECTRICAL, IT ROOMS OR ELEVATOR MACHINE ROOMS.
B. ALL SANITARY SEWER AND ROOF DRAIN PIPING SHALL BE SLOPED AT 1/8" PER FOOT MINIMUM.

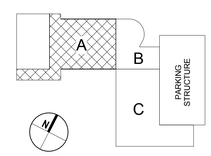

KEYPLAN - NTS

STUDENT LIFE CENTER & PARKING STRUCTURE

Orem, Utah

UTAH VALLEY UNIVERSITY

DRAWN BY:	Author
CHECKED BY:	Checker
OWNER PROJECT NO.:	
GSBS PROJECT NO.:	2011.045.00
ISSUED DATE:	04.27.2012

PLUMBING FLOOR PLAN LEVEL 1 ZONE A

CONSTRUCTION DOCUMENTS

Colvin Engineering Associates, Inc.
244 West 300 North Suite 200
Salt Lake City, Utah 84103
Phone: (801) 322-2400 / Fax: (801) 322-2416

PL1.11A

Copyright (C) 2011 by Colvin Engineering Associates, Inc. Salt Lake City, Utah. All rights reserved. Unauthorized copying and/or use is illegal and subject to prosecution.

Copyright (C) 2011 by Colvin Engineering Associates, Inc. Salt Lake City, Utah. All rights reserved. Unauthorized copying and/or use is illegal and subject to prosecution.

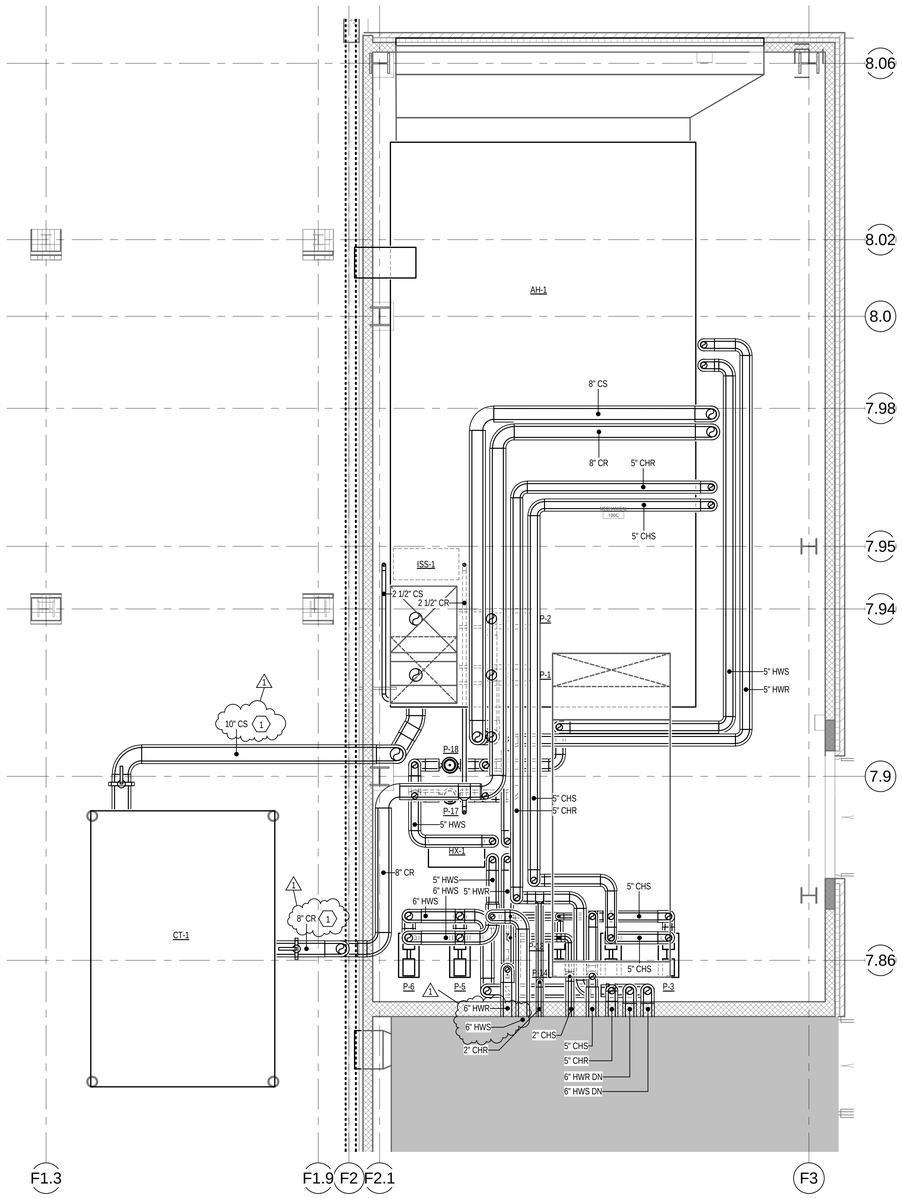

ENLARGED MECHANICAL ROOM PIPING PLAN LEVEL 1 & 2 ZONE A

2 SCALE: 1/4" = 1'-0"

3' 0' 2' 4' 6' 8'

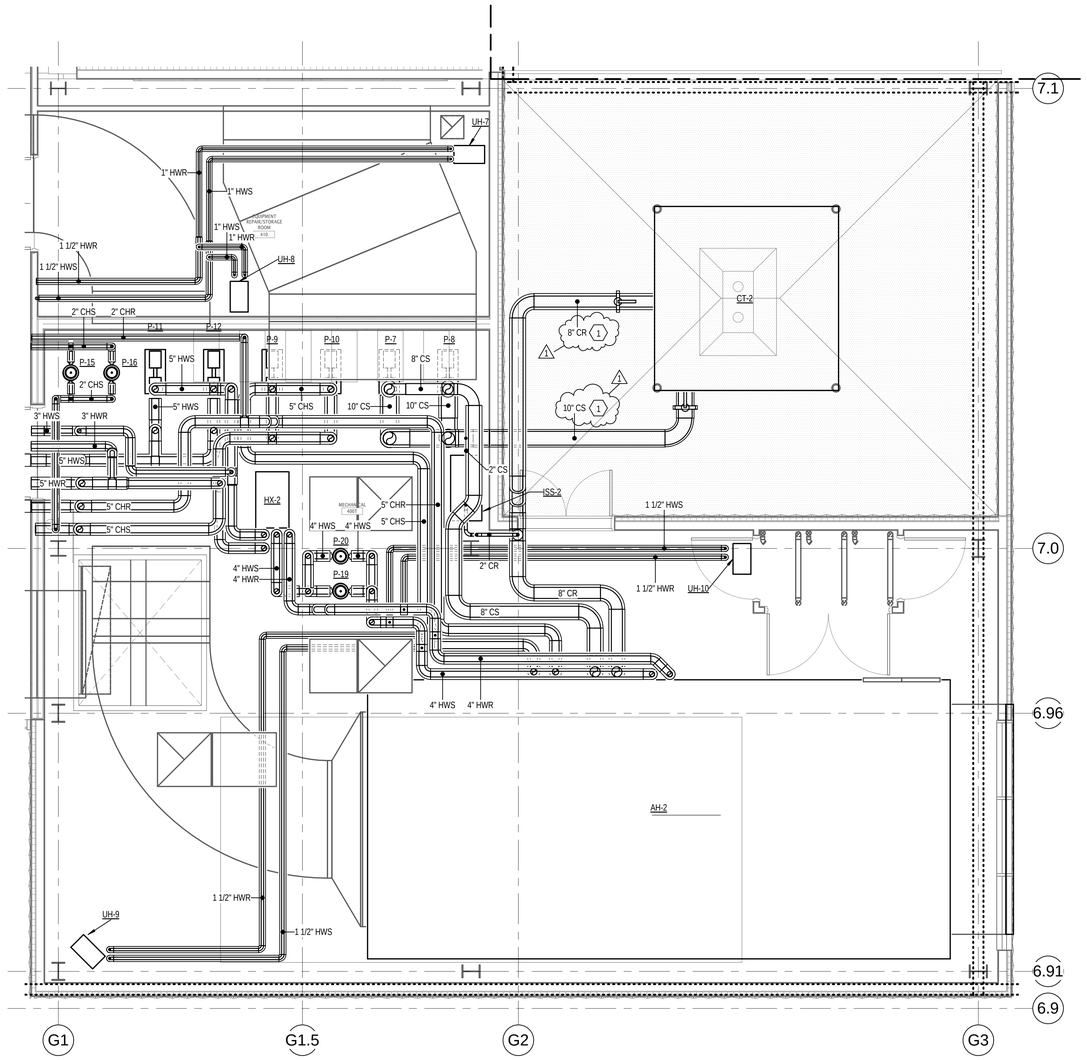

ENLARGED MECHANICAL ROOM MECHANICAL PIPING LEVEL 4 ZONE C

1 SCALE: 1/4" = 1'-0"

3' 0' 2' 4' 6' 8'

GENERAL NOTES

A. DO NOT ROUTE ANY PIPING ABOVE ELECTRICAL, IT ROOMS OR ELEVATOR MACHINE ROOMS.

B. ALL MANUAL VALVES, AUTOMATIC CONTROL VALVES, STRAINERS, AND CIRCUIT SETTERS SHALL BE INSTALLED WHERE ACCESSIBLE ABOVE LAY-IN CEILING. COORDINATE WITH LATEST AVAILABLE ARCHITECTURAL CEILING PLAN.

C. KEEP CONTROLS ACCESS ZONE OFF SIDE OF VAV BOX CLEAR OF ALL PIPING. PIPING MAY BE ROUTED ABOVE THE ELEVATION OF THE TOP OF THE VAV BOX, AVOIDING THE CONTROLS ACCESS ZONE.

KEYED NOTES

1 HEAT TRACE AND INSULATE ALL OUTDOOR CONDENSER WATER PIPING.

GSBS ARCHITECTS
375 WEST 200 SOUTH
SALT LAKE CITY, UT 84101
P 801.521.8600
F 801.521.7913
www.gsbsarchitects.com

CANNONDESIGN
CANNON DESIGN
829 NORTH 1st AVENUE
PHOENIX, AZ 85003
602.294.6500

REVISIONS:

1	05.04..2012	ADDENDUM 2

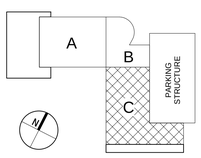

KEYPLAN - NTS

STUDENT LIFE CENTER & PARKING STRUCTURE

Orem, Utah

UTAH VALLEY UNIVERSITY

DRAWN BY:	Author
CHECKED BY:	Checker
OWNER PROJECT NO.:	
GSBS PROJECT NO.:	2011.045.00
ISSUED DATE:	04.27.2012

ENLARGED MECHANICAL ROOMS PIPING PLANS

CONSTRUCTION DOCUMENTS

Colvin Engineering Associates, Inc.
244 West 300 North Suite 200
Salt Lake City, Utah 84103
Phone: (801) 322-2400 | Fax: (801) 322-2416

MP4.01

GSBS ARCHITECTS
375 WEST 200 SOUTH
SALT LAKE CITY, UT 84101
P 801.521.8600
F 801.521.7913
www.gsbsarchitects.com

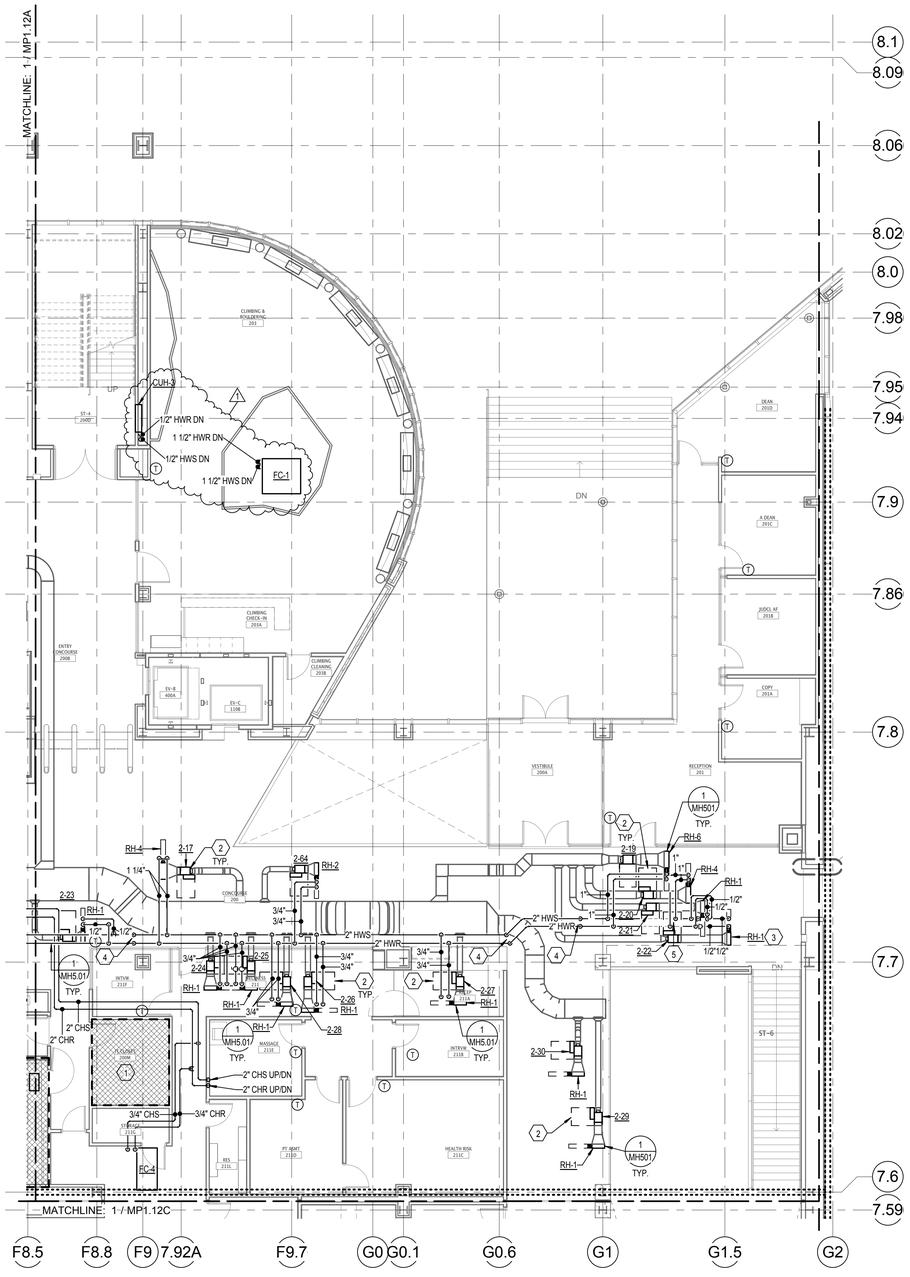

1 LEVEL 2 - MECHPIPING ZONE B

SCALE: 1/8" = 1'-0"

6' 0' 4' 8' 12' 16'

KEYED NOTES

1. DO NOT ROUTE ANY PIPING ABOVE ELECTRICAL/IT ROOMS AND ELEVATORS OR ELEVATOR EQUIPMENT ROOMS. TYPICAL.
2. KEEP CONTROLS ACCESS ZONE OFF SIDE OF VAV BOX CLEAR OF ALL PIPING, DUCTWORK, OR CONDUIT NOT SERVING THE VAV BOX. PIPING, DUCTWORK, AND CONDUIT MAY BE ROUTED ABOVE THE ELEVATION OF THE TOP OF THE BOX, AVOIDING THE CONTROLS ACCESS ZONE.
3. PROVIDE A THREE-WAY HEATING WATER CONTROL VALVE IN THE REHEAT PIPING FOR THE LAST ZONE OF THE REHEAT SUPPLY MAIN FOR THIS FLOOR. REFER TO DETAIL 2 ON SHEET MH501.
4. COORDINATE PIPING WITH STRUCTURE. PROVIDE ELBOWS AS NECESSARY.
5. ROUT PIPING ABOVE VAV CONTROLS ACCESS ZONE LOCATE BALANCING.

GENERAL NOTES

A. DO NOT ROUTE ANY PIPING ABOVE ELECTRICAL, IT ROOMS OR ELEVATOR MACHINE ROOMS.
B. ALL MANUAL VALVES, AUTOMATIC CONTROL VALVES, STRAINERS, AND CIRCUIT SETTERS SHALL BE INSTALLED WHERE ACCESSIBLE ABOVE LAY-IN CEILING. COORDINATE WITH LATEST AVAILABLE ARCHITECTURAL CEILING PLAN.
C. KEEP CONTROLS ACCESS ZONE OFF SIDE OF VAV BOX CLEAR OF ALL PIPING. PIPING MAY BE ROUTED ABOVE THE ELEVATION OF THE TOP OF THE VAV BOX, AVOIDING THE CONTROLS ACCESS ZONE.

CANNONDESIGN
CANNON DESIGN
829 NORTH 1st AVENUE
PHOENIX, AZ 85003
602.294.6500

REVISIONS:

1	05.04..2012	ADDENDUM 2

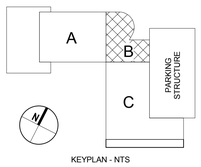

KEYPLAN - NTS

STUDENT LIFE CENTER & PARKING STRUCTURE

Orem, Utah

UTAH VALLEY UNIVERSITY

DRAWN BY:	Author
CHECKED BY:	Checker
OWNER PROJECT NO.:	
GSBS PROJECT NO.:	2011.045.00
ISSUED DATE:	04.27.2012

MECHANICAL PIPING FLOOR PLAN LEVEL 2 ZONE B

CONSTRUCTION DOCUMENTS

Colvin Engineering Associates, Inc.
244 West 300 North Suite 200
Salt Lake City, Utah 84103
Phone: (801) 322-2400 / Fax: (801) 322-2416

MP1.12B

Copyright (C) 2011 by Colvin Engineering Associates, Inc. Salt Lake City, Utah. All rights reserved. Unauthorized copying and/or use is illegal and subject to prosecution.

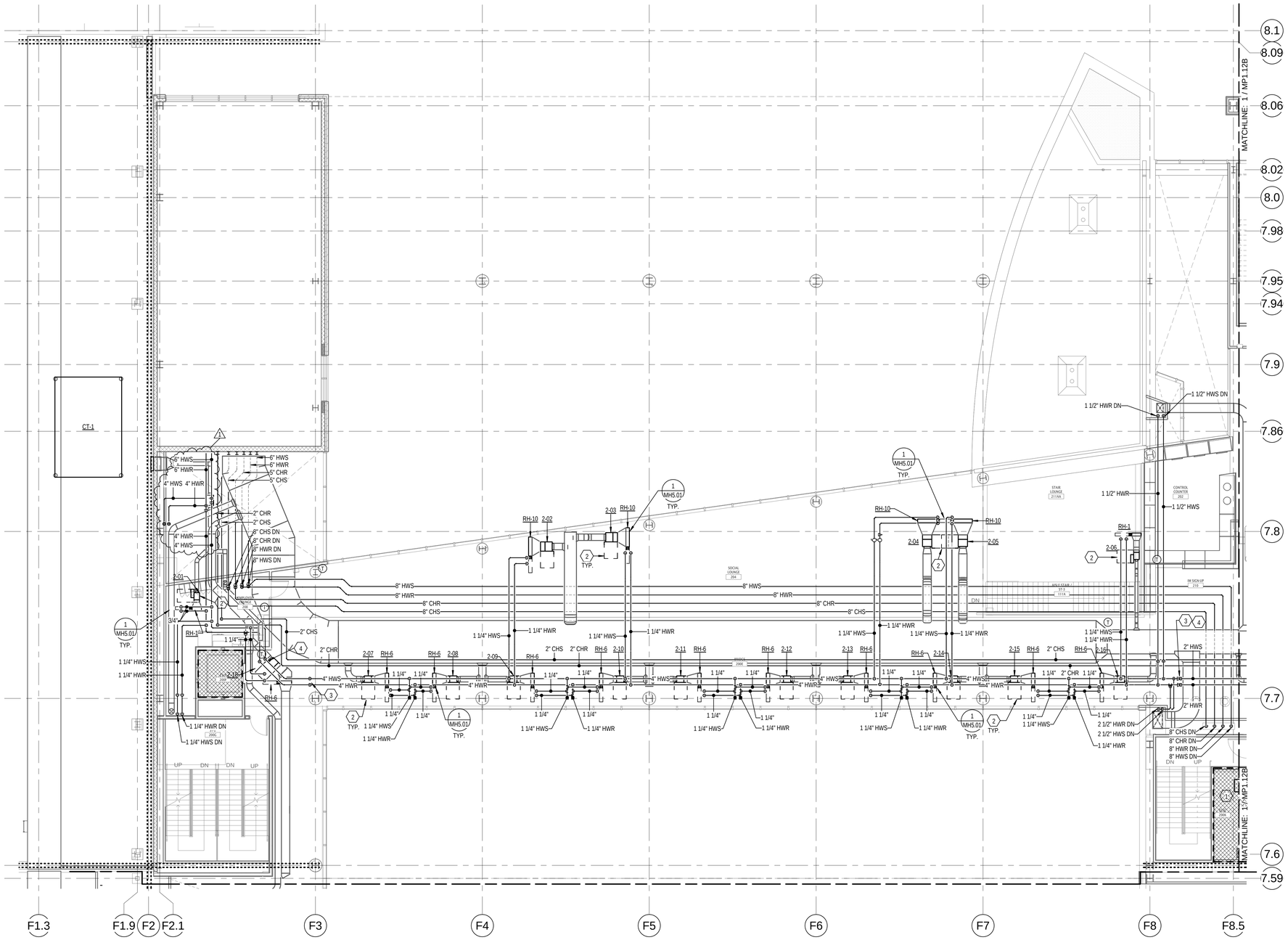

1 LEVEL 2 - MECHPIPING ZONE A

SCALE: 1/8" = 1'-0"

6' 0' 4' 8' 12' 16'

KEYED NOTES

1. DO NOT ROUTE ANY PIPING ABOVE ELECTRICALIT ROOMS AND ELEVATORS OR ELEVATOR EQUIPMENT ROOMS. TYPICAL.
2. KEEP CONTROLS ACCESS ZONE OFF SIDE OF VAV BOX CLEAR OF ALL PIPING, DUCTWORK, OR CONDUIT NOT SERVING THE VAV BOX. PIPING, DUCTWORK, AND CONDUIT MAY BE ROUTED ABOVE THE ELEVATION OF THE TOP OF THE BOX, AVOIDING THE CONTROLS ACCESS ZONE.
3. COORDINATE PIPING WITH STRUCTURE. PROVIDE ELBOWS AS NECESSARY.
4. ROUTE PIPING UP HIGH OVER OTHER DISCIPLINES.

GENERAL NOTES

A. DO NOT ROUTE ANY PIPING ABOVE ELECTRICAL, IT ROOMS OR ELEVATOR MACHINE ROOMS.

B. ALL MANUAL VALVES, AUTOMATIC CONTROL VALVES, STRAINERS, AND CIRCUIT SETTERS SHALL BE INSTALLED WHERE ACCESSIBLE ABOVE LAY-IN CEILING. COORDINATE WITH LATEST AVAILABLE ARCHITECTURAL CEILING PLAN.

C. KEEP CONTROLS ACCESS ZONE OFF SIDE OF VAV BOX CLEAR OF ALL PIPING. PIPING MAY BE ROUTED ABOVE THE ELEVATION OF THE TOP OF THE VAV BOX, AVOIDING THE CONTROLS ACCESS ZONE.

GSBS ARCHITECTS

375 WEST 200 SOUTH
SALT LAKE CITY, UT 84101

P 801.521.8600
F 801.521.7913

www.gsbsarchitects.com

CANNONDESIGN

CANNON DESIGN
829 NORTH 1st AVENUE
PHOENIX, AZ 85003
602.294.6500

REVISIONS:

1	05.04..2012	ADDENDUM 2

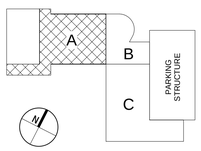

KEYPLAN - NTS

STUDENT LIFE CENTER & PARKING STRUCTURE

Orem, Utah

UTAH VALLEY UNIVERSITY

DRAWN BY:	Author
CHECKED BY:	Checker
OWNER PROJECT NO.:	
GSBS PROJECT NO.:	2011.045.00
ISSUED DATE:	04.27.2012

MECHANICAL PIPING FLOOR PLAN LEVEL 2 ZONE A

CONSTRUCTION DOCUMENTS

MP1.12A

Colvin Engineering Associates, Inc.
244 West 300 North Suite 200
Salt Lake City, Utah 84103
Phone: (801) 322-2400 / Fax: (801) 322-2416

Copyright (C) 2011 by Colvin Engineering Associates, Inc. Salt Lake City, Utah. All rights reserved. Unauthorized copying and/or use is illegal and subject to prosecution.

GSBS ARCHITECTS
375 WEST 200 SOUTH
SALT LAKE CITY, UT 84101
P 801.521.8600
F 801.521.7913
www.gsbsarchitects.com

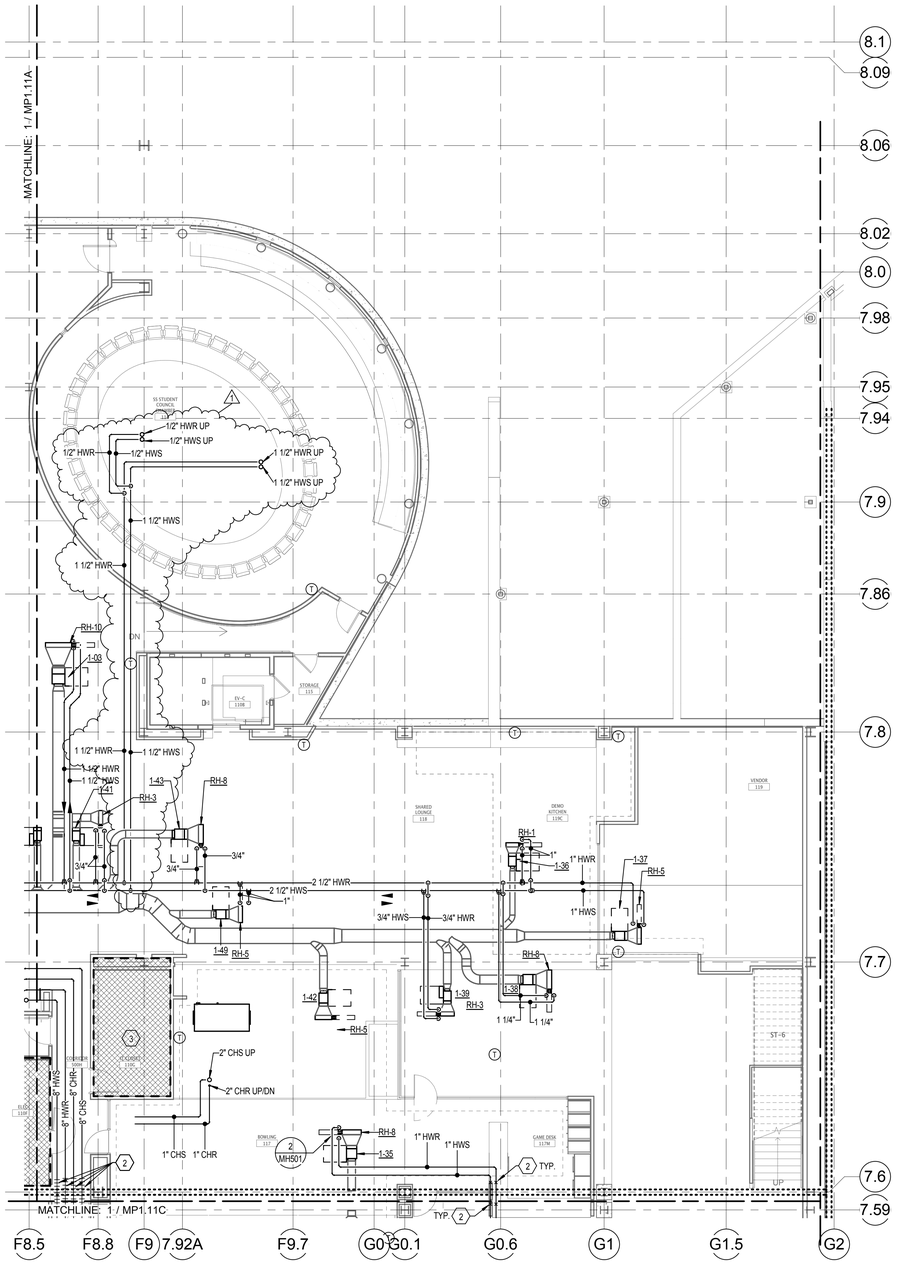

1 LEVEL 1 - MECHPIPING ZONE B
SCALE: 1/8" = 1'-0"

KEYED NOTES

1. PROVIDE METRAFLEX EXPANSION JOINT TO ACCOMMODATE PIPE MOVEMENT ACROSS SEISMIC EXPANSION JOINT. TYPICAL.
2. PROVIDE METRAFLEX METRALOOP EXPANSION JOINT IN MECHANICAL PIPING DESIGNED FOR 7" OF MOVEMENT ACROSS SEISMIC EXPANSION JOINT. PROVIDE SEISMIC BRACING ON BOTH SIDES OF EXPANSION JOINT.
3. DO NOT ROUTE ANY PIPING ABOVE ELECTRICAL/IT ROOMS AND ELEVATORS OR ELEVATOR EQUIPMENT ROOMS. TYPICAL.

GENERAL NOTES

A. DO NOT ROUTE ANY PIPING ABOVE ELECTRICAL, IT ROOMS OR ELEVATOR MACHINE ROOMS.
B. ALL MANUAL VALVES, AUTOMATIC CONTROL VALVES, STRAINERS, AND CIRCUIT SETTERS SHALL BE INSTALLED WHERE ACCESSIBLE ABOVE LAY-IN CEILING. COORDINATE WITH LATEST AVAILABLE ARCHITECTURAL CEILING PLAN.
C. KEEP CONTROLS ACCESS ZONE OFF SIDE OF VAV BOX CLEAR OF ALL PIPING. PIPING MAY BE ROUTED ABOVE THE ELEVATION OF THE TOP OF THE VAV BOX, AVOIDING THE CONTROLS ACCESS ZONE.

CANNONDESIGN
CANNON DESIGN
829 NORTH 1st AVENUE
PHOENIX, AZ 85003
602.294.6500

REVISIONS:

1	05.04..2012	ADDENDUM 2

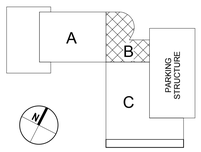

KEYPLAN - NTS

STUDENT LIFE CENTER & PARKING STRUCTURE

Orem, Utah

UTAH VALLEY UNIVERSITY

DRAWN BY:	Author
CHECKED BY:	Checker
OWNER PROJECT NO.:	
GSBS PROJECT NO.:	2011.045.00
ISSUED DATE:	04.27.2012

MECHANICAL PIPING FLOOR PLAN LEVEL 1 ZONE B

CONSTRUCTION DOCUMENTS

MP1.11B

Colvin Engineering Associates, Inc.
244 West 300 North Suite 200
Salt Lake City, Utah 84103
Phone: (801) 322-2400 | Fax: (801) 322-2416

Copyright (C) 2011 by Colvin Engineering Associates, Inc. Salt Lake City, Utah. All rights reserved. Unauthorized copying and/or use is illegal and subject to prosecution.

Copyright (C) 2011 by Colvin Engineering Associates, Inc. Salt Lake City, Utah. All rights reserved. Unauthorized copying and/or use is illegal and subject to prosecution.

AIR HANDLING UNIT SCHEDULE (AH)

PLAN CODE	AREA SERVED	MANUFACTURER MODEL	WEIGHT LBS	SUPPLY FAN TYPE	DIA	CLASS	CFM AT ELEV	ESP (SL)	BHP	MOTOR EFF	HP (1)	RPM	VOLT/ PH	SPEED CONTROL
AH-1	NORTH MECHANICAL RM	UNITECH -	72,600	BLOW THRU	27	II	104,860	6.5	8 @ 17.4	PREMIUM	8 @ 25	1914	480 / 3	VFD
AH-2	SOUTH MECHANICAL RM	UNITECH -	58,600	BLOW THRU	27	II	76,750	6.5	6 @ 17.0	PREMIUM	6 @ 20	1898	480 / 3	VFD

PLAN CODE	HEATING COIL CFM	MBH SEN	TOTAL GPM	% PG	WPD (FT)	EWT (ºF)	EAT (ºF)	LAT (ºF)	ROWS / FPF	AIR PD (IN MAX)	COIL SIZE
AH-1	29,519	1,217	228	25	4.0	98	15	54	1 / 11	0.02	6 @ 43.5 x 108
AH-2	22,014	692	132	25	7.1	98	23	54	1 / 8	0.01	6 @ 40.5 X 94

PLAN CODE	COOLING COIL MBH SEN	MBH TOTAL	TOTAL GPM	% PG	WPD (FT)	EWT (ºF)	EAT (dbºF)	EAT (wbºF)	LAT (dbºF)	LAT (wbºF)	AIR PD (IN MAX)	ROWS / FPI	COIL SIZE
AH-1	1,550	2,197	360	0	8.8	48	71.6	62.5	54.6	54.5	0.76	8 / 8	6 @ 43.5 x 108
AH-2	1,166	1,689	270	0	12.5	48	71.6	62.5	54.2	54.0	0.65	8 / 8	6 @ 40.5 x 94

PLAN CODE	AIR WASHER MAX AIR VEL (FPM)	AIR PD (IN MAX)	MEDIA DEPTH (IN)	SATURATION EFF %	PUMP GPM	PUMP HP	PUMP VOLT/ PH	MAX SIZE (IN) DEPTH	WIDTH	HEIGHT	PRE-FILTER MAX VEL	% EFF	TYPE	REMARKS	CONTROL
AH-1	480	0.22	12	90	40	0.5	120/1	12	237	123	350	85	V-BANK -	PROVIDE BACKDRAFT DAMPER FOR EACH FAN	VFD
AH-2	440	0.22	12	90	35	0.5	120/1	12	205	114	350	85	V-BANK -	PROVIDE BACKDRAFT DAMPER FOR EACH FAN	VFD

(1) PROVIDE FAN ARRAY.

AIR HANDLING UNIT SCHEDULE CONT'D (AH)

PLAN CODE	INDIRECT COOLING COIL CFM	MBH SEN	TOTAL GPM	% PG	WPD (FT)	EWT (ºF)	LAT (ºF)	ROWS / FPF	AIR PD (IN MAX)	COIL SIZE
AH-1	104,860	2,647	1050	0	12.5	66	68.8	8 / 8	0.61	6 @ 43.5 x 108
AH-2	76,750	1,941	720	0	6.1	66	68.7	8 / 8	0.52	6 @ 40.5 x 94

COOLING TOWER SCHEDULE (CT)

PLAN CODE	FLOW RATE (GPM)	MIN. FLOW RATE (GPM)	TOTAL HEAT REJECTED (MBH)	EWT (ºF)	LWT (ºF)	OSA wb (ºF)	NO. OF CELLS	MIN FAN EFF (%)	ELECTRICAL MOTOR HP	CONTROL	SUMP HEATERS (KW)	VOLTAGE/ PHASE	MAXIMUM DIMENSIONS LENGTH (IN)	WIDTH (IN)	HEIGHT (IN)	MAX. OPERATING WEIGHT (LBS)	MANUFACTURER & MODEL NO	REMARKS
CT-1	1,100	500	3,570	72.5	66	63	1	PREMIUM	40	VFD	2 @ 6KW	460/3	217	144	201	26,000	BAC PT2-1218A-3O1	304 STAINLESS STEEL BASIN
CT-2	750	400	2,430	72.5	66	63	1	PREMIUM	40	VFD	2 @ 4KW	460/3	144	144	192	15,000	BAC PT2-1212A-3N1	304 STAINLESS STEEL BASIN

PUMP SCHEDULE (P) △1

PLAN CODE	TYPE	DUTY	FLOW (GPM)	PRESSURE (FT)	CONTROL	PUMP SPEED (RPM)	MIN EFF (%)	FLUID	MOTOR LOAD (BHP)	HP	VOLTAGE/ PHASE	PUMP AND MOTOR WT (LBS)	MANUFACTURER & MODEL NO	REMARKS
P-1	END SUCTION	COOLING TOWER N. MECH RM	1,050	45	CONSTANT	1750	PREMIUM	FW	19.4	25	460/3	2500 (W/ INERTIA BASE)	BELL & GOSSETT 1531 6G	△1 (3)
P-2	END SUCTION	COOLING TOWER N. MECH RM	1,050	45	CONSTANT	1750	PREMIUM	FW	19.4	25	460/3	2500 (W/ INERTIA BASE)	BELL & GOSSETT 1531 6G	(3)
P-3	END SUCTION	CHILLED WATER N. MECH RM	360	30	VFD	1750	PREMIUM	FW	3.5	5	460/3	1150 (W/ INERTIA BASE)	BELL & GOSSETT 1531 4AC	(1)
P-4	END SUCTION	CHILLED WATER N. MECH RM	360	30	VFD	1750	PREMIUM	FW	3.5	5	460/3	1150 (W/ INERTIA BASE)	BELL & GOSSETT 1531 4AC	(1)
P-5	END SUCTION	HEATING WATER N. MECH RM	560	45	VFD	1750	PREMIUM	FW	8.8	10	460/3	1250 (W/ INERTIA BASE)	BELL & GOSSETT 1531 3BC	(1)
P-6	END SUCTION	HEATING WATER N. MECH RM	560	45	VFD	1750	PREMIUM	FW	8.8	10	460/3	1250 (W/ INERTIA BASE)	BELL & GOSSETT 1531 3BC	(1)
P-7	END SUCTION	COOLING TOWER S. MECH RM	720	45	CONSTANT	1750	PREMIUM	FW	10.7	15	460/3	2100 (W/ INERTIA BASE)	BELL & GOSSETT 1531 5BC	(1)
P-8	END SUCTION	COOLING TOWER S. MECH RM	720	45	CONSTANT	1750	PREMIUM	FW	10.7	15	460/3	2100 (W/ INERTIA BASE)	BELL & GOSSETT 1531 5BC	(1)
P-9	INLINE	CHILLED WATER S. MECH RM	270	30	VFD	1750	PREMIUM	FW	2.8	3	460/3	280	BELL & GOSSETT 80 4X4X7	(1)
P-10	INLINE	CHILLED WATER S. MECH RM	270	30	VFD	1750	PREMIUM	FW	2.8	3	460/3	280	BELL & GOSSETT 80 4X4X7	(1)
P-11	END SUCTION	HEATING WATER S. MECH RM	320	45	VFD	1750	PREMIUM	FW	5.3	7.5	460/3	1100 (W/ INERTIA BASE)	BELL & GOSSETT 1531 3BC	(1)
P-12	END SUCTION	HEATING WATER S. MECH RM	320	45	VFD	1750	PREMIUM	FW	5.3	7.5	460/3	1100 (W/ INERTIA BASE)	BELL & GOSSETT 1531 3BC	(1)
P-13	INLINE	IT CLOSET FAN COIL UNITS N. MECH RM	25	28	VFD	1750	PREMIUM	FW	0.6	1	460/3	200	BELL & GOSSETT 80 2X2X7	(1)
P-14	INLINE	IT CLOSET FAN COIL UNITS N. MECH RM	25	28	VFD	1750	PREMIUM	FW	0.6	1	460/3	200	BELL & GOSSETT 80 2X2X7	(1)
P-15	INLINE	IT CLOSET FAN COIL UNITS S. MECH RM	25	28	VFD	1750	PREMIUM	FW	0.6	1	460/3	200	BELL & GOSSETT 80 2X2X7	(1)
P-16	INLINE	IT CLOSET FAN COIL UNITS S. MECH RM	25	28	VFD	1750	PREMIUM	FW	0.6	1	460/3	200	BELL & GOSSETT 80 2X2X7	(1)
P-17	INLINE	AH-1 PRE-HEAT COIL	230	30	CONSTANT	1750	PREMIUM	25% PG	2.5	3	460/3	280	BELL & GOSSETT 80 4X4X7	(1)
P-18	INLINE	AH-1 PRE-HEAT COIL	230	30	CONSTANT	1750	PREMIUM	25% PG	2.5	3	460/3	280	BELL & GOSSETT 80 4X4X7	(1)
P-19	INLINE	AH-2 PRE-HEAT COIL	130	30	CONSTANT	1750	PREMIUM	25% PG	1.6	2	460/3	250	BELL & GOSSETT 80 2-1/2X2-1/2X7	(1)
P-20	INLINE	AH-2 PRE-HEAT COIL	130	30	CONSTANT	1750	PREMIUM	25% PG	1.6	2	460/3	250	BELL & GOSSETT 80 2-1/2X2-1/2X7	(1)
P-21	INLINE	ELEV EQUIPMENT RM	1.6	15	CONSTANT	2650	PREMIUM	FW	0.08	-	120/1	15	BELL & GOSSETT PL-30	
P-22	INLINE	ELEV EQUIPMENT RM	1.6	15	CONSTANT	2650	PREMIUM	FW	0.08	-	120/1	15	BELL & GOSSETT PL-30	
P-23	INLINE	ELEV EQUIPMENT RM	1.6	15	CONSTANT	2650	PREMIUM	FW	0.08	-	120/1	15	BELL & GOSSETT PL-30	

(1) PROVIDE MAXIMUM IMPELLER.

RELIEF FAN SCHEDULE (RF)

PLAN CODE	SYSTEM SERVED	TYPE	CFM @ ELEV	ESP @ ELEV (IN WC)	FAN RPM	MOTOR HP	BHP	EFF	RPM	VOLTAGE/ PHASE	OCTAVE BAND HZ	1 (63)	2 (125)	3 (250)	4 (500)	5 (1K)	6 (2K)	7 (4K)	8 (8K)	AIR VOLUME CONTROL	METHOD OF CONTROL	FAN DIAMETER (IN)	OPERATING WEIGHT (LBS)	MANUFACTURER & MODEL NO	REMARKS
RF-1	AH-1 BUILDING RELIEF	BELT DRIVE CENTRIFUGAL UPBLAST	13,000	1.0	871	5	4.7	PREMIUM	1725	460/3	INLET	88	93	91	86	78	75	69	63	ATC/VFD	ATC SYSTEM/ DUCT STATIC	54	360	COOK 300 ACRUB	PROVIDE WITH ROOF CURB, BACKDRAFT DAMPER
RF-2	BUILDING RELIEF	BELT DRIVE CENTRIFUGAL UPBLAST	13,000	1.0	871	5	4.7	PREMIUM	1725	460/3	INLET	88	93	91	86	78	75	69	63	ATC/VFD	ATC SYSTEM/ DUCT STATIC	54	360	COOK 300 ACRUB	PROVIDE WITH ROOF CURB, BACKDRAFT DAMPER
RF-3	BUILDING RELIEF	BELT DRIVE CENTRIFUGAL UPBLAST	13,000	1.0	871	5	4.7	PREMIUM	1725	460/3	INLET	88	93	91	86	78	75	69	63	ATC/VFD	ATC SYSTEM/ DUCT STATIC	54	360	COOK 300 ACRUB	PROVIDE WITH ROOF CURB, BACKDRAFT DAMPER
RF-4	BUILDING RELIEF	BELT DRIVE CENTRIFUGAL UPBLAST	13,000	1.0	871	5	4.7	PREMIUM	1725	460/3	INLET	88	93	91	86	78	75	69	63	ATC/VFD	ATC SYSTEM/ DUCT STATIC	54	360	COOK 300 ACRUB	PROVIDE WITH ROOF CURB, BACKDRAFT DAMPER
RF-5	BUILDING RELIEF	BELT DRIVE CENTRIFUGAL UPBLAST	13,000	1.0	871	5	4.7	PREMIUM	1725	460/3	INLET	88	93	91	86	78	75	69	63	ATC/VFD	ATC SYSTEM/ DUCT STATIC	54	360	COOK 300 ACRUB	PROVIDE WITH ROOF CURB, BACKDRAFT DAMPER
RF-6	BUILDING RELIEF	BELT DRIVE CENTRIFUGAL UPBLAST	13,000	1.0	871	5	4.7	PREMIUM	1725	460/3	INLET	88	93	91	86	78	75	69	63	ATC/VFD	ATC SYSTEM/ DUCT STATIC	54	360	COOK 300 ACRUB	PROVIDE WITH ROOF CURB, BACKDRAFT DAMPER
RF-7	BUILDING RELIEF	BELT DRIVE CENTRIFUGAL UPBLAST	19,000	0.75	397	5	4.4	PREMIUM	1725	460/3	INLET	88	87	82	75	71	65	59	55	ATC/VFD	ATC SYSTEM/ DUCT STATIC	76	1100	COOK 490 ACRUB	PROVIDE WITH ROOF CURB, BACKDRAFT DAMPER
RF-8	BUILDING RELIEF	BELT DRIVE CENTRIFUGAL UPBLAST	19,000	0.75	397	5	4.4	PREMIUM	1725	460/3	INLET	88	87	82	75	71	65	59	55	ATC/VFD	ATC SYSTEM/ DUCT STATIC	76	1100	COOK 490 ACRUB	PROVIDE WITH ROOF CURB, BACKDRAFT DAMPER
RF-9	BUILDING RELIEF	BELT DRIVE CENTRIFUGAL UPBLAST	19,000	0.75	397	5	4.4	PREMIUM	1725	460/3	INLET	88	87	82	75	71	65	59	55	ATC/VFD	ATC SYSTEM/ DUCT STATIC	76	1100	COOK 490 ACRUB	PROVIDE WITH ROOF CURB, BACKDRAFT DAMPER

PLATE-AND-FRAME HEAT EXCHANGER SCHEDULE (HX)

PLAN CODE	SYSTEM SERVED	CAPACITY (MBH)	HOT FLOW (GPM)	HOT EWT / LWT (ºF)	HOT PD (FT)	HOT FLUID	COLD FLOW (GPM)	COLD EWT / LWT (ºF)	COLD PD (FT)	COLD FLUID	WEIGHT (LB)	MANUFACTURER & MODEL NO
HX-1	AH-1 PRE-HEAT COILS	1,195	228	100 / 85	10	WATER	228	83 / 98	10	25% PG	3,100	BELL & GOSSETT GPX AP47
HX-2	AH-2 PRE-HEAT COILS	944	132	100 / 85	5	WATER	132	83 / 98	5	25% PG	4,000	BELL & GOSSETT GPX AP62

IN-LINE SOLIDS SEPARATOR SCHEDULE (ISS)

PLAN CODE	SYSTEM SERVED	PUMP FLOW (GPM)	PUMP HEAD (PSI)	INLET/ OUTLET PIPE SIZE (IN)	ELECTRICAL VOLTAGE/ PHASE	AMPS	MAX DIMENSIONS L x W x H (IN)	MAX OPERATING WEIGHT (LBS)	MANUFACTURER & MODEL NO	REMARKS
ISS-1	CT-1	70	40	2.5 / 2.0	460/3	4.8	27 x 30 x 53	500	GRISWOLD CSS-201-LH	PROVIDE WITH CONTACTOR FOR REMOTE START/STOP, PURGE VALVE FURNISEHD BY 232500 CONTRACTOR
ISS-2	CT-2	42	40	2.0 / 2.0	460/3	4.8	27 x 30 x 53	500	GRISWOLD CSS-201-LH	PROVIDE WITH CONTACTOR FOR REMOTE START/STOP, PURGE VALVE FURNISEHD BY 232500 CONTRACTOR

AIR SEPARATOR (AS)

PLAN CODE	SYSTEM SERVED	CONNECTION SIZE	MAX GPM	PD (FT)	MAX DIMENSIONS (IN) DIAMETER	HEIGHT	FLANGE TO FLANGE	DRY WT (LBS)	MAX OPER WT (LBS)	MANUFACTURER & MODEL NO
AS-1	AH-1 CHILLED WATER	6"	360	0.5	12.8	30.6	27.7	450	620	SPIROVENT SENIOR
AS-2	AH-2 CHILLED WATER	3"	270	0.5	8.6	23.7	20.2	115	175	SPIROVENT SENIOR
AS-3	AH-1 HEATING WATER	8"	560	0.5	16	38.4	33.6	430	710	SPIROVENT SENIOR
AS-4	AH-2 HEATING WATER	6"	320	0.5	12.8	30.6	27.7	450	620	SPIROVENT SENIOR
AS-5	AH-1 PRE-HEAT COIL	2 1/2"	230	0.5	6.3	19	15.7	70	95	SPIROVENT SENIOR
AS-6	AH-2 PRE-HEAT COIL	2"	130	0.5	6.3	19	15.2	60	80	SPIROVENT SENIOR

LOUVERED PENTHOUSE SCHEDULE (LPH)

PLAN CODE	FUNCTION	THROAT SIZE LENGTH (IN)	WIDTH (IN)	HEIGHT (IN)	MINIMUM FREE AREA (SQ FT)	MANUFACTURER & MODEL NO
LPH-1	INTAKE	24	24	24	5.67	RUSKIN PHB6375DXD
LPH-2	EXHAUST	108	18	18	14.22	RUSKIN PHB6375DXD
LPH-3	EXHAUST	114	48	36	44.68	RUSKIN PHB6375DXD
LPH-4	INTAKE	114	30	24	24.06	RUSKIN PHB6375DXD

EXHAUST FAN SCHEDULE (EF)

PLAN CODE	AREA SERVED	TYPE	CFM @ ELEV	ESP @ ELEV	FAN RPM	MOTOR BHP	HP	EFFICIENCY %	VOLT/ PH	SONES	DAMPER (GRAVITY OR MOTOR)	METHOD OF CONTROL	OPENING SIZE	MAX OPERATING WT (LBS)	MANUFACTURER & MODEL NO	REMARKS
EF-1	DEMO KITCHEN	UPBLAST CENTRIFUGAL	2,400	1.0	1093	0.75	1.0	PREMIUM	460/3	13.1	GRAVITY	ATC	26"X26"	210	COOK VCR 180V6B	-
EF-2	RESTROOMS LEVELS 3 & 4	UPBLAST CENTRIFUGAL	900	0.75	1550	0.33	0.5	PREMIUM	115/1	12.4	GRAVITY	ATC	20"X20"	150	COOK ACRUD-HP 150RH15D	-
EF-3	RESTROOMS LEVELS 1 & 2	UPBLAST CENTRIFUGAL	2,400	1.0	1093	0.75	1.0	PREMIUM	460/3	13.1	GRAVITY	ATC	26"X26"	210	COOK VCR 180V6B	-
EF-4	DEMO KITCHEN	UPBLAST CENTRIFUGAL	2,400	1.0	1093	0.75	1.0	PREMIUM	460/3	13.1	GRAVITY	ATC	26"X26"	210	COOK VCR 180V6B	-
EF-5	EMPLOYEE LOUNGE 208	INLINE CENTRIFUGAL	50	1.0	2144	0.13	1/6	PREMIUM	460/3	12.1	GRAVITY	ATC	12"X12"	125	COOK 60SQN-B	-
EF-6	ELEC MAIN 110Y	INLINE CENTRIFUGAL	75	0.3	1000	46 WATTS	-	PREMIUM	115/1	1.4	GRAVITY	PROVIDE LINE VOLTAGE THERMOSTAT	6"x6"	20	COOK GN-142	-
EF-7	LAUNDRY 125F	INLINE CENTRIFUGAL	480	0.5	2854	0.38	1/2	PREMIUM	115/1	25	GRAVITY	ATC	12"x12"	135	COOK 70SQN-B	PROVIDE WITH SOLID STATE SPEED CONTROLLER.
EF-8	ELEC 200K	INLINE CENTRIFUGAL	850	.3	904	208 WATTS	-	PREMIUM	115/1	2.0	GRAVITY	PROVIDE LINE VOLTAGE THERMOSTAT	20"x6"	90	COOK GN-822	-

EXPANSION TANK SCHEDULE (ET)

PLAN CODE	SYSTEM SERVED	WATER TEMP (°F)	% GLYCOL	TANK VOLUME (GAL)	ACCEPTANCE VOLUME (GAL)	PRE-CHARGE (PSI)	MAX DIMENSIONS DIA (IN)	HEIGHT (IN)	OPERATING WT (LBS)	MANUFACTURER & MODEL NO	REMARKS
ET-1	AH-1 CHILLED WATER	48	0	8.0	2.4	14	12	19	130	AMTROL AX-15	1/2" NPT CONNECTION
ET-2	AH-2 CHILLED WATER	48	0	8.0	2.4	14	12	19	130	AMTROL AX-15	1/2" NPT CONNECTION
ET-3	AH-1 HEATING WATER	100	0	68	34.0	14	24	41	950	AMTROL AX-120V	1" NPT CONNECTION
ET-4	AH-2 HEATING WATER	100	0	68	34.0	14	24	41	950	AMTROL AX-120V	1" NPT CONNECTION
ET-5	AH-1 PRE-HEAT COIL	98	25	21.7	11.3	14	16	29	310	AMTROL AX-40V	1/2" NPT CONNECTION
ET-6	AH-2 PRE-HEAT COIL	98	25	8.0	2.4	14	12	19	130	AMTROL AX-15	1/2" NPT CONNECTION

△1

SOUND ATTENUATOR SCHEDULE (SA)

PLAN CODE	SYSTEM SERVED	CFM (ALT)	MAX VEL (FPM)	MAX PRESS DROP	MAX DIMENSIONS (1) LENGTH (IN)	WIDTH (IN)	HEIGHT (IN)	MAX OPERATING WT (LBS)	MANUFACTURER & MODEL NO	OCTAVE BAND HZ	1 (63)	2 (125)	3 (250)	4 (500)	5 (1000)	6 (2000)	7 (4000)	8 (8000)	POSITION OF BAFFLES
SA-1	RF-1	13,000	1444	0.11	108	36	36	250	VIBRO-ACOUSTICS RED-UHV-FC-L13968	DIL	10	16	16	26	35	30	21	21	VERTICAL
SA-2	RF-2	13,000	1444	0.11	108	36	36	250	VIBRO-ACOUSTICS RED-UHV-FC-L13968	DIL	10	16	16	26	35	30	21	21	VERTICAL
SA-3	RF-3	13,000	1444	0.11	108	36	36	250	VIBRO-ACOUSTICS RED-UHV-FC-L13968	DIL	10	16	16	26	35	30	21	21	VERTICAL
SA-4	RF-4	13,000	1444	0.11	108	36	36	250	VIBRO-ACOUSTICS RED-UHV-FC-L13968	DIL	10	16	16	26	35	30	21	21	VERTICAL
SA-5	RF-5	13,000	1444	0.11	108	36	36	250	VIBRO-ACOUSTICS RED-UHV-FC-L13968	DIL	10	16	16	26	35	30	21	21	VERTICAL
SA-6	RF-6	13,000	1444	0.11	108	36	36	250	VIBRO-ACOUSTICS RED-UHV-FC-L13968	DIL	10	16	16	26	35	30	21	21	VERTICAL

LOUVER SCHEDULE (L)

PLAN CODE	CFM	MAXIMUM VELOCITY (FPM)	MINIMUM FREE AREA (SQ FT)	MAXIMUM DIMENSIONS (W x H) (IN)	MANUFACTURER & MODEL NO
L-1	50	500	0.10	30" x 12"	RUSKIN ELF6375DX
L-2	26,215	1125	23.3	120" x 48"	RUSKIN ELF6375DX
L-3	26,215	1125	23.3	120" x 48"	RUSKIN ELF6375DX
L-4	26,215	1125	23.3	120" x 48"	RUSKIN ELF6375DX
L-5	26,215	1125	23.3	120" x 48"	RUSKIN ELF6375DX

JOB SITE ELEVATION = 4,500 FT
JOB SITE PRESSURE = 12.32 PSI
SELECT ALL EQUIPMENT FOR OPERATION AT JOB SITE ELEVATION
ALL MOTORS TO BE PREMIUM EFFICIENCY

Colvin Engineering Associates, Inc.
244 West 300 North Suite 200
Salt Lake City, Utah 84103
Phone: (801) 322-2400 / Fax: (801) 322-2416

GSBS ARCHITECTS
375 WEST 200 SOUTH
SALT LAKE CITY, UT 84101
P 801.521.8600
F 801.521.7913
www.gsbsarchitects.com

CANNONDESIGN
CANNON DESIGN
829 NORTH 1st AVENUE
PHOENIX, AZ 85003
602.294.6500

REVISIONS:

1	05.04..2012	ADDENDUM 2

STUDENT LIFE CENTER & PARKING STRUCTURE

Orem, Utah

UTAH VALLEY UNIVERSITY

DRAWN BY: Author
CHECKED BY: Checker
OWNER PROJECT NO.:
GSBS PROJECT NO.: 2011.045.00
ISSUED DATE: 04.27.2012

MECHANICAL SCHEDULES

CONSTRUCTION DOCUMENTS

MH6.01

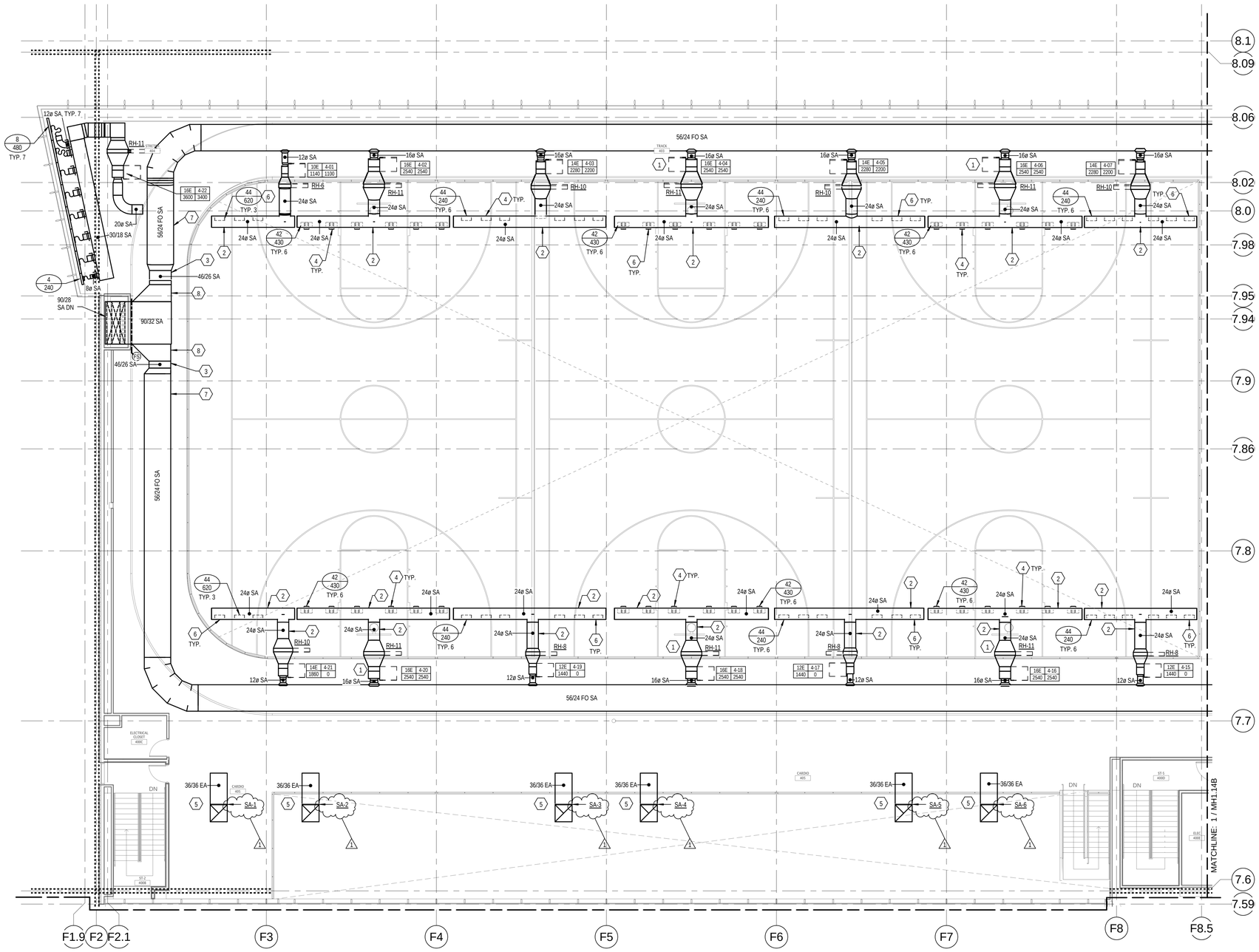

1 LEVEL 4 - MECHANICAL ZONE A

SCALE: 1/8" = 1'-0"

6' 0' 4' 8' 12' 16'

KEYED NOTES

1. DUCTWORK DOWN STREAM OF VAV BOX TO BE INTERNALLY LINED WITH 1" ACOUSTICAL LINING.
2. ROUND DUCT TO BE INSTALLED WITH 1" ACOUSTICAL LINER.
3. TRANSITION FROM 46/26 TO 56/24 FO DUCT.
4. INSTALL SUPPLY AIR GRILLE 30º DOWN FROM HORIZONTAL.
5. SEE SHEET MH1.21 FOR RELIEF AIR FAN LOCATION. PROVIDE SOUND BOOT INTO RELIEF AIR FAN INLET.
6. INSTALL SUPPLY AIR GRILLE 10º DOWN FROM HORIZONTAL.
7. DOUBLE WALL DUCT TO EXTEND 8'-0" BEYOND SHAFT.
8. TRANSITION FROM 82"X32" TO 46"X26" AT A 45° ANGLE. SEE DETAIL 1 ON SHEET MH5.03 FOR ADDITIONAL INFORMATION.

GENERAL NOTES

A. PROVIDE A RETURN SOUND BOOT AT EACH CEILING RETURN AIR GRILLE THAT IS NOT DUCTED IN ACCORDANCE WITH DETAIL 6 ON SHEET MH5.02.

B. SUPPLY AIR DUCT SERVED BY AIR HANDLERS AH-1 AND AH-2 IS DOUBLE-WALLED FROM THE POINT IT CONNECTS TO THE AIR HANDLERS IN THEIR RESPECTIVE MECHANICAL ROOMS, ALONG ITS ENTIRE LENGTH IN THE SHAFT, TO A POINT 8'-0" BEYOND FIRE/SMOKE DAMPER IN BRANCH DUCTS SERVING EACH FLOOR.

C. INSTALL VAV BOXES IN ACCORDANCE WITH DETAIL 7 ON SHEET MH5.02.

D. INSTALL DUCT MOUNTED HEATING COIL IN ACCORDANCE WITH DETAIL 2 ON SHEET MH5.03.

E. RUNOUTS TO DIFFUSERS ARE TO BE NECK SIZE UNLESS OTHERWISE NOTED ON DRAWINGS.

GSBS ARCHITECTS

375 WEST 200 SOUTH
SALT LAKE CITY, UT 84101

P 801.521.8600
F 801.521.7913

www.gsbsarchitects.com

CANNONDESIGN

CANNON DESIGN
829 NORTH 1st AVENUE
PHOENIX, AZ 85003
602.294.6500

REVISIONS:

1	05.04..2012	ADDENDUM 2

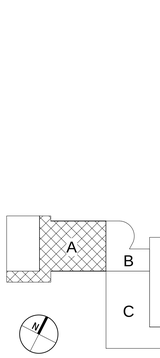

KEYPLAN - NTS

STUDENT LIFE CENTER & PARKING STRUCTURE

Orem, Utah

UTAH VALLEY UNIVERSITY

DRAWN BY:	Author
CHECKED BY:	Checker
OWNER PROJECT NO.:	
GSBS PROJECT NO.:	2011.045.00
ISSUED DATE:	04.27.2012

MECHANICAL FLOOR PLAN LEVEL 4 ZONE A

CONSTRUCTION DOCUMENTS

MH1.14A

Colvin Engineering Associates, Inc.
244 West 300 North Suite 200
Salt Lake City, Utah 84103
Phone: (801) 322-2400 / Fax: (801) 322-2416

Copyright (C) 2011 by Colvin Engineering Associates, Inc. Salt Lake City, Utah. All rights reserved. Unauthorized copying and/or use is illegal and subject to prosecution.

GSBS ARCHITECTS
375 WEST 200 SOUTH
SALT LAKE CITY, UT 84101
P 801.521.8600
F 801.521.7913
www.gsbsarchitects.com

CANNONDESIGN
CANNON DESIGN
829 NORTH 1st AVENUE
PHOENIX, AZ 85003
602.294.6500

REVISIONS:

1	05.04..2012	ADDENDUM 2

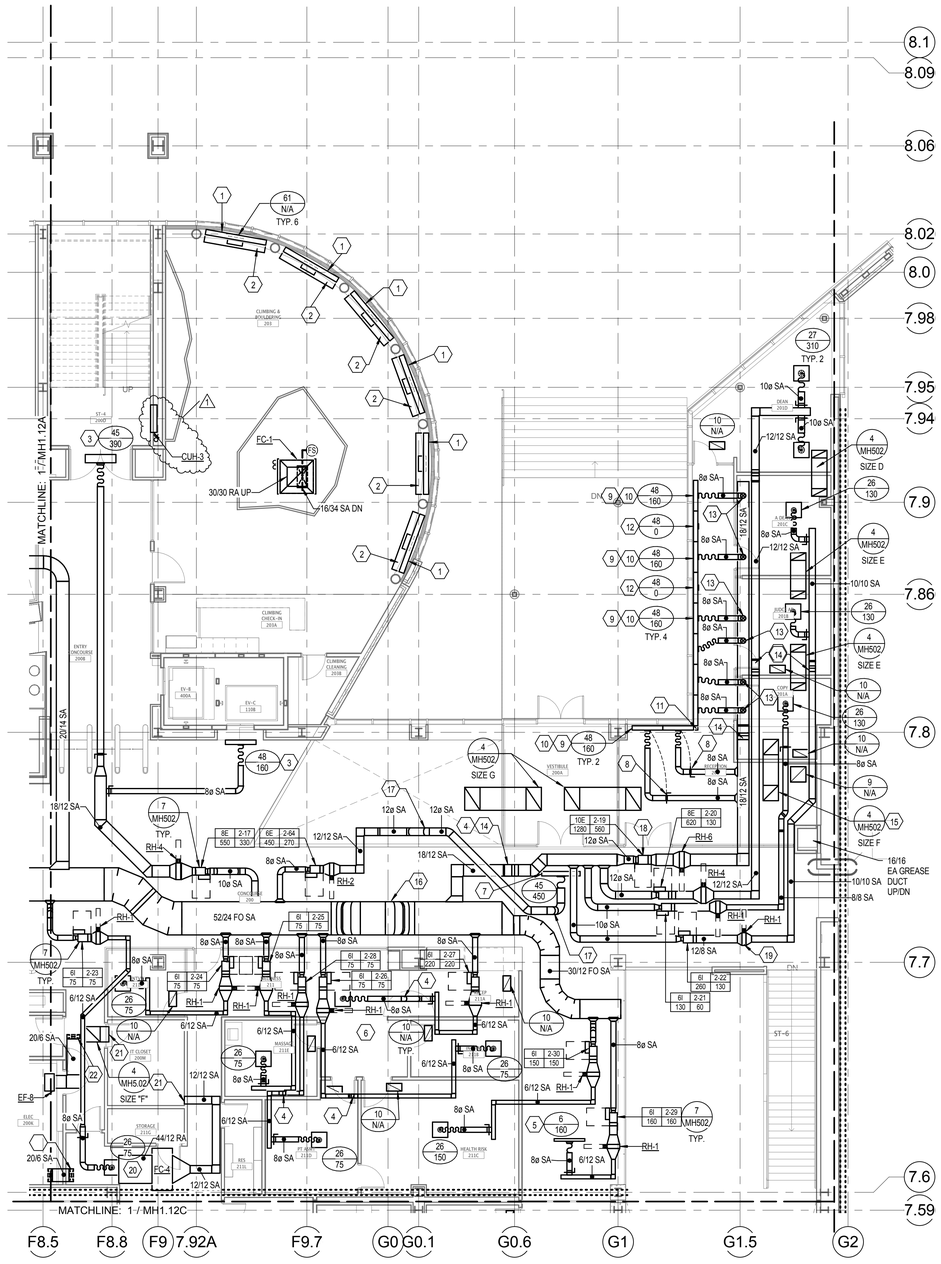

1 LEVEL 2 - MECHANICAL ZONE B
SCALE: 1/8" = 1'-0"

KEYED NOTES

1. 129" X 20" X 14" PLENUM CONCEALED IN ARCHITECTURAL BENCH. SEE ARCHITECTURAL BENCH DETAIL ON SHEET AE-506.
2. 24" X 12" OPENING IN FLOOR. SEE STRUCTURAL DRAWINGS AND ARCHITECTURAL BENCH DETAIL ON SHEET AE-506.
3. DIRECT BOTH SLOTS TO THE SOUTH.
4. PROVIDE OFFSETS IN DUCT AS NECESSARY TO ROUTE DUCT AROUND ROOF AND OVERFLOW DRAINS.
5. DIRECT BOTH SLOTS TO THE NORTH.
6. EXTENSIVE PLUMBING IN THIS AREA. CONTRACTOR MUST COORDINATE INSTALLATION OF DUCTWORK WITH ALL OTHER DISCIPLINES.
7. DIRECT BOTH SLOTS AT AN AN ANGLE TOWARD THE GLASS. MAXIMUM ANGLE IS APPROXIMATELY 30° FROM HORIZONTAL.
8. PROVIDE REMOTE DAMPER OPERATOR THAT RUNS THROUGH THE SUPPLY BRANCH. REMOTE OPERATOR MUST BE ACCESSIBLE THROUGH THE FACE OF THE GRILLE. OPERATOR MUST NOT BE VISIBLE WHEN NOT BEING USED.
9. LINEAR SLOT DIFFUSERS MUST BE CONTINUOUS. COORDINATE WITH ARCHITECT FOR FINISH AND ARCHITECTURAL APPEAL.
10. DIRECT ONE SLOT DOWN ACROSS THE GLASS AND ONE SLOT HORIZONTALLY.
11. PROVIDE MANUFACTURES 90° CORNER SO THAT LINEAR DIFFUSERS APPEAR CONTINUOUS.
12. FAUX LINEAR SLOT GRILLES. MUST MATCH APPEARANCE OF OTHER SLOTS TO GIVE GRILLES A CONTINUOUS APPEARANCE. SHEETMETAL BLANK-OFF PLATE ON BACK SIDE OF DIFFUSER. PAINT FLAT BLACK.
13. PROVIDE BALANCING DAMPER IN VERTICAL TAKE-OFF OF BRANCH DUCTWORK COMING OFF OF 18/12 MAIN. CONTRACTOR TO COORDINATE AND WITH ALL DISCIPLINES SO THAT DAMPERS ARE ACCESSIBLE.
14. PROVIDE OFFSETS IN DUCT AS REQUIRED TO AVOID CONFLICT WITH STRUCTURE.
15. INSTALL RETURN BOOT OVER THE TOP OF THE ROOF DRAINS. COORDINATE INSTALLATION WITH PLUMBING, MECHANICAL PIPING, AND ELECTRICAL.
16. PROVIDE OFFSETS IN DUCT AS REQUIRED TO AVOID CONFLICT WITH ROOF DRAIN PIPING. COORDINATE IN FIELD.
17. PROVIDE OFFSETS AS NECESSARY TO ROUTE SUPPLY BRANCH AROUND STRUCTURE AND OTHER DISCIPLINES. DUCT IS OVERSIZED SO PRESSURE DROP SHOULD BE NEGLIGIBLE.
18. ROUTE MECHANICAL EQUIPMENT AND SHEETMETAL OVER THE TOP OF ROOF DRAINS. NOTE: KEEP MAINTENANCE AREA TO SIDE OF VAV BOX CLEAR OF ANY PIPING, DUCTWORK, OR CONDUIT NOT SERVING THE VAV BOX.
19. MECHANICAL EQUIPMENT AND SHEETMETAL MUST BE INSTALLED FAR ENOUGH TO THE NORTH SO AS NOT TO CONFLICT WITH HORIZONTAL FIRE SHUTTING DEVICES. CONTRACTOR TO COORDINATE ALL DISCIPLINES.
20. PROVIDE 44"X12" OPENING IN TOP OF LINED RETURN AIR DUCT.
21. PROVIDE GALVANIZED WIRE MESH SCREEN AT END OF DUCT. SECURE WITH SCREWED FLANGED FRAME.
22. 20"X6" OPENING IN TOP OF DUCT.

GENERAL NOTES

A. PROVIDE A RETURN SOUND BOOT AT EACH CEILING RETURN AIR GRILLE THAT IS NOT DUCTED IN ACCORDANCE WITH DETAIL 6 ON SHEET MH5.02.
B. SUPPLY AIR DUCT SERVED BY AIR HANDLERS AH-1 AND AH-2 IS DOUBLE-WALLED FROM THE POINT IT CONNECTS TO THE AIR HANDLERS IN THEIR RESPECTIVE MECHANICAL ROOMS, ALONG ITS ENTIRE LENGTH IN THE SHAFT, TO A POINT 8'-0" BEYOND FIRE/SMOKE DAMPER IN BRANCH DUCTS SERVING EACH FLOOR.
C. INSTALL VAV BOXES IN ACCORDANCE WITH DETAIL 7 ON SHEET MH5.02.
D. INSTALL DUCT MOUNTED HEATING COIL IN ACCORDANCE WITH DETAIL 2 ON SHEET MH5.03.
E. RUNOUTS TO DIFFUSERS ARE TO BE NECK SIZE UNLESS OTHERWISE NOTED ON DRAWINGS.

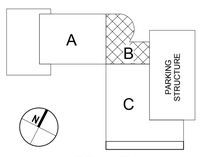

KEYPLAN - NTS

STUDENT LIFE CENTER & PARKING STRUCTURE

Orem, Utah

UTAH VALLEY UNIVERSITY

DRAWN BY:	Author
CHECKED BY:	Checker
OWNER PROJECT NO.:	
GSBS PROJECT NO.:	2011.045.00
ISSUED DATE:	04.27.2012

MECHANICAL FLOOR PLAN LEVEL 2 ZONE B

CONSTRUCTION DOCUMENTS

MH1.12B

Colvin Engineering Associates, Inc.
244 West 300 North Suite 200
Salt Lake City, Utah 84103
Phone: (801) 322-2400 / Fax: (801) 322-2416

Copyright (C) 2011 by Colvin Engineering Associates, Inc. Salt Lake City, Utah. All rights reserved. Unauthorized copying and/or use is illegal and subject to prosecution.

Utah Valley University

STUDENT LIFE CENTER AND PARKING STRUCTURE

ADDENDUM NO. 2

May 4, 2012

ELECTRICAL and TECHNOLOGY

This addendum consists of the following:

Specifications:

AD2-E01 Specification Section 260553 - Identification for Electrical Systems:
a. Add this specification section in its' entirety (attached).

AD2-E02 Specification Section 262413 - Switchboards:
a. Add this specification section in its' entirety (attached).

AD2-E03 Specification Section 274115 - Control Systems:
a. All Control System Components and Programing will be furnished and installed by UVU. The AV installer is to provide all programming for the audio systems specified for the project. The audio integrator is responsible for the coordination with UVU personnel for integration of the two systems.
b. The installer of the audio system shall be Crestron Certified per this specification section and comply with all UVU standards for programing and communications protocol.

Drawings:

AD2-E04 Sheet EJ-601: The mounting of all flat panel monitors is to be verified with the architect and UVU Media Services personnel prior to installation.

AD2-E05 Sheet EY-111a: The following changes apply to this sheet:
a. Change door type on Door 101-2 from #4 to #10.
b. Add door type #5 to the following doors: 100B-3, 100B-5, 100F-1, and 110C-2.

AD2-E06 Sheet EY-111b: The following changes apply to this sheet:
a. Change door type on Door 114-1 from #1 to #8.
b. Change door type on Door 116-1 from #1 to #7.

AD2-E07 Sheet EY-111c: The following changes apply to this sheet:
a. Change door types from #5 to #9 on the following doors: 125-1, 125A-1, 125C-1, 125C-2.
b. Add door type #5 to the following doors: 110U-3, 110U-5
c. Add door type #11 to Door 112-1.
d. Delete the access control device symbols from Door 122-1.

AD2-E08 Sheet EY-121a: The following changes apply to this sheet:

a. Delete access control device symbols from Door 208-1.

AD2-E09 Sheet EY-121b: The following changes apply to this sheet:

a. Change the door type for Door 201-1 from #5 to #9.

AD2-E010 Sheet EY-121c: The following changes apply to this sheet:

a. Change the door type on Door 200E-2 from #2 to #6
b. Change the door type on Door 227F-1 from #5 to #9.
c. Delete access control device symbols from the following doors: 222-1, 223-1, 224-1, 228A-1.

AD2-E011 Sheet EY-131a: The following changes apply to this sheet:

a. Change the door type from #5 to #9 for the following doors: 302A-1 and 302C-1.
b. Add door type #4 to Door 300C-1 and door type #6 to Door 300E-1.

AD2-E012 Sheet EY-131c: The following changes apply to this sheet:

a. Add door type #6 to Door 300R-1
b. Delete access control device symbols from doors 311-1 and 312-1.

AD2-E013 Sheet 141a: The following changes apply to this sheet:

a. Add door type #6 to doors 400B-1 and 400D-1.

AD2-E014 Sheet 141c: The following changes apply to this sheet:

a. Change the door type from #5 to #9 for doors 409-1 and 410-1.
b. Add door type #6 to Door 400P-1.
c. Add door type #1 to Door 412-1.

AD2-E015 Sheet EY-601: The following changes apply to this sheet:

a. The "Card Access Door Type Schedule" has been completely replaced. See Attachment Sheet EY-601.

AD2-E016 Sheet TA-002: The following changes apply to this sheet:

a. All Crestron equipment will be owner furnished and installed. Audio installer is responsible to coordinate installation of specified equipment and equipment provided by owner.

AD2-E017 Sheet TT-001: The following changes apply to this sheet:

a. The voice station cable is to be blue in color.
b. All AV equipment racks including 'C', '1', and 'W' are to have 6 data cables and 1 voice cable.
c. The campus fiber cable 'FS' is to be 72 strand single mode.

AD2-E018 Sheet TT-601: The following changes apply to this sheet:

a. All AV equipment racks including 'C', '1', and 'W' are to have 6 data cables and 1 voice cable.
b. The main server room in to be 110N on the first level and not 225A as shown on the riser.
c. The Telecom Room in Liberal Arts is 011 not 110N.
d. The outside fiber to be removed is from Library LE 323B to CS608. The fiber will be long enough to pull back in. It has 144 strands of single mode. The installer is responsible to re-terminate all fiber. The installer is responsible to verify the integrity of the fiber prior to remove and is to

insure all 144 strands meet standards and are tested after reinstallation. It will be the installers responsibility to replace any damaged fiber.

Attachments:

This addendum includes the following attachments:

Specification Section 260553	Identification for Electrical Systems
Specification Section 262413	Switchboards
Sheet EY-601	Security Systems Schedules

End of Addendum No. 2 - Electrical

SECTION 260553 - IDENTIFICATION FOR ELECTRICAL SYSTEMS

PART 1 - GENERAL

1.1 RELATED DOCUMENTS

A. Drawings and general provisions of the Contract, including General and Supplementary Conditions and Division 01 Specification Sections, apply to this Section.

1.2 SUMMARY

A. Section Includes:
1. Identification for raceways.
2. Identification of power and control cables.
3. Identification for conductors.
4. Underground-line warning tape.
5. Warning labels and signs.
6. Instruction signs.
7. Equipment identification labels.
8. Miscellaneous identification products.

1.3 SUBMITTALS

A. Identification Schedule: An index of nomenclature of electrical equipment and system components used in identification signs and labels.

1.4 QUALITY ASSURANCE

A. Comply with ANSI A13.1.

B. Comply with NFPA 70.

C. Comply with 29 CFR 1910.144 and 29 CFR 1910.145.

D. Comply with ANSI Z535.4 for safety signs and labels.

E. Adhesive-attached labeling materials, including label stocks, laminating adhesives, and inks used by label printers, shall comply with UL 969.

1.5 COORDINATION

A. Coordinate identification names, abbreviations, colors, and other features with requirements in other Sections requiring identification applications, Drawings, Shop Drawings, manufacturer's wiring diagrams, and the Operation and Maintenance Manual; and with those required by codes, standards, and 29 CFR 1910.145. Use consistent designations throughout Project.

B. Coordinate installation of identifying devices with completion of covering and painting of surfaces where devices are to be applied.

C. Coordinate installation of identifying devices with location of access panels and doors.

D. Install identifying devices before installing acoustical ceilings and similar concealment.

PART 2 - PRODUCTS

2.1 POWER RACEWAY IDENTIFICATION MATERIALS

A. Comply with ANSI A13.1 for minimum size of letters for legend and for minimum length of color field for each raceway size.

B. Colors for Raceways Carrying Circuits at More Than 600 V:
   1. White letters on painted red raceways.
   2. Legend: "DANGER HIGH VOLTAGE WIRING" with 3-inch- (75-mm-) high letters on 20-inch (500-mm) centers.

C. Self-Adhesive Vinyl Labels for Raceways Carrying Circuits at 600 V or Less: Preprinted, flexible label laminated with a clear, weather- and chemical-resistant coating and matching wraparound adhesive tape for securing ends of legend label.

D. Write-On Tags: Polyester tag, 0.010 inch (0.25 mm) thick, with corrosion-resistant grommet and cable tie for attachment to conductor or cable.
   1. Marker for Tags: Machine-printed, permanent, waterproof, black ink marker recommended by printer manufacturer.

2.2 POWER AND CONTROL CABLE IDENTIFICATION MATERIALS

A. Comply with ANSI A13.1 for minimum size of letters for legend and for minimum length of color field for each raceway and cable size.

B. Self-Adhesive Vinyl Labels: Preprinted, flexible label laminated with a clear, weather- and chemical-resistant coating and matching wraparound adhesive tape for securing ends of legend label.

C. Write-On Tags: Polyester tag, 0.010 inch (0.25 mm) thick, with corrosion-resistant grommet and cable tie for attachment to conductor or cable.
   1. Marker for Tags: Machine-printed, permanent, waterproof, black ink marker recommended by printer manufacturer.

2.3 CONDUCTOR IDENTIFICATION MATERIALS

A. Color-Coding Conductor Tape: Colored, self-adhesive vinyl tape not less than 3 mils (0.08 mm) thick by 1 to 2 inches (25 to 50 mm) wide.

B. Marker Tapes: Vinyl or vinyl-cloth, self-adhesive wraparound type, with circuit identification legend machine printed by thermal transfer or equivalent process.

C. Write-On Tags: Polyester tag, 0.010 inch (0.25 mm) <**Insert dimension**> thick, with corrosion-resistant grommet and cable tie for attachment to conductor or cable.

1. Marker for Tags: Machine-printed, permanent, waterproof, black ink marker recommended by printer manufacturer.

2.4 UNDERGROUND-LINE WARNING TAPE

A. Tape:
1. Recommended by manufacturer for the method of installation and suitable to identify and locate underground electrical and communications utility lines.
2. Printing on tape shall be permanent and shall not be damaged by burial operations.
3. Tape material and ink shall be chemically inert, and not subject to degrading when exposed to acids, alkalis, and other destructive substances commonly found in soils.
4. Detectable three-layer laminate, consisting of a printed pigmented polyolefin film, a solid aluminum-foil core, and a clear protective film that allows inspection of the continuity of the conductive core, bright-colored, continuous-printed on one side with the inscription of the utility, compounded for direct-burial service.
5. Overall Thickness: 5 mils (0.125 mm).
6. Foil Core Thickness: 0.35 mil (0.00889 mm).
7. Weight: 28 lb/1000 sq. ft. (13.7 kg/100 sq. m).
8. 3-Inch (75-mm) Tensile According to ASTM D 882: 70 lbf (311.3 N), and 4600 psi (31.7 MPa).

B. Color and Printing:
1. Comply with ANSI Z535.1 through ANSI Z535.5.
2. Inscriptions for Red-Colored Tapes: ELECTRIC LINE, HIGH VOLTAGE,.
3. Inscriptions for Orange-Colored Tapes: TELEPHONE CABLE, CATV CABLE, COMMUNICATIONS CABLE, OPTICAL FIBER CABLE.

2.5 WARNING LABELS AND SIGNS

A. Comply with NFPA 70 and 29 CFR 1910.145.

B. Self-Adhesive Warning Labels: Factory-printed, multicolor, pressure-sensitive adhesive labels, configured for display on front cover, door, or other access to equipment unless otherwise indicated.

C. Baked-Enamel Warning Signs:
1. Preprinted aluminum signs, punched or drilled for fasteners, with colors, legend, and size required for application.
2. 1/4-inch (6.4-mm) grommets in corners for mounting.
3. Nominal size, 7 by 10 inches (180 by 250 mm).

D. Warning label and sign shall include, but are not limited to, the following legends:
1. Multiple Power Source Warning: "DANGER - ELECTRICAL SHOCK HAZARD - EQUIPMENT HAS MULTIPLE POWER SOURCES."
2. Workspace Clearance Warning: "WARNING - OSHA REGULATION - AREA IN FRONT OF ELECTRICAL EQUIPMENT MUST BE KEPT CLEAR FOR 48 INCHES (1200 MM)."

2.6 INSTRUCTION SIGNS

A. Engraved, laminated acrylic or melamine plastic, minimum 1/16 inch (1.6 mm) thick for signs up to 20 sq. inches (129 sq. cm) and 1/8 inch (3.2 mm) thick for larger sizes.
   1. Engraved legend with black letters on white face.
   2. Punched or drilled for mechanical fasteners.
   3. Framed with mitered acrylic molding and arranged for attachment at applicable equipment.

B. Adhesive Film Label with Clear Protective Overlay: Machine printed, in black, by thermal transfer or equivalent process. Minimum letter height shall be 3/8 inch (10 mm). Overlay shall provide a weatherproof and UV-resistant seal for label.

2.7 EQUIPMENT IDENTIFICATION LABELS

A. Engraved, Laminated Acrylic or Melamine Label: Punched or drilled for screw mounting. Minimum letter height shall be 3/8 inch (10 mm). Color code equipment labels based on the power system the equipment is connected to:
   1. Normal Power System: Black labels with white lettering.
   2. Emergency Power System: Red labels with white lettering.
   3. Standby Power System: White labels with red lettering.

B. Stenciled Legend: In nonfading, waterproof, black ink or paint. Minimum letter height shall be 1 inch (25 mm).

2.8 CABLE TIES

A. Plenum-Rated Cable Ties: Self extinguishing, UV stabilized, one piece, self locking.
   1. Minimum Width: 3/16 inch (5 mm).
   2. Tensile Strength at 73 deg F (23 deg C), According to ASTM D 638: 7000 psi (48.2 MPa).
   3. UL 94 Flame Rating: 94V-0.
   4. Temperature Range: Minus 50 to plus 284 deg F (Minus 46 to plus 140 deg C).
   5. Color: Black.

2.9 MISCELLANEOUS IDENTIFICATION PRODUCTS

A. Paint: Comply with requirements in Division 09 painting Sections for paint materials and application requirements. Select paint system applicable for surface material and location (exterior or interior).

B. Fasteners for Labels and Signs: Self-tapping, stainless-steel screws or stainless-steel machine screws with nuts and flat and lock washers.

PART 3 - EXECUTION

3.1 INSTALLATION

A. Verify identity of each item before installing identification products.

B. Location: Install identification materials and devices at locations for most convenient viewing without interference with operation and maintenance of equipment.

C. Apply identification devices to surfaces that require finish after completing finish work.

D. Self-Adhesive Identification Products: Clean surfaces before application, using materials and methods recommended by manufacturer of identification device.

E. Attach signs and plastic labels that are not self-adhesive type with mechanical fasteners appropriate to the location and substrate.

F. System Identification Color-Coding Bands for Raceways and Cables: Each color-coding band shall completely encircle cable or conduit. Place adjacent bands of two-color markings in contact, side by side. Locate bands at changes in direction, at penetrations of walls and floors, at 50-foot (15-m) maximum intervals in straight runs, and at 25-foot (7.6-m) maximum intervals in congested areas.

G. Aluminum Wraparound Marker Labels and Metal Tags: Secure tight to surface of conductor or cable at a location with high visibility and accessibility.

H. Cable Ties: For attaching tags. Use general-purpose type, except as listed below:
   1. Outdoors: UV-stabilized nylon.
   2. In Spaces Handling Environmental Air: Plenum rated.

I. Underground-Line Warning Tape: During backfilling of trenches install continuous underground-line warning tape directly above line at 6 to 8 inches (150 to 200 mm) below finished grade. Use multiple tapes where width of multiple lines installed in a common trench or concrete envelope exceeds 16 inches (400 mm) overall.

J. Painted Identification: Comply with requirements in Division 09 painting Sections for surface preparation and paint application.

3.2 IDENTIFICATION SCHEDULE

A. Raceways, More Than 600 V, within Buildings: Paint entire raceway system red, including all junction boxes and pull boxes.. Stencil legend "DANGER CONCEALED HIGH VOLTAGE WIRING" with 3-inch- (75-mm-) high white letters on 10' centers.

B. Accessible Raceways and Cables within Buildings: Identify the covers of each junction and pull box of the following systems with self-adhesive vinyl labels with the wiring system legend and system voltage. System legends shall be as follows:
   1. Emergency Power.
   2. Power.
   3. UPS.

C. Fire Alarm Raceways:
   1. Paint all junction boxes red.

D. Power-Circuit Conductor Identification, 600 V or Less: For conductors in vaults, pull and junction boxes, manholes, and handholes, use color-coding conductor tape to identify the phase.
   1. Color-Coding for Phase and Voltage Level Identification, 600 V or Less: Use colors listed below for ungrounded service, feeder and branch-circuit conductors.
      a. Color shall be factory applied or field applied for sizes larger than No. 8 AWG, if authorities having jurisdiction permit.
      b. Colors for 208/120-V Circuits:
         1) Phase A: Black.
         2) Phase B: Red.
         3) Phase C: Blue.
      c. Colors for 480/277-V Circuits:
         1) Phase A: Brown.
         2) Phase B: Orange.
         3) Phase C: Yellow.
      d. Field-Applied, Color-Coding Conductor Tape: Apply in half-lapped turns for a minimum distance of 6 inches (150 mm) from terminal points and in boxes where splices or taps are made. Apply last two turns of tape with no tension to prevent possible unwinding. Locate bands to avoid obscuring factory cable markings.

E. Power-Circuit Conductor Identification, More than 600 V: For conductors in vaults, pull and junction boxes, manholes, and handholes, use write-on tags.

F. Install instructional sign including the color-code for grounded and ungrounded conductors using adhesive-film-type labels.

G. Conductors to Be Extended in the Future: Attach write-on tags to conductors and list source.

H. Auxiliary Electrical Systems Conductor Identification: Identify field-installed alarm, control, and signal connections.
   1. Identify conductors, cables, and terminals in enclosures and at junctions, terminals, and pull points. Identify by system and circuit designation.
   2. Use system of marker tape designations that is uniform and consistent with system used by manufacturer for factory-installed connections.
   3. Coordinate identification with Project Drawings, manufacturer's wiring diagrams, and the Operation and Maintenance Manual.

I. Locations of Underground Lines: Identify with underground-line warning tape for power, lighting, communication, and control wiring and optical fiber cable.
   1. Limit use of underground-line warning tape to direct-buried cables.
   2. Install underground-line warning tape for both direct-buried cables and cables in raceway.

J. Workspace Indication: Install floor marking tape to show working clearances in the direction of access to live parts. Workspace shall be as required by NFPA 70 and 29 CFR 1926.403 unless otherwise indicated. Do not install at flush-mounted panelboards and similar equipment in finished spaces.

K. Warning Labels for Indoor Cabinets, Boxes, and Enclosures for Power and Lighting: Self-adhesive warning labels.

1. Comply with 29 CFR 1910.145.
2. Identify system voltage with black letters on an orange background.
3. Apply to exterior of door, cover, or other access.
4. For equipment with multiple power or control sources, apply to door or cover of equipment including, but not limited to, the following:
   a. Power transfer switches.
   b. Controls with external control power connections.

L. Operating Instruction Signs: Install instruction signs to facilitate proper operation and maintenance of electrical systems and items to which they connect. Install instruction signs with approved legend where instructions are needed for system or equipment operation.

M. Emergency Operating Instruction Signs: Install instruction signs with white legend on a red background with minimum 3/8-inch- (10-mm-) high letters for emergency instructions at equipment used for power transfer.

N. Equipment Identification Labels: On each unit of equipment, install color-coded, unique designation label that is consistent with wiring diagrams, schedules, and the Operation and Maintenance Manual. Apply labels to disconnect switches and protection equipment, central or master units, control panels, control stations, terminal cabinets, and racks of each system. Systems include power, lighting, control, communication, signal, monitoring, and alarm systems unless equipment is provided with its own identification.
   1. Labeling Instructions:
      a. Indoor Equipment: Engraved, laminated acrylic or melamine label. Provide multi- line of text with 1/2-inch- (13-mm-) high letters on 3-inch- (70-mm-) high label.
      b. Outdoor Equipment: Engraved, laminated acrylic or melamine label stenciled legend 4 inches (100 mm) high.
      c. Elevated Components: Increase sizes of labels and letters to those appropriate for viewing from the floor.
      d. Unless provided with self-adhesive means of attachment, fasten labels with appropriate mechanical fasteners that do not change the NEMA or NRTL rating of the enclosure.
   2. Example of Labeling Scheme: Include equipment identification on nametag that is color coded based on the power system (as indicated above), along with the source equipment an room number that the equipment is fed from. Some examples include the following:

PANEL "1HD"
277/480V - NORMAL POWER
FED FROM DIST. PANEL "1HDPD"
IN ROOM 0143A

PANEL "0ELC"
120/208V - EMERGENCY POWER
FED FROM TRANSFORMER "OTEC"
IN ROOM 0133

MOTOR CONTROL CENTER "PQMCCA"
277/480V - STANDBY POWER
FED FROM DIST. PANEL "0QHDPC"
IN ROOM 0144

3. Equipment to Be Labeled:
   a. Panelboards: Typewritten directory of circuits in the location provided by panelboard manufacturer. Panelboard identification shall be engraved, laminated acrylic or melamine label.
      1) Use actual building room numbers for panel directory of circuits. Do not use plan room numbers.
   b. Enclosures and electrical cabinets.
   c. Access doors and panels for concealed electrical items.
   d. Switchgear.
   e. Switchboards.
   f. Transformers: Label that includes tag designation shown on Drawings for the transformer, feeder, and panelboards or equipment supplied by the secondary.
   g. Substations.
   h. Emergency system boxes and enclosures.
   i. Motor-control centers.
   j. Enclosed switches.
   k. Enclosed circuit breakers.
   l. Enclosed controllers.
   m. Variable-speed controllers.
   n. Push-button stations.
   o. Power transfer equipment.
   p. Contactors.
   q. Remote-controlled switches, dimmer modules, and control devices.
   r. Battery racks.
   s. Power-generating units.
   t. Monitoring and control equipment.
   u. UPS equipment.

END OF SECTION 260553

SECTION 262413 - SWITCHBOARDS

PART 1 - GENERAL

1.1 RELATED DOCUMENTS

A. Drawings and general provisions of the Contract, including General and Supplementary Conditions and Division 01 Specification Sections, apply to this Section.

1.2 SUMMARY

A. Section Includes:
1. Service and distribution switchboards rated 600 V and less.
2. Transient voltage suppression devices, factory installed.
3. Disconnecting and overcurrent protective devices.
4. Instrumentation.
5. Control power.
6. Accessory components and features.
7. Identification.

B. Related Sections include the following:
1. Division 26 Section "Transient Voltage Suppression for Low-Voltage Electrical Power Circuits " for TVSS units that are factory-installed in switchboards.
2. Division 26 Section "Electrical Power Monitoring and Control" for metering equipment installed internal or external to switchboards.
3. Division 26 Section "Identification for Electrical Systems" for labeling requirements of electrical distribution equipment.
4. Division 16 Section "Commissioning for Electrical"

1.3 PERFORMANCE REQUIREMENTS

A. Seismic Performance: Switchboards shall withstand the effects of earthquake motions determined according to SEI/ASCE 7.
1. The term "withstand" means "the unit will remain in place without separation of any parts from the device when subjected to the seismic forces specified and the unit will be fully operational after the seismic event."

1.4 SUBMITTALS

A. Product Data: For each type of switchboard, overcurrent protective device, transient voltage suppression device, ground-fault protector, accessory, and component indicated. Include dimensions and manufacturers' technical data on features, performance, electrical characteristics, ratings, accessories, and finishes.

B. Shop Drawings: For each switchboard and related equipment.
1. Include dimensioned plans, elevations, sections, and details, including required clearances and service space around equipment. Show tabulations of installed devices, equipment features, and ratings.
2. Detail enclosure types for types other than NEMA 250, Type 1.

3. Detail bus configuration, current, and voltage ratings.
4. Detail short-circuit current rating of switchboards and overcurrent protective devices.
5. Include descriptive documentation of optional barriers specified for electrical insulation and isolation.
6. Detail utility company's metering provisions with indication of approval by utility company.
7. Include evidence of NRTL listing for series rating of installed devices.
8. Detail features, characteristics, ratings, and factory settings of individual overcurrent protective devices and auxiliary components.
9. Include time-current coordination curves for each type and rating of overcurrent protective device included in switchboards. Submit on translucent log-log graft paper; include selectable ranges for each type of overcurrent protective device.
10. Include schematic and wiring diagrams for power, signal, and control wiring.

C. Seismic Qualification Certificates: Submit certification that switchboards, overcurrent protective devices, accessories, and components will withstand seismic forces defined in Division 26 Section "Vibration and Seismic Controls for Electrical Systems." Include the following:
1. Basis for Certification: Indicate whether withstand certification is based on actual test of assembled components or on calculation.
2. Dimensioned Outline Drawings of Equipment Unit: Identify center of gravity and locate and describe mounting and anchorage provisions.
3. Detailed description of equipment anchorage devices on which the certification is based and their installation requirements.

D. Field Quality-Control Reports:
1. Test procedures used.
2. Test results that comply with requirements.
3. Results of failed tests and corrective action taken to achieve test results that comply with requirements.

E. Operation and Maintenance Data: For switchboards and components to include in emergency, operation, and maintenance manuals. In addition to items specified in Division 01 Section "Operation and Maintenance Data," include the following:
1. Routine maintenance requirements for switchboards and all installed components.
2. Manufacturer's written instructions for testing and adjusting overcurrent protective devices.
3. Time-current coordination curves for each type and rating of overcurrent protective device included in switchboards. Submit on translucent log-log graft paper; include selectable ranges for each type of overcurrent protective device.

1.5 QUALITY ASSURANCE

A. Installer Qualifications: An employer of workers qualified as defined in NEMA PB 2.1 and trained in electrical safety as required by NFPA 70E.

B. Source Limitations: Obtain switchboards, overcurrent protective devices, components, and accessories from single source from single manufacturer.

C. Product Selection for Restricted Space: Drawings indicate maximum dimensions for switchboards including clearances between switchboards and adjacent surfaces and other items. Comply with indicated maximum dimensions.

D. Electrical Components, Devices, and Accessories: Listed and labeled as defined in NFPA 70, by a qualified testing agency, and marked for intended location and application.

E. Comply with NEMA PB 2.

F. Comply with NFPA 70.

G. Comply with UL 891.

1.6 DELIVERY, STORAGE, AND HANDLING

A. Deliver switchboards in sections or lengths that can be moved past obstructions in delivery path.

B. Remove loose packing and flammable materials from inside switchboards and to prevent condensation.

C. Handle and prepare switchboards for installation according to NEMA PB 2.1.

1.7 PROJECT CONDITIONS

A. Installation Pathway: Remove and replace access fencing, doors, lift-out panels, and structures to provide pathway for moving switchboards into place.

B. Environmental Limitations:
1. Do not deliver or install switchboards until spaces are enclosed and weathertight, wet work in spaces is complete and dry, work above switchboards is complete, and temporary HVAC system is operating and maintaining ambient temperature and humidity conditions at occupancy levels during the remainder of the construction period.
2. Rate equipment for continuous operation under the following conditions unless otherwise indicated:
   a. Ambient Temperature: Not exceeding 104 deg F (40 deg C).
   b. Altitude: Not exceeding 6600 feet (2000 m).

C. Service Conditions: NEMA PB 2, usual service conditions, as follows:
1. Ambient temperatures within limits specified.
2. Altitude not exceeding 6600 feet (2000 m).

D. Interruption of Existing Electric Service: Do not interrupt electric service to facilities occupied by Owner or others unless permitted under the following conditions and then only after arranging to provide temporary electric service according to requirements indicated:
1. Notify Architect and Owner no fewer than seven days in advance of proposed interruption of electric service.
2. Indicate method of providing temporary electric service.
3. Do not proceed with interruption of electric service without Architect's and Owner's written permission.
4. Comply with NFPA 70E.

1.8 COORDINATION

A. Coordinate layout and installation of switchboards and components with other construction that penetrates walls or is supported by them, including electrical and other types of equipment, raceways, piping, encumbrances to workspace clearance requirements, and adjacent surfaces.

B. Maintain required workspace clearances and required clearances for equipment access doors and panels.

C. Coordinate with work of other trades so that piping, ductwork or any equipment foreign to the electrical installation is not located directly above switchboards.

D. Coordinate sizes and locations of concrete bases with actual equipment provided. Cast anchor-bolt inserts into bases. Concrete, reinforcement, and formwork requirements are specified in Division 03.

1.9 EXTRA MATERIALS

A. Furnish extra materials that match products installed and that are packaged with protective covering for storage and identified with labels describing contents.
   1. Potential Transformer Fuses: Equal to 10 percent of quantity installed for each size and type, but no fewer than two of each size and type.
   2. Control-Power Fuses: Equal to 10 percent of quantity installed for each size and type, but no fewer than two of each size and type.
   3. Fuses for Fused Switches: Equal to 10 percent of quantity installed for each size and type, but no fewer than three of each size and type.
   4. Indicating Lights: Equal to 10 percent of quantity installed for each size and type, but no fewer than one of each size and type.

PART 2 - PRODUCTS

2.1 MANUFACTURED UNITS

A. Manufacturers of Switchboards: Subject to compliance with requirements, provide products by one of the following:
   1. Eaton Electrical Inc.; Cutler-Hammer Business Unit.
   2. General Electric Company; GE Consumer & Industrial - Electrical Distribution.
   3. Siemens Energy & Automation, Inc.
   4. Square D; a brand of Schneider Electric.

B. Manufacturers of Multi-Function Digital Meters: Subject to compliance with requirements, provide products by one of the following:
   1. Square D; a brand of Schneider Electric.

C. Front-Connected, Front-Accessible Switchboards:
   1. Main Devices: Fixed, individually mounted.
   2. Branch Devices: Panel mounted.
   3. Sections front and rear aligned.

D. Seismic Requirements: Fabricate and test switchboards according to IEEE 344 to withstand seismic forces defined in Division 26 Section "Vibration and Seismic Controls for Electrical Systems."

E. Indoor Enclosures: Steel, NEMA 250, Type 1.

F. Enclosure Finish for Indoor Units: Factory-applied finish in manufacturer's standard gray finish over a rust-inhibiting primer on treated metal surface.

G. Outdoor Enclosures: Type 3R.
   1. Finish: Factory-applied finish in manufacturer's standard color; undersurfaces treated with corrosion-resistant undercoating.
   2. Enclosure: Downward, rearward sloping roof; bolt-on rear covers for each section, with provisions for padlocking.

H. Barriers: Between adjacent switchboard sections where normal power is required to be separate from emergency/life-safety power.

I. Customer Metering Compartment: A separate customer metering compartment and section with front hinged door, for indicated metering, and current transformers for each meter. Current transformer secondary wiring shall be terminated on shorting-type terminal blocks. Include potential transformers having primary and secondary fuses with disconnecting means and secondary wiring terminated on terminal blocks.

J. Bus Transition and Incoming Pull Sections: Matched and aligned with basic switchboard.

K. Hinged Front Panels: Allow access to circuit breaker, metering, accessory, and blank compartments.

L. Pull Box on Top of Switchboard:
   1. Adequate ventilation to maintain temperature in pull box within same limits as switchboard.
   2. Set back from front to clear circuit-breaker removal mechanism.
   3. Removable covers shall form top, front, and sides. Top covers at rear shall be easily removable for drilling and cutting.
   4. Bottom shall be insulating, fire-resistive material with separate holes for cable drops into switchboard.
   5. Cable supports shall be arranged to facilitate cabling and adequate to support cables indicated, including those for future installation.

M. Buses and Connections: Three phase, four wire unless otherwise indicated.
   1. Phase- and Neutral-Bus Material: Hard-drawn copper of 98 percent conductivity, with tin-plated copper feeder circuit-breaker line connections.
   2. Load Terminals: Insulated, rigidly braced, runback bus extensions, of same material as through buses, equipped with mechanical connectors for outgoing circuit conductors. Provide load terminals for future circuit-breaker positions at full-ampere rating of circuit-breaker position.
   3. Ground Bus: Minimum-size required by UL 891, hard-drawn copper of 98 percent conductivity, equipped with mechanical connectors for feeder and branch-circuit ground

conductors. For busway feeders, extend insulated equipment grounding cable to busway ground connection and support cable at intervals in vertical run.

4. Main Phase Buses and Equipment Ground Buses: Uniform capacity for entire length of switchboard's main and distribution sections. Provide for future extensions from both ends.
5. Neutral Buses: 100 percent of the ampacity of phase buses unless otherwise indicated, equipped with mechanical connectors for outgoing circuit neutral cables. Brace bus extensions for busway feeder neutral bus.
6. Isolation Barrier Access Provisions: Permit checking of bus-bolt tightness.

N. Future Devices: Equip compartments with mounting brackets, supports, bus connections, and appurtenances at full rating of circuit-breaker compartment.

2.2 TRANSIENT VOLTAGE SUPPRESSION DEVICES (TVSS)

A. TVSS Units: Comply with Division 26 Section "Transient Voltage Suppression for Low-Voltage Electrical Power Circuits."

B. Factory-installed, integral to switchboard within a segregated metal compartment that completely isolates the TVSS from the switchboard interior.

2.3 DISCONNECTING AND OVERCURRENT PROTECTIVE DEVICES

A. Molded-Case Circuit Breaker (MCCB): Comply with UL 489, with interrupting capacity to meet available fault currents.

1. Thermal-Magnetic Circuit Breakers: Inverse time-current element for low-level overloads, and instantaneous magnetic trip element for short circuits. Adjustable magnetic trip setting for circuit-breaker frame sizes 250 A and larger.
2. Adjustable Instantaneous-Trip Circuit Breakers: Magnetic trip element with front-mounted, field-adjustable trip setting.
3. Electronic trip circuit breakers with rms sensing; field-replaceable rating plug or field-replicable electronic trip; and the following field-adjustable settings:
   a. Instantaneous trip.
   b. Long- and short-time pickup levels.
   c. Long- and short-time time adjustments.
   d. Ground-fault pickup level, time delay, and I^2t response.
4. Molded-Case Circuit-Breaker (MCCB) Features and Accessories:
   a. Standard frame sizes, trip ratings, and number of poles.
   b. Lugs: Mechanical style, suitable for number, size, trip ratings, and conductor material.
   c. Application Listing: Appropriate for application; Type SWD for switching fluorescent lighting loads; Type HID for feeding fluorescent and high-intensity discharge (HID) lighting circuits.
   d. Ground-Fault Protection: Integrally mounted relay and trip unit with adjustable pickup and time-delay settings, push-to-test feature, and ground-fault indicator.
   e. Shunt Trip: 120-V trip coil energized from separate circuit, set to trip at 75 percent of rated voltage.
   f. Auxiliary Contacts: One SPDT switch with "a" and "b" contacts; "a" contacts mimic circuit-breaker contacts, "b" contacts operate in reverse of circuit-breaker contacts.

B. Fused Switch: NEMA KS 1, Type HD; clips to accommodate specified fuses; lockable handle.

C. Fuses are specified in Division 26 Section "Fuses."

2.4 INSTRUMENTATION

A. Instrument Transformers: IEEE C57.13, NEMA EI 21.1, and the following:
   1. Potential Transformers: IEEE C57.13; 120 V, 60 Hz, tapped secondary; disconnecting type with integral fuse mountings. Burden and accuracy shall be consistent with connected metering and relay devices.
   2. Current Transformers: IEEE C57.13; 5 A, 60 Hz, secondary; bar or window type; double secondary winding and secondary shorting device. Burden and accuracy shall be consistent with connected metering and relay devices.
   3. Control-Power Transformers: Dry type, mounted in separate compartments for units larger than 3 kVA.
   4. Current Transformers for Neutral and Ground-Fault Current Sensing: Connect secondary wiring to ground overcurrent relays, via shorting terminals, to provide selective tripping of main and tie circuit breaker. Coordinate with feeder circuit-breaker, ground-fault protection.

B. Multifunction Digital-Metering Monitor: Microprocessor-based unit suitable for three- or four-wire systems and with the following features:
   1. Manufacturer:
      a. Main Service Entrance Meters: Square D PowerLogic CM4000 series meter.
      b. Ditribution Panel Meters: Square D PowerLogic PM820 series meter
   2. Switch-selectable digital display of the following values with maximum accuracy tolerances as indicated:
      a. Phase Currents, Each Phase: Plus or minus 1 percent.
      b. Phase-to-Phase Voltages, Three Phase: Plus or minus 1 percent.
      c. Phase-to-Neutral Voltages, Three Phase: Plus or minus 1 percent.
      d. Megawatts: Plus or minus 2 percent.
      e. Megavars: Plus or minus 2 percent.
      f. Power Factor: Plus or minus 2 percent.
      g. Frequency: Plus or minus 0.5 percent.
      h. Total Harmonic Distortion: current and voltage.
      i. Accumulated Energy, Megawatt Hours: Plus or minus 2 percent; accumulated values unaffected by power outages up to 72 hours.
      j. Megawatt Demand: Plus or minus 2 percent; demand interval programmable from five to 60 minutes.
      k. Contact devices to operate remote impulse-totalizing demand meter.
      l. Ethernet card for connection to existing Square D central utility power management system.
      m. BACnet interface for connection to the BMS.
      n. RS-485 communication port.
      o. Onboard HTML web server.
   3. Mounting: Display and control unit flush or semiflush mounted in instrument compartment door.
   4. Refer to Division 26 Section "Electrical Power Monitoring and Control" for additional requirements.

C. Feeder Ammeters (where indicated): 2-1/2-inch (64-mm) minimum size with 90- or 120-degree scale. Meter and transfer device with off position, located on overcurrent device door for indicated feeder circuits only.

2.5 CONTROL POWER

A. Control Circuits: 120-V ac, supplied through secondary disconnecting devices from control-power transformer.

B. Control-Power Fuses: Primary and secondary fuses for current-limiting and overload protection of transformer and fuses for protection of control circuits.

C. Control Wiring: Factory installed, with bundling, lacing, and protection included. Provide flexible conductors for No. 8 AWG and smaller, for conductors across hinges, and for conductors for interconnections between shipping units.

2.6 ACCESSORY COMPONENTS AND FEATURES

A. Accessory Set: Include tools and miscellaneous items required for overcurrent protective device test, inspection, maintenance, and operation.

B. Portable Test Set: For testing functions of solid-state trip devices without removing from switchboard. Include relay and meter test plugs suitable for testing switchboard meters and switchboard class relays.

C. Spare-Fuse Cabinet: Suitably identified, wall-mounted, lockable, compartmented steel box or cabinet. Arrange for wall mounting.

2.7 IDENTIFICATION

A. Service Equipment Label: NRTL labeled for use as service equipment for switchboards with one or more service disconnecting and overcurrent protective devices.

PART 3 - EXECUTION

3.1 EXAMINATION

A. Receive, inspect, handle, and store switchboards according to NEMA PB 2.1.

B. Examine switchboards before installation. Reject switchboards that are moisture damaged or physically damaged.

C. Examine elements and surfaces to receive switchboards for compliance with installation tolerances and other conditions affecting performance of the Work.

D. Proceed with installation only after unsatisfactory conditions have been corrected.

3.2 INSTALLATION

A. Install switchboards and accessories according to NEMA PB 2.1.

B. Equipment Mounting: Install switchboards on concrete base, 4-inch (100-mm) nominal thickness. Comply with requirements for concrete base specified in Division 03 Section "Cast-in-Place Concrete."
   1. Install dowel rods to connect concrete base to concrete floor. Unless otherwise indicated, install dowel rods on 18-inch (450-mm) centers around the full perimeter of concrete base.
   2. For supported equipment, install epoxy-coated anchor bolts that extend through concrete base and anchor into structural concrete floor.
   3. Place and secure anchorage devices. Use setting drawings, templates, diagrams, instructions, and directions furnished with items to be embedded.
   4. Install anchor bolts to elevations required for proper attachment to switchboards.

C. Temporary Lifting Provisions: Remove temporary lifting eyes, channels, and brackets and temporary blocking of moving parts from switchboard units and components.

D. Comply with mounting and anchoring requirements specified in Division 26 Section "Vibration and Seismic Controls for Electrical Systems."

E. Operating Instructions: Frame and mount the printed basic operating instructions for switchboards, including control and key interlocking sequences and emergency procedures. Fabricate frame of finished wood or metal and cover instructions with clear acrylic plastic. Mount on front of switchboards.

F. Install filler plates in unused spaces of panel-mounted sections.

G. Install overcurrent protective devices, transient voltage suppression devices, and instrumentation.
   1. Set field-adjustable switches and circuit-breaker trip ranges.

H. Install spare-fuse cabinet.

I. Comply with NECA 1.

3.3 IDENTIFICATION

A. Identify field-installed conductors, interconnecting wiring, and components; provide warning signs complying with requirements for identification specified in Division 26 Section "Identification for Electrical Systems."

B. Switchboard Nameplates: Label each switchboard compartment with a nameplate complying with requirements for identification specified in Division 26 Section "Identification for Electrical Systems."

C. Device Nameplates: Label each disconnecting and overcurrent protective device and each meter and control device mounted in compartment doors with a nameplate complying with requirements for identification specified in Division 26 Section "Identification for Electrical Systems."

3.4 FIELD QUALITY CONTROL

A. Manufacturer's Field Service: Engage a factory-authorized service representative to inspect, test, and adjust components, assemblies, and equipment installations, including connections.

B. Perform tests and inspections.
   1. Manufacturer's Field Service: Engage a factory-authorized service representative to inspect components, assemblies, and equipment installations, including connections, and to assist in testing.

C. Acceptance Testing Preparation:
   1. Test insulation resistance for each switchboard bus, component, connecting supply, feeder, and control circuit.
   2. Test continuity of each circuit.

D. Tests and Inspections:
   1. Perform each visual and mechanical inspection and electrical test stated in NETA Acceptance Testing Specification. Certify compliance with test parameters.
   2. Correct malfunctioning units on-site, where possible, and retest to demonstrate compliance; otherwise, replace with new units and retest.
   3. Test and adjust controls, remote monitoring, and safeties. Replace damaged and malfunctioning controls and equipment.

E. Switchboard will be considered defective if it does not pass tests and inspections.

F. Prepare test and inspection reports, including a certified report that identifies switchboards included and that describes scanning results. Include notation of deficiencies detected, remedial action taken, and observations after remedial action.

3.5 COMMISSIONING

A. Participate in commissioning services as specified in Section 260800, "Commissioning for Electrical."

3.6 ADJUSTING

A. Adjust moving parts and operable components to function smoothly, and lubricate as recommended by manufacturer.

B. Set field-adjustable circuit-breaker trip ranges as indicated.

3.7 PROTECTION

A. Temporary Heating: Apply temporary heat, to maintain temperature according to manufacturer's written instructions, until switchboard is ready to be energized and placed into service.

3.8 DEMONSTRATION

A. Engage a factory-authorized service representative to train Owner's maintenance personnel to adjust, operate, and maintain switchboards, overcurrent protective devices, instrumentation, and accessories, and to use and reprogram microprocessor-based trip, monitoring, and communication units.

END OF SECTION 262413

SECURITY SYSTEM EQUIPMENT SCHEDULE

SYMBOL	DESCRIPTION	MOUNTING *	ROUGH-IN	QTY	ACCEPTABLE TYPES
CR	CARD READER	40"	4SQ W/ 1G RING	OFP	SEE SECTION 281300
#	CARD ACCESS DOOR TYPE, TYPICAL. REFER TO CARD ACCESS DOOR TYPE SCHEDULE.	SEE SCHEDULE	SEE SCHEDULE	OFP	REFER TO CARD ACCESS DOOR TYPE SCHEDULE & SECTION 281300
CI	DOOR MONITOR - CONTACT INDICATOR	SEE SCHEDULE	SEE SCHEDULE	OFP	SEE SECTION 281600
J CAM 1	VSS CAMERA LOCATION	WALL	4SQ W/ 1G RING	OFP	PROVIDE JUNCTION BOX WITH 1 EA 1" CONDUIT (EMT) TO NEAREST COMM/DATA ROOM OR AS NOTED. SEE CONDUIT RISER ON SHEET ET 601.
J CAM 2	VSS CAMERA LOCATION	CEILING	4SQ BOX ABOVE CEILING LOCATION	OFP	PROVIDE JUNCTION BOX WITH 1 EA 1" CONDUIT (EMT) TO NEAREST COMM/DATA ROOM OR AS NOTED. SEE CONDUIT RISER ON SHEET ET 601.
ACS	ACCESS CONTROLLERS & PWR SUPPLIES	72"	4"x4" GUTTER & STUBS A/R	A/R	SEE SECTION 281300
	MISC. CABLES.	AS NOTED	AS NOTED	OFP	AS NOTED AND PER MANUFACTURER'S WRITTEN INSTRUCTIONS

* COORDINATE MOUNTING HEIGHTS WITH ARCHITECTURAL ELEVATIONS BEFORE INSTALLATION.

ABBREVIATIONS

DBL = DOUBLE
DIR = DIRECTION
HDWR = HARDWARE
C = CONDUIT
4SQ = FOUR SQUARE
W/ = WITH
1G = 1 GANG
PWR = POWER
ACC = ACCESSIBLE
OCC = OCCUPANCY
TYP = TYPICAL
L/PS = LOCK POWER SUPPLY
CR = CARD READER
CI = DOOR CONTACT INDICATOR
EPT = ELECTRIC POWER TRANSFER
ES = ELECTRIC STRIKE
PH = PANIC HARDWARE
EML = ELECTROMAGNETIC LOCK
KS = KEY SWITCH
ACS = ACCESS CONTROL SYSTEM
EL = ELECTRIC LOCKSET
MD = MOTION DETECTOR
TLC = TIME/SYSTEM LOCK CONTROL
ELC = EMERGENCY LOCK CONTROL
IDS = INTRUSION DETECTION SYSTEM

NOTES

1. PROVIDE RACEWAY AND EQUIPMENT AS INDICATED FOR CARD ACCESS DOOR TYPE INDICATED. REFER TO SECTION 281300 AND CARD ACCESS AUTO-DOOR AND LOCK CONTROL DETAILS FOR ADDITIONAL REQUIREMENTS.
2. PROVIDE CONCEALED .75" C TYPICAL FOR LINES SHOWN TO DEVICE BOXES ON PROTECTED SIDE AND UNPROTECTED SIDE ELEVATIONS.
3. CONFIRM CORRECT CARD ACCESS DOOR RACEWAY, LOCK VOLTAGE, AND EXIT SWITCH CURRENT RATING (2 AMPS MIN.) WITH DIV. 8 FURNISHED CARD ACCESS DOOR HARDWARE PER DIV. 8 DOOR HARDWARE SUBMITTALS.
4. POWER SUPPLIES FOR ELECTRIC LATCH RETRACTION EXIT HARDWARE FOR FIRE ALARM CONTROL BY DIV. 8.
5. LOCATE CARD READER BOX AS INDICATED ON FLOOR PLANS. RACEWAY AND BOXES BY DIV. 26. REFER TO 281300 FOR CARD ACCESS SYSTEM REQUIREMENTS.
6. DOUBLE 4SQ J-BOX ON PROTECTED SIDE OF DOORWAY (SIDE OPPOSITE OF CARD READER) ABOVE ACCESSIBLE CEILING OR IN OTHER ACCESSIBLE LOCATION. PROVIDE COVER FOR J-BOX.
7. ELECTRIC LOCKING HARDWARE (MAG LOCKS, ELECTRIC STRIKES, POWER TRANSFER HINGES, ETC.) BY DIV 8. REVIEW DOOR HARDWARE FURNISHED AND VERIFY LOCK VOLTAGES AND OPERATIONAL FUNCTIONALITY OF LOCKS. CONTACT ENGINEER WITH QUESTIONS OR CONCERNS.

CARD ACCESS DOOR TYPE SCHEDULE

1

DOOR TYPE #	SYMBOL	DESCRIPTION	PROTECTED SIDE ELEVATION	UNPROTECTED SIDE ELEVATION	LOCK TYPE(S)	INCLUDES:
TYPE 1:	TO ACS; #1; HDWR GROUPS: 31, 32, 33, 34, 35	SINGLE DOOR, 1 CARD READER MOUNTED ON DOOR (FREE EGRESS).	4SQ J-BOX ABOVE ACC CEILING; .75" C (TYP); POWER TRANSFER 4SQ BOX W/1G RING AND COVER; CONTACT INDICATOR 1G BOX IN FRAME	ELECTRONIC LOCK W/ CARD READER	ELECTRONIC LOCK W/ CARD READER	SECURITY CONTRACTOR PROVIDES: • L/PS HARDWARE CONTRACTOR PROVIDES: • EL, CR, EPT, CI LOCK CONTROLLED BY: • CR SPECIAL NOTES: • L/PS-6A @ 24V
TYPE 2:	TO ACS; CR; #2; HDWR GROUP: AL-02	SINGLE DOOR, 1 CARD READER, WITH AUTO ASSIST (ADA).	AUTO DOOR; 4SQ J-BOX ABOVE ACC CEILING; .75" C (TYP); SWITCHED EXIT HARDWARE; TRANSFER HINGE 1G BOX IN FRAME; CONTACT INDICATOR 1G BOX IN FRAME	4SQ J-BOX ABOVE ACC CEILING; .75" C (TYP); CARD READER 4SQ BOX W/1G RING; 40"	ELECTRIC PANIC HARDWARE	SECURITY CONTRACTOR PROVIDES: • HARDWARE CONTRACTOR PROVIDES: • PH, CR, EPT, CI, L/PS, ADA LOCK CONTROLLED BY: • CR
TYPE 3:	CR; TO ACS; #3; HDWR GROUPS: 14, AL-03, AL-05	DOUBLE DOOR, 1 CARD READER, AUTO ASSISTED SEE ARCHITECTURAL DRAWINGS FOR EXACT CARD READER AND ACTUATOR MOUNTING LOCATIONS.	AUTO; 4SQ J-BOX ABOVE ACC CEILING; .75" C (TYP); CONTACT INDICATORS 1G BOXES IN FRAME; ELECTRIFIED EXIT HARDWARE; POWER TRANSFER 1G BOXES IN FRAME	4SQ J-BOX ABOVE ACC CEILING; .75" C (TYP); CARD READER 4SQ BOX W/1G RING; 40"	ELECTRIFIED EXIT HARDWARE	SECURITY CONTRACTOR PROVIDES: • HARDWARE CONTRACTOR PROVIDES: • PH(2), EPT(2), L/PS, CI(2), CR LOCK CONTROLLED BY: • TLC , CR SPECIAL NOTES: • INTERFACE WITH AUTO ASSISTED DOOR OPENER (ADA)
TYPE 4:	TO ACS; #4; CR; HDWR GROUP: 13	DOUBLE DOOR, 1 CARD READER	4SQ J-BOX ABOVE ACC CEILING; .75" C (TYP); CONTACT INDICATORS 1G BOXES IN FRAME; POWER TRANSFER HINGES 1G BOXES IN FRAME; (EGRESS SIDE); ELECTRIFIED PANIC HARDWARE	4SQ J-BOX ABOVE ACC CEILING; .75" C (TYP); CARD READER 4SQ BOX W/1G RING; 40"	ELECTRIFIED PANIC HARDWARE	SECURITY CONTRACTOR PROVIDES: • L/PS HARDWARE CONTRACTOR PROVIDES: • PH(2), EPT(2), CI(2), CR LOCK CONTROLLED BY: • CR
TYPE 5:	TO ACS; #5; HDWR GROUPS: AL-01, AL-04	DOUBLE DOOR, NO CARD READER	4SQ J-BOX ABOVE ACC CEILING; .75" C (TYP); CONTACT INDICATORS 1G BOXES IN FRAME; TRANSFER HINGES 1G BOXES IN FRAME; (EGRESS SIDE); ELECTRIFIED PANIC HARDWARE		ELECTRIFIED PANIC HARDWARE	SECURITY CONTRACTOR PROVIDES: • HARDWARE CONTRACTOR PROVIDES: • PH(2), EPT(2), CI(2), L/PS LOCK CONTROLLED BY: • TLC
TYPE 6:	TO ACS; CR; #6; HDWR GROUPS: 20, 21	SINGLE DOOR, 1 CARD READER	4SQ J-BOX ABOVE ACC CEILING; .75" C (TYP); SWITCHED EXIT HARDWARE; TRANSFER HINGE 1G BOX IN FRAME; CONTACT INDICATOR 1G BOX IN FRAME	4SQ J-BOX ABOVE ACC CEILING; .75" C (TYP); CARD READER 4SQ BOX W/1G RING; 40"	ELECTRIC PANIC HARDWARE	SECURITY CONTRACTOR PROVIDES: • HARDWARE CONTRACTOR PROVIDES: • PH, CR, EPT, CI, L/PS LOCK CONTROLLED BY: • CR
TYPE 7:	CR; TO ACS; #7; HDWR GROUP: AL-20	SINGLE DOOR, 1 CARD READER, (FREE EGRESS)		4SQ J-BOX ABOVE ACC CEILING; .75" C (TYP); CARD READER 4SQ BOX W/1G RING; ELECTRIC STRIKE 1G BOX IN FRAME; 40"	ELECTRIC STRIKE	SECURITY CONTRACTOR PROVIDES: • L/PS HARDWARE CONTRACTOR PROVIDES: • ES, CR LOCK CONTROLLED BY: • CR
TYPE 8:	TO ACS; CR; #8; HDWR GROUP: 39	SINGLE DOOR, 1 CARD READER, (FREE EGRESS WITH MOTION AND PUSH BUTTON)	4SQ J-BOX ABOVE ACC CEILING; .75" C (TYP); REX MOTION 1G BOX; 40"; EXIT PUSH BUTTON 4SQ BOX WITH 1G RING	4SQ J-BOX ABOVE ACC CEILING; .75" C (TYP); CARD READER 4SQ BOX W/1G RING; 40"	MAG LOCK	SECURITY CONTRACTOR PROVIDES: • L/PS HARDWARE CONTRACTOR PROVIDES: • ML, CR, PB, MD LOCK CONTROLLED BY: • CR
TYPE 9:	TO ACS; #9; CR; HDWR GROUPS: 36, 37, 38, 40, 41	DOUBLE DOOR, 1 CARD READER, (1 LEAF FIXED, FREE EGRESS)	DBL 4SQ J-BOX ABOVE ACC CEILING; .75" C (TYP); TRANSFER HINGE 1G BOX IN FRAME	ELECTRONIC LOCK W/ CARD READER	ELECTRIC LOCK WITH CARD READER	SECURITY CONTRACTOR PROVIDES: • L/PS HARDWARE CONTRACTOR PROVIDES: • EL, CR, EPT LOCK CONTROLLED BY: • CR
TYPE 10:	TO ACS; #10; CR; HDWR GROUP: AL-13	DOUBLE DOOR, 1 CARD READER, (ELECTRIFIED MULLION, FREE EGRESS)	ELECTRIC STRIKE IN MULLION	4SQ J-BOX ABOVE ACC CEILING; .75" C (TYP); CARD READER 4SQ BOX W/1G RING; 40"; ARRANGE CONCEALED CABLE ACCESS INTO MULLION	ELECTRIC STRIKE IN MULLION	SECURITY CONTRACTOR PROVIDES: • L/PS HARDWARE CONTRACTOR PROVIDES: • ES, CR LOCK CONTROLLED BY: • CR
TYPE 11:	TO ACS; #11; CR; HDWR GROUP: 11	DOUBLE DOOR, NO CARD READER (FREE EGRESS)	EXIT MOTION 1G BOX; 4SQ J-BOX ABOVE ACC CEILING; CONTACT INDICATORS 1G BOXES IN FRAME; PANIC EXIT HARDWARE; (EGRESS SIDE)	4SQ J-BOX ABOVE ACC CEILING; .75" C (TYP); CARD READER 4SQ BOX W/1G RING; 40"	PANIC HARDWARE	SECURITY CONTRACTOR PROVIDES: • L/PS HARDWARE CONTRACTOR PROVIDES: • PH, CR, MD, CI LOCK CONTROLLED BY: • CR

GSBS ARCHITECTS
375 WEST 200 SOUTH
SALT LAKE CITY, UT 84101
P 801.521.8600
F 801.521.7913
www.gsbsarchitects.com

CANNONDESIGN
CANNON DESIGN
829 NORTH 1st AVENUE
PHOENIX, AZ 85003
602.294.6500

REVISIONS:

1	May 4, 2012	Addendum #2

SPECTRUM ENGINEERS
324 S. State St., Suite 400
Salt Lake City, UT 84111
800-678-7077
801-328-5151
fax: 801-328-5155
www.spectrum-engineers.com

LICENSED PROFESSIONAL ENGINEER
No. 181563
DAVID E. WESEMANN
04/27/2012
STATE OF UTAH

UTAH VALLEY UNIVERSITY STUDENT LIFE CENTER & PARKING STRUCTURE

DFCM

THE GREAT SEAL OF THE STATE OF UTAH 1896

4110 STATE OFFICE BUILDING
SALT LAKE CITY, UT 84112

DRAWN BY: Author
CHECKED BY: Checker
OWNER PROJECT NO.: #10289790
GSBS PROJECT NO.: 2011.045.00
ISSUED DATE: 04.27.2012

SECURITY SYSTEMS SCHEDULES

CONSTRUCTION DOCUMENTS

EY-601

C:\Users\dxh\Documents\20110364Elec UVU Student Life Center_Spartan DxH.rvt
5/3/2012 3:58:23 PM