State of Utah

GARY R. HERBERT
Governor

GREGORY S. BELL
Lt. Governor

Department of Administrative Services
KIMBERLY K. HOOD
Executive Director

Division of Facilities Construction and Management
DAVID G. BUXTON
Director

Addendum No. 2

Date: April 3, 2013

To: Contractors

From: Matthias Mueller – Program Director

Reference: Regional Training Institute – TASS Phase 2
Utah National Guard – Camp Williams, Utah
DFCM Project No. 11020480

Subject: **Addendum No. 2**

Pages	Addendum Cover Sheet	1	page
	Architect's Add-02	113	pages
	Total	114	pages

Note: This Addendum shall be included as part of the Contract Documents. Items in this Addendum apply to all drawings and specification sections whether referenced or not involving the portion of the work added, deleted, modified, or otherwise addressed in the Addendum. Acknowledge receipt of this Addendum in the space provided on the Bid Form. Failure to do so may subject the Bidder to Disqualification.

2.1 SCHEDULE CHANGES: There are no Project Schedule changes.

2.2 GENERAL ITEMS: See attached Architect's Addendum Add-02 dated April 1, 2013.

ARCHITECTURAL nexus

ADD-02

ADDENDUM

Architectural Nexus, Inc.
www.archnexus.com

SALT LAKE CITY
2505 East Parleys Way
Salt Lake City, Utah 84109
T 801.924.5000
F 801.924.5001

PLACERVILLE
778 Pacific Street
Placerville, California 95667
T 530.626.1810
F 530.626.1931

SACRAMENTO
1990 Third Street, Suite 500
Sacramento, California 95811
T 916.443.5911
F 916.443.2965

ISSUE DATE:	1 April 2013
RESPONSE TO:	Contractor Requests for Information & DFCM Comments
PROJECT:	**RTI TASS Complex, Phase II** **Administration & Billets Buildings** 17800 South Academy Street Utah National Guard Camp Williams **DFCM'S PROJECT #:** 11020480 **NGB'S PROJECT #:** 490444 **ARCHITECT'S PROJECT #:** 11024
OWNER:	**Utah National Guard** 12953 South Minuteman Drive Draper, Utah 84020-1726
SUBJECT:	**VARIOUS CLARIFICATIONS**
ATTACHED:	**VOLUMES A.1 & A.2**

General: GI101, GI505, GI512, GI513, GI514

Civil: CU102, CU502, CF101

Structural: S-001, S-002, SB100, SB101, SB501, SB502, SB503, SB504, SF101, SF102, SF103, SF104, SF201, SF202, SF203, SF204, SF401, SF510, SF512, SF513, SF514, SF515, SF520, SF521, SF522, SF523, SF524

Architectural: AD101, AE011, AE101, AE102, AE358, AE359, AE403, AE406, AE503, AE514, AE601, AE630

Mechanical: MH121

Electrical: EP401

VOLUME B

General: GI101, GI512, GI513, GI514

Structural: S-001, SF105

Architectural: AE011, AE012, AE013, AE101, AE102, AE103, AE111, AE112, AE113, AE151, AE152, AE153, AE201, AE202, AE354, AE630, AE631, AE640, AE701

Fire Protection: FA101, FA102, FA103, FX101, FX102, FX103

Plumbing: PL101, PL102, PL103

Mechanical: MH101, MH102, MH103, MH121, MH601, MP101, MP102, MP103

Electrical: EL101, EL102, EL103, EP101, EP102, EP103

PAGES: Narrative (5)
Consultant Narratives (7)
Drawings, Volume A (49)
Drawings, Volume B (48)

This Addendum forms a part of the Contract Documents and modifies the original Bid Documents as noted below. Acknowledge receipt of this Addendum in the space provided on the Bid Form. Failure to do so may subject the Bidder to disqualification. This Addendum includes all attachments noted, included herein by reference.

GENERAL AMENDMENTS

G1. Changes to Prior Addenda:

NONE

SPECIFICATION AMENDMENTS:

S1. Specifications:

Item #	Section	Amendment
S1.01	01 25 00	**REMOVE** paragraph 1.2-B.1. in its entirety.
S1.02	01 29 00	**REMOVE** paragraph 1.2-B.1. in its entirety.
S1.03	01 40 00	**REMOVE** paragraph 1.2-C. in its entirety.
S1.04	01 60 00	**REMOVE** paragraph 1.2-B.1. in its entirety.
S1.05	08 31 13	**REMOVE** article 1.3 in its entirety.
S1.06	08 71 00.01	**ADD** hardware set 'A34' as follows:

HW SET NO: A34

2	EA	CONT. HINGE	224HD	628
1	EA	PANIC HARDWARE	CD-25-V-EO-LBR	626
1	EA	MORTISE CYLINDER	1E74	626
2	EA	SURFACE CLOSER	SC71 FA/HO	689
2	EA	KICK PLATE	8400 10" X 2" LDW	630
2	EA	WALL STOP	WS407CCV	630
2	EA	SILENCER	SR64	GRY

ADMINISTRATION DRAWING AMENDMENTS (VOLUMES A.1 & A.2):

A0. General:

Item #	Sheet(s)	Amendment
A1.01	GI002.1, GI002.2	**ADD** sheet GI514 to the sheet index.
A1.02	GI101	**REVISE** sheet as provided.
A1.03	GI110	**ADD** the following to the DEFERRED SUBMITTALS LIST: • FIRE ALARMS…… 6 MONTHS
A1.04	GI505	**REVISE** wall type 'SS42' to be wall type 'SS42T', as shown in sheet provided.
A1.05	GI512, GI513, GI514	**REPLACE** sheets GI512 and GI513 with sheets provided. **ADD** UL Design No. U415 to sheet GI512, which rearranges details to next subsequent sheet. **ADD** sheet GI514, as provided.
A1.06	GI701	**REVISE** dimension on detail A6/GI701 to read "60" MIN, CLEAR" for distance from the plumbing wall. Clearance dimensions should now be 60" in both directions.

A2. Civil:

Item #	Sheet(s)	Amendment
A2.01	CU102, CU502, CF101	**REVISE** sheets as provided.

A3. Structural:

Item #	Sheet(s)	Amendment
A3.01	S-001, S-002, SB100, SB101, SB102, SB501, SB502, SB503, SB504, SF101, SF102, SF103, SF104, SF201, SF202, SF203, SF204, SF401, SF510, SF512, SF513, SF514, SF515, SF520, SF521, SF522, SF523, SF524	*See the attached Memorandum from Engineer, dated March 26, 2013*

A4. Architectural:

Item #	Sheet(s)	Amendment
A4.01	ALL SHEETS	**REVISE** roof construction to have 8" thick (min) of rigid insulation. **REVISE** spray-foam insulation at wall vs. roof intersections to be equal in thickness to the thickness of the roof insulation. Only applicable where spray-foam is shown at these intersections. **REVISE** perimeter insulation to be 3" thick (min), and placed on the exterior side of foundation walls.
A4.02	AD101	**ADD** notation on A6/AD101 for louvered penthouse alteration, as shown in sheet provided.
A4.03	AE011	**REVISE** sheet to show locations of transformer pads (E4), spot elevation for elevator pit (D2), and masonry opening for service door #1140C (E5), as shown in sheet provided. **REVISE** hatching over kitchen area updated to correct pattern, as shown.
A4.04	AE101	**REVISE** doors 1160 and 1161 to swing into their respective rooms, as shown in sheet provided. **REVISE** Electrical #1162 as shown in sheet provided.
A4.05	AE102	**REVISE** doors 1260 and 1261 to swing into their respective rooms, as shown in sheet provided.
A4.06	AE358	**ADD** wall section C3/AE358, as shown in sheet provided.
A4.07	AE359	**ADD** seismic separation dimension to walls sections A1, A3, A4, and A6/AE359, as shown in sheet provided.
A4.08	AE251, AE252, AE401, AE402, AE403, AE404, AE405, AE403	**ADD** keynote #21 to KEYNOTE – INTERIOR ELEVATION schedule, to read as follows: "21. KITCHEN HOOD"
A4.09	AE403	**ADD** keynote # 21 to details D2, D3, and D4/AE403, as shown in sheet provided. **REVISE** wall tag at plumbing wall of handwash station to be 'SS42T', as shown in sheet provided.
A4.10	AE406	**REVISE** Electrical #1162, as shown in sheet provided. Doors #1162A and #1162B have been moved to allow for proper clearance to door #1172A, and electrical panel adjustments within the room.
A4.11	AE503	**REVISE** plan detail A1/AE503, as shown in sheet provided. Rated expansion joint to be in line with rated wall construction, and an expansion cover plate provided at exterior face of walls. **REVISE** rating of 4'-0" portion to be 1-hr min construction. Wall types indicated for clarity of wall construction. **ADD** wall section marker 'C3/AE358' to plan detail D5/AE503, as shown in sheet provided.
A4.12	AE514	**REISSUE** sheet as provided. Multiple revisions across all details. Note that details A1 and C1/AE514 have been added to the sheet.
A4.13	AE601	**REVISE** door schedule as shown on sheet provided. **REVISE** frame types B4/AE601 to have hollow metal types 'SH01', 'SH02', and 'DH01', as shown on sheet provided.
A4.14	AE630	**DELETE** and **REPLACE** details D1 and D5/AE6630, with D1 and D4/AE630, respectively, as shown on sheet provided. **REVISE** details B3, B5, B6, and C6/AE630 as shown on sheet provided. **ADD** details D6 and E6/AE630, as provided on sheet.

A5. Mechanical:

Item #	Sheet(s)	Amendment
A5.01	MH121	*See the attached Memorandum from Engineer, dated March 28, 2013*

A6. Electrical:

Item #	Sheet(s)	Amendment
A6.01	EP401	*See the attached Memorandum from Engineer, dated March 28, 2013*

BILLETS DRAWING AMENDMENTS (VOLUME B):

B1. General:

Item #	Sheet(s)	Amendment
B1.01	GI002	**ADD** sheet GI514 and AE640 to sheet index.
B1.02	GI100	**REVISE** IBC 2009 – GENERAL CODE REQUIREMENT, NEW CONSTRUCTION table to have Floor Construction identified at 20-min rated construction.

Item #	Sheet(s)	Amendment
B1.03		
B1.04	GI101	**REVISE** plans A4 and C4/GI101 to have a FEC cabinet between rooms 2120 and 2122; 2220 and 2222; and 2320 and 2322. **ADD** the following rated construction information to "Floor – Ceiling Floors" on CODE ANALYSIS table: Rating to be '1/3 Hours' and assembly listing to be 'D974'.
B1.05	GI110	**ADD** the following to the DEFERRED SUBMITTALS LIST: • FIRE ALARMS…… 6 MONTHS • EVALUATION REPORTS (ICC OR EQUIVALENT FOR THE FOLLOWING: f. FIRE DAMPERS …… 6 MONTHS
B1.06	GI512, GI513, GI1514	**ADD** UL Design No. D974 to sheet GI513, which rearranges details to across sheets GI512 and GI513. **ADD** sheet GI514, as provided.

B2. Structural:

Item #	Sheet(s)	Amendment
B2.01	S-001, SF105	*See the attached Memorandum from Engineer, dated March 26, 2013*

B3. Architectural:

Item #	Sheet(s)	Amendment
B3.01	ALL SHEETS	**REVISE** roof construction to have 8" thick (min) of rigid insulation. **REVISE** spray-foam insulation at wall vs. roof intersections to be equal in thickness to the thickness of the roof insulation. Only applicable where spray-foam is shown at these intersections. **REVISE** perimeter insulation to be 3" thick (min), and placed on the exterior side of foundation walls.
B3.02	AE011, AE012, AE013, AE101, AE102, AE103, AE111, AE112, AE113, AE151, AE152, AE153, AE201, AE202	Plans and elevations revised for clarity to show rooms that are identified for Alternate #2 and #3.
B3.03	AE354	**ADD** sheet to documents as provided.
B3.04	AE601	**REVISE** door #2371B to have a 45-min rated assembly.
B3.05	AE630	**ADD** details B6 and C6/AE630, as shown on sheet provided.
B3.06	AE631	**REVISE** details B5 and C5/AE631 to be B6 and C6/AE631, respectively, as shown in sheet provided. **REVISE** details B1 and B2/AE631, as shown on sheet provided.
B3.07	AE640	**ADD** sheet to documents as provided.
B3.08	AE701	**REVISE** details B2 and C2/AE701, as shown on sheet provided.

B4. Fire Protection:

Item #	Sheet(s)	Amendment
B4.01	FX101, FX102, FX103	*See the attached Memorandum from Engineer, dated March 28, 2013*
B4.02	FA101, FA102, FA103	**REVISE** sheets to indicate areas associated with Add/Alt #2 and #3, as shown in sheets provided.

B5. Plumbing:

Item #	Sheet(s)	Amendment
B5.01	PL101, PL102, PL103	*See the attached Memorandum from Engineer, dated March 28, 2013*

B6. Mechanical:

Item #	Sheet(s)	Amendment

Item #	Sheet(s)	Amendment
B6.01	MH101, MH102, MH103, MH121, MH601, MP101, MP102, MP103	*See the attached Memorandum from Engineer, dated March 28, 2013*

B7. Electrical:

Item #	Sheet(s)	Amendment
B7.01	EL101, EL102, EL103, EP101, EP102, EP103	**REVISE** sheets to indicate areas associated with Add/Alt #2 and #3, as shown in sheets provided.
B7.02	EP601	**DELETE** keyed note #1.

PRODUCT SUBSTITUTIONS / PRIOR APPROVALS:

Item #	Section(s)	Product Type	Alternate Manufacturer(s)
1.01	236400-2.5	Cassette Style Ductless Split System	LG
1.02	237400-2.1	Direct Fired Make-up Air Unit	Titan Air
1.03	263353-2.1	Uninterruptible Power Supplies	Toshiba

RESPONSE TO INQUIRIES:

1. The bid form contains 8 bid items. Will all 8 items be awarded?
   a. ***Yes.***
2. Just below the line "TOTAL BASE BID PLUS ALTERNATE BIDS" there is a line for all work shown on the drawings. Is this line to be the total base bid without alternates?
   a. ***Yes***
3. Section 01 25 00, 01 29 00, 01 40 00, and 01 60 00 refer to a section 01 21 00 Allowances which is not included in the specifications. Please clarify.
   a. ***Allowances are to be removed from referenced specification sections.***
4. Section 08 31 13 Section 1.3 Allowances refers to an access door and frame allowance. What is the amount of the allowance?
   a. ***'Allowances' to be removed from referenced specification section.***
5. Section 05 12 00 requires that the fabricators to be listed on the current DFCM approved list. During the bid process would it be possible for a fabricator to be added to this list?
   a. ***All fabricators are to apply and be approved by the State of Utah before they are to be added to the list of approved fabricators. Please refer to DFCM's website (http://www.dfcm.utah.gov/dfcm/building-official.html) for requirements to apply as a STATE OF UTAH (DFCM) STRUCTURAL STEEL FABRICATOR and MANUFACTURER and/or STEEL BUILDING FABRICATOR/MANUFACTURER.***
6. Is there a prequalified list of steel erectors?
   a. ***We are not aware of any prequalified list of steel erectors for DFCM, nor any requirement for steel erectors to be prequalified.***
7. On drawing EP601 in the attached notes it calls to move a generator and add a new enclosure and fuel tank. I do not see details on the drawings or in the specifications for this 24 hour tank which I would supply. Will this be required?
   a. ***Keyed note #1 shall be deleted. The generator needs to be a new 50kW 120/208V generator with an 8 hour tank as shown on EP601.***

COMMENTS:

END OF ADDENDUM

---

1 April 2013

Stephen Springer, *AIA, NCARB, LEED AP*
Architectural Nexus, Inc.

Date

THIS PAGE INTENTIONALLY LEFT BLANK

DUNN ASSOCIATES, INC
Consulting Structural Engineers

STRUCTURAL ITEMS

FOR ADDENDUM #2

FOR

TASS Phase II, Building A
Camp Williams, Utah

March 26, 2013

380 West 800 South, Suite 100 Salt Lake City, Utah 84101 phone: 801-575-8877 fax: 801-575-8875 www.dunn-se.com

Structural Items for Building A Addendum #2:

1. Drawing S-001 – Revised water/cement ratio for interior slabs on grade to 0.5 in the Concrete Section of the General Structural Notes. Revised the masonry strength f'm to 2500 psi in the Masonry section of the General Structural Notes.
2. Drawing S-002 – Added wall system performance requirements to the Cold Formed Steel section of the General Structural Notes. Deleted paragraph 2.2.1 of the Cold Formed Steel section eliminating the lateral drift detailing requirements.
3. Drawing SB100 – Added callout labels to steel columns. Corrected section cut callout, and footing label callout. Corrected drawing references in Footing and Foundation Plan Notes, and in the Marks and Symbols.
4. Drawing SB101 – Added and corrected dimensions to continuous footing ends. Added missing masonry column callouts. Added missing concrete wall callouts. Deleted SC-12 columns on Grid 6.8. Added missing footing callout on Grid S.3. Added section cut to loading dock area. Increased loading dock slab on grade thickness to 6". Corrected drawing references in Footing and Foundation Plan Notes, and in the Marks and Symbols.
5. Drawing SB501 – Added rebar to 4" slab on grade sections in detail C4.
6. Drawing SB502 – Removed dimension to top of footing on detail C4. Removed reinforcing callout in detail B4.
7. Drawing SB503 – Added detail callout to detail D2. Revised detail callout for detail D3. Added minimum insulation density to detail D5. Added embed length to drilled and epoxied dowels to details A3 and A4.
8. Drawing SB504 – Added embed length to drilled and epoxied dowels to detail D1. Added section cut to detail D4. Corrected detail callout on detail C1. Added reinforcing callout to detail C2. Added dowel to section B3.
9. Drawing SF101 – Corrected detail callouts. Added detail callout. Added symbol for slab reinforcing over beams framing into columns to plan and to Marks and Symbols Legend.
10. Drawing SF102 – Corrected detail callout. Added detail callouts. Added W16x26 beam under parapet wall. Added beam callout to canopy. Added seismic separation joint callout on Grid 1. Deleted W12x19 beam at Grid A.2 between Grids 1.1 and 2. Revised beam size on Grid G.
11. Drawing SF103 – Added dimension. Corrected detail cuts and section callouts. Added and deleted section cuts. Revised all "K" series joists to "LH" series. Added seismic separation joint callout on Grid 1. Removed bridging between grids S.2 and S.5.
12. Drawing SF104 – Revised beam sizes.

13. Drawing SF201 – Clarified Elevation Note 4. Added section cut to detail C1.
14. Drawing SF202 – Corrected detail callout on detail D3. Added add load callout and bolt callout to detail D6.
15. Drawing SF203 – Corrected hatching shading on details D1, C1 and A1. Added missing masonry column callout on detail C1.
16. Drawing SF204 – Added beam sizes to frame elevation D2.
17. Drawing SF401 – Added note to galvanize steel for details D6, C1, C2, and C3. Added section cut to D3. Added detail B1.
18. Drawing SF510 – Corrected edge plate location on detail A4.
19. Drawing SF512 – Corrected detail reference on detail A5.
20. Drawing SF513 – Added bolt number to detail C5. Added weld to detail A1.
21. Drawing SF514 – Corrected detail callout on detail D5. Added dimension to detail C1. Revised ties on detail C4. Reduced DBA spacing to 3” oc on detail A3. Added detail callout to detail A4.
22. Drawing SF515 – Corrected detail callout on details D2, B4, A1 and A2. Increase plate thickness to ½” on detail A4.
23. Drawing SF520 – Corrected edge plate location on details B4 and B5. Added bolt callout to details A1 and A2.
24. Drawing SF521 – Relocated detail D1 to sheet SF520. Added detail callouts to details D2 and B3. Added bolt callout for details D3 and D4. Added details C4 and C5.
25. Drawing SF522 – Revised title to detail B4. Corrected detail callout on detail A1. Added detail A4.
26. Drawing SF523 – Added bolt callout to details D3 and C3. Added dimension to detail C4. Added detail callout to detail C5. Revised dimension on detail B5. Added detail D2.
27. Drawing SF524 – Corrected detail callout on details B5 and A4. Added detail callout on detail A1.

THIS PAGE INTENTIONALLY LEFT BLANK

DUNN ASSOCIATES, INC
Consulting Structural Engineers

STRUCTURAL ITEMS

FOR ADDENDUM #2

FOR

TASS Phase II, Building B
Camp Williams, Utah

March 26, 2013

380 West 800 South, Suite 100 Salt Lake City, Utah 84101 phone: 801-575-8877 fax: 801-575-8875 www.dunn-se.com

Structural Items for Building B Addendum #2:

1. Drawing S-001 – Revised masonry strength f'm to 2500 psi in the Masonry section of the General Structural Notes.
2. Drawing SF105 – Revised beam sizes and alignment of beams on High Roof Framing Plan.

COLVIN ENGINEERING ASSOCIATES

MECHANICAL ADDENDUM NO. 02

Job Name and Location: TASS-Phase II

CEA PROJECT NO.: 2011-042.00

Date: March 28, 2013

All contractors submitting proposals for this project shall be governed by the following addendum, changes, and explanations to the bidding documents. Bids shall be submitted in accordance with the following:

Item No.	Add, Delete or Clarify	Specification Section or Drawing No.	Reference / Description:
1.01	Add	Shown on Volume A.2, Sheet MH121	-The outside air intake on the roof of TASS-Phase I Admin Building for air handler AH-1 rests too close to the roof and consequently pulls snow into the intake. The intake is a louvered penthouse. -Contractor shall survey the existing site condition and provide an 18" extension that raise the OSA intake louvered penthouse another 18" above the roof surface. Extension can be shop fabricated or manufactured, but must be of the same material and construction of the existing louvered penthouse.
1.02	Clarify	Volume B, Sheets: FX101, FX102, FX103, MH101, MH102, MH121, MH103, MH601, MP101, MP102, MP103, PL101, PL102, PL103,	Add/Alt #2 and #3 defined on these sheets.

PRODUCT SUBSTITUTIONS / PRIOR APPROVALS

Item No.	Specification Section	Product Type	Alternate Manufacturers
1.03	236400-2.5	Cassette Style Ductless Split Systems	LG
1.04	237400-2.1	Direct Fired Make-up Air Unit	Titan Air

The above named alternate equipment manufacturers stand approved in name only. Approval here in no way relieves the supplier from complying with all other engineering, weight spatial, and quality requirements of equipment indicated in the contract documents. Contractors using products from the above named alternate manufacturers shall refer to Specification Section 230500 for detailed contractor responsibilities related to the use of alternate brands not used as the Basis of Design.

END OF ADDENDUM NO. 02

\\CEAFS2\Data\PROJECTS\2011 Projects\2011-042.00 TASS Complex - Phase 2 - Design\Revisions\Addenda\01 (2013-03-28)\Mechanical Addendum 02.docx

THIS PAGE INTENTIONALLY LEFT BLANK

Ken Garner Engineering, Inc.
ELECTRICAL CONSULTING ENGINEERS

ADDENDUM NUMBER 2

March 28, 2013
Utah National Guard
TASS Phase 2
2011-044.00

PRIOR APPROVAL TO BID

The following manufacturers are prior approved to bid the project. All manufacturers must bid an equal to that specified, as determined by the Engineer. Products approved, but later proving not to be equal, may be disqualified at a later date, and the contractor shall then supply the original specified products. Products not listed did not meet the prior approval deadline, or are not considered equal to those specified.

DRAWINGS

Sheet EP401

1. Main floor electrical room equipment to be relocated as shown on attached sheet EP401.
2. Panels moved to allow for doors to swing into IT rooms, as shown on detail 2 and 4.

THIS PAGE INTENTIONALLY LEFT BLANK

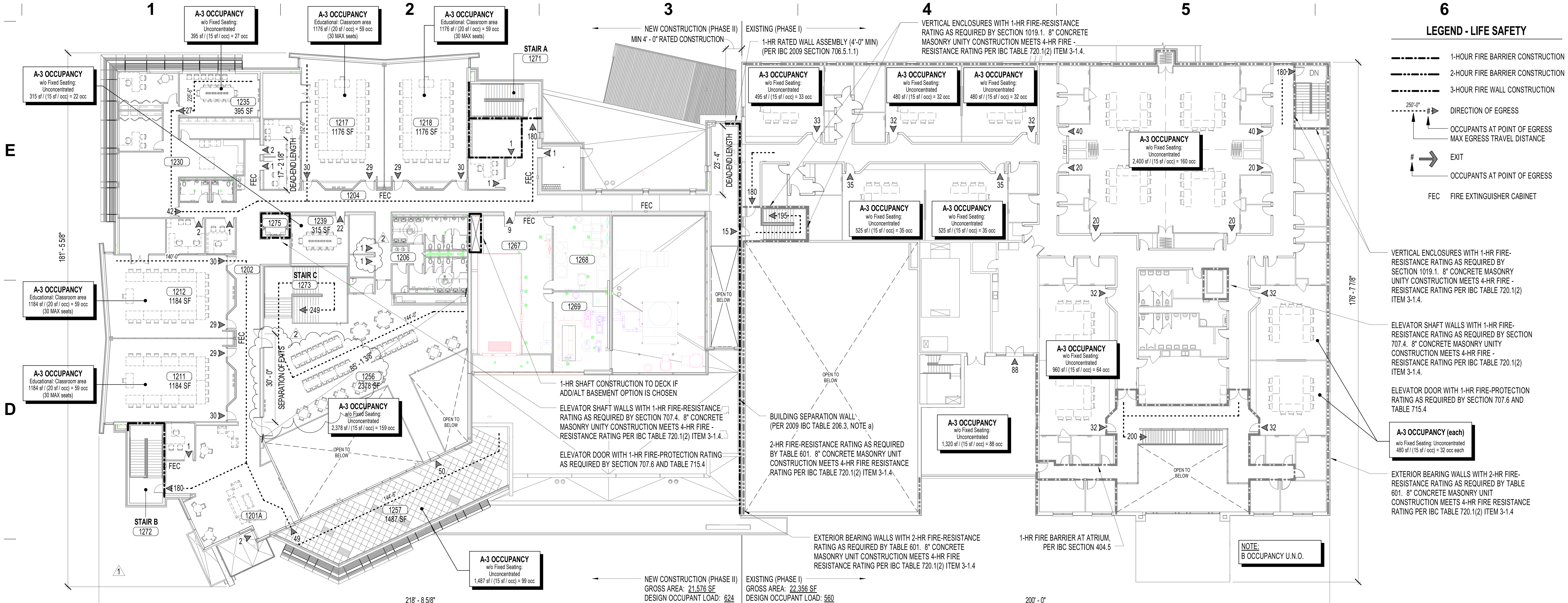

C1 LEVEL 2 - LIFE SAFETY PLAN
GI101 1/16" = 1'-0"

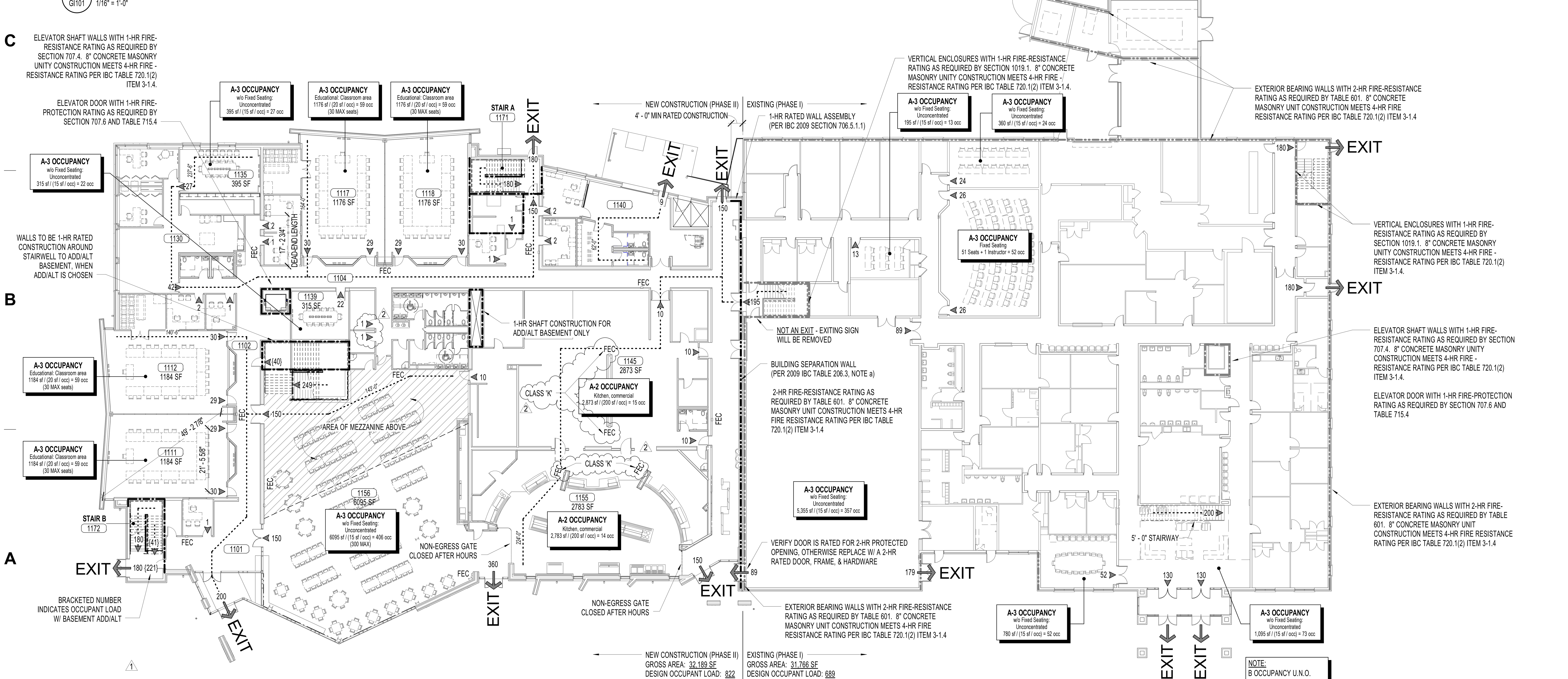

A1 LEVEL 1 - LIFE SAFETY PLAN
GI101 1/16" = 1'-0"

4/1/2013 10:26:48 AM

LEGEND - LIFE SAFETY

- 1-HOUR FIRE BARRIER CONSTRUCTION
- 2-HOUR FIRE BARRIER CONSTRUCTION
- 3-HOUR FIRE WALL CONSTRUCTION
- 250'-0" # DIRECTION OF EGRESS
- OCCUPANTS AT POINT OF EGRESS / MAX EGRESS TRAVEL DISTANCE
- # EXIT
- OCCUPANTS AT POINT OF EGRESS
- FEC FIRE EXTINGUISHER CABINET

CODE COORDINATION NOTES

A. SEE LISTING FOR FIRE RATING OF WALL TYPES ON SHEETS GI501 THROUGH GI505.

B. NOTE: ONLY WALLS NOTED ON THESE SHEETS (GI100 & GI101) ARE REQUIRED TO BE FIRE-RATED. SOME WALLS MAY BE REFERENCED TO A WALL CONSTRUCTION TYPE WHICH HAS A FIRE-RATING, BUT THE RATING IS NOT REQUIRED UNLESS SO NOTED ON THIS SHEET.

C. PENETRATIONS THROUGH FIRE RATED ASSEMBLIES SHALL BE FIRE STOPPED IN ACCORDANCE WITH SHEET GI510 & GI511, AND WRITTEN INSTRUCTION FROM THE MANUFACTURER OF THE FIRE STOPPING MATERIAL.

D. WALLS AND FLOOR / CEILINGS SURROUNDING EXIT PASSAGEWAYS, VERTICAL EXIT ENCLOSURES AND ELEVATOR SHAFTS SHALL NOT BE PENETRATED WITH DUCTS, PIPING CONDUITS, ETC. UNLESS NECESSARY TO SERVICE OR PROTECT THE EXIT ENCLOSURE. THERE SHALL BE NO COMMUNICATION OPENING OR PENETRATIONS BETWEEN ADJACENT EXIT ENCLOSURES. PENETRATION SHALL BE FIRE STOPPED IN ACCORDANCE WITH THE DETAILS ON SHEETS GI510 & GI511 AND WRITTEN INSTRUCTION FROM MANUFACTURER OF THE FIRE STOPPING MATERIAL.

CODE ANALYSIS

ADMINISTRATION & EDUCATION BUILDING - PHASE I (EXISTING)

APPLICABLE CODES

Code	Year	Code	Year
International Building Code	2009	National Electrical Code	2011
International Mechanical Code	2009	Uniform Code for Building Conservation	2009
International Fuel Gas Code	2009	ADA Accessibility Guidelines	2010
International Plumbing Code	2009		
International Fire Code	2009		
International Energy Conservation Code	2009	ICC / ANSI A117.1	2003

A. Occupancy and Group: A-3 B
Change in Use: Yes ____ No X Mixed Occupancy: Yes X No ____
Special Use and Occupancy (e.g. High Rise, Covered Mall): N/A

B. Seismic Design Category: D Design Wind Speed: 90 mph EXP. C

C. Type of Construction (circle one): I-A, I-B, II-A, II-B, III-A, (III-B), IV-HT, V-A, V-B

D. Fire Resistance Rating Requirements for the Exterior Walls based on the fire separation distance (in hours):
North: 0 South: 0 East: 0 West: 0

E. Mixed Occupancies: YES Nonseparated Uses: YES

F: Sprinklers:
Required: YES Provided: YES
Type of Sprinkler System (IBC 903.3.1) NFPA 13

G: Number of Stories: 2 Building Height: 30' - 0"

H: Actual Area per Floor (square feet): Lvl 1: 31,357 - Lvl 2: 22,356

I: Tabular Area: (table 503): A-3: 9,500 SF

J: Area Modifications:

a) $A_a = \{A_t + [A_t \times I_f] + [A_t \times I_s]\}$ $I_f = [F/P - 0.25] W/30$

Aa = { 9,500 + [9,500 x 0.52] + [9,500 x 2] } If = [577 / 754 - 0.25] 30/30
Aa = 9,500 + 4,940 + 19,000 If = 0.52
Aa = 33,440

b) Sum of the Ratio Calculations for Mixed Occupancies:
Actual Area / Allowable Area ≤ 1 N/A

c) Total Allowable Area for:
1) One Story: 33,440 SF
2) Two Story: $A_a(2)$ 66,880 SF
3) Three Story: $A_a(3)$ ____

d) Unlimited Area Building: Yes ____ No X Code Section: ____

K. Fire Resistance Rating Requirements for Building Elements (hours).

Element	Hours	Assembly Listing	Element	Hours	Assembly Listing
Exterior Bearing Walls	2	IBC TABLE 720.1(2), ITEM 3-1.4	Floors - Ceiling Floors	0	
Interior Bearing Walls	0		Roofs - Ceiling Roofs	0	
Exterior Non-Bearing Walls	0		Exterior Doors and Windows	0	
Structural Frame	0		Shaft Enclosures	0	
Partitions - Permanent	0		Fire Walls	0	
Fire Barriers	0		Fire Partitions	0	
			Smoke Partitions	0	

L. Design Occupant Load: Lvl 1: 689 - Lvl 2: 560
Exit Width Required: Lvl 1: 138" Lvl 2: 132" Exit Width Provided: Lvl 1: 396" Lvl 2: 132"

M. Minimum Number of Required Plumbing Facilities:
a) Water Closets - Required (m) 11 (f) 12 Provided (m) 23 (f) 12
b) Urinals - Required (m) 5 (f) 0 Provided (m) 14 (f) 0
c) Lavatories - Required (m) 11 (f) 11 Provided (m) 14 (f) 12
d) Bath Tubs or Showers: 9
e) Drinking Fountains: 10 Service Sinks: 2

FOOTNOTES:
1) In case of conflict with the U.S. Department of Justice Federal Registers Parts I through V - ADA Guidelines and specific reference to the International Building Code Accessibility Chapters, the more restrictive requirement shall govern.
2) Additional Code Information shall be provided at the discretion of the Building Official for Complex Buildings. Including, but not limited to:
a) High Rise Requirements.
b) Atriums.
c) Performance Based Criteria.
d) Means or Egress Analysis.
e) Fire Assembly Locator Sheet.
f) Exterior and Interior Accessibility Route.
g) Fire Stopping, Including Tested Design Number.

CODE ANALYSIS

ADMINISTRATION & EDUCATION BUILDING - PHASE II

APPLICABLE CODES

Code	Year	Code	Year
International Building Code	2009	National Electrical Code	2011
International Mechanical Code	2009	Uniform Code for Building Conservation	2009
International Fuel Gas Code	2009	ADA Accessibility Guidelines	2010
International Plumbing Code	2009		
International Fire Code	2009		
International Energy Conservation Code	2009	ICC / ANSI A117.1	2003

A. Occupancy and Group: A-3 B
Change in Use: Yes ____ No X Mixed Occupancy: Yes X No ____
Special Use and Occupancy (e.g. High Rise, Covered Mall): N/A

B. Seismic Design Category: D Design Wind Speed: 90 mph EXP. C

C. Type of Construction (circle one): I-A, I-B, II-A, (II-B), III-A, III-B, IV-HT, V-A, V-B

D. Fire Resistance Rating Requirements for the Exterior Walls based on the fire separation distance (in hours):
North: 0 South: 0 East: 0 West: 0

E. Mixed Occupancies: YES Nonseparated Uses: YES

F: Sprinklers:
Required: YES Provided: YES
Type of Sprinkler System (IBC 903.3.1) NFPA 13

G: Number of Stories: 2 Building Height: 34' - 8"

H: Actual Area per Floor (square feet): Basement: 9,560 - Lvl 1: 32,189 - Lvl 2: 21,576

I: Tabular Area: (table 503): A-3: 9,500 SF

J: Area Modifications:

a) $A_a = \{A_t + [A_t \times I_f] + [A_t \times I_s]\}$ $I_f = [F/P - 0.25] W/30$

Aa = { 9,500 + [9,500 x 0.52] + [9,500 x 2] } If = [619 / 800 - 0.25] 30/30
Aa = 9,500 + 4,940 + 19,000 If = 0.52
Aa = 33,440

b) Sum of the Ratio Calculations for Mixed Occupancies:
Actual Area / Allowable Area ≤ 1 N/A

c) Total Allowable Area for:
1) One Story: 33,440 SF
2) Two Story: $A_a(2)$ 66,880 SF
3) Three Story: $A_a(3)$ ____

d) Unlimited Area Building: Yes ____ No X Code Section: ____

K. Fire Resistance Rating Requirements for Building Elements (hours).
Type IIB construction, per IBC 2009, Table 601

Element	Hours	Assembly Listing	Element	Hours	Assembly Listing
Exterior Bearing Walls	0		Floors - Ceiling Floors	0	
Interior Bearing Walls	0		Roofs - Ceiling Roofs	0	
Exterior Non-Bearing Walls	0		Exterior Doors and Windows	0	
Structural Frame	0		Shaft Enclosures	1	SEE WALL TYPES
Partitions - Permanent	0		Fire Walls	2	SEE WALL TYPES
Fire Barriers	0		Fire Partitions	0	
			Smoke Partitions	0	

L. Design Occupant Load: Basement: 306 - Lvl 1: 600 - Lvl 2: 450
Exit Width Required: Basement: 72" Lvl 1: 116" Lvl 2: 75" Exit Width Provided: Basement: 84" Lvl 1: 360" Lvl 2: 204"

M. Minimum Number of Required Plumbing Facilities:
a) Water Closets - Required (m) 12 (14) (f) 4 (5) Provided (m) 21 (30) (f) 11 (15)
b) Urinals - Required (m) 5 (6) (f) 0 Provided (m) 12 (17) (f) 0
c) Lavatories - Required (m) 12 (14) (f) 4 (5) Provided (m) 15 (21) (f) 11 (15)
d) Bath Tubs or Showers: 0
e) Drinking Fountains: 4 (5) Service Sinks: 2 (3)

NOTE: NUMBERS IN ( ) INDICATE WITH ADD/ALT

FOOTNOTES:
1) In case of conflict with the U.S. Department of Justice Federal Registers Parts I through V - ADA Guidelines and specific reference to the International Building Code Accessibility Chapters, the more restrictive requirement shall govern.
2) Additional Code Information shall be provided at the discretion of the Building Official for Complex Buildings. Including, but not limited to:
a) High Rise Requirements.
b) Atriums.
c) Performance Based Criteria.
d) Means or Egress Analysis.
e) Fire Assembly Locator Sheet.
f) Exterior and Interior Accessibility Route.
g) Fire Stopping, Including Tested Design Number.

ARCHITECTURAL NEXUS
SALT LAKE CITY PLACERVILLE SACRAMENTO

Architectural NEXUS, Inc.
2505 East Parleys Way
Salt Lake City, Utah 84109
T 801.924.5000 F 801.924.5001
http://www.archnexus.com

Licensed Architect PETER MOYES No. 83-122248-0301 State of Utah 21 MARCH 2013

Original drawings remain the property of the Architect and as such the Architect retains total ownership and control. The design represented by these drawings is sold to the client for a one time use, unless otherwise agreed upon in writing by the Architect.
© Architectural Nexus, Inc. 2012

UTAH NATIONAL GUARD CAMP WILLIAMS
RTI TASS COMPLEX, PHASE II
NGB PROJECT NO. 490444
17800 SOUTH ACADEMY STREET
BLUFFDALE, UTAH 84065

#	REVISIONS	
1	3.15.13	DFCM REVIEW RESPONSE
2	3.22.13	DFCM REVIEW RESPONSE #2

NEXUS PROJECT #: 11024
CHECKED BY: SMS
DRAWN BY: SMS
DATE: 21 MARCH 2013

SHEET CONTENTS:
LEVELS 1 & 2 LIFE SAFETY PLANS

VOLUME A.1 - BID DOCUMENTS

GI101

1 | 2 | 3 | 4 | 5 | 6

E

WALL TYPE: MT01

FIRE RATING: NONE
HEIGHT: TO DECK ABOVE
FIRE TEST:
SOUND RATING (MIN): NONE
SOUND TEST:

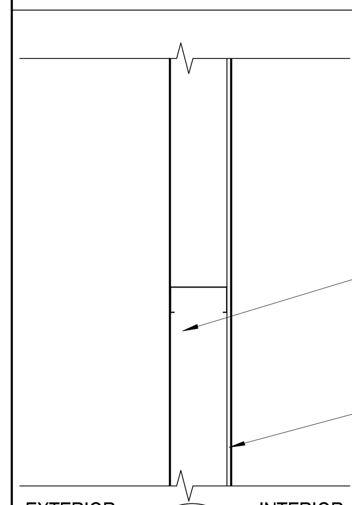

EXTERIOR SIDE:
NONE

CORE:
3 5/8" METAL STUD FRAMING @ 16" OC

INTERIOR SIDE:
METAL WIRE MESH

WALL TYPE: S66

FIRE RATING: NONE
HEIGHT: TO DECK ABOVE
FIRE TEST:
SOUND RATING (MIN): NONE
SOUND TEST:

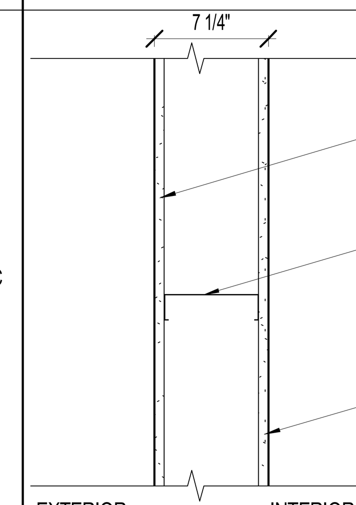

EXTERIOR SIDE:
(1) LAYER 5/8" GYPSUM BOARD

CORE:
6" STRUCTURAL METAL STUD @ 16" O.C.

INTERIOR SIDE:
(1) LAYER 5/8" GYPSUM BOARD

WALL TYPE: S66AST

FIRE RATING: NONE
HEIGHT: TO DECK ABOVE
FIRE TEST:
SOUND RATING (MIN): STC 60
SOUND TEST: BASIS OF 0L08-0913

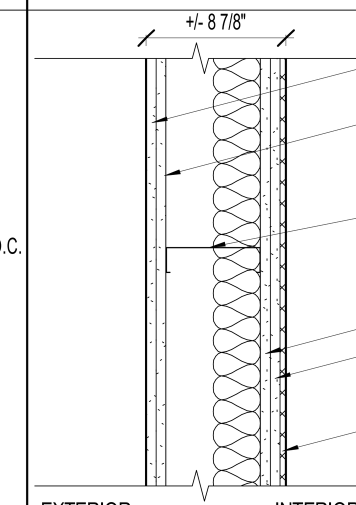

EXTERIOR SIDE:
(1) LAYER 5/8" SOUND-DEADENING GYPSUM BOARD
(1) LAYER 1" TYPE 'X' GYPSUM BOARD

CORE:
6" METAL STUD FRAMING @ 24" OC

INTERIOR SIDE:
(1) LAYER 1" TYPE 'X' GYPSUM BOARD
5/8" TILE BACKER BD WHERE TILE OCCURS. 5/8" MOISTURE-RESISTANT GYP BD OTHERWISE.
CERAMIC TILE OVER THIN SET MORTAR BED. SEE FIN SCHED & INT ELEVATIONS FOR EXTENTS, SIZE AND TYPE.

WALL TYPE: S68M

FIRE RATING: NONE
HEIGHT: TO DECK ABOVE
FIRE TEST:
SOUND RATING (MIN): NONE
SOUND TEST:

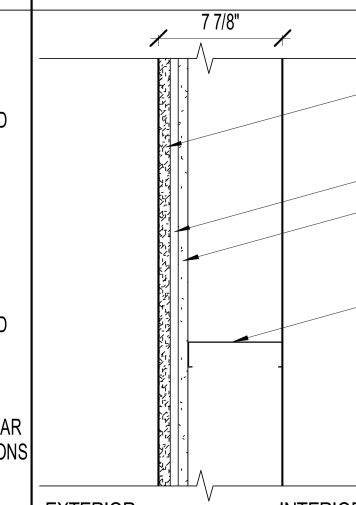

EXTERIOR SIDE:
METAL LAMINATE OVER 3/4" PARTICLE BD SUBSTRATE ON 3/4" DIA SS STANDOFFS W/ 1/2" SPACER
AIR SPACE
(1) LAYER 5/8" EXTERIOR GLASS MAT GYPSUM SHEATHING

CORE:
6" STRUCTURAL METAL STUD @ 16" O.C.

INTERIOR SIDE:
NONE

D

WALL TYPE: SS42T

1 (revision)

FIRE RATING: 2 HR
HEIGHT: RE WALL SECTIONS
FIRE TEST: U415, SYSTEM D
SOUND RATING (MIN): NONE
SOUND TEST:

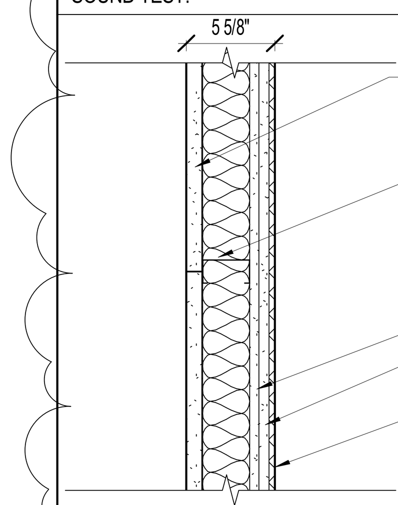

EXTERIOR SIDE:
1" GYPSUM BOARD SHAFTLINER

CORE:
4" C-H STUD FRAMING @ 24 OC W/ 3" MINERAL WOOL BATT

INTERIOR SIDE:
(1) LAYER 5/8" TYPE 'X' GYPSUM BD
(1) LAYER 5/8" TYPE 'X' GYPSUM BACKER BOARD
CERAMIC TILE OVER THIN SET MORTAR BED. SEE FIN SCHED & INT ELEVATIONS FOR EXTENTS, SIZE AND TYPE.

WALL TYPE: S66ATT

FIRE RATING: NONE
HEIGHT: TO DECK ABOVE
FIRE TEST:
SOUND RATING (MIN): STC 50
SOUND TEST: BASIS OF NRCC 818-NV, 2-3-81

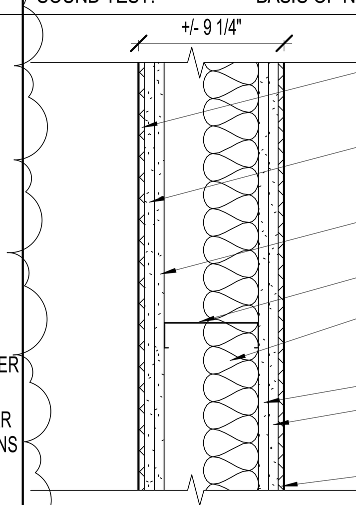

EXTERIOR SIDE:
CERAMIC TILE OVER THIN SET MORTAR BED. SEE FIN SCHED & INT ELEVATIONS FOR EXTENTS, SIZE AND TYPE.
5/8" TILE BACKER BD WHERE TILE OCCURS. 5/8" MOISTURE-RESISTANT GYP BD OTHERWISE.
(1) LAYER 5/8" GYPSUM BOARD

CORE:
6" METAL STUD FRAMING @ 24" OC
3 1/2" GLASS FIBER BLANKET

INTERIOR SIDE:
(1) LAYER 5/8" GYPSUM BOARD
5/8" TILE BACKER BD WHERE TILE OCCURS. 5/8" MOISTURE-RESISTANT GYP BD OTHERWISE.
CERAMIC TILE OVER THIN SET MORTAR BED. SEE FIN SCHED & INT ELEVATIONS FOR EXTENTS, SIZE AND TYPE.

WALL TYPE: S66ST

FIRE RATING: NONE
HEIGHT: TO DECK ABOVE
FIRE TEST:
SOUND RATING (MIN): STC 45
SOUND TEST: BASIS OF RAL-TL-11-127

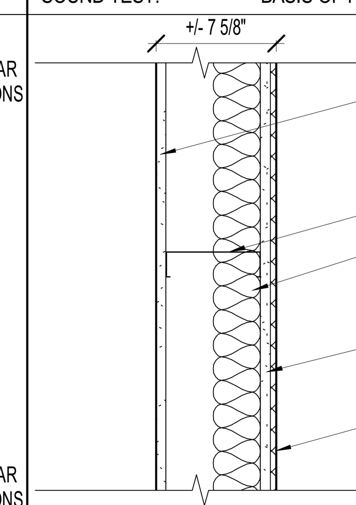

EXTERIOR SIDE:
(1) LAYER 5/8" GYPSUM BOARD

CORE:
6" METAL STUD FRAMING @ 24" OC
3" SOUND ATTENUATION BLANKET

INTERIOR SIDE:
5/8" TILE BACKER BD WHERE TILE OCCURS. 5/8" MOISTURE-RESISTANT GYP BD OTHERWISE.
CERAMIC TILE OVER THIN SET MORTAR BED. SEE FIN SCHED & INT ELEVATIONS FOR EXTENTS, SIZE AND TYPE.

WALL TYPE: S69

FIRE RATING: NONE
HEIGHT: 6" AFC
FIRE TEST:
SOUND RATING (MIN): NONE
SOUND TEST:

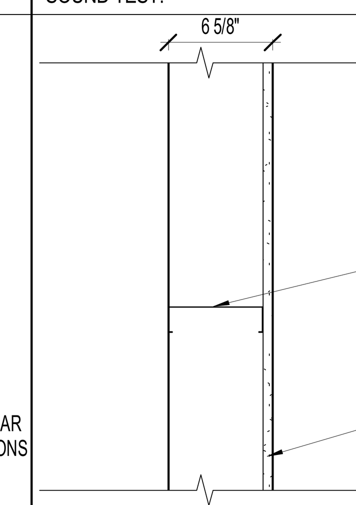

EXTERIOR SIDE:
NONE

CORE:
6" STRUCTURAL METAL STUD @ 16" O.C.

INTERIOR SIDE:
(1) LAYER 5/8" GYPSUM BOARD

C

WALL TYPE: S66S.1

FIRE RATING: NONE
HEIGHT: TO DECK ABOVE
FIRE TEST:
SOUND RATING (MIN): STC 45
SOUND TEST: BASIS OF RAL-TL-11-127

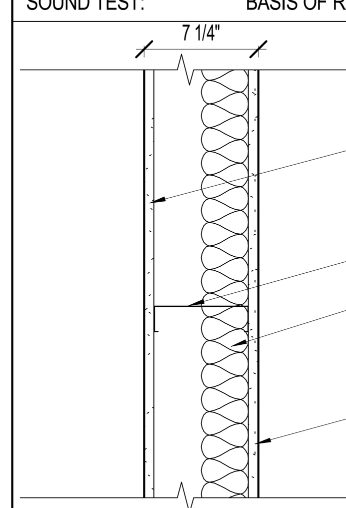

EXTERIOR SIDE:
(1) LAYER 5/8" GYPSUM BOARD

CORE:
6" METAL STUD FRAMING @ 24" OC
3" SOUND ATTENUATION BLANKET

INTERIOR SIDE:
(1) LAYER 5/8" GYPSUM BOARD

WALL TYPE: S66T

FIRE RATING: NONE
HEIGHT: TO DECK ABOVE
FIRE TEST:
SOUND RATING (MIN): NONE
SOUND TEST:

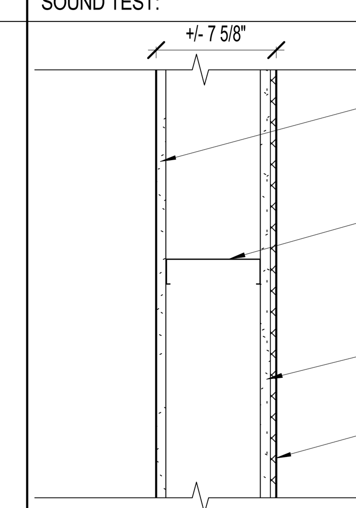

EXTERIOR SIDE:
(1) LAYER 5/8" GYPSUM BOARD

CORE:
6" STRUCTURAL METAL STUD @ 16" O.C.

INTERIOR SIDE:
5/8" TILE BACKER BD WHERE TILE OCCURS. 5/8" MOISTURE-RESISTANT GYP BD OTHERWISE.
CERAMIC TILE OVER THIN SET MORTAR BED. SEE FIN SCHED & INT ELEVATIONS FOR EXTENTS, SIZE AND TYPE.

WALL TYPE: S81S

FIRE RATING: 1 HR
HEIGHT: TO DECK ABOVE
FIRE TEST: BASIS OF U465
SOUND RATING (MIN): NONE
SOUND TEST:

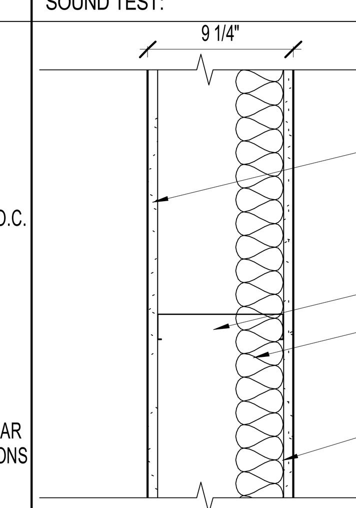

EXTERIOR SIDE:
(1) LAYER 5/8" TYPE 'X' GYPSUM BD

CORE:
6" STRUCTURAL METAL STUD @ 16" O.C.
3" SOUND ATTENUATION BLANKET

INTERIOR SIDE:
6" STRUCTURAL METAL STUD @ 16" O.C.

B

WALL TYPE: S66S.2

FIRE RATING: NONE
HEIGHT: TO DECK ABOVE
FIRE TEST:
SOUND RATING (MIN): STC 45
SOUND TEST: BASIS OF RAL-TL-11-127

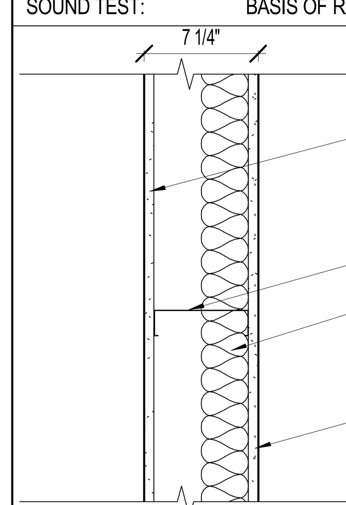

EXTERIOR SIDE:
(1) LAYER 5/8" EXTERIOR GLASS MAT GYPSUM SHEATHING

CORE:
6" STRUCTURAL METAL STUD @ 16" O.C.
3" SOUND ATTENUATION BLANKET

INTERIOR SIDE:
(1) LAYER 5/8" GYPSUM BOARD

WALL TYPE: S66TM

FIRE RATING: NONE
HEIGHT: TO DECK ABOVE
FIRE TEST:
SOUND RATING (MIN): NONE
SOUND TEST:

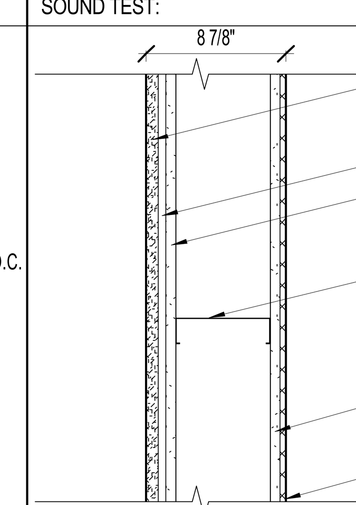

EXTERIOR SIDE:
METAL LAMINATE OVER 3/4" PARTICLE BD SUBSTRATE ON 3/4" DIA SS STANDOFFS W/ 1/2" SPACER
AIR SPACE
(1) LAYER 5/8" GYPSUM BOARD

CORE:
6" STRUCTURAL METAL STUD @ 16" O.C.

INTERIOR SIDE:
5/8" TILE BACKER BD WHERE TILE OCCURS. 5/8" MOISTURE-RESISTANT GYP BD OTHERWISE.
CERAMIC TILE OVER THIN SET MORTAR BED. SEE FIN SCHED & INT ELEVATIONS FOR EXTENTS, SIZE AND TYPE.

WALL TYPE: S86S

FIRE RATING: NONE
HEIGHT: TO DECK ABOVE
FIRE TEST:
SOUND RATING (MIN): STC 45
SOUND TEST: BASIS OF RAL-TL-11-127

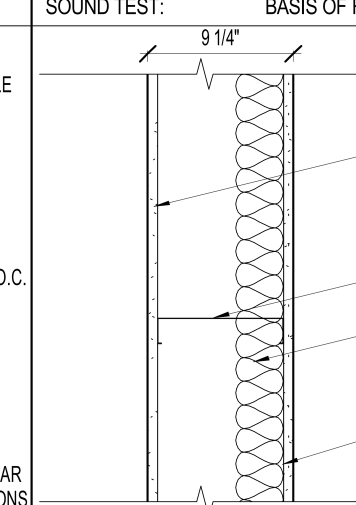

EXTERIOR SIDE:
(1) LAYER 5/8" GYPSUM BOARD

CORE:
6" METAL STUD FRAMING @ 24" OC
3" SOUND ATTENUATION BLANKET

INTERIOR SIDE:
6" METAL STUD FRAMING @ 24" OC

A

WALL TYPE: S61

FIRE RATING: 1 HR
HEIGHT:
FIRE TEST: BASIS OF U465
SOUND RATING (MIN): NONE
SOUND TEST:

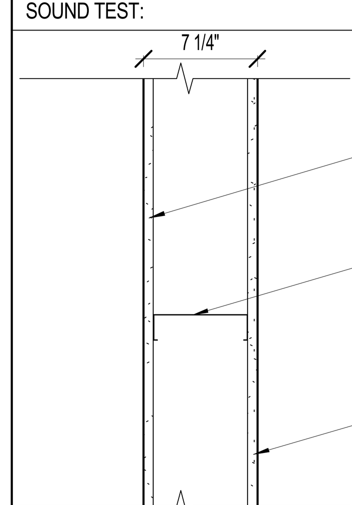

EXTERIOR SIDE:
(1) LAYER 5/8" TYPE 'X' GYPSUM BD

CORE:
6" STRUCTURAL METAL STUD @ 16" O.C.

INTERIOR SIDE:
(1) LAYER 5/8" TYPE 'X' GYPSUM BD

WALL TYPE: S66AS

FIRE RATING: NONE
HEIGHT: TO DECK ABOVE
FIRE TEST:
SOUND RATING (MIN): STC 60
SOUND TEST: 0L08-0913

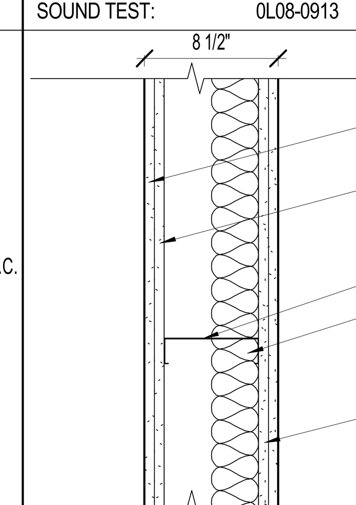

EXTERIOR SIDE:
(1) LAYER 5/8" SOUND-DEADENING GYPSUM BOARD
(1) LAYER 1" TYPE 'X' GYPSUM BOARD

CORE:
6" METAL STUD FRAMING @ 24" OC
3" SOUND ATTENUATION FIBER BLANKET

INTERIOR SIDE:
(2) LAYERS 5/8" TYPE 'X' GYPSUM BOARD

WALL TYPE: S68

FIRE RATING: NONE
HEIGHT: TO DECK ABOVE
FIRE TEST:
SOUND RATING (MIN): NONE
SOUND TEST:

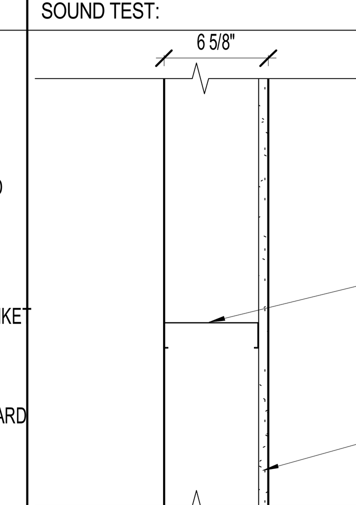

EXTERIOR SIDE:
NONE

CORE:
6" STRUCTURAL METAL STUD @ 16" O.C.

INTERIOR SIDE:
(1) LAYER 5/8" GYPSUM BOARD

WALL TYPE: S88

FIRE RATING: NONE
HEIGHT: TO DECK ABOVE
FIRE TEST:
SOUND RATING (MIN): NONE
SOUND TEST:

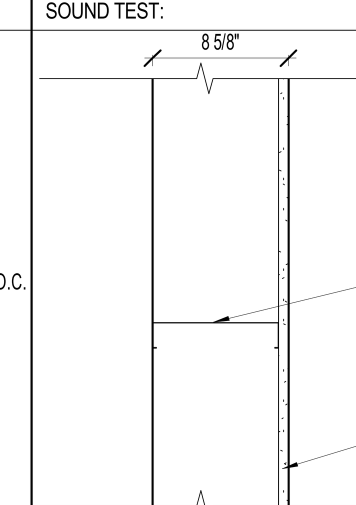

EXTERIOR SIDE:
NONE

CORE:
8" METAL STUD FRAMING @ 16" OC

INTERIOR SIDE:
(1) LAYER 5/8" GYPSUM BOARD

GENERAL NOTES - WALL TYPE

A. ASSEMBLY THICKNESSES DESCRIBED ON THIS SHEET ARE SHOWN AS NOTED. UNLESS NOTED OTHERWISE, WALL DIMENSIONS ARE TO GRID OR FACE OF STUD / STRUCTURE. "CLEAR" DIMENSIONS ARE TO FACE OF FINISH.
B. WALL TYPES DESCRIBED ON THIS SHEET DO NOT ACCOUNT FOR REQUIRED BACKING AND/OR SUPPORT FOR WALL MOUNTED FIXTURES, EQUIPMENT, CASEWORK, AND/OR SYSTEMS FURNITURE. COORDINATE WITH ENLARGED FLOOR PLANS, INTERIOR ELEVATIONS, AND EQUIPMENT PLANS PRIOR TO THE COVERING OF STUD FRAMING. REFER TO MANUFACTURER'S RECOMMENDATIONS AND USE DETAIL B4/AE701 WHERE APPLICABLE.
C. PROVIDE SEISMIC BRACING PER DETAIL A5/AE701 AT ALL WALL TYPES THAT DO NOT EXTEND TO DECK.
D. BUILDING ELEMENTS SHALL BE PROTECTED BY APPROVED AND LISTED FIRE-RESISTANCE-RATED SYSTEMS TO THE MINIMUM RATINGS IDENTIFIED IN THE CODE REVIEW TABLE ON SHEET GI100.
E. PENETRATIONS THROUGH FIRE RATED ASSEMBLIES SHALL BE PROVIDED PER SHEET GI510 SERIES
F. ACCESSORIES PROVIDED ON OR WITHIN WALLS SHALL BE INSTALLED AND SEALED AS REQUIRED TO MAINTAIN REQUIRED FIRE AND ACOUSTIC RATINGS OR MOISTURE TIGHTNESS, AND TO ELIMINATE THERMAL BRIDGING.
G. SEE STRUCTURAL FOR GAGES OF METAL STUDS IN BUILDING EXTERIOR WALLS AND LOAD-BEARING INTERIOR WALLS. UNLESS NOTED OTHERWISE IN THE DRAWINGS, SEE SPECIFICATIONS FOR MINIMUM GAGES FOR NON-LOAD-BEARING METAL STUDS. SEE ALSO DETAIL A3/AE702 FOR SPECIFIC REQUIREMENTS FOR INTERIOR NON-LOAD-BEARING WALL FRAMING.
H. FIRE AND ACOUSTIC (STC) RATINGS LISTED ARE THE MINIMUM REQUIRED RATINGS FOR EACH ASSEMBLY TYPE FOR THIS PROJECT. THE ACTUAL THIRD-PARTY TESTED ASSEMBLY RATING MAY HAVE A HIGHER LISTED POTENTIAL RATING THAN REQUIRED FOR THIS PROJECT.
I. HEIGHTS OF WALLS INDICATED IN THE WALL TYPES ARE DEFAULT VALUES. FOLLOW SPECIFIC DIMENSIONS OR DETAIL CONDITIONS CALLED OUT ELSEWHERE IN THE DOCUMENTS, AS APPLICABLE.

ARCHITECTURAL nexus
SALT LAKE CITY PLACERVILLE SACRAMENTO
Architectural NEXUS, Inc.
2505 East Parleys Way
Salt Lake City, Utah 84109
T 801.924.5000 F 801.924.5001
http://www.archnexus.com

Licensed Architect PETER MOYES No. 83-122248-0301 21 MARCH 2013 State of Utah

Original drawings remain the property of the Architect and as such the Architect retains total ownership and control. The design represented by these drawings is sold to the client for a one time use, unless otherwise agreed upon in writing by the Architect.
© Architectural Nexus, Inc. 2012

UTAH NATIONAL GUARD CAMP WILLIAMS
RTI TASS COMPLEX, PHASE II
NGB PROJECT NO. 490444
17800 SOUTH ACADEMY STREET
BLUFFDALE, UTAH 84065

#	REVISIONS	
1	3.22.13	DFCM REVIEW RESPONSE #2

NEXUS PROJECT #: 11024
CHECKED BY: SMS
DRAWN BY: Author
DATE: 21 MARCH 2013

SHEET CONTENTS:
MISC WALL TYPES

VOLUME A.1 - BID DOCUMENTS

GI505

4/1/2013 10:26:54 AM

ONLINE CERTIFICATIONS DIRECTORY

Design No. U415
BXUV.U415
Fire Resistance Ratings - ANSI/UL 263

Page Bottom

Design/System/Construction/Assembly Usage Disclaimer

- Authorities Having Jurisdiction should be consulted in all cases as to the particular requirements covering the installation and use of UL Listed or Classified products, equipment, system, devices, and materials.
- Authorities Having Jurisdiction should be consulted before construction.
- Fire resistance assemblies and products are developed by the design submitter and have been investigated by UL for compliance with applicable requirements. The published information cannot always address every construction nuance encountered in the field.
- When field issues arise, it is recommended the first contact for assistance be the technical service staff provided by the product manufacturer noted for the design. Users of fire resistance assemblies are advised to consult the general Guide Information for each product category and each group of assemblies. The Guide Information includes specifics concerning alternate materials and alternate methods of construction.
- Only products which bear UL's Mark are considered as Classified, Listed, or Recognized.

Fire-resistance Ratings - ANSI/UL 263

See General Information for Fire-resistance Ratings - ANSI/UL 263

Design No. U415

March 18, 2013

Nonbearing Wall Ratings — 1, 2, 3 or 4 Hr

System A - 1 Hr.

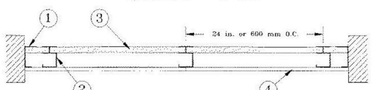

Horizontal Section

System B - 2 Hr.

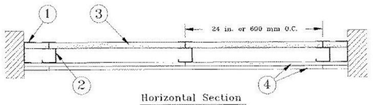

Horizontal Section

System C - 2 Hr.

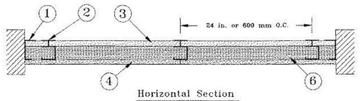

Horizontal Section

System D - 2 Hr.

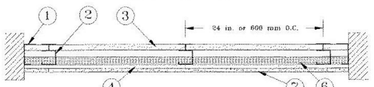

Horizontal Section

System E - 2 Hr.

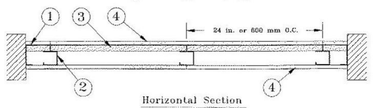

Horizontal Section

System F - 2 Hr.

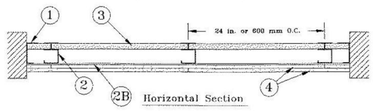

Horizontal Section

System G - 3 Hr.

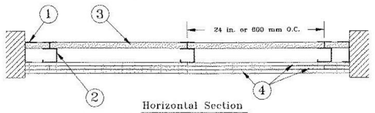

Horizontal Section

System H - 3 Hr.

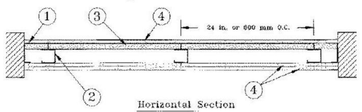

Horizontal Section

System I - 4 Hr.

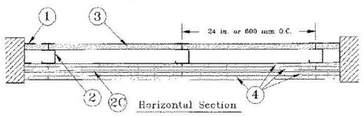

Horizontal Section

1. **Floor, Side and Ceiling Runners —** "J" - shaped runner, min 2-1/2 in. deep (min 4 in. deep when System C is used), with unequal legs of 1 in. and 2 in., fabricated from min 24 MSG (min 20 MSG when Item 4A, 4B or 7 are used) galv steel. Runners positioned with short leg toward finished side of wall. Runners attached to structural supports with steel fasteners located not greater than 2 in. from ends and not greater than 24 in. OC. "E" - shaped studs (Item 2A) may be used as side runners in place of "J" - shaped runners.

2. **Steel Studs —** "C-H" - shaped studs, min 2-1/2 in. deep (min 4 in. deep when System C is used), fabricated from min 25 MSG (min 20 MSG when Items 2D, 4A, 4B or 7 is used) galv steel. Cut to lengths 3/8 to 1/2 in. less than floor-to-ceiling height and spaced 24 in. or 600 mm OC.

2A. **Steel Studs —** (Not Shown) — "E" - shaped studs installed back to back in place of "C-H" - shaped studs (Item 2) "E" - shaped studs secured together with steel screws spaced a maximum 12 in. OC. Fabricated from min 25 MSG (min 20 MSG when Item 2D, 4A, 4B or 7 is used) galv steel, min 2-1/2 in. deep (min 4 in. deep when System C is used), with one leg 1 in. long and two legs 3/4 in. long. Shorter legs 1 in. apart to engage gypsum liner panels. Cut to lengths 3/8 to 1/2 in. less than floor to ceiling heights.

2B. **Furring Channels —** (Optional, not shown) — For use with single or double layer systems. Resilient furring channels fabricated from min 25MSG corrosion protected steel, installed horizontally, and spaced vertically a max 24 in. OC. Flange portion of channel attached to each intersecting "C-H" or "E" stud on side of stud opposite the 1 in. liner panels with 1/2 in. long Type S or S-12 pan-head steel screws. When furring channels are used, wallboard to be installed vertically only. Not to be used with Type FRX-G gypsum wallboard, Type RB-LBG (Item 4A), Type Nelco (Item 4B) or cementitious backer units (Item 7).

2C. **Furring Channels —** For use with System I - "Hat" - shaped, 25 MSG galv steel furring channels attached directly over the inner layers of wallboard to each stud with 2 in. long Type S pan head steel screws. Screws alternate from top flange to bottom flange at each stud intersection. Furring channels spaced vertically max 24 in. OC.

2D. **Steel Framing Members* —** (Optional, not shown) — For use with single or double layer systems. Furring channels and Steel Framing Members as described below. Not to be used with Type FRX-G gypsum wallboard, Type RB-LBG (Item 4A), Type Nelco (Item 4B) or cementitious backer units (Item 7):

a. **Furring Channels —** Formed of No. 25 MSG galv steel. 2-9/16 in. or 2-23/32 in. wide by 7/8 in. deep, spaced max. 24 in. OC perpendicular to studs. Channels secured to studs as described in Item b. Gypsum board installed vertically only and attached to furring channels as described in Item 3.

b. **Steel Framing Members* —** Used to attach furring channels (Item 2Da) to studs (Item 2 or 2A). Clips spaced max. 24 in. OC., and secured to studs with No. 8 x 1-1/2 in. minimum self-drilling, S-12 steel screw through the center grommet. Furring channels are friction fitted into clips. RSIC-1 clip for use with 2-9/16 in. wide furring channels. RSIC-1 (2.75) clip for use with 2-23/32 in. wide furring channels.

PAC INTERNATIONAL INC — Types RSIC-1, RSIC-1 (2.75).

3. **Gypsum Board* —** Gypsum liner panels, nom 1 in. thick, 24 in. or 600 mm (for metric spacing) wide. Panels cut 1 in. less in length than floor to ceiling height. Vertical edges inserted in "H" portion of "C-H" studs or the gap between the two 3/4 in. legs of the "E" studs. Free edge of end panels attached to long leg of vertical "J" - runners with 1-5/8 in. long Type S steel screws spaced not greater than 12 in. OC. When wall height exceeds liner panel length, liner panel may be butted to extend to the full height of the wall. Horizontal joints need not be backed by steel framing. In System I, butt joints in liner panels are staggered min 36 in. Butt joints backed with 6 in. by 22 in. strips of 3/4 in. thick gypsum wallboard (Item 4). Wallboard strips centered over butt joints and secured to liner panels with six 1-1/2 in. long Type G steel screws, three screws along the 22 in. dimension at the top and bottom of the strips.

CGC INC — Type SLX

UNITED STATES GYPSUM CO — Type SLX

USG MEXICO S A DE C V — Type SLX

4. **Gypsum Board* —**

System A - 1 Hr

Gypsum panels, with beveled, square or tapered edges, nom 5/8 in. thick, 48 in. or 1200 mm wide, applied vertically or horizontally, attached to studs with 1 in. long Type S steel screws spaced 12 in. when installed vertically or 8 in OC when installed horizontally. Horizontal joints need not be backed by steel framing.

CGC INC — Types AR, C, IP-AR, IP-X1, IP-X2, IPC-AR, SCX, SHX, ULX, WRC, WRX

UNITED STATES GYPSUM CO — Types AR, C, FRX-G, IP-AR, IP-X1, IP-X2, IPC-AR, SCX, SGX, SHX, ULX, WRC, WRX, USGX.

USG MEXICO S A DE C V — Types AR, C, IP-AR, IP-X1, IP-X2, IPC-AR, SCX, SHX, ULX, WRC, WRX

System B - 2 Hr

Gypsum panels, with beveled, square or tapered edges, nom 1/2 in. or 5/8 in. thick, 48 in. or 1200 mm wide, applied vertically or horizontally in two layers. Inner or base layer attached to studs with 1 in. long Type S steel screws spaced 24 in. OC when installed vertically or 16 in. OC when installed horizontally. Outer or face layer attached to studs with 1-5/8 in. long Type S steel screws spaced 12 in. OC when installed vertically and staggered 12 in. from base layer screws or 8 in. OC when installed horizontally and staggered 8 in. from base layer screws. Horizontal joints between inner and outer layers staggered a min of 12 in. Horizontal joints need not be backed by steel framing. Vertical joints centered over studs and staggered 24 in.

CGC INC — 1/2 in. Type C, IP-X2, IPC-AR or WRC; 5/8 in. Types AR, C, IP-AR, IP-X1, IP-X2, IPC-AR, SCX, SHX, ULX, WRC, WRX

UNITED STATES GYPSUM CO — 1/2 in. Types C, IP-X2, IPC-AR or WRC; 5/8 in. Types AR, C, FRX-G, IP-AR, IP-X1, IP-X2, IPC-AR, SCX, SGX, SHX, ULX, USGX, WRC, WRX

USG MEXICO S A DE C V — 1/2 in. Types C, IP-X2, IPC-AR or WRC; 5/8 in. Types AR, C, IP-AR, IP-X1, IP-X2, IPC-AR, SCX, SHX, ULX, WRC, WRX

System C - 2 Hr

Gypsum panels, with beveled, square or tapered edges, nom 3/4 in. thick, 48 in. or 1200 mm wide, applied vertically or horizontally, secured with 1-1/4 in. long Type S steel screws spaced 8 in. OC along vertical edges and 12 in. OC in the field when installed vertically or 8 in. OC along the vertical edges and in the field when installed horizontally. Horizontal joints need not be backed by steel framing. Screws along side joints offset 4 in. Requires min 4 in. deep framing per Items 1, 2 and 3. Requires min 3 in. thick mineral wool batts per Item 6.

CGC INC — Types IP-X3, or ULTRACODE

UNITED STATES GYPSUM CO — Types IP-X3, or ULTRACODE

USG MEXICO S A DE C V — Types IP-X3, or ULTRACODE

System D - 2 Hr

Gypsum panels, with beveled, square or tapered edges, nom 5/8 in. thick, 48 in. or 1200 mm wide, applied vertically or horizontally, attached directly to studs with 1 in. long Type S steel screws spaced 24 in. when installed vertically or 16 in. OC when installed horizontally. . Horizontal joints need not be backed by steel framing. Requires face layer of 1/2 or 5/8 in. thick cementitious backer units per Item 7 and min 1-1/2 in. thick mineral wool batts per Item 6.

CGC INC — Types AR, C, IP-AR, IP-X1, IP-X2, IPC-AR, SCX, SHX, ULX, WRC, WRX

UNITED STATES GYPSUM CO — Types AR, C, FRX-G, IP-AR, IP-X1, IP-X2, IPC-AR, SCX, SGX, SHX, ULX, USGX, WRC, WRX.

USG MEXICO S A DE C V — Types AR, C, IP-AR, IP-X1, IP-X2, IPC-AR, SCX, SHX, ULX, WRC, WRX

System E - 2 Hr

Gypsum panels, with beveled, square or tapered edges, nom 1/2 in. or 5/8 in. thick, 48 in. or 1200 mm wide, applied vertically or horizontally, attached to studs with 1 in. long Type S steel screws spaced 12 in. OC when installed vertically or 8 in. when installed horizontally. Horizontal joints need not be backed by steel framing.

CGC INC — 1/2 in. Types C, IP-X2, IPC-AR; 5/8 in. Types AR, C, IP-AR, IP-X1, IP-X2, IPC-AR, SCX, SHX, ULX, WRC, WRX

UNITED STATES GYPSUM CO — 1/2 in. Types C, IP-X2, IPC-AR; 5/8 in. Types AR, C, FRX-G, IP-AR, IP-X1, IP-X2, IPC-AR, SCX, SGX, SHX, ULX, USGX, WRC, WRX.

USG MEXICO S A DE C V — 1/2 in. Types C, IP-X2, IPC-AR; 5/8 in. Types AR, C, IP-AR, IP-X1, IP-X2, IPC-AR, SCX, SHX, ULX, WRC, WRX

System F - 2 Hr

Gypsum panels, with beveled, square or tapered edges, nom 1/2 in. or 5/8 in. thick, 48 in. or 1200 mm wide, applied vertically in two layers. Inner or base layer attached to resilient furring channels (Item 2B) with 1 in. long Type S steel screws spaced 24 in. Outer or face layer attached to resilient furring channels (Item 2B) with 1-5/8 in. long Type S steel screws spaced 12 in. OC and staggered 12 in. from base layer screws. Joints between inner and outer layers staggered 24 in.

CGC INC — 1/2 in. Type C, IP-X2, IPC-AR or WRC; 5/8 in. Types AR, C, FRX-G, IP-AR, IP-X1, IP-X2, IPC-AR, SCX, SHX, ULX, WRC, WRX

UNITED STATES GYPSUM CO — 1/2 in. Type C, IP-X2, IPC-AR or WRC; 5/8 in. Types AR, C, FRX-G, IP-AR, IP-X1, IP-X2, IPC-AR, SCX, SGX, SHX, ULX, USGX, WRC, WRX.

USG MEXICO S A DE C V — 1/2 in. Type C, IP-X2, IPC-AR or WRC; 5/8 in. Types AR, C, IP-AR, IP-X1, IP-X2, IPC-AR, SCX, SHX, ULX, WRC, WRX

System G - 3 Hr

Gypsum panels, with beveled, square or tapered edges, nom 5/8 in. thick, 48 in. or 1200 mm wide, applied vertically or horizontally in three layers. Inner or base layer attached to studs with 1 in. long Type S steel screws spaced 24 in. OC when installed vertically or 16 in OC when installed horizontally. Middle layer attached to studs with 1-5/8 in. long Type S steel screws spaced 24 in. when installed vertically or 16 in. OC when installed horizontally. Outer or face layer attached to studs with 2-1/4 in. long Type S steel screws spaced 16 in. when installed vertically or 12 in. OC when installed horizontally. Screws offset 6 in. from layer below. Horizontal joints on adjacent layers staggered a min of 12 in. . Horizontal joints need not be backed by steel framing. Vertical Joints centered over studs and staggered 24 in. on adjacent layers.

CGC INC — Types C, IP-X2, IPC-AR, WRC

UNITED STATES GYPSUM CO — Types C, IP-X2, IPC-AR, WRC

USG MEXICO S A DE C V — Types C, IP-X2, IPC-AR, WRC

System H - 3 Hr

Gypsum panels, with beveled, square or tapered edges, nom 5/8 in. thick, 48 in. or 1200 mm wide, applied vertically or horizontally, two layers over the flange of the "C" section of the studs, one layer over the flange of the "H" section of the studs. Inner or base layer attached to studs with 1 in. long Type S steel screws spaced 24 in. OC when installed vertically or 16 in. OC when installed horizontally. Face layer attached to studs with 1-5/8 in. long Type S steel screws spaced 16 in. when installed vertically or 12 in. OC when installed horizontally. Screws offset 6 in. from layer below. Horizontal joints on adjacent layers staggered a min of 12 in. Horizontal joints need not be backed by steel framing. Vertical Joints centered over studs and staggered 24 in. on adjacent layers.

CGC INC — Types C, IP-X2, IPC-AR, WRC

UNITED STATES GYPSUM CO — Types C, IP-X2, IPC-AR, WRC

USG MEXICO S A DE C V — Types C, IP-X2, IPC-AR, WRC

System I - 4 Hr

Gypsum panels, with beveled, square or tapered edges, nom 3/4 in. thick, 4 ft wide (or 1200 mm for metric spacing) wallboard with square or tapered edges. Total of four layers to be used. First and second (inner) layers applied vertically or horizontally over the steel studs. Horizontal joints need not be backed by steel framing. When applied vertically, joints centered over studs and staggered min 24 in., otherwise all joints staggered min 12 in. First layer secured to studs with 1-1/4 in. long Type S self-drilling, self-tapping bugle-head steel screws spaced 24 in. OC. Second layer secured to studs with 2-1/4 in. long Type S self-drilling, self-tapping bugle-head steel screws spaced 12 in. OC. Third layer applied vertically over the furring channels (Item 2C) with a 1-1/4 in. long Type S self-drilling, self-tapping bugle-head steel screws spaced 12 in. OC. Fourth layer applied vertically or horizontally with 2-1/4 in. long Type S self-drilling, self-tapping bugle-head steel screws spaced 12 in. OC. When applied vertically, joints to be staggered min 24 in. from third layer, otherwise all joints staggered min 12 in.

CGC INC — Types IP-X3, or ULTRACODE

UNITED STATES GYPSUM CO — Types IP-X3, or ULTRACODE

USG MEXICO S A DE C V — Types IP-X3, or ULTRACODE

4A. **Gypsum Board* —** (As an alternate to Item 4 Systems A, B, C, D, E, G, H, and I when used as the base layer, For direct attachment only) - Nom 5/8 in. or ¾ in. thick lead backed gypsum panels with beveled, square or tapered edges, applied vertically. Vertical joints centered over 20 MSG steel studs and staggered min 1 stud cavity on opposite sides of studs. See Items 1, 2, 2A, 2B and 2D. Wallboard secured to studs with 1-1/4 in. long Type S-12 steel screws spaced 8 in. OC at perimeter and 12 in. OC in the field. For Joint Compound see Item 5. To be used with Lead Batten Strips (see Item 9) or Lead Discs or Tabs (see Item 10).

RAY-BAR ENGINEERING CORP — Type RB-LBG

4B. **Gypsum Board* —** (As an alternate to Item 4 Systems A, B, C, D, E, G, H, and I when used as the base layer, For direct attachment only) - Nominal 5/8 in. thick lead backed gypsum panels with beveled, square or tapered edges, applied vertically. Vertical joints centered over studs and staggered min 1 stud cavity on opposite sides of studs. Wallboard secured to studs with 1-1/4 in. long Type S-12 (or #6 by 1-1/4 in. long bugle head fine driller) steel screws spaced 8 in. OC at perimeter and 12 in. OC in the field.

NEW ENGLAND LEAD BURNING CO INC, DBA NELCO — Nelco

4C. **Gypsum Board* —** (As an alternate to Item 4 Systems A, B, C, D, E, G, H, and I when used as the base layer, For direct attachment only) - Nom 5/8 or 3/4 in. thick lead backed gypsum panels with beveled, square or tapered edges, applied vertically. Vertical joints centered over 20 MSG steel studs and staggered min 1 stud cavity on opposite sides of studs. See Items 1, 2, 2A, 2B and 2D. Wallboard secured to studs with 1-1/4 in. long Type S-12 steel screws spaced 8 in. OC at perimeter and 12 in. OC in the field. For Joint Compound see Item 5. To be used with Lead Batten Strips (see Item 9A) or Lead Discs (see Item 10A). Lead batten strips required behind vertical joints of lead backed gypsum wallboard and optional at remaining stud locations. Lead batten strips, min 2 in. wide, max 10 ft long with a max thickness of 0.140 in. placed on the face of studs and attached to the stud with two 1 in. long Type S-8 pan head steel screws, one at the top of the strip and one at the bottom of the strip.

MAYCO INDUSTRIES INC — Type X-Ray Shielded Gypsum

4D. **Gypsum Board* —** (As an alternate to Item 4 Systems A, B, C, D, E, G, H, and I when used as the base layer, For direct attachment only) Nom 5/8 in. thick lead backed gypsum panels with beveled, square or tapered edges, applied vertically. Vertical joints centered over studs and staggered min 1 stud cavity on opposite sides of studs. Wallboard secured to studs with 1-1/4 in. long Type S-12 steel screws gypsum panel steel screws spaced 8 in. OC at perimeter and 12 in. OC in the field. Lead batten strips required behind vertical joints of lead backed gypsum wallboard and optional at remaining stud locations. Lead batten strips, min 2 in. wide, max 8 ft long with a max thickness of 0.14 in. placed on the face of studs and attached to the stud with construction adhesive and two 1 in. long Type S-12 pan head steel screws, one at the top of the strip and one at the bottom of the strip. Lead discs, nominal 3/8 in. diam by max 0.085 in. thick. Compression fitted or adhered over the screw heads. Lead batten strips and discs to have a purity of 99.9% meeting the Federal specification QQ-L-201f, Grade "C".

RADIATION PROTECTION PRODUCTS INC — Type RPP - Lead Lined Drywall

5. **Joint Tape and Compound —** (Not Shown)

Systems A, B, C, E, F, G, H, I

Joints on outer layers of gypsum boards (Item 4 and 4A) covered with paper tape and joint compound. Paper tape and joint compound may be omitted when gypsum boards are supplied with square edges. Exposed screw heads covered with joint compound.

6. **Batts and Blankets* —**

Systems A, B, E, F, G, H, I

(Optional) — Mineral wool or glass fiber batts partially or completely filling stud cavity. Any mineral wool or glass fiber batt mineral bearing the UL Classification Marking as to Fire Resistance.

Systems C & D

Min 3 in. (System C) and min 1-1/2 in. (System D) thick mineral wool batts, friction fitted between the studs and floor and ceiling runners.

THERMAFIBER INC — Type SAFB

7. **Cementitious Backer Units* —** (System D) — Nom 1/2 or 5/8 in. thick panels, square edge, attached to studs over gypsum wallboard with 1-5/8 in. long, Type S-12, corrosion resistant steel screws spaced 8 in. OC and staggered 8 in. from gypsum wall board screws. Joints covered with glass fiber mesh tape. Vertical joints staggered one stud cavity from gypsum wallboard joints. Horizontal joints staggered a min of 12 in. from the gypsum wallboard joints.

UNITED STATES GYPSUM CO — Type DCB

8. **Laminating Adhesive* —** (Optional, Not Shown) — Used to bond outer layer of Cementitious Backer Units (Item 7) to inner layers of Gypsum Board (Item 4) in System D. ANSI A136.1 Type 1 organic adhesive applied with 1/4 in. square notched trowel. See Adhesives (BYWR) in the Fire Resistance Directory or Adhesives (BJLZ) in the Building Materials Directory for names of Classified companies.

9. **Lead Batten Strips —** (Not Shown, For Use With Item 4A) - Lead batten strips, min 1-1/2 in. wide, max 10 ft long with a max thickness of 0.125 in. Strips placed on the interior face of studs and attached from the exterior face of the stud with two 1 in. long Type S-12 pan head steel screws, one at the top of the strip and one at the bottom of the strip. Lead batten strips to have a purity of 99.9% meeting the Federal specification QQ-L-201f, Grade "C". Lead batten strips required behind vertical joints of lead backed gypsum wallboard (Item 4A) and optional at remaining stud locations. Required behind vertical joints.

9A. **Lead Batten Strips —** (Not Shown, for use with Item 4C) Lead batten strips, 2 in. wide, max 10 ft long with a max thickness of 0.142 in. Strips placed on the face of studs and attached to the stud with two min. 1 in. long min. Type S-8 pan head steel screws, one at the top of the strip and one at the bottom of the strip or with one min. 1 in. long min. Type S-8 pan head steel screw at the top of the strip. Lead batten strips to have a purity of 99.9% meeting the Federal specification QQ-L-201f, Grades "A, B, C or D". Lead batten strips required behind vertical joints of lead backed gypsum wallboard (Item 6) and optional at remaining stud locations.

10. **Lead Discs or Tabs —** (Not Shown, For Use With Item 4A) - Used in lieu of or in addition to the lead batten strips (Item 9) or optional at other locations - Max 3/4 in. diam by max 0.125 in. thick lead discs compression fitted or adhered over steel screw heads or max 1/2 in. by 1-1/4 in. by max 0.125 in. thick lead tabs placed on gypsum boards (Item 4A) underneath screw locations prior to the installation of the screws. Lead discs or tabs to have a purity of 99.9% meeting the Federal specification QQ-L-201f, Grade "C".

10A. **Lead Discs —** (Not Shown, for use with Item 4C) Max 5/16 in. diam by max 0.140 in. thick lead discs compression fitted or adhered over steel screw heads. Lead discs to have a purity of 99.9% meeting the Federal Specification QQ-L-201f, Grades "A, B, C or D".

11. **Lead Batten Strips —** (Not Shown, For Use With Item 4B) Lead batten strips, 2 in. wide, max 10 ft long with a max thickness of 0.142 in. Strips placed on the face of studs and attached to the stud with two min. 1 in. long min. Type S-8 pan head steel screws, one at the top of the strip and one at the bottom of the strip or with one min. 1 in. long min. Type S-8 pan head steel screw at the top of the strip. Lead batten strips to have a purity of 99.9% meeting the Federal specification QQ-L-201f, Grade "C". Lead batten strips required behind vertical joints of lead backed gypsum wallboard (Item 4B) and optional at remaining stud locations.

12. **Lead Tabs —** (Not Shown, For Use With Item 4B) 2 in. wide, 5 in. long with a max thickness of 0.142 in. Tabs friction-fit around front face of stud, the stud folded back flange, and the back face of the stud. Tabs required at each location where a screw (that secures the gypsum boards, Item 4B) will penetrate the steel stud. Lead tabs to have a purity of 99.9% meeting the Federal specification QQ-L-201f, Grade "C". Lead tabs may be held in place with standard adhesive tape if necessary.

*Bearing the UL Classification Mark

ONLINE CERTIFICATIONS DIRECTORY

Design No. U459
BXUV.U459
Fire Resistance Ratings - ANSI/UL 263

Page Bottom

Design/System/Construction/Assembly Usage Disclaimer

- Authorities Having Jurisdiction should be consulted in all cases as to the particular requirements covering the installation and use of UL Listed or Classified products, equipment, system, devices, and materials.
- Authorities Having Jurisdiction should be consulted before construction.
- Fire resistance assemblies and products are developed by the design submitter and have been investigated by UL for compliance with applicable requirements. The published information cannot always address every construction nuance encountered in the field.
- When field issues arise, it is recommended the first contact for assistance be the technical service staff provided by the product manufacturer noted for the design. Users of fire resistance assemblies are advised to consult the general Guide Information for each product category and each group of assemblies. The Guide Information includes specifics concerning alternate materials and alternate methods of construction.
- Only products which bear UL's Mark are considered as Classified, Listed, or Recognized.

Fire Resistance Ratings - ANSI/UL 263

See General Information for Fire Resistance Ratings - ANSI/UL 263

Design No. U459

August 06, 2012

Nonbearing Wall Rating — 2 Hr.

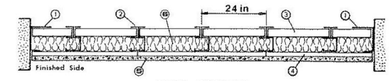

HORZ. SECTION

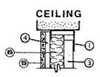

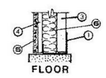

FLOOR

1. **Floor and Ceiling Runners —** "J" shaped, 2-1/2 in. wide with unequal legs of 1 in. and 2 in., fabricated from 20 MSG (0.0329 in., min bare metal thickness) galv steel. Position runners with short leg towards finish side of wall. Runners attached to structural supports with steel fasteners located not greater than 2 in. from ends and not greater than 24 in. OC.

2. **Steel Studs —** "C-H" shaped studs, 2-1/2 in. wide by 1-1/2 in. deep, fabricated from min 20 MSG (0.0329 in., min bare metal thickness) galv steel. Cut to lengths 3/8 to 1/2 in. less than floor to ceiling height and spaced 24 in. OC.

2A. **Steel Studs —** (not shown) — "E" -shaped studs installed in place of "C-H" -shaped studs (Item 2) around fire rated openings. Fabricated from min 20 MSG (0.0329 in., min bare metal thickness) galv steel, 2-1/2 in. wide, with one leg 1 in. long and two legs 3/4 in. long. Shorter legs 1 in. apart to engage gypsum liner panels. Cut to lengths 3/8 in. less than floor to ceiling height. Sill and lintel of opening formed with "J" -shaped runners (Item 1) secured to "E" -shaped studs with angle clips and steel screws.

3. **Gypsum Board* —** 1 in. thick gypsum wallboard liner panels, supplied in nominal 24 in. widths. Panels cut 1 in. less in length than floor to ceiling height. Vertical edges inserted in "H" shaped section of "C-H" studs. Free edge of end panels attached to long leg of "J" runners with 1-5/8 in. long Type S-12 steel screws spaced not greater than 12 in. O. C.

CGC INC — Type SLX.

UNITED STATES GYPSUM CO — Type SLX.

USG MEXICO S A DE C V — Type SLX.

4. **Gypsum Board* —** 5/8 in. thick, 4 ft wide gypsum wallboard applied vertically and attached to studs with 1 in. long Type S-12 steel screws spaced 24 in. OC.

CGC INC — Types AR, C, IP-AR, IP-X1, IP-X2, IPC-AR, SCX, SHX, ULX, WRX.

UNITED STATES GYPSUM CO — Types AR, C, FRX-G, IP-AR, IP-X1, IP-X2, IPC-AR, SCX, SHX, ULX, USGX or WRX.

USG MEXICO S A DE C V — Types AR, C, IP-X1, IP-X2, IPC-AR, SCX, SHX, ULX, WRX.

4A. **Gypsum Board* —** (As an alternate to Item 4) — Nom 3/4 in. thick, 4 ft wide, installed as described in Item 4 with screw length increased to 1-1/4 in.

CGC INC — Types AR, IP-AR.

UNITED STATES GYPSUM CO — Types AR, IP-AR.

USG MEXICO S A DE C V — Types AR, IP-AR.

5. **Cementitious Backer Units* —** Board 1/2 or 5/8 in. thick, square edge, attached to studs with 1-5/8 in. long, (1-7/8 in. long when Item 4A is used), Type S-12, corrosion resistant wafer head steel screws spaced 8 in. OC. Joints covered with glass fiber mesh tape.

UNITED STATES GYPSUM CO — Durock Exterior Cement Board or Durock brand Cement Board.

6. **Batts and Blankets* —** Placed to fill interior of stud cavity, 1-1/2 in. min thickness.

THERMAFIBER INC — Type SAFB.

7. **Laminating Adhesive* —** (Optional) — Used to bond outer layer of Mineral and Fiber Board (Item 5) to inner layers of Gypsum Board (Item 4). ANSI A136.1 Type 1 organic adhesive applied with 1/4 in. square notched trowel. See Adhesives (BYWR) in the Fire Resistance Directory or Adhesives (BJLZ) in the Building materials Directory for names of Classified companies.

*Bearing the UL Classification Mark

ARCHITECTURAL NEXUS
SALT LAKE CITY PLACERVILLE SACRAMENTO

Architectural NEXUS, Inc.
2505 East Parleys Way
Salt Lake City, Utah 84109
T 801.924.5000 F 801.924.5001
http://www.archnexus.com

Licensed Architect PETER MOYES No. 21 MARCH 2013 83-122248-0301 State of Utah

Original drawings remain the property of the Architect and as such the Architect retains total ownership and control. The design represented by these drawings is sold to the client for a one time use, unless otherwise agreed upon in writing by the Architect. © Architectural Nexus, Inc. 2012

UTAH NATIONAL GUARD CAMP WILLIAMS
RTI TASS COMPLEX, PHASE II
NGB PROJECT NO. 490444
17800 SOUTH ACADEMY STREET
BLUFFDALE, UTAH 84065

#		REVISIONS
1	3.15.13	DFCM REVIEW RESPONSE
2	3.22.13	DFCM REVIEW RESPONSE #2

NEXUS PROJECT #:	11024
CHECKED BY:	SMS
DRAWN BY:	Author
DATE:	21 MARCH 2013

SHEET CONTENTS:
UL LISTINGS

VOLUME A - BID DOCUMENTS

GI512

4/1/2013 10:26:56 AM

1 2 3 4 5 6

ONLINE CERTIFICATIONS DIRECTORY

Design No. U465
BXUV.U465
Fire Resistance Ratings - ANSI/UL 263

Page Bottom

Design/System/Construction/Assembly Usage Disclaimer

- Authorities Having Jurisdiction should be consulted in all cases as to the particular requirements covering the installation and use of UL Listed or Classified products, equipment, system, devices, and materials.
- Authorities Having Jurisdiction should be consulted before construction.
- Fire resistance assemblies and products are developed by the design submitter and have been investigated by UL for compliance with applicable requirements. The published information cannot always address every construction nuance encountered in the field.
- When field issues arise, it is recommended the first contact for assistance be the technical service staff provided by the product manufacturer noted for the design. Users of fire resistance assemblies are advised to consult the general Guide Information for each product category and each group of assemblies. The Guide Information includes specifics concerning alternate materials and alternate methods of construction.
- Only products which bear UL's Mark are considered as Classified, Listed, or Recognized.

Fire-resistance Ratings - ANSI/UL 263

See General Information for Fire-resistance Ratings - ANSI/UL 263

Design No. U465

February 22, 2013

Nonbearing Wall Rating — 1 HR.

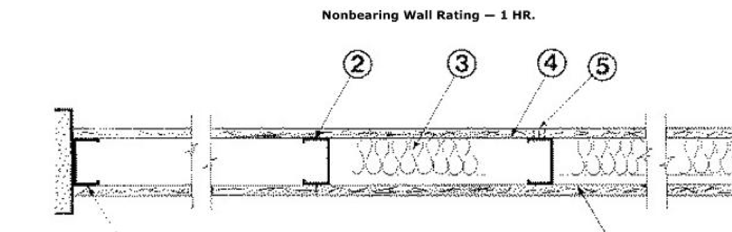

1. **Floor and Ceiling Runners —** (Not shown) — Channel shaped runners, 3-5/8 in. deep (min), 1-1/4 in. legs, formed from min No. 25 MSG galv steel, attached to floor and ceiling with fasteners spaced 24 in. OC max.

1A. **Framing Members*— Floor and Ceiling Runners —** (Not shown) — As an alternate to Item 1 - Channel shaped, min 3-5/8 in. deep, attached to floor and ceiling with fasteners 24 in. OC. max.

ALLSTEEL & GYPSUM PRODUCTS INC — Type SUPREME Framing System

CONSOLIDATED FABRICATORS CORP, BUILDING PRODUCTS DIV — Type SUPREME Framing System

QUAIL RUN BUILDING MATERIALS INC — Type SUPREME Framing System

SCAFCO STEEL STUD MANUFACTURING CO — Type SUPREME Framing System

STEEL CONSTRUCTION SYSTEMS INC — Type SUPREME Framing System

UNITED METAL PRODUCTS INC — Type SUPREME Framing System

1B. **Framing Members* - Floor and Ceiling Runners —** Not shown - In lieu of Item 1 — For use with Item 2B, proprietary channel shaped runners, 1-1/4 in. wide by min 3-5/8 in. deep fabricated from min 0.020 in. thick galv steel, attached to floor and ceiling with fasteners spaced 24 in. OC max.

CALIFORNIA EXPANDED METAL PRODUCTS CO — Viper20™ Track

CRACO MFG INC — SmarterTrack20™, SmartTrack20™

MARINO/WARE, DIV OF WARE INDUSTRIES INC — Viper20™ Track

PHILLIPS MFG CO L L C — Viper20™ Track

1C. **Floor and Ceiling Runners —** (Not shown)—For use with Item 2C- Channel shaped, fabricated from min 20 MSG corrosion-protected or galv steel, min depth to accommodate stud size, with min 1 in. long legs, attached to floor and ceiling with fasteners spaced max 24 in. OC.

1D. **Framing Members*— Floor and Ceiling Runners —** Not shown - In lieu of Items 1 through 1C — For use with Item 2D and 4G only, proprietary channel shaped runners, 1-1/4 in. deep by min 3-5/8 in. wide fabricated from min 0.018 in. thick galv steel, attached to floor and ceiling with fasteners spaced 24 in. OC max.

CLARKDIETRICH BUILDING SYSTEMS — CD ProTRAK

DMFCWBS L L C — ProTRAK

MBA BUILDING SUPPLIES — ProTRAK

RAM SALES L L C — Ram ProTRAK

SOUTHEASTERN STUD & COMPONENTS INC — ProTRAK

STEEL STRUCTURAL SYSTEMS L L C — Tri-S ProTRAK

1E. **Framing Members*— Floor and Ceiling Runners —** Not shown - In lieu of Items 1 through 1D — For use with Item 2E and 4I only, proprietary channel shaped runners, 1-1/4 in. deep by min 3-5/8 in. wide fabricated from min 0.018 in. thick galv steel, attached to floor and ceiling with fasteners spaced 24 in. OC max.

TELLING INDUSTRIES L L C — TRUE-TRACK™

1F. **Framing Members*— Floor and Ceiling Runners —** Not shown - In lieu of Items 1 through 1E — For use with Item 2, channel shaped runners, 1-1/4 in. deep by min 3-5/8 in. wide fabricated from min 25 MSG steel, attached to floor and ceiling with fasteners spaced 24 in. OC max.

KIRII (HONG KONG) LTD — Type KIRII

1G. **Framing Members*— Floor and Ceiling Runners —** Not shown - In lieu of Items 1 through 1F — For use with Item 2, channel shaped runners, 1-1/4 in. deep by min 3-5/8 in. wide, attached to floor and ceiling with fasteners spaced 24 in. OC max.

STUDCO BUILDING SYSTEMS — CROCSTUD Track

1H. **Floor and Ceiling Runners —** (Not shown) — Channel shaped, fabricated from min 0.02 in. galv steel, min width to

steel or thicker, attached to floor and ceiling with fasteners spaced max 24 in. OC.

MARINO/WARE, DIV OF WARE INDUSTRIES INC — Viper20™ Track VT100.

1I. **Framing Members* - Floor and Ceiling Runners —** Not shown - In lieu of Item 1 — For use with Item 2H, proprietary channel shaped runners, 1-1/4 in. wide by min 3-5/8 in. deep fabricated from min 0.020 in. thick galv steel, attached to floor and ceiling with fasteners spaced 24 in. OC max.

TELLING INDUSTRIES L L C — Viper20™ Track

2. **Steel Studs —** Channel shaped, 3-5/8 in. deep (min), formed from min No. 25 MSG galv steel spaced 24 in. OC max. Studs to be cut 3/4 in. less than assembly height.

2A. **Framing Members*— Steel Studs —** As an alternate to Item 2 - Channel shaped studs, min 3-5/8 in. deep, spaced a max of 24 in. OC. Studs to be cut 3/4 in. less than assembly height.

ALLSTEEL & GYPSUM PRODUCTS INC — Type SUPREME Framing System

CONSOLIDATED FABRICATORS CORP, BUILDING PRODUCTS DIV — Type SUPREME Framing System

QUAIL RUN BUILDING MATERIALS INC — Type SUPREME Framing System

SCAFCO STEEL STUD MANUFACTURING CO — Type SUPREME Framing System

STEEL CONSTRUCTION SYSTEMS INC — Type SUPREME Framing System

UNITED METAL PRODUCTS INC — Type SUPREME Framing System

2B. **Framing Members* - Steel Studs —** Not shown - In lieu of Item 2 — For use with Item 1B, proprietary channel shaped steel studs, 1-1/4 in. wide by min 3-5/8 in. deep fabricated from min 0.020 in. thick galv steel. Studs cut 3/4 in. less in length than assembly height.

CALIFORNIA EXPANDED METAL PRODUCTS CO — Viper20™

CRACO MFG INC — SmarterStud20™, SmartStud20™

MARINO/WARE, DIV OF WARE INDUSTRIES INC — Viper20™

PHILLIPS MFG CO L L C — Viper20™

2C. **Steel Studs —** (As an alternate to Item 2, For use with Item 4E) Channel shaped, fabricated from min 20 MSG corrosion-protected or galv steel, 3-1/2 in. min depth, spaced a max of 16 in. OC. Studs friction-fit into floor and ceiling runners. Studs to be cut 5/8 to 3/4 in. less than assembly height.

2D. **Framing Members*— Steel Studs —** As an alternate to Items 2 through 2C- For use with Item 1D and 4G only, channel shaped studs, min 3-5/8 in. wide fabricated from min 0.018 in. thick galv steel, spaced a max of 24 in. OC. Studs to be cut 1/2 in. less than assembly height.

CLARKDIETRICH BUILDING SYSTEMS — CD ProSTUD

DMFCWBS L L C — ProSTUD

MBA BUILDING SUPPLIES — ProSTUD

RAM SALES L L C — Ram ProSTUD

SOUTHEASTERN STUD & COMPONENTS INC — ProSTUD

STEEL STRUCTURAL SYSTEMS L L C — Tri-S ProSTUD

2E. **Framing Members*— Steel Studs —** As an alternate to Items 2 through 2D- For use with Item 1E and 4I only, channel shaped studs, min 3-5/8 in. wide fabricated from min 0.018 in. thick galv steel, spaced a max of 24 in. OC. Studs to be cut 1/2 in. less than assembly height.

TELLING INDUSTRIES L L C — TRUE-STUD™

2F. **Framing Members*— Steel Studs —** As an alternate to Items 2 through 2E- For use with Item 1F, channel shaped studs, min 3-5/8 in. wide fabricated from min 25 MSG steel, spaced a max of 24 in. OC. Studs to be cut 1/2 in. less than assembly height.

KIRII (HONG KONG) LTD — Type KIRII

2G. **Framing Members* - Steel Studs —** Not shown - In lieu of Item 2 through 2F - For use with Item 1G. Proprietary channel shaped studs, minimum 3-5/8 in. wide, Studs to be cut 1/2 in. less than the assembly height.

STUDCO BUILDING SYSTEMS — CROCSTUD

2H. **Framing Members* - Steel Studs —** Not shown - In lieu of Item 2 — For use with Item 1I, proprietary channel shaped steel studs, 1-1/4 in. wide by min 3-5/8 in. deep fabricated from min 0.020 in. thick galv steel. Studs cut 3/4 in. less in length than assembly height.

TELLING INDUSTRIES L L C — Viper20™

3. **Batts and Blankets* —** (Optional) — Mineral wool or glass fiber batts partially or completely filling stud cavity.

See **Batts and Blankets** (BZJZ) category for names of Classified companies.

3A. **Fiber, Sprayed* —** As an alternate to Batts and Blankets (Item 3) — Spray applied cellulose material. The fiber is applied with water to completely fill the enclosed cavity in accordance with the application instructions supplied with the product. Nominal dry density of 3.0 lb/ft^3. Alternate application method: The fiber is applied with U.S. Greenfiber LLC Type AD100 hot melt adhesive at a nominal ratio of one part adhesive to 6.6 parts fiber to completely fill the enclosed cavity in accordance with the application instructions supplied with the product. Nominal dry density of 2.5 lb/ft^3.

U S GREENFIBER L L C — Cocoon2 Stabilized or Cocoon-FRM (Fire Rated Material)

3B. **Fiber, Sprayed* —** As an alternate to Batts and Blankets (Item 3) and Item 3A - Spray applied cellulose insulation material. The fiber is applied with water to interior surfaces in accordance with the application instructions supplied with the product. Applied to completely fill the enclosed cavity. Minimum dry density of 4.3 pounds per cubic ft.

NU-WOOL CO INC — Cellulose Insulation

3C. **Fiber, Sprayed* —** As an alternate to Batts and Blankets (Item 3) - Spray applied cellulose fiber. The fiber is applied with water to completely fill the enclosed cavity in accordance with the application instructions supplied with the product. The minimum dry density shall be 4.30 lbs/ft^3.

INTERNATIONAL CELLULOSE CORP — Celbar-RL

3D. **Batts and Blankets* —** For use with Item 8. Nom 3 in. thick, minimum 3.4 pcf mineral wool batts, friction fit between the studs and floor and ceiling runners.

See **Batts and Blankets** (BZJZ) category for names of manufacturers.

4. **Gypsum Board* —** 5/8 in. thick, 4 ft wide, attached to steel studs and floor and ceiling track with 1 in. long, Type S steel screws spaced 8 in. OC. along edges of board and 12 in. OC in the field of the board. Joints oriented vertically and staggered on opposite sides of the assembly. When attached to item 6 (resilient channels) or 6A or 6C (furring channels), gypsum board is screw attached to furring channels with 1 in. long, Type S steel screws spaced 12 in. OC.

ACADIA DRYWALL SUPPLIES LTD — Type X

AMERICAN GYPSUM CO — Types AG-C, AGX-1, M-Glass

BEIJING NEW BUILDING MATERIALS PUBLIC LTD CO — Type DBX-1.

CGC INC — Types AR, C, IP-AR, IP-X1, IP-X2, IPC-AR, SCX, SHX, WRC or WRX.

CERTAINTEED GYPSUM INC — Types 1, EGRG, GlasRoc, Type X, Type C, SilentFX, 5/8" Easi-Lite Type X.

CERTAINTEED GYPSUM CANADA INC — Type C, Type X, Type Abuse-Resistant, 5/8" Easi-Lite Type X.

GEORGIA-PACIFIC GYPSUM L L C — Types 5, 6, 9, C, DAP, DD, DA, DAPC, DGG, DS, GPFS6, LS.

LAFARGE NORTH AMERICA INC — Types LGFC2, LGFC2A, LGFC6, LGFC6A, LGFC-C, LGFC-C/A, LGFC-WD, LGLLX.

NATIONAL GYPSUM CO — Types FSK, FSK-C, FSK-G, FSW-C, FSW-G, FSW, FSW-3, FSW-5, FSW-6, FSL.

PABCO BUILDING PRODUCTS L L C, DBA PABCO GYPSUM — Types PG-C, PG-9, PG-11, PGS-WRS.

PANEL REY S A — Types GREX, PRX, RHX, MDX, ETX.

SIAM GYPSUM INDUSTRY (SARABURI) CO LTD — Type EX-1

TEMPLE-INLAND — Type X, Veneer Plaster Base - Type X, Water Rated - Type X, Sheathing - Type X, Soffit - Type X, TG-C, GreenGlass Type X, Type X ComfortGuard Sound Deadening Gypsum Board.

THAI GYPSUM PRODUCTS PCL — Type X, Type C.

UNITED STATES GYPSUM CO — Type AR, C, FRX-G, IP-AR, IP-X1, IP-X2, IPC-AR, SCX, SHX, WRC, WRX, USGX (Joint tape and compound, Item 5, optional for use with Type USGX).

USG MEXICO S A DE C V — Type AR, C, IP-AR, IP-X1, IP-X2, IPC-AR, SCX, SHX, WRC or WRX.

4A. **Gypsum Board* —** (As alternate to Item 4) - Nom 5/8 in. thick gypsum panels with beveled, square or tapered edges, applied vertically or horizontally. Vertical joints centered over studs and staggered one stud cavity on opposite sides of studs. Horizontal edge joints and horizontal butt joints on opposite sides of studs need not be staggered or backed by steel framing. Panels attached to steel studs and floor runner with 1 in. long Type S steel screws spaced 8 in. OC when applied horizontally, or 8 in. OC along vertical and bottom edges and 12 in. OC in the field when panels are applied vertically. When used in widths other than 48 in., gypsum panels to be installed horizontally.

CGC INC — Types AR, C, IP-AR, IP-X1, IP-X2, IPC-AR, SCX, SHX, WRC or WRX.

CERTAINTEED GYPSUM INC — Type X, Type C, Type EGRG/ GlasRoc.

CERTAINTEED GYPSUM CANADA INC — Type X, Type C, Type EGRG/ GlasRoc.

GEORGIA-PACIFIC GYPSUM L L C — Types DAP, DAPC, DGG, DS.

LAFARGE NORTH AMERICA INC — Type LGFC6A, LGFC-C/A

THAI GYPSUM PRODUCTS PCL — Type X, Type C.

UNITED STATES GYPSUM CO — T ype AR, C, FRX-G, IP-AR, IP-X1, IP-X2, IPC-AR, SCX, SHX, WRC, WRX, , USGX (Joint tape and compound, Item 5, optional for use with Type USGX).

USG MEXICO S A DE C V — Type AR, C, IP-AR, IP-X1, IP-X2, IPC-AR, SCX, SHX, WRC or WRX.

4B. **Gypsum Board* —** (As an alternate to Items 4 or 4A) — Nom 3/4 in. thick, 4 ft wide, installed as described in Item 4A with screw length increased to 1-1/4 in.

CGC INC — Types AR, IP-AR.

UNITED STATES GYPSUM CO — Types AR, IP-AR.

USG MEXICO S A DE C V — Types AR, IP-AR.

4C. **Gypsum Board* —** As an alternate to Items 4, 4A, and 4B - Nom. 5/8 in. thick gypsum panels, with square edges, applied horizontally. Gypsum panels fastened to framing with 1 in. long bugle head steel screws spaced a max 8 in. OC, with last 2 screws 3/4 in. and 4 in. from each edge of board. Horizontal joints need not be backed by steel framing. Horizontal edge joints and horizontal butt joints on opposite sides of studs on interior walls need not be staggered or backed by steel framing.

TEMPLE-INLAND — GreenGlass Type X.

4D. **Gypsum Board* —** As an alternate to Items 4, 4A, 4B, and 4C - Nom. 5/8 in. thick gypsum panels applied horizontally. Horizontal joints need not be backed by steel framing. Horizontal edge joints and horizontal butt joints on opposite sides of studs need not be staggered. Gypsum panels fastened to framing with 1 in. long Type S steel screws 1-1/2 in. from board edges, 3 in. from board edge and every 8 in. OC in the field. Screws spaced a max 12 in. along the top and bottom edges of the wall.

NATIONAL GYPSUM CO — Types FSK, FSK-C, FSK-G, FSW-C, FSW-G, FSW.

4E. **Gypsum Board* —** (As an alternate to Items 4 through 4D) - Installed as described in Item 4. 5/8 in. thick, 4 ft. wide, paper surfaced, applied vertically only and fastened to the studs and plates with 1 in. long, Type S steel screws spaced, 8 in. OC. Not to be used with item 6.

NATIONAL GYPSUM CO — SoundBreak XP Type X Gypsum Board

4F. **Gypsum Board* —** (Not Shown) - (As an alternate to Item 4 when used as the base layer on one or both sides of wall. For direct attachment only to steel studs Item 2C) - Nom 5/8 in. thick lead backed gypsum panels with beveled, square or tapered edges, applied vertically. Vertical joints centered over studs and staggered min 1 stud cavity on opposite sides of studs. Gypsum board secured to studs with 1-1/4 in. long Type S-12 steel screws spaced 8 in. OC at perimeter and 12 in. OC in the field.

RAY-BAR ENGINEERING CORP — Type RB-LBG

4G. **Gypsum Board* —** (As an alternate to Items 4 through 4F) — For use with Items 1D and 2D only, 5/8 in. thick, 4 ft wide, attached to steel studs and floor and ceiling track with 1 in. long, Type S steel screws spaced 8 in. OC. along edges of board and 12 in. OC in the field of the board. Joints oriented vertically and staggered on opposite sides of the assembly.

LAFARGE NORTH AMERICA INC — Type LGFC6A, LGFC-C/A

NATIONAL GYPSUM CO — Types FSW

UNITED STATES GYPSUM CO — Type SCX

4H. **Wall and Partition Facings and Accessories* —** (As an alternate to Items 4 through 4G) — Nominal 5/8 in. thick, 4 ft wide panels, applied vertically and secured as described in Item 4.

SERIOUS ENERGY INC — Types QuietRock ES, QuietRock 527.

4I. **Gypsum Board* —** (As an alternate to Items 4 through 4F) — For use with Items 1E and 2E only, 5/8 in. thick, 4 ft wide, attached to steel studs and floor and ceiling track with 1 in. long, Type S steel screws spaced 8 in. OC. along edges of board and 12 in. OC in the field of the board. Joints oriented vertically and staggered on opposite sides of the assembly.

UNITED STATES GYPSUM CO — Type SCX

4J. **Gypsum Board* —** (Not Shown) - (As an alternate to Item 4 when used as the base layer on one or both sides of wall. For direct attachment only to steel studs Item 2C) - Nom 5/8 in. thick lead backed gypsum panels with beveled, square or tapered edges, applied vertically. Vertical joints centered over studs and staggered min 1 stud cavity on opposite sides of studs. Gypsum board secured to studs with 1-1/4 in. long Type S-12 steel screws spaced 8 in. OC at perimeter and 12 in. OC in the field. To be used with Lead Batten Strips (see Item 9A) or Lead Discs (see Item 10A).

MAYCO INDUSTRIES INC — Type X-Ray Shielded Gypsum

4K. **Gypsum Board* —** (As an alternate to Item 4 and 4A, not for use with Items 1D, 1E, 2D and 2E) - Nom. 5/8 in. thick gypsum panels with beveled, square or tapered edges installed as described in Item 4 and 4A.

CGC INC — Type ULX

UNITED STATES GYPSUM CO — Type ULX

USG MEXICO S A DE C V — Type ULX

4L. **Gypsum Board* —** (Not Shown) - (As an alternate to Item 4 when used as the base layer on one or both sides of wall. For direct attachment only to steel studs Item 2C). Nom 5/8 in. thick lead backed gypsum panels with beveled, square or tapered edges, applied vertically. Vertical joints centered over studs and staggered min 1 stud cavity on opposite sides of studs. Wallboard secured to studs with 1-1/4 in. long Type S-12 steel screws gypsum panel steel screws spaced 8 in. OC at perimeter and 12 in. OC in the field. Lead batten strips required behind vertical joints of lead backed gypsum wallboard and optional at remaining stud locations. Lead batten strips, min 2 in. wide, max 8 ft long with a max thickness of 0.14 in. placed on the face of studs and attached to the stud with construction adhesive and two 1 in. long Type S-12 pan head steel screws, one at the top of the strip and one at the bottom of the strip. Lead discs, nominal 3/8 in. diam by max 0.085 in. thick. Compression fitted or adhered over the screw heads. Lead batten strips and discs to have a purity of 99.9% meeting the Federal specification QQ-L-201f, Grade "C".

RADIATION PROTECTION PRODUCTS INC — Type RPP - Lead Lined Drywall

4M. **Gypsum Board* —** (For use with Item 8) - 5/8 in. thick, 4 ft wide, applied vertically over Mineral and Fiber Board (Item 8) with vertical joints located anywhere over stud cavities. Secured to mineral and fiber boards with 1-1/2 in. Type G Screws spaced 8 in. OC along edges of each vertical joint and 12 in. OC in intermediate field of the Mineral and Fiber Board (Item 8). Secured to outermost studs and floor and ceiling runners with 2 in. long Type S screws spaced 8 in. OC. Gypsum Board joints covered with paper tape and joint compound. Screw heads covered with joint compound.

AMERICAN GYPSUM CO — Type AG-C

CERTAINTEED GYPSUM INC — Type FRPC, Type C

CERTAINTEED GYPSUM CANADA INC — Type C

CGC INC — Types C, IP-X2, IPC-AR

GEORGIA-PACIFIC GYPSUM L L C — Types 5, DAPC

LAFARGE NORTH AMERICA INC — Types LGFC-C, LGFC-C/A

NATIONAL GYPSUM CO — Types FSK-C, FSW-C

PABCO BUILDING PRODUCTS L L C, DBA PABCO GYPSUM — Type PG-C.

PANEL REY S A — Type PRC

TEMPLE-INLAND — Type TG-C

THAI GYPSUM PRODUCTS PCL — Type C

UNITED STATES GYPSUM CO — Types C, IP-X2, IPC-AR

USG MEXICO S A DE C V — Types C, IP-X2, IPC-AR

5. **Joint Tape and Compound —** Vinyl, dry or premixed joint compound, applied in two coats to joints and screw heads; paper tape, 2 in. wide, embedded in first layer of compound over all joints. As an alternate, nominal 3/32 in. thick gypsum veneer plaster may be applied to the entire surface of Classified veneer baseboard. Joints reinforced. Paper tape and joint compound may be omitted when gypsum boards are supplied with square edges.

6. **Resilient Channel —** (Optional-Not Shown) — 25 MSG galv steel resilient channels spaced vertically max 24 in. OC, flange portion attached to each intersecting stud with 1/2 in. long type S-12 pan head steel screws. May not be used with Item 4F or 4J.

6A. **Steel Framing Members (Not Shown)* —** As an alternate to Item 6, furring channels and resilient sound isolation clip as described below:

a. **Furring Channels —** Formed of No. 25 MSG galv steel. 2-9/16 in. or 2-23/32 in. wide by 7/8 in. deep, spaced 24 in. OC perpendicular to studs. Channels secured to studs as described in Item b. Ends of adjoining channels are overlapped 6 in. and tied together with double strand of No. 18 SWG galv steel wire near each end of overlap. As an alternate, ends of adjoining channels may be overlapped 6 in. and secured together with two self-tapping No. 6 framing screws, min 7/16 in. long at the midpoint of the overlap, with one screw on each flange of the channel.

b. **Framing Members* —** Used to attach furring channels (Item a) to studs (Item 2). Clips spaced 48 in. OC., and secured to studs with 1-5/8 in. wafer or hex head Type S steel screw through the center grommet. Furring channels are friction fitted into clips. RSIC-1 clip for use with 2-9/16 in. wide furring channels. RSIC-1 (2.75) clip for use with 2-23/32 in. wide furring channels.

PAC INTERNATIONAL INC — Types RSIC-1, RSIC-1 (2.75).

6B. **Framing Members* —** Optional - Not Shown - Used as an alternate method to attach resilient channels (Item 6). Clips attached at each intersection of the resilient channel and the steel studs (Item 2). Resilient channels are friction fitted into clips, and then clips are secured to the stud with min. 1 in. long Type S-12 pan head steel screws through the center hole of the clip and the resilient channel flange.

KEENE BUILDING PRODUCTS CO INC — Type RC Assurance.

6C. **Framing Members* —** (Not Shown) — (Optional on one or both sides) — As an alternate to Item 6, furring channel and Steel Framing Members as described below:

a. **Furring Channels —** Formed of No. 25 MSG galv steel. 2-3/8 in. wide by 7/8 in. deep, spaced max. 24 in. OC perpendicular to studs. Channels secured to studs as described in Item b. Gypsum board attached to furring channels as described in Item 4.

b. **Steel Framing Members* —** Used to attach furring channels (Item 6Ca) to studs (Item 2). Clips spaced max. 48 in. OC. GENIECLIPS secured to studs with No. 8 x 1-1/2 in. minimum self-drilling, S-12 steel screw through the center grommet. Furring channels are friction fitted into clips.

PLITEQ INC — Type Genie Clip

7. **Wall and Partition Facings and Accessories* —** (Optional, Not shown) — Nominal 1/2 in. thick, 4 ft wide panels, for optional use as an additional layer on one or both sides of the assembly. Panels attached in accordance with manufacturer's recommendations. When the QR-510 panel is installed between the steel framing and the UL Classified gypsum board, the required UL Classified gypsum board layer(s) is/are to be installed as indicated as to fastener type and spacing, except that the required fastener length shall be increased by a minimum of 1/2 in. Not evaluated or intended as a substitute for the required layer(s) of UL Classified Gypsum Board.

SERIOUS ENERGY INC — Type QuietRock QR-510.

8. **Mineral and Fiber Board* —** (Optional, Not shown) — For optional use as an additional layer on one side of wall. Nom 1/2 in. thick, 4 ft wide with long dimension parallel and centered over studs. Attached to studs and floor and ceiling runners with 1-5/8 in. long Type S steel screws, spaced 12 in. OC and 24 in. OC along all intermediate framing. The required UL Classified gypsum board layer (Item 4M) is to be installed over the Mineral and Fiber Boards. Batts and Blankets, Item 3D, and Adhesive, Item 11, are required.

9. **Lead Batten Strips —** (Not Shown, For Use With Item 4E) - Lead batten strips, min 1-1/2 in. wide, max 10 ft long with a max thickness of 0.125 in. Strips placed on the interior face of studs and attached from the exterior face of the stud with two 1 in. long Type S-12 pan head steel screws, one at the top of the strip and one at the bottom of the strip. Lead batten strips to have a purity of 99.9% meeting the Federal specification QQ-L-201f, Grade "C". Lead batten strips required behind vertical joints of lead backed gypsum board (Item 4E) and optional at remaining stud locations. Required behind vertical joints.

9A. **Lead Batten Strips —** (Not Shown, for use with Item 4J) Lead batten strips, 2 in. wide, max 10 ft long with a max thickness of 0.140 in. Strips placed on the face of studs and attached to the stud with two min. 1 in. long min. Type S-8 pan head steel screws, one at the top of the strip and one at the bottom of the strip or with one min. 1 in. long min. Type S-8 pan head steel screw at the top of the strip. Lead batten strips to have a purity of 99.9% meeting the Federal specification QQ-L-201f, Grades "A, B, C or D". Lead batten strips required behind vertical joints of lead backed gypsum wallboard (Item 4J) and optional at remaining stud locations.

10. **Lead Discs or Tabs —** (Not Shown, For Use With Item 4E) - Used in lieu of or in addition to the lead batten strips (Item 8) or optional at other locations - Max 3/4 in. diam by max 0.125 in. thick lead discs compression fitted or adhered over steel screw heads or max 1/2 in. by 1-1/4 in. by max 0.125 in. thick lead tabs placed on gypsum boards (Item 4E) underneath screw locations prior to the installation of the screws. Lead discs or tabs to have a purity of 99.9% meeting the Federal specification QQ-L-201f, Grade "C".

10A. **Lead Discs —** (Not Shown, for use with Item 4J) Max 5/16 in. diam by max 0.140 in. thick lead discs compression fitted or adhered over steel screw heads. Lead discs to have a purity of 99.9% meeting the Federal Specification QQ-L-201f, Grades "A, B, C or D".

11. **Adhesive —** Not Shown - (For use with Item 8) - Construction grade adhesive applied in vertical, serpentine, nominal 3/8 in. wide beads down the length of both vertical edges of Mineral and Fiber Board (Item 8).

*Bearing the UL Classification Mark

ONLINE CERTIFICATIONS DIRECTORY

Design No. U469
BXUV.U469
Fire Resistance Ratings - ANSI/UL 263

Page Bottom

Design/System/Construction/Assembly Usage Disclaimer

- Authorities Having Jurisdiction should be consulted in all cases as to the particular requirements covering the installation and use of UL Listed or Classified products, equipment, system, devices, and materials.
- Authorities Having Jurisdiction should be consulted before construction.
- Fire resistance assemblies and products are developed by the design submitter and have been investigated by UL for compliance with applicable requirements. The published information cannot always address every construction nuance encountered in the field.
- When field issues arise, it is recommended the first contact for assistance be the technical service staff provided by the product manufacturer noted for the design. Users of fire resistance assemblies are advised to consult the general Guide Information for each product category and each group of assemblies. The Guide Information includes specifics concerning alternate materials and alternate methods of construction.
- Only products which bear UL's Mark are considered as Classified, Listed, or Recognized.

Fire Resistance Ratings - ANSI/UL 263

See General Information for Fire Resistance Ratings - ANSI/UL 263

Design No. U469

December 31, 2012

Assembly Rating — 1 HR

Nonbearing Wall

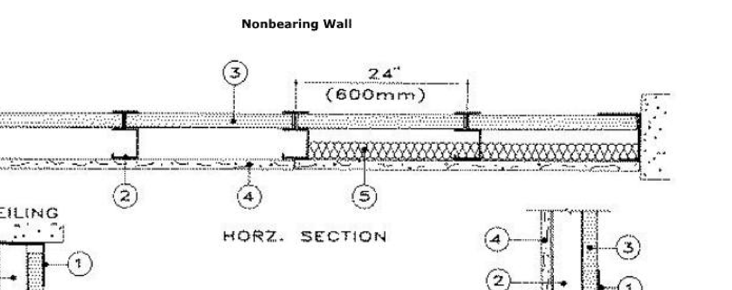

1. **Floor and Ceiling Runners —** "J" - shaped, 2-1/2 in. wide with unequal legs of 1 in. and 2 in., fabricated from 24 MSG galv steel (min 20 MSG steel required when Item 4A is used). Runners attached to structural supports with steel fasteners located not greater than 2 in. from ends and not greater than 24 in. OC.

2. **Steel Studs —** "C-H" shaped studs, 2-1/2 in. wide by 1-1/2 in. deep, fabricated from min 25 MSG galv steel (min 20 MSG steel required when Item 4A is used), spaced 24 in. or 600 mm OC. Vertically restrained walls require studs to be cut 3/8 in. less than floor to ceiling height.

3. **Gypsum Board* —** 1 in. thick gypsum wallboard liner panels, supplied in nominal 24 in. or 600 mm widths. Vertical edges inserted in "H" shaped section of "C-H" studs. Free edge of end panels attached to long leg of "J" runners with 1-5/8 in. long Type S head steel screws spaced not greater than 12 in. OC.

CGC INC — Type SLX.

LAFARGE NORTH AMERICA INC — Type LGFCSL

TEMPLE-INLAND — Type TP-6

UNITED STATES GYPSUM CO — Type SLX

USG MEXICO S A DE C V — Type SLX.

4. **Gypsum Board* —** 5/8 in. thick, 4 ft or 1200 mm wide, applied vertically and attached to studs with 1 in. long Type S steel screws spaced 12 in. OC along the edges and in the field of the boards.

AMERICAN GYPSUM CO — Types AGX-1, M-Glass, AG-C.

CERTAINTEED GYPSUM INC — Type C.

CERTAINTEED GYPSUM CANADA INC — Type C.

CGC INC — Types C, IP-X1, IP-X2, IPC-AR, SCX, ULX, or WRC.

GEORGIA-PACIFIC GYPSUM L L C — Types 5, DAPC.

LAFARGE NORTH AMERICA INC — Types LGFC-C, LGFC-C/A, LGFC6A

PABCO BUILDING PRODUCTS L L C, DBA PABCO GYPSUM — Types C, PG-11, PG-C, PGS-WRS.

TEMPLE-INLAND — Type X, Veneer Plaster Base - Type X, Water Rated - Type X, Sheathing - Type X, Soffit - Type X, TG-C.

THAI GYPSUM PRODUCTS PCL — Type C.

UNITED STATES GYPSUM CO — Types C, FRX-G, IP-X1, IP-X2, IPC-AR, SCX, ULX or WRC.

USG MEXICO S A DE C V — Types C, IP-X1, IP-X2, IPC-AR, SCX, ULX, or WRC.

4A. **Gypsum Board* —** Not Shown - As an Alternate to Item 4. Nom 5/8 in. thick lead backed gypsum panels with beveled, square or tapered edges, applied vertically. Vertical joints centered over studs and staggered min 1 stud cavity on opposite sides of studs. Wallboard secured to studs with 1-1/4 in. long Type S-12 steel screws spaced 8 in. OC at perimeter and 12 in. OC in the field. Lead batten strips (Item 6) required behind vertical joints

RAY-BAR ENGINEERING CORP — Type RB-LBG

4B. **Gypsum Board* —** Not Shown - As an Alternate to Item 4. Nom 5/8 in. thick lead backed gypsum panels with beveled, square or tapered edges, applied vertically. Vertical joints centered over studs and staggered min 1 stud cavity on opposite sides of studs. Wallboard secured to studs with 1-1/4 in. long Type S-12 steel screws spaced 8 in. OC at perimeter and 12 in. OC in the field. Lead batten strips required behind vertical joints. To be used with Lead Batten Strips (see Item 6B) or Lead Discs (see Item 6C).

MAYCO INDUSTRIES INC — Type X-Ray Shielded Gypsum

4C. **Gypsum Board* —** (Not Shown - As an Alternate to Item 4.). Nom 5/8 in. thick lead backed gypsum panels with beveled, square or tapered edges, applied vertically. Vertical joints centered over studs and staggered min 1 stud cavity on opposite sides of studs. Wallboard secured to studs with 1-1/4 in. long Type S-12 steel screws gypsum panel steel screws

spaced 8 in. OC at perimeter and 12 in. OC in the field. Lead batten strips required behind vertical joints of lead backed gypsum wallboard and optional at remaining stud locations. Lead batten strips, min 2 in. wide, max 8 ft long with a max thickness of 0.14 in. placed on the face of studs and attached to the stud with construction adhesive and two 1 in. long Type S-12 pan head steel screws, one at the top of the strip and one at the bottom of the strip. Lead discs, nominal 3/8 in. diam by max 0.085 in. thick. Compression fitted or adhered over the screw heads. Lead batten strips and discs to have a purity of 99.9% meeting the Federal specification QQ-L-201f, Grade "C".

RADIATION PROTECTION PRODUCTS INC — Type RPP - Lead Lined Drywall

5. **Batts and Blankets* —** (Optional) — Mineral wool batts partially or completely filling stud cavity.

THERMAFIBER INC — Type SAFB.

5A. **Fiber, Sprayed* —** As an alternate to Batts and Blankets (Item 5) — Spray applied cellulose material. The fiber is applied with water to completely fill the enclosed cavity in accordance with the application instructions supplied with the product. Nominal dry density of 3.0 lb/ft^3. Alternate application method: The fiber is applied with U.S. Greenfiber LLC Type AD100 hot melt adhesive at a nominal ratio of one part adhesive to 6.6 parts fiber to completely fill the enclosed cavity in accordance with the application instructions supplied with the product. Nominal dry density of 2.5 lb/ft^3.

U S GREENFIBER L L C — Cocoon2 Stabilized or Cocoon-FRM (Fire Rated Material)

5B. **Fiber, Sprayed* —** As an alternate to Batts and Blankets (Item 5) and Item 5A - Spray applied cellulose insulation material. The fiber is applied with water to interior surfaces in accordance with the application instructions supplied with the product. Applied to completely fill the enclosed cavity. Minimum dry density of 4.3 pounds per cubic ft.

NU-WOOL CO INC — Cellulose Insulation

5C. **Fiber, Sprayed* —** As an alternate to Batts and Blankets (Item 5) - Spray applied cellulose fiber. The fiber is applied with water to completely fill the enclosed cavity in accordance with the application instructions supplied with the product. The minimum dry density shall be 4.30 lbs/ft^3.

INTERNATIONAL CELLULOSE CORP — Celbar-RL

6. **Lead Batten Strips —** For Use with Item 4A - (Not Shown) — Lead batten strips required behind vertical joints of lead backed gypsum wallboard (Item 4A) and optional at remaining stud locations. Strips, min 1-1/2 in. wide, max 10 ft long with a max thickness of 0.125 in. Strips placed on the interior face of studs and attached from the exterior face of the stud with two 1 in. long Type S-12 pan head steel screws, one at the top of the strip and one at the bottom of the strip. Lead batten strips to have a purity of 99.9% meeting the Federal specification QQ-L-201f, Grade "C".

6A. **Lead Discs or Tabs —** (Not Shown) - Used in lieu of or in addition to the lead batten strips (Item 6) or optional at other locations - Max 3/4 in. diam by max 0.125 in. thick lead discs compression fitted or adhered over steel screw heads or max 1/2 in. by 1-1/4 in. by max 0.125 in. thick lead tabs placed on gypsum boards (Item 5) underneath screw locations prior to the installation of the screws. Lead discs or tabs to have a purity of 99.9% meeting the Federal specification QQ-L-201f, Grade "C".

6B. **Lead Batten Strips —** (Not Shown, for use with Item 4B) Lead batten strips, 2 in. wide, max 10 ft long with a max thickness of 0.140 in. Strips placed on the face of studs and attached to the stud with two min. 1 in. long min. Type S-8 pan head steel screws, one at the top of the strip and one at the bottom of the strip or with one min. 1 in. long min. Type S-8 pan head steel screw at the top of the strip. Lead batten strips to have a purity of 99.9% meeting the Federal specification QQ-L-201f, Grades "A, B, C or D".

6C. **Lead Discs —** (Not Shown, for use with Item 4B) Max 5/16 in. diam by max 0.140 in. thick lead discs compression fitted or adhered over steel screw heads. Lead discs to have a purity of 99.9% meeting the Federal Specification QQ-L-201f, Grades "A, B, C or D".

*Bearing the UL Classification Mark

A R C H I T E C T U R A L NEXUS
SALT LAKE CITY PLACERVILLE SACRAMENTO

Architectural NEXUS, Inc.
2505 East Parleys Way
Salt Lake City, Utah 84109
T 801.924.5000 F 801.924.5001
http://www.archnexus.com

Licensed Architect
PETER MOYES
No. 83-122248-0301
21 MARCH 2013
State of Utah

Original drawings remain the property of the Architect and as such the Architect retains total ownership and control. The design represented by these drawings is sold to the client for a one time use, unless otherwise agreed upon in writing by the Architect.
© Architectural Nexus, Inc. 2012

UTAH NATIONAL GUARD CAMP WILLIAMS
RTI TASS COMPLEX, PHASE II
NGB PROJECT NO. 490444
17800 SOUTH ACADEMY STREET
BLUFFDALE, UTAH 84065

#		REVISIONS
1	3.15.13	DFCM REVIEW RESPONSE
2	3.22.13	DFCM REVIEW RESPONSE #2

NEXUS PROJECT #:	11024
CHECKED BY:	SMS
DRAWN BY:	Author
DATE:	21 MARCH 2013

SHEET CONTENTS:
UL LISTINGS

VOLUME A.1 - BID DOCUMENTS

1 2 **GI513**

4/1/2013 10:26:58 AM

LEGACY REPORT

NER-258

Reissued July 1, 2008

ICC Evaluation Service, Inc.
www.icc-es.org

Business/Regional Office ■ 5360 Workman Mill Road, Whittier, California 90601 ■ (562) 699-0543
Regional Office ■ 900 Montclair Road, Suite A, Birmingham, Alabama 35213 ■ (205) 599-9800
Regional Office ■ 4051 West Flossmoor Road, Country Club Hills, Illinois 60478 ■ (708) 799-2305

Legacy report on the BOCA® *National Building Code*/1990, the 1988 *Standard Building Code*® with 1989/1990 Revisions, the 1988 *Uniform Building Code*™ with 1990 Accumulative Supplement

DIVISION: 09—FINISHES
Section: 09260—Gypsum Board Assemblies

REPORT HOLDER:

USG CORPORATION
550 WEST ADAMS STREET
CHICAGO, ILLINOIS 60661

EVALUATION SUBJECT:

USG Drywall Shaft Partition Systems

1.0 SUBJECT

USG® Drywall Shaft Partition Systems

2.0 PROPERTY FOR WHICH EVALUATION IS SOUGHT

Fire Resistance

3.0 DESCRIPTION

CAVITY SHAFT WALL SYSTEMS

A. One-Hour Cavity Shaft Wall (Nonload-Bearing)

1. Two and one-half-inch-wide, minimum No. 25 gauge "J" floor and ceiling runners.
2. One-inch-thick SHEETROCK brand Gypsum Liner panels 24 inches wide - no screw attachment.
3. Minimum No. 25 gauge USG Steel C-H stud. Screws not required to attach stud to runner. E-shaped studs may be used for closure panels at end walls or columns. (If "J" runners are used at end walls, the gypsum liner is fastened at the ends with $1^{3}/_{4}$-inch Type S screws 12 inches on center.) The H-Section of C-H stud normally faces shaft.
4. A single ply $^{5}/_{8}$-inch USG SHEETROCK FIRECODE® Type C gypsum panels installed vertically with 1 inch Type S screws 12 inches on center in field and at edges - 6 inches from top, bottom and ends. Joints and screw heads are finished with SHEETROCK Joint Tape and SHEETROCK Joint Compound on this ply, when required for decorative purposes.

ICC-ES legacy reports are not to be construed as representing aesthetics or any other attributes not specifically addressed, nor are they to be construed as an endorsement of the subject of the report or a recommendation for its use. There is no warranty by ICC Evaluation Service, Inc., express or implied, as to any finding or other matter in this report, or as to any product covered by the report.

Copyright © 2008

an overlap of the wall of not less than 1 inch is maintained. The angles are secured to the framed opening with the same type of screws (2 screws on each side angle 3 inches from each end; 3 screws on each head and sill angle with 1 screw in the center and 1 at each end 3 inches from ends).

C. Two-Hour Cavity shaft Wall - Alternative (Nonload-Bearing)

1. Two and one-half-inch-wide, minimum No. 25 gauge "J" floor and ceiling runners.
2. One-inch-thick SHEETROCK brand Gypsum Liner Panels 24 inches wide - no screw attachment.
3. Minimum No. 25 gauge USG STEEL C-H stud. Screws not required to attach stud to runner. E-shaped studs are used fro closure panels at end walls or columns, or in lieu of C-H stud. (If "J" runners are used at end walls, the gypsum liner is fastened at the ends with $1^{3}/_{4}$ inch Type S screws, 12 inches on center.) The H-Section of C-H stud normally faces shaft.
4. One-half-inch USG SHEETROCK FIRECODE® Type C or $^{5}/_{8}$-inch SHEETROCK FIRECODE® Type X gypsum panels applied vertically and attached with 1-inch type S screws at 12 inches on center in field and at edges - 6 inches from top, bottom and ends. Joints and screw heads are finished with SHEETROCK Joint Tape and SHEETROCK Joint Compound on outer layer only, when required for decorative purposes. Vertical joint must be staggered on opposite sides of the walls.

D. Two-Hour Cavity Shaft Sound Wall (Nonload-Bearing) STC Over 50

1. Two and one-half-inch wide, minimum No. 25 gauge "J" floor and ceiling runners.]
2. One-inch-thick SHEETROCK brand Gypsum Liner Panels 24 inches wide - no screw attachment.
3. Minimum No. 25 gauge USG Steel C-H stud. Screws not required to attach stud to runner. E-shaped studs are used for closure panels at end walls or columns, or in lieu of C-H stud. (If "J" runners are used at end walls, the gypsum is fastened at the ends with $1^{3}/_{4}$-inch Type S screws, 12 inches on center.) The H-Section of C-H stud normally faces shaft.
4. One and one-half-inch thick USG THERMAFIBER® Sound Attenuation Blanket.
5. One-half-inch SHEETROCK FIRECODE® Type C or $^{5}/_{8}$-inch SHEETROCK FIRECODE® Type X gypsum panels applied vertically and attached with 1-inch Type S screws at 12 inches on center. Joints and screw heads are finished with SHEETROCK Joint Tape and SHEETROCK Joint Compound on outer layer only, when required for decorative purposes. Vertical joints in the base layer must be staggered with the vertical joints in the finish layer.
6. USG RC-1 resilient channels at 24 inches on center horizontally and attached with $^{5}/_{8}$-inch panhead screws.

E. Three-Hour Cavity Shaft Wall (Nonload-Bearing)

1. Two and one-half-inch-wide, minimum No. 25 gauge "J" floor and ceiling runners.
2. One-inch-thick SHEETROCK brand Gypsum Liner Panels 24 inches wide - no screw attachment.
3. Minimum No. 25 gauge USG Steel C-H stud. Screws not required to attach stud to runner. E-shaped studs are used for closure panels at end walls or columns, or in lieu of C-H stud. (If "J" runners are used at end walls, the gypsum liner is fastened at the ends with $1^{3}/_{4}$ inch Type S screws, 12 inches on center.) The H-Section of C-H stud normally faces shaft.
4. Gypsum panels attached as follows:
   a. Base layer: $^{5}/_{8}$ inch SHEETROCK FIRECODE® Type C gypsum panels applied vertically or horizontally with 1 inch Type S screws at 24 inches on center in field and at edges.
   b. Middle layer: $^{5}/_{8}$ inch SHEETROCK FIRECODE® Type C gypsum panels applied vertically or horizontally with $1^{3}/_{4}$ inch Type S screws at 24 inches on center in field and at edges. When applied vertically the joints must be staggered with the base and finish layer joints.
   c. Finish layer: $^{5}/_{8}$ inch USG SHEETROCK FIRECODE® Type C gypsum panels applied vertically or horizontally and attached with $2^{1}/_{4}$ inch Type S screws at 16 inches on center in field and at edges - 6 inches from top, bottom and ends.

Joint and screw heads on outer layer only are finished with SHEETROCK Joint Tape and SHEETROCK Joint Compound systems, when required for decorative purposes.

SOLID AND VENT SHAFT SYSTEMS

F. Two-Hour 2-inch Solid Gypsum Partition (Nonload-Bearing)

1. No. 22 gauge metal angles.
2. One-half-inch USG SHEETROCK FIRECODE Type C gypsum panels laminated to core panels with SHEETROCK Setting Type Joint Compound.
3. One-inch USG V-Edge Gypsum Coreboard 2 feet 0 inch wide (attachment - No. 22 gauge angle: 1 inch Type S screws).
4. No. 22 gauge metal angles.

An alternative assembly sequence for F above: Where construction is limited to application of gypsum panels from one side, "L" runners are anchored to floor and ceiling with suitable attachments at 24 inches on center. If "L" runners frame an opening in concrete, a 2-inch-by-2-inch "L" runner is used to permit fasteners to be driven further from concrete edge. The 1 inch coreboard is fastened to angle runners with two $1^{1}/_{4}$-inch Type S screws placed 3 inches in from each edge. Two layers of $^{5}/_{8}$ inch USG SHEETROCK FIRECODE® Type C gypsum panels are laminated to one side of 1 inch coreboard with all

vertical joints being offset at least 3 inches. Joints need not be taped or finished on inside.

Alternative Construction: As an alternative for all of the above described constructions. Imperial Gypsum Base of the same thickness and core type shall be substituted for the gypsum panels. Joints on the face layer, other than the inside of shaft or duct partitions, may be covered with tape and the entire surface is covered with a minimum of $^{1}/_{16}$ inch of USG Veneer Plaster (Imperial or Diamond Interior Finish) in accordance with manufacturer's directions.

G. USG Cavity Shaft Wall System

To provide a fire-resistive protection to corridor ceilings or the underside of stairs.

USG "J" runners are attached to all existing horizontal and vertical framing intersected at the boundaries of the area to be protected. The "J" runners are attached to the existing framing members using mechanical fasteners spaced at a maximum of 24 inches on center and having an assigned design load of 200 pounds in either shear or pullout. USG C-H studs of the required gauge are attached to the "J" runners at 24 inches on center by means of two Types S-12, $^{1}/_{2}$-inch panhead screws to frame the walls and/or soffits of the enclosures. Corners of the enclosure which do not intersect existing framing are built up of two "J" runners fastened together with two Type S-12, $^{1}/_{2}$-inch panhead screws at 24 inches on center. The USG C-H studs are fastened to the "J" runners as previously described. One-inch-thick SHEETROCK brand Gypsum Liner Panels, 24 inches wide, is installed on the interior face of the enclosure within the slots of the C-H studs. No screw attachments are required. Where the Gypsum Liner Panel intersects the "J" runners against the existing horizontal and/or vertical framing, $1^{1}/_{4}$-inch Type S screws are installed at a maximum of 12 inches on center.

Gypsum panels are attached to the exterior surfaces of the framing in the manner required for the fire-resistive rating as follows:

1. One-hour construction consists of one layer of $^{5}/_{8}$ inch SHEETROCK FIRECODE® Type C gypsum panels applied parallel to the C-H studs, with all vertical joint on studs. The panels are fastened to each C-H stud and end "J" runners with 1-inch Type S screws 12 inches on center in the field and at edges. Joints and screw heads on the outer face panels are finished with SHEETROCK Joint Tape and SHEETROCK Joint Compound.
2. Two-hour construction consists of a base layer of $^{1}/_{2}$-inch SHEETROCK FIRECODE® Type C panels applied parallel to the C-H studs and attached with 1-inch Type S screws at 24 inches on center in the field and at edges. The finish layer of $^{1}/_{2}$-inch SHEETROCK FIRECODE® Type C panels are applied either parallel or normal to the C-H studs, with joints staggered 24 inches from the base layer. One and five-eights-inch Type S screws at 12 inches on center in the field and at edges fasten the finish layer. Joints and screw heads on the outer layer only are finished with SHEETROCK Joint Tape and SHEETROCK Joint Compound.

H. USG Cavity Shaft Wall for Two-Hour Horizontal Membrane or Horizontal Duct Shaft Protection

Basically the same as described in paragraph "G" above, but uses three layers of $^{1}/_{2}$ inch SHEETROCK FIRECODE® Type C gypsum panels. (See Figure III-H at the end of this report.) The base layer is applied identical to the base layer described in item G.2. above. The second layer is applied the same as the base layer, except that joints are offset 24 inches and $1^{1}/_{4}$-inch type S screws are 4 inches on center. The face layer is installed perpendicular to the C-H studs with $2^{1}/_{4}$-inch screws 12 inches on center. Butt joints in face layer fall between C-H studs and are secured with $1^{1}/_{4}$-inch Type G screws 8 inches on center. Treatment of wallboard joints and fasteners is not necessary.

I. Materials

USG Steel C-H studs are roll formed from ASTM A 526 steel having a minimum yield strength of 33,000 psi.

Cement for laminating - SHEETROCK Setting Type Joint Compound.

For taping and sealing joints - SHEETROCK Joint Tape and SHEETROCK Joint Compound.

SHEETROCK FIRECODE® is a USG registered trademark for a Type X core gypsum panel. Type C is a USG trademark for an improved Type X core. USG Type C panels may be substituted for any Type X gypsum panel permitted by the code, provided the panel thickness is the same.

4.0 INSTALLATION

USG Drywall Shaft Partition Systems shall be installed in accordance with the fire rated assembly details and other information contained in this report.

5.0 IDENTIFICATION

Face panels are bundled in two panel groups and bound with a red, white and blue tape with panel designation printed on the tape.

SHEETROCK brand Gypsum Liner Panels are shipped unbundled in units with end banding. The face and back paper is green. The long edges are paper wrapped and have a $^{5}/_{8}$-inch bevel on top and bottom edge. The back of each liner panel has an Underwriters Laboratories, Inc. Label that denotes UL design U438, lists USG File No. R 1319 and identifies the panel as USG Type SLX (shaft liners fire-rated).

6.0 EVIDENCE SUBMITTED

Results of fire-endurance tests conducted in accordance with ASTM E 119.

7.0 CONDITIONS OF USE

The National Evaluation Service Committee finds that, in their opinion, the USG® Drywall Shaft Partition Systems described in this report are alternates to types of fire-resistive construction specified in the 1990 BOCA National Building Code, the 1988 Standard Building Code with 1989/1990 Revisions, and the 1988 Uniform Building Code with 1990 Accumulative Supplement, subject to the following conditions:

1. The report does not include structural evaluation of the products listed.
2. All cut openings and horizontal joints in metal-framed shaft partitions with coreboard must be cased with system metal framing.
3. System G shaft walls are limited for use as corridor ceilings or as the horizontal enclosure on the underside of stairs (i.e. "Stair Soffits").
4. Assembly described in paragraph H may be used to protect two-hour horizontal ducts (horizontal duct shafts) or where a two-hour horizontal membrane is required and is not part of a floor/ceiling or roof/ceiling assembly. This system is designed to support its own dead weight only and should not be used where there is an attic or loft above, or any probability of storage.

This report is subject to periodic re-examination. For information on the current status of this report, contact the ICC-ES.

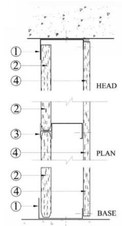

SYSTEM A

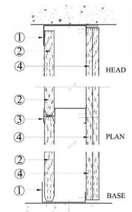

SYSTEM B

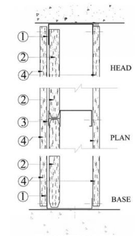

SYSTEM C

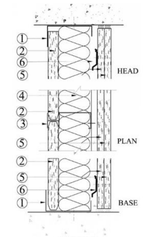

SYSTEM D

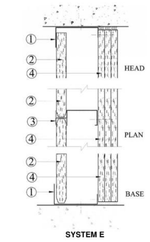

SYSTEM E

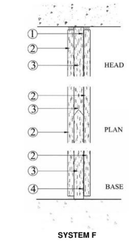

SYSTEM F

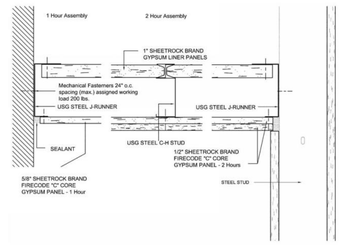

SYSTEM G

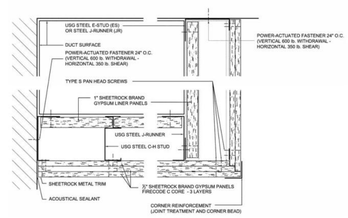

SYSTEM H

ARCHITECTURAL NEXUS
SALT LAKE CITY PLACERVILLE SACRAMENTO

Architectural Nexus, Inc.
2505 East Parleys Way
Salt Lake City, Utah 84109
T 801.924.5000 F 801.924.5001
http://www.archnexus.com

Licensed Architect
PETER MOYES
No. 83-122248-0301
21 MARCH 2013
State of Utah

Original drawings remain the property of the Architect and as such the Architect retains total ownership and control. The design represented by these drawings is sold to the client for a one time use, unless otherwise agreed upon in writing by the Architect.
© Architectural Nexus, Inc. 2012

UTAH NATIONAL GUARD CAMP WILLIAMS
RTI TASS COMPLEX, PHASE II
NGB PROJECT NO. 490444

17800 SOUTH ACADEMY STREET
BLUFFDALE, UTAH 84065

REVISIONS

1	3.22.13	DFCM REVIEW RESPONSE #2

NEXUS PROJECT #:	11024
CHECKED BY:	SMS
DRAWN BY:	Author
DATE:	21 MARCH 2013

SHEET CONTENTS:

EVALUATION REPORTS

VOLUME A.1 - BID DOCUMENTS

GI514

4/1/2013 10:27:00 AM

1 2 3 4 5 6

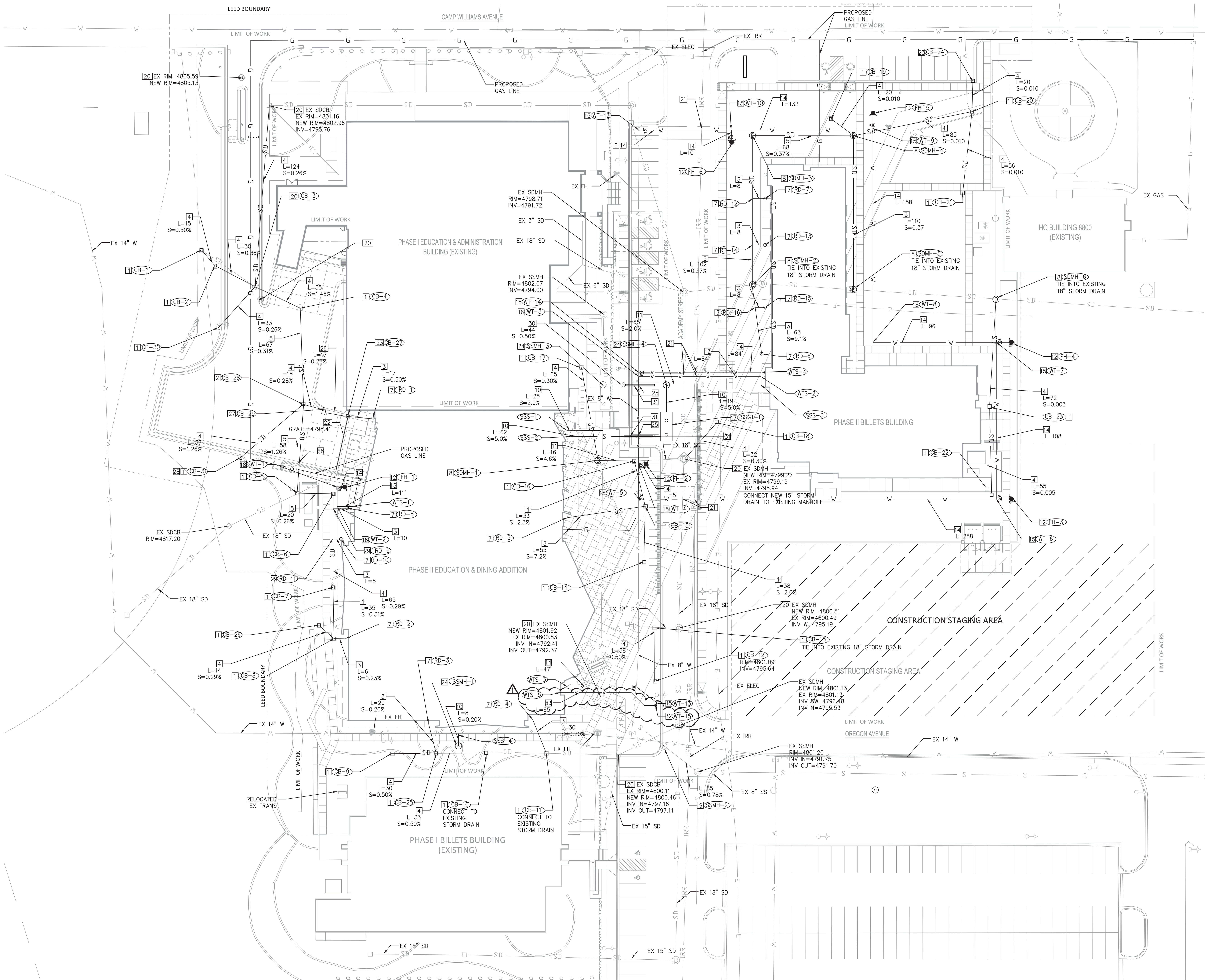

CONSTRUCTION NOTES:

1. INSTALL NYLOPLAST CATCH BASIN PER DETAIL L, SHEET CU 501 – USE DETAIL L1 FOR LANDSCAPED AREAS
2. INSTALL 2X2 CONCRETE CATCH BASIN PER DETAIL K, SHEET CU 501
3. INSTALL 6" PVC STORM DRAIN PIPE AND STUB FOR ROOF DRAIN CONNECTION
4. INSTALL 15" RCP CL III PIPE
5. INSTALL 18" RCP CL III PIPE
6. TRENCH AND REPAIR ASPHALT, CURB, GUTTER, AND SIDEWALK AS NECESSARY FOR WATER MAIN INSTALLATION
7. CONNECT TO ROOF DRAIN PER ARCHITECTS PLANS
8. INSTALL STORM DRAIN MANHOLE PER DETAIL M, SHEET CU502
9. INSTALL SANITARY SEWER MANHOLE PER DETAIL H, SHEET CU501
10. INSTALL 4" SS SDR–35 PVC
11. INSTALL 6" SS SDR–35 PVC
12. INSTALL FIRE HYDRANT ASSEMBLY PER DETAIL N, SHEET CU502
13. INSTALL 1½" W, WATER SERVICE, MAINTAIN 5' MINIMUM COVER
14. INSTALL 8" W, C–900 DR–18 PIPE, MAINTAIN 5' MINIMUM COVER
15. INSTALL 8"X8"8" TEE W/TRUST BLOCK PER DETAIL P, SHEET CU502
16. TAP 8" WATER MAIN FOR WATER SERVICE
17. INSTALL 6000 GAL GREASE TRAP W/ MONITORING MANHOLE PER DETAILS R AND S, SHEET CU503
18. INSTALL 90° 8" ELBOW W/TRUST BLOCK PER DETAIL P. SHEET CU502
19. INSTALL 45° 8" ELBOW W/TRUST BLOCK PER DETAIL P, SHEET CU502
20. ADJUST RIM TO NEW GRADE
21. LOOP WATER UNDER STORM DRAIN AND IRRIGATION LINE AS REQUIRED PER DETAIL Q, SHEET CU503
22. INSTALL TRENCH DRAIN PER DETAIL U, SHEET CU503
23. INSTALL CURB TYPE CATCH BASIN PER DETAIL J, SHEET CU501
24. INSTALL OUTSIDE DROP MANHOLE PER SOUTH VALLEY SEWER DISTRICT STANDARDS
25. 0.5 FEET CLEARANCE BETWEEN STORM DRAIN AND SEWER LATERAL, INSTALL CONCRETE PIER PER DETAIL T, SHEET CU503
26. INSTALL 12" RCP CL III PIPE
27. INSTALL COMBINATION INLET PER DETAIL V, SHEET CU503
28. SEE DETAIL B3 ON SHEET S510 FOR PIPE PENETRATING WALL
29. CONNECT 6" PVC ROOF DRAIN TO RCP STORM DRAIN PIPE PER DETAIL L2, SHEET CU501
30. INSTALL 8" SS SDR–35 PVC
31. INSTALL STEEL CASING PER DETAIL X SHEET CU503
32. INSTALL REMOTE FIRE DEPARTMENT CONNECTION–SEE DETAIL Q ON SHEET CU502 (△1)
33. INSTALL 6" W, C–900 DR–14 PIPE, MAINTAIN 5' MINIMUM COVER (△1)

GENERAL NOTES:

1. ALL SANITARY SEWER CONSTRUCTION SHALL COMPLY WITH SOUTH VALLEY SEWER DISTRICT'S DESIGN STANDARDS AND CONSTRUCTION SPECIFICATIONS.
2. CONTRACTOR SHALL FIELD VERIFY LOCATIONS AND INVERT ELEVATIONS OF EXISTING MANHOLES AND OTHER UTILITIES BEFORE STAKING OR CONSTRUCTING ANY NEW SEWER AND STORM DRAIN LINES.
3. SEWER AND WATER LATERALS WILL BE STUBBED TO WITHIN FIVE FEET OF THE BUILDING. SEE PLUMBING PLANS FOR CONTINUATION INTO THE BUILDING.
4. WATER MAINS TO MAINTAIN A MINIMUM OF 5 FEET OF COVER.

STORM DRAIN TABLE

LABEL	NORTHING	EASTING	RIM	INVERT	COMMENTS
CB–1	329041.3180	521807.8420	4811.16	4796.27	
CB–2	329029.6129	521817.3828	4808.63	4796.20	
CB–3	329015.0760	521844.7390	4800.64	4796.09	RAISE RIM TO NEW GRADE
CB–4	329000.3630	521875.8630	4799.06	4796.61	PROTECT IN PLACE
CB–5	328876.4737	521879.4689	4801.70	N/E 4797.06 SW 4798.39	
CB–6	328872.2853	521898.5508	4801.97	4797.12	
CB–7	328807.3364	521898.5035	4802.23	4797.31	
CB–8	328772.4026	521899.1900	4801.99	4797.42	
CB–9	328692.9612	521938.6912	4801.36	4797.94	
CB–10	328693.5612	522003.9436	4800.67	4797.61	
CB–11	328693.4644	522045.6341	4800.29	4797.41	
CB–12	328742.9382	522120.3669	4801.09	4795.64	
CB–13	328779.8246	522120.5247	4800.45	4795.26	
CB–14	328825.4190	522112.9001	4800.00	4795.93	
CB–15	328863.7015	522113.8579	4799.54	4795.17	
CB–16	328895.0688	522106.3069	4800.24	4794.41	REMOVE AND REPLACE EXISTING CATCH BASIN AND INSTALL NEW CATCH BASIN
CB–17	328959.4663	522069.8330	4802.16	4799.55	
CB–18	328921.8140	522163.1918	4798.66	4796.04	
CB–19	329131.1494	522242.1258	4795.00	4789.56	
CB–20	329135.8090	522339.3215	4793.93	4790.21	
CB–21	329080.0117	522332.7941	4794.85	4790.76	
CB–22	328875.7135	522350.0158	4796.50	4788.19	
CB–23	328904.2519	522349.9902	4797.92	4788.05	
CB–24	329156.5521	522339.8465	4793.13	4790.41	
CB–25	328693.3290	521969.6540	4801.01	4797.79	
CB–26	328781.6443	521888.6766	4801.87	4797.46	
CB–27	328926.6560	521909.0094	4798.41	4796.87	
CB–28	328933.9606	521877.8438	4799.95	4796.81	
CB–29	328930.5369	521892.4670	4798.79	4796.84	
CB–30	328986.8003	521819.4204	4805.00	4796.19	
CB–31	328897.1403	521834.5804	4808.15	4797.42	
SDMH–1	328895.2357	522081.2995	4802.15	E 4795.06 N 4799.35	CONNECT TO EXISTING STORM DRAIN PIPE TO THE EAST
SDMH–2	329016.3872	522187.9572	4798.82	4789.99	CONNECT TO EXISTING STORM DRAIN PIPE TO THE WEST
SDMH–3	329119.2905	522187.9572	4798.96	4789.61	
SDMH–4	329119.2905	522257.5274	4795.50	4789.36	
SDMH–5	329013.0707	522257.5274	4797.90	4788.95	CONNECT TO EXISTING STORM DRAIN PIPE TO THE EAST
SDMH–6	329006.2680	522355.7907	4795.10	4787.75	CONNECT TO EXISTING STORM DRAIN PIPE TO THE EAST AND WEST
RD–1	328924.2800	521926.0499		4796.71	
RD–2	328772.3644	521907.0264		4799.56	
RD–3	328713.7891	521964.3694		4798.19	
RD–4	328717.2072	522036.1442		4798.01	
RD–5	328855.7850	522059.8543		4799.15	
RD–6	328954.0995	522196.2760		4795.75	
RD–7	329075.8346	522196.5593		4795.75	
RD–8	328862.2905	521908.3160			
RD–9	328862.2905	521898.5435			
RD–10	328840.9315	521904.0363			
RD–11	328841.1583	521898.5265			
RD–12	329075.8346	522187.9572			
RD–13	329043.8346	522196.5593			
RD–14	329043.8346	522187.9572			
RD–15	329000.8346	522196.5593			
RD–16	329000.8346	522189.7275			

SANITARY SEWER TABLE

LABEL	NORTHING	EASTING	RIM	INVERT
SSMH–1	328698.4394	521985.0611	4801.34	4393.78
SSMH–2	328698.3486	522126.8321	4800.93	NW/SE 4791.93 W 4792.03
SSMH–3	328947.3643	522084.7730	4801.59	N/S 4793.71 W 4794.21
SSMH–4	328947.3370	522128.4991	4798.52	S/E/W 4794.45
SSGT–1	328903.4552	522128.4991	SEE DETAILS R & S, SHEET CU503	

CULINARY WATER AND SANITARY SEWER SERVICE TABLE

LABEL	NORTHING	EASTING	COMMENTS
WTS–1	328863.5151	521911.9798	SEE MECHANICAL PLANS FOR CONTINUATION
WTS–2	328953.0857	522193.6860	SEE MECHANICAL PLANS FOR CONTINUATION
WTS–3	328739.0401	522060.5878	SEE MECHANICAL PLANS FOR CONTINUATION
WTS–4	328956.0857	522193.6860	SEE MECHANICAL PLANS FOR CONTINUATION
WTS–5 (△1)	328735.3369	522055.6528	FIRE RISER–SEE MECHANICAL PLANS FOR CONTINUATION
SSS–1	328915.8190	522059.9819	SEE MECHANICAL PLANS FOR CONTINUATION
SSS–2	328911.8304	522062.4667	SEE MECHANICAL PLANS FOR CONTINUATION
SSS–3	328947.2962	522193.7641	SEE MECHANICAL PLANS FOR CONTINUATION
SSS–4	328706.8134	521985.0967	SEE MECHANICAL PLANS FOR CONTINUATION

CULINARY WATER TABLE

LABEL	NORTHING	EASTING	COMMENTS
FH–1	328876.8729	521906.5403	SEE DETAIL N, SHEET CU502
FH–2	328892.1881	522114.8829	SEE DETAIL N, SHEET CU502
FH–3	328868.7606	522366.5187	SEE DETAIL N, SHEET CU502
FH–4	328976.1826	522366.8661	SEE DETAIL N, SHEET CU502
FH–5	329134.7497	522271.0329	SEE DETAIL N, SHEET CU502
FH–6	329114.4575	522174.0291	SEE DETAIL N, SHEET CU502
WT–1	328876.8716	521901.4746	8" 90° BEND FOR FIRE HYDRANT ASSEMBLY
WT–2	328863.5125	521901.4496	WATER SERVICE CONNECTION
WT–3	328953.0857	522109.3210	WATER SERVICE CONNECTION
WT–4	328892.7174	522109.2688	8X8X8 TEE FOR FIRE HYDRANT ASSEMBLY
WT–5	328868.7606	522109.3266	8X8X8 TEE AND GATE VALVE
WT–6	328868.7606	522356.0596	8X8X8 TEE
WT–7	328976.7205	522356.0596	8X8X8 TEE
WT–8	328976.7205	522271.0329	8" 90° ELBOW
WT–9	329124.2905	522271.0329	8X8X8 TEE
WT–10	329124.2905	522173.4577	8X8X8 TEE
WT–11	329124.2905	522138.5678	8" 45° ELBOW
WT–12	329086.0108	522101.2180	8X8X8 TEE AND GATE VALVE
WT–13	328739.0401	522107.7950	8X8X8 TEE AND GATE VALVE
WT–14	328956.0857	522109.3210	8X8X8 TEE AND GATE VALVE
WT–15 (△1)	328726.2870	522120.9056	REMOTE FIRE DEPARTMENT CONNECTION

Q:\23479\11–CADD\6 Sheets\CU101 Site Utility Plan.dwg Mar 27, 2013 – 4:23pm

A R C H I T E C T U R A L nexus SALT LAKE CITY PLACERVILLE SACRAMENTO

Architectural NEXUS, Inc.
2150 South 1300 East, Suite 200
Salt Lake City, Utah 84106
T 801.924.5000 F 801.924.5001
http://www.archnexus.com

REGISTERED PROFESSIONAL ENGINEER No. 367572-2202 JEFFERY DAMON UPRIGHT 3/27/03 STATE OF UTAH

Original drawings remain the property of the Architect and as such the Architect retains total ownership and control. The design represented by these drawings is sold to the client for a one time use, unless otherwise agreed upon in writing by the Architect.
© Architectural Nexus, Inc.2011

UTAH NATIONAL GUARD CAMP WILLIAMS
RTI TASS COMPLEX, PHASE II
NGB PROJECT NO. 490444

UTAH NATIONAL GUARD
12953 SOUTH MINUTEMAN DRIVE
DRAPER, UTAH 84020-1726

#	REVISIONS
1	ADDENDUM 2

CALL BEFORE YOU DIG! IT'S THE LAW BLUE STAKES 1 800 662 4111

VOLUME A.1 - BID DOCUMENTS

NEXUS PROJECT #: 11024
CHECKED BY: JDU
DRAWN BY: NS
DATE: 27 MARCH 2013

SHEET CONTENTS:
CIVIL UTILITIES

CU102

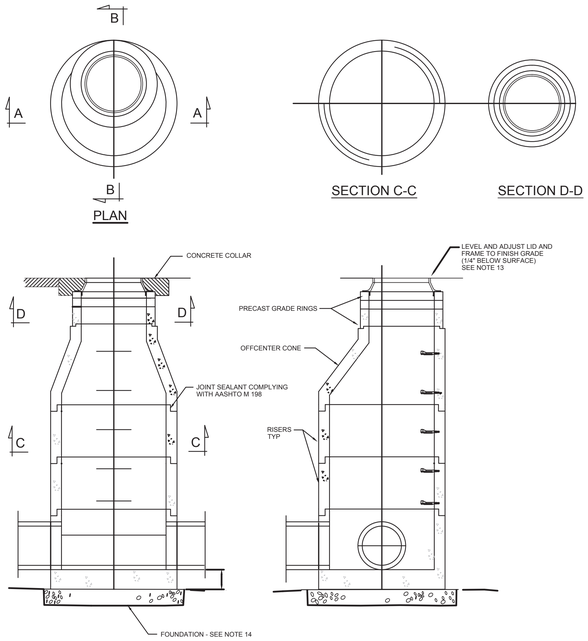

MAX PIPE O.D.		
DIA	45 DEG ANGLE	90 DEG ANGLE
4'- 0"	27"	18"
5'- 0"	36"	24"

PRECAST SECTIONS	MAX HEIGHT
GRADE RINGS	8"
COMBINED GRADE RINGS AND LID	18"
CONES	36"
RISERS	48"

M — STORMDRAIN MANHOLE

SCALE: N.T.S.

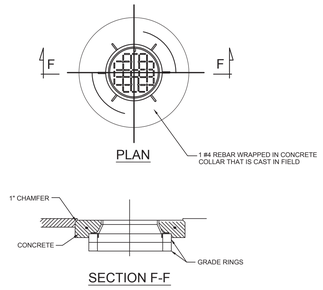

DESIGN DATA

STRUCTURAL STEEL: Fy = 36,000 psi

STRUCTURAL CONCRETE: f'c = 4,000 psi; fy = 60,000 psi; n = 8

NOTES

1. PROVIDE PRECAST CONCRETE STANDARD MANHOLE SECTIONS THAT CONFORM TO AASHTO M 199 (ASTM C 478) EXCEPT THAT THE MINIMUM WALL THICKNESS WILL BE 3 INCHES.
2. USE DEFORMED-CARBON REINFORCING STEEL BARS CONFORMING TO M 31, GRADE 60 OR WELDED WIRE REINFORCING CONFORMING TO AASHTO M 55 OR AASHTO M 221.
3. COATED STEEL IS NOT REQUIRED FOR PRECAST MANHOLES.
4. USE CLASS AA (AE) CONCRETE.
5. USE TYPE II CEMENT (LOW ALKALI).
6. PROVIDE 2 INCH CONCRETE COVER TO REINFORCING STEEL.
7. PLACE STEPS BEGINNING NOT LESS THAN12 INCHES BELOW FINISH GRADE AND PLACE ADDITIONAL STEPS ACCORDING TO STD DWG GF 6. MANUFACTURER WILL ADJUST GRADE RINGS AND RISER HEIGHTS TO ACCOMMODATE UNIFORM SPACING OF STEPS PER STD DWG GF 6.
8. USE 3, 4, 6, OR 8 INCH GRADE RINGS FOR RISERS.
9. SEE PLANS FOR NUMBER, LOCATION, AND SIZE OF PIPE.
10. REMOVE THE CONE AND GRADE RINGS AND ADJUST THE MANHOLE ELEVATION WITH THE APPROPRIATE MANHOLE SECTION IF THE REQUIRED MANHOLE ADJUSTMENT IS MORE THAN 1 FT. MATCH FINISH GRADE FOR THE CONE SECTION AND GRADE RINGS, FRAME AND LID.
11. REMOVE DEBRIS FROM MANHOLE AND PIPE INVERTS.
12. REPAIR OR REPLACE MANHOLE SECTIONS, CONES AND GRADE RINGS DAMAGED BY CONSTRUCTION TO THE SATISFACTION OF THE ENGINEER, AT NO COST TO THE OWNER.
13. USE STD RING AND LID.
14. PROVIDE HYDRAULIC CEMENT MORTAR ACCORDING TO ASTM C 1329.
15. DO NOT OVER EXCAVATE, PLACE 6 INCH MIN UTBC BEDDING ACCORDING TO STANDARD SPECIFICATIONS ON FIRM SUBGRADE. DO NOT USE CRUSHED ROCK IN ACTIVE WATER TABLE WITHOUT APPROVAL OF THE ENGINEER.
16. CAST FORMED INVERT TO BE POURED IN PLANT, WHEN SPECIFIED.
17. MANUFACTURE MANHOLE RISERS, BASES, CONES, AND GRADE RINGS, INCLUDING STEEL REINFORCING WHERE REQUIRED ACCORDING TO ASTM C 478.

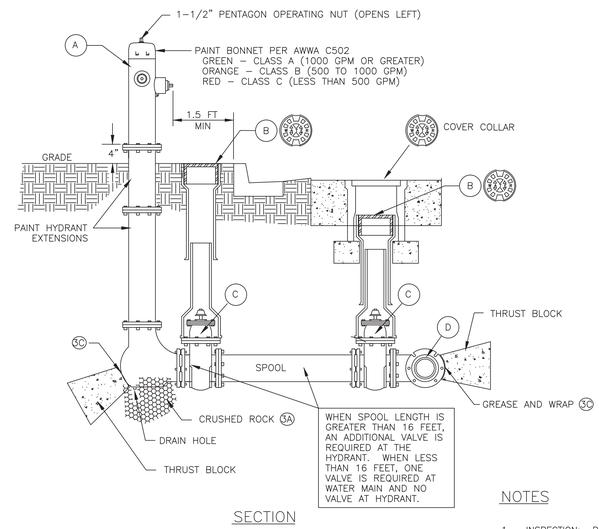

LEGEND		
No.	ITEM	DESCRIPTION
A	FIRE HYDRANT	AWWA C502
B	VALVE BOX WITH LID	2 PIECE CAST IRON
C	GATE VALVE WITH 2"x2" NUT	AWWA C509
D	TEE WITH 125 # FLANGE	AWWA C110

N — FIRE HYDRANT ASSEMBLY

SCALE: N.T.S.

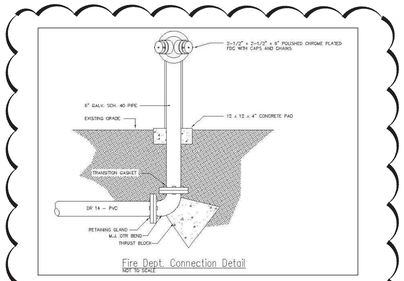

Q — REMOTE FIRE DEPARTMENT CONNECTION

SCALE: N.T.S.

NOTES

1. INSPECTION: PRIOR TO BACKFILLING, SECURE INSPECTION OF INSTALLATION BY ENGINEER.
2. BACKFILL: PROVIDE, PLACE AND COMPACT PER SPECIFICATIONS. MAXIMUM LIFT THICKNESS IS 8 INCHES BEFORE COMPACTION.
3. HYDRANT: DRY BARREL PER AWWA C502.
   A. PROVIDE AT LEAST 1 CUBIC YARD OF CRUSHED ROCK AROUND DRAIN HOLE AT BASE OF HYDRANT. WRAP PLASTIC OVER SEWER ROCK TO PREVENT SILTING.
   B. PAINT FIRE HYDRANT TO NATIONAL GUARDS'S FIRE HYDRANT PAINT COLOR CODE.
   C. APPLY CHEVRON FM #1 NON–OXIDE GREASE TO ALL BURIED METAL SURFACES. WRAP WITH 8 MIL THICK POLYETHYLENE SHEET AND TAPE WRAP.
   D. NOTIFY FIRE DEPARTMENT AS SOON AS HYDRANT IS PLACED IN SERVICE.
4. THRUST BLOCKS:
   A. PRIOR TO POURING CONCRETE, WRAP PIPE SYSTEM WITH 8 MIL THICK PLASTIC SHEET TO PREVENT BONDING OF CONCRETE TO PIPE SYSTEM.
   B. NOT REQUIRED FOR FLANGED OR WELDED PIPE SYSTEMS.

NOTES:

1. – Connection and pipe to be backfilled per ASTM D2321.
2. – In lieu of an internal cylinder, an HDPE watertight repair coupler can be used to connect HDPE pipe to CMP.
3. – Internal cylinder adapter is not recommended for downstream connections.

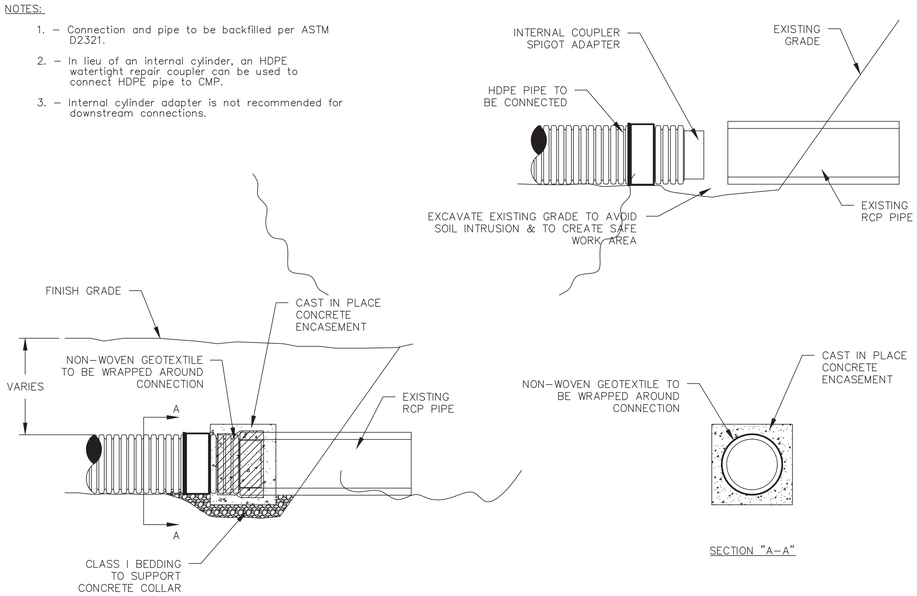

©2007 ADS, INC.

REV.	DESCRIPTION	BY	MM/DD/YY	CHK'D
1	UPDATED DRAWING	TJR	01/24/07	CKS

ADVANCED DRAINAGE SYSTEMS, INC. ("ADS") HAS PREPARED THIS DETAIL BASED ON INFORMATION PROVIDED TO ADS. THIS DRAWING IS INTENDED TO DEPICT THE COMPONENTS AS REQUESTED. ADS HAS NOT PERFORMED ANY ENGINEERING OR DESIGN SERVICES FOR THIS PROJECT, NOR HAS ADS INDEPENDENTLY VERIFIED THE INFORMATION SUPPLIED. THE INSTALLATION DETAILS PROVIDED HEREIN ARE GENERAL RECOMMENDATIONS AND ARE NOT SPECIFIC FOR THIS PROJECT. THE DESIGN ENGINEER SHALL REVIEW THESE DETAILS PRIOR TO CONSTRUCTION. IT IS THE DESIGN ENGINEERS RESPONSIBILITY TO ENSURE THE DETAILS PROVIDED HEREIN MEETS OR EXCEEDS THE APPLICABLE NATIONAL, STATE, OR LOCAL REQUIREMENTS AND TO ENSURE THAT THE DETAILS PROVIDED HEREIN ARE ACCEPTABLE FOR THIS PROJECT.

DISSIMILAR PIPE CONNECTIONS FOR RCP DETAIL

DRAWING NUMBER: STD–603

ADS ADVANCED DRAINAGE SYSTEMS, INC. 4640 TRUEMAN BLVD HILLIARD, OHIO 43026

DRAWN BY: K.J.M. DATE: 03/09/04 DATE REV.: SCALE: NTS SHEET 1 OF 1

O — RCP TO HDPE PIPE CONNECTION

SCALE: N.T.S.

MINIMUM BEARING AREA IN SQ. FT.					
SIZE OF PIPE	TEES, VALVES DEAD ENDS	90° BENDS	45° BENDS	22 1/2° BENDS	11 1/4° BENDS
4"	2	3	2	2	2
6"	4	5.5	3	1.5	1
8"	6.5	9.5	5	2.75	1.5
12"	14	20	11	5.5	3
14"	19	26.5	14.5	7.5	4
16"	24	34	18.5	9.5	6
20"	27	52	28.5	14.5	16
24"	53	74	41	21	53
30"	81	114	62	32	16

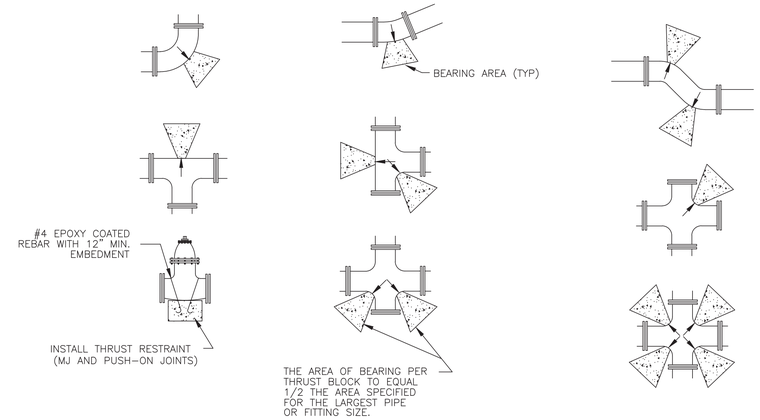

NOTES

1. CONCRETE SHALL BE POURED AGAINST UNDISTURBED SOIL.
2. PIPE JOINTS: DO NOT COVER WITH CONCRETE. LEAVE COMPLETELY ACCESSIBLE.
3. GREASE: APPLY CHEVRON FM #1 NON–OXIDE GREASE TO ALL BURIED METAL SURFACES. WRAP WITH 8 MIL THICK POLYETHYLENE SHEET AND TAPE WRAP.
4. SPECIAL CONSTRUCTION REQUIREMENTS.
   A. THRUST DESIGN FOR PIPE SIZES OR CONFIGURATIONS NOT SHOWN REQUIRE SPECIAL DESIGN.
   B. BEARING AREAS, VOLUMES, AND SPECIAL THRUST BLOCKING DETAILS SHOWN ON DRAWINGS TAKE PRECEDENCE OVER THIS PLAN.
   C. REINFORCING STEEL BARS TO BE EPOXY COATED AT LEAST 15 MILS THICK. MINIMUM STRESS YIELD STRENGTH OF TIE DOWN BARS IS 70,000 PSI.
   D. LOCKING RESTRAINT DEVICES MAY BE USED IN CONJUNCTION WITH CONCRETE THRUST BLOCKING (AT OPTION OF ENGINEER).
5. INSPECTION: PRIOR TO BACKFILLING AROUND THRUST BLOCK, SECURE INSPECTION OF INSTALLATION BY ENGINEER.

P — THRUST BLOCK

SCALE: N.T.S.

ARCHITECTURAL NEXUS
SALT LAKE CITY PLACERVILLE SACRAMENTO

Architectural NEXUS, Inc.
2150 South 1300 East, Suite 200
Salt Lake City, Utah 84106
T 801.924.5000 F 801.924.5001
http://www.archnexus.com

LICENSED PROFESSIONAL ENGINEER No. 367762-2202 JEFFERY DAMON UPRIGHT 3/27/13 STATE OF UTAH

Original drawings remain the property of the Architect and as such the Architect retains total ownership and control. The design represented by these drawings is sold to the client for a one time use, unless otherwise agreed upon in writing by the Architect. © Architectural Nexus, Inc.2011

UTAH NATIONAL GUARD CAM
RTI TASS COMPLEX, PHASE II
NGB PROJECT NO. 490444

UTAH NATIONAL GUARD
12953 SOUTH MINUTEMAN DRIVE
DRAPER, UTAH 84020-1726

#	REVISIONS
1	ADDENDUM 2

NEXUS PROJECT #:	11024
CHECKED BY:	JDU
DRAWN BY:	NS
DATE:	27 MARCH 2013

SHEET CONTENTS:

UTILITY CONSTRUCTION DETAILS

VOLUME A - BID DOCUMENTS

CU502

CALL BEFORE YOU DIG! BLUE STAKES 1 800 662 4111

Q:\23479\11-CAD\16 Sheets\C0501 Civil Details.dwg Mar 27, 2013 - 10:24am

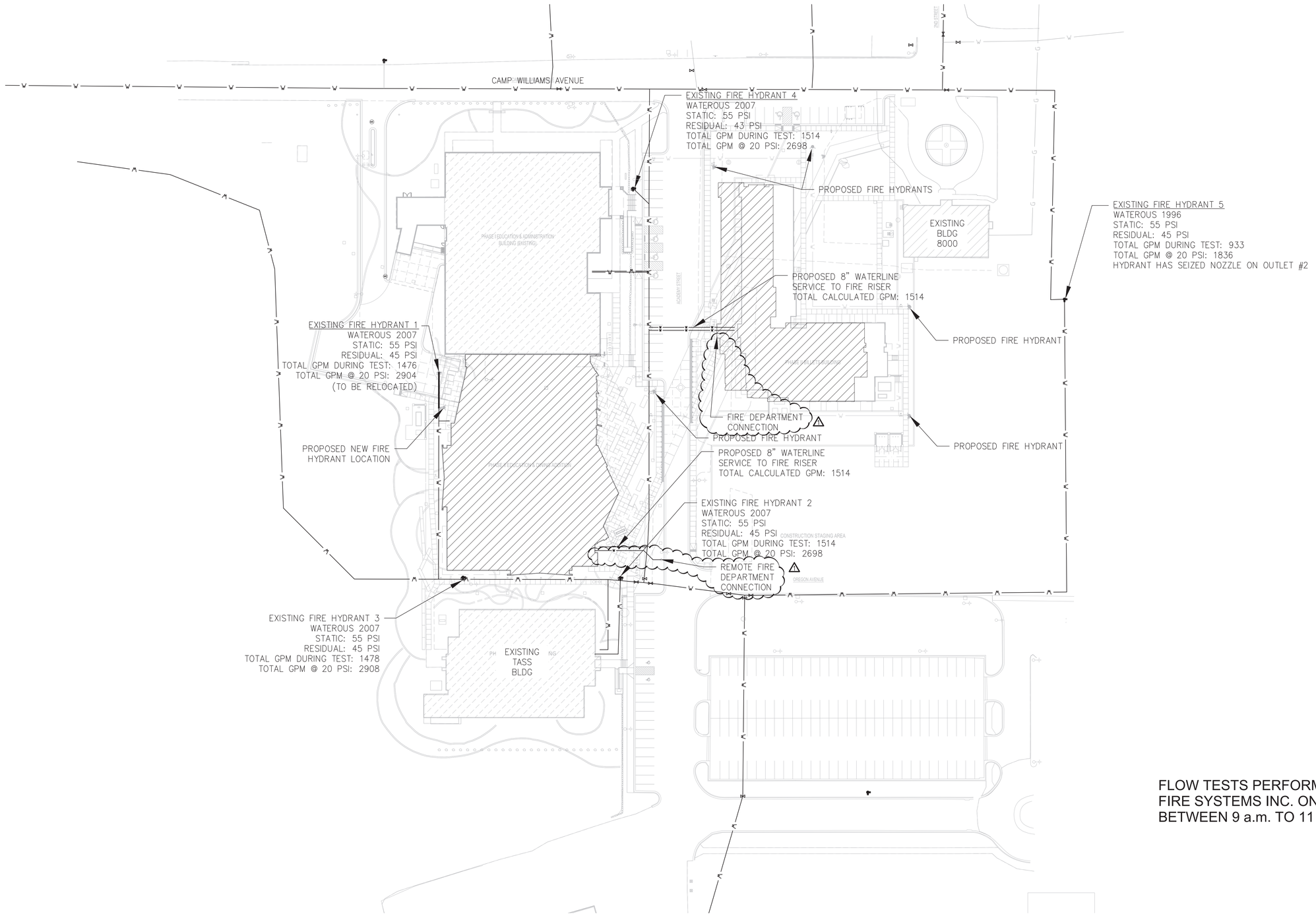

FLOW TESTS PERFORMED BY DELTA FIRE SYSTEMS INC. ON 3/13/2013 BETWEEN 9 a.m. TO 11 a.m.

ARCHITECTURAL NEXUS
SALT LAKE CITY PLACERVILLE SACRAMENTO

Architectural NEXUS, Inc.
2150 South 1300 East, Suite 200
Salt Lake City, Utah 84106
T 801.924.5000 F 801.924.5001
http://www.archnexus.com

REGISTERED PROFESSIONAL ENGINEER
Kal, Inc. 2/22/02
JEFFERY DAMON UPRIGHT
5 | 2 | 13
STATE OF UTAH

Original drawings remain the property of the Architect and as such the Architect retains total ownership and control. The design represented by these drawings is sold to the client for a one time use, unless otherwise agreed upon in writing by the Architect.
© Architectural Nexus, Inc.2011

UTAH NATIONAL GUARD CAMP WILLIAMS
RTI TASS COMPLEX, PHASE II
NGB PROJECT NO. 490444

UTAH NATIONAL GUARD
12953 SOUTH MINUTEMAN DRIVE
DRAPER, UTAH 84020-1726

REVISIONS
1 ADDENDUM 2

NEXUS PROJECT #:	11024
CHECKED BY:	JDU
DRAWN BY:	JDU
DATE:	27 MARCH 2013

SHEET CONTENTS:
FIRE HYDRANT SUMMARY

VOLUME A.1 - BID DOCUMENTS

CF101

CALL BEFORE YOU DIG! IT'S THE LAW BLUE STAKES 1 800 662 4111

O:\234790\1-CADD\Sheets\CF101 Fire Hydrant Summary.dwg Mar 27, 2013 - 4:27pm

GENERAL STRUCTURAL NOTES

GENERAL

1. The structural notes are intended to complement the project specifications. Specific notes and details in the drawings shall govern over the structural notes and typical details.
2. Typical details and sections shall apply where specific details are not shown.
3. The contractor shall verify all site conditions and dimensions. If actual conditions differ from those shown in the contract drawings, the contractor shall immediately notify the architect/engineer before proceeding with the fabrication or construction of any affected elements.
4. Drawings shall not be scaled for the purpose of preparing shop drawings or for construction. Where dimensions on the design drawings are not provided or inferred, the contractor may scale drawings only to estimate member lengths for the purpose of bidding.
5. Changes to these contract drawings may be made only by an authorized representative of Dunn Associates, Inc. Dunn Associates, Inc. shall not be held responsible or liable for any claims arising directly or indirectly from changes made without written authorization by an authorized representative of Dunn Associates, Inc.
6. Omissions or conflicts between the contract drawings and/or specifications shall be brought to the attention of the architect/engineer before proceeding with any work involved. In case of conflict, follow the most stringent requirement as directed by the architect/engineer at no additional cost to the owner.
7. The contractor shall submit a written request to the architect/engineer before proceeding with any changes, substitutions, or modifications. Any work done by the contractor before receiving written approval will be at the contractor's risk.
8. The contractor shall coordinate with all trades any items that are to be integrated into the structural system such as openings, penetrations, mechanical and electrical equipment, etc. Sizes and locations of mechanical and other equipment that differs from those shown on the contract drawings shall be reported to the architect/engineer. Contractor shall take measures as required to insure that construction loads shall not exceed design loads for the structure.
9. The contractor shall be responsible for means, methods, techniques, sequences, and procedures in order to comply with the contract drawings and specifications. The contractor shall provide adequate shoring and bracing as required for the chosen method of erection. Shoring and bracing shall remain in place until final connections for the permanent members are completed. The building shall not be considered stable until all connections are completed. Walls shall not be considered self-supporting and shall be braced until the floor/roof system is completed.
10. Site observations by a field representative of Dunn Associates, Inc. shall not be construed as approval of construction, the procedures, nor special inspection.
11. Detailing and shop drawing production for structural elements will require information (including dimensions) contained in the architectural, structural and/or other consultants' drawings. The structural drawings shall be used in conjunction with the architectural and other consultant's drawings. See the Architectural Drawings for dimensions, doors, windows, non-bearing interior and exterior walls, elevations, slopes, stairs, curbs, drains, recesses, depressions, railings, waterproofing, finishes, chamfers, kerfs, etc.
12. The Contractor may choose to submit shop drawings and submittals for review electronically. The Contractor may do this provided a minimum of one hard copy set is submitted for review. The submittal will be stamped as received by Dunn Associates, Inc. when the hard copy is received by our office. Hard copies of small submittals need not be submitted if the Contractor receives the approval for this exception by the Engineer of Record.
13. Review of shop drawing submittals by Dunn Associates, Inc. is for general compliance only and is not intended for approval. The shop drawing review shall not relieve the contractor from the responsibility of completing the project according to the contract documents.
14. Shop drawings made from reproductions of the structural drawings will be rejected unless the contractor signs a release agreement prior to the shop drawings being reviewed. The contractor may also obtain electronic files of the plan sheets after signing a release agreement. Electronic files of the detail sheets and schedule sheets will not be made available.
15. All work shall be done in accordance with OSHA requirements. Potential conflicts between these documents and OSHA requirements shall be brought to the attention of the structural engineer before proceeding with the work.

BASIS OF DESIGN

1. Governing Building Code----------Unified Facilities Criteria and the International Building Code 2009
   - 1.1. The Design Documents meet DFCM Standards.
2. Occupancy Category----------III
3. Floor Live Loads
   - 3.1. Uniformly Distributed Loads
     - 3.1.1. Offices + Partitions----------80 psf + 20 psf
     - 3.1.2. Lobbies & Main Floor Corridors----------100 psf
     - 3.1.3. Corridors Above Main Floor----------80 psf
     - 3.1.4. Dining Hall----------100 psf
     - 3.1.5. Toilet Rooms----------75 psf
     - 3.1.6. Classrooms----------40 psf
     - 3.1.7. Balconies----------100 psf
     - 3.1.8. Storage----------125 psf
     - 3.1.9. Mechanical Rooms----------150 psf
   - 3.2. Concentrated Loads, all areas---------- 2000 lbs
4. Roof Live Load (Not concurrent with Roof Snow Load)---------- 20 psf
5. Roof Snow Load
   - 5.1. Ground Snow Load---------- Pg = 48 psf
   - 5.2. Flat Roof Snow Load---------- Pf = 34 psf
   - 5.3. Snow Exposure Factor---------- Ce = 1.0
   - 5.4. Thermal Factor---------- Ct = 1.0
   - 5.5. Snow Load Importance Factor---------- Is = 1.1
6. Wind Load
   - 6.1. Basic Wind Speed (3 Second Gust)---------- 90 mph
   - 6.2. Wind Importance Factor---------- 1.15
   - 6.3. Wind Exposure---------- C
   - 6.4. Internal Pressure Coefficient---------- ± 0.18
7. Seismic Design Criteria
   - 7.1. Mapped Spectral Response Accelerations
     - 7.1.1. Short Period Acceleration---------- SS = 1.117
     - 7.1.2. 1-Second Acceleration---------- S1 = 0.455
   - 7.2. Spectral Response Coefficients
     - 7.2.1. Short Period Acceleration---------- SDS = 0.784
     - 7.2.2. 1-Second Acceleration---------- SD1 = 0.469
   - 7.2. Site Class (Soil Profile)---------- D
   - 7.3. Seismic Importance Factor---------- 1.25
   - 7.4. Seismic Design Category---------- D
   - 7.5. Effective Structural Seismic Weight---------- W
   - 7.6. Lateral Force Resisting System---------- Special Reinforced Masonry Shear Walls
     - 7.6.1. Response Modification Coefficient---------- R = 5
     - 7.6.2. System Overstrength Factor---------- Ωo = 2.5
     - 7.6.3. Deflection Amplification Factor---------- CD = 3.5
     - 7.6.4. Design Base Shear---------- V = Cs*W = 0.20W
   - 7.7. Analysis Procedure----------Modal Response Spectrum Analysis
8. Serviceability Criteria
   - 8.1. Interstory Seismic/Wind Drift----------Δa < 0.007h ('h' is story height)
   - 8.2. Deflection Limits----------Total----------Live/Snow
     - Floor----------L/360----------L/480
     - Roof----------L/240----------L/360
     - Perimeter----------___----------L/600(3/8" max)

FOUNDATION

1. Soils Report by:----------GSH Geotechnical Consultants, Inc.
2. Report Number & Date:----------0128.074-11 September 28, 2011
3. Soil Bearing Pressure:----------3000 psf, on Compacted Fill.
4. Frost Protection:----------30 inches minimum
5. Lateral Soil Pressure Fluid Equivalent Density:
   - 5.1. Active----------38 pcf (retaining walls)
   - 5.2. At Rest----------47 pcf (rigid foundation walls)
   - 5.3. Passive----------300 pcf
6. Coefficient of Friction----------0.4
7. The soils engineer shall review all excavations and fill placement prior to placing concrete.

EARTHWORK

1. Clearing: The entire building area shall be scraped to remove the top 4" of soil including all vegetation and debris.
2. Contractor is to provide temporary shoring for excavations as required.
3. Contractor is to provide measures necessary to prevent damage to or settlement of new or existing construction and utilities on or adjacent to project site.
4. Contractor is to provide dewatering as required to protect the site from flooding.
5. Proof rolling: The natural undisturbed soil below all footings shall be proof rolled prior to placing concrete. Remove all soft spots and replace with compacted structural fill.
6. Compacted structural fill: All fill material shall be a well-graded granular material with a maximum size less than 4" and with not more than 10% passing a #200 sieve. It shall be compacted to 95% of the maximum laboratory density as determined by ASTM D 1557. All fill shall be tested. Compacted structural fill shall be placed in lifts not exceeding 8" in uncompacted thickness.
7. Consult the project specifications and soils report for further earthwork requirements. The soils engineer shall review all excavations and fill placement prior to placing concrete.

CONCRETE

2

1. Concrete shall be supplied in accordance with ACI 318 and the following requirements:

Concrete Use	Comp. Strength f 'c (psi)	Exposure Classes	Cement Type[a]	Max. W/CM Ratio	Max. Flyash	Air Content[b,c]	Aggregate Size, Max.	Slump Limit[d]
Exterior Footings	4500	F1, S0, P0, C0	I, II	0.45	25%	5%	1 1/2"	4"
Interior Footings	3000	F0, S0, P0, C0	I, II	0.50	25%	1.5%	1 1/2"	5"
Foundation Walls	4500	F1, S0, P0, C1	I, II	0.45	25%	5%	3/4"	4"
Other Walls	4000	F0, S0, P0, C0	I, II	0.45	25%	1.5%	3/4"	4"
Piers	4000	F0, S0, P0, C0	I, II	0.45	25%	1.5%	3/4"	4"
Interior Slabs on Grade	3500	F0, S0, P0, C1	I, II	0.50	25%	1.5%	3/4"	5"
Normal Wt. Concrete on Steel Deck	3500	F0, S0, P0, C1	I, II	0.45	25%	1.5%	3/4"	4"
Site Concrete[e] (unreinforced)	4500	F2, S0, P0, C1	I, II	0.40	25%	6%	3/4"	4"

Table Footnotes:

a. Cement to comply with ASTM C150. Use Type V cement where required by soils report.
b. Air content ± 1.5%, measured at point of final placement. Air-entraining admixtures shall comply with ASTM C260 (when used). Calcium chloride shall not be added to the concrete mix. Unreinforced concrete slabs on grade may have calcium chloride not exceeding one percent.
c. Air entrainment shall be adjusted for the use of admixtures and fly ash.
d. Slump limit ± 1" applies to non-plasticized concrete. Test shall be conducted prior to adding plasticizer if used.
e. See civil drawings for site concrete requirements. In the absence of information, use values listed.

2. Materials unless noted otherwise:
   - 2.1. Normal Weight aggregates----------ASTM C33
   - 2.2. Fly Ash, Class F Pozzolan----------ASTM C618
   - 2.3. Reinforcing Steel
     - 2.3.1. General----------ASTM 615 Grade 60
   - 2.4. Deformed Bar Anchors (DBA)----------ASTM A496
   - 2.5. Headed Stud Anchors (HSA)----------ASTM A108
   - 2.6. Anchor Bolts: See steel and/or wood section(s) of general notes.
   - 2.7. No aluminum conduit or product containing aluminum or any other material injurious to concrete shall be embedded in concrete.
3. Reinforce composite slabs over metal deck with the following welded wire reinforcement (minimum). Welded wire reinforcement shall be placed 1" to 1 1/2" below the top of the slab:
   - 3.1. Slabs 6 1/4" or thinner 6" x 6" - W1.4/W1.4
   - 3.2. Slabs 7" or thinner, but thicker than 6 1/4" 6" x 6" - W2.1/W2.1
4. In composite slabs 6 1/4" or thinner, welded wire reinforcement may be substituted with "Fibermesh Fibers" manufactured by Propex Concrete Systems Corporation, as approved by ICC ER-4811. The rate of fiber application shall be based on ICC ER-4811. Other substitutions may be permitted if an ICC Evaluation report is approved by the Structural Engineer. Fibers above finished slab shall not be burned off.
5. In composite slabs thicker than 6 1/4", welded wire reinforcement may be substituted with macro synthetic fibers "coarse fibers" (per ASTM Subcommittee C09.42), made from virgin polyolefin, with equivalent diameter between 0.016" and 0.05", having minimum aspect ratio (length/equivalent diameter) of 50, at a minimum rate of 4 lb / cubic yard. Fibers above finished slab shall not be burned off.
6. The contractor shall be responsible for the design, detailing, care, placement and removal of all formwork and shores.
   - 6.1. Supporting forms and shoring shall not be removed until structural members have acquired sufficient strength to safely support their own weight and any construction load to which they may be subjected. In no case, however, shall forms and shoring be removed in less than 24 hours after concrete placement.
   - 6.2. Suspended slabs shall be re-supported after form removal until concrete reaches its 28-day specified compressive strength.
7. Reinforcement shall have the following concrete cover:---------- Clear Cover
   - 7.1. Cast-in-place Concrete
     - 7.1.1. Cast against and permanently exposed to earth----------3"
     - 7.1.2. Formed concrete exposed to earth or weather:
       - #6 thru #18 bars----------2"
       - #5 and smaller bars----------1 1/2"
     - 7.1.3. Concrete not exposed to weather or in contact with ground:
       - Slabs, Walls, Joists; #11 bars and smaller----------3/4"
       - Beams, Columns: Primary Reinforcement, Ties,----------1 1/2"
       - Stirrups, Spirals
   - 7.2. Precast Concrete
     - 7.2.1. Concrete exposed to earth or weather:
       - Wall Panels:
       - #6 and smaller----------3/4"
       - #14 and #18 bars----------1 1/2"
       - Other members:
       - #11 and smaller----------1 1/2"
       - #14 and #18 bars----------2"
     - 7.2.2. Concrete not exposed to weather or in contact with ground:
       - Slabs, Walls, Joists; #11 bars and smaller----------5/8"
       - Beams, Columns: Primary Reinforcement----------1 1/2"
       - Ties, Stirrups, Spirals----------3/8"
8. Construction Joints and Control Joints:
   - 8.1. Provide a beveled 2" x 4" x continuous keyway in all horizontal and vertical construction joints including between top of footing and foundation walls. In addition, all joints shall be intentionally roughened to a full amplitude of approximately 1/4".
   - 8.2. Control joints shall be installed in slabs on grade so the length to width ratio of the slab is no more than 1.25:1. Control joints shall be completed within 12 hours of concrete placement. Control joints may be installed by either:
     - 8.2.1. Saw cut with depth of 1/4 the thickness of the slab
     - 8.2.2. Tooled joints with depth of 1/4 the thickness of the slab
   - 8.3. Install construction or control joints in slabs on grade at a spacing not to exceed 30 times the slab thickness in any direction, unless noted otherwise. Construction joints shall not exceed a distance of 125'-0" on center in any direction.
9. Construction
   - 9.1. Use chairs or other support devices recommended by the CRSI to support bar and tie reinforcement bars and WWF prior to placing concrete. WWF shall be continuously supported at 36" on center maximum. Reinforcing steel for slabs on grade shall be adequately supported on precast concrete units. Lifting the reinforcing off the grade during placement of concrete is not permitted.
   - 9.2. Contractor shall coordinate placement of all openings, curbs, dowels, sleeves, conduits, bolts, inserts and other embedded items prior to concrete placement.
   - 9.3. All embeds and dowels shall be securely tied to formwork or to adjacent reinforcing prior to the placement of concrete.
   - 9.4. No pipes, ducts, sleeves, etc. shall be placed in structural concrete unless specifically detailed or approved by the structural engineer. Penetrations through walls when approved shall be built into the wall prior to concrete placement. Penetrations will not be allowed in footings or grade beams unless detailed. Piping shall be routed around these elements and footings stepped to avoid piping.
   - 9.5. Reinforcing bars shall not be welded unless specifically shown on drawings. In such cases, use only AWS standards. Do not substitute reinforcing bars for DBAs or HSAs.
   - 9.6. Top of concrete columns shall be flush (±1/4") with bottom of supported cast-in-place members.
10. Detailing:
    - 10.1. Lap splice lengths shall be detailed to comply with the "Reinforcing Bar Lap Splice Schedule" contained within the contract drawings.
      - 10.1.1. Do not splice stirrups and ties. Do not splice vertical bars in retaining walls unless specifically shown.
      - 10.1.2. At shearwall boundary elements, lap lengths shall be increased by 25%.
      - 10.1.3. Splices may be made with mechanical splices capable of 125% tension capacity of the bar being spliced. Mechanical splices shall be the positive connecting type coupler and shall meet all ACI requirements. Use "Cadweld", "Lenton" Standard Couplers, "Bar-Lock" or equal with internal protector. If mechanical splices are used, splices or couplers on adjacent bars shall be staggered a minimum of 24" apart along the longitudinal axis of the reinforcing bars.
    - 10.2. At joints provide reinforcing dowels to match the member reinforcing, unless noted otherwise.
    - 10.3. At all discontinuous control or construction slab on grade joints, provide (2) #4 x 48".
    - 10.4. Provide corner bars at intersecting wall corners using the same bar size and spacing as the horizontal wall reinforcing.
    - 10.5. All vertical reinforcing shall be doweled to footings, or to the structure below with the same size and spacing as the vertical reinforcing for the element above. Dowels extending into footings shall terminate with a 90° standard hook and shall extend to within 4" of the bottom of the footing. Footing dowels (#8 bars and smaller) with hooks need not extend more than 20" into footings.
    - 10.6. In concrete shearwalls, the horizontal wall reinforcing shall terminate at ends of walls and openings into the far end of the jamb column with a 90° standard hook plus a 6 bar diameter extension. Horizontal wall reinforcing shall be continuous through construction and control joints.
    - 10.7. See details for reinforcing around miscellaneous openings. All recesses that interrupt reinforcing shall be reinforced the same as an opening.
    - 10.8. Reference ACI 315 for additional detailing requirements.
11. Contractor required to submit concrete mix design for review by the engineer prior to any placement of concrete.
12. Contractor shall refer to and follow the recommendations in ACI 305R for hot weather concreting and ACI 306R for cold weather concreting.
13. Contractor is not to backfill against retaining walls unless walls have achieved design strength or have been shored. Contractor is not to backfill against basement walls without placement of the main floor diaphragm unless the walls have been shored or approval of the EOR has been granted, or it has been noted otherwise on the design drawings.
14. Construction activity or storage of materials shall not take place on newly placed concrete for a minimum of 7 days after concrete placement.

POST-INSTALLED ANCHORS

1. Post-installed anchors shall only be used where specifically detailed or called for on the design drawings. If circumstances arise during construction where the Contractor desires to substitute a post-installed anchor in place of a cast-in-place anchor, the Contractor shall submit a formal written request for each circumstance to the Architect and Engineer for review.
2. Follow all ICC Evaluation Report and manufacturers' requirements and recommendations for post-installed anchor installation. Where conflicts may exist, the most stringent requirement applies.
3. All holes in hollow, brick, or stone masonry shall be performed in the "rotary-only" mode with the hammer function off.
4. Follow manufacturer and ICC evaluation report requirements for installation temperature of adhesive anchors. Adhesive anchors shall not be installed or cured outside of approved temperature ranges.
   - 4.1. Adhesive anchors in concrete (normal weight only) shall be
     - 4.1.1. HIT RE-500 SD by Hilti (ESR-2322)
     - 4.1.2. HIT HY-150 MAX-SD by Hilti (ESR-3013)
     - 4.2.3. SET-XP by Simpson (ESR-2508)
     - 4.2.4. PE1000+ by Powers Fasteners (ESR-2583) - 1/2" to 7/8" diameter only
   - 4.3. Adhesive anchors in grouted masonry shall be
     - 4.3.1. HIT HY-150 MAX by Hilti (ESR-1967)
     - 4.3.2. SET by Simpson (ESR-1772)
   - 4.4. Adhesive anchors in brick or stone masonry shall be
     - 4.4.1. HIT HY-20 by Hilti (ESR-4815)
     - 4.4.2. SET by Simpson (ESR-1772)
     - 4.4.3. CIA-GEL 7000 Epoxy by USP (ESR-1702)
5. Mechanical (Expansion) anchors
   - 5.1. Mechanical anchors in concrete shall be
     - 5.1.1. Kwik Bolt TZ by Hilti (ESR-1917)
     - 5.1.2. Kwik HUS-EZ by Hilti (ESR-3027)
     - 5.1.3. Strong-Bolt by Simpson (ESR-1771)
     - 5.1.4. Strong-Bolt 2 by Simpson (ESR-3037)
     - 5.1.5. Titen HD by Simpson (ESR-2713)
     - 5.1.6. Torq-cut by Simpson (ESR-2705)
     - 5.1.7. Trubolt+ by ITW Redhead (ESR-2427)
   - 5.2. Mechanical anchors in grouted masonry shall be
     - 5.2.1. Kwik Bolt 3 by Hilti (ESR-1385)
     - 5.2.2. Titen HD by Simpson (ESR-1056)
     - 5.2.3. Wedge-All by Simpson (ESR-1396)
     - 5.2.4. Strong-Bolt 2 by Simpson (IAPMO ES ER-0240)
6. The Contractor may submit, for review and approval, the manufacturer's ICC evaluation report of alternate anchor systems. The alternate method shall provide minimum capacities equal to or greater than those in the above noted anchors. The alternate method shall be approved by the engineer of record prior to the substitution.
7. Special Inspection and Testing
   - 7.1. Special inspection shall be performed according to the requirements of the ICC evaluation report, per section 1704.15 of the IBC. Periodic inspection is allowed for mechanical anchors per section 6.6 of ICC-ES AC193.
   - 7.2. Testing shall be done according to the more stringent requirements of the ICC evaluation report and the values listed below.
     - 7.2.1. Adhesive Anchors in Concrete or Solid Grouted Masonry: 50% of anchors in non-redundant elements (e.g. column, brace connections, boundary steel, hold-downs) and 10% of anchors in redundant elements shall be tension tested.
     - 7.2.2. Adhesive Anchors in Solid Brick Masonry: Tension test 5% of all anchors to 3000 lbs. Hold load for five minutes. Torque test 25% of all anchors with a calibrated wrench to 60 foot-pounds.
     - 7.2.3. Mechanical anchors shall be tension tested to twice the allowable tension load listed in the ICC evaluation report.

MASONRY

2

1. Materials, unless noted otherwise:
   - 1.1. Concrete Masonry Units (CMU): Medium weight (115pcf) (minimum unit strength of 3750 psi) f'm = 2500 psi
   - 1.2. Mortar: Type "M" (2500 psi minimum compressive strength)
   - 1.3. Grout shall attain a minimum compressive strength of 2500 psi at 28 days.
   - 1.4. Reinforcing Steel----------ASTM 615 Grade 60 (Fy = 60 ksi)
   - 1.5. Deformed Bar Anchors (DBA)----------ASTM A496
   - 1.6. Headed Stud Anchors (HSA)----------ASTM A108
   - 1.7. Anchor Bolts----------ASTM A307
   - 1.8. Heavy hex nuts and hardened washers----------ASTM A563
2. Reinforcement shall have the following cover:
   - 2.1. Joint reinforcement shall have not less than 5/8" mortar coverage from the exposed face.
   - 2.2. Other reinforcement shall have a minimum coverage of one bar diameter over all the bars, but not less than 3/4". When masonry is exposed to soil, minimum coverage shall be 1 1/2".
3. Construction Requirements
   - 3.1. All units shall be laid with full mortar beds on the face shells. All head joints shall be filled solidly with mortar for a distance in from the face of the units not less than the thickness of the longitudinal face shells. Cells which are to be grouted shall have full head joints.
   - 3.2. Masonry walls, beams and columns shall be constructed with running bond unless noted otherwise.
   - 3.3. Solid grouting of walls is unacceptable except where specifically noted.
   - 3.4. All cells containing reinforcement, embeds, anchor bolts, etc. shall be filled solid with grout. Grout shall be placed by mechanical vibration during placing and revibrated after excess moisture has been absorbed but before workability is lost. Puddling or rodding of grout is not allowed.
   - 3.5. Where walls are not grouted solid, each grout pour shall terminate flush with the top of the uppermost unit except at cells with vertical reinforcing where the grout shall be 1 1/2" below top of unit to provide construction key.
   - 3.6. Grout pours shall be limited to 4'-0" unless high lift grouting procedures are followed.
   - 3.7. All masonry below grade shall be solid grouted.
   - 3.8. Vertical cells to be filled with grout shall have vertical alignment sufficient to maintain a clear, unobstructed, vertical cell measuring not less than 2" by 3". All steel reinforcement shall be secured against displacement prior to grouting by wire positioners or other suitable devices at intervals not exceeding 200 bar diameters or 10'-0" maximum, or at bar splice locations. Vertical reinforcing shall be located at the center of the wall unless noted otherwise.
   - 3.9. Reinforcing bars shall not be welded unless specifically shown on drawings. In such cases, use only AWS standards. Do not substitute reinforcing bars for DBAs or HSAs.
   - 3.10. Control Joints: Spacing shall not exceed 26'-0". See architectural drawings for locations.
   - 3.11. Grout all beam and joist pockets solid after installation of beams and joists.
   - 3.12. Embed channels and plates shall be placed so as to create a flush surface with the face of the wall.
   - 3.13. Anchor bolts and headed stud anchors shall be set in a grouted cell. Anchor bolts and headed stud anchors shall have 1/2" grout surrounding the shank at its penetration. Grout shall be flush with the face or top of the masonry.
4. Detailing Requirements
   - 4.1. Lap all masonry reinforcing per the "Masonry Reinforcing Bar Lap Splice Schedule" contained within the contract drawings.
   - 4.2. All vertical reinforcing shall be doweled to the foundation wall, footing (structure below) and to the structure below with the same size dowel, spacing (and in the same core) as the vertical wall reinforcing above.
   - 4.3. Corner Bars: Horizontal reinforcement shall be continuous at all corners and at intersecting walls. Provide corner bars with the required lap splice length.
   - 4.4. See details for reinforcing around miscellaneous openings.
   - 4.5. Horizontal wall reinforcing shall be continuous through joining concrete walls, masonry walls, columns, and pilasters. Provide a key between the wall and the column or pilaster. Horizontal wall reinforcing shall be placed inside the column vertical reinforcing.
   - 4.6. Horizontal reinforcing shall terminate with a standard hook at edge of openings and ends of walls without corner bars as shown in details.
   - 4.7. Horizontal wall reinforcing shall terminate with a standard 180° hook at each side of control joints except at floor and roof levels, lintels, beams and at top of parapets as shown in details.
   - 4.8. All masonry column ties shall terminate with 135° hooks plus a 6 bar diameter extension (4" minimum).

MASONRY VENEER

1. Masonry veneer shall be attached to steel stud walls with "Dur-O-Wal DA 213S seismic veneer anchors" by Dur-O-Wal or Hohmann & Barnard "DW-10" or "DW-10HS seismic veneer anchors" (or equal) spaced at 16" on center. Veneer anchors shall be attached to studs with (2) #10 corrosion resistant self-drilling screws and neoprene washers. Attach the veneer to the anchors with "Dur-O-Wal 213S Seismic Steel Pintles" or Hohmann & Barnard 3/16" diameter "Byna-Tie with Seismiclips" (or equal) spaced at a maximum of 16" on center in both directions. Anchor ties shall engage to a galvanized #9 gauge horizontal joint reinforcement wire in the veneer, which shall be continuous and shall be placed at 16" on center maximum at the center of the veneer.
2. Masonry Veneer shall be attached to concrete walls with 22 gauge "Dur-O-Wal DA100" galvanized dovetail slots installed vertically in concrete at 16" on center. Attach the veneer to dovetail slots with 16 gauge "Dur-O-Wal DA 131 seismic dovetail anchor ties" or Hohmann & Barnard 3/16" diameter "Byna-Tie with Seismiclips" (or equal) spaced at a maximum of 16" on center in both vertical and horizontal directions. Anchor ties shall engage to a galvanized #9 gauge horizontal joint reinforcement wire in the veneer, which shall be continuous and shall be placed at 16" on center maximum at the center of the veneer. Dovetail slots and anchor ties shall be galvanized.
3. Masonry veneer shall be attached to reinforced masonry walls with "tri-rod ladur type reinforcement" spaced at a maximum of 16" on center vertically consisting of (3) #9 gauge, galvanized, corrugated, wires. Veneer may also be attached with "Dur-O-Wal DA 3600S Heavy Duty Seismic Ladur-Eye" with DA 213S seismic steel pintles spaced at 16" on center maximum in both vertical and horizontal directions. Anchor ties shall engage to a galvanized #9 gauge horizontal joint reinforcement wire in the veneer, which shall be continuous and shall be placed at 16" on center maximum at the center of the veneer. Anchors shall extend to the galvanized "ladur type" ((2) #9 wires) joint reinforcing in the masonry wall spaced at 16" on center maximum.
4. Other methods of attachment may be used after written acceptance by the architect and structural engineer.
5. Steel Lintels: Provide steel angle lintels at all openings through the masonry veneer. Provide 1" of bearing for each foot of width of opening, with a minimum bearing of 6". See the Steel Angle Lintel Schedule for size.

STRUCTURAL STEEL

1. Codes and Standards: Fabrication and installation shall comply with the latest edition of the following:
   - 1.1. American Institute of Steel Construction (AISC), "Specification for the Design, Fabrication and Erection of Structural Steel for Buildings," with "Commentary".
   - 1.2. AISC "Code of Standard Practice" excluding sections 3.4, 4.4 and 4.4.1.
   - 1.3. AISC "Specification for Structural Joints Using ASTM A325 or A490 Bolts"
   - 1.4. AISC "Seismic Provisions for Structural Steel Buildings."
   - 1.5. American Welding Society (AWS), Structural Welding Codes D1.1, D1.3, D1.4, and D1.8, except as modified by the "Steel Construction Manual".
2. Material:
   - 2.1. Wide Flange Sections----------ASTM A992 (50 ksi)
   - 2.2. Plate
     - 2.2.1. Typical----------ASTM A36
     - 2.2.2. Moment Frames----------ASTM A572 Grade 50
   - 2.3. Notch-toughness requirements apply for Group 3, 4, and 5 shapes with flange thickness greater than 1 1/2" and plate 2" and thicker which are a part of the Seismic Load Resisting System (SLRS). Minimum Charpy V-Notch requirements are 20 ft-lbs at 70°F.
   - 2.4. Notch-toughness requirements apply for demand critical welds. Minimum Charpy V-Notch requirements are 20 ft-lbs at -20°F and 40 ft-lbs at 70°F
   - 2.5. Pipe----------ASTM A53 Grade B Type E/S
   - 2.6. Hollow Structural Shapes
     - 2.6.1. Rectangular----------ASTM A500 Grade B (46 ksi)
     - 2.6.2. Round----------ASTM A500 Grade B (42 ksi)
   - 2.7. Other Structural Shapes (M, C, etc)----------ASTM A36
   - 2.8. Bolted Connections----------ASTM A325
   - 2.9. Anchor Bolts
     - 2.9.1. All Columns unless noted otherwise: ASTM F1554 Grade 36 with ASTM A563 heavy hex nuts with Grade A hardened washers.
     - 2.9.2. Moment Frame Columns unless noted otherwise: ASTM F1554 Grade 55 (equiv to A572 Grade 55) ASTM F1554 Grade 105 (equiv to A193 Grade B7) with ASTM A563 heavy hex nuts with ASTM F436 minimum 5/16" thick washers.
   - 2.10. Weld Filler Metal
     - 2.10.1. Shielded Metal Arc Welding----------AWS A5.1, low-hydrogen only. Low-hydrogen restrictions do not apply when welding sheet steels in accordance with AWS D1.3, including attaching these steels to structural members.
     - 2.10.2. Gas-Metal & Metal-Cored Arc Welding----AWS A5.18
     - 2.10.3. Flux-Cored Arc Welding----------AWS A5.20. E7XT-4 or E7XT-11 electrodes are not permitted.
     - 2.10.4. Intermixing of welds made from self-shielded welding electrodes with welds made by other processes is not allowed in seismic critical welds, unless tested in accordance with AWS D1.8, annex B. The Field Erection Contractor is responsible for verifying that intermixing of self-shielded weld metal with weld metal of other processes will not occur, or alternatively, the welding procedure is qualified by testing.
   - 2.11. Deformed Bar Anchors (DBA)----------ASTM A496
   - 2.12. Headed Stud Anchors (HSA)----------ASTM A108
   - 2.13. Non-Shrink Grout----------ASTM C1107 Grade B
     - Non-shrink grout shall be prepackaged, non-metallic and non-gaseous.
     - Furnish certified independent test data to Structural Engineer.
     - Fluid Consistency (flow cone) = 20 to 30 seconds
     - Compressive Strength in 28 days = 7,500 psi
3. Structural Detailing
   - 3.1. Provide full depth web stiffener plates at each side of all beams at all bearing points. Stiffener plates shall be the thickness called out below unless noted otherwise. Stiffeners shall be welded on both sides of the plate-to-flange and plate-to-web interfaces. Do not weld into the web-to-flange fillet region of the member.
     - FLANGE WIDTH----------STIFFENER THICKNESS & WELD SIZE
     - Less than 8 1/4"----------1/4" & 3/16"
     - 8 1/4" to 12 1/4"----------3/8" & 1/4"
     - 12 1/4" to 16 1/2"----------1/2" & 5/16"
     - 16 1/2" to 20 3/4"----------5/8" & 3/8"
   - 3.2. Bolting and Fasteners
     - 3.2.1. Ordinary steel-to-steel connections, simple span framing, and beam/girder-to-bearing plates are the standard connection used throughout the design drawings, unless noted otherwise:
       - 3.2.1.1. Use A325N bolts or tension-controlled bolts.
       - 3.2.1.2. Tighten these fasteners to a "snug tight" condition.
       - 3.2.1.3. Where a steel-to-steel connection is not shown, provide a framed connection per AISC for one half the total uniform load capacity of the beam for the span and steel specified.
     - 3.2.2. Fasteners and washers shall not be reused. Scrap dirty, rusted, or water-contaminated bolt assemblies.
   - 3.3. Reduced Beam Sections
     - 3.3.1. Fabrication of the reduced flange sections of beams used in SLRS is restricted to mechanically guided thermal cutting processes. Freehand cutting is not permitted.
     - 3.3.2. Flange cuts shall meet the requirements of AISC 358.
     - 3.3.3. Repair of gouges, notches, mill imperfections, shall conform to the requirements of the AISC and AWS provisions.
   - 3.4. Weld Access Holes and Temporary Attachments
     - 3.4.1. Fabricate beam copes and weld access holes using the geometry described in AISC 360 Section J1.6.
     - 3.4.2. Runoff tabs are to be removed unless noted otherwise.
   - 3.5. Backup Bars: Remove backup bars from all beam bottom flange connections in demand critical welds, unless noted otherwise. Backgouge the root and weld to sound metal. Reweld the gouged area and add a 5/16" reinforcing fillet weld.
   - 3.6. Protected Zones: No connections, other than those on the design drawings, shall be made within the protected zone of the SLRS as identified in AISC 341.
     - 3.6.1. Locate headed studs, welds, miscellaneous metal, etc outside of the protected zone.
     - 3.6.2. Paint the protected zones with bright paint before and after fire coating operations to identify them.
   - 3.7. All welds not noted on drawings shall be minimum 1/4" fillet welds.
   - 3.8. Welds may be performed in the shop or the field. Designations of field welds on the Contract Documents are shown where it is anticipated field welds may be required, and are shown only for the purpose of assisting the Contractor in the bidding process. The Contractor is to coordinate the welding sequence between sub-contractors, and any costs associated with variations in the welding sequence are outside the scope of the Design Engineer, and are the responsibility of the Contractor. Field welding is to be minimized where possible. Contractor is to verify that the sequencing of welds meets all safety regulations, and the requirements of the Construction Documents and their referenced codes.
   - 3.9. All structural steel members shall be considered as an unrestrained fire-resistance-rated assembly.
4. Welding of Reinforcing Steel or Bolts
   - 4.1. Reinforcing Bars: Do not weld rebar except as specifically detailed in the drawings. In such cases, use only AWS standards. Do not substitute reinforcing bars for deformed bar anchors, structural bolts, or headed stud anchors.
   - 4.2. Do not weld anchor bolts, including "tack" welds.
   - 4.3. Headed Stud Anchor welding and Deformed Bar Anchor welding shall conform to the manufacturer's specifications.

COMPOSITE STEEL BEAMS

1. All beams supporting concrete over metal deck shall have headed stud anchors.
2. Composite beams are indicated on the framing plans with a suffix (nn). The number inside parentheses indicates the number of studs for this beam or section of beam. Beams or sections of beams shall have the studs spaced uniformly over the beam or section. The maximum spacing shall not exceed 36" on center.
3. All headed stud anchors shall conform to ASTM A-108. Dimensions shall comply with AISC. Use 3/4" diameter studs. Headed studs shall extend 1 1/2" minimum (2" maximum) above the top of the steel deck after welding. Headed studs shall be applied through the metal deck to the top flange of the steel section or welded directly to the steel section.
4. The minimum on center spacing of stud connectors shall be 6 diameters along the longitudinal axis of the supporting composite beam and 4 diameters transverse to the longitudinal axis of the supporting composite beam.
5. Composite beams shall be precambered as shown on plans. On the plans, c=0.00" denotes precamber dimension (upward) in inches.
6. Camber tolerance shall be +1/4", -0".
7. Slab shall be screeded to a constant thickness as indicated.

OPEN WEB STEEL JOISTS AND GIRDERS

1. All open web steel joist and girders shall be fabricated and erected in accordance with the latest edition of Steel Joist Institute (SJI), "Standard Specifications and Code of Standard Practice."
2. Joists or girders with slopes greater than 1/2" per foot shall be designed to meet or exceed the load capacities, listed in the SJI load tables, of the joist or girder sizes indicated on the framing plan, as if the joists or girders were installed level.
3. Provide special bearing ends to accommodate slopes from sloped joists, sloped girders or sloped bearing conditions.
4. Modifications to any joist or girder, including holes through the top and bottom chords, without the written consent and direction from the manufacturer is not allowed.
5. Design loads, unless noted otherwise:
   - 5.1. Wind loads (W) shown are calculated using ASCE 7.
   - 5.2. Seismic loads (E and Em) shown are calculated using ASCE 7.
   - 5.3. Gravity loads (D, L, S, etc.) shown are Allowable Stress (Working Stress) levels.
   - 5.4. Loads shown are at levels to be used directly by the Load Combinations from Section 1605 of the IBC without further adjustment.
   - 5.5. Allowable stress increases are permitted as allowed by the referenced standard being used for design.
6. The deflection of all open web joists and girders shall be limited to L/240 for total load and L/360 for live load, unless noted otherwise.
7. A certificate of compliance must be submitted to the building official upon completion of fabrication per IBC 2206.5.
8. All Open Web Steel Joists shall have their top chord designed for a +/- 4 kip axial seismic load.

28 March 2013
VOLUME A.1 - DFCM
Review Response #2

NOTE:
THESE STRUCTURAL DRAWINGS ARE BASED ON ARCHITECTURAL DRAWINGS DATED 08.28.2012

DIMENSIONS AND ELEVATIONS, AS THEY RELATE TO THE BUILDING IN GENERAL, i.e. GRID TO GRID DIMENSIONS OR DECK BEARING ELEVATIONS, ARE SUPPLIED BY THE ARCHITECT. THEY ARE PROVIDED ON THE STRUCTURAL PLANS AND DETAILS FOR THE CONVENIENCE OF THE CONTRACTOR. VERIFY DIMENSIONS AND ELEVATIONS WITH ARCHITECTURAL DRAWINGS.

DUNN ASSOCIATES, INC
Consulting Structural Engineers
EMAIL: ENG@DUNN-SE.COM
PH: 801-575-8877 FAX: 801-575-8875

A R C H I T E C T U R A L NEXUS
SALT LAKE CITY PLACERVILLE SACRAMENTO
Architectural NEXUS, Inc.
2150 South 1300 East, Suite 200
Salt Lake City, Utah 84106
T 801.924.5000 F 801.924.5001
http://www.archnexus.com

Original drawings remain the property of the Architect and as such the Architect retains total ownership and control. The design represented by these drawings is sold to the client for a one time use, unless otherwise agreed upon in writing by the Architect.
© Architectural Nexus, Inc.2011

UTAH NATIONAL GUARD CAMP WILLIAMS
RTI TASS COMPLEX, PHASE II
PROJECT NO. 490444

UTAH NATIONAL GUARD
12953 SOUTH MINUTEMAN DRIVE
DRAPER, UTAH 84020-1726

#	REVISIONS	
1	15 March 2013	DFCM Review Response
2	28 March 2013	DFCM Review Response #2

VOLUME A.1 - DFCM Review Response #2

DUNN PROJECT #:	11024
CHECKED BY:	Tyler Wright
DRAWN BY:	Brett Roberts
DATE:	28 March 2013

SHEET CONTENTS:
GENERAL STRUCTURAL NOTES

S-001

This drawing, as an instrument of professional service, is the property of DUNN ASSOCIATES INC, and shall not be used, in whole or part for any other project without the written permission of an authorized representative of DUNN ASSOCIATES INC. Unauthorized use will be prosecuted to the fullest extent of the law. Copyright © 2012 by DUNN ASSOCIATES INC.

3/27/2013 4:47:41 PM

GENERAL STRUCTURAL NOTES

METAL DECKING

1. Steel deck shall comply with the latest requirements of the Steel Deck Institute.
2. Steel deck material shall comply with the manufacturer's ICC Report and have a minimum yield strength of 33ksi.
3. All deck shall be 3-span continuous minimum. In areas where 3-span conditions are not possible, the contractor shall provide heavier gauge deck as required to provide the equivalent loading of the specified deck under a 3-span condition.
4. Steel roof deck shall not be used to support loads from plumbing, fire sprinklers, HVAC ducts, light fixtures, architectural elements, or equipment of any kind, unless specifically noted.
5. Conduits are permitted in deck slabs subject to local code requirements and fire rating considerations. When conduit is installed in the slab, it shall be limited to conduits having a diameter of 1" or less, or less than 1/3 the concrete cover, and no crossovers occur, and conduit is spaced at least 18" apart with a 3/4" minimum cover.
6. All members supporting deck shall be dry before welding.
7. Crimp seams before button punching or welding interlocking seams.
8. Where deck is to receive sprayed-on fire proofing, painted deck shall be coated with special paint that will allow the sprayed-on fire proofing to adhere to the painted deck.
9. All welds performed on the steel deck are to be painted.
10. Steel deck shall be galvanized (G60) when used above or below mechanical equipment rooms.
11. Steel floor deck shall be phosphatized/painted, composite, with interlocking side seams with the following minimum properties (LW = Light weight concrete, NW = Normal weight concrete):

    Type/Ga------S(in3/ft)------I (in4/ft)------Concrete (Total)----------Allowable shear value----------Notes
    W3/16---------0.960----------1.509----------3"(6")NW----------2175 plf for 10'-0" span----------Balcony Deck
    W3/16---------0.767----------1.203----------3"(6") NW----------2175 plf for 10'-0" span----------Typ. Floor

    11.1. Weld deck to supporting framing members with 3/4" diameter puddle welds at the following spacing (Closer spacings may be used to develop minimum shear requirements):
    - 11.1.1. 12" on center to supports perpendicular to deck corrugations (4 welds per 36" wide sheet).
    - 11.1.2. 12" on center to all supports parallel to deck corrugations.

    11.2. Attach interlocking seams with 3/16" diameter button punch at 18" on center or 1 1/2" top seam weld at 36" on center between adjacent pieces of deck. Closer spacings may be used to develop minimum shear requirements.

    11.3. Provide a 2" minimum bearing at all supports.

    11.4. Butt all end splices.
12. Steel roof deck shall be painted with interlocking side seams with the following minimum properties:

    Type/Ga----------S(in3/ft)----------I (in4/ft)----------Allowable shear value----------Notes
    1 1/2" B/20----------0.226----------0.216----------1120 plf for 6'-0" span----------Typ. Roof
    1 1/2" B/16----------0.411----------0.377----------2403 plf for 6'-0" span----------Typ. Roof

    12.1. Weld steel roof deck to supporting framing members with 3/4" diameter puddle welds at the following spacings (Closer spacings may be used to develop minimum shear requirements):
    - 12.1.1. 6" on center to all supports perpendicular to deck corrugations (7 welds per 36" sheet).
    - 12.1.2. 6" on center to all supports parallel to deck corrugations.
    - 12.1.3. Interlocking side seams between adjacent pieces of decking may be attached with "Verco Sidelap Connections" by Verco Manufacturing (VSC) or "ASC DeltaGrip side seam connection" by ASC Steel Deck at 8" on center minimum Unless noted otherwise.

    12.2. At the Contractor's option, Hilti X-EDN19/X-EDNK 22 powder-actuated fasteners may be used in lieu of puddle welds for 20 ga deck. Puddle welds are required for 16 ga deck. Follow fastener manufacturer's recommendations for installation. Fasteners shall be installed at the following spacings (Closer spacings may be used to develop minimum shear requirements):
    - 12.2.1. 6" on center to all supports perpendicular to deck corrugations (7 fasteners per 36" sheet).
    - 12.2.2. 6" on center to all supports parallel to deck corrugations.
    - 12.2.3. Interlocking side seams between adjacent pieces of decking may be attached with "Verco Sidelap Connections" by Verco Manufacturing (VSC) or "ASC DeltaGrip side seam connection" by ASC Steel Deck at 4" on center. Closer spacing may be used to develop minimum shear requirements.

    12.3. The Contractor may submit, for review and approval, the manufacturer's ICC report of an alternate method of deck attachment. The alternate method shall provide minimum deck diaphragm shear values equal to or greater than those noted above. The alternate method shall be approved by the engineer of record prior to the substitution.

    12.4. Provide a 2" minimum bearing and an 8" lap at the splice points, centering the splice over the support.

COLD FORMED STEEL

1. Wall System Performance Requirements
   - 1.1. All systems intended for use to enclose the building shall comply with the following criteria for interstory drift as required by ASCE 7-05 as interpreted or defined herein and as modified or supplemented herein. Systems shall be detailed to accommodate vertical building movement (live load deflection) in conjunction with interstory drift.
     - 1.1.1. All components and systems shall be designed and detailed for elastic (probable) interstory drift (lateral displacement of one floor relative to adjacent floors as indicated in the General Structural Notes. For this given magnitude of movement, all systems and/or elements and/or components shall remain intact, undamaged and all sealant joints integral to or placed between systems shall remain intact, uncompromised, without failures or breaches. Joints, jointing and/or jointery shall be designed such that sealant materials flex, compress and/or shear within limits recommended by the sealant manufacturers so as to remain an effective barrier for water and air infiltration.
     - 1.1.2. In addition, all systems, elements and components shall be designed and detailed for amplified interstory (credible) as indicated in the General Structural Notes such that no failure or distress occurs to systems, and/or components, and/or elements and/or connections except joint sealant is allowed to fail. Under no circumstances shall elements and/or components come in contract with adjacent systems, elements and/or components.
     - 1.1.3. Systems with glazing are intended to keep all members and glazing intact and connected to the building. Glazing shall not break or become dislodged from its restraints. Gaskets may fail and may dislodge but shall not let glass escape its restraint.
     - 1.1.4. Allowance shall be made for sealant to occupy some finite space when compressed beyond its working limit (suggest ±15% of its static joint width).
   - 1.2. All system connections shall comply with requirements of ASCE 7-05, Chapter 13.
   - 1.3. All systems shall be coordinated with all associated adjoining and interface in systems such that consistency is maintained throughout the exterior closure regarding the mode (sliding or racking) in which the system performs to meet interstory drift and other design criteria.
   - 1.4. Systems and details shall be consistent with the architectural intent for joint sizes and system details to the largest extent possible, or where required, modified only after prior approval.
2. Cold Formed Steel Framing
   - 2.1. The design of cold formed steel and low alloy steel structural members shall be in accordance with AISI-NASPEC, North American Specification for the Design of Cold-Formed Steel Structural Members.
   - 2.2. The design, installation and construction of cold formed steel for structural and non-structural framing shall be in accordance with AISI-CFSD, Standard for Cold-Formed Steel Framing - General Provisions.
   - 2.3. All steel framing members shall comply with ASTM C955.
   - 2.4. Follow all manufacturers' guidelines and recommendations for all products.
   - 2.5. Unless noted otherwise, all welded connections shall be done according to AWS standards.
   - 2.6. All interior non-bearing steel stud walls that extend above the ceiling but do not attach to the structure above shall be braced with diagonal metal-stud braces (45°). The kl/r ratio of the brace shall not exceed 200 and shall not be spaced further apart than 10'-0" on center. Connect diagonal braces to the top of the steel stud walls and to the top flange of the steel beams with (2) #10 tek screws minimum. Where a concrete deck occurs above, use two powder-driven fasteners per diagonal brace. Other approved methods may be used.
   - 2.7. Anchor bolts: See steel section of general notes.
3. Connection Hardware
   - 3.1. All connection hardware (examples: "StiffClip", "VertiClip", "DriftClip", "BridgeClip", etc) shown shall be supplied by:
     The Steel Network, Inc.
     3221 Wellington Court
     Raleigh, NC 27615
     Phone: (888) 474-4676
     www.steelnetwork.com
   - 3.2. Install all hardware per the manufacturer's guidelines and recommendations.
   - 3.3. The contractor may submit an alternate connection method for approval by Dunn Associates, Inc. and the Architect.
4. Prefabricated Wall Systems: Submit complete shop drawings and calculations of all elements and connections for review. Shop Drawings shall bear the stamp of a Professional Engineer licensed in the same state as the project location.
5. All exterior cold formed steel framing shall be designed to comply with the requirements of Unified Facilities Criteria 04-010-01.

SPECIAL INSPECTION REQUIREMENTS

1. Seismic/Wind-force-resisting systems:
   - 1.1. Masonry shear walls
   - 1.2. Steel moment frames
   - 1.3. Steel cantilevered columns
   - 1.4. Metal roof deck
   - 1.5. Concrete diaphragms

   See specific discipline drawings for additional designated seismic systems requiring special inspection which are not contained in the structural drawings.
2. Special inspection and testing as required by the IBC shall be provided by an independent agency employed by the owner unless waived by the building official. The contractor shall coordinate and cooperate with the required inspections/tests as indicated below, referring to the IBC section indicated as appropriate.
3. Special inspection reports from the inspector shall be sent to the architect/engineer and building official.
   - 3.1. Bring any discrepancies to the contractor's immediate attention.
   - 3.2. Notify the engineer of any non-passing work that the contractor cannot readily correct.
   - 3.3. Any uncorrected discrepancies shall be brought to the attention of the architect/engineer and building official prior to completion of that phase of the work.
   - 3.4. A final report documenting required special inspections and corrections of any discrepancies shall be provided.
4. Quality Control Submittals for Structural Steel
   - 4.1. Furnish Level III nondestructive testing (NDT) personnel certifications.
   - 4.2. Furnish welder qualification records to verify project welders are tested and qualified in accordance with AWS D1.1 before welding structural or miscellaneous steels, D1.3 before welding sheet steels (10 ga and thinner), and D1.4 before welding reinforcing steel. Submit documentation to the approved inspection agency for review before welding.
     - 4.2.1. Special, restricted welder qualification testing is required for welders joining the bottom-flange through the weld access hole connection in demand critical welds. Qualify welders for the minimum groove angle and maximum deposition rate used in production. Follow the instructions for supplemental qualification testing in AWS D1.8, Section 5.1. Qualification testing must take place within two years from the start of this project.
   - 4.3. Furnish welding procedures that comply with AWS D1.1, D1.3, D1.4, D1.8, as required by the project. Welding procedures shall be made available to welders and inspectors.
     - 4.3.1. Furnish weld filler metal product data sheets identifying optimum welding parameters and storage conditions with each welding procedure submittal.
     - 4.3.2. Identify the maximum welding heat input per inch of weld (KJ/in) permitted by the welding procedures.
     - 4.3.3. Identify the maximum deposition rate that will be used while welding on any demand critical weld.
     - 4.3.4. Furnish typical welding filler metal Certificates of Conformance that identify the WPS Heat Input Envelope.
   - 4.4. Furnish a preliminary welding repair procedure to follow should welding repairs be required within the Seismic Protected Zone.
   - 4.5. Provide mill/material test reports (MTR) or certificates of conformance (CofC) that verify compliance of furnished materials to the requirements of the approved contract documents. MTRs or CofCs are required for structural shapes, plate, metal deck, fasteners, headed studs, DBAs, weld filler metal, and bolt assemblies used as primary, load-bearing members. Maintain the heat number traceability of structural shapes and plate used as primary, load bearing members.
5. Special Inspectors
   - 5.1. Special inspectors shall be qualified persons who shall demonstrate competence, to the satisfaction of the building official, for inspection of the particular type of construction or operation requiring special inspection.
   - 5.2. Structural Steel Non-Destructive Testing (NDT)
     - 5.2.1. NDT personnel will:
       - 5.2.1.1. Qualify in accordance with the recommended practices of the American Society of Nondestructive Testing, SNT-TC-1A, latest edition.
       - 5.2.1.2. Pass eye examinations meeting: (1) ASTM requirements at least once a year, and (2) AWS D1.1 every three years.
       - 5.2.1.3. Be certified in accordance with the AWS QC-1, latest edition.
       - 5.2.1.4. Level III must be qualified by ASNT testing in the applicable method under review.
     - 5.2.2. Only Level II and Level III technicians, qualified by testing in the applicable method, are permitted to interpret nondestructive testing results.
     - 5.2.3. Only Senior Certified or Certified Welding Inspectors (SCWI, CWI) are permitted to evaluate welds. Certified Associate Welding Inspectors may evaluate welds when under the direct supervision of a SCWI and/or CWI.
   - 5.3. Approved Inspection Agency will certify the following:
     - 5.3.1. Level III inspector has reviewed the NDT procedures
     - 5.3.2. Project ultrasonic testing technicians, testing demand critical welds, are trained and qualified in accordance with AWS D1.8, Annex E
     - 5.3.3. That the Inspection Agencies' ultrasonic testing procedures are qualified by weld mockups similar to AWS D1.1, Annex S
6. Section 1704: Special Inspections
   - 6.1. Fabricators (1704.2): All offsite fabrication of structural members (structural steel, precast concrete, wood glulams, etc.) shall be special inspected as required by the IBC, except work performed by fabricators registered and approved to perform work without special inspection. Approved fabricators shall submit a certificate of compliance to building official at the completion of fabrication.
   - 6.2. Steel (1704.3): Special inspection is required during the fabrication of any load-bearing members and assemblies, unless the fabricator and/or erector demonstrate prior approval by the jurisdiction where fabricated steel will be installed.
     - 6.2.1. Perform all welding and welding special inspection activities in accordance with AWS D1.1, D1.3, D1.4, and D1.8 as appropriate for the material form and welding methods employed. Approved methods and acceptance criteria are established in these codes.
     - 6.2.2. Perform all bolting and bolting inspection in accordance with AISC Specification for Structural Joints Using A325 and A490 Bolts.
     - 6.2.3. Continuous Special Inspection of welding is required for:
       - 6.2.3.1. Complete and partial penetration welds, except flare-bevel groove welds
       - 6.2.3.2. Multi-pass fillet welds
       - 6.2.3.3. Single-pass fillet welds larger than 5/16"
     - 6.2.4. Periodic Special Inspection of welding is required for (Inspect 25% of welds while welding operations are taking place):
       - 6.2.4.1. Single-pass fillet welds equal to or smaller than 5/16"
       - 6.2.4.2. Floor and roof deck arc spot, puddle welds
       - 6.2.4.3. Welding of stairs and railing systems, cold formed steel studs/joists.
     - 6.2.5. Periodic Special Inspection of all bolts is required as follows:
       - 6.2.5.1. Verify the proper grade of fasteners are installed where indicated in the approved construction drawings.
       - 6.2.5.2. Verify the storage and cleanliness of high strength fasteners meets AISC requirements.
       - 6.2.5.3. Store fasteners in protected storage until released for use. Temperature control is not required. Do not use fastener components showing rust, dirt, or grit. Cleaning or modifying fastener components from the as-delivered condition is not permitted.
       - 6.2.5.4. Verify the faying surfaces have been brought into firm contact, the bolts are in a snug tight condition, and that washers have been used as required.
     - 6.2.6. Non-Destructive Testing (NDT) of Welds is required as follows:
       - 6.2.6.1. Fabricators will visually inspect all welds for conformance to the approved construction drawings before releasing items for installation.
       - 6.2.6.2. Test all complete joint penetration welds joining primary structural members 5/16" or thicker, by radiographic or ultrasonic testing. Test in accordance with AWS D1.1, Section 6.
       - 6.2.6.3. Ultrasonically test base metal thicker than 1 1/2" for material discontinuities when that material is subjected to through-thickness weld shrinkage strains. (e.g. column flange of the beam-to-column, or column to base plate, complete joint penetration welds)
       - 6.2.6.4. Magnetic Particle Test is required for the following items:
         - 6.2.6.4.1. All temporary attachment or unauthorized weld sites or repairs inside the Protected Zones after finishing and grinding operations
         - 6.2.6.4.2. Any welds made in the k-zone
         - 6.2.6.4.3. 25% of all beam-to-column complete joint penetration welds
         - 6.2.6.4.4. Beam copes and weld access holes made in rolled shapes with flange thickness greater than 1 1/2" or in built-up shapes with webs thicker than 1 1/2"
         - 6.2.6.4.5. Weld tab removal sites.
       - 6.2.6.5. Amount of NDT is permitted to be reduced according to AISC 341, Appendix Q5.2(g) and (h) if appropriate criteria are met and if approved by the building official and engineer of record.
   - 6.3. Concrete (1704.4): Concrete construction shall be special inspected according to Table 1704.4. In the absence of sufficient data or documentation showing conformance to quality standards for materials, testing shall be required to determine material properties under the direction of the building official according to Chapter 3 of ACI 318.
   - 6.4. Masonry (1704.5): Masonry foundation walls constructed in accordance with Tables 1807.1.6.3(1-4) and masonry fireplaces, heaters and chimneys are not required to be special inspected.

     Engineered masonry in Occupancy Category I, II or III shall be special inspected according to Table 1704.5.1, excluding glass unit masonry or masonry veneer.
   - 6.5. Soils (1704.7): Existing site soil conditions, fill placement and procedure and load-bearing requirements shall be special inspected to verify compliance with the approved soils report and Table 1704.7. Where total depth of controlled fill is 12" or less, the special inspector shall verify that the in-place dry density of the compacted fill is not less than the 90% of the maximum dry density at optimum moisture content according to ASTM D 1557.
   - 6.6. Sprayed fire-resistant materials (1704.12): Special inspections for sprayed fire-resistant materials applied to structural elements and decks shall be in accordance with Sections 1704.12.1 through 1704.12.6 and based on the fire-resistance design as designated in the architectural drawings.
   - 6.7. Mastic and intumescent fire-resistant coatings (1704.13): Special inspections for mastic and intumescent fire-resistant coatings applied to structural elements and decks shall be in accordance with AWCI 12-B and based on the fire-resistance design as designated in the architectural drawings.
   - 6.8. See architectural drawings for additional inspections pertaining to EIFS (1704.14) or smoke control systems (1704.16).
   - 6.9. Special Cases (1704.15): Special inspect all post-installed anchors per ICC report. Periodic inspection minimum.
7. Section 1707: Special Inspections for Seismic Resistance
   - 7.1. Structural steel (1707.2): See special inspections for steel above.
   - 7.2. See specific discipline drawings for anchorage of storage racks (1707.5), architectural components (1707.6), mechanical/electrical components (1707.7) and designated seismic system verification (1707.8).
8. Section 1708: Structural Testing for Seismic Resistance
   - 8.1. Structural steel (1708.3): See special inspections for steel above.
   - 8.2. See manufacturer's seismic certification of compliance for non-structural components.
9. Structural Observations for Seismic Resistance: Structural Observations are to be performed by the Engineer of record or his representative. At the end of the project the Engineer performing Structural observations shall submit a stamped report of the Structural observations to the building official. Contractor shall notify the engineer at least 2 days prior to the following stages of construction so the engineer may have the opportunity to review the work. Observation reports shall be sent to architect, contractor and building official.
   - 9.1. Initial placing of any concrete, including but not limited to: footings, slabs on grade or concrete over steel deck
   - 9.2. Initial grout pours for masonry walls
   - 9.3. Initial erection of structural steel
   - 9.4. Completion of structural roof deck
   - 9.5. Initial finish work

LEGEND OF MARKS AND ABBREVIATIONS

AB	Anchor Bolt	JST	Joist
ABV	Above		
ALT	Alternate	K	Kip(S) = 1000 Pounds
ARCH	Architect	KLF	Kips Per Lineal Foot
		KSF	Kips Per Square Foot
BLDG	Building		
BLK	Blocking	LB	Pounds (#)
BLW	Below	LOC	Location
BM	Beam	LVL	Laminated Veneer Lumber
BN	Boundary Nail		
BOTT	Bottom	MAS	Masonry
BRB	Buckling Restrained Brace	MAX	Maximum
BRDG	Bridging	MECH	Mechanical
BRG	Bearing	MEZZ	Mezzanine
BTW	Between	MFR	Manufacturer
		MIN	Minimum
CGS	Center of Gravity of Strand	MISC	Miscellaneous
CJ	Control Joint	MTL	Metal
CJP	Complete Joint Penetration		
CL	Center Line	NTS	Not To Scale
CMU	Concrete Masonry Unit		
COL	Column	oc	On Center
CONC	Concrete	OPNG	Opening
CONN	Connection	OPP	Opposite
CONT	Continuous	OSB	Orientated Strand Board
COORD	Coordinate		
CS	Coil Strap	PCF	Pounds per Cubic Foot
CTR	Center	PEN	Penetrate or Penetration
		PERP	Perpendicular
DB	Deck Bearing	PFT	Pre-Fabricated Truss
DBA	Deformed Bar Anchor	PL	Plate
DBL	Double	PLF	Pounds per Lineal Foot
DCW	Demand Critical Weld	PREFAB	Prefabricated
DET	Detail	PSF	Pounds per Square Foot
DIA	Diameter	PSI	Pounds per Square Inch
DIM	Dimension	PT	Post Tension
DWG	Drawing	PT/DF	Pressure Treated Douglas Fir (or appropriate species for region)
(E)	Existing		
EA	Each	REINF	Reinforce
EF	Each Face	REQD	Required
EL	Elevation	RTU	Roof Top Unit
ELEC	Electrical		
EN	Edge Nail	SCHED	Schedule
ENGR	Engineer	SIM	Similar
EQ	Equal	SOG	Slab on Grade
EQUIP	Equipment	STD	Standard
EQ SP	Equally Spaced	STIFF	Stiffener
EW	Each Way	STL	Steel
EJ	Expansion Joint	STRUCT	Structural
EXT	Exterior	SW	Shear Wall
		SLRS	Seismic Load Resisting System
FLR	Floor		
FND	Foundation	T&B	Top and Bottom
FTG	Footing	T&G	Tongue and Groove
		TEMP	Temperature
@	Gage	THRU	Through
GALV	Galvanized	T/	Top of
GLB	Glued Laminated Beam	TYP	Typical
GSN	General Structural Notes		
GT	Girder Truss	UNO	Unless Noted Otherwise
HD	Hold-down	VERT	Vertical
HORIZ	Horizontal		
HSA	Headed Stud Anchor	W/	With
HSS	Hollow Structural Section	WWR	Welded Wire Reinforcement
		WP	Working Point
ICBO	International Conference of Building Officials		
IBC	International Building Code		
ICC	International Code Council		
INT	Interior		

DEFERRED SUBMITTALS

1. Items requiring deferred submittals that are listed below are to be designed and fabricated by the manufacturer according to specifications given in the construction documents.
   - 1.1. Open Web Steel Roof Joists and Girders (by steel joist manufacturer).
   - 1.2. Precast Concrete Elements (by precast supplier)
   - 1.3. Exterior Facade Framing and Connections (by supplier).
   - 1.4. Seismic Bracing for mechanical, electrical and plumbing components
2. These deferred submittals shall first be submitted to the project architect and/or engineer for review and coordination. Upon completion of the architect/engineer review, the architect/engineer will submit the deferred submittals to the Building Official for review and approval. The submittal to the Building Official shall include a letter stating that the architect/engineer review has been performed and that the plans and calculations for the deferred submittal items are found to be in general conformance with the design drawings with no exceptions.
3. The final submittal shall be signed and sealed by a Professional Engineer licensed in the state in which construction will occur and shall be available at the jobsite throughout construction.
4. Construction related to deferred submittals shall not commence until the Building Official has approved the submittal.

28 March 2013
VOLUME A.1 - DFCM
Review Response #2

NOTE:
THESE STRUCTURAL DRAWINGS ARE BASED ON ARCHITECTURAL DRAWINGS DATED 08.28.2012

DIMENSIONS AND ELEVATIONS, AS THEY RELATE TO THE BUILDING IN GENERAL, i.e. GRID TO GRID DIMENSIONS OR DECK BEARING ELEVATIONS, ARE SUPPLIED BY THE ARCHITECT. THEY ARE PROVIDED ON THE STRUCTURAL PLANS AND DETAILS FOR THE CONVENIENCE OF THE CONTRACTOR. VERIFY DIMENSIONS AND ELEVATIONS WITH ARCHITECTURAL DRAWINGS.

DUNN
DUNN ASSOCIATES, INC
Consulting Structural Engineers
EMAIL: ENG@DUNN-SE.COM
PH: 801-575-8877 FAX: 801-575-8875

ARCHITECTURAL NEXUS
SALT LAKE CITY PLACERVILLE SACRAMENTO

Architectural NEXUS, Inc.
2150 South 1300 East, Suite 200
Salt Lake City, Utah 84106
T 801.924.5000 F 801.924.5001
http://www.archnexus.com

Original drawings remain the property of the Architect and as such the Architect retains total ownership and control. The design represented by these drawings is sold to the client for a one time use, unless otherwise agreed upon in writing by the Architect.
© Architectural Nexus, Inc.2011

UTAH NATIONAL GUARD CAMP WILLIAMS
RTI TASS COMPLEX, PHASE II
PROJECT NO. 490444

UTAH NATIONAL GUARD
12953 SOUTH MINUTEMAN DRIVE
DRAPER, UTAH 84020-1726

#	REVISIONS	
1	15 March 2013	DFCM Review Response
2	28 March 2013	DFCM Review Response #2

DUNN PROJECT #:	11024
CHECKED BY:	Tyler Wright
DRAWN BY:	Brett Roberts
DATE:	28 March 2013

SHEET CONTENTS:
GENERAL STRUCTURAL NOTES

S-002

VOLUME A.1 - DFCM Review Response #2

This drawing, as an instrument of professional service, is the property of DUNN ASSOCIATES INC. and shall not be used, in whole or part for any other project without the written permission of an authorized representative of DUNN ASSOCIATES INC. Unauthorized use will be prosecuted to the fullest extent of the law. Copyright © 2012 by DUNN ASSOCIATES INC.

3/27/2013 4:47:42 PM

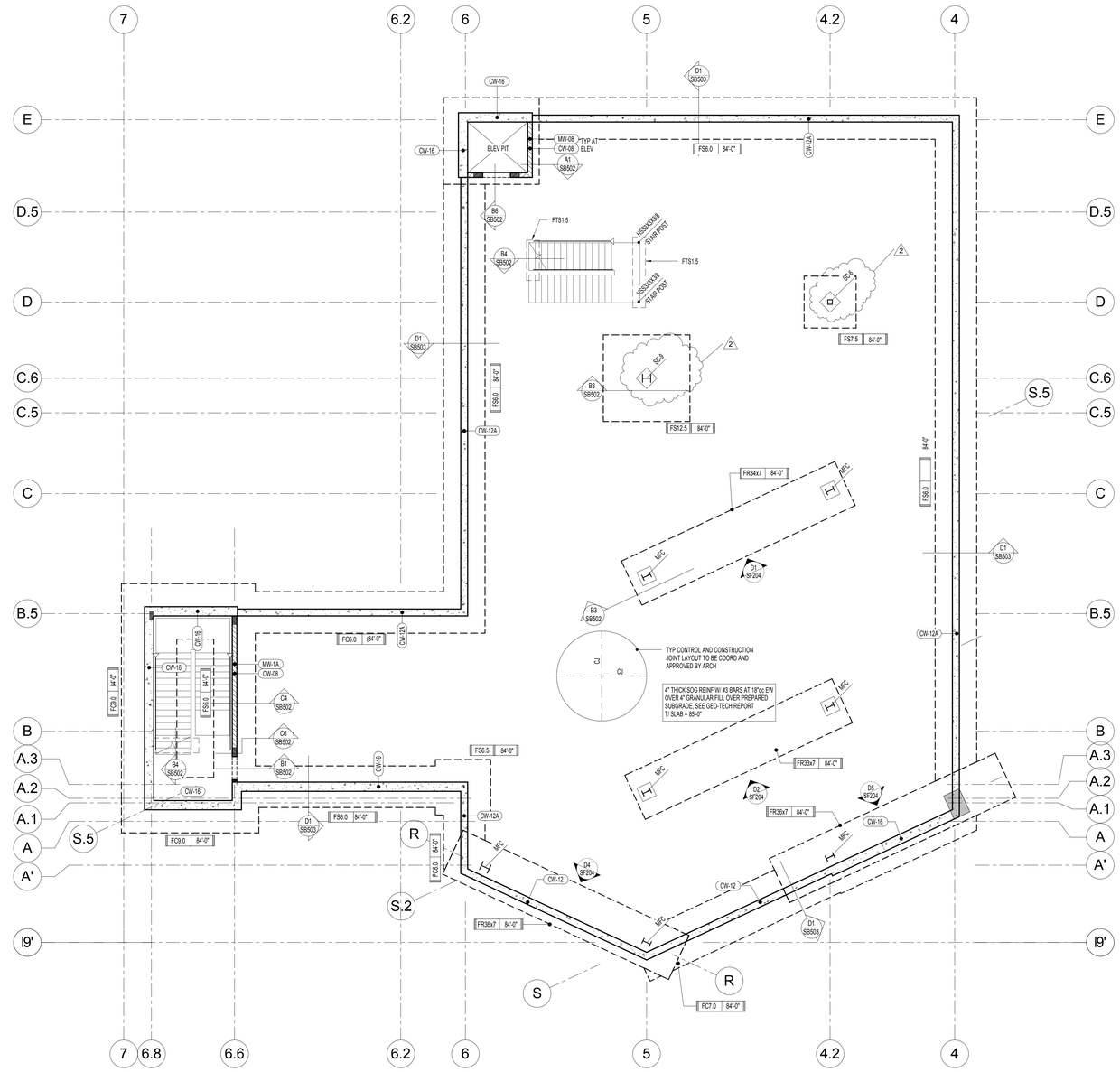

NORTH

1 / SB100 ADDITIVE / ALTERNATE FOOTING AND FOUNDATION PLAN

SCALE: 1/8" = 1'-0"

FOOTING AND FOUNDATION PLAN NOTES:

1. COORDINATE LOCATION OF DEPRESSED SLABS, SLOPED SLABS, AND FLOOR DRAINS WITH ARCHITECTURAL AND MECHANICAL DRAWINGS.
2. SEE ARCHITECTURAL DRAWINGS AND CIVIL DRAWINGS FOR EXTERIOR CONCRETE WORK AT DOORS, SIDEWALKS, ETC.
3. CENTER ALL SPOT FOOTINGS UNDER COLUMNS AS SHOWN ON PLAN, TYPICAL UNO.
4. SEE ARCHITECTURAL DRAWINGS FOR DIMENSIONS TO ALL STEEL COLUMNS.
5. SEE FOOTING AND FOUNDATION DETAILS ON SHEET (SB501) FOR BURIED PIPES RUNNING PARALLEL AND PERPENDICULAR TO FOOTINGS.
6. SEE FOOTING AND FOUNDATION DETAILS ON SHEET (SB501) FOR TYPICAL CONSTRUCTION AND CONTROL JOINTS IN FLOOR SLABS.
7. SEE FOOTING AND FOUNDATION DETAILS ON SHEET (SB501) FOR LOCATIONS WHERE CONTROL JOINTS ARE DISCONTINUOUS.
8. SEE FOOTING AND FOUNDATION DETAILS ON SHEET (SB501) FOR REINFORCING AROUND MISCELLANEOUS OPENINGS IN CONCRETE WALLS.
9. SEE FOOTING AND FOUNDATION DETAILS ON SHEET (SB501) FOR FILL BENEATH FOOTINGS
10. SEE FOOTING AND FOUNDATION DETAILS ON SHEET (SB502) FOR REINFORCING AROUND MISCELLANEOUS OPENINGS IN MASONRY WALLS.
11. SEE FOOTING AND FOUNDATION DETAILS ON SHEET (SB501) FOR REINFORCING AROUND RECESSES IN MASONRY WALLS.
12. SEE FOOTING AND FOUNDATION DETAILS ON SHEET (SB501) FOR MASONRY CONTROL JOINTS.
13. SEE FOOTING AND FOUNDATION DETAILS ON SHEET (SB501) FOR TERMINATION ON HORIZONTAL WALL REINFORCING AT ENDS OF WALLS.

MARKS AND SYMBOLS LEGEND

- SECTION MARK / SHEET NUMBER
- FRAME EL MARK FRAME
- EL ON (SF201)
- FTG / EL — FTG DESIGNATION / TOF EL, SEE DET ON (SB501) FOR REQD FROST DEPTH
- DEPRESSED FND WALL, POUR SLAB OVER, SEE FTG AND FND DETS ON (SB502)
- S — S — FTG STEP, SEE FTG AND FND DETS ON (SB501)
- FLR OFFSET, SEE FTG AND FND DETS ON (SB501)
- DEPRESSED SLAB, SEE ARCH PLANS FOR EXACT LOCATION AND EL
- CONC WALL, SEE SCHED ON (SF601)
- MAS WALL, SEE SCHED ON (SF601)
- or — STL COL, SEE SCHED ON (SF602)
- MAS COL, SEE SCHED ON (SF601)
- CW-X — CONC WALL, SEE SCHED ON (SF601)
- MW-X — MAS WALL, SEE SCHED ON (SF601)
- MW-X / CW-X — CONC WALL BLW AND MAS WALL ABV, SEE SCHED ON (SF601)
- MC-x — MAS COL, SEE SCHED ON (SF601)
- ML-x — MAS LINTEL, SEE SCHED ON (SF601)
- SC-x — STL COL, SEE SCHED ON (SF602)
- CP-x — CONC PIER
- FC-x — CONT FTG, SEE SCHED ON (SF601)
- FS-x — SPOT FTG, SEE SCHED ON (SF601)
- FR-x — RECTANGULAR FTG, SEE SCHED ON (SF601)
- FTS-x — THICKENED SLAB FTG, SEE SCHED ON (SF601)
- CJ — CONTROL JOINT, SEE FTG AND FND DETS ON (SB501), SEE ARCH DWGS FOR LAYOUT
- MCJ — MASONRY CONTROL JOINT. RUN FULL HEIGHT OF WALL

ARCHITECTURAL NEXUS
SALT LAKE CITY PLACERVILLE SACRAMENTO

Architectural NEXUS, Inc.
2150 South 1300 East, Suite 200
Salt Lake City, Utah 84106
T 801.924.5000 F 801.924.5001
http://www.archnexus.com

Original drawings remain the property of the Architect and as such the Architect retains total ownership and control. The design represented by these drawings is sold to the client for a one time use, unless otherwise agreed upon in writing by the Architect.
© Architectural Nexus, Inc.2011

UTAH NATIONAL GUARD CAMP WILLIAMS
RTI TASS COMPLEX, PHASE II
PROJECT NO. 490444

UTAH NATIONAL GUARD
12953 SOUTH MINUTEMAN DRIVE
DRAPER, UTAH 84020-1726

#	REVISIONS	
1	15 March 2013	DFCM Review Response
2	28 March 2013	DFCM Review Response #2

DUNN PROJECT #:	11024
CHECKED BY:	Tyler Wright
DRAWN BY:	Brett Roberts
DATE:	28 March 2013

SHEET CONTENTS:

ADDITIVE / ALTERNATE FOOTING AND FOUNDATION PLAN

SB100

VOLUME A.1 - DFCM Review Response #2

28 March 2013
VOLUME A.1 - DFCM
Review Response #2

NOTE:
THESE STRUCTURAL DRAWINGS ARE BASED ON ARCHITECTURAL DRAWINGS DATED 08.28.2012

DIMENSIONS AND ELEVATIONS, AS THEY RELATE TO THE BUILDING IN GENERAL, i.e. GRID TO GRID DIMENSIONS OR DECK BEARING ELEVATIONS, ARE SUPPLIED BY THE ARCHITECT. THEY ARE PROVIDED ON THE STRUCTURAL PLANS AND DETAILS FOR THE CONVENIENCE OF THE CONTRACTOR. VERIFY DIMENSIONS AND ELEVATIONS WITH ARCHITECTURAL DRAWINGS.

DUNN ASSOCIATES, INC
Consulting Structural Engineers
EMAIL: ENG@DUNN-INC.COM
PH: 801-575-8877 FAX: 801-575-8875

This drawing, as an instrument of professional service, is the property of DUNN ASSOCIATES INC., and shall not be used, in whole or part for any other project without the written permission of an authorized representative of DUNN ASSOCIATES INC. Unauthorized use will be prosecuted to the fullest extent of the law. Copyright © 2012 by DUNN ASSOCIATES INC.

3/27/2013 4:47:45 PM

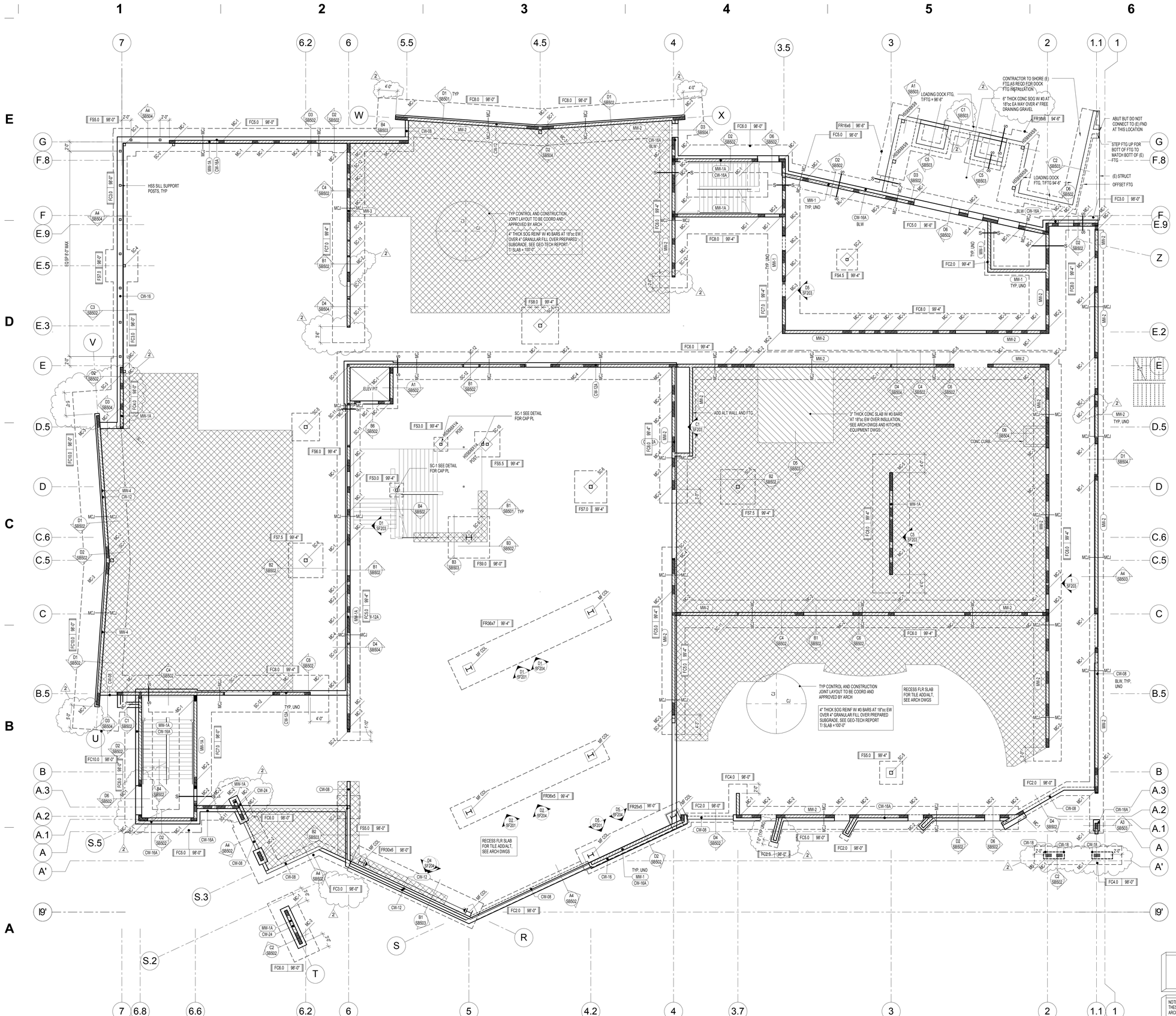

1 FOOTING AND FOUNDATION PLAN
SB101 SCALE: 1/8" = 1'-0"

FOOTING AND FOUNDATION PLAN NOTES:

1. COORDINATE LOCATION OF DEPRESSED SLABS, SLOPED SLABS, AND FLOOR DRAINS WITH ARCHITECTURAL AND MECHANICAL DRAWINGS.
2. SEE ARCHITECTURAL DRAWINGS AND CIVIL DRAWINGS FOR EXTERIOR CONCRETE WORK AT DOORS, SIDEWALKS, ETC.
3. CENTER ALL SPOT FOOTINGS UNDER COLUMNS AS SHOWN ON PLAN, TYPICAL UNO.
4. SEE ARCHITECTURAL DRAWINGS FOR DIMENSIONS TO ALL STEEL COLUMNS.
5. SEE FOOTING AND FOUNDATION DETAILS ON SHEET (SB501) FOR BURIED PIPES RUNNING PARALLEL AND PERPENDICULAR TO FOOTINGS.
6. SEE FOOTING AND FOUNDATION DETAILS ON SHEET (SB501) FOR TYPICAL CONSTRUCTION AND CONTROL JOINTS IN FLOOR SLABS.
7. SEE FOOTING AND FOUNDATION DETAILS ON SHEET (SB501) FOR LOCATIONS WHERE CONTROL JOINTS ARE DISCONTINUOUS.
8. SEE FOOTING AND FOUNDATION DETAILS ON SHEET (SB501) FOR REINFORCING AROUND MISCELLANEOUS OPENINGS IN CONCRETE WALLS.
9. SEE FOOTING AND FOUNDATION DETAILS ON SHEET (SB501) FOR FILL BENEATH FOOTINGS
10. SEE FOOTING AND FOUNDATION DETAILS ON SHEET (SB502) FOR REINFORCING AROUND MISCELLANEOUS OPENINGS IN MASONRY WALLS.
11. SEE FOOTING AND FOUNDATION DETAILS ON SHEET (SB501) FOR REINFORCING AROUND RECESSES IN MASONRY WALLS.
12. SEE FOOTING AND FOUNDATION DETAILS ON SHEET (SB501) FOR MASONRY CONTROL JOINTS.
13. SEE FOOTING AND FOUNDATION DETAILS ON SHEET (SB501) FOR TERMINATION ON HORIZONTAL WALL REINFORCING AT ENDS OF WALLS.

MARKS AND SYMBOLS LEGEND

- SECTION MARK / SHEET NUMBER
- FRAME EL MARK FRAME
- EL ON (SF201)
- FTG | EL — FTG DESIGNATION / TOF EL, SEE DET ON (SB501) FOR REQD FROST DEPTH
- DEPRESSED FND WALL, POUR SLAB OVER, SEE FTG AND FND DETS ON (SB502)
- S — S — FTG STEP, SEE FTG AND FND DETS ON (SB501)
- FLR OFFSET, SEE FTG AND FND DETS ON (SB501)
- DEPRESSED SLAB, SEE ARCH PLANS FOR EXACT LOCATION AND EL
- CONC WALL, SEE SCHED ON (SF601)
- MAS WALL, SEE SCHED ON (SF601)
- □ or I — STL COL, SEE SCHED ON (SF602)
- MAS COL, SEE SCHED ON (SF601)
- CW-X — CONC WALL, SEE SCHED ON (SF601)
- MW-X — MAS WALL, SEE SCHED ON (SF601)
- MW-X / CW-X — CONC WALL BLW AND MAS WALL ABV, SEE SCHED ON (SF601)
- MC-x — MAS COL, SEE SCHED ON (SF601)
- ML-x — MAS LINTEL, SEE SCHED ON (SF601)
- SC-x — STL COL, SEE SCHED ON (SF602)
- CP-x — CONC PIER
- FC-x — CONT FTG, SEE SCHED ON (SF601)
- FS-x — SPOT FTG, SEE SCHED ON (SF601)
- FR-x — RECTANGULAR FTG, SEE SCHED ON (SF601)
- FTS-x — THICKENED SLAB FTG, SEE SCHED ON (SF601)
- CJ — CONTROL JOINT, SEE FTG AND FND DETS ON (SB501), SEE ARCH DWGS FOR LAYOUT
- MCJ — MASONRY CONTROL JOINT. RUN FULL HEIGHT OF WALL

28 March 2013
VOLUME A.1 - DFCM
Review Response #2

NOTE:
THESE STRUCTURAL DRAWINGS ARE BASED ON ARCHITECTURAL DRAWINGS DATED 08.28.2012

DIMENSIONS AND ELEVATIONS, AS THEY RELATE TO THE BUILDING IN GENERAL, i.e. GRID TO GRID DIMENSIONS OR DECK BEARING ELEVATIONS, ARE SUPPLIED BY THE ARCHITECT. THEY ARE PROVIDED ON THE STRUCTURAL PLANS AND DETAILS FOR THE CONVENIENCE OF THE CONTRACTOR. VERIFY DIMENSIONS AND ELEVATIONS WITH ARCHITECTURAL DRAWINGS.

DUNN
DUNN ASSOCIATES, INC
Consulting Structural Engineers
EMAIL: ENG@DUNN-SE.COM
PH: 801-575-8677 FAX: 801-575-8675

ARCHITECTURAL NEXUS
SALT LAKE CITY PLACERVILLE SACRAMENTO

Architectural NEXUS, Inc.
2150 South 1300 East, Suite 200
Salt Lake City, Utah 84106
T 801.924.5000 F 801.924.5001
http://www.archnexus.com

Original drawings remain the property of the Architect and as such the Architect retains total ownership and control. The design represented by these drawings is sold to the client for a one time use, unless otherwise agreed upon in writing by the Architect.
© Architectural Nexus, Inc.2011

UTAH NATIONAL GUARD CAMP WILLIAMS
RTI TASS COMPLEX, PHASE II
PROJECT NO. 490444

UTAH NATIONAL GUARD
12953 SOUTH MINUTEMAN DRIVE
DRAPER, UTAH 84020-1726

#	REVISIONS	
2	28 March 2013	DFCM Review Response #2

DUNN PROJECT #: 11024
CHECKED BY: Tyler Wright
DRAWN BY: Brett Roberts
DATE: 28 March 2013

SHEET CONTENTS:
FOOTING AND FOUNDATION PLAN

VOLUME A.1 - DFCM Review Response #2

SB101

This drawing, as an instrument of professional service, is the property of DUNN ASSOCIATES INC. and shall not be used, in whole or part for any other project without the written permission of an authorized representative of DUNN ASSOCIATES INC. Unauthorized use will be prosecuted to the fullest extent of the law. Copyright © 2012 by DUNN ASSOCIATES INC.

3/27/2013 4:47:47 PM

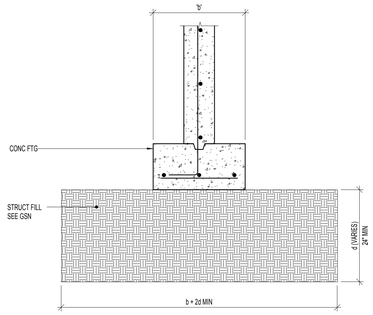

D1 TYPICAL COMPACTED STRUCTURAL FILL
SB501 NO SCALE:

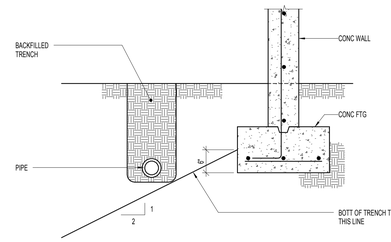

D2 TYPICAL PIPE PARALLEL TO FOOTING
SB501 NO SCALE:

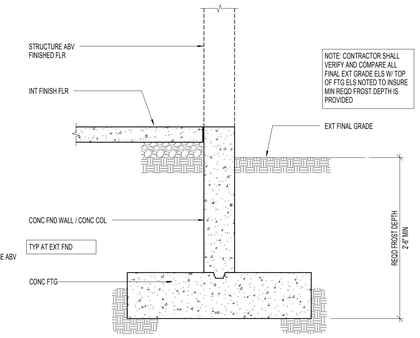

D3 TYPICAL FOOTING DEPTH DETAIL FOR FROST PROTECTION
SB501 NO SCALE:

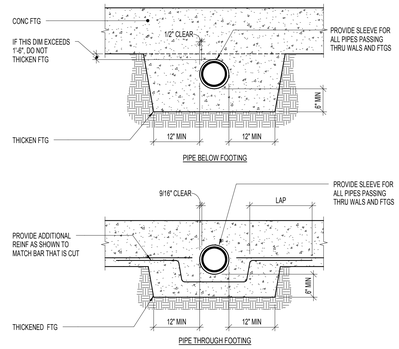

D4 TYPICAL PIPE PERPENDICULAR TO CONTINUOUS FOOTING
SB501 NO SCALE:

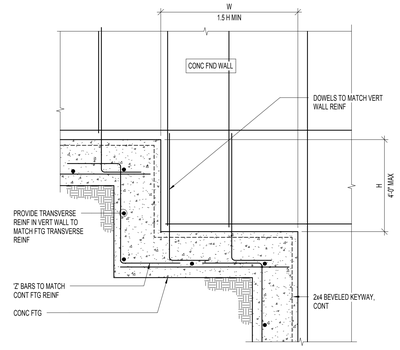

D6 TYPICAL FOOTING STEP AT CONCRETE FOUNDATION WALL
SB501 NO SCALE:

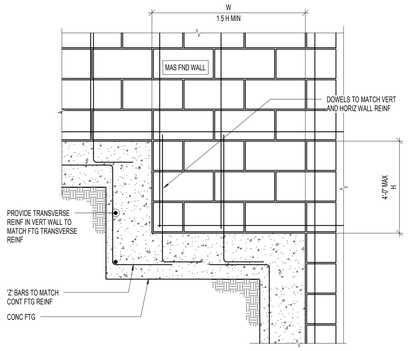

C1 TYPICAL FOOTING STEP AT MASONRY FOUNDATION WALL
SB501 NO SCALE:

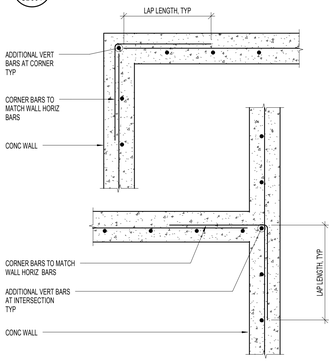

C2 TYPICAL CORNER WALL REINFORCING FOR SINGLE REINFORCED CONCRETE WALLS (PLAN VIEW)
SB501 NO SCALE:

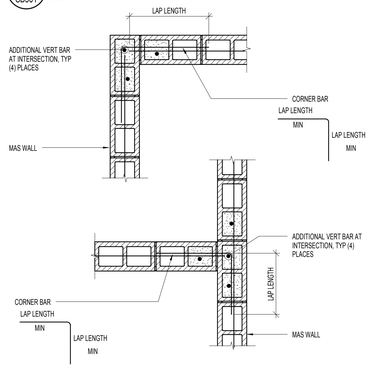

C3 TYPICAL CORNER WALL REINFORCING FOR SINGLE REINFORCED MASONRY WALLS (PLAN VIEW)
SB501 NO SCALE:

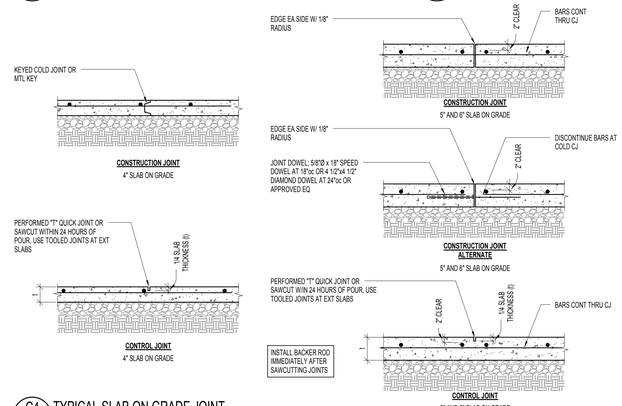

C4 TYPICAL SLAB ON GRADE JOINT
SB501 NO SCALE:

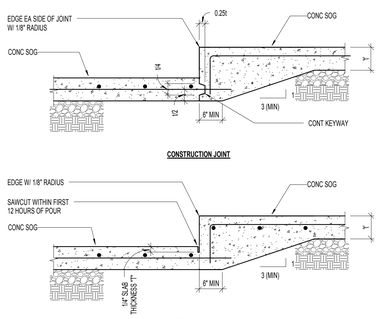

B1 TYPICAL SLAB DEPRESSION DETAIL
SB501 NO SCALE:

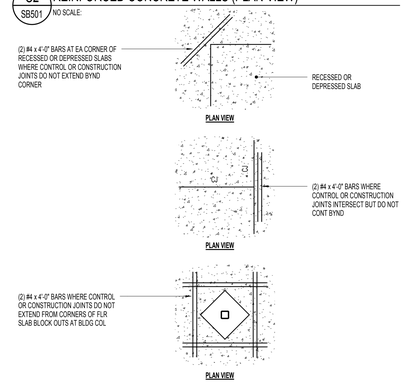

B2 TYPICAL LOCATIONS REQUIRING ADDITONAL SLAB REINFORCING STEEL
SB501 NO SCALE:

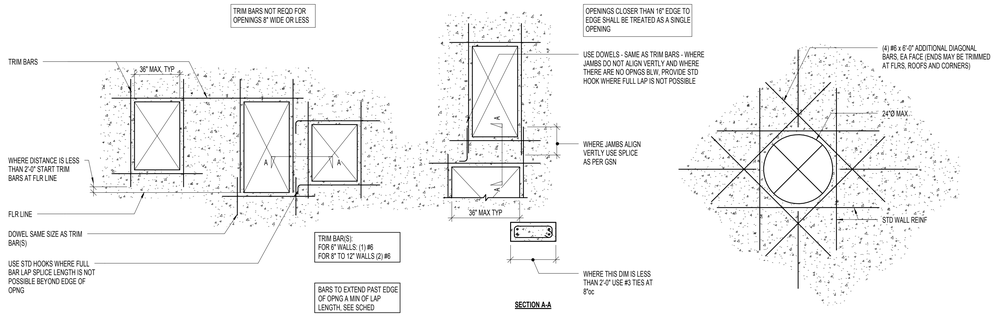

B3 TYPICAL TRIM BARS AROUND MISCELLANEOUS CONCRETE WALL OPENINGS UNLESS NOTED OTHERWISE
SB501 NO SCALE:

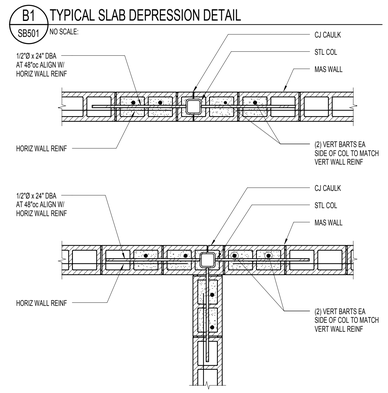

A1 TYPICAL STEEL COLUMN IN MASONRY WALL AT SINGLE REINFORCING (PLAN VIEW)
SB501 NO SCALE:

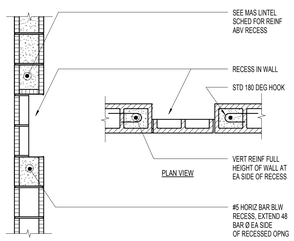

A2 TYPICAL MASONRY WALL RECESS DETAILS FOR SINGLE REINFORCED MASONRY WALLS (PLAN VIEW)
SB501 NO SCALE:

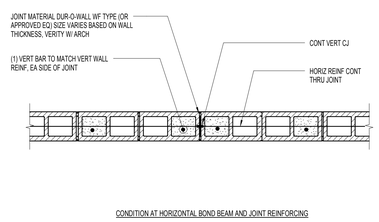

A3 TYPICAL CONTROL JOINT FOR SINGLE REINFORCED MASONRY WALLS (PLAN VIEW)
SB501 NO SCALE:

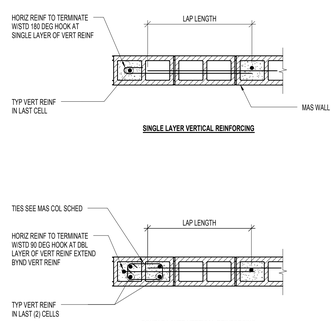

A4 TYPICAL TERMINATION OF HORIZONTAL REINFORCING FOR REINFORCED MASONRY WALLS (PLAN VIEW)
SB501 NO SCALE:

28 March 2013
VOLUME A.1 - DFCM
Review Response #2

NOTE:
THESE STRUCTURAL DRAWINGS ARE BASED ON ARCHITECTURAL DRAWINGS DATED 08.28.2012

DIMENSIONS AND ELEVATIONS, AS THEY RELATE TO THE BUILDING IN GENERAL, i.e. GRID TO GRID DIMENSIONS OR DECK BEARING ELEVATIONS, ARE SUPPLIED BY THE ARCHITECT. THEY ARE PROVIDED ON THE STRUCTURAL PLANS AND DETAILS FOR THE CONVENIENCE OF THE CONTRACTOR. VERIFY DIMENSIONS AND ELEVATIONS WITH ARCHITECTURAL DRAWINGS.

DUNN
DUNN ASSOCIATES, INC
Consulting Structural Engineers
EMAIL: ENG@DUNN-INC.COM
PH: 801-575-8877 FAX: 801-575-8875

ARCHITECTURAL NEXUS
SALT LAKE CITY PLACERVILLE SACRAMENTO

Architectural NEXUS, Inc.
2150 South 1300 East, Suite 200
Salt Lake City, Utah 84106
T 801.924.5000 F 801.924.5001
http://www.archnexus.com

Original drawings remain the property of the Architect and as such the Architect retains total ownership and control. The design represented by these drawings is sold to the client for a one time use, unless otherwise agreed upon in writing by the Architect.
© Architectural Nexus, Inc. 2011

UTAH NATIONAL GUARD CAMP WILLIAMS
RTI TASS COMPLEX, PHASE II
PROJECT NO. 490444
UTAH NATIONAL GUARD
12953 SOUTH MINUTEMAN DRIVE
DRAPER, UTAH 84020-1726

REVISIONS

DUNN PROJECT #:	11024
CHECKED BY:	Tyler Wright
DRAWN BY:	Brett Roberts
DATE:	28 March 2013

SHEET CONTENTS:
FOOTING AND FOUNDATION DETAILS

VOLUME A.1 - DFCM Review Response #2

SB501

This drawing, as an instrument of professional service, is the property of DUNN ASSOCIATES INC., and shall not be used, in whole or part for any other project without the written permission of an authorized representative of DUNN ASSOCIATES INC. Unauthorized use will be prosecuted to the fullest extent of the law. Copyright © 2012 by DUNN ASSOCIATES INC.

3/27/2013 4:47:50 PM

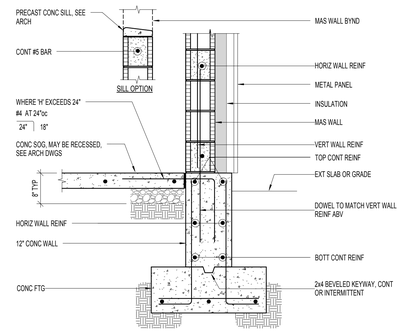

D1 SB502 TYPICAL SINGLE MAT REINFORCING MASONRY WALL ON CONCRETE FOUNDATION WALL
NO SCALE:

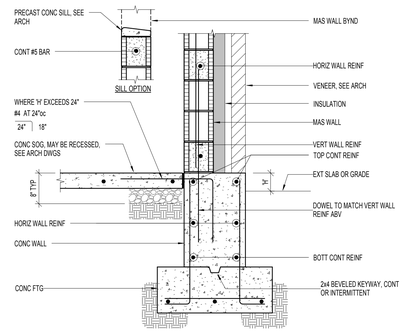

D2 SB502 TYPICAL SINGLE MAT REINFORCING MASONRY WALL ON CONCRETE FOUNDATION WALL
NO SCALE:

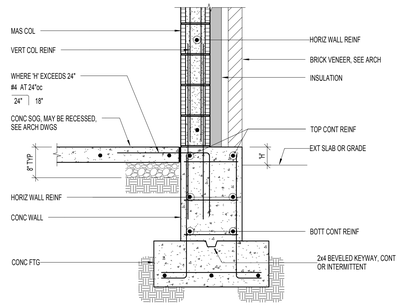

D3 SB502 TYPICAL MASONRY COLUMN ON CONCRETE FOUNDATION WALL
NO SCALE:

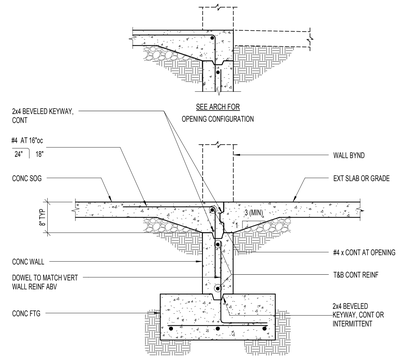

D4 SB502 TYPICAL FOUNDATION WALL AT OPENING
NO SCALE:

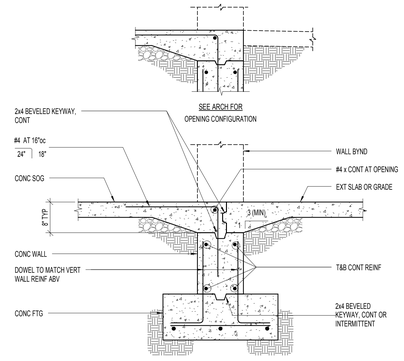

D6 SB502 TYPICAL FOUNDATION WALL AT OPENING
NO SCALE:

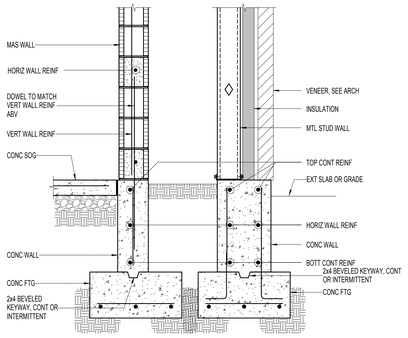

C1 SB502 FOUNDATION DETAIL
NO SCALE:

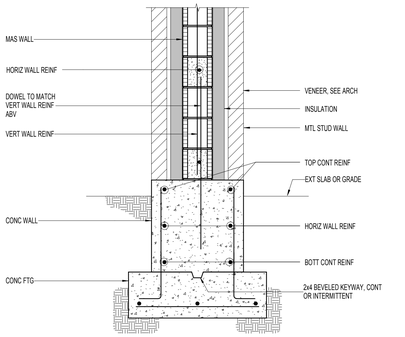

C2 SB502 FOUNDATION DETAIL
NO SCALE:

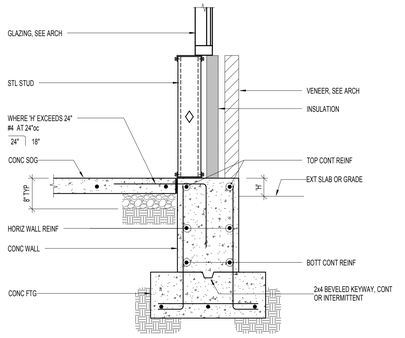

C3 SB502 FOUNDATION DETAIL
NO SCALE:

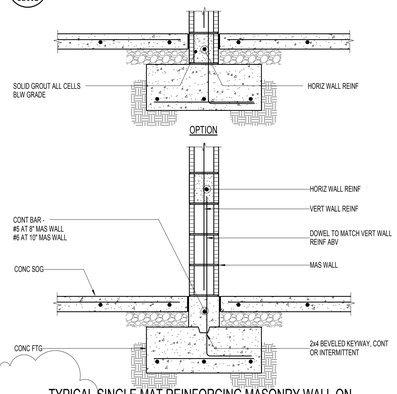

C4 SB502 TYPICAL SINGLE MAT REINFORCING MASONRY WALL ON INTERIOR CONCRETE FOOTING
NO SCALE:

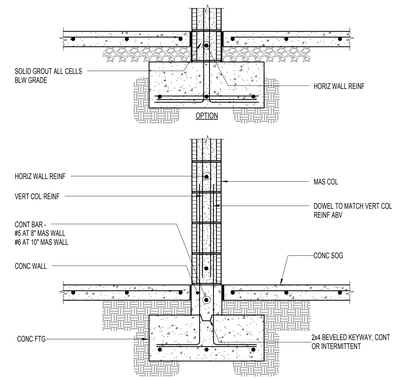

C6 SB502 TYPICAL MASONRY COLUMN ON INTERIOR CONCRETE FOOTING
NO SCALE:

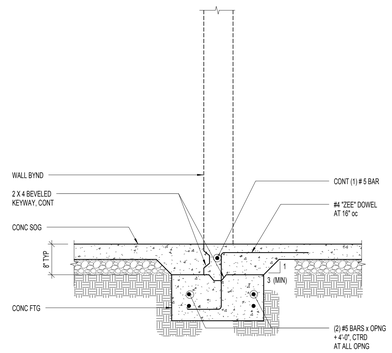

B1 SB502 INTERIOR WALL OPENING DETAIL AT 8" WALLS
NO SCALE:

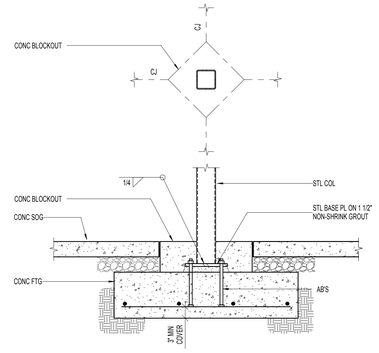

B2 SB502 TYPICAL STEEL COLUMN TO CONCRETE FOOTING
NO SCALE:

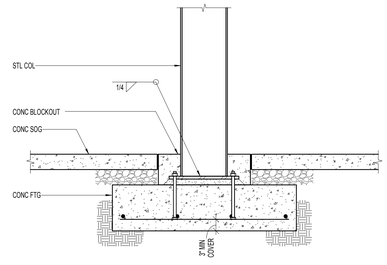

B3 SB502 TYPICAL STEEL COLUMN TO CONCRETE FOOTING
NO SCALE:

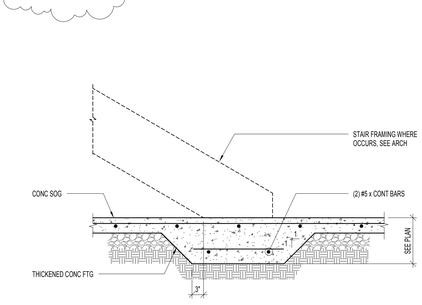

B4 SB502 TYPICAL THICKENED SLAB AT BASE OF STAIRS
NO SCALE:

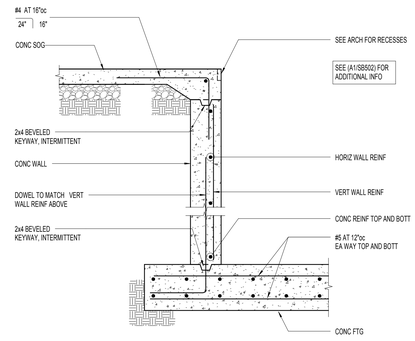

B6 SB502 TYPICAL ELEVATOR PIT DETAIL
NO SCALE:

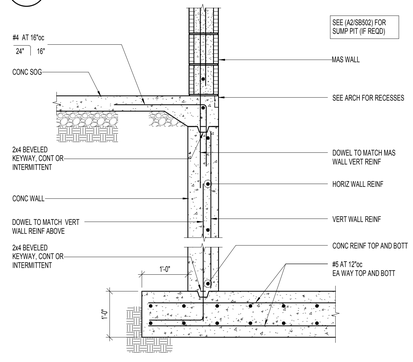

A1 SB502 TYPICAL ELEVATOR PIT DETAIL
NO SCALE:

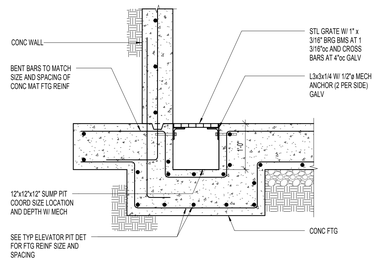

A2 SB502 SUMP IN ELEVATOR PIT
NO SCALE:

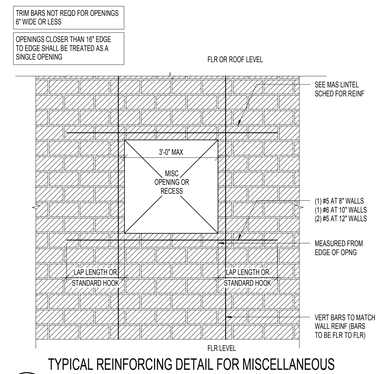

A3 SB502 TYPICAL REINFORCING DETAIL FOR MISCELLANEOUS MASONRY WALL OPENINGS AND RECESSES
NO SCALE:

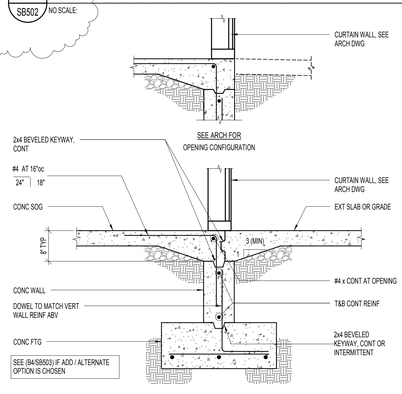

A4 SB502 TYPICAL FOUNDATION WALL AT CURTAIN WALL
NO SCALE:

28 March 2013
VOLUME A.1 - DFCM
Review Response #2

NOTE:
THESE STRUCTURAL DRAWINGS ARE BASED ON ARCHITECTURAL DRAWINGS DATED 08.28.2012

DIMENSIONS AND ELEVATIONS, AS THEY RELATE TO THE BUILDING IN GENERAL, i.e. GRID TO GRID DIMENSIONS OR DECK BEARING ELEVATIONS, ARE SUPPLIED BY THE ARCHITECT. THEY ARE PROVIDED ON THE STRUCTURAL PLANS AND DETAILS FOR THE CONVENIENCE OF THE CONTRACTOR. VERIFY DIMENSIONS AND ELEVATIONS WITH ARCHITECTURAL DRAWINGS.

DUNN ASSOCIATES, INC
Consulting Structural Engineers
EMAIL: ENG@DUNN-INC.COM
PH: 801-575-8877 FAX: 801-575-8875

ARCHITECTURAL NEXUS
SALT LAKE CITY PLACERVILLE SACRAMENTO

Architectural NEXUS, Inc.
2150 South 1300 East, Suite 200
Salt Lake City, Utah 84106
T 801.924.5000 F 801.924.5001
http://www.archnexus.com

Original drawings remain the property of the Architect and as such the Architect retains total ownership and control. The design represented by these drawings is sold to the client for a one time use, unless otherwise agreed upon in writing by the Architect.
© Architectural Nexus, Inc.2011

UTAH NATIONAL GUARD CAMP WILLIAMS
RTI TASS COMPLEX, PHASE II
PROJECT NO. 490444
UTAH NATIONAL GUARD
12953 SOUTH MINUTEMAN DRIVE
DRAPER, UTAH 84020-1726

#	REVISIONS	
2	28 March 2013	DFCM Review Response #2

DUNN PROJECT #:	11024
CHECKED BY:	Tyler Wright
DRAWN BY:	Brett Roberts
DATE:	28 March 2013

SHEET CONTENTS:
FOOTING AND FOUNDATION DETAILS

VOLUME A.1 - DFCM Review Response #2

SB502

This drawing, as an instrument of professional service, is the property of DUNN ASSOCIATES INC., and shall not be used, in whole or part for any other project without the written permission of an authorized representative of DUNN ASSOCIATES INC. Unauthorized use will be prosecuted to the fullest extent of the law. Copyright © 2012 by DUNN ASSOCIATES INC.

3/27/2013 4:47:53 PM

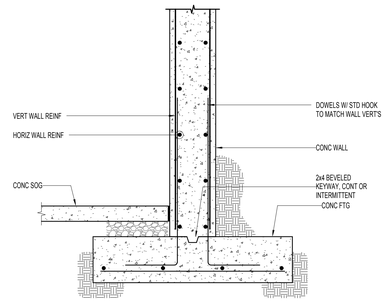

D1 SB503 FOUNDATION WALL DETAIL AT PERIMETER WALL
NO SCALE:

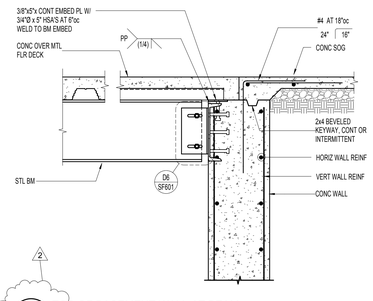

D2 SB503 TOP OF BASEMENT WALL AT BEAM
NO SCALE:

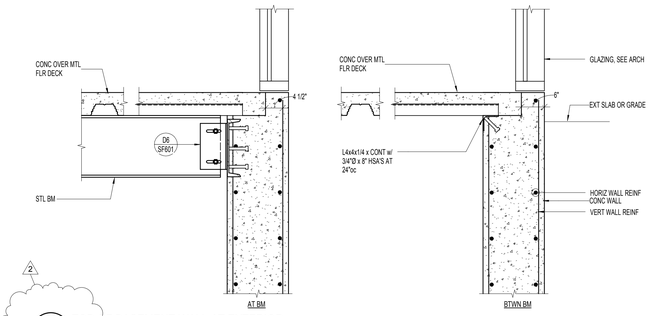

D3 SB503 TOP OF BASEMENT WALL AT EXTERIOR
NO SCALE:

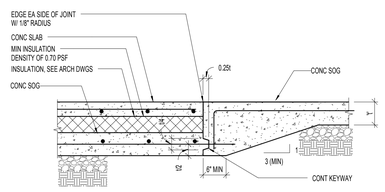

D5 SB503 CONCRETE SLAB OVER INSULATION
NO SCALE:

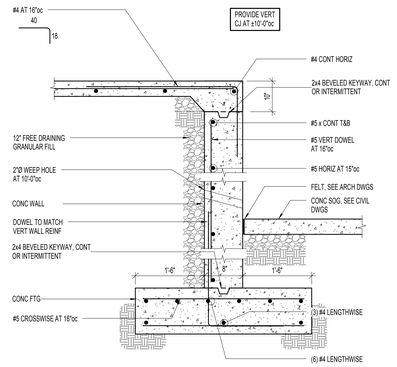

C1 SB503 TYPICAL DOCK FOUNDATION
NO SCALE:

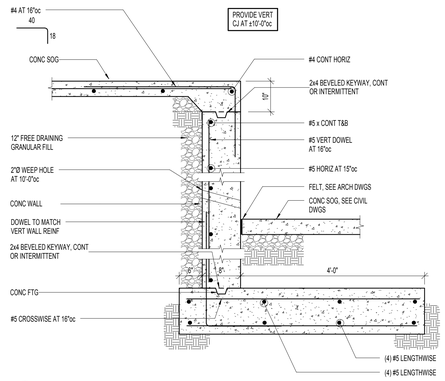

C2 SB503 TYPICAL DOCK FOUNDATION AT OFFSET FOOTING
NO SCALE:

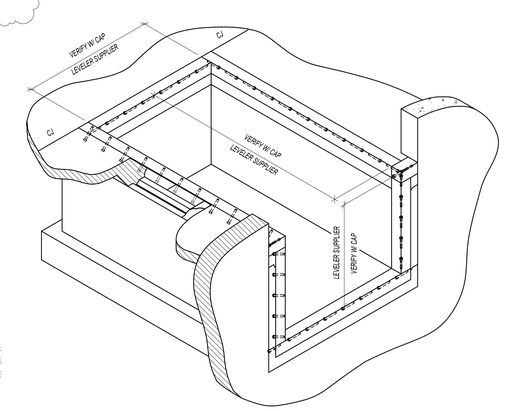

C3 SB503 SCHEMATIC DOCK PIT DETAIL
NO SCALE:

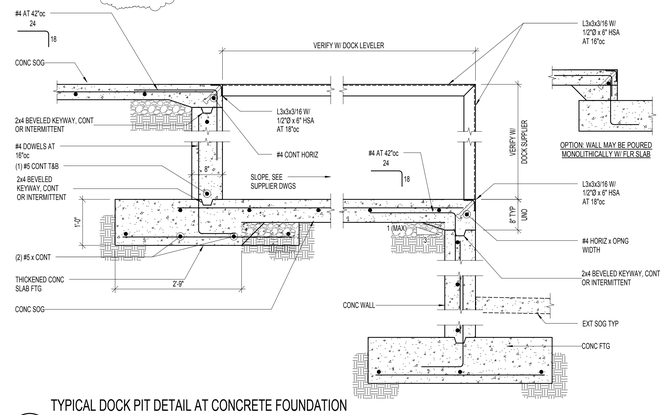

C5 SB503 TYPICAL DOCK PIT DETAIL AT CONCRETE FOUNDATION WALL
NO SCALE:

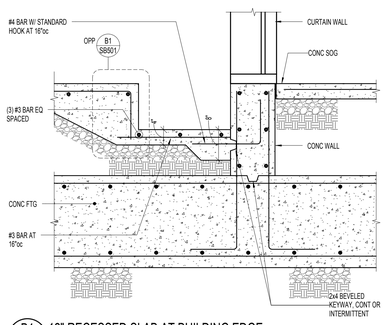

B1 SB503 12" RECESSED SLAB AT BUILDING EDGE
NO SCALE:

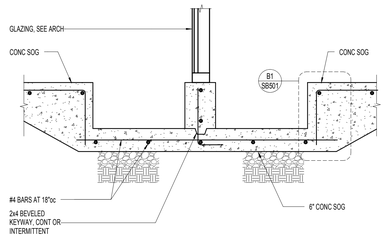

B2 SB503 12" DEPRESSED SLAB AT STEM WALL
NO SCALE:

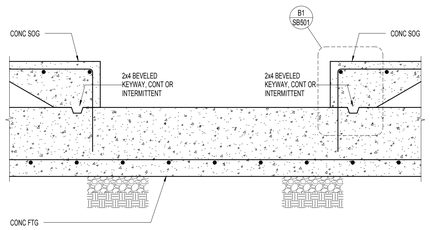

B3 SB503 12" DEPRESSED SLAB AT FOOTING
NO SCALE:

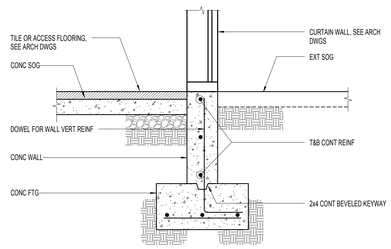

B4 SB503 FOUNDATION WALL AT CURTAIN WALL (ADD / ALT TILE OPTION)
NO SCALE:

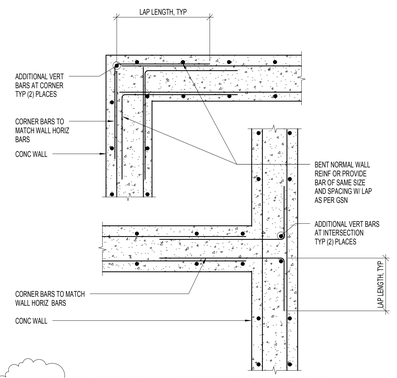

B5 SB503 TYPICAL CORNER WALL REINFORCING FOR DOUBLE REINFORCED CONCRETE WALLS (PLAN VIEW)
NO SCALE:

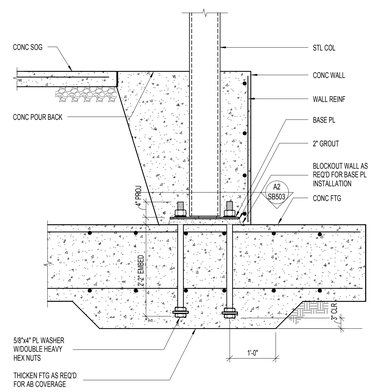

A1 SB503 CANOPY COLUMN BASE
NO SCALE:

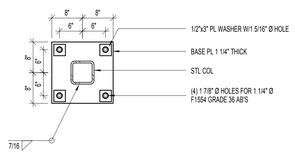

A2 SB503 HSS COLUMN BASE PLATE
NO SCALE:

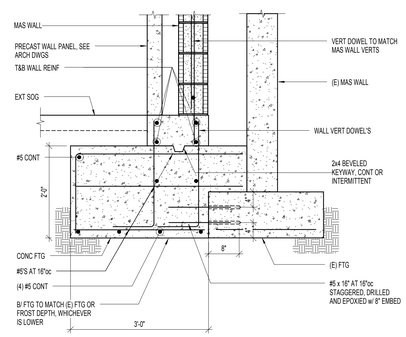

A3 SB503 EXTERIOR WALL FOOTING AT EXISTING BUILDING
NO SCALE:

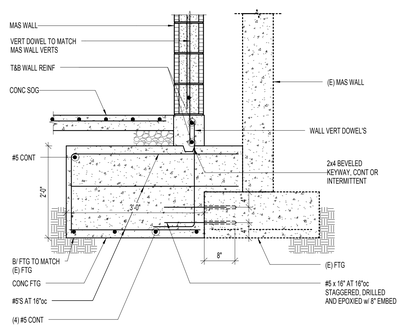

A4 SB503 INTERIOR WALL FOOTING AT EXISTING BUILDING
NO SCALE:

28 March 2013
VOLUME A.1 - DFCM
Review Response #2

NOTE:
THESE STRUCTURAL DRAWINGS ARE BASED ON ARCHITECTURAL DRAWINGS DATED 08.28.2012

DIMENSIONS AND ELEVATIONS, AS THEY RELATE TO THE BUILDING IN GENERAL, i.e. GRID TO GRID DIMENSIONS OR DECK BEARING ELEVATIONS, ARE SUPPLIED BY THE ARCHITECT. THEY ARE PROVIDED ON THE STRUCTURAL PLANS AND DETAILS FOR THE CONVENIENCE OF THE CONTRACTOR. VERIFY DIMENSIONS AND ELEVATIONS WITH ARCHITECTURAL DRAWINGS.

DUNN
DUNN ASSOCIATES, INC
Consulting Structural Engineers
EMAIL: ENG@DUNN-SE.COM
PH: 801-575-8877 FAX: 801-575-8875

ARCHITECTURAL NEXUS
SALT LAKE CITY PLACERVILLE SACRAMENTO
Architectural NEXUS, Inc.
2150 South 1300 East, Suite 200
Salt Lake City, Utah 84106
T 801.924.5000 F 801.924.5001
http://www.archnexus.com

Original drawings remain the property of the Architect and as such the Architect retains total ownership and control. The design represented by these drawings is sold to the client for a one time use, unless otherwise agreed upon in writing by the Architect.
© Architectural Nexus, Inc.2011

UTAH NATIONAL GUARD CAMP WILLIAMS
RTI TASS COMPLEX, PHASE II
PROJECT NO. 490444

UTAH NATIONAL GUARD
12953 SOUTH MINUTEMAN DRIVE
DRAPER, UTAH 84020-1726

#	REVISIONS	
2	28 March 2013	DFCM Review Response #2

DUNN PROJECT #:	11024
CHECKED BY:	Tyler Wright
DRAWN BY:	Brett Roberts
DATE:	28 March 2013

SHEET CONTENTS:
FOOTING AND FOUNDATION DETAILS

VOLUME A.1 - DFCM Review Response #2

SB503

This drawing, as an instrument of professional service, is the property of DUNN ASSOCIATES INC. and shall not be used, in whole or part for any other project without the written permission of an authorized representative of DUNN ASSOCIATES INC. Unauthorized use will be prosecuted to the fullest extent of the law. Copyright © 2012 by DUNN ASSOCIATES INC.

3/27/2013 4:47:58 PM

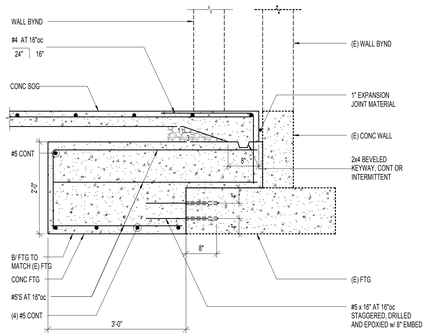

D1 INTERIOR WALL FOOTING AT EXISTING BUILDING OPENING DETAIL
SB504 NO SCALE:

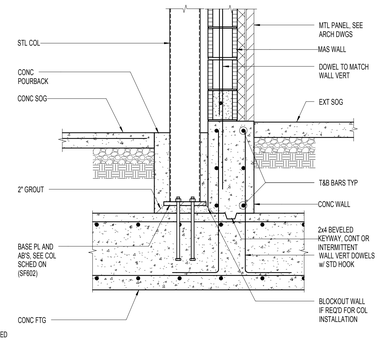

D2 COLUMN AT BUILDING EXTERIOR DETAIL
SB504 NO SCALE:

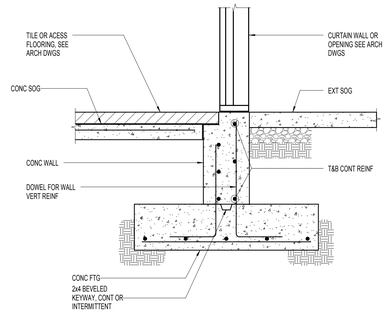

D3 FOUNDATION WALL AT CURTAIN WALL OR OPENING (AT FLOOR RECESS) DETAIL
SB504 NO SCALE:

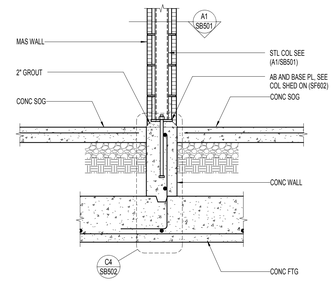

D4 STEEL COLUMN IN MASONRY WALL AT BASE DETAIL
SB504 NO SCALE:

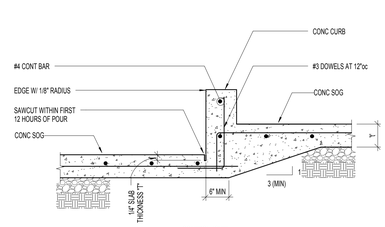

D6 TYPICAL CURB SLAB DEPRESSION DETAIL
SB504 NO SCALE:

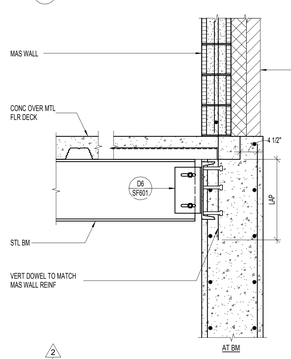

C1 TOP OF BASEMENT WALL AT EXTERIOR
SB504 NO SCALE:

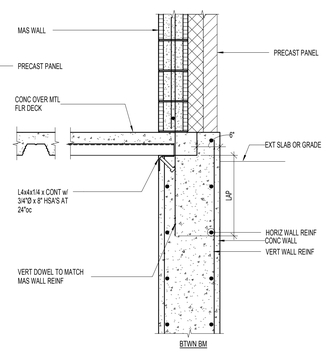

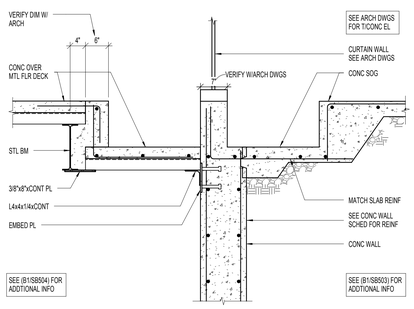

C2 BASEMENT WALL AT PLANTERS
SB504 NO SCALE:

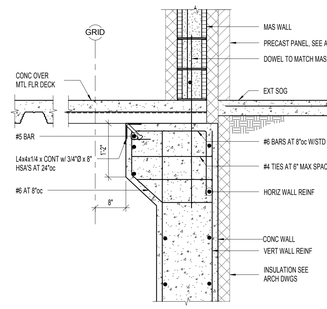

C3 BASEMENT WALL HAUNCH
SB504 NO SCALE:

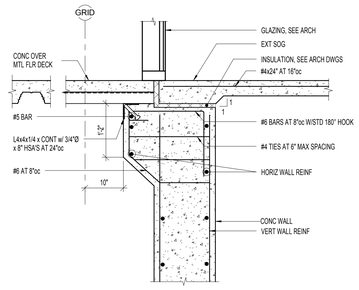

C4 BASEMENT WALL DETAIL
SB504 NO SCALE:

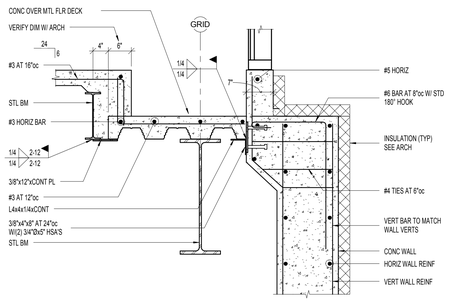

B1 BASEMENT WALL DETAIL
SB504 NO SCALE:

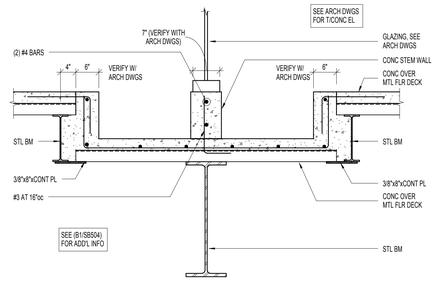

B2 INTERIOR PLANTER SECTION
SB504 NO SCALE:

B3 BASEMENT WALLS AT MECHANICAL CHASE
SB504 NO SCALE:

B4 BASEMENT WALL SUPPORTING MASONRY
SB504 NO SCALE:

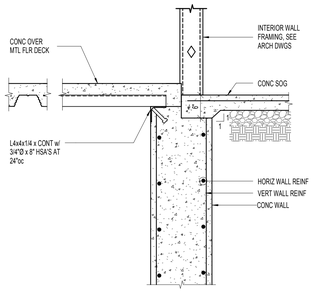

A1 BASEMENT WALL AT FLOOR STEP
SB504 NO SCALE:

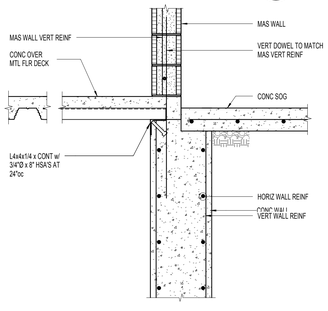

A2 BASEMENT WALL AT FLOOR STEP
SB504 NO SCALE:

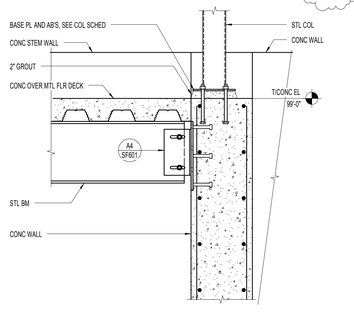

A3 STEEL COLUMN AT BASEMENT CORNER
SB504 NO SCALE:

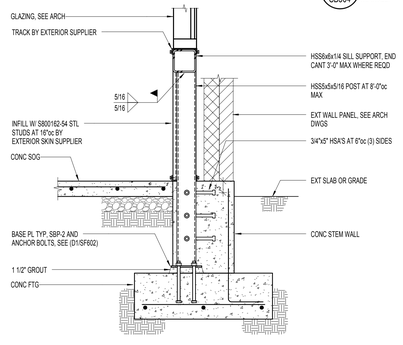

A4 RIBBON WINDOW GROUND FLOOR SILL SUPPORT
SB504 NO SCALE:

28 March 2013
VOLUME A.1 - DFCM
Review Response #2

NOTE:
THESE STRUCTURAL DRAWINGS ARE BASED ON ARCHITECTURAL DRAWINGS DATED 08.28.2012

DIMENSIONS AND ELEVATIONS, AS THEY RELATE TO THE BUILDING IN GENERAL, i.e. GRID TO GRID DIMENSIONS OR DECK BEARING ELEVATIONS, ARE SUPPLIED BY THE ARCHITECT. THEY ARE PROVIDED ON THE STRUCTURAL PLANS AND DETAILS FOR THE CONVENIENCE OF THE CONTRACTOR. VERIFY DIMENSIONS AND ELEVATIONS WITH ARCHITECTURAL DRAWINGS.

DUNN ASSOCIATES, INC
Consulting Structural Engineers
EMAIL: ENG@DUNN-SE.COM
PH: 801-575-8877 FAX: 801-575-8875

ARCHITECTURAL NEXUS
SALT LAKE CITY PLACERVILLE SACRAMENTO

Architectural NEXUS, Inc.
2150 South 1300 East, Suite 200
Salt Lake City, Utah 84106
T 801.924.5000 F 801.924.5001
http://www.archnexus.com

Original drawings remain the property of the Architect and as such the Architect retains total ownership and control. The design represented by these drawings is sold to the client for a one time use, unless otherwise agreed upon in writing by the Architect.
© Architectural Nexus, Inc.2011

UTAH NATIONAL GUARD CAMP WILLIAMS
RTI TASS COMPLEX, PHASE II
PROJECT NO. 490444

UTAH NATIONAL GUARD
12953 SOUTH MINUTEMAN DRIVE
DRAPER, UTAH 84020-1726

#	REVISIONS	
2	28 March 2013	DFCM Review Response #2

DUNN PROJECT #:	11024
CHECKED BY:	Checker
DRAWN BY:	Author
DATE:	28 March 2013

SHEET CONTENTS:
FOOTING AND FOUNDATION DETAILS

VOLUME A.1 - DFCM Review Response #2

SB504

This drawing, as an instrument of professional service, is the property of DUNN ASSOCIATES INC, and shall not be used, in whole or part for any other project without the written permission of an authorized representative of DUNN ASSOCIATES INC. Unauthorized use will be prosecuted to the fullest extent of the law. Copyright © 2012 by DUNN ASSOCIATES INC.

3/27/2013 4:47:59 PM

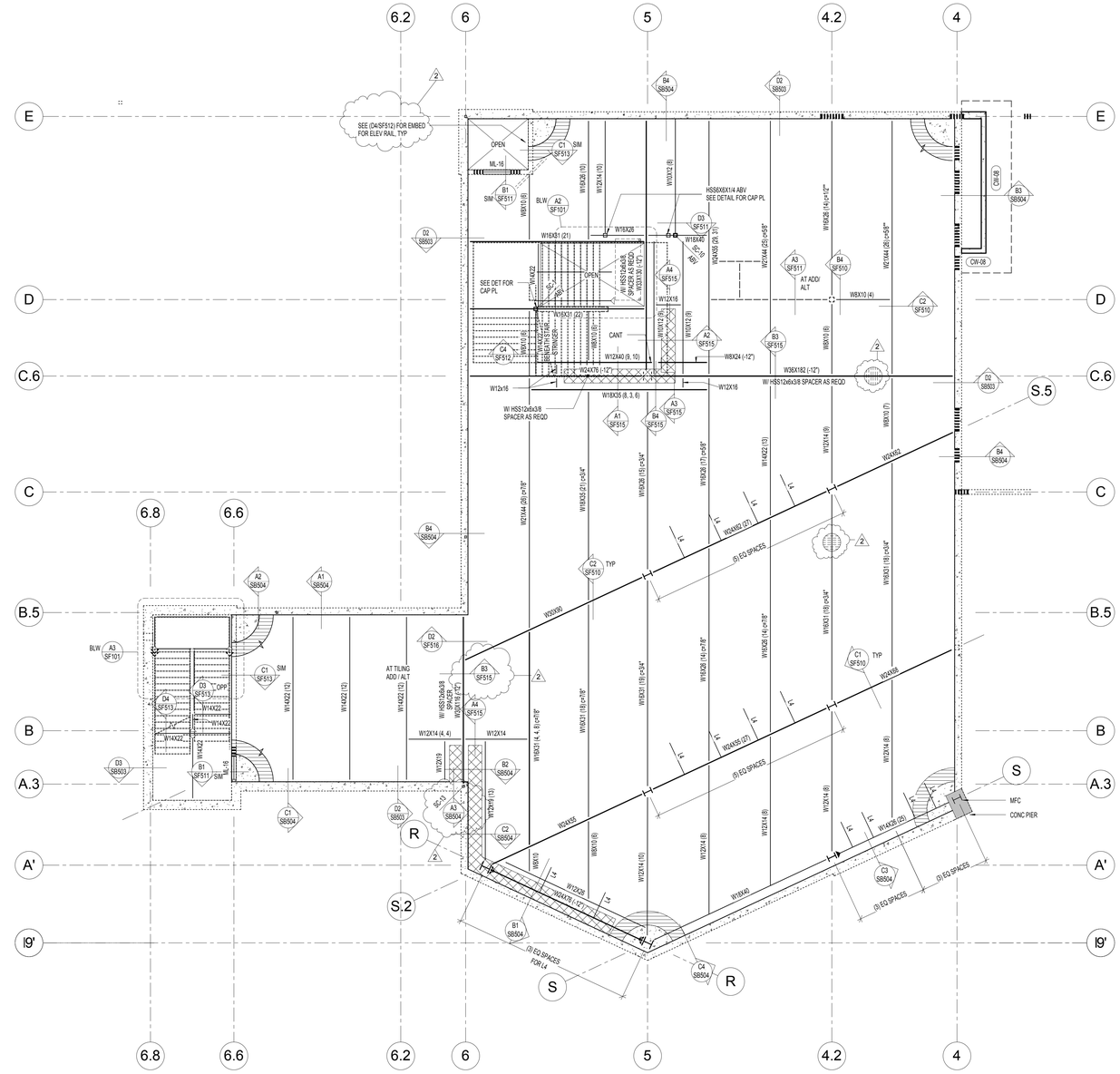

NORTH

B2 SF101 ADDITIVE / ALTERNATE MAIN LEVEL FLOOR FRAMING PLAN
SCALE: 1/8" = 1'-0"

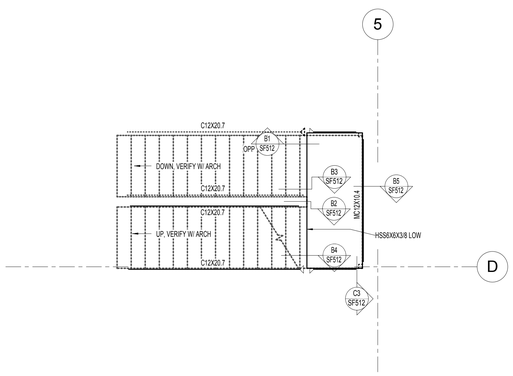

NORTH

A2 SF101 INTERMEDIATE LANDING AT BASEMENT
SCALE: 1/4" = 1'-0"

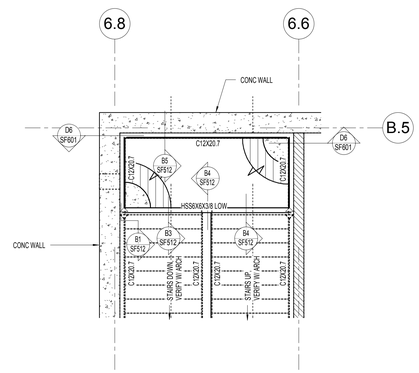

NORTH

A3 SF101 INTERMEDIATE LANDING AT BASEMENT
SCALE: 1/4" = 1'-0"

FLOOR FRAMING PLAN NOTES:

1. VERIFY WALL FLOOR OPENINGS FOR MECHANICAL SHAFTS, STAIRS, ETC. WITH ARCHITECTURAL DRAWINGS.
2. SEE FLOOR FRAMING DETAILS ON SHEET (SF510) FOR FRAMING AROUND ALL OPENINGS.
3. SEE FOOTING AND FOUNDATION DETAILS ON SHEET (SB502) FOR MISCELLANEOUS MASONRY OPENINGS.
4. SEE FOOTING AND FOUNDATION DETAILS ON SHEET (SB501) FOR MASONRY CONTROL JOINTS.
5. SEE FOOTING AND FOUNDATION DETAILS ON SHEET (SB501) FOR TERMINATION OF HORIZONTAL REINFORCING AT ENDS OF MASONRY WALLS.
6. SEE ARCHITECTURAL PLANS FOR ALL STEEL COLUMN LOCATIONS (DIMENSIONS).
7. SEE MECHANICAL DRAWINGS FOR SIZE AND LOCATION OF CONRETE MECHANICAL PADS. SEE DETAIL (SF512).
8. FOR TILING ADD / ALTERNATE ALL STEEL AT THIS LEVEL BETWEEN GRIDS 4 AND 6 IS TO BE LOWERED 1 1/2". ALL BEAMS THAT CROSS THE TILING BOUNDARY SHALL HAVE AN HSS3.5x1.5x3/16 SPACER WELDED TO THE TOP FLANGE TO SUPPORT THE FLOORING IN AREAS WHERE THE TOP OF CONCRETE REMAINS 100'-0". SEE (A3/SF511) FOR SPACER WELDING REQUIREMENTS.

MARKS & SYMBOLS LEGEND

- SECTION MARK / SHEET NUMBER
- CONC OVER MTL DECK, SEE GSN ON (S001)
- ADDITIONAL CONC REINF OF (2) #6 BARS x 6'-0", CTR ON CORNERS, NO SPLICES
- DEPRESSED SLAB, SEE ARCH PLANS FOR EXACT LOCATION AND EL
- MAS WALL, SEE SCHED ON (SF601)
- BRG WALL BLW
- STL COL, SEE SCHED ON (SF602)
- MAS COL, SEE SCHED ON (SF601)
- MW-X — MAS WALL, SEE SCHED ON (SF601)
- MC-x — MAS COL, SEE SCHED ON (SF601)
- ML-x — MAS LINTEL, SEE SCHED ON (SF601)
- SC-x — STL COL, SEE SCHED ON (SF602)
- W_x_ — COMPOSITE STL BMS, SEE GSN ON (S001)
- (x) — NUMBER OF HSA FOR SECTION OF COMPOSITE STL BM, SEE GSN ON (S001)
- (0+_") — REQD PRE-CAMBER AT MID-SPAN OF BMS, CAMBER TOLERANCE SHALL BE +1/4", -0"
- L4 — L4x4x3/8 BRACE SEE (D2/SF202)
- BEAM WEB PENETRATION, SEE SCHED ON (A2/SF602)
- C8x11.5 CLOSURE CHANNEL, SEE DET (B3/S-521). USE C10x15.3 IF ADD/ALT TILE FLOORING SYSTEM IS CHOSEN.
- LOCATE STL BM 6" OFF INSIDE FACE OF WALL
- RECESS BEAMS 1 1/2" FOR ADD/ALT TILE FLOORING IF CHOSEN.
- W12x12 BEAMS FOR TILING ADD/ALTERNATE
- TYPICAL REINFORCING OVER BEAMS FRAMING INTO COLUMNS. SEE DETAIL (C1/SF510)

ARCHITECTURAL NEXUS
SALT LAKE CITY PLACERVILLE SACRAMENTO

Architectural NEXUS, Inc.
2150 South 1300 East, Suite 200
Salt Lake City, Utah 84106
T 801.924.5000 F 801.924.5001
http://www.archnexus.com

Original drawings remain the property of the Architect and as such the Architect retains total ownership and control. The design represented by these drawings is sold to the client for a one time use, unless otherwise agreed upon in writing by the Architect.
© Architectural Nexus, Inc.2011

UTAH NATIONAL GUARD CAMP WILLIAMS
RTI TASS COMPLEX, PHASE II
PROJECT NO. 490444

UTAH NATIONAL GUARD
12953 SOUTH MINUTEMAN DRIVE
DRAPER, UTAH 84020-1726

#	REVISIONS	
2	28 March 2013	DFCM Review Response #2

DUNN PROJECT #:	11024
CHECKED BY:	Tyler Wright
DRAWN BY:	Brett Roberts
DATE:	28 March 2013

SHEET CONTENTS:
ADDITIVE / ALTERNATE MAIN FLOOR FRAMING PLAN

VOLUME A.1 - DFCM Review Response #2

SF101

28 March 2013
VOLUME A.1 - DFCM
Review Response #2

NOTE:
THESE STRUCTURAL DRAWINGS ARE BASED ON ARCHITECTURAL DRAWINGS DATED 08.28.2012

DIMENSIONS AND ELEVATIONS, AS THEY RELATE TO THE BUILDING IN GENERAL, i.e. GRID TO GRID DIMENSIONS OR DECK BEARING ELEVATIONS, ARE SUPPLIED BY THE ARCHITECT. THEY ARE PROVIDED ON THE STRUCTURAL PLANS AND DETAILS FOR THE CONVENIENCE OF THE CONTRACTOR. VERIFY DIMENSIONS AND ELEVATIONS WITH ARCHITECTURAL DRAWINGS.

DUNN ASSOCIATES, INC
Consulting Structural Engineers
EMAIL: ENG@DUNN-SE.COM
PH: 801-575-8877 FAX: 801-575-8875

This drawing is an instrument of professional service, is the property of DUNN ASSOCIATES INC, and shall not be used, in whole or part for any project without the written permission of an authorized representative of DUNN ASSOCIATES INC. Unauthorized use will be prosecuted to the fullest extent of the law. Copyright © 2012 by DUNN ASSOCIATES INC.

3/27/2013 4:48:03 PM

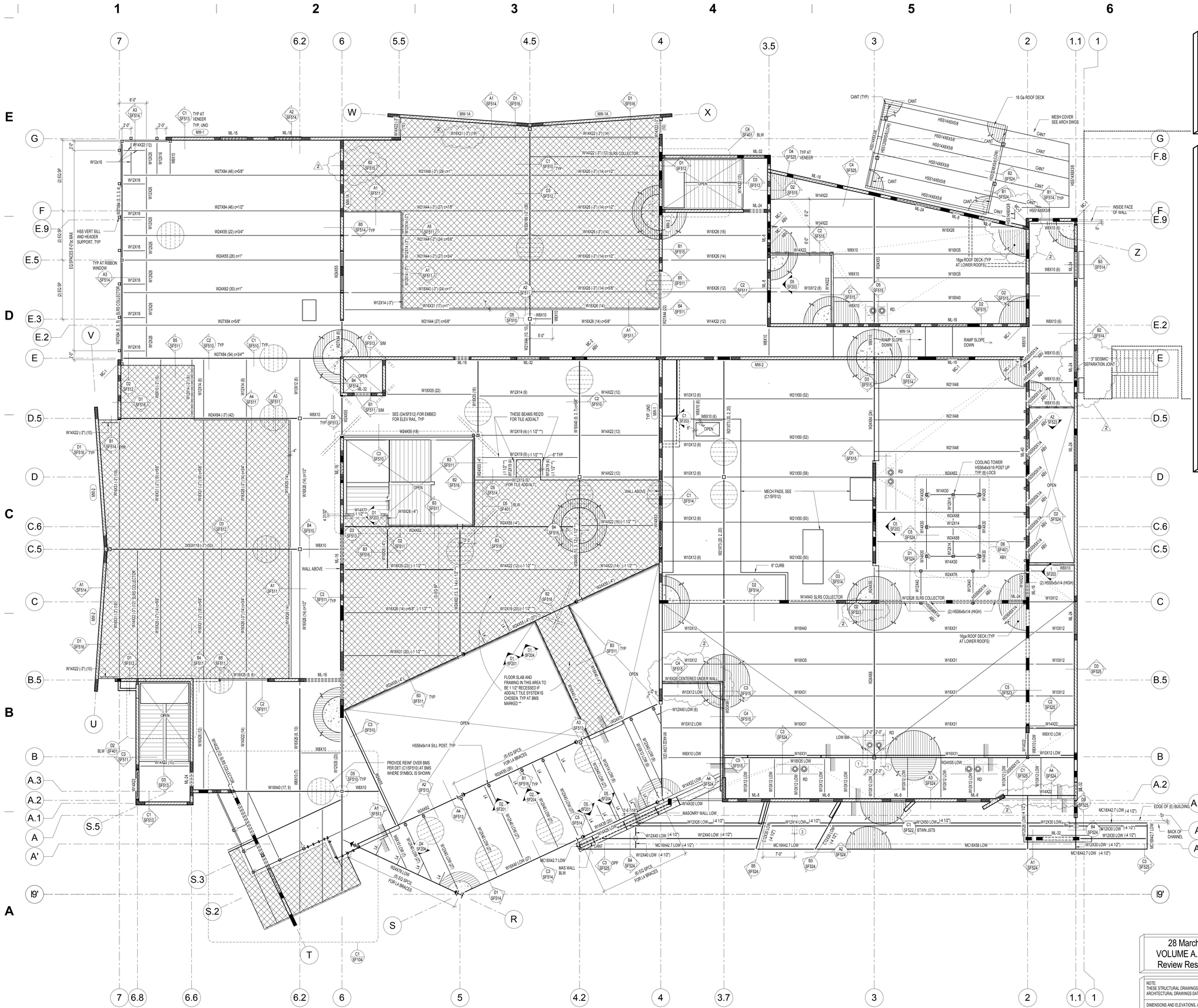

FLOOR FRAMING PLAN NOTES:

1. VERIFY WALL FLOOR OPENINGS FOR MECHANICAL SHAFTS, STAIRS, ETC. WITH ARCHITECTURAL DRAWINGS.
2. SEE FLOOR FRAMING DETAILS ON SHEET (SF510) FOR FRAMING AROUND ALL OPENINGS.
3. SEE FOOTING AND FOUNDATION DETAILS ON SHEET (SB502) FOR MISCELLANEOUS MASONRY OPENINGS.
4. SEE FOOTING AND FOUNDATION DETAILS ON SHEET (SB501) FOR MASONRY CONTROL JOINTS.
5. SEE FOOTING AND FOUNDATION DETAILS ON SHEET (SB501) FOR TERMINATION OF HORIZONTAL REINFORCING AT ENOF MASONRY WALLS.
6. SEE ARCHITECTURAL PLANS FOR ALL STEEL COLUMN LOCATIONS (DIMENSIONS).
7. SEE MECHANICAL DRAWINGS FOR SIZE AND LOCATION OF CONRETE MECHANICAL PADS. SEE DETAIL (SF512).

MARKS & SYMBOLS LEGEND

- SECTION MARK / SHEET NUMBER
- CONC OVER MTL DECK, SEE GSN ON (S001)
- ADDITIONAL CONC REINF OF (2) #6 BARS x 6'-0", CTR ON CORNERS, NO SPLICES
- DEPRESSED SLAB. SEE ARCH PLANS FOR EXACT LOCATION AND EL
- MAS WALL, SEE SCHED ON (SF601)
- BRG WALL BLW
- STL COL, SEE SCHED ON (SF602)
- MAS COL, SEE SCHED ON (SF601)
- MW-X — MAS WALL, SEE SCHED ON (SF601)
- MC-x — MAS COL, SEE SCHED ON (SF601)
- ML-x — MAS LINTEL, SEE SCHED ON (SF601)
- SC-x — STL COL, SEE SCHED ON (SF602)
- W_x_ — COMPOSITE STL BMS, SEE GSN ON (S001)
- (x) — NUMBER OF HSA FOR SECTION OF COMPOSITE STL BM, SEE GSN ON (S001)
- (c=_") — REQD PRE-CAMBER AT MID-SPAN OF BMS, CAMBER TOLERANCE SHALL BE +1/4", -0"
- L4 — L4x4x3/8 BRACE SEE (D2/SF202)
- BEAM WEB PENETRATION, SEE SCHED ON (A2/SF602)
- C12x20.7 CLOSURE CHANNEL, SEE DET (S3/SF511).
- LOCATE STL BM 6" OFF INSIDE FACE OF WALL
- RECESS BEAMS 1 1/2" FOR ADD/ALT TILE FLOORING IF CHOSEN.

1 SECOND FLOOR FRAMING PLAN
SF102 SCALE: 1/8" = 1'-0"

28 March 2013
VOLUME A.1 - DFCM
Review Response #2

NOTE:
THESE STRUCTURAL DRAWINGS ARE BASED ON ARCHITECTURAL DRAWINGS DATED 08.28.2012

DIMENSIONS AND ELEVATIONS, AS THEY RELATE TO THE BUILDING IN GENERAL, i.e. GRID TO GRID DIMENSIONS OR DECK BEARING ELEVATIONS, ARE SUPPLIED BY THE ARCHITECT. THEY ARE PROVIDED ON THE STRUCTURAL PLANS AND DETAILS FOR THE CONVENIENCE OF THE CONTRACTOR. VERIFY DIMENSIONS AND ELEVATIONS WITH ARCHITECTURAL DRAWINGS.

DUNN ASSOCIATES, INC
Consulting Structural Engineers
EMAIL: ENG@DUNN-SE.COM
PH: 801-575-8877 FAX: 801-575-8875

ARCHITECTURAL NEXUS
SALT LAKE CITY PLACERVILLE SACRAMENTO

Architectural NEXUS, Inc.
2150 South 1300 East, Suite 200
Salt Lake City, Utah 84106
T 801.924.5000 F 801.924.5001
http://www.archnexus.com

Original drawings remain the property of the Architect and as such the Architect retains total ownership and control. The design represented by these drawings is sold to the client for a one time use, unless otherwise agreed upon in writing by the Architect.
© Architectural Nexus, Inc.2011

UTAH NATIONAL GUARD CAMP WILLIAMS
RTI TASS COMPLEX, PHASE II
PROJECT NO. 490444

UTAH NATIONAL GUARD
12953 SOUTH MINUTEMAN DRIVE
DRAPER, UTAH 84020-1726

#		
REVISIONS		
1	15 March 2013	DFCM Review Response
2	28 March 2013	DFCM Review Response #2

DUNN PROJECT #:	11024
CHECKED BY:	Tyler Wright
DRAWN BY:	Brett Roberts
DATE:	28 March 2013

SHEET CONTENTS:
SECOND FLOOR FRAMING PLAN

VOLUME A.1 - DFCM Review Response #2

SF102

This drawing, as an instrument of professional service, is the property of DUNN ASSOCIATES INC. Unauthorized use will be prosecuted to the fullest extent of the law. Copyright © 2012 by DUNN ASSOCIATES INC.

3/27/2013 4:48:07 PM

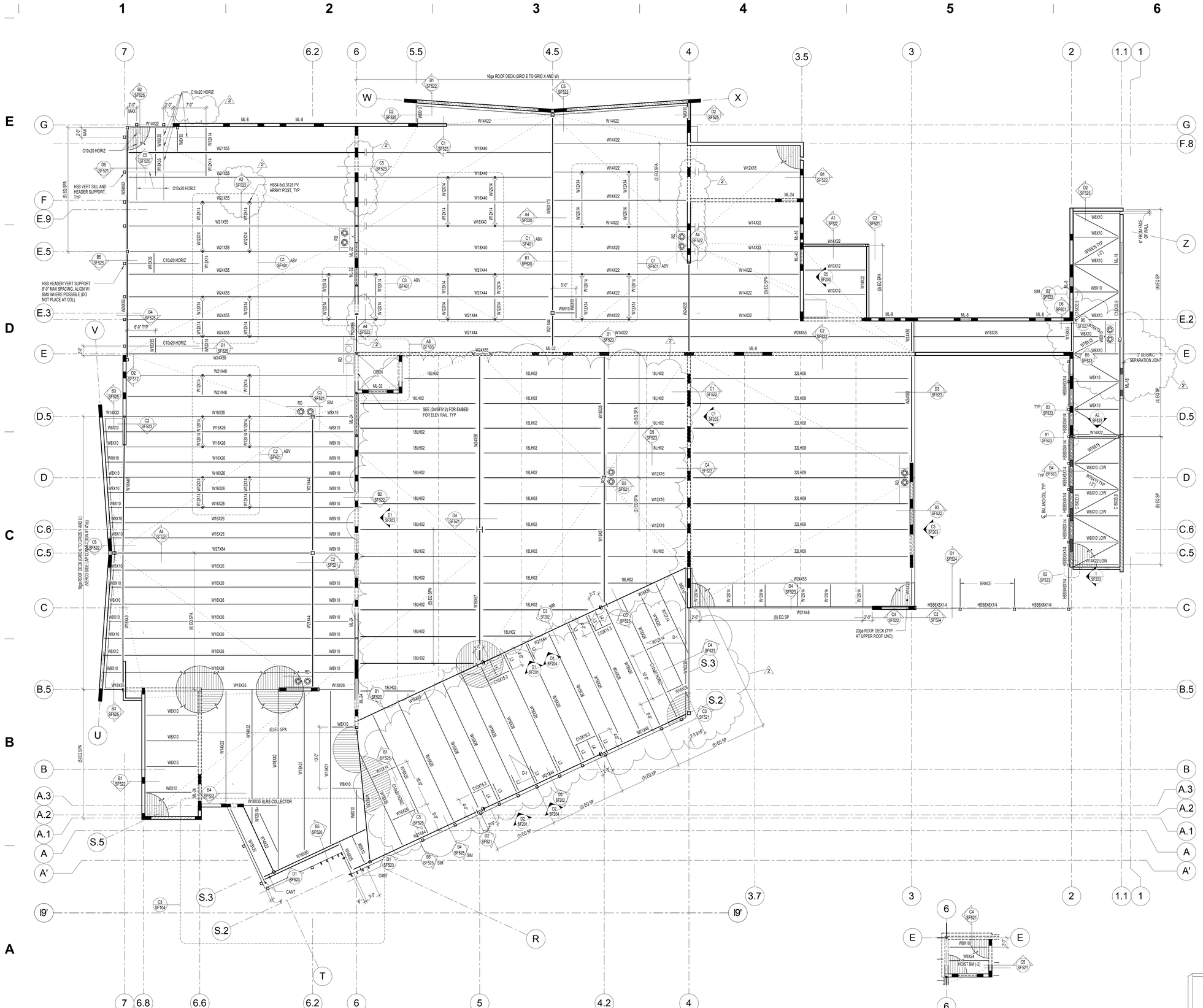

ROOF FRAMING PLAN NOTES:

1. VERIFY ROOF SLOPES, DRAINS, AND DECK BEARING ELEVATIONS WITH ARCHITECTURAL DRAWINGS. SEE ROOF FRAMING DETAILS ON SHEET (SF520).
2. ALL JOISTS SHALL HAVE FLUSH FRAMED ENDS AT STEEL BEAM AND 5" BEARINGS AT MASONRY SUPPORTS.
3. JOIST SUPPLIER TO PROVIDE BRIDGING AS REQUIRED.
4. ALL ROOF OPENINGS SHALL BE FRAMED AS INDICATED IN ROOF FRAMING DETAILS ON SHEET (SF520).
5. SEE ROOF FRAMING DETAILS ON SHEET (SF520) FOR CONCENTRATED LOADS LOCATED FURTHER THAN 6" FROM JOIST/GIRDER PANEL JOINT.
6. SEE ROOF FRAMING DETAILS ON SHEET (SF520) FOR MECHANICAL UNITS HUNG BELOW JOISTS.
7. VERIFY SIZE, WEIGHT, AND LOCATION OF ALL ROOF TOP MECHANICAL UNITS WITH ARCHITECTURAL AND MECHANICAL DRAWINGS. SEE ROOF FRAMING DETAILS ON SHEET (SF520) FOR STEEL FRAMES AT ALL ROOF TOP EQUIPMENT. COORDINATE OPENINGS WITH MECHANICAL, ELECTRICAL, AND GENERAL CONTRACTORS.
8. OPEN WEB STEEL JOISTS AND JOIST GIRDERS SHALL BE DESIGNATED BY THE MANUFACTURER TO SUPPORT THE MECHANICAL AND LATERAL LOADS SHOWN ON THE ROOF FRAMING PLANS IN ADDITION TO THE UNIFORM AND POINT LOADS SHOWN.
9. WHERE SKYLIGHTS OR MECHANICAL UNITS INTERRUPT HORIZONTAL BRIDGING, PROVIDE CROSS BRIDGING AT JOIST SPACES ON EACH SIDE, TYPICAL.
10. WHERE DIAGONAL BRIDGING CONFLICTS WITH MECHANICAL DUCTS, REMOVE DIAGONAL BRIDGING AND REPLACE WITH HORIZONTAL BRIDGING (AFTER ROOF DECK IS IN PLACE).
11. * - INDICATES THAT THESE JOISTS SHALL BE DESIGNED FOR AN ADLOAD OF 100#/ AT ANY TOP CHORD PANEL POINT. THIS LOAD IS TO BE ADDED TO THE GIRDER TOP CHORD LOAD. MULTIPLE "*" ARE ADDITIVE.
12. JOIST DESIGNER SHALL DESIGN JOISTS AND SUPPLY ADDITIONAL BRIDDING AS REQUIRED FOR 10 PSF NET UPLIFT DUE TO WIND. THERE IS NO UPLIFT ON GIRDERS.
13. SEE ROOF FRAMINGTAILS ON SHEET (SF520) FOR REINFORCING AROUND MISCELLANEOUS MASONRY OPENINGS.
14. SEE FOOTING AND FOUNDATION DETAILS ON SHEET (S8501) FOR MASONRY CONTROL JOINTS.
15. SEE FOOTING AND FOUNDATION DETAILS ON SHEET (S8501) FOR TERMINATION OF HORIZONTAL REINFORCING AT ENDS OF MASONRY WALLS.
16. SEE ARCHITECTURAL PLANS FOR ALL STEEL COLUMN LOCATIONS (DIMENSIONS).
17. SPRINKLER DESIGNER SHALL COORDINATE THE SPRINKLER DESIGN WITH THE JOIST/GIRDER SHOP DRAWINGS.

MARKS AND SYMBOLS LEGEND

	SECTION MARK / SHEET NUMBER
	MTL ROOF DECK, SEE GSN ON (S001)
	MAS WALL, SEE SCHED ON (SF601)
	BRG WALL BLW
or	STL COL, SEE SCHED ON (SF602)
	MAS COL, SEE SCHED ON (SF601)
	JST TOP CHORD TIE, SEE ROOF FRAMING DETS ON (SF520)
	HORIZ BRIDG
	X-BRIDG
	HORIZ BRDG REQD FOR UPLIFT, SEE STL JST SUPPLIER FOR REQUIREMENTS
ML-x	MAS LINTEL, SEE SCHED ON (SF601)
T=C=nK	ROOF JST TOP CHORD SHALL BE DESIGNED FOR AN ADDITIONAL LOAD OF __KIPS IN TENSION AND COMPRESSION. LOADS ARE PROVIDED AT ULTIMATE STRENGTH LEVEL
RD	ROOF DRAIN, SEE ARCH AND MECH FOR EXACT LOCATION, SEE DETAIL ON (SF521)
L4	L4x4x3/8 BRACE SEE DETAIL (D4/SF202)
L3	L3x3x1/4 BRACE SEE DETAIL (D6/SF202)
22 OWSJ (X/X)	OPEN WEB STEEL JOISTS (DEAD LOAD / TOTAL LOAD). ADDITIONAL DRIFT LOADS ARE SHOWN ON PLAN

SNOW DRIFT LOADING DIAGRAM

MAX PSF — D-1 — MAX = 80 PSF, L = 18'-0" — 0 PSF — D-x — UNIFORM ROOF SNOW LOAD, SEE GSN — 1'

ARCHITECTURAL NEXUS
SALT LAKE CITY PLACERVILLE SACRAMENTO

Architectural NEXUS, Inc.
2150 South 1300 East, Suite 200
Salt Lake City, Utah 84106
T 801.924.5000 F 801.924.5001
http://www.archnexus.com

Original drawings remain the property of the Architect and as such the Architect retains total ownership and control. The design represented by these drawings is sold to the client for a one time use, unless otherwise agreed upon in writing by the Architect.
© Architectural Nexus, Inc. 2011

UTAH NATIONAL GUARD CAMP WILLIAMS
RTI TASS COMPLEX, PHASE II
PROJECT NO. 490444

UTAH NATIONAL GUARD
12953 SOUTH MINUTEMAN DRIVE
DRAPER, UTAH 84020-1726

#	REVISIONS	
1	15 March 2013	DFCM Review Response
2	28 March 2013	DFCM Review Response #2

DUNN PROJECT #:	11024
CHECKED BY:	Tyler Wright
DRAWN BY:	Brett Roberts
DATE:	28 March 2013

SHEET CONTENTS:
ROOF FRAMING PLAN

VOLUME A.1 - DFCM Review Response #2

SF103

28 March 2013
VOLUME A.1 - DFCM
Review Response #2

NOTE:
THESE STRUCTURAL DRAWINGS ARE BASED ON ARCHITECTURAL DRAWINGS DATED 08.28.2012

DIMENSIONS AND ELEVATIONS, AS THEY RELATE TO THE BUILDING IN GENERAL, i.e. GRID TO GRID DIMENSIONS OR DECK BEARING ELEVATIONS, ARE SUPPLIED BY THE ARCHITECT. THEY ARE PROVIDED ON THE STRUCTURAL PLANS AND DETAILS FOR THE CONVENIENCE OF THE CONTRACTOR. VERIFY DIMENSIONS AND ELEVATIONS WITH ARCHITECTURAL DRAWINGS.

DUNN ASSOCIATES, INC
Consulting Structural Engineers
EMAIL: ENG@DUNN-SE.COM
PH: 801-575-8677 FAX: 801-575-8675

NORTH — A1 (SF103) ROOF FRAMING PLAN
SCALE: 1/8" = 1'-0"

NORTH — A5 (SF103) ELEVATOR POP UP PLAN
SCALE: 1/8" = 1'-0"

This drawing, as an instrument of professional service, is the property of DUNN ASSOCIATES INC. and shall not be used, in whole or part for any other project without the written permission of an authorized representative of DUNN ASSOCIATES INC. Unauthorized use will be prosecuted to the fullest extent of the law. Copyright © 2012 by DUNN ASSOCIATES INC.

3/27/2013 4:48:09 PM

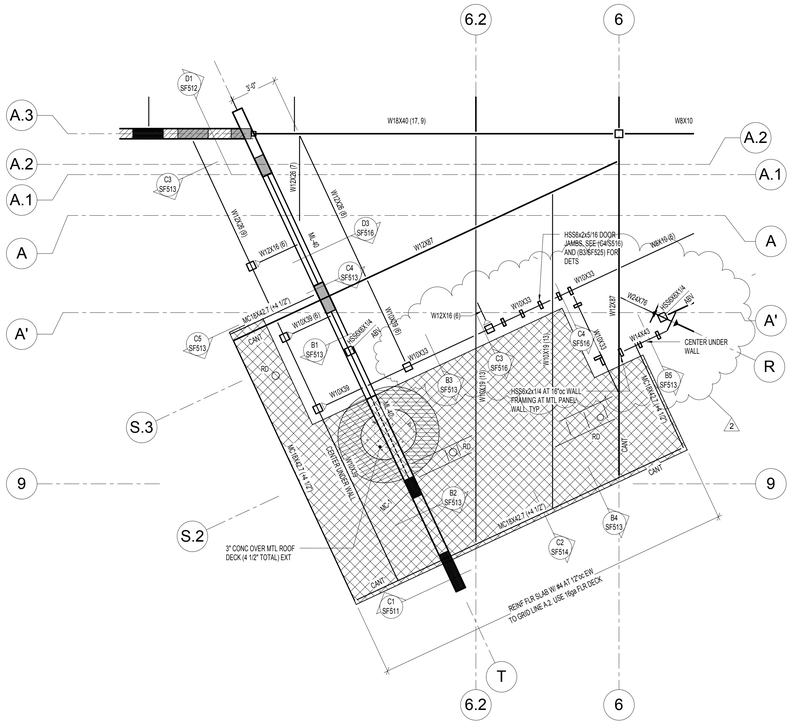

NORTH

C1 SF104 PARTIAL SECOND FLOOR FRAMING PLAN
SCALE: 1/4" = 1'-0"

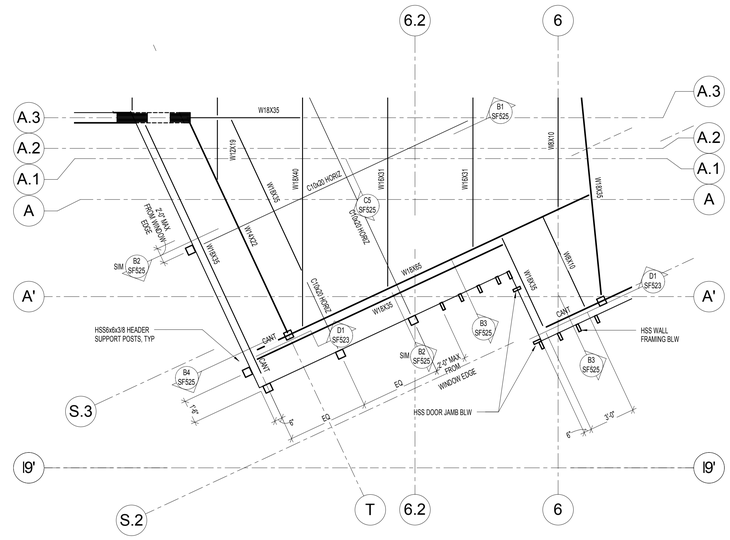

NORTH

C3 SF104 ROOF FRAMING PLAN
SCALE: 1/4" = 1'-0"

28 March 2013
VOLUME A.1 - DFCM
Review Response #2

NOTE:
THESE STRUCTURAL DRAWINGS ARE BASED ON ARCHITECTURAL DRAWINGS DATED 08.28.2012

DIMENSIONS AND ELEVATIONS, AS THEY RELATE TO THE BUILDING IN GENERAL, i.e. GRID TO GRID DIMENSIONS OR DECK BEARING ELEVATIONS, ARE SUPPLIED BY THE ARCHITECT. THEY ARE PROVIDED ON THE STRUCTURAL PLANS AND DETAILS FOR THE CONVENIENCE OF THE CONTRACTOR. VERIFY DIMENSIONS AND ELEVATIONS WITH ARCHITECTURAL DRAWINGS.

DUNN ASSOCIATES, INC
Consulting Structural Engineers
EMAIL: ENG@DUNN-SE.COM
PH: 801-575-8877 FAX: 801-575-8875

ARCHITECTURAL NEXUS
SALT LAKE CITY PLACERVILLE SACRAMENTO

Architectural NEXUS, Inc.
2150 South 1300 East, Suite 200
Salt Lake City, Utah 84106
T 801.924.5000 F 801.924.5001
http://www.archnexus.com

Original drawings remain the property of the Architect and as such the Architect retains total ownership and control. The design represented by these drawings is sold to the client for a one time use, unless otherwise agreed upon in writing by the Architect.
© Architectural Nexus, Inc.2011

UTAH NATIONAL GUARD CAMP WILLIAMS
RTI TASS COMPLEX, PHASE II
PROJECT NO. 490444

UTAH NATIONAL GUARD
12953 SOUTH MINUTEMAN DRIVE
DRAPER, UTAH 84020-1726

#	REVISIONS	
2	28 March 2013	DFCM Review Response #2

DUNN PROJECT #:	11024
CHECKED BY:	Checker
DRAWN BY:	Author
DATE:	28 March 2013

SHEET CONTENTS:
PARTIAL ROOF FRAMING PLAN

VOLUME A.1 - DFCM Review Response #2

SF104

This drawing, as an instrument of professional service, is the property of DUNN ASSOCIATES INC., and shall not be used, in whole or part for any other project without the written permission of an authorized representative of DUNN ASSOCIATES INC. Unauthorized use will be prosecuted to the fullest extent of the law. Copyright © 2012 by DUNN ASSOCIATES INC.

3/27/2013 4:48:11 PM

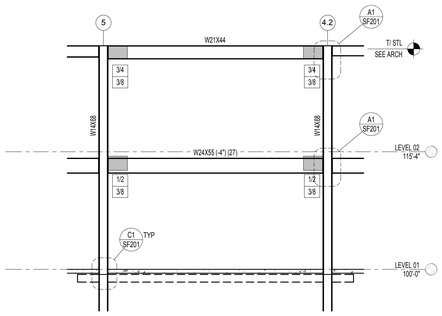

D1 SF201 MOMENT FRAME ELEVATION GRID S.5
SCALE: 1/8" = 1'-0"

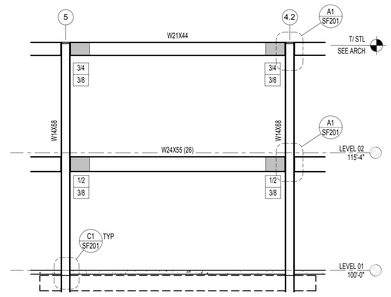

D2 SF201 MOMENT FRAME ELEVATION GRID S.2
NO SCALE:

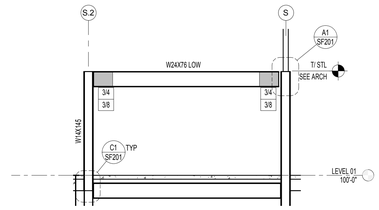

D4 SF201 MOMENT FRAME ELEVATION GRID R
NO SCALE:

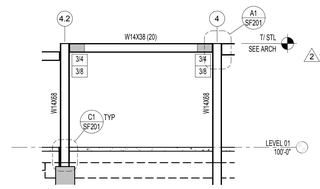

D5 SF201 MOMENT FRAME ELEVATION GRID S
NO SCALE:

ELEVATION NOTES

1. ALL MEMBERS SIZED ON THIS SHEET ARE PART OF THE MOMENT FRAME. SEE GENERAL STRUCTURAL NOTES AND SPECIFIED DETAILS FOR MORE INFORMATION.
2. WHERE POSSIBLE COORDINATE FULL HEIGHT WEB STIFFENERS WITH PERPENDICULAR BEAM CONNECTIONS. SEE (D/SF202).
3. ALL MOMENT FRAME BEAM TO COLUMN CONNECTIONS ARE REDUCED BEAM CONNECTIONS. SEE SCHEDULE! DETAIL (A1/SF201).
4. PROVIDE 3/4"Ø x 0'-6" HSA AT 12"oc TYPICAL AT MOMENT FRAME BEAMS WITH CONCRETE SLAB OVER METAL DECK, UNLESS NOTED OTHERWISE.

ELEVATION NOTES

SECTION MARK
SHEET NUMBER

X — SIZE INDICATES CONTINUITY PL THICKNESS
X — SIZE INDICATES WEB DOUBLER PL THICKNESS

PROTECTED ZONE. SEE DETAIL (A1/SF201)

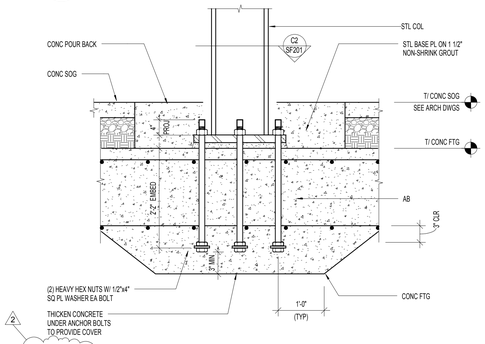

C1 SF201 MOMENT FRAME COLUMN TO CONCRETE FOOTING
NO SCALE:

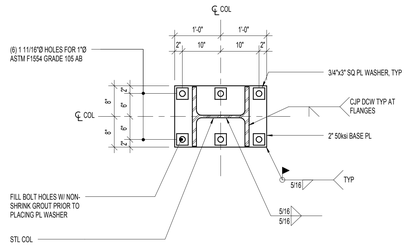

C2 SF201 MOMENT FRAME END COLUMN BASE PLATE
NO SCALE:

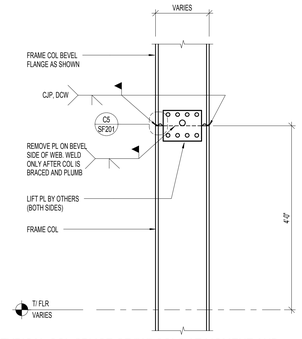

C4 SF201 TYPICAL COL SPLICE OF "W" COLS AT MOMENT AND BRACED FRAMES
NO SCALE:

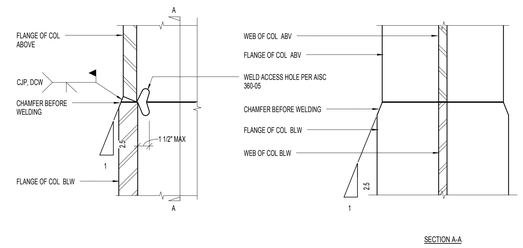

C5 SF201 TRANSITION DETAIL
NO SCALE:

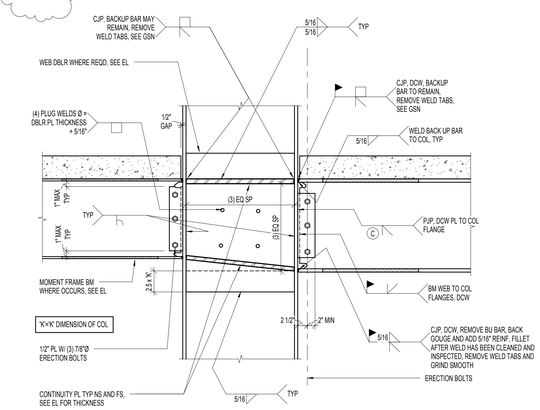

MOMENT CONNECTION WHERE COLUMN CONTINUES UP

BEAM	DIMENSIONS			
	a (IN)	b (IN) APPROX	c (IN)	RADIUS
W14x38	3.5	9.25	0.75	14.6
W21x44	3.25	13.5	0.75	30.8
W24x55	3.75	15.5	0.75	40.4
W24x62	3.75	15.5	0.75	40.4
W24x76	4.5	15.75	1	31.5

NOTES:
1. COPE TOP AND BOTT BM FLANGES IN CIRCULAR ARC AS SHOWN. CUT EDGE TO BE GROUND SMOOTH W/ GRINDING PARALLEL TO FLANGE. SEE . GSN, ALL SHOP DRAWINGS TO CLEARLY NOTE FINISH REQUIREMENTS.
2. CONSTRUCTION SEQUENCE:
   A. SNUG TIGHTEN ERECTION BOLTS.
   B. WELD TOP AND BOTTOM BEAM FLANGES.
   C. WELD BEAM WEB.
3. CUT TOLERANCES ARE AS FOLLOWS:
   A. ± 1/4"

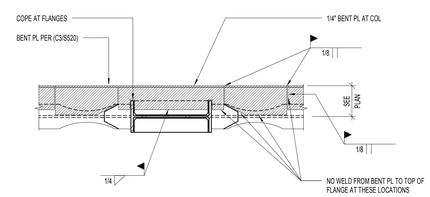

BENT PLATE AT FLOOR

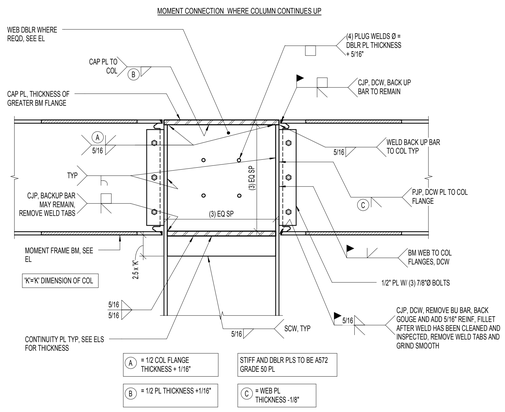

MOMENT CONNECTION AT TOP OF COLUMN

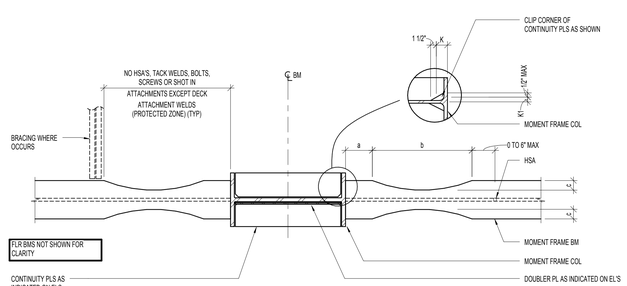

MOMENT CONNECTION SECTIONS

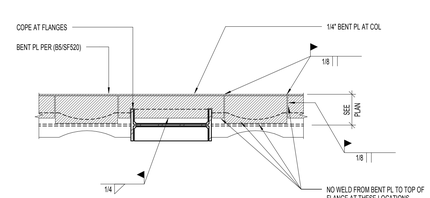

BENT PLATE AT ROOF

A1 SF201 RADIUS CUT REDUCED BEAM SECTION MOMENT CONNECTIONS
NO SCALE:

28 March 2013
VOLUME A.1 - DFCM
Review Response #2

NOTE:
THESE STRUCTURAL DRAWINGS ARE BASED ON ARCHITECTURAL DRAWINGS DATED 08.28.2012

DIMENSIONS AND ELEVATIONS, AS THEY RELATE TO THE BUILDING IN GENERAL, i.e. GRID TO GRID DIMENSIONS OR DECK BEARING ELEVATIONS, ARE SUPPLIED BY THE ARCHITECT. THEY ARE PROVIDED ON THE STRUCTURAL PLANS AND DETAILS FOR THE CONVENIENCE OF THE CONTRACTOR. VERIFY DIMENSIONS AND ELEVATIONS WITH ARCHITECTURAL DRAWINGS.

DUNN ASSOCIATES, INC
Consulting Structural Engineers
EMAIL: ENG@DUNN-SE.COM
PH: 801-575-8877 FAX: 801-575-8875

ARCHITECTURAL NEXUS
SALT LAKE CITY PLACERVILLE SACRAMENTO

Architectural NEXUS, Inc.
2150 South 1300 East, Suite 200
Salt Lake City, Utah 84106
T 801.924.5000 F 801.924.5001
http://www.archnexus.com

Original drawings remain the property of the Architect and as such the Architect retains total ownership and control. The design represented by these drawings is sold to the client for a one time use, unless otherwise agreed upon in writing by the Architect.
© Architectural Nexus, Inc.2011

UTAH NATIONAL GUARD CAMP WILLIAMS
RTI TASS COMPLEX, PHASE II
PROJECT NO. 490444
UTAH NATIONAL GUARD
12953 SOUTH MINUTEMAN DRIVE
DRAPER, UTAH 84020-1726

#	REVISIONS	
1	15 March 2013	DFCM Review Response
2	28 March 2013	DFCM Review Response #2

DUNN PROJECT #:	11024
CHECKED BY:	Tyler Wright
DRAWN BY:	Brett Roberts
DATE:	28 March 2013

SHEET CONTENTS:
MOMENT FRAME ELEVATIONS

VOLUME A.1 - DFCM Review Response #2

SF201

This drawing, as an instrument of professional service, is the property of DUNN ASSOCIATES INC, and shall not be used, in whole or part for any other project without the written permission of an authorized representative of DUNN ASSOCIATES INC. Unauthorized use will be prosecuted to the fullest extent of the law. Copyright © 2012 by DUNN ASSOCIATES INC.

3/27/2013 4:48:14 PM

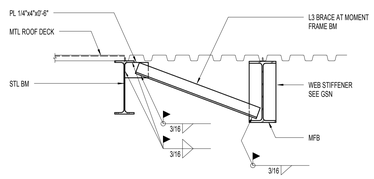

D1 SF202 BRACE AT MOMENT FRAME BEAM RBS SECTION
NO SCALE:

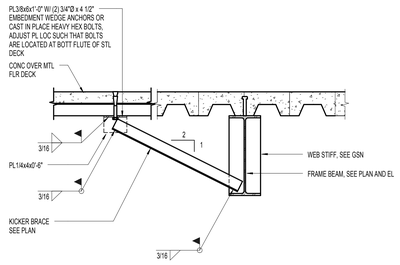

D2 SF202 BRACE AT FRAME FLOOR BEAM
NO SCALE:

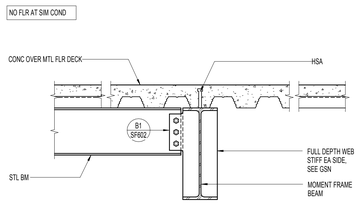

2 D3 SF202 STEEL BEAM TO MOMENT FRAME BEAM CONNECTION
NO SCALE:

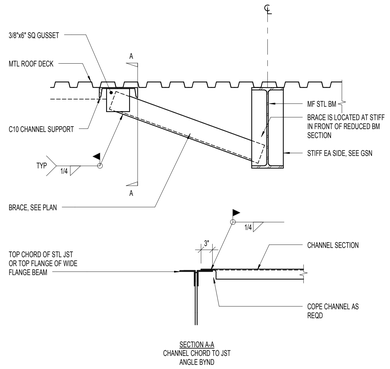

D4 SF202 DETAIL
NO SCALE:

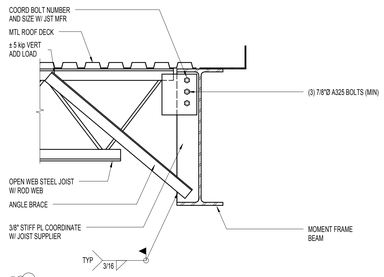

2 D6 SF202 MOMENT FRAME BEAM BRACE AT JOIST
NO SCALE:

This drawing, as an instrument of professional service, is the property of DUNN ASSOCIATES INC., and shall not be used, in whole or part for any other project without the written permission of an authorized representative of DUNN ASSOCIATES INC. Unauthorized use will be prosecuted to the fullest extent of the law. Copyright © 2012 by DUNN ASSOCIATES INC.

3/27/2013 4:48:15 PM

28 March 2013
VOLUME A.1 - DFCM
Review Response #2

NOTE:
THESE STRUCTURAL DRAWINGS ARE BASED ON ARCHITECTURAL DRAWINGS DATED 08.28.2012

DIMENSIONS AND ELEVATIONS, AS THEY RELATE TO THE BUILDING IN GENERAL, i.e. GRID TO GRID DIMENSIONS OR DECK BEARING ELEVATIONS, ARE SUPPLIED BY THE ARCHITECT. THEY ARE PROVIDED ON THE STRUCTURAL PLANS AND DETAILS FOR THE CONVENIENCE OF THE CONTRACTOR. VERIFY DIMENSIONS AND ELEVATIONS WITH ARCHITECTURAL DRAWINGS.

DUNN
DUNN ASSOCIATES, INC
Consulting Structural Engineers
EMAIL: ENG@DUNN-SE.COM
PH: 801-575-8877 FAX: 801-575-8875

ARCHITECTURAL NEXUS
SALT LAKE CITY PLACERVILLE SACRAMENTO

Architectural NEXUS, Inc.
2150 South 1300 East, Suite 200
Salt Lake City, Utah 84106
T 801.924.5000 F 801.924.5001
http://www.archnexus.com

Original drawings remain the property of the Architect and as such the Architect retains total ownership and control. The design represented by these drawings is sold to the client for a one time use, unless otherwise agreed upon in writing by the Architect.
© Architectural Nexus, Inc.2011

UTAH NATIONAL GUARD CAMP WILLIAMS
RTI TASS COMPLEX, PHASE II
PROJECT NO. 490444

UTAH NATIONAL GUARD
12953 SOUTH MINUTEMAN DRIVE
DRAPER, UTAH 84020-1726

REVISIONS

#	Date	Description
2	28 March 2013	DFCM Review Response #2

DUNN PROJECT #:	11024
CHECKED BY:	Tyler Wright
DRAWN BY:	Brett Roberts
DATE:	28 March 2013

SHEET CONTENTS:
MOMENT FRAME DETAIL

VOLUME A.1 - DFCM Review Response #2

SF202

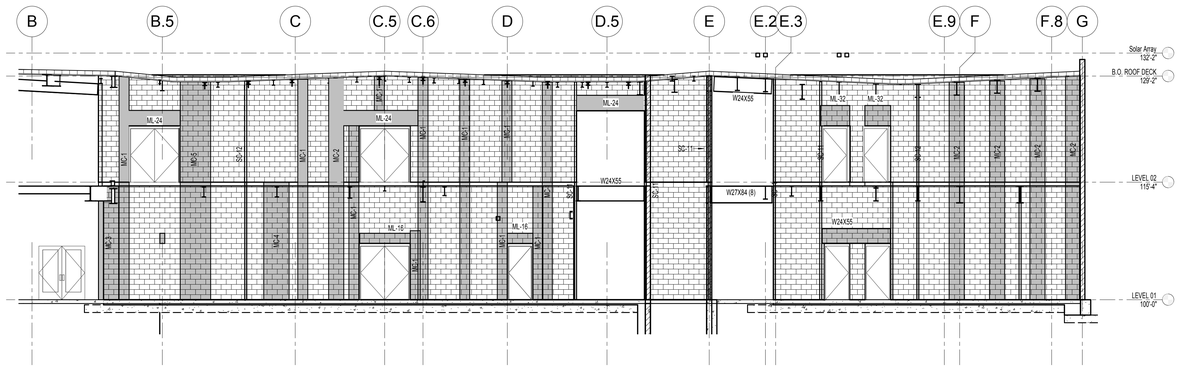

D1 SF203 INTERIOR WALL ELEVATION GRID 6
SCALE: 1/8" = 1'-0"

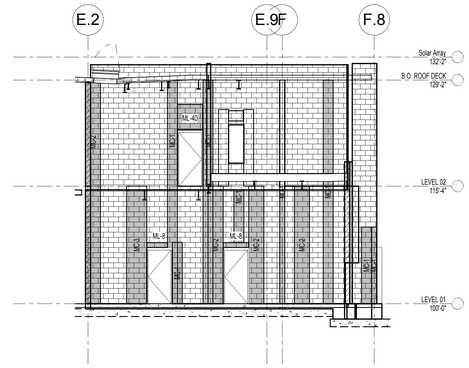

D5 SF203 INTERIOR WALL ELEVATION GRID 3.5
SCALE: 1/8" = 1'-0"

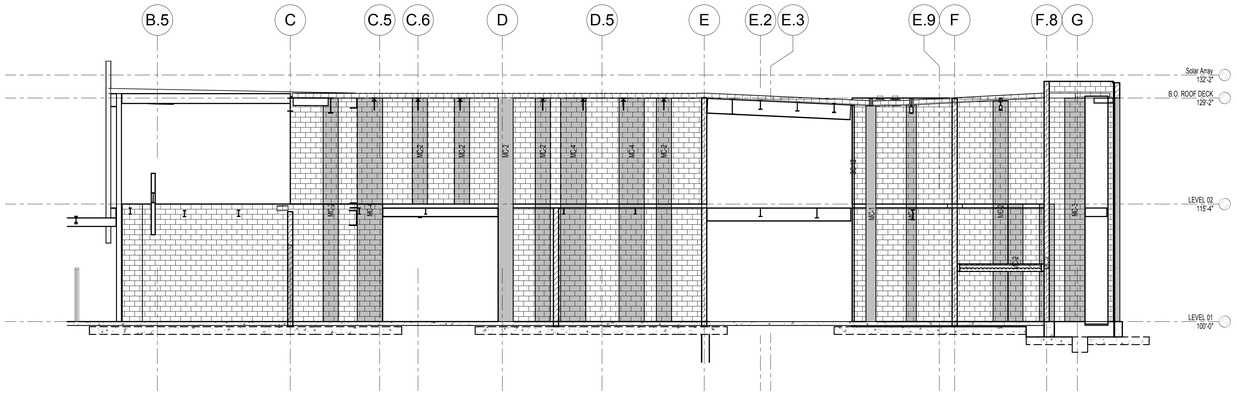

C1 SF203 INTERIOR WALL ELEVATION GRID 4
SCALE: 1/8" = 1'-0"

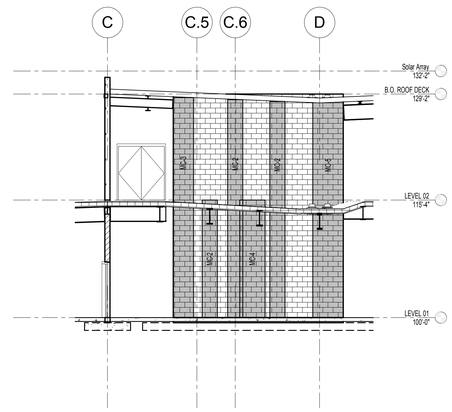

C5 SF203 INTERIOR WALL ELEVATION GRID 3
SCALE: 1/8" = 1'-0"

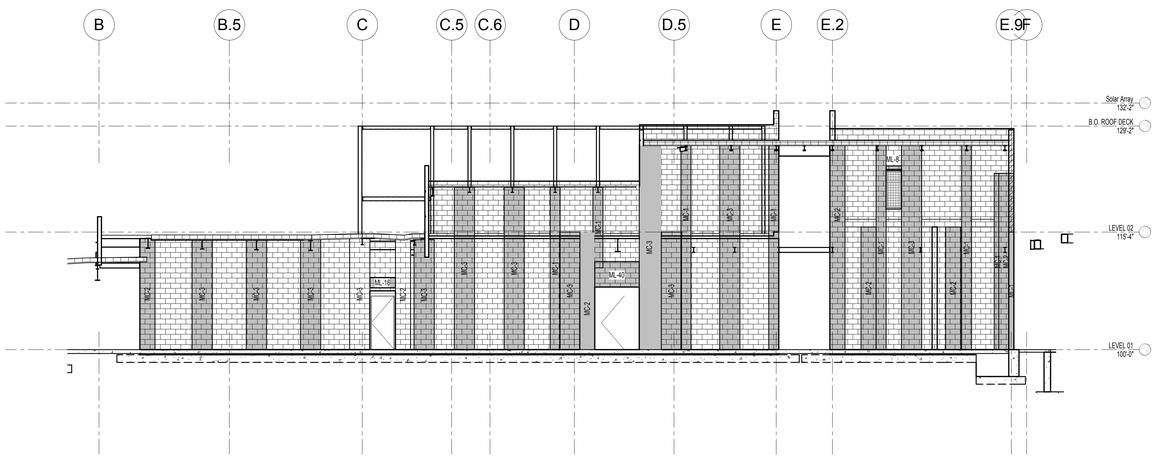

1 SF203 INTERIOR WALL ELEVATION GRID 2
SCALE: 1/8" = 1'-0"

28 March 2013
VOLUME A.1 - DFCM
Review Response #2

NOTE:
THESE STRUCTURAL DRAWINGS ARE BASED ON ARCHITECTURAL DRAWINGS DATED 08.28.2012

DIMENSIONS AND ELEVATIONS, AS THEY RELATE TO THE BUILDING IN GENERAL, i.e. GRID TO GRID DIMENSIONS OR DECK BEARING ELEVATIONS, ARE SUPPLIED BY THE ARCHITECT. THEY ARE PROVIDED ON THE STRUCTURAL PLANS AND DETAILS FOR THE CONVENIENCE OF THE CONTRACTOR. VERIFY DIMENSIONS AND ELEVATIONS WITH ARCHITECTURAL DRAWINGS.

DUNN
DUNN ASSOCIATES, INC
Consulting Structural Engineers
EMAIL: ENG@DUNN-SE.COM
PH: 801-575-8877 FAX: 801-575-8875

ARCHITECTURAL NEXUS
SALT LAKE CITY PLACERVILLE SACRAMENTO

Architectural NEXUS, Inc.
2150 South 1300 East, Suite 200
Salt Lake City, Utah 84106
T 801.924.5000 F 801.924.5001
http://www.archnexus.com

Original drawings remain the property of the Architect and as such the Architect retains total ownership and control. The design represented by these drawings is sold to the client for a one time use, unless otherwise agreed upon in writing by the Architect.
© Architectural Nexus, Inc.2011

UTAH NATIONAL GUARD CAMP WILLIAMS
RTI TASS COMPLEX, PHASE II
PROJECT NO. 490444

UTAH NATIONAL GUARD
12953 SOUTH MINUTEMAN DRIVE
DRAPER, UTAH 84020-1726

REVISIONS

DUNN PROJECT #:	11024
CHECKED BY:	Tyler Wright
DRAWN BY:	Brett Roberts
DATE:	28 March 2013

SHEET CONTENTS:
MASONRY WALL ELEVATIONS

VOLUME A.1 - DFCM Review Response #2

SF203

This drawing, as an instrument of professional service, is the property of DUNN ASSOCIATES INC., and shall not be used, in whole or part for any other project without the written permission of an authorized representative of DUNN ASSOCIATES INC. Unauthorized use will be prosecuted to the fullest extent of the law. Copyright © 2013 by DUNN ASSOCIATES INC.

3/27/2013 4:48:20 PM

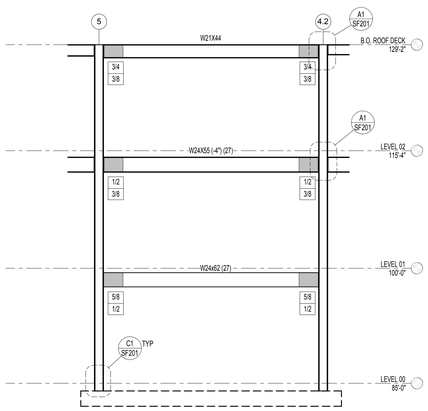

D1 SF204 MOMENT FRAME ELEVATION GRID S.5 (REPLACES (D1/SF201) IF BASEMENT ADDITIVE ALTERNATE IS ACCEPTED)
SCALE: 1/8" = 1'-0"

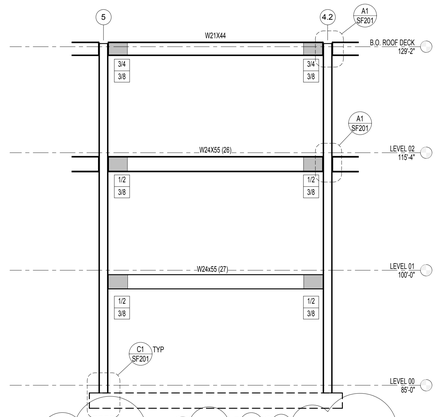

D2 SF204 MOMENT FRAME ELEVATION GRID S.2 (REPLACES (D2/SF201) IF BASEMENT ADDITIVE ALTERNATE IS ACCEPTED)
SCALE: 1/8" = 1'-0"

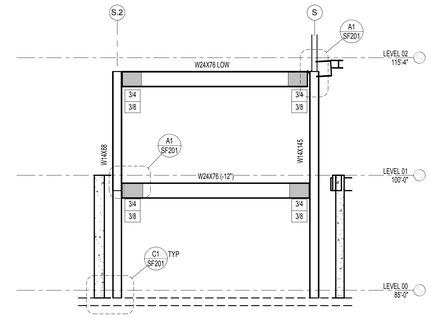

D4 SF204 MOMENT FRAME ELEVATION GRID R (REPLACES (D4/SF201) IF BASEMENT ADDITIVE ALTERNATE IS ACCEPTED)
SCALE: 1/8" = 1'-0"

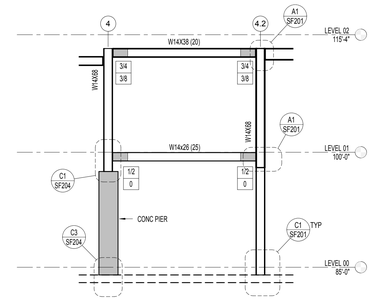

D5 SF204 MOMENT FRAME ELEVATION GRID S (REPLACES (D5/SF201) IF BASEMENT ADDITIVE ALTERNATE IS ACCEPTED)
SCALE: 1/8" = 1'-0"

ELEVATION NOTES

1. ALL MEMBERS SIZED ON THIS SHEET ARE PART OF THE MOMENT FRAME. SEE GENERAL STRUCTURAL NOTES AND SPECIFIED DETAILS FOR MORE INFORMATION.
2. WHERE POSSIBLE COORDINATE FULL HEIGHT WEB STIFFENERS WITH PERPENDICULAR BEAM CONNECTIONS. SEE (03/SF202).
3. ALL MOMENT FRAME BEAM TO COLUMN CONNECTIONS ARE REDUCED BEAM CONNECTIONS. SEE SCHEDULE / DETAIL (A1/SF201)
4. PROVIDE 3/4"Ø x 0'-0" HSA AT 12"oc TYPICAL AT MOMENT FRAME BEAMS WITH CONCRETE SLAB OVER METAL DECK, UNLESS NOTED OTHERWISE.

ELEVATION NOTES

SECTION MARK
SHEET NUMBER

X SIZE INDICATES CONTINUITY PL THICKNESS
X SIZE INDICATES WEB DOUBLER PL THICKNESS

PROTECTED ZONE. SEE DETAIL (A1/SF201)

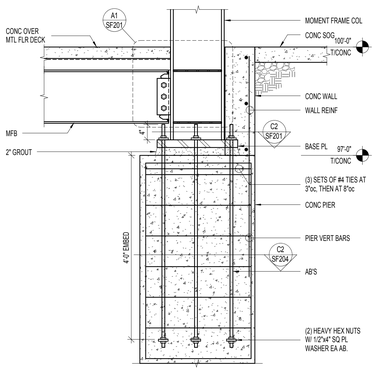

C1 SF204 MOMENT FRAME PIER (BASEMENT ADD / ALTERNATE)
NO SCALE:

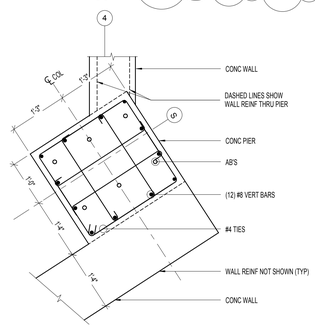

C2 SF204 PIER SECTION (BASEMENT ADD / ALTERNATE)
NO SCALE:

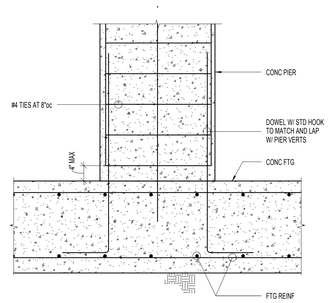

C3 SF204 PIER TO FOOTING DETAIL (BASEMENT ADD / ALTERNATE)
NO SCALE:

ARCHITECTURAL NEXUS
SALT LAKE CITY PLACERVILLE SACRAMENTO

Architectural NEXUS, Inc.
2150 South 1300 East, Suite 200
Salt Lake City, Utah 84106
T 801.924.5000 F 801.924.5001
http://www.archnexus.com

Original drawings remain the property of the Architect and as such the Architect retains total ownership and control. The design represented by these drawings is sold to the client for a one time use, unless otherwise agreed upon in writing by the Architect.
© Architectural Nexus, Inc.2011

UTAH NATIONAL GUARD CAMP WILLIAMS
RTI TASS COMPLEX, PHASE II
PROJECT NO. 490444

UTAH NATIONAL GUARD
12953 SOUTH MINUTEMAN DRIVE
DRAPER, UTAH 84020-1726

#	REVISIONS	
1	15 March 2013	DFCM Review Response
2	28 March 2013	DFCM Review Response #2

DUNN PROJECT #:	11024
CHECKED BY:	Tyler Wright
DRAWN BY:	Brett Roberts
DATE:	28 March 2013

SHEET CONTENTS:
ADDITIVE / ALTERNATE MOMENT FRAME

VOLUME A.1 - DFCM Review Response #2

SF204

28 March 2013
VOLUME A.1 - DFCM
Review Response #2

NOTE:
THESE STRUCTURAL DRAWINGS ARE BASED ON ARCHITECTURAL DRAWINGS DATED 08.28.2012

DIMENSIONS AND ELEVATIONS, AS THEY RELATE TO THE BUILDING IN GENERAL, i.e. GRID TO GRID DIMENSIONS OR DECK BEARING ELEVATIONS, ARE SUPPLIED BY THE ARCHITECT. THEY ARE PROVIDED ON THE STRUCTURAL PLANS AND DETAILS FOR THE CONVENIENCE OF THE CONTRACTOR. VERIFY DIMENSIONS AND ELEVATIONS WITH ARCHITECTURAL DRAWINGS.

DUNN ASSOCIATES, INC
Consulting Structural Engineers
EMAIL: ENG@DUNN-SE.COM
PH: 801-575-8877 FAX: 801-575-8875

This drawing, as an instrument of professional service, is the property of DUNN ASSOCIATES INC, and shall not be used, in whole or part for any other project without the written permission of an authorized representative of DUNN ASSOCIATES INC. Unauthorized use will be prosecuted to the fullest extent of the law. Copyright © 2012 by DUNN ASSOCIATES INC.

3/27/2013 4:48:23 PM

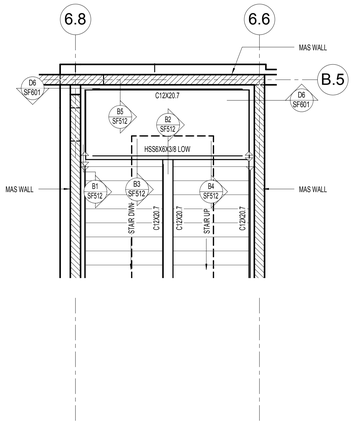

NORTH D2 SF401 INTERMEDIATE LANDING
SCALE: 1/4" = 1'-0"

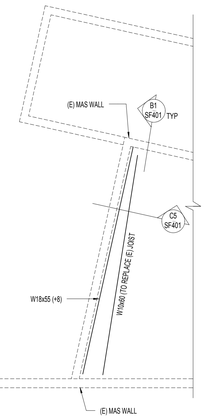

NORTH D3 SF401 ROOF - EXISTING DOCK BEAM ADDITION
SCALE: 1/8" = 1'-0"

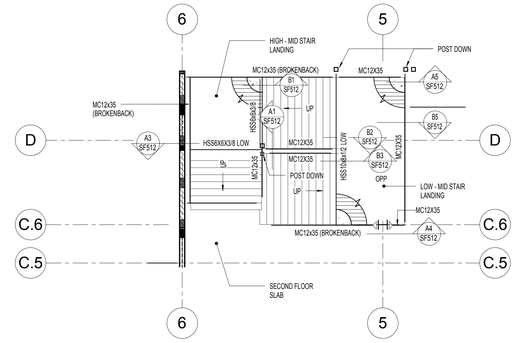

NORTH D5 SF401 STAIR BETWEEN GROUND LEVEL AND SECOND FLOOR
SCALE: 1/8" = 1'-0"

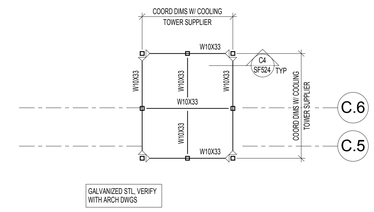

NORTH D6 SF401 COOLING TOWER FRAME PLAN
SCALE: 1/8" = 1'-0"

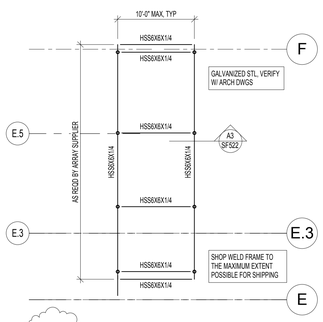

NORTH C1 SF401 8 POST ARRAY SUPPORT, TYP (3) LOCATIONS
SCALE: 1/8" = 1'-0"

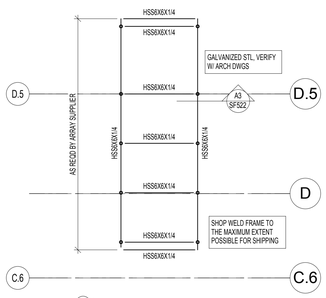

NORTH C2 SF401 10 POST ARRAY SUPPORT
SCALE: 1/8" = 1'-0"

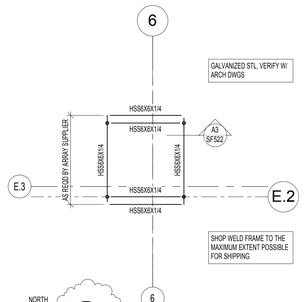

NORTH C3 SF401 4 POST ARRAY SUPPORT
SCALE: 1/8" = 1'-0"

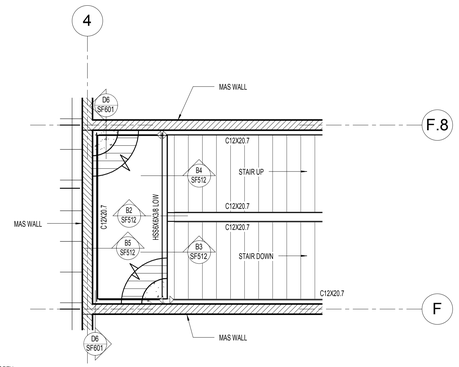

NORTH C4 SF401 INTERMEDIATE LANDING
SCALE: 1/4" = 1'-0"

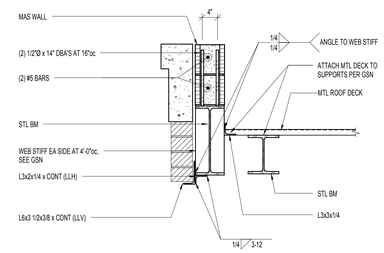

C5 SF401 PHASE 1 DOCK ROOF DETAIL
NO SCALE:

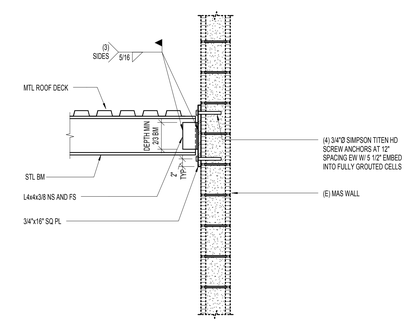

B1 SF401 BEAM TO EXISTING MASONRY WALL
NO SCALE:

28 March 2013
VOLUME A.1 - DFCM
Review Response #2

NOTE:
THESE STRUCTURAL DRAWINGS ARE BASED ON ARCHITECTURAL DRAWINGS DATED 08.28.2012

DIMENSIONS AND ELEVATIONS, AS THEY RELATE TO THE BUILDING IN GENERAL, i.e. GRID TO GRID DIMENSIONS OR DECK BEARING ELEVATIONS, ARE SUPPLIED BY THE ARCHITECT. THEY ARE PROVIDED ON THE STRUCTURAL PLANS AND DETAILS FOR THE CONVENIENCE OF THE CONTRACTOR. VERIFY DIMENSIONS AND ELEVATIONS WITH ARCHITECTURAL DRAWINGS.

DUNN
DUNN ASSOCIATES, INC
Consulting Structural Engineers
EMAIL: ENG@DUNN-SE.COM
PH: 801-575-8877 FAX: 801-575-8875

ARCHITECTURAL NEXUS
SALT LAKE CITY PLACERVILLE SACRAMENTO

Architectural NEXUS, Inc.
2150 South 1300 East, Suite 200
Salt Lake City, Utah 84106
T 801.924.5000 F 801.924.5001
http://www.archnexus.com

Original drawings remain the property of the Architect and as such the Architect retains total ownership and control. The design represented by these drawings is sold to the client for a one time use, unless otherwise agreed upon in writing by the Architect.
© Architectural Nexus, Inc.2011

UTAH NATIONAL GUARD CAMP WILLIAMS
RTI TASS COMPLEX, PHASE II
PROJECT NO. 490444

UTAH NATIONAL GUARD
12953 SOUTH MINUTEMAN DRIVE
DRAPER, UTAH 84020-1726

#	REVISIONS	
2	28 March 2013	DFCM Review Response #2

DUNN PROJECT #:	11024
CHECKED BY:	Tyler Wright
DRAWN BY:	Brett Roberts
DATE:	28 March 2013

SHEET CONTENTS:
PLANS AND DETAILS

VOLUME A.1 - DFCM Review Response #2

SF401

This drawing, as an instrument of professional service, is the property of DUNN ASSOCIATES INC., and shall not be used, in whole or part for any other project without the written permission of an authorized representative of DUNN ASSOCIATES INC. Unauthorized use will be prosecuted to the fullest extent of the law. Copyright © 2012 by DUNN ASSOCIATES INC.

3/27/2013 4:48:27 PM

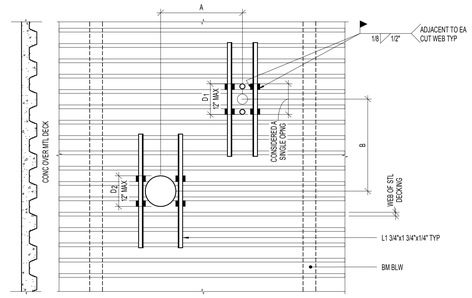

NOTES:
1. THIS DETAIL APPLIES TO HOLES CUTTING NO MORE THAN (2) ADJACENT WEBS FOR 12" MODULE DECK.
2. OPENINGS SHALL BE BLOCKED OUT AND THE DECK LEFT INTACT. AFTER THE CONCRETE HAS CURED, THE DECK IN THE AREA OF THE OPENING CAN BE REMOVED.
3. ANGLES SHALL BE PLACED ON TOP OF THE DECK, ANGLES SHAL EXTEND 3 WEBS PAST THE DECK OPENING (TYP)
   IF DIMENSION A IS >4D1 , 4D2 , OR 32" WHICHEVER IS LARGER, THERE IS NO RESTRICTION ON DIMENSION B
   IF DIMENSION B IS >4D1 , 4D2 , OR 32" WHICHEVER IS LARGER, THERE IS NO RESTRICTION ON DIMENSION A
4. IF DIMENSIONS A AND B ARE <4D1 , 4D2 , OR 32" WHICHEVER IS LARGER, THE OPENING GROUP SHALL BE CONSIDERED AS A SINGLE HOLE, AND SHALL BE REINFORCED AS REQUIRED FOR LARGER OPENING . SEE FOLLOWING DETAIL.
5. INDIVIDUAL HOLES LESS THAN 6" IN DIAMETER AND CUTTING NO MORE THAN ONE WEB DO NOT REQUIRE REINFORCING.

D1 SF510 TYPICAL SMALL OPENING IN FLOOR SLAB
NO SCALE:

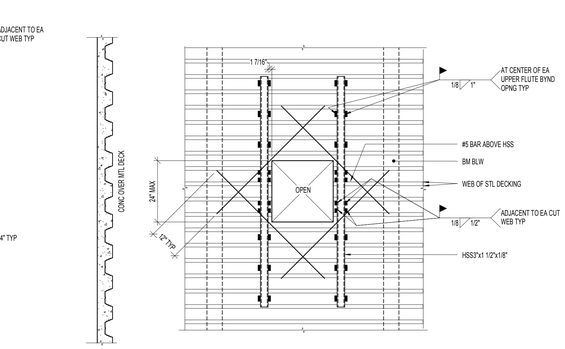

NOTES:
1. THIS DETAIL APPLIES TO OPENING UP TO 24".
2. TUBES SHALL BE PLACED ON TOP OF DECK.
3. THE DECK SHALL NOT BE CUT UNTIL CONCRETE HAS BEEN PLACED AND CURED, AT THE TIME OF POURING, SUITABLE SLEEVES OR BULKHEADS SHALL BE PLACED AROUND THE OPENING.
4. SEE FOLLOWING DETAIL IF OPENING IS GREATER THAN 24".

D2 SF510 TYPICAL MEDIUM OPENING IN FLOOR SLAB
NO SCALE:

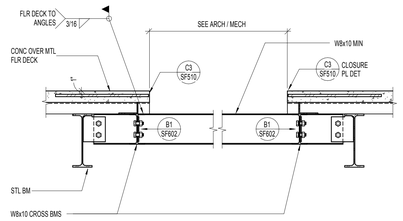

D4 SF510 MISCELLANEOUS FLOOR OPENING DETAIL
NO SCALE:

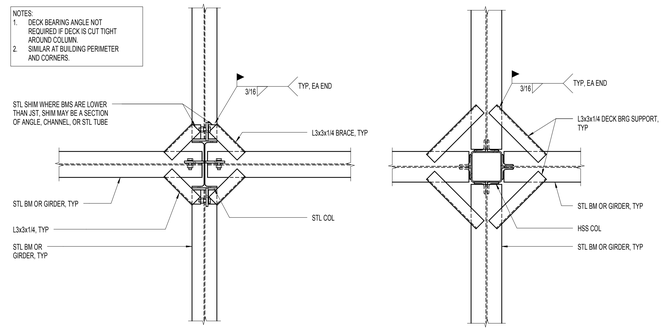

NOTES:
1. DECK BEARING ANGLE NOT REQUIRED IF DECK IS CUT TIGHT AROUND COLUMN.
2. SIMILAR AT BUILDING PERIMETER AND CORNERS.

D5 SF510 TYPICAL DECK BEARING ANGLES AT COLUMNS (WHERE REQUIRED)
NO SCALE:

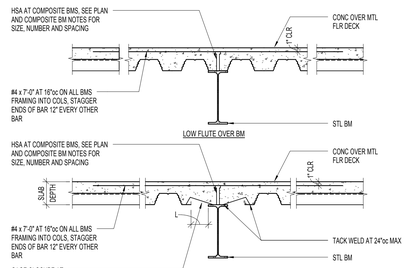

GAGE CLOSURE AT GIRDER

RECOMMENDED GIRDER FILLER THICKNESS

L	METAL GAGE (TYPE)
0" TO 5"	20
5"+ TO 7 1/2"	16
7 1/2"+ TO 9"	14

* NOT TO EXCEED 12". ABOVE GAGES ARE BASED ON FLAT MATERIAL WITH NO STRENGTH INCREASE DUE TO ITS SHAPE.

C1 SF510 TYPICAL COMPOSITE BEAM DETAILS
NO SCALE:

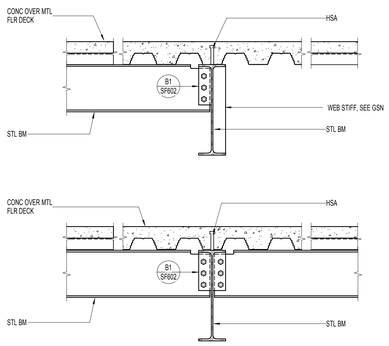

C2 SF510 TYPICAL STEEL BEAM TO STEEL BEAM CONNECTION DETAILS
NO SCALE:

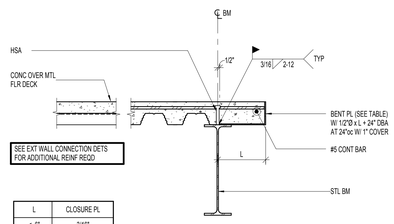

SEE EXT WALL CONNECTION DETS FOR ADDITIONAL REINF REQD

L	CLOSURE PL
< 6"	3/16"
6" ≤ 10"	1/4"
10" ≤ 12"	5/16"

C3 SF510 TYPICAL CLOSURE PLATE (OVERHANG L ≤ 12")
NO SCALE:

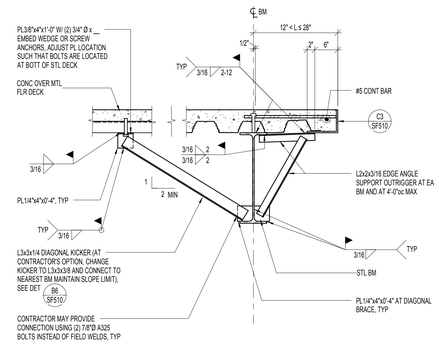

C4 SF510 TYPICAL CLOSURE PLATE (OVERHANG 12" < L ≤ 28")
NO SCALE:

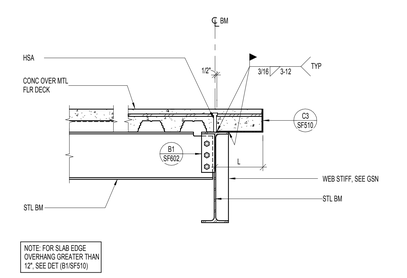

NOTE: FOR SLAB EDGE OVERHANG GREATER THAN 12". SEE DET (B1/SF510)

C6 SF510 TYPICAL SLAB EDGE CONDITION AT BEAM (OVERHANG L ≤ 12")
NO SCALE:

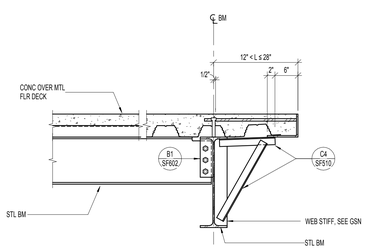

C1 SF510 TYPICAL COMPOSITE BEAM DETAILS
NO SCALE:

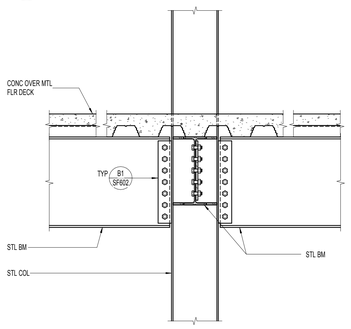

C2 SF510 TYPICAL STEEL BEAM TO STEEL BEAM CONNECTION DETAILS
NO SCALE:

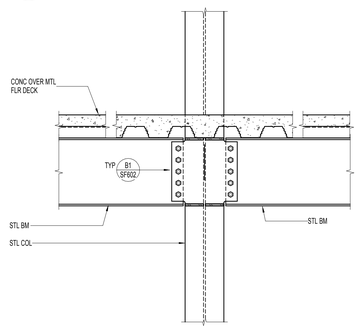

C3 SF510 TYPICAL CLOSURE PLATE (OVERHANG L ≤ 12")
NO SCALE:

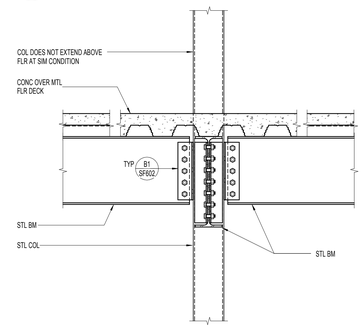

C4 SF510 TYPICAL CLOSURE PLATE (OVERHANG 12" < L ≤ 28")
NO SCALE:

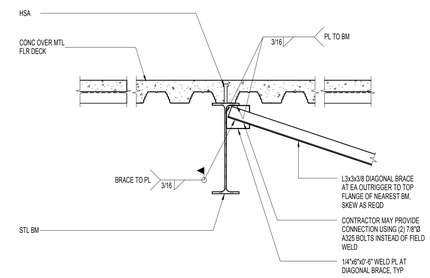

B6 SF510 TYPICAL KICKER CONNECTION DETAIL AT STEEL BEAM
NO SCALE:

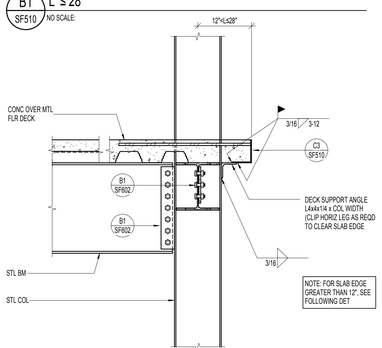

B1 SF510 TYPICAL SLAB EDGE CONDITION AT BEAM (OVERHANG 12" < 'L' ≤ 28"
NO SCALE:

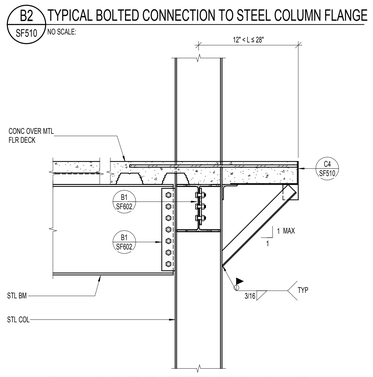

B2 SF510 TYPICAL BOLTED CONNECTION TO STEEL COLUMN FLANGE
NO SCALE:

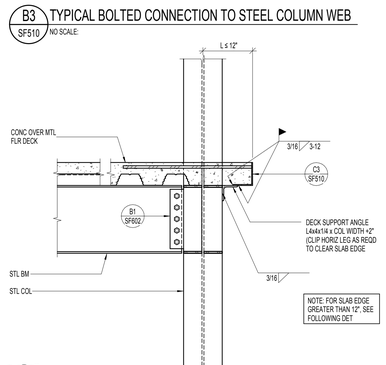

B3 SF510 TYPICAL BOLTED CONNECTION TO STEEL COLUMN WEB
NO SCALE:

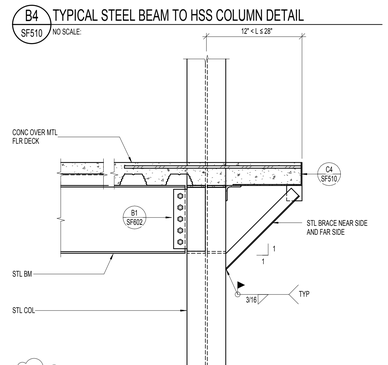

B4 SF510 TYPICAL STEEL BEAM TO HSS COLUMN DETAIL
NO SCALE:

A1 SF510 TYPICAL SLAB EDGE AT STEEL COLUMN FLANGE (OVERHANG 'L' ≤ 12")
NO SCALE:

A2 SF510 TYPICAL SLAB EDGE AT STEEL COLUMN FLANGE (OVERHANG 12"< 'L' ≤ 28")
NO SCALE:

A3 SF510 TYPICAL SLAB EDGE AT STEEL COLUMN WEB (OVERHANG 'L' ≤ 12")
NO SCALE:

A4 SF510 TYPICAL SLAB EDGE AT STEEL COLUMN WEB (OVERHANG 12" <'L' ≤ 28")
NO SCALE:

28 March 2013
VOLUME A.1 - DFCM
Review Response #2

NOTE:
THESE STRUCTURAL DRAWINGS ARE BASED ON ARCHITECTURAL DRAWINGS DATED 08.28.2012

DIMENSIONS AND ELEVATIONS, AS THEY RELATE TO THE BUILDING IN GENERAL, i.e. GRID TO GRID DIMENSIONS OR DECK BEARING ELEVATIONS, ARE SUPPLIED BY THE ARCHITECT. THEY ARE PROVIDED ON THE STRUCTURAL PLANS AND DETAILS FOR THE CONVENIENCE OF THE CONTRACTOR. VERIFY DIMENSIONS AND ELEVATIONS WITH ARCHITECTURAL DRAWINGS.

DUNN ASSOCIATES, INC
Consulting Structural Engineers
EMAIL: ENG@DUNN-NE.COM
PH: 801-575-8877 FAX: 801-575-8875

ARCHITECTURAL NEXUS
SALT LAKE CITY PLACERVILLE SACRAMENTO

Architectural NEXUS, Inc.
2150 South 1300 East, Suite 200
Salt Lake City, Utah 84106
T 801.924.5000 F 801.924.5001
http://www.archnexus.com

Original drawings remain the property of the Architect and as such the Architect retains total ownership and control. The design represented by these drawings is sold to the client for a one time use, unless otherwise agreed upon in writing by the Architect.
© Architectural Nexus, Inc.2011

UTAH NATIONAL GUARD CAMP WILLIAMS
RTI TASS COMPLEX, PHASE II
PROJECT NO. 490444

UTAH NATIONAL GUARD
12953 SOUTH MINUTEMAN DRIVE
DRAPER, UTAH 84020-1726

#	REVISIONS	
2	28 March 2013	DFCM Review Response #2

DUNN PROJECT #:	11024
CHECKED BY:	Tyler Wright
DRAWN BY:	Brett Roberts
DATE:	28 March 2013

SHEET CONTENTS:
FLOOR FRAMING DETAILS

VOLUME A.1 - DFCM Review Response #2

SF510

This drawing, as an instrument of professional service, is the property of DUNN ASSOCIATES INC., and shall not be used, in whole or part for any other project without the written permission of an authorized representative of DUNN ASSOCIATES INC. Unauthorized use will be prosecuted to the fullest extent of the law. Copyright © 2012 by DUNN ASSOCIATES INC.

3/27/2013 4:48:30 PM

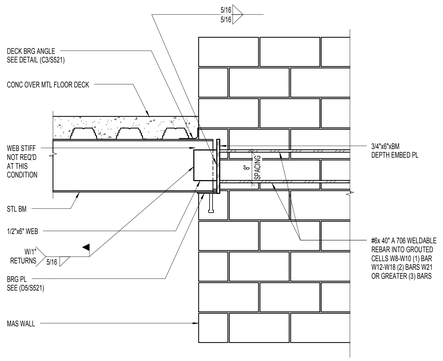

D1 SF512 DRAG BEAM CONNECTION TO SHEAR WALL
NO SCALE:

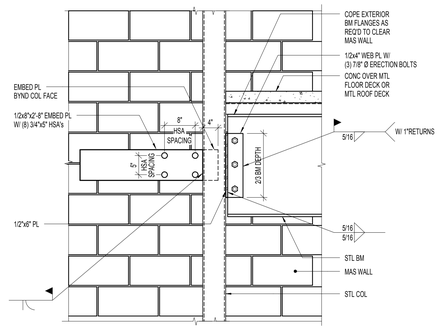

D2 SF512 COLUMN DRAG TO MASONRY WALL
NO SCALE:

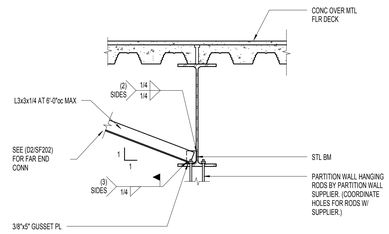

D3 SF512 PARTITION DOOR SUPPORT AT FLOOR
NO SCALE:

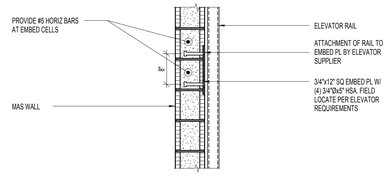

D4 SF512 TYPICAL ELEVATOR RAIL SUPPORT
NO SCALE:

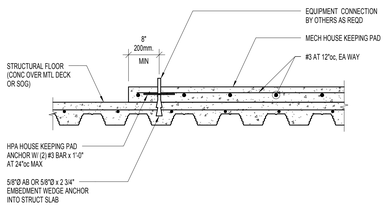

SECTION VIEW

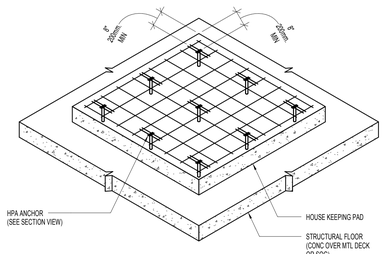

ISOMETRIC VIEW

C1 SF512 ANCHOR DETAIL FOR HOUSEKEEPING PAD ON CONCRETE OVER METAL DECK
NO SCALE:

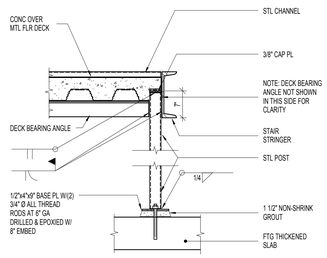

C3 SF512 INTERMEDIATE STAIR LANDING POST
NO SCALE:

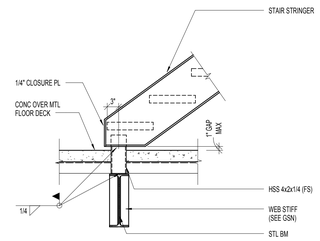

C4 SF512 CANTILEVERED STAIR LANDING SUPPORT
NO SCALE:

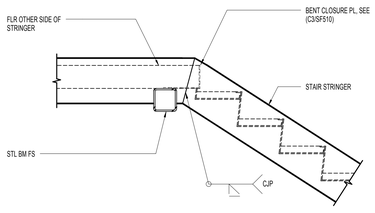

B1 SF512 STAIR DETAIL
NO SCALE:

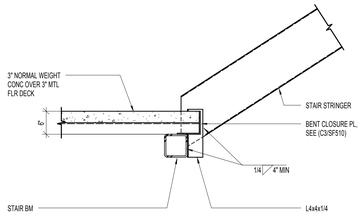

B2 SF512 STAIR DETAIL
NO SCALE:

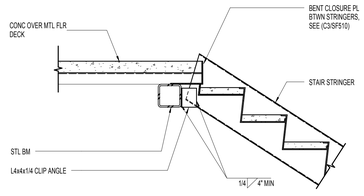

B3 SF512 STAIR DETAIL
NO SCALE:

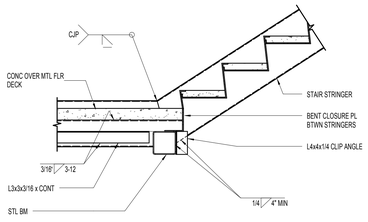

B4 SF512 STAIR DETAIL
NO SCALE:

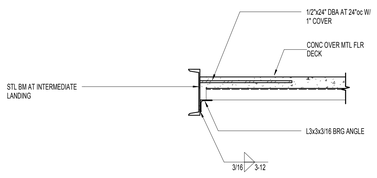

B5 SF512 EDGE DETAIL AT INTERMEDIATE LANDING
NO SCALE:

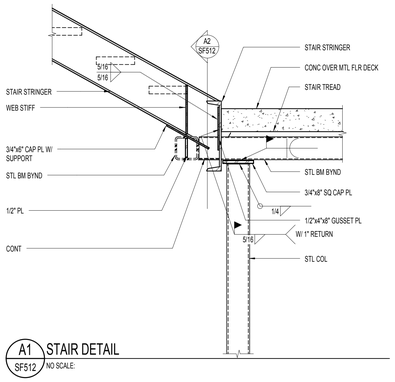

A1 SF512 STAIR DETAIL
NO SCALE:

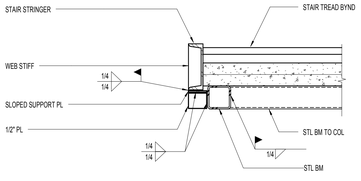

A2 SF512 STAIR DETAIL
NO SCALE:

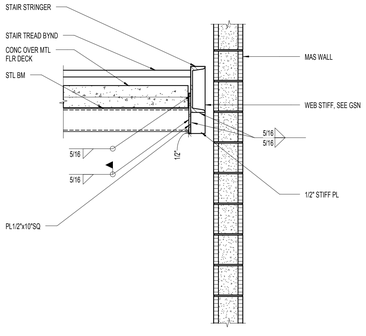

A3 SF512 STAIR DETAIL
NO SCALE:

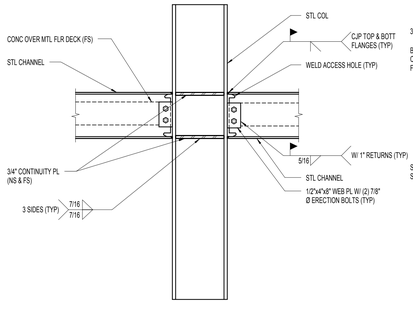

A4 SF512 CANTILEVERED STAIR LANDING SUPPORT
NO SCALE:

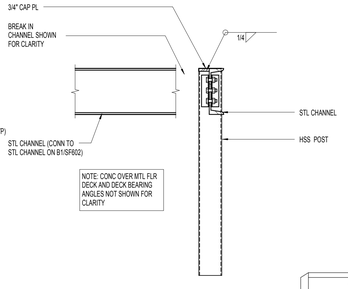

A5 SF512 INTERMEDIATE LANDING DETAIL
NO SCALE:

2

28 March 2013
VOLUME A.1 - DFCM
Review Response #2

NOTE:
THESE STRUCTURAL DRAWINGS ARE BASED ON ARCHITECTURAL DRAWINGS DATED 08.28.2012

DIMENSIONS AND ELEVATIONS, AS THEY RELATE TO THE BUILDING IN GENERAL, i.e. GRID TO GRID DIMENSIONS OR DECK BEARING ELEVATIONS, ARE SUPPLIED BY THE ARCHITECT. THEY ARE PROVIDED ON THE STRUCTURAL PLANS AND DETAILS FOR THE CONVENIENCE OF THE CONTRACTOR. VERIFY DIMENSIONS AND ELEVATIONS WITH ARCHITECTURAL DRAWINGS.

DUNN
DUNN ASSOCIATES, INC
Consulting Structural Engineers
EMAIL: ENG@DUNN-SE.COM
PH: 801-575-8877 FAX: 801-575-8875

ARCHITECTURAL NEXUS
SALT LAKE CITY PLACERVILLE SACRAMENTO

Architectural NEXUS, Inc.
2150 South 1300 East, Suite 200
Salt Lake City, Utah 84106
T 801.924.5000 F 801.924.5001
http://www.archnexus.com

Original drawings remain the property of the Architect and as such the Architect retains total ownership and control. The design represented by these drawings is sold to the client for a one time use, unless otherwise agreed upon in writing by the Architect.
© Architectural Nexus, Inc.2011

UTAH NATIONAL GUARD CAMP WILLIAMS
RTI TASS COMPLEX, PHASE II
PROJECT NO. 490444

UTAH NATIONAL GUARD
12953 SOUTH MINUTEMAN DRIVE
DRAPER, UTAH 84020-1726

#	REVISIONS	
2	28 March 2013	DFCM Review Response #2

DUNN PROJECT #:	11024
CHECKED BY:	Tyler Wright
DRAWN BY:	Brett Roberts
DATE:	28 March 2013

SHEET CONTENTS:
FLOOR FRAMING DETAILS

VOLUME A.1 - DFCM Review Response #2

SF512

This drawing, as an instrument of professional service, is the property of DUNN ASSOCIATES INC., and shall not be used, in whole or part for any other project without the written permission of an authorized representative of DUNN ASSOCIATES INC. Unauthorized use will be prosecuted to the fullest extent of the law. Copyright © 2012 by DUNN ASSOCIATES INC.

3/27/2013 4:48:36 PM

1 2 3 4 5 6

E

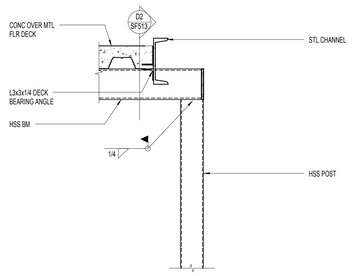

D1 SF513 INTERMEDIATE LANDING DETAIL
NO SCALE:

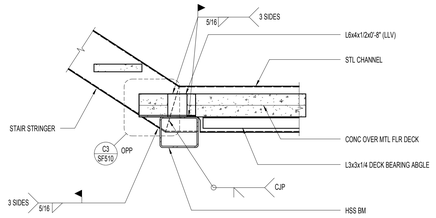

D2 SF513 INTERMEDIATE LANDING DETAIL
NO SCALE:

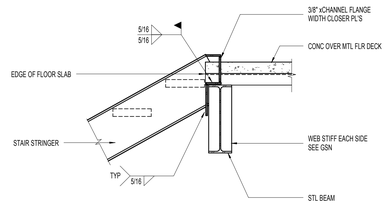

D3 SF513 UPPER CONNECTION A STAIR
NO SCALE:

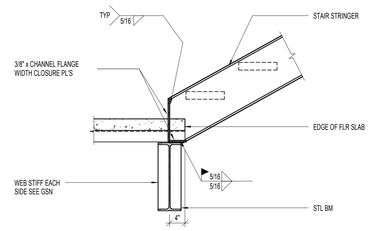

D4 SF513 LOWER CONNECTION AT STAIR
NO SCALE:

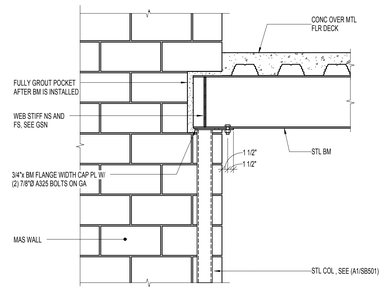

D5 SF513 BEAM TO COLUMN IN MASONRY WALL
NO SCALE:

D

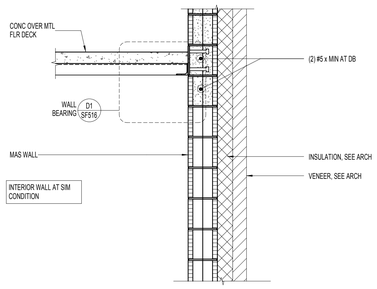

C1 SF513 TYPICAL DECK BEARING AT EXTERIOR WALL
NO SCALE:

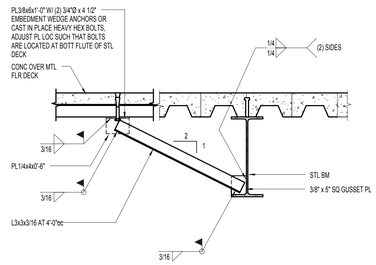

C2 SF513 BRACE AT FLOOR BEAM
NO SCALE:

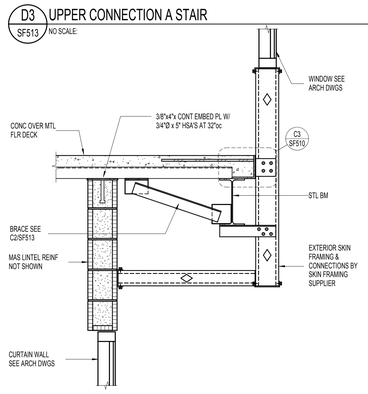

C3 SF513 DETAIL AT FLOOR EDGE
NO SCALE:

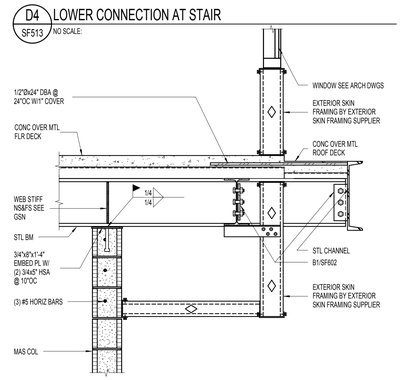

C4 SF513 CANTILEVERED BEAM AT MASONRY WALL
NO SCALE:
2

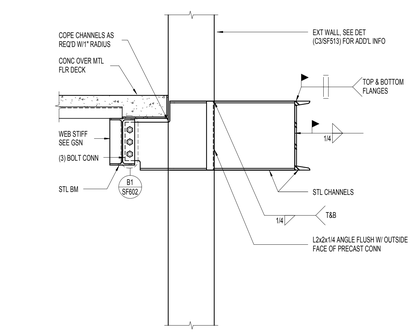

C5 SF513 BALCONY CORNER
NO SCALE:
2

C

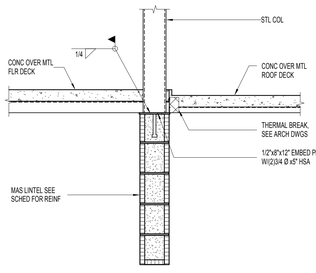

B1 SF513 STEEL COLUMN AT MASONRY LINTEL
NO SCALE:

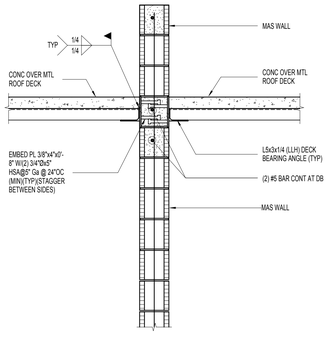

B2 SF513 MASONRY PARAPET THRU ROOF
NO SCALE:

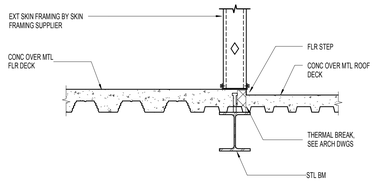

B3 SF513 DETAIL AT FLOOR TO BALCONY TRANSITION
NO SCALE:

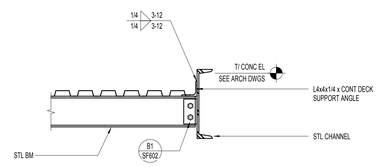

B4 SF513 BALCONY DETAIL
NO SCALE:

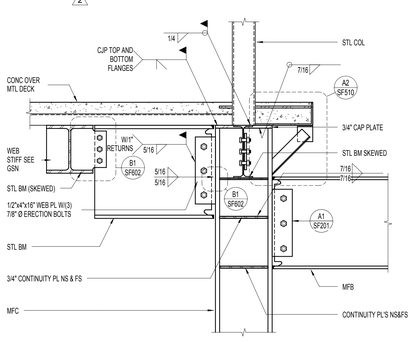

B5 SF513 BEAM CANTILEVER CONNECTION
NO SCALE:

B

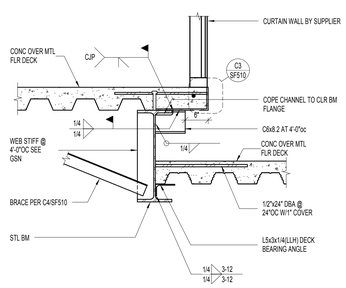

A1 SF513 STEP AT PATIO
NO SCALE:
2

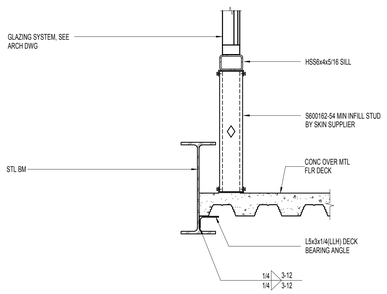

A2 SF513 PATIO SUPPORT AT HIGH BEAM
NO SCALE:

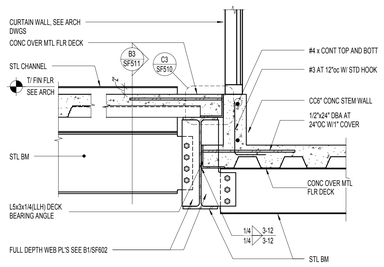

A3 SF513 BRIDGE CONNECTION AT PATIO
NO SCALE:

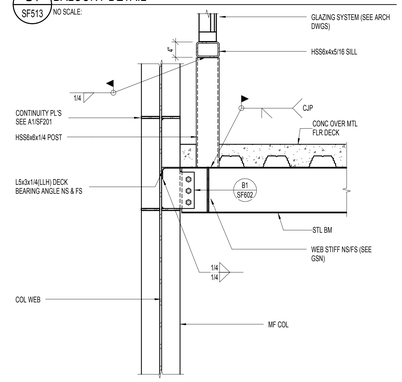

A4 SF513 LOW PATIO BEAM AT COLUMN
NO SCALE:

28 March 2013
VOLUME A.1 - DFCM
Review Response #2

NOTE:
THESE STRUCTURAL DRAWINGS ARE BASED ON ARCHITECTURAL DRAWINGS DATED 08.28.2012

DIMENSIONS AND ELEVATIONS, AS THEY RELATE TO THE BUILDING IN GENERAL, i.e. GRID TO GRID DIMENSIONS OR DECK BEARING ELEVATIONS, ARE SUPPLIED BY THE ARCHITECT. THEY ARE PROVIDED ON THE STRUCTURAL PLANS AND DETAILS FOR THE CONVENIENCE OF THE CONTRACTOR. VERIFY DIMENSIONS AND ELEVATIONS WITH ARCHITECTURAL DRAWINGS.

DUNN
DUNN ASSOCIATES, INC
Consulting Structural Engineers
EMAIL: ENG@DUNN-SE.COM
PH: 801-575-8877 FAX: 801-575-8875

ARCHITECTURAL NEXUS SACRAMENTO PLACERVILLE SALT LAKE CITY

Architectural NEXUS, Inc.
2150 South 1300 East, Suite 200
Salt Lake City, Utah 84106
T 801.924.5000 F 801.924.5001
http://www.archnexus.com

Original drawings remain the property of the Architect and as such the Architect retains total ownership and control. The design represented by these drawings is sold to the client for a one time use, unless otherwise agreed upon in writing by the Architect.
© Architectural Nexus, Inc.2011

UTAH NATIONAL GUARD CAMP WILLIAMS
RTI TASS COMPLEX, PHASE II
PROJECT NO. 490444

UTAH NATIONAL GUARD
12953 SOUTH MINUTEMAN DRIVE
DRAPER, UTAH 84020-1726

#	REVISIONS	
2	28 March 2013	DFCM Review Response #2

DUNN PROJECT #:	11024
CHECKED BY:	Checker
DRAWN BY:	Author
DATE:	28 March 2013

SHEET CONTENTS:
FLOOR FRAMING DETAILS

VOLUME A.1 - DFCM Review Response #2

SF513

This drawing, as an instrument of professional service, is the property of DUNN ASSOCIATES INC. and shall not be used, in whole or part for any other project without the written permission of an authorized representative of DUNN ASSOCIATES INC. Unauthorized use will be prosecuted to the fullest extent of the law. Copyright © 2012 by DUNN ASSOCIATES INC.

3/27/2013 4:48:39 PM

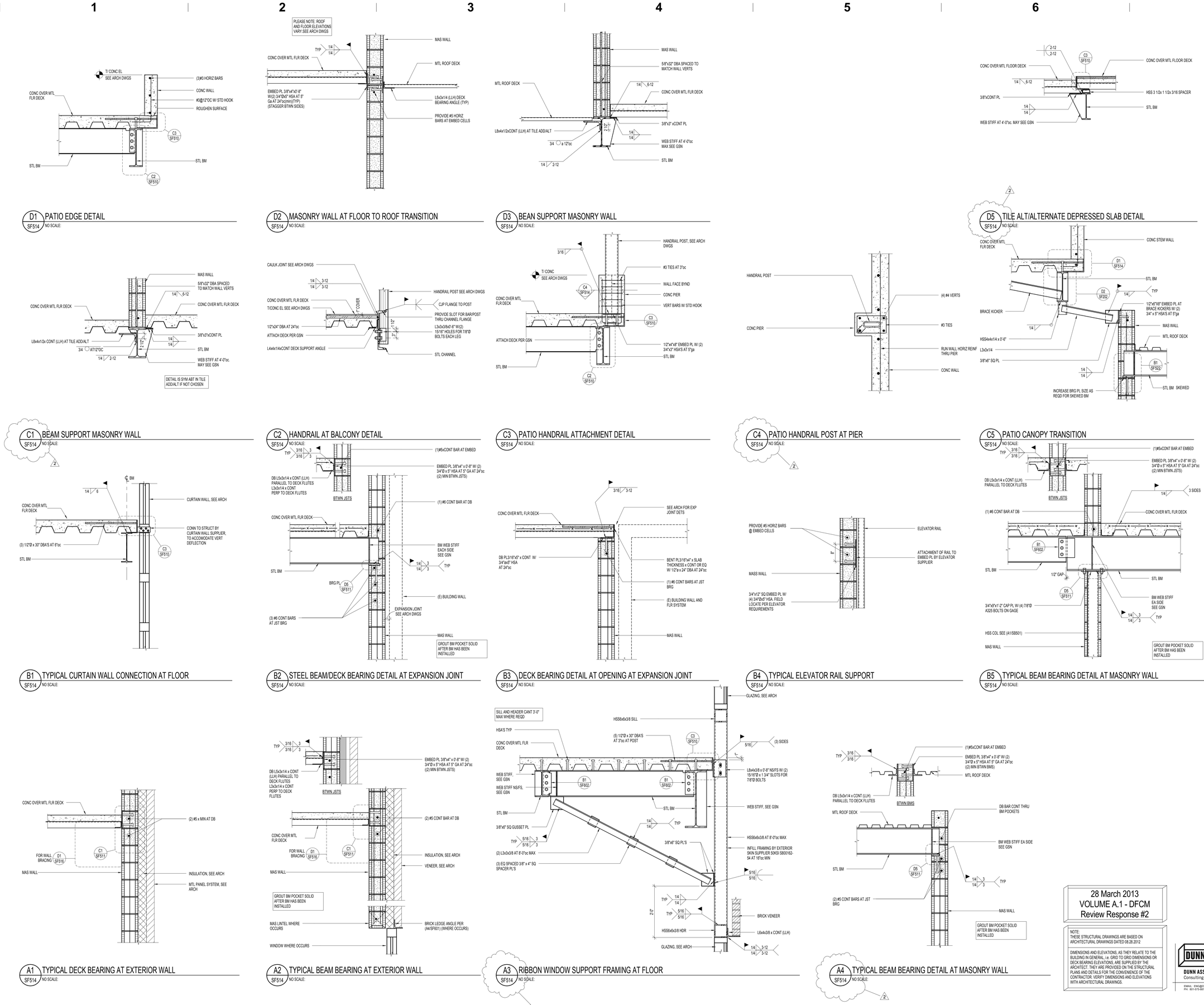

28 March 2013
VOLUME A.1 - DFCM
Review Response #2

NOTE:
THESE STRUCTURAL DRAWINGS ARE BASED ON ARCHITECTURAL DRAWINGS DATED 08.28.2012

DIMENSIONS AND ELEVATIONS, AS THEY RELATE TO THE BUILDING IN GENERAL, i.e. GRID TO GRID DIMENSIONS OR DECK BEARING ELEVATIONS, ARE SUPPLIED BY THE ARCHITECT. THEY ARE PROVIDED ON THE STRUCTURAL PLANS AND DETAILS FOR THE CONVENIENCE OF THE CONTRACTOR. VERIFY DIMENSIONS AND ELEVATIONS WITH ARCHITECTURAL DRAWINGS.

DUNN ASSOCIATES, INC
Consulting Structural Engineers
EMAIL: ENG@DUNN-SE.COM
PH: 801-575-8677 FAX: 801-575-8675

ARCHITECTURAL NEXUS
SALT LAKE CITY PLACERVILLE SACRAMENTO

Architectural NEXUS, Inc.
2150 South 1300 East, Suite 200
Salt Lake City, Utah 84106
T 801.924.5000 F 801.924.5001
http://www.archnexus.com

Original drawings remain the property of the Architect and as such the Architect retains total ownership and control. The design represented by these drawings is sold to the client for a one time use, unless otherwise agreed upon in writing by the Architect.
© Architectural Nexus, Inc.2011

UTAH NATIONAL GUARD CAMP WILLIAMS
RTI TASS COMPLEX, PHASE II
PROJECT NO. 490444

UTAH NATIONAL GUARD
12953 SOUTH MINUTEMAN DRIVE
DRAPER, UTAH 84020-1726

#	REVISIONS	
2	28 March 2013	DFCM Review Response #2

DUNN PROJECT #:	11024
CHECKED BY:	Checker
DRAWN BY:	Author
DATE:	28 March 2013

SHEET CONTENTS:
FLOOR FRAMING DETAILS

SF514

VOLUME A.1 - DFCM Review Response #2

This drawing, as an instrument of professional service, is the property of DUNN ASSOCIATES INC., and shall not be used, in whole or part for any other project without the written permission of an authorized representative of DUNN ASSOCIATES INC. Unauthorized use will be prosecuted to the fullest extent of the law. Copyright © 2012 by DUNN ASSOCIATES INC.

3/27/2013 4:48:42 PM

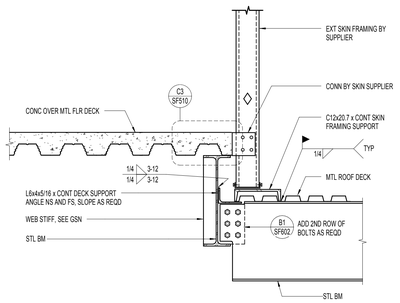

D1 SF515 BEAM AT ROOF TO FLOOR STEP
NO SCALE:

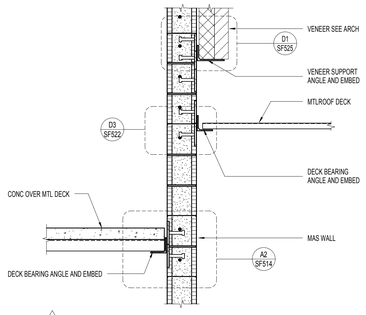

D2 SF515 WALL SECTION
NO SCALE:

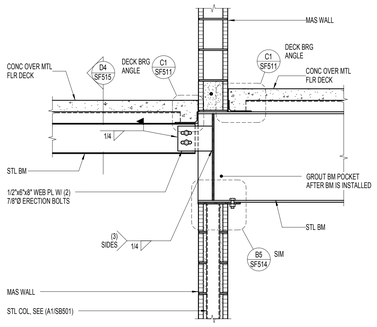

D3 SF515 BEAM TO BEAM CONNECTION AT RAMP
NO SCALE:

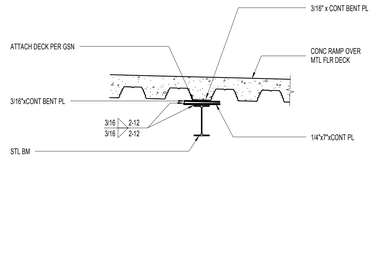

D4 SF515 RAMP TO BEAM CONNECTION
NO SCALE:

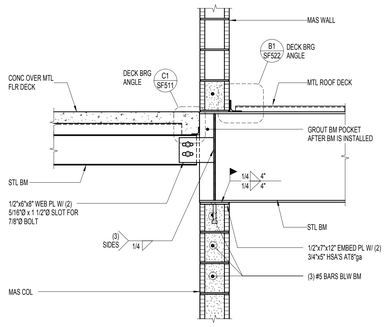

D5 SF515 BEAM TO BEAM CONNECTION AT RAMP
NO SCALE:

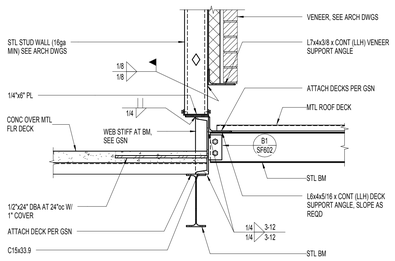

C1 SF515 ROOF AND FLOOR SUPPORT DETAIL
NO SCALE:

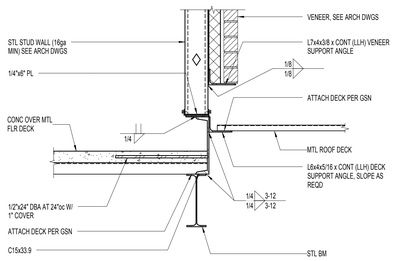

C2 SF515 ROOF AND FLOOR SUPPORT DETAIL
NO SCALE:

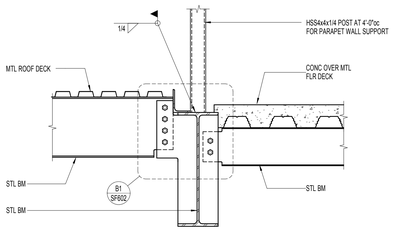

C3 SF515 FLOOR TO ROOF TRANSITION
NO SCALE:

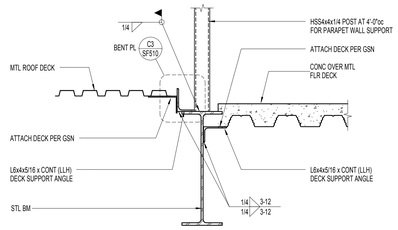

C4 SF515 FLOOR TO ROOF TRANSITION
NO SCALE:

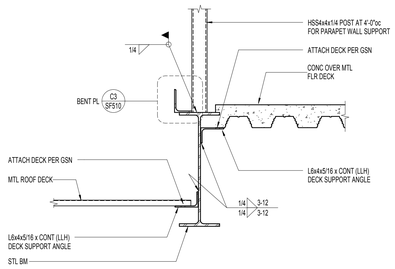

C5 SF515 FLOOR TO ROOF TRANSITION
NO SCALE:

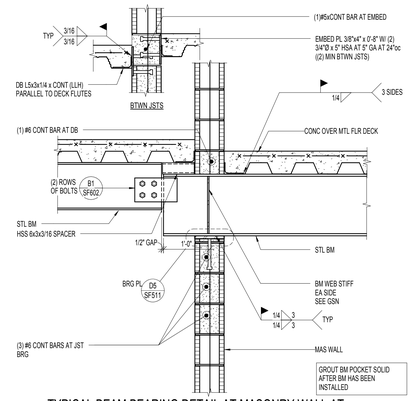

B1 SF515 TYPICAL BEAM BEARING DETAIL AT MASONRY WALL AT FLOOR STEP
NO SCALE:

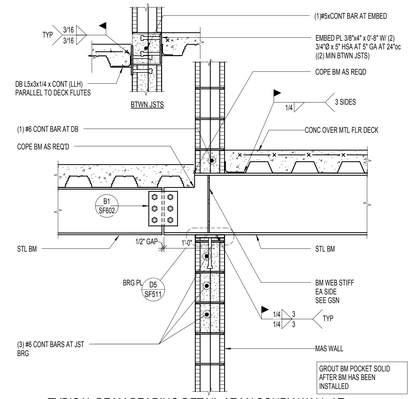

B2 SF515 TYPICAL BEAM BEARING DETAIL AT MASONRY WALL AT FLOOR STEP
NO SCALE:

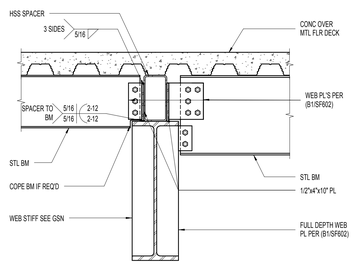

B3 SF515 BEAMS CONNECTING AT LOWERED GIRDER (BASEMENT ADD/ALTERNATE)
NO SCALE:

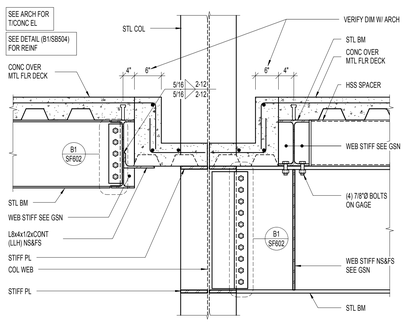

B4 SF515 PLANTER BOX AT COLUMN (BASEMENT ADD/ALTERNATE)
NO SCALE:

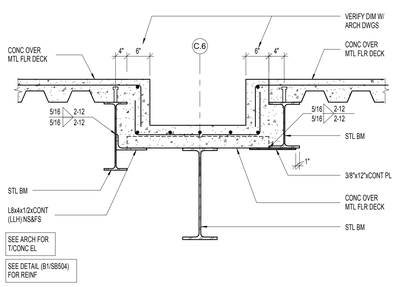

A1 SF515 PLANTER BOX SECTION AT GRID C.6 (BASEMENT ADD/ALTERNATE)
NO SCALE:

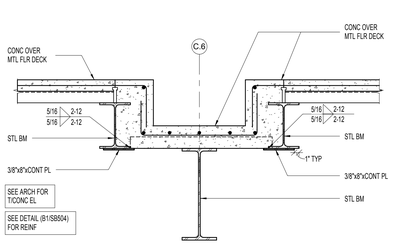

A2 SF515 PLANTER BOX SECTION (BASEMENT ADD/ALTERNATE)
NO SCALE:

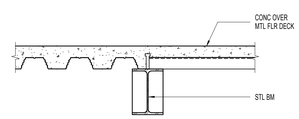

A3 SF515 TYPICAL DECK TRANSITION DETAIL
NO SCALE:

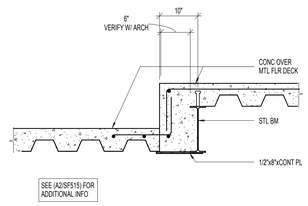

A4 SF515 PLANTER END DETAIL (BASEMENT ADD/ALTERNATE)
NO SCALE:

28 March 2013
VOLUME A.1 - DFCM
Review Response #2

NOTE:
THESE STRUCTURAL DRAWINGS ARE BASED ON ARCHITECTURAL DRAWINGS DATED 08.28.2012

DIMENSIONS AND ELEVATIONS, AS THEY RELATE TO THE BUILDING IN GENERAL, i.e. GRID TO GRID DIMENSIONS OR DECK BEARING ELEVATIONS, ARE SUPPLIED BY THE ARCHITECT. THEY ARE PROVIDED ON THE STRUCTURAL PLANS AND DETAILS FOR THE CONVENIENCE OF THE CONTRACTOR. VERIFY DIMENSIONS AND ELEVATIONS WITH ARCHITECTURAL DRAWINGS.

DUNN
DUNN ASSOCIATES, INC
Consulting Structural Engineers
EMAIL: ENG@DUNN-SE.COM
PH: 801-575-8877 FAX: 801-575-8875

ARCHITECTURAL NEXUS
SALT LAKE CITY PLACERVILLE SACRAMENTO

Architectural NEXUS, Inc.
2150 South 1300 East, Suite 200
Salt Lake City, Utah 84106
T 801.924.5000 F 801.924.5001
http://www.archnexus.com

Original drawings remain the property of the Architect and as such the Architect retains total ownership and control. The design represented by these drawings is sold to the client for a one time use, unless otherwise agreed upon in writing by the Architect.
© Architectural Nexus, Inc. 2011

UTAH NATIONAL GUARD CAMP WILLIAMS
RTI TASS COMPLEX, PHASE II
PROJECT NO. 490444
UTAH NATIONAL GUARD
12953 SOUTH MINUTEMAN DRIVE
DRAPER, UTAH 84020-1726

#	REVISIONS	
2	28 March 2013	DFCM Review Response #2

DUNN PROJECT #:	11024
CHECKED BY:	Checker
DRAWN BY:	Author
DATE:	28 March 2013

SHEET CONTENTS:
FLOOR FRAMING DETAILS

VOLUME A.1 - DFCM Review Response #2

SF515

This drawing, as an instrument of professional service, is the property of DUNN ASSOCIATES INC., and shall not be used, in whole or part for any other project without the written consent of an authorized representative of DUNN ASSOCIATES INC. Copyright © 2012 by DUNN ASSOCIATES INC.

3/27/2013 4:48:45 PM

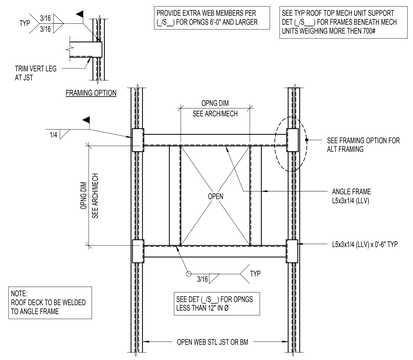

D1 SF520 TYPICAL ROOF OPENING OR MECHANICAL UNIT WEIGHING LESS THAN 700#
NO SCALE:

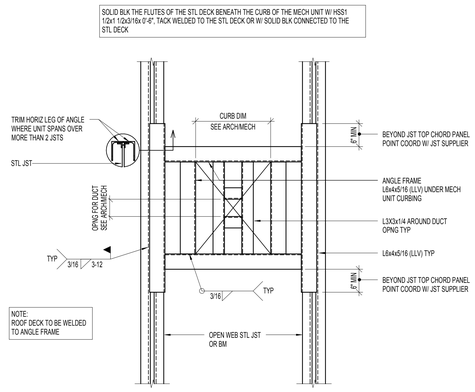

D2 SF520 TYPICAL ROOF TOP MECHANICAL UNIT WEIGHING MORE THAN 700#
NO SCALE:

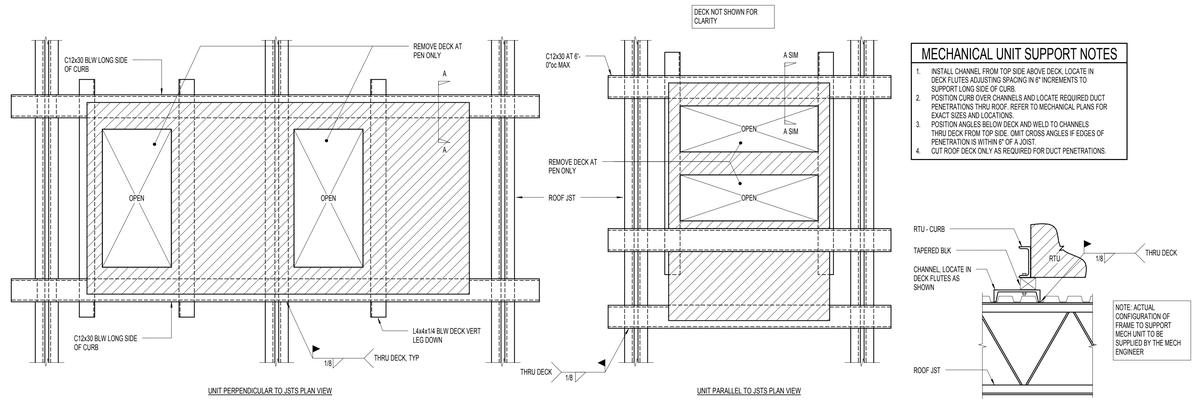

MECHANICAL UNIT SUPPORT NOTES

1. INSTALL CHANNEL FROM TOP SIDE ABOVE DECK. LOCATE IN DECK FLUTES ADJUSTING SPACING IN 6" INCREMENTS TO SUPPORT LONG SIDE OF CURB.
2. POSITION CURB OVER CHANNELS AND LOCATE REQUIRED DUCT PENETRATIONS THRU ROOF. REFER TO MECHANICAL PLANS FOR EXACT SIZES AND LOCATIONS.
3. POSITION ANGLES BELOW DECK AND WELD TO CHANNELS THRU DECK FROM TOP SIDE. OMIT CROSS ANGLES IF EDGES OF PENETRATION IS WITHIN 6" OF A JOIST.
4. CUT ROOF DECK ONLY AS REQUIRED FOR DUCT PENETRATIONS.

D4 SF520 TYPICAL ROOF OPENING OR MECHANICAL UNITS (PLAN VIEW)
NO SCALE:

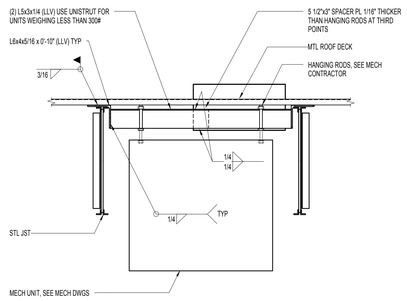

C1 SF520 HANGING MECHANICAL UNIT
NO SCALE:

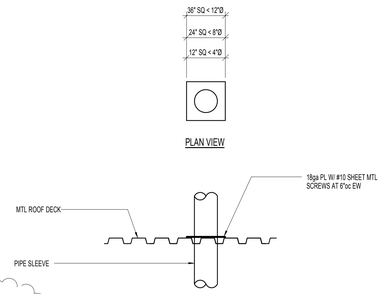

C2 SF520 TYPICAL PIPE SLEEVE HOLE DETAIL (12"Ø OR LESS) THRU ROOF DECK
NO SCALE:

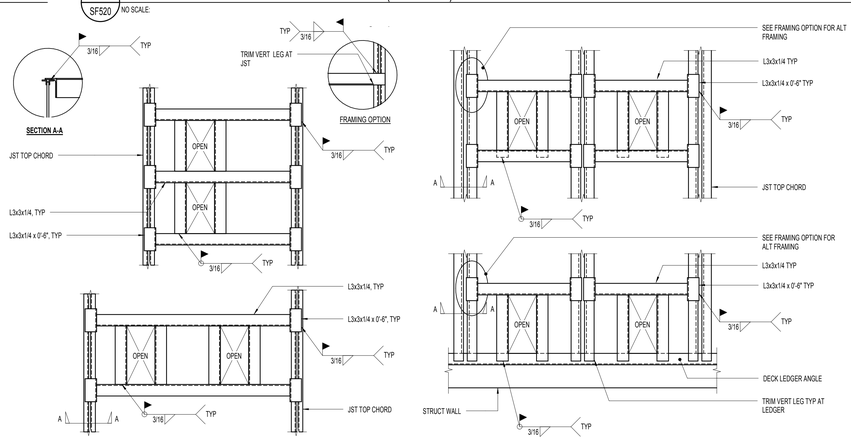

C3 SF520 TYPICAL ROOF DRAIN SUPPORT (PLAN VIEW)
NO SCALE:

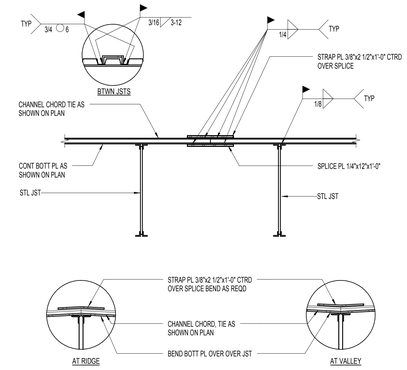

C6 SF520 TYPICAL CHANNEL CHORD SPLICE
NO SCALE:

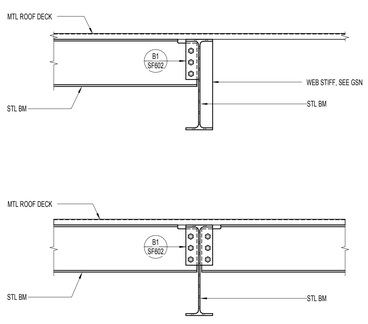

B1 SF520 DETAIL
NO SCALE:

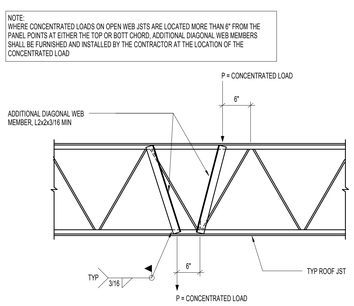

B2 SF520 TYPICAL JOIST REINFORCING
NO SCALE:

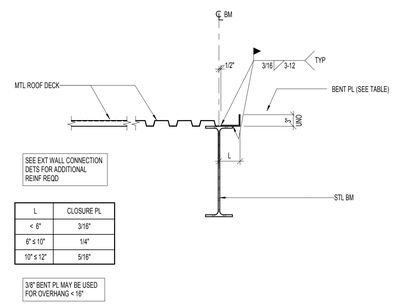

L	CLOSURE PL
< 6"	3/16"
6" ≤ 10"	1/4"
10" ≤ 12"	5/16"

B3 SF520 TYPICAL CLOSURE PLATE (OVERHANG 'L' ≤ 12")
NO SCALE:

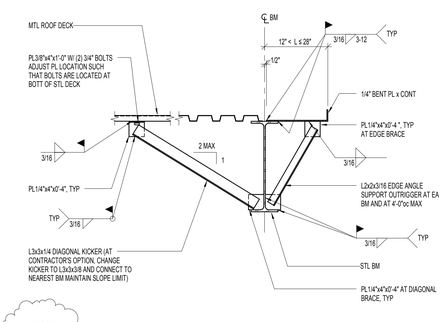

B4 SF520 TYPICAL CLOSURE PLATE (OVERHANG 12" < 'L'≤ 28")
NO SCALE:

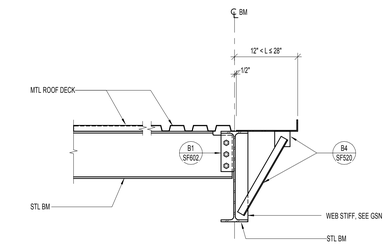

B5 SF520 TYP ROOF EDGE CONDITION AT BEAM (OVERHANG 12" < 'L' ≤ 28")
NO SCALE:

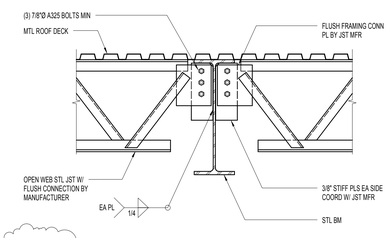

A1 SF520 TYPICAL JOISTS BEARING ON STEEL BEAM
NO SCALE:

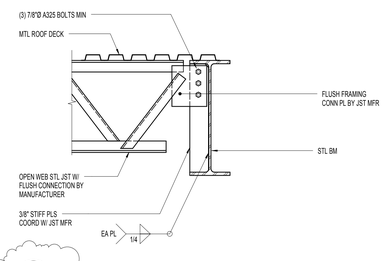

A2 SF520 TYPICAL JOIST BEARING ON BEAM
NO SCALE:

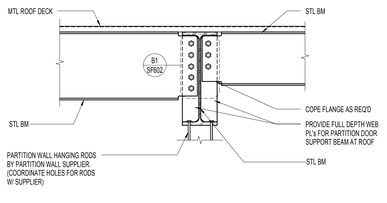

A3 SF520 PARTITION DOOR SUPPORT AT ROOF
NO SCALE:

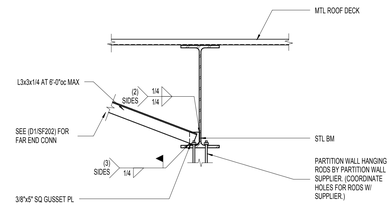

A4 SF520 PARTITION DOOR SUPPORT AT ROOF
NO SCALE:

28 March 2013
VOLUME A.1 - DFCM
Review Response #2

NOTE:
THESE STRUCTURAL DRAWINGS ARE BASED ON ARCHITECTURAL DRAWINGS DATED 08.28.2012

DIMENSIONS AND ELEVATIONS, AS THEY RELATE TO THE BUILDING IN GENERAL, i.e. GRID TO GRID DIMENSIONS OR DECK BEARING ELEVATIONS, ARE SUPPLIED BY THE ARCHITECT. THEY ARE PROVIDED ON THE STRUCTURAL PLANS AND DETAILS FOR THE CONVENIENCE OF THE CONTRACTOR. VERIFY DIMENSIONS AND ELEVATIONS WITH ARCHITECTURAL DRAWINGS.

DUNN ASSOCIATES, INC
Consulting Structural Engineers
EMAIL: ENG@DUNN-INC.COM
PH: 801-575-8877 FAX: 801-575-8875

ARCHITECTURAL NEXUS
SALT LAKE CITY PLACERVILLE SACRAMENTO

Architectural NEXUS, Inc.
2150 South 1300 East, Suite 200
Salt Lake City, Utah 84106
T 801.924.5000 F 801.924.5001
http://www.archnexus.com

Original drawings remain the property of the Architect and as such the Architect retains total ownership and control. The design represented by these drawings is sold to the client for a one time use, unless otherwise agreed upon in writing by the Architect.
© Architectural Nexus, Inc.2011

UTAH NATIONAL GUARD CAMP WILLIAMS
RTI TASS COMPLEX, PHASE II
PROJECT NO. 490444
UTAH NATIONAL GUARD
12953 SOUTH MINUTEMAN DRIVE
DRAPER, UTAH 84020-1726

#	REVISIONS	
2	28 March 2013	DFCM Review Response #2

DUNN PROJECT #:	11024
CHECKED BY:	Tyler Wright
DRAWN BY:	Brett Roberts
DATE:	28 March 2013

SHEET CONTENTS:
ROOF FRAMING DETAILS

SF520

VOLUME A.1 - DFCM Review Response #2

This drawing, as an instrument of professional service, is the property of DUNN ASSOCIATES INC., and shall not be used, in whole or part for any other project without the written permission of an authorized representative of DUNN ASSOCIATES INC. Unauthorized use will be prosecuted to the fullest extent of the law. Copyright © 2012 by DUNN ASSOCIATES INC.

3/27/2013 4:48:50 PM

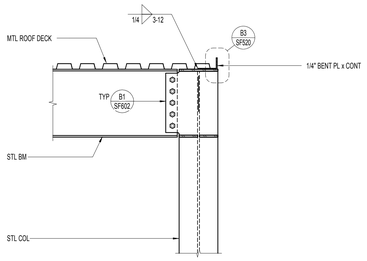

D2 SF521 ROOF FRAMING DETAIL
NO SCALE:
2

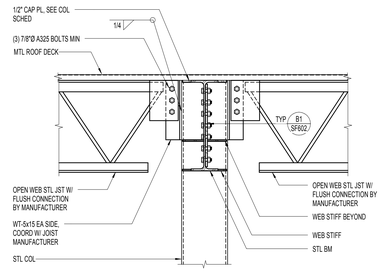

D3 SF521 TYPICAL BOLTED CONNECTION TO HSS COLUMN
NO SCALE:
2

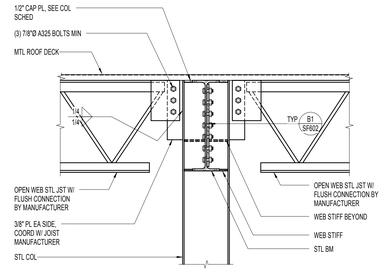

D4 SF521 TYPICAL BOLTED CONNECTION TO STEEL COLUMN FLANGE
NO SCALE:
2

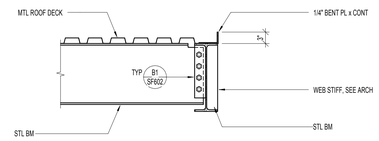

D6 SF521 EDGE BEAM SUPPORT AT CONNECTION BEAM
NO SCALE:

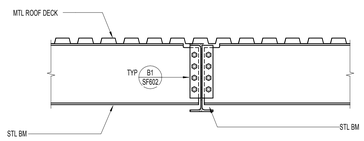

C1 SF521 BEAM TO BEAM CONNECTION
NO SCALE:

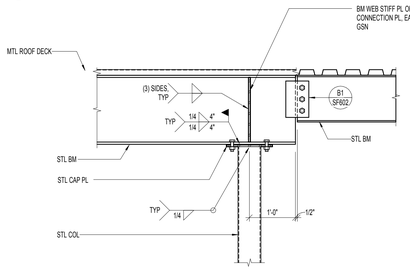

C2 SF521 TYPICAL STEEL BEAM ON STEEL COLUMN AT DROP-IN BEAM CONDITION
NO SCALE:

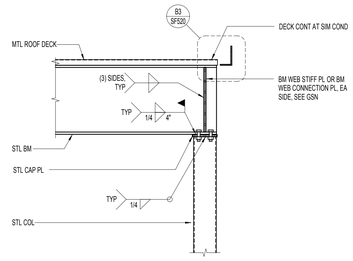

C3 SF521 TYPICAL STEEL BEAM TO STEEL COLUMN
NO SCALE:
2

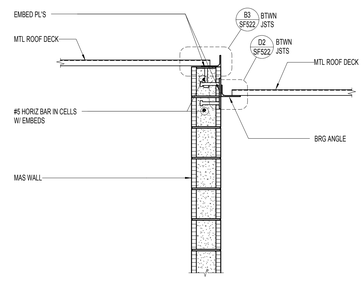

C4 SF521 ELEVATOR POP-UP DETAIL
NO SCALE:
2

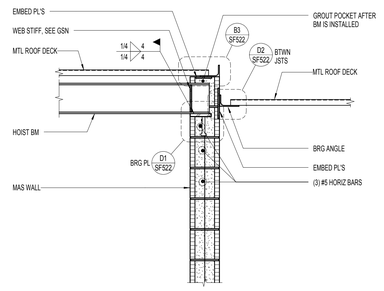

C5 SF521 ELEVATOR POP-UP DETAIL
NO SCALE:
2

28 March 2013
VOLUME A.1 - DFCM
Review Response #2

NOTE:
THESE STRUCTURAL DRAWINGS ARE BASED ON ARCHITECTURAL DRAWINGS DATED 08.28.2012

DIMENSIONS AND ELEVATIONS, AS THEY RELATE TO THE BUILDING IN GENERAL, i.e. GRID TO GRID DIMENSIONS OR DECK BEARING ELEVATIONS, ARE SUPPLIED BY THE ARCHITECT. THEY ARE PROVIDED ON THE STRUCTURAL PLANS AND DETAILS FOR THE CONVENIENCE OF THE CONTRACTOR. VERIFY DIMENSIONS AND ELEVATIONS WITH ARCHITECTURAL DRAWINGS.

DUNN ASSOCIATES, INC
Consulting Structural Engineers
EMAIL: ENG@DUNN-SE.COM
PH: 801-575-8877 FAX: 801-575-8875

ARCHITECTURAL NEXUS
SALT LAKE CITY PLACERVILLE SACRAMENTO

Architectural NEXUS, Inc.
2150 South 1300 East, Suite 200
Salt Lake City, Utah 84106
T 801.924.5000 F 801.924.5001
http://www.archnexus.com

Original drawings remain the property of the Architect and as such the Architect retains total ownership and control. The design represented by these drawings is sold to the client for a one time use, unless otherwise agreed upon in writing by the Architect.
© Architectural Nexus, Inc.2011

UTAH NATIONAL GUARD CAMP WILLIAMS
RTI TASS COMPLEX, PHASE II
PROJECT NO. 490444

UTAH NATIONAL GUARD
12953 SOUTH MINUTEMAN DRIVE
DRAPER, UTAH 84020-1726

#	REVISIONS	
2	28 March 2013	DFCM Review Response #2

DUNN PROJECT #:	11024
CHECKED BY:	Tyler Wright
DRAWN BY:	Brett Roberts
DATE:	28 March 2013

SHEET CONTENTS:
ROOF FRAMING DETAILS

VOLUME A.1 - DFCM Review Response #2

SF521

This drawing, as an instrument of professional service, is the property of DUNN ASSOCIATES INC., and shall not be used, in whole or part for any other project without the written permission of an authorized representative of DUNN ASSOCIATES INC. Unauthorized use will be prosecuted to the fullest extent of the law. Copyright © 2012 by DUNN ASSOCIATES INC.

3/27/2013 4:48:51 PM

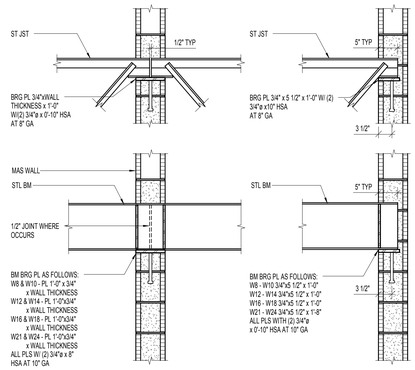

D1 / SF522 BEARING PLATE SCHEDULE FOR ROOF JOIST/BEAM
NO SCALE:

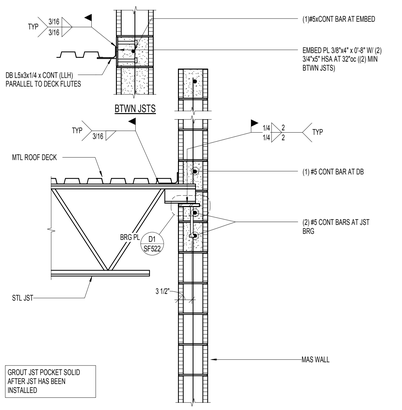

D2 / SF522 TYPICAL JOIST / DECK BEARING DETAIL
NO SCALE:

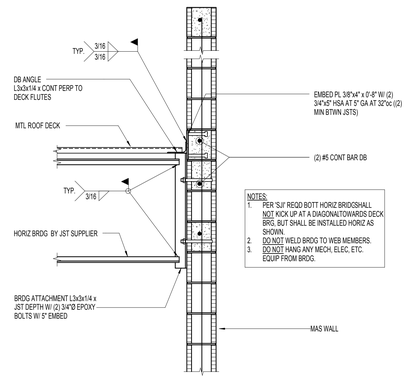

D3 / SF522 TYPICAL DECK BEARING WITH BRIDGING DETAIL
NO SCALE:

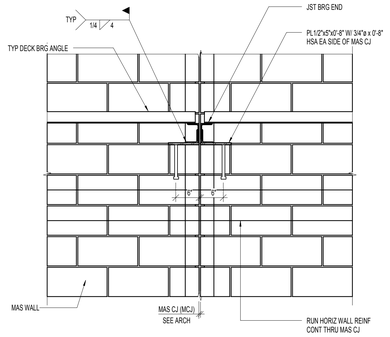

D5 / SF522 JOIST BEARING AT MASONRY CONTROL JOINT DETAIL
NO SCALE:

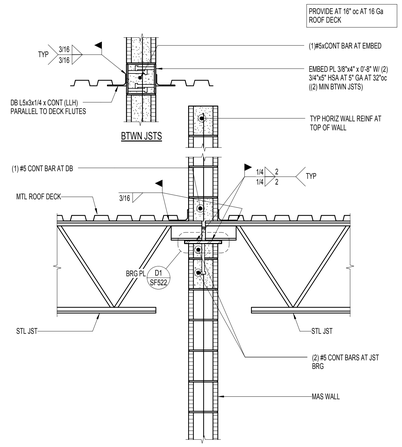

D6 / SF522 TYPICAL JOIST / DECK BEARING DETAIL
NO SCALE:

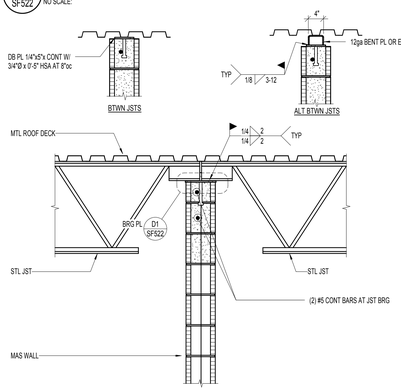

C1 / SF522 TYPICAL JOIST / DECK BEARING DETAIL
NO SCALE:

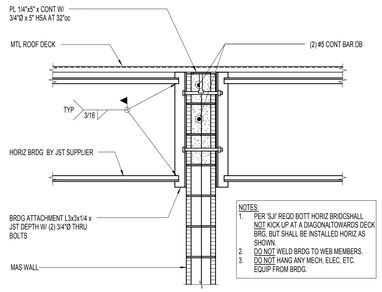

C2 / SF522 TYPICAL DECK BEARING AT MASONRY WALL WITH BRIDGING ATTACHMENT
NO SCALE:

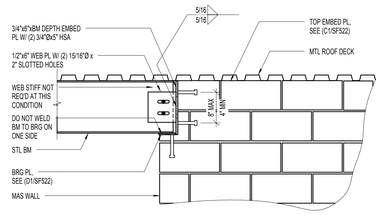

C3 / SF522 END CONNECTION FOR BEAM SPANNING BETWEEN TWO WALLS
NO SCALE:

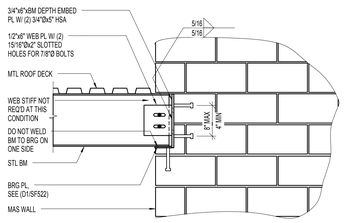

C4 / SF522 END CONNECTION FOR BEAM SPANNING BETWEEN TWO WALLS
NO SCALE:

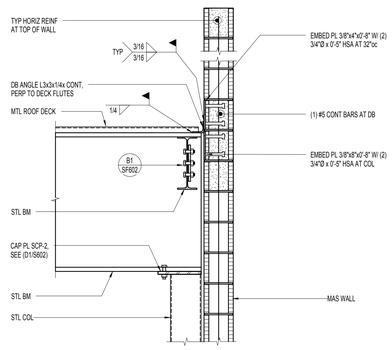

C5 / SF522 TYPICAL GIRDER / DECK BEARING DETAIL
NO SCALE:

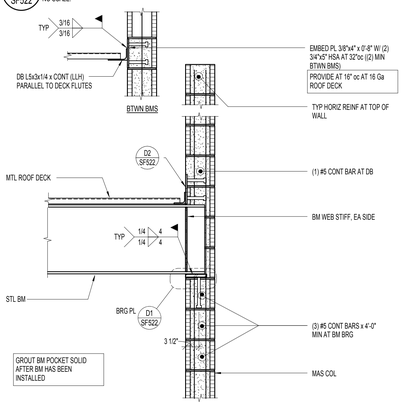

B1 / SF522 TYPICAL BEAM / DECK BEARING DETAIL
NO SCALE:

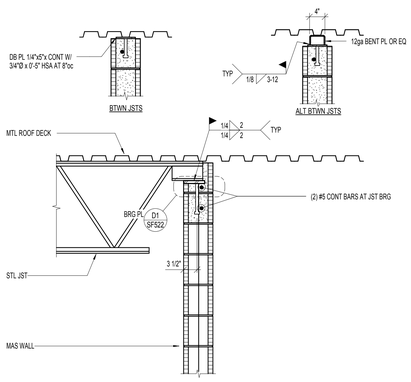

B2 / SF522 TYPICAL JOIST / DECK BEARING DETAIL
NO SCALE:

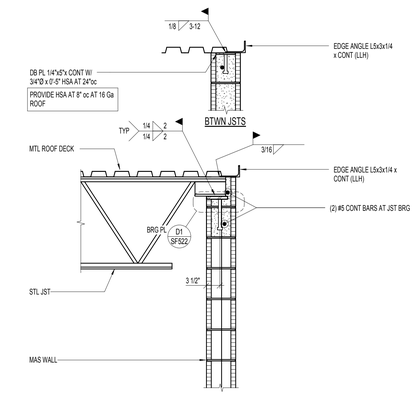

B3 / SF522 TYPICAL JOIST / DECK BEARING DETAIL
NO SCALE:

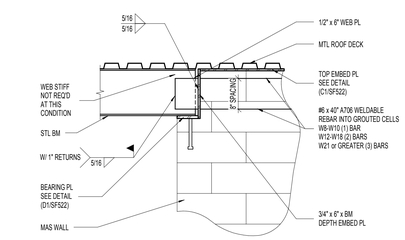

B4 / SF522 COLLECTOR BEAM CONNECTON TO SHEAR WALL
NO SCALE:

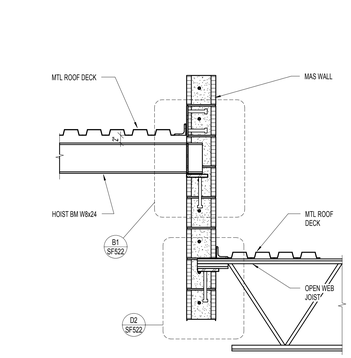

B5 / SF522 ELEVATOR ROOF
NO SCALE:

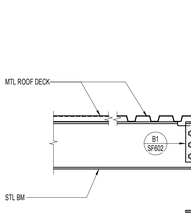

NOTE: FOR ROOF EDGE OVERHANG GREATER THAN 12", SEE DET (B4/SF520)

A1 / SF522 TYP ROOF EDGE CONDITION AT BEAM (OVERHANG 'L' ≤ 12")
NO SCALE:

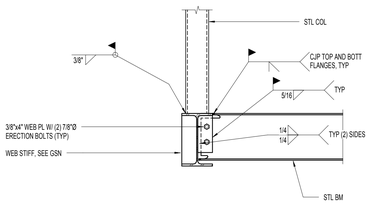

A2 / SF522 PV ARRAY POST TO BEAM
NO SCALE:

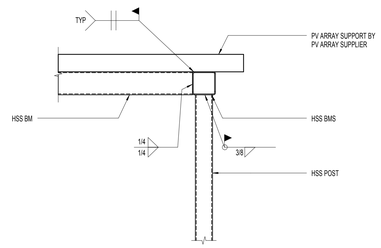

A3 / SF522 ARRAY SUPPORT FRAME DETAIL
NO SCALE:

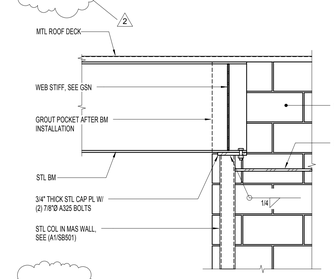

A4 / SF522 BEAM CONNECTION TO STEEL COLUMN IN MASONRY WALL
NO SCALE:

28 March 2013
VOLUME A.1 - DFCM
Review Response #2

NOTE:
THESE STRUCTURAL DRAWINGS ARE BASED ON ARCHITECTURAL DRAWINGS DATED 08.28.2012

DIMENSIONS AND ELEVATIONS, AS THEY RELATE TO THE BUILDING IN GENERAL, i.e. GRID TO GRID DIMENSIONS OR DECK BEARING ELEVATIONS, ARE SUPPLIED BY THE ARCHITECT. THEY ARE PROVIDED ON THE STRUCTURAL PLANS AND DETAILS FOR THE CONVENIENCE OF THE CONTRACTOR. VERIFY DIMENSIONS AND ELEVATIONS WITH ARCHITECTURAL DRAWINGS.

DUNN ASSOCIATES, INC
Consulting Structural Engineers
EMAIL: ENG@DUNN-SE.COM
PH: 801-575-8877 FAX: 801-575-8875

ARCHITECTURAL NEXUS
SALT LAKE CITY PLACERVILLE SACRAMENTO

Architectural NEXUS, Inc.
2150 South 1300 East, Suite 200
Salt Lake City, Utah 84106
T 801.924.5000 F 801.924.5001
http://www.archnexus.com

Original drawings remain the property of the Architect and as such the Architect retains total ownership and control. The design represented by these drawings is sold to the client for a one time use, unless otherwise agreed upon in writing by the Architect.
© Architectural Nexus, Inc.2011

UTAH NATIONAL GUARD CAMP WILLIAMS
RTI TASS COMPLEX, PHASE II
PROJECT NO. 490444

UTAH NATIONAL GUARD
12953 SOUTH MINUTEMAN DRIVE
DRAPER, UTAH 84020-1726

#	REVISIONS	
2	28 March 2013	DFCM Review Response #2

DUNN PROJECT #:	11024
CHECKED BY:	Tyler Wright
DRAWN BY:	Brett Roberts
DATE:	28 March 2013

SHEET CONTENTS:
ROOF FRAMING DETAILS

VOLUME A.1 - DFCM Review Response #2

SF522

This drawing, as an instrument of professional service, is the property of DUNN ASSOCIATES INC., and shall not be used, in whole or part for any other project without the written permission of an authorized representative of DUNN ASSOCIATES INC. Unauthorized use will be prosecuted to the fullest extent of the law. Copyright © 2012 by DUNN ASSOCIATES INC.

3/27/2013 4:48:54 PM

1 2 3 4 5 6

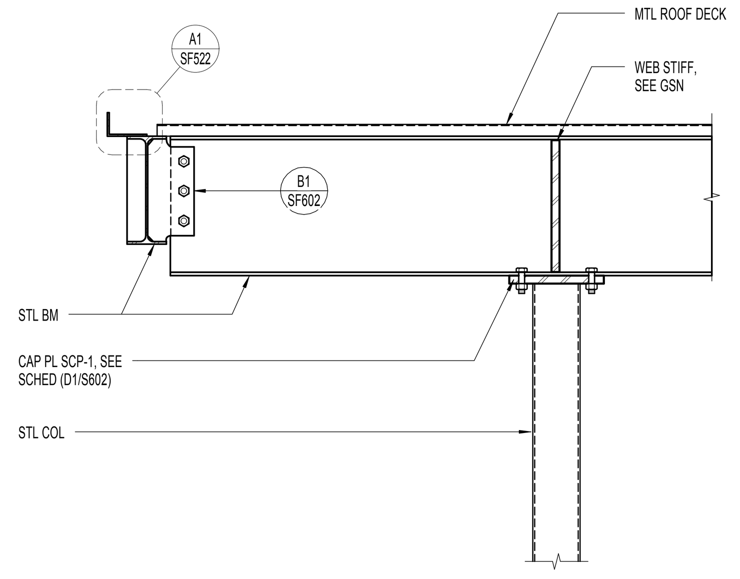

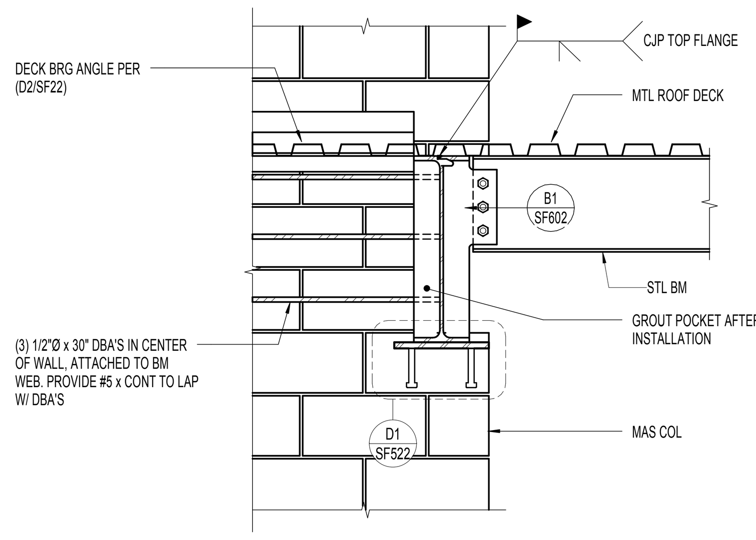

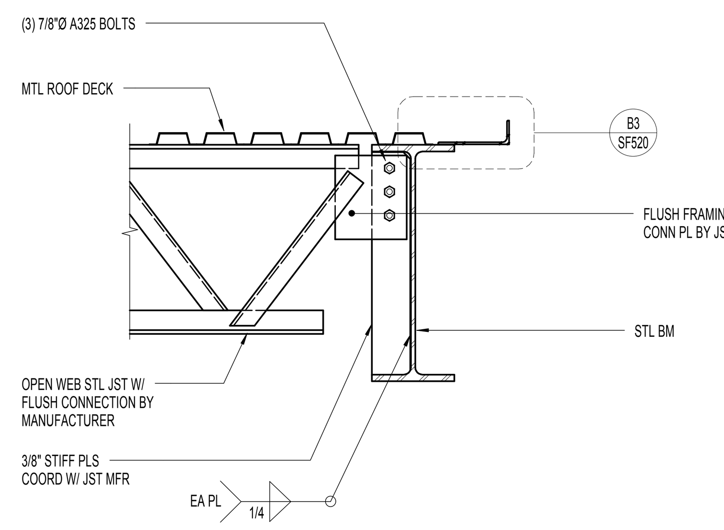

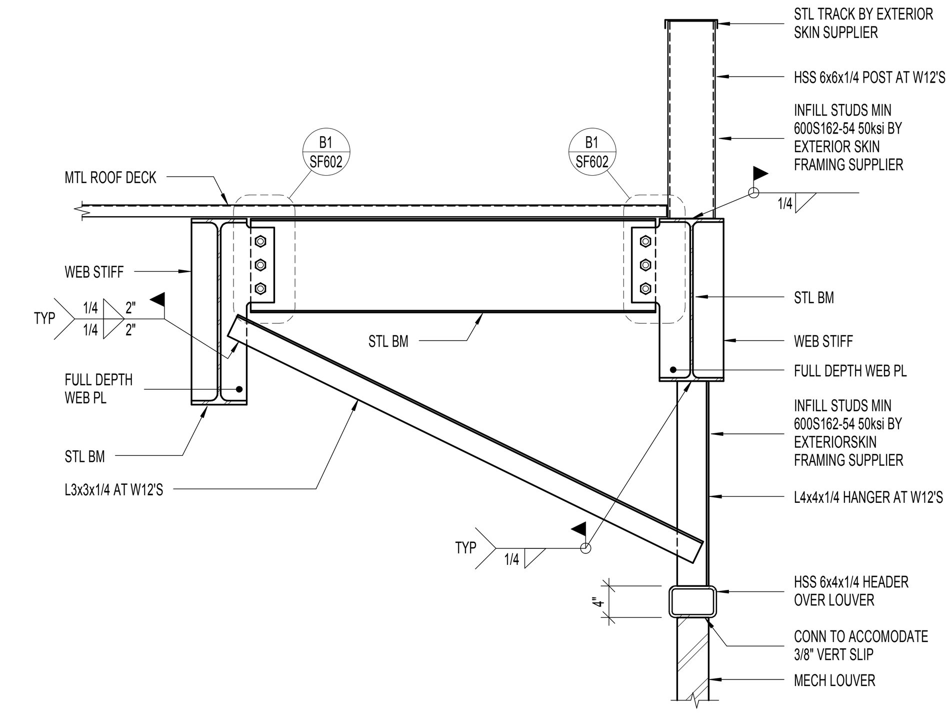

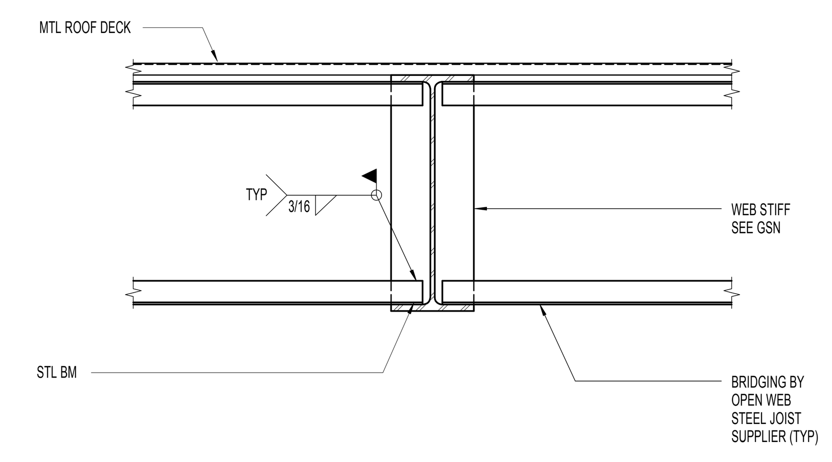

D1 CANTILEVERED ROOF BEAM
SF523 NO SCALE:

D2 COLLECTOR CONNECTION AT WALL CORNER
SF523 NO SCALE: 2

D3 JOIST TO EXTERIOR BEAM CONNECTION
SF523 NO SCALE: 2

D4 ROOF DETAIL AT MECHANICAL LOUVER
SF523 NO SCALE:

D5 BRIDGING TO STEEL BEAM
SF523 NO SCALE:

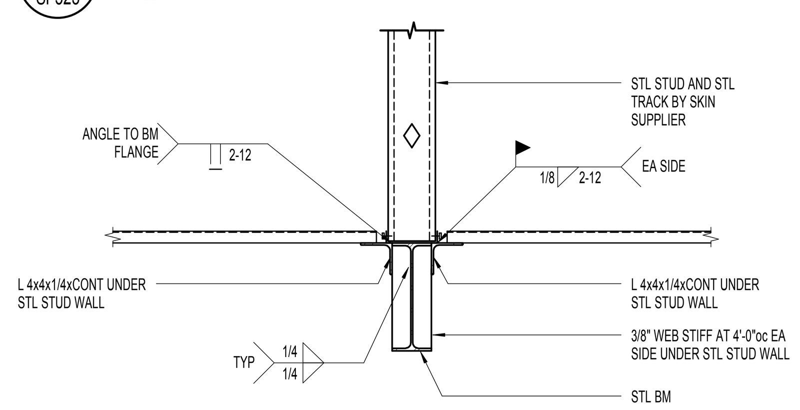

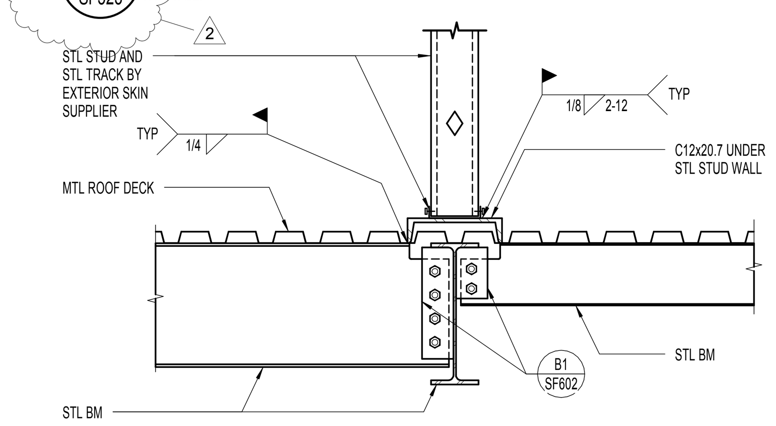

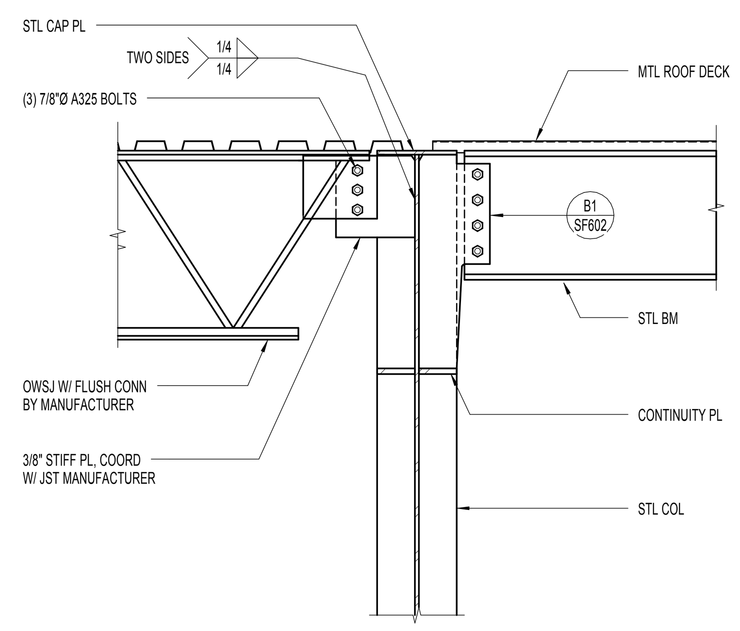

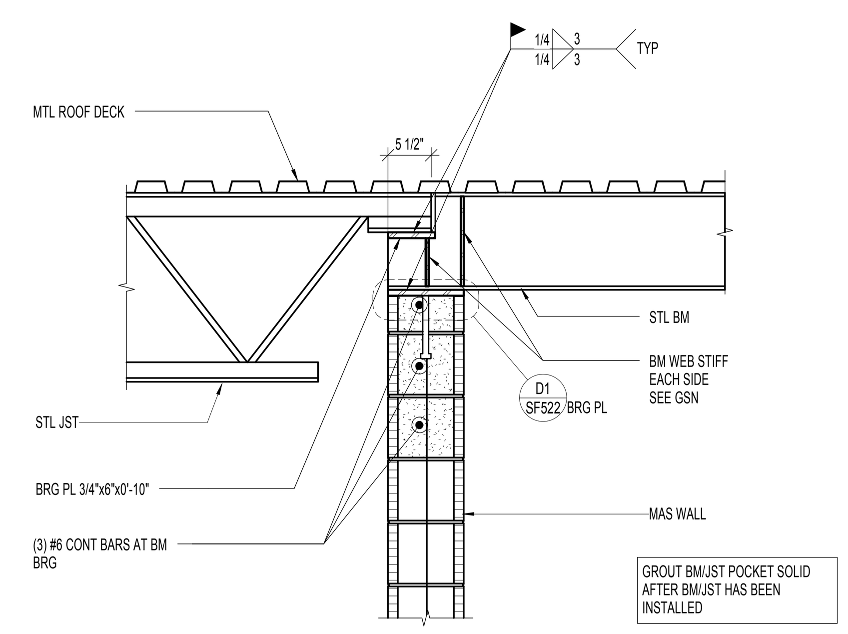

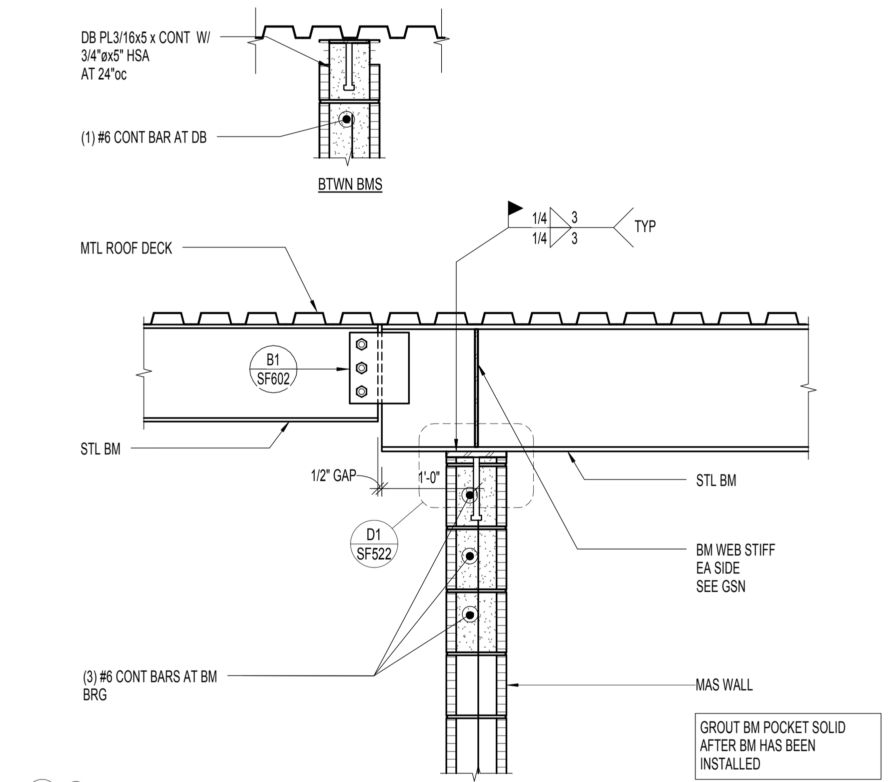

C1 INTERIOR PARAPET SUPPORT
SF523 NO SCALE:

C2 INTERIOR PARAPET SUPPORT
SF523 NO SCALE:

C3 BEAM/JOIST TO COLUMN CONNECTION
SF523 NO SCALE: 2

C4 TYPICAL JOIST/BEAM DETAIL AT MASONRY WALL
SF523 NO SCALE: 2

C5 TYPICAL BEAM BEARING DETAIL AT 8" MASONRY WALL
SF523 NO SCALE: 2

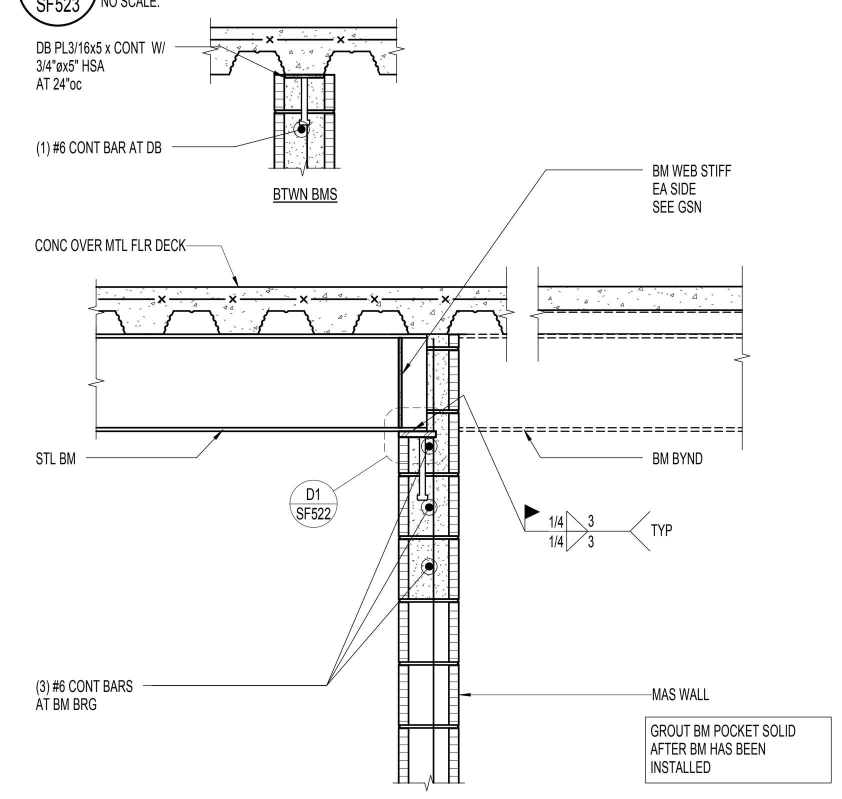

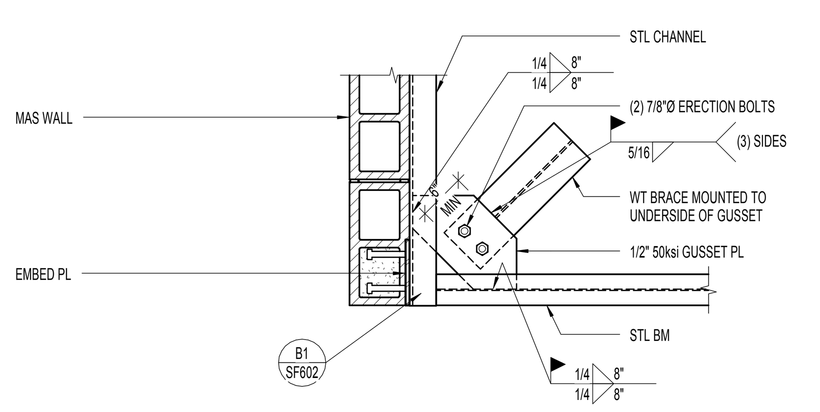

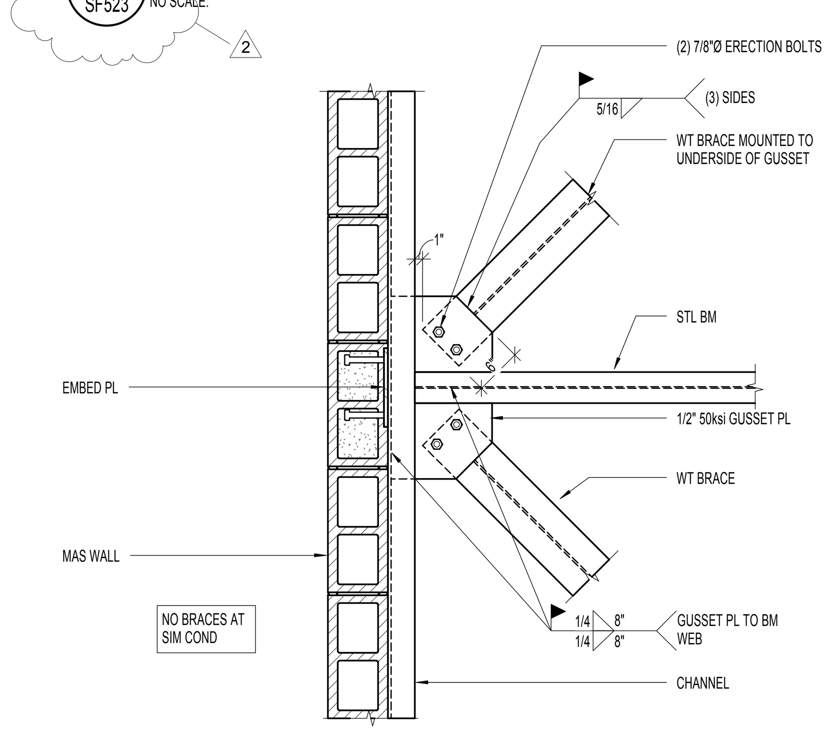

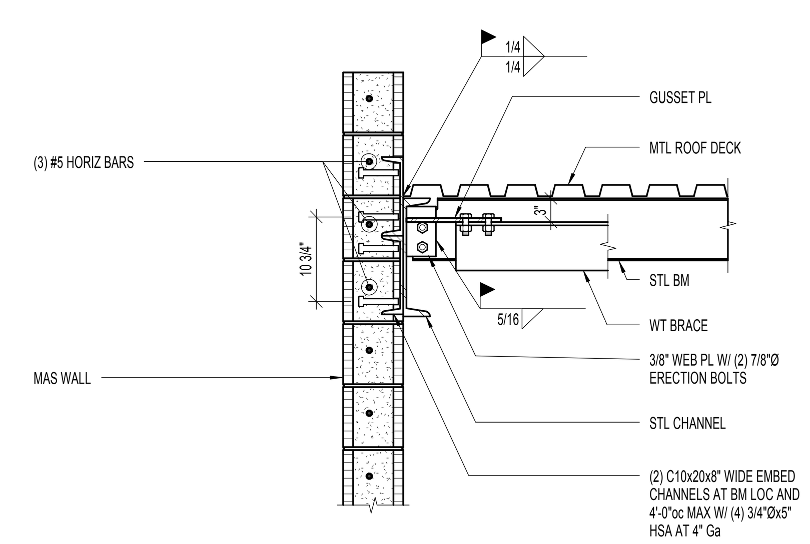

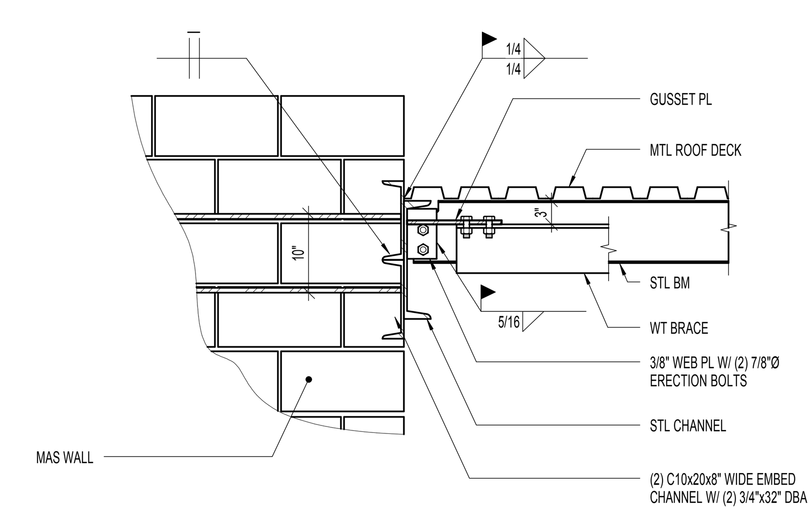

B1 TYPICAL BEAM BEARING DETAIL AT 8" MASONRY WALL
SF523 NO SCALE:

B2 HORIZONTAL BRACE CONNECTION TO BEAM
SF523 NO SCALE:

B3 BRACE CONNECTION DETAIL
SF523 NO SCALE:

B4 BRACE CONNECTION AT ROOF
SF523 NO SCALE:

B5 ROOF BRACE CONNECTION AT END WALL
SF523 NO SCALE: 2

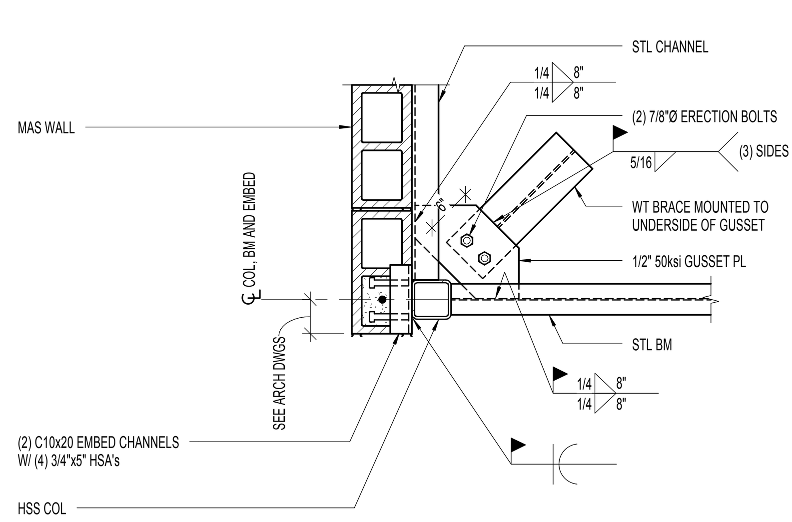

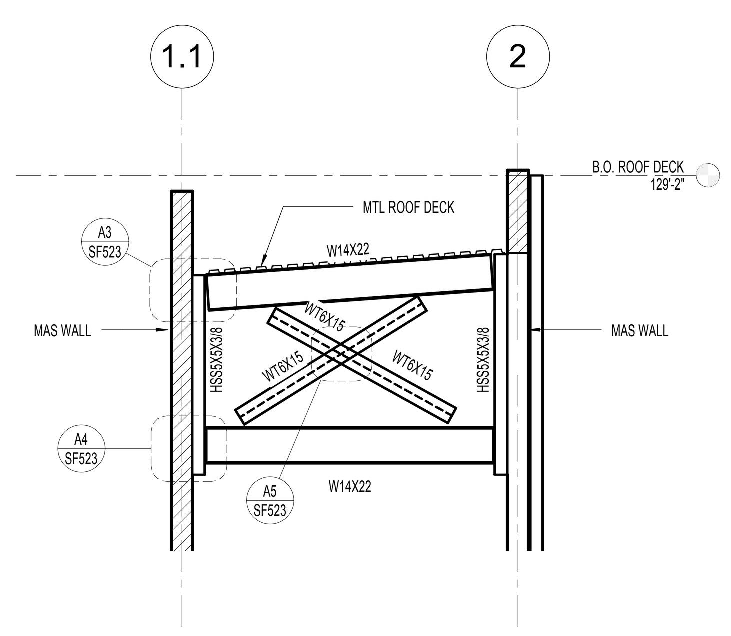

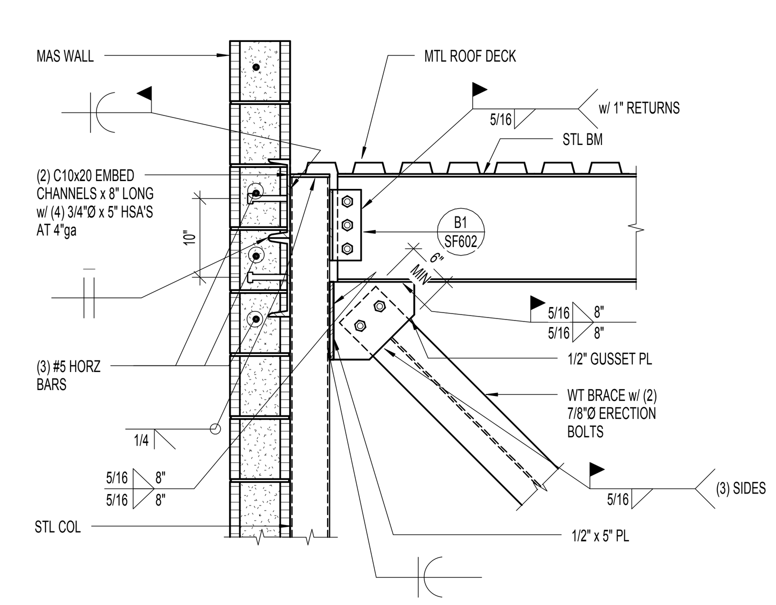

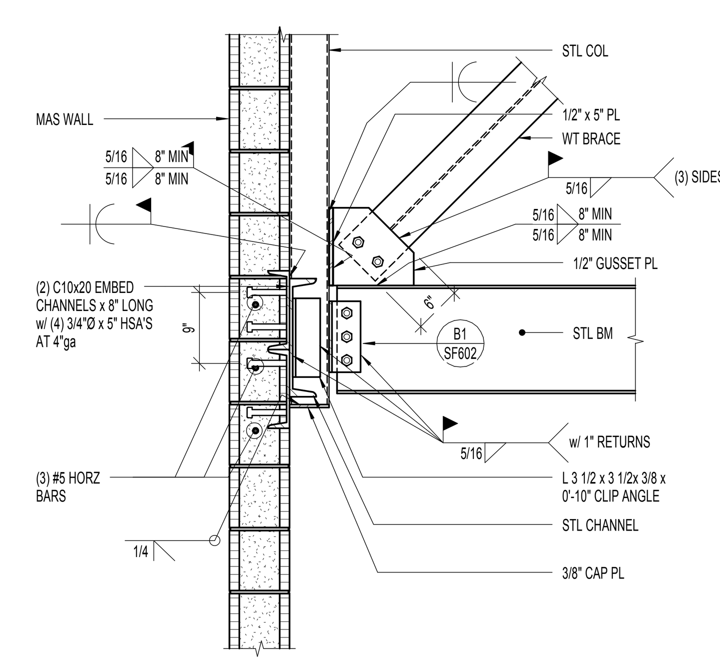

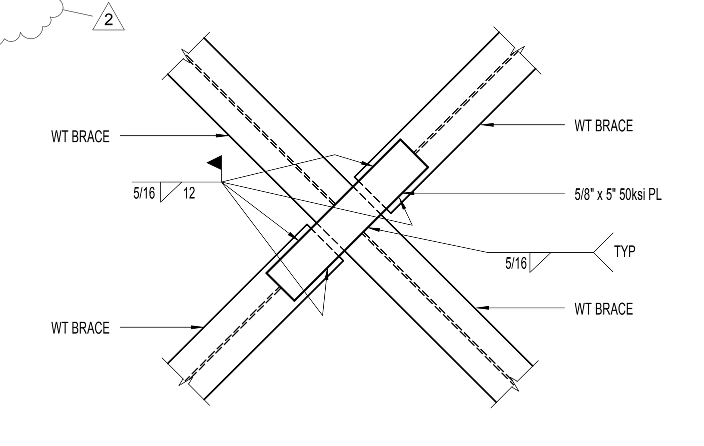

A5 BRACE CONNECTION
SF523 NO SCALE:

A1 ROOF BRACE CONNECTION AT HIGH WALL END
SF523 NO SCALE:

A2 BRACED FRAME ELEVATION AT ROOF STEP
SF523 SCALE: 1/4" = 1'-0"

A3 BRACE CONNECTION
SF523 NO SCALE:

A4 BRACE CONNECTION
SF523 NO SCALE:

28 March 2013
VOLUME A.1 - DFCM
Review Response #2

NOTE:
THESE STRUCTURAL DRAWINGS ARE BASED ON ARCHITECTURAL DRAWINGS DATED 08.28.2012

DIMENSIONS AND ELEVATIONS, AS THEY RELATE TO THE BUILDING IN GENERAL, i.e. GRID TO GRID DIMENSIONS OR DECK BEARING ELEVATIONS, ARE SUPPLIED BY THE ARCHITECT. THEY ARE PROVIDED ON THE STRUCTURAL PLANS AND DETAILS FOR THE CONVENIENCE OF THE CONTRACTOR. VERIFY DIMENSIONS AND ELEVATIONS WITH ARCHITECTURAL DRAWINGS.

DUNN ASSOCIATES, INC
Consulting Structural Engineers
EMAIL: ENG@DUNN-SE.COM
PH: 801-575-8877 FAX: 801-575-8875

ARCHITECTURAL NEXUS
SALT LAKE CITY PLACERVILLE SACRAMENTO
Architectural NEXUS, Inc.
2150 South 1300 East, Suite 200
Salt Lake City, Utah 84106
T 801.924.5000 F 801.924.5001
http://www.archnexus.com

Original drawings remain the property of the Architect and as such the Architect retains total ownership and control. The design represented by these drawings is sold to the client for a one time use, unless otherwise agreed upon in writing by the Architect.
© Architectural Nexus, Inc.2011

UTAH NATIONAL GUARD CAMP WILLIAMS
RTI TASS COMPLEX, PHASE II
PROJECT NO. 490444

UTAH NATIONAL GUARD
12953 SOUTH MINUTEMAN DRIVE
DRAPER, UTAH 84020-1726

#	REVISIONS	
2	28 March 2013	DFCM Review Response #2

DUNN PROJECT #:	11024
CHECKED BY:	Tyler Wright
DRAWN BY:	Brett Roberts
DATE:	28 March 2013

SHEET CONTENTS:
ROOF FRAMING DETAILS

VOLUME A.1 - DFCM Review Response #2

SF523

This drawing, as an instrument of professional service, is the property of DUNN ASSOCIATES INC, and shall not be used, in whole or part for any other project without the written permission of an authorized representative of DUNN ASSOCIATES INC. Unauthorized use will be prosecuted to the fullest extent of the law. Copyright © 2012 by DUNN ASSOCIATES INC.

3/27/2013 4:48:55 PM

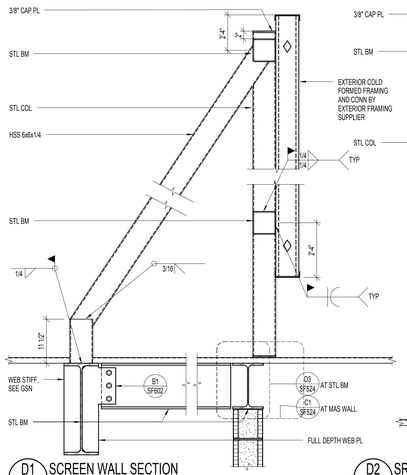

D1 SCREEN WALL SECTION
SF524 NO SCALE:

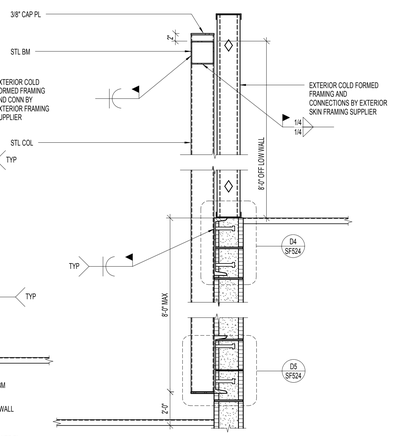

D2 SREEN WALL SECTION
SF524 NO SCALE:

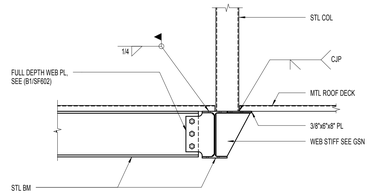

D3 SCREEN WALL COLUMN CONNECTION
SF524 NO SCALE:

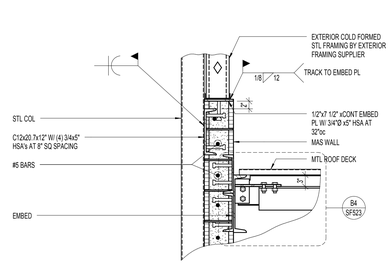

D4 SCREEN WALL AT MASONRY WALL
SF524 NO SCALE:

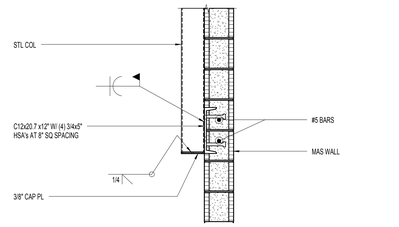

D5 SCREEN WALL AT MASONRY WALL
SF524 NO SCALE:

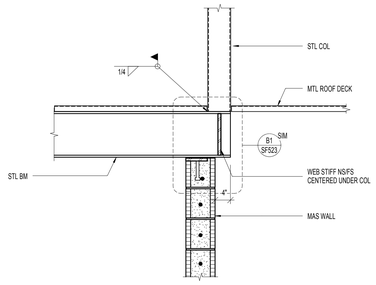

C1 SCREEN WALL COLUMN TO MASONRY WALL
SF524 NO SCALE:

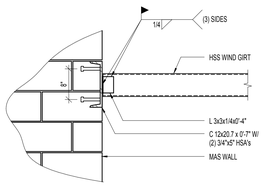

C2 SCREEN WALL WIND GIRT TO WALL
SF524 NO SCALE:

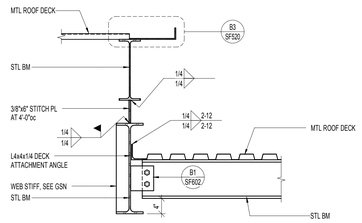

C3 ROOF STEP DETAIL
SF524 NO SCALE:

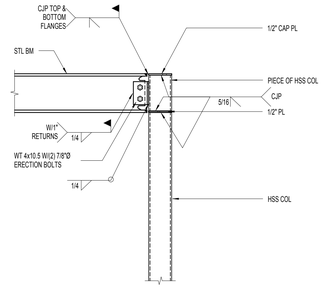

C4 COOLING TOWER FRAME BEAM TO COLUMN CONNECTION
SF524 NO SCALE:

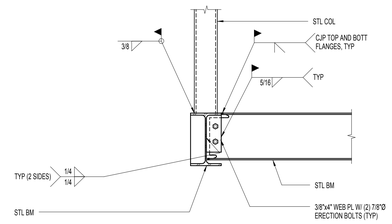

C5 COOLING TOWER FRAME POST TO BEAM
SF524 NO SCALE:

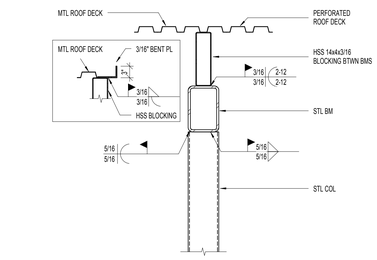

B1 CANOPY BM TO COLUMN
SF524 NO SCALE:

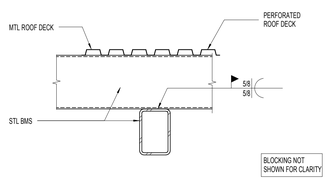

B2 CANOPY BEAM TO BEAM CONNECTION
SF524 NO SCALE:

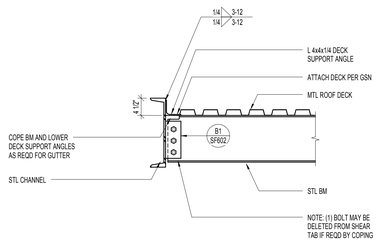

B3 CANOPY EDGE DETAIL
SF524 NO SCALE:

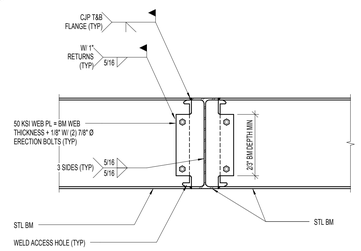

B4 BEAM TO BEAM MOMENT CONNECTION THRU EQUAL DEPTH BEAM
SF524 NO SCALE:

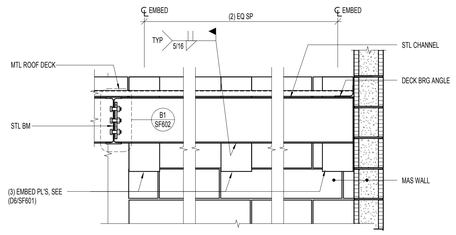

B5 CANOPY CHANNEL TO MASONRY WALL
SF524 NO SCALE:

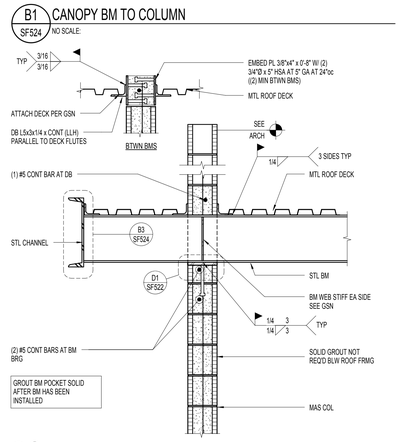

A1 CANTILEVERED ROOF BEAM BEARING AT MASONRY COLUMN
SF524 NO SCALE:

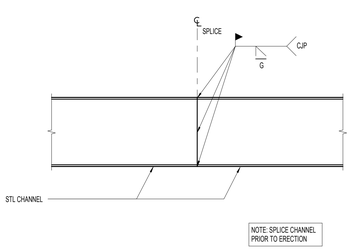

A2 ARCHITECTURALLY EXPOSED CHANNEL SPLICE
SF524 NO SCALE:

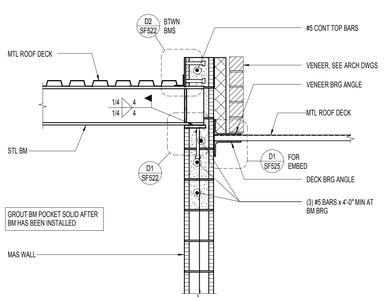

A3 DECK BEARING DETAIL AT ROOF STEP
SF524 NO SCALE:

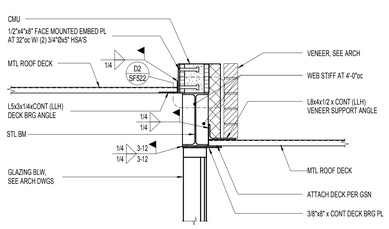

A4 STEEL BEAM AT ROOF STEP
SF524 NO SCALE:

28 March 2013
VOLUME A.1 - DFCM
Review Response #2

NOTE:
THESE STRUCTURAL DRAWINGS ARE BASED ON ARCHITECTURAL DRAWINGS DATED 08.28.2012

DIMENSIONS AND ELEVATIONS, AS THEY RELATE TO THE BUILDING IN GENERAL, i.e. GRID TO GRID DIMENSIONS OR DECK BEARING ELEVATIONS, ARE SUPPLIED BY THE ARCHITECT. THEY ARE PROVIDED ON THE STRUCTURAL PLANS AND DETAILS FOR THE CONVENIENCE OF THE CONTRACTOR. VERIFY DIMENSIONS AND ELEVATIONS WITH ARCHITECTURAL DRAWINGS.

DUNN ASSOCIATES, INC
Consulting Structural Engineers
EMAIL: ENG@DUNN-SE.COM
PH: 801-575-8877 FAX: 801-575-8875

ARCHITECTURAL NEXUS
SALT LAKE CITY PLACERVILLE SACRAMENTO

Architectural NEXUS, Inc.
2150 South 1300 East, Suite 200
Salt Lake City, Utah 84106
T 801.924.5000 F 801.924.5001
http://www.archnexus.com

Original drawings remain the property of the Architect and as such the Architect retains total ownership and control. The design represented by these drawings is sold to the client for a one time use, unless otherwise agreed upon in writing by the Architect.
© Architectural Nexus, Inc.2011

UTAH NATIONAL GUARD CAMP WILLIAMS
RTI TASS COMPLEX, PHASE II
PROJECT NO. 490444
UTAH NATIONAL GUARD
12953 SOUTH MINUTEMAN DRIVE
DRAPER, UTAH 84020-1726

#	REVISIONS	
2	28 March 2013	DFCM Review Response #2

DUNN PROJECT #:	11024
CHECKED BY:	Tyler Wright
DRAWN BY:	Brett Roberts
DATE:	28 March 2013

SHEET CONTENTS:
ROOF FRAMING DETAILS

VOLUME A.1 - DFCM Review Response #2

SF524

This drawing, as an instrument of professional service, is the property of DUNN ASSOCIATES INC. Use/Approval can will be prosecuted to the fullest extent of the law. Copyright © 2012 by DUNN ASSOCIATES INC.

3/27/2013 4:48:58 PM

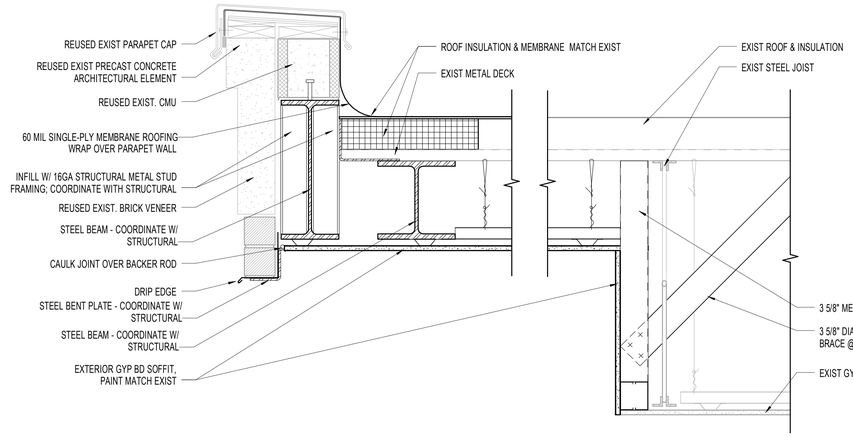

D3 / AD101 SECTION DETAIL (NEW PARAPET WALL @ PHASE 1 DOCK)
1 1/2" = 1'-0"

NOTE:
IF METAL DECK NEEDS TO BE CUT, DEMO BACK TO NEXT JOIST

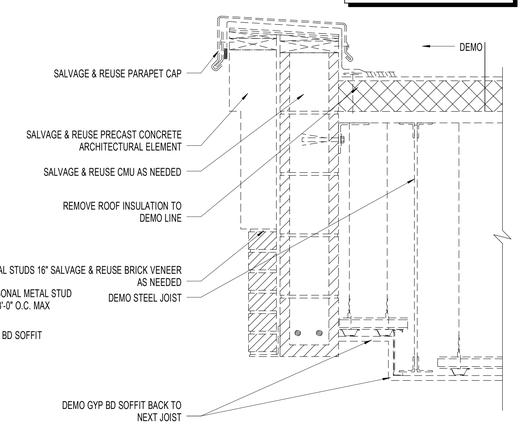

D6 / AD101 SECTION DETAIL (EXIST. PARAPET WALL @ PHASE 1 DOCK)
1 1/2" = 1'-0"

GENERAL NOTES - DEMOLITION

A. SOME INCIDENTAL ITEMS REQUIRING REMOVAL MAY NOT BE SPECIFICALLY CALLED OUT. REMOVAL OF ALL ITEMS NECESSARY FOR THE COMPLETION OF WORK IS THE RESPONSIBILITY OF THE CONTRACTOR.
B. CAUTION & CARE MUST BE TAKEN WHEN REMOVING PRECAST & MASONRY VENEER.
C. PREOTECT SALVAGED ITEMS FROM DAMAGE
D. REPLACE DAMAGED ITEMS IF INTENDED FOR NEW CONSTRUCTION.
E. COORDINATE OPENINGS, DEMOLITION, INFILL, & EXPANSION JOINTS WITH NEW CONSTRUCTION.
F. RETAIN WALL RATING AS INDICATED ON GI101.
G. RECYCLE ALL DEMO'D MATERIAL AS APPLICABLE.
H. COORDINATE WITH EXISTING OCCUPANTS FOR PHASE I MECHANICAL PENTHOUSE ALTERATION.
   a. ALTERATION TO BE COMPLETED BEFORE WINTER MONTHS.
   b. VERIFY THAT SNOW DRIFTS DO NOT IMPEDE AIRFLOW INTO MECHANICAL PENTHOUSE, AND THAT FREEZING DOES NOT OCCUR WITHIN THE PENTHOUSE.
   c. REFER TO MECHANICAL DRAWINGS FOR MORE INFORMATION

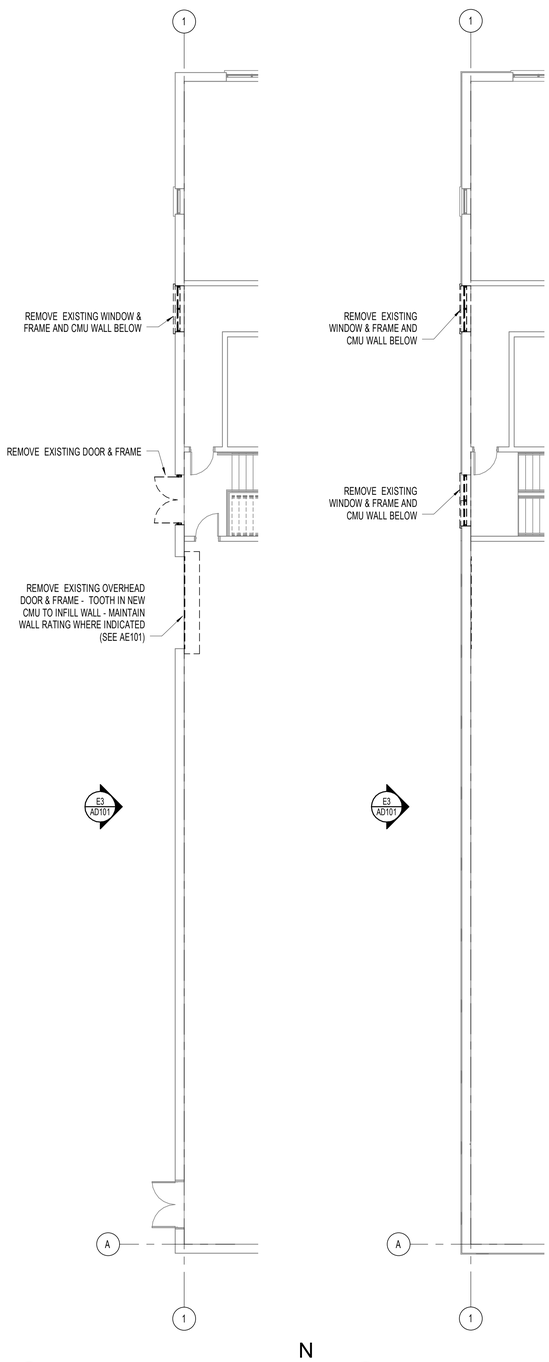

A1 / AD101 LEVEL 1 - DEMOLITION PLAN @ GRID 1
1/8" = 1'-0"

A2 / AD101 LEVEL 2 - DEMOLITION PLAN @ GRID 1
1/8" = 1'-0"

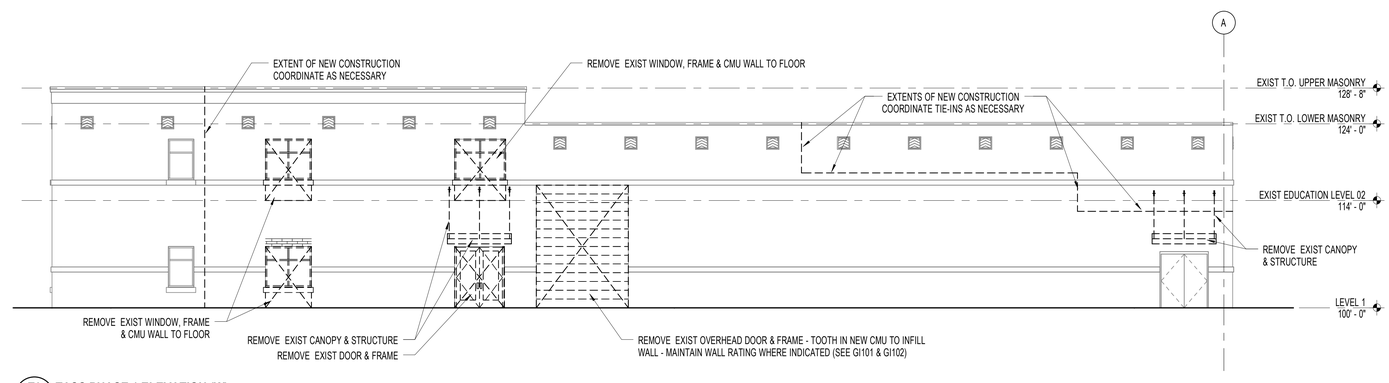

E3 / AD101 TASS PHASE 1 ELEVATION (W)
1/8" = 1'-0"

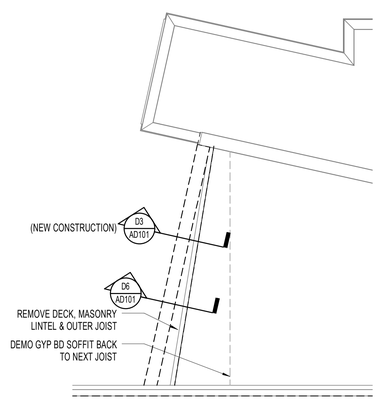

A3 / AD101 ROOF - EXISTING DOCK DEMOLITION PLAN

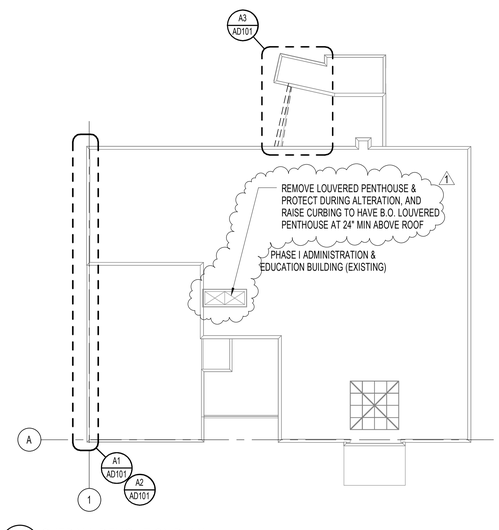

A6 / AD101 OVERALL DEMOLITION PLAN
1/32" = 1'-0"

4/1/2013 10:23:47 AM

ARCHITECTURAL NEXUS
SALT LAKE CITY PLACERVILLE SACRAMENTO

Architectural NEXUS, Inc.
2505 East Parleys Way
Salt Lake City, Utah 84109
T 801.924.5000 F 801.924.5001
http://www.archnexus.com

Licensed Architect
PETER MOYES
No. 83-122248-0301
21 MARCH 2013
State of Utah

Original drawings remain the property of the Architect and as such the Architect retains total ownership and control. The design represented by these drawings is sold to the client for a one time use, unless otherwise agreed upon in writing by the Architect.
© Architectural Nexus, Inc. 2012

UTAH NATIONAL GUARD CAMP WILLIAMS
RTI TASS COMPLEX, PHASE II
NGB PROJECT NO. 490444
17800 SOUTH ACADEMY STREET
BLUFFDALE, UTAH 84065

#	REVISIONS	
1	4.01.13	ADD-02

NEXUS PROJECT #:	11024
CHECKED BY:	SMS
DRAWN BY:	Author
DATE:	21 MARCH 2013

SHEET CONTENTS:
PHASE I DEMOLITION PLANS

VOLUME A.1 - BID DOCUMENTS

AD101

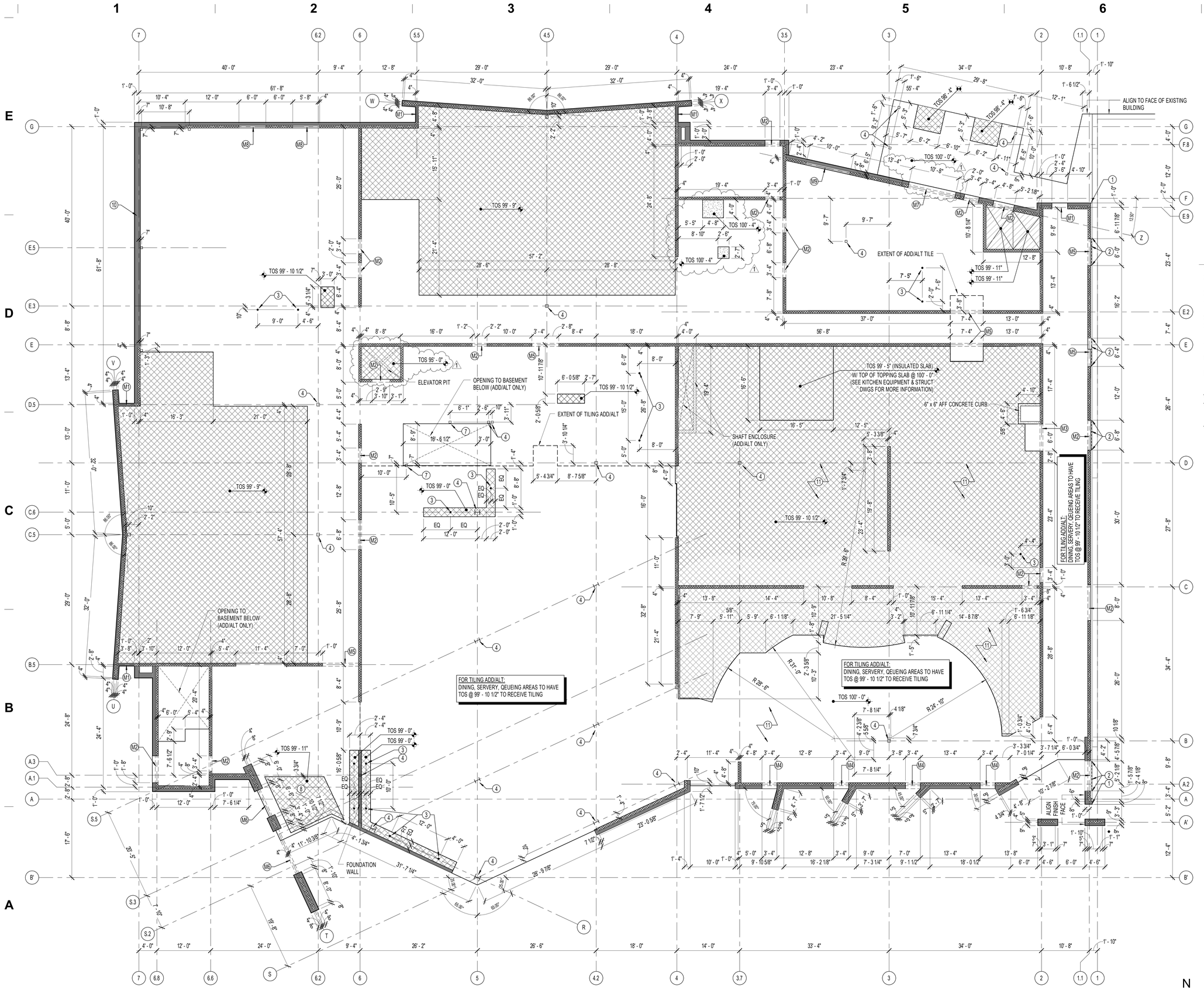

A1 LEVEL 1 - SLAB CONTROL PLAN
AE011 1/8" = 1'-0"

4/12/2013 10:23:53 AM

GENERAL NOTES - SLAB CONTROL PLAN

A. DIMENSIONAL CONTROL PLANS SHOW ONLY STRUCTURAL AND OTHER KEY ELEMENTS PERTINENT TO DIMENSIONAL INTEGRITY. ALL OTHER ITEMS ARE NOT SHOWN FOR CLARITY. SEE OTHER ARCHITECTURAL, CIVIL, STRUCTURAL, MECHANICAL AND ELECTRICAL DRAWINGS FOR INFORMATION SPECIFIC TO THOSE TRADES THAT IS NOT DEPICTED ON THIS DRAWING.

B. THIS DRAWING IS FOR COORDINATION PURPOSES ONLY, AND DEPICTS ONLY GENERAL EXTENTS OF CONCRETE SLABS AND WALLS AND CERTAIN MAJOR OPENINGS FOR CIRCULATION AND SHAFTS, AND ALLOWABLE PENETRATION LOCATIONS OF CONCRETE BEAMS NEAR COLUMNS. CONTRACTOR IS RESPONSIBLE FOR VERIFYING ALL REQUIRED OPENINGS OR PENETRATIONS, AND COORDINATING ALL REQUIREMENTS FOR ALL OPENINGS WITH ALL TRADES AND WITH STRUCTURAL ELEMENTS.

C. UNLESS NOTED OTHERWISE, DIMENSIONS ARE TO GRID, FACE OF CONCRETE STRUCTURAL ELEMENT OR OPENING, OR CENTERLINE OF STEEL STRUCTURAL ELEMENT.

D. COORDINATE KITCHEN EQUIPMENT PLUMBING, ELECTRICAL, AND FLOOR SINKS & DRAIN LOCATIONS WITH OF SHEETS.

E. COORDINATE COLUMN KEYWAYS W/ FINISH PLANS SHEETS AI101 & AI102.

KEYNOTE - CONTROL PLAN

1 RATED EXPANSION JOINT
2 RATED EXPANSION JOINT AROUND PERIMETER OF OPENING (FLOOR, JAMBS & HEAD)
3 FLOOR DRAIN
4 STRUCTURAL COLUMN - SEE STRUCTURAL FOR MORE INFORMATION
5 CURTAINWALL GUARDRAIL SUPPORT COLUMN
6 CONCRETE PATIO ROOF CURB AND GUARDRAIL FOUNDATION
7 STRUCTURAL POST - SEE STRUCTURAL FOR MORE INFORMATION
8 RECESSED WALK-OFF MAT - COORDINATE WITH WALK-OFF MAT MFR REQUIREMENTS
9 EDGE OF SLAB ALIGNED WITH CENTER OF BEAM BELOW - COORDINATE WITH STRUCTURAL DETAILS
10 FOUNDATION
11 COORDINATE FLOOR DRAINS & SINKS W/ MECHANICAL AND/OR KITCHEN EQUIPMENT DRAWINGS
12 CONCRETE STEM WALL - SEE WALL SECTIONS FOR MORE INFORMATION

MASONRY OPENINGS

KEY NOTE	DESCRIPTION	HEIGHT (AFF, UNO) SILL	HEAD
M1	CONTINUOUS OPENING	-	T.O. PARAPET
M2	MASONRY LINTEL	-	7' - 4"
M3	MASONRY LINTEL	-	8' - 0"
M4	MASONRY LINTEL	-	9' - 0"
M5	MASONRY LINTEL	-	9' - 4"
M6	MASONRY LINTEL	-	11' - 4"
M7	MASONRY LINTEL	-	12' - 0"
M8	MASONRY OPENING	2' - 8"	8' - 0"
M9	MASONRY OPENING	3' - 0"	7' - 0"
M10	MASONRY OPENING	3' - 0"	8' - 0"

SLAB EDGE PLAN LEGEND

- CONCRETE SLAB - SEE STRUCTURAL DRAWINGS FOR MORE INFORMATION
- SLOPED CONCRETE SLAB - SEE SLAB PLAN FOR TOC SPOT ELEVATIONS
- RECESSED CONCRETE SLAB - SEE SLAB PLAN FOR TOS ELEVATION
- MASONRY BLOCK - SEE FLOOR PLANS & WALL TYPES FOR FULL WALL CONSTRUCTION
- MASONRY OPENING - SEE KEYNOTES FOR MORE INFORMATION
- CONCRETE FOUNDATION WALL (UNO) - SEE STRUCTURAL FOR MORE INFORMATION
- CONCRETE PAD OR CURB

ARCHITECTURAL NEXUS
SALT LAKE CITY PLACERVILLE SACRAMENTO

Architectural NEXUS, Inc.
2505 East Parleys Way
Salt Lake City, Utah 84109
T 801.924.5000 F 801.924.5001
http://www.archnexus.com

Licensed Architect PETER MOYES No. 21 MARCH 2013 83-122248-0301 State of Utah

Original drawings remain the property of the Architect and as such the Architect retains total ownership and control. The design represented by these drawings is sold to the client for a one time use, unless otherwise agreed upon in writing by the Architect.
© Architectural Nexus, Inc. 2012

UTAH NATIONAL GUARD CAMP WILLIAMS
RTI TASS COMPLEX, PHASE II
NGB PROJECT NO. 490444

17800 SOUTH ACADEMY STREET
BLUFFDALE, UTAH 84065

#	REVISIONS	
1	4.01.13	ADD-02

NEXUS PROJECT #:	11024
CHECKED BY:	SMS
DRAWN BY:	SMS
DATE:	21 MARCH 2013

SHEET CONTENTS:
LEVEL 1 SLAB CONTROL PLAN

VOLUME A.1 - BID DOCUMENTS

AE011

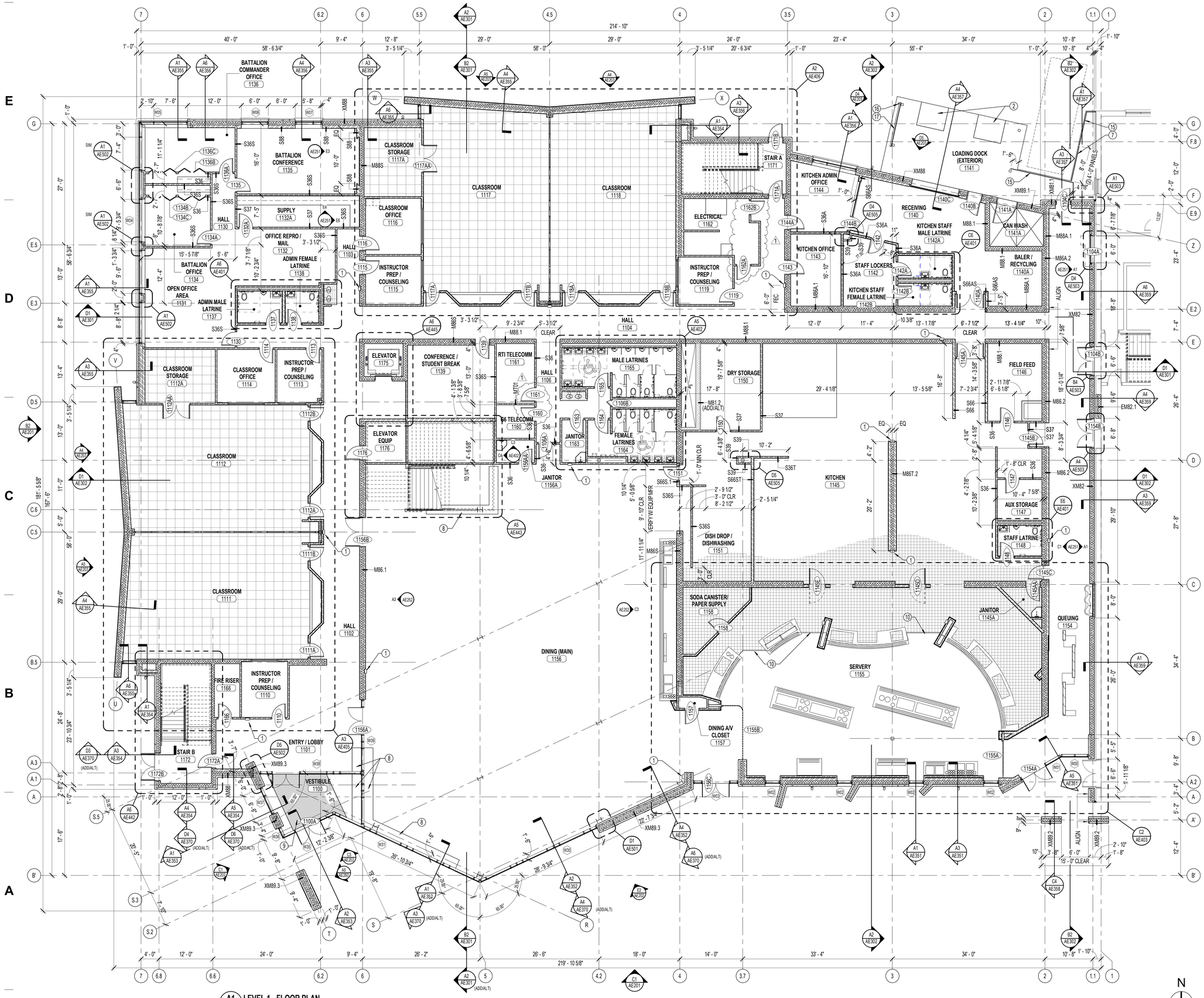

A1 AE101 LEVEL 1 - FLOOR PLAN
1/8" = 1'-0"

4/1/2013 10:24:05 AM

GENERAL NOTES - FLOOR PLAN

A. SEE G SERIES SHEETS FOR REGULATORY INFORMATION, INCLUDING TYPICAL ACCESSIBILITY CLEARANCE AND COMPLIANCE REQUIREMENTS.
B. SEE DIMENSIONAL PLANS IN AE100 SERIES FOR ALIGNMENT / POSITION OF STRUCTURAL ELEMENTS AND OTHER KEY DIMENSIONS.
C. UNLESS NOTED OTHERWISE, WALL DIMENSIONS ARE TO GRID OR FACE OF STUD / STRUCTURE. "CLEAR" DIMENSIONS ARE TO FACE OF FINISH.
D. WHERE PROVIDED, DOOR AND WINDOW DIMENSIONS ARE TO EDGE OF ROUGH OPENING. OPENING DIMENSIONS ARE NOMINAL. CONTRACTOR SHALL COORDINATE DIMENSIONS OF ALL ROUGH OPENINGS AND ACTUAL FRAME SIZES. WHERE DOOR LOCATIONS ARE NOT DIMENSIONED, SEE DETAILS REFERENCED IN DOOR SCHEDULE BY SPECIFIC CONDITION. OTHERWISE, THE HINGE SIDE OF DOOR ROUGH OPENINGS SHALL BE LOCATED 4" FROM THE ADJACENT PERPENDICULAR WALL, SUBJECT TO MAINTENANCE OF REQUIRED ADA CLEARANCES. SEE SHEET GI701.
E. SEE CIVIL, STRUCTURAL, MECHANICAL AND ELECTRICAL DRAWINGS FOR INFORMATION SPECIFIC TO THOSE TRADES THAT IS NOT DEPICTED ON THIS DRAWING.
F. WHETHER SPECIFICALLY CALLED OUT OR NOT, PROVIDE BACKING BEHIND ALL SURFACE MOUNTED EQUIPMENT AND/OR FIXTURES PER DETAIL B4/A701.
G. SEE AE400 SERIES FOR TYPICAL ENLARGED PLANS AND ELEVATIONS.

KEYNOTE - FLOOR PLAN

1 FIRE EXTINGUISHER CABINET - COORDINATE FINAL LOCATION WITH USERS
2 DOCK LEVELER
3 STRUCTURAL FRAMING FOR MECHANICAL EQUIPMENT
4 SCREENWALL BRACING - SEE STRUCTURAL FOR MORE INFORMATION
5 SUN SHADE
6 MECHANICAL CHASE
7 42" HIGH REMOVABLE GUARDRAIL FOR SERVICE OF EQUIPMENT
8 INTERIOR RECESSED PLANTER - SEE DETAILS AND LANDSCAPE DWGS FOR MORE INFORMATION
9 RECESSED WALK-OFF MAT
10 FLOOR FINISH TRANSITION. SEE INTEIROR FINISH PLANS, SCHEDULE AND DETAILS FOR MORE INFORMATION.
11 PERFORATED SUNSCREEN
12 CORRUGATED ROOF
13 MECHANICAL EQUIPMENT - SEE MECH DWGS FOR MORE INFORMATION
14 ALTERNATING TREAD DEVICE TO ROOF ABOVE
15 42" HIGH GUARDRAIL
16 DOWNSPOUT
17 PERFORATED METAL SUN SCREEN WALL

ARCHITECTURAL NEXUS
SALT LAKE CITY PLACERVILLE SACRAMENTO

Architectural NEXUS, Inc.
2505 East Parleys Way
Salt Lake City, Utah 84109
T 801.924.5000 F 801.924.5001
http://www.archnexus.com

Licensed Architect
PETER MOYES
No. 21 MARCH 2013
83-122248-0301
State of Utah

Original drawings remain the property of the Architect and as such the Architect retains total ownership and control. The design represented by these drawings is sold to the client for a one time use, unless otherwise agreed upon in writing by the Architect.
© Architectural Nexus, Inc. 2012

UTAH NATIONAL GUARD CAMP WILLIAMS
RTI TASS COMPLEX, PHASE II
NGB PROJECT NO. 490444
17800 SOUTH ACADEMY STREET
BLUFFDALE, UTAH 84065

#	REVISIONS	
1	3.22.13	DFCM REVIEW RESPONSE #2

NEXUS PROJECT #:	11024
CHECKED BY:	SMS
DRAWN BY:	SMS
DATE:	21 MARCH 2013

SHEET CONTENTS:
LEVEL 1 FLOOR PLAN

VOLUME A.1 - BID DOCUMENTS

AE101

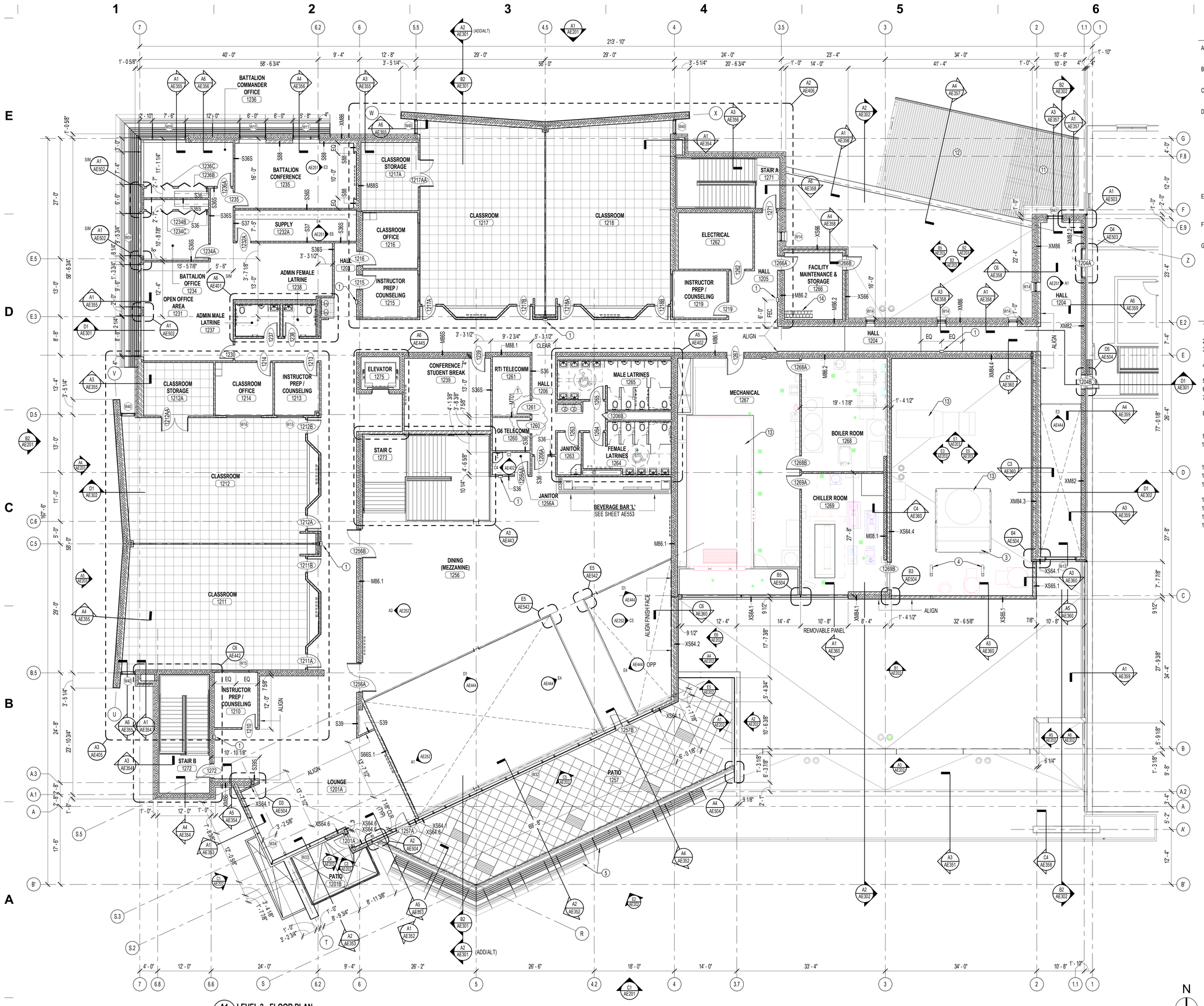

A1 LEVEL 2 - FLOOR PLAN
AE102 1/8" = 1'-0"

GENERAL NOTES - FLOOR PLAN

A. SEE G SERIES SHEETS FOR REGULATORY INFORMATION, INCLUDING TYPICAL ACCESSIBILITY CLEARANCE AND COMPLIANCE REQUIREMENTS.
B. SEE DIMENSIONAL PLANS IN AE100 SERIES FOR ALIGNMENT / POSITION OF STRUCTURAL ELEMENTS AND OTHER KEY DIMENSIONS.
C. UNLESS NOTED OTHERWISE, WALL DIMENSIONS ARE TO GRID OR FACE OF STUD / STRUCTURE. "CLEAR" DIMENSIONS ARE TO FACE OF FINISH.
D. WHERE PROVIDED, DOOR AND WINDOW DIMENSIONS ARE TO EDGE OF ROUGH OPENING. OPENING DIMENSIONS ARE NOMINAL. CONTRACTOR SHALL COORDINATE DIMENSIONS OF ALL ROUGH OPENINGS AND ACTUAL FRAME SIZES. WHERE DOOR LOCATIONS ARE NOT DIMENSIONED, SEE DETAILS REFERENCED IN DOOR SCHEDULE BY SPECIFIC CONDITION. OTHERWISE, THE HINGE SIDE OF DOOR ROUGH OPENINGS SHALL BE LOCATED 4" FROM THE ADJACENT PERPENDICULAR WALL, SUBJECT TO MAINTENANCE OF REQUIRED ADA CLEARANCES. SEE SHEET GI701.
E. SEE CIVIL, STRUCTURAL, MECHANICAL AND ELECTRICAL DRAWINGS FOR INFORMATION SPECIFIC TO THOSE TRADES THAT IS NOT DEPICTED ON THIS DRAWING.
F. WHETHER SPECIFICALLY CALLED OUT OR NOT, PROVIDE BACKING BEHIND ALL SURFACE MOUNTED EQUIPMENT AND/OR FIXTURES PER DETAIL B4/A701.
G. SEE AE400 SERIES FOR TYPICAL ENLARGED PLANS AND ELEVATIONS.

KEYNOTE - FLOOR PLAN

1 FIRE EXTINGUISHER CABINET - COORDINATE FINAL LOCATION WITH USERS
2 DOCK LEVELER
3 STRUCTURAL FRAMING FOR MECHANICAL EQUIPMENT
4 SCREENWALL BRACING - SEE STRUCTURAL FOR MORE INFORMATION
5 SUN SHADE
6 MECHANICAL CHASE
7 42" HIGH REMOVABLE GUARDRAIL FOR SERVICE OF EQUIPMENT
8 INTERIOR RECESSED PLANTER - SEE DETAILS AND LANDSCAPE DWGS FOR MORE INFORMATION
9 RECESSED WALK-OFF MAT
10 FLOOR FINISH TRANSITION. SEE INTEIROR FINISH PLANS, SCHEDULE AND DETAILS FOR MORE INFORMATION.
11 PERFORATED SUNSCREEN
12 CORRUGATED ROOF
13 MECHANICAL EQUIPMENT - SEE MECH DWGS FOR MORE INFORMATION
14 ALTERNATING TREAD DEVICE TO ROOF ABOVE
15 42" HIGH GUARDRAIL
16 DOWNSPOUT
17 PERFORATED METAL SUN SCREEN WALL

ARCHITECTURAL NEXUS
SALT LAKE CITY PLACERVILLE SACRAMENTO

Architectural NEXUS, Inc.
2505 East Parleys Way
Salt Lake City, Utah 84109
T 801.924.5000 F 801.924.5001
http://www.archnexus.com

Licensed Architect PETER MOYES No. 7203 21 MARCH 2013 83-122248-0301 State of Utah

Original drawings remain the property of the Architect and as such the Architect retains total ownership and control. The design represented by these drawings is sold to the client for a one time use, unless otherwise agreed upon in writing by the Architect.
© Architectural Nexus, Inc. 2012

UTAH NATIONAL GUARD CAMP WILLIAMS
RTI TASS COMPLEX, PHASE II
NGB PROJECT NO. 490444
17800 SOUTH ACADEMY STREET
BLUFFDALE, UTAH 84065

#	REVISIONS	
1	3.22.13	DFCM REVIEW RESPONSE #2

NEXUS PROJECT #:	11024
CHECKED BY:	SMS
DRAWN BY:	SMS
DATE:	21 MARCH 2013

SHEET CONTENTS:
LEVEL 2 FLOOR PLAN

VOLUME A.1 - BID DOCUMENTS

AE102

4/1/2013 10:24:26 AM

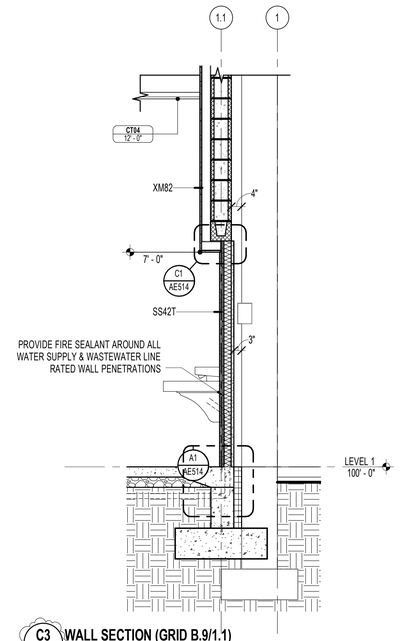

C3 AE358 **WALL SECTION (GRID B.9/1.1)**
1/2" = 1'-0"

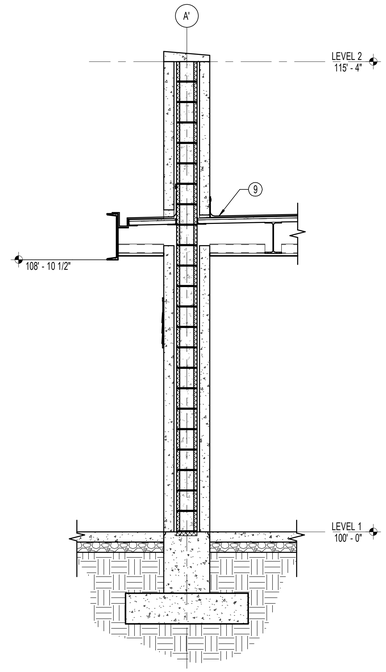

C4 AE358 **WALL SECTION (GRID 1.9/A')**
1/2" = 1'-0"

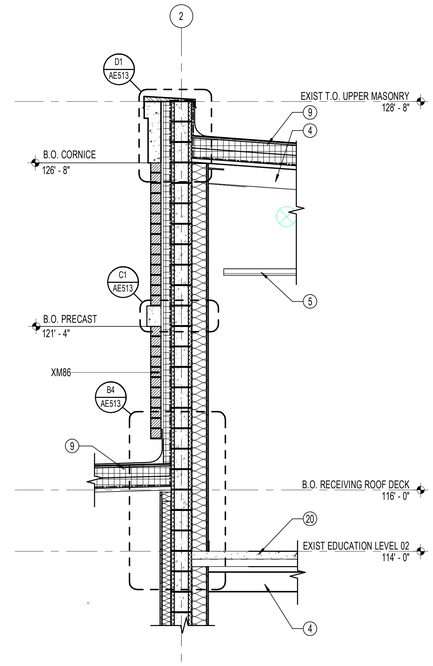

C6 AE358 **WALL SECTION (GRID E.5/M8)**
1/2" = 1'-0"

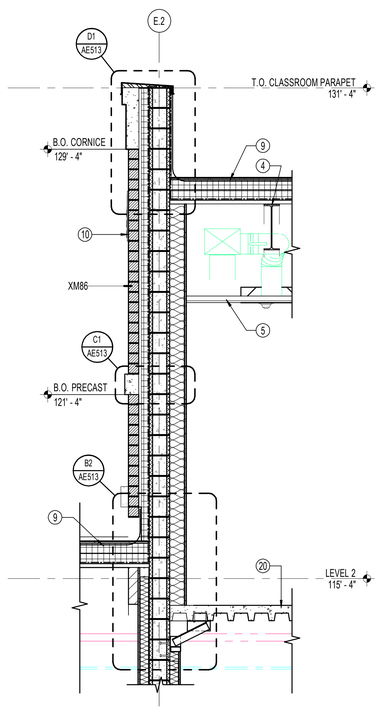

A1 AE358 **WALL SECTION (GRID 2.3/E.2)**
1/2" = 1'-0"

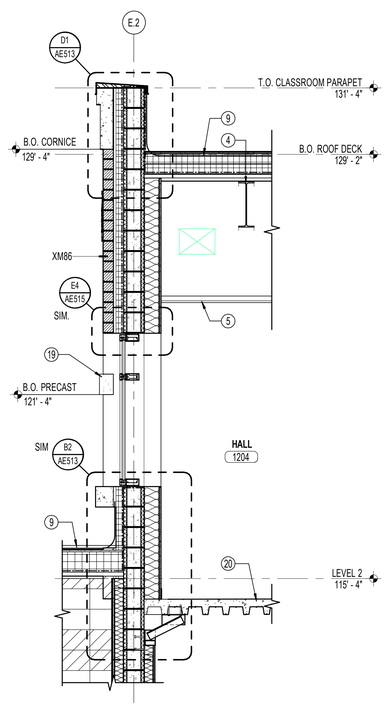

A3 AE358 **WALL SECTION (GRID 2.5/E.2)**
1/2" = 1'-0"

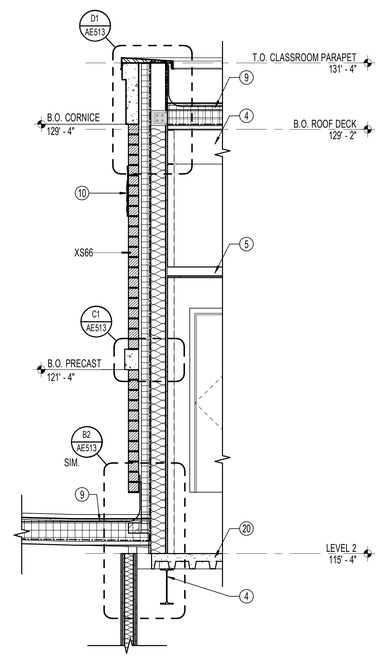

A4 AE358 **WALL SECTION (GRID 3.3/E.7)**
1/2" = 1'-0"

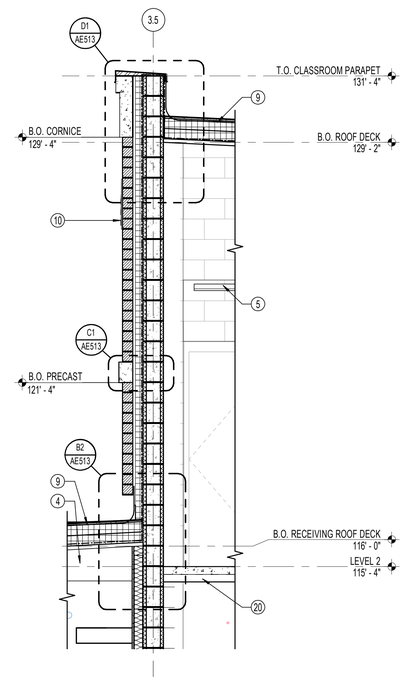

A6 AE358 **WALL SECTION (GRID F.3/3.5)**
1/2" = 1'-0"

GENERAL NOTES - WALL SECTIONS

A. COORDINATE GRADING SHOWN ON ELEVATIONS W/ CIVIL.
B. PROVIDE GUTTERS AND DOWN SPOUTS W/ HEAT CABLE, SNOW FENCES, AND SNOW CLIPS - SEE ROOF PLAN & COORDINATE ELECTRICAL REQUIREMENTS WITH ELECTRICAL DWGS.
C. FOR TYPICAL WALL ASSEMBLY INCLUDING MATERIAL DESIGNATIONS AND DETAILING APPROACH, SEE AE350 SERIES.

KEYNOTE - WALL SECTIONS

1 HORIZONTAL LOUVER SUNSHADE
2 INSULATED CURTAIN WALL WINDOW SYSTEM
3 6" COMPOSITE CONCRETE AND CORRUGATED METAL ROOF DECK - RE: STRUCTURAL
4 STEEL STRUCTURAL BEAMS - RE: STRUCTURAL FOR SIZES AND LOCATIONS
5 SCHEDULED CEILING - SEE REFLECTED CEILING PLANS
6 4" CONCRETE SLAB ON GRADE - RE: STRUCTURAL
7 METAL PANEL SYSTEM
8 SINGLE-PLY ROOF OVER 5/8" EXTERIOR SHEATHING OVER CORRUGATED METAL DECK
9 SINGLE PLY MEMBRANE ROOF OVER 6" RIGID INSULATION, CONTINUOUS AIR BARRIER, & CORRUGATED METAL DECK
10 PRECAST CONCRETE CHEVRON MEDALLION
11 EXTERIOR WALL WITH PRECAST PANELS - SEE WALL TYPES FOR MORE ASSEMBLY INFO
12 PREFINISHED METAL WALL CAP AND DRIP EDGE
13 CUSTOM STAINLESS STEEL RAILING W/ CHEVRON MEDALLION
14 STEEL COLUMN - RE: STRUCTURAL
15 CONCRETE FOOTING - RE: STRUCTURAL
16 CONCRETE FOUNDATION WALL - RE: STRUCTURAL
17 EXTERIOR BICK VENEER WALL WITH PRECAST WAINSCOT - SEE WALL TYPES FOR ASSEMBLY INFO
18 HOLLOW METAL DOOR
19 PRECAST CONCRETE BAND
20 COMPOSITE CONCRETE FLOOR SLAB ON CORRUGATED METAL DECK
21 PRECAST CONCRETE CORNICE
22 STAIRS
23 PRECAST CONCRETE PANEL
24 INTERIOR MASONRY WALL - SEE WALL TYPES FOR ASSEMBLY INFO
25 WALL MOUNTED FLAT PANEL TV
26 OVERHEAD DOOR
27 TRENCH DRAIN; COORDINATE WITH CIVIL
28 5/8" GYP BD. CEILING ON METAL STUDS
29 2"x4" STEEL GUARD RAIL
30 PAINTED STEEL CHANNEL
31 CONCRETE TILE PATIO PAVERS
32 METAL BUILDING SIGNAGE
33 RIGID INSULATION ALONG PERIMETER FOUNDATION WALLS
34 SOLID SURFACE SILL
35 ACCESS FLOOR SYSTEM - RE: SPECIFICATIONS
36 PENETRATION THROUGH STEEL PER STRUCTURAL DETAILING
37 OVERFLOW ROOF DRAIN SPOUT
38 ADJUSTABLE PAVER PEDESTAL
39 CONTINUOUS WEATHER BARRIER
40 LIGHT FIXTURE - SEE ELEC DWGS FOR MORE INFORMATION
41 METAL PANEL SOFFIT
42 FINISH GRADE - COORDINATE W/ LANDSCAPE & CIVIL DWGS
43 PATIO DRAIN - COORDINATE W/ ROOF PLAN & PLUMBING DWGS
44 AUTOMATIC DOOR ACTUATOR PUSH PAD
45 CONCRETE HAUNCH - RE: STRUCTURAL DWGS
46 PREFINISHED METAL RAIN GUTTER

ARCHITECTURAL NEXUS
SALT LAKE CITY PLACERVILLE SACRAMENTO

Architectural NEXUS, Inc.
2505 East Parleys Way
Salt Lake City, Utah 84109
T 801.924.5000 F 801.924.5001
http://www.archnexus.com

Licensed Architect
PETER MOYES
No. 21 MARCH 2013
83-122248-0301
State of Utah

Original drawings remain the property of the Architect and as such the Architect retains total ownership and control. The design represented by these drawings is sold to the client for a one time use, unless otherwise agreed upon in writing by the Architect.
© Architectural Nexus, Inc. 2012

UTAH NATIONAL GUARD CAMP WILLIAMS
RTI TASS COMPLEX, PHASE II
NGB PROJECT NO. 490444
17800 SOUTH ACADEMY STREET
BLUFFDALE, UTAH 84065

#	REVISIONS	
1	3.22.13	DFCM REVIEW RESPONSE #2

NEXUS PROJECT #:	11024
CHECKED BY:	SMS
DRAWN BY:	RM
DATE:	21 MARCH 2013

SHEET CONTENTS:
PARTIAL WALL SECTIONS

VOLUME A.1 - BID DOCUMENTS

AE358

4/1/2013 10:24:38 AM

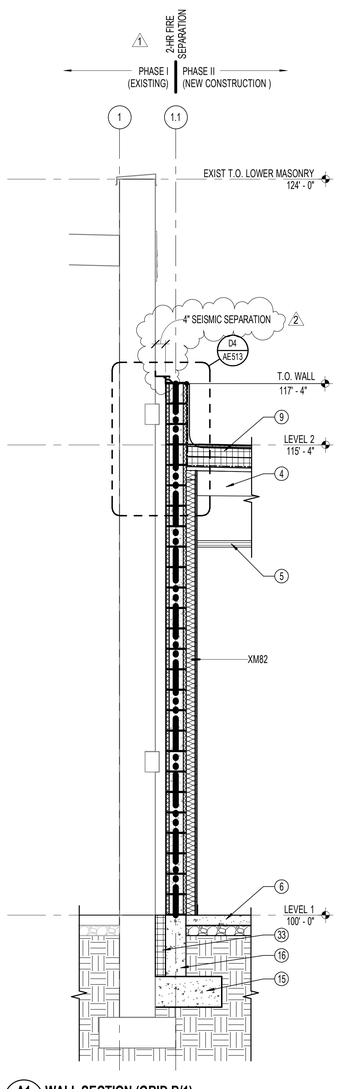

A1 AE359 WALL SECTION (GRID B/1)
1/2" = 1'-0"

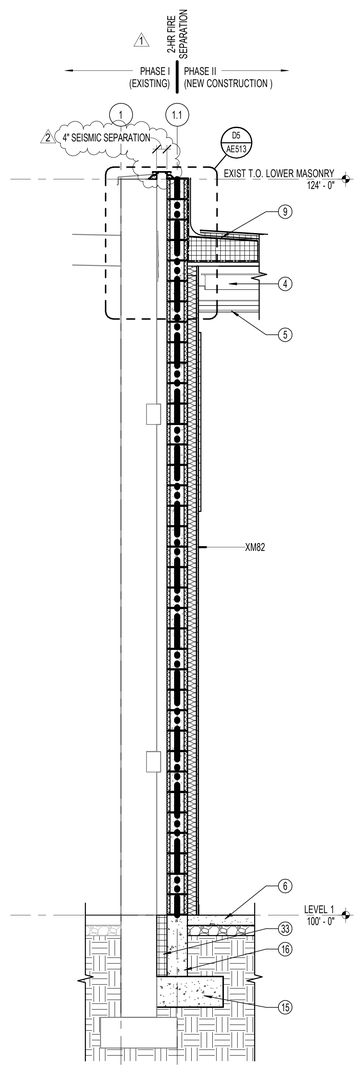

A3 AE359 WALL SECTION (GRID C.4/1)
1/2" = 1'-0"

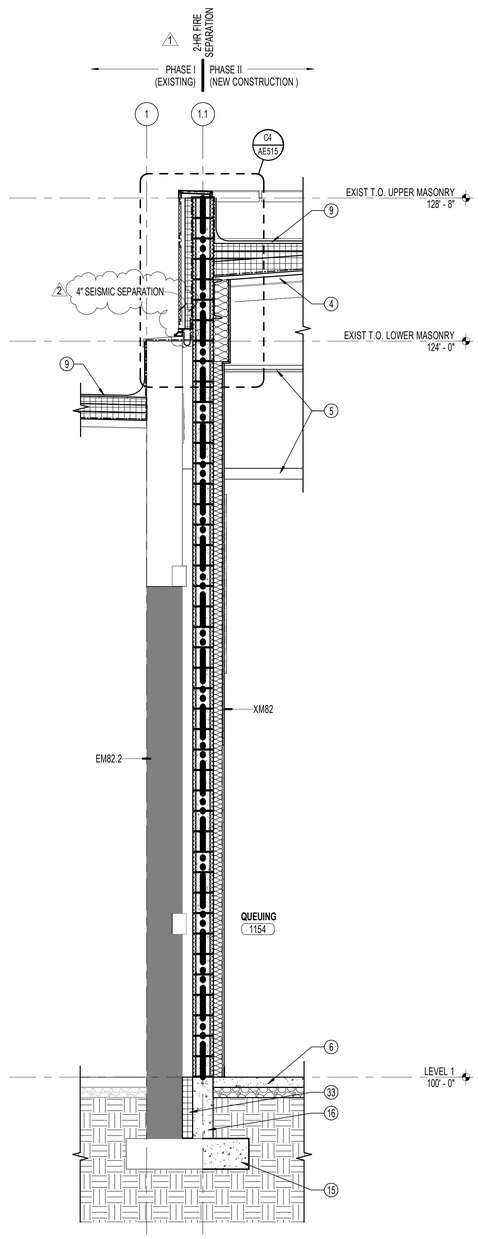

A4 AE359 WALL SECTION (GRID 1.1/D.5)
1/2" = 1'-0"

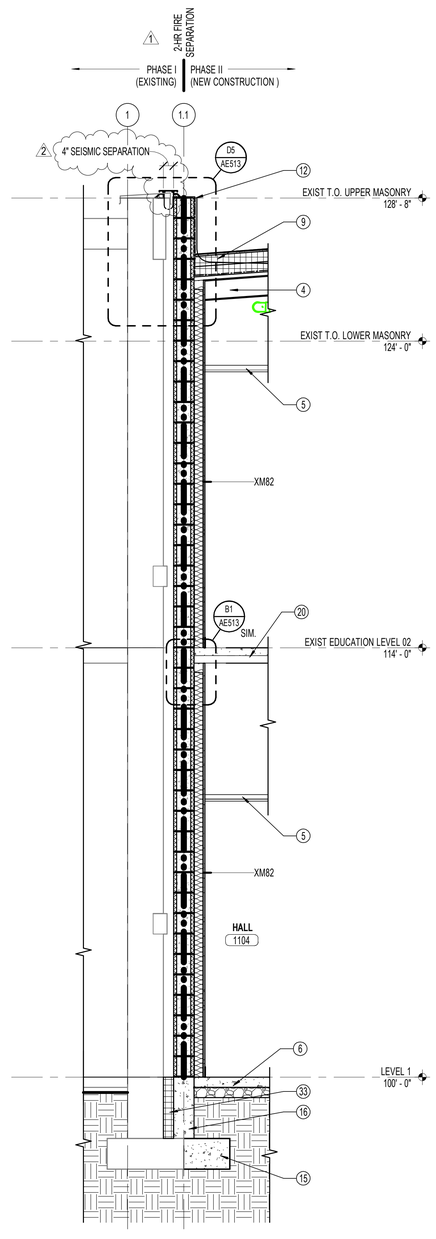

A6 AE359 WALL SECTION (GRID E.1/1)
1/2" = 1'-0"

GENERAL NOTES - WALL SECTIONS

A. COORDINATE GRADING SHOWN ON ELEVATIONS W/ CIVIL.
B. PROVIDE GUTTERS AND DOWN SPOUTS W/ HEAT CABLE, SNOW FENCES, AND SNOW CLIPS - SEE ROOF PLAN & COORDINATE ELECTRICAL REQUIREMENTS WITH ELECTRICAL DWGS.
C. FOR TYPICAL WALL ASSEMBLY INCLUDING MATERIAL DESIGNATIONS AND DETAILING APPROACH, SEE AE350 SERIES.

KEYNOTE - WALL SECTIONS

1 HORIZONTAL LOUVER SUNSHADE
2 INSULATED CURTAIN WALL WINDOW SYSTEM
3 6" COMPOSITE CONCRETE AND CORRUGATED METAL ROOF DECK - RE: STRUCTURAL
4 STEEL STRUCTURAL BEAMS - RE: STRUCTURAL FOR SIZES AND LOCATIONS
5 SCHEDULED CEILING - SEE REFLECTED CEILING PLANS
6 4" CONCRETE SLAB ON GRADE - RE: STRUCTURAL
7 METAL PANEL SYSTEM
8 SINGLE-PLY ROOF OVER 5/8" EXTERIOR SHEATHING OVER CORRUGATED METAL DECK
9 SINGLE PLY MEMBRANE ROOF OVER 6" RIGID INSULATION, CONTINUOUS AIR BARRIER, & CORRUGATED METAL DECK
10 PRECAST CONCRETE CHEVRON MEDALLION
11 EXTERIOR WALL WITH PRECAST PANELS - SEE WALL TYPES FOR MORE ASSEMBLY INFO
12 PREFINISHED METAL WALL CAP AND DRIP EDGE
13 CUSTOM STAINLESS STEEL RAILING W/ CHEVRON MEDALLION
14 STEEL COLUMN - RE: STRUCTURAL
15 CONCRETE FOOTING - RE: STRUCTURAL
16 CONCRETE FOUNDATION WALL - RE: STRUCTURAL
17 EXTERIOR BICK VENEER WALL WITH PRECAST WAINSCOT - SEE WALL TYPES FOR ASSEMBLY INFO
18 HOLLOW METAL DOOR
19 PRECAST CONCRETE BAND
20 COMPOSITE CONCRETE FLOOR SLAB ON CORRUGATED METAL DECK
21 PRECAST CONCRETE CORNICE
22 STAIRS
23 PRECAST CONCRETE PANEL
24 INTERIOR MASONRY WALL - SEE WALL TYPES FOR ASSEMBLY INFO
25 WALL MOUNTED FLAT PANEL TV
26 OVERHEAD DOOR
27 TRENCH DRAIN; COORDINATE WITH CIVIL
28 5/8" GYP BD. CEILING ON METAL STUDS
29 2"x4" STEEL GUARD RAIL
30 PAINTED STEEL CHANNEL
31 CONCRETE TILE PATIO PAVERS
32 METAL BUILDING SIGNAGE
33 RIGID INSULATION ALONG PERIMETER FOUNDATION WALLS
34 SOLID SURFACE SILL
35 ACCESS FLOOR SYSTEM - RE: SPECIFICATIONS
36 PENETRATION THROUGH STEEL PER STRUCTURAL DETAILING
37 OVERFLOW ROOF DRAIN SPOUT
38 ADJUSTABLE PAVER PEDESTAL
39 CONTINUOUS WEATHER BARRIER
40 LIGHT FIXTURE - SEE ELEC DWGS FOR MORE INFORMATION
41 METAL PANEL SOFFIT
42 FINISH GRADE - COORDINATE W/ LANDSCAPE & CIVIL DWGS
43 PATIO DRAIN - COORDINATE W/ ROOF PLAN & PLUMBING DWGS
44 AUTOMATIC DOOR ACTUATOR PUSH PAD
45 CONCRETE HAUNCH - RE: STRUCTURAL DWGS
46 PREFINISHED METAL RAIN GUTTER

ARCHITECTURAL NEXUS
SALT LAKE CITY PLACERVILLE SACRAMENTO

Architectural NEXUS, Inc.
2505 East Parleys Way
Salt Lake City, Utah 84109
T 801.924.5000 F 801.924.5001
http://www.archnexus.com

Licensed Architect
PETER MOYES
No. 83-122248-0301
21 MARCH 2013
State of Utah

Original drawings remain the property of the Architect and as such the Architect retains total ownership and control. The design represented by these drawings is sold to the client for a one time use, unless otherwise agreed upon in writing by the Architect.
© Architectural Nexus, Inc. 2012

UTAH NATIONAL GUARD CAMP WILLIAMS
RTI TASS COMPLEX, PHASE II
NGB PROJECT NO. 490444
17800 SOUTH ACADEMY STREET
BLUFFDALE, UTAH 84065

REVISIONS

#	Date	Description
1	3.15.13	DFCM REVIEW RESPONSE
2	3.22.13	DFCM REVIEW RESPONSE #2

NEXUS PROJECT #:	11024
CHECKED BY:	SMS
DRAWN BY:	RM
DATE:	21 MARCH 2013

SHEET CONTENTS:
BUILDING SEPARATION WALL SECTIONS

VOLUME A.1 - BID DOCUMENTS

AE359

4/1/2013 10:24:47 AM

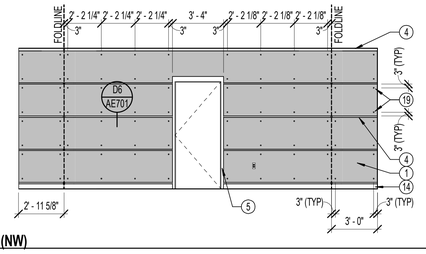

E1 AE403 SERVERY #1155 (NW)
1/4" = 1'-0"

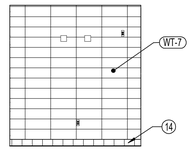

E3 AE403 SERVERY #1155 (W)
1/4" = 1'-0"

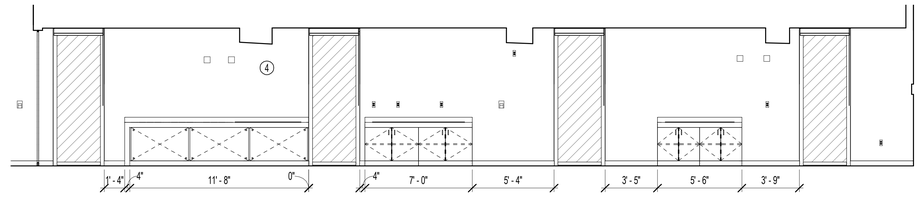

E4 AE403 SERVERY #1155 (S)
1/4" = 1'-0"

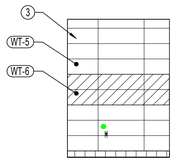

D1 AE403 SERVERY #1155 (SE)
1/4" = 1'-0"

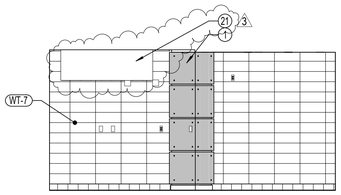

D2 AE403 SERVERY #1155 (E)
1/4" = 1'-0"

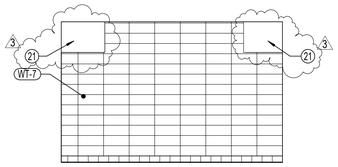

D3 AE403 SERVERY #1155 (NE)
1/4" = 1'-0"

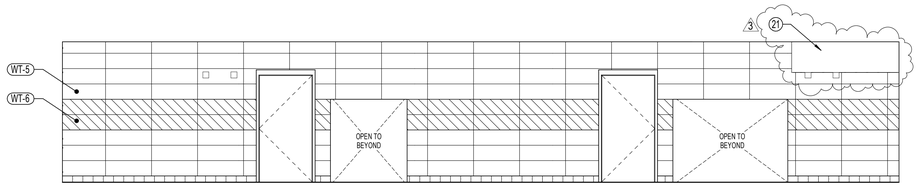

D4 AE403 SERVERY #1155 (N)
1/4" = 1'-0"

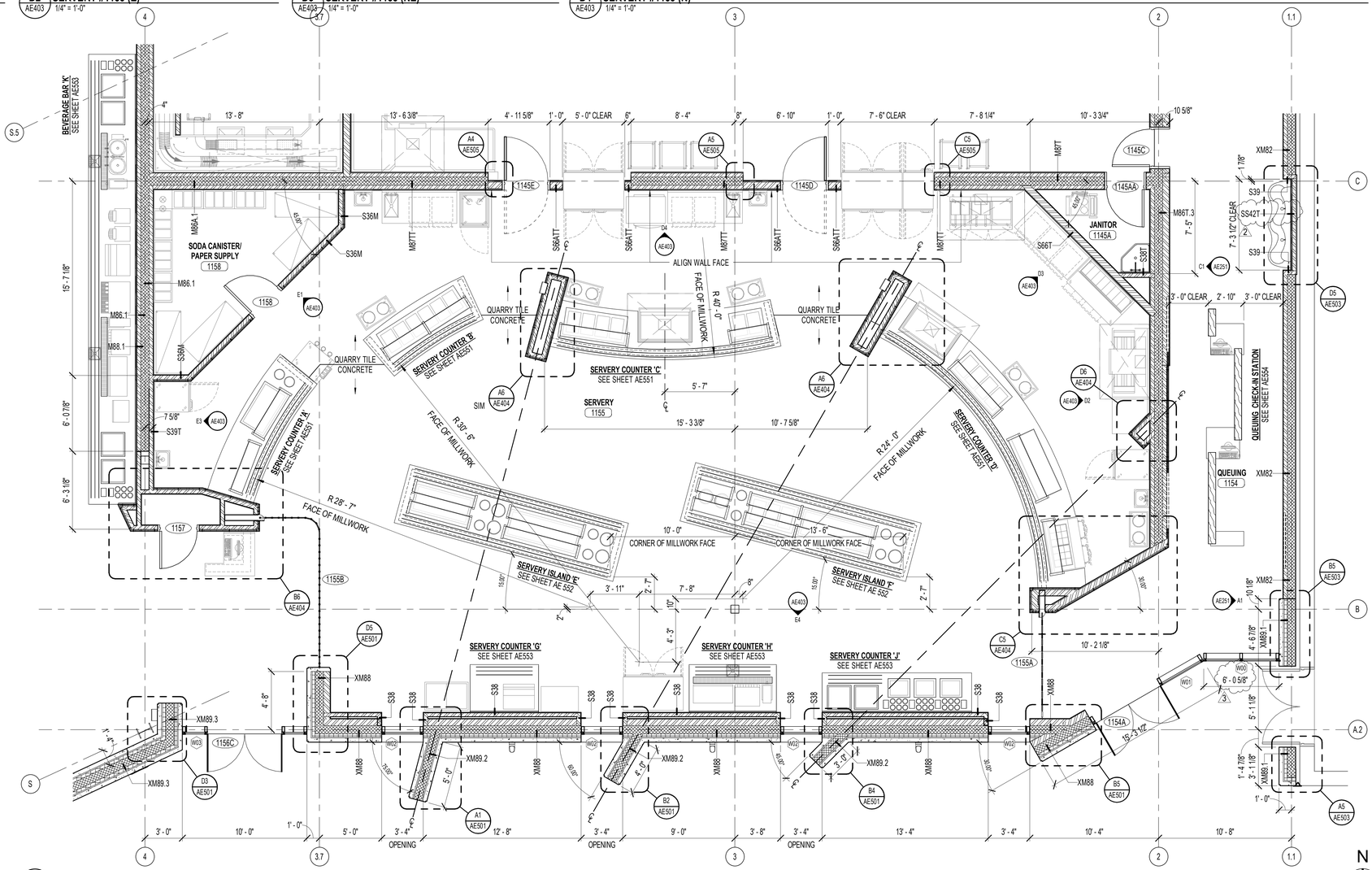

C2 AE403 ENLARGED SERVERY PLAN (1155)
1/4" = 1'-0"

GENERAL NOTES - ENLARGED FLOOR PLAN

A. SEE GI SERIES SHEETS FOR REGULATORY INFORMATION, INCLUDING TYPICAL ACCESSIBILITY CLEARANCE AND COMPLIANCE REQUIREMENTS.
B. SEE DIMENSIONAL PLANS IN AE100 SERIES FOR ALIGNMENT / POSITION OF STRUCTURAL ELEMENTS AND OTHER KEY DIMENSIONS.
C. UNLESS NOTED OTHERWISE, WALL DIMENSIONS ARE TO GRID OR FACE OF STUD / STRUCTURE. "CLEAR" DIMENSIONS ARE TO FACE OF FINISH.
D. WHERE PROVIDED, DOOR AND WINDOW DIMENSIONS ARE TO EDGE OF ROUGH OPENING. OPENING DIMENSIONS ARE NOMINAL. CONTRACTOR SHALL COORDINATE DIMENSIONS OF ALL ROUGH OPENINGS AND ACTUAL FRAME SIZES. WHERE DOOR LOCATIONS ARE NOT DIMENSIONED, SEE DETAILS REFERENCED IN DOOR SCHEDULE BY SPECIFIC CONDITION. OTHERWISE, THE HINGE SIDE OF DOOR ROUGH OPENINGS SHALL BE LOCATED 4" FROM THE ADJACENT PERPENDICULAR WALL, SUBJECT TO MAINTENANCE OF REQUIRED ADA CLEARANCES. SEE SHEET GI701.
E. SEE CIVIL, STRUCTURAL, MECHANICAL AND ELECTRICAL DRAWINGS FOR INFORMATION SPECIFIC TO THOSE TRADES THAT IS NOT DEPICTED ON THIS DRAWING.
F. WHETHER SPECIFICALLY CALLED OUT OR NOT, PROVIDE BACKING BEHIND ALL SURFACE MOUNTED EQUIPMENT AND/OR FIXTURES PER DETAIL B4/AE701.

GENERAL NOTES - INTERIOR ELEVATION

A. ENSURE THAT ALL REQUIRED FIXTURE AND CABINET CLEARANCES AND OTHER REQUIREMENTS ARE MAINTAINED PURSUANT TO ADAAG AND ANSI A117.1. SEE SHEET GI701 FOR GENERAL GUIDANCE ON COMMON MOUNTING HEIGHTS
B. PROVIDE BLOCKING / BACKING AS NECESSARY, FOR MOUNTING OF WALL-MOUNTED CABINETS, FIXTURES AND EQUIPMENT PER MANUFACTURERS RECOMMENDATION. COORDINATE THIS REQUIREMENT THROUGH ALL FLOOR PLANS, FURNISHING PLANS, EQUIPMENT PLANS, AND INTERIOR ELEVATIONS.
C. ON ALL EXPOSED CABINET SIDES, INCLUDING KNEE OPENINGS, PROVIDE FINISHED FACE TO MATCH CABINET FRONTS. SEE FINISH SCHEDULE FOR CABINET FINISHES.
D. INSULATE WATER SUPPLY AND DRAIN LINES, AND PROTECT ALL EXPOSED UNDER-COUNTER SURFACES TO ENSURE THAT THERE ARE NO SHARP OR ABRASIVE SURFACES OR EDGES.
E. ACCESSORIES PROVIDED ON OR WITHIN WALLS SHALL BE INSTALLED AND SEALED TO PREVENT MOISTURE FROM ENTERING WALL.
F. DIMENSION ALL CABINETS PER AWS STANDARDS.
G. SEE FINISH SCHEDULE FOR ALL FINISHES.

KEYNOTE - INTERIOR ELEVATION

1 METAL LAMINATE ON 3/4" SUBSTRATE. REVEALS AS NOTED ON ELEVATIONS
2 FULL HEIGHT DOOR OVER SECURITY GRILL POCKET
3 WALL TILE
4 PAINTED GYPSUM BOARD. SEE FINISH SCHEDULE
5 PAINTED METAL DOOR FRAME
6 OWNER PROVIDED FLAT PANEL TV - COORDINATE WITH OWNER'S REQUIREMENTS
7 OPERABLE PANEL SEPARATION WALLS
8 WINDOW, SEE WINDOW TYPES
9 GYPSUM BOARD CONTROL JOINT (FOR SPANS OVER 30'-0")
10 FURNITURE, NIC
11 OVERHEAD ROLLING DOOR
12 (3) FAUCET HANDWASH SINK
13 ACOUSTIC PANELS
14 SCHEDULED BASE
15 FIRE EXTINGUISHER CABINET
16 PLUMBING FIXTURE - SEE MECH DWGS FOR MORE INFORMATION
17 DOOR SWING
18 HOUSEKEEPING SINK
19 3/14" DIA STAINLESS STEEL STAND-OFFS W/ 1/2" SPACER
20 KITCHEN EQUIPMENT CASEWORK
21 KITCHEN HOOD

ARCHITECTURAL NEXUS
SALT LAKE CITY PLACERVILLE SACRAMENTO

Architectural NEXUS, Inc.
2505 East Parleys Way
Salt Lake City, Utah 84109
T 801.924.5000 F 801.924.5001
http://www.archnexus.com

Licensed Architect
PETER MOYES
No. 21 MARCH 2013
83-122248-0301
State of Utah

Original drawings remain the property of the Architect and as such the Architect retains total ownership and control. The design represented by these drawings is sold to the client for a one time use, unless otherwise agreed upon in writing by the Architect.
© Architectural Nexus, Inc. 2012

UTAH NATIONAL GUARD CAMP WILLIAMS
RTI TASS COMPLEX, PHASE II
NGB PROJECT NO. 490444
17800 SOUTH ACADEMY STREET
BLUFFDALE, UTAH 84065

#		REVISIONS
1	3.15.13	DFCM REVIEW RESPONSE
2	3.22.13	DFCM REVIEW RESPONSE #2
3	4.01.13	ADD-02

NEXUS PROJECT #:	11024
CHECKED BY:	SMS
DRAWN BY:	Author
DATE:	21 MARCH 2013

SHEET CONTENTS:
ENLARGED PLANS & INTERIOR ELEVATIONS - SERVERY

VOLUME A.1 - BID DOCUMENTS

AE403

4/12/2013 10:25:05 AM

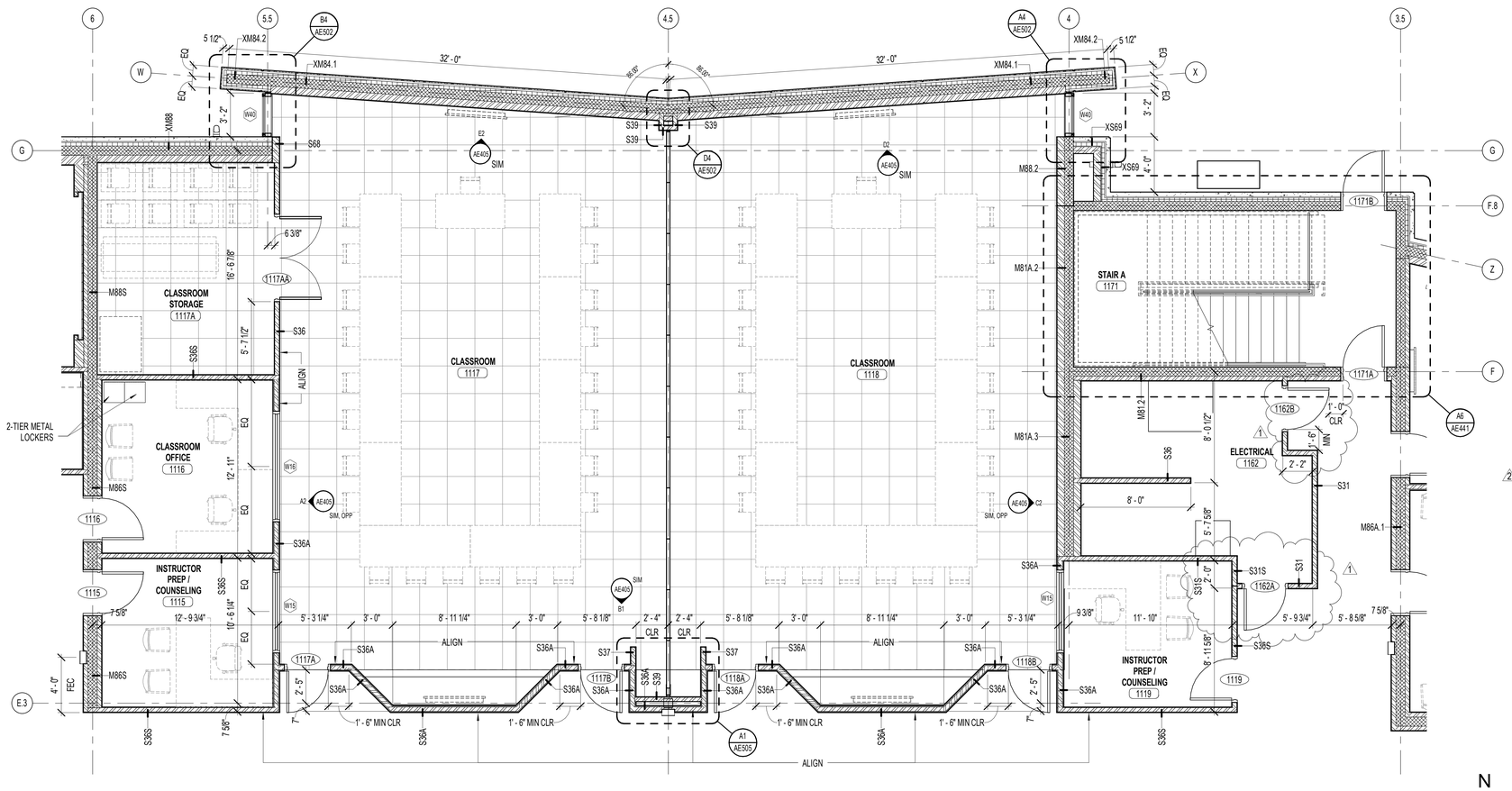

A2 AE406 **ENLARGED CLASSROOM PLAN - TYPE 2**
1/4" = 1'-0"

GENERAL NOTES - ENLARGED FLOOR PLAN

A. SEE GI SERIES SHEETS FOR REGULATORY INFORMATION, INCLUDING TYPICAL ACCESSIBILITY CLEARANCE AND COMPLIANCE REQUIREMENTS.
B. SEE DIMENSIONAL PLANS IN AE100 SERIES FOR ALIGNMENT / POSITION OF STRUCTURAL ELEMENTS AND OTHER KEY DIMENSIONS.
C. UNLESS NOTED OTHERWISE, WALL DIMENSIONS ARE TO GRID OR FACE OF STUD / STRUCTURE. "CLEAR" DIMENSIONS ARE TO FACE OF FINISH.
D. WHERE PROVIDED, DOOR AND WINDOW DIMENSIONS ARE TO EDGE OF ROUGH OPENING. OPENING DIMENSIONS ARE NOMINAL. CONTRACTOR SHALL COORDINATE DIMENSIONS OF ALL ROUGH OPENINGS AND ACTUAL FRAME SIZES. WHERE DOOR LOCATIONS ARE NOT DIMENSIONED, SEE DETAILS REFERENCED IN DOOR SCHEDULE BY SPECIFIC CONDITION. OTHERWISE, THE HINGE SIDE OF DOOR ROUGH OPENINGS SHALL BE LOCATED 4" FROM THE ADJACENT PERPENDICULAR WALL, SUBJECT TO MAINTENANCE OF REQUIRED ADA CLEARANCES. SEE SHEET GI701.
E. SEE CIVIL, STRUCTURAL, MECHANICAL AND ELECTRICAL DRAWINGS FOR INFORMATION SPECIFIC TO THOSE TRADES THAT IS NOT DEPICTED ON THIS DRAWING.
F. WHETHER SPECIFICALLY CALLED OUT OR NOT, PROVIDE BACKING BEHIND ALL SURFACE MOUNTED EQUIPMENT AND/OR FIXTURES PER DETAIL B4/AE701.

GENERAL NOTES - INTERIOR ELEVATION

A. ENSURE THAT ALL REQUIRED FIXTURE AND CABINET CLEARANCES AND OTHER REQUIREMENTS ARE MAINTAINED PURSUANT TO ADAAG AND ANSI A117.1. SEE SHEET GI701 FOR GENERAL GUIDANCE ON COMMON MOUNTING HEIGHTS
B. PROVIDE BLOCKING / BACKING AS NECESSARY, FOR MOUNTING OF WALL-MOUNTED CABINETS, FIXTURES AND EQUIPMENT PER MANUFACTURERS RECOMMENDATION. COORDINATE THIS REQUIREMENT THROUGH ALL FLOOR PLANS, FURNISHING PLANS, EQUIPMENT PLANS, AND INTERIOR ELEVATIONS.
C. ON ALL EXPOSED CABINET SIDES, INCLUDING KNEE OPENINGS, PROVIDE FINISHED FACE TO MATCH CABINET FRONTS. SEE FINISH SCHEDULE FOR CABINET FINISHES.
D. INSULATE WATER SUPPLY AND DRAIN LINES, AND PROTECT ALL EXPOSED UNDER-COUNTER SURFACES TO ENSURE THAT THERE ARE NO SHARP OR ABRASIVE SURFACES OR EDGES.
E. ACCESSORIES PROVIDED ON OR WITHIN WALLS SHALL BE INSTALLED AND SEALED TO PREVENT MOISTURE FROM ENTERING WALL.
F. DIMENSION ALL CABINETS PER AWS STANDARDS.
G. SEE FINISH SCHEDULE FOR ALL FINISHES.

KEYNOTE - INTERIOR ELEVATION

1 METAL LAMINATE ON 3/4" SUBSTRATE. REVEALS AS NOTED ON ELEVATIONS
2 FULL HEIGHT DOOR OVER SECURITY GRILL POCKET
3 WALL TILE
4 PAINTED GYPSUM BOARD. SEE FINISH SCHEDULE
5 PAINTED METAL DOOR FRAME
6 OWNER PROVIDED FLAT PANEL TV - COORDINATE WITH OWNER'S REQUIREMENTS
7 OPERABLE PANEL SEPARATION WALLS
8 WINDOW, SEE WINDOW TYPES
9 GYPSUM BOARD CONTROL JOINT (FOR SPANS OVER 30'-0")
10 FURNITURE, NIC
11 OVERHEAD ROLLING DOOR
12 (3) FAUCET HANDWASH SINK
13 ACOUSTIC PANELS
14 SCHEDULED BASE
15 FIRE EXTINGUISHER CABINET
16 PLUMBING FIXTURE - SEE MECH DWGS FOR MORE INFORMATION
17 DOOR SWING
18 HOUSEKEEPING SINK
19 3/14" DIA STAINLESS STEEL STAND-OFFS W/ 1/2" SPACER
20 KITCHEN EQUIPMENT CASEWORK
21 KITCHEN HOOD

ARCHITECTURAL NEXUS
SALT LAKE CITY PLACERVILLE SACRAMENTO

Architectural NEXUS, Inc.
2505 East Parleys Way
Salt Lake City, Utah 84109
T 801.924.5000 F 801.924.5001
http://www.archnexus.com

Licensed Architect
PETER MOYES
No. 83-122248-0301
21 MARCH 2013
State of Utah

Original drawings remain the property of the Architect and as such the Architect retains total ownership and control. The design represented by these drawings is sold to the client for a one time use, unless otherwise agreed upon in writing by the Architect.
© Architectural Nexus, Inc. 2012

UTAH NATIONAL GUARD CAMP WILLIAMS
RTI TASS COMPLEX, PHASE II
NGB PROJECT NO. 490444
17800 SOUTH ACADEMY STREET
BLUFFDALE, UTAH 84065

#	REVISIONS	
1	3.22.13	DFCM REVIEW RESPONSE #2
2	4.01.13	ADD-02

NEXUS PROJECT #:	11024
CHECKED BY:	SMS
DRAWN BY:	Author
DATE:	21 MARCH 2013

SHEET CONTENTS:
ENLARGED PLANS & INTERIOR ELEVATIONS - CLASSROOM

VOLUME A.1 - BID DOCUMENTS

AE406

4/1/2013 10:25:09 AM

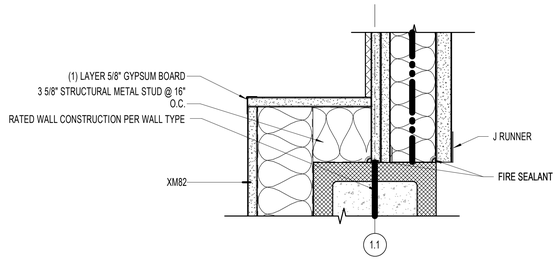

D2 AE503 **PLAN DETAIL (LVL 1, GRID B.8/1.1)**
3" = 1'-0"

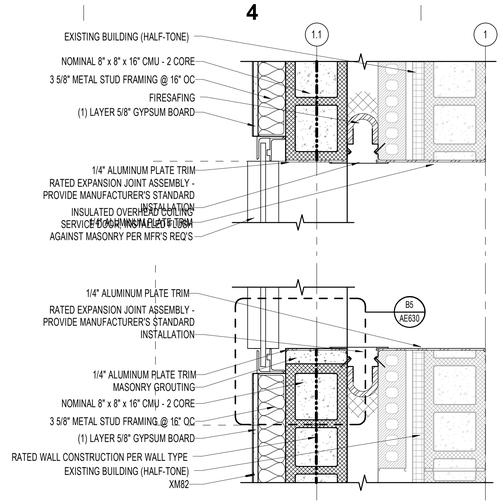

D4 AE503 **PLAN DETAIL (LVL 1, GRID E.8/1.1)**
1 1/2" = 1'-0"

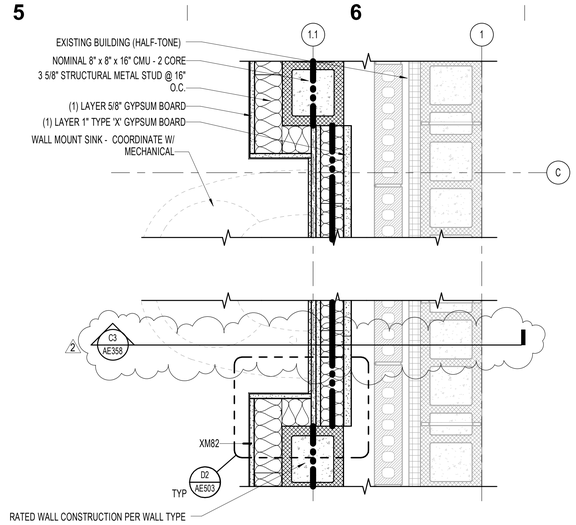

D5 AE503 **PLAN DETAIL (LVL 1, GRID C/1.1)**
1 1/2" = 1'-0"

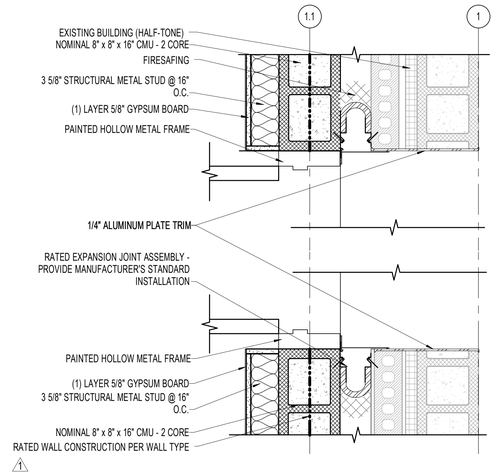

B4 AE503 **PLAN DETAIL (LVL 1, GRID E/1.1)**
1 1/2" = 1'-0"

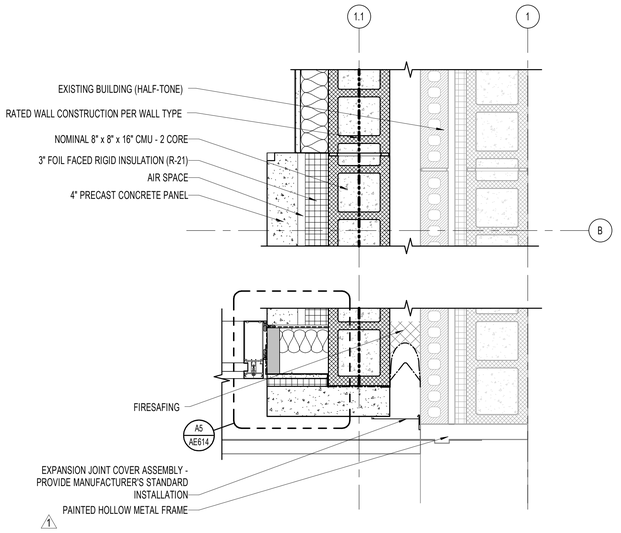

B5 AE503 **PLAN DETAIL (LVL 1, GRID B/1.1)**
1 1/2" = 1'-0"

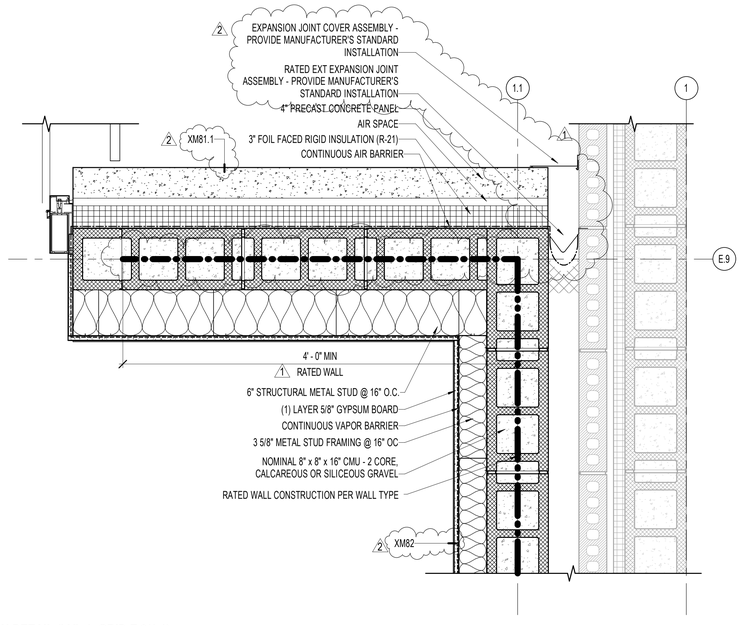

A1 AE503 **PLAN DETAIL (LVL 1, GRID E.9/1.1)**
1 1/2" = 1'-0"

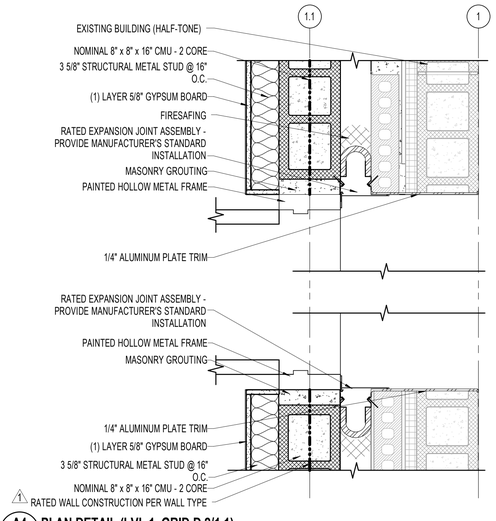

A4 AE503 **PLAN DETAIL (LVL 1, GRID D.2/1.1)**
1 1/2" = 1'-0"

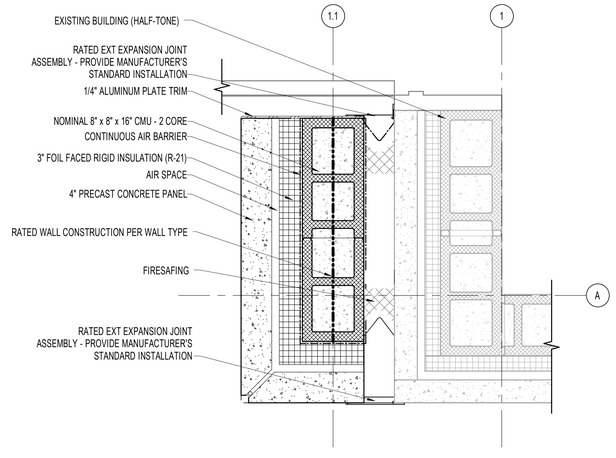

A5 AE503 **PLAN DETAIL (LVL 1, GRID A/1.1)**
1 1/2" = 1'-0"

4/1/2013 10:25:22 AM

ARCHITECTURAL NEXUS
SALT LAKE CITY PLACERVILLE SACRAMENTO

Architectural NEXUS, Inc.
2505 East Parleys Way
Salt Lake City, Utah 84109
T 801.924.5000 F 801.924.5001
http://www.archnexus.com

Licensed Architect
PETER MOYES
No. 83-122248-0301
21 MARCH 2013
State of Utah

Original drawings remain the property of the Architect and as such the Architect retains total ownership and control. The design represented by these drawings is sold to the client for a one time use, unless otherwise agreed upon in writing by the Architect.
© Architectural Nexus, Inc. 2012

UTAH NATIONAL GUARD CAMP WILLIAMS
RTI TASS COMPLEX, PHASE II
NGB PROJECT NO. 490444
17800 SOUTH ACADEMY STREET
BLUFFDALE, UTAH 84065

REVISIONS

1	3.15.13	DFCM REVIEW RESPONSE
2	3.22.13	DFCM REVIEW RESPONSE #2

NEXUS PROJECT #:	11024
CHECKED BY:	SMS
DRAWN BY:	RM
DATE:	21 MARCH 2013

SHEET CONTENTS:
EXTERIOR PLAN DETAILS

VOLUME A.1 - BID DOCUMENTS

AE503

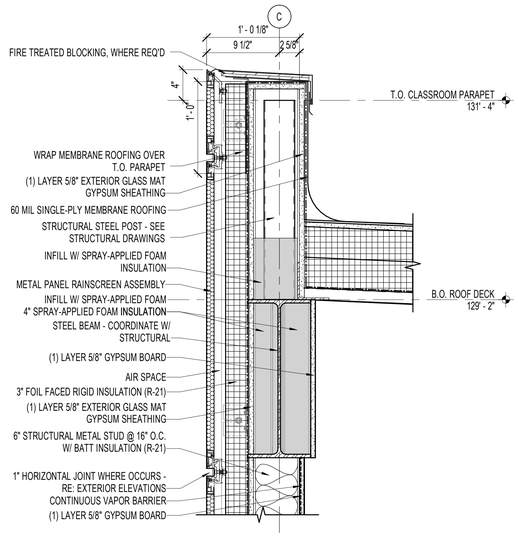

D3 AE514 **SECTION DETAIL (PARAPET @ METAL PANEL, CMU)**
1 1/2" = 1'-0"

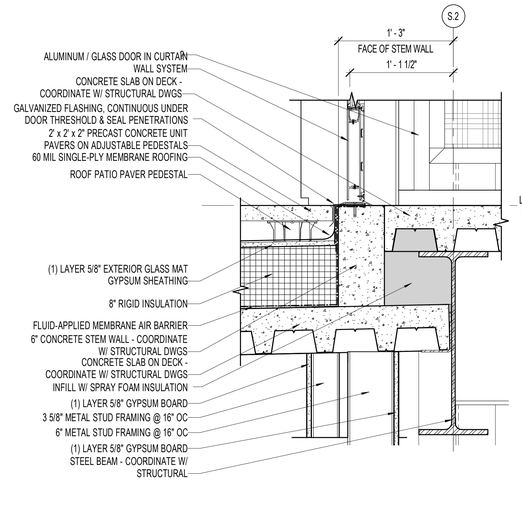

D4 AE514 **SECTION DETAIL (THRESHOLD @ PATIO)**
1 1/2" = 1'-0"

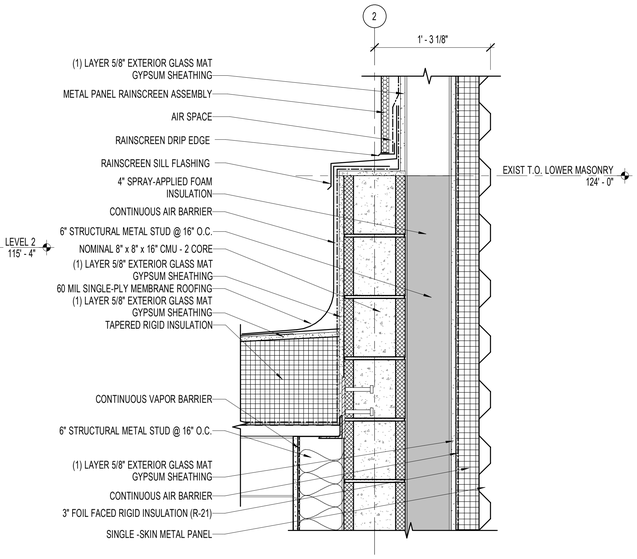

D5 AE514 **SECTION DETAIL (ROOF @ QUEUING)**
1 1/2" = 1'-0"

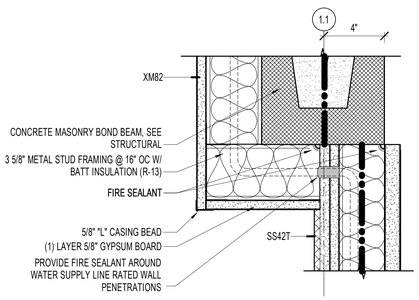

C1 AE514 **SECTION DETAIL (LVL 1, GRID B.9/1.1) @ 7' A.F.F.**
3" = 1'-0"

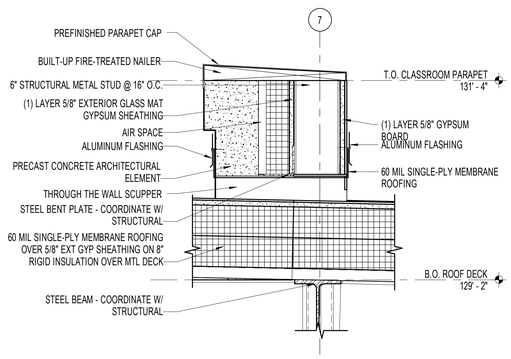

C3 AE514 **ROOF DETAIL (THRU-WALL DRAIN)**
1 1/2" = 1'-0"

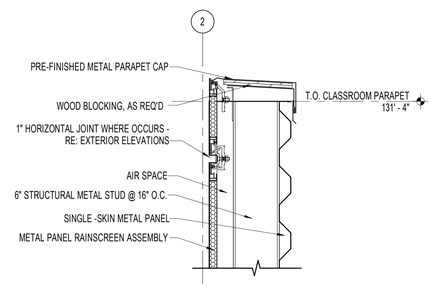

C4 AE514 **SECTION DETAIL (PARAPET @ MECH SCREEN)**
1 1/2" = 1'-0"

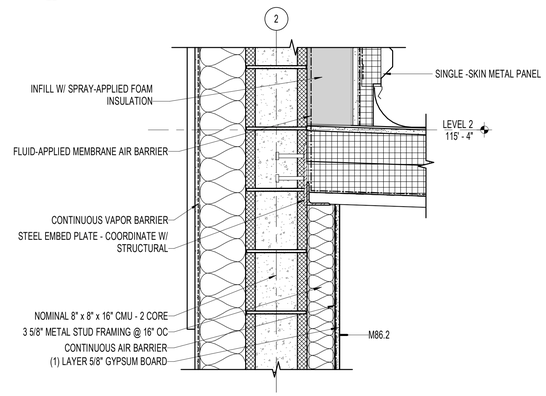

B5 AE514 **SECTION DETAIL (ROOF @ GRID C.6/2)**
1 1/2" = 1'-0"

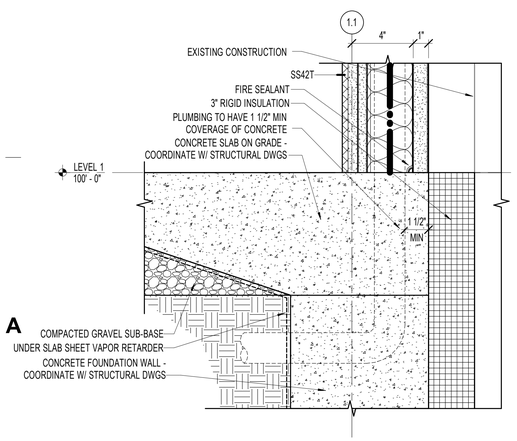

A1 AE514 **SECTION DETAIL (LVL 1, GRID B.9/1.1)**
3" = 1'-0"

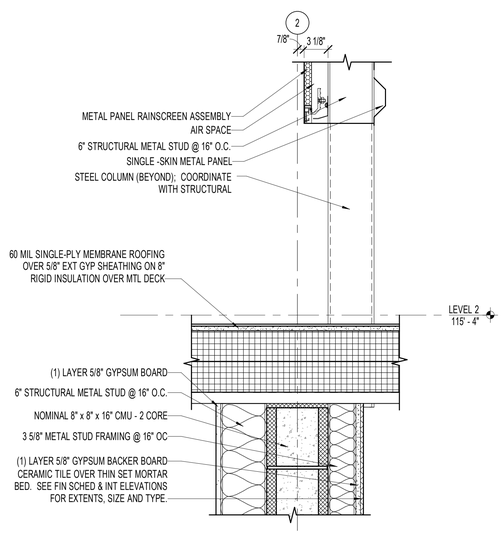

A3 AE514 **SECTION DETAIL (ROOF @ MECH SCREEN)**
1 1/2" = 1'-0"

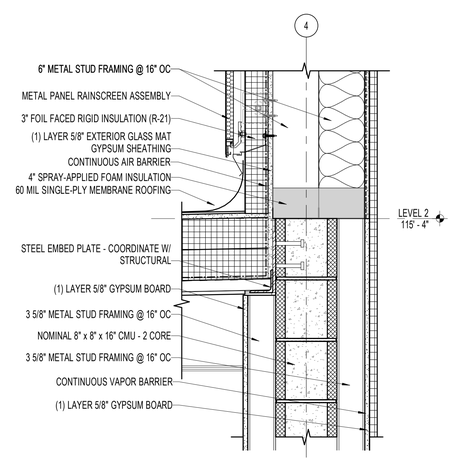

A4 AE514 **SECTION DETAIL (ROOF @ GRID 4/B.8)**
1 1/2" = 1'-0"

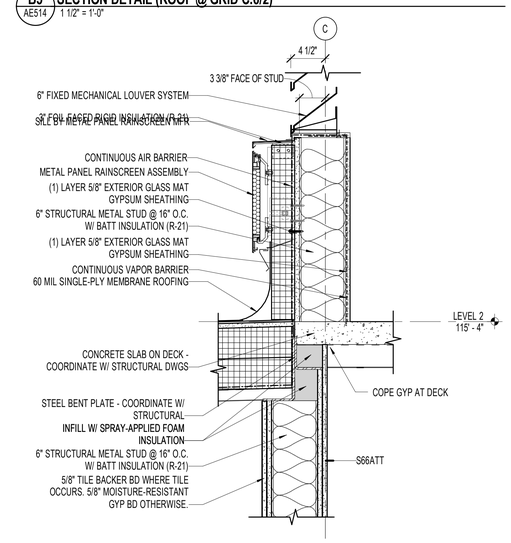

A5 AE514 **SECTION DETAIL (ROOF @ GRID 3.5/B.5)**
1 1/2" = 1'-0"

4/1/2013 10:25:39 AM

ARCHITECTURAL NEXUS
SALT LAKE CITY PLACERVILLE SACRAMENTO

Architectural NEXUS, Inc.
2505 East Parleys Way
Salt Lake City, Utah 84109
T 801.924.5000 F 801.924.5001
http://www.archnexus.com

Licensed Architect
PETER MOYES
No. 7246
21 MARCH 2013
83-122248-0301
State of Utah

Original drawings remain the property of the Architect and as such the Architect retains total ownership and control. The design represented by these drawings is sold to the client for a one time use, unless otherwise agreed upon in writing by the Architect.
© Architectural Nexus, Inc. 2012

UTAH NATIONAL GUARD CAMP WILLIAMS
RTI TASS COMPLEX, PHASE II
NGB PROJECT NO. 490444
17800 SOUTH ACADEMY STREET
BLUFFDALE, UTAH 84065

#	REVISIONS	
1	4.01.13	ADD-02

NEXUS PROJECT #:	11024
CHECKED BY:	SMS
DRAWN BY:	RM
DATE:	21 MARCH 2013

SHEET CONTENTS:
SECTION DETAILS

VOLUME A.1 - BID DOCUMENTS

AE514

1 2 3 4 5 6

DOOR SCHEDULE

	DOOR				FRAME								
	SIZE					DETAIL			FIRE		HARDWARE		
NUMBER	WIDTH	HEIGHT	TYPE	FINISH	TYPE	HEAD	JAMB	FINISH	RATING	STC	GROUP	NOTES	NUMBER
1100A	6' - 0"	7' - 0"	AD01		W35	C3/AE630	B3/AE630				AL-A01		1100A
1100B	6' - 0"	7' - 0"	AD01		W38	C3/AE630 SIM	B3/AE630 SIM				AL-A02		1100B
1104A	6' - 0"	9' - 0"	CD02		-	B5/AE632	A6/AE632		90 MIN		BY MFGR		1104A
1104B	6' - 2"	7' - 0"	WD01		DH01	E6/AE631	D6/AE631		90 MIN		A09	2	1104B
1104C	3' - 0"	7' - 0"	SF02		W41	C3/AE630	A1/AE613 A2/AE613				A04		1104C
1106A	3' - 0"	7' - 0"	WS02		SH01	E6/AE630	D6/AE630				A19		1106A
1106B	1' - 2"	7' - 0"	WS02		-						A01		1106B
1110	3' - 0"	7' - 0"	WS01		SH01	E6/AE630	D6/AE630			45	STC-A01		1110
1111A	3' - 0"	7' - 0"	WS01		SH01	E5/AE630	D5/AE630			50	STC-A06		1111A
1111B	3' - 0"	7' - 0"	WS01		SH01	E5/AE630	D5/AE630			50	STC-A06		1111B
1112A	3' - 0"	7' - 0"	WS01		SH01	E5/AE630	D5/AE630			50	STC-A06		1112A
1112AA	6' - 0"	7' - 0"	WD02		DH01	E6/AE630	D6/AE630				A22		1112AA
1112B	3' - 0"	7' - 0"	WS01		SH01	E5/AE630	D5/AE630			50	STC-A06		1112B
1113	3' - 0"	7' - 0"	WS01		SH01	E6/AE630	D6/AE630			45	STC-A01		1113
1114	3' - 0"	7' - 0"	WS02		SH01	E6/AE630	D6/AE630			45	STC-A01		1114
1115	3' - 0"	7' - 0"	WS01		SH01	E5/AE631	D5/AE631			45	STC-A01		1115
1116	3' - 0"	7' - 0"	WS02		SH01	E5/AE631	D5/AE631			45	STC-A01		1116
1117A	3' - 0"	7' - 0"	WS01		SH01	E5/AE630	D5/AE630			50	STC-06		1117A
1117AA	6' - 0"	7' - 0"	WD02		DH01	E6/AE630	D6/AE630				A22		1117AA
1117B	3' - 0"	7' - 0"	WS01		SH01	E5/AE630	D5/AE630			50	STC-A06		1117B
1118A	3' - 0"	7' - 0"	WS01		SH01	E5/AE630	D5/AE630			50	STC-A06		1118A
1118B	3' - 0"	7' - 0"	WS01		SH01	E5/AE630	D5/AE630			50	STC-A06		1118B
1119	3' - 0"	7' - 0"	WS01		SH01	E6/AE630	D6/AE630			45	STC-A01		1119
1130	3' - 0"	7' - 0"	WS01		SH01	E6/AE630	D6/AE630			45	STC-A02		1130
1132A	3' - 0"	7' - 0"	WS02		SH01	E6/AE630	D6/AE630				A17		1132A
1134A	3' - 0"	7' - 0"	WS02		SH01	E6/AE630	D6/AE630			45	STC-A01		1134A
1134B	6' - 0"	7' - 0"	BF01		-						A29		1134B
1134C	6' - 0"	7' - 0"	BF01		-						A29		1134C
1135	3' - 0"	7' - 0"	WS02		SH01	E6/AE630	D6/AE630			45	STC-A03		1135
1136A	3' - 0"	7' - 0"	WS02		SH01	E6/AE630	D6/AE630			45	STC-A01		1136A
1136B	6' - 0"	7' - 0"	BF01		-						A29		1136B
1136C	6' - 0"	7' - 0"	BF01		-						A29		1136C
1137	3' - 0"	7' - 0"	WS02		SH01	E3/AE630	D3/AE630			50	STC-A04		1137
1138	3' - 0"	7' - 0"	WS02		SH01	E3/AE630	D3/AE630			50	STC-A04		1138
1139	3' - 0"	7' - 0"	WS02		SH01	E5/AE631	D5/AE631			45	STC-A03		1139
1140A	6' - 0"	7' - 0"	HD01		DH01	C4/AE630	B4/AE630			50	STC-A05	3	1140A
1140B	3' - 0"	7' - 0"	HS01		SH01	D1/AE631	D3/AE631 D4/AE631				A05		1140B
1140C	10' - 8"	12' - 0"	CD01		-	B3/AE632	A4/AE632				A01		1140C
1141A	4' - 4"	7' - 0"	HS01		SH01	D1/AE631	D3/AE631 D4/AE631				A06		1141A
1142	3' - 0"	7' - 0"	WS02		SH01	E5/AE630	D5/AE630				A31		1142
1142A	3' - 0"	7' - 0"	WS02		SH01	E4/AE630	D4/AE630				A31		1142A
1142B	3' - 0"	7' - 0"	WS02		SH01	E4/AE630	D4/AE630				A31		1142B
1143	3' - 0"	7' - 0"	WS01		SH01	E5/AE631 SIM	D5/AE631 SIM			50	STC-A01		1143
1144A	3' - 0"	7' - 0"	WS01		SH01	E5/AE631 SIM	D5/AE631 SIM			50	STC-A01		1144A
1144B	3' - 0"	7' - 0"	WS02		SH02	C4/AE630	B4/AE630 SIM			50	STC-A01		1144B
1145A	6' - 0"	7' - 0"	WD02		DH01	E6/AE630	D6/AE630				A23		1145A
1145AA	3' - 0"	7' - 0"	HS01		SH01	C6/AE631	B6/AE631				A17		1145AA
1145B	3' - 0"	7' - 0"	WS02		SH01	E6/AE630	D6/AE630				A24		1145B
1145C	3' - 0"	7' - 0"	WS02		SH01	C5/AE631	B5/AE631				A25		1145C
1145D	3' - 6"	7' - 0"	HS02		SH01	C5/AE630	B5/AE630				A29		1145D
1145E	3' - 6"	7' - 0"	HS02		SH01	C5/AE630	B5/AE630				A29		1145E
1146	3' - 0"	7' - 0"	WS02		SH01	E6/AE630	D6/AE630				A26		1146
1147	3' - 0"	7' - 0"	WS02		SH01	E6/AE630	D6/AE630				A26		1147
1148	3' - 0"	7' - 0"	WS02		SH01	E3/AE630	D3/AE630				A32		1148
1150	3' - 0"	7' - 0"	WS02		SH01	E6/AE630	D6/AE630				A26		1150
1151	3' - 0"	7' - 0"	WS02		SH01	C6/AE630	B6/AE630			45	A28		1151
1154A	6' - 0"	7' - 0"	AD01		W01	C3/AE630 SIM	B3/AE630 SIM B2/AE630				AL-A03		1154A
1154B	6' - 4"	7' - 0"	HD01		DH01	E6/AE631	D6/AE631		90 MIN		A10		1154B
1155A	0' - 6"	8' - 10"	GATE		-						A01		1155A
1155B	0' - 6"	8' - 10"	GATE		-						A01		1155B
1156A	6' - 0"	7' - 0"	AD01		W39	C3/AE630 SIM	B3/AE630 SIM				AL-A06		1156A
1156AA	3' - 0"	7' - 0"	WS02		SH01	E6/AE630	D6/AE630				A17		1156AA
1156B	6' - 4"	7' - 0"	WD03		DH01	E5/AE631 SIM	D5/AE631 SIM				A33		1156B
1156C	6' - 0"	7' - 0"	AD01		W03	C3/AE630 SIM	B3/AE630 SIM				AL-A04		1156C
1157	3' - 0"	6' - 10"	SF22		WD01	E2/AE630	D2/AE630				A17		1157
1158	3' - 0"	7' - 0"	WS02		SH01	E2/AE630	D2/AE630				A17		1158

DOOR SCHEDULE

	DOOR				FRAME								
	SIZE					DETAIL			FIRE		HARDWARE		
NUMBER	WIDTH	HEIGHT	TYPE	FINISH	TYPE	HEAD	JAMB	FINISH	RATING	STC	GROUP	NOTES	NUMBER
1160	3' - 0"	7' - 0"	WS02		SH01	E6/AE630	D6/AE630				A27		1160
1161	3' - 0"	7' - 0"	WS02		SH01	E6/AE630	D6/AE630				A27		1161
1162A	3' - 0"	7' - 0"	WS02		SH01	E6/AE630	D6/AE630		45 MIN		A11		1162A
1162B	3' - 0"	7' - 0"	WS02		SH01	E6/AE630	D6/AE630		45 MIN		A11		1162B
1163	3' - 0"	7' - 0"	WS02		SH01	E6/AE630	D6/AE630				A17		1163
1164	3' - 0"	7' - 0"	WS02		SH01	E4/AE630	D4/AE630				A30		1164
1165	3' - 0"	7' - 0"	WS02		SH01	E4/AE630	D4/AE630				A30		1165
1166	3' - 0"	7' - 0"	WS02		SH01	E6/AE630	D6/AE630				A17		1166
1171A	3' - 0"	7' - 0"	WS01		SH01	E6/AE631 SIM	D6/AE631 SIM		45 MIN		A12		1171A
1171B	3' - 0"	7' - 0"	HS01		SH01	C4/AE631	B3/AE631 B4/AE631				A04	1	1171B
1172A	3' - 0"	7' - 0"	WS01		SH01	E6/AE631 SIM	D6/AE631 SIM		45 MIN		A12		1172A
1172B	6' - 0"	7' - 0"	HD01		DH01	C4/AE631	B3/AE631 B4/AE631				A03	1	1172B
1172C	5' - 0"	2' - 6"	GS01		-						NONE		1172C
1173	3' - 0"	7' - 0"	WS02		SH01	E5/AE631	D5/AE631		45 MIN		A14		1173
1176	3' - 0"	7' - 0"	WS02		SH01	E5/AE631	D5/AE631		0		A14		1176
1201A	3' - 0"	7' - 0"	AS01		SA01	C1/AE630	B1/AE630				AL-A07		1201A
1204A	6' - 0"	9' - 0"	CD02		-	B5/AE632	A6/AE632		90 MIN		BY MFGR		1204A
1204B	3' - 0"	7' - 0"	WS01		SH01	E6/AE631 SIM	D6/AE631 SIM		90 MIN		A15		1204B
1206A	3' - 0"	7' - 0"	WS01		SH01	E6/AE630	D6/AE630				A19		1206A
1206B	1' - 2"	7' - 0"	WS02		-						A01		1206B
1210	3' - 0"	7' - 0"	WS01		SH01	E6/AE630	D6/AE630			45	STC-A01		1210
1211A	3' - 0"	7' - 0"	WS01		SH01	E5/AE630	D5/AE630			50	STC-A06		1211A
1211B	3' - 0"	7' - 0"	WS01		SH01	E5/AE630	D5/AE630			50	STC-A06		1211B
1212A	3' - 0"	7' - 0"	WS01		SH01	E5/AE630	D5/AE630			50	STC-A06		1212A
1212AA	6' - 0"	7' - 0"	WD02		DH01	E6/AE630	D6/AE630				A22		1212AA
1212B	3' - 0"	7' - 0"	WS01		SH01	E5/AE630	D5/AE630			50	STC-A06		1212B
1213	3' - 0"	7' - 0"	WS01		SH01	E6/AE630	D6/AE630			45	STC-A01		1213
1214	3' - 0"	7' - 0"	WS02		SH01	E6/AE630	D6/AE630			45	STC-A01		1214
1215	3' - 0"	7' - 0"	WS01		SH01	E5/AE631	D5/AE631			45	STC-A01		1215
1216	3' - 0"	7' - 0"	WS02		SH01	E5/AE631	D5/AE631			45	STC-A01		1216
1217A	3' - 0"	7' - 0"	WS01		SH01	E5/AE630	D5/AE630			50	STC-A06		1217A
1217AA	6' - 0"	7' - 0"	WD02		DH01	E6/AE630	D6/AE630				A22		1217AA
1217B	3' - 0"	7' - 0"	WS01		SH01	E5/AE630	D5/AE630			50	STC-A06		1217B
1218A	3' - 0"	7' - 0"	WS01		SH01	E5/AE630	D5/AE630			50	STC-A06		1218A
1218B	3' - 0"	7' - 0"	WS01		SH01	E5/AE630	D5/AE630			50	STC-A06		1218B
1219	3' - 0"	7' - 0"	WS01		SH01	E6/AE630	D6/AE630			45	STC-A01		1219
1230	3' - 0"	7' - 0"	WS01		SH01	E6/AE630	D6/AE630			45	STC-A02		1230
1232A	3' - 0"	7' - 0"	WS02		SH01	E6/AE630	D6/AE630				A17		1232A
1234A	3' - 0"	7' - 0"	WS02		SH01	E6/AE630	D6/AE630			45	STC-A01		1234A
1234B	6' - 0"	7' - 0"	BF01		-						A29		1234B
1234C	6' - 0"	7' - 0"	BF01		-						A29		1234C
1235	3' - 0"	7' - 0"	WS02		SH01	E6/AE630	D6/AE630			45	STC-A03		1235
1236A	3' - 0"	7' - 0"	WS02		SH01	E6/AE630	D6/AE630			45	STC-A01		1236A
1236B	6' - 0"	7' - 0"	BF01		-						A29		1236B
1236C	6' - 0"	7' - 0"	BF01		-						A29		1236C
1237	3' - 0"	7' - 0"	WS02		SH01	E3/AE630	D3/AE630			50	STC-A04		1237
1238	3' - 0"	7' - 0"	WS02		SH01	E3/AE630	D3/AE630			50	STC-A04		1238
1239	3' - 0"	7' - 0"	WS02		SH01	E5/AE631	D5/AE631			45	STC-A03		1239
1256A	6' - 4"	7' - 0"	WD03		DH01	E5/AE631 SIM	D5/AE631 SIM				A34		1256A
1256AA	3' - 0"	7' - 0"	WS02		SH01	E6/AE630	D6/AE630				A17		1256AA
1256B	6' - 4"	7' - 0"	WD03		DH01	E5/AE631 SIM	D5/AE631 SIM				A34		1256B
1257A	3' - 0"	7' - 0 1/2"	AS01		W32	C3/AE630	B3/AE630				AL-A05		1257A
1257B	3' - 0"	7' - 0 1/2"	AS01		W32	C3/AE630	B3/AE630				AL-A05		1257B
1260	3' - 0"	7' - 0"	WS02		SH01	E6/AE630	D6/AE630				A24		1260
1261	3' - 0"	7' - 0"	WS02		SH01	E6/AE630	D6/AE630				A24		1261
1262	3' - 0"	7' - 0"	WS02		SH01	E6/AE630	D6/AE630		45 MIN		A18		1262
1263	3' - 0"	7' - 0"	WS02		SH01	E6/AE630	D6/AE630				A17		1263
1264	3' - 0"	7' - 0"	WS02		SH01	E4/AE630	D4/AE630				A30		1264
1265	3' - 0"	7' - 0"	WS02		SH01	E4/AE630	D4/AE630				A30		1265
1266A	3' - 0"	7' - 0"	WS02		SH01	E6/AE632	D6/AE632				A17		1266A
1266B	3' - 0"	5' - 10"	HS01		SH01	E5/AE632	D5/AE632				A07	1	1266B
1267	3' - 8"	7' - 0"	WS02		SH01	E5/AE631 SIM	D5/AE631 SIM		45 MIN	45	A17		1267
1268A	3' - 0"	7' - 0"	HS01		SH01	E6/AE630	D6/AE630				A16		1268A
1268B	3' - 0"	7' - 0"	HS01		SH01	E6/AE630	D6/AE630				A16		1268B
1269A	3' - 0"	7' - 0"	HS01		SH01	E6/AE630	D6/AE630				A20		1269A
1269B	6' - 0"	7' - 0"	HD01		DH01	E3/AE632	D3/AE632				A21	1	1269B
1271	3' - 0"	7' - 0"	WS01		SH01	E6/AE631 SIM	D6/AE631 SIM		45 MIN		A12		1271
1272	3' - 0"	7' - 0"	WS01		SH01	E6/AE631 SIM	D6/AE631 SIM		45 MIN		A12		1272

BASEMENT (ADD/ALT) DOOR SCHEDULE

	DOOR				FRAME								
	SIZE					DETAIL			FIRE		HARDWARE		
NUMBER	WIDTH	HEIGHT	TYPE	FINISH	TYPE	HEAD	JAMB	FINISH	RATING	STC	GROUP	NOTES	NUMBER
1006B	1' - 2"	7' - 0"	WS02		-						A01		1006B
1063	3' - 0"	7' - 0"	WS02		SH01						A17		1063
1064	3' - 0"	7' - 0"	WS02		SH01						A30		1064
1065	3' - 0"	7' - 0"	WS02		SH01						A30		1065
1066	3' - 0"	7' - 0"	WS02		SH01						A17		1066
1072	3' - 0"	7' - 0"	WS01		SH01				45 MIN		A13		1072
1076	3' - 0"	7' - 0"	WS01		SH01				45 MIN		A15		1076

GENERAL NOTES - DOOR AND WINDOW

A. FRAME DIMENSIONS SHOWN ARE NOMINAL. CONTRACTOR SHALL COORDINATE DIMENSIONS OF ALL ROUGH OPENINGS AND ACTUAL FRAME SIZES. FIELD VERIFY ALL DIMENSIONS PRIOR TO SHOP DRAWING SUBMITTAL & SUBSEQUENT FABRICATION OF ALL DOOR AND WINDOW FRAMES.
B. PROVIDE CLEARANCE REQUIRED BY ACCESSIBILITY CODES ANSI A117.1 AND ADAAG AT ALL DOORS, AS DEPICTED IN DETAILS ON SHEET G70x.
C. DO NOT SCALE DRAWINGS
D. SEE SPECIFICATION SECTION 087100 FOR HARDWARE GROUP DEFINITIONS.
E. DOOR LITE DIMENSIONS SHOWN REPRESENT THE FINISHED CLEAR GLAZED OPENING BETWEEN TRIM ELEMENTS.
F. UNLESS NOTED OTHEWISE ON FLOOR PLANS, THE DIMENSION FROM THE HINGE-SIDE OF A DOOR FRAME OPENING SHALL TYPICALY BE 4" FROM THE NEAREST PERPENDICULAR WALL SURFACE, EXCEPT THAT THIS DIMENSION SHALL BE ADJUSTED AS NECESSARY TO ACCOMMODATE THE NECESSARY ACCESSIBLE CLEARANCE TO ANY OBSTRUCTION ON THE LATCH SIDE OF THE DOOR.
G. SEE GLAZING DESCRIPTIONS IN SPECIFICATIONS.
H. GLAZING SHALL HAVE THE NFRC LABEL LISTING THE U-FACTOR AND SOLAR HEAT GAIN COEFFICIENT OF THE GLAZING SYSTEM.

DOOR SCHEDULE NOTES

1	INSULATED DOOR
2	MATCH DOOR OPENING WIDTH OF EXISTING DOOR
3	HM DOOR W/ WOOD VENEER TO MATCH WD02

DOOR SCHEDULE LEGEND

FRAME: TYPE	
S	SINGLE SWING
D	DOUBLE SWING
R	ROLLER
O	OVERHEAD
F	FOLDING PAIRED ACOUSTICAL PANELS
E	ELEVATOR
ES	ELEVATOR SMOKE
ST	STAIR BARRIER GATE
L	UNBALANCED LEAF
FRAME AND DOOR MATERIAL	
M	HOLLOW METAL
A	ALUMINUM
W	WOOD
F	FIBERGLASS
G	GALVANIZED STEEL

GLASS TYPES

1	1/4" CLEAR GLASS
2	1/4" CLEAR GLASS, TEMPERED
3	1/4" CLEAR GLASS, RATED
4	1/4" HALF SILVERED REFLECTIVE GLASS
5	7/16" CLEAR LAMINATED GLASS, TEMPERED
6	1 1/8" INSULATING-LAMINATED GLASS
7	1 1/8" INSULATING-LAMINATED GLASS, TEMPERED
8	1 1/8" INSULATING-LAMINATED GLASS, SPANDRAL
9	1 1/8" INSULATING-LAMINATED GLASS, FRITTED
10	1 1/8" INSULATING-LAMINATED GLASS, TEMPERED & FRITTED

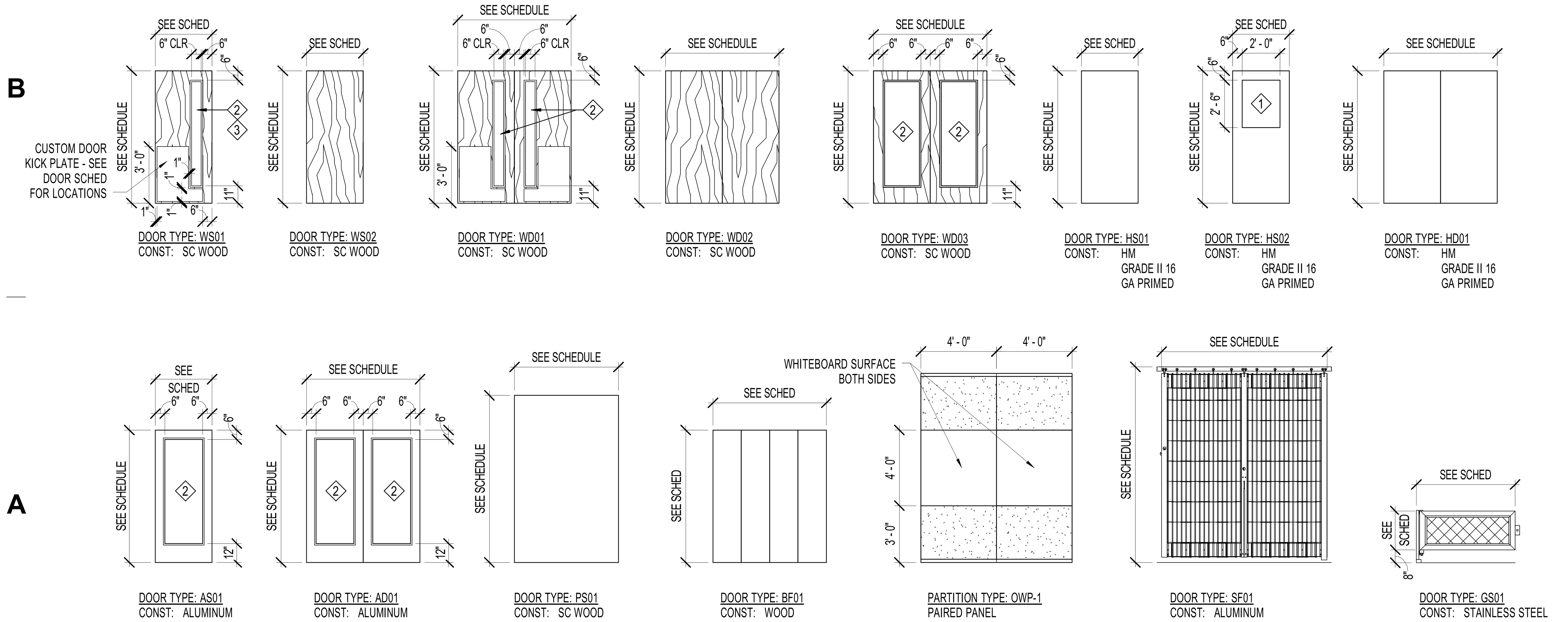

A1 DOOR TYPES
AE601 1/4" = 1'-0"

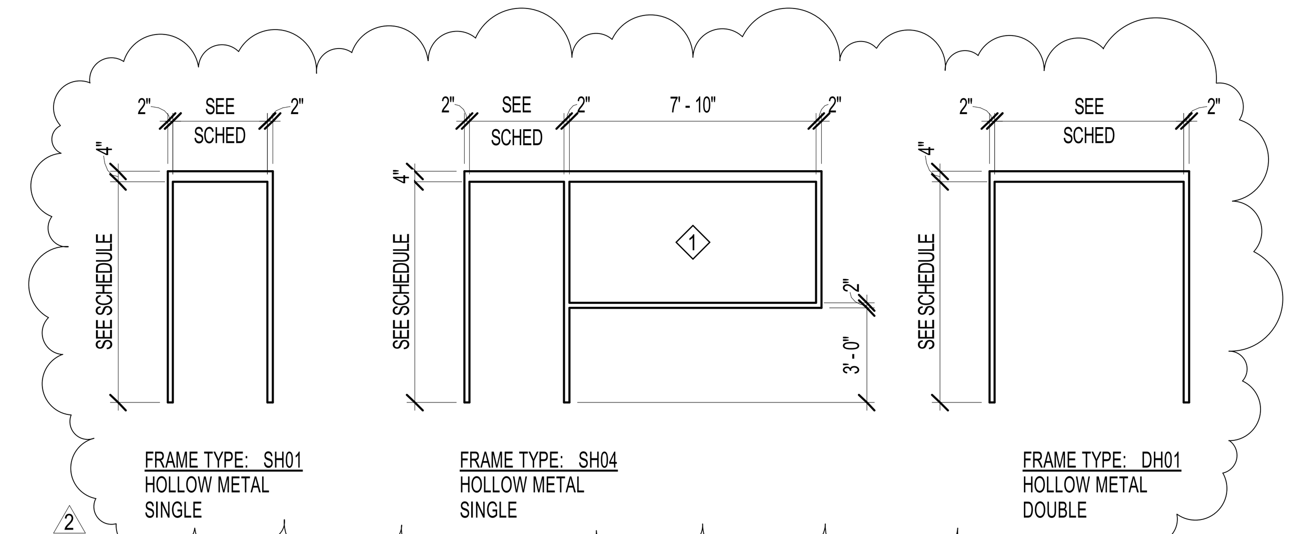

B4 FRAME TYPES - HOLLOW METAL
AE601 1/4" = 1'-0"

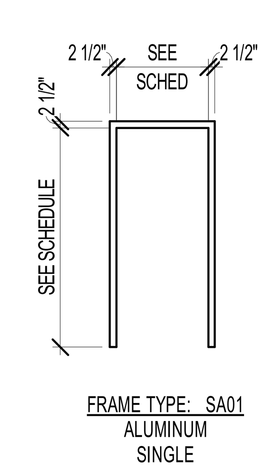

A4 FRAME TYPES - ALUMINUM
AE601 1/4" = 1'-0"

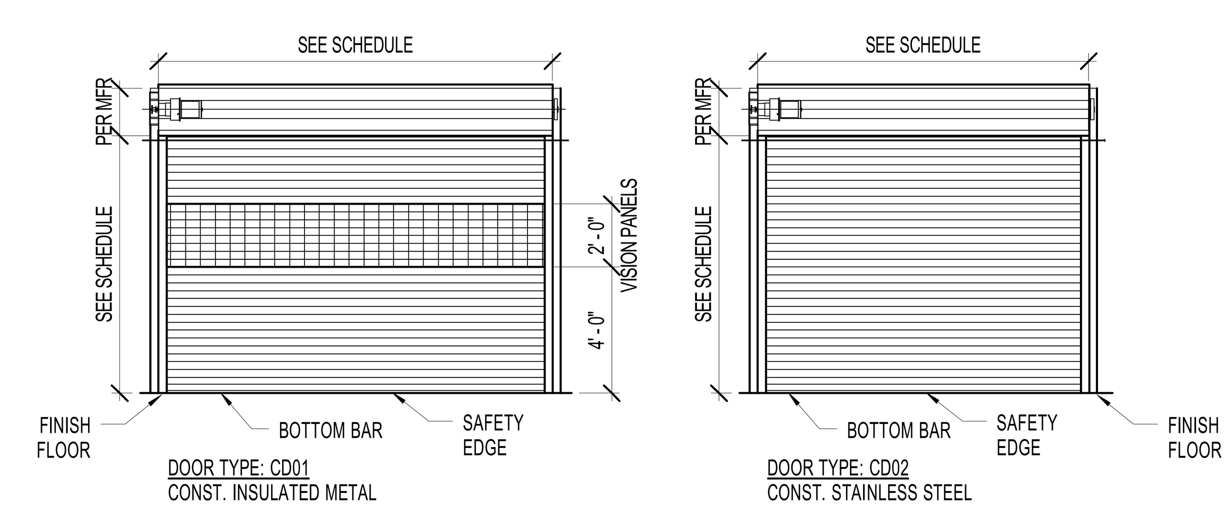

A5 DOOR TYPES - OVERHEAD
AE601 1/4" = 1'-0"

4/1/2013 10:25:45 AM

ARCHITECTURAL NEXUS SALT LAKE CITY PLACERVILLE SACRAMENTO

Architectural NEXUS, Inc.
2505 East Parleys Way
Salt Lake City, Utah 84109
T 801.924.5000 F 801.924.5001
http://www.archnexus.com

Licensed Architect PETER MOYES No. 83-122248-0301 21 MARCH 2013 State of Utah

Original drawings remain the property of the Architect and as such the Architect retains total ownership and control. The design represented by these drawings is sold to the client for a one time use, unless otherwise agreed upon in writing by the Architect.
© Architectural Nexus, Inc. 2012

UTAH NATIONAL GUARD CAMP WILLIAMS
RTI TASS COMPLEX, PHASE II
NGB PROJECT NO. 490444

17800 SOUTH ACADEMY STREET
BLUFFDALE, UTAH 84065

#	REVISIONS	
1	3.22.13	DFCM REVIEW RESPONSE #2
2	4.01.13	ADD-02

NEXUS PROJECT #:	11024
CHECKED BY:	SMS
DRAWN BY:	AW
DATE:	21 MARCH 2013

SHEET CONTENTS:
DOORS, WINDOWS & LOUVERS - SCHEDULES & TYPES

VOLUME A.1 - BID DOCUMENTS

AE601

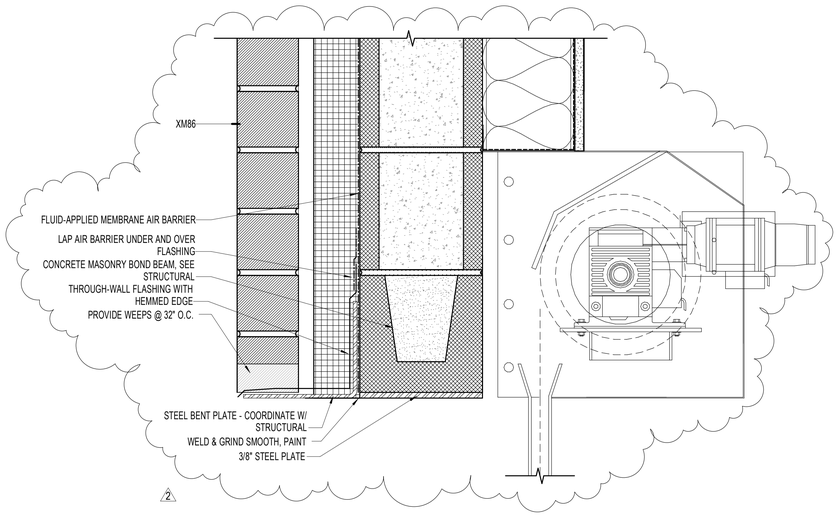

D1 AE630 — **HEAD DETAIL (OVERHEAD @ WALL TYPE XM86.1)**
3" = 1'-0"

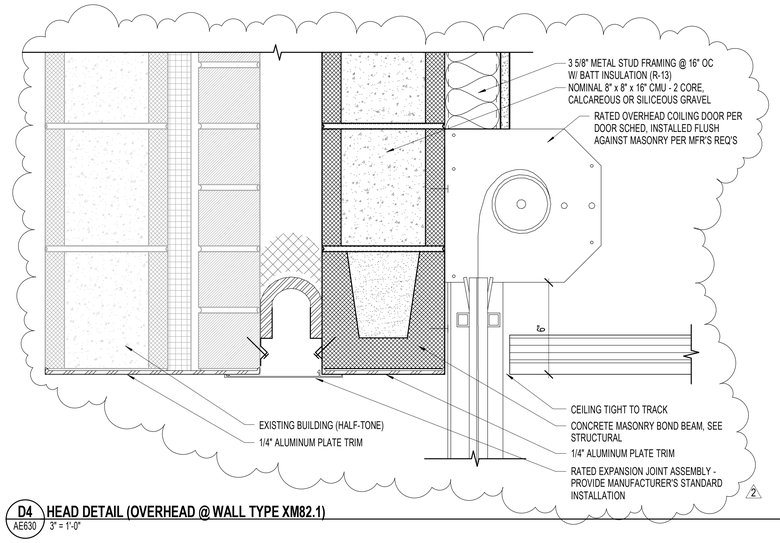

D4 AE630 — **HEAD DETAIL (OVERHEAD @ WALL TYPE XM82.1)**
3" = 1'-0"

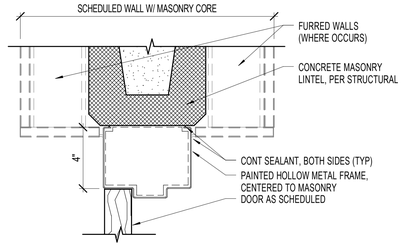

E6 AE630 — **HM HEAD DETAIL (FLUSH FRAME**
3" = 1'-0"

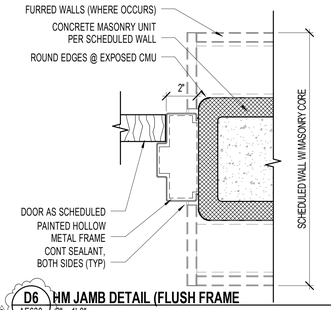

D6 AE630 — **HM JAMB DETAIL (FLUSH FRAME**
3" = 1'-0"

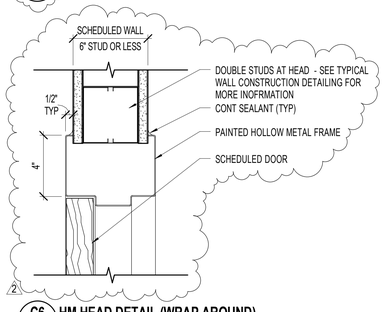

C6 AE630 — **HM HEAD DETAIL (WRAP AROUND)**
3" = 1'-0"

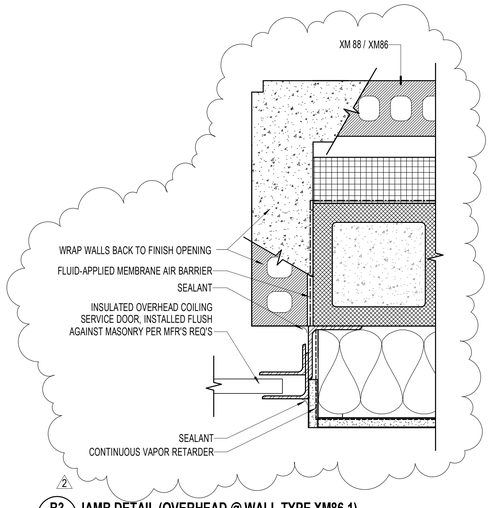

B3 AE630 — **JAMB DETAIL (OVERHEAD @ WALL TYPE XM86.1)**
3" = 1'-0"

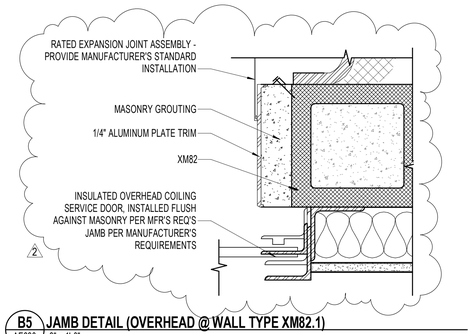

B5 AE630 — **JAMB DETAIL (OVERHEAD @ WALL TYPE XM82.1)**
3" = 1'-0"

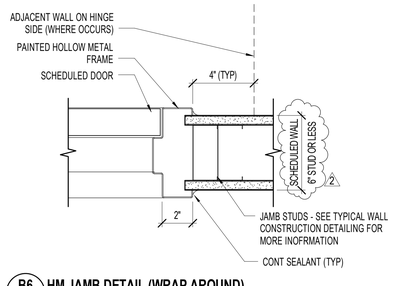

B6 AE630 — **HM JAMB DETAIL (WRAP AROUND)**
3" = 1'-0"

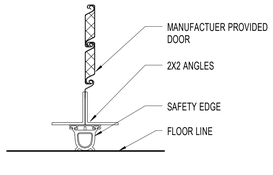

A2 AE630 — **THRESHOLD DETAIL - COILING**
3" = 1'-0"

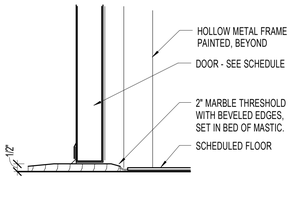

A3 AE630 — **THRESHOLD DETAIL - MARBLE**
3" = 1'-0"

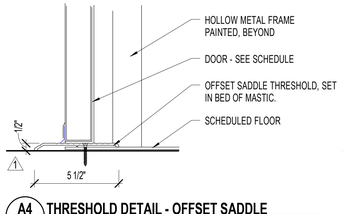

A4 AE630 — **THRESHOLD DETAIL - OFFSET SADDLE**
3" = 1'-0"

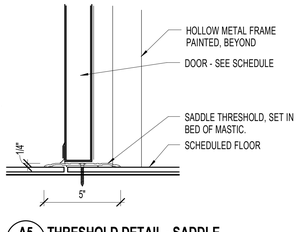

A5 AE630 — **THRESHOLD DETAIL - SADDLE**
3" = 1'-0"

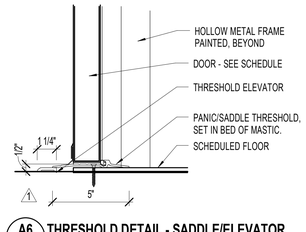

A6 AE630 — **THRESHOLD DETAIL - SADDLE/ELEVATOR**
3" = 1'-0"

4/1/2013 10:25:46 AM

ARCHITECTURAL NEXUS
SALT LAKE CITY PLACERVILLE SACRAMENTO

Architectural NEXUS, Inc.
2505 East Parleys Way
Salt Lake City, Utah 84109
T 801.924.5000 F 801.924.5001
http://www.archnexus.com

Licensed Architect
PETER MOYES
No. 83-122248-0301
21 MARCH 2013
State of Utah

Original drawings remain the property of the Architect and as such the Architect retains total ownership and control. The design represented by these drawings is sold to the client for a one time use, unless otherwise agreed upon in writing by the Architect.
© Architectural Nexus, Inc. 2012

UTAH NATIONAL GUARD CAMP WILLIAMS
RTI TASS COMPLEX, PHASE II
NGB PROJECT NO. 490444
17800 SOUTH ACADEMY STREET
BLUFFDALE, UTAH 84065

#	REVISIONS	
1	3.15.13	DFCM REVIEW RESPONSE
2	4.01.13	ADD-02

NEXUS PROJECT #:	11024
CHECKED BY:	SMS
DRAWN BY:	Author
DATE:	21 MARCH 2013

SHEET CONTENTS:
DOOR DETAILS

VOLUME A.1 - BID DOCUMENTS

AE630

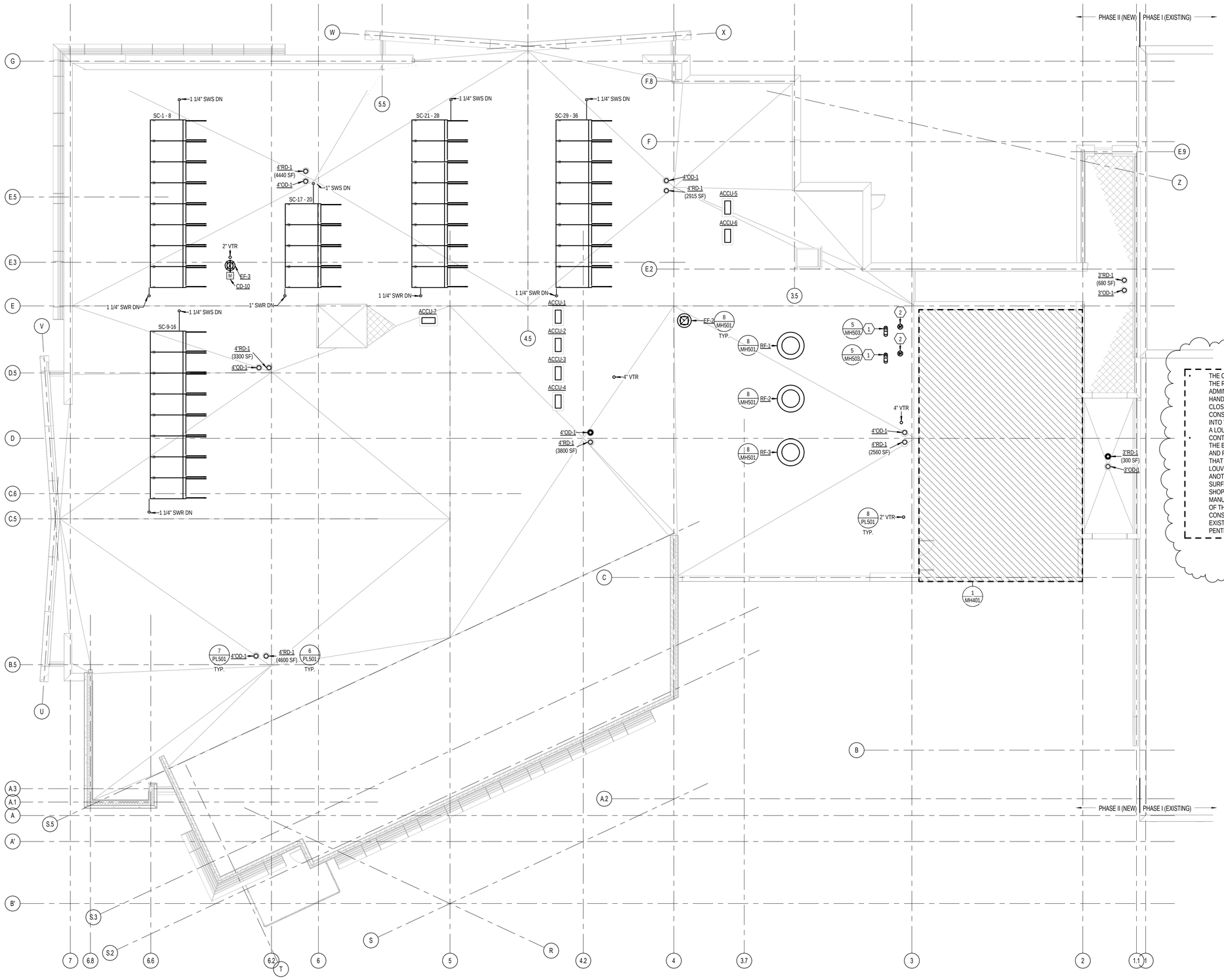

KEYED NOTES

1 ROUTE 8" AIR INTAKE TO ROOF. TERMINATE WITH GOOSENECK WITH BIRDSCREEN.

2 ROUTE 8" AL29-4C FLUE TO ROOF AND TERMINATE AS REQUIRED WITH FLUE CAP.

GENERAL NOTES

A. ROUTE DUCTWORK AS HIGH AS POSSIBLE AT ALL TIMES. PROVIDE ALL NECESSARY FITTINGS AND TRANSITIONS TO MAXIMIZE SPACE BELOW DUCT.

B. DIRECT AIR FLOW FROM ALL LINEAR DIFFUSERS TO ADJACENT WALL UNLESS OTHERWISE NOTED OR SHOWN WITH FLOW ARROWS.

C COORDINATE WITH ALL TRADES PRIOR TO INSTALLATION OF ANY MECHANICAL EQUIPMENT OR DUCT WORK.

1 MECHANICAL ROOF PLAN

SCALE: 1/8" = 1'-0"

ARCHITECTURAL NEXUS
SALT LAKE CITY PLACERVILLE SACRAMENTO

Architectural NEXUS, Inc.
2505 East Parleys Way
Salt Lake City, Utah 84109
T 801.924.5000 F 801.924.5001
http://www.archnexus.com

Stephen G. Conlin
Registered Professional Engineer
187524
03.21.13
State of Utah

Original drawings remain the property of the Architect and as such the Architect retains total ownership and control. The design represented by these drawings is sold to the client for a one time use, unless otherwise agreed upon in writing by the Architect.
© Architectural Nexus, Inc. 2012

UTAH NATIONAL GUARD CAMP WILLIAMS
RTI TASS COMPLEX, PHASE II
NGB PROJECT NO. 490444

UTAH NATIONAL GUARD
12953 SOUTH MINUTEMAN DRIVE
DRAPER, UTAH 84020-1726

#	REVISIONS
1	2013-04-01 ADD #2

CEA PROJECT #:	2011-042.00
CHECKED BY:	JTP
DRAWN BY:	ENL
DATE:	21 MARCH 2013

SHEET CONTENTS:
MECHANICAL ROOF PLAN

VOLUME A.2 - BID DOCUMENTS

MH121

COLVIN ENGINEERING ASSOCIATES
244 West 300 North, Suite 200 / Salt Lake City, Utah 84103
Phone 801.322.2400 / colvinengineering.com

Copyright (C) 2012 by Colvin Engineering Associates, Inc. Salt Lake City, Utah. All rights reserved. Unauthorized copying and/or use is illegal and subject to prosecution.

3/29/2013 11:10:27 AM

KEYED NOTES - SHEET A.EP104

1. 4'X8'X3/4" FIRE TREATED BACKBOARD.
2. GROUNDING BUS BAR.
3. WIRE BASKET CABLERAY.
4. FLOOR MOUNTED TELECOM RACK WITH VERTICAL WIRE MANAGEMENT.
5. DEDICATED RECEPTACLE FOR TV DISTRIBUTION EQUIPMENT.
6. JUNCTION BOX WITH (2) 1" CONDUIT FOR TV DISTRIBUTION. SEE DETAIL 4 ON SHEET EV600.
7. SSFC UNIT POWER FROM ACCU UNIT ON ROOF. DIV 26 TO RUN POWER FROM ACCU TO SSFC UNIT.
8. INSTALL WIRELESS MASTER CLOCK MAIN SYSTEM IN TELECOM RACK.

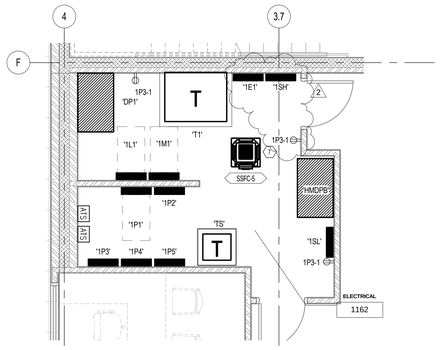

1 EP401 ENLARGED LEVEL 01 ELECTRICAL ROOM 1162
1/4" = 1'-0"

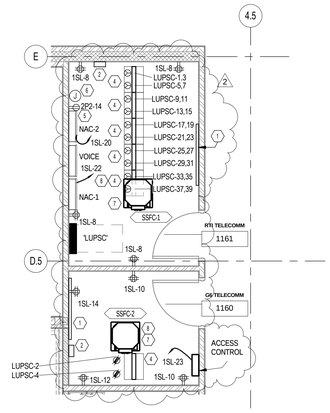

2 EP401 ENLARGED LEVEL 01 IT ROOMS 1160 & 1161 POWER PLAN
1/4" = 1'-0"

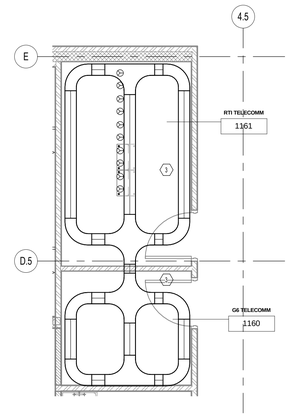

5 EP401 ENLARGED LEVEL 01 IT ROOMS 1160 &1161 CABLETRAY PLAN
1/4" = 1'-0"

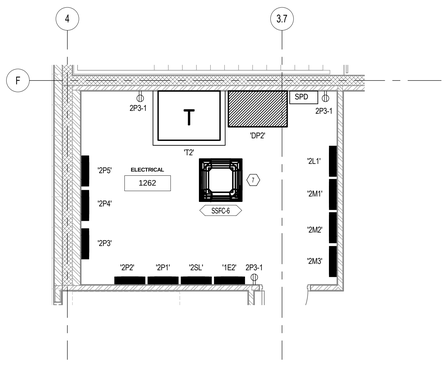

3 EP401 ENLARGED LEVEL 02 ELECTRICAL ROOM 1262
1/4" = 1'-0"

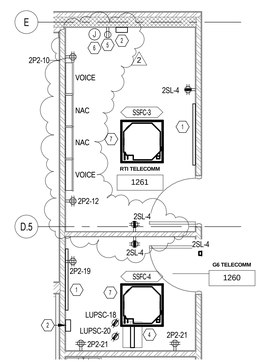

4 EP401 ENLARGED LEVEL 02 IT ROOMS 1260 &1261 POWER PLAN
1/4" = 1'-0"

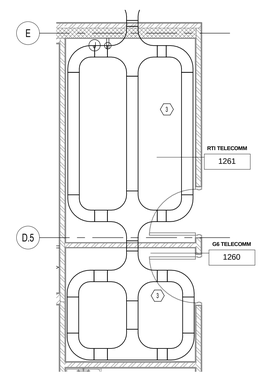

6 EP401 ENLARGED LEVEL 02 IT ROOMS 1260 & 1261 CABLETRAY PLAN
1/4" = 1'-0"

ARCHITECTURAL NEXUS
SALT LAKE CITY PLACERVILLE SACRAMENTO

Architectural NEXUS, Inc.
2150 South 1300 East, Suite 200
Salt Lake City, Utah 84106
T 801.924.5000 F 801.924.5001
http://www.archnexus.com

LICENSED PROFESSIONAL ENGINEER No. 271818 KENNETH D. GARNER STATE OF UTAH

Original drawings remain the property of the Architect and as such the Architect retains total ownership and control. The design represented by these drawings is sold to the client for a one time use, unless otherwise agreed upon in writing by the Architect.
© Architectural Nexus, Inc.2011

UTAH NATIONAL GUARD CAMP WILLIAMS
RTI TASS COMPLEX, PHASE II
PROJECT NO. 490444

UTAH NATIONAL GUARD
12953 SOUTH MINUTEMAN DRIVE
DRAPER, UTAH 84020-1726

#	REVISIONS
1	03-11-2013 DFCM REVIEW COMMENTS
2	03-28-2013 ADDENDUM 2

NEXUS PROJECT #:	11024
CHECKED BY:	KGE
DRAWN BY:	KGE
DATE:	21 MARCH 2013

SHEET CONTENTS:
ENLARGED ELECTRICAL AND IT ROOMS

VOLUME A.2 - BID DOCUMENTS

EP401

Ken Garner Engineering, Inc.
Electrical Engineering Consultants, Inc.
102 West 500 South, Suite #225
Salt Lake City, Utah 84101
Telephone: 801.328.8800
Fax: 801.328.8802
Contact: Adam Brownell
Project #: 11044.00

3/29/2013 1:17:03 PM

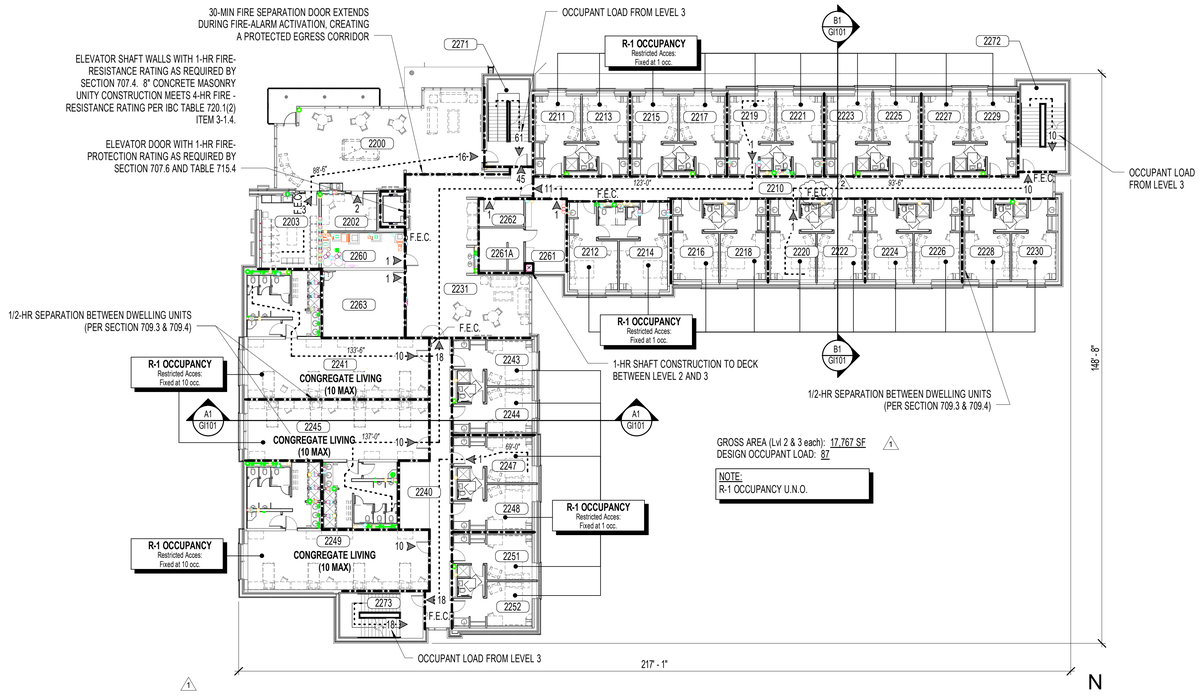

C4 GI101 BILLETS LEVEL 2 LIFE SAFETY PLAN (LEVEL 3 SIM)
1/16" = 1'-0"

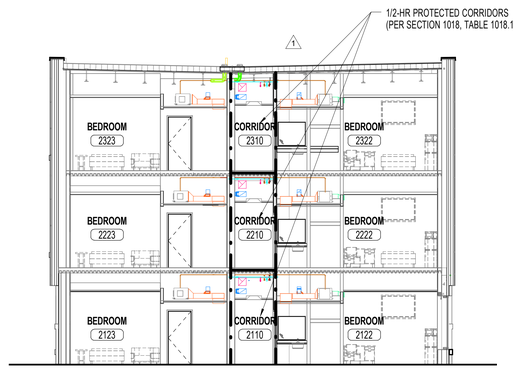

B1 GI101 LIFE SAFETY BUILDING SECTION - NORTH WING
1/8" = 1'-0"

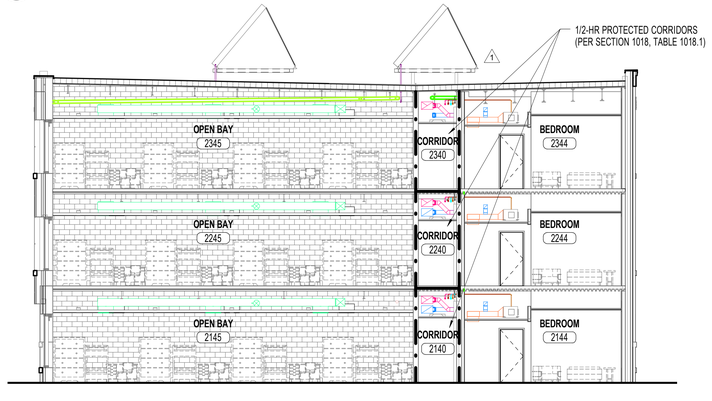

A1 GI101 LIFE SAFETY BUILDING SECTION - EAST WING
1/8" = 1'-0"

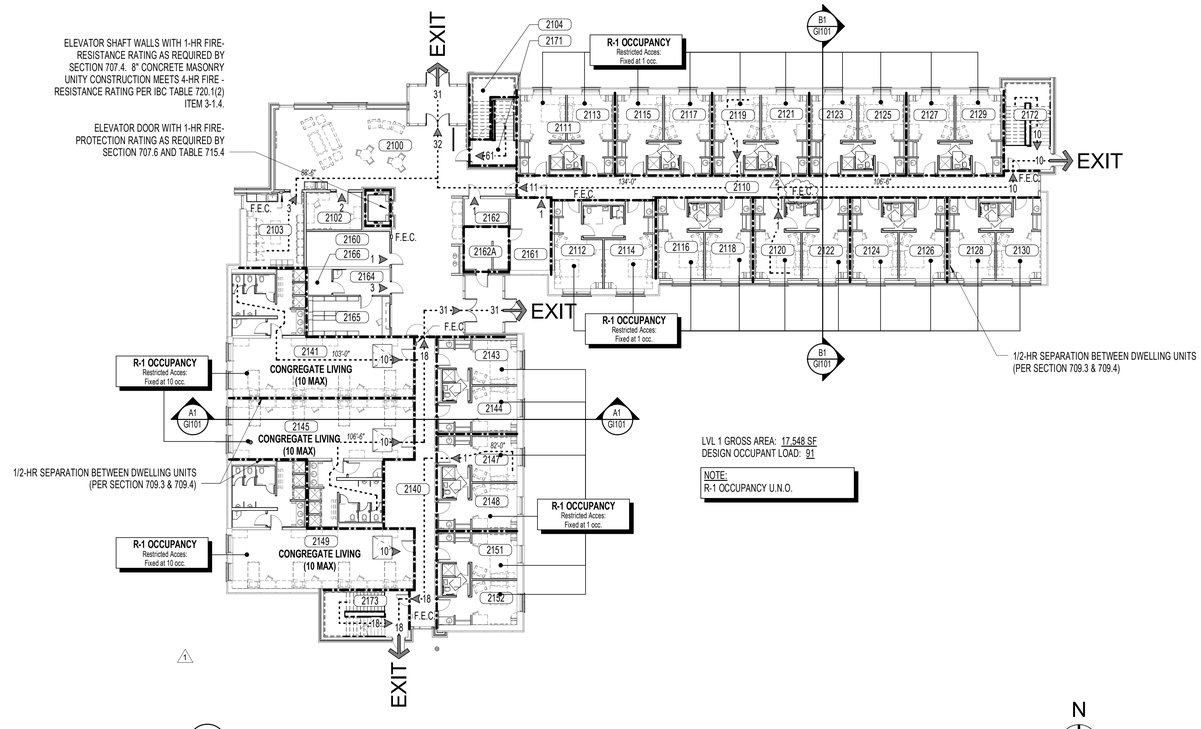

A4 GI101 BILLETS LEVEL 1 LIFE SAFETY PLAN
1/16" = 1'-0"

CODE COORDINATION NOTES

A. SEE LISTING FOR FIRE RATING OF CONSTRUCTION TYPES ON SHEETS GI501, GI 502, AND GI503.
B. NOTE: ONLY WALLS NOTED ON SHEETS GI101 ARE REQUIRED TO BE FIRE-RATED. SOME WALLS MAY BE REFERENCED TO A WALL CONSTRUCTION TYPE WHICH HAS A FIRE-RATING, BUT THE RATING IS NOT REQUIRED UNLESS SO NOTED ON THIS SHEET.
C. PENETRATIONS THROUGH FIRE RATED ASSEMBLIES SHALL BE FIRE STOPPED IN ACCORDANCE WITH SHEET GI510 & GI511, AND WRITTEN INSTRUCTION FROM THE MANUFACTURER OF THE FIRE STOPPING MATERIAL.
D. WALLS AND FLOOR / CEILINGS SURROUNDING EXIT PASSAGEWAYS, VERTICAL EXIT ENCLOSURES AND ELEVATOR SHAFTS SHALL NOT BE PENETRATED WITH DUCTS, PIPING CONDUITS, ETC. UNLESS NECESSARY TO SERVICE OR PROTECT THE EXIT ENCLOSURE. THERE SHALL BE NO COMMUNICATION OPENING OR PENETRATIONS BETWEEN ADJACENT EXIT ENCLOSURES. PENETRATION SHALL BE FIRE STOPPED IN ACCORDANCE WITH THE DETAILS ON SHEETS GI510 & GI511 AND WRITTEN INSTRUCTION FROM MANUFACTURER OF THE FIRE STOPPING MATERIAL.

LEGEND - LIFE SAFETY

- 1-HOUR FIRE BARRIER CONSTRUCTION
- 250'-0" — DIRECTION OF EGRESS
- OCCUPANTS AT POINT OF EGRESS MAX EGRESS TRAVEL DISTANCE
- EXIT
- OCCUPANTS AT POINT OF EGRESS
- F.E.C. — FIRE EXTINGUISHER CABINET

ARCHITECTURAL NEXUS
SALT LAKE CITY PLACERVILLE SACRAMENTO

Architectural NEXUS, Inc.
2505 East Parleys Way
Salt Lake City, Utah 84109
T 801.924.5000 F 801.924.5001
http://www.archnexus.com

Licensed Architect
PETER MOYES
No. 21 MARCH 2013
83-122248-0301
State of Utah

Original drawings remain the property of the Architect and as such the Architect retains total ownership and control. The design represented by these drawings is sold to the client for a one time use, unless otherwise agreed upon in writing by the Architect.
© Architectural Nexus, Inc. 2012

CODE ANALYSIS

BILLETS BUILDING - PHASE II

APPLICABLE CODES

	Year		Year
International Building Code	2009	National Electrical Code	2011
International Mechanical Code	2009	Uniform Code for Building Conservation	2009
International Fuel Gas Code	2009	ADA Accessibility Guidelines	2010
International Plumbing Code	2009	ICC / ANSI A117.1	2003
International Fire Code	2009		
International Energy Conservation Code	2009		

A. Occupancy and Group: R-1
Change in Use: Yes ___ No: X Mixed Occupancy: Yes ___ No: X
Special Use and Occupancy (e.g. High Rise, Covered Mall): N/A

B. Seismic Design Category: D Design Wind Speed: 90 mph Exp: C

C. Type of Construction: (I/II/III/IV/V)
IA 1HR 1HR 1HR 0 NR NR 1HR NR NR
IB 1HR 1HR 1HR 0 NR NR 1HR NR NR
IIA 1HR 1HR 1HR 0 NR NR 1HR NR NR
IIB 1HR 1HR 1HR 0 NR NR 1HR NR NR
IIIA 1HR 1HR 1HR 0 NR NR 1HR NR NR
IIIB 1HR 1HR 1HR 0 NR NR 1HR NR NR
IV 1HR 1HR 1HR HT NR NR 1HR NR NR
VA 1HR 1HR 1HR 0 NR NR 1HR NR NR
VB 1HR 1HR 1HR 0 NR NR 1HR NR NR

D. Fire Resistance Rating - Requirements for the Exterior Walls based on the fire separation distance (in hours):
North: 0 South: 0 East: 0 West: 0

E. Mixed Occupancies: YES Nonseparated Uses: YES

F. Sprinklers:
Required: YES Provided: YES
Type of Sprinkler System (IBC 903.3.1): NFPA 13

G. Number of Stories: 3 Building Height: 42' - 3"

H. Actual Area per Floor (square feet): Lvl 1: 17,548 - Lvl 2: 17,767 - Lvl 3: 17,767

I. Tabular Area: (table 503): R-1: 16,000 SF

J. Area Modifications:

$$\text{or } A_a = \left\{ A_1 + \left[A_2 \times I_2 \right] + \left[A_3 \times I_3 \right] \right\} \qquad I_f = \left[F/P - 0.25 \right] W/30$$

Aa = [16,000 + [16,000 x 0.75] + [16,000 x 2]] If = [730 / 730 - 0.25] 30/30
Aa = 16,000 + 12,000 + 32,000 If = 0.75
Aa = 60,000

b) Sum of the Ratio Calculations for Mixed Occupencies:
Actual Area / Allowable Area ≤ 1 N/A

c) Total Allowable Area for:
1) One Story: 60,000 SF
2) Two Story: A_a/N_s 120,000 SF
3) Three Story: A_a/N_s 180,000 SF

d) Unlimited Area Building: Yes ___ No: X Code Section: ___

K. Fire Resistance Rating Requirements for Building Elements (hours).

Element	Hours	Assembly Living	Element	Hours	Assembly Living
Exterior Bearing Walls	0		Floors - Ceiling / Floors	1/2	2013/7
Interior Bearing Walls	1		Roofs - Ceiling / Roofs	0	
Exterior Non-Bearing Walls	0		Roofs - Ceiling / Roof Rafters	0	
Structural Frames	1		Shaft Enclosures	1	IBC Table 715.4
Partitions - Permanent	1		Fire Walls	1/2	2/2Hr.#
Fire Barriers	1		Fire Partitions	1	
			Smoke Partitions	0	

L. Design Occupant Load: Lvl 1: 91 - Lvl 2: 87 - Lvl 3: 87

Exit Width Required: Lvl 1: 32" Lvl 2: 32" Lvl 3: 32"
Exit Width Provided: Lvl 1: 216" Lvl 2: 144" Lvl 2: 144"

M. Minimum Number of Required Plumbing Facilities:
a) Water Closets - Required (ea): 35 (m) 15 Provided (ea): 50 (m) 16
b) Urinals - Required (ea): 4 (m) 0 Provided (ea): 16 (m) 0
c) Lavatories - Required (ea): 30 (m) 15 Provided (ea): 108 (m) 36
d) Bath Tubs or Showers: X1
e) Drinking Fountains: 3 Service Sinks: 3

FOOTNOTES:
1) In case of conflict with the U.S. Department of Justice Federal Registers Parts 1 through 3 - ADA Guidelines and specific reference to the International Building Code Accessibility Chapters, the more restrictive requirement shall govern.
2) Additional Code Information shall be provided at the discretion of the Building Official for Complex Buildings, Including, but not limited to:
a) High Rise Requirements.
b) Atriums.
c) Performance Based Criteria.
d) Means or Egress Analysis.
e) Fire Assembly Locator Sheet.
f) Exterior and Interior Accessibility Route.
g) Fire Stopping, Including Tested Design Number.

UTAH NATIONAL GUARD CAMP WILLIAMS
RTI TASS COMPLEX, PHASE II
NGB PROJECT NO. 490444
17800 SOUTH ACADEMY STREET
BLUFFDALE, UTAH 84065

#	REVISIONS	
1	3.15.13	DFCM REVIEW RESPONSE
2	3.22.13	DFCM REVIEW RESPONSE #2

NEXUS PROJECT #:	11024
CHECKED BY:	SMS
DRAWN BY:	Author
DATE:	21 MARCH 2013

SHEET CONTENTS:
LIFE SAFETY PLANS & SECTIONS

VOLUME B - BID DOCUMENTS

GI101

4/1/2013 11:20:06 AM

ONLINE CERTIFICATIONS DIRECTORY

Design No. U404
BXUV.U404
Fire Resistance Ratings - ANSI/UL 263

Page Bottom

Design/System/Construction/Assembly Usage Disclaimer

- Authorities Having Jurisdiction should be consulted in all cases as to the particular requirements covering the installation and use of UL Listed or Classified products, equipment, system, devices, and materials.
- Authorities Having Jurisdiction should be consulted before construction.
- Fire resistance assemblies and products are developed by the design submitter and have been investigated by UL for compliance with applicable requirements. The published information cannot always address every construction nuance encountered in the field.
- When field issues arise, it is recommended the first contact for assistance be the technical service staff provided by the product manufacturer noted for the design. Users of fire resistance assemblies are advised to consult the general Guide Information for each product category and each group of assemblies. The Guide Information includes specifics concerning alternate materials and alternate methods of construction.
- Only products which bear UL's Mark are considered as Classified, Listed, or Recognized.

Fire Resistance Ratings - ANSI/UL 263

See General Information for Fire Resistance Ratings - ANSI/UL 263

Design No. U404

August 01, 2012

Bearing Wall Rating — 1 and 2 Hr (See Items 2, 3 and 5)

Nonbearing Wall Rating — 1 and 2 Hr (See Items 2, 3 and 5)

Load Restricted for Canadian Applications — See Guide BXUV7

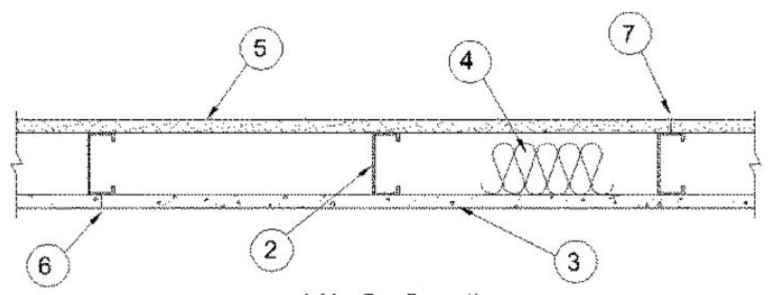

1 Hr. Configuration

1. **Steel Floor and Ceiling Runners —** (Not Shown) — Channel shaped, 3-1/2 in. wide by 1-1/4 in. deep, fabricated from min 20 MSG (0.0329 in., min bare metal thickness) galvanized steel. Attached to floor and ceiling with steel fasteners spaced 24 in. OC max.

2. **Steel Studs —** 3-1/2 in. wide, fabricated from min 20 MSG (0.0329 in., min bare metal thickness) galvanized steel , spaced max 16 in. OC. For bearing walls, studs shall be designed in accordance with the current edition of the Specification for the Design of Cold-Formed Steel Structural Members by the American Iron and Steel Institute. All design details enhancing the structural integrity of the bearing wall assembly, including the axial design load of the studs, shall be as specified by the steel stud designer and/or producer and shall meet the requirements of all applicable local code agencies. Steel studs attached to floor and ceiling runners with 3/8 in. long Type S-12 steel screws on both sides of the studs or by welded or bolted connections designed in accordance with the AISI specifications. For nonbearing walls, studs to be cut 3/8 to 3/4 in. less than assembly height and friction-fitted into floor and ceiling runners .

2A. **Steel Studs —** (As an alternate to Item 2, For use with Items 5A & 5B) Channel shaped, fabricated from min 20 MSG corrosion-protected or galv steel, 3-1/2 in. min width, min 1-1/2 in. flanges and 1/4 in. return, spaced a max of 16 in. OC. Studs friction-fit into floor and ceiling runners. For nonbearing walls, studs to be cut 5/8 to 3/4 in. less than assembly height.

3. **Cementitious Backer Units* —** 1/2 in. or 5/8 in. thick, applied vertically or horizontally with vertical joints centered over studs. Fastened to studs and runners with corrosion resistant, chamfered, ribbed wafer head screws with a minimum head diameter of .400 inch. For nonbearing systems, fastened to studs and bottom runners with the uppermost screws placed 1/2 in. to 2 in. below the bottom edge of the leg of the top runner. Horizontal joints need not be backed by framing. **1 Hr System** - Screws shall be min 1-1/4 in. long and spaced a max of 8 in. OC. All vertical joints staggered one stud cavity from gypsum board vertical joints on the opposite side of studs. Horizontal edge joints and horizontal butt joints on opposite sides of studs need not be staggered. **2-Hr System** - For the base layer in Configuration B, the screws shall be min 1-1/4 in. long and spaced a max of 12 in. OC. For the face layers, screws shall be 1-5/8 in. long and spaced a max of 8 in. OC. All face layer joints offset min 12 in. from underlying base layer joints. Joints in either layer need not be staggered from joints on the opposite side of the wall.

UNITED STATES GYPSUM CO — DUROCK Exterior Cement Board, or DUROCK Brand Cement Board.

4. **Batts and Blankets* —** Min 3 in. thick mineral wool insulation batts, friction-fitted between studs .

IIG MINWOOL L L C — Type SAFB

THERMAFIBER INC — Type SAFB.

5. **Gypsum Board* —** 5/8 in. thick, with square or tapered edges, applied vertically or horizontally with vertical joints centered over studs. Horizontal joints need not be backed by framing. Fastened with Type S-12 screws. **1-Hr System** - For vertical application, fastened to studs and runners with 1 in. long screws spaced max 8 in. OC at vertical edges and spaced max 12 in. OC in the field. For horizontal application, fastened to studs and runners with 1 in. long screws spaced max 8 in. OC. Vertical joints staggered one stud cavity from cement board vertical joints on opposite side of studs. Horizontal edge joints and horizontal butt joints on opposite sides of studs need not be staggered. **2-Hr System** - Base layer with an overlying gypsum board face layer, fastened with 1 in. long screws spaced max 16 in. OC to studs and runners. Base layer with an overlying cement board face layer, fastened with 1 in. long screws spaced max 12 in. OC to studs and runners. Face layers fastened with 1-5/8 in. long screws spaced max 16 in. OC to studs and runners with screws offset 8 in. from face layer screws. Face layer joints offset min 12 in. from base layer joints. Joints in either layer need not be staggered from joints on the opposite side of the wall. When used in widths other than 48 in., gypsum panels to be installed horizontally.

CGC INC — Types AR, C, IP-AR, IP-X1, IP-X2, IPC-AR, SCX, SHX, SGX, ULX, WRC or WRX.

UNITED STATES GYPSUM CO — Type AR, C, FRX-G, IP-AR, IP-X1, IP-X2, IPC-AR, SCX, SHX, ULX, WRC, WRX, USGX (Joint tape and compound, Items 6 and 7, optional for use with Type USGX).

USG MEXICO S A DE C V — Types AR, C, IP-AR, IP-X1, IP-X2, IPC-AR, SCX, SHX, ULX, WRC, WRX.

5A. **Gypsum Board* —** (As an alternate to Item 5 may be used as the base layer on one or both sides of wall, For direct attachment only) - Nom 5/8 in. thick lead backed gypsum panels with beveled, square or tapered edges, applied vertically. Vertical joints centered over studs and staggered min 1 stud cavity on opposite sides of studs. Wallboard secured to studs with 1-1/4 in. long Type S-12 steel screws spaced 8 in. OC at perimeter and 12 in. OC in the field.

RAY-BAR ENGINEERING CORP — Type RB-LBG

5B. **Gypsum Board* —** (As an alternate to Item 5 may be used as the base layer on one or both sides of wall, For direct attachment only). Nominal 5/8 in. thick lead backed gypsum panels with beveled, square or tapered edges, applied vertically. Vertical joints centered over studs and staggered min 1 stud cavity on opposite sides of studs. Wallboard secured to studs with 1-1/4 in. long Type S-12 (or #6 by 1-1/4 in. long bugle head fine driller) steel screws spaced 8 in. OC at perimeter and 12 in. OC in the field.

NEW ENGLAND LEAD BURNING CO INC, DBA NELCO — Nelco

5C. **Gypsum Board* —** (As an alternate to Item 5) For Direct Application to Studs Only- For use as the base layer or as the face layer. Nom 5/8 in. thick lead backed gypsum panels with beveled, square or tapered edges, applied vertically. Vertical joints centered over studs and staggered min 1 stud cavity on opposite sides of studs. Wallboard secured to studs with 1-5/8 in. long Type S-12 steel screws spaced 8 in. OC at perimeter and 12 in OC in the field when applied as the base layer. When applied as the face layer screw length to be increased to 2-1/2 in. Lead batten strips required behind vertical joints of lead backed gypsum wallboard and optional at remaining stud locations. Lead batten strips, min 2 in. wide, max 10 ft long with a max thickness of 0.140 in. placed on the face of studs and attached to the stud with two 1 in. long Type S-8 pan head steel screws, one at the top of the strip and one at the bottom of the strip. Lead discs, max 5/16 in. diam by max 0.140 in. thick. compression fitted or adhered over the screw heads. Lead batten strips and discs to have a purity of 99.9% meeting the Federal specification QQ-L-201f, Grades "A, B, C or D". Fasteners for face layer gypsum panels (Item 5) when installed over lead backed board to be min 2-1/2 in.

MAYCO INDUSTRIES INC — Type X-Ray Shielded Gypsum

5D. **Gypsum Board* —** ((As an alternate to Items 5 may be used as the base layer on one or both sides of wall, For direct attachment only)) For Direct Application to Studs Only- Nom 5/8 in. thick lead backed gypsum panels with beveled, square or tapered edges, applied vertically. Vertical joints centered over studs and staggered min 1 stud cavity on opposite sides of studs. Wallboard secured to studs with 1-1/4 in. long Type S-12 steel screws spaced 8 in. OC at perimeter and 12 in. OC in the field. Lead batten strips, min 2 in. wide, max 8 ft long with a max thickness of 0.14 in. placed on the face of studs and attached to the stud with construction adhesive and two 1 in. long Type S-12 pan head steel screws, one at the top of the strip and one at the bottom of the strip. Lead discs, nominal 3/8 in. diam by max 0.085 in. thick. Compression fitted or adhered over the screw heads. Lead batten strips and discs to have a purity of 99.9% meeting the Federal specification QQ-L-201f, Grade "C". Fasteners for face layer gypsum panels (Item 5) when installed over lead backed board to be min 2-1/2 in. Type S-12 bugle head steel.

RADIATION PROTECTION PRODUCTS INC — Type RPP - Lead Lined Drywall

6. **Joints —** Covered with glass fiber mesh tape and latex modified Portland cement mortar or basecoat, or Type I organic adhesive.

7. **Joints —** When tapered edge gypsum board is used, face layer joints covered with joint compound and paper tape. As an alternate, gypsum veneer plaster may be applied to the entire surface of Classified veneer baseboard with joints reinforced. When square-edge gypsum board is used, treatment of joints is optional.

8. **Vapor Retarder, Water Barrier or Weather Resistive Barrier —** (Optional — Not shown) — As required.

9. **Lead Batten Strips —** (Not Shown, For use With Item 5A) - Lead batten strips, min 1-1/2 in. wide, max 10 ft long with a max thickness of 0.125 in. Strips placed on the interior face of studs and attached from the exterior face of the stud with two 1 in. long Type S-12 pan head steel screws, one at the top of the strip and one at the bottom of the strip. Lead batten strips to have a purity of 99.9% meeting the Federal specification QQ-L-201f, Grade "C". Lead batten strips required behind vertical joints of lead backed gypsum wallboard (Item 5A) and optional at remaining stud locations. Required behind vertical joints.

9A. **Lead Batten Strips —** (Not Shown, for use with Item 5C) Lead batten strips, 2 in. wide, max 10 ft long with a max thickness of .0140 in. Strips placed on the face of studs and attached to the stud with two min. 1 in. long min. Type S-8 pan head steel screws, one at the top of the strip and one at the bottom of the strip or with one min. 1 in. long min. Type S-8 pan head steel screw at the top of the strip. Lead batten strips to have a purity of 99.9% meeting the Federal specification QQ-L-201f, Grades "A, B, C or D". Lead batten strips required behind vertical joints of lead backed gypsum wallboard (Item 5) and optional at remaining stud locations.

10. **Lead Discs or Tabs —** (Not Shown, For use With Item 5A) - Used in lieu of or in addition to the lead batten strips (Item 9) or optional at other locations - Max 3/4 in. diam by max 0.125 in. thick lead discs compression fitted or adhered over steel screw heads or max 1/2 in. by 1-1/4 in. by max 0.125 in. thick lead tabs placed on gypsum boards (Item 5A) underneath screw locations prior to the installation of the screws. Lead discs or tabs to have a purity of 99.9% meeting the Federal specification QQ-L-201f, Grade "C".

10A. **Lead Discs —** (Not Shown, for use with Item 5C) Max 5/16 in. diam by max 0.140 in. thick lead discs compression fitted or adhered over steel screw heads. Lead discs to have a purity of 99.9% meeting the Federal Specification QQ-L-201f, Grades "A, B, C or D".

11. **Lead Batten Strips —** (Not Shown, For Use With Item 5B) Lead batten strips, 2 in. wide, max 10 ft long with a max thickness of 0.142 in. Strips placed on the face of studs and attached to the stud with two min. 1 in. long min. Type S-8 pan head steel screws, one at the top of the strip and one at the bottom of the strip or with one min. 1 in. long min. Type S-8 pan head steel screw at the top of the strip. Lead batten strips to have a purity of 99.9% meeting the Federal specification QQ-L-201f, Grade "C". Lead batten strips required behind vertical joints of lead backed gypsum wallboard (Item 5B) and optional at remaining stud locations.

12. **Lead Tabs —** (Not Shown, For Use With Item 5B) 2 in. wide, 5 in. long with a max thickness of 0.142 in. Tabs friction-fit around front face of stud, the stud folded back flange, and the back face of the stud. Tabs required at each location where a screw (that secures the gypsum boards, Item 5B) will penetrate the steel stud. Lead tabs to have a purity of 99.9% meeting the Federal specification QQ-L-201f, Grade "C". Lead tabs may be held in place with standard adhesive tape if necessary.

*Bearing the UL Classification Mark

ONLINE CERTIFICATIONS DIRECTORY

Design No. U415
BXUV.U415
Fire Resistance Ratings - ANSI/UL 263

Page Bottom

Design/System/Construction/Assembly Usage Disclaimer

- Authorities Having Jurisdiction should be consulted in all cases as to the particular requirements covering the installation and use of UL Listed or Classified products, equipment, system, devices, and materials.
- Authorities Having Jurisdiction should be consulted before construction.
- Fire resistance assemblies and products are developed by the design submitter and have been investigated by UL for compliance with applicable requirements. The published information cannot always address every construction nuance encountered in the field.
- When field issues arise, it is recommended the first contact for assistance be the technical service staff provided by the product manufacturer noted for the design. Users of fire resistance assemblies are advised to consult the general Guide Information for each product category and each group of assemblies. The Guide Information includes specifics concerning alternate materials and alternate methods of construction.
- Only products which bear UL's Mark are considered as Classified, Listed, or Recognized.

Fire Resistance Ratings - ANSI/UL 263

See General Information for Fire Resistance Ratings - ANSI/UL 263

Design No. U415

December 10, 2012

Nonbearing Wall Ratings — 1, 2, 3 or 4 Hr

System A — 1 Hr.

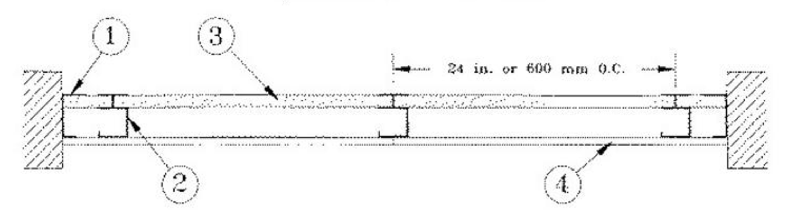

1. **Floor, Side and Ceiling Runners —** "J" - shaped runner, min 2-1/2 in. deep (min 4 in. deep when System C is used), with unequal legs of 1 in. and 2 in., fabricated from min 24 MSG (min 20 MSG when Item 4A, 4B or 7 are used) galv steel. Runners positioned with short leg toward finished side of wall. Runners attached to structural supports with steel fasteners located not greater than 2 in. from ends and not greater than 24 in. OC. "E" - shaped studs (Item 2A) may be used as side runners in place of "J" - shaped runners.

2. **Steel Studs —** "C-H" - shaped studs, min 2-1/2 in. deep (min 4 in. deep when System C is used), fabricated from min 25 MSG (min 20 MSG when Items 2D, 4A, 4B or 7 is used) galv steel. Cut to lengths 3/8 to 1/2 in. less than floor-to-ceiling height and spaced 24 in. or 600 mm OC.

2A. **Steel Studs —** (Not Shown) — "E" - shaped studs installed back to back in place of "C-H" - shaped studs (Item 2) "E" - shaped studs secured together with steel screws spaced a maximum 12 in. OC. Fabricated from min 25 MSG (min 20 MSG when Item 2D, 4A, 4B or 7 is used) galv steel, min 2-1/2 in. deep (min 4 in. deep when System C is used), with one leg 1 in. long and two legs 3/4 in. long. Shorter legs 1 in. apart to engage gypsum liner panels. Cut to lengths 3/8 to 1/2 in. less than floor to ceiling heights.

2B. **Furring Channels —** (Optional, not shown) — For use with single or double layer systems. Resilient furring channels fabricated from min 25MSG corrosion protected steel, installed horizontally, and spaced vertically a max 24 in. OC. Flange portion of channel attached to each intersecting "C-H" or "E" stud on side of stud opposite the 1 in. liner panels with 1/2 in. long Type S or S-12 pan-head steel screws. When furring channels are used, wallboard to be installed vertically only. Not to be used with Type FRX-G gypsum wallboard, Type RB-LBG (Item 4A), Type Nelco (Item 4B) or cementitious backer units

(Item 7).

2C. **Furring Channels —** For use with System I - "Hat" - shaped, 25 MSG galv steel furring channels attached directly over the inner layers of wallboard to each stud with 2 in. long Type S pan head steel screws. Screws alternate from top flange to bottom flange at each stud intersection. Furring channels spaced vertically max 24 in. OC.

2D. **Steel Framing Members* —** (Optional, not shown) — For use with single or double layer systems. Furring channels and Steel Framing Members as described below. Not to be used with Type FRX-G gypsum wallboard, Type RB-LBG (Item 4A), Type Nelco (Item 4B) or cementitious backer units (Item 7):

a. **Furring Channels —** Formed of No. 25 MSG galv steel. 2-9/16 in. or 2-23/32 in. wide by 7/8 in. deep, spaced max. 24 in. OC perpendicular to studs. Channels secured to studs as described in Item b. Gypsum board installed vertically only and attached to furring channels as described in Item 3.

b. **Steel Framing Members* —** Used to attach furring channels (Item 2Da) to studs (Item 2 or 2A). Clips spaced max. 24 in. OC., and secured to studs with No. 8 x 1-1/2 in. minimum self-drilling, S-12 steel screw through the center grommet. Furring channels are friction fitted into clips. RSIC-1 clip for use with 2-9/16 in. wide furring channels. RSIC-1 (2.75) clip for use with 2-23/32 in. wide furring channels.

PAC INTERNATIONAL INC — Types RSIC-1, RSIC-1 (2.75).

3. **Gypsum Board* —** Gypsum liner panels, nom 1 in. thick, 24 in. or 600 mm (for metric spacing) wide. Panels cut 1 in. less in length than floor to ceiling height. Vertical edges inserted in "H" portion of "C-H" studs or the gap between the two 3/4 in. legs of the "E" studs. Free edge of end panels attached to long leg of vertical "J" - runners with 1-5/8 in. long Type S steel screws spaced not greater than 12 in. OC. When wall height exceeds liner panel length, liner panel may be butted to extend to the full height of the wall. Horizontal joints need not be backed by steel framing. In System I, butt joints in liner panels are staggered min 36 in. Butt joints backed with 6 in. by 22 in. strips of 3/4 in. thick gypsum wallboard (Item 4). Wallboard strips centered over butt joints and secured to liner panels with six 1-1/2 in. long Type G steel screws, three screws along the 22 in. dimension at the top and bottom of the strips.

CGC INC — Type SLX

UNITED STATES GYPSUM CO — Type SLX

USG MEXICO S A DE C V — Type SLX

4. **Gypsum Board* —**

System A - 1 Hr

Gypsum panels, with beveled, square or tapered edges, nom 5/8 in. thick, 48 in. or 1200 mm wide, applied vertically or horizontally, attached to studs with 1 in. long Type S steel screws spaced 12 in. when installed vertically or 8 in OC when installed horizontally. Horizontal joints need not be backed by steel framing.

CGC INC — Types AR, C, IP-AR, IP-X1, IP-X2, IPC-AR, SCX, SHX, ULX, WRC, WRX

UNITED STATES GYPSUM CO — Types AR, C, FRX-G, IP-AR, IP-X1, IP-X2, IPC-AR, SCX, SGX, SHX, ULX, WRC, WRX, USGX.

USG MEXICO S A DE C V — Types AR, C, IP-AR, IP-X1, IP-X2, IPC-AR, SCX, SHX, ULX, WRC, WRX

System B - 2 Hr

Gypsum panels, with beveled, square or tapered edges, nom 1/2 in. or 5/8 in. thick, 48 in. or 1200 mm wide, applied vertically or horizontally in two layers. Inner or base layer attached to studs with 1 in. long Type S steel screws spaced 24 in. OC when installed vertically or 16 in. OC when installed horizontally. Outer or face layer attached to studs with 1-5/8 in. long Type S steel screws spaced 12 in. OC when installed vertically and staggered 12 in. from base layer screws or 8 in. OC when installed horizontally and staggered 8 in. from base layer screws. Horizontal joints between inner and outer layers staggered a min of 12 in. Horizontal joints need not be backed by steel framing. Vertical joints centered over studs and staggered 24 in.

CGC INC — 1/2 in. Type C, IP-X2, IPC-AR or WRC; 5/8 in. Types AR, C, IP-AR, IP-X1, IP-X2, IPC-AR, SCX, SHX, ULX, WRC, WRX

UNITED STATES GYPSUM CO — 1/2 in. Types C, IP-X2, IPC-AR, or WRC; 5/8 in. Types AR, C, FRX-G, IP-AR, IP-X1, IP-X2, IPC-AR, SCX, SGX, SHX, ULX, USGX, WRC, WRX

USG MEXICO S A DE C V — 1/2 in. Types C, IP-X2, IPC-AR or WRC; 5/8 in. Types AR, C, IP-AR, IP-X1, IP-X2, IPC-AR, SCX, SHX, ULX, WRC, WRX

System C - 2 Hr

Gypsum panels, with beveled, square or tapered edges, nom 3/4 in. thick, 48 in. or 1200 mm wide, applied vertically or horizontally, secured with 1-1/4 in. long Type S steel screws spaced 8 in. OC along vertical edges and 12 in. OC in the field when installed vertically or 8 in. OC along the vertical edges and in the field when installed horizontally. Horizontal joints need not be backed by steel framing. Screws along side joints offset 4 in. Requires min 4 in. deep framing per Items 1, 2 and 3. Requires min 3 in. thick mineral wool batts per Item 6.

CGC INC — Types IP-X3, or ULTRACODE

UNITED STATES GYPSUM CO — Types IP-X3, or ULTRACODE

USG MEXICO S A DE C V — Types IP-X3, or ULTRACODE

System D - 2 Hr

Gypsum panels, with beveled, square or tapered edges, nom 5/8 in. thick, 48 in. or 1200 mm wide, applied vertically or horizontally, attached directly to studs with 1 in. long Type S steel screws spaced 24 in. when installed vertically or 16 in. OC when installed horizontally. . Horizontal joints need not be backed by steel framing. Requires face layer of 1/2 or 5/8 in. thick cementitious backer units per Item 7 and min 1-1/2 in. thick mineral wool batts per Item 6.

CGC INC — Types AR, C, IP-AR, IP-X1, IP-X2, IPC-AR, SCX, SHX, ULX, WRC, WRX

UNITED STATES GYPSUM CO — Types AR, C, FRX-G, IP-AR, IP-X1, IP-X2, IPC-AR, SCX, SGX, SHX, ULX, USGX, WRC, WRX.

USG MEXICO S A DE C V — Types AR, C, IP-AR, IP-X1, IP-X2, IPC-AR, SCX, SHX, ULX, WRC, WRX

System E - 2 Hr

Gypsum panels, with beveled, square or tapered edges, nom 1/2 in. or 5/8 in. thick, 48 in. or 1200 mm wide, applied vertically or horizontally, attached to studs with 1 in. long Type S steel screws spaced 12 in. OC when installed vertically or 8 in. when installed horizontally. Horizontal joints need not be backed by steel framing.

CGC INC — 1/2 in. Types C, IP-X2, IPC-AR; 5/8 in. Types AR, C, IP-AR, IP-X1, IP-X2, IPC-AR, SCX, SHX, ULX, WRC, WRX

UNITED STATES GYPSUM CO — 1/2 in. Types C, IP-X2, IPC-AR; 5/8 in. Types AR, C, FRX-G, IP-AR, IP-X1, IP-X2, IPC-AR, SCX, SGX, SHX, ULX, USGX, WRC, WRX.

USG MEXICO S A DE C V — 1/2 in. Types C, IP-X2, IPC-AR; 5/8 in. Types AR, C, IP-AR, IP-X1, IP-X2, IPC-AR, SCX, SHX, ULX, WRC, WRX

System F - 2 Hr

Gypsum panels, with beveled, square or tapered edges, nom 1/2 in. or 5/8 in. thick, 48 in. or 1200 mm wide, applied vertically in two layers. Inner or base layer attached to resilient furring channels (Item 2B) with 1 in. long Type S steel screws spaced 24 in. Outer or face layer attached to resilient furring channels (Item 2B) with 1-5/8 in. long Type S steel screws spaced 12 in. OC and staggered 12 in. from base layer screws. Joints between inner and outer layers staggered 24 in.

CGC INC — 1/2 in. Type C, IP-X2, IPC-AR or WRC; 5/8 in. Types AR, C, FRX-G, IP-AR, IP-X1, IP-X2, IPC-AR, SCX, SHX, ULX, WRC, WRX

UNITED STATES GYPSUM CO — 1/2 in. Type C, IP-X2, IPC-AR or WRC; 5/8 in. Types AR, C, FRX-G, IP-AR, IP-X1, IP-X2, IPC-AR, SCX, SGX, SHX, ULX, USGX, WRC, WRX.

USG MEXICO S A DE C V — 1/2 in. Type C, IP-X2, IPC-AR or WRC; 5/8 in. Types AR, C, IP-AR, IP-X1, IP-X2, IPC-AR, SCX, SHX, ULX, WRC, WRX

System G - 3 Hr

Gypsum panels, with beveled, square or tapered edges, nom 5/8 in. thick, 48 in. or 1200 mm wide, applied vertically or horizontally in three layers. Inner or base layer attached to studs with 1 in. long Type S steel screws spaced 24 in. OC when installed vertically or 16 in OC when installed horizontally. Middle layer attached to studs with 1-5/8 in. long Type S steel screws spaced 24 in. when installed vertically or 16 in. OC when installed horizontally. Outer or face layer attached to studs with 2-1/4 in. long Type S steel screws spaced 16 in. when installed vertically or 12 in. OC when installed horizontally. Screws offset 6 in. from layer below. Horizontal joints on adjacent layers staggered a min of 12 in. . Horizontal joints need not be backed by steel framing. Vertical joints centered over studs and staggered 24 in. on adjacent layers.

CGC INC — Types C, IP-X2, IPC-AR, WRC

UNITED STATES GYPSUM CO — Types C, IP-X2, IPC-AR, WRC

USG MEXICO S A DE C V — Types C, IP-X2, IPC-AR, WRC

System H - 3 Hr

Gypsum panels, with beveled, square or tapered edges, nom 5/8 in. thick, 48 in. or 1200 mm wide, applied vertically or horizontally, two layers over the flange of the "C" section of the studs, one layer over the flange of the "H" section of the studs. Inner or base layer attached to studs with 1 in. long Type S steel screws spaced 24 in. OC when installed vertically or 16 in. OC when installed horizontally. Face layer attached to studs with 1-5/8 in. long Type S steel screws spaced 16 in. when installed vertically or 12 in. OC when installed horizontally. Screws offset 6 in. from layer below. Horizontal joints on adjacent layers staggered a min of 12 in. Horizontal joints need not be backed by steel framing. Vertical joints centered over studs and staggered 24 in. on adjacent layers.

CGC INC — Types C, IP-X2, IPC-AR, WRC

UNITED STATES GYPSUM CO — Types C, IP-X2, IPC-AR, WRC

USG MEXICO S A DE C V — Types C, IP-X2, IPC-AR, WRC

System I - 4 Hr

Gypsum panels, with beveled, square or tapered edges, nom 3/4 in. thick, 4 ft wide (or 1200 mm for metric spacing) wallboard with square or tapered edges. Total of four layers to be used. First and second (inner) layers applied vertically or horizontally over the steel studs. Horizontal joints need not be backed by steel framing. When applied vertically, joints centered over studs and staggered min 24 in., otherwise all joints staggered min 12 in. First layer secured to studs with 1-1/4 in. long Type S self-drilling, self-tapping bugle-head steel screws spaced 24 in. OC. Second layer secured to studs with 2-1/4 in. long Type S self-drilling, self-tapping bugle-head steel screws spaced 12 in. OC. Third layer applied vertically over the furring channels (Item 2C) with a 1-1/4 in. long Type S self-drilling, self-tapping bugle-head steel screws spaced 12 in. OC. Fourth layer applied vertically or horizontally with 2-1/4 in. long Type S self-drilling, self-tapping bugle-head steel screws spaced 12 in. OC. When applied vertically, joints to be staggered min 24 in. from third layer, otherwise all joints staggered min 12 in.

CGC INC — Types IP-X3, or ULTRACODE

UNITED STATES GYPSUM CO — Types IP-X3, or ULTRACODE

USG MEXICO S A DE C V — Types IP-X3, or ULTRACODE

4A. **Gypsum Board* —** (As an alternate to Item 4 Systems A, B, C, D, E, G, H, and I when used as the base layer, For direct attachment only) - Nom 5/8 in. or ¾ in. thick lead backed gypsum panels with beveled, square or tapered edges, applied vertically. Vertical joints centered over 20 MSG steel studs and staggered min 1 stud cavity on opposite sides of studs. See Items 1, 2, 2A, 2B and 2D. Wallboard secured to studs with 1-1/4 in. long Type S-12 steel screws spaced 8 in. OC at perimeter and 12 in. OC in the field. For Joint Compound see Item 5. To be used with Lead Batten Strips (see Item 9) or Lead Discs or Tabs (see Item 10).

RAY-BAR ENGINEERING CORP — Type RB-LBG

4B. **Gypsum Board* —** (As an alternate to Item 4 Systems A, B, C, D, E, G, H, and I when used as the base layer, For direct attachment only) - Nominal 5/8 in. thick lead backed gypsum panels with beveled, square or tapered edges, applied vertically. Vertical joints centered over studs and staggered min 1 stud cavity on opposite sides of studs. Wallboard secured to studs with 1-1/4 in. long Type S-12 (or #6 by 1-1/4 in. long bugle head fine driller) steel screws spaced 8 in. OC at perimeter and 12 in. OC in the field.

NEW ENGLAND LEAD BURNING CO INC, DBA NELCO — Nelco

4C. **Gypsum Board* —** (As an alternate to Item 4 Systems A, B, C, D, E, G, H, and I when used as the base layer, For direct attachment only) - Nom 5/8 or 3/4 in. thick lead backed gypsum panels with beveled, square or tapered edges, applied vertically. Vertical joints centered over 20 MSG steel studs and staggered min 1 stud cavity on opposite sides of studs. See Items 1, 2, 2A, 2B and 2D. Wallboard secured to studs with 1-1/4 in. long Type S-12 steel screws spaced 8 in. OC at perimeter and 12 in. OC in the field. For Joint Compound see Item 5. To be used with Lead Batten Strips (see Item 9A) or Lead Discs (see Item 10A). Lead batten strips required behind vertical joints of lead backed gypsum wallboard and optional at remaining stud locations. Lead batten strips, min 2 in. wide, max 10 ft long with a max thickness of 0.140 in. placed on the face of studs and attached to the stud with two 1 in. long Type S-8 pan head steel screws, one at the top of the strip and one at the bottom of the strip.

MAYCO INDUSTRIES INC — Type X-Ray Shielded Gypsum

4D. **Gypsum Board* —** (As an alternate to Item 4 Systems A, B, C, D, E, G, H, and I when used as the base layer, For direct attachment only). Nom 5/8 in. thick lead backed gypsum panels with beveled, square or tapered edges, applied vertically. Vertical joints centered over studs and staggered min 1 stud cavity on opposite sides of studs. Wallboard secured to studs with 1-1/4 in. long Type S-12 steel screws gypsum panel steel screws spaced 8 in. OC at perimeter and 12 in. OC in the field. Lead batten strips required behind vertical joints of lead backed gypsum wallboard and optional at remaining stud locations. Lead batten strips, min 2 in. wide, max 8 ft long with a max thickness of 0.14 in. placed on the face of studs and attached to the stud with construction adhesive and two 1 in. long Type S-12 pan head steel screws, one at the top of the strip and one at the bottom of the strip. Lead discs, nominal 3/8 in. diam by max 0.085 in. thick. Compression fitted or adhered over the screw heads. Lead batten strips and discs to have a purity of 99.9% meeting the Federal specification QQ-L-201f, Grade "C".

RADIATION PROTECTION PRODUCTS INC — Type RPP - Lead Lined Drywall

5. **Joint Tape and Compound —** (Not Shown)

Systems A, B, C, E, F, G, H, I

Joints on outer layers of gypsum boards (Item 4 and 4A) covered with paper tape and joint compound. Paper tape and joint compound may be omitted when gypsum boards are supplied with square edges. Exposed screw heads covered with joint compound.

6. **Batts and Blankets* —**

Systems A, B, E, F, G, H, I

(Optional) — Mineral wool or glass fiber batts partially or completely filling stud cavity. Any mineral wool or glass fiber batt mineral bearing the UL Classification Marking as to Fire Resistance.

Systems C & D

Min 3 in. (System C) and min 1-1/2 in. (System D) thick mineral wool batts, friction fitted between the studs and floor and ceiling runners.

THERMAFIBER INC — Type SAFB

7. **Cementitious Backer Units* —** (System D) — Nom 1/2 or 5/8 in. thick panels, square edge, attached to studs over gypsum wallboard with 1-5/8 in. long, Type S-12, corrosion resistant steel screws spaced 8 in. OC and staggered 8 in. from gypsum wall board screws. Joints covered with glass fiber mesh tape. Vertical joints staggered one stud cavity from gypsum wallboard joints. Horizontal joints staggered a min of 12 in. from the gypsum wallboard joints.

UNITED STATES GYPSUM CO — DUROCK Exterior Cement Board or DUROCK Brand Cement Board.

8. **Laminating Adhesive* —** (Optional, Not Shown) — Used to bond outer layer of Cementitious Backer Units (Item 7) to inner layers of Gypsum Board (Item 4) in System D. ANSI A136.1 Type 1 organic adhesive applied with 1/4 in. square notched trowel. See Adhesives (BYWR) in the Fire Resistance Directory or Adhesives (BJLZ) in the Building Materials

Directory for names of Classified companies.

9. **Lead Batten Strips —** (Not Shown, For Use With Item 4A) - Lead batten strips, min 1-1/2 in. wide, max 10 ft long with a max thickness of 0.125 in. Strips placed on the interior face of studs and attached from the exterior face of the stud with two 1 in. long Type S-12 pan head steel screws, one at the top of the strip and one at the bottom of the strip. Lead batten strips to have a purity of 99.9% meeting the Federal specification QQ-L-201f, Grade "C". Lead batten strips required behind vertical joints of lead backed gypsum wallboard (Item 4A) and optional at remaining stud locations. Required behind vertical joints.

9A. **Lead Batten Strips —** (Not Shown, for use with Item 4C) Lead batten strips, 2 in. wide, max 10 ft long with a max thickness of 0.140 in. Strips placed on the face of studs and attached to the stud with two min. 1 in. long min. Type S-8 pan head steel screws, one at the top of the strip and one at the bottom of the strip or with one min. 1 in. long min. Type S-8 pan head steel screw at the top of the strip. Lead batten strips to have a purity of 99.9% meeting the Federal specification QQ-L-201f, Grades "A, B, C or D".. Lead batten strips required behind vertical joints of lead backed gypsum wallboard (Item 6) and optional at remaining stud locations.

10. **Lead Discs or Tabs —** (Not Shown, For Use With Item 4A) - Used in lieu of or in addition to the lead batten strips (Item 9) or optional at other locations - Max 3/4 in. diam by max 0.125 in. thick lead discs compression fitted or adhered over steel screw heads or max 1/2 in. by 1-1/4 in. by max 0.125 in. thick lead tabs placed on gypsum boards (Item 4A) underneath screw locations prior to the installation of the screws. Lead discs or tabs to have a purity of 99.9% meeting the Federal specification QQ-L-201f, Grade "C".

10A. **Lead Discs —** (Not Shown, for use with Item 4C) Max 5/16 in. diam by max 0.140 in. thick lead discs compression fitted or adhered over steel screw heads. Lead discs to have a purity of 99.9% meeting the Federal Specification QQ-L-201f, Grades "A, B, C or D".

11. **Lead Batten Strips —** (Not Shown, For Use With Item 4B) Lead batten strips, 2 in. wide, max 10 ft long with a max thickness of 0.142 in. Strips placed on the face of studs and attached to the stud with two min. 1 in. long min. Type S-8 pan head steel screws, one at the top of the strip and one at the bottom of the strip or with one min. 1 in. long min. Type S-8 pan head steel screw at the top of the strip. Lead batten strips to have a purity of 99.9% meeting the Federal specification QQ-L-201f, Grade "C". Lead batten strips required behind vertical joints of lead backed gypsum wallboard (Item 4B) and optional at remaining stud locations.

12. **Lead Tabs —** (Not Shown, For Use With Item 4B) 2 in. wide, 5 in. long with a max thickness of 0.142 in. Tabs friction-fit around front face of stud, the stud folded back flange, and the back face of the stud. Tabs required at each location where a screw (that secures the gypsum boards, Item 4B) will penetrate the steel stud. Lead tabs to have a purity of 99.9% meeting the Federal specification QQ-L-201f, Grade "C". Lead tabs may be held in place with standard adhesive tape if necessary.

*Bearing the UL Classification Mark

ONLINE CERTIFICATIONS DIRECTORY

Design No. U458
BXUV.U458
Fire Resistance Ratings - ANSI/UL 263

Page Bottom

Design/System/Construction/Assembly Usage Disclaimer

- Authorities Having Jurisdiction should be consulted in all cases as to the particular requirements covering the installation and use of UL Listed or Classified products, equipment, system, devices, and materials.
- Authorities Having Jurisdiction should be consulted before construction.
- Fire resistance assemblies and products are developed by the design submitter and have been investigated by UL for compliance with applicable requirements. The published information cannot always address every construction nuance encountered in the field.
- When field issues arise, it is recommended the first contact for assistance be the technical service staff provided by the product manufacturer noted for the design. Users of fire resistance assemblies are advised to consult the general Guide Information for each product category and each group of assemblies. The Guide Information includes specifics concerning alternate materials and alternate methods of construction.
- Only products which bear UL's Mark are considered as Classified, Listed, or Recognized.

Fire Resistance Ratings - ANSI/UL 263

See General Information for Fire Resistance Ratings - ANSI/UL 263

Design No. U458

December 08, 2011

Nonbearing Wall Rating — 1 HR.

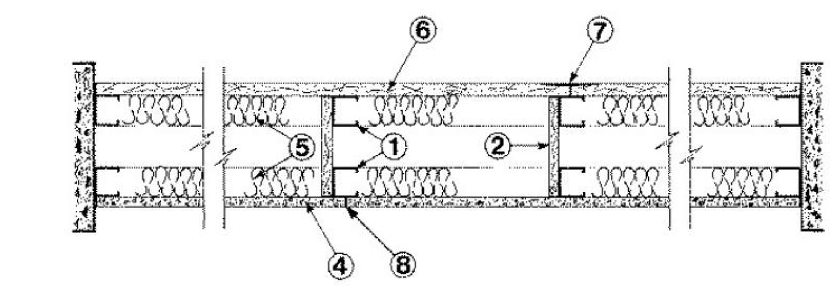

1. **Studs —** Channel shaped, 1-5/8 in. wide by 1-1/4 in. deep with 5/16 in. folded back return flange legs. Fabricated from 20 MSG (0.0329 in., min bare metal thickness) galv steel. Max stud spacing 16 in. OC. Studs to be cut 1 in. less than assembly height.

2. **Bracing —** Two Types — Cut from steel runners or studs, cavity width. Fastened with two 1/8 in. long, Type S-12, steel screws in each stud, space braces max 48 in. OC. As an alternate, bracing cut from gypsum wallboard, length equal to stud cavity width and 6 in. wide. Fastened with two 1 in. long, Type S-12, steel screws in each stud space braces max 48 in. OC.

3. **Floor and Ceiling Runners —** (Not Shown) — Channel shaped runners, 1-5/8 in. wide by 1-1/4 in. deep, fabricated from 20 MSG (0.0329 in., min bare metal thickness) galv steel. Attached to floor and ceiling with fasteners.

4. **Cementitious Backer Units* —** Board 1/2 or 5/8 in. thick, square edge, attached to studs with 1-1/4 in. long.

Type S-12, corrosion-resistant, wafer-head steel screws, spaced 8 in. OC. Joints covered with glass fiber mesh tape.

UNITED STATES GYPSUM CO — Durock Type DCB, Durock Exterior Cement Board or Durock brand Cement Board.

USG MEXICO S A DE C V — Type DCB.

5. **Batts and Blankets* —** Placed to fill interior of stud cavity. Min thickness 1-1/2 in. both stud cavities.

THERMAFIBER INC — Type SAFB.

6. **Gypsum Board* —** Gypsum panels 5/8 in. thick, with beveled, square or tapered edges, applied vertically or horizontally. Vertical joints centered over studs. All joints staggered a min of 12 in. from Cementitious Backer Unit joints. When applied vertically, secured to studs with 1 in. long Type S-12 steel screws, spaced 8 in. OC along the edges of the board and 12 in. OC in the field of the board. When applied horizontally, secured to studs with 1 in. long Type S-12 steel screws, spaced 8 in. OC along the edges of the board and 8 in. OC in the field of the board. When Types AR, IP-X1 and SCX boards are used, stud cavity depth to be a min of 3-1/2 in. When used in widths other than 48 in., gypsum panels to be installed horizontally.

CGC INC — Types AR, C, IP-AR, IP-X1, IP-X2, IPC-AR, SCX, ULX, WRC.

UNITED STATES GYPSUM CO — Types AR, C, FRX-G, IP-AR, IP-X1, IP-X2, IPC-AR, SCX, ULX or WRC.

USG MEXICO S A DE C V — Type C, IP-AR, IP-X1, IP-X2, IPC-AR, SCX, ULX, AR or WRC.

7. **Joint Tape and Compound —** Vinyl, dry or premixed joint compound, applied in two coats to joints and screw heads; paper tape, 2 in. wide, embedded in first layer of compound over all joints. As an alternate, nom 3/32 in. thick gypsum veneer plaster may be applied to the entire surface of Classified veneer baseboard. Joints reinforced. Paper tape and joint compound may be omitted when gypsum boards are supplied with square edges.

8. **Joints —** Treated with glass fiber tape and latex modified Portland cement, mortar or ANSI A136.1 type 1 organic adhesive.

*Bearing the UL Classification Mark

A R C H I T E C T U R A L — SALT LAKE CITY PLACERVILLE SACRAMENTO

Architectural NEXUS, Inc.
2505 East Parleys Way
Salt Lake City, Utah 84109
T 801.924.5000 F 801.924.5001
http://www.archnexus.com

Licensed Architect PETER MOYES No. 83-122248-0301 21 MARCH 2013 State of Utah

Original drawings remain the property of the Architect and as such the Architect retains total ownership and control. The design represented by these drawings is sold to the client for a one time use, unless otherwise agreed upon in writing by the Architect.
© Architectural Nexus, Inc. 2012

UTAH NATIONAL GUARD CAMP WILLIAMS
RTI TASS COMPLEX, PHASE II
NGB PROJECT NO. 490444

17800 SOUTH ACADEMY STREET
BLUFFDALE, UTAH 84065

#	REVISIONS	
1	3.22.13	DFCM REVIEW RESPONSE #2

NEXUS PROJECT #:	11024
CHECKED BY:	SMS
DRAWN BY:	Author
DATE:	21 MARCH 2013

VOLUME B - BID DOCUMENTS

SHEET CONTENTS:

UL LISTINGS

GI512

4/1/2013 11:20:07 AM

ONLINE CERTIFICATIONS DIRECTORY

Design No. U465
BXUV.U465
Fire Resistance Ratings - ANSI/UL 263

Page Bottom

Design/System/Construction/Assembly Usage Disclaimer

- Authorities Having Jurisdiction should be consulted in all cases as to the particular requirements covering the installation and use of UL Listed or Classified products, equipment, system, devices, and materials.
- Authorities Having Jurisdiction should be consulted before construction.
- Fire resistance assemblies and products are developed by the design submitter and have been investigated by UL for compliance with applicable requirements. The published information cannot always address every construction nuance encountered in the field.
- When field issues arise, it is recommended the first contact for assistance be the technical service staff provided by the product manufacturer noted for the design. Users of fire resistance assemblies are advised to consult the general Guide Information for each product category and each group of assemblies. The Guide Information includes specifics concerning alternate materials and alternate methods of construction.
- Only products which bear UL's Mark are considered as Classified, Listed, or Recognized.

Fire-resistance Ratings - ANSI/UL 263

See General Information for Fire-resistance Ratings - ANSI/UL 263

Design No. U465

February 22, 2013

Nonbearing Wall Rating — 1 HR.

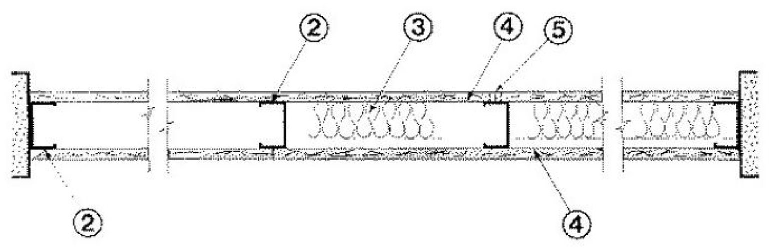

1. **Floor and Ceiling Runners —** (Not shown) — Channel shaped runners, 3-5/8 in. deep (min), 1-1/4 in. legs, formed from min No. 25 MSG galv steel, attached to floor and ceiling with fasteners spaced 24 in. OC max.

1A. **Framing Members*— Floor and Ceiling Runners —** (Not shown) — As an alternate to Item 1 - Channel shaped, min 3-5/8 in. deep, attached to floor and ceiling with fasteners 24 in. OC. max.

ALLSTEEL & GYPSUM PRODUCTS INC — Type SUPREME Framing System

CONSOLIDATED FABRICATORS CORP, BUILDING PRODUCTS DIV — Type SUPREME Framing System

QUAIL RUN BUILDING MATERIALS INC — Type SUPREME Framing System

SCAFCO STEEL STUD MANUFACTURING CO — Type SUPREME Framing System

STEEL CONSTRUCTION SYSTEMS INC — Type SUPREME Framing System

UNITED METAL PRODUCTS INC — Type SUPREME Framing System

1B. **Framing Members* - Floor and Ceiling Runners —** Not shown - In lieu of Item 1 — For use with Item 2B, proprietary channel shaped runners, 1-1/4 in. wide by min 3-5/8 in. deep fabricated from min 0.020 in. thick galv steel, attached to floor and ceiling with fasteners spaced 24 in. OC max.

CALIFORNIA EXPANDED METAL PRODUCTS CO — Viper20™ Track

CRACO MFG INC — SmarterTrack20™, SmartTrack20™

MARINO/WARE, DIV OF WARE INDUSTRIES INC — Viper20™ Track

PHILLIPS MFG CO L L C — Viper20™ Track

1C. **Floor and Ceiling Runners —** (Not shown)—For use with Item 2C- Channel shaped, fabricated from min 20 MSG corrosion-protected or galv steel, min depth to accommodate stud size, with min 1 in. long legs, attached to floor and ceiling with fasteners spaced max 24 in. OC.

1D. **Framing Members*— Floor and Ceiling Runners —** Not shown - In lieu of Items 1 through 1C — For use with Item 2D and 4G only, proprietary channel shaped runners, 1-1/4 in. deep by min 3-5/8 in. wide fabricated from min 0.018 in. thick galv steel, attached to floor and ceiling with fasteners spaced 24 in. OC max.

CLARKDIETRICH BUILDING SYSTEMS — CD ProTRAK

DMFCWBS L L C — ProTRAK

MBA BUILDING SUPPLIES — ProTRAK

RAM SALES L L C — Ram ProTRAK

SOUTHEASTERN STUD & COMPONENTS INC — ProTRAK

STEEL STRUCTURAL SYSTEMS L L C — Tri-S ProTRAK

1E. **Framing Members*— Floor and Ceiling Runners —** Not shown - In lieu of Items 1 through 1D — For use with Item 2E and 4I only, proprietary channel shaped runners, 1-1/4 in. deep by min 3-5/8 in. wide fabricated from min 0.018 in. thick galv steel, attached to floor and ceiling with fasteners spaced 24 in. OC max.

TELLING INDUSTRIES L L C — TRUE-TRACK™

1F. **Framing Members*— Floor and Ceiling Runners —** Not shown - In lieu of Items 1 through 1E — For use with Item 2, channel shaped runners, 1-1/4 in. deep by min 3-5/8 in. wide fabricated from min 25 MSG steel, attached to floor and ceiling with fasteners spaced 24 in. OC max.

KIRII (HONG KONG) LTD — Type KIRII

1G. **Framing Members*— Floor and Ceiling Runners —** Not shown - In lieu of Items 1 through 1F — For use with Item 2, channel shaped runners, 1-1/4 in. deep by min 3-5/8 in. wide, attached to floor and ceiling with fasteners spaced 24 in. OC max.

STUDCO BUILDING SYSTEMS — CROCSTUD Track

1H. **Floor and Ceiling Runners —** (Not shown) — Channel shaped, fabricated from min 0.02 in. galv steel, min width to steel or thicker, attached to floor and ceiling with fasteners spaced max 24 in. OC.

MARINO/WARE, DIV OF WARE INDUSTRIES INC — Viper20™ Track VT100.

1I. **Framing Members* - Floor and Ceiling Runners —** Not shown - In lieu of Item 1 — For use with Item 2H, proprietary channel shaped runners, 1-1/4 in. wide by min 3-5/8 in. deep fabricated from min 0.020 in. thick galv steel, attached to floor and ceiling with fasteners spaced 24 in. OC max.

TELLING INDUSTRIES L L C — Viper20™ Track

2. **Steel Studs —** Channel shaped, 3-5/8 in. deep (min), formed from min No. 25 MSG galv steel spaced 24 in. OC max. Studs to be cut 3/4 in. less than assembly height.

2A. **Framing Members*— Steel Studs —** As an alternate to Item 2 - Channel shaped studs, min 3-5/8 in. deep, spaced a max of 24 in. OC. Studs to be cut 3/4 in. less than assembly height.

ALLSTEEL & GYPSUM PRODUCTS INC — Type SUPREME Framing System

CONSOLIDATED FABRICATORS CORP, BUILDING PRODUCTS DIV — Type SUPREME Framing System

QUAIL RUN BUILDING MATERIALS INC — Type SUPREME Framing System

SCAFCO STEEL STUD MANUFACTURING CO — Type SUPREME Framing System

STEEL CONSTRUCTION SYSTEMS INC — Type SUPREME Framing System

UNITED METAL PRODUCTS INC — Type SUPREME Framing System

2B. **Framing Members* - Steel Studs —** Not shown - In lieu of Item 2 — For use with Item 1B, proprietary channel shaped steel studs, 1-1/4 in. wide by min 3-5/8 in. deep fabricated from min 0.020 in. thick galv steel. Studs cut 3/4 in. less in length than assembly height.

CALIFORNIA EXPANDED METAL PRODUCTS CO — Viper20™

CRACO MFG INC — SmarterStud20™, SmartStud20™

MARINO/WARE, DIV OF WARE INDUSTRIES INC — Viper20™

PHILLIPS MFG CO L L C — Viper20™

2C. **Steel Studs —** (As an alternate to Item 2, For use with Item 4E) Channel shaped, fabricated from min 20 MSG corrosion-protected or galv steel, 3-1/2 in. min depth, spaced a max of 16 in. OC. Studs friction-fit into floor and ceiling runners. Studs to be cut 5/8 to 3/4 in. less than assembly height.

2D. **Framing Members*— Steel Studs —** As an alternate to Items 2 through 2C- For use with Item 1D and 4G only, channel shaped studs, min 3-5/8 in. wide fabricated from min 0.018 in. thick galv steel, spaced a max of 24 in. OC. Studs to be cut 1/2 in. less than assembly height.

CLARKDIETRICH BUILDING SYSTEMS — CD ProSTUD

DMFCWBS L L C — ProSTUD

MBA BUILDING SUPPLIES — ProSTUD

RAM SALES L L C — Ram ProSTUD

SOUTHEASTERN STUD & COMPONENTS INC — ProSTUD

STEEL STRUCTURAL SYSTEMS L L C — Tri-S ProSTUD

2E. **Framing Members*— Steel Studs —** As an alternate to Items 2 through 2D- For use with Item 1E and 4I only, channel shaped studs, min 3-5/8 in. wide fabricated from min 0.018 in. thick galv steel, spaced a max of 24 in. OC. Studs to be cut 1/2 in. less than assembly height.

TELLING INDUSTRIES L L C — TRUE-STUD™

2F. **Framing Members*— Steel Studs —** As an alternate to Items 2 through 2E- For use with Item 1F, channel shaped studs, min 3-5/8 in. wide fabricated from min 25 MSG steel, spaced a max of 24 in. OC. Studs to be cut 1/2 in. less than assembly height.

KIRII (HONG KONG) LTD — Type KIRII

2G. **Framing Members* - Steel Studs —** Not shown - In lieu of Item 2 through 2F - For use with Item 1G. Proprietary channel shaped studs, minimum 3-5/8 in. wide, Studs to be cut 1/2 in. less than the assembly height.

STUDCO BUILDING SYSTEMS — CROCSTUD

2H. **Framing Members* - Steel Studs —** Not shown - In lieu of Item 2 — For use with Item 1I, proprietary channel shaped steel studs, 1-1/4 in. wide by min 3-5/8 in. deep fabricated from min 0.020 in. thick galv steel. Studs cut 3/4 in. less in length than assembly height.

TELLING INDUSTRIES L L C — Viper20™

3. **Batts and Blankets* —** (Optional) — Mineral wool or glass fiber batts partially or completely filling stud cavity.

See **Batts and Blankets** (BZJZ) category for names of Classified companies.

3A. **Fiber, Sprayed* —** As an alternate to Batts and Blankets (Item 3) — Spray applied cellulose material. The fiber is applied with water to completely fill the enclosed cavity in accordance with the application instructions supplied with the product. Nominal dry density of 3.0 lb/ft³. Alternate application method: The fiber is applied with U.S. Greenfiber LLC Type AD100 hot melt adhesive at a nominal ratio of one part adhesive to 6.6 parts fiber to completely fill the enclosed cavity in accordance with the application instructions supplied with the product. Nominal dry density of 2.5 lb/ft³.

U S GREENFIBER L L C — Cocoon2 Stabilized or Cocoon-FRM (Fire Rated Material)

3B. **Fiber, Sprayed* —** As an alternate to Batts and Blankets (Item 3) and Item 3A - Spray applied cellulose insulation material. The fiber is applied with water to interior surfaces in accordance with the application instructions supplied with the product. Applied to completely fill the enclosed cavity. Minimum dry density of 4.3 pounds per cubic ft.

NU-WOOL CO INC — Cellulose Insulation

3C. **Fiber, Sprayed* —** As an alternate to Batts and Blankets (Item 3) - Spray applied cellulose fiber. The fiber is applied with water to completely fill the enclosed cavity in accordance with the application instructions supplied with the product. The minimum dry density shall be 4.30 lbs/ft³.

INTERNATIONAL CELLULOSE CORP — Celbar-RL

3D. **Batts and Blankets* —** For use with Item 8. Nom 3 in. thick, minimum 3.4 pcf mineral wool batts, friction fit between the studs and floor and ceiling runners.

See **Batts and Blankets** (BZJZ) category for names of manufacturers.

4. **Gypsum Board* —** 5/8 in. thick, 4 ft wide, attached to steel studs and floor and ceiling track with 1 in. long, Type S steel screws spaced 8 in. OC. along edges of board and 12 in. OC in the field of the board. Joints oriented vertically and staggered on opposite sides of the assembly. When attached to item 6 (resilient channels) or 6A or 6C (furring channels), gypsum board is screw attached to furring channels with 1 in. long, Type S steel screws spaced 12 in. OC.

ACADIA DRYWALL SUPPLIES LTD — Type X

AMERICAN GYPSUM CO — Types AG-C, AGX-1, M-Glass

BEIJING NEW BUILDING MATERIALS PUBLIC LTD CO — Type DBX-1.

CGC INC — Types AR, C, IP-AR, IP-X1, IP-X2, IPC-AR, SCX, SHX, WRC or WRX.

CERTAINTEED GYPSUM INC — Types 1, EGRG, GlasRoc, Type X, Type C, SilentFX, 5/8" Easi-Lite Type X.

CERTAINTEED GYPSUM CANADA INC — Type C, Type X, Type Abuse-Resistant, 5/8" Easi-Lite Type X.

GEORGIA-PACIFIC GYPSUM L L C — Types 5, 6, 9, C, DAP, DD, DA, DAPC, DGG, DS, GPFS6, LS.

LAFARGE NORTH AMERICA INC — Types LGFC2, LGFC2A, LGFC6, LGFC6A, LGFC-C, LGFC-C/A, LGFC-WD, LGLLX.

NATIONAL GYPSUM CO — Types FSK, FSK-C, FSK-G, FSW-C, FSW-G, FSW, FSW-3, FSW-5, FSW-6, FSL.

PABCO BUILDING PRODUCTS L L C, DBA PABCO GYPSUM — Types PG-C, PG-9, PG-11, PGS-WRS.

PANEL REY S A — Types GREX, PRX, RHX, MDX, ETX.

SIAM GYPSUM INDUSTRY (SARABURI) CO LTD — Type EX-1

TEMPLE-INLAND — Type X, Veneer Plaster Base - Type X, Water Rated - Type X, Sheathing - Type X, Soffit - Type X, TG-C, GreenGlass Type X, Type X ComfortGuard Sound Deadening Gypsum Board.

THAI GYPSUM PRODUCTS PCL — Type X, Type C.

UNITED STATES GYPSUM CO — Type AR, C, FRX-G, IP-AR, IP-X1, IP-X2, IPC-AR, SCX, SHX, WRC, WRX, USGX (Joint tape and compound, Item 5, optional for use with Type USGX).

USG MEXICO S A DE C V — Type AR, C, IP-AR, IP-X1, IP-X2, IPC-AR, SCX, SHX, WRC or WRX.

4A. **Gypsum Board* —** (As alternate to Item 4) - Nom 5/8 in. thick gypsum panels with beveled, square or tapered edges, applied vertically or horizontally. Vertical joints centered over studs and staggered one stud cavity on opposite sides of studs. Horizontal edge joints and horizontal butt joints on opposite sides of studs need not be staggered or backed by steel framing. Panels attached to steel studs and floor runner with 1 in. long Type S steel screws spaced 8 in. OC when applied horizontally, or 8 in. OC along vertical and bottom edges and 12 in. OC in the field when panels are applied vertically. When used in widths other than 48 in., gypsum panels to be installed horizontally.

CGC INC — Types AR, C, IP-AR, IP-X1, IP-X2, IPC-AR, SCX, SHX, WRC or WRX.

CERTAINTEED GYPSUM INC — Type X, Type C, Type EGRG/ GlasRoc.

CERTAINTEED GYPSUM CANADA INC — Type X, Type C, Type EGRG/ GlasRoc.

GEORGIA-PACIFIC GYPSUM L L C — Types DAP, DAPC, DGG, DS.

LAFARGE NORTH AMERICA INC — Type LGFC6A, LGFC-C/A

THAI GYPSUM PRODUCTS PCL — Type X, Type C.

UNITED STATES GYPSUM CO — T ype AR, C, FRX-G, IP-AR, IP-X1, IP-X2, IPC-AR, SCX, SHX, WRC, WRX, , USGX (Joint tape and compound, Item 5, optional for use with Type USGX).

USG MEXICO S A DE C V — Type AR, C, IP-AR, IP-X1, IP-X2, IPC-AR, SCX, SHX, WRC or WRX.

4B. **Gypsum Board* —** (As an alternate to Items 4 or 4A) — Nom 3/4 in. thick, 4 ft wide, installed as described in Item 4A with screw length increased to 1-1/4 in.

CGC INC — Types AR, IP-AR.

UNITED STATES GYPSUM CO — Types AR, IP-AR.

USG MEXICO S A DE C V — Types AR, IP-AR.

4C. **Gypsum Board* —** As an alternate to Items 4, 4A, and 4B - Nom. 5/8 in. thick gypsum panels, with square edges, applied horizontally. Gypsum panels fastened to framing with 1 in. long bugle head steel screws spaced a max 8 in. OC, with last 2 screws 3/4 in. and 4 in. from each edge of board. Horizontal joints need not be backed by steel framing. Horizontal edge joints and horizontal butt joints on opposite sides of studs on interior walls need not be staggered or backed by steel framing.

TEMPLE-INLAND — GreenGlass Type X.

4D. **Gypsum Board* —** As an alternate to Items 4, 4A, 4B, and 4C - Nom. 5/8 in. thick gypsum panels applied horizontally. Horizontal joints need not be backed by steel framing. Horizontal edge joints and horizontal butt joints on opposite sides of studs need not be staggered. Gypsum panels fastened to framing with 1 in. long Type S steel screws 1-1/2 in. from board edges, 3 in. from board edge and every 8 in. OC in the field. Screws spaced a max 12 in. along the top and bottom edges of the wall.

NATIONAL GYPSUM CO — Types FSK, FSK-C, FSK-G, FSW-C, FSW-G, FSW.

4E. **Gypsum Board* —** (As an alternate to Items 4 through 4D) - Installed as described in Item 4. 5/8 in. thick, 4 ft. wide, paper surfaced, applied vertically only and fastened to the studs and plates with 1 in. long, Type S steel screws spaced, 8 in. OC. Not to be used with item 6.

NATIONAL GYPSUM CO — SoundBreak XP Type X Gypsum Board

4F. **Gypsum Board* —** (Not Shown) - (As an alternate to Item 4 when used as the base layer on one or both sides of wall. For direct attachment only to steel studs Item 2C) - Nom 5/8 in. thick lead backed gypsum panels with beveled, square or tapered edges, applied vertically. Vertical joints centered over studs and staggered min 1 stud cavity on opposite sides of studs. Gypsum board secured to studs with 1-1/4 in. long Type S-12 steel screws spaced 8 in. OC at perimeter and 12 in. OC in the field.

RAY-BAR ENGINEERING CORP — Type RB-LBG

4G. **Gypsum Board* —** (As an alternate to Items 4 through 4F) — For use with Items 1D and 2D only, 5/8 in. thick, 4 ft wide, attached to steel studs and floor and ceiling track with 1 in. long, Type S steel screws spaced 8 in. OC. along edges of board and 12 in. OC in the field of the board. Joints oriented vertically and staggered on opposite sides of the assembly.

LAFARGE NORTH AMERICA INC — Type LGFC6A, LGFC-C/A

NATIONAL GYPSUM CO — Types FSW

UNITED STATES GYPSUM CO — Type SCX

4H. **Wall and Partition Facings and Accessories* —** (As an alternate to Items 4 through 4G) — Nominal 5/8 in. thick, 4 ft wide panels, applied vertically and secured as described in Item 4.

SERIOUS ENERGY INC — Types QuietRock ES, QuietRock 527.

4I. **Gypsum Board* —** (As an alternate to Items 4 through 4F) — For use with Items 1E and 2E only, 5/8 in. thick, 4 ft wide, attached to steel studs and floor and ceiling track with 1 in. long, Type S steel screws spaced 8 in. OC. along edges of board and 12 in. OC in the field of the board. Joints oriented vertically and staggered on opposite sides of the assembly.

UNITED STATES GYPSUM CO — Type SCX

4J. **Gypsum Board* —** (Not Shown) - (As an alternate to Item 4 when used as the base layer on one or both sides of wall. For direct attachment only to steel studs Item 2C) - Nom 5/8 in. thick lead backed gypsum panels with beveled, square or tapered edges, applied vertically. Vertical joints centered over studs and staggered min 1 stud cavity on opposite sides of studs. Gypsum board secured to studs with 1-1/4 in. long Type S-12 steel screws spaced 8 in. OC at perimeter and 12 in. OC in the field. To be used with Lead Batten Strips (see Item 9A) or Lead Discs (see Item 10A).

MAYCO INDUSTRIES INC — Type X-Ray Shielded Gypsum

4K. **Gypsum Board* —** (As an alternate to Item 4 and 4A, not for use with Items 1D, 1E, 2D and 2E) - Nom. 5/8 in. thick gypsum panels with beveled, square or tapered edges installed as described in Item 4 and 4A.

CGC INC — Type ULX

UNITED STATES GYPSUM CO — Type ULX

USG MEXICO S A DE C V — Type ULX

4L. **Gypsum Board* —** (Not Shown) - (As an alternate to Item 4 when used as the base layer on one or both sides of wall. For direct attachment only to steel studs Item 2C). Nom 5/8 in. thick lead backed gypsum panels with beveled, square or tapered edges, applied vertically. Vertical joints centered over studs and staggered min 1 stud cavity on opposite sides of studs. Wallboard secured to studs with 1-1/4 in. long Type S-12 steel screws gypsum panel steel screws spaced 8 in. OC at perimeter and 12 in. OC in the field. Lead batten strips required behind vertical joints of lead backed gypsum wallboard and optional at remaining stud locations. Lead batten strips, min 2 in. wide, max 8 ft long with a max thickness of 0.14 in. placed on the face of studs and attached to the stud with construction adhesive and two 1 in. long Type S-12 pan head steel screws, one at the top of the strip and one at the bottom of the strip. Lead discs, nominal 3/8 in. diam by max 0.085 in. thick. Compression fitted or adhered over the screw heads. Lead batten strips and discs to have a purity of 99.9% meeting the Federal specification QQ-L-201f, Grade "C".

RADIATION PROTECTION PRODUCTS INC — Type RPP - Lead Lined Drywall

4M. **Gypsum Board* —** (For use with Item 8) - 5/8 in. thick, 4 ft wide, applied vertically over Mineral and Fiber Board (Item 8) with vertical joints located anywhere over stud cavities. Secured to mineral and fiber boards with 1-1/2 in. Type G Screws spaced 8 in. OC along edges of each vertical joint and 12 in. OC in intermediate field of the Mineral and Fiber Board (Item 8). Secured to outermost studs and floor and ceiling runners with 2 in. long Type S screws spaced 8 in. OC. Gypsum Board joints covered with paper tape and joint compound. Screw heads covered with joint compound.

AMERICAN GYPSUM CO — Type AG-C

CERTAINTEED GYPSUM INC — Type FRPC, Type C

CERTAINTEED GYPSUM CANADA INC — Type C

CGC INC — Types C, IP-X2, IPC-AR

GEORGIA-PACIFIC GYPSUM L L C — Types 5, DAPC

LAFARGE NORTH AMERICA INC — Types LGFC-C, LGFC-C/A

NATIONAL GYPSUM CO — Types FSK-C, FSW-C

PABCO BUILDING PRODUCTS L L C, DBA PABCO GYPSUM — Type PG-C.

PANEL REY S A — Type PRC

TEMPLE-INLAND — Type TG-C

THAI GYPSUM PRODUCTS PCL — Type C

UNITED STATES GYPSUM CO — Types C, IP-X2, IPC-AR

USG MEXICO S A DE C V — Types C, IP-X2, IPC-AR

5. **Joint Tape and Compound —** Vinyl, dry or premixed joint compound, applied in two coats to joints and screw heads; paper tape, 2 in. wide, embedded in first layer of compound over all joints. As an alternate, nominal 3/32 in. thick gypsum veneer plaster may be applied to the entire surface of Classified veneer baseboard. Joints reinforced. Paper tape and joint compound may be omitted when gypsum boards are supplied with square edges.

6. **Resilient Channel —** (Optional-Not Shown) — 25 MSG galv steel resilient channels spaced vertically max 24 in. OC, flange portion attached to each intersecting stud with 1/2 in. long type S-12 pan head steel screws. May not be used with Item 4F or 4J.

6A. **Steel Framing Members (Not Shown)* —** As an alternate to Item 6, furring channels and resilient sound isolation clip as described below:

a. **Furring Channels —** Formed of No. 25 MSG galv steel. 2-9/16 in. or 2-23/32 in. wide by 7/8 in. deep, spaced 24 in. OC perpendicular to studs. Channels secured to studs as described in Item b. Ends of adjoining channels are overlapped 6 in. and tied together with double strand of No. 18 SWG galv steel wire near each end of overlap. As an alternate, ends of adjoining channels may be overlapped 6 in. and secured together with two self-tapping No. 6 framing screws, min 7/16 in. long at the midpoint of the overlap, with one screw on each flange of the channel.

b. **Framing Members* —** Used to attach furring channels (Item a) to studs (Item 2). Clips spaced 48 in. OC., and secured to studs with 1-5/8 in. wafer or hex head Type S steel screw through the center grommet. Furring channels are friction fitted into clips. RSIC-1 clip for use with 2-9/16 in. wide furring channels. RSIC-1 (2.75) clip for use with 2-23/32 in. wide furring channels.

PAC INTERNATIONAL INC — Types RSIC-1, RSIC-1 (2.75).

6B. **Framing Members* —** Optional - Not Shown - Used as an alternate method to attach resilient channels (Item 6). Clips attached at each intersection of the resilient channel and the steel studs (Item 2). Resilient channels are friction fitted into clips, and then clips are secured to the stud with min. 1 in. long Type S-12 pan head steel screws through the center hole of the clip and the resilient channel flange.

KEENE BUILDING PRODUCTS CO INC — Type RC Assurance.

6C. **Framing Members* —** (Not Shown) — (Optional on one or both sides) — As an alternate to Item 6, furring channel and Steel Framing Members as described below:

a. **Furring Channels —** Formed of No. 25 MSG galv steel. 2-3/8 in. wide by 7/8 in. deep, spaced max. 24 in. OC perpendicular to studs. Channels secured to studs as described in Item b. Gypsum board attached to furring channels as described in Item 4.

b. **Steel Framing Members* —** Used to attach furring channels (Item 6Ca) to studs (Item 2). Clips spaced max. 48 in. OC. GENIECLIPS secured to studs with No. 8 x 1-1/2 in. minimum self-drilling, S-12 steel screw through the center grommet. Furring channels are friction fitted into clips.

PLITEQ INC — Type Genie Clip

7. **Wall and Partition Facings and Accessories* —** (Optional, Not shown) — Nominal 1/2 in. thick, 4 ft wide panels, for optional use as an additional layer on one or both sides of the assembly. Panels attached in accordance with manufacturer's recommendations. When the QR-510 panel is installed between the steel framing and the UL Classified gypsum board, the required UL Classified gypsum board layer(s) is/are to be installed as indicated as to fastener type and spacing, except that the required fastener length shall be increased by a minimum of 1/2 in. Not evaluated or intended as a substitute for the required layer(s) of UL Classified Gypsum Board.

SERIOUS ENERGY INC — Type QuietRock QR-510.

8. **Mineral and Fiber Board* —** (Optional, Not shown) — For optional use as an additional layer on one side of wall. Nom 1/2 in. thick, 4 ft wide with long dimension parallel and centered over studs. Attached to studs and floor and ceiling runners with 1-5/8 in. long Type S steel screws, spaced 12 in. OC and 24 in. OC along all intermediate framing. The required UL Classified gypsum board layer (Item 4M) is to be installed over the Mineral and Fiber Boards. Batts and Blankets, Item 3D, and Adhesive, Item 11, are required.

9. **Lead Batten Strips —** (Not Shown, For Use With Item 4E) - Lead batten strips, min 1-1/2 in. wide, max 10 ft long with a max thickness of 0.125 in. Strips placed on the interior face of studs and attached from the exterior face of the stud with two 1 in. long Type S-12 pan head steel screws, one at the top of the strip and one at the bottom of the strip. Lead batten strips to have a purity of 99.9% meeting the Federal specification QQ-L-201f, Grade "C". Lead batten strips required behind vertical joints of lead backed gypsum board (Item 4E) and optional at remaining stud locations. Required behind vertical joints.

9A. **Lead Batten Strips —** (Not Shown, for use with Item 4J) Lead batten strips, 2 in. wide, max 10 ft long with a max thickness of 0.140 in. Strips placed on the face of studs and attached to the stud with two min. 1 in. long min. Type S-8 pan head steel screws, one at the top of the strip and one at the bottom of the strip or with one min. 1 in. long min. Type S-8 pan head steel screw at the top of the strip. Lead batten strips to have a purity of 99.9% meeting the Federal specification QQ-L-201f, Grades "A, B, C or D". Lead batten strips required behind vertical joints of lead backed gypsum wallboard (Item 4J) and optional at remaining stud locations.

10. **Lead Discs or Tabs —** (Not Shown, For Use With Item 4E) - Used in lieu of or in addition to the lead batten strips (Item 8) or optional at other locations - Max 3/4 in. diam by max 0.125 in. thick lead discs compression fitted or adhered over steel screw heads or max 1/2 in. by 1-1/4 in. by max 0.125 in. thick lead tabs placed on gypsum boards (Item 4E) underneath screw locations prior to the installation of the screws. Lead discs or tabs to have a purity of 99.9% meeting the Federal specification QQ-L-201f, Grade "C".

10A. **Lead Discs —** (Not Shown, for use with Item 4J) Max 5/16 in. diam by max 0.140 in. thick lead discs compression fitted or adhered over steel screw heads. Lead discs to have a purity of 99.9% meeting the Federal Specification QQ-L-201f, Grades "A, B, C or D".

11. **Adhesive —** Not Shown - (For use with Item 8) - Construction grade adhesive applied in vertical, serpentine, nominal 3/8 in. wide beads down the length of both vertical edges of Mineral and Fiber Board (Item 8).

*Bearing the UL Classification Mark

ONLINE CERTIFICATIONS DIRECTORY

Design No. D974
BXUV.D974
Fire-resistance Ratings - ANSI/UL 263

Page Bottom

Design/System/Construction/Assembly Usage Disclaimer

- Authorities Having Jurisdiction should be consulted in all cases as to the particular requirements covering the installation and use of UL Listed or Classified products, equipment, system, devices, and materials.
- Authorities Having Jurisdiction should be consulted before construction.
- Fire resistance assemblies and products are developed by the design submitter and have been investigated by UL for compliance with applicable requirements. The published information cannot always address every construction nuance encountered in the field.
- When field issues arise, it is recommended the first contact for assistance be the technical service staff provided by the product manufacturer noted for the design. Users of fire resistance assemblies are advised to consult the general Guide Information for each product category and each group of assemblies. The Guide Information includes specifics concerning alternate materials and alternate methods of construction.
- Only products which bear UL's Mark are considered as Classified, Listed, or Recognized.

Fire-resistance Ratings - ANSI/UL 263

See General Information for Fire-resistance Ratings - ANSI/UL 263

Design No. D974

February 12, 2013

Restrained Assembly Ratings — 3 Hr. (See Item 2)

Unrestrained Assembly Ratings — 1-1/2 Hr.

Unrestrained Beam Ratings — 1-1/2 Hr.

Load Restricted for Canadian Applications — See Guide BXUV7

Loading is Restricted to Light Weight Concrete Loading Tables - (See Item 5)

Beam substitution not permitted

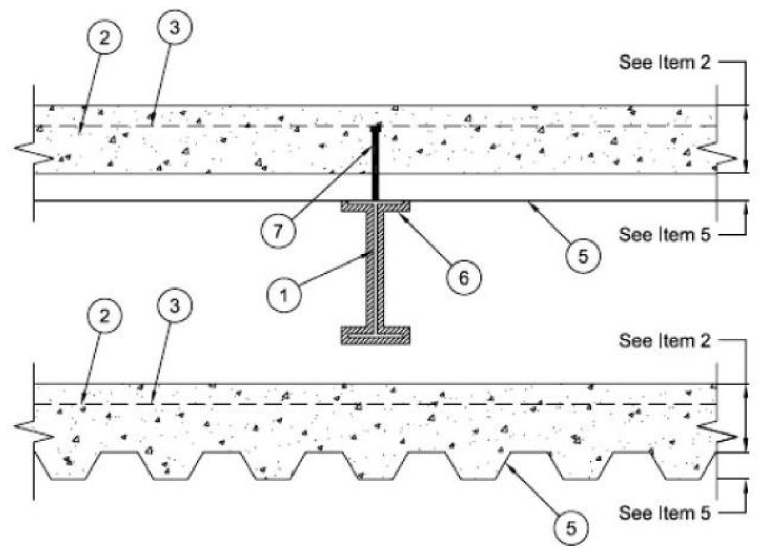

1. **Beam —** W8x28 min size.

1A. **Steel Joists —** (Not Shown) — As an alternate, composite or noncomposite and welded or bolted to end supports. May be uncoated or provided with a shop coat of paint. Designed per S.J.I. specifications for a max design stress of 30,000 psi. Top chords shall consist of two angles measuring 1-1/2 by 1-1/2 by 0.156 in. thick. Bottom chords shall consist of two round bars measuring 0.675 in. in diam. Bearing plates shall consist of two angles measuring 2 by 2 by 0.192 in. thick and shall be min 4-15/16 in. long. The second web member at each end shall consist of 0.654 in. diam round bar. All remaining web members, including the end web members, shall consist of 0.774 in. diam round bars. Bridging per S.J.I. specifications is required when noncomposite joists are used.

2. **Normal Weight Concrete —** Normal weight concrete, carbonate or siliceous aggregate, with a minimum compressive strength of 3000 psi and a minimum equilibrium density shown below measured by ASTM C567, concrete to be vibrated after pour. The sand to total aggregate ratio must be between 0.5 - 0.8 by Volume. (See Item 4).

Restrained Assembly Rating Hr	Concrete (Type)	Equilibrium Concrete Unit Weight, pcf	Concrete Thkns In.
1-3	Normal Weight	114-120	4-1/2

3. **Welded Wire Fabric —** 6x6 10/10 SWG.

4. **Fiber Reinforcement and Concrete Additive* —** (Not Shown) - Required with Item 2. Engineered concrete additive added to concrete mix a maximum dosage of 13.0 lb for each cubic yard of concrete.

SYNTHEON INC — Type Elemix XE® Concrete Additive

5. **Steel Floor and Form Units* —** Composite 1-1/2 in. deep galv units. Min gauges are Nominal 22 MSG for fluted. The light weight concrete loading tables must be used when calculating loading conditions with this item.

ASC STEEL DECK, DIV OF ASC PROFILES INC — 32 in. wide Type N-32

CANAM STEEL CORP — 24 in. wide Type P-2432 composite or Type P-3623 composite

CENTRIA — QL Series: 24 in. wide 2 in. 99, 121, AKX, NKX, TKX; 24 or 30 in. wide GKX, GKXH, GKX-A; 36 in. wide 2 in. 99, AKX, WKX; 12 in. wide NKC, TKC;

CHIA TEH CONSTRUCTION MATERIAL CO LTD — 24 or 36 in. wide Mac-Lok 3; 24 in. wide CFD-3.

CANAM STEEL CORP — 12 or 24 in. wide, Types 1-1/2, 2, or 3 in. LOK-Floor; 36 in. wide, Types 2 or 3 in. LOK-Floor; 24, 30 or 36 in. wide, Type 1-1/2 in. B-LOK; 24 in. wide, Types N-LOK.

CONSOLIDATED SYSTEMS INC — 24 in. wide Types CFD-2, CFD-3; 24, 30 or 36 in. wide Type CFD-1.5; 24 or 36 in. wide Types Mac-Lok 2, Mac-Lok 3; 24 in. wide Types B2C, B2FC, NC, NFC; 30 in. wide, Type B3C.

DECK WEST INC — 36 in. wide Type B-DW, BA-DW, 2-DW or 3-DW.

EPIC METALS CORP — 24 in. wide Types EC150, EC150 inverted, EC300, EC366, ECP150, ECP300, ECP366; 30 in. wide Types ECB150, ECBR150; 36 in. wide Types EC156, EC266, ECP266.

GENS METALS INC — 12 or 24 in. wide Types LF2, LF3.

MARLYN STEEL DECKS INC — Type 1.5 CF, 2.0 CF or 3.0 CF.

NEW MILLENNIUM BUILDING SYSTEMS L L C — 24 or 36 in. wide Types 1.5 CD, 1.5CDI, 1.5CDR, 2.0CD or 3.0CD. Units may be phos/painted or galvanized.

ROOF DECK INC — 36 in. wide Types LOK-1-1/2, LOK-1-1/2R; 24 in. wide Types LOK-2, LOK-3.

VERCO DECKING INC - A NUCOR CO — 24, 30 or 36 in. wide Types PLB, PLBCD, B, BCD, BR; 24 or 36 in. wide Types PLW2, PLW2CD, W2, W2CD, PLW3, PLW3CD, W3, W3CD; 24 in. wide Types PLN, PLNCD, N, NCD .

VULCRAFT, DIV OF NUCOR CORP — 24, 30 or 36 in. wide, Type 1.5 VL, 1.5VLI, 1.5VLP; 24 or 36 in. wide, Types 2VLI, 3VLI, 2VLP, 3VLP.

Spacing of welds attaching units to supports shall be 12 in. OC for 24, 36 in. wide units, four welds per sheet for 30 in. wide units. Unless specified otherwise for specific units types, adjacent units button-punched or welded together 36 in. OC along side joints.

When a superimposed load of 250 PSF is desired the spacing of welds or button-punches shall not exceed 24 in. OC along side joints.

The Unrestrained Assembly Rating is equal to the Unrestrained Beam Rating (See Item 6) for a max 1-1/2 Hr and is limited to the following units and limitations:

(a) min. 1-1/2 in. deep, min. 24 in. wide, 20 MSG or thicker fluted with clear spans not more than 8 ft, 9-1/2 in.

6. **Spray-Applied Fire Resistive Materials* —** Applied by mixing with water in accordance with instructions on each bag and applied in one or more coats to a final thickness as shown in table below to steel beam surface which is free of dirt, oil or scale. The area between the steel deck and the top flange of the steel beam shall be completely filled.

Min average and min individual density is 15 and 14 pcf, respectively. For method of density determination, refer to Design Information Section. The thickness of the material on the Structural Members (Item 1) shall be as follows:

Maximum Restrained Assembly Rating Hr	Maximum Unrestrained Beam Rating Hr	Minimum Protection Mtl Thkns on Structural Members In
3	1-1/2	11/16
Maximum Restrained Assembly Rating Hr	**Maximum Unrestrained Steel Joist Rating Hr**	**Minimum Protection Mtl Thkns on Structural Members In**
3	1-1/2	1-3/8

ISOLATEK INTERNATIONAL — Types 300, 300AC, 300ES, 300HS, 300N, or SB.

LUCKY CORE INSULATING MATERIALS MANUFACTURING L L C — Types 300, 300ES, 300N, or SB.

NEWKEM PRODUCTS CORP — Types 300, 300ES, 300N, or SB.

6A. **Spray-Applied Resistive Material* —** As an alternate to Item 6, applied by mixing with water according to instructions on each bag of material. Mixture can be spray or trowel applied in one or more coats. The thickness of the mixture is dependent on the type of floor unit. See table below for appropriate thickness. Crest areas above the beam/joist shall be filled with spray-applied resistive material. The steel surfaces must be clean and free of dirt, loose scale, and oil. Minimum average density of 38 pcf and minimum individual density of 35 pcf for Type 800. Min avg density of 44 pcf with min ind value of 40 pcf for Type M-II. Min avg density of 44 pcf with min ind value of 42 pcf for Type TG . For method of density determination, refer to Design Information Section, Sprayed Material.

Minimum Spray-Applied Resistive Material Thickness, in.

Maximum Restrained Assembly Rating Hr	Maximum Unrestrained Beam Rating Hr	Minimum Protection Mtl Thkns on Structural Members In
3	1-1/2	13/16
Maximum Restrained Assembly Rating Hr	**Maximum Unrestrained Steel Joist Rating Hr**	**Minimum Protection Mtl Thkns on Structural Members In**
3	1-1/2	2-1/16

BERLIN CO LTD — Types M-II or TG. Types M-II and TG Investigated for exterior use.

ISOLATEK INTERNATIONAL — Types 800, M-II, or TG. Types 800, M-II and TG Investigated for exterior use.

LUCKY CORE INSULATING MATERIALS MANUFACTURING L L C — Types M-II or TG. Types M-II and TG Investigated for exterior use.

NEWKEM PRODUCTS CORP — Types M-II or TG. Types M-II and TG Investigated for exterior use.

6B. **Spray-Applied Fire Resistive Materials* —** As an alternate to Item 6, applied by spraying with water to the final thicknesses shown below. Crest areas shall be filled with Spray-Applied Fire Resistive Materials above the beam/joist. Steel surfaces must be clean and free of dirt, loose scale and oil. Min average density of 13 pcf with min. ind density of 11 pcf for Types II, or DC/F. Min avg and min ind densities of 22 and 19 pcf, respectively, for Type HP. For method of density determination, refer to Design Information Section.

Maximum Restrained Assembly Rating Hr	Maximum Unrestrained Beam Rating Hr	Minimum Protection Mtl Thkns on Structural Members In
3	1-1/2	1
Maximum Restrained Assembly Rating Hr	**Maximum Unrestrained Steel Joist Rating Hr**	**Minimum Protection Mtl Thkns on Structural Members In**
3	1-1/2	2-1/16

ISOLATEK INTERNATIONAL — Type D-C/F, HP or Type II. Investigated for exterior use. Type EBS or Type X adhesive/sealer is optional.

6C. **Spray-Applied Resistive Material* —** As an alternate to Item 6, see tables below for appropriate thicknesses.

Prepared by mixing with water and spray-applied in one or more coats to beam surfaces which must be clean and free of dirt, loose scale, and oil. Flute areas above the beam/joist shall be filled with spray-applied resistive material. Min average density of 18.0 pcf with min individual density of 17.0 pcf for Type 280. Min average density of 17.5 pcf with min individual density of 16.0 pcf for Type 300TW. Min average density of 22.0 pcf with min individual density of 19.0 pcf for Type 280.For method of density determination, see Design Information Section, Sprayed Material.

Maximum Restrained Assembly Rating Hr	Maximum Unrestrained Beam Rating Hr	Minimum Protection Mtl Thkns on Structural Members In
3	1-1/2	1
Maximum Restrained Assembly Rating Hr	**Maximum Unrestrained Steel Joist Rating Hr**	**Minimum Protection Mtl Thkns on Structural Members In**
3	1-1/2	1-3/8

BERLIN CO LTD — Type 400.

ISOLATEK INTERNATIONAL — Types 280, 300TW, 400.

LUCKY CORE INSULATING MATERIALS MANUFACTURING L L C — Type 400.

NEWKEM PRODUCTS CORP — Type 400.

6D. **Spray-Applied Fire Resistive Materials* —** As an alternate to Item 6, applied by mixing with water and spraying in more than one coat to the beam to the final thicknesses shown below. When fluted or corrugated steel floor units are used, crest areas shall be filled with Spray-Applied Fire Resistive Materials above the beam/joist. Steel surfaces must be clean and free of dirt, loose scale and oil. Min avg and min ind density of 15/14 pcf respectively. Min avg and min ind density of 19/18 pcf respectively for Types 7GP and 7HD. For method of density determination, see Design Information Section.

Maximum Restrained Assembly Rating Hr	Maximum Unrestrained Beam Rating Hr	Minimum Protection Mtl Thkns on Structural Members In
3	1-1/2	1-1/16
Maximum Restrained Assembly Rating Hr	**Maximum Unrestrained Steel Joist Rating Hr**	**Minimum Protection Mtl Thkns on Structural Members In**
3	1-1/2	2-3/16

ARABIAN VERMICULITE INDUSTRIES — Types MK-5.

GRACE KOREA INC — Types MK-6/HY, MK-6/HY Extended Set, MK-6s.

PYROK INC — Type LD.

SOUTHWEST FIREPROOFING PRODUCTS CO — Types 4, 5, 5EF, 5GP, 5MD, 7GP, 7HD, 8EF, 8GP, 8MD, 9EF, 9GP, 9MD.

W R GRACE & CO - CONN — Types MK-4, MK-5, MK-6/HY, MK-6/HY Extended Set, MK-6s, RG.

6E. **Mastic and Intumescent Coatings* —** As an alternate to Items 6 through 6D. Min. size W8x28 beams shall be primed with a phenolic modified alkyd primer, a metal alkyd primer, an acrylic primer or an epoxy primer at a nominal thickness of 2 mil. Coating spray or brush applied in accordance with the manufacturer's instructions at the min dry thickness as shown in the table below. The thickness shown below includes the primer thickness. The top surface of the top flange where fluted units are used must be protected with the coating material at the same min dry thickness at a min distance of 1 in. (25 mm) inward from the flange tip on both sides of the beam. Mineral wool insulation optional above top surface of the beam.

Maximum Restrained Assembly Rating Hr	Maximum Unrestrained Beam Rating Hr	Minimum Dry Thickness mils	Minimum Dry Thickness mm
3	1-1/2	158	4.00

BERLIN CO LTD — Type WB3, Investigated for Interior General Purpose.

ISOLATEK INTERNATIONAL — Sprayfilm WB3 and Type WB3, Investigated for Interior General Purpose.

7. **Shear Connector Studs —** Studs, 3/4 in. diam by 3 in. long, for 1-1/2 in. deep form units, headed type or equivalent per AISC specifications. Welded to the top flange of the beam through the steel form units.

7A. **Shear Connector —** (Not Shown) — As an alternate to Item 7, when steel joists are used, studs, min 1/2 in. diam headed type or equivalent per A.I.S.C. specifications. Welded to the top flange of joists through the steel floor units. Stud Welding, as recommended by the stud manufacturer, should be followed.

*Bearing the UL Classification Mark

ARCHITECTURAL NEXUS
SALT LAKE CITY · PLACERVILLE · SACRAMENTO
Architectural NEXUS, Inc.
2505 East Parleys Way
Salt Lake City, Utah 84109
T 801.924.5000 F 801.924.5001
http://www.archnexus.com

Licensed Architect PETER MOYES No. 83-122248-0301 State of Utah 21 MARCH 2013

Original drawings remain the property of the Architect and as such the Architect retains total ownership and control. The design represented by these drawings is sold to the client for a one time use, unless otherwise agreed upon in writing by the Architect. © Architectural Nexus, Inc. 2012

UTAH NATIONAL GUARD CAMP WILLIAMS
RTI TASS COMPLEX, PHASE II
NGB PROJECT NO. 490444
17800 SOUTH ACADEMY STREET
BLUFFDALE, UTAH 84065

#	REVISIONS	
1	3.22.13	DFCM REVIEW RESPONSE #2

NEXUS PROJECT #:	11024
CHECKED BY:	SMS
DRAWN BY:	Author
DATE:	21 MARCH 2013

SHEET CONTENTS:
UL LISTINGS

VOLUME B - BID DOCUMENTS

GI513

4/1/2013 11:20:11 AM

ICC EVALUATION SERVICE

Most Widely Accepted and Trusted

ICC-ES Evaluation Report

ESR-1394*

Reissued December 1, 2011

This report is subject to renewal December 1, 2013.

www.icc-es.org | (800) 423-6587 | (562) 699-0543 — *A Subsidiary of the International Code Council®*

DIVISION: 08 00 00—OPENINGS
Section: 08 30 00—Specialty Doors and Frames
Section: 08 35 13.23—Accordion Folding Fire Doors

REPORT HOLDER:

WON-DOOR CORPORATION
1865 SOUTH 3480 WEST
SALT LAKE CITY, UTAH 84104
(801) 973-7500
www.wondoor.com
timw@wondoor.com

EVALUATION SUBJECT:

WON-DOOR FIREGUARD SERIES SINGLE-SIDE AND CENTER BI-PARTING HORIZONTAL FOLDING FIRE DOOR ASSEMBLIES

1.0 EVALUATION SCOPE

Compliance with the following codes:

- 2012 and 2009 *International Building Code®* (IBC)
- 2012 and 2009 *International Fire Code®* (IFC)

Properties evaluated:

- Fire resistance
- Smoke and draft control
- Means of egress

2.0 USES

The Won-Door FireGuard series single-side and center bi-parting horizontal folding fire door assemblies are used as opening protection in fire-resistance-rated wall assemblies, as smoke- and draft-control door assemblies, and as means of egress doors.

FireGuard smoke- and draft-control door assemblies identified with an "E" suffix are for use at elevator hoistway openings in accordance with Exception 3 of 2012 IBC Section 713.14.1 and 2009 IBC Section 708.14.1.

3.0 DESCRIPTION

3.1 Won-Door FireGuard Series Horizontal Folding Fire Door Assemblies:

Won-Door FireGuard FG20, 60, 90, and 180 series single-side and center bi-parting horizontal folding fire door assemblies consist of two independently suspended and parallel steel curtains separated by a cavity. A formed metal post with a PVC gasket connects to and closes off the movable end of the door. A gasket of polyvinyl chloride material, with fiberglass or ceramic fiber and a liner of foil-scrim-foil liner or foil-scrim-Kraft, is riveted along the top and bottom sweeps of the door for smoke and draft control. Door construction is similar for all models, except that the cavity of doors with the suffix TR is filled with an 8 pcf (64 kg/m^3) ceramic fiber liner and the construction of the surrounding assembly, including the pockets, header, and strike wall, is such as to meet the hourly fire-resistance rating requirements. See Table 1 for models, descriptions, ratings and overall sizes.

3.2 Operation:

The power operating system includes a controller, emergency battery power supply and drive motor assembly. The controller is programmed to automatically move the door to a closed and sealed position upon sensing a fire condition. The door assemblies include a manually activated operating device that allows the doors to open to a predesignated minimum opening width within 10 seconds for egress, after which the doors automatically close and seal. The predesignated minimum opening width must be approved by the code official. The power operating system includes limit controls and sensors that detect and control the door position at all times. Logic circuitry in the control unit prevents the door from opening when heat sensors detect a high-temperature (fire) condition on the other side of the door. Low-voltage battery emergency conditions of the integrated standby power supply cause the fire door to close and seal and signal a low voltage (or low current) alarm condition.

3.3 Fire-resistance Rating:

The numerical designation of the Won-Door FireGuard Series door assembly corresponds to the fire-resistance rating in minutes as determined in accordance with UL 10B, and NFPA 252. The FireGuard FG20S or FG20CS has a 20-minute fire-resistance rating; the FireGuard FG60S, FG60CS and FG60TR have one-hour fire-resistance ratings; the FireGuard FG90S, FG90CS and FG90TR have 1$^1/_2$-hour fire-resistance ratings; and the FireGuard FG180S, FG180CS and FG180TR have three-hour fire-resistive ratings. Doors identified with a "CS" suffix are compressed stack designs.

3.4 Smoke and Draft Control Assemblies:

The Won-Door FireGuard single-side and center bi-parting horizontal folding fire door assemblies comply as smoke- and draft-control assemblies in accordance with 2012 IBC Section 716.5.3.1 and 2009 IBC Section 715.4.3.1. Where no fire-resistance rating is required, the models are FireGuard FGS and FireGuard FGCS. Doors with an "E" suffix are for use at elevator hoistway openings in accordance with Exception 3 of 2012 IBC Section 713.14.1 and 2009 IBC Section 708.14.1. See Table 1 for models, descriptions, ratings and overall sizes.

3.5 Opening Protection:

The Won-Door FireGuard FG-60, FireGuard FG-90 and FireGuard FG-180 door assemblies are recognized for use in fire walls in accordance with 2012 IBC Section 706.8 (2009 IBC Section 706.8), for use in fire barrier walls in accordance with IBC Section 707.6, for use in fire partition walls in accordance with 2012 IBC Section 708.6 (2009 IBC Section 709.6), for use in smoke barrier walls in accordance with 2012 IBC Section 709.5 (2009 IBC Section 710.5), and for use in smoke partition walls in accordance with 2012 IBC Section 710.5 (2009 IBC Section 711.5). The Won-Door FireGuard FG-60TR, FireGuard FG-90TR and FireGuard FG-180TR may be used in accordance with 2012 IBC Section 716.5.5 (2009 IBC Section 715.4.4) where maximum transmitted temperature is required.

3.6 Means of Egress:

IBC: The Won-Door FireGuard door systems are recognized for use in a means of egress system in accordance with IBC Section 1008.1.4.3 in any occupancy other than Group H.

4.0 INSTALLATION

4.1 General:

The Won-Door FireGuard Series horizontal folding fire door assemblies must be installed in accordance with applicable code requirements for the character and location of the wall in which they are situated. The FireGuard door assemblies are designed to be installed in openings having a finished width of 13.1 feet (3993 mm) and a finished height of 12 feet (3658 mm), unless installed under oversized door provisions. The FireGuard doors and frames must be installed in accordance with the manufacturer's published instructions and this evaluation report. Where there is a conflict between the two, this report governs.

Installation of the door systems, including the frame, closing and release devices, and anchorage must be in accordance with NFPA 80, as noted in 2012 IBC Sections 716.5, 716.5.9.2 and 1008.1.4.3 (2009 Sections 715.4, 715.4.8.2, and 1008.1.4.3), as applicable.

4.2 Oversized Doors:

Where a fire-resistance rating is required, oversized doors with a length exceeding 13.1 feet (3993 mm) and a finished height of 12 feet (3658 mm), may be installed in accordance with Section 716.5.7.2 of the 2012 IBC or Section 715.4.6.2 of the 2009 IBC, as applicable.

4.3 Smoke- and Draft-control Door Assembly:

Installation instructions indicating the proper method of installing the Won-Door FireGuard smoke-and draft-control door assembly must be attached to, or packaged with, each assembly. The installation instructions will cover the size, design, and construction of the door and frame assembly for specific air leakage rates.

5.0 CONDITIONS OF USE

The Won-Door FireGuard FG20, 60, 90, and 180 series single-side and center bi-parting horizontal folding fire door assemblies described in this report comply with, or are suitable alternatives to what is specified in, those codes listed in Section 1.0 of this report, subject to the following conditions:

5.1 The door assemblies must be installed in accordance with the manufacturer's published installation instructions, the fire door listing, and this report. Where a conflict exists, this report governs.

5.2 Openings protected with fire-resistance-rated door assemblies must be maintained in accordance with Sections 107 and 703 of the IFC and Chapter 5 of NFPA 80. Annual inspection must be in accordance with Section 5.2 of NFPA 80.

5.3 Openings protected with smoke and draft control assemblies must be maintained in accordance with Sections 107 and 703 of the IFC and Chapter 5 of NFPA 105. Annual inspection must be in accordance with Section 5.2 of NFPA 105.

5.4 FireGuard Door Assemblies are fabricated in Salt Lake City, Utah, under a quality control program with inspections by UL LLC (AA-668).

6.0 EVIDENCE SUBMITTED

6.1 Reports of tests in accordance with NFPA 252; NFPA 80; UL 10B; and UL 1784.

6.2 A quality control manual.

7.0 IDENTIFICATION

The Won-Door FireGuard door assemblies and automatic closing devices bear a permanently affixed label with the Won-Door Corporation name, the name of the inspection agency (UL LLC), and the fire-resistance ratings from UL LLC. The labels for the FireGuard TR Series doors also include the temperature rise developed on the unexposed surface of the door after the first 30 minutes of fire exposure [450°F (232°C)]. The labels for the FireGuard doors must also specify the evaluation report number (ESR-1394), and must comply with NFPA 80. All labels must be applied at the factory or other location where fabrication and assembly are performed.

Won-Door FireGuard smoke- and draft-control door assemblies complying with UL 1784 must be labeled as such, and must show the letter "S" on the fire rating label of the door. This marking must indicate that the door and frame assembly are in compliance when listed or labeled gasketing is also installed.

TABLE 1—FIRE-RESISTANCE-RATED ASSEMBLIES AND AIR LEAKAGE RATED ASSEMBLIES

MODEL	DESCRIPTION	MAXIMUM OVERALL SIZE[1]	FIRE-RESISTANCE RATING (MINUTES)
FG20S, FG60S, FG90S, FG180S, FG20SE, FG60SE, FG90SE, FG180SE	Single or center parting straight or curved fire doors.	13.1 ft wide by 12 ft high	20, 60, 90, 180. Also air leakage rated.
FGTR60, FGTR90, FGTA180, FGTR60E, FG90TRE, FG180TRE	Insulated doors with a temperature rise rating in addition to a fire rating that can be single or center parting straight or curved doors.	13.1 ft wide by 12 ft high	60, 90, 180. Also air leakage rated.
FG20CS, FG60CS, FG90CS, FG180CS, FG20CSE, FG60CSE, FG90CSE, FG180CSE	Cross-corridor single parting straight doors and Compressed Stack single or center parting straight doors.	13.1 ft wide by 12 ft high	20, 60, 90, 180. Also air leakage rated.
FGS, FGSE, FGCS, FGCSE	Air leakage rated doors.	13.1 ft wide by 12 ft high	Air leakage rated. Not fire-resistance rated.

For **SI:** 1 ft = 0.305 m.

[1]Unless installed under oversized door provisions.

***Revised October 2012**

ICC-ES Evaluation Reports are not to be construed as representing aesthetics or any other attributes not specifically addressed, nor are they to be construed as an endorsement of the subject of the report or a recommendation for its use. There is no warranty by ICC Evaluation Service, LLC, express or implied, as to any finding or other matter in this report, or as to any product covered by the report.

Copyright © 2012

ARCHITECTURAL NEXUS
SALT LAKE CITY PLACERVILLE SACRAMENTO

Architectural NEXUS, Inc.
2505 East Parleys Way
Salt Lake City, Utah 84109
T 801.924.5000 F 801.924.5001
http://www.archnexus.com

Licensed Architect
PETER MOYES
No. 83-122248-0301
21 MARCH 2013
State of Utah

Original drawings remain the property of the Architect and as such the Architect retains total ownership and control. The design represented by these drawings is sold to the client for a one time use, unless otherwise agreed upon in writing by the Architect.
© Architectural Nexus, Inc. 2012

WILLIAMS

UTAH NATIONAL GUARD CAMP
RTI TASS COMPLEX, PHASE II
NGB PROJECT NO. 490444

17800 SOUTH ACADEMY STREET
BLUFFDALE, UTAH 84065

#	REVISIONS	
1	3.22.13	DFCM REVIEW RESPONSE #2

NEXUS PROJECT #:	11024
CHECKED BY:	SMS
DRAWN BY:	Author
DATE:	21 MARCH 2013

SHEET CONTENTS:

EVALUATION REPORTS

VOLUME B - BID DOCUMENTS

GI514

4/1/2013 11:20:15 AM

GENERAL STRUCTURAL NOTES

GENERAL

1. The structural notes are intended to complement the project specifications. Specific notes and details in the drawings shall govern over the structural notes and typical details.
2. Typical details and sections shall apply where specific details are not shown.
3. The contractor shall verify all site conditions and dimensions. If actual conditions differ from those shown in the contract drawings, the contractor shall immediately notify the architect/engineer before proceeding with the fabrication or construction of any affected elements.
4. Drawings shall not be scaled for the purpose of preparing shop drawings or for construction. Where dimensions on the design drawings are not provided or inferred, the contractor may scale drawings only to estimate member lengths for the purpose of bidding.
5. Changes to these contract drawings may be made only by an authorized representative of Dunn Associates, Inc. Dunn Associates, Inc. shall not be held responsible or liable for any claims arising directly or indirectly from changes made without written authorization by an authorized representative of Dunn Associates, Inc.
6. Omissions or conflicts between the contract drawings and/or specifications shall be brought to the attention of the architect/engineer before proceeding with any work involved. In case of conflict, follow the most stringent requirement as directed by the architect/engineer at no additional cost to the owner.
7. The contractor shall submit a written request to the architect/engineer before proceeding with any changes, substitutions, or modifications. Any work done by the contractor before receiving written approval will be at the contractor's risk.
8. The contractor shall coordinate with all trades any items that are to be integrated into the structural system such as openings, penetrations, mechanical and electrical equipment, etc. Sizes and locations of mechanical and other equipment that differs from those shown on the contract drawings shall be reported to the architect/engineer. Contractor shall take measures as required to insure that construction loads shall not exceed design loads for the structure.
9. The contractor shall be responsible for means, methods, techniques, sequences, and procedures in order to comply with the contract drawings and specifications. The contractor shall provide adequate shoring and bracing as required for the chosen method of erection. Shoring and bracing shall remain in place until final connections for the permanent members are completed. The building shall not be considered stable until all connections are completed. Walls shall not be considered self-supporting and shall be braced until the floor/roof system is completed.
10. Site observations by a field representative of Dunn Associates, Inc. shall not be construed as approval of construction, the procedures, nor special inspection.
11. Detailing and shop drawing production for structural elements will require information (including dimensions) contained in the architectural, structural and/or other consultants' drawings. The structural drawings shall be used in conjunction with the architectural and other consultant's drawings. See the Architectural Drawings for dimensions, doors, windows, non-bearing interior and exterior walls, elevations, slopes, stairs, curbs, drains, recesses, depressions, railings, waterproofing, finishes, chamfers, kerfs, etc.
12. The Contractor may choose to submit shop drawings and submittals for review electronically. The Contractor may do this provided a minimum of one hard copy set is submitted for review. The submittal will be stamped as received by Dunn Associates, Inc. when the hard copy is received by our office. Hard copies of small submittals need not be submitted if the Contractor receives the approval for this exception by the Engineer of Record.
13. Review of shop drawing submittals by Dunn Associates, Inc. is for general compliance only and is not intended for approval. The shop drawing review shall not relieve the contractor from the responsibility of completing the project according to the contract documents.
14. Shop drawings made from reproductions of the structural drawings will be rejected unless the contractor signs a release agreement prior to the shop drawings being reviewed. The contractor may also obtain electronic files of the plan sheets after signing a release agreement. Electronic files of the detail sheets and schedule sheets will not be made available.
15. All work shall be done in accordance with OSHA requirements. Potential conflicts between these documents and OSHA requirements shall be brought to the attention of the structural engineer before proceeding with the work.

BASIS OF DESIGN

1. Governing Building Codes------------International Building Code 2009
   Unified Facilities Criteria
   1.1 The design documents meet DFCM standards
2. Occupancy Category------------ II
3. Floor Live Loads
   3.1. Uniformly Distributed Loads
      3.1.1. Private Bedrooms ------------40 psf
      3.1.2. Public Bedrooms ------------100 psf
      3.1.3. Lobbies & Main Floor Corridors------------100 psf
      3.1.4. Corridors Above Main Floor------------80 psf
      3.1.5. Public Toilet Rooms ------------75 psf
      3.1.6. Balconies ------------100 psf
      3.1.7. Mechanical Rooms------------150 psf
   3.2. Concentrated Loads, all areas------------ 2000 lbs
4. Roof Live Load (Not concurrent with Roof Snow Load)------------ 20 psf
5. Roof Snow Load
   5.1. Ground Snow Load------------ Pg = 48 psf
   5.2. Flat Roof Snow Load------------ Pf = 34 psf
   5.3. Snow Exposure Factor------------ Ce = 1.0
   5.4. Thermal Factor------------ Ct = 1.0
   5.5. Snow Load Importance Factor------------ Is = 1.0
6. Wind Load
   6.1. Basic Wind Speed (3 Second Gust)------------ 90 mph
   6.2. Wind Importance Factor------------ 1.00
   6.3. Wind Exposure------------ C
   6.4. Internal Pressure Coefficient------------ ± 0.18
7. Seismic Design Criteria
   7.1. Mapped Spectral Response Accelerations
      7.1.1. Short Period Acceleration------------ SS = 1.117
      7.1.2. 1-Second Acceleration------------ S1 = 0.469
   7.2. Spectral Response Coefficients
      7.2.1. Short Period Acceleration------------ SDS = 0.784
      7.2.2. 1-Second Acceleration------------ SD1 = 0.469
   7.2. Site Class (Soil Profile)------------ D
   7.3. Seismic Importance Factor------------ 1.0
   7.4. Seismic Design Category------------ D
   7.5. Effective Structural Seismic Weight------------ W
   7.6. Lateral Force Resisting System------------ Special Reinforced Masonry Shear Walls
      7.6.1. Response Modification Coefficient------- R = 5
      7.6.2. System Overstrength Factor------------ Ωo = 2.5
      7.6.3. Deflection Amplification Factor------------ CD = 3.5
      7.6.4. Design Base Shear------------ V = Cs*W = 0.157W
   7.7. Analysis Procedure------------Model Response Spectrum Analysis
8. Serviceability Criteria
   8.1. Interstory Seismic/Wind Drift------------Δa < 0.007h ('h' is story height)
   8.2. Deflection Limits------------Total------------Live/Snow
      Floor------------L/360------------L/480
      Roof------------L/240------------L/360
      Perimeter------------___------------L/600(3/8" max)

FOUNDATION

1. Soils Report by:------------GSH Geotechnical Consultants, Inc.
2. Report Number & Date:------------0128.074-11 September 28, 2011
3. Soil Bearing Pressure:------------3000 psf, on Compacted Fill.
4. Frost Protection:------------30 inches minimum
5. Lateral Soil Pressure Fluid Equivalent Density:
   5.1. Passive------------300 pcf
6. Coefficient of Friction------------0.4
7. The soils engineer shall review all excavations and fill placement prior to placing concrete.

EARTHWORK

1. Clearing: The entire building area shall be scraped to remove the top 4" of soil including all vegetation and debris.
2. Contractor is to provide temporary shoring for excavations as required.
3. Contractor is to provide measures necessary to prevent damage to or settlement of new or existing construction and utilities on or adjacent to project site.
4. Contractor is to provide dewatering as required to protect the site from flooding.
5. Proof rolling: The natural undisturbed soil below all footings shall be proof rolled prior to placing concrete. Remove all soft spots and replace with compacted structural fill.
6. Compacted structural fill: All fill material shall be a well-graded granular material with a maximum size less than 4" and with not more than 10% passing a #200 sieve. It shall be compacted to 95% of the maximum laboratory density as determined by ASTM D 1557. All fill shall be tested. Compacted structural fill shall be placed in lifts not exceeding 8" in uncompacted thickness.
7. Consult the project specifications and soils report for further earthwork requirements. The soils engineer shall review all excavations and fill placement prior to placing concrete.

CONCRETE

1. Concrete shall be supplied in accordance with ACI 318 and the following requirements:

Concrete Use	Comp. Strength f 'c (psi)	Exposure Classes	Cement Type [a]	Max. W/CM Ratio	Max. Flyash	Air Content [b,c]	Aggregate Size, Max.	Slump Limit [d]
Exterior Footings	4500	F1, S0, P0, C0	I, II	0.45	25%	5%	1 1/2"	4"
Interior Footings	3000	F0, S0, P0, C0	I, II	0.50	25%	1.5%	1 1/2"	5"
Foundation Walls	4500	F1, S0, P0, C1	I, II	0.45	25%	5%	3/4"	4"
Other Walls	4000	F0, S0, P0, C0	I, II	0.45	25%	1.5%	3/4"	4"
Piers	4000	F0, S0, P0, C0	I, II	0.45	25%	1.5%	3/4"	4"
Interior Slabs on Grade	3500	F0, S0, P0, C1	I, II	0.50	25%	1.5%	3/4"	5"
Normal Wt. Concrete on Steel Deck	3500	F0, S0, P0, C1	I, II	0.45	25%	1.5%	3/4"	4"
Site Concrete [e] (unreinforced)	4500	F2, S0, P0, C1	I, II	0.40	25%	6%	3/4"	4"

Table Footnotes:
   a. Cement to comply with ASTM C150. Use Type V cement where required by soils report.
   b. Air content ± 1.5%, measured at point of final placement. Air-entraining admixtures shall comply with ASTM C260 (when used). Calcium chloride shall not be added to the concrete mix. Unreinforced concrete slabs on grade may have calcium chloride not exceeding one percent.
   c. Air entrainment shall be adjusted for the use of admixtures and fly ash.
   d. Slump limit ± 1" applies to non-plasticized concrete. Test shall be conducted prior to adding plasticizer if used.
   e. See civil drawings for site concrete requirements. In the absence of information, use values listed.
2. Materials unless noted otherwise:
   2.1. Normal Weight aggregates------------ASTM C33
   2.2. Fly Ash, Class F Pozzolan------------ASTM C618
   2.3. Reinforcing Steel
      2.3.1. General------------ASTM 615 Grade 60
   2.4. Deformed Bar Anchors (DBA) ------------ASTM A496
   2.5. Headed Stud Anchors (HSA) ------------ASTM A108
   2.6. Anchor Bolts: See steel and/or wood section(s) of general notes.
   2.7. No aluminum conduit or product containing aluminum or any other material injurious to concrete shall be embedded in concrete.
3. The contractor shall be responsible for the design, detailing, care, placement and removal of all formwork and shores.
   3.1. Supporting forms and shoring shall not be removed until structural members have acquired sufficient strength to safely support their own weight and any construction load to which they may be subjected. In no case, however, shall forms and shoring be removed in less than 24 hours after concrete placement.
   3.2. Suspended slabs shall be re-supported after form removal until concrete reaches its 28-day specified compressive strength.
4. Reinforcement shall have the following concrete cover:------------ Clear Cover
   4.1. Cast-in-place Concrete
      4.1.1. Cast against and permanently exposed to earth------------3"
      4.1.2. Formed concrete exposed to earth or weather:
         #6 thru #18 bars------------2"
         #5 and smaller bars------------1 1/2"
      4.1.3. Concrete not exposed to weather or in contact with ground:
         Slabs, Walls, Joists; #11 bars and smaller ------------3/4"
         Beams, Columns: Primary Reinforcement, Ties,------------1 1/2"
         Stirrups, Spirals
   4.2. Precast Concrete
      4.2.1. Concrete exposed to earth or weather:
         Wall Panels:
         #6 and smaller------------3/4"
         #14 and #18 bars ------------1 1/2"
         Other members:
         #11 and smaller------------1 1/2"
         #14 and #18 bars------------2"
      4.2.2. Concrete not exposed to weather or in contact with ground:
         Slabs, Walls, Joists; #11 bars and smaller------------5/8"
         Beams, Columns: Primary Reinforcement------------1 1/2"
         Ties, Stirrups, Spirals------------3/8"
5. Construction Joints and Control Joints:
   5.1. Provide a beveled 2" x 4" x continuous keyway in all horizontal and vertical construction joints including between top of footing and foundation walls. In addition, all joints shall be intentionally roughened to a full amplitude of approximately 1/4".
   5.2. Control joints shall be installed in slabs on grade so the length to width ratio of the slab is no more than 1.25:1. Control joints shall be completed within 12 hours of concrete placement. Control joints may be installed by either:
      5.2.1. Saw cut with depth of 1/4 the thickness of the slab
      5.2.2. Tooled joints with depth of 1/4 the thickness of the slab
   5.3. Install construction or control joints in slabs on grade at a spacing not to exceed 30 times the slab thickness in any direction, unless noted otherwise. Construction joints shall not exceed a distance of 125'-0" on center in any direction.
6. Construction
   6.1. Use chairs or other support devices recommended by the CRSI to support bar and tie reinforcement bars and WWF prior to placing concrete. WWF shall be continuously supported at 36" on center maximum. Reinforcing steel for slabs on grade shall be adequately supported on precast concrete units. Lifting the reinforcing off the grade during placement of concrete is not permitted.
   6.2. Contractor shall coordinate placement of all openings, curbs, dowels, sleeves, conduits, bolts, inserts and other embedded items prior to concrete placement.
   6.3. All embeds and dowels shall be securely tied to formwork or to adjacent reinforcing prior to the placement of concrete.
   6.4. No pipes, ducts, sleeves, etc. shall be placed in structural concrete unless specifically detailed or approved by the structural engineer. Penetrations through walls when approved shall be built into the wall prior to concrete placement. Penetrations will not be allowed in footings or grade beams unless detailed. Piping shall be routed around these elements and footings stepped to avoid piping.
   6.5. Reinforcing bars shall not be welded unless specifically shown on drawings. In such cases, use only AWS standards. Do not substitute reinforcing bars for DBAs or HSAs.
   6.6. Top of concrete columns shall be flush (±1/4") with bottom of supported cast-in-place members.
7. Detailing:
   7.1. Lap splice lengths shall be detailed to comply with the "Reinforcing Bar Lap Splice Schedule" contained within the contract drawings.
      7.1.1. Do not splice stirrups and ties. Do not splice vertical bars in retaining walls unless specifically shown.
      7.1.2. At shearwall boundary elements, lap lengths shall be increased by 25%.
      7.1.3. Splices may be made with mechanical splices capable of 125% tension capacity of the bar being spliced. Mechanical splices shall be the positive connecting type coupler and shall meet all ACI requirements. Use "Cadweld", "Lenton" Standard Couplers, "Bar-Lock" or equal with internal protector. If mechanical splices are used, splices or couplers on adjacent bars shall be staggered a minimum of 24" apart along the longitudinal axis of the reinforcing bars.
   7.2. At joints provide reinforcing dowels to match the member reinforcing, unless noted otherwise.
   7.3. At all discontinuous control or construction slab on grade joints, provide (2) #4 x 48".
   7.4. Provide corner bars at intersecting wall corners using the same bar size and spacing as the horizontal wall reinforcing.
   7.5. All vertical reinforcing shall be doweled to footings, or to the structure below with the same size and spacing as the vertical reinforcing for the element above. Dowels extending into footings shall terminate with a 90° standard hook and shall extend to within 4" of the bottom of the footing. Footing dowels (#8 bars and smaller) with hooks need not extend more than 20" into footings.
   7.6. In concrete shearwalls, the horizontal wall reinforcing shall terminate at ends of walls and openings into the far end of the jamb column with a 90° standard hook plus a 6 bar diameter extension. Horizontal wall reinforcing shall be continuous through construction and control joints.
   7.7. See details for reinforcing around miscellaneous openings. All recesses that interrupt reinforcing shall be reinforced the same as an opening.
   7.8. Reference ACI 315 for additional detailing requirements.
8. Contractor required to submit concrete mix design for review by the engineer prior to any placement of concrete.
9. Contractor shall refer to and follow the recommendations in ACI 305R for hot weather concreting and ACI 306R for cold weather concreting.
10. Contractor is not to backfill against retaining walls unless walls have achieved design strength or have been shored. Contractor is not to backfill against basement walls without placement of the main floor diaphragm unless the walls have been shored or approval of the EOR has been granted, or it has been noted otherwise on the design drawings.
11. Construction activity or storage of materials shall not take place on newly placed concrete for a minimum of 7 days after concrete placement.

POST-INSTALLED ANCHORS

1. Post-installed anchors shall only be used where specifically detailed or called for on the design drawings. If circumstances arise during construction where the Contractor desires to substitute a post-installed anchor in place of a cast-in-place anchor, the Contractor shall submit a formal written request for each circumstance to the Architect and Engineer for review.
2. Follow all ICC Evaluation Report and manufacturers' requirements and recommendations for post-installed anchor installation. Where conflicts may exist, the most stringent requirement applies.
3. All holes in hollow, brick, or stone masonry shall be performed in the "rotary-only" mode with the hammer function off.
4. Follow manufacturer and ICC evaluation report requirements for installation temperature of adhesive anchors. Adhesive anchors shall not be installed or cured outside of approved temperature ranges.
   4.1. Adhesive anchors in concrete (normal weight only) shall be
      4.1.1. HIT RE-500 SD by Hilti (ESR-2322)
      4.1.2. HIT HY-150 MAX-SD by Hilti (ESR-3013)
      4.2.3. SET-XP by Simpson (ESR-2508)
      4.2.4. PE1000+ by Powers Fasteners (ESR-2583) - 1/2" to 7/8" diameter only
   4.3. Adhesive anchors in grouted masonry shall be
      4.3.1. HIT HY-150 MAX by Hilti (ESR-1967)
      4.3.2. SET by Simpson (ESR-1772)
   4.4. Adhesive anchors in brick or stone masonry shall be
      4.4.1. HIT HY-20 by Hilti (ESR-4815)
      4.4.2. SET by Simpson (ESR-1772)
      4.4.3. CIA-GEL 7000 Epoxy by USP (ESR-1702)
5. Mechanical (Expansion) anchors
   5.1. Mechanical anchors in concrete shall be
      5.1.1. Kwik Bolt TZ by Hilti (ESR-1917)
      5.1.2. Kwik HUS-EZ by Hilti (ESR-3027)
      5.1.3. Strong-Bolt by Simpson (ESR-1771)
      5.1.4. Strong-Bolt 2 by Simpson (ESR-3037)
      5.1.5. Titen HD by Simpson (ESR-2713)
      5.1.6. Torq-cut by Simpson (ESR-2705)
      5.1.7. Trubolt+ by ITW Redhead (ESR-2427)
   5.2. Mechanical anchors in grouted masonry shall be
      5.2.1. Kwik Bolt 3 by Hilti (ESR-1385)
      5.2.2. Titen HD by Simpson (ESR-1056)
      5.2.3. Wedge-All by Simpson (ESR-1396)
      5.2.4. Strong-Bolt 2 by Simpson (IAPMO ES ER-0240)
6. The Contractor may submit, for review and approval, the manufacturer's ICC evaluation report of alternate anchor systems. The alternate method shall provide minimum capacities equal to or greater than those in the above noted anchors. The alternate method shall be approved by the engineer of record prior to the substitution.
7. Special Inspection and Testing
   7.1. Special inspection shall be performed according to the requirements of the ICC evaluation report, per section 1704.15 of the IBC. Periodic inspection is allowed for mechanical anchors per section 6.6 of ICC-ES AC193.
   7.2. Testing shall be done according to the more stringent requirements of the ICC evaluation report and the values listed below.
      7.2.1. Adhesive Anchors in Concrete or Solid Grouted Masonry: 50% of anchors in non-redundant elements (e.g. column, brace connections, boundary steel, hold-downs) and 10% of anchors in redundant elements shall be tension tested.
      7.2.2. Adhesive Anchors in Solid Brick Masonry: Tension test 5% of all anchors to 3000 lbs. Hold load for five minutes. Torque test 25% of all anchors with a calibrated wrench to 60 foot-pounds.
      7.2.3. Mechanical anchors shall be tension tested to twice the allowable tension load listed in the ICC evaluation report.

2

MASONRY

1. Materials, unless noted otherwise:
   1.1. Concrete Masonry Units (CMU): Medium weight (115pcf) (minimum unit strength of 3750 psi) f'm = 2500 psi
   1.2. Mortar: Type "M" (2500 psi minimum compressive strength)
   1.3. Grout shall attain a minimum compressive strength of 2500 psi at 28 days.
   1.4. Reinforcing Steel------------ASTM 615 Grade 60 (Fy = 60 ksi)
   1.5. Deformed Bar Anchors (DBA)------------ASTM A496
   1.6. Headed Stud Anchors (HSA)------------ASTM A108
   1.7. Anchor Bolts------------ASTM A307
   1.8. Heavy hex nuts and hardened washers------------ASTM A563
2. Reinforcement shall have the following cover:
   2.1. Joint reinforcement shall have not less than 5/8" mortar coverage from the exposed face.
   2.2. Other reinforcement shall have a minimum coverage of one bar diameter over all the bars, but not less than 3/4". When masonry is exposed to soil, minimum coverage shall be 1 1/2".
3. Construction Requirements
   3.1. All units shall be laid with full mortar beds on the face shells. All head joints shall be filled solidly with mortar for a distance in from the face of the units not less than the thickness of the longitudinal face shells. Cells which are to be grouted shall have full head joints.
   3.2. Masonry walls, beams and columns shall be constructed with running bond unless noted otherwise.
   3.3. Solid grouting of walls is unacceptable except where specifically noted.
   3.4. All cells containing reinforcement, embeds, anchor bolts, etc. shall be filled solid with grout. Grout shall be placed by mechanical vibration during placing and revibrated after excess moisture has been absorbed but before workability is lost. Puddling or rodding of grout is not allowed.
   3.5. Where walls are not grouted solid, each grout pour shall terminate flush with the top of the uppermost unit except at cells with vertical reinforcing where the grout shall be 1 1/2" below top of unit to provide construction key.
   3.6. Grout pours shall be limited to 4'-0" unless high lift grouting procedures are followed.
   3.7. All masonry below grade shall be solid grouted.
   3.8. Vertical cells to be filled with grout shall have vertical alignment sufficient to maintain a clear, unobstructed, vertical cell measuring not less than 2" by 3". All steel reinforcement shall be secured against displacement prior to grouting by wire positioners or other suitable devices at intervals not exceeding 200 bar diameters or 10'-0" maximum, or at bar splice locations. Vertical reinforcing shall be located at the center of the wall unless noted otherwise.
   3.9. Reinforcing bars shall not be welded unless specifically shown on drawings. In such cases, use only AWS standards. Do not substitute reinforcing bars for DBAs or HSAs.
   3.10. Control Joints: Spacing shall not exceed 26'-0". See drawings for locations.
   3.11. Grout all beam and joist pockets solid after installation of beams and joists.
   3.12. Embed channels and plates shall be placed so as to create a flush surface with the face of the wall.
   3.13. Anchor bolts and headed stud anchors shall be set in a grouted cell. Anchor bolts and headed stud anchors shall have 1/2" grout surrounding the shank at its penetration. Grout shall be flush with the face or top of the masonry.
4. Detailing Requirements
   4.1. Lap all masonry reinforcing per the "Masonry Reinforcing Bar Lap Splice Schedule" contained within the contract drawings.
   4.2. All vertical reinforcing shall be doweled to the foundation wall, footing (structure below) and to the structure below with the same size dowel, spacing (and in the same core) as the vertical wall reinforcing above.
   4.3. Corner Bars: Horizontal reinforcement shall be continuous at all corners and at intersecting walls. Provide corner bars with the required lap splice length.
   4.4. See details for reinforcing around miscellaneous openings.
   4.5. Horizontal wall reinforcing shall be continuous through joining concrete walls, masonry walls, columns, and pilasters. Provide a key between the wall and the column or pilaster. Horizontal wall reinforcing shall be placed inside the column vertical reinforcing.
   4.6. Horizontal reinforcing shall terminate with a standard hook at edge of openings and ends of walls without corner bars as shown in details.
   4.7. Horizontal wall reinforcing shall terminate with a standard 180° hook at each side of control joints except at floor and roof levels, lintels, beams and at top of parapets as shown in details.
   4.8. All masonry column ties shall terminate with 135° hooks plus a 6 bar diameter extension (4" minimum).

MASONRY VENEER

1. Masonry veneer shall be attached to steel stud walls with "Dur-O-Wal DA 213S seismic veneer anchors" by Dur-O-Wal or Hohmann & Barnard "DW-10" or "DW-10HS seismic veneer anchors" (or equal) spaced at 16" on center. Veneer anchors shall be attached to studs with (2) #10 corrosion resistant self-drilling screws and neoprene washers. Attach the veneer to the anchors with "Dur-O-Wal 213S Seismic Steel Pintles" or Hohmann & Barnard 3/16" diameter "Byna-Tie with Seismiclips" (or equal) spaced at a maximum of 16" on center in both directions. Anchor ties shall engage to a galvanized #9 gauge horizontal joint reinforcement wire in the veneer, which shall be continuous and shall be placed at 16" on center maximum at the center of the veneer.
2. Masonry Veneer shall be attached to concrete walls with 22 gauge "Dur-O-Wal DA100" galvanized dovetail slots installed vertically in concrete at 16" on center. Attach the veneer to dovetail slots with 16 gauge "Dur-O-Wal DA 131 seismic dovetail anchor ties" or Hohmann & Barnard 3/16" diameter "Byna-Tie with Seismiclips" (or equal) spaced at a maximum of 16" on center in both vertical and horizontal directions. Anchor ties shall engage to a galvanized #9 gauge horizontal joint reinforcement wire in the veneer, which shall be continuous and shall be placed at 16" on center maximum at the center of the veneer. Dovetail slots and anchor ties shall be galvanized.
3. Masonry veneer shall be attached to reinforced masonry walls with "tri-rod ladur type reinforcement" spaced at a maximum of 16" on center vertically consisting of (3) #9 gauge, galvanized, corrugated, wires. Veneer may also be attached with "Dur-O-Wal DA 3600S Heavy Duty Seismic Ladur-Eye" with DA 213S seismic steel pintles spaced at 16" on center maximum in both vertical and horizontal directions. Anchor ties shall engage to a galvanized #9 gauge horizontal joint reinforcement wire in the veneer, which shall be continuous and shall be placed at 16" on center maximum at the center of the veneer. Anchors shall extend to the galvanized "ladur type" ((2) #9 wires) joint reinforcing in the masonry wall spaced at 16" on center maximum.
4. Other methods of attachment may be used after written acceptance by the architect and structural engineer.
5. Steel Lintels: Provide steel angle lintels at all openings through the masonry veneer. Provide 1" of bearing for each foot of width of opening, with a minimum bearing of 6". See the Steel Angle Lintel Schedule for size.

COMPOSITE STEEL BEAMS

1. All beams supporting concrete over metal deck shall have headed stud anchors.
2. Composite beams are indicated on the framing plans with a suffix (nn). The number inside parentheses indicates the number of studs for this beam or section of beam. Beams or sections of beams shall have the studs spaced uniformly over the beam or section. The maximum spacing shall not exceed 36" on center.
3. All headed stud anchors shall conform to ASTM A-108. Dimensions shall comply with AISC. Use 3/4" diameter studs. Headed studs shall extend 1 1/2" minimum (2" maximum) above the top of the steel deck after welding. Headed studs shall be applied through the metal deck to the top flange of the steel section or welded directly to the steel section.
4. The minimum on center spacing of stud connectors shall be 6 diameters along the longitudinal axis of the supporting composite beam and 4 diameters transverse to the longitudinal axis of the supporting composite beam.
5. Composite beams shall be precambered as shown on plans. On the plans, c=0.00" denotes precamber dimension (upward) in inches.
6. Camber tolerance shall be +1/4", -0".
7. Slab shall be screeded to a constant thickness as indicated.

STRUCTURAL STEEL

1. Codes and Standards: Fabrication and installation shall comply with the latest edition of the following:
   1.1. American Institute of Steel Construction (AISC), "Specification for the Design, Fabrication and Erection of Structural Steel for Buildings," with "Commentary".
   1.2. AISC "Code of Standard Practice" excluding sections 3.4, 4.4 and 4.4.1.
   1.3. AISC "Specification for Structural Joints Using ASTM A325 or A490 Bolts"
   1.4. AISC "Seismic Provisions for Structural Steel Buildings."
   1.5. American Welding Society (AWS), Structural Welding Codes D1.1, D1.3, D1.4, and D1.8, except as modified by the "Steel Construction Manual".
2. Material:
   2.1. Wide Flange Sections------------ASTM A992 (50 ksi)
   2.2. Plate
      2.2.1. Typical------------ASTM A36
      2.2.2. Braced/Moment Frames------------ASTM A572 Grade 50
   2.3. Notch-toughness requirements apply for Group 3, 4, and 5 shapes with flange thickness greater than 1 1/2" and plate 2" and thicker which are a part of the Seismic Load Resisting System (SLRS). Minimum Charpy V-Notch requirements are 20 ft-lbs at 70°F.
   2.4. Notch-toughness requirements apply for demand critical welds. Minimum Charpy V-Notch requirements are 20 ft-lbs at -20°F and 40 ft-lbs at 70°F
   2.5. Pipe------------ASTM A53 Grade B Type E/S
   2.6. Hollow Structural Shapes
      2.6.1. Rectangular------------ASTM A500 Grade B (46 ksi)
      2.6.2. Round------------ASTM A500 Grade B (42 ksi)
   2.7. Other Structural Shapes (M, C, etc)------------ASTM A36
   2.8. Bolted Connections------------ASTM A325
   2.9. Anchor Bolts
      2.9.1. All Columns unless noted otherwise: ASTM F1554 Grade 36 with ASTM A563 heavy hex nuts with Grade A hardened washers.
      2.9.2. Braced Frame/Moment Frame Columns unless noted otherwise: ASTM F1554 Grade 105 (equiv to A193 Grade B7) with ASTM A563 heavy hex nuts with ASTM F436 minimum 5/16" thick washers.
   2.10. Weld Filler Metal
      2.10.1. Shielded Metal Arc Welding------------AWS A5.1, low-hydrogen only
         Low-hydrogen restrictions do not apply when welding sheet steels in accordance with AWS D1.3, including attaching these steels to structural members.
      2.10.2. Gas-Metal & Metal-Cored Arc Welding----AWS A5.18
      2.10.3. Flux-Cored Arc Welding------------AWS A5.20
         E7XT-4 or E7XT-11 electrodes are not permitted.
      2.10.4. Intermixing of welds made from self-shielded welding electrodes with welds made by other processes is not allowed in seismic critical welds, unless tested in accordance with AWS D1.8, annex B. The Field Erection Contractor is responsible for verifying that intermixing of self-shielded weld metal with weld metal of other processes will not occur, or alternatively, the welding procedure is qualified by testing.
   2.11. Deformed Bar Anchors (DBA)------------ASTM A496
   2.12. Headed Stud Anchors (HSA)------------ASTM A108
   2.13. Non-Shrink Grout------------ASTM C1107 Grade B
      Non-shrink grout shall be prepackaged, non-metallic and non-gaseous.
      Furnish certified independent test data to Structural Engineer.
      Fluid Consistency (flow cone) = 20 to 30 seconds
      Compressive Strength in 28 days = 7,500 psi
3. Structural Detailing
   3.1. Provide full depth web stiffener plates at each side of all beams at all bearing points. Stiffener plates shall be the thickness called out below unless noted otherwise. Stiffeners shall be welded on both sides of the plate-to-flange and plate-to-web interfaces. Do not weld into the web-to-flange fillet region of the member.
      FLANGE WIDTH------------STIFFENER THICKNESS & WELD SIZE
      Less than 8 1/4"------------1/4" & 3/16"
      8 1/4" to 12 1/4"------------3/8" & 1/4"
      12 1/4" to 16 1/2"------------1/2" & 5/16"
      16 1/2" to 20 3/4"------------5/8" & 3/8"
   3.2. Bolting and Fasteners
      3.2.1. Ordinary steel-to-steel connections, simple span framing, and beam/girder-to-bearing plates are the standard connection used throughout the design drawings, unless noted otherwise:
         3.2.1.1. Use A325N bolts or tension-controlled bolts.
         3.2.1.2. Tighten these fasteners to a "snug tight" condition.
         3.2.1.3. Where a steel-to-steel connection is not shown, provide a framed connection per AISC for one half the total uniform load capacity of the beam for the span and steel specified.
      3.2.2. Fasteners and washers shall not be reused. Scrap dirty, rusted, or water-contaminated bolt assemblies.
   3.3. Weld Access Holes and Temporary Attachments
      3.3.1. Fabricate beam copes and weld access holes using the geometry described in AISC 360 Section J1.6.
      3.3.2. Runoff tabs are to be removed unless noted otherwise.
   3.4. Backup Bars: Remove backup bars from all beam bottom flange connections in demand critical welds, unless noted otherwise. Backgouge the root and weld to sound metal. Reweld the gouged area and add a 5/16" reinforcing fillet weld.
   3.5. Protected Zones: No connections, other than those on the design drawings, shall be made within the protected zone of the SLRS as identified in AISC 341.
      3.5.1. Locate headed studs, welds, miscellaneous metal, etc outside of the protected zone.
      3.5.2. Paint the protected zones with bright paint before and after fire coating operations to identify them.
   3.6. All welds not noted on drawings shall be minimum 1/4" fillet welds.
   3.7. Welds may be performed in the shop or the field. Designations of field welds on the Contract Documents are shown where it is anticipated field welds may be required, and are shown only for the purpose of assisting the Contractor in the bidding process. The Contractor is to coordinate the welding sequence between sub-contractors, and any costs associated with variations in the welding sequence are outside the scope of the Design Engineer, and are the responsibility of the Contractor. Field welding is to be minimized where possible. Contractor is to verify that the sequencing of welds meets all safety regulations, and the requirements of the Construction Documents and their referenced codes.
   3.8. All structural steel members shall be considered as an unrestrained fire-resistance-rated assembly.
4. Welding of Reinforcing Steel or Bolts
   4.1. Reinforcing Bars: Do not weld rebar except as specifically detailed in the drawings. In such cases, use only AWS standards. Do not substitute reinforcing bars for deformed bar anchors, structural bolts, or headed stud anchors.
   4.2. Do not weld anchor bolts, including "tack" welds.
   4.3. Headed Stud Anchor welding and Deformed Bar Anchor welding shall conform to the manufacturer's specifications.

METAL DECKING

1. Steel deck shall comply with the latest requirements of the Steel Deck Institute.
2. Steel deck material shall comply with the manufacturer's ICC Report and have a minimum yield strength of 33ksi.
3. All deck shall be 3-span continuous minimum. In areas where 3-span conditions are not possible, the contractor shall provide heavier gauge deck as required to provide the equivalent loading of the specified deck under a 3-span condition.
4. Steel roof deck shall not be used to support loads from plumbing, fire sprinklers, HVAC ducts, light fixtures, architectural elements, or equipment of any kind, unless specifically noted.
5. Conduits are permitted in deck slabs subject to local code requirements and fire rating considerations. When conduit is installed in the slab, it shall be limited to conduits having a diameter of 1" or less, or less than 1/3 the concrete cover, and no crossovers occur, and conduit is spaced at least 18" apart with a 3/4" minimum cover.
6. All members supporting deck shall be dry before welding.
7. Crimp seams before button punching or welding interlocking seams.
8. Where deck is to receive sprayed-on fire proofing, painted deck shall be coated with special paint that will allow the sprayed-on fire proofing to adhere to the painted deck.
9. All welds performed on the steel deck are to be painted.
10. Steel deck shall be galvanized (G60) when used above or below mechanical equipment rooms.
11. Steel floor deck shall be phosphatized/painted, composite, with interlocking side seams with the following minimum properties (LW = Light weight concrete, NW = Normal weight concrete):
    Type/Ga------S(in3/ft)-------I (in4/ft-------Concrete (Total)----------Allowable shear value-----------Notes
    W3/16---------0.96----------1.509---------5"(8") NW--------2760 plf for 12'-6" span-----------Typ. Floor
    11.1. Weld deck to supporting framing members with 3/4" diameter puddle welds at the following spacing (Closer spacings may be used to develop minimum shear requirements):
       11.1.1. 12" on center to supports perpendicular to deck corrugations (4 welds per 36" wide sheet).
       11.1.2. 12" on center to all supports parallel to deck corrugations.
    11.2. Attach interlocking seams with 3/16" diameter button punch at 18" on center or 1 1/2" top seam weld at 36" on center between adjacent pieces of deck. Closer spacings may be used to develop minimum shear requirements.
    11.3. Provide a 2" minimum bearing at all supports.
    11.4. Butt all end splices.
12. Steel roof deck shall be painted with interlocking side seams with the following minimum properties:
    Type/Ga------------S(in3/ft)------------I (in4/ft)------------Allowable shear value------------Notes
    1 1/2" B/20----------0.235--------------------0.216----------------1338 plf for 6'-0" span---------------Typ. Roof
    1 1/2" B/18----------0.322--------------------0.302----------------1338 plf for 6'-0" span---------------Elevator Roof
    12.1. Weld steel roof deck to supporting framing members with 3/4" diameter puddle welds at the following spacings (Closer spacings may be used to develop minimum shear requirements):
       12.1.1. 6" on center to all supports perpendicular to deck corrugations (7 welds per 36" sheet).
       12.1.2. 6" on center to all supports parallel to deck corrugations.
       12.1.3. Interlocking side seams between adjacent pieces of decking may be attached with "Verco Sidelap Connections" by Verco Manufacturing (VSC) or "ASC DeltaGrip side seam connection" by ASC Steel Deck at 12" on center minimum.
    12.2. At the Contractor's option, Hilti X-EDN19/X-EDNK 22 powder-actuated fasteners may be used in lieu of puddle welds. Follow fastener manufacturer's recommendations for installation. Fasteners shall be installed at the following spacings (Closer spacings may be used to develop minimum shear requirements):
       12.2.1. 6" on center to all supports perpendicular to deck corrugations (7 fasteners per 36" sheet).
       12.2.2. 6" on center to all supports parallel to deck corrugations.
       12.2.3. Interlocking side seams between adjacent pieces of decking may be attached with "Verco Sidelap Connections" by Verco Manufacturing (VSC) or "ASC DeltaGrip side seam connection" by ASC Steel Deck at 4" on center. Closer spacing may be used to develop minimum shear requirements.
    12.3. The Contractor may submit, for review and approval, the manufacturer's ICC report of an alternate method of deck attachment. The alternate method shall provide minimum deck diaphragm shear values equal to or greater than those noted above. The alternate method shall be approved by the engineer of record prior to the substitution.
    12.4. Provide a 2" minimum bearing and an 8" lap at the splice points, centering the splice over the support.

OPEN WEB STEEL JOISTS AND GIRDERS

1. All open web steel joist and girders shall be fabricated and erected in accordance with the latest edition of Steel Joist Institute (SJI), "Standard Specifications and Code of Standard Practice."
2. Joists or girders with slopes greater than 1/2" per foot shall be designed to meet or exceed the load capacities, listed in the SJI load tables, of the joist or girder sizes indicated on the framing plan, as if the joists or girders were installed level.
3. Provide special bearing ends to accommodate slopes from sloped joists, sloped girders or sloped bearing conditions.
4. Modifications to any joist or girder, including holes through the top and bottom chords, without the written consent and direction from the manufacturer is not allowed.
5. Design loads, unless noted otherwise:
   5.1. Wind loads (W) shown are calculated using ASCE 7.
   5.2. Seismic loads (E and Em) shown are calculated using ASCE 7.
   5.3. Gravity loads (D, L, S, etc.) shown are Allowable Stress (Working Stress) levels.
   5.4. Loads shown are at levels to be used directly by the Load Combinations from Section 1605 of the IBC without further adjustment.
   5.5. Allowable stress increases are permitted as allowed by the referenced standard being used for design.
6. The deflection of all open web joists and girders shall be limited to L/240 for total load and L/360 for live load, unless noted otherwise.
7. A certificate of compliance must be submitted to the building official upon completion of fabrication per IBC 2206.5.
8. All Open Web Steel Joists shall have their top chords designed for a +/- 4 kip axial seismic load.

28 March 2013
VOLUME B.1 - DFCM
Review Response #2

NOTE:
THESE STRUCTURAL DRAWINGS ARE BASED ON ARCHITECTURAL DRAWINGS DATED 08.28.2012

DIMENSIONS AND ELEVATIONS, AS THEY RELATE TO THE BUILDING IN GENERAL, i.e. GRID TO GRID DIMENSIONS OR DECK BEARING ELEVATIONS, ARE SUPPLIED BY THE ARCHITECT. THEY ARE PROVIDED ON THE STRUCTURAL PLANS AND DETAILS FOR THE CONVENIENCE OF THE CONTRACTOR. VERIFY DIMENSIONS AND ELEVATIONS WITH ARCHITECTURAL DRAWINGS.

DUNN
DUNN ASSOCIATES, INC
Consulting Structural Engineers
EMAIL: ENG@DUNN-SE.COM
PH: 801-575-8877 FAX: 801-575-8875

ARCHITECTURAL NEXUS
SALT LAKE CITY PLACERVILLE SACRAMENTO
Architectural NEXUS, Inc.
2150 South 1300 East, Suite 200
Salt Lake City, Utah 84106
T 801.924.5000 F 801.924.5001
http://www.archnexus.com

Original drawings remain the property of the Architect and as such the Architect retains total ownership and control. The design represented by these drawings is sold to the client for a one time use, unless otherwise agreed upon in writing by the Architect.
© Architectural Nexus, Inc.2011

UTAH NATIONAL GUARD CAMP WILLIAMS
RTI TASS COMPLEX, PHASE II
PROJECT NO. 490444

UTAH NATIONAL GUARD
12953 SOUTH MINUTEMAN DRIVE
DRAPER, UTAH 84020-1726

NATIONAL GUARD UTAH

#	REVISIONS	
1	03.15.2013	DFCM Review Response
2	03.28.2013	DFCM Review Response #2

VOLUME B.1 - DFCM Review Response #2

NEXUS PROJECT #: 11024
CHECKED BY: Tyler Wright
DRAWN BY: Brett Roberts
DATE: 28 March 2013

SHEET CONTENTS:
GENERAL
STRUCTURAL NOTES

S-001

This drawing, as an instrument of professional service, is the property of DUNN ASSOCIATES INC, and shall not be used, in whole or part for any other project without the written permission of an authorized representative of DUNN ASSOCIATES INC. Unauthorized use will be prosecuted to the fullest extent of the law. Copyright © 2012 by DUNN ASSOCIATES INC.

3/27/2013 5:05:30 PM

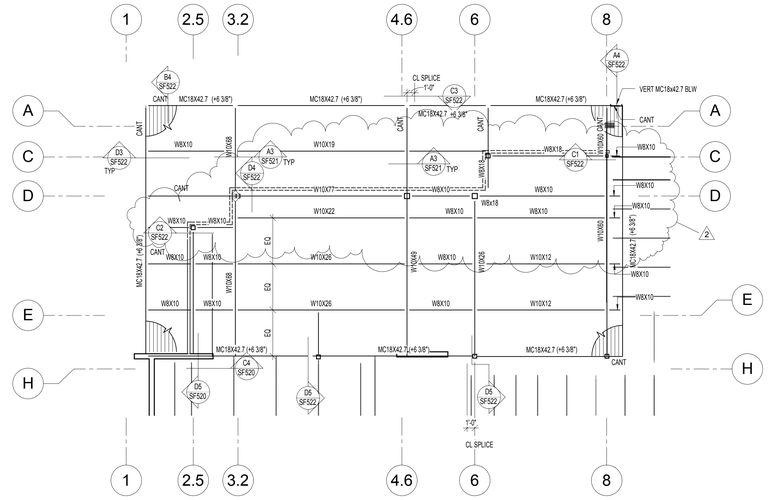

NORTH

1 SF105 HIGH ROOF FRAMING PLAN
SCALE: 1/8" = 1'-0"

ROOF FRAMING PLAN NOTES:

1. VERIFY ROOF SLOPES, DRAINS, AND DECK BEARING ELEVATIONS WITH ARCHITECTURAL DRAWINGS. SEE ROOF FRAMING DETAILS ON SHEET (SF520).
2. ALL JOISTS SHALL HAVE 5" DEEP BEARING ENDS. UNO.
3. ALL ROOF OPENINGS SHALL BE FRAMED AS INDICATED IN ROOF FRAMING DETAILS ON SHEET (SF521).
4. SEE ROOF FRAMING DETAILS ON SHEET (SF521) FOR CONCENTRATED LOADS LOCATED FURTHER THAN 6" FROM JOIST/GIRDER PANEL JOINT.
5. SEE ROOF FRAMING DETAILS ON SHEET (SF521) FOR MECHANICAL UNITS HUNG BELOW FRAMING.
6. VERIFY SIZE, WEIGHT, AND LOCATION OF ALL ROOF TOP MECHANICAL UNITS WITH ARCHITECTURAL AND MECHANICAL DRAWINGS. SEE ROOF FRAMING DETAILS ON SHEET (SF521) FOR STEEL FRAMES AT ALL ROOF TOP EQUIPMENT. COORDINATE OPENINGS WITH MECHANICAL, ELECTRICAL, AND GENERAL CONTRACTORS.
7. OPEN WEB STEEL JOISTS SHALL BE DESIGNATED BY THE MANUFACTURER TO SUPPORT THE MECHANICAL AND LATERAL LOADS SHOWN ON THE ROOF FRAMING PLANS IN ADDITION TO THE UNIFORM AND POINT LOADS SHOWN.
8. WHERE MECHANICAL UNITS INTERRUPT HORIZONTAL BRIDGING, PROVIDE CROSS BRIDGING AT JOIST SPACES ON EA SIDE. TYPICAL.
9. WHERE DIAGONAL BRIDGING CONFLICTS WITH MECHANICAL DUCTS, REMOVE DIAGONAL BRIDGING AND REPLACE WITH HORIZONTAL BRIDGING (AFTER ROOF DECK IS IN PLACE).
10. "*" INDICATES THAT THESE JOISTS SHALL BE DESIGNED FOR AN ADLOAD OF 1000# AT ANY TOP CHORD PANEL POINT. THIS LOAD IS TO BE ADDED TO THE GIRDER TOP CHORD LOAD. MULTIPLE "*" ARE ADDITIVE.
11. JOIST DESIGNER SHALL DESIGN JOISTS AND SUPPLY ADDITIONAL BRIDGING AS REQUIRED FOR 8 PSF NET UPLIFT DUE TO WIND. THERE IS NO UPLIFT ON GIRDERS.
12. SEE ROOF FRAMING DETAILS ON SHEET (SS501) FOR REINFORCING AROUND MISCELLANEOUS MASONRY OPENINGS.
13. SEE FOOTING AND FOUNDATION DETAILS ON SHEET (SS501) FOR MASONRY CONTROL JOINTS.
14. SEE FOOTING AND FOUNDATION DETAILS ON SHEET (SS501) FOR TERMINATION OF HORIZONTAL REINFORCING AT ENDS OF MASONRY WALLS.
15. SEE ARCHITECTURAL PLANS FOR ALL STEEL COLUMN LOCATIONS (DIMENSIONS).
16. THE TOP CHORDS OF OWSJ SHALL BE DESIGNED TO HAVE A TENSILE CAPACITY GREATER THAN A FACTORED LOAD OF 25 kips. OWSJ MARKED *** SHALL HAVE HORIZONTAL LEGS OF TOP CHORDS A MINIMUM WIDTH OF 3 1/2" EA SIDE.

MARKS AND SYMBOLS LEGEND

- SECTION MARK / SHEET NUMBER
- MTL ROOF DECK, SEE GSN ON (S-001)
- MAS WALL, SEE SCHED ON (SF601)
- BRG WALL BLW
- STL COL, SEE SCHED ON (SF602)
- MAS COL, SEE SCHED ON (SF601)
- ML-# — MAS LINTEL, SEE SCHED ON (SF601)
- RD — ROOF DRAIN, SEE ARCH AND MECH FOR EXACT LOCATION. SEE C3/SF521
- BM CONT OVER WALL, SEE DET
- OWSJ (xx/xx) — OPEN WEB STEEL JOIST (DEAD LOAD/TOTAL LOAD) ADDITIONAL DRIFT AND POINT LOADS ARE SHOWN ON PLAN. LOADS ARE SHOWN P/F.
- C8 CHANNEL CHORD HORIZONTAL CHANNEL TO BE C8x8.2 UNO. SEE DETAIL (A1/SF521) FOR SPLICE DETAIL
- ADD / ALT B: REDUCE BASE BID TO EXCLUDE AREA IDENTIFIED AS ADD / ALT "B".
- ADD / ALT C: REDUCE BASE BID TO EXCLUDE AREA IDENTIFIED AS ADD / ALT "C".

SNOW DRIFT LOADING DIAGRAM

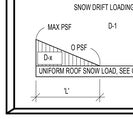

28 March 2013
VOLUME B.1 - DFCM
Review Response #2

NOTE:
THESE STRUCTURAL DRAWINGS ARE BASED ON ARCHITECTURAL DRAWINGS DATED 08.28.2012

DIMENSIONS AND ELEVATIONS, AS THEY RELATE TO THE BUILDING IN GENERAL, i.e. GRID TO GRID DIMENSIONS OR DECK BEARING ELEVATIONS, ARE SUPPLIED BY THE ARCHITECT. THEY ARE PROVIDED ON THE STRUCTURAL PLANS AND DETAILS FOR THE CONVENIENCE OF THE CONTRACTOR. VERIFY DIMENSIONS AND ELEVATIONS WITH ARCHITECTURAL DRAWINGS.

DUNN
DUNN ASSOCIATES, INC
Consulting Structural Engineers
EMAIL: ENG@DUNN-SE.COM
PH: 801-575-8877 FAX: 801-575-8875

ARCHITECTURAL NEXUS
SALT LAKE CITY PLACERVILLE SACRAMENTO

Architectural NEXUS, Inc.
2150 South 1300 East, Suite 200
Salt Lake City, Utah 84106
T 801.924.5000 F 801.924.5001
http://www.archnexus.com

Original drawings remain the property of the Architect and as such the Architect retains total ownership and control. The design represented by these drawings is sold to the client for a one time use, unless otherwise agreed upon in writing by the Architect.
© Architectural Nexus, Inc.2011

UTAH NATIONAL GUARD CAMP WILLIAMS
RTI TASS COMPLEX, PHASE II
PROJECT NO. 490444

UTAH NATIONAL GUARD
12953 SOUTH MINUTEMAN DRIVE
DRAPER, UTAH 84020-1726

#	REVISIONS	
1	03.15.2013	DFCM Review Response
2	03.28.2013	DFCM Review Response #2

NEXUS PROJECT #:	11024
CHECKED BY:	Tyler Wright
DRAWN BY:	Brett Roberts
DATE:	28 March 2013

SHEET CONTENTS:
HIGH ROOF FRAMING PLAN AND DETAILS

VOLUME B.1 - DFCM Review Response #2

SF105

This drawing, as an instrument of professional service, is the property of DUNN ASSOCIATES INC, and shall not be used, in whole or part for any other project without the written permission of an authorized representative of DUNN ASSOCIATES INC. Unauthorized use will be prosecuted to the fullest extent of the law. Copyright © 2012 by DUNN ASSOCIATES INC.

3/27/2013 5:05:31 PM

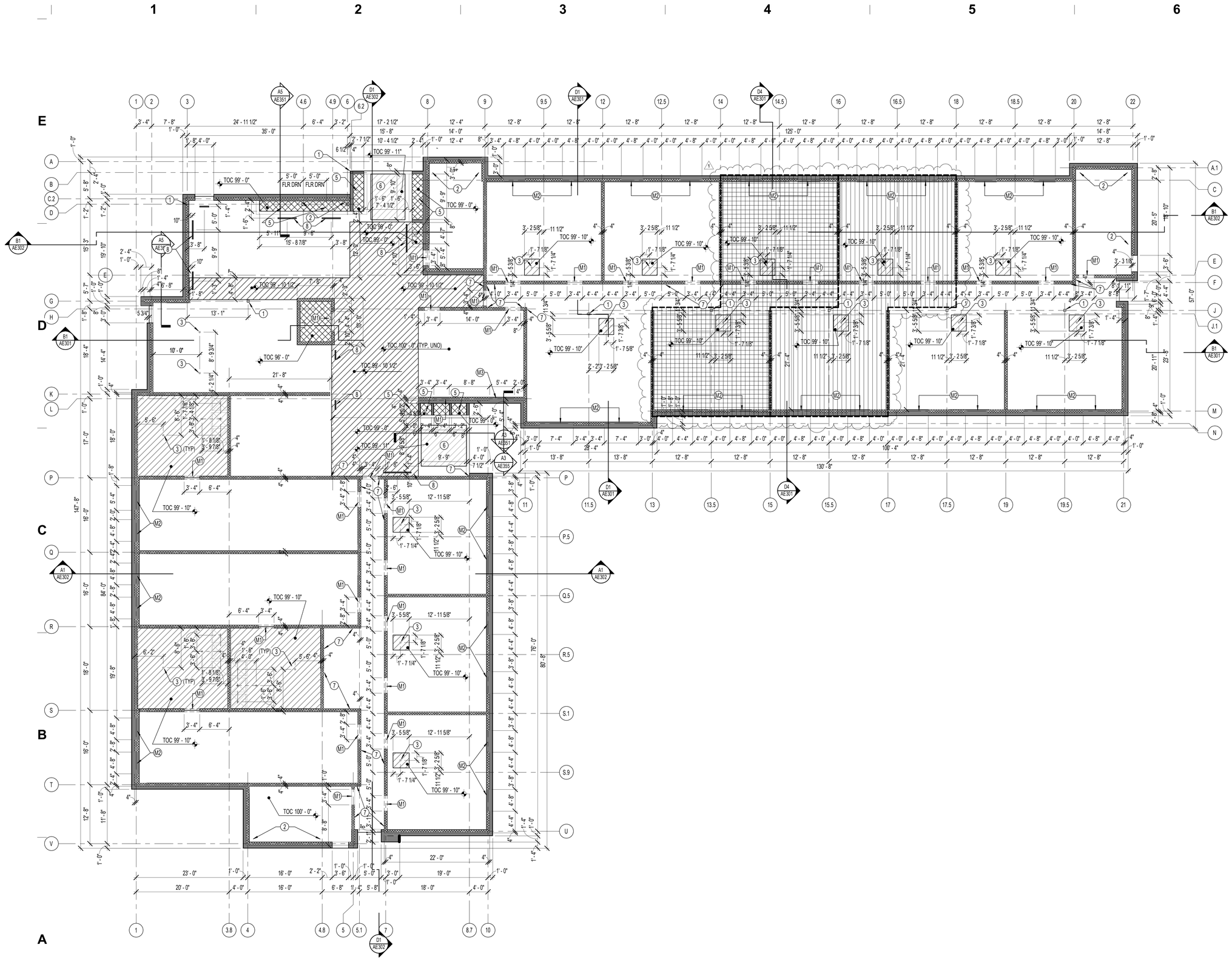

N

A1 AE011 **LEVEL 1 - SLAB CONTROL PLAN**
1/8" = 1'-0"

4/1/2013 11:16:17 AM

GENERAL NOTES - SLAB CONTROL PLAN

A. DIMENSIONAL CONTROL PLANS SHOW ONLY STRUCTURAL AND OTHER KEY ELEMENTS PERTINENT TO DIMENSIONAL INTEGRITY. ALL OTHER ITEMS ARE NOT SHOWN FOR CLARITY. SEE OTHER ARCHITECTURAL, CIVIL, STRUCTURAL, MECHANICAL AND ELECTRICAL DRAWINGS FOR INFORMATION SPECIFIC TO THOSE TRADES THAT IS NOT DEPICTED ON THIS DRAWING.

B. THIS DRAWING IS FOR COORDINATION PURPOSES ONLY, AND DEPICTS ONLY GENERAL EXTENTS OF CONCRETE SLABS AND WALLS AND CERTAIN MAJOR OPENINGS FOR CIRCULATION AND SHAFTS, AND ALLOWABLE PENETRATION LOCATIONS OF CONCRETE BEAMS NEAR COLUMNS. CONTRACTOR IS RESPONSIBLE FOR VERIFYING ALL REQUIRED OPENINGS OR PENETRATIONS, AND COORDINATING ALL REQUIREMENTS FOR ALL OPENINGS WITH ALL TRADES AND WITH STRUCTURAL ELEMENTS.

C. UNLESS NOTED OTHERWISE, DIMENSIONS ARE TO GRID, FACE OF CONCRETE STRUCTURAL ELEMENT OR OPENING, OR CENTERLINE OF STEEL STRUCTURAL ELEMENT.

KEYNOTE - CONTROL PLAN

1 STRUCTURAL COLUMN - SEE STRUCTURAL FOR MORE INFORMATION
2 STRUCTURAL BRACE FRAME - SEE STRUCTURAL FOR MORE INFORMATION
3 FLOOR DRAIN
4 1-HR RATED MECHANICAL SHAFT
5 FLOOR DRAIN CENTERED IN PLANTER
6 WALK-OFF MAT DEPRESSION - COORDINATE WITH WALK-OFF MAT MFR REQUIREMENTS
7 HONED CMU BLOCK - COLOR SELECTED BY ARCHITECT
8 IN FLOOR SUPPLY DIFFUSERS

MASONRY OPENINGS

KEY NOTE	DESCRIPTION	HEIGHT (AFF, UINO) SILL	HEAD
M1	MASONRY LINTEL	-	7' - 4"
M2	MASONRY OPENING	2' - 0"	9' - 0"
M3	MASONRY OPENING	10' - 0"	11' - 8"
M4	MASONRY LINTEL	-	12' - 8"

SLAB EDGE PLAN LEGEND

- CONCRETE SLAB - SEE STRUCTURAL DRAWINGS FOR MORE INFORMATION
- DEPRESSED CONCRETE SLAB - SEE SLAB PLAN FOR TOC ELEVATIONS
- RECESSED CONCRETE SLAB - DEPTH VARIES - SEE SLAB PLAN FOR DEPTH OF RECESS
- MASONRY BLOCK - SEE FLOOR PLANS & WALL TYPES FOR FULL WALL CONSTRUCTION
- MASONRY OPENING - SEE KEYNOTES FOR MORE INFORMATION
- CONCRETE FOUNDATION (UNO) - SEE STRUCTURAL FOR MORE INFORMATION

ADD ALTERNATE LEGEND

ADD/ALT 2:
ADD TO BASE BID SQUARE FOOT AREA INDENTIFIED AS ADD/ALT "2". BUILDING WILL BE INCREASED BY THE DISTANCE EQUAL TO THAT OF EACH GROUP OF ROOMS SHOWN HATCHED. BASE BID WILL BE CALCULATED WITHOUT THE AREA HATCHED.

ADD/ALT 3:
ADD TO BASE BID SQUARE FOOT AREA INDENTIFIED AS ADD/ALT "3". BUILDING WILL BE INCREASED BY THE DISTANCE EQUAL TO THAT OF EACH GROUP OF ROOMS SHOWN HATCHED. BASE BID WILL BE CALCULATED WITHOUT THE AREA HATCHED.

ARCHITECTURAL NEXUS
SALT LAKE CITY PLACERVILLE SACRAMENTO

Architectural Nexus, Inc.
2505 East Parleys Way
Salt Lake City, Utah 84109
T 801.924.5000 F 801.924.5001
http://www.archnexus.com

Licensed Architect PETER MOYES No. 5-7-13 21 MARCH 2013 83-122248-0301 State of Utah

Original drawings remain the property of the Architect and as such the Architect retains total ownership and control. The design represented by these drawings is sold to the client for a one time use, unless otherwise agreed upon in writing by the Architect.
© Architectural Nexus, Inc. 2012

UTAH NATIONAL GUARD CAMP WILLIAMS
RTI TASS COMPLEX, PHASE II
NGB PROJECT NO. 490444
17800 SOUTH ACADEMY STREET
BLUFFDALE, UTAH 84065

#	REVISIONS	
1	4.01.13	ADD-02

NEXUS PROJECT #:	11024
CHECKED BY:	SMS
DRAWN BY:	BS / SMS
DATE:	21 MARCH 2013

SHEET CONTENTS:
LEVEL 1 SLAB CONTROL PLAN

VOLUME B - BID DOCUMENTS

AE011

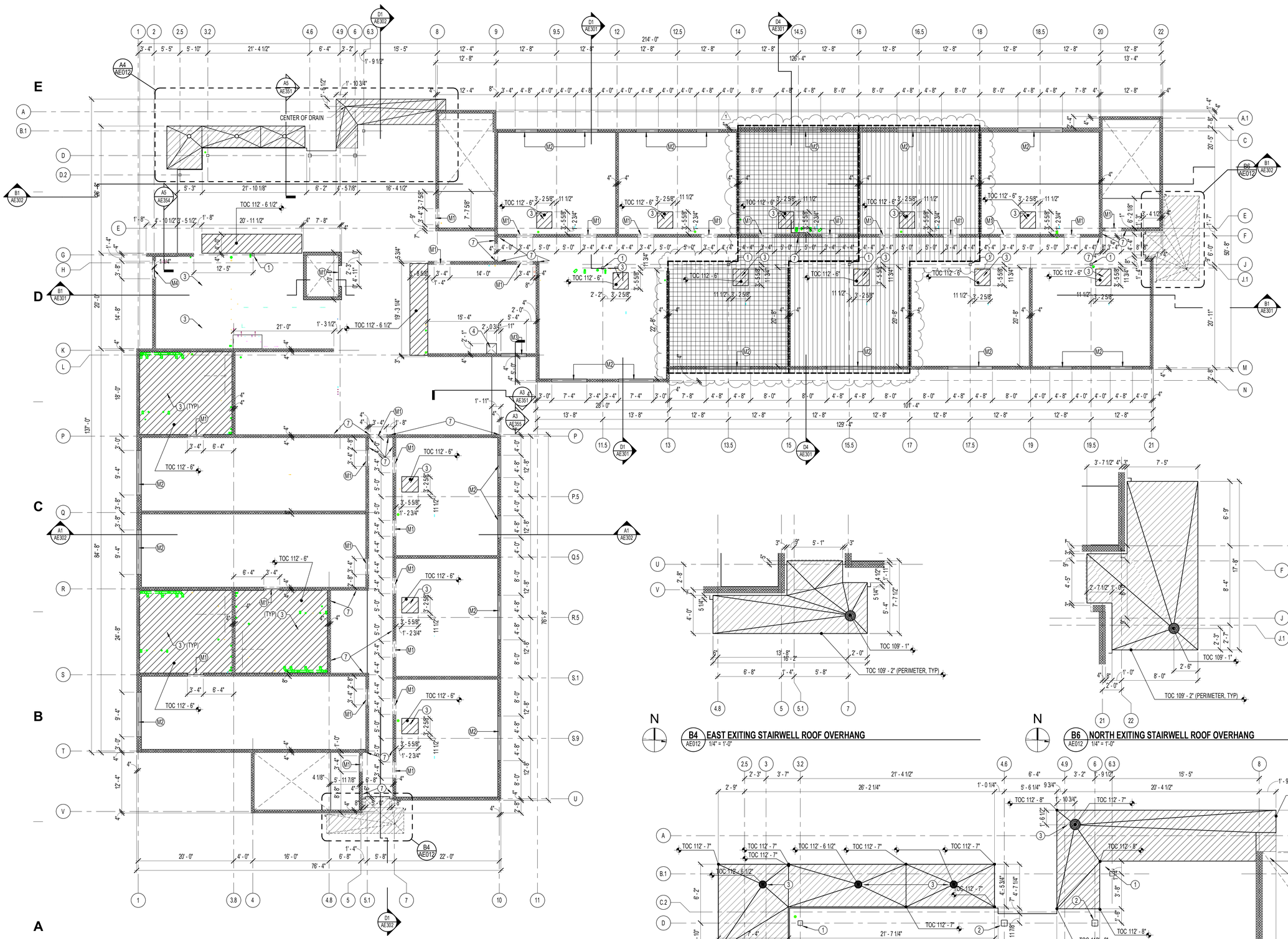

GENERAL NOTES - SLAB CONTROL PLAN

A. DIMENSIONAL CONTROL PLANS SHOW ONLY STRUCTURAL AND OTHER KEY ELEMENTS PERTINENT TO DIMENSIONAL INTEGRITY. ALL OTHER ITEMS ARE NOT SHOWN FOR CLARITY. SEE OTHER ARCHITECTURAL, CIVIL, STRUCTURAL, MECHANICAL AND ELECTRICAL DRAWINGS FOR INFORMATION SPECIFIC TO THOSE TRADES THAT IS NOT DEPICTED ON THIS DRAWING.

B. THIS DRAWING IS FOR COORDINATION PURPOSES ONLY, AND DEPICTS ONLY GENERAL EXTENTS OF CONCRETE SLABS AND WALLS AND CERTAIN MAJOR OPENINGS FOR CIRCULATION AND SHAFTS, AND ALLOWABLE PENETRATION LOCATIONS OF CONCRETE BEAMS NEAR COLUMNS. CONTRACTOR IS RESPONSIBLE FOR VERIFYING ALL REQUIRED OPENINGS OR PENETRATIONS, AND COORDINATING ALL REQUIREMENTS FOR ALL OPENINGS WITH ALL TRADES AND WITH STRUCTURAL ELEMENTS.

C. UNLESS NOTED OTHERWISE, DIMENSIONS ARE TO GRID, FACE OF CONCRETE STRUCTURAL ELEMENT OR OPENING, OR CENTERLINE OF STEEL STRUCTURAL ELEMENT.

KEYNOTE - CONTROL PLAN

1 STRUCTURAL COLUMN - SEE STRUCTURAL FOR MORE INFORMATION
2 STRUCTURAL BRACE FRAME - SEE STRUCTURAL FOR MORE INFORMATION
3 FLOOR DRAIN
4 1-HR RATED MECHANICAL SHAFT
5 FLOOR DRAIN CENTERED IN PLANTER
6 WALK-OFF MAT DEPRESSION - COORDINATE WITH WALK-OFF MAT MFR REQUIREMENTS
7 HONED CMU BLOCK - COLOR SELECTED BY ARCHITECT
8 IN FLOOR SUPPLY DIFFUSERS

MASONRY OPENINGS

KEY NOTE	DESCRIPTION	HEIGHT (AFF, UINO) SILL	HEAD
M1	MASONRY LINTEL	-	7' - 4"
M2	MASONRY OPENING	2' - 0"	9' - 0"
M3	MASONRY OPENING	10' - 0"	11' - 8"
M4	MASONRY LINTEL	-	12' - 8"

SLAB EDGE PLAN LEGEND

- CONCRETE SLAB - SEE STRUCTURAL DRAWINGS FOR MORE INFORMATION
- DEPRESSED CONCRETE SLAB - SEE SLAB PLAN FOR TOC ELEVATIONS
- RECESSED CONCRETE SLAB - DEPTH VARIES - SEE SLAB PLAN FOR DEPTH OF RECESS
- MASONRY BLOCK - SEE FLOOR PLANS & WALL TYPES FOR FULL WALL CONSTRUCTION
- MASONRY OPENING - SEE KEYNOTES FOR MORE INFORMATION
- CONCRETE FOUNDATION (UNO) - SEE STRUCTURAL FOR MORE INFORMATION

ADD ALTERNATE LEGEND

ADD/ALT 2:
ADD TO BASE BID SQUARE FOOT AREA INDENTIFIED AS ADD/ALT "2". BUILDING WILL BE INCREASED BY THE DISTANCE EQUAL TO THAT OF EACH GROUP OF ROOMS SHOWN HATCHED. BASE BID WILL BE CALCULATED WITHOUT THE AREA HATCHED.

ADD/ALT 3:
ADD TO BASE BID SQUARE FOOT AREA INDENTIFIED AS ADD/ALT "3". BUILDING WILL BE INCREASED BY THE DISTANCE EQUAL TO THAT OF EACH GROUP OF ROOMS SHOWN HATCHED. BASE BID WILL BE CALCULATED WITHOUT THE AREA HATCHED.

ARCHITECTURAL NEXUS
SALT LAKE CITY PLACERVILLE SACRAMENTO

Architectural NEXUS, Inc.
2505 East Parleys Way
Salt Lake City, Utah 84109
T 801.924.5000 F 801.924.5001
http://www.archnexus.com

Licensed Architect PETER MOYES No. 7203 21 MARCH 2013 State of Utah

Original drawings remain the property of the Architect and as such the Architect retains total ownership and control. The design represented by these drawings is sold to the client for a one time use, unless otherwise agreed upon in writing by the Architect.
© Architectural Nexus, Inc. 2012

UTAH NATIONAL GUARD CAMP WILLIAMS
RTI TASS COMPLEX, PHASE II
NGB PROJECT NO. 490444

17800 SOUTH ACADEMY STREET
BLUFFDALE, UTAH 84065

#	REVISIONS	
1	4.01.13	ADD-02

NEXUS PROJECT #:	11024
CHECKED BY:	SMS
DRAWN BY:	Author
DATE:	21 MARCH 2013

SHEET CONTENTS:
LEVEL 2 SLAB CONTROL PLAN

VOLUME B - BID DOCUMENTS

AE012

4/1/2013 11:16:19 AM

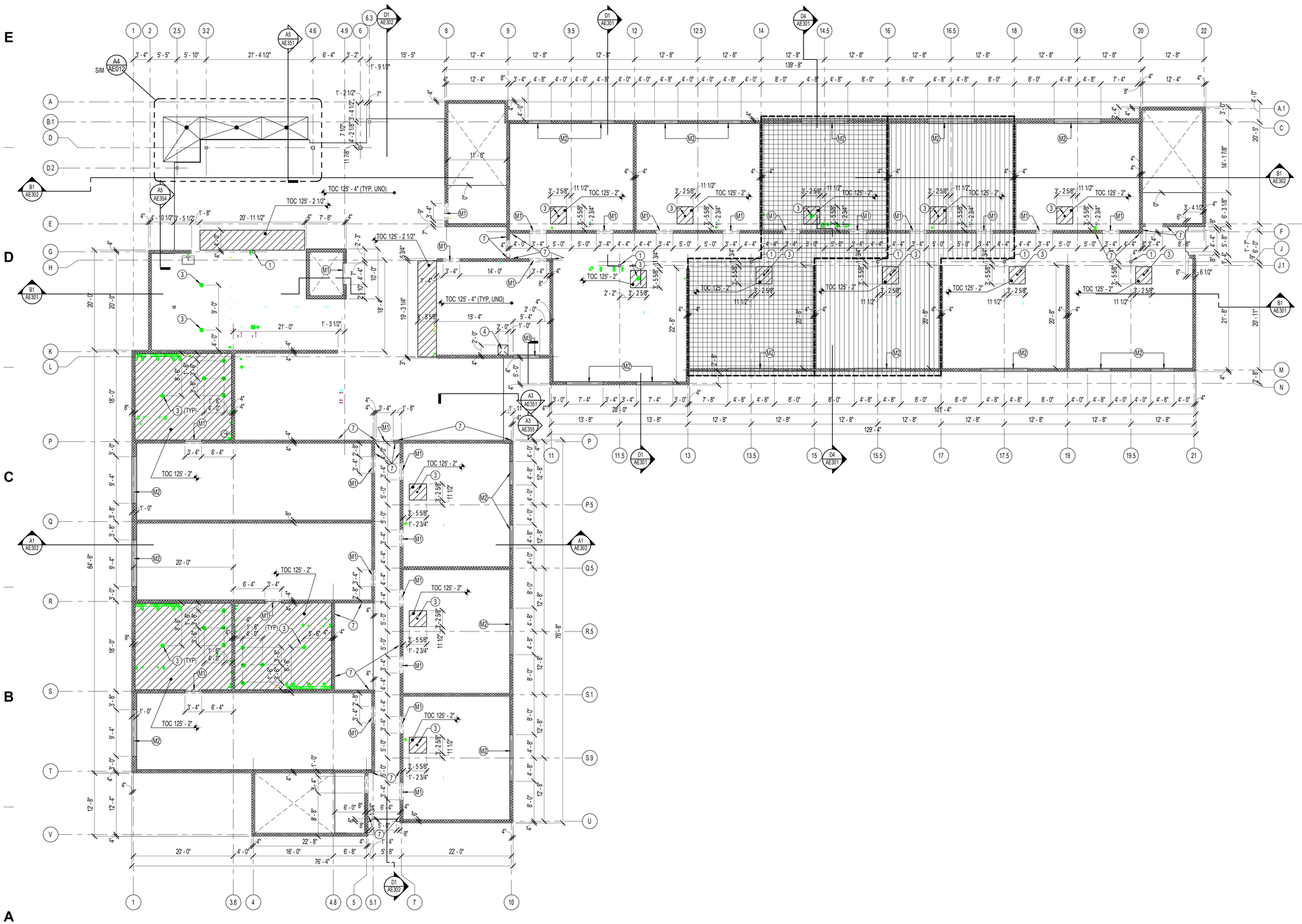

A1 AE013 LEVEL 3 - SLAB CONTROL PLAN
1/8" = 1'-0"

GENERAL NOTES - SLAB CONTROL PLAN

A. DIMENSIONAL CONTROL PLANS SHOW ONLY STRUCTURAL AND OTHER KEY ELEMENTS PERTINENT TO DIMENSIONAL INTEGRITY. ALL OTHER ITEMS ARE NOT SHOWN FOR CLARITY. SEE OTHER ARCHITECTURAL, CIVIL, STRUCTURAL, MECHANICAL AND ELECTRICAL DRAWINGS FOR INFORMATION SPECIFIC TO THOSE TRADES THAT IS NOT DEPICTED ON THIS DRAWING.

B. THIS DRAWING IS FOR COORDINATION PURPOSES ONLY, AND DEPICTS ONLY GENERAL EXTENTS OF CONCRETE SLABS AND WALLS AND CERTAIN MAJOR OPENINGS FOR CIRCULATION AND SHAFTS, AND ALLOWABLE PENETRATION LOCATIONS OF CONCRETE BEAMS NEAR COLUMNS. CONTRACTOR IS RESPONSIBLE FOR VERIFYING ALL REQUIRED OPENINGS OR PENETRATIONS, AND COORDINATING ALL REQUIREMENTS FOR ALL OPENINGS WITH ALL TRADES AND WITH STRUCTURAL ELEMENTS.

C. UNLESS NOTED OTHERWISE, DIMENSIONS ARE TO GRID, FACE OF CONCRETE STRUCTURAL ELEMENT OR OPENING, OR CENTERLINE OF STEEL STRUCTURAL ELEMENT.

KEYNOTE - CONTROL PLAN

1. STRUCTURAL COLUMN - SEE STRUCTURAL FOR MORE INFORMATION
2. STRUCTURAL BRACE FRAME - SEE STRUCTURAL FOR MORE INFORMATION
3. FLOOR DRAIN
4. 1-HR RATED MECHANICAL SHAFT
5. FLOOR DRAIN CENTERED IN PLANTER
6. WALK-OFF MAT DEPRESSION - COORDINATE WITH WALK-OFF MAT MFR REQUIREMENTS
7. HONED CMU BLOCK - COLOR SELECTED BY ARCHITECT
8. IN FLOOR SUPPLY DIFFUSERS

MASONRY OPENINGS

KEY NOTE	DESCRIPTION	HEIGHT (AFF, UINO) SILL	HEAD
M1	MASONRY LINTEL	-	7' - 4"
M2	MASONRY OPENING	2' - 0"	9' - 0"
M3	MASONRY OPENING	10' - 0"	11' - 8"
M4	MASONRY LINTEL	-	12' - 8"

SLAB EDGE PLAN LEGEND

- CONCRETE SLAB - SEE STRUCTURAL DRAWINGS FOR MORE INFORMATION
- DEPRESSED CONCRETE SLAB - SEE SLAB PLAN FOR TOC ELEVATIONS
- RECESSED CONCRETE SLAB - DEPTH VARIES - SEE SLAB PLAN FOR DEPTH OF RECESS
- MASONRY BLOCK - SEE FLOOR PLANS & WALL TYPES FOR FULL WALL CONSTRUCTION
- MASONRY OPENING - SEE KEYNOTES FOR MORE INFORMATION
- CONCRETE FOUNDATION (UNO) - SEE STRUCTURAL FOR MORE INFORMATION

ADD ALTERNATE LEGEND

ADD/ALT 2:
ADD TO BASE BID SQUARE FOOT AREA INDENTIFIED AS ADD/ALT "2". BUILDING WILL BE INCREASED BY THE DISTANCE EQUAL TO THAT OF EACH GROUP OF ROOMS SHOWN HATCHED. BASE BID WILL BE CALCULATED WITHOUT THE AREA HATCHED.

ADD/ALT 3:
ADD TO BASE BID SQUARE FOOT AREA INDENTIFIED AS ADD/ALT "3". BUILDING WILL BE INCREASED BY THE DISTANCE EQUAL TO THAT OF EACH GROUP OF ROOMS SHOWN HATCHED. BASE BID WILL BE CALCULATED WITHOUT THE AREA HATCHED.

ARCHITECTURAL NEXUS
SALT LAKE CITY PLACERVILLE SACRAMENTO

Architectural NEXUS, Inc.
2505 East Parleys Way
Salt Lake City, Utah 84109
T 801.924.5000 F 801.924.5001
http://www.archnexus.com

Licensed Architect
PETER MOYES
No. 83-122248-0301
21 MARCH 2013
State of Utah

Original drawings remain the property of the Architect and as such the Architect retains total ownership and control. The design represented by these drawings is sold to the client for a one time use, unless otherwise agreed upon in writing by the Architect.
© Architectural Nexus, Inc. 2012

UTAH NATIONAL GUARD CAMP WILLIAMS
RTI TASS COMPLEX, PHASE II
NGB PROJECT NO. 490444

17800 SOUTH ACADEMY STREET
BLUFFDALE, UTAH 84065

REVISIONS

NEXUS PROJECT #:	11024
CHECKED BY:	SMS
DRAWN BY:	Author
DATE:	21 MARCH 2013

SHEET CONTENTS:
LEVEL 3 SLAB CONTROL PLAN

VOLUME B - BID DOCUMENTS

AE013

4/1/2013 11:16:21 AM

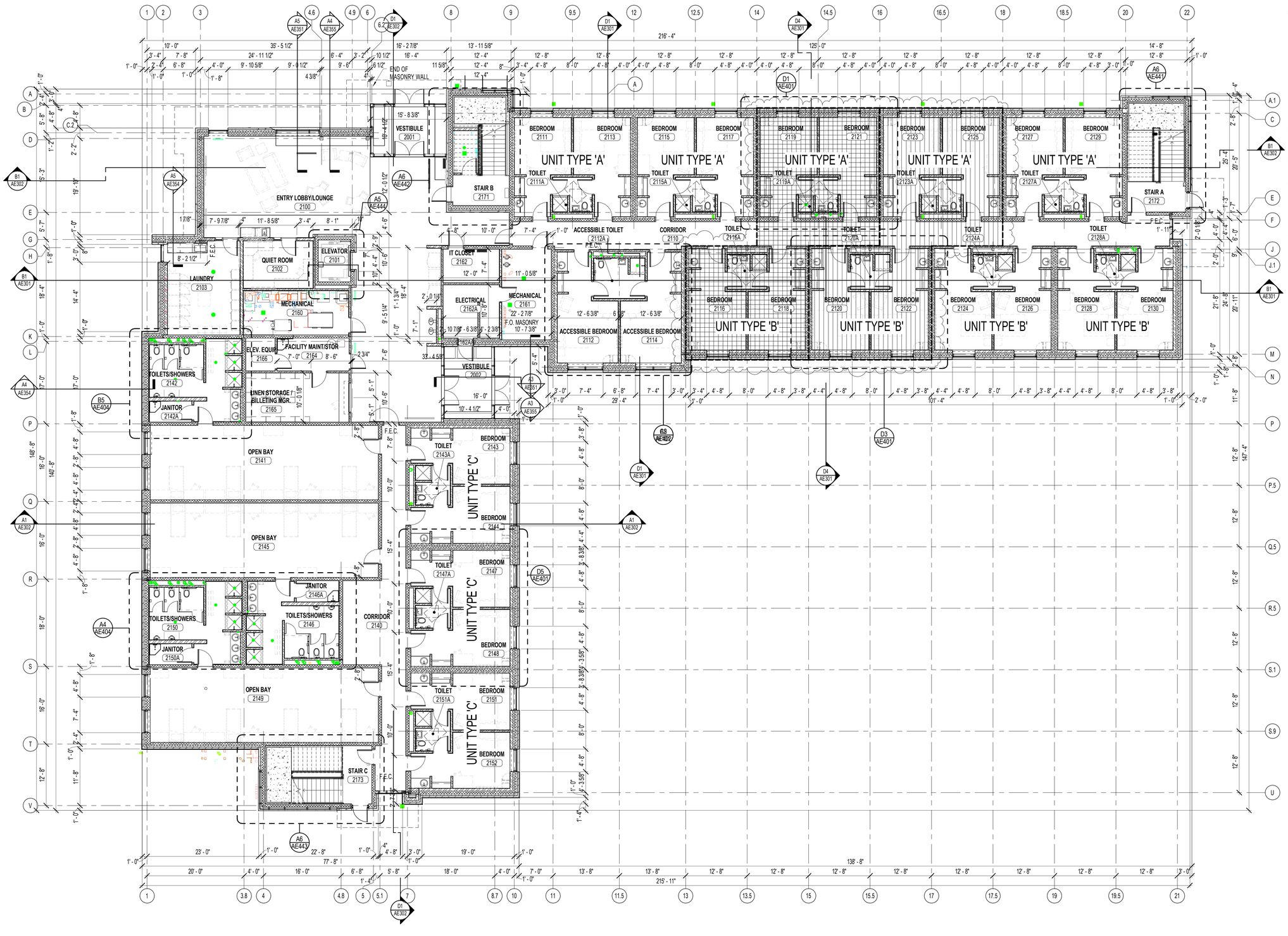

N

A1 AE101 **BILLETS LEVEL 1 FLOOR PLAN**
1/8" = 1'-0"

4/1/2013 11:16:33 AM

GENERAL NOTES - FLOOR PLAN

A. SEE G SERIES SHEETS FOR REGULATORY INFORMATION, INCLUDING TYPICAL ACCESSIBILITY CLEARANCE AND COMPLIANCE REQUIREMENTS.
B. SEE DIMENSIONAL PLANS IN AE100 SERIES FOR ALIGNMENT / POSITION OF STRUCTURAL ELEMENTS AND OTHER KEY DIMENSIONS.
C. UNLESS NOTED OTHERWISE, WALL DIMENSIONS ARE TO GRID OR FACE OF STUD / STRUCTURE. "CLEAR" DIMENSIONS ARE TO FACE OF FINISH.
D. WHERE PROVIDED, DOOR AND WINDOW DIMENSIONS ARE TO EDGE OF ROUGH OPENING. OPENING DIMENSIONS ARE NOMINAL. CONTRACTOR SHALL COORDINATE DIMENSIONS OF ALL ROUGH OPENINGS AND ACTUAL FRAME SIZES. WHERE DOOR LOCATIONS ARE NOT DIMENSIONED, SEE DETAILS REFERENCED IN DOOR SCHEDULE BY SPECIFIC CONDITION. OTHERWISE, THE HINGE SIDE OF DOOR ROUGH OPENINGS SHALL BE LOCATED 4" FROM THE ADJACENT PERPENDICULAR WALL, SUBJECT TO MAINTENANCE OF REQUIRED ADA CLEARANCES. SEE SHEET G1701.
E. SEE CIVIL, STRUCTURAL, MECHANICAL AND ELECTRICAL DRAWINGS FOR INFORMATION SPECIFIC TO THOSE TRADES THAT IS NOT DEPICTED ON THIS DRAWING.
F. WHETHER SPECIFICALLY CALLED OUT OR NOT, PROVIDE BACKING BEHIND ALL SURFACE MOUNTED EQUIPMENT AND/OR FIXTURES PER DETAIL B4/AE701.
G. SEE AE400 SERIES FOR TYPICAL ENLARGED PLANS AND ELEVATIONS.

ADD ALTERNATE LEGEND

ADD/ALT 2:
ADD TO BASE BID SQUARE FOOT AREA INDENTIFIED AS ADD/ALT "2". BUILDING WILL BE INCREASED BY THE DISTANCE EQUAL TO THAT OF EACH GROUP OF ROOMS SHOWN HATCHED. BASE BID WILL BE CALCULATED WITHOUT THE AREA HATCHED.

ADD/ALT 3:
ADD TO BASE BID SQUARE FOOT AREA INDENTIFIED AS ADD/ALT "3". BUILDING WILL BE INCREASED BY THE DISTANCE EQUAL TO THAT OF EACH GROUP OF ROOMS SHOWN HATCHED. BASE BID WILL BE CALCULATED WITHOUT THE AREA HATCHED.

ARCHITECTURAL NEXUS
SALT LAKE CITY PLACERVILLE SACRAMENTO

Architectural NEXUS, Inc.
2505 East Parleys Way
Salt Lake City, Utah 84109
T 801.924.5000 F 801.924.5001
http://www.archnexus.com

Licensed Architect
PETER MOYES
No. 7246
21 MARCH 2013
State of Utah

Original drawings remain the property of the Architect and as such the Architect retains total ownership and control. The design represented by these drawings is sold to the client for a one time use, unless otherwise agreed upon in writing by the Architect.
© Architectural Nexus, Inc. 2012

UTAH NATIONAL GUARD CAMP WILLIAMS
RTI TASS COMPLEX, PHASE II
NGB PROJECT NO. 490444
17800 SOUTH ACADEMY STREET
BLUFFDALE, UTAH 84065

#	REVISIONS	
1	4.01.13	ADD-02

NEXUS PROJECT #:	11024
CHECKED BY:	SMS
DRAWN BY:	Author
DATE:	21 MARCH 2013

SHEET CONTENTS:
LEVEL 1
DIMENSIONAL FLOOR PLAN

VOLUME B - BID DOCUMENTS

AE101

N

A1 AE102 **BILLETS LEVEL 2 FLOOR PLAN**
1/8" = 1'-0"

4/1/2013 11:16:44 AM

GENERAL NOTES - FLOOR PLAN

A. SEE G SERIES SHEETS FOR REGULATORY INFORMATION, INCLUDING TYPICAL ACCESSIBILITY CLEARANCE AND COMPLIANCE REQUIREMENTS.
B. SEE DIMENSIONAL PLANS IN AE100 SERIES FOR ALIGNMENT / POSITION OF STRUCTURAL ELEMENTS AND OTHER KEY DIMENSIONS.
C. UNLESS NOTED OTHERWISE, WALL DIMENSIONS ARE TO GRID OR FACE OF STUD / STRUCTURE. "CLEAR" DIMENSIONS ARE TO FACE OF FINISH.
D. WHERE PROVIDED, DOOR AND WINDOW DIMENSIONS ARE TO EDGE OF ROUGH OPENING. OPENING DIMENSIONS ARE NOMINAL. CONTRACTOR SHALL COORDINATE DIMENSIONS OF ALL ROUGH OPENINGS AND ACTUAL FRAME SIZES. WHERE DOOR LOCATIONS ARE NOT DIMENSIONED, SEE DETAILS REFERENCED IN DOOR SCHEDULE BY SPECIFIC CONDITION. OTHERWISE, THE HINGE SIDE OF DOOR ROUGH OPENINGS SHALL BE LOCATED 4" FROM THE ADJACENT PERPENDICULAR WALL, SUBJECT TO MAINTENANCE OF REQUIRED ADA CLEARANCES. SEE SHEET GI701.
E. SEE CIVIL, STRUCTURAL, MECHANICAL AND ELECTRICAL DRAWINGS FOR INFORMATION SPECIFIC TO THOSE TRADES THAT IS NOT DEPICTED ON THIS DRAWING.
F. WHETHER SPECIFICALLY CALLED OUT OR NOT, PROVIDE BACKING BEHIND ALL SURFACE MOUNTED EQUIPMENT AND/OR FIXTURES PER DETAIL B4/AE701.
G. SEE AE400 SERIES FOR TYPICAL ENLARGED PLANS AND ELEVATIONS.

ADD ALTERNATE LEGEND

ADD/ALT 2:
ADD TO BASE BID SQUARE FOOT AREA INDENTIFIED AS ADD/ALT "2". BUILDING WILL BE INCREASED BY THE DISTANCE EQUAL TO THAT OF EACH GROUP OF ROOMS SHOWN HATCHED. BASE BID WILL BE CALCULATED WITHOUT THE AREA HATCHED.

ADD/ALT 3:
ADD TO BASE BID SQUARE FOOT AREA INDENTIFIED AS ADD/ALT "3". BUILDING WILL BE INCREASED BY THE DISTANCE EQUAL TO THAT OF EACH GROUP OF ROOMS SHOWN HATCHED. BASE BID WILL BE CALCULATED WITHOUT THE AREA HATCHED.

ARCHITECTURAL NEXUS
SALT LAKE CITY PLACERVILLE SACRAMENTO

Architectural NEXUS, Inc.
2505 East Parleys Way
Salt Lake City, Utah 84109
T 801.924.5000 F 801.924.5001
http://www.archnexus.com

Licensed Architect
PETER MOYES
No. 5-10224
21 MARCH 2013
State of Utah

Original drawings remain the property of the Architect and as such the Architect retains total ownership and control. The design represented by these drawings is sold to the client for a one time use, unless otherwise agreed upon in writing by the Architect.
© Architectural Nexus, Inc. 2012

UTAH NATIONAL GUARD CAMP WILLIAMS
RTI TASS COMPLEX, PHASE II
NGB PROJECT NO. 490444
17800 SOUTH ACADEMY STREET
BLUFFDALE, UTAH 84065

#	REVISIONS	
1	4.01.13	ADD-02

NEXUS PROJECT #:	11024
CHECKED BY:	SMS
DRAWN BY:	Author
DATE:	21 MARCH 2013

SHEET CONTENTS:
LEVEL 2
DIMENSIONAL FLOOR PLAN

VOLUME B - BID DOCUMENTS

AE102

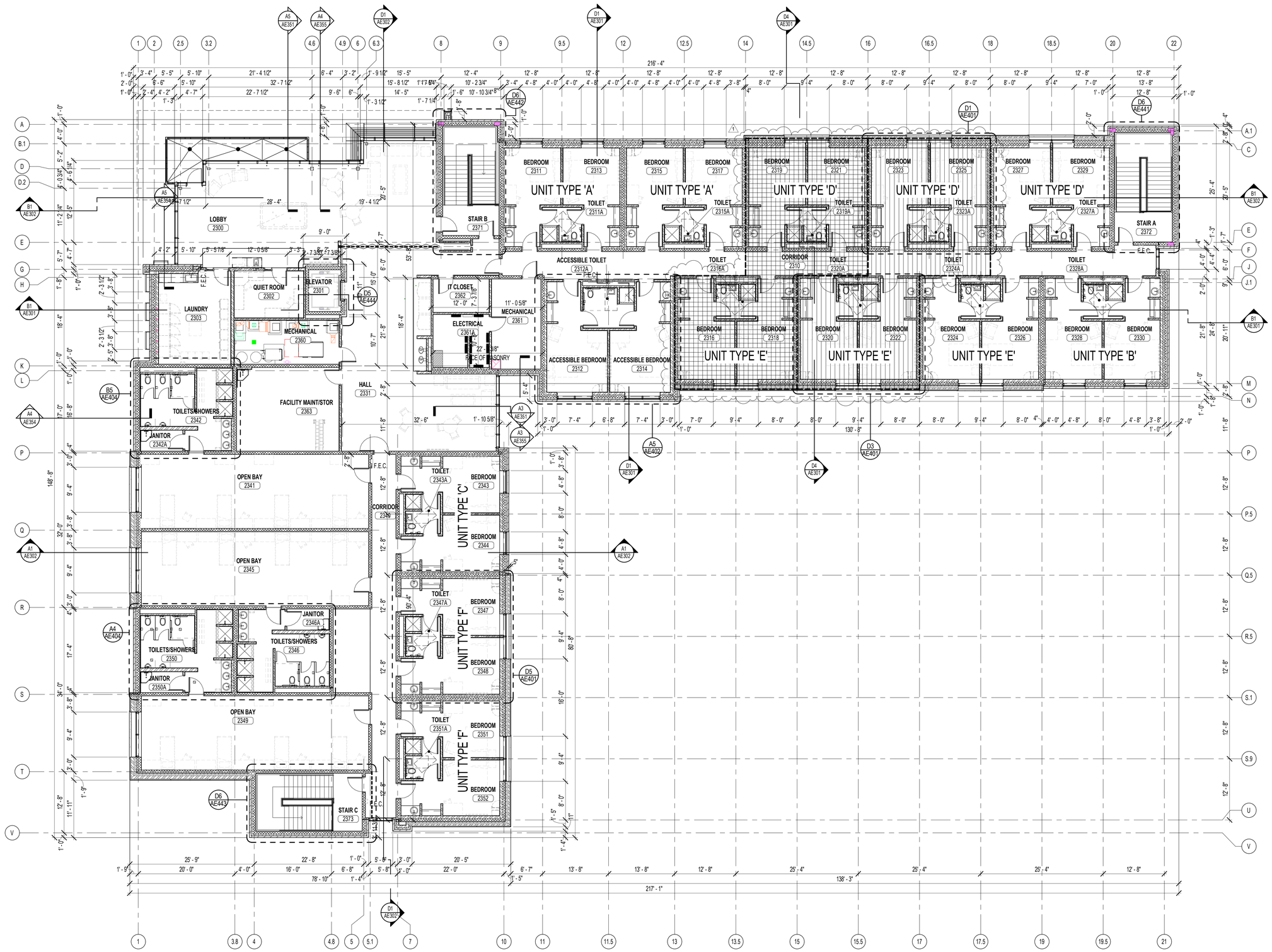

N

A1 AE103 BILLETS LEVEL 3 FLOOR PLAN
1/8" = 1'-0"

4/1/2013 11:16:54 AM

GENERAL NOTES - FLOOR PLAN

A. SEE G SERIES SHEETS FOR REGULATORY INFORMATION, INCLUDING TYPICAL ACCESSIBILITY CLEARANCE AND COMPLIANCE REQUIREMENTS.
B. SEE DIMENSIONAL PLANS IN AE100 SERIES FOR ALIGNMENT / POSITION OF STRUCTURAL ELEMENTS AND OTHER KEY DIMENSIONS.
C. UNLESS NOTED OTHERWISE, WALL DIMENSIONS ARE TO GRID OR FACE OF STUD / STRUCTURE. "CLEAR" DIMENSIONS ARE TO FACE OF FINISH.
D. WHERE PROVIDED, DOOR AND WINDOW DIMENSIONS ARE TO EDGE OF ROUGH OPENING. OPENING DIMENSIONS ARE NOMINAL. CONTRACTOR SHALL COORDINATE DIMENSIONS OF ALL ROUGH OPENINGS AND ACTUAL FRAME SIZES. WHERE DOOR LOCATIONS ARE NOT DIMENSIONED, SEE DETAILS REFERENCED IN DOOR SCHEDULE BY SPECIFIC CONDITION. OTHERWISE, THE HINGE SIDE OF DOOR ROUGH OPENINGS SHALL BE LOCATED 4" FROM THE ADJACENT PERPENDICULAR WALL, SUBJECT TO MAINTENANCE OF REQUIRED ADA CLEARANCES. SEE SHEET GI701.
E. SEE CIVIL, STRUCTURAL, MECHANICAL AND ELECTRICAL DRAWINGS FOR INFORMATION SPECIFIC TO THOSE TRADES THAT IS NOT DEPICTED ON THIS DRAWING.
F. WHETHER SPECIFICALLY CALLED OUT OR NOT, PROVIDE BACKING BEHIND ALL SURFACE MOUNTED EQUIPMENT AND/OR FIXTURES PER DETAIL B4/AE701.
G. SEE AE400 SERIES FOR TYPICAL ENLARGED PLANS AND ELEVATIONS.

ADD ALTERNATE LEGEND

ADD/ALT 2:
ADD TO BASE BID SQUARE FOOT AREA INDENTIFIED AS ADD/ALT "2". BUILDING WILL BE INCREASED BY THE DISTANCE EQUAL TO THAT OF EACH GROUP OF ROOMS SHOWN HATCHED. BASE BID WILL BE CALCULATED WITHOUT THE AREA HATCHED.

ADD/ALT 3:
ADD TO BASE BID SQUARE FOOT AREA INDENTIFIED AS ADD/ALT "3". BUILDING WILL BE INCREASED BY THE DISTANCE EQUAL TO THAT OF EACH GROUP OF ROOMS SHOWN HATCHED. BASE BID WILL BE CALCULATED WITHOUT THE AREA HATCHED.

ARCHITECTURAL NEXUS
SALT LAKE CITY PLACERVILLE SACRAMENTO

Architectural NEXUS, Inc.
2505 East Parleys Way
Salt Lake City, Utah 84109
T 801.924.5000 F 801.924.5001
http://www.archnexus.com

Licensed Architect
PETER MOYES
No. 83-122248-0301
21 MARCH 2013
State of Utah

Original drawings remain the property of the Architect and as such the Architect retains total ownership and control. The design represented by these drawings is sold to the client for a one time use, unless otherwise agreed upon in writing by the Architect.
© Architectural Nexus, Inc. 2012

UTAH NATIONAL GUARD CAMP WILLIAMS
RTI TASS COMPLEX, PHASE II
NGB PROJECT NO. 490444
17800 SOUTH ACADEMY STREET
BLUFFDALE, UTAH 84065

#	REVISIONS	
1	4.01.13	ADD-02

NEXUS PROJECT #:	11024
CHECKED BY:	SMS
DRAWN BY:	Author
DATE:	21 MARCH 2013

SHEET CONTENTS:
LEVEL 3 DIMENSIONAL FLOOR PLAN

VOLUME B - BID DOCUMENTS

AE103

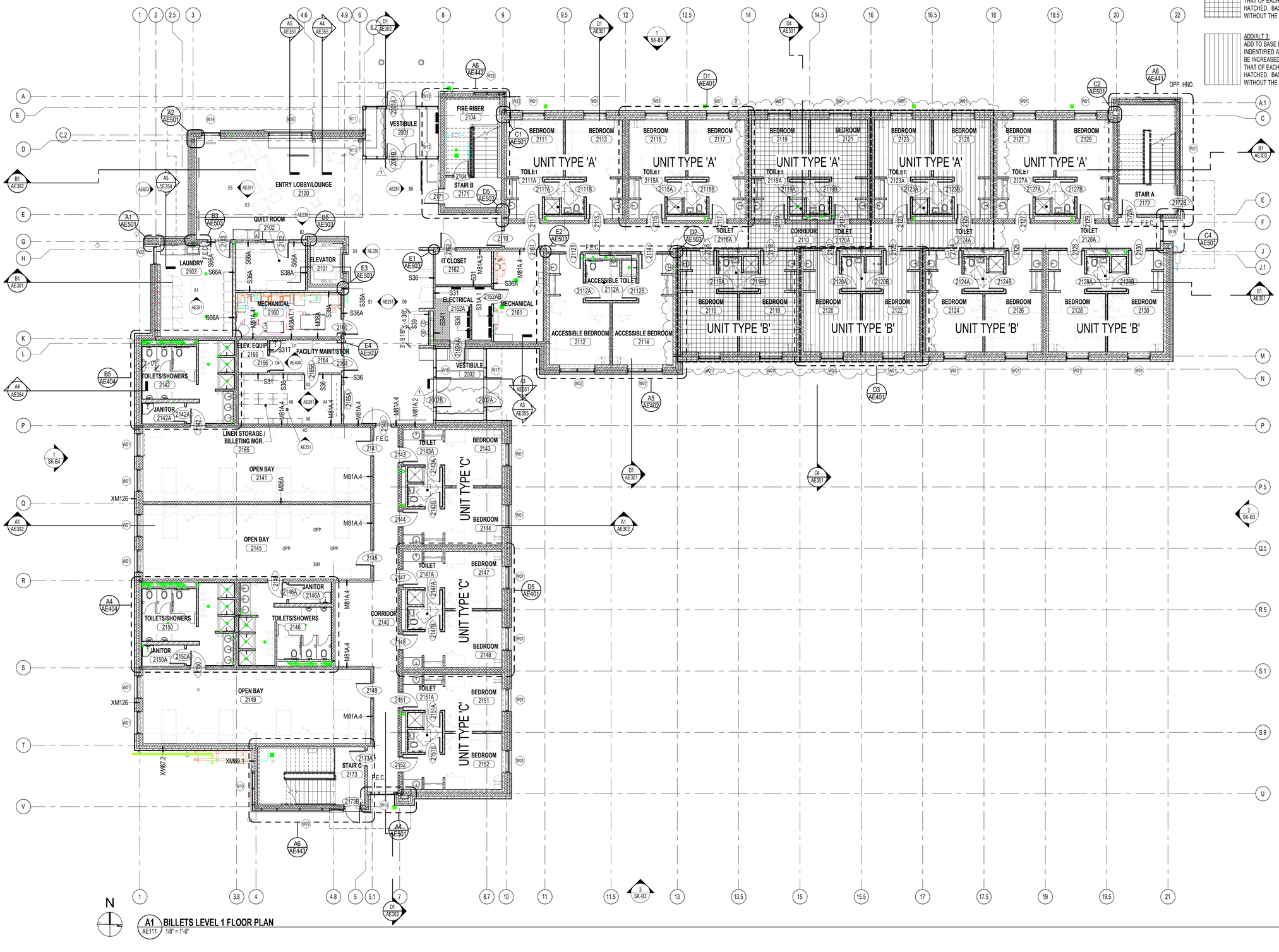

A1 AE111 BILLETS LEVEL 1 FLOOR PLAN
1/8" = 1'-0"

ADD ALTERNATE LEGEND

ADD/ALT 2:
ADD TO BASE BID SQUARE FOOT AREA INDENTIFIED AS ADD/ALT "2". BUILDING WILL BE INCREASED BY THE DISTANCE EQUAL TO THAT OF EACH GROUP OF ROOMS SHOWN HATCHED. BASE BID WILL BE CALCULATED WITHOUT THE AREA HATCHED.

ADD/ALT 3:
ADD TO BASE BID SQUARE FOOT AREA INDENTIFIED AS ADD/ALT "3". BUILDING WILL BE INCREASED BY THE DISTANCE EQUAL TO THAT OF EACH GROUP OF ROOMS SHOWN HATCHED. BASE BID WILL BE CALCULATED WITHOUT THE AREA HATCHED.

ARCHITECTURAL NEXUS
SALT LAKE CITY PLACERVILLE SACRAMENTO

Architectural NEXUS, Inc.
2505 East Parleys Way
Salt Lake City, Utah 84109
T 801.924.5000 F 801.924.5001
http://www.archnexus.com

Licensed Architect
PETER MOYES
No. 21 MARCH 2013
83-122248-0301
State of Utah

Original drawings remain the property of the Architect and as such the Architect retains total ownership and control. The design represented by these drawings is sold to the client for a one time use, unless otherwise agreed upon in writing by the Architect.
© Architectural Nexus, Inc. 2012

UTAH NATIONAL GUARD CAMP WILLIAMS
RTI TASS COMPLEX, PHASE II
NGB PROJECT NO. 490444
17800 SOUTH ACADEMY STREET
BLUFFDALE, UTAH 84065

#	REVISIONS	
1	3.22.13	DFCM REVIEW RESPONSE #2
2	4.01.13	ADD-02

NEXUS PROJECT #:	11024
CHECKED BY:	SMS
DRAWN BY:	Author
DATE:	21 MARCH 2013

SHEET CONTENTS:
LEVEL 1 ANNOTATIVE FLOOR PLAN

VOLUME B - BID DOCUMENTS

AE111

4/1/2013 11:17:07 AM

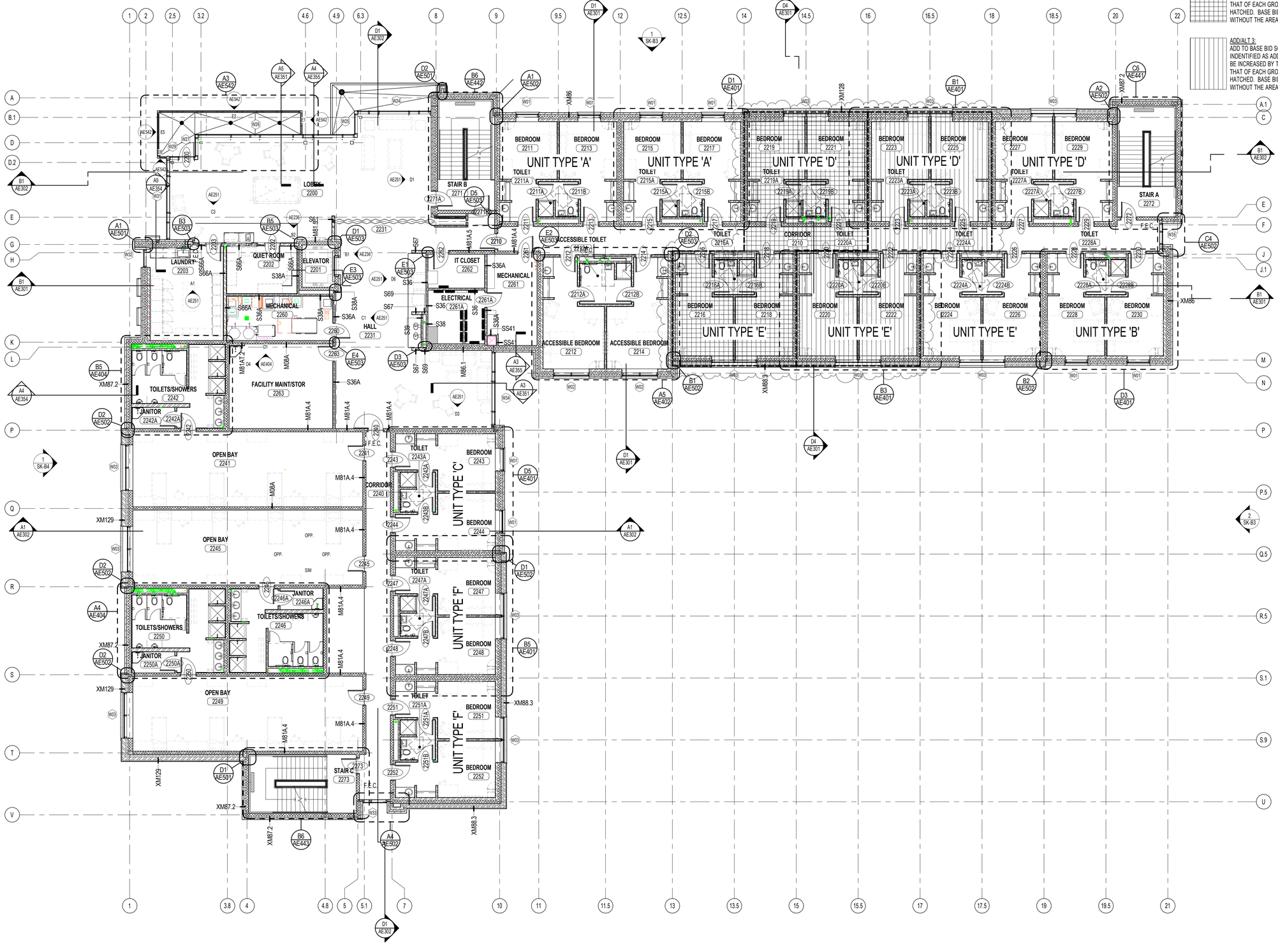

ADD ALTERNATE LEGEND

ADD/ALT 2:
ADD TO BASE BID SQUARE FOOT AREA INDENTIFIED AS ADD/ALT "2". BUILDING WILL BE INCREASED BY THE DISTANCE EQUAL TO THAT OF EACH GROUP OF ROOMS SHOWN HATCHED. BASE BID WILL BE CALCULATED WITHOUT THE AREA HATCHED.

ADD/ALT 3:
ADD TO BASE BID SQUARE FOOT AREA INDENTIFIED AS ADD/ALT "3". BUILDING WILL BE INCREASED BY THE DISTANCE EQUAL TO THAT OF EACH GROUP OF ROOMS SHOWN HATCHED. BASE BID WILL BE CALCULATED WITHOUT THE AREA HATCHED.

N

A1 AE112 **BILLETS LEVEL 2 FLOOR PLAN**
1/8" = 1'-0"

4/1/2013 11:17:17 AM

ARCHITECTURAL NEXUS
SALT LAKE CITY PLACERVILLE SACRAMENTO

Architectural NEXUS, Inc.
2505 East Parleys Way
Salt Lake City, Utah 84109
T 801.924.5000 F 801.924.5001
http://www.archnexus.com

Licensed Architect PETER MOYES No. 21 MARCH 2013 83-122248-0301 State of Utah

Original drawings remain the property of the Architect and as such the Architect retains total ownership and control. The design represented by these drawings is sold to the client for a one time use, unless otherwise agreed upon in writing by the Architect.
© Architectural Nexus, Inc. 2012

UTAH NATIONAL GUARD CAMP WILLIAMS
RTI TASS COMPLEX, PHASE II
NGB PROJECT NO. 490444
17800 SOUTH ACADEMY STREET
BLUFFDALE, UTAH 84065

#	REVISIONS	
1	4.01.13	ADD-02

NEXUS PROJECT #:	11024
CHECKED BY:	SMS
DRAWN BY:	Author
DATE:	21 MARCH 2013

SHEET CONTENTS:
LEVEL 2 ANNOTATIVE FLOOR PLAN

VOLUME B - BID DOCUMENTS

AE112

ADD ALTERNATE LEGEND

ADD/ALT 2:
ADD TO BASE BID SQUARE FOOT AREA INDENTIFIED AS ADD/ALT "2". BUILDING WILL BE INCREASED BY THE DISTANCE EQUAL TO THAT OF EACH GROUP OF ROOMS SHOWN HATCHED. BASE BID WILL BE CALCULATED WITHOUT THE AREA HATCHED.

ADD/ALT 3:
ADD TO BASE BID SQUARE FOOT AREA INDENTIFIED AS ADD/ALT "3". BUILDING WILL BE INCREASED BY THE DISTANCE EQUAL TO THAT OF EACH GROUP OF ROOMS SHOWN HATCHED. BASE BID WILL BE CALCULATED WITHOUT THE AREA HATCHED.

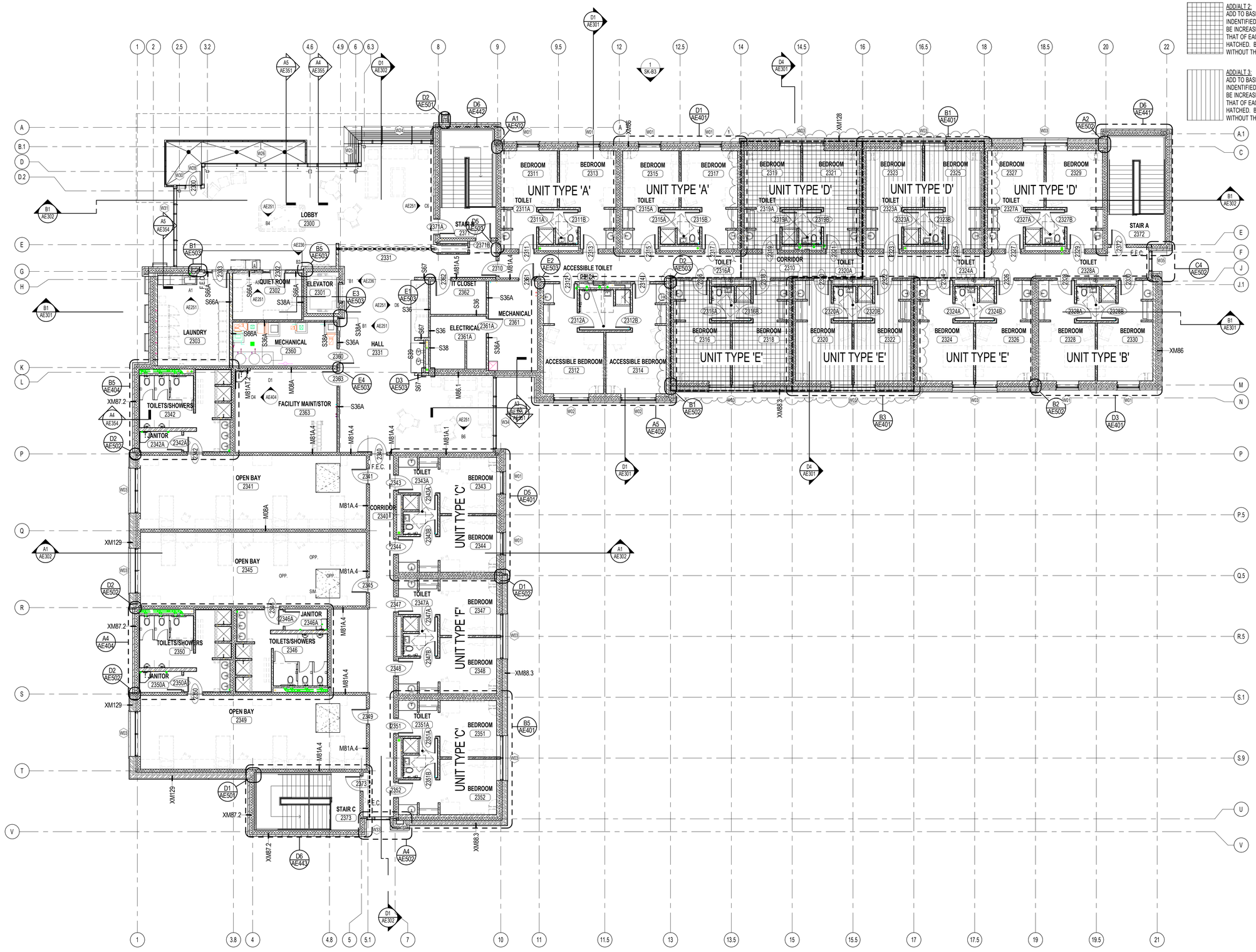

N

A1 AE113 BILLETS LEVEL 3 FLOOR PLAN
1/8" = 1'-0"

4/1/2013 11:17:28 AM

ARCHITECTURAL NEXUS
SALT LAKE CITY PLACERVILLE SACRAMENTO

Architectural NEXUS, Inc.
2505 East Parleys Way
Salt Lake City, Utah 84109
T 801.924.5000 F 801.924.5001
http://www.archnexus.com

Licensed Architect
PETER MOYES
No. 21 MARCH 2013
83-122248-0301
State of Utah

Original drawings remain the property of the Architect and as such the Architect retains total ownership and control. The design represented by these drawings is sold to the client for a one time use, unless otherwise agreed upon in writing by the Architect.
© Architectural Nexus, Inc. 2012

UTAH NATIONAL GUARD CAMP WILLIAMS
RTI TASS COMPLEX, PHASE II
NGB PROJECT NO. 490444

17800 SOUTH ACADEMY STREET
BLUFFDALE, UTAH 84065

#	REVISIONS	
1	4.01.13	ADD-02

NEXUS PROJECT #:	11024
CHECKED BY:	SMS
DRAWN BY:	Author
DATE:	21 MARCH 2013

SHEET CONTENTS:
LEVEL 3 ANNOTATIVE FLOOR PLAN

VOLUME B - BID DOCUMENTS

AE113

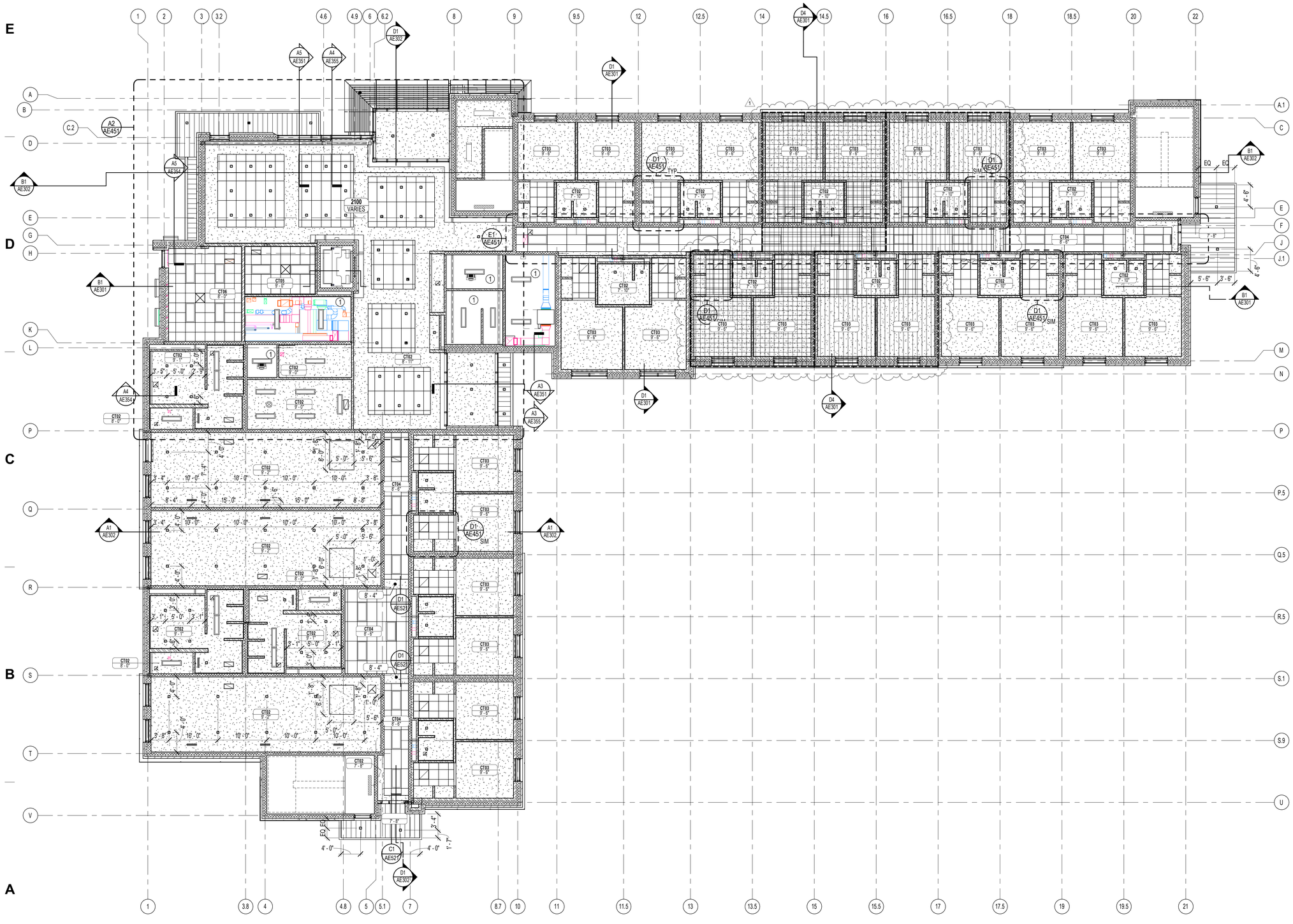

A1 AE151 LEVEL 01
1/8" = 1'-0"

GENERAL NOTES - REFLECTED CEILING PLAN

A. SEE MECHANICAL AND ELECTRICAL DRAWINGS FOR ADDITIONAL LIGHTING AND DIFFUSER INFORMATION
B. CEILING HEIGHT SHOWN IN ROOM TAG INDICATES HEIGHT OF DOMINANT CEILING FINISH.
C. DESIGN SUSPENDED CEILING FRAMING SYSTEMS TO RESIST A LATERAL FORCE OF 20% OF THE WEIGHT OF THE CEILING ASSEMBLY AND ANY LOADS TRIBUTARY TO THE SYSTEM. USE A MINIMUM CEILING WEIGHT OF 5 POUNDS PER SQUARE FOOT TO DETERMINE THE LATERAL FORCE.
D. WHERE CEILING LOADS DO NOT EXCEED 5 POUNDS PER SQUARE FOOT AND WHERE PARTITIONS ARE NOT CONNECTED TO THE CEILING SYSTEM, THE FOLLOWING BRACING METHODS MY BE EMPLOYED:
   a) PROVIDE LATERAL SUPPORT BY FOUR WIRES OF MINIMUM NO. 12 GAUGE SPLAYED IN FOUR DIRECTIONS 90 DEGREES APART, AND CONNECTED TO THE MAIN RUNNER WITHIN 2" OF THE CROSS RUNNER AND TO THE STRUCTURE ABOVE AT AN ANGLE NOT EXCEEDING 45 DEGREES FROM THE PLANE OF THE CEILING. PROVIDE THESE LATERAL SUPPORT POINTS 12 FEET ON CENTER IN EACH DIRECTION. WITH THE FIRST POINT WITHIN 4 FEET FROM EACH WALL.
   b) ALLOW FOR LATERAL MOVEMENT OF SYSTEM. ATTACH MAIN RUNNERS AND CROSS RUNNERS AT TWO ADJACENT WALLS; MAINTAIN CLEARANCE BETWEEN THE WALL AND THE RUNNERS AT THE OTHER TWO WALLS.
   c) PROVIDE VERTICAL SUPPORT AS REQUIRED IN BUILDING CODES. IN ADDITION, VERTICALLY SUPPORT ENDS OF RUNNERS WITHIN 8" OF DISCONTINUITIES SUCH AS MAY OCCUR WHERE A WALL INTERRUPTS THE CEILING.
   d) SUPPORT LIGHT FIXTURES AND AIR DIFFUSERS DIRECTLY BY WIRES TO THE STRUCTURE ABOVE.
   e) LOCATE REGISTERS AND LIGHTING FIXTURES AS SHOWN ON THE DRAWINGS.

REFLECTED CEILING PLAN LEGEND

- 2'x4' ACOUSTICAL PANEL CEILING
- 2'x2' ACOUSTICAL PANEL CEILING
- GYP. BD. CEILING
- EXPOSED STRUCTURE
- METAL PANEL SOFFIT
- RECESSED CAN LIGHT
- EXIT SIGN
- LINEAR LIGHT FIXTURE
- RECESSED 2'x4' AND 2'x2' LIGHT FIXTURES
- SUPPLY GRILLE
- RETURN GRILLE
- EXHAUST GRILLE
- MANUALLY OPERATED ROLLER SHADES

ADD ALTERNATE LEGEND

ADD/ALT 2:
ADD TO BASE BID SQUARE FOOT AREA INDENTIFIED AS ADD/ALT "2". BUILDING WILL BE INCREASED BY THE DISTANCE EQUAL TO THAT OF EACH GROUP OF ROOMS SHOWN HATCHED. BASE BID WILL BE CALCULATED WITHOUT THE AREA HATCHED.

ADD/ALT 3:
ADD TO BASE BID SQUARE FOOT AREA INDENTIFIED AS ADD/ALT "3". BUILDING WILL BE INCREASED BY THE DISTANCE EQUAL TO THAT OF EACH GROUP OF ROOMS SHOWN HATCHED. BASE BID WILL BE CALCULATED WITHOUT THE AREA HATCHED.

ARCHITECTURAL NEXUS
SALT LAKE CITY PLACERVILLE SACRAMENTO

Architectural NEXUS, Inc.
2505 East Parleys Way
Salt Lake City, Utah 84109
T 801.924.5000 F 801.924.5001
http://www.archnexus.com

Licensed Architect
PETER MOYES
No. 83-122248-0301
21 MARCH 2013
State of Utah

Original drawings remain the property of the Architect and as such the Architect retains total ownership and control. The design represented by these drawings is sold to the client for a one time use, unless otherwise agreed upon in writing by the Architect.
© Architectural Nexus, Inc. 2012

UTAH NATIONAL GUARD CAMP WILLIAMS
RTI TASS COMPLEX, PHASE II
NGB PROJECT NO. 490444

17800 SOUTH ACADEMY STREET
BLUFFDALE, UTAH 84065

#	REVISIONS	
1	4.01.13	ADD-02

NEXUS PROJECT #:	11024
CHECKED BY:	SMS
DRAWN BY:	CMB
DATE:	21 MARCH 2013

SHEET CONTENTS:
LEVEL 1 REFLECTED CEILING PLAN

VOLUME B - BID DOCUMENTS

AE151

4/12/2013 11:17:39 AM

GENERAL NOTES - REFLECTED CEILING PLAN

A. SEE MECHANICAL AND ELECTRICAL DRAWINGS FOR ADDITIONAL LIGHTING AND DIFFUSER INFORMATION
B. CEILING HEIGHT SHOWN IN ROOM TAG INDICATES HEIGHT OF DOMINANT CEILING FINISH.
C. DESIGN SUSPENDED CEILING FRAMING SYSTEMS TO RESIST A LATERAL FORCE OF 20% OF THE WEIGHT OF THE CEILING ASSEMBLY AND ANY LOADS TRIBUTARY TO THE SYSTEM. USE A MINIMUM CEILING WEIGHT OF 5 POUNDS PER SQUARE FOOT TO DETERMINE THE LATERCE FORCE.
D. WHERE CEILING LOADS DO NOT EXCEED 5 POUNDS PER SQUARE FOOT AND WHERE PARTITIONS ARE NOT CONNECTED TO THE CEILING SYSTEM, THE FOLLOWING BRACING METHODS MY BE EMPLOYED:
   a) PROVIDE LATERAL SUPPORT BY FOUR WIRES OF MINIMUM NO. 12 GAUGE SPLAYED IN FOUR DIRECTIONS 90 DEGREES APART, AND CONNECTED TO THE MAIN RUNNER WITHIN 2" OF THE CROSS RUNNER AND TO THE STRUCTURE ABOVE AT AN ANGLE NOT EXCEEDING 45 DEGREES FROM THE PLANE OF THE CEILING. PROVIDE THESE LATERAL SUPPORT POINTS 12 FEET ON CENTER IN EACH DIRECTION. WITH THE FIRST POINT WITHIN 4 FEET FROM EACH WALL.
   b) ALLOW FOR LATERAL MOVEMENT OF SYSTEM. ATTACH MAIN RUNNERS AND CROSS RUNNERS AT TWO ADJACENT WALLS; MAINTAIN CLEARANCE BETWEEN THE WALL AND THE RUNNERS AT THE OTHER TWO WALLS.
   c) PROVIDE VERTICAL SUPPORT AS REQUIRED IN BUILDING CODES. IN ADDITION, VERTICALLY SUPPORT ENDS OF RUNNERS WITHIN 8" OF DISCONTINUITIES SUCH AS MAY OCCUR WHERE A WALL INTERRUPTS THE CEILING.
   d) SUPPORT LIGHT FIXTURES AND AIR DIFFUSERS DIRECTLY BY WIRES TO THE STRUCTURE ABOVE.
   e) LOCATE REGISTERS AND LIGHTING FIXTURES AS SHOWN ON THE DRAWINGS.

REFLECTED CEILING PLAN LEGEND

- 2'x4' ACOUSTICAL PANEL CEILING
- 2'x2' ACOUSTICAL PANEL CEILING
- GYP. BD. CEILING
- EXPOSED STRUCTURE
- METAL PANEL SOFFIT
- RECESSED CAN LIGHT
- EXIT SIGN
- LINEAR LIGHT FIXTURE
- RECESSED 2'x4' AND 2'x2' LIGHT FIXTURES
- SUPPLY GRILLE
- RETURN GRILLE
- EXHAUST GRILLE
- MANUALLY OPERATED ROLLER SHADES

ADD ALTERNATE LEGEND

ADD/ALT 2:
ADD TO BASE BID SQUARE FOOT AREA INDENTIFIED AS ADD/ALT "2". BUILDING WILL BE INCREASED BY THE DISTANCE EQUAL TO THAT OF EACH GROUP OF ROOMS SHOWN HATCHED. BASE BID WILL BE CALCULATED WITHOUT THE AREA HATCHED.

ADD/ALT 3:
ADD TO BASE BID SQUARE FOOT AREA INDENTIFIED AS ADD/ALT "3". BUILDING WILL BE INCREASED BY THE DISTANCE EQUAL TO THAT OF EACH GROUP OF ROOMS SHOWN HATCHED. BASE BID WILL BE CALCULATED WITHOUT THE AREA HATCHED.

ARCHITECTURAL NEXUS
SALT LAKE CITY PLACERVILLE SACRAMENTO

Architectural NEXUS, Inc.
2505 East Parleys Way
Salt Lake City, Utah 84109
T 801.924.5000 F 801.924.5001
http://www.archnexus.com

Licensed Architect
PETER MOYES
No. 21 MARCH 2013
83-122248-0301
State of Utah

Original drawings remain the property of the Architect and as such the Architect retains total ownership and control. The design represented by these drawings is sold to the client for a one time use, unless otherwise agreed upon in writing by the Architect.
© Architectural Nexus, Inc. 2012

UTAH NATIONAL GUARD CAMP WILLIAMS
RTI TASS COMPLEX, PHASE II
NGB PROJECT NO. 490444
17800 SOUTH ACADEMY STREET
BLUFFDALE, UTAH 84065

#	REVISIONS	
1	4.01.13	ADD-02

NEXUS PROJECT #:	11024
CHECKED BY:	SMS
DRAWN BY:	CMB
DATE:	21 MARCH 2013

SHEET CONTENTS:
LEVEL 2 REFLECTED CEILING PLAN

VOLUME B - BID DOCUMENTS

AE152

4/1/2013 11:17:50 AM

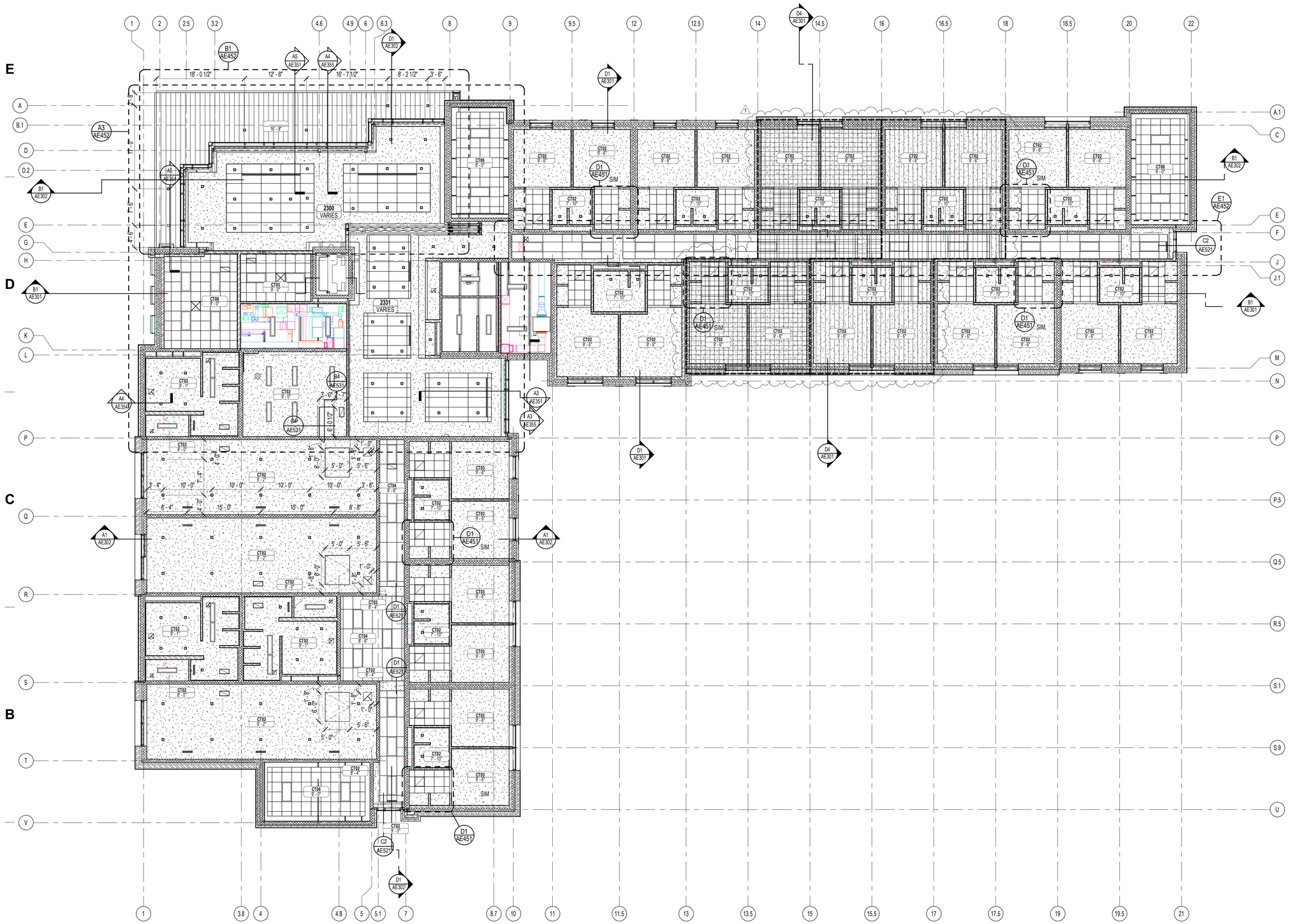

A1 AE153 LEVEL 03
1/8" = 1'-0"

N

GENERAL NOTES - REFLECTED CEILING PLAN

A. SEE MECHANICAL AND ELECTRICAL DRAWINGS FOR ADDITIONAL LIGHTING AND DIFFUSER INFORMATION
B. CEILING HEIGHT SHOWN IN ROOM TAG INDICATES HEIGHT OF DOMINANT CEILING FINISH.
C. DESIGN SUSPENDED CEILING FRAMING SYSTEMS TO RESIST A LATERAL FORCE OF 20% OF THE WEIGHT OF THE CEILING ASSEMBLY AND ANY LOADS TRIBUTARY TO THE SYSTEM. USE A MINIMUM CEILING WEIGHT OF 5 POUNDS PER SQUARE FOOT TO DETERMINE THE LATERAL FORCE.
D. WHERE CEILING LOADS DO NOT EXCEED 5 POUNDS PER SQUARE FOOT AND WHERE PARTITIONS ARE NOT CONNECTED TO THE CEILING SYSTEM, THE FOLLOWING BRACING METHODS MY BE EMPLOYED:
a) PROVIDE LATERAL SUPPORT BY FOUR WIRES OF MINIMUM NO. 12 GAUGE SPLAYED IN FOUR DIRECTIONS 90 DEGREES APART, AND CONNECTED TO THE MAIN RUNNER WITHIN 2" OF THE CROSS RUNNER AND TO THE STRUCTURE ABOVE AT AN ANGLE NOT EXCEEDING 45 DEGREES FROM THE PLANE OF THE CEILING. PROVIDE THESE LATERAL SUPPORT POINTS 12 FEET ON CENTER IN EACH DIRECTION. WITH THE FIRST POINT WITHIN 4 FEET FROM EACH WALL.
b) ALLOW FOR LATERAL MOVEMENT OF SYSTEM. ATTACH MAIN RUNNERS AND CROSS RUNNERS AT TWO ADJACENT WALLS; MAINTAIN CLEARANCE BETWEEN THE WALL AND THE RUNNERS AT THE OTHER TWO WALLS.
c) PROVIDE VERTICAL SUPPORT AS REQUIRED IN BUILDING CODES. IN ADDITION, VERTICALLY SUPPORT ENDS OF RUNNERS WITHIN 8" OF DISCONTINUITIES SUCH AS MAY OCCUR WHERE A WALL INTERRUPTS THE CEILING.
d) SUPPORT LIGHT FIXTURES AND AIR DIFFUSERS DIRECTLY BY WIRES TO THE STRUCTURE ABOVE.
e) LOCATE REGISTERS AND LIGHTING FIXTURES AS SHOWN ON THE DRAWINGS.

REFLECTED CEILING PLAN LEGEND

- 2'x4' ACOUSTICAL PANEL CEILING
- 2'x2' ACOUSTICAL PANEL CEILING
- GYP. BD. CEILING
- EXPOSED STRUCTURE
- METAL PANEL SOFFIT
- RECESSED CAN LIGHT
- EXIT SIGN
- LINEAR LIGHT FIXTURE
- RECESSED 2'x4' AND 2'x2' LIGHT FIXTURES
- SUPPLY GRILLE
- RETURN GRILLE
- EXHAUST GRILLE
- MANUALLY OPERATED ROLLER SHADES

ADD ALTERNATE LEGEND

ADD/ALT 2:
ADD TO BASE BID SQUARE FOOT AREA INDENTIFIED AS ADD/ALT "2". BUILDING WILL BE INCREASED BY THE DISTANCE EQUAL TO THAT OF EACH GROUP OF ROOMS SHOWN HATCHED. BASE BID WILL BE CALCULATED WITHOUT THE AREA HATCHED.

ADD/ALT 3:
ADD TO BASE BID SQUARE FOOT AREA INDENTIFIED AS ADD/ALT "3". BUILDING WILL BE INCREASED BY THE DISTANCE EQUAL TO THAT OF EACH GROUP OF ROOMS SHOWN HATCHED. BASE BID WILL BE CALCULATED WITHOUT THE AREA HATCHED.

ARCHITECTURAL NEXUS
SALT LAKE CITY PLACERVILLE SACRAMENTO

Architectural NEXUS, Inc.
2505 East Parleys Way
Salt Lake City, Utah 84109
T 801.924.5000 F 801.924.5001
http://www.archnexus.com

Licensed Architect
PETER MOYES
No. 21 MARCH 2013
83-122248-0301
State of Utah

Original drawings remain the property of the Architect and as such the Architect retains total ownership and control. The design represented by these drawings is sold to the client for a one time use, unless otherwise agreed upon in writing by the Architect.
© Architectural Nexus, Inc. 2012

UTAH NATIONAL GUARD CAMP WILLIAMS
RTI TASS COMPLEX, PHASE II
NGB PROJECT NO. 490444

17800 SOUTH ACADEMY STREET
BLUFFDALE, UTAH 84065

REVISIONS		
1	4.01.13	ADD-02

NEXUS PROJECT #:	11024
CHECKED BY:	SMS
DRAWN BY:	CMB
DATE:	21 MARCH 2013

SHEET CONTENTS:
LEVEL 3 REFLECTED CEILING PLAN

VOLUME B - BID DOCUMENTS

AE153

4/1/2013 11:18:01 AM

D1 AE201 SOUTHWEST PERSPECTIVE

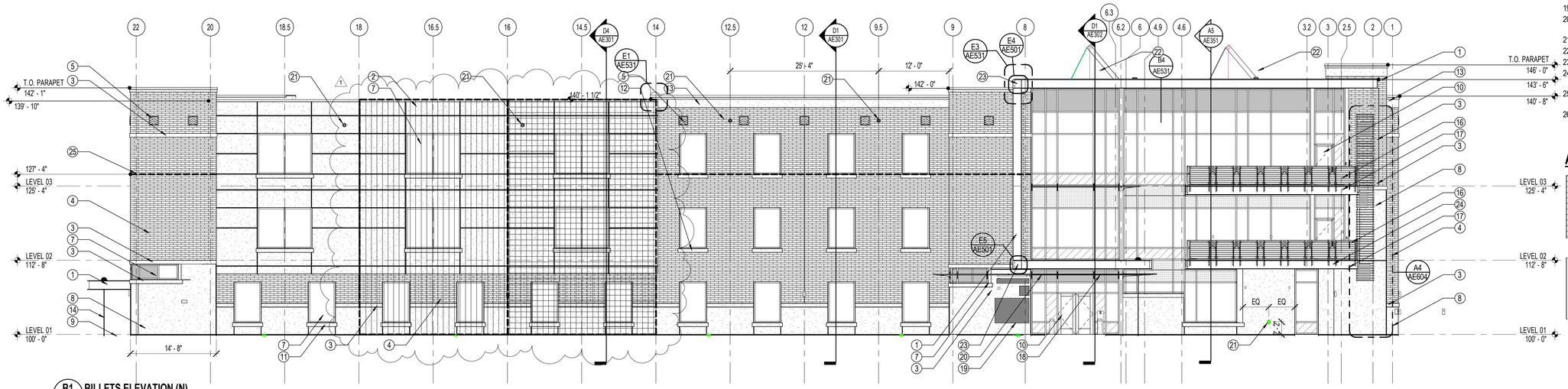

B1 AE201 BILLETS ELEVATION (N) 1/8" = 1'-0"

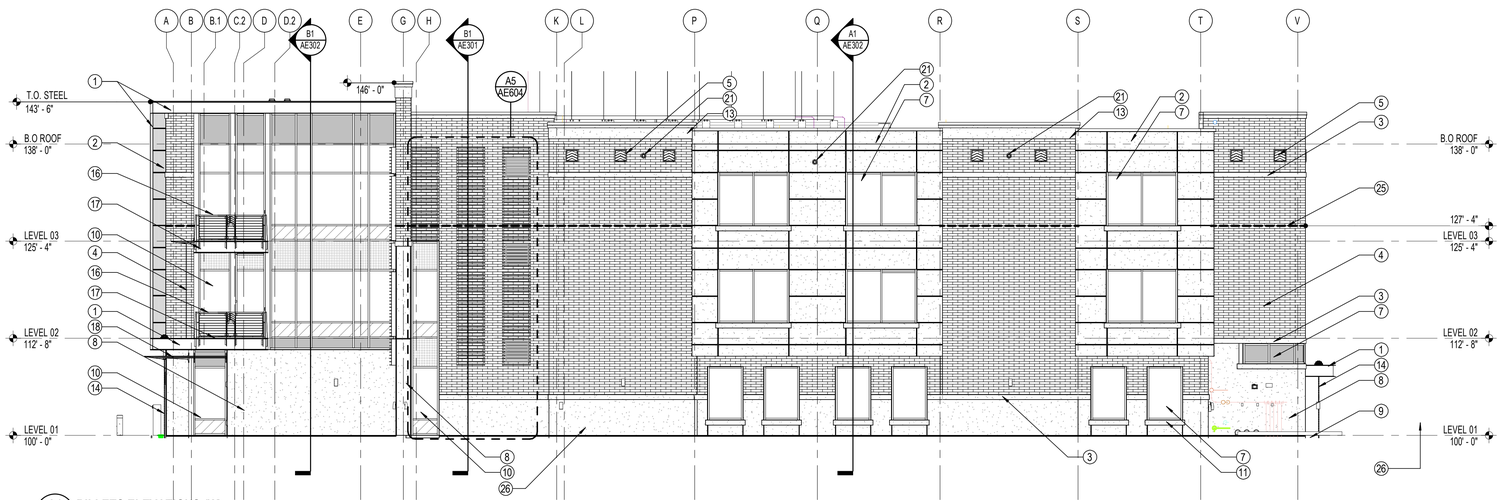

A1 AE201 BILLETS ELEVATIONS (W) 1/8" = 1'-0"

GENERAL NOTE - BUILDING ELEVATION

A. COORDINATE GRADING SHOWN ON ELEVATIONS w/ CIVIL
B. PROVIDE GUTTERS AND DOWN SPOUTS w/ HEAT CABLE, SNOW FENCES, AND SNOW CLIPS - SEE ROOF PLAN
C. FOR TYPICAL WALL ASSEMBLY INCLUDING MATERIAL DESIGNATIONS AND DETAILING APPROACH, SEE A350 SERIES

KEYNOTE - BUILDING ELEVATION

1 STAINLESS STEEL CORNER GUARDS 5'-0" EA. SEE B6/AE701
2 CARPET TILE TRANSITION STRIP
3 PRECAST CONCRETE BAND
4 BRICK VENEER
5 PRECAST CONCRETE CHEVRON MEDALLION
6 HORIZONTAL LOUVER SUNSHADE
7 INSULATED WINDOW SYSTEM
8 PRECAST CONCRETE WALL PANEL
9 FINISH GRADE
10 INSULATED CURTAINWALL SYSTEM
11 INTEGRAL PRECAST CONCRETE SILL
12 PRECAST CONCRETE SILL
13 PRECAST CONCRETE CORNICE
14 CHAIN-TYPE DOWNSPOUT
15 MECHANICAL LOUVER
16 CUSTOM STAINLESS STEEL RAILING W/ CHEVRON MEDALLION
17 PAINTED STEEL CHANNEL OVER CANTILEVERED BALCONY
18 HORIZONTAL SUNSHADES
19 BUILDING SIGNAGE
20 PAINTED STEEL CHANNEL OVER SUSPENDED CONCRETE CANOPY
21 ROOF OVERFLOW DRAIN
22 PHOTOVOLTAIC PANELS AND SUPPORT
23 WEB STIFFENER
24 INTEGRAL WEB STIFFENER AND CUSTOM POST - COORDINATE W/ STRUCTURAL
25 BENT PLATE LEDGER FOR MASONRY SYSTEM (DASHED) - SEE STRUCTURAL
26 UTILITY AND DUMPSTER ENCLOSURES - SEE SHEET AS402 IN VOLUME A FOR ENLARGED PLANS

ADD ALTERNATE LEGEND

ADD/ALT 2:
ADD TO BASE BID SQUARE FOOT AREA INDENTIFIED AS ADD/ALT "2". BUILDING WILL BE INCREASED BY THE DISTANCE EQUAL TO THAT OF EACH GROUP OF ROOMS SHOWN HATCHED. BASE BID WILL BE CALCULATED WITHOUT THE AREA HATCHED.

ADD/ALT 3:
ADD TO BASE BID SQUARE FOOT AREA INDENTIFIED AS ADD/ALT "3". BUILDING WILL BE INCREASED BY THE DISTANCE EQUAL TO THAT OF EACH GROUP OF ROOMS SHOWN HATCHED. BASE BID WILL BE CALCULATED WITHOUT THE AREA HATCHED.

ARCHITECTURAL NEXUS
SALT LAKE CITY PLACERVILLE SACRAMENTO

Architectural NEXUS, Inc.
2505 East Parleys Way
Salt Lake City, Utah 84109
T 801.924.5000 F 801.924.5001
http://www.archnexus.com

Licensed Architect PETER MOYES No. 21 MARCH 2013 83-122248-0301 State of Utah

Original drawings remain the property of the Architect and as such the Architect retains total ownership and control. The design represented by these drawings is sold to the client for a one time use, unless otherwise agreed upon in writing by the Architect.
© Architectural Nexus, Inc. 2012

UTAH NATIONAL GUARD CAMP WILLIAMS
RTI TASS COMPLEX, PHASE II
NGB PROJECT NO. 490444
17800 SOUTH ACADEMY STREET
BLUFFDALE, UTAH 84065

REVISIONS
1 4.01.13 ADD-02

NEXUS PROJECT #:	11024
CHECKED BY:	SMS
DRAWN BY:	RM
DATE:	21 MARCH 2013

SHEET CONTENTS:
EXTERIOR ELEVATIONS

VOLUME B - BID DOCUMENTS

AE201

4/1/2013 11:18:42 AM

D1 AE202 NORTHEAST PERSPECTIVE

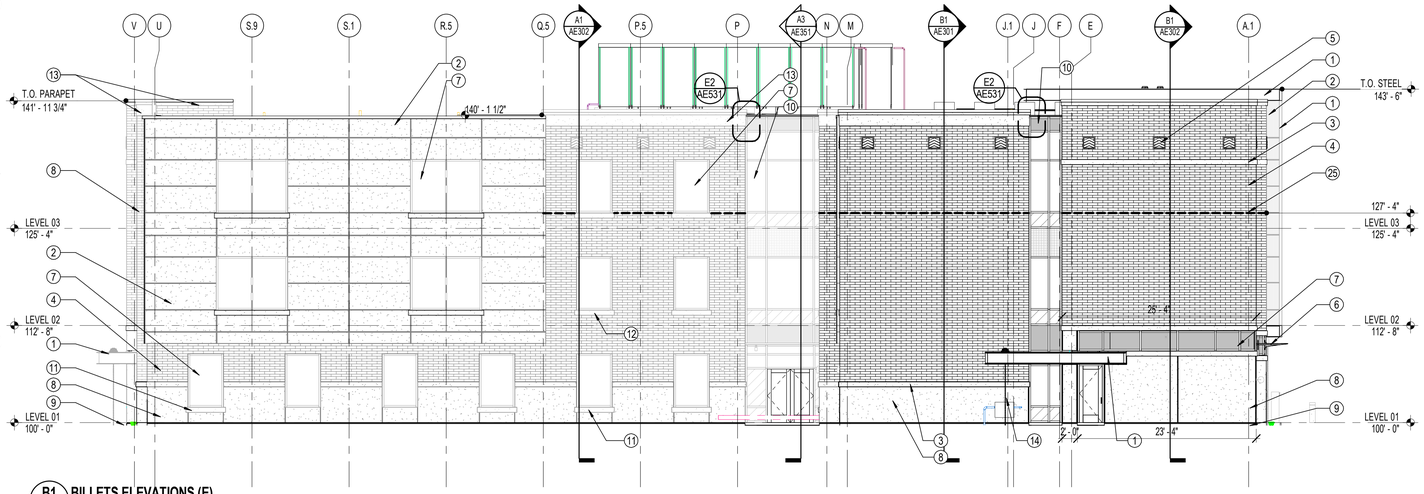

B1 AE202 BILLETS ELEVATIONS (E) 1/8" = 1'-0"

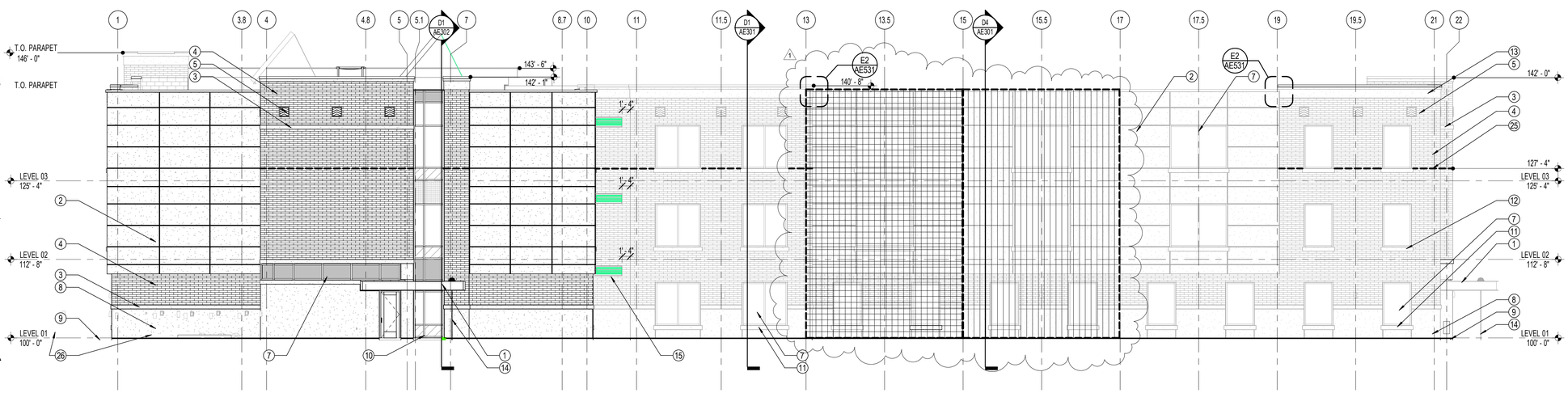

A1 AE202 BILLETS ELEVATION (S) 1/8" = 1'-0"

4/1/2013 11:19:22 AM

GENERAL NOTE - BUILDING ELEVATION

A. COORDINATE GRADING SHOWN ON ELEVATIONS w/ CIVIL
B. PROVIDE GUTTERS AND DOWN SPOUTS w/ HEAT CABLE, SNOW FENCES, AND SNOW CLIPS - SEE ROOF PLAN
C. FOR TYPICAL WALL ASSEMBLY INCLUDING MATERIAL DESIGNATIONS AND DETAILING APPROACH, SEE A350 SERIES

KEYNOTE - BUILDING ELEVATION

1 STAINLESS STEEL CORNER GUARDS 5'-0" EA. SEE B6/AE701
2 CARPET TILE TRANSITION STRIP
3 PRECAST CONCRETE BAND
4 BRICK VENEER
5 PRECAST CONCRETE CHEVRON MEDALLION
6 HORIZONTAL LOUVER SUNSHADE
7 INSULATED WINDOW SYSTEM
8 PRECAST CONCRETE WALL PANEL
9 FINISH GRADE
10 INSULATED CURTAINWALL SYSTEM
11 INTEGRAL PRECAST CONCRETE SILL
12 PRECAST CONCRETE SILL
13 PRECAST CONCRETE CORNICE
14 CHAIN-TYPE DOWNSPOUT
15 MECHANICAL LOUVER
16 CUSTOM STAINLESS STEEL RAILING W/ CHEVRON MEDALLION
17 PAINTED STEEL CHANNEL OVER CANTILEVERED BALCONY
18 HORIZONTAL SUNSHADES
19 BUILDING SIGNAGE
20 PAINTED STEEL CHANNEL OVER SUSPENDED CONCRETE CANOPY
21 ROOF OVERFLOW DRAIN
22 PHOTOVOLTAIC PANELS AND SUPPORT
23 WEB STIFFENER
24 INTEGRAL WEB STIFFENER AND CUSTOM POST - COORDINATE W/ STRUCTURAL
25 BENT PLATE LEDGER FOR MASONRY SYSTEM (DASHED) - SEE STRUCTURAL
26 UTILITY AND DUMPSTER ENCLOSURES - SEE SHEET AS402 IN VOLUME A FOR ENLARGED PLANS

ADD ALTERNATE LEGEND

ADD/ALT 2:
ADD TO BASE BID SQUARE FOOT AREA INDENTIFIED AS ADD/ALT "2". BUILDING WILL BE INCREASED BY THE DISTANCE EQUAL TO THAT OF EACH GROUP OF ROOMS SHOWN HATCHED. BASE BID WILL BE CALCULATED WITHOUT THE AREA HATCHED.

ADD/ALT 3:
ADD TO BASE BID SQUARE FOOT AREA INDENTIFIED AS ADD/ALT "3". BUILDING WILL BE INCREASED BY THE DISTANCE EQUAL TO THAT OF EACH GROUP OF ROOMS SHOWN HATCHED. BASE BID WILL BE CALCULATED WITHOUT THE AREA HATCHED.

ARCHITECTURAL NEXUS
SALT LAKE CITY PLACERVILLE SACRAMENTO

Architectural NEXUS, Inc.
2505 East Parleys Way
Salt Lake City, Utah 84109
T 801.924.5000 F 801.924.5001
http://www.archnexus.com

Licensed Architect PETER MOYES No. 83-122248-0301 21 MARCH 2013 State of Utah

Original drawings remain the property of the Architect and as such the Architect retains total ownership and control. The design represented by these drawings is sold to the client for a one time use, unless otherwise agreed upon in writing by the Architect.
© Architectural Nexus, Inc. 2012

UTAH NATIONAL GUARD CAMP WILLIAMS
RTI TASS COMPLEX, PHASE II
NGB PROJECT NO. 490444

17800 SOUTH ACADEMY STREET
BLUFFDALE, UTAH 84065

#	REVISIONS	
1	4.01.13	ADD-02

NEXUS PROJECT #:	11024
CHECKED BY:	SMS
DRAWN BY:	RM
DATE:	21 MARCH 2013

SHEET CONTENTS:
EXTERIOR ELEVATIONS

VOLUME B - BID DOCUMENTS

AE202

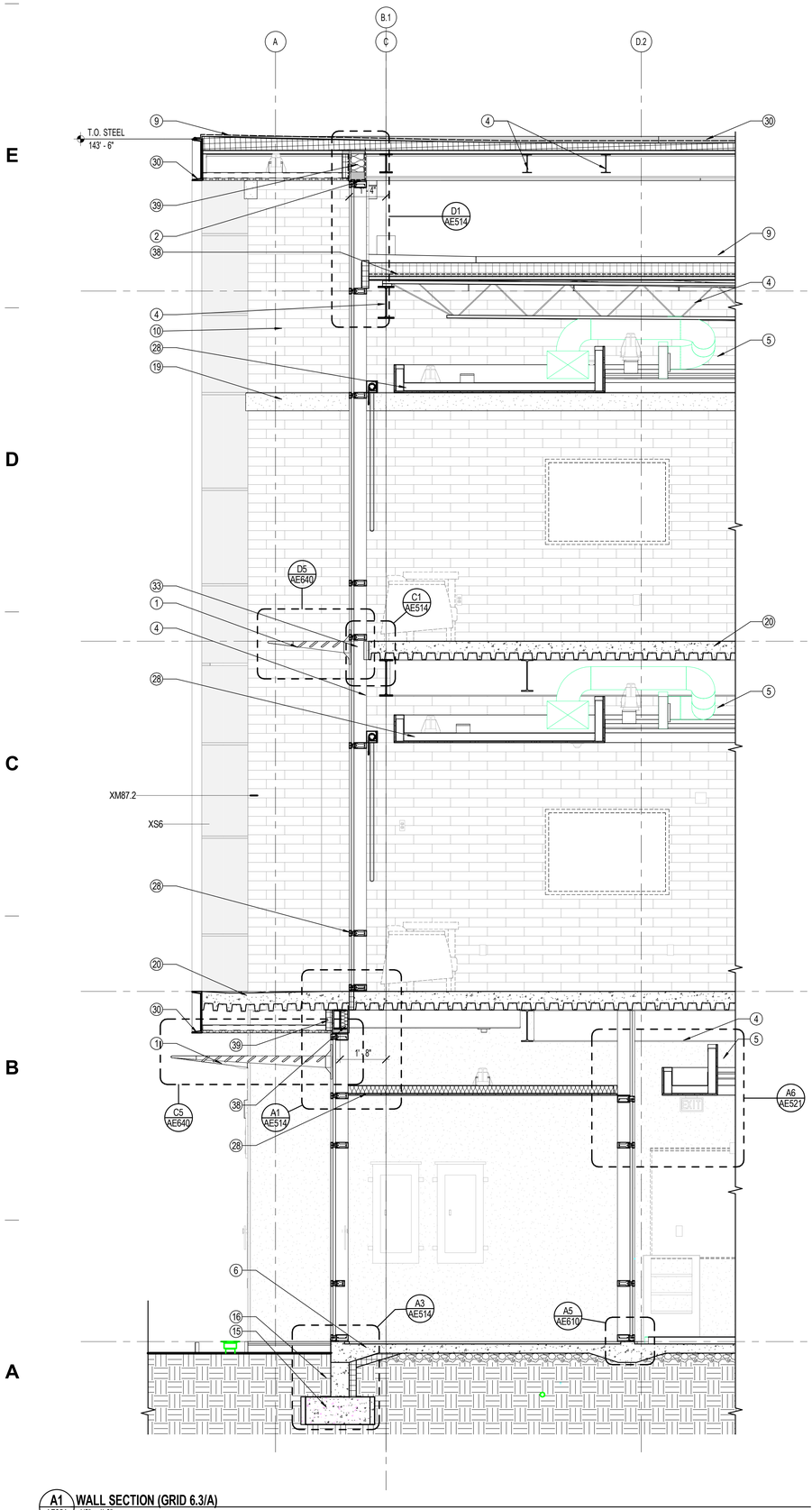

A1 WALL SECTION (GRID 6.3/A)
AE354 1/2" = 1'-0"

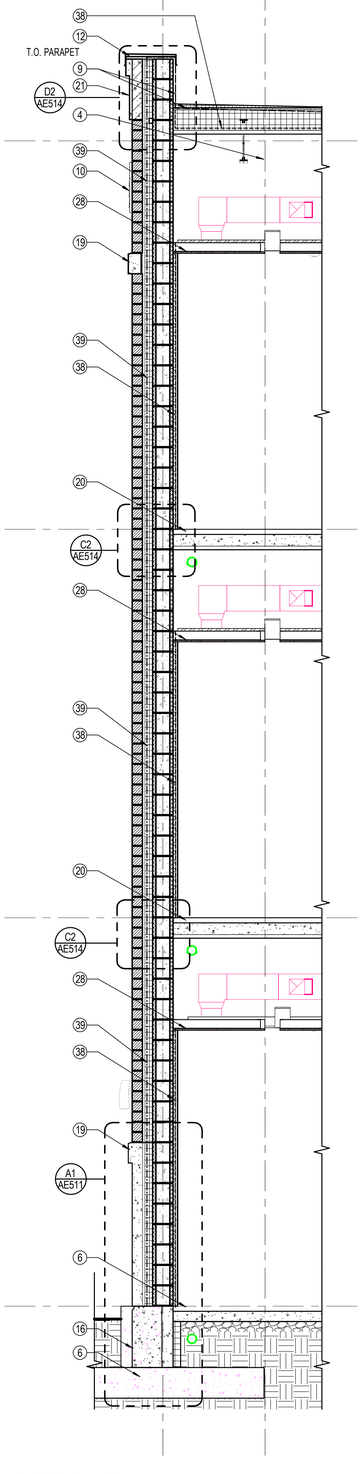

A4 WALL SECTION (GRID 1/L.5)
AE354 1/2" = 1'-0"

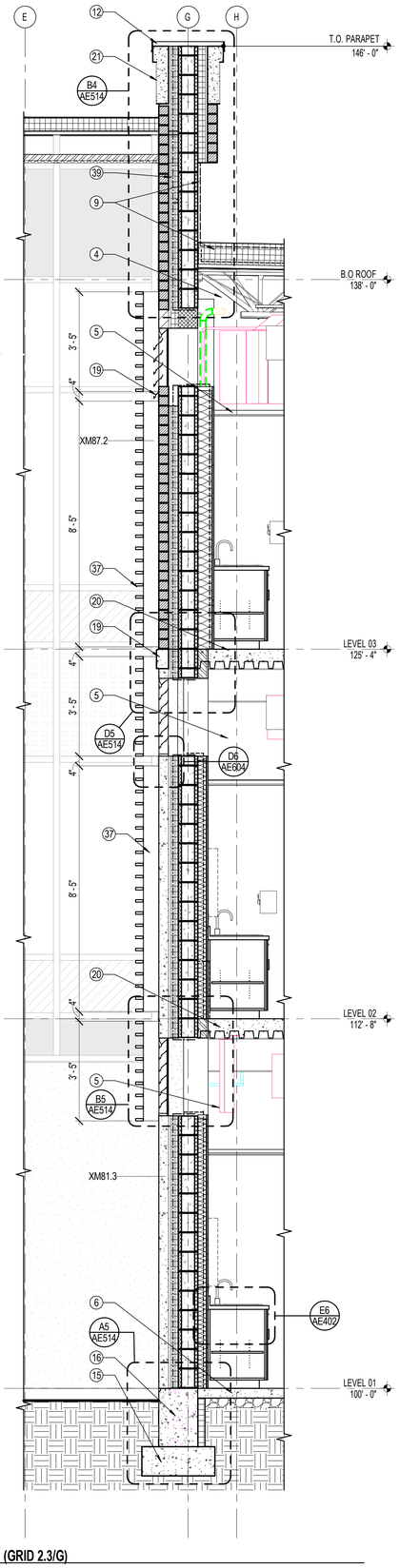

A5 WALL SECTION (GRID 2.3/G)
AE354 1/2" = 1'-0"

GENERAL NOTE - WALL SECTION

A. THE BUILDING SHALL BE INSULATED OVER THE ENTIRE EXTENTS OF ITS INTERFACE BETWEEN INTERIOR SPACE AND EXTERIOR SPACE, AND/OR SPACE THAT COMMUNICATES WITH THE EXTERIOR. MINIMUM INSULATION VALUES SHALL BE R-19 FOR SUSPENDED SLABS OVER EXPOSED AREAS, R-31 FOR WALLS, AND R-38 FOR ROOFS
B. PROPERLY SEAL ALL EXTERIOR AND INTERIOR JOINTS BETWEEN OR WITHIN MATERIALS, TYPICAL.
C. ALL OUTSIDE CORNERS OF CAST-IN-PLACE CONCRETE ELEMENTS EXPOSED TO VIEW SHALL RECEIVE 3/4" CHAMFER.
D. REFER TO STRUCTURAL FOR DEFLECTION TRACK AT DISCONTINUITIES IN EXTERIOR STUD FRAMING AT FLOOR CONDITIONS
E. ALL ROUGH CARPENTRY (NAILERS, BLOCKING, ETC.) ARE TO BE FIRE TREATED
F. FOR T.O. CONCRETE AT SLOPING ROOF SLABS - REFER TO ROOF PLAN
G. FOR ALL DETAILS RELATED TO WINDOWS - REFER TO A620 SERIES OF DRAWINGS
H. COORDINATE PLACEMENT OF FIRE SPRINKLERS WITH OTHER CEILING PLENUM RELATED SUBCONTRACTORS TO AVOID CONFLICTS
I. WALL SECTION KEYNOTES INDICATE WORK ZONE LOCATIONS
J. SEE A150 SERIES & AI600 SERIES SHEETS FOR CEILING ASSEMBLIES

KEYNOTE - WALL SECTION

1 HORIZONTAL LOUVER SUNSHADE
2 INSULATED CURTAIN WALL WINDOW SYSTEM
3 8" COMPOSITE CONCRETE AND CORRUGATED METAL ROOF DECK. SEE STRUCTURAL
4 STEEL STRUCTURAL BEAMS. SEE STRUCTURAL FOR SIZES AND LOCATIONS
5 SUSPENDED ACOUSTICAL TILE CEILING.
6 8" CONCRETE SLAB ON GRADE. SEE STRUCTURAL
7 1" GFRC PRECAST CONCRETE PANEL
8 LIQUID APPLIED MEMBRANE ROOFING OVER 8" RIGID INSULATION AND 1 1/2" CORRUGATED METAL DECK.
9 SINGLE PLY MEMBRANE ROOF OVER 8" RIGID INSULATION AND 3" CORRUGATED METAL DECK
10 PRECAST CONCRETE CHEVRON MEDALLION
11 EXTERIOR WALL WITH PRECAST PANELS. SEE WALL TYPES FOR MORE ASSEMBLY INFO
12 METAL WALL CAP AND DRIP EDGE
13 CUSTOM STAINLESS STEEL RAILING W/ CHEVRON MEDALLION
14 STEEL COLUMN. SEE STRUCTURAL
15 CONCRETE FOOTING. SEE STRUCTURAL
16 CONCRETE FOUNDATION WALL. SEE STRUCTURAL
17 EXTERIOR BICK VENEER WALL WITH PRECAST WAINSCOT. SEE WALL TYPES FOR ASSEMBLY INFO
18 HOLLOW METAL DOOR
19 PRECAST CONCRETE BAND
20 COMPOSITE CONCRETE FLOOR SLAB ON CORRUGATED METAL DECK
21 PRECAST CONCRETE CORNICE
22 STAIRS
23 PRECAST CONCRETE WAINSCOT
24 INTERIOR MASONRY WALL. SEE WALL TYPES FOR ASSEMBLY INFO
25 WALL MOUNTED FLAT PANEL TV
26 OVERHEAD DOOR
27 DOCK LEVELER
28 5/8" GYP BD. CEILING ON METAL STUDS
29 INTEGRAL CONCRETE WINDOW SILL
30 PAINTED STEEL CHANNEL
31 CHAIN TYPE ROOF DRAIN
32 ALUMINUM DRAINABLE, LOUVERED WALL VENT
33 CONTINUOUS FIRE STOP
34 INSULATION BETWEEN MULLIONS AT SPANDRAL PANELS
35 RIGID INSULATION ALONG PERIMETER FOUNDATION WALLS
36 SOLID SURFACE SILL
37 ALUMINUM TRELLIS
38 MOISTURE BARRIER
39 FLUID APPLIED WEATHER BARRIER
40 MANUAL ROLLER SHADES -SEE CEILING PLANS FOR ALL LOCATIONS
42 BRICK RESUPPORT LEDGER - SEE STRUCURAL

ARCHITECTURAL NEXUS
SALT LAKE CITY PLACERVILLE SACRAMENTO

Architectural NEXUS, Inc.
2505 East Parleys Way
Salt Lake City, Utah 84109
T 801.924.5000 F 801.924.5001
http://www.archnexus.com

Licensed Architect
PETER MOYES
No. 21 MARCH 2013
83-122248-0301
State of Utah

Original drawings remain the property of the Architect and as such the Architect retains total ownership and control. The design represented by these drawings is sold to the client for a one time use, unless otherwise agreed upon in writing by the Architect.
© Architectural Nexus, Inc. 2012

UTAH NATIONAL GUARD CAMP WILLIAMS
RTI TASS COMPLEX, PHASE II
NGB PROJECT NO. 490444
17800 SOUTH ACADEMY STREET
BLUFFDALE, UTAH 84065

#	REVISIONS	
1	4.01.13	ADD-02

NEXUS PROJECT #:	11024
CHECKED BY:	SMS
DRAWN BY:	RM
DATE:	21 MARCH 2013

SHEET CONTENTS:
WALL SECTIONS

VOLUME B - BID DOCUMENTS

AE354

4/1/2013 11:19:32 AM

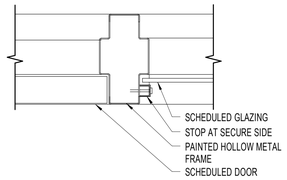

D2 AE630 JAMB DETAIL (TYP HM, GLAZING)
3" = 1'-0"

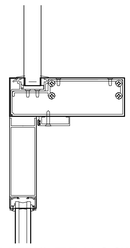

C2 AE630 HEAD DETAIL (TYP 01 @ CURTAIN WALL)
3" = 1'-0"

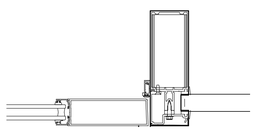

B2 AE630 JAMB DETAIL (TYP 01 @ CURTAIN WALL)
3" = 1'-0"

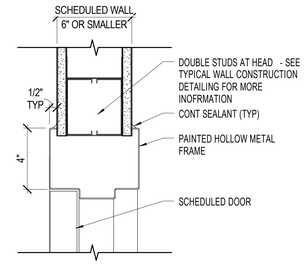

E6 AE630 HM HEAD DETAIL (WRAP AROUND)
3" = 1'-0"

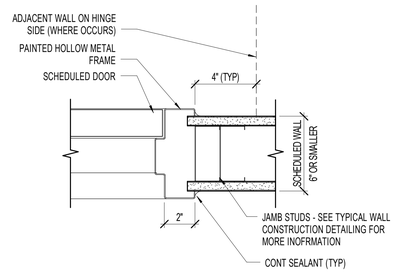

D6 AE630 HM JAMB DETAIL (WRAP AROUND)
3" = 1'-0"

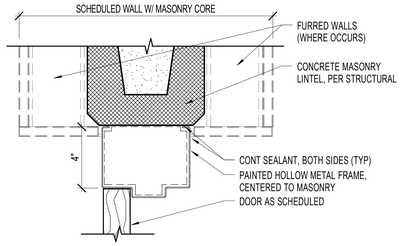

C6 AE630 HM HEAD DETAIL (FLUSH FRAME)
3" = 1'-0"

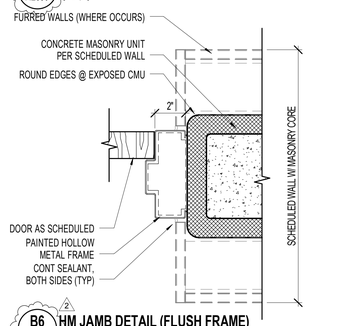

B6 AE630 HM JAMB DETAIL (FLUSH FRAME)
3" = 1'-0"

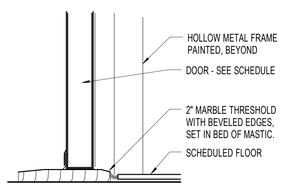

A3 AE630 THRESHOLD DETAIL - MARBLE
3" = 1'-0"

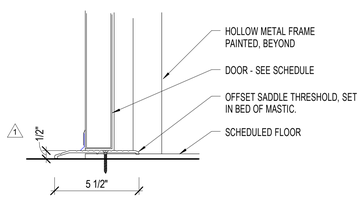

A4 AE630 THRESHOLD DETAIL - OFFSET SADDLE
3" = 1'-0"

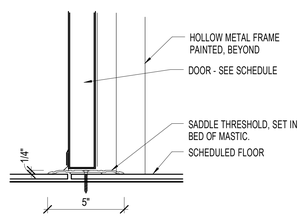

A5 AE630 THRESHOLD DETAIL - SADDLE
3" = 1'-0"

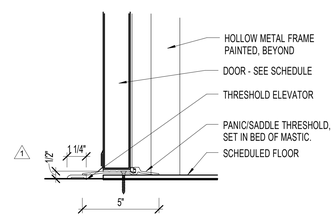

A6 AE630 THRESHOLD DETAIL - SADDLE/ELEVATOR1
3" = 1'-0"

4/1/2013 11:19:33 AM

ARCHITECTURAL NEXUS
SALT LAKE CITY PLACERVILLE SACRAMENTO

Architectural NEXUS, Inc.
2505 East Parleys Way
Salt Lake City, Utah 84109
T 801.924.5000 F 801.924.5001
http://www.archnexus.com

Licensed Architect
PETER MOYES
No. 83-122248-0301
21 MARCH 2013
State of Utah

Original drawings remain the property of the Architect and as such the Architect retains total ownership and control. The design represented by these drawings is sold to the client for a one time use, unless otherwise agreed upon in writing by the Architect.
© Architectural Nexus, Inc. 2012

UTAH NATIONAL GUARD CAMP WILLIAMS
RTI TASS COMPLEX, PHASE II
NGB PROJECT NO. 490444

17800 SOUTH ACADEMY STREET
BLUFFDALE, UTAH 84065

#		REVISIONS
1	3.15.13	DFCM REVIEW RESPONSE
2	4.01.13	ADD-02

NEXUS PROJECT #:	11024
CHECKED BY:	SMS
DRAWN BY:	AHW
DATE:	21 MARCH 2013

SHEET CONTENTS:
DOOR DETAILS

VOLUME B - BID DOCUMENTS

AE630

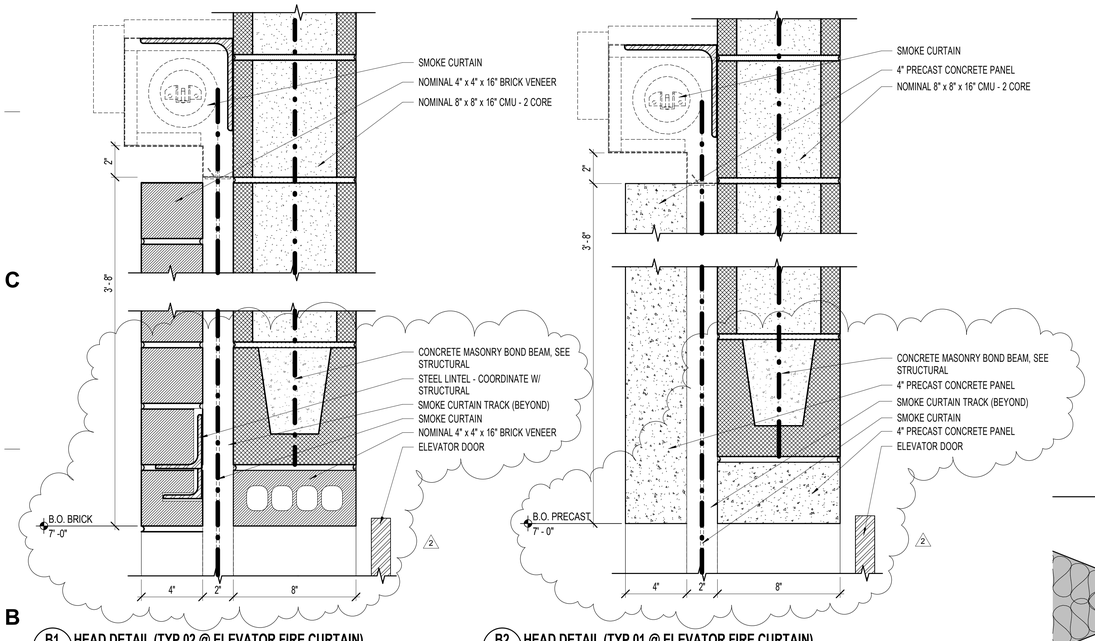

B1 AE631 HEAD DETAIL (TYP 02 @ ELEVATOR FIRE CURTAIN)
3" = 1'-0"

B2 AE631 HEAD DETAIL (TYP 01 @ ELEVATOR FIRE CURTAIN)
3" = 1'-0"

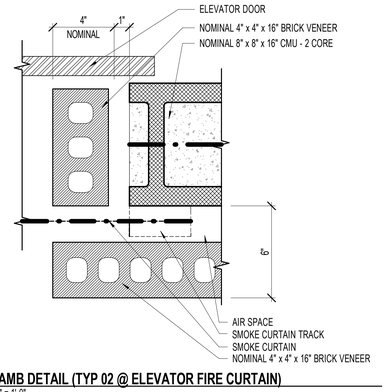

A1 AE631 JAMB DETAIL (TYP 02 @ ELEVATOR FIRE CURTAIN)
3" = 1'-0"

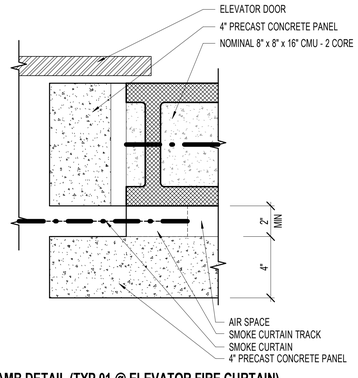

A2 AE631 JAMB DETAIL (TYP 01 @ ELEVATOR FIRE CURTAIN)
3" = 1'-0"

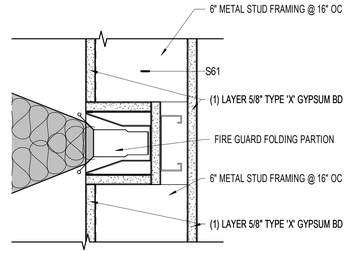

B4 AE631 JAMB DETAIL (TYP 01 @ ACCORDION FIRE DOOR)
3" = 1'-0"

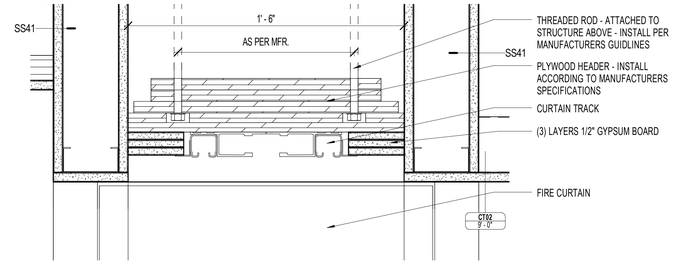

A4 AE631 HEAD DETAIL (TYP 01 @ ACCORDION FIRE DOOR)
3" = 1'-0"

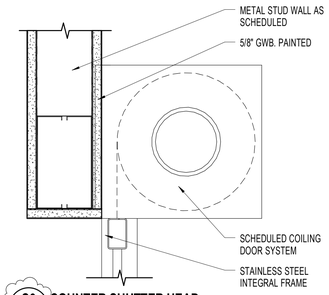

C6 AE631 COUNTER SHUTTER HEAD
3" = 1'-0"

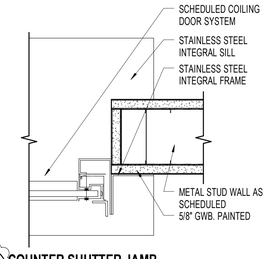

B6 AE631 COUNTER SHUTTER JAMB
3" = 1'-0"

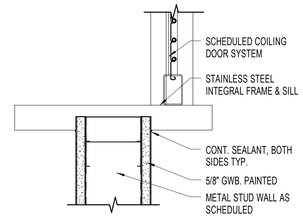

A6 AE631 COUNTER SHUTTER SILL
3" = 1'-0"

4/1/2013 11:19:40 AM

ARCHITECTURAL NEXUS
SALT LAKE CITY PLACERVILLE SACRAMENTO

Architectural NEXUS, Inc.
2505 East Parleys Way
Salt Lake City, Utah 84109
T 801.924.5000 F 801.924.5001
http://www.archnexus.com

Licensed Architect
PETER MOYES
No. 83-122248-0301
21 MARCH 2013
State of Utah

Original drawings remain the property of the Architect and as such the Architect retains total ownership and control. The design represented by these drawings is sold to the client for a one time use, unless otherwise agreed upon in writing by the Architect.
© Architectural Nexus, Inc. 2012

UTAH NATIONAL GUARD CAMP WILLIAMS
RTI TASS COMPLEX, PHASE II
NGB PROJECT NO. 490444
17800 SOUTH ACADEMY STREET
BLUFFDALE, UTAH 84065

#	REVISIONS	
1	3.22.13	DFCM REVIEW RESPONSE #2
2	4.01.13	ADD-02

NEXUS PROJECT #:	11024
CHECKED BY:	SMS
DRAWN BY:	AHW
DATE:	21 MARCH 2013

SHEET CONTENTS:
DOOR DETAILS

VOLUME B - BID DOCUMENTS

AE631

1 2 3 4 5 6

E

D

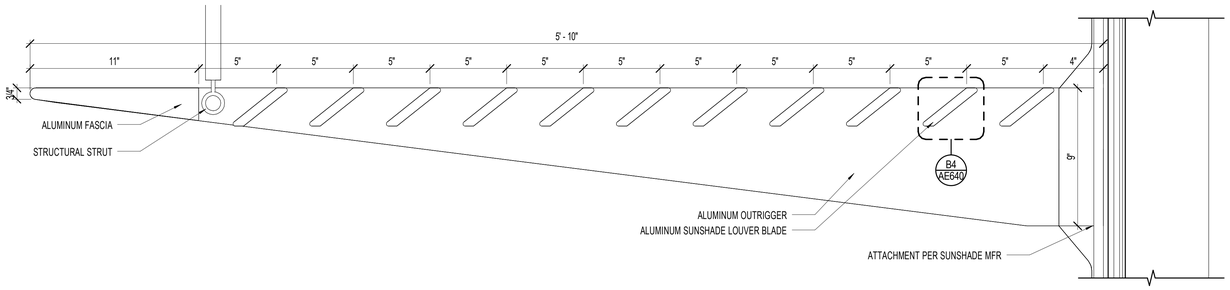

D1 AE640 **SUNSHADE DETAIL (TYP - 70")**
3" = 1'-0"

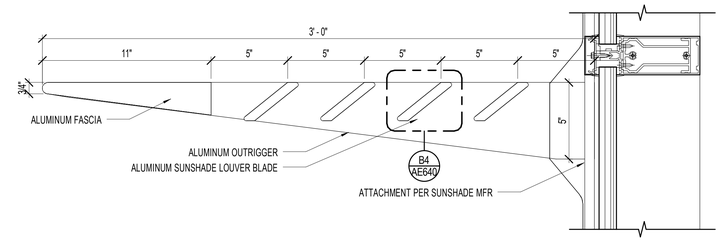

D4 AE640 **SUNSHADE DETAIL (TYP - 36")**
3" = 1'-0"

C

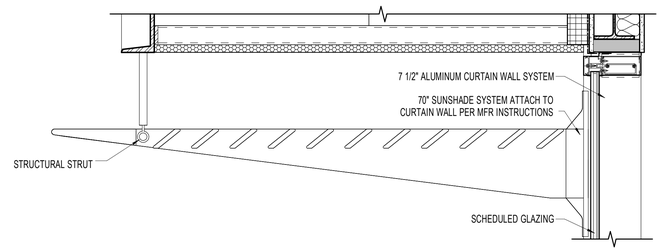

C3 AE640 **70" SUNSHADE DETAIL (S01 @ CURTAIN WALL)**
1 1/2" = 1'-0"

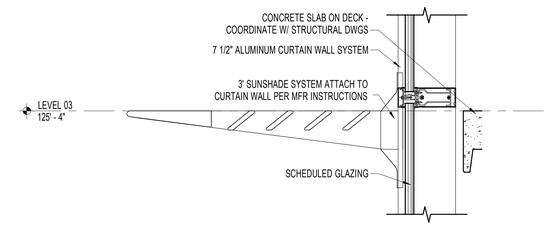

C5 AE640 **36" SUNSHADE DETAIL (S02 @ CURTAIN WALL)**
1 1/2" = 1'-0"

B

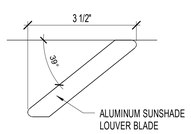

B4 AE640 **SUNSHADE DETAIL (LOUVER BLADE)**
6" = 1'-0"

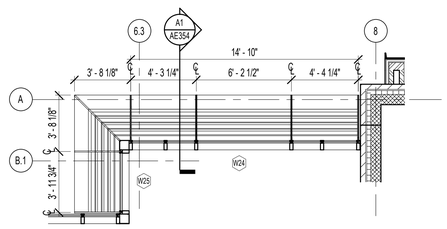

B5 AE640 **SUNSHADE TYPE S02**
1/4" = 1'-0"

A

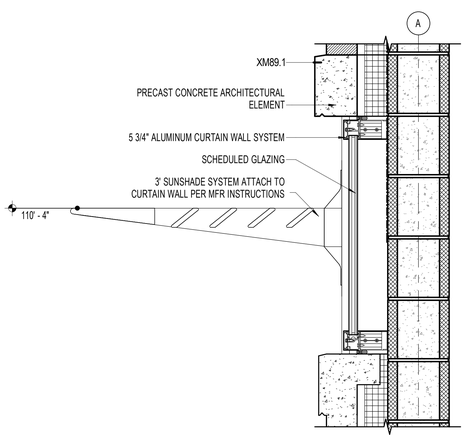

A2 AE640 **36" SUNSHADE DETAIL (S01 @ SPANDREL)**
1 1/2" = 1'-0"

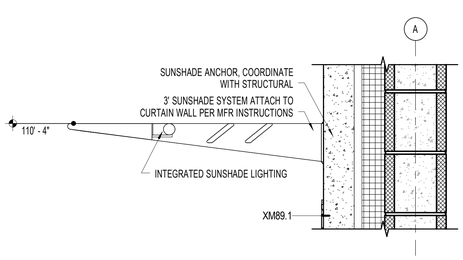

A4 AE640 **36" SUNSHADE DETAIL (S01 @ WALL TYPE XM89.1)**
1 1/2" = 1'-0"

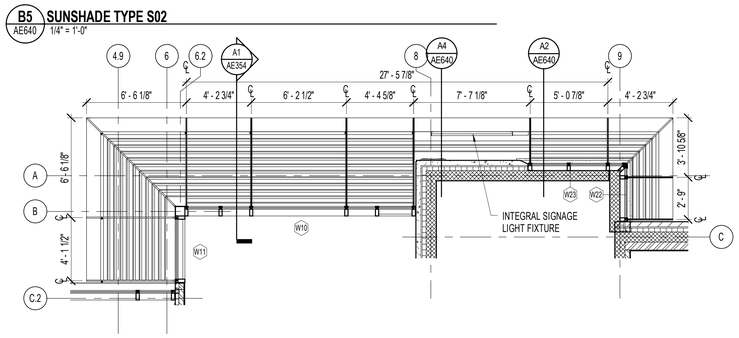

A5 AE640 **SUNSHADE TYPE S01**
1/4" = 1'-0"

4/1/2013 2:00:50 PM

ARCHITECTURAL NEXUS
SALT LAKE CITY PLACERVILLE SACRAMENTO

Architectural NEXUS, Inc.
2505 East Parleys Way
Salt Lake City, Utah 84109
T 801.924.5000 F 801.924.5001
http://www.archnexus.com

Licensed Architect
PETER MOYES
No. 83-122248-0301
21 MARCH 2013
State of Utah

Original drawings remain the property of the Architect and as such the Architect retains total ownership and control. The design represented by these drawings is sold to the client for a one time use, unless otherwise agreed upon in writing by the Architect.
© Architectural Nexus, Inc. 2012

UTAH NATIONAL GUARD CAMP WILLIAMS
RTI TASS COMPLEX, PHASE II
NGB PROJECT NO. 490444
17800 SOUTH ACADEMY STREET
BLUFFDALE, UTAH 84065

#	REVISIONS	
1	4.01.13	ADD-02

NEXUS PROJECT #:	11024
CHECKED BY:	SMS
DRAWN BY:	Author
DATE:	21 MARCH 2013

SHEET CONTENTS:
SUNSHADE TYPES & DETAILS

VOLUME B - BID DOCUMENTS

AE640

1 2 3 4 5 6

E

D

C

B

A

NOTE:
PROVIDE 2" PERIMETER SUPPORTING CLOSURE ANGLE. ONE END OF THE CEILING GRID SHALL BE ATTACHED TO THE CLOSURE ANGLE ON TWO ADJACENT SIDES. THE OPPOSITE ENDS SHALL HAVE A 3/4" CLEARANCE FROM THE WALL AND SHALL REST UPON AND BE FREE TO SLIDE ON CLOSURE ANGLE.

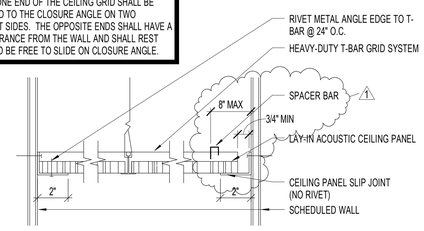

C2 AE701 LAY-IN CEILING TILE EDGE
3" = 1'-0"

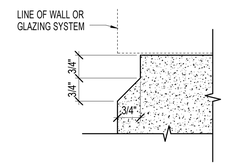

D6 AE701 TYPICAL CONCRETE CHAMFER
6" = 1'-0"

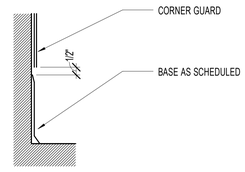

A DETAIL
3"=1'-0"

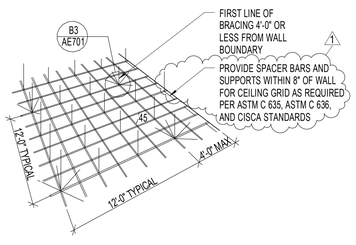

B2 AE701 A701 - TYP. SEISMIC BRACING DETAIL 01
3" = 1'-0"

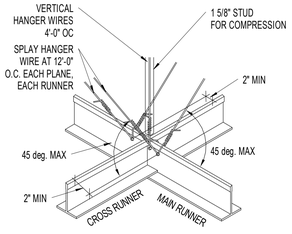

B3 AE701 TYP. SEIMIC BRACING DETAIL
3" = 1'-0"

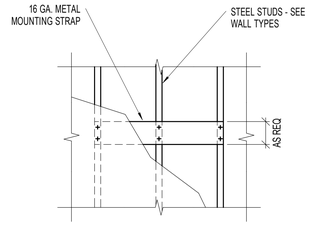

B4 AE701 MOUNTING PLATE DETAIL
3" = 1'-0"

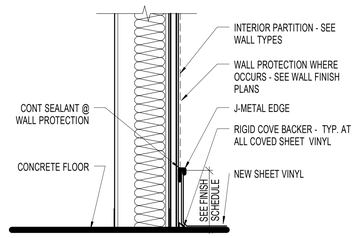

B5 AE701 COVED BASE DETAIL
3" = 1'-0"

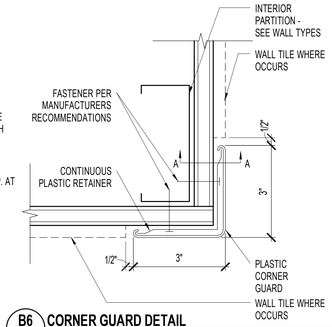

B6 AE701 CORNER GUARD DETAIL
3" = 1'-0"

PARTITION PRIORITY LEGEND

TWO HOUR FIRE AND SMOKE WALL	PRIORITY 1 HIGHEST
TWO HOUR FIRE WALL	PRIORITY 2
TWO HOUR SHAFT WALL	PRIORITY 2
ONE HOUR FIRE AND SMOKE WALL	PRIORITY 3
ONE HOUR FIRE WALL	PRIORITY 4
SMOKE TIGHT WALL	PRIORITY 5
NON-RATED WALL	PRIORITY 6

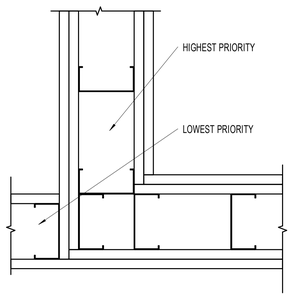

A2 AE701 PARTITION PRIORITY LEGEND
3" = 1'-0"

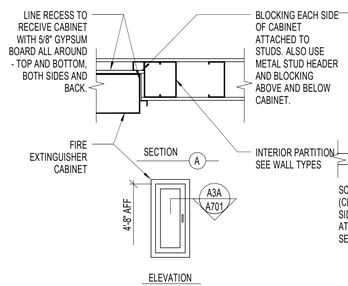

A4 AE701 FIRE EXTINGUISHER CAB. DETAIL 02
3" = 1'-0"

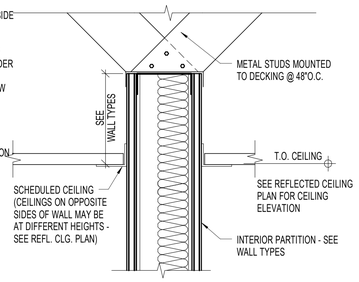

A5 AE701 A701 - CEILING DETAIL
3" = 1'-0"

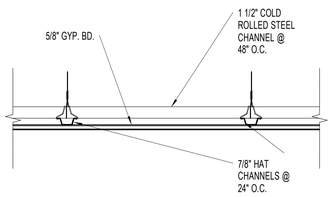

A6 AE701 SUSPENDED CEILING DETAIL
3" = 1'-0"

4/1/2013 11:19:45 AM

ARCHITECTURAL NEXUS
SALT LAKE CITY PLACERVILLE SACRAMENTO

Architectural NEXUS, Inc.
2505 East Parleys Way
Salt Lake City, Utah 84109
T 801.924.5000 F 801.924.5001
http://www.archnexus.com

Licensed Architect
PETER MOYES
No. 83-122248-0301
21 MARCH 2013
State of Utah

Original drawings remain the property of the Architect and as such the Architect retains total ownership and control. The design represented by these drawings is sold to the client for a one time use, unless otherwise agreed upon in writing by the Architect.
© Architectural Nexus, Inc. 2012

UTAH NATIONAL GUARD CAMP WILLIAMS
RTI TASS COMPLEX, PHASE II
NGB PROJECT NO. 490444
17800 SOUTH ACADEMY STREET
BLUFFDALE, UTAH 84065

#	REVISIONS	
1	3.22.13	DFCM REVIEW RESPONSE #2

NEXUS PROJECT #:	11024
CHECKED BY:	SMS
DRAWN BY:	Author
DATE:	21 MARCH 2013

SHEET CONTENTS:
TYPICAL DETAILS

VOLUME B - BID DOCUMENTS

AE701

KEYED NOTES - SHEET B-FA101

1. ALARM TO ACTIVATE ONLY ON SPRINKLER WATER FLOW.
2. CONTROL MODULES FOR ELEVATOR SHUNT DOWN, ELEVATOR RECALL AND ALTERNATE RECALL.
3. CONTROL MODULES FOR FIRE SHUTTER/OVER HEAD DOOR OPERATOR OVER RIDE.
4. ADD / ALT B.
5. ADD / ALT C.

1 FA101 LEVEL 1 FIRE SYSTEMS PLAN
1/8" = 1'-0"

3/29/2013 1:50:58 PM

Ken Garner Engineering, Inc.
Electrical Engineering Consultants, Inc.
102 West 500 South, Suite 225
Salt Lake City, Utah 84101
Telephone: 801.328.8800
Fax: 801.328.8802
Contact: Adam Brownell
Project #: 2011-044.00

ARCHITECTURAL NEXUS
SALT LAKE CITY PLACERVILLE SACRAMENTO

Architectural NEXUS, Inc.
2150 South 1300 East, Suite 200
Salt Lake City, Utah 84106
T 801.924.5000 F 801.924.5001
http://www.archnexus.com

LICENSED PROFESSIONAL ENGINEER No. 274818 KENNETH D. GARNER STATE OF UTAH

Original drawings remain the property of the Architect and as such the Architect retains total ownership and control. The design represented by these drawings is sold to the client for a one time use, unless otherwise agreed upon in writing by the Architect.
© Architectural Nexus, Inc.2011

UTAH NATIONAL GUARD CAMP WILLIAMS
RTI TASS COMPLEX, PHASE II
PROJECT NO. 490444

UTAH NATIONAL GUARD
12953 SOUTH MINUTEMAN DRIVE
DRAPER, UTAH 84020-1726

#	REVISIONS
2	03-29-2013 ADDENDUM 2

NEXUS PROJECT #:	11024
CHECKED BY:	Checker
DRAWN BY:	Author
DATE:	03-21-2013

SHEET CONTENTS:
LEVEL 1 FIRE SYSTEMS PLAN

VOLUME B - BID DOCUMENTS

FA101

KEYED NOTES - SHEET B-FA102

1. CONTROL MODULE FOR WON-DOOR OPERATION.
2. RELAY AND CONTROL MODULE FOR FAN SHUTDOWN ON HEAT PUMP 'C'.
3. ADD / ALT B.
4. ADD / ALT C.

GENERAL NOTES - SHEET B-FA102

A. CONTRACTOR TO FIELD VERIFY ALL EXISTING CONDITIONS, MATERIALS, FINISHES, AND DIMENSIONS BEFORE AND AFTER CONSTRUCTION.
B. CONTRACTOR TO ENSURE THAT ALL CORRIDORS OUTSIDE OF CONSTRUCTION AREA ARE KEPT CLEAN AND CLEAR OF DEBRIS AND OBSTRUCTIONS AT ALL TIMES.
C. PROTECT ALL ITEMS TO REMAIN FROM DAMAGE.

1 LEVEL 2 FIRE SYSTEMS PLAN
FA102 1/8" = 1'-0"

Ken Garner Engineering, Inc.
Electrical Engineering Consultants, Inc.
102 West 500 South, Suite 225
Salt Lake City, Utah 84101
Telephone: 801.328.8800
Fax: 801.328.8802
Contact: Adam Brownell
Project #: 2011-044.00

ARCHITECTURAL NEXUS
SALT LAKE CITY PLACERVILLE SACRAMENTO

Architectural NEXUS, Inc.
2150 South 1300 East, Suite 200
Salt Lake City, Utah 84106
T 801.924.5000 F 801.924.5001
http://www.archnexus.com

LICENSED PROFESSIONAL ENGINEER No. 271818 KENNETH D. GARNER STATE OF UTAH

Original drawings remain the property of the Architect and as such the Architect retains total ownership and control. The design represented by these drawings is sold to the client for a one time use, unless otherwise agreed upon in writing by the Architect.
© Architectural Nexus, Inc.2011

UTAH NATIONAL GUARD CAMP WILLIAMS
RTI TASS COMPLEX, PHASE II
PROJECT NO. 490444

UTAH NATIONAL GUARD
12953 SOUTH MINUTEMAN DRIVE
DRAPER, UTAH 84020-1726

#	REVISIONS
2	03-29-2013 ADDENDUM 2

NEXUS PROJECT #:	11024
CHECKED BY:	Checker
DRAWN BY:	Author
DATE:	03-21-2013

SHEET CONTENTS:

LEVEL 2 FIRE SYSTEMS PLAN

VOLUME B - BID DOCUMENTS

FA102

3/29/2013 1:51:04 PM

KEYED NOTES - SHEET B-FA103

1. CONTROL MODULE FOR WON-DOOR OPERATION.
2. RELAY AND CONTROL MODULE FOR FAN SHUT DOWN ON HEAT PUMP 'C'.
3. HEAT DETECTOR LOCATED IN THE TOP OF ELEVATOR SHAFT.
4. ADD / ALT B.
5. ADD / ALT C.

GENERAL NOTES - SHEET B-FA103

A. CONTRACTOR TO FIELD VERIFY ALL EXISTING CONDITIONS, MATERIALS, FINISHES, AND DIMENSIONS BEFORE AND AFTER CONSTRUCTION.
B. CONTRACTOR TO ENSURE THAT ALL CORRIDORS OUTSIDE OF CONSTRUCTION AREA ARE KEPT CLEAN AND CLEAR OF DEBRIS AND OBSTRUCTIONS AT ALL TIMES.
C. PROTECT ALL ITEMS TO REMAIN FROM DAMAGE.

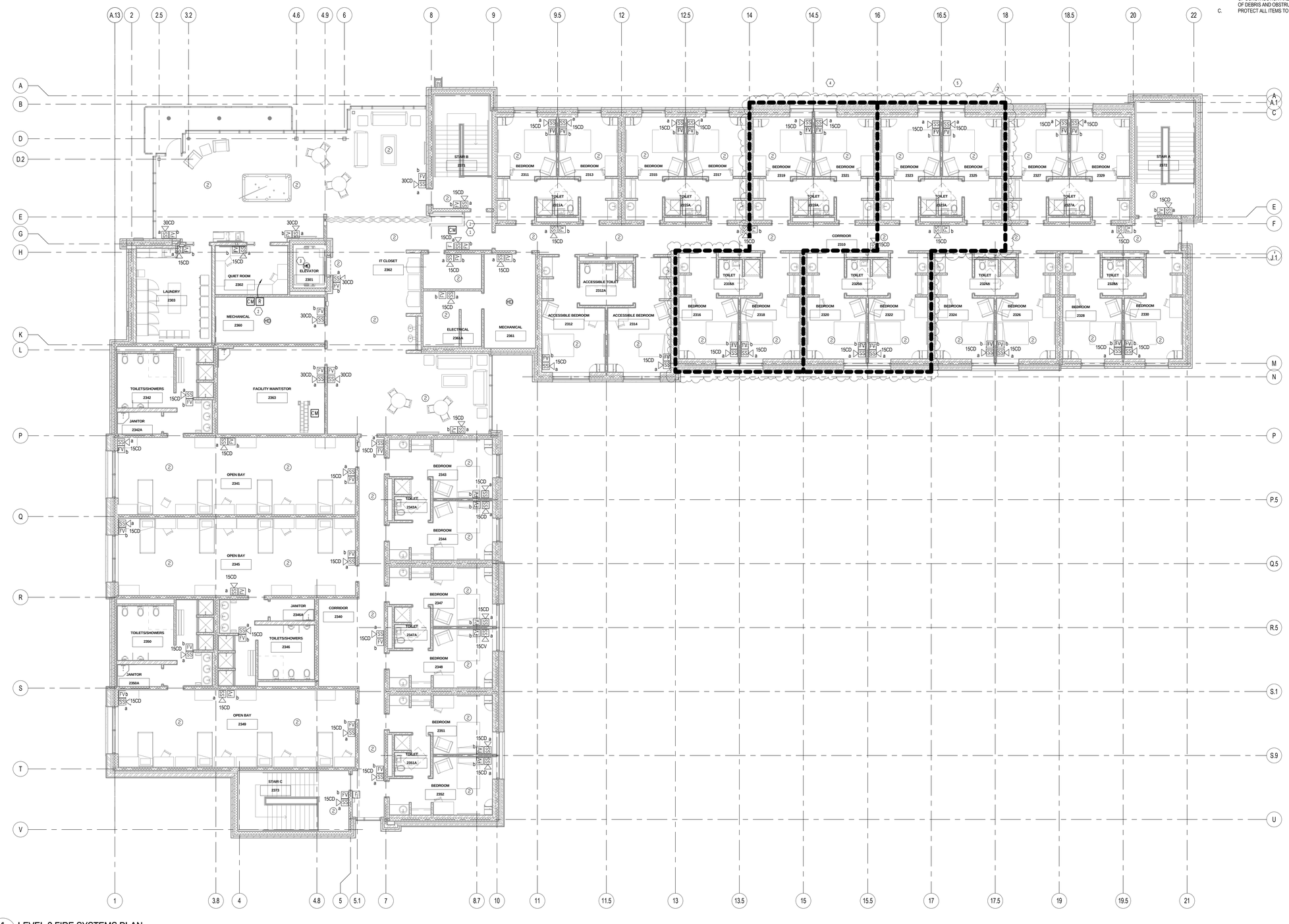

1 FA103 LEVEL 3 FIRE SYSTEMS PLAN
1/8" = 1'-0"

Ken Garner Engineering, Inc.
Electrical Engineering Consultants, Inc.
102 West 500 South, Suite 225
Salt Lake City, Utah 84101
Telephone: 801.328.8800
Fax: 801.328.8802
Contact: Adam Brownell
Project #: 2011-044.00

ARCHITECTURAL NEXUS
SALT LAKE CITY PLACERVILLE SACRAMENTO

Architectural NEXUS, Inc.
2150 South 1300 East, Suite 200
Salt Lake City, Utah 84106
T 801.924.5000 F 801.924.5001
http://www.archnexus.com

LICENSED PROFESSIONAL ENGINEER No. 274818 KENNETH D. GARNER STATE OF UTAH

Original drawings remain the property of the Architect and as such the Architect retains total ownership and control. The design represented by these drawings is sold to the client for a one time use, unless otherwise agreed upon in writing by the Architect.
© Architectural Nexus, Inc.2011

UTAH NATIONAL GUARD CAMP WILLIAMS
RTI TASS COMPLEX, PHASE II
PROJECT NO. 490444

UTAH NATIONAL GUARD
12953 SOUTH MINUTEMAN DRIVE
DRAPER, UTAH 84020-1726

#	REVISIONS
2	03-29-2013 ADDENDUM 2

NEXUS PROJECT #:	11024
CHECKED BY:	Checker
DRAWN BY:	Author
DATE:	03-21-2013

SHEET CONTENTS:
LEVEL 3 FIRE SYSTEMS PLAN

VOLUME B - BID DOCUMENTS

FA103

3/29/2013 1:51:11 PM

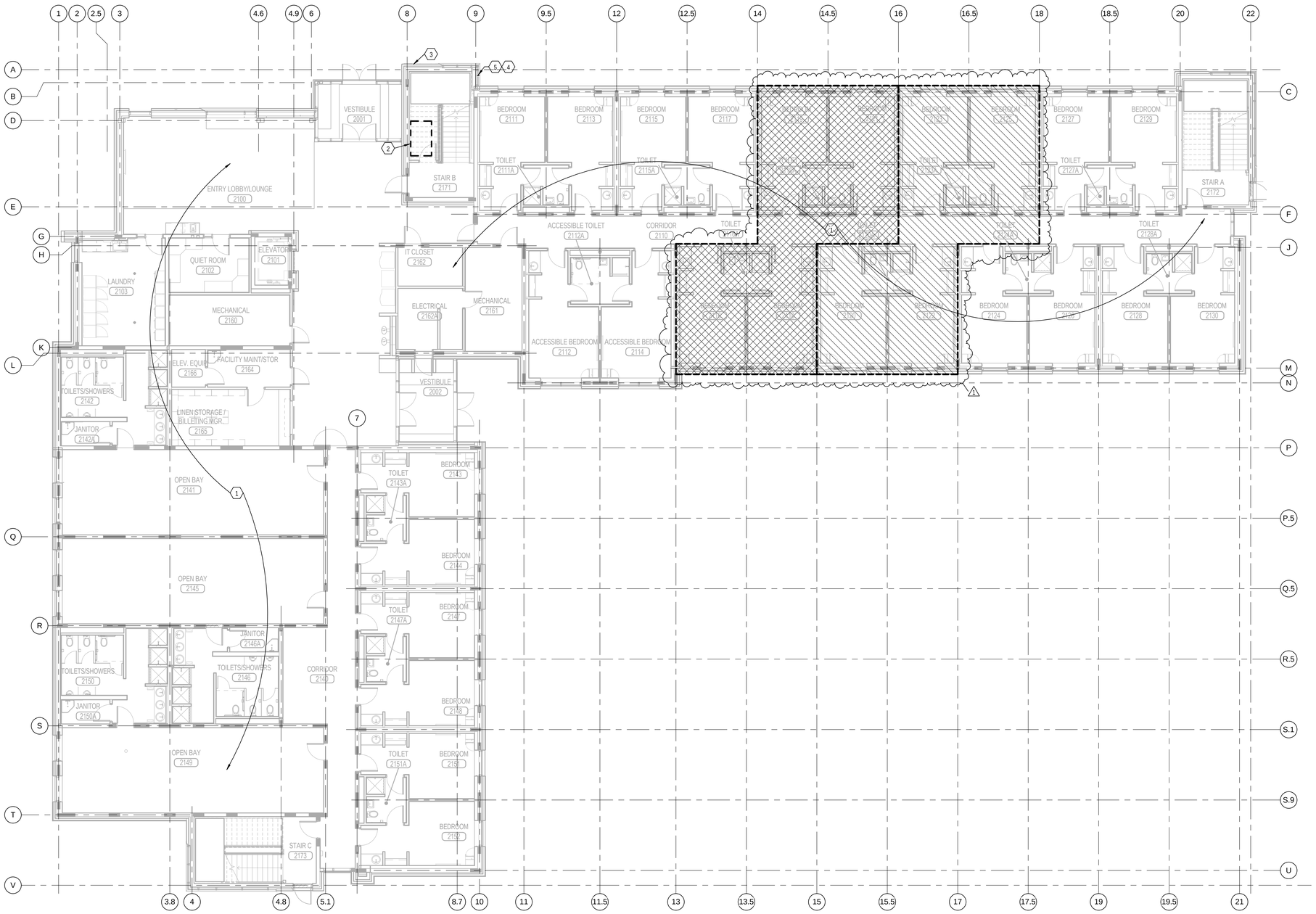

1 LEVEL 1 - FIRE PROTECTION PLAN
SCALE: 1/8" = 1'-0"

KEYED NOTES

1. PROTECT ENTIRE FLOOR WITH WET FIRE SPRINKLING SYSTEM.
2. KEEP 3' X 8' AREA CLEAR FOR FIRE RISER ASSEMBLY. SITE UTILITIES CONTRACTOR TO ROUTE 6" FIRE LINE INTO BUILDING BELOW SLAB AND TERMINATE 12" ABOVE THE FINISHED FLOOR WITH A BLIND FLANGE. THIS IS THE POINT OF CONNECTION FOR THE FIRE PROTECTION CONTRACTOR. COORDINATE EXACT ENTRY LOCATION WITH PLUMBING CONTRACTOR TO AVOID CONFLICT WITH PRESSURE REDUCING VALVE STATION AND PIPING.
3. PROVIDE FIRE DEPARTMENT CONNECTION AT THIS LOCATION.
4. LOCATION OF HORN AND STROBE, 10'-0" ABOVE GRADE. COORDINATE WITH ELECTRICAL.
5. PROVIDE 2" MAIN TEST PORT AND DRAIN. PROVIDE 100 FEET OF 2-1/2" FIRE HOSE TO BE STORED BY OWNER. HOSE CAN BE USED DURING FLOW TESTS TO CARRY WATER TO THE CURB.

GENERAL NOTES

A. PERFORM HYDRAULIC CALCULATIONS FOR AUTOMATIC FIRE SPRINKLER SYSTEM IN ACCORDANCE WITH NFPA 13.
B. PROVIDE THREADED, WELDED, OR GROOVED FITTING THAT CONFORM TO NFPA 13 REQUIREMENTS.
C. PROVIDE SEISMIC BRACING AND FLEXIBLE COUPLINGS AS REQUIRED FOR SEISMIC PROTECTION.
D. COORDINATE WITH ALL OTHER DISCIPLINES AND PROVIDE ADDITIONAL FITTINGS AND OFFSET AS REQUIRED FOR INSTALLATION.
E. REFER TO CONTRACT SPECIFICATIONS FOR ADDITIONAL REQUIREMENTS.

ADD ALTERNATE LEGEND

ADD/ALT 2:
ADD TO BASE BID SQUARE FOOT AREA INDENTIFIED AS ADD/ALT "2". BUILDING WILL BE INCREASED BY THE DISTANCE EQUAL TO THAT OF EACH GROUP OF ROOMS SHOWN HATCHED. THIS INCLUDES ALL HVAC, PIPING, CONTROLS, PLUMBING AND FIRE PROTECTION. IT IS TYPICAL OF ALL 3 FLOORS.

ADD/ALT 3:
ADD TO BASE BID SQUARE FOOT AREA INDENTIFIED AS ADD/ALT "3". BUILDING WILL BE INCREASED BY THE DISTANCE EQUAL TO THAT OF EACH GROUP OF ROOMS SHOWN HATCHED. THIS INCLUDES ALL HVAC, PIPING, CONTROLS, PLUMBING AND FIRE PROTECTION. IT IS TYPICAL OF ALL 3 FLOORS.

ARCHITECTURAL NEXUS
SALT LAKE CITY PLACERVILLE SACRAMENTO

Architectural NEXUS, Inc.
2505 East Parleys Way
Salt Lake City, Utah 84109
T 801.924.5000 F 801.924.5001
http://www.archnexus.com

Stephen G. Conlin
STATE OF UTAH
187524
03.21.13
State of Utah

Original drawings remain the property of the Architect and as such the Architect retains total ownership and control. The design represented by these drawings is sold to the client for a one time use, unless otherwise agreed upon in writing by the Architect.
© Architectural Nexus, Inc. 2012

UTAH NATIONAL GUARD CAMP WILLIAMS
RTI TASS COMPLEX, PHASE II
NGB PROJECT NO. 490444

UTAH NATIONAL GUARD
12953 MINUTEMAN DRIVE
DRAPER, UTAH 84020-1726

#	REVISIONS
1	2013-04-01 ADD #2

CEA PROJECT #:	2011-042.00
CHECKED BY:	JTP
DRAWN BY:	EHW
DATE:	21 MARCH 2013

SHEET CONTENTS:
LEVEL 1 FIRE PROTECTION PLAN

VOLUME B - BID DOCUMENTS

FX101

COLVIN ENGINEERING ASSOCIATES
244 West 300 North, Suite 200 / Salt Lake City, Utah 84103
Phone 801.322.2400 / colvinengineering.com

Copyright (C) 2012 by Colvin Engineering Associates, Inc. Salt Lake City, Utah. All rights reserved. Unauthorized copying and/or use is illegal and subject to prosecution.

3/29/2013 11:14:52 AM

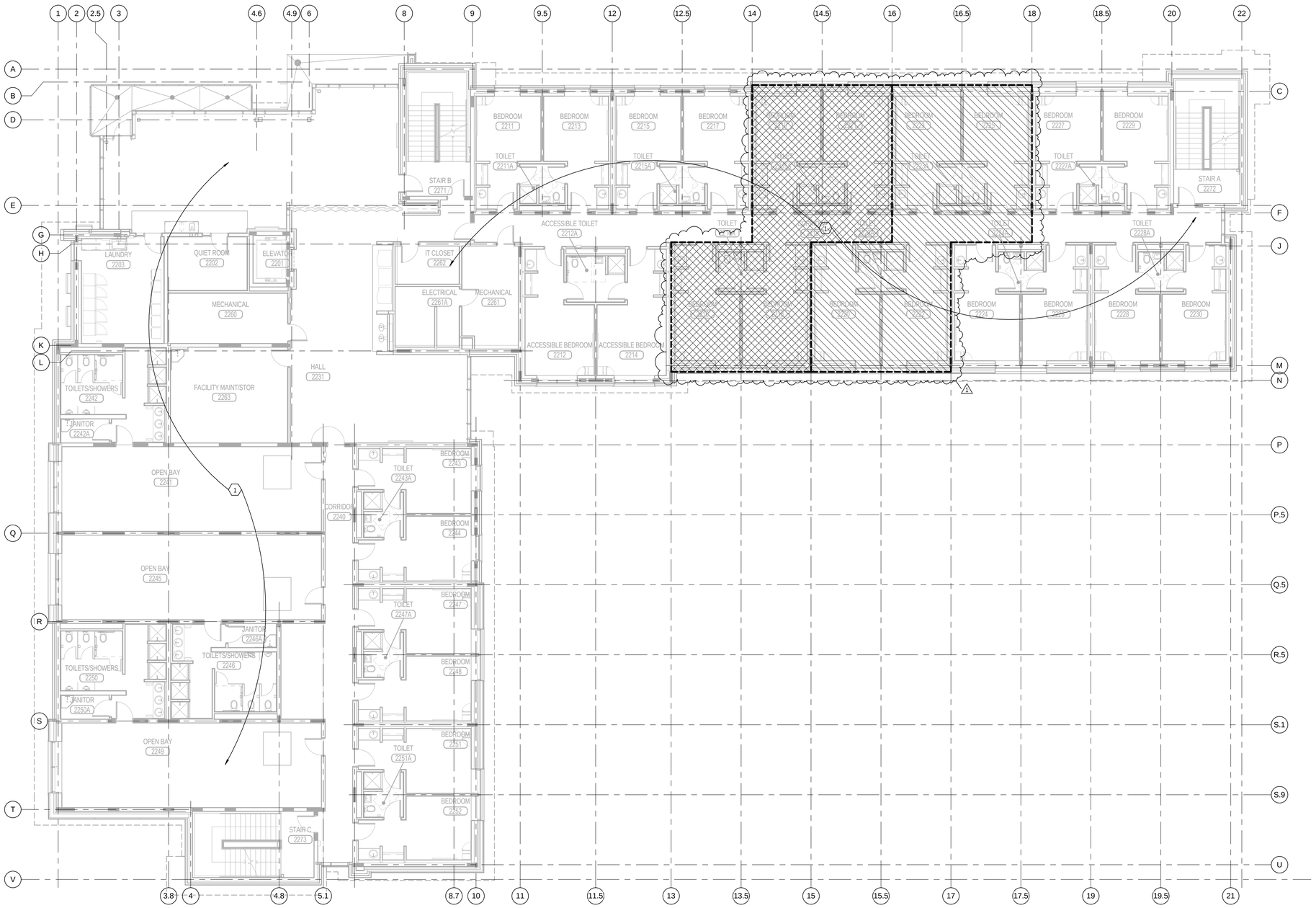

1 LEVEL 2 - FIRE PROTECTION PLAN
SCALE: 1/8" = 1'-0"

KEYED NOTES

1 PROTECT ENTIRE FLOOR WITH WET FIRE SPRINKLING SYSTEM.

GENERAL NOTES

A. PERFORM HYDRAULIC CALCULATIONS FOR AUTOMATIC FIRE SPRINKLER SYSTEM IN ACCORDANCE WITH NFPA 13.
B. PROVIDE THREADED, WELDED, OR GROOVED FITTING THAT CONFORM TO NFPA 13 REQUIREMENTS.
C. PROVIDE SEISMIC BRACING AND FLEXIBLE COUPLINGS AS REQUIRED FOR SEISMIC PROTECTION.
D. COORDINATE WITH ALL OTHER DISCIPLINES AND PROVIDE ADDITIONAL FITTINGS AND OFFSET AS REQUIRED FOR INSTALLATION.
E. REFER TO CONTRACT SPECIFICATIONS FOR ADDITIONAL REQUIREMENTS.

ADD ALTERNATE LEGEND

ADD/ALT 2:
ADD TO BASE BID SQUARE FOOT AREA INDENTIFIED AS ADD/ALT "2". BUILDING WILL BE INCREASED BY THE DISTANCE EQUAL TO THAT OF EACH GROUP OF ROOMS SHOWN HATCHED. THIS INCLUDES ALL HVAC, PIPING, CONTROLS, PLUMBING AND FIRE PROTECTION. IT IS TYPICAL OF ALL 3 FLOORS.

ADD/ALT 3:
ADD TO BASE BID SQUARE FOOT AREA INDENTIFIED AS ADD/ALT "3". BUILDING WILL BE INCREASED BY THE DISTANCE EQUAL TO THAT OF EACH GROUP OF ROOMS SHOWN HATCHED. THIS INCLUDES ALL HVAC, PIPING, CONTROLS, PLUMBING AND FIRE PROTECTION. IT IS TYPICAL OF ALL 3 FLOORS.

ARCHITECTURAL NEXUS
SALT LAKE CITY PLACERVILLE SACRAMENTO

Architectural NEXUS, Inc.
2505 East Parleys Way
Salt Lake City, Utah 84109
T 801.924.5000 F 801.924.5001
http://www.archnexus.com

Stephen G. Conlin
STATE OF UTAH
187524
03.21.13
STATE OF UTAH
ORIGINAL AND NEVER EXPIRES

Original drawings remain the property of the Architect and as such the Architect retains total ownership and control. The design represented by these drawings is sold to the client for a one time use, unless otherwise agreed upon in writing by the Architect.
© Architectural Nexus, Inc. 2012

UTAH NATIONAL GUARD CAMP WILLIAMS
RTI TASS COMPLEX, PHASE II
NGB PROJECT NO. 490444

UTAH NATIONAL GUARD
12953 MINUTEMAN DRIVE
DRAPER, UTAH 84020-1726

#	REVISIONS
1	2013-04-01 ADD #2

CEA PROJECT #:	2011-042.00
CHECKED BY:	JTP
DRAWN BY:	EHW
DATE:	21 MARCH 2013

SHEET CONTENTS:
LEVEL 2 FIRE PROTECTION PLAN

VOLUME B - BID DOCUMENTS

FX102

COLVIN ENGINEERING ASSOCIATES
244 West 300 North, Suite 200 / Salt Lake City, Utah 84103
Phone 801.322.2400 / colvinengineering.com

Copyright (C) 2012 by Colvin Engineering Associates, Inc. Salt Lake City, Utah. All rights reserved. Unauthorized copying and/or use is illegal and subject to prosecution.

3/29/2013 11:14:59 AM

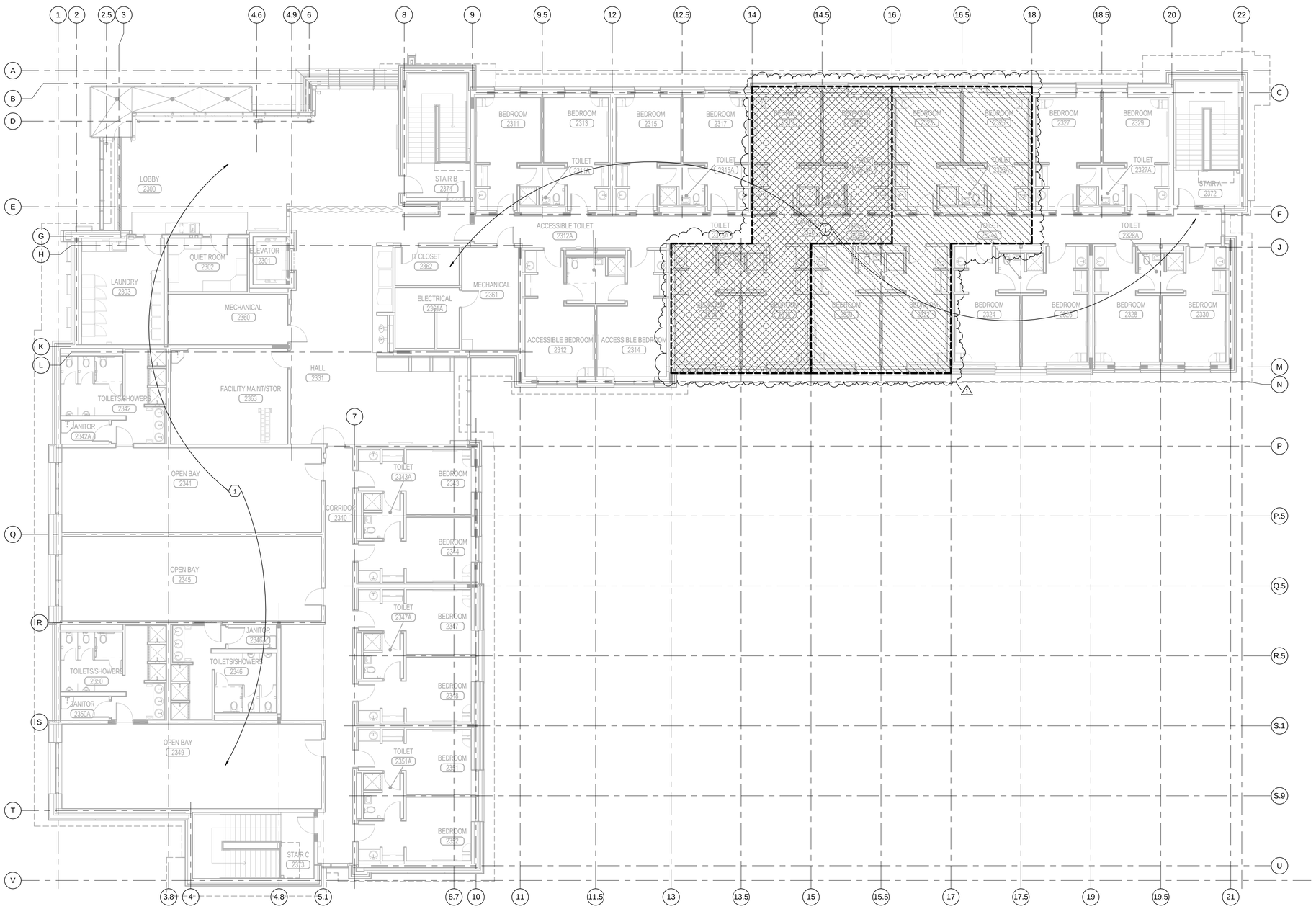

1 LEVEL 3 - FIRE PROTECTION PLAN

SCALE: 1/8" = 1'-0"

KEYED NOTES

1 PROTECT ENTIRE FLOOR WITH WET FIRE SPRINKLING SYSTEM.

GENERAL NOTES

A. PERFORM HYDRAULIC CALCULATIONS FOR AUTOMATIC FIRE SPRINKLER SYSTEM IN ACCORDANCE WITH NFPA 13.
B. PROVIDE THREADED, WELDED, OR GROOVED FITTING THAT CONFORM TO NFPA 13 REQUIREMENTS.
C. PROVIDE SEISMIC BRACING AND FLEXIBLE COUPLINGS AS REQUIRED FOR SEISMIC PROTECTION.
D. COORDINATE WITH ALL OTHER DISCIPLINES AND PROVIDE ADDITIONAL FITTINGS AND OFFSET AS REQUIRED FOR INSTALLATION.
E. REFER TO CONTRACT SPECIFICATIONS FOR ADDITIONAL REQUIREMENTS.

ADD ALTERNATE LEGEND

ADD/ALT 2:
ADD TO BASE BID SQUARE FOOT AREA INDENTIFIED AS ADD/ALT "2". BUILDING WILL BE INCREASED BY THE DISTANCE EQUAL TO THAT OF EACH GROUP OF ROOMS SHOWN HATCHED. THIS INCLUDES ALL HVAC, PIPING, CONTROLS, PLUMBING AND FIRE PROTECTION. IT IS TYPICAL OF ALL 3 FLOORS.

ADD/ALT 3:
ADD TO BASE BID SQUARE FOOT AREA INDENTIFIED AS ADD/ALT "3". BUILDING WILL BE INCREASED BY THE DISTANCE EQUAL TO THAT OF EACH GROUP OF ROOMS SHOWN HATCHED. THIS INCLUDES ALL HVAC, PIPING, CONTROLS, PLUMBING AND FIRE PROTECTION. IT IS TYPICAL OF ALL 3 FLOORS.

ARCHITECTURAL NEXUS
SALT LAKE CITY PLACERVILLE SACRAMENTO

Architectural NEXUS, Inc.
2505 East Parleys Way
Salt Lake City, Utah 84109
T 801.924.5000 F 801.924.5001
http://www.archnexus.com

Stephen G. Conlin
Registered Architect
187524
03.21.13
State of Utah

Original drawings remain the property of the Architect and as such the Architect retains total ownership and control. The design represented by these drawings is sold to the client for a one time use, unless otherwise agreed upon in writing by the Architect.
© Architectural Nexus, Inc. 2012

UTAH NATIONAL GUARD CAMP WILLIAMS
RTI TASS COMPLEX, PHASE II
NGB PROJECT NO. 490444

UTAH NATIONAL GUARD
12953 MINUTEMAN DRIVE
DRAPER, UTAH 84020-1726

#	REVISIONS
1	2013-04-01 ADD #2

CEA PROJECT #:	2011-042.00
CHECKED BY:	JTP
DRAWN BY:	EHW
DATE:	21 MARCH 2013

SHEET CONTENTS:
LEVEL 3 FIRE PROTECTION PLAN

VOLUME B - BID DOCUMENTS

FX103

COLVIN ENGINEERING ASSOCIATES
244 West 300 North, Suite 200 / Salt Lake City, Utah 84103
Phone 801.322.2400 / colvinengineering.com

Copyright (C) 2012 by Colvin Engineering Associates, Inc. Salt Lake City, Utah. All rights reserved. Unauthorized copying and/or use is illegal and subject to prosecution.

3/29/2013 11:15:05 AM

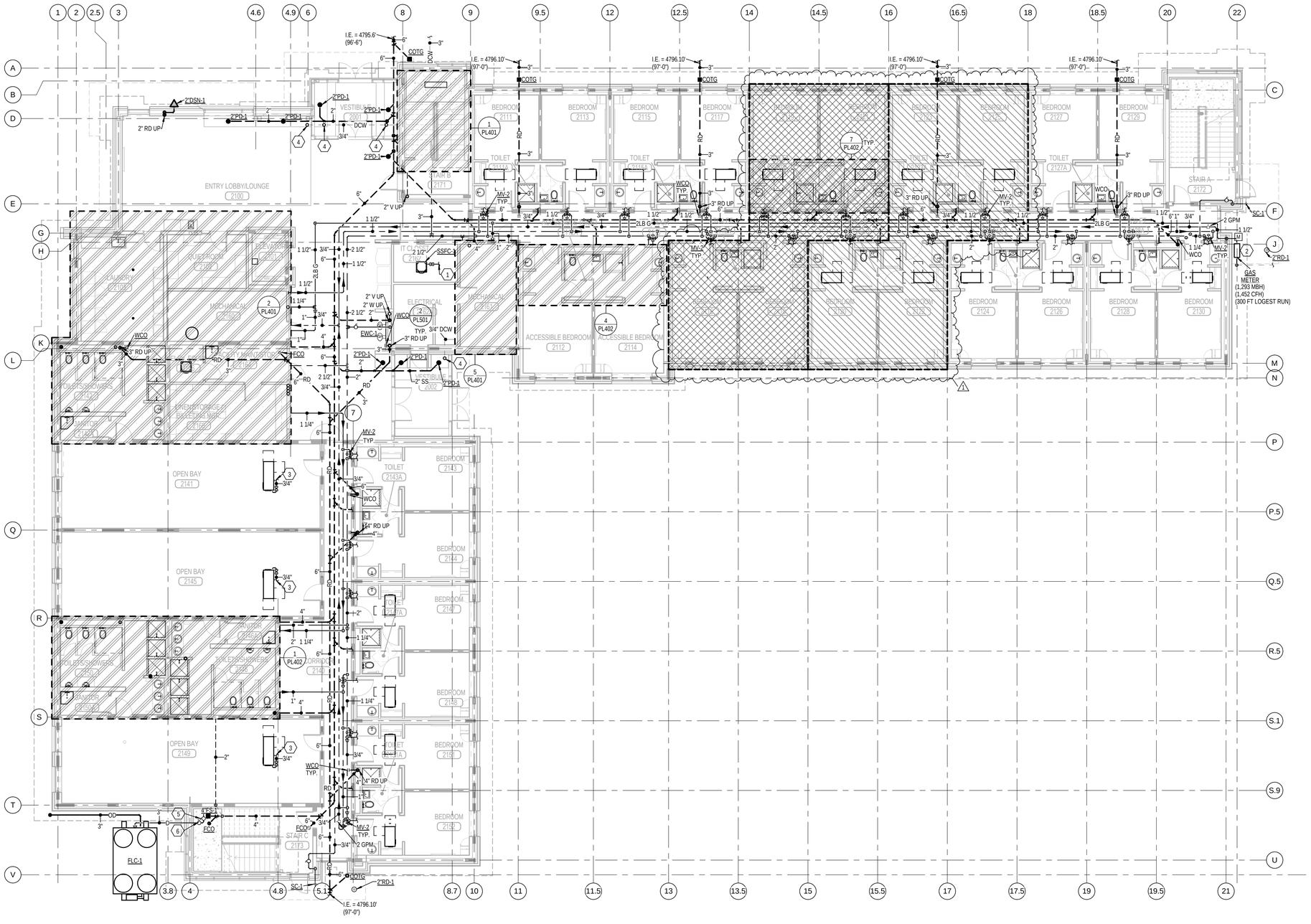

KEYED NOTES

1. ROUTE 3/4" CONDENSATE DRAIN WITH P-TRAP HIGH AND CONNECT TO EITHER THE P-TRAP TAIL PIECE OF THE CLOSEST LAVATORY OR TO A FLOOR SINK IN THE ADJACENT MECHANICAL ROOM.
2. PROVIDE CONCRETE PAD FOR GAS METER TO BE PROVIDED AND INSTALLED BY OTHERS. CONNECT GAS LINE AS REQUIRED.
3. ROUTE 3/4" CONDENSATE DRAIN WITH P-TRAP TO NEAREST SERVICE SINK.
4. CAP 3/4" PVC PIPE WITHIN PLANTER AREA AT THIS APPROXIMATE LOCATION FOR IRRIGATION CONNECTION.
5. PROVIDE THROTTLING VALVE TO CONTROL DRAIN FLOW FROM FLUID COOLER.
6. PROVIDE ISOLATION VALVE.

GENERAL NOTES

A. ALL ROOF DRAIN AND OVERFLOW DRAIN PIPING TO BE RUN AT 1/8" PER FOOT SLOPE AND AS TIGHT TO STRUCTURE AS POSSIBLE.
B. ALL SANITARY WASTE PIPING 2 1/2" AND SMALLER TO BE RUN AT 1/4" PER FOOT SLOPE. PIPE 3" AND LARGER RUN AT 1/8" PER FOOT SLOPE.
C. INLET AND OUTLET AND PIPE SIZE TO MIXING VALVES TO MATCH CONNECTION SIZES UNLESS NOTED OTHERWISE. PROVIDE ACCESS TO MIXING VALVE AS REQUIRED.
D. COORDINATE WITH ALL TRADES PRIOR TO INSTALLATION OF ANY PLUMBING PIPING AND EQUIPMENT.
E. DO NOT ROUTE OR LOCATE ANY PLUMBING PIPING OR EQUIPMENT OVER ANY ELECTRICAL EQUIPMENT.

ADD ALTERNATE LEGEND

ADD/ALT 2:
ADD TO BASE BID SQUARE FOOT AREA INDENTIFIED AS ADD/ALT "2". BUILDING WILL BE INCREASED BY THE DISTANCE EQUAL TO THAT OF EACH GROUP OF ROOMS SHOWN HATCHED. THIS INCLUDES ALL HVAC, PIPING, CONTROLS, PLUMBING AND FIRE PROTECTION. IT IS TYPICAL OF ALL 3 FLOORS.

ADD/ALT 3:
ADD TO BASE BID SQUARE FOOT AREA INDENTIFIED AS ADD/ALT "3". BUILDING WILL BE INCREASED BY THE DISTANCE EQUAL TO THAT OF EACH GROUP OF ROOMS SHOWN HATCHED. THIS INCLUDES ALL HVAC, PIPING, CONTROLS, PLUMBING AND FIRE PROTECTION. IT IS TYPICAL OF ALL 3 FLOORS.

ARCHITECTURAL NEXUS
SALT LAKE CITY PLACERVILLE SACRAMENTO

Architectural NEXUS, Inc.
2505 East Parleys Way
Salt Lake City, Utah 84109
T 801.924.5000 F 801.924.5001
http://www.archnexus.com

Stephen G. Conlin
187524
03.21.13
State of Utah

Original drawings remain the property of the Architect and as such the Architect retains total ownership and control. The design represented by these drawings is sold to the client for a one time use, unless otherwise agreed upon in writing by the Architect.
© Architectural Nexus, Inc. 2012

UTAH NATIONAL GUARD CAMP WILLIAMS
RTI TASS COMPLEX, PHASE II
NGB PROJECT NO. 490444

UTAH NATIONAL GUARD
12953 MINUTEMAN DRIVE
DRAPER, UTAH 84020-1726

#	REVISIONS
1	2013-04-01 ADD #2

1 LEVEL 1 - PLUMBING PLAN
SCALE: 1/8" = 1'-0"

CEA PROJECT #:	2011-042.00
CHECKED BY:	Checker
DRAWN BY:	Author
DATE:	21 MARCH 2013

SHEET CONTENTS:
LEVEL 1 PLUMBING PLAN

VOLUME B - BID DOCUMENTS

PL101

COLVIN ENGINEERING ASSOCIATES
244 West 300 North, Suite 200 / Salt Lake City, Utah 84103
Phone 801.322.2400 / colvinengineering.com

Copyright (C) 2012 by Colvin Engineering Associates, Inc. Salt Lake City, Utah. All rights reserved. Unauthorized copying and/or use is illegal and subject to prosecution.

3/29/2013 11:16:22 AM

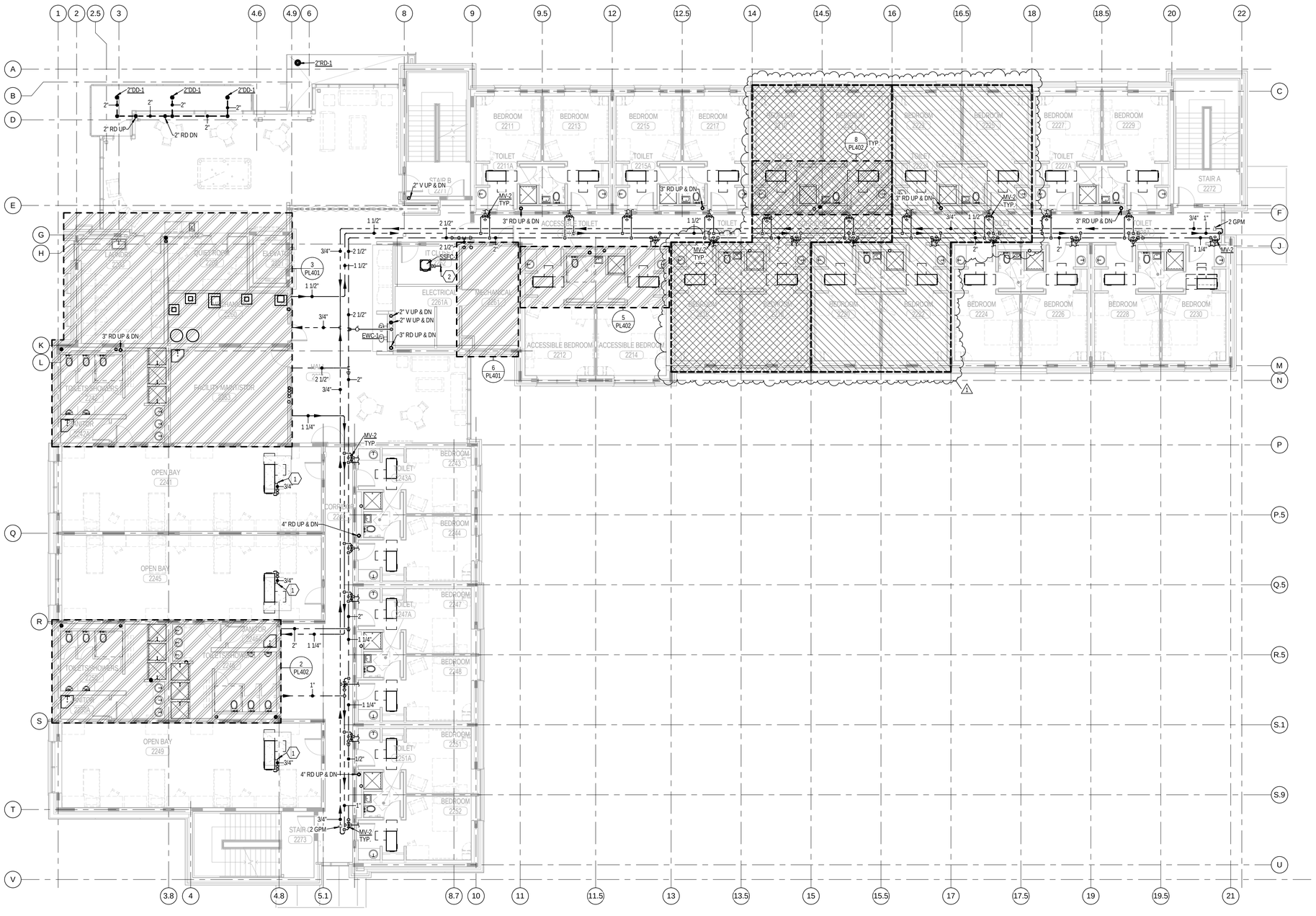

1 LEVEL 2 - PLUMBING PLAN

SCALE: 1/8" = 1'-0"

KEYED NOTES

1. ROUTE 3/4" CONDENSATE DRAIN WITH P-TRAP TO NEAREST SERVICE SINK.
2. ROUTE 3/4" CONDENSATE DRAIN WITH P-TRAP HIGH AND CONNECT TO EITHER THE P-TRAP TAIL PIECE OF THE CLOSEST LAVATORY OR TO A FLOOR SINK IN THE ADJACENT MECHANICAL ROOM.

GENERAL NOTES

A. ALL ROOF DRAIN AND OVERFLOW DRAIN PIPING TO BE RUN AT 1/8" PER FOOT SLOPE AND AS TIGHT TO STRUCTURE AS POSSIBLE.

B. ALL SANITARY WASTE PIPING 2 1/2" AND SMALLER TO BE RUN AT 1/4" PER FOOT SLOPE. PIPE 3" AND LARGER RUN AT 1/8" PER FOOT SLOPE.

C. INLET AND OUTLET AND PIPE SIZE TO MIXING VALVES TO MATCH CONNECTION SIZES UNLESS NOTED OTHERWISE. PROVIDE ACCESS TO MIXING VALVE AS REQUIRED.

D. COORDINATE WITH ALL TRADES PRIOR TO INSTALLATION OF ANY PLUMBING PIPING AND EQUIPMENT.

E. DO NOT ROUTE OR LOCATE ANY PLUMBING PIPING OR EQUIPMENT OVER ANY ELECTRICAL EQUIPMENT.

ADD ALTERNATE LEGEND

ADD/ALT 2:
ADD TO BASE BID SQUARE FOOT AREA INDENTIFIED AS ADD/ALT "2". BUILDING WILL BE INCREASED BY THE DISTANCE EQUAL TO THAT OF EACH GROUP OF ROOMS SHOWN HATCHED. THIS INCLUDES ALL HVAC, PIPING, CONTROLS, PLUMBING AND FIRE PROTECTION. IT IS TYPICAL OF ALL 3 FLOORS.

ADD/ALT 3:
ADD TO BASE BID SQUARE FOOT AREA INDENTIFIED AS ADD/ALT "3". BUILDING WILL BE INCREASED BY THE DISTANCE EQUAL TO THAT OF EACH GROUP OF ROOMS SHOWN HATCHED. THIS INCLUDES ALL HVAC, PIPING, CONTROLS, PLUMBING AND FIRE PROTECTION. IT IS TYPICAL OF ALL 3 FLOORS.

ARCHITECTURAL NEXUS
SALT LAKE CITY PLACERVILLE SACRAMENTO

Architectural NEXUS, Inc.
2505 East Parleys Way
Salt Lake City, Utah 84109
T 801.924.5000 F 801.924.5001
http://www.archnexus.com

Stephen G. Conlon
Registered Professional Engineer
187524
03.21.13
State of Utah

Original drawings remain the property of the Architect and as such the Architect retains total ownership and control. The design represented by these drawings is sold to the client for a one time use, unless otherwise agreed upon in writing by the Architect.
© Architectural Nexus, Inc. 2012

UTAH NATIONAL GUARD CAMP WILLIAMS
RTI TASS COMPLEX, PHASE II
NGB PROJECT NO. 490444

UTAH NATIONAL GUARD
12953 MINUTEMAN DRIVE
DRAPER, UTAH 84020-1726

#	REVISIONS
1	2013-04-01 ADD #2

CEA PROJECT #:	2011-042.00
CHECKED BY:	Checker
DRAWN BY:	Author
DATE:	21 MARCH 2013

SHEET CONTENTS:
LEVEL 2 PLUMBING PLAN

VOLUME B - BID DOCUMENTS

PL102

COLVIN ENGINEERING ASSOCIATES
244 West 300 North, Suite 200 / Salt Lake City, Utah 84103
Phone 801.322.2400 / colvinengineering.com

Copyright (C) 2012 by Colvin Engineering Associates, Inc. Salt Lake City, Utah. All rights reserved. Unauthorized copying and/or use is illegal and subject to prosecution.

3/29/2013 11:16:32 AM

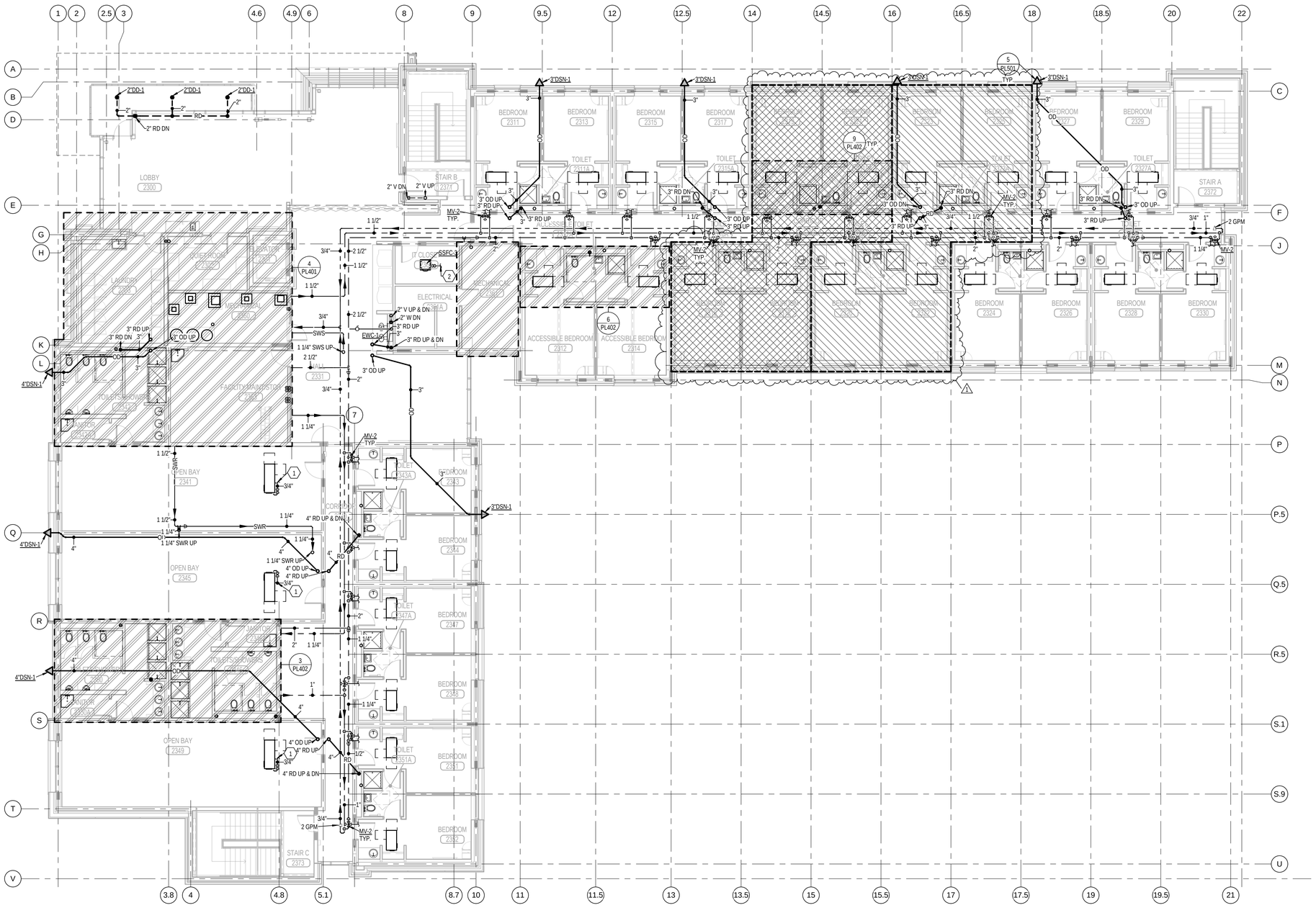

1 LEVEL 3 - PLUMBING PLAN

SCALE: 1/8" = 1'-0"

KEYED NOTES

1. ROUTE 3/4" CONDENSATE DRAIN WITH P-TRAP TO NEAREST SERVICE SINK.
2. ROUTE 3/4" CONDENSATE DRAIN WITH P-TRAP HIGH AND CONNECT TO EITHER THE P-TRAP TAIL PIECE OF THE CLOSEST LAVATORY OR TO A FLOOR SINK IN THE ADJACENT MECHANICAL ROOM.

GENERAL NOTES

A. ALL ROOF DRAIN AND OVERFLOW DRAIN PIPING TO BE RUN AT 1/8" PER FOOT SLOPE AND AS TIGHT TO STRUCTURE AS POSSIBLE.
B. ALL SANITARY WASTE PIPING 2 1/2" AND SMALLER TO BE RUN AT 1/4" PER FOOT SLOPE. PIPE 3" AND LARGER RUN AT 1/8" PER FOOT SLOPE.
C. INLET AND OUTLET AND PIPE SIZE TO MIXING VALVES TO MATCH CONNECTION SIZES UNLESS NOTED OTHERWISE. PROVIDE ACCESS TO MIXING VALVE AS REQUIRED.
D. COORDINATE WITH ALL TRADES PRIOR TO INSTALLATION OF ANY PLUMBING PIPING AND EQUIPMENT.
E. DO NOT ROUTE OR LOCATE ANY PLUMBING PIPING OR EQUIPMENT OVER ANY ELECTRICAL EQUIPMENT.

ADD ALTERNATE LEGEND

ADD/ALT 2:
ADD TO BASE BID SQUARE FOOT AREA INDENTIFIED AS ADD/ALT "2". BUILDING WILL BE INCREASED BY THE DISTANCE EQUAL TO THAT OF EACH GROUP OF ROOMS SHOWN HATCHED. THIS INCLUDES ALL HVAC, PIPING, CONTROLS, PLUMBING AND FIRE PROTECTION. IT IS TYPICAL OF ALL 3 FLOORS.

ADD/ALT 3:
ADD TO BASE BID SQUARE FOOT AREA INDENTIFIED AS ADD/ALT "3". BUILDING WILL BE INCREASED BY THE DISTANCE EQUAL TO THAT OF EACH GROUP OF ROOMS SHOWN HATCHED. THIS INCLUDES ALL HVAC, PIPING, CONTROLS, PLUMBING AND FIRE PROTECTION. IT IS TYPICAL OF ALL 3 FLOORS.

ARCHITECTURAL NEXUS
SALT LAKE CITY PLACERVILLE SACRAMENTO

Architectural NEXUS, Inc.
2505 East Parleys Way
Salt Lake City, Utah 84109
T 801.924.5000 F 801.924.5001
http://www.archnexus.com

Stephen G. Conlin
187524
03.21.13
State of Utah

Original drawings remain the property of the Architect and as such the Architect retains total ownership and control. The design represented by these drawings is sold to the client for a one time use, unless otherwise agreed upon in writing by the Architect.
© Architectural Nexus, Inc. 2012

UTAH NATIONAL GUARD CAMP WILLIAMS
RTI TASS COMPLEX, PHASE II
NGB PROJECT NO. 490444

UTAH NATIONAL GUARD
12953 MINUTEMAN DRIVE
DRAPER, UTAH 84020-1726

#	REVISIONS
1	2013-04-01 ADD #2

CEA PROJECT #:	2011-042.00
CHECKED BY:	Checker
DRAWN BY:	Author
DATE:	21 MARCH 2013

SHEET CONTENTS:
LEVEL 3 PLUMBING PLAN

VOLUME B - BID DOCUMENTS

PL103

COLVIN ENGINEERING ASSOCIATES
244 West 300 North, Suite 200 / Salt Lake City, Utah 84103
Phone 801.322.2400 / colvinengineering.com

Copyright (C) 2012 by Colvin Engineering Associates, Inc. Salt Lake City, Utah. All rights reserved. Unauthorized copying and/or use is illegal and subject to prosecution.

3/29/2013 11:16:45 AM

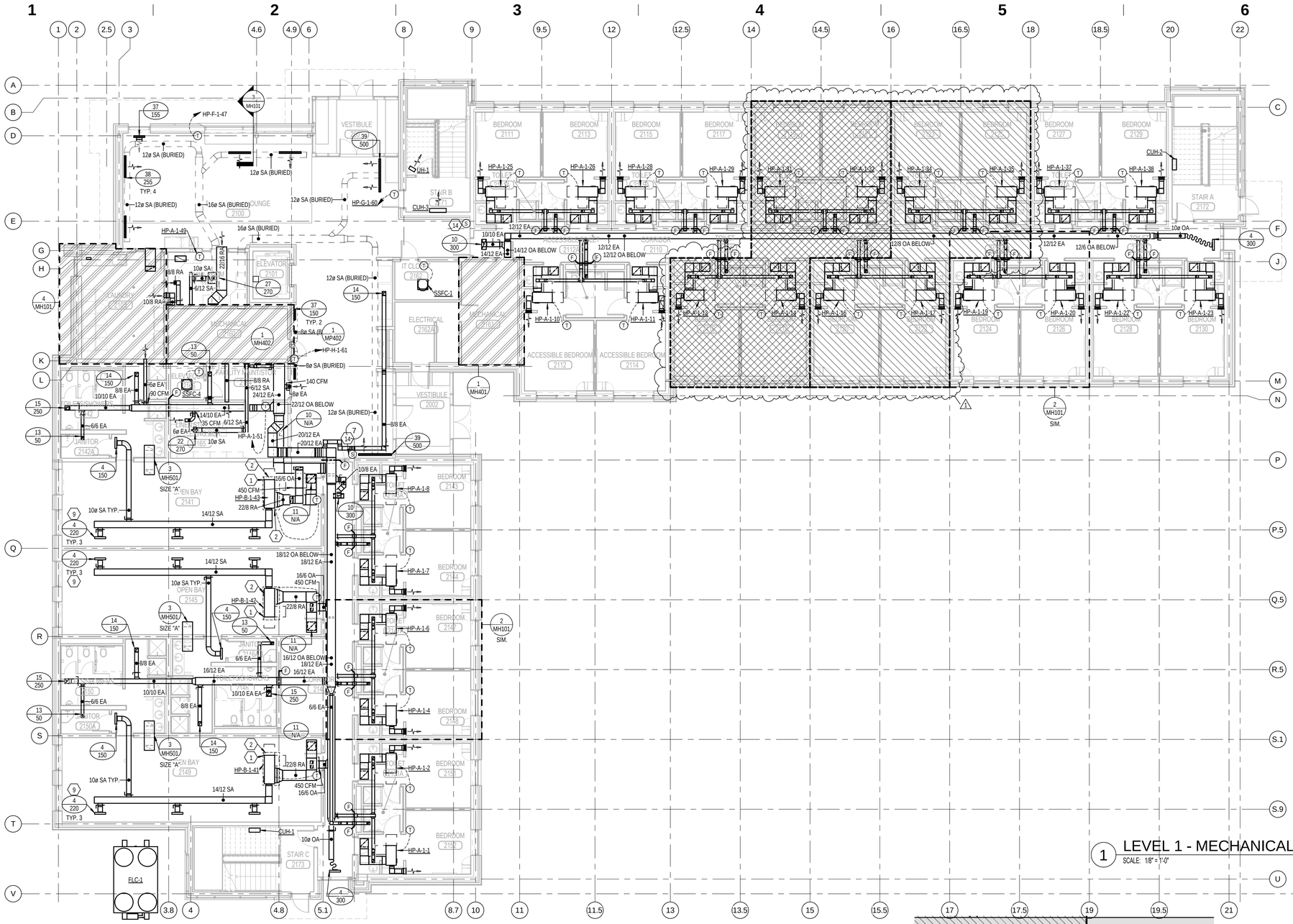

1 LEVEL 1 - MECHANICAL PLAN
SCALE: 1/8" = 1'-0"

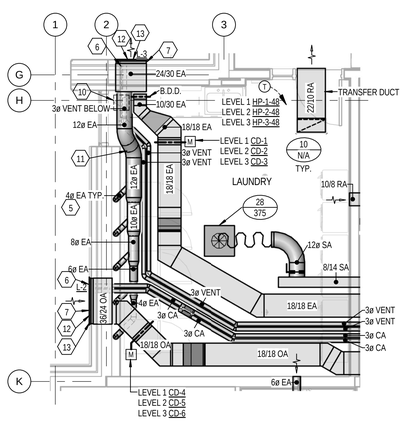

4 TYPICAL LAUNDRY MECHANICAL PLAN
SCALE: 1/4" = 1'-0"

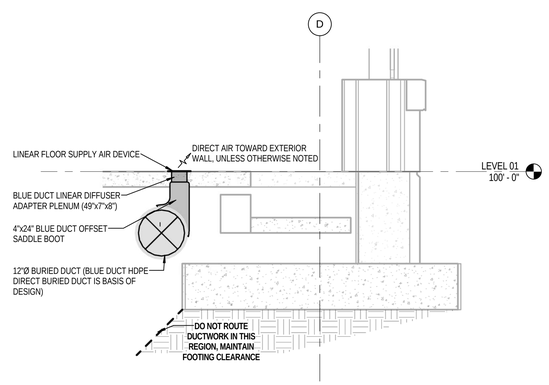

3 BURIED DUCT SECTION
SCALE: 3/4" = 1'-0"

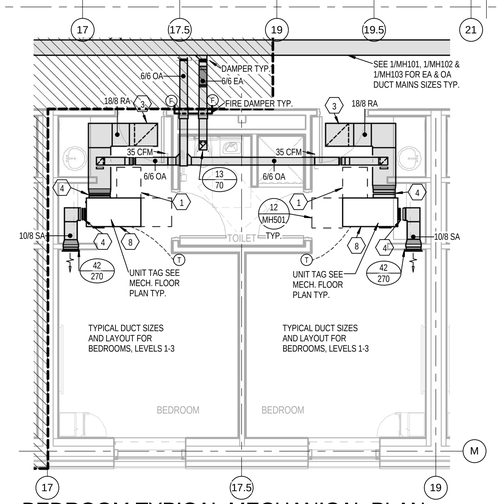

2 BEDROOM TYPICAL MECHANICAL PLAN
SCALE: 1/4" = 1'-0"

KEYED NOTES

1. DASHED LINE REPRESENTS MAINTENANCE ACCESS SPACE TO REMAIN CLEAR.
2. PROVIDE A 3' X 6' FULL SIZE ACCESS DOOR FOR MAINTENANCE ACCESS TO HEAT PUMP.
3. AIR DEVICE 11. SEE AIR DEVICE SCHEDULE ON SHEET MH601.
4. PROVIDE FLEXIBLE CONNECTION ON SUPPLY AND RETURN CONNECTION.
5. PROVIDE CLEAN OUT AT BOTTOM OF EACH VERTICAL RISER.
6. ROUTE BOTH 3"ø VENT OR CA TO BACK SIDE OF LOUVER.
7. COORDINATE EXACT LOUVER LOCATION WITH ARCHITECTURAL SHEET AE604 AND ANY OTHERS THAT APPLY PRIOR TO INSTALLATION.
8. SEE ARCHITECTURAL DETAIL X/AXXX FOR ACCESS PANEL INFORMATION.
9. DIRECT AIRFLOW OF ALL AIR DEVICE SLOTS AWAY FROM THE HEAD OF BEDS LOCATED BELOW.
10. PROVIDE LINT TRAP WITH ACCESS PANEL BELOW FOR DRYER LINT CLEANOUT.
11. DRYER EXHAUST DUCTWORK AND ROUTING MUST BE CONFIRMED BASED ON INSTALLED DRYER MANUFACTURER'S VENTING INSTRUCTIONS.
12. PROVIDE SHEETMETAL SEPARATION IN LOUVER PLENUM BETWEEN EXHAUST DUCT CONNECTIONS.
13. ENSURE THAT BOTTOM OF LOUVER IS AT 10' MINIMUM ABOVE FINISHED GRADE.
14. PROVIDE A MECHANICAL SYSTEM EMERGENCY SHUT DOWN SWITCH AT THIS APPROXIMATE LOCTAION TO COMPLY WITH AT/FP PROTOCOLS. LOCATE SWITCH NEAR THE NFPA 72 MANUAL FIRE ALRAM BOXES. CONFIRM EXACT FINAL LOCATION WITH THE OWNER. PER UFC 4-010-01, B-4.3, SWITCH SHALL PROVIDE A HARDWIRED INTERRUPT OF OPERATION FOR ALL HVAC AND VENTILATION EQUIPMENT: ENERGY RECOVERY VENTILATORS, CABINET UNIT HEATERS, SPLIT SYSTEM FAN COILS, AND HEAT PUMPS. SWITCH WILL ALSO CLOSE MOTORIZED CONTROL DAMPERS CD-1 THROUGH CD-10. REFER TO SPECIFICATION SECTION 230900 FOR ADDITIONAL REQUIREMENTS.

GENERAL NOTES

A. COORDINATE WITH ALL TRADES PRIOR TO INSTALLATION OF ANY MECHANICAL EQUIPMENT OR DUCT WORK.

ADD ALTERNATE LEGEND

ADD/ALT 2:
ADD TO BASE BID SQUARE FOOT AREA INDENTIFIED AS ADD/ALT "2". BUILDING WILL BE INCREASED BY THE DISTANCE EQUAL TO THAT OF EACH GROUP OF ROOMS SHOWN HATCHED. THIS INCLUDES ALL HVAC, PIPING, CONTROLS, PLUMBING AND FIRE PROTECTION. IT IS TYPICAL OF ALL 3 FLOORS.

ADD/ALT 3:
ADD TO BASE BID SQUARE FOOT AREA INDENTIFIED AS ADD/ALT "3". BUILDING WILL BE INCREASED BY THE DISTANCE EQUAL TO THAT OF EACH GROUP OF ROOMS SHOWN HATCHED. THIS INCLUDES ALL HVAC, PIPING, CONTROLS, PLUMBING AND FIRE PROTECTION. IT IS TYPICAL OF ALL 3 FLOORS.

ARCHITECTURAL NEXUS
SALT LAKE CITY PLACERVILLE SACRAMENTO

Architectural NEXUS, Inc.
2505 East Parleys Way
Salt Lake City, Utah 84109
T 801.924.5000 F 801.924.5001
http://www.archnexus.com

Stephen G. Conlin
Registered Professional Engineer
187524
03.21.13
State of Utah

Original drawings remain the property of the Architect and as such the Architect retains total ownership and control. The design represented by these drawings is sold to the client for a one time use, unless otherwise agreed upon in writing by the Architect.
© Architectural Nexus, Inc. 2012

UTAH NATIONAL GUARD CAMP WILLIAMS
RTI TASS COMPLEX, PHASE II
NGB PROJECT NO. 490444

UTAH NATIONAL GUARD
12953 MINUTEMAN DRIVE
DRAPER, UTAH 84020-1726

#	REVISIONS
1	2013-04-01 ADD #2

CEA PROJECT #:	2011-042.00
CHECKED BY:	SGC
DRAWN BY:	ENL
DATE:	21 MARCH 2013

SHEET CONTENTS:
LEVEL 1 MECHANICAL PLAN

VOLUME B - BID DOCUMENTS

MH101

COLVIN ENGINEERING ASSOCIATES
244 West 300 North, Suite 200 / Salt Lake City, Utah 84103
Phone 801.322.2400 / colvinengineering.com

Copyright (C) 2012 by Colvin Engineering Associates, Inc. Salt Lake City, Utah. All rights reserved. Unauthorized copying and/or use is illegal and subject to prosecution.

3/29/2013 11:15:18 AM

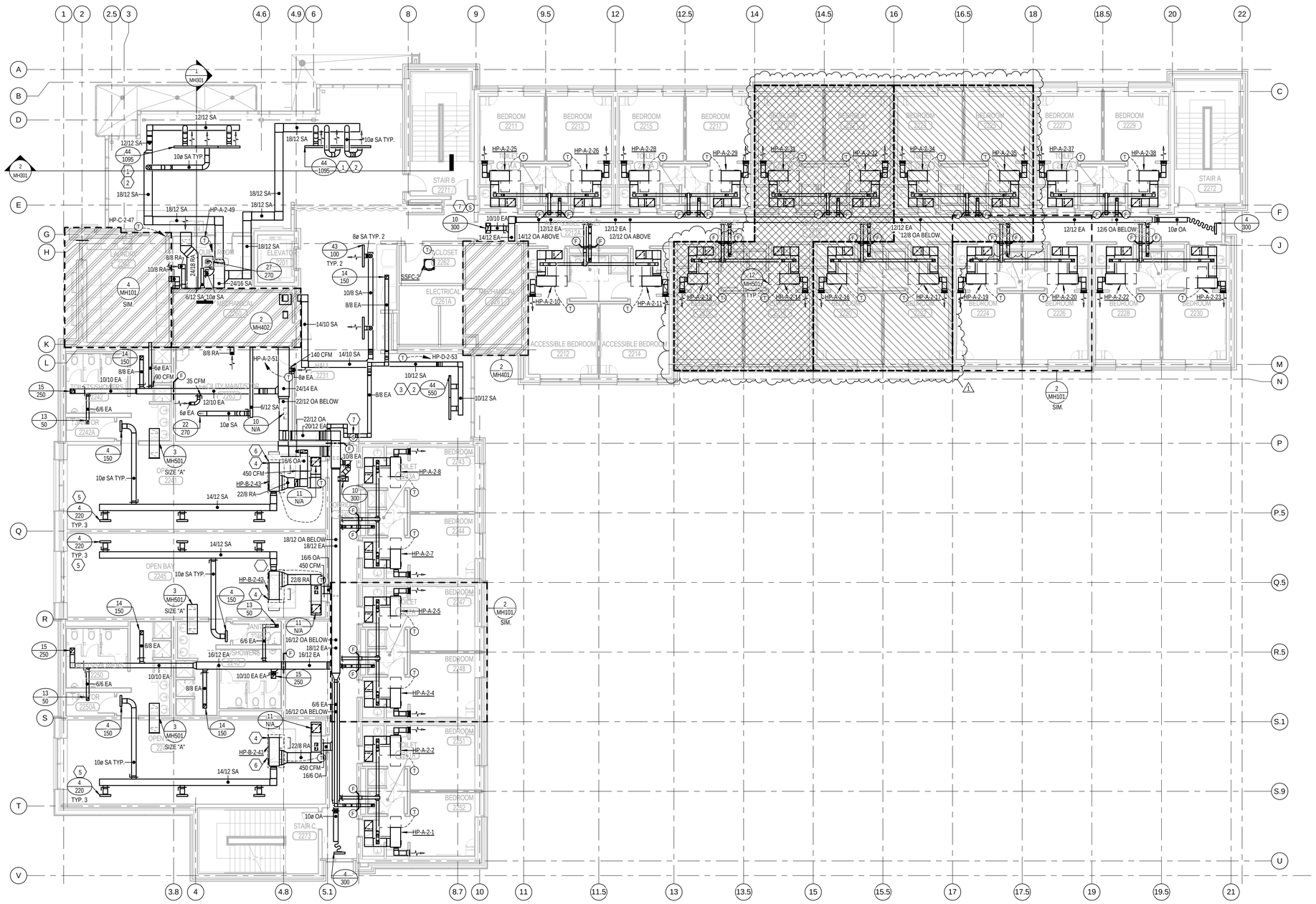

1 LEVEL 2 - MECHANICAL PLAN

SCALE: 1/8" = 1'-0"

KEYED NOTES

1. PROVIDE AIR DEVICE AS ONE UNIT FOR A CONTINUOUS LOOK. PROVIDE 3 PLENUM BOXES AS SHOWN AND BALANCE TO THE TOTAL AIR FLOW CALLED OUT ON THE PLAN.
2. ADJUST LINEAR AIR DEVICE SO THAT THE EXTERIOR SLOT BLOWS DOWN OR SLIGHTLY TOWARD THE EXTERIOR. ADJUST THE INTERIOR SLOT TO BLOW HORIZONTALLY INTO THE SPACE.
3. PROVIDE AIR DEVICE AS ONE UNIT FOR A CONTINUOUS LOOK. PROVIDE 2 PLENUM BOXES AS SHOWN AND BALANCE TO THE TOTAL AIR FLOW CALLED OUT ON THE PLAN.
4. DASHED LINE REPRESENTS MAINTENANCE ACCESS SPACE TO REMAIN CLEAR.
5. DIRECT AIRFLOW OF ALL AIR DEVICE SLOTS AWAY FROM THE HEAD OF BEDS LOCATED BELOW.
6. PROVIDE A 3' X 6' FULL SIZE ACCESS DOOR FOR MAINTENANCE ACCESS TO HEAT PUMP.
7. PROVIDE A MECHANICAL SYSTEM EMERGENCY SHUT DOWN SWITCH AT THIS APPROXIMATE LOCTAION TO COMPLY WITH ATFP PROTOCOLS. LOCATE SWITCH NEAR THE NFPA 72 MANUAL FIRE ALRAM BOXES. CONFIRM EXACT FINAL LOCATION WITH THE OWNER. PER UFC 4-010-01, B-4.3, SWITCH SHALL PROVIDE A HARDWIRED INTERRUPT OF OPERATION FOR ALL HVAC AND VENTILATION EQUIPMENT: ENERGY RECOVERY VENTILATORS, CABINET UNIT HEATERS, SPLIT SYSTEM FAN COILS, AND HEAT PUMPS. SWITCH WILL ALSO CLOSE MOTORIZED CONTROL DAMPERS CD-1 THROUGH CD-10. REFER TO SPECIFICATION SECTION 230900 FOR ADDITIONAL REQUIREMENTS.

GENERAL NOTES

A. COORDINATE WITH ALL TRADES PRIOR TO INSTALLATION OF ANY MECHANICAL EQUIPMENT OR DUCT WORK.

ADD ALTERNATE LEGEND

ADD/ALT 2:
ADD TO BASE BID SQUARE FOOT AREA INDENTIFIED AS ADD/ALT "2". BUILDING WILL BE INCREASED BY THE DISTANCE EQUAL TO THAT OF EACH GROUP OF ROOMS SHOWN HATCHED. THIS INCLUDES ALL HVAC, PIPING, CONTROLS, PLUMBING AND FIRE PROTECTION. IT IS TYPICAL OF ALL 3 FLOORS.

ADD/ALT 3:
ADD TO BASE BID SQUARE FOOT AREA INDENTIFIED AS ADD/ALT "3". BUILDING WILL BE INCREASED BY THE DISTANCE EQUAL TO THAT OF EACH GROUP OF ROOMS SHOWN HATCHED. THIS INCLUDES ALL HVAC, PIPING, CONTROLS, PLUMBING AND FIRE PROTECTION. IT IS TYPICAL OF ALL 3 FLOORS.

ARCHITECTURAL NEXUS
SALT LAKE CITY PLACERVILLE SACRAMENTO

Architectural NEXUS, Inc.
2505 East Parleys Way
Salt Lake City, Utah 84109
T 801.924.5000 F 801.924.5001
http://www.archnexus.com

Stephen G. Condon
No. 187524
03.21.13
State of Utah
Licensed Architect

Original drawings remain the property of the Architect and as such the Architect retains total ownership and control. The design represented by these drawings is sold to the client for a one time use, unless otherwise agreed upon in writing by the Architect.
© Architectural Nexus, Inc. 2012

UTAH NATIONAL GUARD CAMP WILLIAMS
RTI TASS COMPLEX, PHASE II
NGB PROJECT NO. 490444

UTAH NATIONAL GUARD
12953 MINUTEMAN DRIVE
DRAPER, UTAH 84020-1726

#	REVISIONS
1	2013-04-01 ADD #2

CEA PROJECT #:	2011-042.00
CHECKED BY:	Checker
DRAWN BY:	Author
DATE:	21 MARCH 2013

SHEET CONTENTS:
LEVEL 2 MECHANICAL PLAN

VOLUME B - BID DOCUMENTS

MH102

COLVIN ENGINEERING ASSOCIATES
244 West 300 North, Suite 200 / Salt Lake City, Utah 84103
Phone 801.322.2400 / colvinengineering.com

Copyright (C) 2012 by Colvin Engineering Associates, Inc. Salt Lake City, Utah. All rights reserved. Unauthorized copying and/or use is illegal and subject to prosecution.

3/29/2013 11:15:26 AM

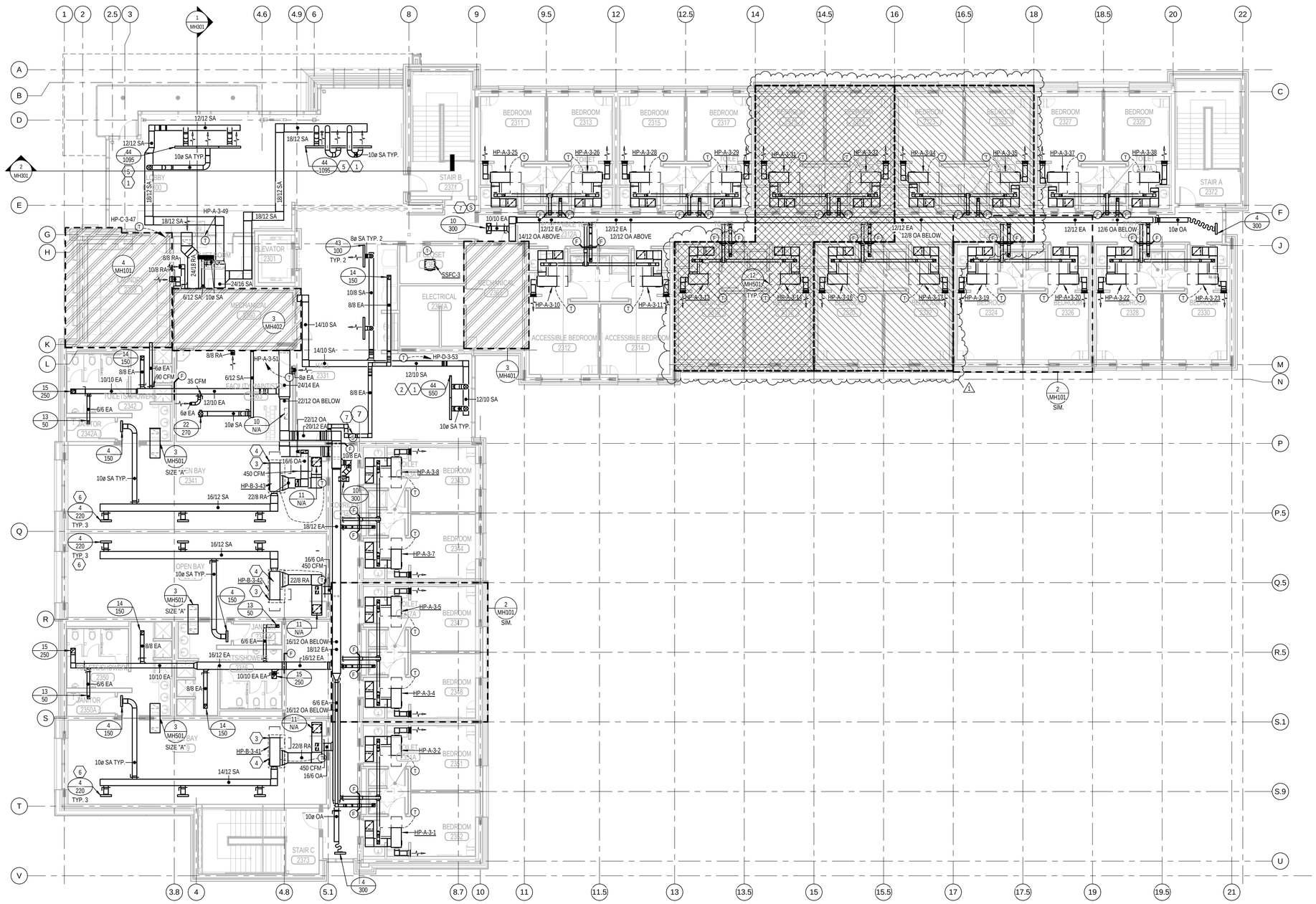

KEYED NOTES

1. ADJUST LINEAR AIR DEVICE SO THAT THE EXTERIOR SLOT BLOWS DOWN OR SLIGHTLY TOWARD THE EXTERIOR. ADJUST THE INTERIOR SLOT TO BLOW HORIZONTALLY INTO THE SPACE.
2. PROVIDE AIR DEVICE AS ONE UNIT FOR A CONTINUOUS LOOK. PROVIDE 2 PLENUM BOXES AS SHOWN AND BALANCE TO THE TOTAL AIR FLOW CALLED OUT ON THE PLAN.
3. DASHED LINE REPRESENTS MAINTENANCE ACCESS SPACE TO REMAIN CLEAR.
4. PROVIDE A 3' X 6' FULL SIZE ACCESS DOOR FOR MAINTENANCE ACCESS TO HEAT PUMP.
5. PROVIDE AIR DEVICE AS ONE UNIT FOR A CONTINUOUS LOOK. PROVIDE 3 PLENUM BOXES AS SHOWN AND BALANCE TO THE TOTAL AIR FLOW CALLED OUT ON THE PLAN.
6. DIRECT AIRFLOW OF ALL AIR DEVICE SLOTS AWAY FROM THE HEAD OF BEDS LOCATED BELOW.
7. PROVIDE A MECHANICAL SYSTEM EMERGENCY SHUT DOWN SWITCH AT THIS APPROXIMATE LOCTAION TO COMPLY WITH AT/FP PROTOCOLS. LOCATE SWITCH NEAR THE NFPA 72 MANUAL FIRE ALRAM BOXES. CONFIRM EXACT FINAL LOCATION WITH THE OWNER. PER UFC 4-010-01, B-4.3, SWITCH SHALL PROVIDE A HARDWIRED INTERRUPT OF OPERATION FOR ALL HVAC AND VENTILATION EQUIPMENT: ENERGY RECOVERY VENTILATORS, CABINET UNIT HEATERS, SPLIT SYSTEM FAN COILS, AND HEAT PUMPS. SWITCH WILL ALSO CLOSE MOTORIZED CONTROL DAMPERS CD-1 THROUGH CD-10. REFER TO SPECIFICATION SECTION 230900 FOR ADDITIONAL REQUIREMENTS.

GENERAL NOTES

A. COORDINATE WITH ALL TRADES PRIOR TO INSTALLATION OF ANY MECHANICAL EQUIPMENT OR DUCT WORK.

ADD ALTERNATE LEGEND

ADD/ALT 2:
ADD TO BASE BID SQUARE FOOT AREA INDENTIFIED AS ADD/ALT "2". BUILDING WILL BE INCREASED BY THE DISTANCE EQUAL TO THAT OF EACH GROUP OF ROOMS SHOWN HATCHED. THIS INCLUDES ALL HVAC, PIPING, CONTROLS, PLUMBING AND FIRE PROTECTION. IT IS TYPICAL OF ALL 3 FLOORS.

ADD/ALT 3:
ADD TO BASE BID SQUARE FOOT AREA INDENTIFIED AS ADD/ALT "3". BUILDING WILL BE INCREASED BY THE DISTANCE EQUAL TO THAT OF EACH GROUP OF ROOMS SHOWN HATCHED. THIS INCLUDES ALL HVAC, PIPING, CONTROLS, PLUMBING AND FIRE PROTECTION. IT IS TYPICAL OF ALL 3 FLOORS.

1 LEVEL 3 - MECHANICAL PLAN
SCALE: 1/8" = 1'-0"

ARCHITECTURAL NEXUS
SALT LAKE CITY PLACERVILLE SACRAMENTO

Architectural NEXUS, Inc.
2505 East Parleys Way
Salt Lake City, Utah 84109
T 801.924.5000 F 801.924.5001
http://www.archnexus.com

Stephen G. Conlin
Registered Professional Engineer
187524
03.21.13
State of Utah

Original drawings remain the property of the Architect and as such the Architect retains total ownership and control. The design represented by these drawings is sold to the client for a one time use, unless otherwise agreed upon in writing by the Architect.
© Architectural Nexus, Inc. 2012

UTAH NATIONAL GUARD CAMP WILLIAMS
RTI TASS COMPLEX, PHASE II
NGB PROJECT NO. 490444

UTAH NATIONAL GUARD
12953 MINUTEMAN DRIVE
DRAPER, UTAH 84020-1726

#	REVISIONS
1	2013-04-01 ADD #2

CEA PROJECT #:	2011-042.00
CHECKED BY:	SGC
DRAWN BY:	TCF
DATE:	21 MARCH 2013

SHEET CONTENTS:
LEVEL 3 MECHANICAL PLAN

VOLUME B - BID DOCUMENTS

MH103

COLVIN ENGINEERING ASSOCIATES
244 West 300 North, Suite 200 / Salt Lake City, Utah 84103
Phone 801.322.2400 / colvinengineering.com

Copyright (C) 2012 by Colvin Engineering Associates, Inc. Salt Lake City, Utah. All rights reserved. Unauthorized copying and/or use is illegal and subject to prosecution.

3/29/2013 11:15:34 AM

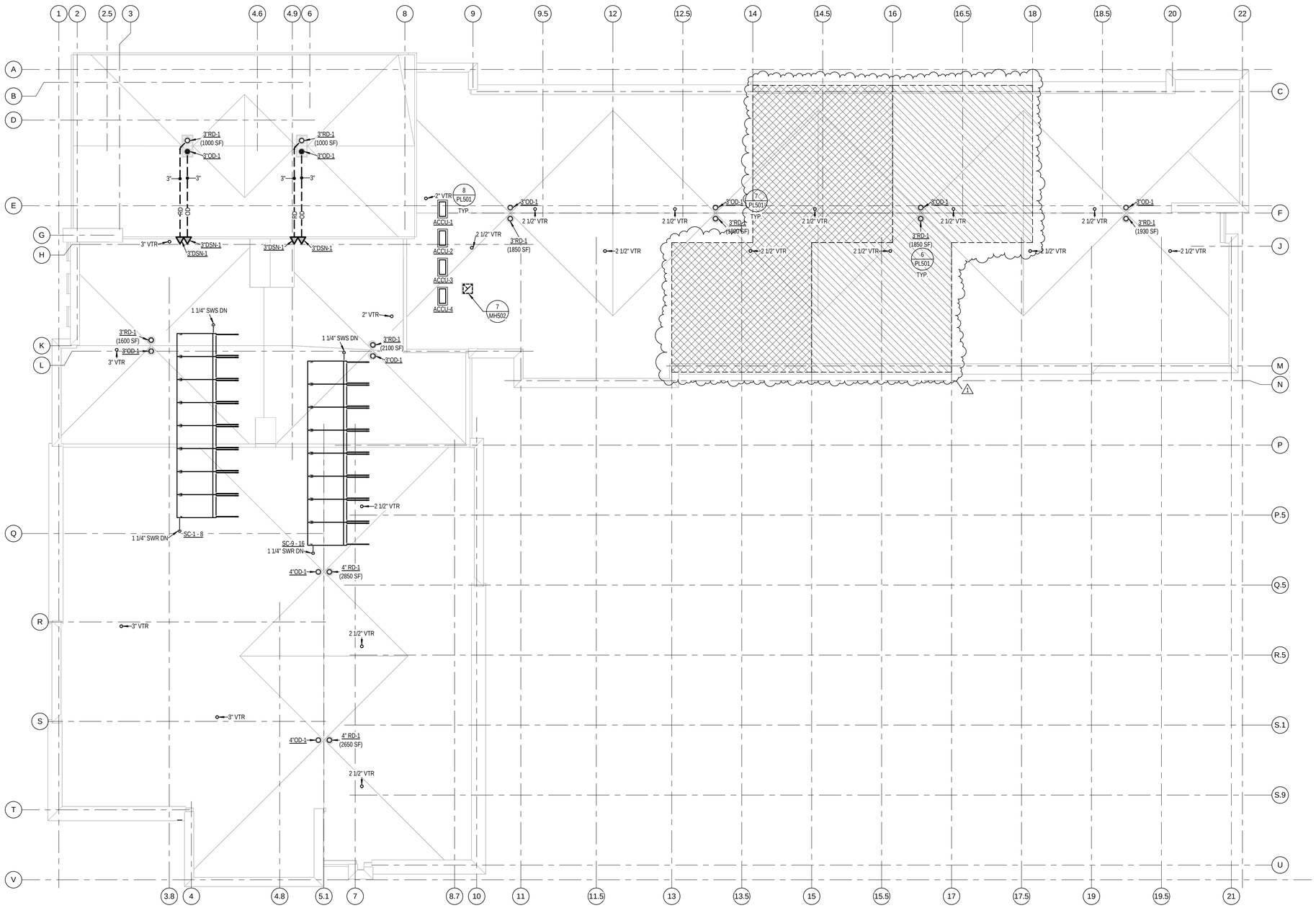

1 MECHANICAL/PLUMBING ROOF PLAN

SCALE: 1/8" = 1'-0"

GENERAL NOTES

A. COORDINATE WITH ALL TRADES PRIOR TO INSTALLATION OF ANY MECHANICAL EQUIPMENT OR DUCT WORK.

ADD ALTERNATE LEGEND

ADD/ALT 2:
ADD TO BASE BID SQUARE FOOT AREA INDENTIFIED AS ADD/ALT "2". BUILDING WILL BE INCREASED BY THE DISTANCE EQUAL TO THAT OF EACH GROUP OF ROOMS SHOWN HATCHED. THIS INCLUDES ALL HVAC, PIPING, CONTROLS, PLUMBING AND FIRE PROTECTION. IT IS TYPICAL OF ALL 3 FLOORS.

ADD/ALT 3:
ADD TO BASE BID SQUARE FOOT AREA INDENTIFIED AS ADD/ALT "3". BUILDING WILL BE INCREASED BY THE DISTANCE EQUAL TO THAT OF EACH GROUP OF ROOMS SHOWN HATCHED. THIS INCLUDES ALL HVAC, PIPING, CONTROLS, PLUMBING AND FIRE PROTECTION. IT IS TYPICAL OF ALL 3 FLOORS.

ARCHITECTURAL NEXUS
SALT LAKE CITY PLACERVILLE SACRAMENTO

Architectural NEXUS, Inc.
2505 East Parleys Way
Salt Lake City, Utah 84109
T 801.924.5000 F 801.924.5001
http://www.archnexus.com

Stephen G. Conlin
Registered Professional Engineer
187524
03.21.13
State of Utah

Original drawings remain the property of the Architect and as such the Architect retains total ownership and control. The design represented by these drawings is sold to the client for a one time use, unless otherwise agreed upon in writing by the Architect.
© Architectural Nexus, Inc. 2012

UTAH NATIONAL GUARD CAMP WILLIAMS
RTI TASS COMPLEX, PHASE II
NGB PROJECT NO. 490444

UTAH NATIONAL GUARD
12953 MINUTEMAN DRIVE
DRAPER, UTAH 84020-1726

#	REVISIONS
1	2013-04-01 ADD #2

CEA PROJECT #:	2011-042.00
CHECKED BY:	SGC
DRAWN BY:	TCF
DATE:	21 MARCH 2013

SHEET CONTENTS:
MECHANICAL & PLUMBING ROOF PLAN

VOLUME B - BID DOCUMENTS

MH121

COLVIN ENGINEERING ASSOCIATES
244 West 300 North, Suite 200 / Salt Lake City, Utah 84103
Phone 801.322.2400 / colvinengineering.com

Copyright (C) 2012 by Colvin Engineering Associates, Inc. Salt Lake City, Utah. All rights reserved. Unauthorized copying and/or use is illegal and subject to prosecution.

3/29/2013 11:15:46 AM

1	2	3	4	5	6

E

ELECTRIC CABINET UNIT HEATER SCHEDULE (CUH)

PLAN CODE	ELECTRICAL TOTAL KW	NO OF STEPS	VOLT/ PH	MOUNTING	EAT (°F)	MANUFACTURER & MODEL NO	REMARKS
CUH-1	4.8	1	208/3	WALL	60	QMARK CWH35083-SM	INTEGRAL THERMOSTAT
CUH-2	4.8	1	208/3	WALL	60	QMARK CWH35083-SM	INTEGRAL THERMOSTAT
CUH-3	4.8	1	208/3	WALL	60	QMARK CWH35083-SM	INTEGRAL THERMOSTAT

HEAT PUMP SCHEDULE

PLAN CODE	BASE BID QUANTITY	ADD/ALT #2 QUANTITY	ADD/ALT #3 QUANTITY	CFM	MIN OSA (CFM)	ESP (WC)	GPM	PD FT	FLUID	COOLING CAPACITY: HEAT OF REJECTION (MBH)	TOTAL CAP MBH	SENSIBLE CAP MBH	EAT DB/WB	LAT °F	EWT °F	POWER (KW)	(1) EER	(2) AVG. EER	HEATING CAPACITY: TOTAL (MBH)	EAT °FDB	LAT °F	EWT °F	HEAT OF ABSORPTION	POWER (KW)	(1) COP	(2) AVG. COP	ELECTRICAL: MCA	FLA	VOLTAGE/PHASE	MANUFACTURER & MODEL NO.	REMARKS
HP-A	60	12	12	270	35	0.5	1.25	5	25 % PG	7.8	6.3	5.4	80/67	58.0	77.0	0.44	14.5	14.7	4.7	70.0	89.0	32	3.2	0.44	3.15	4.33	4.3	3.5	208 / 1	CLIMATE MASTER TS 006	6 VERTICAL UNITS, 78 HORIZONTAL UNITS (3)
HP-B	9	0	0	810	450	0.5	4.0	6	25 % PG	23.7	20.0	15.8	80/67	58.3	77.0	1.06	18.2	18.6	13.7	70.0	88.5	32	10.1	1.06	3.8	5.02	16.8	14.2	208 / 1	CLIMATE MASTER TTH 026 P/L	ECM BLOWER (3)
HP-C	2	0	0	2050	230	0.8	9.0	5	25 % PG	87.4	68.9	51.9	80/67	53.7	77.0	4.65	13.4	12.9	49.2	70.0	94.5	32	33.3	4.65	3.1	4.1	40.0	33.2	208 / 1	CLIMATE MASTER TTV 072	ECM BLOWER
HP-D	2	0	0	750	185	0.5	3.75	6	25 % PG	24.0	19.7	15.7	80/67	56.7	77.0	1.18	15.7	15.9	13.8	70.0	90.5	32	9.8	1.18	3.43	4.77	15.2	12.9	208 / 1	CLIMATE MASTER TSV 018	ECM BLOWER
HP-E	3	0	0	375	90	0.5	2.0	5	25 % PG	14.7	11.9	8.0	80/67	56.2	77.0	0.83	14.1	14.4	9.1	70.0	95.1	32	6.2	0.83	3.2	3.96	7.0	5.7	208 / 1	CLIMATE MASTER TSV 012	-
HP-F	1	0	0	1130	215	0.5	4.0	6	25 % PG	36.5	29.6	22.1	80/67	58.2	77.0	1.85	14.7	14.9	22.2	70.0	90.1	32	15.9	1.85	3.52	4.57	14.3	12.2	208 / 3	CLIMATE MASTER TSV 030	ECM BLOWER, DOWN BLAST
HP-G	1	0	0	275	75	0.5	1.5	5	25 % PG	11.7	9.4	6.2	80/67	54.8	77.0	0.66	14.4	14.6	6.6	70.0	94.6	32	4.4	0.66	3.1	3.96	5.3	4.3	208 / 1	CLIMATE MASTER TSV 009	DOWN BLAST
HP-H	1	0	0	950	125	0.5	4.0	6	25 % PG	31.0	25.7	18.8	80/67	58.0	77.0	1.58	16.6	16.9	18.3	70.0	91.4	32	12.9	1.58	3.4	4.54	13.9	11.9	208 / 3	CLIMATE MASTER TSV 024	ECM BLOWER, DOWN BLAST

(1) EFFICIENCIES AT AHRI CONDITIONS. (2) EFFICIENCIES ARE AVERAGE SEASONAL EFFICIENCIES AT PROJECT CONDITIONS. (3) PROVIDE WITH SECONDARY DRAIN WATER LEVEL SENSORS ON HORIZONTAL UNITS.

BTU METER (BTUM)

PLAN CODE	SYSTEM SERVED	SHEET REFERENCE PLAN	SCHEMATIC	FLUID	TEMP RANGE °F	MINIMUM/ MAXIMUM RATE	PIPE SIZE	TYPE	MANUFACTURER & MODEL NO	OUTPUT
BTUM-1	GROUND LOOP WATER	MP401	MP201	FW	50-190	20/150	4"	TURBINE	ONICON SYSTEM-10	4 - 20 MA 0 - 10V DIGITAL DISPLAY

D

LOUVER SCHEDULE (L)

PLAN CODE	SERVICE	CFM	MAXIMUM VELOCITY (FPM)	MINIMUM FREE AREA (FT²)	MAXIMUM DIMENSIONS (W x H) (IN)	MANUFACTURER & MODEL NO (1) (2)
L-1	ERV-4-6 OSA	1,000	710	1.41	48 X 12	RUSKIN ELF6375DX
L-2	ERV-1-3 OSA/ WATER HEATER INTAKE	2,310	791	2.92	36 X 24	RUSKIN ELF6375DX
L-3	LAUNDRY/ BOILER/ ERV-1-3 EXHAUST	N/A	N/A	2.50	24 X 30	RUSKIN ELF6375DX

(1) TYPE AND COLOR TO BE REVIEWED AND CONFIRMED BY ARCHITECT.
(2) PROVIDE WITH BIRDSCREEN.

AIR COOLED CONDENSING UNIT SCHEDULE (ACCU)

PLAN CODE	SYSTEM SERVED	NET COOLING MBH	AMBIENT TEMP (°F)	REFRIGERANT TYPE	ELECTRICAL VOLTAGE/ PHASE	MCA	MOCP	DIMENSIONS LENGTH	WIDTH	HEIGHT	OPERATING WEIGHT (LBS)	MANUFACTURER & MODEL NO	REMARKS
ACCU-1	SSFC-1	12	105	R410A	208/230 / 1	13	15	14	32	24	250	MITSUBISHI PUY-A12NHA3	(1)(2)(3)
ACCU-2	SSFC-2	12	105	R410A	208/230 / 1	13	15	14	32	24	250	MITSUBISHI PUY-A12NHA3	(1)(2)(3)
ACCU-3	SSFC-3	12	105	R410A	208/230 / 1	13	15	14	32	24	250	MITSUBISHI PUY-A12NHA3	(1)(2)(3)
ACCU-4	SSFC-4	18	105	R410A	208/230 / 1	13	20	14	32	24	250	MITSUBISHI PUY-A18NHA3	(1)(2)(3)

(1) MOUNT UNIT ON MINIMUM 14" SEISMIC ROOF CURB.
(2) PROVIDE WITH LOW AMBIENT KIT DOWN TO 0°F.
(3) ROUTE REFRIGERANT PIPING FROM CONDENSING UNITS TO EQUIPMENT SYSTEM SERVED AS REQUIRED. SIZE REFRIGERANT PIPING PER MANUFACTURERS REQUIREMENTS.

ENERGY RECOVERY VENTILATOR (ERV)

PLAN CODE	OUTSIDE AIR WINTER (DBT)	SUMMER (DBT)	SUMMER (WBT)	EXHAUST AIR VOLUME (CFM)	ESP (IN WC)	MOTOR (HP)	WINTER (DBT)	SUMMER (DBT)	SUMMER (WBT)	SUPPLY AIR VOLUME (CFM)	MOTOR (HP)	ESP (IN WC)	WINTER (DBT)	SUMMER (DBT)	SUMMER (WBT)	ELECTRICAL VOLT / PH	MCA (A)	MOCP (A)	WEIGHT (LBS)	ACCESSORIES	BASIS OF DESIGN
ERV-1	9.3	97.4	63.5	2310	0.5	2	72	75	60	2310	2	0.5	52.9	81.3	58.4	208 / 3	26.8	34.6	1000	MERV 13 SUPPLY FILTER	MICROMETL FWVD
ERV-2	9.3	97.4	63.5	2310	0.5	2	72	75	60	2310	2	0.5	52.9	81.3	58.4	208 / 3	26.8	34.6	1000	MERV 13 SUPPLY FILTER	MICROMETL FWVD
ERV-3	9.3	97.4	63.5	2310	0.5	2	72	75	60	2310	2	0.5	52.9	81.3	58.4	208 / 3	26.8	34.6	1000	MERV 13 SUPPLY FILTER	MICROMETL FWVD
ERV-4	9.3	97.4	63.5	1000	0.5	2	72	75	60	1000	2	0.5	54.4	80.8	58.2	208 / 3	10.3	15	800	MERV 13 SUPPLY FILTER	MICROMETL EVCC
ERV-5	9.3	97.4	63.5	1000	0.5	2	72	75	60	1000	2	0.5	54.4	80.8	58.2	208 / 3	10.3	15	800	MERV 13 SUPPLY FILTER	MICROMETL EVCC
ERV-6	9.3	97.4	63.5	1000	0.5	2	72	75	60	1000	2	0.5	54.4	80.8	58.2	208 / 3	10.3	15	800	MERV 13 SUPPLY FILTER	MICROMETL EVCC

FLUID COOLER SCHEDULE (FLC)

PLAN CODE	GROUND LOOP FLOW (GPM)	TOTAL HEAT REJECTED (MBH)	EWT (°F)	LWT (°F)	FLUID PD (FT)	OSA WB (°F)	NO OF CELLS	MIN FAN EFF (%)	FLUID TYPE (%)	INTERNAL WATER FLOW (GPM)	MAKE-UP WATER (GPM)	ELECTRICAL MAX BHP TOTAL	MOTOR HP	CONTROL	VOLT/ PH	MAX DIMENSIONS LENGTH (IN)	WIDTH (IN)	HEIGHT (IN)	MAX OPERATING WT (LBS)	MANUFACTURER & MODEL NO (1)(2)(3)
FLC-1	240	1,500	90	77	5.5	67	1	PREMIUM	25% PPG	360	3.5	23	(4) 5 HP FANS (1) 3 HP PUMP	BAS	208/3	96	168	115	15,000	MARLEY/RECOLD MW-96B

(1) GALVANIZED STEEL CASING AND FRAMING. SERIES 300 STAINLESS STEEL DISTRIBUTION BASINS AND COVERS, SERIES 300 STAINLESS STEEL COLLECTION BASIN.
(2) PROVIDE WITH MAKE UP WATER FLOAT VALVE.
(3) MOUNT ON 6" CONCRETE HOUSEKEEPING PAD.

AIR DEVICE SCHEDULE

PLAN CODE / GRILLE CFM

PLAN CODE	TYPE & DUTY	FACE SIZE	NECK SIZE	CEILING TYPE (2)	MAX CFM	MAX TP (IN WC)	NC LEVEL MAX	MIN THROW (FT) (T50)	MANUFACTURER & MODEL NO	REMARKS
2	LINEAR-SUPPLY	24"L	8"ø	MATCH CEILING	160	0.09	33	13	TEMP0 L.D.	2 @ 1" SLOT
4	LINEAR-SUPPLY	24"L	10"ø	MATCH CEILING	320	0.11	35	15	TEMP0 L.D.	4 @ 1" SLOT
9	PERFORATED RETURN	24" X 24"	22" X 22"	MATCH CEILING	1200	0.05	17	-	TITUS PAR	-
10	PERFORATED RETURN	24" X 12"	22"X 10"	MATCH CEILING	600	0.06	10	-	TITUS PAR	-
11	PERFORATED RETURN	20" X 20"	18" X 18"	MATCH CEILING	800	0.1	10	-	TITUS PAR	-
13	PERFORATED EXHAUST GRILLE	8" X 8"	6" X 6"	MATCH CEILING	120	0.12	10	-	TITUS 8F	PROVIDE WITH OPTIONAL OPPOSED BLADE DAMPER (BORDER TYPE 1) ACCESSIBLE THROUGH GRILLE
14	PERFORATED EXHAUST GRILLE	10" X 10"	8" X 8"	MATCH CEILING	225	0.12	12	-	TITUS 8F	PROVIDE WITH OPTIONAL OPPOSED BLADE DAMPER (BORDER TYPE 1) ACCESSIBLE THROUGH GRILLE
15	PERFORATED EXHAUST GRILLE	12" X 12"	10" X 10"	MATCH CEILING	360	0.12	14	-	TITUS 8F	PROVIDE WITH OPTIONAL OPPOSED BLADE DAMPER (BORDER TYPE 1) ACCESSIBLE THROUGH GRILLE
22	RADIAL BLADE DIFFUSER	15"ø	10"ø	SURFACE	330	0.14	29	10 (1)	AIR DIFFUSION PRODUCTS DNR	-
27	RADIAL BLADE DIFFUSER	24" X 24"	10"ø	GRID	330	0.14	29	10 (1)	AIR DIFFUSION PRODUCTS DNR	-
28	RADIAL BLADE DIFFUSER	24" X 24"	12"	GRID	470	0.14	30	12 (1)	AIR DIFFUSION PRODUCTS DNR	-
37	BAR FLOOR DIFFUSER	6" x 26"	4" x 24" (8" ø DUCT)	200	100/FT	0.05	21	13	PRICE LBPH 26C	CORE 26C (7/16" SPACING,3/16 " BARS, 15° DEFLECTION), HEAVY DUTY FLANGED, BORDER-TYPE 1000-TYPE A FASTENING, VCS3 BALANCING DAMPER
38	BAR FLOOR DIFFUSER	6" x 50"	4" x 48" (8" ø DUCT)	400	100/FT	0.05	21	13	PRICE LBPH 26C	CORE 26C (7/16" SPACING,3/16 " BARS, 15° DEFLECTION), HEAVY DUTY FLANGED, BORDER-TYPE 1000-TYPE A FASTENING, VCS3 BALANCING DAMPER
39	BAR FLOOR DIFFUSER	7" x 50"	5" x 48"	600	150/FT	0.08	24	16	PRICE LBPH 26C	CORE 26C (7/16" SPACING,3/16 " BARS, 15° DEFLECTION), HEAVY DUTY FLANGED, BORDER-TYPE 1000-TYPE A FASTENING, VCS3 BALANCING DAMPER
42	SIDE WALL LOUVERED SUPPLY	12" X 10"	10" x 8"	MATCH SURFACE	325	0.10	21	18	PRICE 520D-F-L-D-A	PROVIDE WITH OPTIONAL BALANCING DAMPER AND MOUNTING FRAME, COORDINATE FINISH TYPE AND COLOR WITH ARCHITECT AND OWNER
43	LINEAR SUPPLY SLOT DIFFUSER	4" X L	8" ø	MATCH CEILING	60/FT	0.08	20	24	PRICE AST220-1-23-8"	COORDINATE FINISH WITH ARCHITECT AND OWNER, PROVIDE WITH OPTIONAL CABLE BALANCING DAMPER-ACCESSIBLE THROUGH DIFFUSER FACE
44	LINEAR SUPPLY SLOT DIFFUSER	8" X L	10" ø	MATCH CEILING	100/FT	0.08	22	25	PRICE AST215-2-23-10"	COORDINATE FINISH WITH ARCHITECT AND OWNER, PROVIDE WITH OPTIONAL CABLE BALANCING DAMPER-ACCESSIBLE THROUGH DIFFUSER FACE

(1) RECOMMENDED MINIMUM DISTANCE BETWEEN DIFFUSERS IN 9' CEILING.
(2) VERIFY FRAME TYPE OF ALL AIR DEVICES WITH ARCHITECTURAL REFLECTED CEILING PLAN/CEILING VENDOR BEFORE ORDERING. GRID CEILING AIR DEVICES ARE BASED ON A 15/16" GRID. THE ARCHITECT HAS INDICATED THAT THERE MAY BE 9/16" GRID IN SOME PLACES AS WELL AS TEGULAR TYPE CEILING GRIDS. ADJUST THE MODEL NUMBERS TO OBTAIN THE CORRECT AIR DEVICE.

C

SPLIT SYSTEM DIRECT EXPANSION FAN COIL (SSFC) (2)

PLAN CODE	AREA SERVED	CFM	COOLING CAPACITY (MBH) (1)	ELECTRICAL MCA	WATTS	VOLTS	PH	HZ	WEIGHT LBS	MANUFACTURER & MODEL NO
SSFC-1	IT 2162	530	12	1	50	208/230	1	60	65	MITSUBISHI PLA-A12BA
SSFC-2	IT 2262	530	12	1	50	208/230	1	60	65	MITSUBISHI PLA-A12BA
SSFC-3	IT 2362	530	12	1	50	208/230	1	60	65	MITSUBISHI PLA-A12BA
SSFC-4	ELEV 2166	640	18	1	50	208/230	1	60	65	MITSUBISHI PLA-A18BA

(1) RATING AT 97° F DB / 63° F WB ENTERING CONDENSING UNIT.
(2) ROUTE REFRIGERANT LINES FROM CONDENSING UNIT TO SPLIT SYSTEM FAN COILS AS REQUIRED. ROUTE AND SIZE REFRIGERANT LINES PER MANUFACTURERS REQUIREMENTS.

AIR SEPARATOR (AS)

PLAN CODE	SYSTEM SERVED	CONNECTION SIZE	MAX GPM	PD (FT)	MAX DIMENSIONS (IN) DIAMETER	HEIGHT	FLANGE TO FLANGE	DRY WT (LBS)	MANUFACTURER & MODEL NO
AS-1	HEAT PUMP LOOP	5"	260	2.44	12.8	30.6	27.7	185	SPIROTHERM SENIOR

RADIANT CEILING PANEL SCHEDULE (RCP)

PLAN CODE	ELECTRICAL TOTAL KW	NO OF STEPS	VOLT/ PH	MOUNTING	SIZE (IN)	MANUFACTURER & MODEL NO	REMARKS
RCP-1	7.5	1	208/3	CEILING	24 X 48	QMARK CP758	INTEGRAL THERMOSTAT
RCP-2	7.5	1	208/3	CEILING	24 X 48	QMARK CP758	INTEGRAL THERMOSTAT

B

EXPANSION TANK SCHEDULE (ET)

PLAN CODE	SYSTEM SERVED	WATER TEMP (°F)	% GLYCOL	TANK VOLUME (GAL)	ACCEPTANCE VOLUME (GAL)	PRE-CHARGE (PSI)	MAX DIMENSIONS DIA (IN)	HEIGHT (IN)	OPERATING WT (LBS)	MANUFACTURER & MODEL NO	REMARKS
ET-1	HEAT PUMP	30 - 110	25% PG	44.5	22.6	10	24	28	520	AMTROL AX - 80V	1" NPT SYSTEM CONNECTION

CONTROL DAMPER SCHEDULE (CD)

PLAN CODE	SERVICE	TYPE (1)	AIR FLOW VOLUME (CFM)	DIMENSIONS WIDTH (IN)	HEIGHT (IN)	MAX FACE VELOCITY (FPM)	METHOD OF CONTROL	BLADE ORIENTATION	MANUFACTURER & MODEL NO
CD-1	ERV-1 EXHAUST AIR	MOTORIZED 2- POSITION	2,310	18	18	1,026	HARDWIRED INTERLOCK	HORIZONTAL OPPOSED BLADE	RUSKIN CD60 (2)
CD-2	ERV-2 EXHAUST AIR	MOTORIZED MODULATING	2,310	18	18	1,026	HARDWIRED INTERLOCK	HORIZONTAL OPPOSED BLADE	RUSKIN CD60 (2)
CD-3	ERV-3 EXHAUST AIR	MOTORIZED MODULATING	2,310	18	18	1,026	HARDWIRED INTERLOCK	HORIZONTAL OPPOSED BLADE	RUSKIN CD60 (2)
CD-4	ERV-1 OUTSIDE AIR	MOTORIZED MODULATING	2,310	18	18	1,026	HARDWIRED INTERLOCK	HORIZONTAL OPPOSED BLADE	RUSKIN CD60 (2)
CD-5	ERV-2 OUTSIDE AIR	MOTORIZED MODULATING	2,310	18	18	1,026	HARDWIRED INTERLOCK	HORIZONTAL OPPOSED BLADE	RUSKIN CD60 (2)
CD-6	ERV-3 OUTSIDE AIR	MOTORIZED 2-POSITION	2,310	18	18	1,026	HARDWIRED INTERLOCK	HORIZONTAL OPPOSED BLADE	RUSKIN CD60 (2)
CD-7	ERV-4 OUTSIDE AIR	MOTORIZED 2-POSITION	1,000	16	12	750	HARDWIRED INTERLOCK	HORIZONTAL OPPOSED BLADE	RUSKIN CD60 (2)
CD-8	ERV-5 OUTSIDE AIR	MOTORIZED 2-POSITION	1,000	16	12	750	HARDWIRED INTERLOCK	HORIZONTAL OPPOSED BLADE	RUSKIN CD60 (2)
CD-9	ERV-6 OUTSIDE AIR	MOTORIZED 2-POSITION	1,000	16	12	750	HARDWIRED INTERLOCK	HORIZONTAL OPPOSED BLADE	RUSKIN CD60 (2)
CD-10	ERV-4-6 EXHAUST AIR	MOTORIZED 2-POSITION	3,000	20	20	1,080	HARDWIRED INTERLOCK	HORIZONTAL OPPOSED BLADE	RUSKIN CD60 (2)

(1) PROVIDE END SWITCHES ON DAMPER.
(2) PROVIDE A HARDWIRED INTERLOCK TO CLOSE DAMPER IF ACTIVATED BY ANY BUILDING AT/FP EMERGENCY SHUTDOWN SWITCH.

PUMP SCHEDULE (P)

PLAN CODE	TYPE	DUTY	FLOW (GPM)	PRESSURE (FT HD)	PUMP SPEED (RPM)	MIN EFF (%)	FLUID	MOTOR LOAD (BHP)	SIZE (HP)	EFFICIENCY (%)	W/GPM	VOLT/ PH	METHOD OF CONTROL	PUMP & MOTOR WT (LBS)	MANUFACTURER & MODEL NO
P-1	VERTICAL IN LINE	HEAT PUMP LOOP	240	115	3500	60	25% PG	10.65	15	91	33	208 / 3	ATC VFD-1	500	BELL & GOSSETT 80 2-1/2X2-1/2X7 (1)
P-2	VERTICAL IN LINE	HEAT PUMP LOOP	240	115	3500	60	25% PG	10.65	15	91	33	208 / 3	ATC VFD-2	500	BELL & GOSSETT 80 2-1/2X2-1/2X7 (1)

(1) PROVIDE PUMP WITH A SUCTION DIFFUSER.

VARIABLE FREQUENCY DRIVE SCHEDULE (VFD) (1)

PLAN CODE	SERVICE	CONTROL OF VFD METHOD	MAXIMUM RESPONSE TIME	CONTROLLER INPUT	CONTROL SYS INTERFACE	HARMONICS ISOLATION	MANUFACTURER & MODEL NO	REMARKS
VFD-1	PUMP P-1	ATC	<150 MILLISECONDS	DIFFERENTIAL PRESSURE	BACNET	INPUT REACTORS	ABB ACH550	PASSWORD PROTECTED KEYPAD, LOCKING DISCONNECT
VFD-2	PUMP P-2	ATC	<150 MILLISECONDS	DIFFERENTIAL PRESSURE	BACNET	INPUT REACTORS	ABB ACH550	

(1) PROVIDE WITH PULSE WIDTH MODULATION DRIVE TYPE, NO BYPASS, RATED FOR 4,815 FT ELEVATION AND 105 °F AMBIENT TEMPERATURE.

A

GLYCOL MAKE-UP SCHEDULE (GM)

PLAN CODE	SYSTEM SERVED	FLUID	TANK VOLUME (GAL)	ELECTRICAL	MANUFACTURER & MODEL NO
GM-1	GROUND LOOP	25% PG	18	120/1	WESSELS/GLYMATIC GMP-18

ELECTRIC UNIT HEATER SCHEDULE (UH)

PLAN CODE	ELECTRICAL TOTAL KW	NO OF STEPS	VOLT/ PH	MOUNTING	EAT (°F)	MANUFACTURER & MODEL NO	REMARKS
UH-1	5	1	208/3	CEILING	60	QMARK MUH0581	INTEGRAL THERMOSTAT

JOB SITE ELEVATION = 4,815 FT
JOB SITE PRESSURE = 12.31 PSI
SELECT ALL EQUIPMENT FOR OPERATION AT JOB SITE ELEVATION

ALL MOTORS TO BE PREMIUM EFFICIENCY

Copyright (C) 2012 by Colvin Engineering Associates, Inc. Salt Lake City, Utah. All rights reserved. Unauthorized copying and/or use is illegal and subject to prosecution.

3/29/2013 11:15:47 AM

A R C H I T E C T U R A L NEXUS
SALT LAKE CITY PLACERVILLE SACRAMENTO
Architectural NEXUS, Inc.
2505 East Parleys Way
Salt Lake City, Utah 84109
T 801.924.5000 F 801.924.5001
http://www.archnexus.com

Stephen G. Connor REGISTERED PROFESSIONAL ENGINEER 187524 03.21.13 State of Utah

Original drawings remain the property of the Architect and as such the Architect retains total ownership and control. The design represented by these drawings is sold to the client for a one time use, unless otherwise agreed upon in writing by the Architect. © Architectural Nexus, Inc. 2012

UTAH NATIONAL GUARD CAMP WILLIAMS
RTI TASS COMPLEX, PHASE II
NGB PROJECT NO. 490444

UTAH NATIONAL GUARD
12953 MINUTEMAN DRIVE
DRAPER, UTAH 84020-1726

NATIONAL GUARD UTAH

#	REVISIONS
1	2013-04-01 ADD #2

CEA PROJECT #: 2011-042.00
CHECKED BY: SGC
DRAWN BY: TCF
DATE: 21 MARCH 2013

SHEET CONTENTS:
MECHANICAL SCHEDULES

VOLUME B - BID DOCUMENTS

MH601

COLVIN ENGINEERING ASSOCIATES
244 West 300 North, Suite 200 / Salt Lake City, Utah 84103
Phone 801.322.2400 / colvinengineering.com

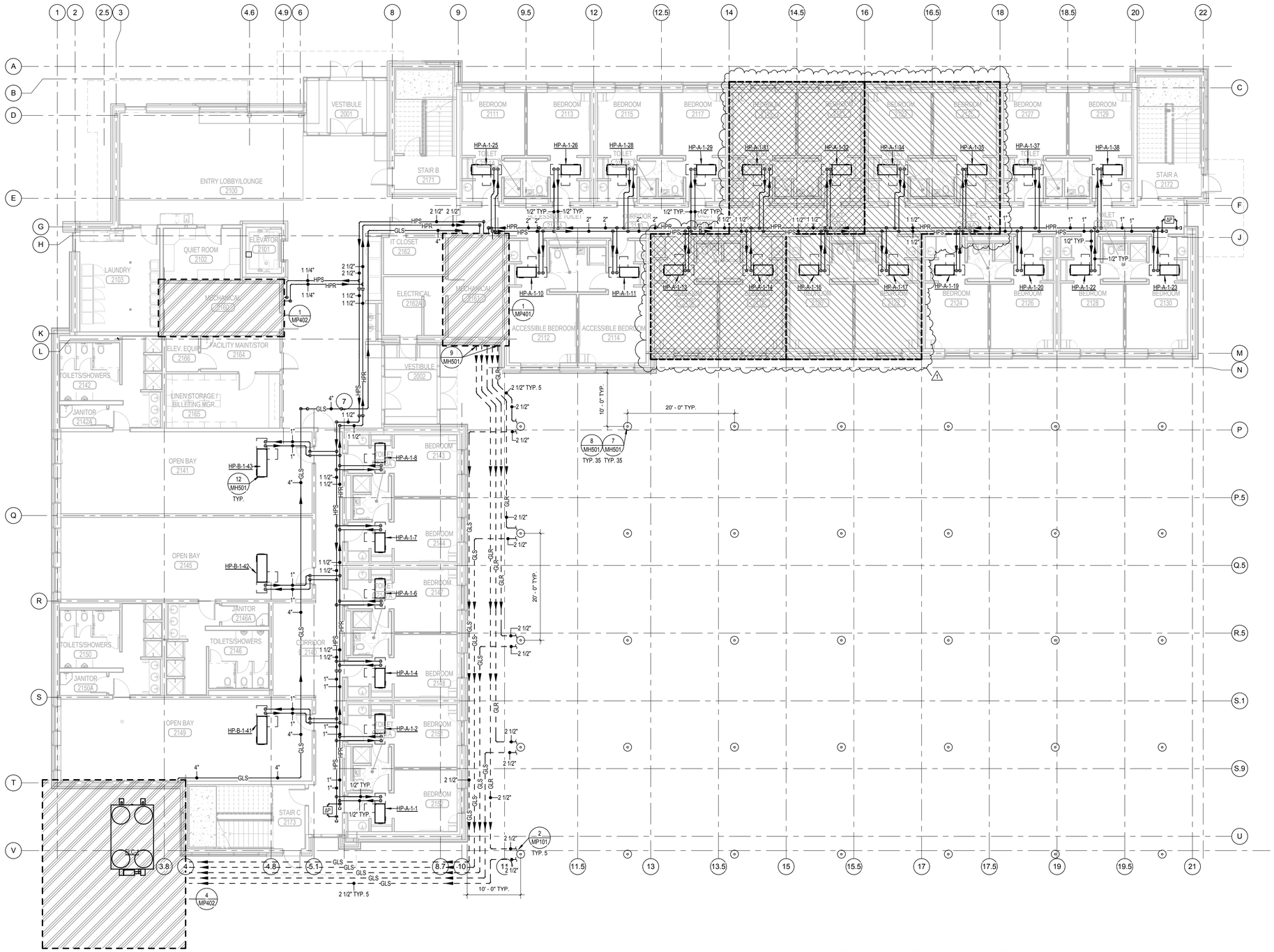

1 LEVEL 1 - MECHANICAL PIPING PLAN

SCALE: 1/8" = 1'-0"

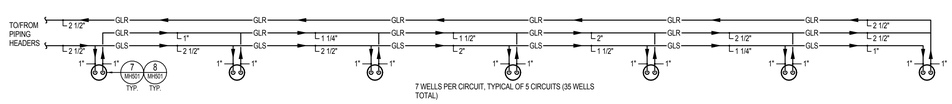

2 BORE FIELD PIPING DETAIL (REVERSE RETURN)

SCALE: NONE

GENERAL NOTES

A. COORDINATE WITH ALL TRADES PRIOR TO INSTALLATION OF ANY MECHANICAL PIPING OR EQUIPMENT.

B. DO NOT ROUTE OR LOCATE ANY MECHANICAL PIPING OR EQUIPMENT OVER ANY ELECTRICAL EQUIPMENT.

ADD ALTERNATE LEGEND

ADD/ALT 2:
ADD TO BASE BID SQUARE FOOT AREA INDENTIFIED AS ADD/ALT "2". BUILDING WILL BE INCREASED BY THE DISTANCE EQUAL TO THAT OF EACH GROUP OF ROOMS SHOWN HATCHED. THIS INCLUDES ALL HVAC, PIPING, CONTROLS, PLUMBING AND FIRE PROTECTION. IT IS TYPICAL OF ALL 3 FLOORS.

ADD/ALT 3:
ADD TO BASE BID SQUARE FOOT AREA INDENTIFIED AS ADD/ALT "3". BUILDING WILL BE INCREASED BY THE DISTANCE EQUAL TO THAT OF EACH GROUP OF ROOMS SHOWN HATCHED. THIS INCLUDES ALL HVAC, PIPING, CONTROLS, PLUMBING AND FIRE PROTECTION. IT IS TYPICAL OF ALL 3 FLOORS.

ARCHITECTURAL NEXUS
SALT LAKE CITY PLACERVILLE SACRAMENTO

Architectural NEXUS, Inc.
2505 East Parleys Way
Salt Lake City, Utah 84109
T 801.924.5000 F 801.924.5001
http://www.archnexus.com

Stephen G. Conroy
187524
03.21.13
State of Utah

Original drawings remain the property of the Architect and as such the Architect retains total ownership and control. The design represented by these drawings is sold to the client for a one time use, unless otherwise agreed upon in writing by the Architect.
© Architectural Nexus, Inc. 2012

UTAH NATIONAL GUARD CAMP WILLIAMS
RTI TASS COMPLEX, PHASE II
NGB PROJECT NO. 490444

UTAH NATIONAL GUARD
12953 MINUTEMAN DRIVE
DRAPER, UTAH 84020-1726

#	REVISIONS
1	2013-04-01 ADD #2

CEA PROJECT #:	2011-042.00
CHECKED BY:	SGC
DRAWN BY:	EHW
DATE:	21 MARCH 2013

SHEET CONTENTS:
LEVEL 1 MECHANICAL PIPING PLAN

VOLUME B - BID DOCUMENTS

MP101

COLVIN ENGINEERING ASSOCIATES
244 West 300 North, Suite 200 / Salt Lake City, Utah 84103
Phone 801.322.2400 / colvinengineering.com

Copyright (C) 2012 by Colvin Engineering Associates, Inc. Salt Lake City, Utah. All rights reserved. Unauthorized copying and/or use is illegal and subject to prosecution.

3/29/2013 11:15:56 AM

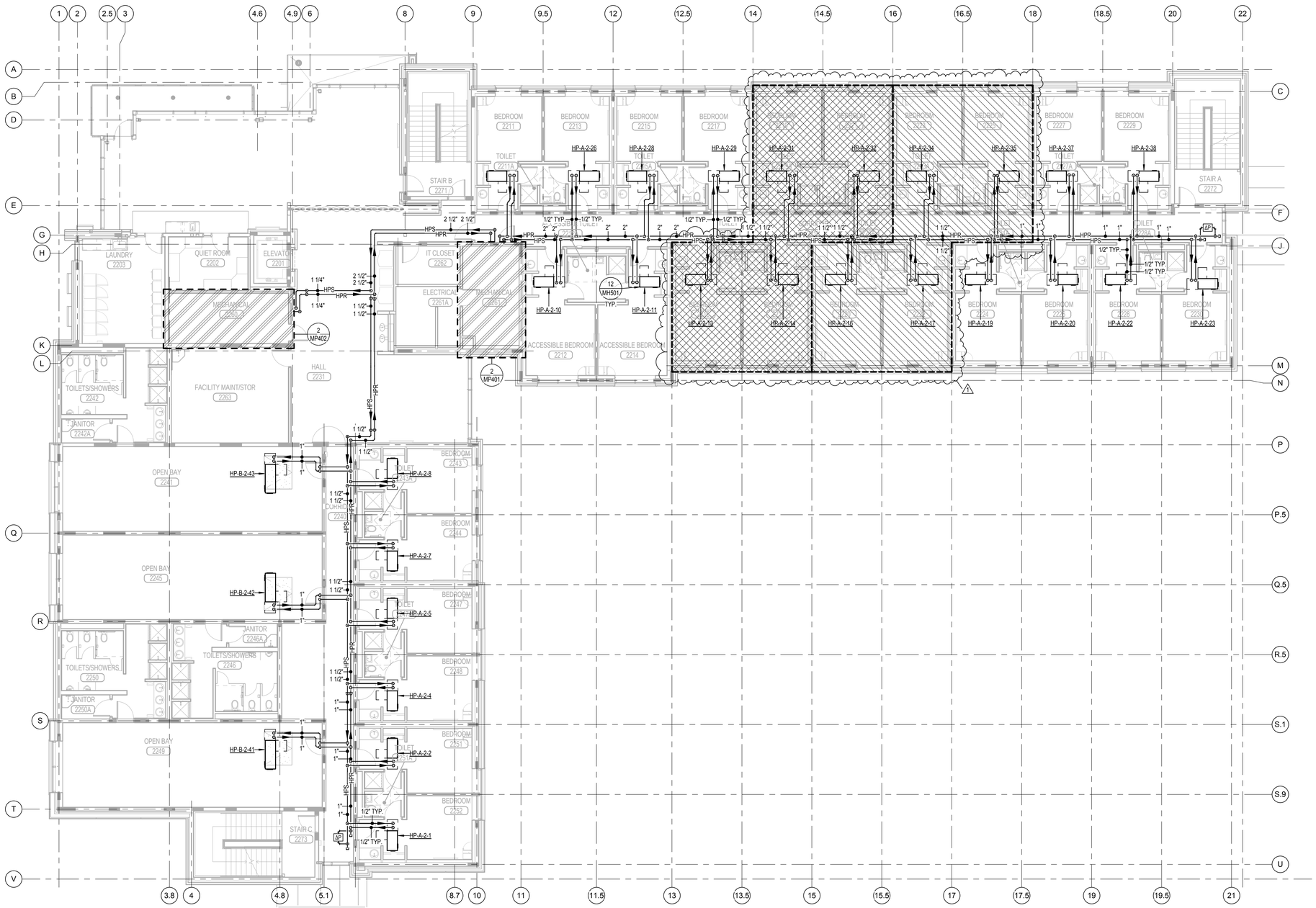

1 LEVEL 2 - MECHANICAL PIPING PLAN

SCALE: 1/8" = 1'-0"

GENERAL NOTES

A. COORDINATE WITH ALL TRADES PRIOR TO INSTALLATION OF ANY MECHANICAL PIPING OR EQUIPMENT.

B. DO NOT ROUTE OR LOCATE ANY MECHANICAL PIPING OR EQUIPMENT OVER ANY ELECTRICAL EQUIPMENT.

ADD ALTERNATE LEGEND

ADD/ALT 2:
ADD TO BASE BID SQUARE FOOT AREA INDENTIFIED AS ADD/ALT "2". BUILDING WILL BE INCREASED BY THE DISTANCE EQUAL TO THAT OF EACH GROUP OF ROOMS SHOWN HATCHED. THIS INCLUDES ALL HVAC, PIPING, CONTROLS, PLUMBING AND FIRE PROTECTION. IT IS TYPICAL OF ALL 3 FLOORS.

ADD/ALT 3:
ADD TO BASE BID SQUARE FOOT AREA INDENTIFIED AS ADD/ALT "3". BUILDING WILL BE INCREASED BY THE DISTANCE EQUAL TO THAT OF EACH GROUP OF ROOMS SHOWN HATCHED. THIS INCLUDES ALL HVAC, PIPING, CONTROLS, PLUMBING AND FIRE PROTECTION. IT IS TYPICAL OF ALL 3 FLOORS.

ARCHITECTURAL NEXUS
SALT LAKE CITY PLACERVILLE SACRAMENTO

Architectural NEXUS, Inc.
2505 East Parleys Way
Salt Lake City, Utah 84109
T 801.924.5000 F 801.924.5001
http://www.archnexus.com

Stephen G. Conroy
Registered Professional Engineer
187524
03.21.13
State of Utah

Original drawings remain the property of the Architect and as such the Architect retains total ownership and control. The design represented by these drawings is sold to the client for a one time use, unless otherwise agreed upon in writing by the Architect.
© Architectural Nexus, Inc. 2012

UTAH NATIONAL GUARD CAMP WILLIAMS
RTI TASS COMPLEX, PHASE II
NGB PROJECT NO. 490444

UTAH NATIONAL GUARD
12953 MINUTEMAN DRIVE
DRAPER, UTAH 84020-1726

#	REVISIONS
1	2013-04-01 ADD #2

CEA PROJECT #:	2011-042.00
CHECKED BY:	SGC
DRAWN BY:	TCF
DATE:	21 MARCH 2013

SHEET CONTENTS:
LEVEL 2 MECHANICAL PIPING PLAN

VOLUME B - BID DOCUMENTS

MP102

COLVIN ENGINEERING ASSOCIATES
244 West 300 North, Suite 200 / Salt Lake City, Utah 84103
Phone 801.322.2400 / colvinengineering.com

Copyright (C) 2012 by Colvin Engineering Associates, Inc. Salt Lake City, Utah. All rights reserved. Unauthorized copying and/or use is illegal and subject to prosecution.

3/29/2013 11:16:04 AM

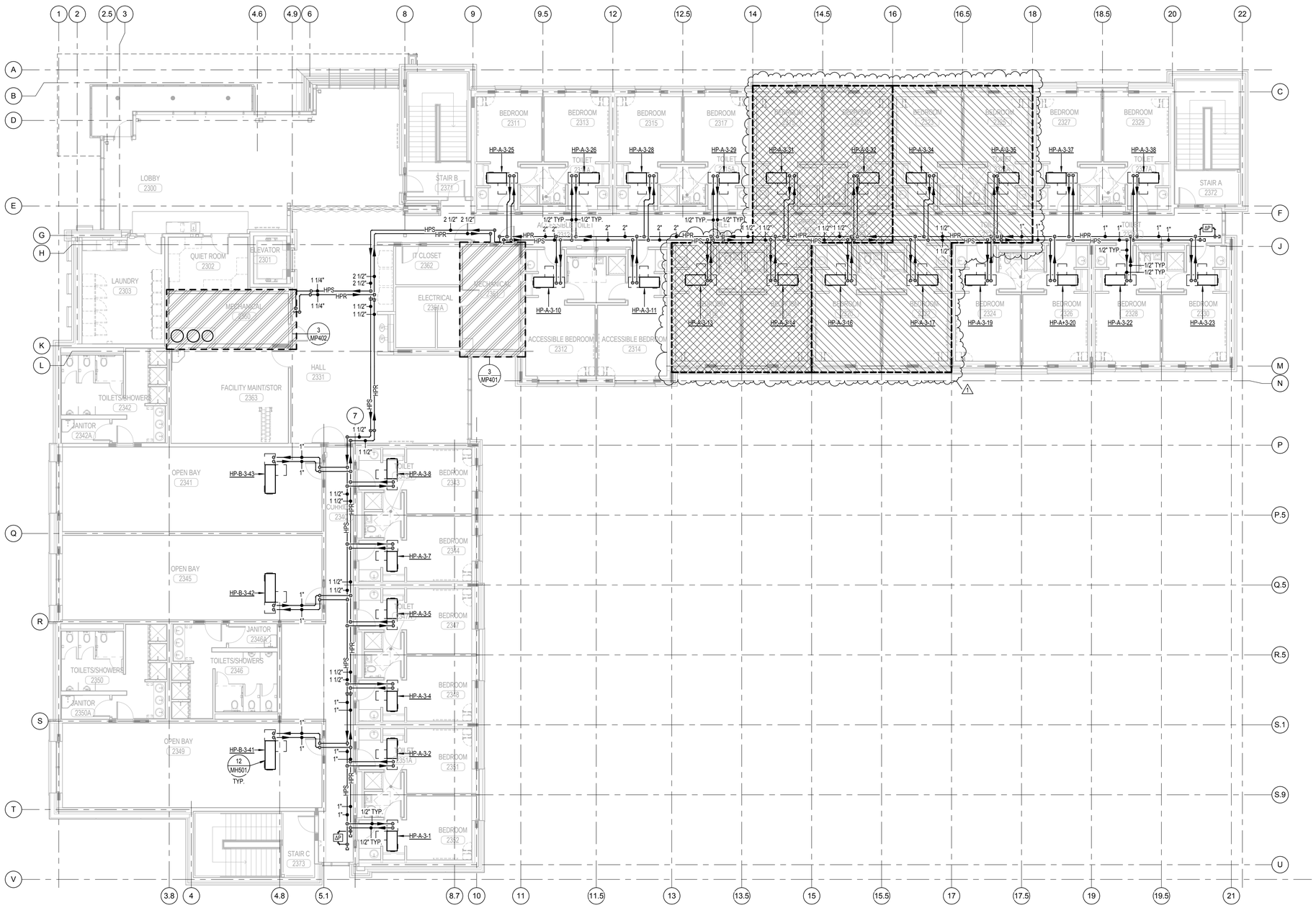

GENERAL NOTES

A. COORDINATE WITH ALL TRADES PRIOR TO INSTALLATION OF ANY MECHANICAL PIPING OR EQUIPMENT.

B. DO NOT ROUTE OR LOCATE ANY MECHANICAL PIPING OR EQUIPMENT OVER ANY ELECTRICAL EQUIPMENT.

ADD ALTERNATE LEGEND

ADD/ALT 2:
ADD TO BASE BID SQUARE FOOT AREA INDENTIFIED AS ADD/ALT "2". BUILDING WILL BE INCREASED BY THE DISTANCE EQUAL TO THAT OF EACH GROUP OF ROOMS SHOWN HATCHED. THIS INCLUDES ALL HVAC, PIPING, CONTROLS, PLUMBING AND FIRE PROTECTION. IT IS TYPICAL OF ALL 3 FLOORS.

ADD/ALT 3:
ADD TO BASE BID SQUARE FOOT AREA INDENTIFIED AS ADD/ALT "3". BUILDING WILL BE INCREASED BY THE DISTANCE EQUAL TO THAT OF EACH GROUP OF ROOMS SHOWN HATCHED. THIS INCLUDES ALL HVAC, PIPING, CONTROLS, PLUMBING AND FIRE PROTECTION. IT IS TYPICAL OF ALL 3 FLOORS.

1 LEVEL 3 - MECHANICAL PIPING PLAN
SCALE: 1/8" = 1'-0"

ARCHITECTURAL NEXUS
SALT LAKE CITY PLACERVILLE SACRAMENTO

Architectural NEXUS, Inc.
2505 East Parleys Way
Salt Lake City, Utah 84109
T 801.924.5000 F 801.924.5001
http://www.archnexus.com

Stephen G. Conger
Registered Professional Engineer
E 187524
03.21.13
State of Utah

Original drawings remain the property of the Architect and as such the Architect retains total ownership and control. The design represented by these drawings is sold to the client for a one time use, unless otherwise agreed upon in writing by the Architect.
© Architectural Nexus, Inc. 2012

UTAH NATIONAL GUARD CAMP WILLIAMS
RTI TASS COMPLEX, PHASE II
NGB PROJECT NO. 490444

UTAH NATIONAL GUARD
12953 MINUTEMAN DRIVE
DRAPER, UTAH 84020-1726

#	REVISIONS
1	2013-04-01 ADD #2

CEA PROJECT #:	2011-042.00
CHECKED BY:	SGC
DRAWN BY:	TCF
DATE:	21 MARCH 2013

SHEET CONTENTS:
LEVEL 3 MECHANICAL PIPING PLAN

VOLUME B - BID DOCUMENTS

MP103

COLVIN ENGINEERING ASSOCIATES
244 West 300 North, Suite 200 / Salt Lake City, Utah 84103
Phone 801.322.2400 / colvinengineering.com

Copyright (C) 2012 by Colvin Engineering Associates, Inc. Salt Lake City, Utah. All rights reserved. Unauthorized copying and/or use is illegal and subject to prosecution.

3/29/2013 11:16:13 AM

KEYED NOTES - SHEET B-EL101

1. BELL TO ACTIVATE ON WATER FLOW ONLY.
2. KABA KEY SWIPE CARD READER.
3. GALAXY CARD READER.
4. PEDISTAL BY OTHERS.
5. EITHER THE GALAXY OR KABA CARD REDER TO OPEN THESE DOORS.
6. CONTROL MODULE FOR FIRE SHATTER/OVERHAND DOOR OPERATOR.
7. ADD / ALT B.
8. ADD / ALT C.

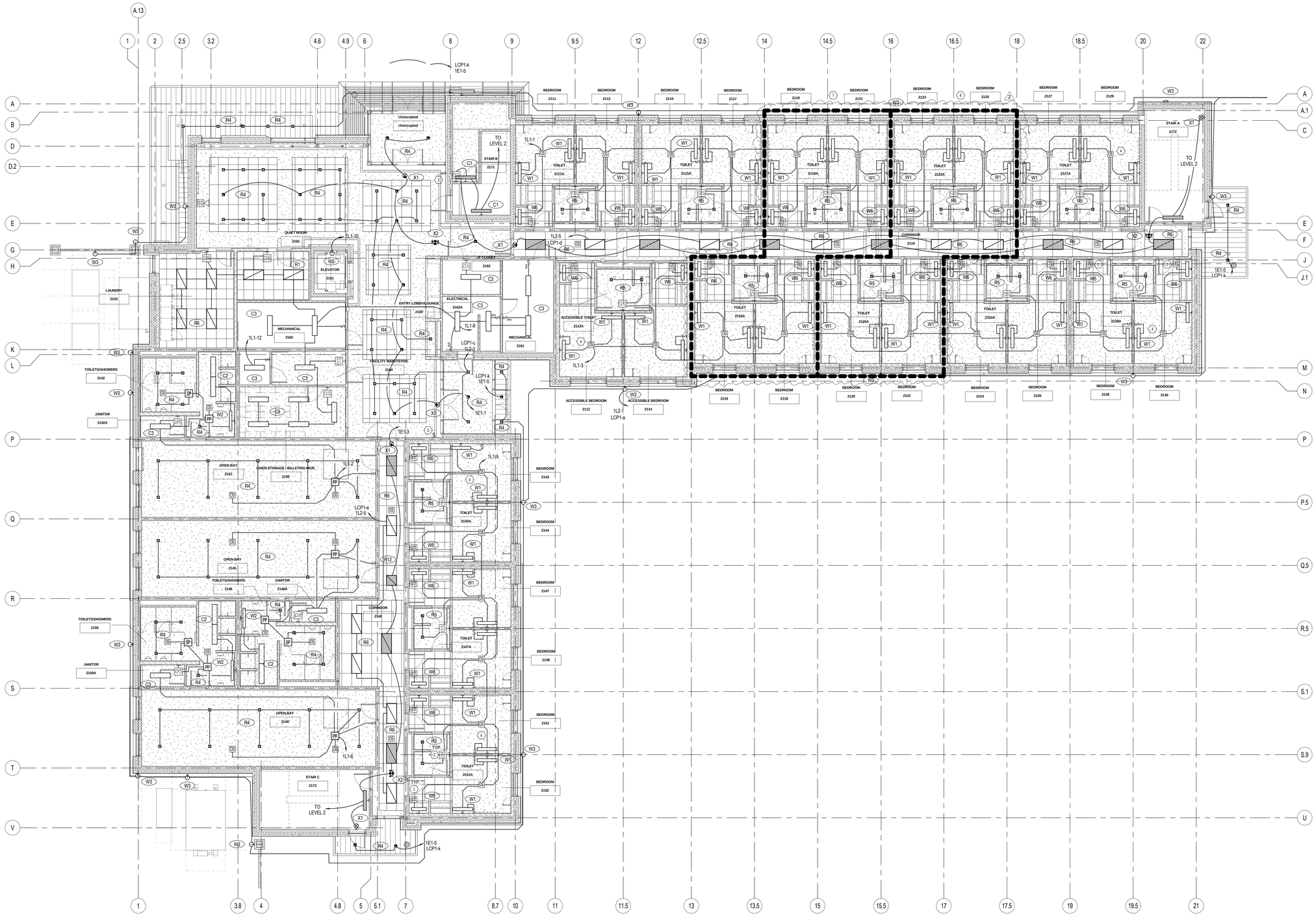

1 EL101 LEVEL 1 LIGHTING PLAN
1/8" = 1'-0"

3/29/2013 1:49:55 PM

Ken Garner Engineering, Inc.
Electrical Engineering Consultants, Inc.
102 West 500 South, Suite 225
Salt Lake City, Utah 84101
Telephone: 801.328.8800
Fax: 801.328.8802
Contact: Adam Brownell
Project #: 2011-044.00

ARCHITECTURAL NEXUS
SALT LAKE CITY PLACERVILLE SACRAMENTO

Architectural NEXUS, Inc.
2150 South 1300 East, Suite 200
Salt Lake City, Utah 84106
T 801.924.5000 F 801.924.5001
http://www.archnexus.com

LICENSED PROFESSIONAL ENGINEER No. 274818 KENNETH D. GARNER STATE OF UTAH

Original drawings remain the property of the Architect and as such the Architect retains total ownership and control. The design represented by these drawings is sold to the client for a one time use, unless otherwise agreed upon in writing by the Architect.
© Architectural Nexus, Inc.2011

UTAH NATIONAL GUARD CAMP WILLIAMS
RTI TASS COMPLEX, PHASE II
PROJECT NO. 490444

UTAH NATIONAL GUARD
12953 SOUTH MINUTEMAN DRIVE
DRAPER, UTAH 84020-1726

#	REVISIONS
2	03-29-2013 ADDENDUM 2

NEXUS PROJECT #:	11024
CHECKED BY:	KGE
DRAWN BY:	KGE
DATE:	03-21-2013

SHEET CONTENTS:
LEVEL 1 LIGHTING PLAN

VOLUME B - BID DOCUMENTS

EL101

KEYED NOTES - SHEET B-EL102

1. WALL MOUNTED PRESET COUNTDOWN TIMER SWITCH, TYPICAL FOR EACH BEDROOM.
2. WALL MOUNTED VACANCY SENSOR SWITCH, TYPICAL FOR EACH BATHROOM.
3. FLOOR LIGHTING MASTER OVERRIDE SWITCH CONTROLLING FLOOR LIGHTING.
4. CEILING MOUNTED LINE VOLTAGE DUAL TECHNOLOGY OCCUPANCY SENSOR. WATTSTOPPER DT-355 SERIES TYPICAL FOR EACH BEDROOM.
5. ADD / ALT B.
6. ADD / ALT C.

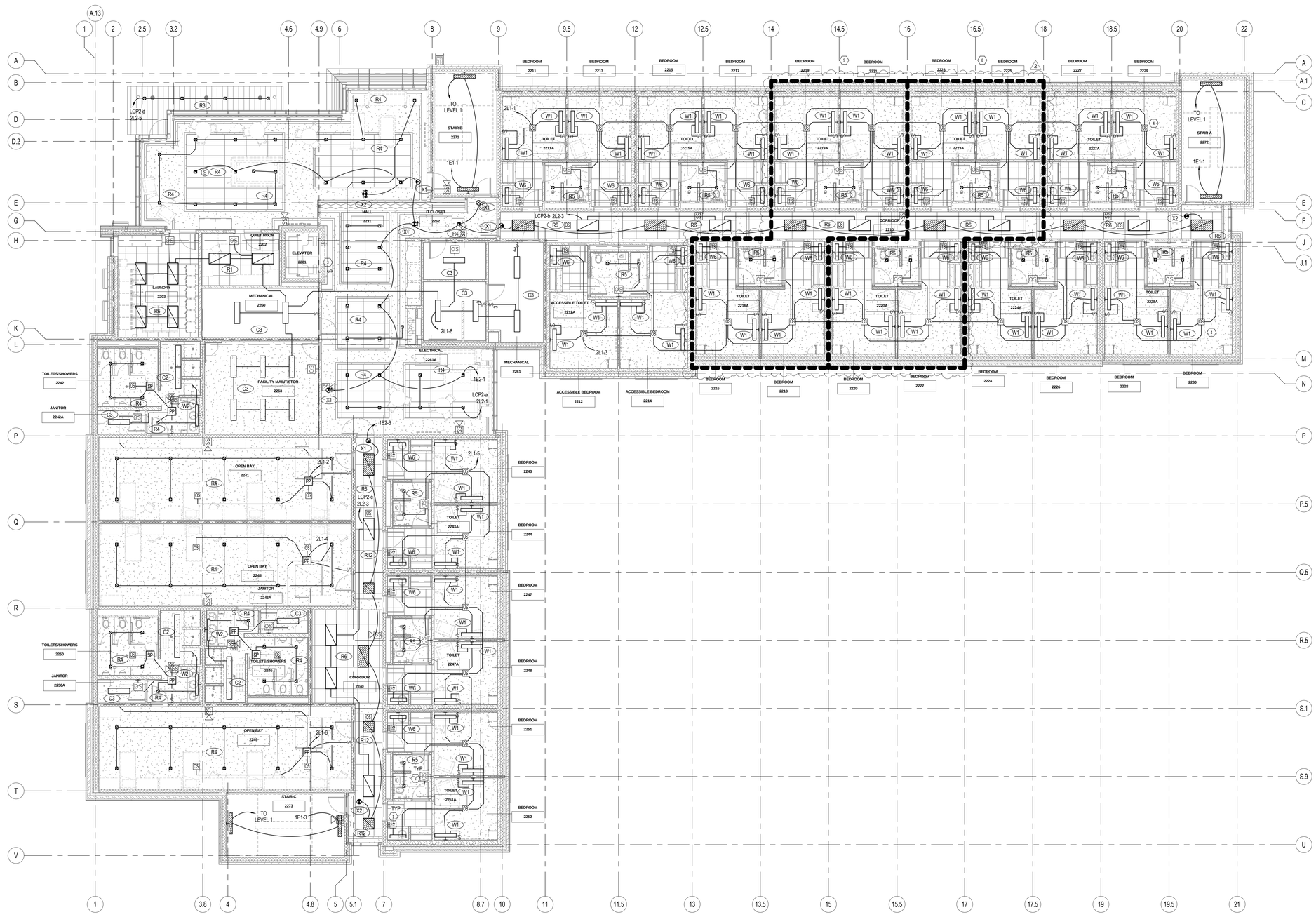

1 EL102 LEVEL 2 LIGHTING PLAN
1/8" = 1'-0"

Ken Garner Engineering, Inc.
Electrical Engineering Consultants, Inc.
102 West 500 South, Suite 225
Salt Lake City, Utah 84101
Telephone: 801.328.8800
Fax: 801.328.8802
Contact: Adam Brownell
Project #: 2011-044.00

ARCHITECTURAL NEXUS
SALT LAKE CITY PLACERVILLE SACRAMENTO

Architectural NEXUS, Inc.
2150 South 1300 East, Suite 200
Salt Lake City, Utah 84106
T 801.924.5000 F 801.924.5001
http://www.archnexus.com

LICENSED PROFESSIONAL ENGINEER No. 274818 KENNETH D. GARNER STATE OF UTAH

Original drawings remain the property of the Architect and as such the Architect retains total ownership and control. The design represented by these drawings is sold to the client for a one time use, unless otherwise agreed upon in writing by the Architect.
© Architectural Nexus, Inc.2011

UTAH NATIONAL GUARD CAMP WILLIAMS
RTI TASS COMPLEX, PHASE II
PROJECT NO. 490444

UTAH NATIONAL GUARD
12953 SOUTH MINUTEMAN DRIVE
DRAPER, UTAH 84020-1726

#	REVISIONS
2	03-29-2013 ADDENDUM 2

NEXUS PROJECT #:	11024
CHECKED BY:	KGE
DRAWN BY:	KGE
DATE:	03-21-2013

SHEET CONTENTS:
LEVEL 2 LIGHTING PLAN

VOLUME B - BID DOCUMENTS

EL102

3/29/2013 1:50:09 PM

KEYED NOTES - SHEET EL 103

1. WALL MOUNTED PRESET COUNTDOWN TIMER SWITCH, TYPICAL FOR EACH BEDROOM.
2. WALL MOUNTED VACANCY SENSOR SWITCH, TYPICAL FOR EACH BEDROOM.
3. FLOOR LIGHTING MASTER OVERRIDE SWITCH CONTROLLING FLOOR LIGHTING.
4. CEILING MOUNTED LINE VOLTAGE DUAL TECHNOLOGY OCCUPANCY SENSOR. WATTSTOPPER DT-355 SERIES TYPICAL FOR EACH BEDROOM.
5. ADD / ALT B.
6. ADD / ALT C.

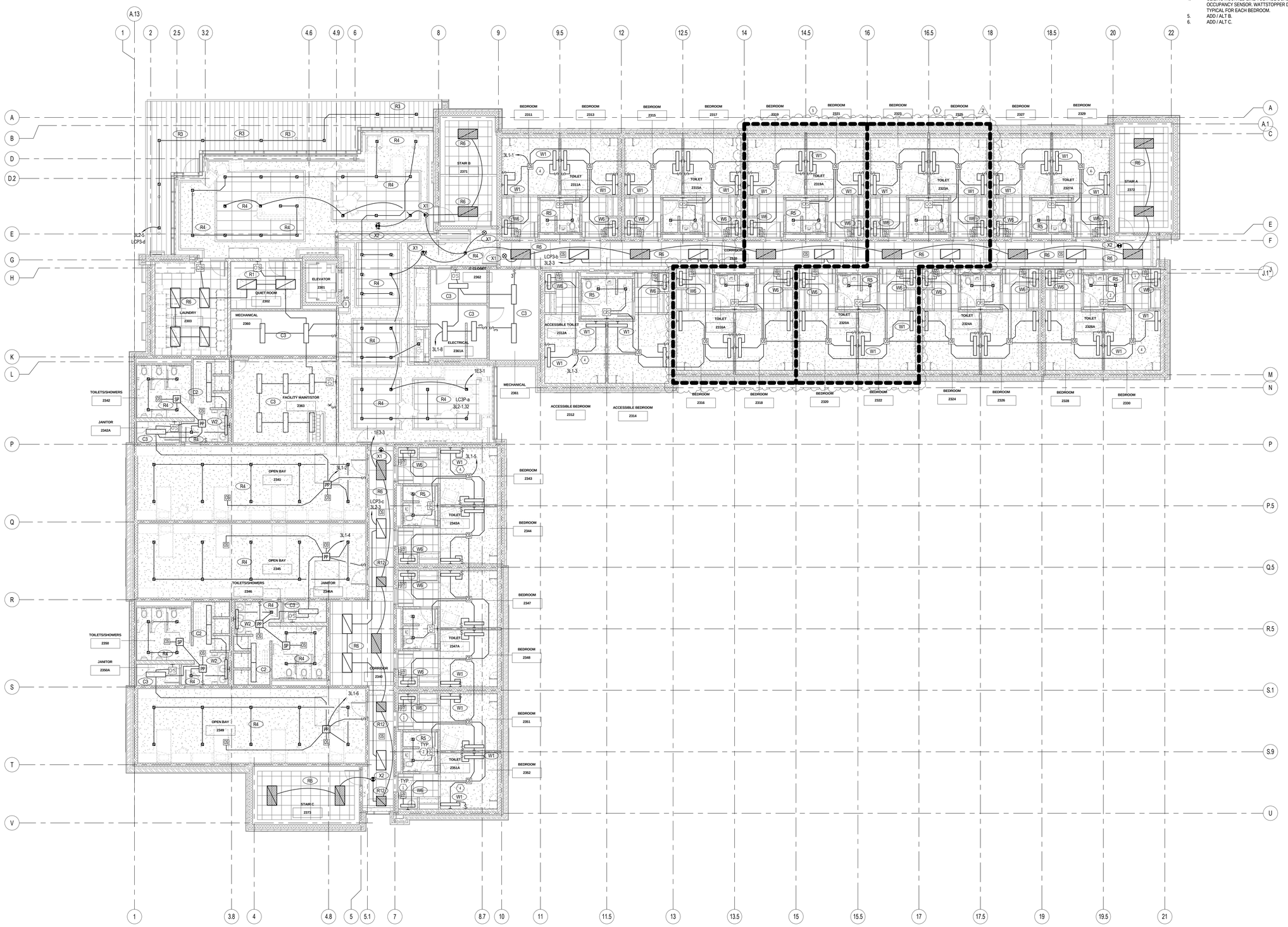

1 LEVEL 3 LIGHTING PLAN
EL103 1/8" = 1'-0"

3/29/2013 1:50:21 PM

Ken Garner Engineering, Inc.
Electrical Engineering Consultants, Inc.
102 West 500 South, Suite 225
Salt Lake City, Utah 84101
Telephone: 801.328.8800
Fax: 801.328.8802
Contact: Adam Brownell
Project #: 2011-044.00

ARCHITECTURAL NEXUS
SALT LAKE CITY PLACERVILLE SACRAMENTO

Architectural NEXUS, Inc.
2150 South 1300 East, Suite 200
Salt Lake City, Utah 84106
T 801.924.5000 F 801.924.5001
http://www.archnexus.com

LICENSED PROFESSIONAL ENGINEER No. 274818 KENNETH D. GARNER STATE OF UTAH

Original drawings remain the property of the Architect and as such the Architect retains total ownership and control. The design represented by these drawings is sold to the client for a one time use, unless otherwise agreed upon in writing by the Architect.
© Architectural Nexus, Inc.2011

UTAH NATIONAL GUARD CAMP WILLIAMS
RTI TASS COMPLEX, PHASE II
PROJECT NO. 490444

UTAH NATIONAL GUARD
12953 SOUTH MINUTEMAN DRIVE
DRAPER, UTAH 84020-1726

#	REVISIONS
2	03-29-2013 ADDENDUM 2

NEXUS PROJECT #:	11024
CHECKED BY:	KGE
DRAWN BY:	KGE
DATE:	03-21-2013

SHEET CONTENTS:
LEVEL 3 LIGHTING PLAN

VOLUME B - BID DOCUMENTS

EL103

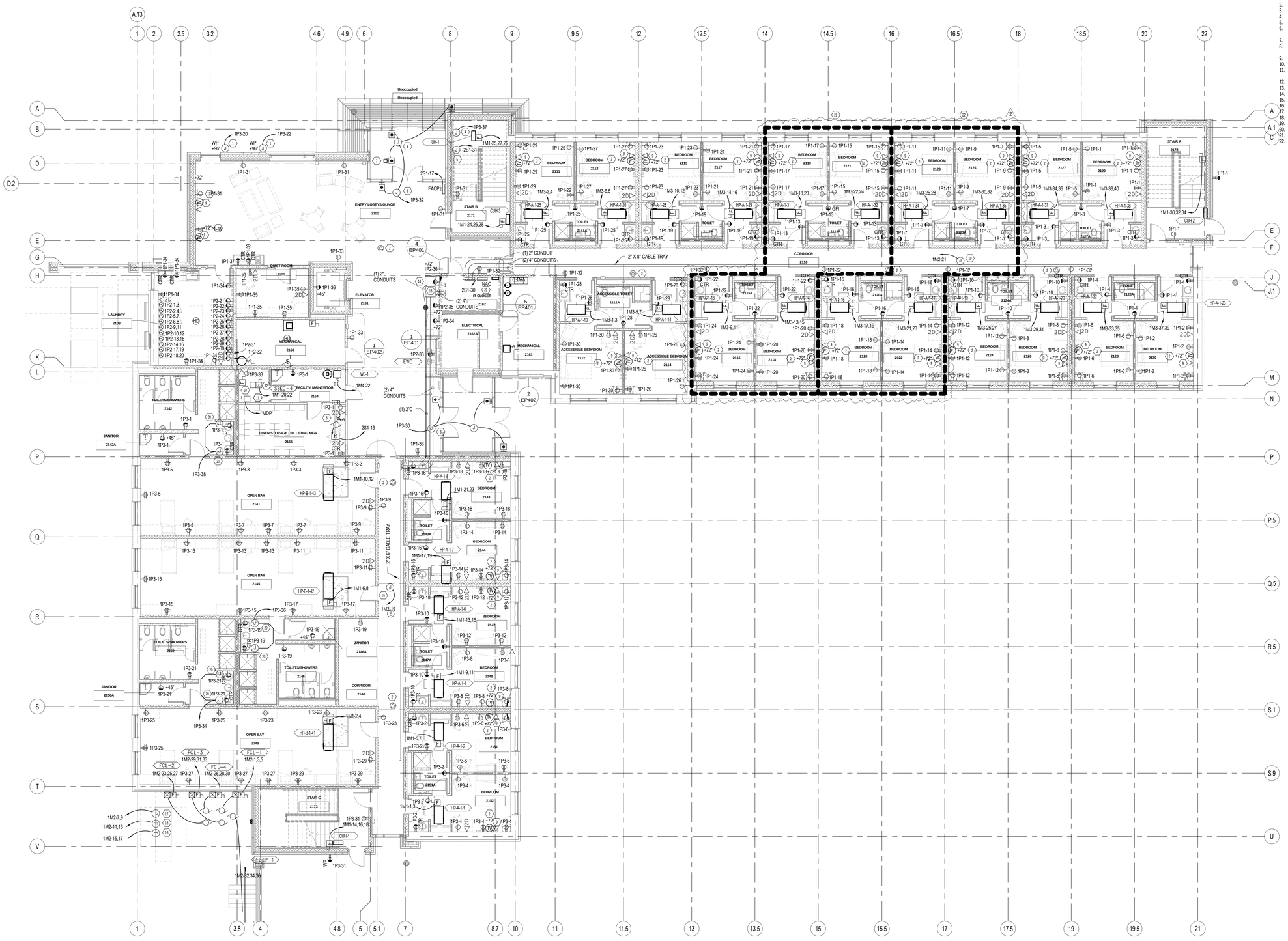

1 EP101 LEVEL 1 POWER PLAN
1/8" = 1'-0"

KEYED NOTES - SHEET B-EP101

1. PROVIDE SELF REGULATING HEAT TRACE WRAP FOR ROOF DRAIN PIPES ABOVE WRAP 4" SPIRAL SPACING. PROVIDE 1" INSULATION.
2. SEE DETAIL 'A' ON SHEET EV501.
3. JUNCTION BOX FOR AV. 12"X12"X6".
4. POWER FOR IRRIGATION CONTROLLER.
5. OVERHEAD DOOR/FIRE SHUTTER.
6. DAYTIME CONTROL SWITCH FOR OVERHEAD DOOR/ FIRE SHUTTER.
7. RUN ONE RG11 CABLE TO MAIN RF AMPLIFIER AND SPLITTER.
8. SEE BUILDING 'B' TV DISTRIBUTION SYSTEM RISER FOR CABLE RUNNING REQUIREMENTS.
9. PULL (1) GREY CAT 6 CABLE TO TV LOCATION.
10. CONNECTION FOR TELECOM CABLE FOR ELEVATOR.
11. ELEVATOR POWER MODULE. CONFIRM ELEVATOR ROOM LAYOUT WITH ELEVATOR CONTRACTOR PRIOR TO ROUGH-IN.
12. CAB LIGHTING DISCONNECT.
13. 6"x6"x4" PULL BOX FOR CABLE TV.
14. 36"x36"x8" PULL BOX FOR TELECOM.
15. POWER FOR FIRE RISER.
16. POWER FOR GENERATOR BLOCK HEATER.
17. POWER FOR GENERATOR BATTERY CHARGER.
18. POWER FOR GENERATOR BATTERY HEATING BLANKET.
19. POWER FOR VAV BOXES.
20. POWER FOR HAND DRYERS.
21. ADD / ALT B.
22. ADD / ALT C.

ARCHITECTURAL NEXUS
SALT LAKE CITY PLACERVILLE SACRAMENTO

Architectural NEXUS, Inc.
2150 South 1300 East, Suite 200
Salt Lake City, Utah 84106
T 801.924.5000 F 801.924.5001
http://www.archnexus.com

LICENSED PROFESSIONAL ENGINEER No. 271818 KENNETH D. GARNER STATE OF UTAH

Original drawings remain the property of the Architect and as such the Architect retains total ownership and control. The design represented by these drawings is sold to the client for a one time use, unless otherwise agreed upon in writing by the Architect.
© Architectural Nexus, Inc. 2011

UTAH NATIONAL GUARD CAMP WILLIAMS
RTI TASS COMPLEX, PHASE II
PROJECT NO. 490444

UTAH NATIONAL GUARD
12953 SOUTH MINUTEMAN DRIVE
DRAPER, UTAH 84020-1726

#	REVISIONS
2	03-29-2013 ADDENDUM 2

NEXUS PROJECT #:	11024
CHECKED BY:	KGE
DRAWN BY:	KGE
DATE:	03-21-2013

SHEET CONTENTS:
LEVEL 1 POWER PLAN

VOLUME B - BID DOCUMENTS

EP101

Ken Garner Engineering, Inc.
Electrical Engineering Consultants, Inc.
102 West 500 South, Suite 225
Salt Lake City, Utah 84101
Telephone: 801.328.8800
Fax: 801.328.8802
Contact: Adam Brownell
Project #: 2011-044.00

3/29/2013 1:50:28 PM

1. KEYED NOTES - SHEET B-EP102
PROVIDE SELF REGULATING HEAT TRACE WRAP FOR ROOF DRAIN PIPES ABOVE WRAP 4" SPIRAL SPACING. PROVIDE 1" INSULATION.
2. SEE DETAIL 'A' ON SHEET EV700.
3. JUNCTION BOX FOR AV. 12"X12"X6".
4. WIRELESS ACCESS POINT.
5. POWER AND CONTROLS FOR WON-DOOR.
6. KEY SWITCH LOCATION FOR WON-DOOR.
7. RUN ONE RG11 CABLE TO MAIN RF AMPLIFIER AND SPLITTER.
8. SEE BUILDING 'B' TV DISTRIBUTION SYSTEM RISER FOR CABLE RUNNING REQUIREMENTS.
9. PULL BOX FOR CABLE TV.
10. PULL BOX FOR TELECOM.
11. PULL (3) GREY CAT6 CABLE TO TV LOCATION.
12. POWER FOR VAV BOXES.
13. POWER FOR HAND DRYERS.
14. ADD / ALT B.
15. ADD / ALT C.

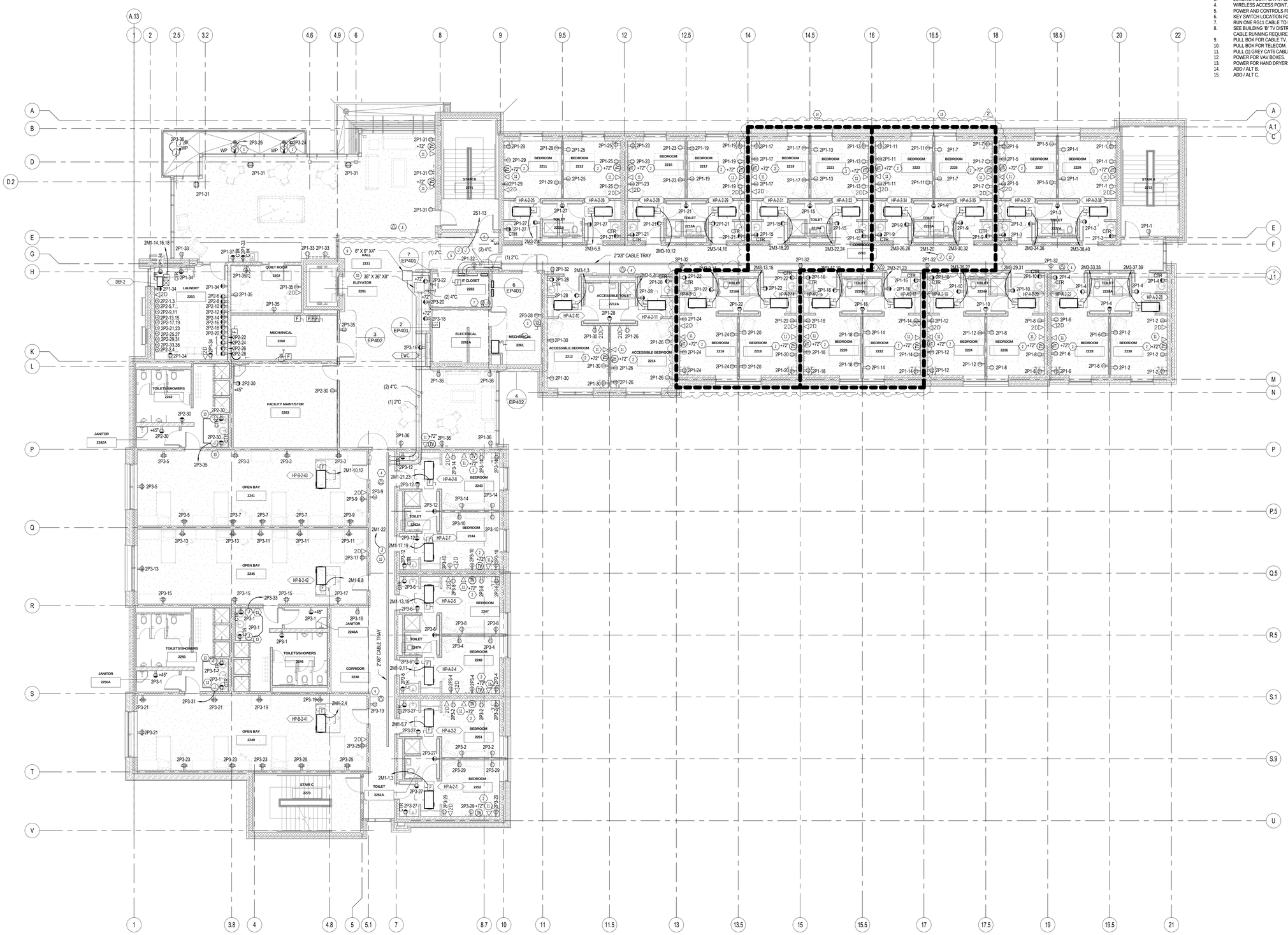

1 LEVEL 2 POWER PLAN
EP102 1/8" = 1'-0"

Ken Garner Engineering, Inc.
Electrical Engineering Consultants, Inc.
102 West 500 South, Suite 225
Salt Lake City, Utah 84101
Telephone: 801.328.8800
Fax: 801.328.8802
Contact: Adam Brownell
Project #: 2011-044.00

ARCHITECTURAL NEXUS
SALT LAKE CITY PLACERVILLE SACRAMENTO

Architectural NEXUS, Inc.
2150 South 1300 East, Suite 200
Salt Lake City, Utah 84106
T 801.924.5000 F 801.924.5001
http://www.archnexus.com

LICENSED PROFESSIONAL ENGINEER No. 271818 KENNETH D. GARNER STATE OF UTAH

Original drawings remain the property of the Architect and as such the Architect retains total ownership and control. The design represented by these drawings is sold to the client for a one time use, unless otherwise agreed upon in writing by the Architect.
© Architectural Nexus, Inc. 2011

UTAH NATIONAL GUARD CAMP WILLIAMS
RTI TASS COMPLEX, PHASE II
PROJECT NO. 490444

UTAH NATIONAL GUARD
12953 SOUTH MINUTEMAN DRIVE
DRAPER, UTAH 84020-1726

#	REVISIONS
2	03-29-2013 ADDENDUM 2

NEXUS PROJECT #:	11024
CHECKED BY:	KGE
DRAWN BY:	KGE
DATE:	03-21-2013

SHEET CONTENTS:
LEVEL 2 POWER PLAN

VOLUME B - BID DOCUMENTS

EP102

3/29/2013 1:50:38 PM

KEYED NOTES - SHEET B-EP103

1. DUPLEX RECEPTACLE INSTALLED IN THE TOP OF THE ELEVATOR SHAFT.
2. SEE DETAIL 'A' ON SHEET EV501.
3. JUINCTION BOX FOR AV, 12"X12"X6".
4. WIRELESS ACCESS POINT.
5. POWER AND CONTROLS FOR WON-DOOR.
6. KEY SWITCH LOCATION FOR WON-DOOR.
7. RUN ONE RG11 TO MAIN RF AMPLIFIER AND SPLITTER.
8. SEE BUILDING 'B' TV DISTRIBUTION SYSTEM RISER FOR
9. PULL (1) GREY CAT 6 CABLE TO TV LOCATION.
10. 6"x6"x4" PULL BOX FOR CABLE TV.
11. 36"x36"x8" PULL BOX FOR TELECOM.
12. POWER FOR VAV BOXES.
13. POWER FOR VENT TRACE.
14. POWER FOR HAND DRYERS.
15. ADD / ALT B.
16. ADD / ALT C.

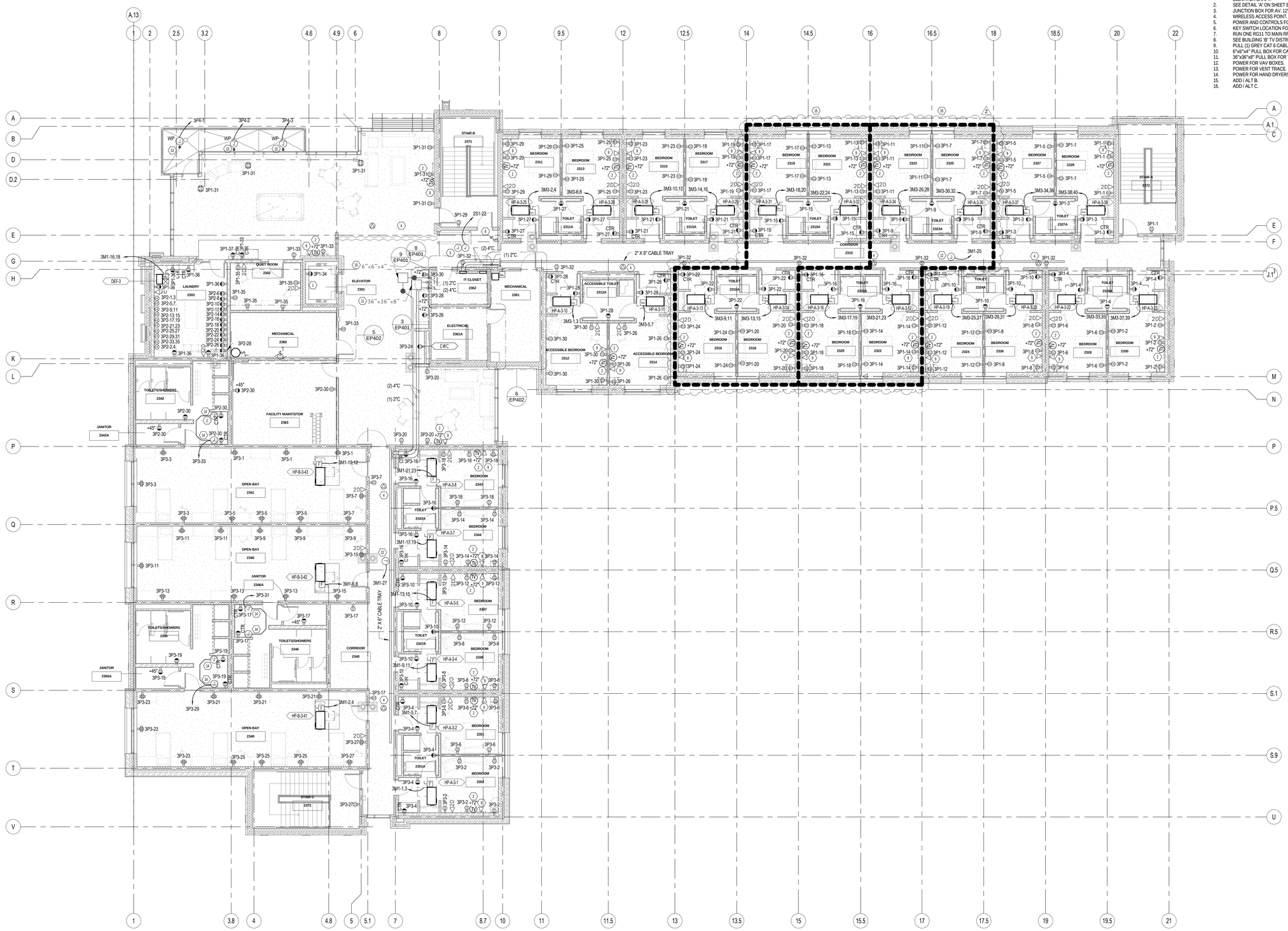

1 EP103 LEVEL 3 POWER PLAN
1/8" = 1'-0"

Ken Garner Engineering, Inc.
Electrical Engineering Consultants, Inc.
102 West 500 South, Suite 225
Salt Lake City, Utah 84101
Telephone: 801.328.8800
Fax: 801.328.8802
Contact: Adam Brownell
Project #: 2011-044.00

ARCHITECTURAL NEXUS
SALT LAKE CITY PLACERVILLE SACRAMENTO

Architectural NEXUS, Inc.
2150 South 1300 East, Suite 200
Salt Lake City, Utah 84106
T 801.924.5000 F 801.924.5001
http://www.archnexus.com

LICENSED PROFESSIONAL ENGINEER No. 271818 KENNETH D. GARNER STATE OF UTAH

Original drawings remain the property of the Architect and as such the Architect retains total ownership and control. The design represented by these drawings is sold to the client for a one time use, unless otherwise agreed upon in writing by the Architect.
© Architectural Nexus, Inc.2011

UTAH NATIONAL GUARD CAMP WILLIAMS
RTI TASS COMPLEX, PHASE II
PROJECT NO. 490444

UTAH NATIONAL GUARD
12953 SOUTH MINUTEMAN DRIVE
DRAPER, UTAH 84020-1726

#	REVISIONS
2	03-29-2013 ADDENDUM 2

NEXUS PROJECT #:	11024
CHECKED BY:	KGE
DRAWN BY:	KGE
DATE:	03-21-2013

SHEET CONTENTS:
LEVEL 3 POWER PLAN

VOLUME B - BID DOCUMENTS

EP103

3/29/2013 1:50:51 PM