State of Utah

GARY R. HERBERT
Governor

GREGORY S. BELL
Lt. Governor

Department of Administrative Services
KIMBERLY K. HOOD
Executive Director

Division of Facilities Construction and Management
DAVID G. BUXTON
Director

Addendum No. 3

Date: April 8, 2013

To: Contractors

From: Matthias Mueller – Program Director

Reference: Regional Training Institute – TASS Phase 2
Utah National Guard – Camp Williams, Utah
DFCM Project No. 11020480

Subject: **Addendum No. 3**

Pages	Addendum Cover Sheet	1	page
	Architect's Add-03	42	pages
	Total	43	pages

Note: This Addendum shall be included as part of the Contract Documents. Items in this Addendum apply to all drawings and specification sections whether referenced or not involving the portion of the work added, deleted, modified, or otherwise addressed in the Addendum. Acknowledge receipt of this Addendum in the space provided on the Bid Form. Failure to do so may subject the Bidder to Disqualification.

3.1 SCHEDULE CHANGES: There are no Project Schedule changes.

3.2 GENERAL ITEMS: See attached Architect's Addendum Add-03 dated April 8, 2013.

ARCHITECTURAL nexus

ADD-03

Architectural Nexus, Inc.
www.archnexus.com

SALT LAKE CITY
2505 East Parleys Way
Salt Lake City, Utah 84109
T 801.924.5000
F 801.924.5001

PLACERVILLE
778 Pacific Street
Placerville, California 95667
T 530.626.1810
F 530.626.1931

SACRAMENTO
1990 Third Street, Suite 500
Sacramento, California 95811
T 916.443.5911
F 916.443.2965

ADDENDUM

ISSUE DATE:	8 April 2013
RESPONSE TO:	Contractor Requests for Information
PROJECT:	**RTI TASS Complex, Phase II Administration & Billets Buildings** 17800 South Academy Street Utah National Guard Camp Williams **DFCM'S PROJECT #:** 11020480 **NGB'S PROJECT #:** 490444 **ARCHITECT'S PROJECT #:** 11024
OWNER:	**Utah National Guard** 12953 South Minuteman Drive Draper, Utah 84020-1726
SUBJECT:	**VARIOUS CLARIFICATIONS**
ATTACHED:	**Specifications:** 017419, 096723

VOLUMES A.1 & A.2

General: GI801, GI802

Architectural: AE511, AE512, AE515, AE516, AE554, AE555, AE610, AI601

Equipment: QF101, QF102

VOLUME B

General: GI801

Architectural: AI601

PAGES:	Narrative (4) Consultant Narratives (2) Specifications (18) Drawings, Volume A (12) Drawings, Volume B (2)

This Addendum forms a part of the Contract Documents and modifies the original Bid Documents as noted below. Acknowledge receipt of this Addendum in the space provided on the Bid Form. Failure to do so may subject the Bidder to disqualification. This Addendum includes all attachments noted, included herein by reference.

GENERAL AMENDMENTS

G1. Changes to Prior Addenda:

NONE

SPECIFICATION AMENDMENTS:

S1. Specifications:

Item #	Section	Amendment
S1.01	012500	**REVISE** paragraph 3.1-A. to read as follows: *"A. Refer to Section 00 01 00 "DFCM General Conditions" for schedule of alternates within the NGB Cost Proposal Form."* **DELETE** sub-paragraphs 3.1-A.1, -A.2, and –A.3. These sub-paragraphs are now covered in the Bid Form.
S1.02	017419	**REMOVE** and **REPLACE** specification with one provided herein.
S1.03	018113.13	**ADD** LEED scorecard to the specification documents, as provided. This scorecard is for reference only, and is subject to final compliance of applicable credits pursued for LEED Silver certification, in accordance with AGMBC Guidelines for Group Certification, dated October 2011.

Item #	Section	Amendment
S1.04	083513.23	**REVISE** paragraph 2.1-A. to read as follows: *"A. Horizontal sliding accordion fire doors may be either Won-Door FireGuard model FG60S or model FG60CS, manufactured by Won-Door Corporation, Salt Lake City, UT."* **DELETE** sub-paragraphs 2.3-F., -G., -H., -I., -J., and -K.
S1.05	096723	**ADD** section in its entirety, as provided herein.
S1.06	114000	**REVISE** article 3.12 BID TOTALS to read as follows: A. The bidder is to prepare a sub-total bid of this specification to include the cost of the items and the installation as per the specifications of the 'Contractor Furnished, Contractor Installed' (CFCI) equipment items as listed on the plans and specifications. B. The bidder is to prepare a sub-total bid of this specification to include the costs for the installation as per the specifications of the 'Government Furnished, Contractor Installed' (GFCI) equipment items as listed on the plans and specifications. **C.** The remainder of the items are for reference and will be 'Government Furnished, Government Installed' (GFGI) and include items that do not require utility connections other than a cord and plug. The general contractor is to coordinate the physical size requirements of these items as necessary. **REVISE** Part 4 to have procurement and installation responsibilities indicated (CFCI, GFCI, GFGI) on each piece of equipment. This should match the equipment schedule, as shown on sheets QF101 and QF102.
S1.07	230548	*See the attached Memorandum from Engineer, dated April 8, 2013.*

ADMINISTRATION DRAWING AMENDMENTS (VOLUMES A.1 & A.2):

A1. General:

Item #	Sheet(s)	Amendment
A1.01	GI002.1, GI002.2, GI801, GI802	**ADD** sheets 'GI801 – BUILDING MOCKUP' and 'GI802 – BUILDING MOCKUP' to sheet indices. **ADD** sheets GI801 and GI802 to drawings as provided.

A2. Architectural:

Item #	Sheet(s)	Amendment
A2.01	AE511	**REVISE** section detail A1/AE511 to show 3" rigid insulation on perimeter foundation walls, as shown on sheet provided. **REVISE** section detail D1/AE511 to show insulated aluminum closure panel, as shown on sheet provided. **REVISE** section detail D3/AE511 to show proper wall construction assembly, per wall type.
A2.02	AE512	**REVISE** section details D1 and D2/AE512 to have detail marker for solid surface sill, as shown on sheet provided.
A2.03	AE515	**REVISE** section detail C5/AE515 to show 3" rigid insulation on perimeter foundation walls, as shown on sheet provided. **REVISE** section detail D2/AE515 to have detail marker for solid surface sill and 3" rigid insulation on perimeter foundation walls, as shown on sheet provided.
A2.04	AE516	**REVISE** section detail A1/AE516 to show 1" thermal break, as shown in sheet provided. **REVISE** section detail D6/AE516 to show 3" rigid insulation on perimeter foundation walls, as shown on sheet provided.
A2.05	AE554	**ADD** millwork details C2, C4, D4, D6, and E6/AE554, as shown on sheet provided. **REVISE** details A2, A3, A5, B2, B3, and B4/AE554, as shown on sheet provided. Hardwood inlay strips added to elevations, and electrical access panels indicated. **REVISE** detail C5/AE554 to have annotation as shown on sheet provided
A2.06	AE555	**REVISE** detail C5/AE555 to have a flush aluminum profile, as shown on sheet provided.
A2.07	AE601, AE602, AE603	**REVISE** glass type '8' to read as follows: *"8. 1-1/8" INSULATING-LAMINATED GLASS, SPANDRAL W/ INTERIOR INSULATED ALUMINUM CLOSURE PANEL"*
A2.08	AE610	**REVISE** sill detail D1/AE610 to show insulated aluminum closure panel, as shown on sheet provided.

Item #	Sheet(s)	Amendment
A2.09	AI601	**ADD** sill detail A2/AI601, as shown on sheet provided. **ADD** General Notes – Finish Legend / Schedule, as shown on sheet provided. **REVISE** finish legend to include floor finish 'RF1' and millwork finish 'WD2,' as shown on sheet provided. **REVISE** the following rooms to have floor 'RF1' and base 'RF1: 1267, 1268, and 1269.

A3. Equipment:

Item #	Sheet(s)	Amendment
A3.01	QF101, QF102	**REVISE** equipment schedule to show procurement and installation responsibilities for equipment, as shown on sheets provided.

BILLETS DRAWING AMENDMENTS (VOLUME B):

B1. General:

Item #	Sheet(s)	Amendment
B1.01	GI002, GI801	**ADD** sheet 'GI801 – BUILDING MOCKUP' to sheet index. **ADD** sheet GI801 to drawings as provided.
B1.02	AI601	**ADD** sill detail A2/AI601, as shown on sheet provided. **REVISE** finish legend to include floor finish 'RF1' and millwork finish 'WD2,' as shown on sheet provided. **REVISE** the following rooms to have floor 'RF1' and base 'RF1': 2160 and 2161.
B1.03	AI602	**REVISE** the following rooms to have floor 'RF1' and base 'RF1': 2260, 2261, 2360, and 2361.

B2. Electrical:

Item #	Sheet(s)	Amendment
B2.01	EP601	*See the attached Memorandum from Engineer, dated April 8, 2013.*

PRODUCT SUBSTITUTIONS / PRIOR APPROVALS:

Item #	Section(s)	Product Type	Alternate Manufacturer(s)
1.01	07 27 26	Fluid-Applied Membrane Air Barriers	Sto Guard Systems
1.02	10 51 13	Metal Lockers	Hadrian Mfg.
1.03	22 44 50	Hot Water Heater	Lochinvar
1.04	26 51 00	Lighting *See the attached Memorandum from Engineer, dated April 8, 2013, for specific items related to Alternate Manufacturers*	Luminaire Lighting Corp Gotham Lighting Litecontrol
1.05	26 09 23	Lighting Control	LC&D
1.06	26 09 25	Occupancy Sensed Lighting Control	Sensor Switch
1.07	26 22 00	Transformers	Synergy Energy

The above named alternate manufacturers stand approved in name only. Approval here in no way relieves the supplier from complying with all other engineering, performance and quality requirements of systems indicated in the contract documents. Contractors using products from the above named alternate manufacturers shall refer to Specification Sections 012500 "Substitution Procedures" and Section 01 60 00 "Product Requirements" for detailed contractor responsibilities related to the use of alternate brands not used as the Basis of Design or approved equivalent.

RESPONSE TO INQUIRIES:

1. Section 083513.23 – paragraph 2.1-A – The WonDoor FGCS60 Accordion Fire Door meets the specified requirements for this section. Will it be added to the approved product list?
    a. ***Yes. Won-Door FG60CS may be submitted contingent upon its fulfillment of the specification requirements.***

2. Section 083513.23 – paragraph 2.3-F., -G., -H., -I., -J., -K. – These specific requirements (especially 2.3-H. regarding air

pressure differentials) may not apply to this project. Will you confirm?

   a. ***It is confirmed that the referenced paragraphs are not applicable to this project, and thus have been removed per addendum 03.***

3. Sheet GI110 in the deferred submittals list it shows all items as having an estimated 6 month time frame between submittal and installation. Obviously this will not be possible for some of the items. On note 1 above it talks about a minimum of two weeks. Please clarify.

   a. ***Understood that not all submittals will allow for a 6 month review lead time prior to installation. Timeframe of deferred submittals is to ensure that the Designer has reviewed the products compliance with the construction documents, meets the requirements for DFCM review, and to allow sufficient time for DFCM's review process. DFCM review time is a minimum of 2 weeks (10 working days), and, as note 1 also states, additional time may be necessary for deficient submittals. Also refer to section 013300 "SUBMITTAL PROCEDURES," paragraph 1.5-C. for submittal processing times, since these will also affect the lead times for review.***

      Be advised, use of the materials/systems submitted as a deferred submittal may not commence until approval has been provided by DFCM, per the "DEFERRED SUBMITTALS" paragraph on the cover page, under "DESIGN CRITERIA."

4. Vol. B, Power and Lighting Drawings: Add/Alts B & C: Do these alternates include the corridor between as well? Are the lights, cable trays, devices, etc. located in the corridor to be included in the alternates?

   a. ***Yes, length of the corridor will be affected by the Add/Alts, which will affect the lights, cable tray, devices, etc.***

5. Follow up of question above: Does the building square footage shrink if the alternates are not accepted? This would affect my conduit lengths from east end of the building. Please clarify.

   a. ***Yes, the total square footage of the building will shrink if the alternates are not accepted.***

6. Vol. B Sheets EL101 & EL103: Bedrooms 2116 - 2130 & 2316 - 2330. Approximately (16) W1 fixtures do not show separate switching. Do all W1 fixtures in the Bedrooms require a separate switch?

   a. ***Yes.***

7. Vol. B Sheet EP601: If the 750KVA Utility Transformer steps down to 120/208V then the CT/Main is 120/208V as well. Should the CT/Main read as 120/208V? Please clarify.

   a. ***Yes, that will need to be 120/208V.***

8. Vol. B Sheet EP601 and Vol. A.2 Sheet EP600: Is the 750KVA Transformer feeding the new Billets building to be included with the Site Pricing?

   a. ***Refer to the bid form description for the cut off line between building and site. Be sure to coordinate this with your GC to make sure it is covered somewhere in the bid.***

9. Vol. B Sheet EP601, EP401 Detail #2, and panel schedules: Is panel '2M5' a future panel?

   a. ***Yes, this is a future panel. We will take this off sheet EP601 in addendum #3.***

COMMENTS:

END OF ADDENDUM

Stephen Springer, *AIA, NCARB, LEED AP*
Architectural Nexus, Inc.

8 April 2013
Date

COLVIN ENGINEERING ASSOCIATES

MECHANICAL ADDENDUM NO. 03

Job Name and Location: TASS-Phase II

CEA PROJECT NO.: 2011-042.00

Date: April 08, 2013

All contractors submitting proposals for this project shall be governed by the following addendum, changes, and explanations to the bidding documents. Bids shall be submitted in accordance with the following:

Item No.	Add, Delete or Clarify	Specification Section or Drawing No.	Reference / Description:
3.01	Clarify/Add	23 05 48	-Add the following passage to Part 1.3 References: "E. UFC 4-010-01, B-3.6, Standard 15: Overhead mounted equipment weighing 31 pounds or more are mounted using either rigid or flexible systems to minimize the likelihood that they will fall and injure building occupants. Mount all such systems so that they resist forces of 0.5 times the component weight in any horizontal direction and 1.5 times the component weight in the downward direction. This standard does not preclude the need to design for forces required by other criteria such as seismic standards."

PRODUCT SUBSTITUTIONS / PRIOR APPROVALS

Item No.	Specification Section	Product Type	Alternate Manufacturers
3.02	22 44 50	Hot Water Heater	Lochinvar

The above named alternate equipment manufacturers stand approved in name only. Approval here in no way relieves the supplier from complying with all other engineering, weight spatial, and quality requirements of equipment indicated in the contract documents. Contractors using products from the above named alternate manufacturers shall refer to Specification Section 230500 for detailed contractor responsibilities related to the use of alternate brands not used as the Basis of Design.

END OF ADDENDUM NO. 03

HVAC | Energy Efficient Solutions | Building Simulation
244 West 300 North, Suite 200 | Salt Lake City, Utah 84103-1147 | 801.322.2400

THIS PAGE INTENTIONALLY LEFT BLANK

Ken Garner Engineering, Inc.
ELECTRICAL CONSULTING ENGINEERS

ADDENDUM NUMBER 3

April 08, 2013
Utah National Guard
TASS Phase 2
2011-044.00

PRIOR APPROVAL TO BID

The following manufacturers are prior approved to bid the project. All manufacturers must bid an equal to that specified, as determined by the Engineer. Products approved, but later proving not to be equal, may be disqualified at a later date, and the contractor shall then supply the original specified products. Products not listed did not meet the prior approval deadline, or are not considered equal to those specified.

SECTION 26 5100 – LIGHTING

Type	Manufacturer
C1	LUMINAIRE LIGHTING CORP
R3	GOTHAM LIGHTING
R11	Litecontrol

SECTION 260923 - LIGHTING CONTROL
Acceptable Manufacturers: LC&D

SECTION 260925 – OCCUPANCY SENSED LIGHTING CONTROL
Acceptable Manufacturers: SENSOR SWITCH

SECTION 26 2200 – TRANSFORMERS
Acceptable Manufacturers: Synergy Energy.

DRAWINGS

Sheet EP601

1. Delete panel 2M5 and its associated feeder. This panel is not being used.

THIS PAGE INTENTIONALLY LEFT BLANK

SECTION 01 74 19

CONSTRUCTION WASTE MANAGEMENT AND DISPOSAL

PART 1 - GENERAL

1.1 RELATED DOCUMENTS

A. Drawings and general provisions of the Contract, including General and Supplementary Conditions and other Division 01 Specification Sections, apply to this Section.

1.2 SUMMARY

A. Section includes administrative and procedural requirements for the following:

1. Recycling nonhazardous demolition and construction waste.
2. Disposing of nonhazardous demolition and construction waste.

B. Related Requirements:

1. Section 024119 "Selective Demolition" for disposition of waste resulting from partial demolition of buildings, structures, and site improvements, and for disposition of hazardous waste.
2. Section 042000 "Unit Masonry" for disposal requirements for masonry waste.
3. Section 311000 "Site Clearing" for disposition of waste resulting from site clearing and removal of above- and below-grade improvements.

1.3 DEFINITIONS

A. Construction Waste: Building and site improvement materials and other solid waste resulting from construction, remodeling, renovation, or repair operations. Construction waste includes packaging.

B. Demolition Waste: Building and site improvement materials resulting from demolition or selective demolition operations.

C. Disposal: Removal off-site of demolition and construction waste and subsequent sale, recycling, reuse, or deposit in landfill or incinerator acceptable to authorities having jurisdiction.

D. Recycle: Recovery of demolition or construction waste for subsequent processing in preparation for reuse.

E. Salvage: Recovery of demolition or construction waste and subsequent sale or reuse in another facility.

F. Salvage and Reuse: Recovery of demolition or construction waste and subsequent incorporation into the Work.

1.4 PERFORMANCE REQUIREMENTS

A. General: Achieve end-of-Project rates for salvage/recycling of 75 percent by weight of total non-hazardous solid waste generated by the Work. Practice efficient waste management in the use of materials in the course of the Work. Use all reasonable means to divert construction and demolition waste from landfills and incinerators. Facilitate recycling and salvage of materials, including the following:

1. Demolition Waste:

    a. Asphalt paving.
    b. Concrete.
    c. Concrete reinforcing steel.
    d. Brick.
    e. Concrete masonry units.
    f. Structural and miscellaneous steel.
    g. Rough hardware.
    h. Roofing.
    i. Insulation.
    j. Doors and frames.
    k. Door hardware.
    l. Windows.
    m. Glazing.
    n. Metal studs.
    o. Gypsum board.
    p. Acoustical tile and panels.
    q. Carpet.
    r. Carpet pad.
    s. Equipment.
    t. Supports and hangers.
    u. Lighting fixtures.
    v. Lamps.
    w. Ballasts.
    x. Electrical devices.
    y. Switchgear and panelboards.
    z. Transformers.
2. Construction Waste:
    a. Masonry and CMU.
    b. Lumber.
    c. Wood sheet materials.
    d. Wood trim.
    e. Metals.
    f. Roofing.
    g. Insulation.
    h. Carpet and pad.
    i. Gypsum board.
    j. Piping.

k. Electrical conduit.
l. Packaging: Regardless of salvage/recycle goal indicated in "General" Paragraph above, salvage or recycle 100 percent of the following uncontaminated packaging materials:

1) Paper.
2) Cardboard.
3) Boxes.
4) Plastic sheet and film.
5) Polystyrene packaging.
6) Wood crates.
7) Plastic pails.

1.5 ACTION SUBMITTALS

A. Waste Management Plan: Submit plan within 7 days of date established for the Notice of Award.

1.6 INFORMATIONAL SUBMITTALS

A. Waste Reduction Progress Reports: Concurrent with each Application for Payment, submit report. Use Form CWM-7 for construction waste and Form CWM-8 for demolition waste. Include the following information:

1. Material category.
2. Generation point of waste.
3. Total quantity of waste in tons (tonnes).
4. Quantity of waste salvaged, both estimated and actual in tons (tonnes).
5. Quantity of waste recycled, both estimated and actual in tons (tonnes).
6. Total quantity of waste recovered (salvaged plus recycled) in tons (tonnes).
7. Total quantity of waste recovered (salvaged plus recycled) as a percentage of total waste.

B. Waste Reduction Calculations: Before request for Substantial Completion, submit calculated end-of-Project rates for salvage, recycling, and disposal as a percentage of total waste generated by the Work.

C. Records of Donations: Indicate receipt and acceptance of salvageable waste donated to individuals and organizations. Indicate whether organization is tax exempt.

D. Records of Sales: Indicate receipt and acceptance of salvageable waste sold to individuals and organizations. Indicate whether organization is tax exempt.

E. Recycling and Processing Facility Records: Indicate receipt and acceptance of recyclable waste by recycling and processing facilities licensed to accept them. Include manifests, weight tickets, receipts, and invoices.

F. Landfill and Incinerator Disposal Records: Indicate receipt and acceptance of waste by landfills and incinerator facilities licensed to accept them. Include manifests, weight tickets, receipts, and invoices.

G. LEED Submittal: LEED letter template for Credit MR 2, signed by Contractor, tabulating total waste material, quantities diverted and means by which it is diverted, and statement that requirements for the credit have been met.

H. Qualification Data: For waste management coordinator and refrigerant recovery technician.

I. Statement of Refrigerant Recovery: Signed by refrigerant recovery technician responsible for recovering refrigerant, stating that all refrigerant that was present was recovered and that recovery was performed according to EPA regulations. Include name and address of technician and date refrigerant was recovered.

1.7 QUALITY ASSURANCE

A. Waste Management Coordinator Qualifications: Experienced firm, with a record of successful waste management coordination of projects with similar requirements, that employs a LEED-Accredited Professional, certified by the USGBC, as waste management coordinator. Waste management coordinator may also serve as LEED coordinator.

B. Refrigerant Recovery Technician Qualifications: Certified by EPA-approved certification program.

C. Regulatory Requirements: Comply with hauling and disposal regulations of authorities having jurisdiction.

D. Waste Management Conference: Conduct conference at Project site to comply with requirements in Section 013100 "Project Management and Coordination." Review methods and procedures related to waste management including, but not limited to, the following:

1. Review and discuss waste management plan including responsibilities of waste management coordinator.
2. Review requirements for documenting quantities of each type of waste and its disposition.
3. Review and finalize procedures for materials separation and verify availability of containers and bins needed to avoid delays.
4. Review procedures for periodic waste collection and transportation to recycling and disposal facilities.
5. Review waste management requirements for each trade.

1.8 WASTE MANAGEMENT PLAN

A. General: Develop a waste management plan according to ASTM E 1609 and requirements in this Section. Plan shall consist of waste identification, waste reduction

work plan, and cost/revenue analysis. Distinguish between demolition and construction waste. Indicate quantities by weight or volume, but use same units of measure throughout waste management plan.

B. Waste Identification: Indicate anticipated types and quantities of demolition, site-clearing, and construction waste generated by the Work. Use Form CWM-1 for construction waste and Form CWM-2 for demolition waste. Include estimated quantities and assumptions for estimates.

C. Waste Reduction Work Plan: List each type of waste and whether it will be salvaged, recycled, or disposed of in landfill or incinerator. Use Form CWM-3 for construction waste and Form CWM-4 for demolition waste. Include points of waste generation, total quantity of each type of waste, quantity for each means of recovery, and handling and transportation procedures.

1. Salvaged Materials for Reuse: For materials that will be salvaged and reused in this Project, describe methods for preparing salvaged materials before incorporation into the Work.
2. Salvaged Materials for Sale: For materials that will be sold to individuals and organizations, include list of their names, addresses, and telephone numbers.
3. Recycled Materials: Include list of local receivers and processors and type of recycled materials each will accept. Include names, addresses, and telephone numbers.

4. Disposed Materials: Indicate how and where materials will be disposed of. Include name, address, and telephone number of each landfill and incinerator facility.
5. Handling and Transportation Procedures: Include method that will be used for separating recyclable waste including sizes of containers, container labeling, and designated location where materials separation will be performed.

D. Cost/Revenue Analysis: Indicate total cost of waste disposal as if there was no waste management plan and net additional cost or net savings resulting from implementing waste management plan. Use Form CWM-5 for construction waste and Form CWM-6 for demolition waste. Include the following:

1. Total quantity of waste.
2. Estimated cost of disposal (cost per unit). Include hauling and tipping fees and cost of collection containers for each type of waste.
3. Total cost of disposal (with no waste management).
4. Revenue from salvaged materials.
5. Revenue from recycled materials.
6. Savings in hauling and tipping fees by donating materials.
7. Savings in hauling and tipping fees that are avoided.
8. Handling and transportation costs. Include cost of collection containers for each type of waste.
9. Net additional cost or net savings from waste management plan.

PART 2 - PRODUCTS (Not Used)

PART 3 - EXECUTION

3.1 PLAN IMPLEMENTATION

A. General: Implement approved waste management plan. Provide handling, containers, storage, signage, transportation, and other items as required to implement waste management plan during the entire duration of the Contract.

1. Comply with operation, termination, and removal requirements in Section 015000 "Temporary Facilities and Controls."

B. Waste Management Coordinator: Engage a waste management coordinator to be responsible for implementing, monitoring, and reporting status of waste management work plan.

C. Training: Train workers, subcontractors, and suppliers on proper waste management procedures, as appropriate for the Work.

1. Distribute waste management plan to everyone concerned within three days of submittal return.
2. Distribute waste management plan to entities when they first begin work on-site. Review plan procedures and locations established for salvage, recycling, and disposal.

D. Site Access and Temporary Controls: Conduct waste management operations to ensure minimum interference with roads, streets, walks, walkways, and other adjacent occupied and used facilities.

1. Designate and label specific areas on Project site necessary for separating materials that are to be salvaged, recycled, reused, donated, and sold.
2. Comply with Section 015000 "Temporary Facilities and Controls" for controlling dust and dirt, environmental protection, and noise control.

3.2 SALVAGING DEMOLITION WASTE

A. Salvaged Items for Reuse in the Work: Salvage items for reuse and handle as follows:

1. Clean salvaged items.
2. Pack or crate items after cleaning. Identify contents of containers with label indicating elements, date of removal, quantity, and location where removed.
3. Store items in a secure area until installation.
4. Protect items from damage during transport and storage.
5. Install salvaged items to comply with installation requirements for new materials and equipment. Provide connections, supports, and miscellaneous materials necessary to make items functional for use indicated.

B. Salvaged Items for Sale: Not permitted on Project site.

C. Salvaged Items for Owner's Use: Salvage items for Owner's use and handle as follows:

1. Clean salvaged items.
2. Pack or crate items after cleaning. Identify contents of containers with label indicating elements, date of removal, quantity, and location where removed.
3. Store items in a secure area until delivery to Owner.
4. Transport items to Owner's storage area designated by Owner.
5. Protect items from damage during transport and storage.

D. Doors and Hardware: Brace open end of door frames. Except for removing door closers, leave door hardware attached to doors.

E. Equipment: Drain tanks, piping, and fixtures. Seal openings with caps or plugs. Protect equipment from exposure to weather.

F. Lighting Fixtures: Separate lamps by type and protect from breakage.

G. Electrical Devices: Separate switches, receptacles, switchgear, transformers, meters, panelboards, circuit breakers, and other devices by type.

3.3 RECYCLING DEMOLITION AND CONSTRUCTION WASTE, GENERAL

A. General: Recycle paper and beverage containers used by on-site workers.

B. Recycling Incentives: Revenues, savings, rebates, tax credits, and other incentives received for recycling waste materials shall accrue to Contractor.

C. Preparation of Waste: Prepare and maintain recyclable waste materials according to recycling or reuse facility requirements. Maintain materials free of dirt, adhesives, solvents, petroleum contamination, and other substances deleterious to the recycling process.

D. Procedures: Separate recyclable waste from other waste materials, trash, and debris. Separate recyclable waste by type at Project site to the maximum extent practical according to approved construction waste management plan.

1. Provide appropriately marked containers or bins for controlling recyclable waste until removed from Project site. Include list of acceptable and unacceptable materials at each container and bin.

   a. Inspect containers and bins for contamination and remove contaminated materials if found.

2. Stockpile processed materials on-site without intermixing with other materials. Place, grade, and shape stockpiles to drain surface water. Cover to prevent windblown dust.
3. Stockpile materials away from construction area. Do not store within drip line of remaining trees.
4. Store components off the ground and protect from the weather.

5. Remove recyclable waste from Owner's property and transport to recycling receiver or processor.

3.4 RECYCLING DEMOLITION WASTE

A. Asphalt Paving: Grind asphalt to maximum ~~[1-1/2-inch (38-mm)]~~ ~~[~~4-inch (100-mm)~~]~~ size.

1. Crush asphaltic concrete paving and screen to comply with requirements in Section 312000 "Earth Moving" for use as general fill.

B. Asphalt Paving: Break up and transport paving to asphalt-recycling facility.

C. Concrete: Remove reinforcement and other metals from concrete and sort with other metals.

1. Pulverize concrete to maximum ~~[1-1/2-inch (38-mm)]~~ ~~[~~4-inch (100-mm)~~]~~ size.
2. Crush concrete and screen to comply with requirements in Section 312000 "Earth Moving" for use as satisfactory soil for fill or subbase.

D. Masonry: Remove metal reinforcement, anchors, and ties from masonry and sort with other metals.

1. Pulverize masonry to maximum ~~[3/4-inch (19-mm)]~~ ~~[1-inch (25-mm)]~~ ~~[1-1/2-inch (38-mm)]~~ ~~[~~4-inch (100-mm)~~]~~ size.

a. Crush masonry and screen to comply with requirements in Section 312000 "Earth Moving" for use as ~~[general fill]~~ ~~[satisfactory soil for fill or subbase]~~.
b. Crush masonry and screen to comply with requirements in Section 329300 "Plants" for use as mineral mulch.

2. Clean and stack undamaged, whole masonry units on wood pallets.

E. Wood Materials: Sort and stack members according to size, type, and length. Separate lumber, engineered wood products, panel products, and treated wood materials.

F. Metals: Separate metals by type.

1. Structural Steel: Stack members according to size, type of member, and length.
2. Remove and dispose of bolts, nuts, washers, and other rough hardware.

G. Asphalt Shingle Roofing: Separate organic and glass-fiber asphalt shingles and felts. Remove and dispose of nails, staples, and accessories.

H. Gypsum Board: Stack large clean pieces on wood pallets or in container and store in a dry location. Remove edge trim and sort with other metals. Remove and dispose of fasteners.

I. Acoustical Ceiling Panels and Tile: Stack large clean pieces on wood pallets and store in a dry location.

J. Metal Suspension System: Separate metal members including trim, and other metals from acoustical panels and tile and sort with other metals.

K. Carpet[and Pad]: Roll large pieces tightly after removing debris, trash, adhesive, and tack strips.

1. Store clean, dry carpet[and pad] in a closed container or trailer provided by Carpet Reclamation Agency or carpet recycler.

L. Carpet Tile: Remove debris, trash, and adhesive.

1. Stack tile on pallet and store clean, dry carpet in a closed container or trailer provided by Carpet Reclamation Agency or carpet recycler.

M. Piping: Reduce piping to straight lengths and store by type and size. Separate supports, hangers, valves, sprinklers, and other components by type and size.

N. Conduit: Reduce conduit to straight lengths and store by type and size.

3.5 RECYCLING CONSTRUCTION WASTE

A. Packaging:

1. Cardboard and Boxes: Break down packaging into flat sheets. Bundle and store in a dry location.
2. Polystyrene Packaging: Separate and bag materials.
3. Pallets: As much as possible, require deliveries using pallets to remove pallets from Project site. For pallets that remain on-site, break down pallets into component wood pieces and comply with requirements for recycling wood.
4. Crates: Break down crates into component wood pieces and comply with requirements for recycling wood.

B. Wood Materials:

1. Clean Cut-Offs of Lumber: Grind or chip into small pieces.
2. Clean Sawdust: Bag sawdust that does not contain painted or treated wood.

a. Comply with requirements in Section 329300 "Plants" for use of clean sawdust as organic mulch.

C. Gypsum Board: Stack large clean pieces on wood pallets or in container and store in a dry location.

1. Clean Gypsum Board: Grind scraps of clean gypsum board using small mobile chipper or hammer mill. Screen out paper after grinding.

a. Comply with requirements in Section 329300 "Plants" for use of clean ground gypsum board as inorganic soil amendment.

3.6 DISPOSAL OF WASTE

A. General: Except for items or materials to be salvaged, recycled, or otherwise reused, remove waste materials from Project site and legally dispose of them in a landfill or incinerator acceptable to authorities having jurisdiction.

1. Except as otherwise specified, do not allow waste materials that are to be disposed of accumulate on-site.
2. Remove and transport debris in a manner that will prevent spillage on adjacent surfaces and areas.

B. Burning: Do not burn waste materials.

C. Burning: Burning of waste materials is permitted only at designated areas on Owner's property, provided required permits are obtained. Provide full-time monitoring for burning materials until fires are extinguished.

D. Disposal: Remove waste materials and dispose of at designated spoil areas on Owner's property.

E. Disposal: Remove waste materials from Owner's property and legally dispose of them.

3.7 ATTACHMENTS

A. Form CWM-1 for construction waste identification.

B. Form CWM-2 for demolition waste identification.

C. Form CWM-3 for construction waste reduction work plan.

D. Form CWM-4 for demolition waste reduction work plan.

E. Form CWM-5 cost/revenue analysis of construction waste reduction work plan.

F. Form CWM-6 cost/revenue analysis of demolition waste reduction work plan.

G. Form CWM-7 for construction waste

H. Form CWM-8 for demolition waste.

END OF SECTION 01 74 19

RTI TASS Phase II Complex

Utah National Guard, Camp Williams, Utah

Administration Addition & Billets Buildings (under AGMBC Guidelines)

UTNG Project # 490444

DFCM Project # 11020480

Nexus Project # 11024

54	26	30	Total Project Score - 54	Possible Points 110

Certified 40 to 49 points Silver 50 to 59 points Gold 60 to 79 points Platinum 80 or more points

Project Information Forms

Y	?	N				Primary	Secondary
Y			Prereq 1	Minimum Project Requirements		D	AN
Y			Prereq 2	Project Summary Details		D	AN
Y			Prereq 3	Occupant and Usage Data		D	AN
Y			Prereq 4	Schedule and Overview Documents		D	AN

Sustainable Sites — Possible Points 26

Y	?	N				Primary	Secondary
Y			Prereq 1	Construction Activity Pollution Prevention		C	
1			Credit 1	Site Selection	1	D	AN
	5		Credit 2	Development Density & Community Connectivity	5	D	AN
		1	Credit 3	Brownfield Redevelopment	1	D	
		6	Credit 4.1	Alternative Transportation, Public Transportation Access	6	D	
1			Credit 4.2	Alternative Transportation, Bicycle Storage & Changing Rooms	1	D	AN
3			Credit 4.3	Alternative Transportation, Low-Emission/Fuel Efficient Vehicles	3	D	AN
2			Credit 4.4	Alternative Transportation, Parking Capacity	2	D	AN
1			Credit 5.1	Site Development, Protect or Restore Habitat	1	C	AN
1			Credit 5.2	Site Development, Maximize Open Space	1	D	AN
1			Credit 6.1	Stormwater Design, Quantity Control	1	D	Stanley
1			Credit 6.2	Stormwater Design, Quality Control	1	D	Stanley
1			Credit 7.1	Heat Island Effect, Non-Roof	1	C	AN
1			Credit 7.2	Heat Island Effect, Roof	1	D	AN
	1		Credit 8	Light Pollution Reduction	1	D	KGE

Water Efficiency — Possible Points 10

Y	?	N				Primary	Secondary
Y			Prereq 1	Water Use Reduction		D	CEA
2		2	Credit 1	Water Efficient Landscaping, Reduce by 50%		D	AN
				2 Reduce by 50%	2		
				No Potable Water Use	2		
	2		Credit 2	Innovative Wastewater Technologies	2	D	CEA
2	1	1	Credit 3	Water Use Reduction		D	CEA
				2 30% Reduction	2		
				35% Reduction	1		
				40% Reduction	1		

Energy & Atmosphere — Possible Points 35

Y	?	N				Primary	Secondary
Y			Prereq 1	Fundamental Building Systems Commissioning		C	CEA
Y			Prereq 2	Minimum Energy Performance		D	CEA
Y			Prereq 3	Fundamental Refrigerant Management		D	CEA
13		8	Credit 1	Optimize Energy Performance		D	CEA
				1 12% for New Buildings or 8% for Existing Buildings	1		
				1 14% for New Buildings or 10% for Existing Buildings	1		
				1 16% for New Buildings or 12% for Existing Buildings	1		
				1 18% for New Buildings or 14% for Existing Buildings	1		
				1 20% for New Buildings or 16% for Existing Buildings	1		
				1 22% for New Buildings or 18% for Existing Buildings	1		
				1 24% for New Buildings or 20% for Existing Buildings	1		
				1 26% for New Buildings or 22% for Existing Buildings	1		
				1 28% for New Buildings or 24% for Existing Buildings	1		
				1 30% for New Buildings or 26% for Existing Buildings	1		
				1 32% for New Buildings or 28% for Existing Buildings	1		
				1 34% for New Buildings or 30% for Existing Buildings	1		
				1 36% for New Buildings or 32% for Existing Buildings	1		
				38% for New Buildings or 34% for Existing Buildings	1		
				40% for New Buildings or 36% for Existing Buildings	1		
				42% for New Buildings or 38% for Existing Buildings	1		
				44% for New Buildings or 40% for Existing Buildings	1		
				46% for New Buildings or 42% for Existing Buildings	1		
				48%+ for New Buildings or 44%+ for Existing Buildings	1		
	7		Credit 2	On-Site Renewable Energy		D	CEA/KGE
				1 1% Renewable Energy	1		
				3% Renewable Energy	1		
				5% Renewable Energy	1		
				7% Renewable Energy	1		
				9% Renewable Energy	1		
				11% Renewable Energy	1		
				13% Renewable Energy	1		
2			Credit 3	Enhanced Commissioning	2	D	WCx AN
2			Credit 4	Enhanced Refrigerant Management	2	D	CEA
		3	Credit 5	Measurement & Verification	3	C	
	2		Credit 6	Green Power	2	C	

Materials & Resources — Possible Points 14

Y	?	N				Primary	Secondary
Y			Prereq 1	Storage & Collection of Recyclables		D	RTI AN
		3	Credit 1.1	Building Reuse, Maintain Existing Walls, Floors and Roof		C	
				Reuse 55%	1		
				Reuse 75%	1		
				Reuse 95%	1		
		1	Credit 1.2	Building Reuse, Maintain Interior Nonstructural Elements	1	C	
1	1		Credit 2	Construction Waste Management		C	
				1 50% Recycled or Salvaged	1		
				75% Recycled or Salvaged	1		
	1	1	Credit 3	Materials Reuse		C	
				Reuse 5%	1		
				Reuse 10%	1		
1	1		Credit 4	Recycled Content		C	
				1 10% of Content	1		
				20% of Content	1		
1	1		Credit 5.1	Regional Materials		C	
				1 10% of Materials	1		
				20% of Materials	1		
1			Credit 6	Rapidly Renewable Materials	1	C	
1			Credit 7	Certified Wood	1	C	

Indoor Environmental Quality — Possible Points 15

Y	?	N				Primary	Secondary
Y			Prereq 1	Minimum IAQ Performance		D	CEA
Y			Prereq 2	Environmental Tobacco Smoke (ETS) Control		D	UTNG AN
1			Credit 1	Outdoor Air Delivery Monitoring	1	D	CEA
1			Credit 2	Increased Ventilation	1	D	CEA
1			Credit 3.1	Construction IAQ Management Plan, During Construction	1	C	
1			Credit 3.2	Construction IAQ Management Plan, Before Occupancy	1	C	
1			Credit 4.1	Low-Emitting Materials, Adhesives & Sealants	1	C	
1			Credit 4.2	Low-Emitting Materials, Paints & Coatings	1	C	
1			Credit 4.3	Low-Emitting Materials, Flooring Systems	1	C	
1			Credit 4.4	Low-Emitting Materials, Composite Wood & Agrifiber Products	1	C	
1			Credit 5	Indoor Chemical & Pollutant Source Control	1	D	AN
1			Credit 6.1	Controllability of Systems, Lighting	1	D	KGE
1			Credit 6.2	Controllability of Systems, Thermal Comfort	1	D	CEA
1			Credit 7.1	Thermal Comfort, Design	1	D	CEA
		1	Credit 7.2	Thermal Comfort, Verification	1	D	
		1	Credit 8.1	Daylight & Views, Daylight 75% of Spaces	1	D	
		1	Credit 8.2	Daylight & Views, Views for 90% of Spaces	1	D	

Innovation & Design Process — Possible Points 6

Y	?	N				Primary	Secondary
1	2		Credit 1	Innovation in Design			
				Innovation in Design (1-5 Points)			
				Green Cleaning (EBOM)	1	D/C	
				Building as a Teaching Tool	1	D/C	
					1	D/C	
					1	D/C	
					1	D/C	
				Exemplary Performance (1-3 points)			
					1	D/C	
					1	D/C	
					1	D/C	
				1 Pilot Credit (1 point)			
				PC17 - WE: Cooling Tower Water Use	1	D	CEA
1			Credit 2	LEED™ Accredited Professional	1	D	AN

Regional Priority (zip 57706) — Possible Points 4

Y	?	N				Primary	Secondary
1	2	1	Credit 1	Regional Priority			
				SSc2: Development Density & Community Connectivity	1	D	AN
				SSc4.1: Alternative Transportation, Public Transportation Access	1	D	
				WEc2, Opt. 2: Treat 50% of wastewater on-site	1	D	AN
				1 EAc1(36%/32%)	1	D	CEA
				EAc2(5%)	1	D	CEA AN
				IEQc8.1	1	D	

RESPONSIBILITY MATRIX

Credit	Unassigned
Credit	Owner
Credit	Contractor
Credit	Civil
Credit	Landscape
Credit	Architectural Nexus
Credit	Mechanical
Credit	Electrical
Credit	Commissioning Authority

THIS PAGE INTENTIONALLY LEFT BLANK

SECTION 09 67 23

RESINOUS FLOORING

PART 1 - GENERAL

1.1 RELATED DOCUMENTS

A. Drawings and general provisions of the Contract, including General and Supplementary Conditions and Division 01 Specification Sections, apply to this Section.

1.2 SUMMARY

A. Section Includes:

1. Industrial resinous flooring systems.

B. Related Sections:

1. Section 079200 "Joint Sealants" for sealants installed at joints in resinous flooring systems.

1.3 ACTION SUBMITTALS

A. Product Data: For each type of product indicated. Include manufacturer's technical data, application instructions, and recommendations for each resinous flooring component required.

B. LEED Submittals:

1. Product Data for Credit IEQ 4.2: For liquid-applied flooring components, documentation including printed statement of VOC content.
2. Laboratory Test Reports for Credit IEQ 4: For flooring systems, documentation indicating that products comply with the testing and product requirements of the California Department of Health Services' "Standard Practice for the Testing of Volatile Organic Emissions from Various Sources Using Small-Scale Environmental Chambers."

C. Samples for Initial Selection: For each type of exposed finish required.

D. Samples for Verification: For each resinous flooring system required, 6 inches (150 mm) square, applied to a rigid backing by Installer for this Project.

E. Product Schedule: For resinous flooring. Use same designations indicated on Drawings.

1.4 INFORMATIONAL SUBMITTALS

A. Installer Certificates: Signed by manufacturer certifying that installers comply with specified requirements.

B. Material Certificates: For each resinous flooring component, from manufacturer.

C. Material Test Reports: For each resinous flooring system.

1.5 CLOSEOUT SUBMITTALS

A. Maintenance Data: For resinous flooring to include in maintenance manuals.

1.6 QUALITY ASSURANCE

A. Installer Qualifications: Manufacturer's authorized representative who is trained and approved for installation of flooring systems required for this Project.

1. Engage an installer who is certified in writing by resinous flooring manufacturer as qualified to apply resinous flooring systems indicated.

B. Source Limitations: Obtain primary resinous flooring materials, including primers, resins, hardening agents, grouting coats, and topcoats, from single source from single manufacturer. Provide secondary materials, including patching and fill material, joint sealant, and repair materials, of type and from source recommended by manufacturer of primary materials.

C. Preinstallation Conference: Conduct conference at Project site.

1.7 DELIVERY, STORAGE, AND HANDLING

A. Deliver materials in original packages and containers, with seals unbroken, bearing manufacturer's labels indicating brand name and directions for storage and mixing with other components.

1.8 PROJECT CONDITIONS

A. Environmental Limitations: Comply with resinous flooring manufacturer's written instructions for substrate temperature, ambient temperature, moisture, ventilation, and other conditions affecting resinous flooring application.

B. Lighting: Provide permanent lighting or, if permanent lighting is not in place, simulate permanent lighting conditions during resinous flooring application.

C. Close spaces to traffic during resinous flooring application and for not less than 24 hours after application unless manufacturer recommends a longer period.

PART 2 - PRODUCTS

2.1 MANUFACTURERS

A. Basis-of-Design Product: Subject to compliance with requirements, provide Stongard; Stonhard MD, or comparable product by one of the following:

1. BASF Construction Chemicals, Inc; BASF Building Systems.
2. DUDICK Inc.
3. Tnemec Company, Inc.

2.2 MATERIALS

A. VOC Content of Liquid-Applied Flooring Components: Mot more than 100 g/L when calculated according to 40 CFR 59, Subpart D (EPA Method 24):

B. Low-Emitting Materials: Flooring system shall comply with the testing and product requirements of the California Department of Health Services' "Standard Practice for the Testing of Volatile Organic Emissions from Various Sources Using Small-Scale Environmental Chambers."

2.3 INDUSTRIAL RESINOUS FLOORING (RF1)

A. Resinous Flooring: Abrasion-, impact- and chemical-resistant, industrial-aggregate-filled, resin-based, monolithic floor surfacing designed to produce a seamless floor and integral cove base.

B. System Characteristics:

1. Color and Pattern: As selected by Architect from manufacturer's full range .
2. Wearing Surface: Textured for slip resistance .
3. Overall System Thickness: 30 mils.

C. Body Coats:

1. Primer: Epoxy
   a. Description: A two-component epoxy primer applied in conjunction with a three-component epoxy primer with fine aggregates applied wet-on-wet.

2. Base:
   a. Resin: 100% Solids Urethane Elastomer.
   b. Formulation Description: Two-component elastomer consisting of urethane polyol resin and curing agent.
   c. Type: Pigmented Elastomer
   d. Application Method: 30 mil notched squeegee
   e. Application thickness: 30 mils

3. Undercoat:
   a. Resin: Epoxy .
   b. Formulation Description: Two-component elastomer consisting of urethane polyol resin and curing agent.
   c. Type: Clear
   d. Application Method: Squeegee and medium nap roller.
      1) Number of Coats: One .
   e. Finish: Gloss
   f. Aggregates: Manufacturer's standard .

D. Topcoat: Sealing or finish coats.

1. Resin: Epoxy .
2. Formulation Description: Two-component, high performance, UV resistant, solvent free, epoxy sealer..
3. Type: Clear .
4. Finish: Gloss.
5. Number of Coats: One .

2.4 ACCESSORIES

A. Primer: Type recommended by manufacturer for substrate and body coats indicated.

B. Waterproofing Membrane: Type recommended by manufacturer for substrate and primer and body coats indicated.

1. Formulation Description: Liquid applied urethane, membrane comprised of a penetrating, two-component epoxy primer and a two-component urethane membrane applied at a minimum of 25 mils and with an elongation of 200% per ASTM D412.

C. Reinforcing Membrane: Flexible resin formulation that is recommended by manufacturer for substrate and primer and body coats indicated and that prevents substrate cracks from reflecting through resinous flooring.

D. Patching and Fill Material: Resinous product of or approved by resinous flooring manufacturer and recommended by manufacturer for application indicated.

E. Integral Coved Base:
1. Three-component, epoxy mortar with two-component finish sealer applied to the height indicated on Drawings and Finish Schedule.
2. Radius at floor/wall interface shall be at a ¾” minimum.
3. Metal Cove Termination Strip: 1/8” x ½”, “L” shaped, zinc or equivalent metal, cove strip fastened to wall substrate at cove height indicated on Drawings

F. Epoxy Resinous Grout (required for sloping in wet areas):
1. Three-component, fast-setting, trowelable, epoxy based grout designed for permanent horizontal repairs to concrete foundations, decks, floors and structural surfaces.

G. Expansion/Isolation (including penetrations) Joint Sealant Materials:

1. Two-component, pourable polyurethane sealant with a minimum 400 percent elongation per ASTM D-638.
2. Backer Rod: Polyurethane foam rod or polyethylene backer rod one grade larger than the joint width.

PART 3 - EXECUTION

3.1 PREPARATION

A. General: Prepare and clean substrates according to resinous flooring manufacturer's written instructions for substrate indicated. Provide clean, dry substrate for resinous flooring application.

B. Concrete Substrates: Provide sound concrete surfaces free of laitance, glaze, efflorescence, curing compounds, form-release agents, dust, dirt, grease, oil, and other contaminants incompatible with resinous flooring.

1. Roughen concrete substrates as follows:
   a. Comply with ASTM C 811 requirements unless manufacturer's written instructions are more stringent.
   b. The surface must show open pores throughout and have a sandpaper texture.

2. Repair damaged and deteriorated concrete according to resinous flooring manufacturer's written instructions.
3. Verify that concrete substrates are dry and moisture-vapor emissions are within acceptable levels according to manufacturer's written instructions.

   a. Perform anhydrous calcium chloride test, ASTM F 1869. Proceed with application of resinous flooring only after substrates have maximum moisture-vapor-emission rate of 4 lbd of water/1000 sq. ft. of slab area in 24 hours.
   b. Perform relative humidity test using in situ probes, ASTM F 2170. Proceed with installation only after substrates have a maximum 80 percent relative humidity level measurement.
   c. Perform additional moisture tests recommended by manufacturer. Proceed with application only after substrates pass testing.

4. Alkalinity and Adhesion Testing: Verify that concrete substrates have pH within acceptable range. Perform tests recommended by manufacturer. Proceed with application only after substrates pass testing.

C. Resinous Materials: Mix components and prepare materials according to resinous flooring manufacturer's written instructions.

D. Use patching and fill material to fill holes and depressions in substrates according to manufacturer's written instructions.

E. Treat control joints and other nonmoving substrate cracks to prevent cracks from reflecting through resinous flooring according to manufacturer's written instructions.

3.2 APPLICATION

A. General: Apply components of resinous flooring system according to manufacturer's written instructions to produce a uniform, monolithic wearing surface of thickness indicated.

1. Coordinate application of components to provide optimum adhesion of resinous flooring system to substrate, and optimum intercoat adhesion.
2. Cure resinous flooring components according to manufacturer's written instructions. Prevent contamination during application and curing processes.
3. At substrate expansion and isolation joints, comply with resinous flooring manufacturer's written instructions.

B. Apply primer over prepared substrate at manufacturer's recommended spreading rate.

C. Apply waterproofing membrane, where indicated, in manufacturer's recommended thickness.

1. Apply waterproofing membrane to integral cove base substrates.

D. Apply reinforcing membrane to entire substrate surface.

E. Integral Cove Base: Apply cove base mix to wall surfaces before applying flooring. Apply according to manufacturer's written instructions and details including those for taping, mixing, priming, troweling, sanding, and topcoating of cove base. Round internal and external corners.

1. Integral Cove Base: 6 inches high.

F. Apply troweled or screeded body coats in thickness indicated for flooring system. Hand or power trowel and grout to fill voids. When cured, remove trowel marks and roughness using method recommended by manufacturer.

G. Apply grout coat, of type recommended by resinous flooring manufacturer, to fill voids in surface of final body coat and to produce wearing surface indicated.

H. Apply topcoats in number indicated for flooring system and at spreading rates recommended in writing by manufacturer.

3.3 FIELD QUALITY CONTROL

A. Core Sampling: At the direction of Owner and at locations designated by Owner, take one core sample per 1000 sq. ft. (92.9 sq. m) of resinous flooring, or portion of, to verify thickness. For each sample that fails to comply with requirements, take two additional samples. Repair damage caused by coring and correct deficiencies.

B. Material Sampling: Owner may at any time and any number of times during resinous flooring application require material samples for testing for compliance with requirements.

1. Owner will engage an independent testing agency to take samples of materials being used. Material samples will be taken, identified, sealed, and certified in presence of Contractor.

2. Testing agency will test samples for compliance with requirements, using applicable referenced testing procedures or, if not referenced, using testing procedures listed in manufacturer's product data.
3. If test results show applied materials do not comply with specified requirements, pay for testing, remove noncomplying materials, prepare surfaces coated with unacceptable materials, and reapply flooring materials to comply with requirements.

3.4 PROTECTION

A. Protect resinous flooring from damage and wear during the remainder of construction period. Use protective methods and materials, including temporary covering, recommended in writing by resinous flooring manufacturer.

END OF SECTION 09 67 23

THIS PAGE INTENTIONALLY LEFT BLANK

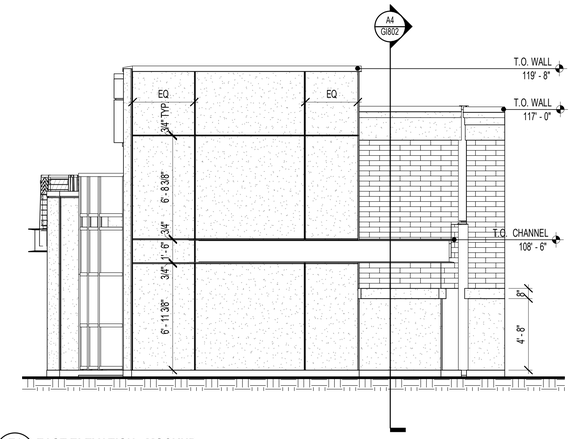

E1 GI801 **EAST ELEVATION - MOCKUP**
1/4" = 1'-0"

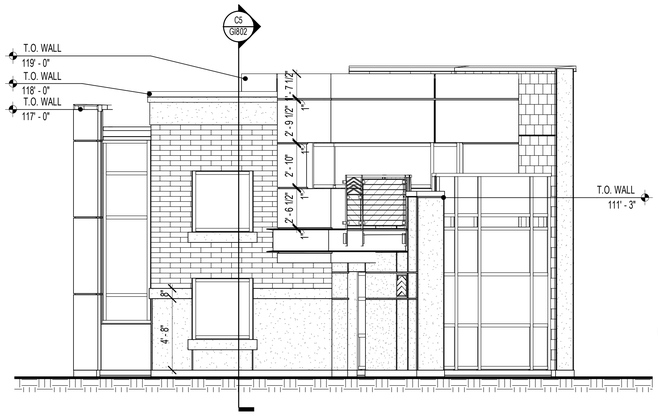

E2 GI801 **SOUTH ELEVATION - MOCKUP**
1/4" = 1'-0"

E4 GI801 **SOUTH WEST PERSPECTIVE**

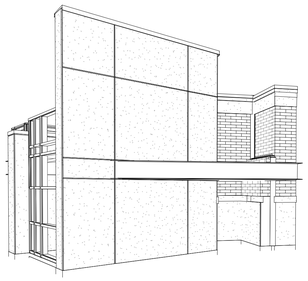

E6 GI801 **SOUTH EAST PERSPECTIVE**

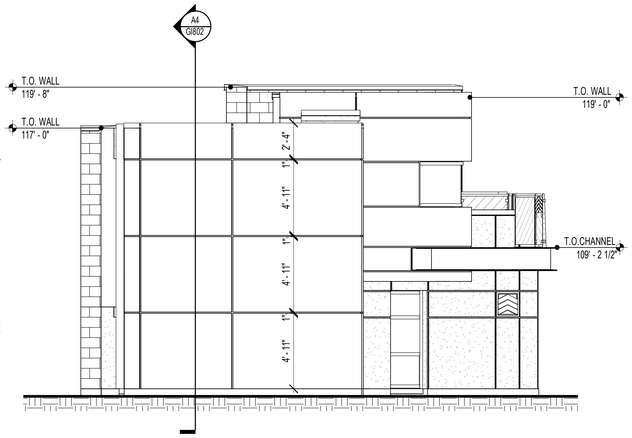

C1 GI801 **WEST ELEVATION - MOCKUP**
1/4" = 1'-0"

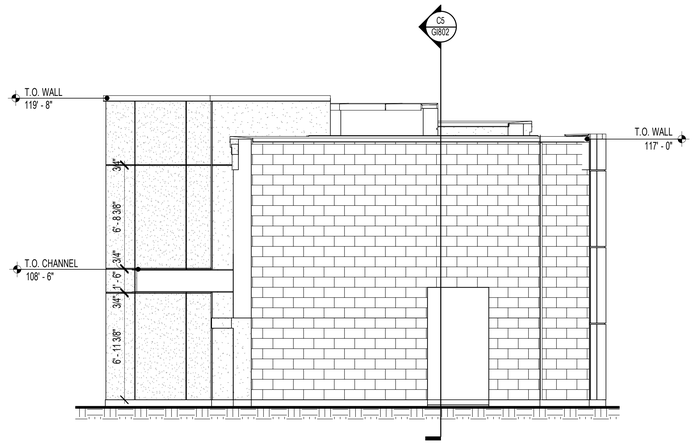

C2 GI801 **NORTH ELEVATION MOCKUP**
1/4" = 1'-0"

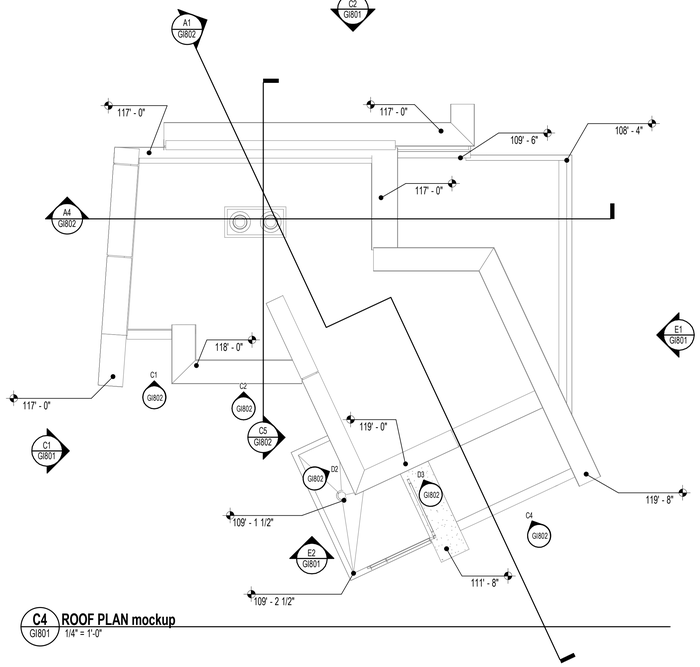

C4 GI801 **ROOF PLAN mockup**
1/4" = 1'-0"

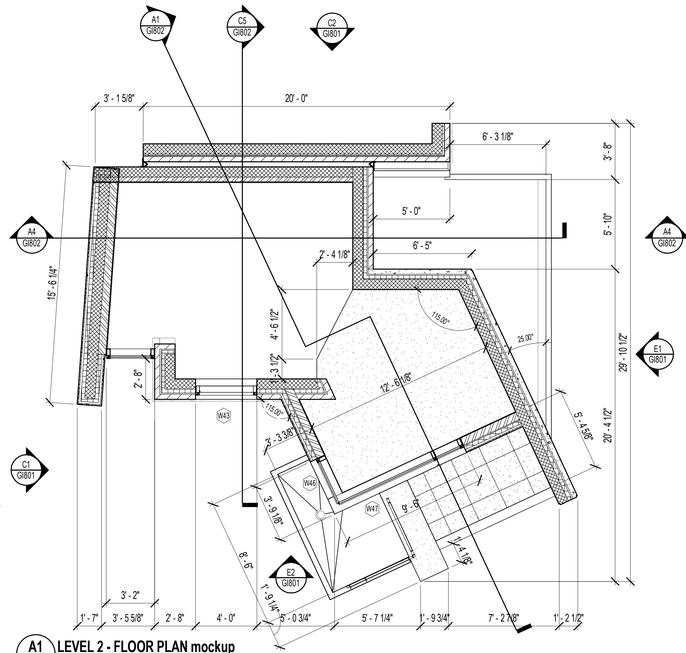

A1 GI801 **LEVEL 2 - FLOOR PLAN mockup**
1/4" = 1'-0"

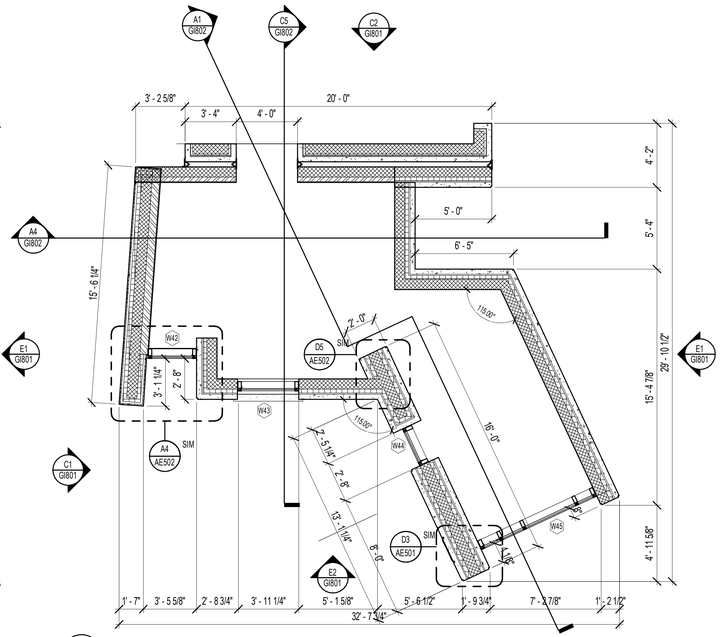

A2 GI801 **LEVEL 1 - FLOOR PLAN mockup**
1/4" = 1'-0"

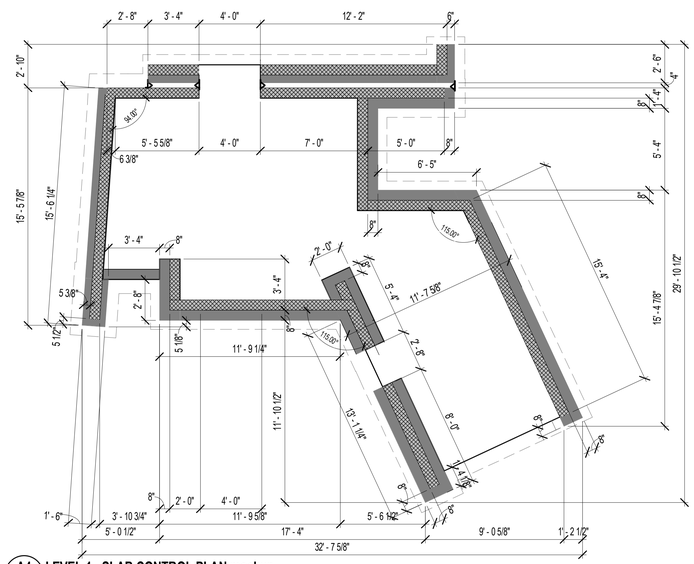

A4 GI801 **LEVEL 1 - SLAB CONTROL PLAN mockup**
1/4" = 1'-0"

GENERAL NOTES - MOCKUP PLANS

A. NOTIFY ARCHITECT & COMMISSIONING AGENT WHEN WATER MEMBRANE IS INSTALLED PRIOR TO EXTERIOR CLADDING BEING INSTALLED
B. PROVIDE 1" GLAZING IN ALL MOCKUP WINDOW / CURTAIN WALL FRAMES
C. REFER TO AE543 FOR RAILING DETAILING
D. PROVIDE THRU-WALL SCUPPER @ BRICK AND PRECAST - REFER TO MECHANICAL FOR SCUPPER TYPE
E. PROVIDE CHEVRON MASONRY ACCENT PANEL - SEE C3/AE234

ARCHITECTURAL NEXUS
SALT LAKE CITY PLACERVILLE SACRAMENTO

Architectural NEXUS, Inc.
2505 East Parleys Way
Salt Lake City, Utah 84109
T 801.924.5000 F 801.924.5001
http://www.archnexus.com

Licensed Architect PETER MOYES No. 83-122248-0301 21 MARCH 2013 State of Utah

Original drawings remain the property of the Architect and as such the Architect retains total ownership and control. The design represented by these drawings is sold to the client for a one time use, unless otherwise agreed upon in writing by the Architect.
© Architectural Nexus, Inc. 2012

UTAH NATIONAL GUARD CAMP WILLIAMS
RTI TASS COMPLEX, PHASE II
NGB PROJECT NO. 490444
17800 SOUTH ACADEMY STREET
BLUFFDALE, UTAH 84065

REVISIONS		
1	4.08.13	ADD-03

NEXUS PROJECT #:	11024
CHECKED BY:	SMS
DRAWN BY:	Author
DATE:	21 MARCH 2013

SHEET CONTENTS:
BUILDING MOCKUP

VOLUME A.1 - BID DOCUMENTS

GI801

4/8/2013 8:54:51 AM

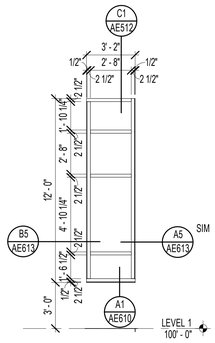

C1 GI802 **WINDOW TYPE W42**
1/4" = 1'-0"

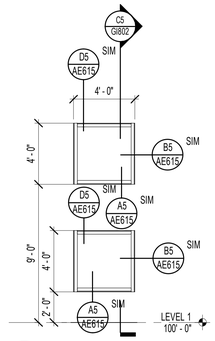

C2 GI802 **WINDOW TYPE W43**
1/4" = 1'-0"

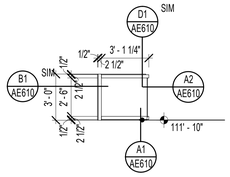

D2 GI802 **WINDOW TYPE W46**
1/4" = 1'-0"

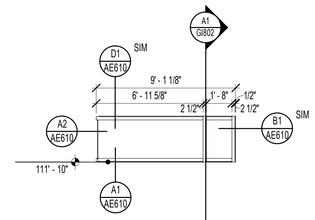

D3 GI802 **WINDOW TYPE W47**
1/4" = 1'-0"

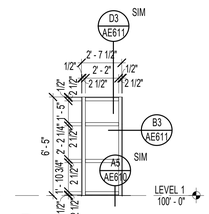

C3 GI802 **WINDOW TYPE W44**
1/4" = 1'-0"

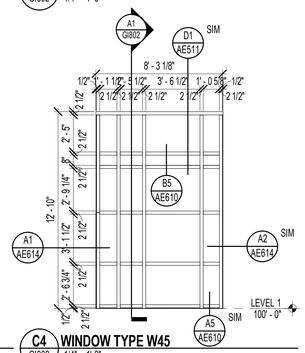

C4 GI802 **WINDOW TYPE W45**
1/4" = 1'-0"

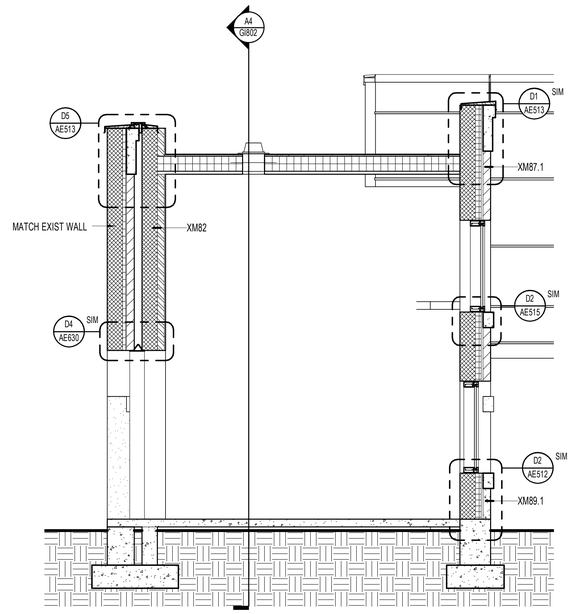

C5 GI802 **building section 3 mockup**
3/8" = 1'-0"

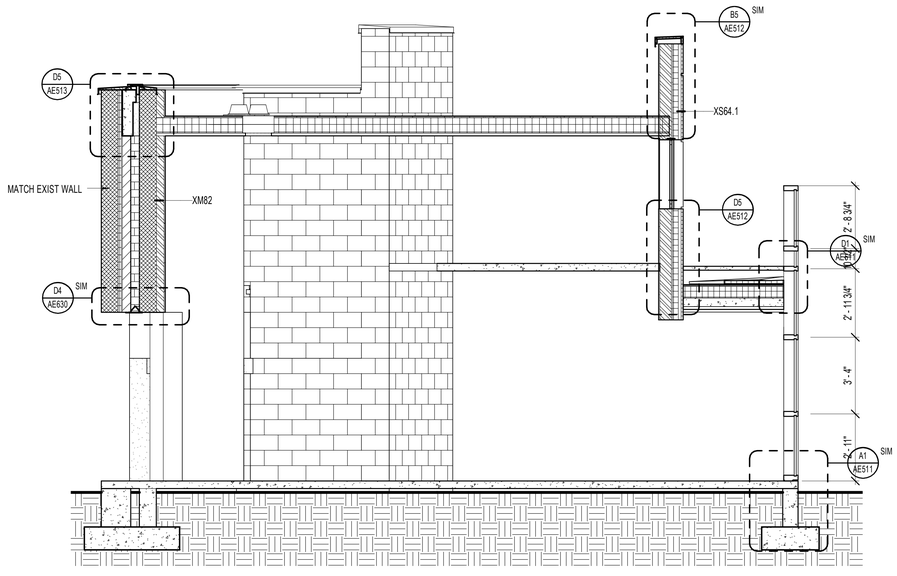

A1 GI802 **building section 2 mockup**
3/8" = 1'-0"

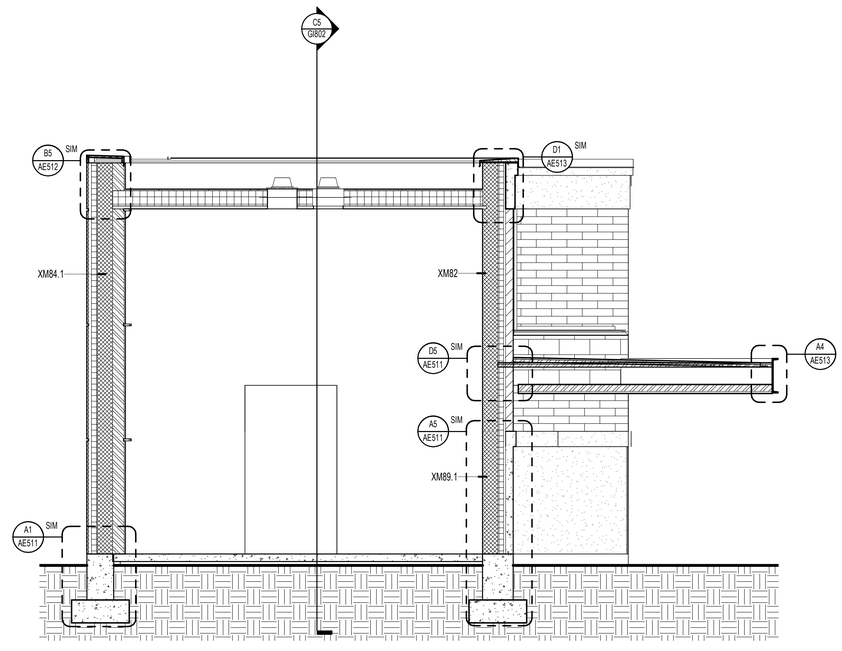

A4 GI802 **building section 1 mockup**
3/8" = 1'-0"

GENERAL NOTES - MOCKUP PLANS

A. NOTIFY ARCHITECT & COMMISSIONING AGENT WHEN WATER MEMBRANE IS INSTALLED PRIOR TO EXTERIOR CLADDING BEING INSTALLED
B. PROVIDE 1" GLAZING IN ALL MOCKUP WINDOW / CURTAIN WALL FRAMES
C. REFER TO AE543 FOR RAILING DETAILING
D. PROVIDE THRU-WALL SCUPPER @ BRICK AND PRECAST - REFER TO MECHANICAL FOR SCUPPER TYPE
E. PROVIDE CHEVRON MASONRY ACCENT PANEL - SEE C3/AE234

ARCHITECTURAL NEXUS
SALT LAKE CITY PLACERVILLE SACRAMENTO

Architectural NEXUS, Inc.
2505 East Parleys Way
Salt Lake City, Utah 84109
T 801.924.5000 F 801.924.5001
http://www.archnexus.com

Licensed Architect
PETER MOYES
No. 83-122248-0301
21 MARCH 2013
State of Utah

Original drawings remain the property of the Architect and as such the Architect retains total ownership and control. The design represented by these drawings is sold to the client for a one time use, unless otherwise agreed upon in writing by the Architect.
© Architectural Nexus, Inc. 2012

UTAH NATIONAL GUARD CAMP WILLIAMS
RTI TASS COMPLEX, PHASE II
NGB PROJECT NO. 490444
17800 SOUTH ACADEMY STREET
BLUFFDALE, UTAH 84065

#	REVISIONS	
1	4.08.13	ADD-03

NEXUS PROJECT #:	11024
CHECKED BY:	SMS
DRAWN BY:	Author
DATE:	21 MARCH 2013

SHEET CONTENTS:
BUILDING MOCKUP

VOLUME A.1 - BID DOCUMENTS

GI802

4/8/2013 8:55:06 AM

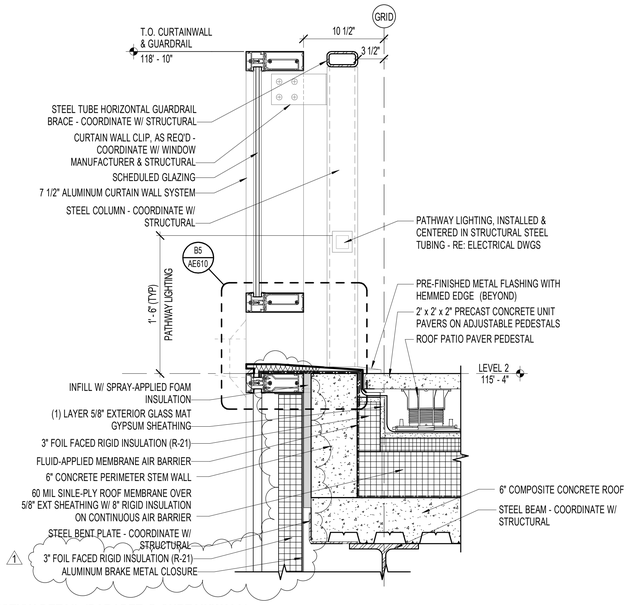

D1 AE511 — **SECTION DETAIL (PARAPET @ CURTAINWALL)**
1 1/2" = 1'-0"

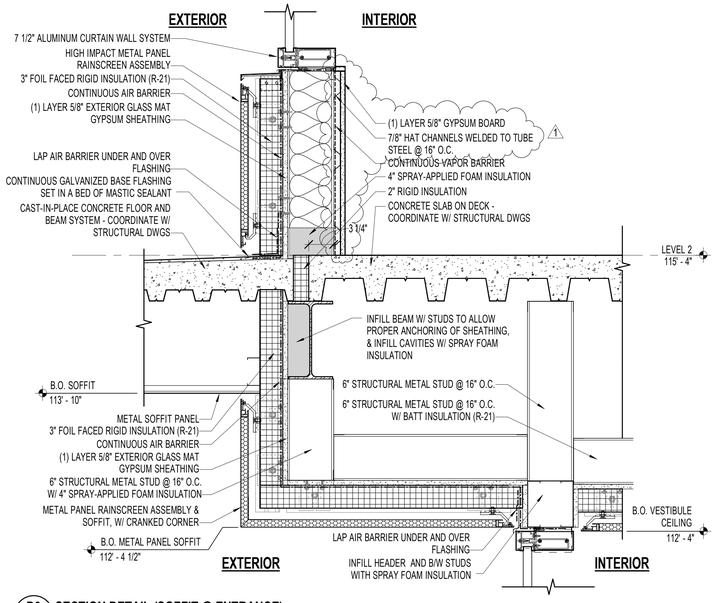

D3 AE511 — **SECTION DETAIL (SOFFIT @ ENTRANCE)**
1 1/2" = 1'-0"

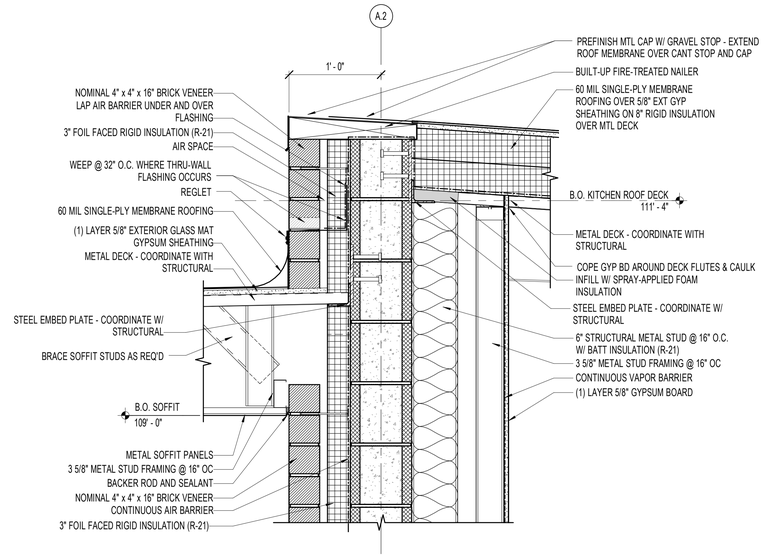

D5 AE511 — **SECTION DETAIL (PARAPET @ GRID 2.5/A.1)**
1 1/2" = 1'-0"

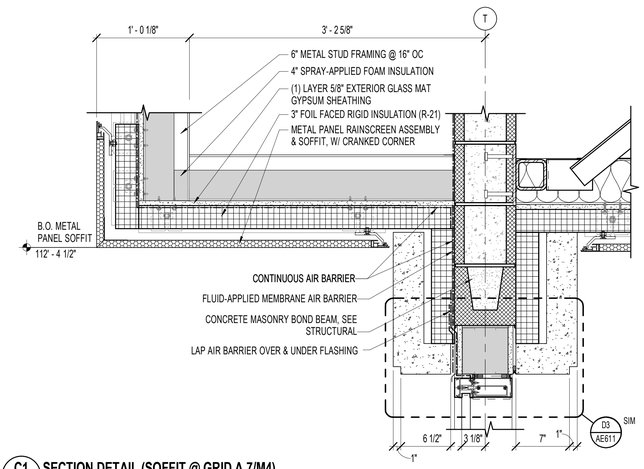

C1 AE511 — **SECTION DETAIL (SOFFIT @ GRID A.7/M4)**
1 1/2" = 1'-0"

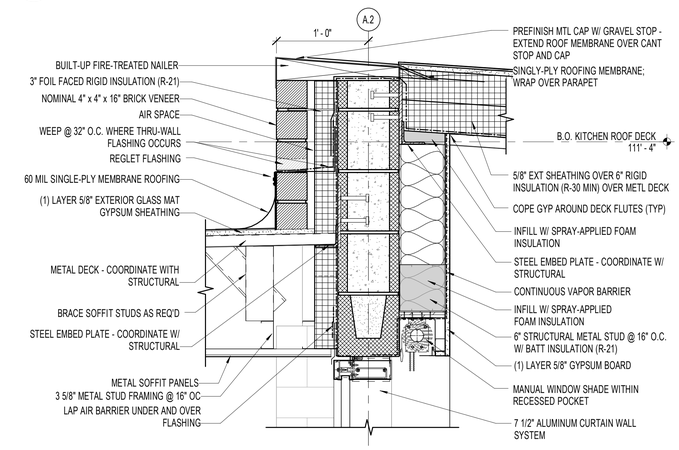

C3 AE511 — **SECTION DETAIL (LVL B.O. KITCHEN ROOF DECK, GRID 2.9/A.1)**
1 1/2" = 1'-0"

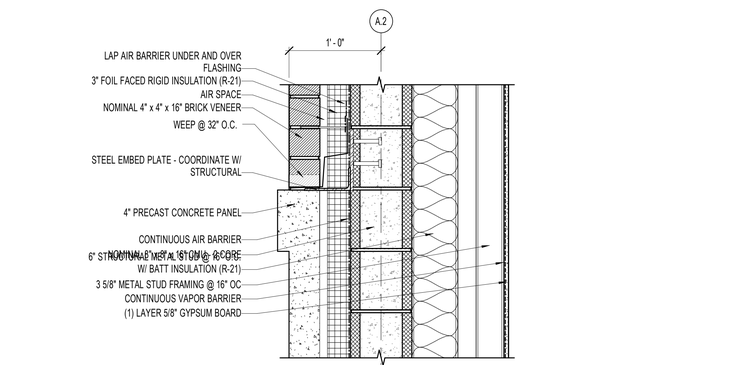

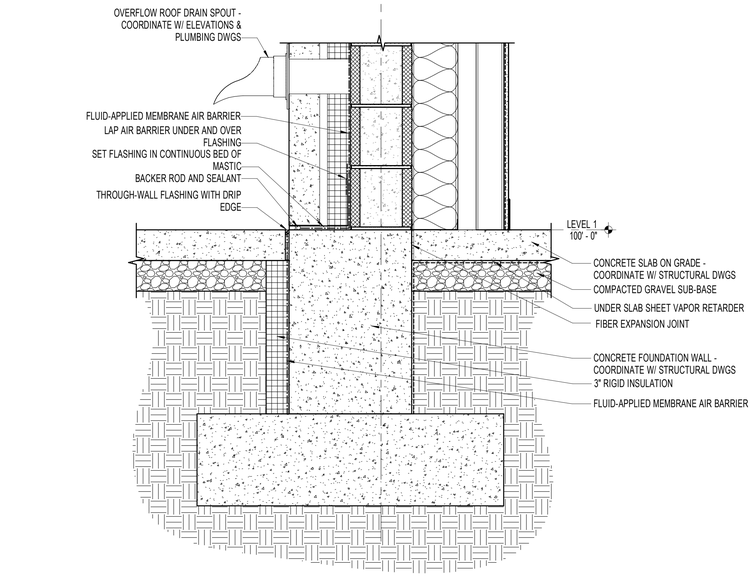

A5 AE511 — **SECTION DETAIL (LVL 1, GRID 2.5/A.1)**
1 1/2" = 1'-0"

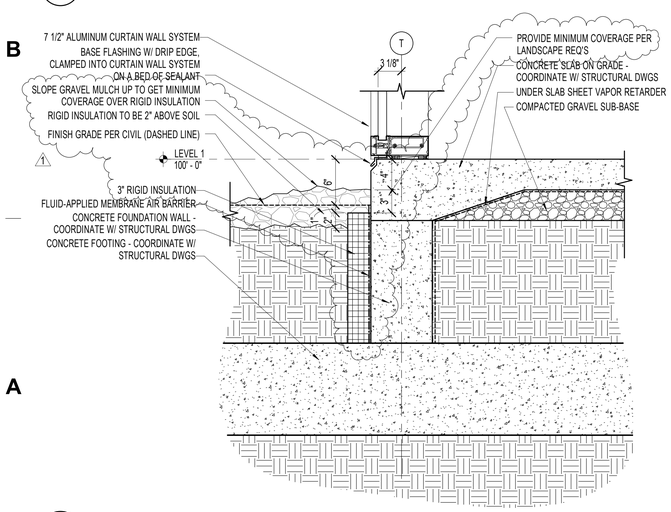

A1 AE511 — **SECTION DETAIL (SILL @ LEVEL 1 W/ EXPOSED GRADE)**
1 1/2" = 1'-0"

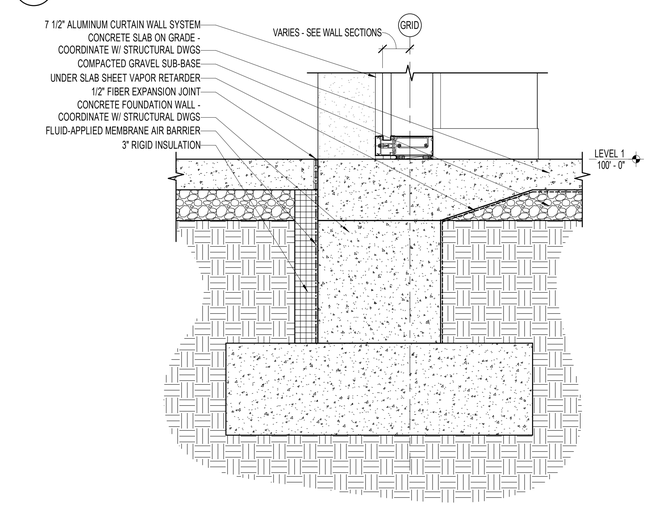

A3 AE511 — **SECTION DETAIL (SILL @ LEVEL 1 W/ HARDSCAPE)**
1 1/2" = 1'-0"

4/8/2013 10:48:04 AM

ARCHITECTURAL NEXUS
SALT LAKE CITY PLACERVILLE SACRAMENTO

Architectural NEXUS, Inc.
2505 East Parleys Way
Salt Lake City, Utah 84109
T 801.924.5000 F 801.924.5001
http://www.archnexus.com

Licensed Architect
PETER MOYES
No. 21 MARCH 2013
83-122248-0301
State of Utah

Original drawings remain the property of the Architect and as such the Architect retains total ownership and control. The design represented by these drawings is sold to the client for a one time use, unless otherwise agreed upon in writing by the Architect.
© Architectural Nexus, Inc. 2012

UTAH NATIONAL GUARD CAMP WILLIAMS
RTI TASS COMPLEX, PHASE II
NGB PROJECT NO. 490444
17800 SOUTH ACADEMY STREET
BLUFFDALE, UTAH 84065

#	REVISIONS	
1	4.08.13	ADD-03

NEXUS PROJECT #:	11024
CHECKED BY:	SMS
DRAWN BY:	RM
DATE:	21 MARCH 2013

SHEET CONTENTS:
SECTION DETAILS

VOLUME A.1 - BID DOCUMENTS

AE511

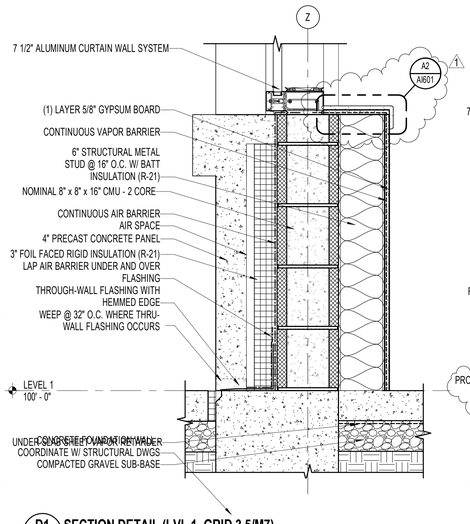

D1 AE512 SECTION DETAIL (LVL 1, GRID 3.5/M7)
1 1/2" = 1'-0"

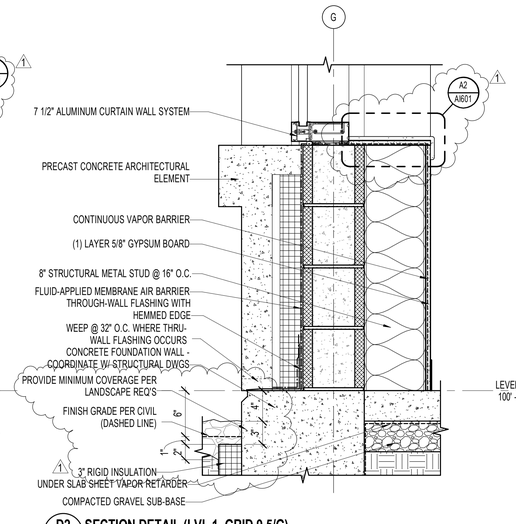

D2 AE512 SECTION DETAIL (LVL 1, GRID 9.5/G)
1 1/2" = 1'-0"

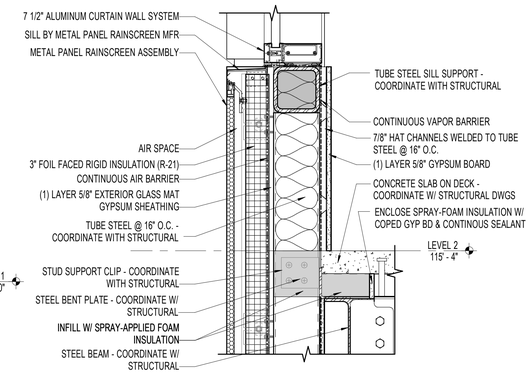

D3 AE512 SECTION DETAIL (LVL 2, SLAB EDGE, STUDS)
1 1/2" = 1'-0"

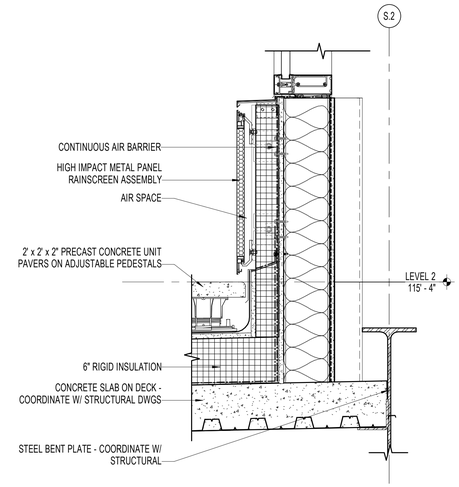

D5 AE512 SECTION DETAIL (SILL @ LEVEL 2 ROOF)
1 1/2" = 1'-0"

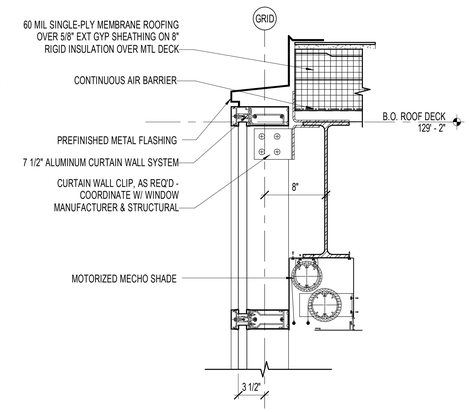

C1 AE512 MULLION DETAIL (PARAPET @ CURTAINWALL FLUSH)
1 1/2" = 1'-0"

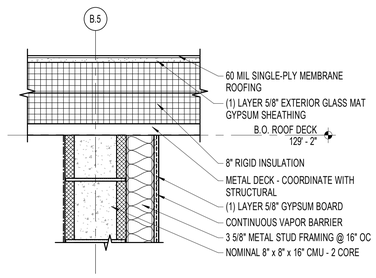

C2 AE512 SECTION DETAIL (LVL B.O. ROOF DECK, CMU)
1 1/2" = 1'-0"

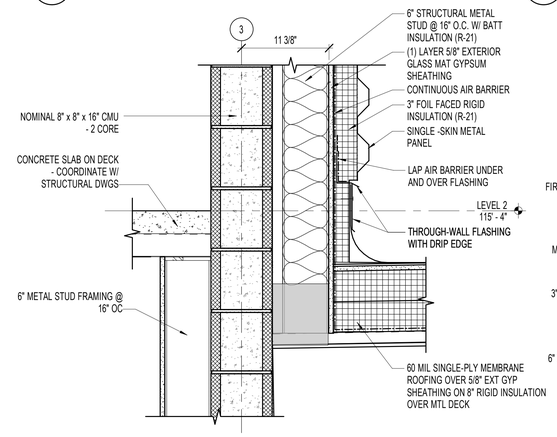

C4 AE512 SECTION DETAIL (LVL 2, GRID C.4/3)
1 1/2" = 1'-0"

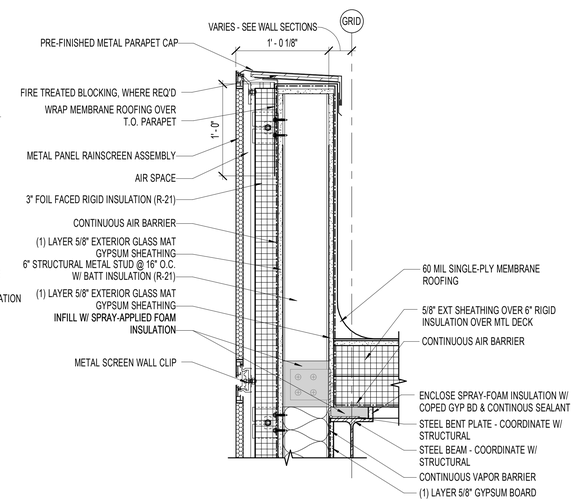

B5 AE512 SECTION DETAIL (PARAPET @ METAL PANEL, 2-SIDES)
1 1/2" = 1'-0"

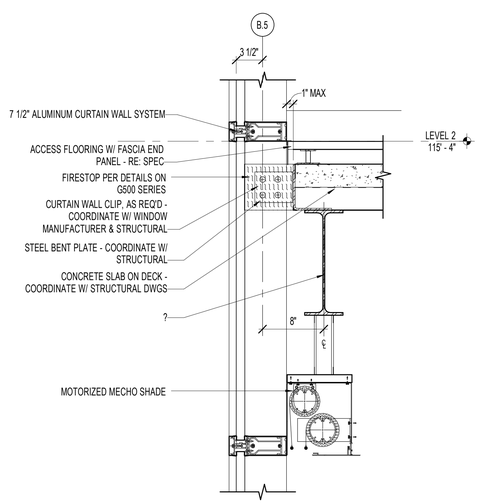

A1 AE512 SECTION DETAIL (LVL 2, SLAB EDGE, CURTAINWALL)
1 1/2" = 1'-0"

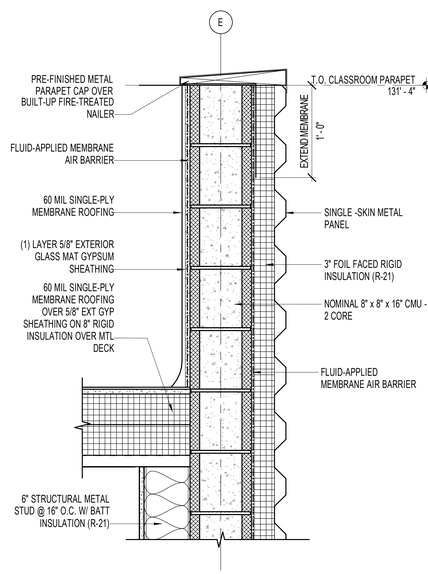

A2 AE512 SECTION DETAIL (PARAPET @ GRID 2.2/E)
1 1/2" = 1'-0"

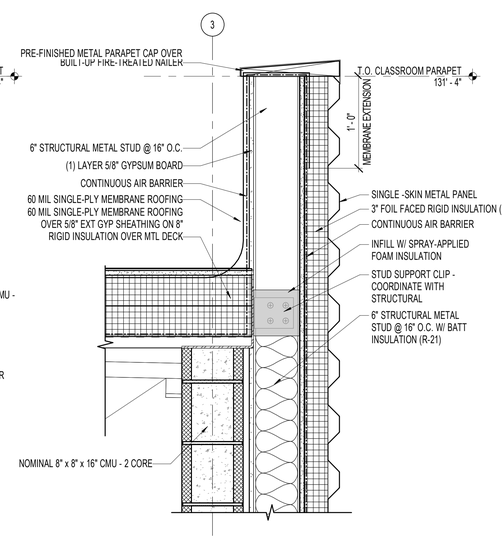

A4 AE512 SECTION DETAIL (PARAPET @ GRID C.4/3)
1 1/2" = 1'-0"

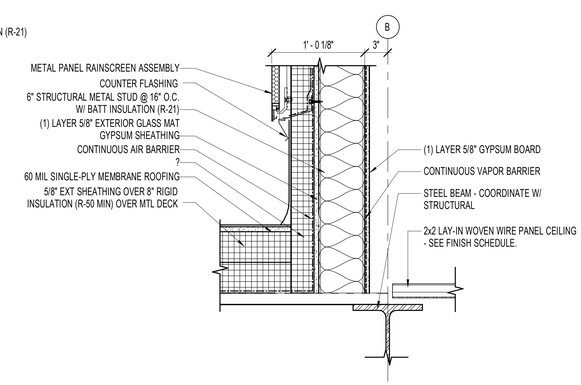

A5 AE512 SECTION DETAIL (ROOF @ GRID 2.5/A.1)
1 1/2" = 1'-0"

4/8/2013 10:18:14 AM

ARCHITECTURAL NEXUS
SALT LAKE CITY PLACERVILLE SACRAMENTO

Architectural NEXUS, Inc.
2505 East Parleys Way
Salt Lake City, Utah 84109
T 801.924.5000 F 801.924.5001
http://www.archnexus.com

Licensed Architect PETER MOYES No. 83-122248-0301 21 MARCH 2013 State of Utah

Original drawings remain the property of the Architect and as such the Architect retains total ownership and control. The design represented by these drawings is sold to the client for a one time use, unless otherwise agreed upon in writing by the Architect.
© Architectural Nexus, Inc. 2012

UTAH NATIONAL GUARD CAMP WILLIAMS
RTI TASS COMPLEX, PHASE II
NGB PROJECT NO. 490444
17800 SOUTH ACADEMY STREET
BLUFFDALE, UTAH 84065

#	REVISIONS	
1	4.08.13	ADD-03

NEXUS PROJECT #:	11024
CHECKED BY:	SMS
DRAWN BY:	Author
DATE:	21 MARCH 2013

SHEET CONTENTS:
SECTION DETAILS

VOLUME A.1 - BID DOCUMENTS

AE512

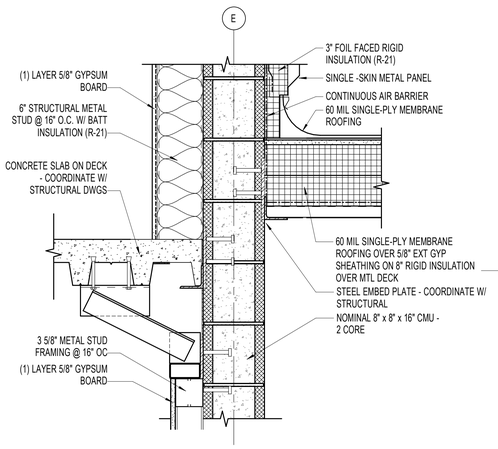

D1 AE515 **SECTION DETAIL (LVL 2, GRID 2.2/E)**
1 1/2" = 1'-0"

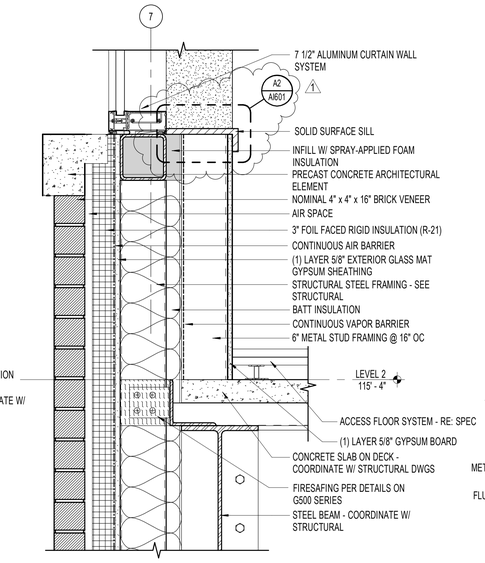

D2 AE515 **SECTION DETAIL (SILL @ LEVEL 2)**
1 1/2" = 1'-0"

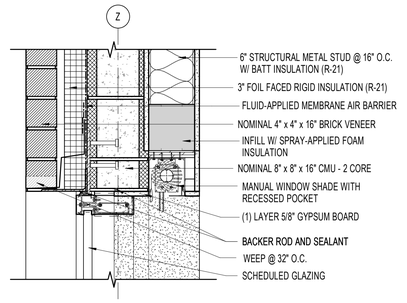

E4 AE515 **SECTION DETAIL (HEAD @ LEVEL 1)**
1 1/2" = 1'-0"

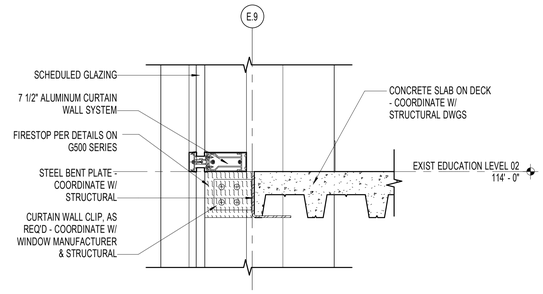

E2 AE515 **SECTION DETAIL (LVL 2, GRID 1.2/F)**
1 1/2" = 1'-0"

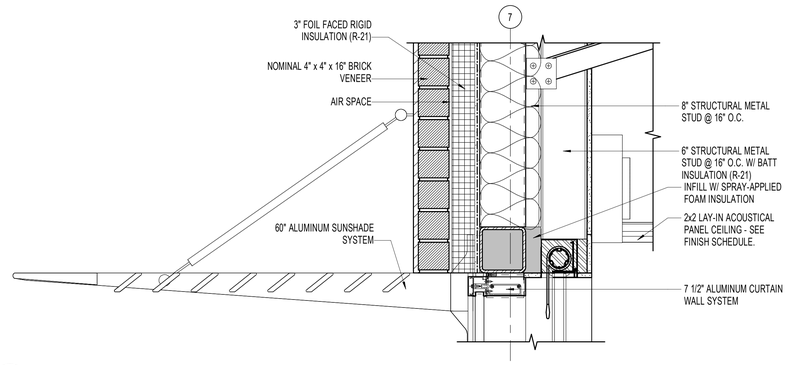

C1 AE515 **SECTION DETAIL (CANOPY @ GRID E.3/7)**
1 1/2" = 1'-0"

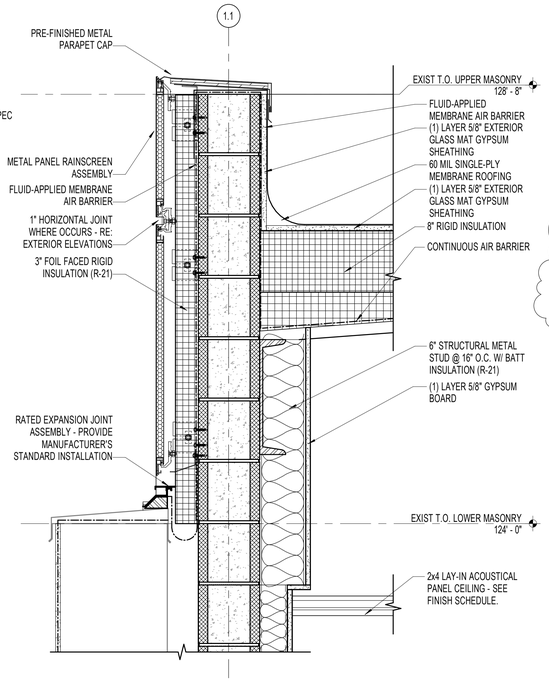

C4 AE515 **SECTION DETAIL (PARAPET @ GRID 1.1/D.5)**
1 1/2" = 1'-0"

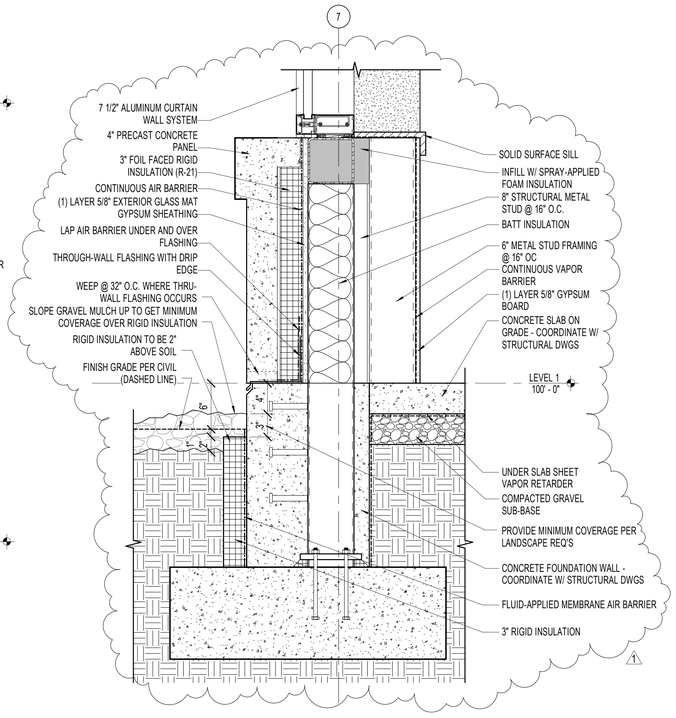

C5 AE515 **SECTION DETAIL (LVL1, GRID E.3/7)**
1 1/2" = 1'-0"

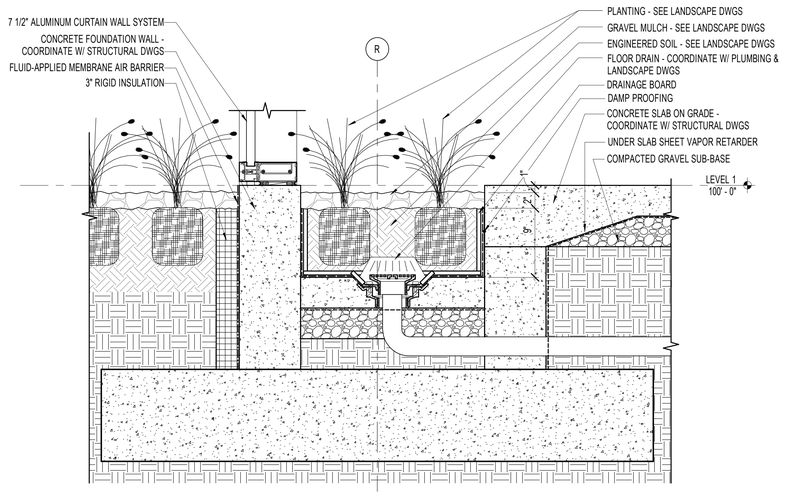

A1 AE515 **SECTION DETAIL (LOBBY PLANTER)**
1 1/2" = 1'-0"

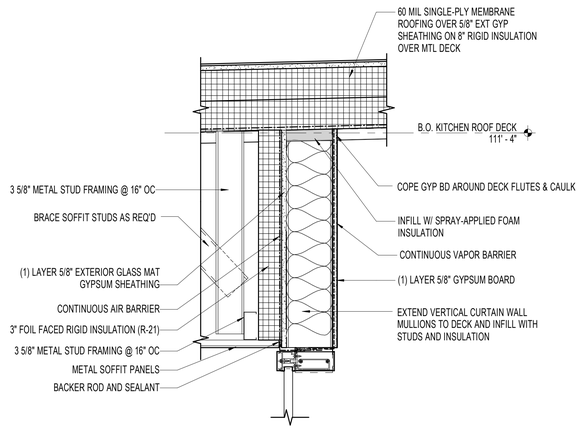

A4 AE515 **SECTION DETAIL (LVL B.O. KITCHEN ROOF DECK, GRID 1.5/A.3)**
1 1/2" = 1'-0"

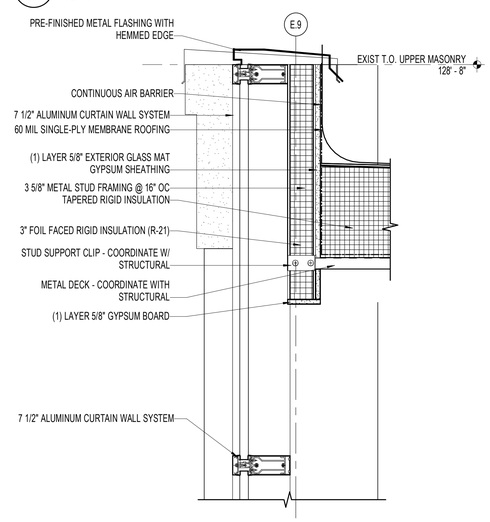

A5 AE515 **SECTION DETAIL (PARAPET @ CURTAINWALL 2)**
1 1/2" = 1'-0"

4/8/2013 8:53:49 AM

ARCHITECTURAL NEXUS
SALT LAKE CITY PLACERVILLE SACRAMENTO

Architectural NEXUS, Inc.
2505 East Parleys Way
Salt Lake City, Utah 84109
T 801.924.5000 F 801.924.5001
http://www.archnexus.com

Licensed Architect
PETER MOYES
No. 21 MARCH 2013
83-122248-0301
State of Utah

Original drawings remain the property of the Architect and as such the Architect retains total ownership and control. The design represented by these drawings is sold to the client for a one time use, unless otherwise agreed upon in writing by the Architect.
© Architectural Nexus, Inc. 2012

UTAH NATIONAL GUARD CAMP WILLIAMS
RTI TASS COMPLEX, PHASE II
NGB PROJECT NO. 490444
17800 SOUTH ACADEMY STREET
BLUFFDALE, UTAH 84065

#	REVISIONS	
1	4.08.13	ADD-03

NEXUS PROJECT #:	11024
CHECKED BY:	SMS
DRAWN BY:	RM
DATE:	21 MARCH 2013

SHEET CONTENTS:
SECTION DETAILS

VOLUME A.1 - BID DOCUMENTS

AE515

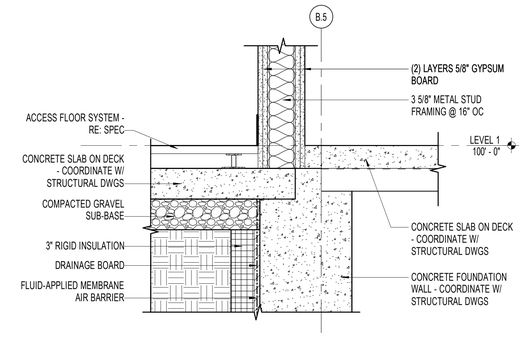

D1 AE516 SECTION DETAIL (LVL 1, GRID 6.4/B.5) - BASEMENT (ADD/ALT)
1 1/2" = 1'-0"

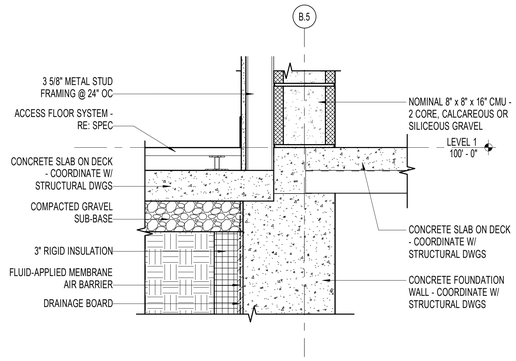

D3 AE516 SECTION DETAIL (LVL 1, GRID 6.5/B.5) - BASEMENT (ADD/ALT)
1 1/2" = 1'-0"

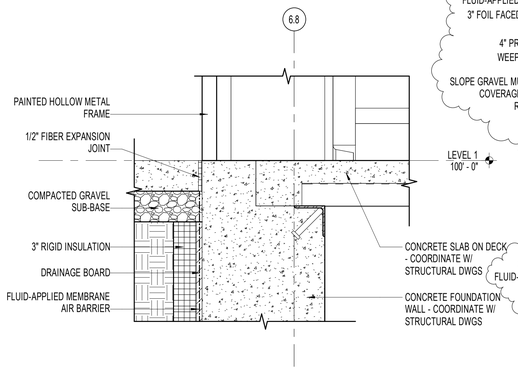

D4 AE516 SECTION DETAIL (LVL 1, GRID 6.8/A.6) - BASEMENT (ADD/ALT)
1 1/2" = 1'-0"

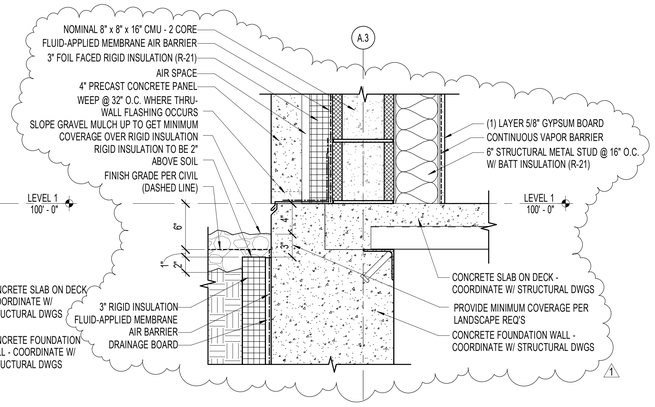

D6 AE516 SECTION DETAIL (LVL 1, GRID 6.5/A.3) - BASEMENT (ADD/ALT)
1 1/2" = 1'-0"

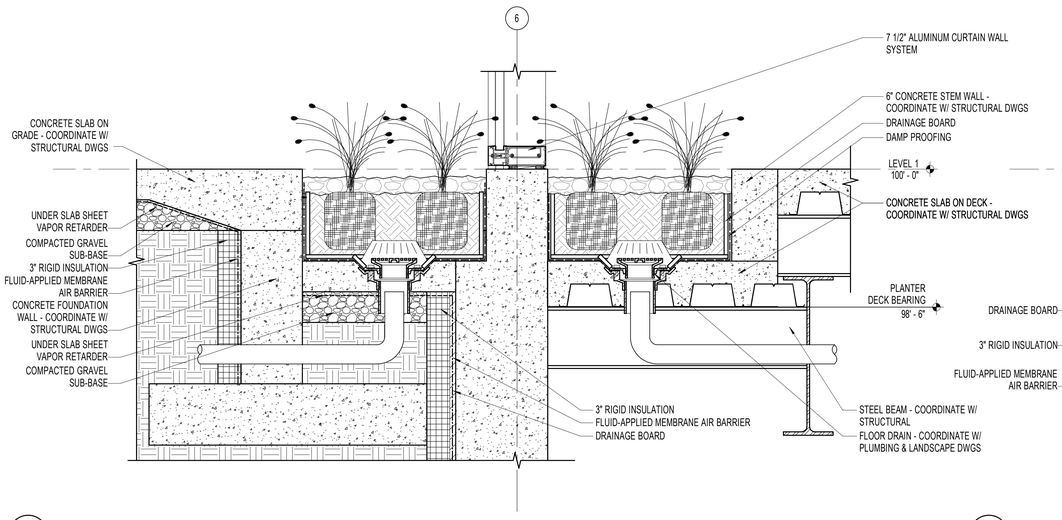

C1 AE516 SECTION DETAIL (LVL 1, GRID A/6) - BASEMENT (ADD/ALT)
1 1/2" = 1'-0"

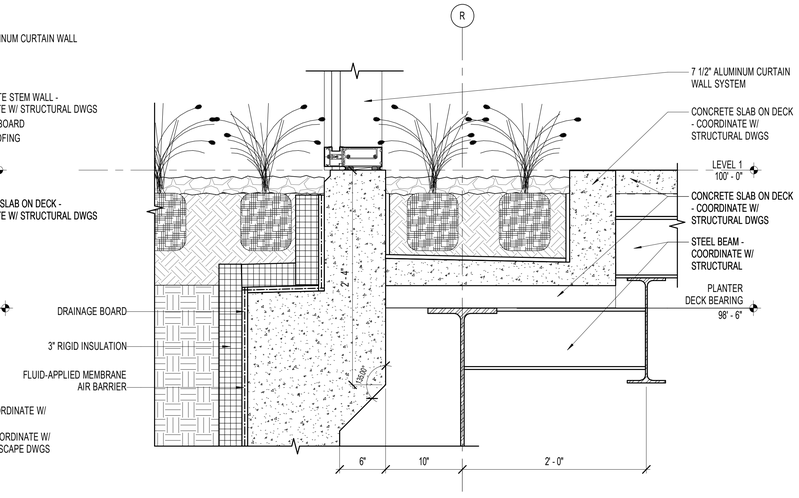

C5 AE516 SECTION DETAIL (LVL 1, GRID 5.5/R) - BASEMENT (ADD/ALT)
1 1/2" = 1'-0"

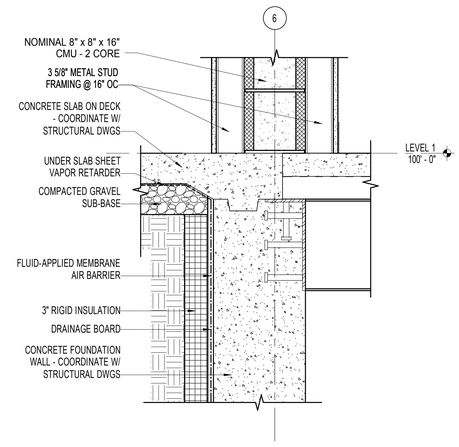

C6 AE516 SECTION DETAIL (LVL 1, GRID C.5/6) - BASEMENT (ADD/ALT)
1 1/2" = 1'-0"

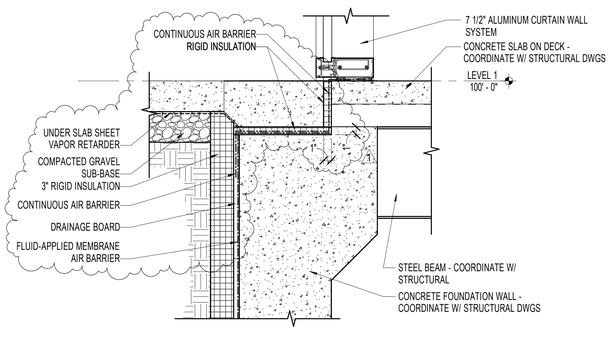

A1 AE516 SECTION DETAIL (LVL 1, GRID 4.5/S) - BASEMENT (ADD/ALT)
1 1/2" = 1'-0"

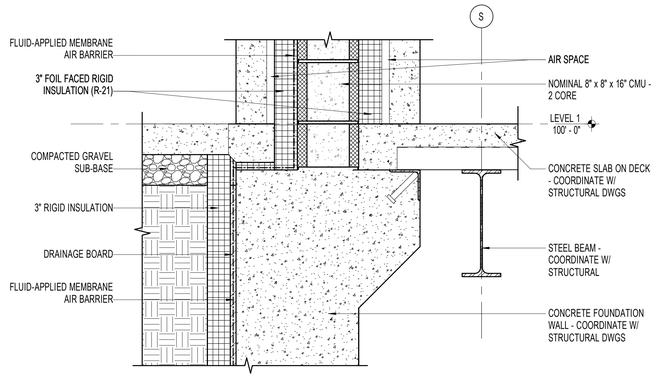

A2 AE516 SECTION DETAIL (LVL 1, GRID 4.1/S) - BASEMENT (ADD/ALT)
1 1/2" = 1'-0"

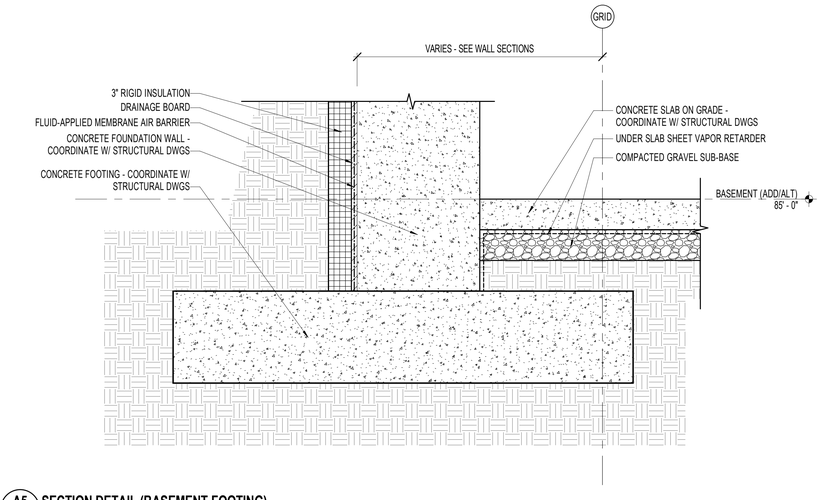

A5 AE516 SECTION DETAIL (BASEMENT FOOTING)
1 1/2" = 1'-0"

4/8/2013 8:54:02 AM

ARCHITECTURAL NEXUS
SALT LAKE CITY PLACERVILLE SACRAMENTO

Architectural NEXUS, Inc.
2505 East Parleys Way
Salt Lake City, Utah 84109
T 801.924.5000 F 801.924.5001
http://www.archnexus.com

Licensed Architect PETER MOYES No. 21 MARCH 2013 83-122248-0301 State of Utah

Original drawings remain the property of the Architect and as such the Architect retains total ownership and control. The design represented by these drawings is sold to the client for a one time use, unless otherwise agreed upon in writing by the Architect.
© Architectural Nexus, Inc. 2012

UTAH NATIONAL GUARD CAMP WILLIAMS
RTI TASS COMPLEX, PHASE II
NGB PROJECT NO. 490444
17800 SOUTH ACADEMY STREET
BLUFFDALE, UTAH 84065

#	REVISIONS	
1	4.08.13	ADD-03

NEXUS PROJECT #:	11024
CHECKED BY:	SMS
DRAWN BY:	Author
DATE:	21 MARCH 2013

SHEET CONTENTS:
SECTION DETAILS - BASEMENT (ADD/ALT)

VOLUME A.1 - BID DOCUMENTS

AE516

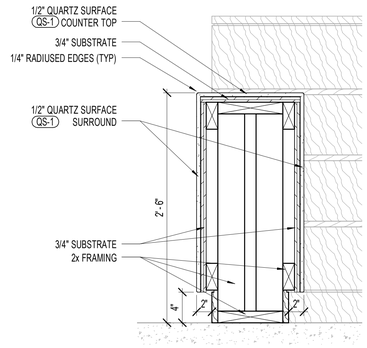

D4 AE554 1 1/2" = 1'-0"

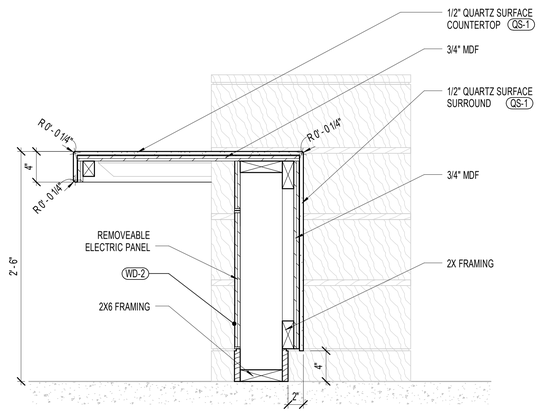

C2 AE554 1 1/2" = 1'-0"

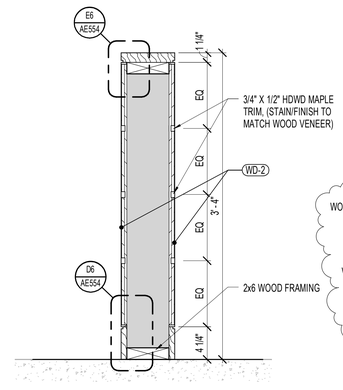

C4 AE554 1 1/2" = 1'-0"

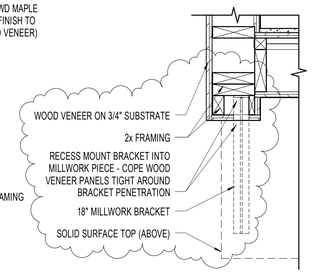

C5 AE554 1 1/2" = 1'-0"

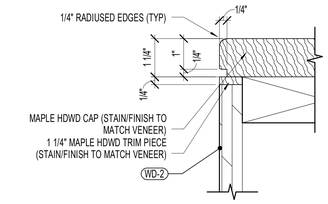

E6 AE554 6" = 1'-0"

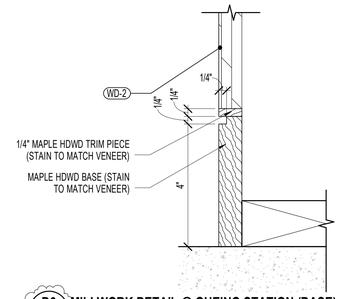

D6 AE554 6" = 1'-0"

GENERAL NOTES - MILLWORK

A. SEE GI SERIES SHEETS FOR REGULATORY INFORMATION, INCLUDING TYPICAL ACCESSIBILITY CLEARANCE AND COMPLIANCE REQUIREMENTS.
B. SEE DIMENSIONAL PLANS IN AE100 SERIES FOR ALIGNMENT / POSITION OF STRUCTURAL ELEMENTS AND OTHER KEY DIMENSIONS.
C. UNLESS NOTED OTHERWISE, WALL DIMENSIONS ARE TO GRID OR FACE OF STUD / STRUCTURE. "CLEAR" DIMENSIONS ARE TO FACE OF FINISH.
D. WHETHER SPECIFICALLY CALLED OUT OR NOT, PROVIDE BACKING BEHIND ALL SURFACE MOUNTED EQUIPMENT AND/OR FIXTURES PER DETAIL B4/AE701.
E. ENSURE ALL REQUIRED FIXTURE AND CABINET CLEARANCES AND OTHER REQUIREMENTS ARE MAINTAINED PURSUANT TO ADAAG AND ANSI A117.1. SEE SHEET GI701 FOR GENERAL GUIDANCE ON COMMON MOUNTIN HEIGHTS.
F. COORDINATE PENETRATIONS AND OPENINGS W/ KITCHEN EQUIPMENT SUPPLIER THEIR ASSOCIATED TRADES.
G. DIMENSION ALL CABINETS PER AWS STANDARDS.
H. SEE FINISH SCHEDULE FOR ALL FINISHES.
I. COORDINATE CONSTRUCTION W/ QF500 DWGS

CABINET DESIGN STANDARD (CDS)

REFER TO CABINET DESIGN STANDARD (CDS) FROM THE ARCHITECTURAL WOODWORK STANDARDS SYSTEM.

WIDTH (IN INCHES) — CDS(MI) — DEPTH (IN INCHES)
HEIGHT (IN INCHES)

CABINET MODIFICATION DESCRIPTION
(TO BE PLACED BENEATH SYMBOL AS NOTED)

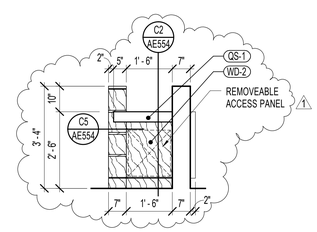

B2 AE554 1/2" = 1'-0"

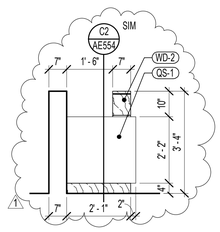

B3 AE554 1/2" = 1'-0"

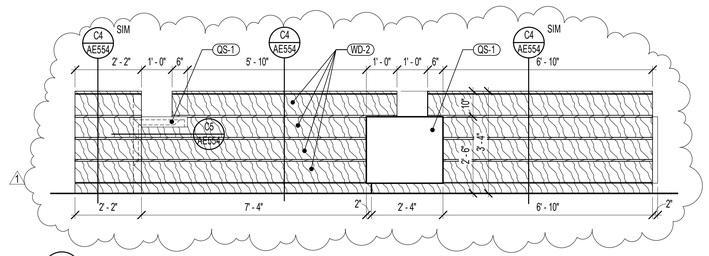

B4 AE554 1/2" = 1'-0"

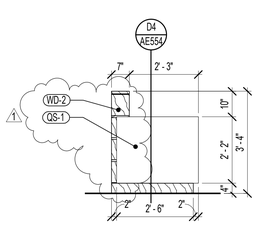

A2 AE554 1/2" = 1'-0"

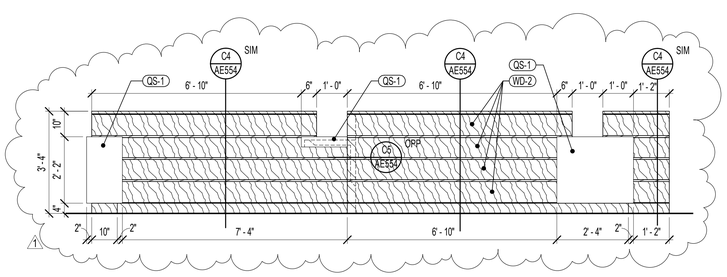

A3 AE554 1/2" = 1'-0"

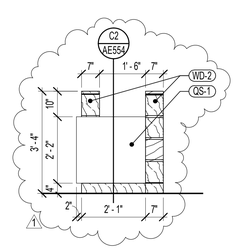

A5 AE554 1/2" = 1'-0"

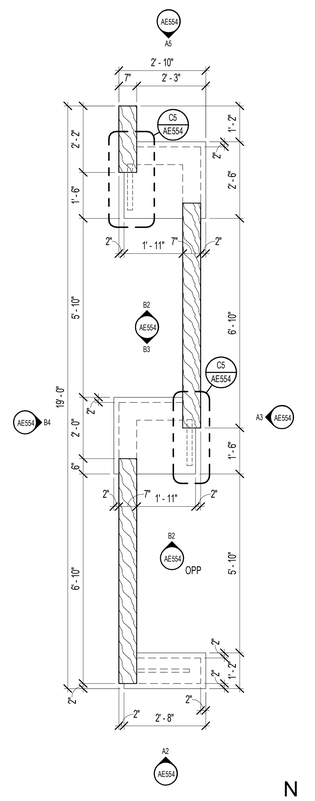

A6 AE554 1/2" = 1'-0"

N

ARCHITECTURAL NEXUS
SALT LAKE CITY PLACERVILLE SACRAMENTO

Architectural NEXUS, Inc.
2505 East Parleys Way
Salt Lake City, Utah 84109
T 801.924.5000 F 801.924.5001
http://www.archnexus.com

Licensed Architect
PETER MOYES
No. 21 MARCH 2013
83-122248-0301
State of Utah

Original drawings remain the property of the Architect and as such the Architect retains total ownership and control. The design represented by these drawings is sold to the client for a one time use, unless otherwise agreed upon in writing by the Architect.
© Architectural Nexus, Inc. 2012

UTAH NATIONAL GUARD CAMP WILLIAMS
RTI TASS COMPLEX, PHASE II
NGB PROJECT NO. 490444

17800 SOUTH ACADEMY STREET
BLUFFDALE, UTAH 84065

REVISIONS		
1	4.08.13	ADD-03

NEXUS PROJECT #:	11024
CHECKED BY:	SMS
DRAWN BY:	Author
DATE:	21 MARCH 2013

SHEET CONTENTS:
MILLWORK PLANS & ELEVATIONS

VOLUME A.1 - BID DOCUMENTS

AE554

4/8/2013 8:54:04 AM

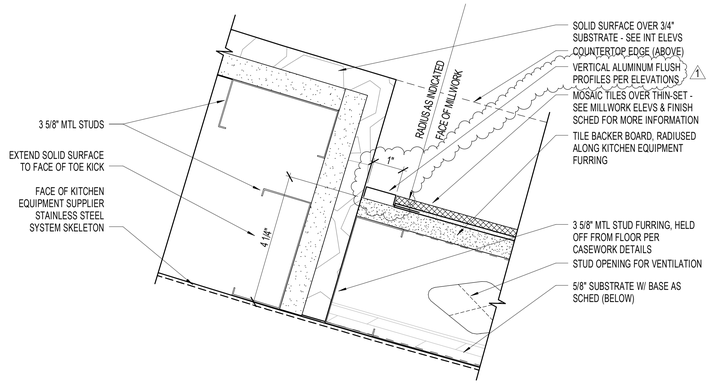

C5 AE555 **SERVERY SOLID SURFACE RETURN**
6" = 1'-0"

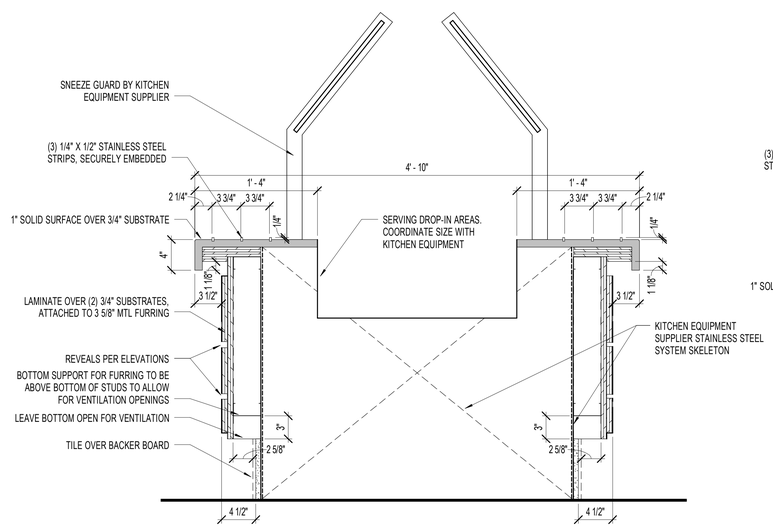

A3 AE555 **SERVERY ISLAND SECTION**
1 1/2" = 1'-0"

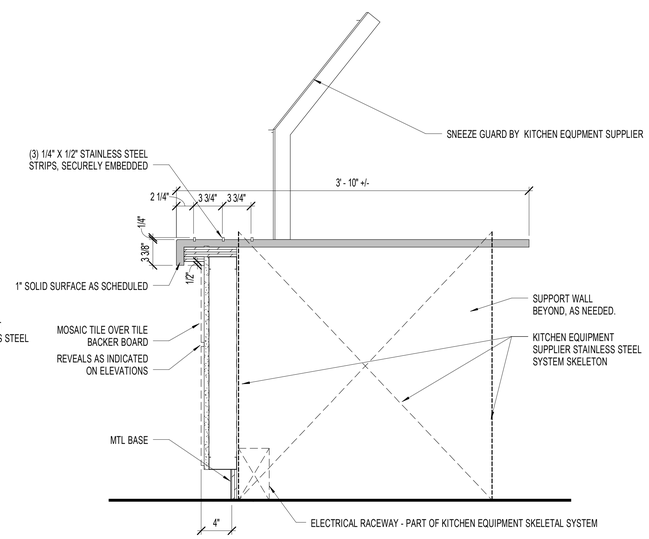

A5 AE555 **SERVERY COUNTER SECTION**
1 1/2" = 1'-0"

4/8/2013 8:54:09 AM

ARCHITECTURAL NEXUS
SALT LAKE CITY PLACERVILLE SACRAMENTO

Architectural NEXUS, Inc.
2505 East Parleys Way
Salt Lake City, Utah 84109
T 801.924.5000 F 801.924.5001
http://www.archnexus.com

Licensed Architect
PETER MOYES
No. 83-122248-0301
21 MARCH 2013
State of Utah

Original drawings remain the property of the Architect and as such the Architect retains total ownership and control. The design represented by these drawings is sold to the client for a one time use, unless otherwise agreed upon in writing by the Architect.
© Architectural Nexus, Inc. 2012

UTAH NATIONAL GUARD CAMP WILLIAMS
RTI TASS COMPLEX, PHASE II
NGB PROJECT NO. 490444
17800 SOUTH ACADEMY STREET
BLUFFDALE, UTAH 84065

#	REVISIONS	
1	4.08.13	ADD-03

NEXUS PROJECT #:	11024
CHECKED BY:	SMS
DRAWN BY:	Author
DATE:	21 MARCH 2013

SHEET CONTENTS:
MILLWORK DETAILS

VOLUME A.1 - BID DOCUMENTS

AE555

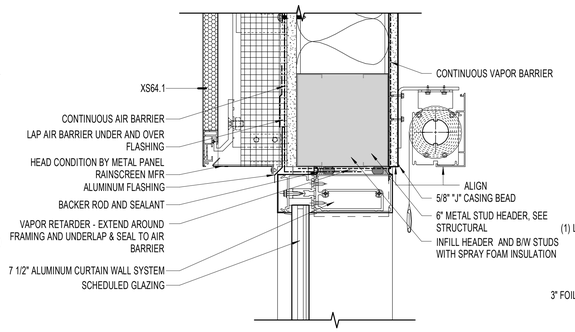

D1 / AE610 — HEAD DETAIL (CURTAIN WALL, WALL TYPE XS64.1
3" = 1'-0"

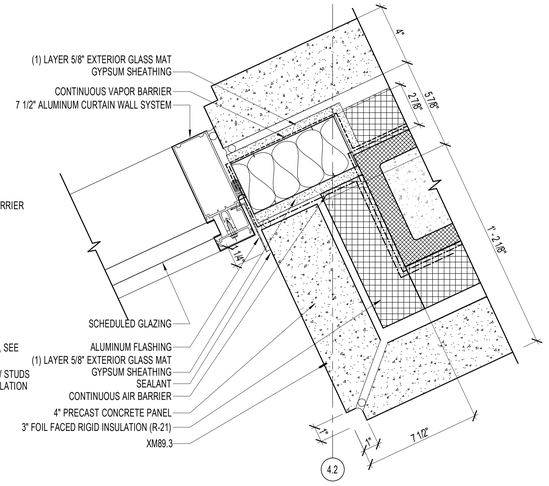

D2 / AE610 — JAMB DETAIL (CURTAIN WALL, WALL TYPE XM89.2, TYP 02)
3" = 1'-0"

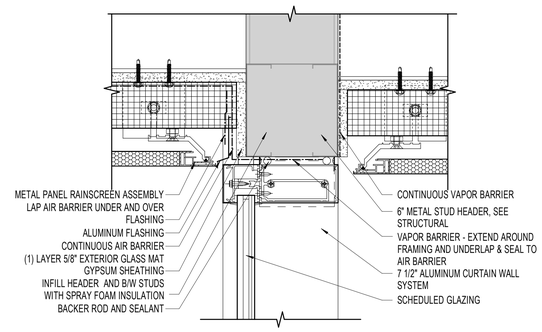

D4 / AE610 — HEAD DETAIL (WINDOW TYPE W31)
3" = 1'-0"

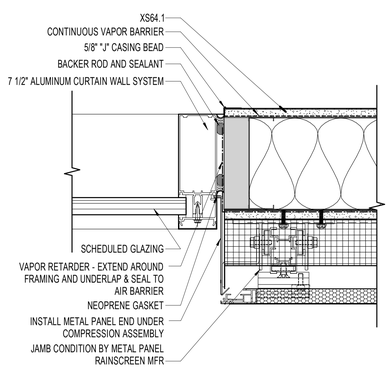

B1 / AE610 — JAMB DETAIL (CURTAIN WALL, WALL TYPE XS64.1)
3" = 1'-0"

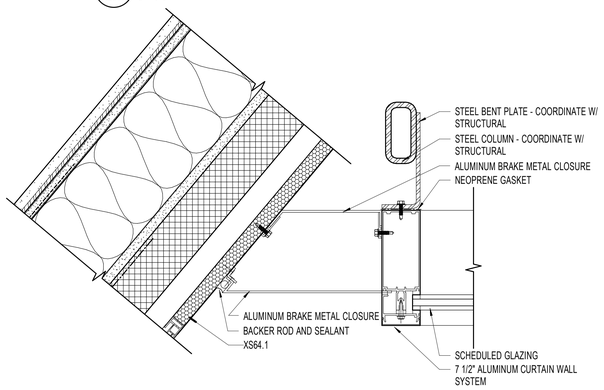

B2 / AE610 — JAMB DETAIL (WINDOW TYPE W31)
3" = 1'-0"

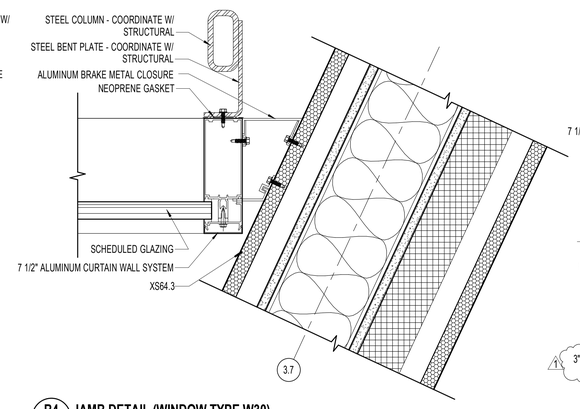

B4 / AE610 — JAMB DETAIL (WINDOW TYPE W30)
3" = 1'-0"

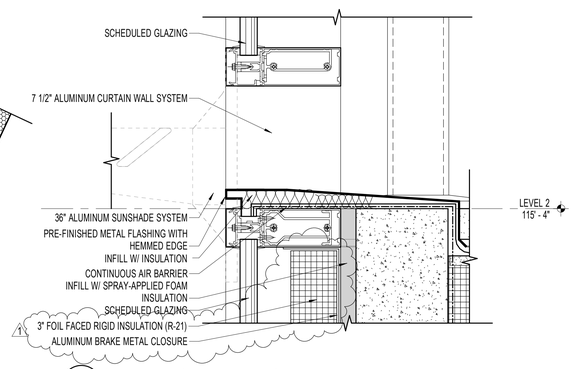

B5 / AE610 — SILL DETAIL (CURTAIN WALL @ PARAPET, TYP 01)
3" = 1'-0"

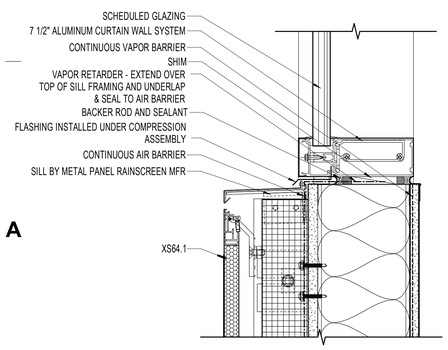

A1 / AE610 — SILL DETAIL (CURTAIN WALL, WALL TYPE XS64.1)
3" = 1'-0"

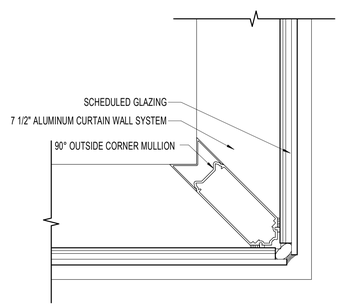

A2 / AE610 — CORNER DETAIL (CURTAIN WALL @ W33 & W34)
3" = 1'-0"

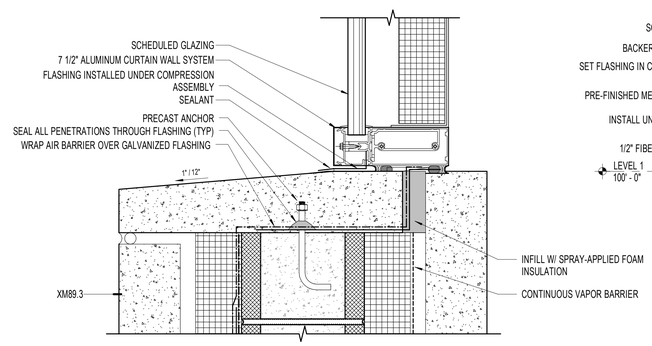

A4 / AE610 — SILL DETAIL (WINDOW TYPE W30)
3" = 1'-0"

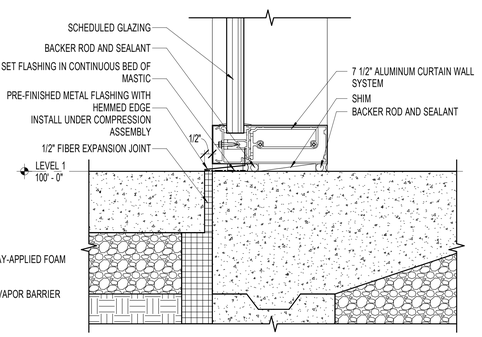

A5 / AE610 — SILL DETAIL (CURTAIN WALL, TYP 01)
3" = 1'-0"

4/8/2013 8:54:24 AM

ARCHITECTURAL NEXUS
SALT LAKE CITY PLACERVILLE SACRAMENTO

Architectural NEXUS, Inc.
2505 East Parleys Way
Salt Lake City, Utah 84109
T 801.924.5000 F 801.924.5001
http://www.archnexus.com

Licensed Architect PETER MOYES No. 83-122248-0301 21 MARCH 2013 State of Utah

Original drawings remain the property of the Architect and as such the Architect retains total ownership and control. The design represented by these drawings is sold to the client for a one time use, unless otherwise agreed upon in writing by the Architect.
© Architectural Nexus, Inc. 2012

UTAH NATIONAL GUARD CAMP WILLIAMS
RTI TASS COMPLEX, PHASE II
NGB PROJECT NO. 490444
17800 SOUTH ACADEMY STREET
BLUFFDALE, UTAH 84065

REVISIONS

#	Date	Description
1	4.08.13	ADD-03

NEXUS PROJECT #:	11024
CHECKED BY:	SMS
DRAWN BY:	AW
DATE:	21 MARCH 2013

SHEET CONTENTS:
CURTAIN WALL DETAILS

VOLUME A.1 - BID DOCUMENTS

AE610

ROOM FINISH SCHEDULE - LEVEL 1

ROOM NO.	ROOM NAME	FLOOR	BASE	WALLS N	WALLS E	WALLS S	WALLS W	CEILINGS TYPE	CEILINGS FINISH	CEILINGS HEIGHT	NOTES	ROOM NO.
1100	VESTIBULE	C6 / SC2		-	-	-	-			12' - 4"		1100
1101	ENTRY / LOBBY	C1 / C2 / SC2	RB1 / MB1	P2	P12	P2	P2	CT02 / CT10	P2	VARIES		1101
1102	HALL	C1 / C2	RB1	P2	P12 / WT1 / WT2	P2	P2	CT02 / CT03 / CT04	P2	VARIES		1102
1103	HALL	C1 / C2 / T9	RB1	P2	P2	P2	WT1 / WT2 / P2	CT04		9' - 0"		1103
1104	HALL	C1 / C2 / SC2	RB1	P2	P2	P12	P2	CT02 / CT04	P2	9' - 0"		1104
1105	HALL	C1 / C2	RB1	P2	P2	P2	P2	CT02 / CT04	P2	9' - 0"		1105
1106	HALL	C1 / C2 / T9	RB1	P2 / WT1 / WT2	P12	P2	P12	CT02 / CT04	P2	9' - 0"		1106
1110	INSTRUCTOR PREP / COUNSELING	C1 / C2	RB1	P2	P2	P2	P2	CT05		9' - 0"		1110
1111	CLASSROOM	C1 / C2 / C3	RB1	P2	P2	P2	P13 / P14	CT02 / CT09	P2	10' - 6"		1111
1112	CLASSROOM	C1 / C2 / C3	RB1	P2	P2	P2	P13 / P14	CT02 / CT09	P2	10' - 6"		1112
1112A	CLASSROOM STORAGE	C1 / C2	RB1	P2	P2	P2	P2	CT07		9' - 0"		1112A
1113	INSTRUCTOR PREP / COUNSELING	C1 / C2	RB1	P2	P2	P2	P2	CT05		9' - 0"		1113
1114	CLASSROOM OFFICE	C1 / C2	RB1	P2	P2	P2	P2	CT05		9' - 0"		1114
1115	INSTRUCTOR PREP / COUNSELING	C1 / C2	RB1	P2	P2	P2	P2	CT05		9' - 0"		1115
1116	CLASSROOM OFFICE	C1 / C2	RB1	P2	P2	P2	P2	CT05		9' - 0"		1116
1117	CLASSROOM	C1 / C2 / C3	RB1	P13 / P14	P2	P2	P2	CT02 / CT09	P2	10' - 6"		1117
1117A	CLASSROOM STORAGE	C1 / C2	RB1	P2	P2	P2	P2	CT07		9' - 0"		1117A
1118	CLASSROOM	C1 / C2 / C3	RB1	P13 / P14	P2	P2	P2	CT02 / CT09	P2	10' - 6"		1118
1119	INSTRUCTOR PREP / COUNSELING	C1 / C2	RB1	P2	P2	P2	P2	CT05		9' - 0"		1119
1130	HALL	C1 / C2	RB1	P2	P2 /P12	P2	P2	CT04		9' - 0"		1130
1131	OPEN OFFICE AREA	C1 / C2	RB1	P2	P2	P2	P2	CT05		9' - 0"		1131
1132	OFFICE REPRO / MAIL	C1 / C2	RB1	P12	P2	P2	P2	CT04		9' - 0"		1132
1132A	SUPPLY	C1 / C2	RB1	P2	P2	P2	P2	CT07		9' - 0"		1132A
1133	OPEN OFFICE AREA	C1 / C2	RB1	P2	P2	P2	P2	CT05		9' - 0"		1133
1134	BATTALION OFFICE	C1 / C2	RB1	P2	P2	P2	P2	CT05		9' - 0"		1134
1135	BATTALION CONFERENCE	C1 / C2	RB1 / WB1	P2	P13 / WD1	P2	P2	CT02 / CT09	P2	10' - 0"		1135
1136	BATTALION COMMANDER OFFICE	C1 / C2	RB1	P2	P2	P2	P2	CT05		9' - 0"		1136
1137	ADMIN MALE LATRINE	T7	T7	WT7 / WT8	WT7 / WT8	WT7 / WT8	WT7 / WT8	CT02	P2	8' - 0"		1137
1138	ADMIN FEMALE LATRINE	T7	T7	WT7 / WT8	WT7 / WT8	WT7 / WT8	WT7 / WT8	CT02	P2	8' - 0"		1138
1139	CONFERENCE / STUDENT BREAK	C1 / C2	RB1	P2	P2	P2	P12	CT02 / CT09	P2	10' - 0"		1139
1140	RECEIVING	SC1	RB1	P2	P2	P2	P2	-		OPEN		1140
1140A	BALER / RECYCLING	SC1	RB1	P2	P2	P2	P2	-		OPEN		1140A
1141	LOADING DOCK (EXTERIOR)	SC1	-	-	-	-	-	-		OPEN		1141
1141A	CAN WASH	SC1	RB1	P2	P2	P2	P2	-		OPEN		1141A
1142	STAFF LOCKERS	T7	T7	P2	P2	P2	P2	CT07		9' - 0"		1142
1142A	KITCHEN STAFF MALE LATRINE	T7	T7	WT7 / WT8	WT7 / WT8	WT7 / WT8	WT7 / WT8	CT02	P2	8' - 0"		1142A
1142B	KITCHEN STAFF FEMALE LATRINE	T7	T7	WT7 / WT8	WT7 / WT8	WT7 / WT8	WT7 / WT8	CT02	P2	8' - 0"		1142B
1143	KITCHEN OFFICE	C1 / C2	RB1	P2	P2	P2	P2	CT05		9' - 0"		1143
1144	KITCHEN ADMIN OFFICE	C1 / C2	RB1	P2	P2	P2	P2	CT05		9' - 0"		1144
1145	KITCHEN	T5	T5	P2	P2	P2	P2	CT12		10' - 0"		1145
1145A	JANITOR	T5	T5	P2	P2	P2	P2	CT02	P2	9' - 0"		1145A
1146	FIELD FEED	T5	T5	P2	P2	P2	P2	CT12		9' - 0"		1146
1147	AUX STORAGE	T5	T5	P2	P2	P2	P2	CT12		9' - 0"		1147
1148	STAFF LATRINE	T7	T7	WT7 / WT8	WT7 / WT8	WT7 / WT8	WT7 / WT8	CT02	P2	8' - 0"		1148
1150	DRY STORAGE	T5	T5	P2	P2	P2	P2	CT12		9' - 0"		1150
1151	DISH DROP / DISHWASHING	T5	T5	P2	P2	P2	P2	CT12		10' - 0"		1151
1154	QUEUING	SC2	MB1	P2	P2 / WT5	P2	P13	CT02 / CT04 / CT08	P2	12' - 0"		1154
1155	SERVERY	SC2 / T5	MB1 / T5	WT5 / WT6	WT7	P2	WT7	CT02 / CT08 / CT10 / CT11	P2	VARIES		1155
1156	DINING (MAIN)	SC2	MB1	P3	P2	P2	P2	CT02 / CT08 / CT10	P2	10' - 6"		1156
1156A	JANITOR	SC2	RB1	WT17 / P2	P2	P2	WT17 / P2	CT02	P2	9' - 0"		1156A
1157	DINING A/V CLOSET	SC2	MB1	P2	P2	P2	P2	CT02	P2	8' - 0"		1157
1158	SODA CANISTER/ PAPER SUPPLY	T5	T5	P2	P2	P2	P2	CT12		9' - 0"		1158
1160	G6 TELECOMM	SC1	RB1	P2	P2	P2	P2	OPEN		OPEN		1160
1161	RTI TELECOMM	SC1	RB1	P2	P2	P2	P2	OPEN		OPEN		1161
1162	ELECTRICAL	C1 / C2	RB1	P2	P2	P2	P2	OPEN		OPEN		1162
1163	JANITOR	SC1	RB1	P2	WT17 / P2	WT17 / P2	P2			9' - 0"		1163
1164	FEMALE LATRINES	T7	T7	WT7 / WT8	WT7 / WT8	WT7 / WT8	WT7 / WT8	CT02	P2	9' - 0"		1164
1165	MALE LATRINES	T7	T7	WT7 / WT8	WT7 / WT8	WT7 / WT8	WT7 / WT8	CT02	P2	9' - 0"		1165
1166	FIRE RISER	SC1	RB1	P2	P2	P2	P2	-		OPEN		1166
1171	STAIR A	SC1	RB1	P2	P2	P2	P2			OPEN		1171
1172	STAIR B	SC1	RB1	P2	P2	P2	P2			OPEN		1172
1173	STAIR C	SC1	RB1	P2	P2	P2	P2	CT01	P2	VARIES		1173
1175	ELEVATOR	C1	-	-	-	-	-	-		OPEN		1175
1176	ELEVATOR EQUIP	SC1	RB1	P2	P2	P2	P2	CT01	P2	10' - 0"		1176

ROOM FINISH SCHEDULE - LEVEL 2

ROOM NO.	ROOM NAME	FLOOR	BASE	WALLS N	WALLS E	WALLS S	WALLS W	CEILINGS TYPE	CEILINGS FINISH	CEILINGS HEIGHT	NOTES	ROOM NO.
1201A	LOUNGE	C1 / C2 / C3	RB1	P2	P3 / P12	P2	P2	CT02 / CT04 / CT08	P2	9' - 0"		1201A
1201B	PATIO	-	-	-	-	-	-	-		-		1201B
1202	HALL	C1 / C2	RB1	P2	P12 / WT1 / WT2 /	P2	P2	CT02 / CT03 / CT04	P2	9' - 0"		1202
1203	HALL	C1 / C2 / T9	RB1	P2	P2	P2	P2 / WT1 / WT2	CT02 / CT04	P2	9' - 0"		1203
1204	HALL	C1 / C2	RB1	P2	P2	P12	P2	CT02 / CT04	P2	9' - 0"		1204
1205	HALL	C1 / C2	RB1	P2	P2	P2	P2	CT02 / CT04	P2	9' - 0"		1205
1206	HALL	C1 / C2 / T9	RB1	P2 / WT1 / WT2	P12	P2	P12	CT02 / CT04	P2	9' - 0"		1206
1210	INSTRUCTOR PREP / COUNSELING	C1 / C2	RB1	P2	P2	P2	P2	CT05		9' - 0"		1210
1211	CLASSROOM	C1 / C2 / C3	RB1	P2	P2	P2	P13 / P14	CT02 / CT09	P2	10' - 6"		1211
1212	CLASSROOM	C1 / C2 / C3	RB1	P2	P2	P2	P13 / P14	CT02 / CT09	P2	10' - 6"		1212
1212A	CLASSROOM STORAGE	C1 / C2	RB1	P2	P2	P2	P2	CT07		9' - 0"		1212A
1213	INSTRUCTOR PREP / COUNSELING	C1 / C2	RB1	P2	P2	P2	P2	CT05		9' - 0"		1213
1214	CLASSROOM OFFICE	C1 / C2	RB1	P2	P2	P2	P2	CT05		9' - 0"		1214
1215	INSTRUCTOR PREP / COUNSELING	C1 / C2	RB1	P2	P2	P2	P2	CT05		9' - 0"		1215
1216	CLASSROOM OFFICE	C1 / C2	RB1	P2	P2	P2	P2	CT05		9' - 0"		1216
1217	CLASSROOM	C1 / C2 / C3	RB1	P13 / P14	P2	P2	P2	CT02 / CT09	P2	10' - 6"		1217
1217A	CLASSROOM STORAGE	C1 / C2	RB1	P2	P2	P2	P2	CT07		9' - 0"		1217A
1218	CLASSROOM	C1 / C2 / C3	RB1	P13 / P14	P2	P2	P2	CT02 / CT09	P2	10' - 6"		1218
1219	INSTRUCTOR PREP / COUNSELING	C1 / C2	RB1	P2	P2	P2	P2	CT05		9' - 0"		1219
1230	HALL	C1 / C2	RB1	P2	P2 / P12	P2	P2	CT04		9' - 0"		1230
1231	OPEN OFFICE AREA	C1 / C2	RB1	P2	P2	P2	P2	CT05		9' - 0"		1231
1232	OFFICE REPRO / MAIL	C1 / C2	RB1	P12	P2	P2	P2	CT04		9' - 0"		1232
1232A	SUPPLY	C1 / C2	RB1	P2	P2	P2	P2	CT07		9' - 0"		1232A
1233	OPEN OFFICE AREA	C1 / C2	RB1	P2	P2	P2	P2	CT05		9' - 0"		1233
1234	BATTALION OFFICE	C1 / C2	RB1	P2	P2	P2	P2	CT05		9' - 0"		1234
1235	BATTALION CONFERENCE	C1 / C2	RB1 / WB1	P2	P13 / WD1	P2	P2	CT02 / CT09	P2	10' - 0"		1235
1236	BATTALION COMMANDER OFFICE	C1 / C2	RB1	P2	P2	P2	P2	CT05		9' - 0"		1236
1237	ADMIN MALE LATRINE	T7	T7	WT7 / WT8	WT7 / WT8	WT7 / WT8	WT7 / WT8	CT02	P2	8' - 0"		1237
1238	ADMIN FEMALE LATRINE	T7	T7	WT7 / WT8	WT7 / WT8	WT7 / WT8	WT7 / WT8	CT02	P2	8' - 0"		1238
1239	CONFERENCE / STUDENT BREAK	C1 / C2	RB1	P2	P2	P2	P12	CT02 / CY09	P2	10' - 0"		1239
1256	DINING (MEZZANINE)	SC2	MB1	P2 / P3	P2	P2	P2	CT02 / CT13	P2	VARIES		1256
1256A	JANITOR	SC2	RB1	WT17 / P2	P2	P2	WT17 / P2	CT02	P2	9' - 0"		1256A
1257	PATIO	T1	-	-	-	-	-	-		-		1257
1260	G6 TELECOMM	SC1	RB1	P2	P2	P2	P2	-		OPEN		1260
1261	RTI TELECOMM	SC1	RB1	P2	P2	P2	P2	-		OPEN		1261
1262	ELECTRICAL	SC1	RB1	P2	P2	P2	P2	OPEN		OPEN		1262
1263	JANITOR	SC1	RB1	P2	WT17 / P2	WT17 / P2	P2			9' - 0"		1263
1264	FEMALE LATRINES	T7	T7	WT7 / WT8	WT7 / WT8	WT7 / WT8	WT7 / WT8	CT02	P2	9' - 0"		1264
1265	MALE LATRINES	T7	T7	WT7 / WT8	WT7 / WT8	WT7 / WT8	WT7 / WT8	CT02	P2	9' - 0"		1265
1266	FACILITY MAINTENANCE & STORAGE	SC1	RB1	P2	P2	P2	P2	CT02	P2	9' - 0"		1266
1267	MECHANICAL	RF1	RF1	P2	P2	P2	P2	-		OPEN		1267
1268	BOILER ROOM	RF1	RF1	P2	P2	P2	P2	-		OPEN		1268
1269	CHILLER ROOM	RF1	RF1	P2	P2	P2	P2	-		OPEN		1269
1271	STAIR A	SC1	RB1	P2	P2	P2	P2	CT04		9' - 0"		1271
1272	STAIR B	SC1	RB1	P2	P2	P2	P2	CT04		9' - 0"		1272
1273	STAIR C											1273
1275	ELEVATOR	C1	-	-	-	-	-	-		OPEN		1275

ROOM FINISH SCHEDULE - BASEMENT (ADD/ALT)

ROOM NO.	ROOM NAME	FLOOR	BASE	WALLS N	WALLS E	WALLS S	WALLS W	CEILINGS TYPE	CEILINGS FINISH	CEILINGS HEIGHT	NOTES	ROOM NO.
1000	SHELLED BASEMENT	SC1	RB1	P1	P1	P1	P1	-		OPEN		1000
1006	HALL	SC1	RB1	P1	P1	P1	p1	-		OPEN		1006
1063	JANITOR	T1	WT9	WT9 / P1	WT9 / P1	P1	P1	CT02		9' - 0"		1063
1064	FEMALE LATRINES	T7	T7	WT7 / WT8	WT7 / WT8	WT7 / WT8	WT7 / WT8	CT02		9' - 0"		1064
1065	MALE LATRINES	T7	T7	WT7 / WT8	WT7 / WT8	WT7 / WT8	WT7 / WT8	CT02		9' - 0"		1065
1066	SEWAGE PUMP	T1	WT9	P1	P1	P1	P1	-		OPEN		1066
1072	STAIR B	SC1	RB1	P1	P1	P1	P1	-		OPEN		1072
1073	STAIR C	SC1	-	-	-	-	-	CT01		VARIES		1073
1075	ELEVATOR	C1	-	-	-	-	-	-		OPEN		1075
1076	ELEVATOR EQUIP	SC1	RB1	P1	P1	P1	P1	-		OPEN		1076

GENERAL NOTES - FINISH LEGEND / SCHEDULE

A. SEE FINISH FLOOR PLANS AND ELEVATIONS FOR SPECIFIC FINISH LOCATIONS.
B. FINISH CALL-OUTS ON FINISH FLOOR PLANS & ELEVATIONS SHOWN AS: XX-X
C. SEE ELEVATIONS FOR FOR MILLWORK FINISH LOCATIONS.
D. FINISH LOCATIONS BASED ON PLAN NORTH.

ROOM FINISH LEGEND

FLOOR FINISHES

- C — CARPET
  - C1 — CARPET TILE; SHAW CONTRACT GROUP, STYLE: OVERLAY 59598, COLOR: BLEND 95750, SIZE: 18" X 36" INSTALLATION METHOD: BOXED IN
  - C2 — CARPET TILE; SHAW CONTRACT GROUP, STYLE: BLUR 59596, COLOR: BLEND 95750, SIZE: 18" X 36" INSTALLATION METHOD: BOXED IN
  - C3 — CARPET TILE; SHAW CONTRACT GROUP, STYLE: COLOUR PLANK 59595, COLOR: SUNDRIED 95870, SIZE: 18" X 36" INSTALLATION METHOD: BOXED IN
  - C4 — CARPET TILE: SHAW CONTRACT GROUP, STYLE: RADIANCE 59361, COLOR: NATURAL TONIC 60755, MONOLITHIC INSTALLATION
  - C5 — CARPET TILE: SHAW CONTRACT GROUP, STYLE: LUMINOSITY 59362, COLOR: NATURAL TONIC 60755, MONOLITHIC INSTALLATION
  - C6 — WALK OFF MAT:
- SC — SEALED CONCRETE
  - SC1 — SEALED CONCRETE
  - SC2 — BURNISHED/STAINED CONCRETE
- SV — SHEET VINYL
  - SV1 — SHEET VINYL; MANNINGTON COMMERCIAL; STYLE: FRAMEWORK, COLOR: STONE GRAY ALL108
  - SV2 — SHEET VINYL; MANNINGTON COMMERCIAL; STYLE: FRAMEWORK, COLOR: BARK ALL101, 12" PERIMETER WITH 6" COVED BASE, CHEMICAL WELD
- 1 RF — RESINOUS FLOORING
  - RF1 — RESINOUS FLOORING; STONHARD: STYLE: STONGARD MD, COLOR: TBD, INTEGRAL 6" COVE BASE

TILE FINISHES

- T — FLOOR TILE BASE TILE
  - T1 — PORCELAIN TILE; CAESAR, STYLE: GATE, COLOR: GREIGE, SIZE: 29 9/16" X 29 9/16" - **ADD ALTERNATE (DINING, SERVERY)**
  - T2 — PORCELAIN TILE; CAESAR, STYLE: GATE, COLOR: BROADWAY, SIZE: 9 13/16" X 29 9/16" - **ADD ALTERNATE (DINING, SERVERY)**
  - T3 — PORCELAIN TILE; CAESAR, STYLE: GATE, COLOR: LICORICE, SIZE: 2" X 29 9/16" - **ADD ALTERNATE (DINING, SERVERY)**
  - T4 — PORCELAIN TILE; CAESAR, STYLE: GATE, COLOR: GREIGE, SIZE: STEP TREAD 13" X 29 9/16" - **ADD ALTERNATE**
  - T5 — PORCELAIN TILE; DALTILE, STYLE: QUARRY TEXTURES, COLOR: ADOBE FLASH 0T06, SIZE: 8" X 8" | BASE TILE: COVE, Q-3585, SIZE: 5" X 8" (ADMIN.)
  - T6 — PORCELAIN TILE: NEXT BY DALTILE, STYLE: ELITE, COLOR: TAN J201, SIZE: 16" X 32" RUNNING BOND INSTALLATION, TYP. (BILLETS)
  - T7 — PORCELAIN TILE; DALTILE, STYLE: KEYSTONES BLENDS, COLOR: TERRAIN DK10, SIZE: 1" X 1" | BASE: MB-4C (ADMIN.)
  - T8 — PORCELAIN TILE: DALTILE, STYLE: KEYSTONES, CUSTOM MOSIAC BLEND, COLOR: ELEMENTAL TAN D166 50%, SUEDE GRAY D182 25%, MARBLE D325 25%, SIZE: 1" X 1" | BASE: MB-4C, COLOR: ELEMENTAL TAN D166 100% (BILLETS)
  - T9 — PORCELAIN TILE; CAESAR, STYLE: GATE, COLOR: GREIGE, SIZE: 4 5/8" X 23 5/8"
- WT — WALL TILE
  - WT1 — PORCELAIN TILE; CAESAR, STYLE: GATE, COLOR: GREIGE, SIZE: 11 13/16" X 23 5/8"
  - WT2 — PORCELAIN TILE; CAESAR, STYLE: GATE, COLOR: GREIGE, SIZE: 11 13/16" X 23 5/8" DOGHE 3D
  - WT3 — PORCELAIN TILE; NEXT BY DALTILE, STYLE: ec1, COLOR: DOCKS J103, SIZE: 12" X 24" (BILLETS)
  - WT4 — PORCELAIN TILE; NEXT BY DALTILE, STYLE: ec1, COLOR: DOCKS J103, SIZE: 6" X 24" RANDOM LINEAR ACCENT (BILLETS)
  - WT5 — PORCELAIN TILE; ATLAS CONCORDE, STYLE: INTENSITY, COLOR: 8X08 INTENSITY LOVE, SIZE: 12" X 36"
  - WT6 — PORCELAIN TILE; ATLAS CONCORDE, STYLE: INTENSITY, COLOR: 8X18 INTENSITY LOVE INSERTO LINE, SIZE: 12" X 36"
  - WT7 — PORCELAIN TILE; DALTILE, STYLE: IDENTITY WALL, COLOR: GLOSS BISTRO CREAM MY62, SIZE: 8" X 20"
  - WT8 — PORCELAIN TILE; DALTILE, STYLE: IDENTITY WALL, COLOR: MATTE BISTRO CREAM MY62, SIZE: 8" X 20"
  - WT9 — PORCELAIN TILE; DALTILE, STYLE: MATTE, COLOR: URBAN PUTTY 0761, SIZE: 9" X 12" (BILLETS)
  - WT10 — PORCELAIN TILE; DALTILE, STYLE: MATTE, COLOR: ELEMENTAL TAN 0766, SIZE: 9" X 12" (BILLETS)
  - WT11 — PORCELAIN TILE; DALTILE, STYLE: MODERN DIMENSIONS, COLOR: ELEMENTAL TAN 0766, SIZE: 3" X 6" (BILLETS)
  - WT12 — PORCELAIN TILE; DALTILE, STYLE: MARACAS GLASS SOLIDS, COLOR: GLOSSY MUSHROOM P653, SIZE: 1" X 1" (BILLETS)
  - WT13 — PORCELAIN TILE; AMERICAN OLEAN, STYLE: LEGACY GLASS, COLOR: AUBURN LG14, SIZE: 1" X 1"
  - WT14 — PORCELAIN TILE; AMERICAN OLEAN, STYLE: LEGACY GLASS, COLOR: RED BLEND LG23, SIZE: 1" X 1"
  - WT15 — PORCELAIN TILE; AMERICAN OLEAN, STYLE: LEGACY GLASS, COLOR: CORAL LG13, SIZE: 1" X 1"
  - WT16 — PORCELAIN TILE; AMERICAN OLEAN, STYLE: LEGACY GLASS, COLOR: COPPER LG12, SIZE: 1" X 1"
  - WT17 — PORCELAIN TILE; DALTILE, STYLE: MATTE, COLOR: URBAN PUTTY 0761, SIZE: 6" X 6"

BASE FINISHES

- RB — RESILIENT BASE
  - RB1 — RUBBER BASE; ROPPE, STYLE: PINNACLE - TYPE TS, COLOR: 110 BROWN
  - RB2 — 4" RUBBER BASE; ROPPE, STYLE: PINNACLE - TYPE TS, COLOR: 140 FAWN
- MB — METAL BASE
  - MB1 — 4" ZINC-COATED BASE; FINISH TO MATCH BUILDING METAL PANELS
  - MB2 — 4" ALUMINUM BASE; CLEAR ANODIZED FINISH
- WB — WOOD BASE
  - WB1 — WOOD BASE, 4" PROFILE TBD

WALL FINISHES

- P — PAINT
  - P1 — PAINT; BENJAMIN MOORE, MOUNTAIN PEAK WHITE OC-121
  - P2 — PAINT; BENJAMIN MOORE, MANCHESTER TAN HC-81 (FIELD, ADMIN / ACCENT, BILLETS)
  - P3 — PAINT; BENJAMIN MOORE, AMBER WAVES 2159-40 (ACCENT, ADMIN)
  - P4 — PAINT; BENJAMIN MOORE, COUNTRY LANE 2088-20 (ACCENT, ADMIN)
  - P5 — PAINT; BENJAMIN MOORE, DAVENPORT TAN HC-76 (HM, ADMIN)
  - P6 — PAINT; BENJAMIN MOORE, TIMID WHITE OC-39 (FIELD, BILLETS)
  - P7 — PAINT; NOT USED
  - P8 — PAINT; BENJAMIN MOORE, SUNTAN YELLOW 2155-50
  - P9 — PAINT; BENJAMIN MOORE, PIKE'S PEAK GRAY 2127-50
  - P10 — PAINT; BENJAMIN MOORE, WOLF GRAY 2127-40
  - P11 — PAINT; BENJAMIN MOORE, KINGSPORT GRAY HC-86 (HM, BILLETS)
  - P12 — PAINT; BENJAMIN MOORE, ALEXANDRIA BEIGE HC-77 (ACCENT, ADMIN)
  - P13 — PAINT; ZOLATONE, LLUMINATIONS ZFX-DA139 (ACCENT, ADMIN)
  - P14 — WHITE BOARD PAINT
- AP — ACOUSTICAL PANEL
  - AP1 — ACOUSTICAL PANEL; ARMSTRONG, STYLE: SOUNDSCAPES SHAPES, COLOR: (CN) CRANBERRY, ITEM: #5449 LARGE RECTANGLE
  - AP2 — ACOUSTICAL PANEL; SNAPTEX, CUSTOM PRINTED FABRIC WRAPPED ACOUSTICAL PANELS; SIZE AS INDICATED ON ELEVATIONS, IMAGES BY OWNER

CEILING FINISHES

- CT — CEILING
  - CT1 — GYP. BD. CEILING; W/ 4" C-H STUD FRAMING
  - CT2 — GYP. BD. CEILING; W/ 3 5/8" STUD FRAMING (SHORT SPANS)
  - CT3 — GYP. BD. CEILING CEILING; 7/8" HAT CHANNELS WITH 1 1/2" MAIN RUNNERS LONG SPANS)
  - CT4 — ACOUSTICAL TILE; ARMSTRONG, STYLE: ULTIMA 9/16" BEVELED TEGULAR EDGE, 24" X 48"
  - CT5 — ACOUSTICAL TILE; ARMSTRONG, STYLE: ULTIMA 9/16" BEVELED TEGULAR EDGE, 24" X 24"
  - CT6 — ACOUSTICAL TILE; ARMSTRONG, STYLE: GEORGIAN (HIGH ACOUSTICS) 15/16" ANGLED TEGULAR EDGE, 24" X 24"
  - CT7 — ACOUSTICAL TILE; ARMSTRONG, STYLE: GEORGIAN 15/16 SQUARE LAY-IN, 24" X 48"
  - CT8 — ACOUSTICAL TILE; ARMSTRONG, STYLE: ULTIMA 15/16 VECTOR EDGE, 24" X 24"
  - CT9 — ACOUSTICAL TILE; ARMSTRONG, STYLE: TECHZONE, ULTIMA 9/16 BEVELED TEGULAR EDGE, FIELD PANEL: 24" X 48" & 24" X 24", TECHNICAL PANEL: 6" X 48"
  - CT10 — ACOUSTICAL TILE; ARMSTRONG, STYLE: METALWORKS MESH, 2DIAMOND WOVEN WIRE, 24" X 24", NICKEL CHROME
  - CT11 — ACOUSTICAL TILE; ARMSTRONG, STYLE: HEALTHZONE, ULTIMA 9/16 BEVELED TEGULAR EDGE, 24" X 24"
  - CT12 — ACOUSTICAL TILE; ARMSTRONG, STYLE: GEORGIAN (HIGH WASHABILITY) 15/16 SQUARE LAY-IN, 24" X 48"
  - CT13 — ACOUSTICAL TILE; ARMSTRONG, STYLE: SOUNDSCAPES - SHAPES, TRAPEZOID #5445, CUSTOM PANELS #5446, & #5447, & CUSTOM CUT PANELS, 48" X 48" & 48" X 60"

MILLWORK FINISHES

- PL — PLASTIC LAMINATE
  - PL1 — PLASTIC LAMINATE; WILSONART, COLOR 7941K-18 TAN ECHO
  - PL2 — PLASTIC LAMINATE; FORMICA, COLOR: 5342-SP EARTH, SCULPTED FINISH
  - PL3 — PLASTIC LAMINATE; WILSONART, COLOR: 4876-38 SHEER MESH
  - PL4 — PLASTIC LAMINATE; FORMICA, COLOR: 7738-58 COGNAC MAPLE
  - PL5 — PLASTIC LAMINATE; WILSONART, COLOR: 7970K-18 HIGH LINE
- SS — SOLID SURFACE
  - SS1 — SOLID SURFACE; CORIAN, STYLE: TERRA COLLECTION, COLOR: FAWN
  - SS2 — SOLID SURFACE; CORIAN, STYLE: TERRA COLLECTION, COLOR: SERENE SAGE
  - SS3 — SOLID SURFACE; HI-MACS, STYLE: VOLCANICS, COLOR: KAFFA VE13
- QS — QUARTZ SURFACE
  - QS1 — QUARTZ SURFACE; SILESTONE, COLOR: BLANCO MAPLE
  - QS2 — QUARTZ SURFACE; SILESTONE, COLOR: ALTAIR
- WD — WOOD
  - WD1 — WOOD VENEER PANEL; SPECIES: WHITE MAPLE, STAIN: TBD, FINISH: TBD, DIAMOND MATCH
  - 1 WD2 — WOOD VENEER PANEL; SPECIES: WHITE MAPLE, STAIN: TBD, FINISH: TBD, EQUAL ~ 6" LEAVES, SLIP MATCH

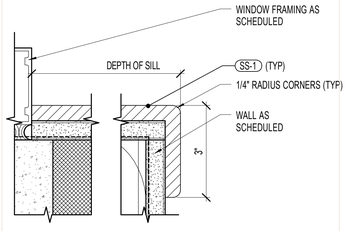

A2 / AI601 — SILL DETAIL (SOLID SURFACE EDGE) — 6" = 1'-0"

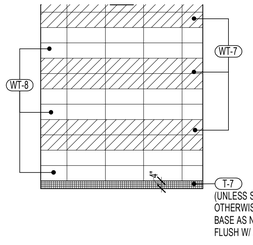

A3 / AI601 — LATRINE ROOM WALL TILE PATTERN (TYP) — 3/8" = 1'-0"

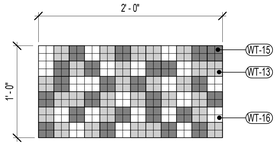

A4 / AI601 — SERVERY MOSAIC TILE PATTERN 'T8' — 1 1/2" = 1'-0"

ARCHITECTURAL NEXUS
SALT LAKE CITY SACRAMENTO PLACERVILLE

Architectural NEXUS, Inc.
2505 East Parleys Way
Salt Lake City, Utah 84109
T 801.924.5000 F 801.924.5001
http://www.archnexus.com

Licensed Architect PETER MOYES No. 21 MARCH 2013 83-122248-0301 State of Utah

Original drawings remain the property of the Architect and as such the Architect retains total ownership and control. The design represented by these drawings is sold to the client for a one time use, unless otherwise agreed upon in writing by the Architect.
© Architectural Nexus, Inc. 2012

UTAH NATIONAL GUARD CAMP WILLIAMS
RTI TASS COMPLEX, PHASE II
NGB PROJECT NO. 490444
17800 SOUTH ACADEMY STREET
BLUFFDALE, UTAH 84065

REVISIONS		
1	4.08.13	ADD-03

NEXUS PROJECT #:	11024
CHECKED BY:	SMS
DRAWN BY:	Author
DATE:	21 MARCH 2013

SHEET CONTENTS:
FINISH SCHEDULE & LEGEND

VOLUME A.1 - BID DOCUMENTS

AI601

4/8/2013 8:54:32 AM

SCHEDULE: FOOD SERVICE EQUIPMENT

ITEM	QTY	UNIT	DESCRIPTION	BY
#K-1	1	SYS	REMOTE REFRIGERATION SYSTEM	CFCI
#K-2	1	LOT	WALK-IN COOLER AND FREEZER BOX	CFCI
#K-3	1	EACH	WALK-IN COOLER REFRIGERATION SYSTEM: BLOWER COIL	CFCI
#K-4	1	EACH	WALK-IN COOLER REFRIGERATION SYSTEM: BLOWER COIL	CFCI
#K-5	1	EACH	WALK-IN COOLER REFRIGERATION SYSTEM: BLOWER COIL	CFCI
#K-6	2	EACH	WALK-IN FREEZER REFRIGERATION SYSTEM: BLOWER COIL	CFCI
#K-7	1	LOT	WALK-IN SHELVING	GFCI
#K-8	1	LOT	DRY STORAGE SHELVING	GFCI
#K-9	1	LOT	DRY STORAGE BULK SHELVING SYSTEM	GFCI
#K-10	-	-	SPARE NUMBER	
#K-11	2	EACH	CAN STORAGE RACK	GFCI
#K-12	1	EACH	ICE MAKER AND BIN	GFCI
#K-13	1	EACH	FLOOR TROUGH	CFCI
#K-14	1	LOT	STORAGE SHELVING	GFCI
#K-15	7	EACH	WALL MOUNT HAND SINK	CFCI
#K-16	1	EACH	FOOD PROCESSOR	GFGI
#K-17	1	EACH	STAINLESS STEEL PREP SINK WORK TABLE	GFCI
#K-18	1	EACH	DISPOSER	GFCI
#K-19	1	EACH	PRE-RINSE SPRAY FAUCET	GFCI
#K-20	-		SPARE NUMBER	
#K-21	1	EACH	PEELER	GFCI
#K-22	1	EACH	QUEEN MARY CART	GFGI
#K-23	2	EACH	SLICER: WITH MOBILE STAND	GFGI
#K-24	1	EACH	20 QUART MIXER: WITH MOBILE STAND	GFGI
#K-25	3	EACH	STAINLESS STEEL CART	GFGI
#K-26	1	EACH	STAINLESS STEEL PREP SINK	GFCI
#K-27	1	EACH	COOK AND HOLD OVEN	GFGI
#K-28	1	EACH	STAINLESS STEEL WORK TABLE	GFCI
#K-29	2	EACH	CAN OPENER	GFGI
#K-30	-	-	SPARE NUMBER	
#K-31	1	EACH	STAINLESS STEEL WORK TABLE: UTENSIL RACK & UTILITY SINK	GFCI
#K-32	1	EACH	ROLL-IN REFRIGERATOR: ONE SECTION	GFCI
#K-33	5	EACH	SPEED RACK	GFGI
#K-34	-	-	SPARE NUMBER	
#K-35	1	LOT	STAINLESS STEEL EXHAUST HOOD: TYPE I	CFCI
#K-36	1	SYS	FIRE PROTECTION SYSTEM	CFCI
#K-37	1	LOT	STAINLESS STEEL WALL FLASHING	CFCI
#K-38	2	EACH	POT FILL FAUCET	GFCI
#K-39	-	-	SPARE NUMBER	
#K-40	-	-	SPARE NUMBER	
#K-41	1	EACH	COMBI-OVEN: GAS	GFCI
#K-42	2	EACH	STACKED CONVECTION OVEN: GAS	GFCI
#K-43	2	EACH	40 GALLON TILT SKILLET: GAS	GFCI
#K-44	2	EACH	STAINLESS STEEL FLOOR TROUGH	CFCI
#K-45	1	EACH	TWO BURNER RANGE: GAS	GFCI
#K-46	1	EACH	FOUR BURNER RANGE: GAS	GFCI
#K-47	1	LOT	STAINLESS STEEL EXHAUST HOOD: TYPE I	CFCI
#K-48	1	SYS	FIRE PROTECTION SYSTEM	CFCI
#K-49	1	LOT	STAINLESS STEEL WALL FLASHING	CFCI
#K-50	-	-	SPARE NUMBER	
#K-51	1	EACH	TWIN 6 GALLON TILT KETTLE: WITH STAND: GAS	GFCI
#K-52	1	EACH	40 GALLON TILT KETTLE	GFCI
#K-53	1	EACH	STAINLESS STEEL FLOOR TROUGH	CFCI
#K-54	1	EACH	STEAMER	GFCI
#K-55	1	LOT	FRYER SYSTEM	GFCI
#K-56	-	-	SPARE NUMBER	
#K-57	1	EACH	PROOFING CABINET	GFGI
#K-58	1	EACH	STAINLESS STEEL WORK TABLE	GFCI
#K-59	3	EACH	INGREDIENT BINS	GFGI
#K-60	-	-	SPARE NUMBER	
#K-61	1	EACH	60 QUART MIXER	GFCI
#K-62	1	EACH	STAINLESS TEEL WORK TABLE: WITH UTILITY SINK	GFCI
#K-63	1	EACH	REACH-IN FREEZER: DOUBLE SECTION	GFGI
#K-64	2	EACH	PASTRY STORAGE CABINETS: MOBILE	GFGI
#K-65	1	EACH	STAINLESS STEEL WORK TABLE	GFCI
#K-66	1	EACH	STAINLESS STEEL MIXER ACCESSORIE RACK	GFGI
#K-67	-	-	SPARE NUMBER	
#K-68	1	EACH	STAINLESS STEEL CLEAN POT TABLE	GFCI
#K-69	1	EACH	POT WASHER	GFCI
#K-70	-	-	SPARE NUMBER	
#K-71	1	EACH	STAINLESS STEEL VENT HOOD: TYPE II	CFCI
#K-72	-	-	SPARE NUMBER	
#K-73	1	EACH	DISPOSER	GFCI
#K-74	1	EACH	PRE-RINSE SPRAY FAUCET	GFCI
#K-75	1	EACH	POT SINK RECIRCULATING	GFCI
#K-76	1	LOT	STAINLESS STEEL POT WASH SINK AND TABLE	GFCI
#K-77	1	EACH	SINK BOOSTER HEATER	GFCI
#K-78	-		SPARE NUMBER	
#K-79	1	EACH	STAINLESS STEEL VENT HOOD: TYPE II	CFCI
#K-80	-	-	SPARE NUMBER	
#K-81	1	SYS	STAINLESS STEEL WALL FLASHING	CFCI
#K-82	1	LOT	POT RACK	GFCI
#K-83	-	-	SPARE NUMBER	
#K-84	1	SYS	SOILED TRAY CONVEYOR	CFCI
#K-85	1	LOT	STAINLESS STEEL DIRTY DISH TABLE	CFCI
#K-86	1	EACH	STAINLESS STEEL DISH RACK WALLSHELF	GFCI
#K-87	2	EACH	SILVER SOAK SINK	GFCI
#K-88	1	SYS	PULPER AND WATER PRESS	CFCI
#K-89	-	-	SPARE NUMBER	
#K-90	-	-	SPARE NUMBER	
#K-91	1	LOT	TRASH CONTAINER: PROVIDED BY OWNER	GFGI
#K-92	1	EACH	WASTE COLLECTOR	GFCI
#K-93	1	EACH	PRE-RINSE SPRAY FAUCET	GFCI
#K-94	1	EACH	DISHWASHER: GAS	GFCI
#K-95	1	EACH	STAINLESS STEEL VENT HOOD: TYPE II	CFCI
#K-96	1	LOT	STAINLESS STEEL WALL FLASHING	CFCI
#K-97	1	EACH	BOOSTER HEATER: GAS	GFCI
#K-98	1	EACH	STAINLESS STEEL CLEAN DISH TABLE	GFCI
#K-99	1	EACH	STAINLESS STEEL WALL SHELF	GFCI
#K-100	-		SPARE NUMBER	
#K-101	1	EACH	HOSE REEL	GFCI
#K-102	1	EACH	STAINLESS STEEL MOP SINK	GFCI
#K-103	1	EACH	STAINLESS STEEL WALL CABINET	GFCI
#K-104	-		SPARE NUMBER	
#K-105	3	EACH	GLASS AND CUP RACK DOLLY: MOBILE	GFGI
#K-106	2	EACH	PLATE STORAGE CART: MOBILE	GFGI
#K-107	7	EACH	PLATE DISPESERS: MOBILE	GFGI
#K-108	1	LOT	STORAGE SHELVING	GFCI
#K-109	6	EACH	SODA SYRUP RACKS: PROVIDED BY VENDER	GFGI
#K-110	-	-	SPARE NUMBER	
#K-111	1	EACH	STAINLESS STEEL CART: MOBILE	GFGI
#K-112	1	EACH	HOSE REEL	GFCI
#K-113	1	EACH	STAINLESS STEEL FLOOR TROUGH	CFCI
#K-114	1	EACH	STAINLESS STEEL COUNTER	GFCI
#K-115	1	EACH	STAINLESS STEEL FLOOR TROUGH	CFCI
#K-116	2	EACH	BULK JUICE DISPENSER: PROVIDED BY VENDER	GFGI
#K-117	1	EACH	ICE MAKER AND BIN	GFCI
#K-118	1	EACH	STAINLESS STEEL FLOOR TROUGH	CFCI
#K-119	1	EACH	STAINLESS STEEL URN COUNTER	GFCI
#K-120	-	-	SPARE NUMBER	
#K-121	1	EACH	COFFEE URN: PROVIDED BY VENDER	GFGI
#K-122	1	LOT	STORAGE SHELVING	GFCI
#K-123	-	-	SPARE NUMBER	
#K-124	-	-	SPARE NUMBER	
#K-125	1	EACH	DELI BREATH GUARD SERVING SHELF	GFCI
#K-126	1	EACH	SANDWICH PREP TABLE	GFCI
#K-127	1	EACH	PIZZA BREATH GUARD SERVING SHELF	GFCI
#K-128	1	EACH	THERMAL SHELF	GFCI
#K-129	-	-	SPARE NUMBER	
#K-130	-	-	SPARE NUMBER	
#K-131	1	EACH	REACH-IN REFRIGERATOR: SINGLE SECTION	GFGI
#K-132	1	EACH	STAINLESS STEEL UTILITY COUNTER/PIZZA OVEN STAND	GFCI
#K-133	1	LOT	STAINLESS STEEL EXHAUST HOOD: TYPE I	CFCI
#K-134	-	-	SPARE NUMBER	
#K-135	2	EACH	DOUBLE CONVEYOR PIZZA OVEN	GFCI
#K-136	1	EACH	REFRIGERATED PIZZA TABLE	GFCI
#K-137	-	-	SPARE NUMBER	
#K-138	1	EACH	STAINLESS STEEL WORK COUNTER	GFCI
#K-139	-	-	SPARE NUMBER	
#K-140	-	-	SPARE NUMBER	
#K-141	1	LOT	GRILL/PIZZA/DELI SERVING COUNTER	GFCI
#K-142	1	EACH	GRILL BREATH GUARD SERVING SHELF	GFCI
#K-143	1	EACH	DROP-IN HOT FOOD WARMER: FOUR PAN	GFCI
#K-144	1	EACH	GRILL BREATH GUARD COOKING GUARD	GFCI
#K-145	1	EACH	STAINLESS STEEL ISLAND EXHAUST HOOD: TYPE I	CFCI
#K-146	1	SYS	FIRE PROTECTION SYSTEM	CFCI
#K-147	1	EACH	FLAT TOP GRIDDLE: GAS	GFCI
#K-148	1	EACH	STAINLESS STEEL GRILL STAND	GFCI
#K-149	-	-	SPARE NUMBER	
#K-150	-	-	SPARE NUMBER	
#K-151	1	EACH	PASS THROUGH REFRIGERATOR: DOUBLE SECTION	GFGI
#K-152	1	EACH	REACH-IN FREEZER: SINGLE SECTION	GFGI
#K-153	1	LOT	STAINLESS STEEL EXHAUST HOOD: TYPE I	CFCI
#K-154	1	SYS	FIRE PROTECTION SYSTEM	CFCI
#K-155	1	LOT	FRYER SYSTEM	GFCI
#K-156	1	LOT	STAINLESS STEEL WALL FLASHING	CFCI
#K-157	1	LOT	ACTION STATION SERVING COUNTER	GFCI
#K-158	1	EACH	ACTION STATION BREATH GUARD SERVING SHELF	GFCI
#K-159	1	EACH	DROP-IN REFRIGERATED COLD PAN: TWO PAN	GFCI
#K-160	-	-	SPARE NUMBER	

CONTINUED ON SHEET QF102

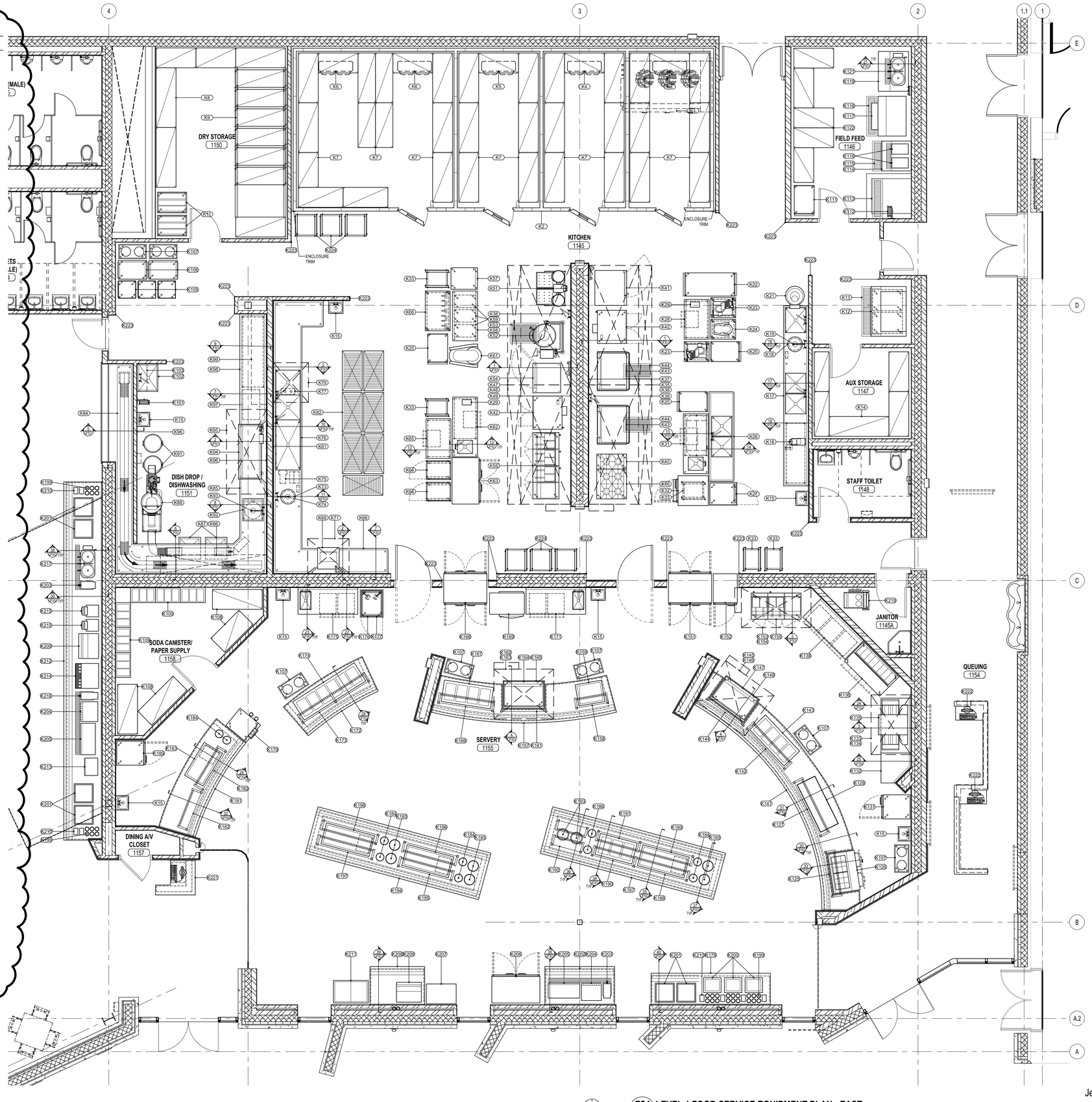

N

FS1 / QF101 LEVEL 1 FOOD SERVICE EQUIPMENT PLAN - EAST
1/4" = 1'-0"

Jedrziewski Designs
1537 Yale Avenue
Salt Lake City, Utah 84105
(801) 582-9747
JedrziewskiDesigns.com

ARCHITECTURAL nexus
SALT LAKE CITY PLACERVILLE SACRAMENTO

Architectural NEXUS, Inc.
2505 East Parleys Way
Salt Lake City, Utah 84109
T 801.924.5000 F 801.924.5001
http://www.archnexus.com

Original drawings remain the property of the Architect and as such the Architect retains total ownership and control. The design represented by these drawings is sold to the client for a one time use, unless otherwise agreed upon in writing by the Architect.
© Architectural Nexus, Inc. 2012

UTAH NATIONAL GUARD CAMP WILLIAMS
RTI TASS COMPLEX, PHASE II
NGB PROJECT NO. 490444

UTAH NATIONAL GUARD
12963 SOUTH MINUTEMAN DRIVE
DRAPER, UTAH 84020-1726

2	REVISIONS
1	ADDENDUM #3 4/8/2013

NEXUS PROJECT #:	11024
CHECKED BY:	BS / PM
DRAWN BY:	RCJ
DATE:	MARCH 21, 2013

SHEET CONTENTS:
LEVEL 1 FOOD SERVICE EQUIPMENT PLAN

VOLUME A.2 - BID DOCUMENTS

QF101

SCHEDULE: FOOD SERVICE EQUIPMENT

ITEM	QTY	UNIT	DESCRIPTION	BY
#K-161	1	EACH	ACTION STATION BREARTH GUARD COOKING GUARD	GFCI
#K-162	1	LOT	STAINLESS STEEL ISLAND EXHAUST HOOD: TYPE I	CFCI
#K-163	1	SYS	FIRE PROTECTION SYSTEM	CFCI
#K-164	1	EACH	FLAT TOP GRIDDLE: GAS	GFCI
#K-165	1	EACH	STAINLESS STEEL GRILL STAND	GFCI
#K-166	1	EACH	BREATH GUARD SERVING SHELF	GFCI
#K-167	1	EACH	DROP-IN HOT FOOD WARMER: FOUR PAN	GFCI
#K-168	1	EACH	PASS THROUGH HOT FOOD WARMING CABINET: TWO SECTION	GFGI
#K-169	1	EACH	VENTLESS ROTISSERIE	GFCI
#K-170	-	-	SPARE NUMBER	
#K-171	1	EACH	STAINLESS STEEL UTILITY COUNTER: WITH UTILITY SINK	GFCI
#K-172	1	LOT	ENTREE SERVING COUNTER	GFCI
#K-173	1	EACH	BREATH GUARD SERVING SHELF	GFCI
#K-174	1	EACH	DROP-IN HOT FOOD WARMER: SIX PAN	GFCI
#K-175	1	EACH	STAINLESS STEEL UTILITY COUNTER: WITH UTILITY SINK	GFCI
#K-176	1	EACH	HOT FOOD WARMING CABINET: HALF HEIGHT	GFGI
#K-177	1	EACH	CARVING STATION: SET ON ITEM #K176	GFGI
#K-178	1	LOT	TRAY PICK UP SERVICE COUNTER	GFCI
#K-179	1	EACH	SOFT SERVE ICE CREAM MACHINE	GFCI
#K-180	1	EACH	REACH-IN REFRIGERATOR: SINGLE SECTION	GFGI
#K-181	1	LOT	DESSERT SERVING COUNTER	GFCI
#K-182	2	EACH	BREATH GUARD DISPLAY SHELF	GFCI
#K-183	1	EACH	DROP-IN REFRIGERATED COLD PAN: THREE PAN	GFCI
#K-184	8	EACH	DROP-IN MEDIUM PLATE DISPENSERS	GFCI
#K-185	6	EACH	DROP-IN LARGE PLATE DISPENSERS	GFCI
#K-186	2	EACH	DROP-IN BOWL DISPENSERS	GFCI
#K-187	1	LOT	HOT/COLD/SOUP BAR ISLAND SERVING COUNTER	GFCI
#K-188	2	EACH	BREATH GUARD DISPLAY SHELF	GFCI
#K-189	1	EACH	DROP-IN REFRIGERATED COLD PAN: FIVE PAN	GFCI
#K-190	2	EACH	BREATH GUARD SERVING SHELF	GFCI
#K-191	1	EACH	DROP-IN HOT FOOD WARMER: THREE PAN	GFCI
#K-192	2	EACH	BREATH GUARD	GFCI
#K-193	2	EACH	DROP-IN SOUP WARMERS	GFCI
#K-194	1	LOT	SALAD BAR ISLAND SERVING COUNTER	GFCI
#K-195	2	EACH	BREATH GUARD DISPLAY SHELF	GFCI
#K-196	1	EACH	DROP-IN REFRIGERATED COLD PAN: FIVE PAN	GFCI
#K-197	2	EACH	BREATH GUARD DISPLAY SHELF	GFCI
#K-198	1	EACH	DROP-IN REFRIGERATED COLD PAN: FOUR PAN	GFCI
#K-199	36	EACH	DROP-IN UTENSIL BIN	GFCI
#K-200	3	EACH	DROP-IN TRAY LOWERATOR	GFCI
#K-201	8	EACH	DROP-IN GLASS AND CUP RACK LOWERATOR	GFCI
#K-202	1	LOT	BEVERAGE URN SERVING COUNTER	GFCI
#K-203	3	EACH	CAPPUCCINO DISPENSER: PROVIDED BY VENDER	GFGI
#K-204	3	EACH	JUICE DISPENSER: PROVIDED BY VENDER	GFGI
#K-205	3	EACH	MILK DISPENSER: THREE FLAVOR	GFGI
#K-206	1	EACH	MERCHANDISING REFRIGERATOR: DOUBLE SECTION	GFGI
#K-207	1	EACH	CERAL DISPLAY RACK: PROVIDED BY VENDER	GFGI
#K-208	1	LOT	BREAKFAST SERVING COUNTER	GFGI
#K-209	3	EACH	BREAD RACK: PROVIDED BY VENDER	GFGI
#K-210	10	EACH	DROP-IN NAPKIN DISPENSER	GFGI
#K-211	1	EACH	HORIZONTAL ICE CREAM DISPLAY CABINET: BY VENDER	GFGI
#K-212	1	LOT	BEVERAGE SERVING COUNTER	GFCI
#K-213	2	EACH	MICROWAVE OVEN	GFCI
#K-214	2	EACH	SODA AND ICE DISPENSER: PROVIDED BY VENDER	GFGI
#K-215	3	EACH	ROTARY TOASTER	GFGI
#K-216	2	EACH	TEA BREAWER: PROVIDED BY VENDER	GFGI
#K-217	2	EACH	COFFEE URN: PROVIDED BY VENDER	GFGI
#K-218	1	LOT	BEVERAGE SERVING COUNTER	GFCI
#K-219	1	EACH	PRESSURE CLEANING SYSTEM: MOBILE, PROVIDED BY OWNER	GFGI
#K-220	-	-	SPARE NUMBER	
#K-221	1	LOT	CASHIER STAND: PROVIDED BY OTHER SECTION	
#K-222	2	EACH	CHECK-IN STAND: PROVIDED BY OTHER SECTION	
#K-223	1	LOT	STAINLESS STEEL CORNER GUARDS	CFCI
#K-224	6	EACH	BREAD RACKS: PROVIDED BY VENDER	GFGI
#K-225	1	SYS	BULK CO2: PROVIDED BY VENDER	GFCI
#K-226	1	EACH	WASTE COOKING OIL CADDY: PROVIDED BY VENDER	GFCI
#K-227	1	EACH	WASTE COOKING OIL STORAGE TANK: PROVIDED BY VENDER	GFCI
#K-228	1	EACH	SCALE	GFGI
#K-229	2	EACH	PLATFORM TRUCKS	GFGI
#K-230	-	-	SPARE NUMBER	
#K-231	1	EACH	STAINLESS STEEL WORK TABLE: WITH UTILITY SINK	GFCI
#K-232	1	EACH	CAN CRUSHER	GFCI
[illegible]	[illegible]	[illegible]	[illegible] PROVIDED BY OWNER	GFGI

ITEMS IDENTIFIED WITH THE CFCI (CONTRACTOR FURNISHED, CONTRACTOR INSTALLED) ARE TO BE INCLUDED AS PART OF THE GENERAL CONTRACT.

ITEMS IDENTIFIED WITH THE GFCI (GOVERNMENT FURNISHED, CONTRACTOR INSTALLED) ARE TO INCLUDE THE TOTAL INSTALLATION OF THE ITEM AS PART OF THE GENERAL CONTRACT.

ITEMS IDENTIFIED WITH THE GFGI (GOVERNMENT FURNISHED, GOVERNMENT INSTALLED ARE NOT TO BE INCLUDED AS PART OF THE GENERAL CONTRACT.

1

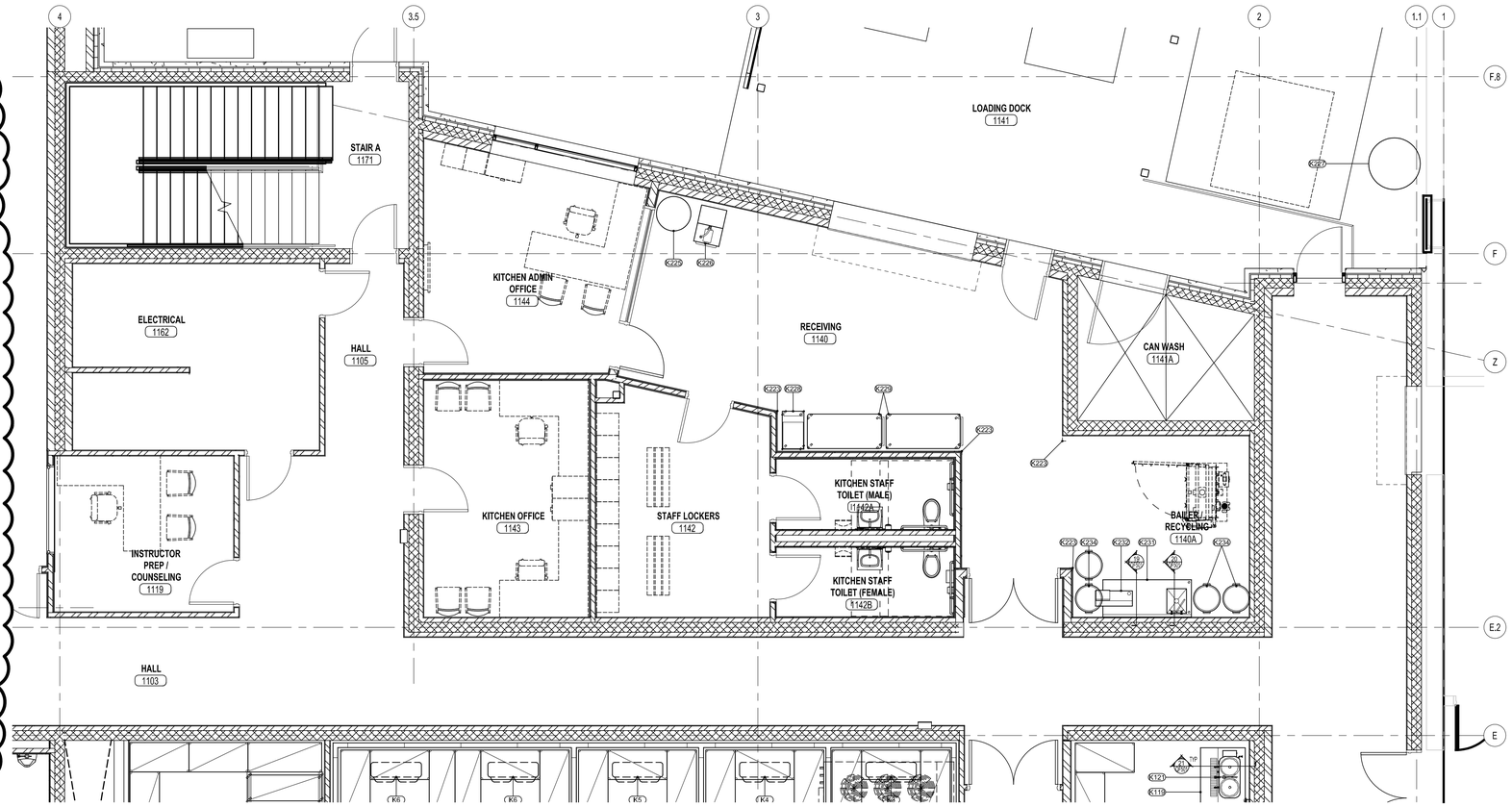

N

FS2 QF102 **LEVEL 1 FOOD SERVICE EQUIPMENT PLAN - WEST**
1/4" = 1'-0"

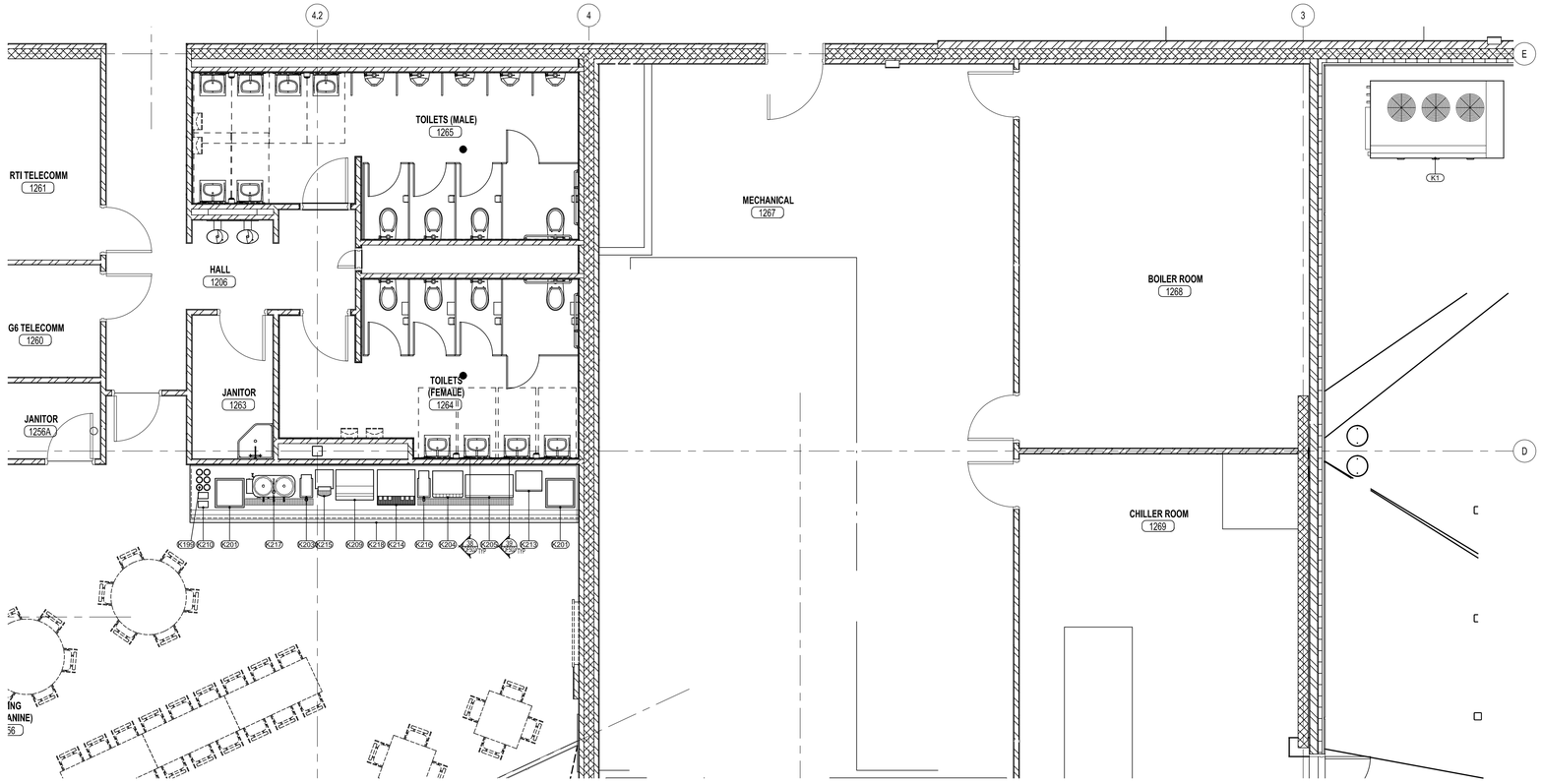

N

FS3 QF102 **LEVEL 2 FOOD SERVICE EQUIPMENT PLAN**
1/4" = 1'-0"

ARCHITECTURAL nexus SALT LAKE CITY PLACERVILLE SACRAMENTO

Architectural NEXUS, Inc.
2505 East Parleys Way
Salt Lake City Utah 84109
T 801.924.5000 F 801.924.5001
http://www.archnexus.com

Original drawings remain the property of the Architect and as such the Architect retains total ownership and control. The design represented by these drawings is sold to the client for a one time use, unless otherwise agreed upon in writing by the Architect.
© Architectural Nexus, Inc. 2012

UTAH NATIONAL GUARD CAMP WILLIAMS
RTI TASS COMPLEX, PHASE II
NGB PROJECT NO. 490444

UTAH NATIONAL GUARD
12953 SOUTH MINUTEMAN DRIVE
DRAPER, UTAH 84020-1726

REVISIONS
1 ADDENDUM #3 4/8/2013

NEXUS PROJECT #:	11024
CHECKED BY:	BS / PM
DRAWN BY:	RCJ
DATE:	MARCH 21, 2013

SHEET CONTENTS:
LEVEL 2 FOOD SERVICE EQUIPMENT PLAN

Jedrziewski Designs
1537 Yale Avenue
Salt Lake City, Utah 84105
(801) 582-9747
JedrziewskiDesigns.com

VOLUME A.2 - BID DOCUMENTS

QF102

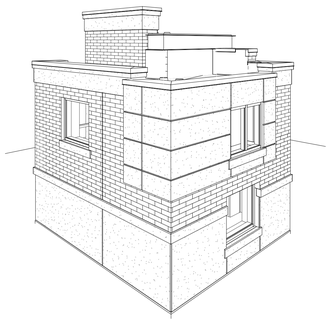

E1 GI801 **PERSPECTIVE - NORTH WEST**

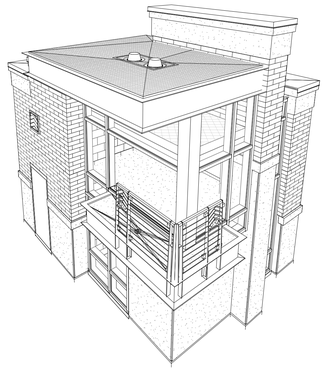

E2 GI801 **PERSPECTIVE - SOUTH WEST**

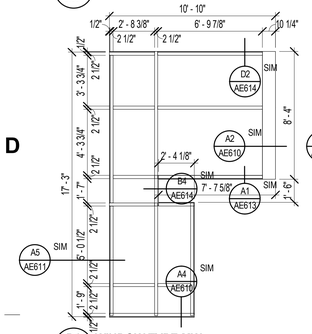

D1 GI801 **WINDOW TYPE MW5** 1/4" = 1'-0"

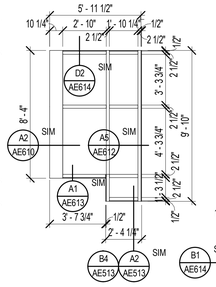

D1.1 GI801 **WINDOW TYPE MW4** 1/4" = 1'-0"

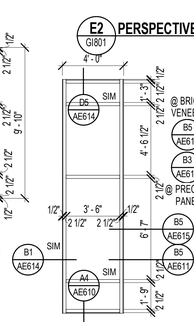

D2 GI801 **WINDOW TYPE MW3** 1/4" = 1'-0"

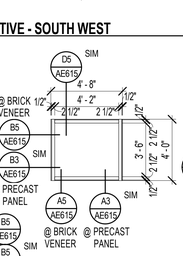

D2.1 GI801 **WINDOW TYPE MW2** 1/4" = 1'-0"

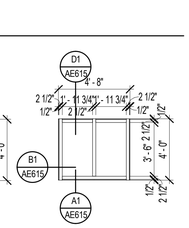

D3 GI801 **WINDOW TYPE MW1** 1/4" = 1'-0"

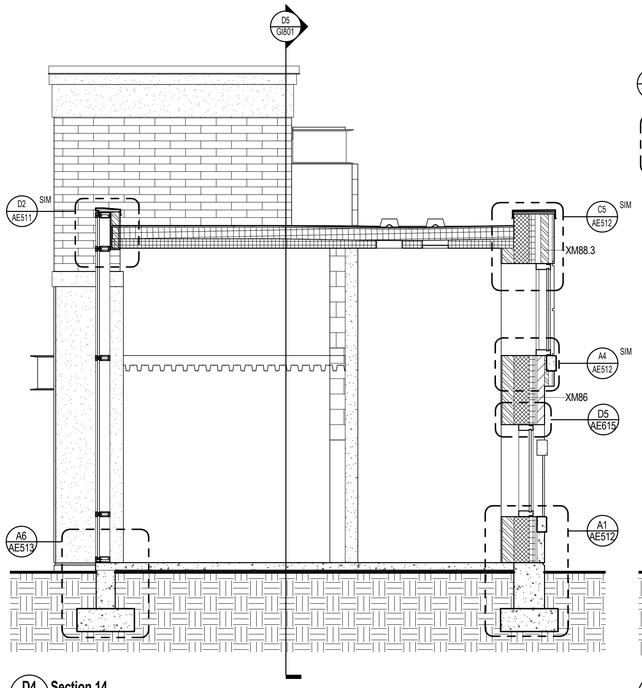

D4 GI801 **Section 14** 3/8" = 1'-0"

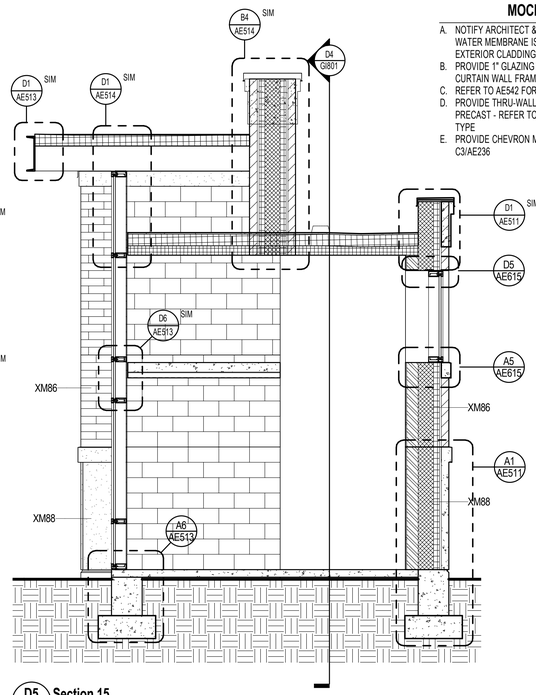

D5 GI801 **Section 15** 3/8" = 1'-0"

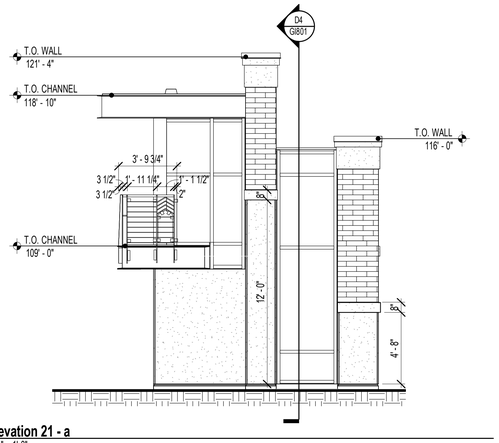

B1 GI801 **Elevation 21 - a** 1/4" = 1'-0"

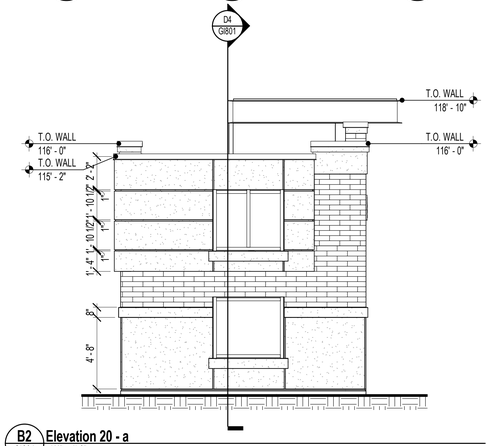

B2 GI801 **Elevation 20 - a** 1/4" = 1'-0"

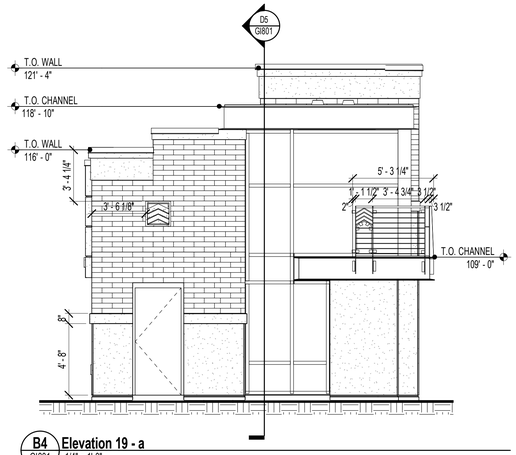

B4 GI801 **Elevation 19 - a** 1/4" = 1'-0"

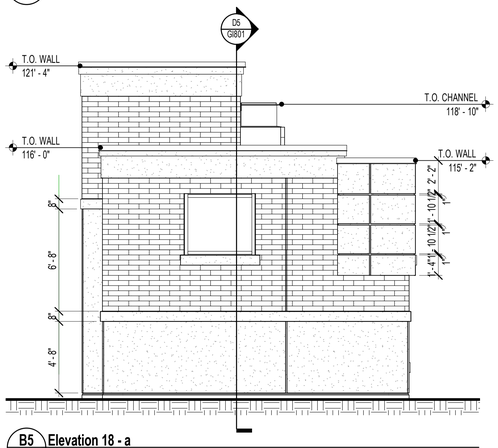

B5 GI801 **Elevation 18 - a** 1/4" = 1'-0"

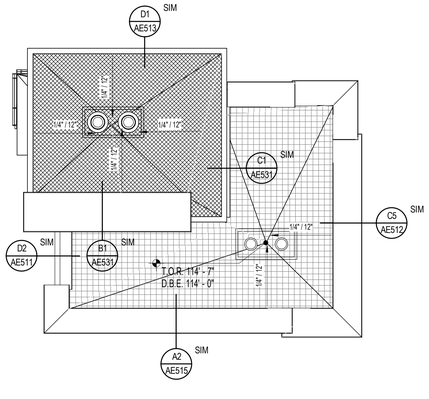

A1 GI801 **BILLETS ROOF PLAN** 1/4" = 1'-0"

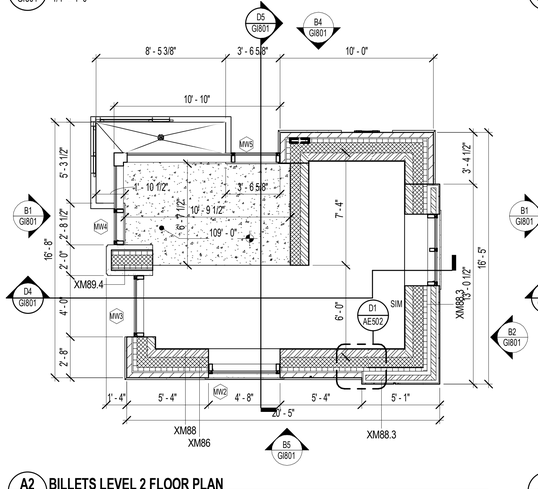

A2 GI801 **BILLETS LEVEL 2 FLOOR PLAN** 1/4" = 1'-0"

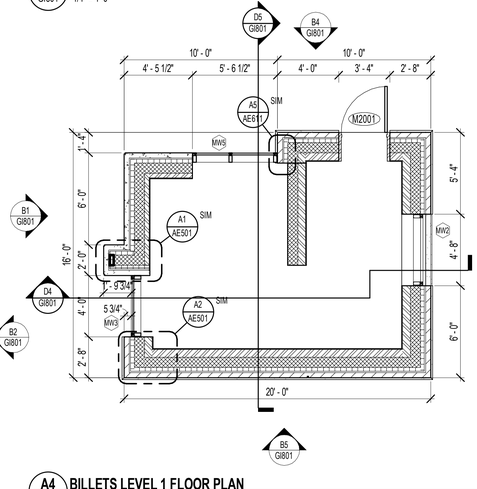

A4 GI801 **BILLETS LEVEL 1 FLOOR PLAN** 1/4" = 1'-0"

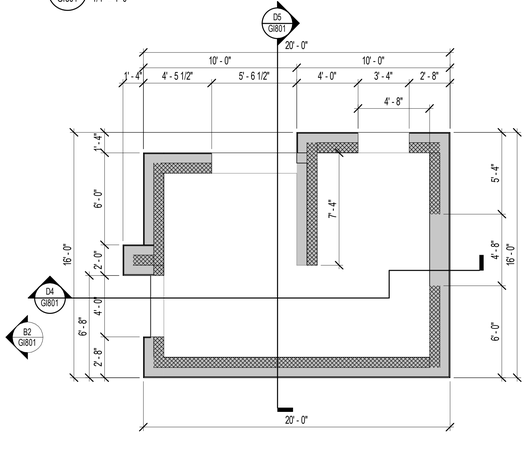

A5 GI801 **LEVEL 1 - SLAB CONTROL PLAN (mockup)** 1/4" = 1'-0"

GENERAL NOTES - MOCKUP PLANS

A. NOTIFY ARCHITECT & COMMISSIONING AGENT WHEN WATER MEMBRANE IS INSTALLED PRIOR TO EXTERIOR CLADDING BEING INSTALLED
B. PROVIDE 1" GLAZING IN ALL MOCKUP WINDOW / CURTAIN WALL FRAMES
C. REFER TO AE542 FOR RAILING DETAILING
D. PROVIDE THRU-WALL SCUPPER @ BRICK AND PRECAST - REFER TO MECHANICAL FOR SCUPPER TYPE
E. PROVIDE CHEVRON MASONRY ACCENT PANEL - SEE C3/AE236

ARCHITECTURAL NEXUS SACRAMENTO PLACERVILLE SALT LAKE CITY

Architectural NEXUS, Inc.
2505 East Parleys Way
Salt Lake City, Utah 84109
T 801.924.5000 F 801.924.5001
http://www.archnexus.com

Licensed Architect PETER MOYES No. 83-122248-0301 21 MARCH 2013 State of Utah

Original drawings remain the property of the Architect and as such the Architect retains total ownership and control. The design represented by these drawings is sold to the client for a one time use, unless otherwise agreed upon in writing by the Architect. © Architectural Nexus, Inc. 2012

UTAH NATIONAL GUARD CAMP WILLIAMS
RTI TASS COMPLEX, PHASE II
NGB PROJECT NO. 490444
17800 SOUTH ACADEMY STREET
BLUFFDALE, UTAH 84065

#	REVISIONS	
1	4.08.13	ADD-03

NEXUS PROJECT #:	11024
CHECKED BY:	SMS
DRAWN BY:	Author
DATE:	21 MARCH 2013

SHEET CONTENTS:
BUILDING MOCKUP

VOLUME B - BID DOCUMENTS

GI801

4/5/2013 4:45:24 PM

ROOM FINISH SCHEDULE - LEVEL 1

Room	Name	Floor	Base	Walls N	Walls E	Walls S	Walls W	Ceilings Type	Ceilings Finish	Ceilings Height	Notes
2002	VESTIBULE	C6 / T6	-	-	-	-	-	CT03	P6	8' - 11"	
2100	ENTRY LOBBY/LOUNGE	C4 / T6	RB2 / AL2	P6	P6 / WT3 / WT4	P6 1	P6	CT02 / CT04	P6	VARIES	
2101	ELEVATOR	T6	-	-	-	-	-	-		OPEN	
2102	QUIET ROOM	C4	RB2	P6	P6	P6	P6	CT05		9' - 0"	
2103	LAUNDRY	SV1 / SV2	SV2	P6	P6	P6	P6	CT06		8' - 0"	
2104	FIRE RISER	SC1	RB2	P6	P6	P6	P6	CT01	P6	VARIES	
2110	CORRIDOR	C4	RB2	P6	P6	P6	P6	CT02 / CT04	P6	8' - 6"	
2111	BEDROOM	C5	RB2	P6	P6 / P2	P6	P6	CT02 / CT03 / CT05	P6	9' - 6"	
2111A	TOILET	T8	T8	WT9 / WT11 / WT12	WT9 / WT11 / WT12	WT10 / WT11 / WT12	WT9 / WT11 / WT12	CT02	P6	7' - 10"	
2112	ACCESSIBLE BEDROOM	C5	RB2	P6	P6	P6	P6 / P2	CT02 / CT03 / CT05	P6	9' - 6"	
2112A	ACCESSIBLE TOILET	T8	T8	WT10 / WT11 / WT12	WT9 / WT11 / WT12	WT9 / WT11 / WT12	WT9 / WT11 / WT12	1 CT02	P6	7' - 10"	
2113	BEDROOM	C5	RB2	P6	P6	P6	P6 / P2	CT02 / CT03 / CT05	P6	9' - 6"	
2114	ACCESSIBLE BEDROOM	C5	RB2	P6 1	P6	P6	P6 / P2	CT02 / CT03 / CT05	P6	9' - 6"	
2115	BEDROOM	C5	RB2	P6	P6 / P2	P6	P6	CT02 / CT03 / CT05	P6	9' - 6"	
2115A	TOILET	T8	T8	WT9 / WT11 / WT12	WT9 / WT11 / WT12	WT10 / WT11 / WT12	WT9 / WT11 / WT12	CT02	P6	7' - 10"	
2116	BEDROOM	C5	RB2	P6	P6 / P2	P6	P6	CT02 / CT03 / CT05	P6	9' - 6"	
2116A	TOILET	T8	T8	WT10 / WT11 / WT12	WT9 / WT11 / WT12	WT9 / WT11 / WT12	WT9 / WT11 / WT12	CT02	P6	7' - 10"	
2117	BEDROOM	C5	RB2	P6	P6	P6	P6 / P2	CT02 / CT03 / CT05	P6	9' - 6"	
2118	BEDROOM	C5	RB2	P6	P6	P6	P6 / P2	CT02 / CT03 / CT05	P6	9' - 6"	
2119	BEDROOM	C5	RB2	P6	P6 / P2	P6	P6	CT02 / CT03 / CT05	P6	9' - 6"	
2119A	TOILET	T8	T8	WT9 / WT11 / WT12	WT9 / WT11 / WT12	WT10 / WT11 / WT12	WT9 / WT11 / WT12	CT02	P6	7' - 10"	
2120	BEDROOM	C5	RB2	P6	P6 / P2	P6	P6	CT02 / CT03 / CT05	P6	9' - 6"	
2120A	TOILET	T8	T8	WT10 / WT11 / WT12	WT9 / WT11 / WT12	WT9 / WT11 / WT12	WT9 / WT11 / WT12	CT02	P6	7' - 10"	
2121	BEDROOM	C5	RB2	P6	P6	P6	P6 / P2	CT02 / CT03 / CT05	P6	9' - 6"	
2122	BEDROOM	C5	RB2	P6	P6	P6	P6 / P2	CT02 / CT03 / CT05	P6	9' - 6"	
2123	BEDROOM	C5	RB2	P6	P6 / P2	P6	P6	CT02 / CT03 / CT05	P6	9' - 6"	
2123A	TOILET	T8	T8	WT9 / WT11 / WT12	WT9 / WT11 / WT12	WT10 / WT11 / WT12	WT9 / WT11 /WT12	CT02	P6	7' - 10"	
2124	BEDROOM	C5	RB2	P6	P6 / P2	P6	P6	CT02 / CT03 / CT05	P6	9' - 6"	
2124A	TOILET	T8	T8	WT10 / WT11 / WT12	WT9 / WT11 / WT12	WT9 / WT11 / WT12	WT9 / WT11 / WT12	CT02	P6	7' - 10"	
2125	BEDROOM	C5	RB2	P6	P6	P6	P6 / P2	CT02 / CT03 / CT05	P6	9' - 6"	
2126	BEDROOM	C5	RB2	P6	P6	P6	P6 / P2	CT02 / CT03 / CT05	P6	9' - 6"	
2127	BEDROOM	C5	RB2	P6	P6 / P2	P6	P6	CT02 / CT03 / CT05	P6	9' - 6"	
2127A	TOILET	T8	T8	WT9 / WT11 / WT12	WT9 / WT11 / WT12	WT10 / WT11 / WT12	WT9 / WT11 /WT12	CT02	P6	7' - 10"	
2128	BEDROOM	C5	RB2	P6	P6 / P2	P6	P6	CT02 / CT03 / CT05	P6	9' - 6"	
2128A	TOILET	T8	T8	WT10 / WT11 / WT12	WT9 / WT11 / WT12	WT9 / WT11 / WT12	WT9 / WT11 / WT12	CT02	P6	7' - 10"	
2129	BEDROOM	C5	RB2	P6	P6	P6	P6 / P2	CT02 / CT03 / CT05	P6	9' - 6"	
2130	BEDROOM	C5	RB2	P6	P6	P6	P6 / P2	CT02 / CT03 / CT05	P6	9' - 6"	
2140	CORRIDOR	C4	RB2	P6	P6	P6	P6	CT02 / CT04	P6	8' - 6"	
2141	OPEN BAY	SV1 / SV2	SV2	P6	P6	P6	P6	CT03	P6	9' - 2"	
2142	TOILETS/SHOWERS	T8	T8	WT9 / WT10 / WT11 / WT12	WT10 / WT11 / WT12	WT9 / WT11 / WT12	WT9 / WT11 / WT12	CT02	P6	9' - 1"	
2142A	JANITOR	T8	T8	WT9 / P6	P6	P6	WT9 / P6	CT02	P6	8' - 0"	
2143	BEDROOM	C5	RB2	P6	P6	P6 / P2	P6	CT02 / CT03 / CT05	P6	9' - 6"	
2143A	TOILET	T8	T8	WT9 / WT11 / WT12	WT9 / WT11 / WT12	WT9 / WT11 / WT12	WT10 / WT11 / WT12	CT02	P6	7' - 10"	
2144	BEDROOM	C5	RB2	P6 / P2	P6	P6	P6	CT02 / CT03 / CT05	P6	9' - 6"	
2145	OPEN BAY	SV1 / SV2	SV2	P6	P6	P6	P6	CT03	P6	9' - 2"	
2146	TOILETS/SHOWERS	T8	T8	WT9 / WT11 / WT12	WT9 / WT11 / WT12	WT9 / WT10 / WT11 / WT12	WT 10 / WT11 / WT12	CT02	P6	9' - 1"	
2146A	JANITOR	T8	T8	P6	WT9 / P6	WT9 / P6	P6	CT02	P6	8' - 0"	
2147	BEDROOM	C5	RB2	P6	P6	P6 / P2	P6	CT02 / CT03 / CT05	P6	9' - 6"	
2147A	TOILET	T8	T8	WT9 / WT11 / WT12	WT9 / WT11 / WT12	WT9 / WT11 / WT12	WT10 / WT11 / WT12	CT02	P6	7' - 10"	
2148	BEDROOM	C5	RB2	P6 / P2	P6	P6	P6	CT02 / CT03 / CT05	P6	9' - 6"	
2149	OPEN BAY	SV1 / SV2	SV2	P6	P6	P6	P6	CT03	P6	9' - 2"	
2150	TOILETS/SHOWERS	T8	T8	WT9 / WT10 / WT11 / WT12	WT10 / WT11 / WT12	WT9 / WT11 / WT12	WT9 / WT11 / WT12	CT02	P6	9' - 1"	
2150A	JANITOR	T8	T8	WT9 / P6	P6	P6	WT9 / P6	CT02	P6	8' - 0"	
2151	BEDROOM	C5	RB2	P6	P6	P6 / P2	P6	CT02 / CT03 / CT05	P6	9' - 6"	
2151A	TOILET	T8	T8	WT9 / WT11 / WT12	WT9 / WT11 / WT12	WT9 / WT11 / WT12	WT10 / WT11 / WT12	CT02	P6	7' - 10"	
2152	BEDROOM	C5	RB2	P6 / P2	P6	P6	P6	CT02 / CT03 / CT05	P6	9' - 6"	
2160	MECHANICAL	RF1	RF1	P6	P6	P6	P6	-		OPEN	
2161	MECHANICAL	RF1	RF1	P6	P6	P6	P6	-		OPEN	
2162	IT CLOSET	SC1	RB2	P6	P6	P6	P6	-		OPEN	
2162A	ELECTRICAL	SC1	RB2	P6	P6	P6	P6	-		OPEN	
2164	FACILITY MAINT/STOR	SV1 / SV2	SV2	P6	P6	P6	P6	CT02	P6	9' - 0"	
2165	LINEN STORAGE / BILLETING MGR.	SV1 / SV2	SV2	P6	P6	P6	P6	CT02	P6	9' - 0"	
2166	ELEV. EQUIP.	SC1	RB2	P6	P6	P6	P6	-		OPEN	
2171	STAIR B	SC1	RB2	P6	P6	P6	P6	-		OPEN	
2172	STAIR A	SC1	RB2	P6	P6	P6	P6	-		OPEN	
2173	STAIR C	SC1	RB2	P6	P6	P6	P6	-		OPEN	

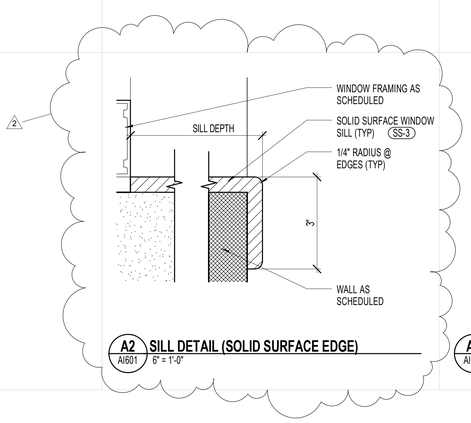

A2 / AI601 SILL DETAIL (SOLID SURFACE EDGE)
6" = 1'-0"

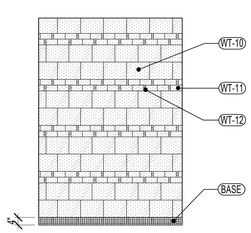

A3 / AI601 TOILET ROOM PATTERN - UNIFORM
3/8" = 1'-0"

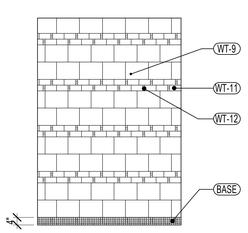

A4 / AI601 TOILET ROOM PATTERN - VARIED
3/8" = 1'-0"

ROOM FINISH LEGEND

FLOOR FINISHES

- C — CARPET
  - C1 — CARPET TILE; SHAW CONTRACT GROUP, STYLE: OVERLAY 59598, COLOR: BLEND 95750, SIZE: 18" X 36" INSTALLATION METHOD: BOXED IN
  - C2 — CARPET TILE; SHAW CONTRACT GROUP, STYLE: BLUR 59596, COLOR: BLEND 95750, SIZE: 18" X 36" INSTALLATION METHOD: BOXED IN
  - C3 — CARPET TILE; SHAW CONTRACT GROUP, STYLE: COLOUR PLANK 59595, COLOR: SUNDRIED 95870, SIZE: 18" X 36" INSTALLATION METHOD: BOXED IN
  - C4 — CARPET TILE: SHAW CONTRACT GROUP, STYLE: RADIANCE 59361, COLOR: NATURAL TONIC 60755, MONOLITHIC INSTALLATION
  - C5 — CARPET TILE: SHAW CONTRACT GROUP, STYLE: LUMINOSITY 59362, COLOR: NATURAL TONIC 60755, MONOLITHIC INSTALLATION
  - C6 — WALK OFF MAT:
- SC — SEALED CONCRETE
  - SC1 — SEALED CONCRETE
  - SC2 — BURNISHED/STAINED CONCRETE
- SV — SHEET VINYL
  - SV1 — SHEET VINYL; MANNINGTON COMMERCIAL; STYLE: FRAMEWORK, COLOR: STONE GRAY ALL108
  - SV2 — SHEET VINYL; MANNINGTON COMMERCIAL; STYLE: FRAMEWORK, COLOR: BARK ALL101, 12" PERIMETER WITH 6" COVED BASE, CHEMICAL WELD
- RF — RESINOUS FLOORING
  - RF1 — RESINOUS FLOORING; STONHARD: STYLE: STONGARD MD, COLOR: TBD, INTEGRAL 6" COVE BASE

TILE FINISHES

- T — FLOOR TILE BASE TILE
  - T1 — PORCELAIN TILE; CAESAR, STYLE: GATE, COLOR: GREIGE, SIZE: 29 9/16" X 29 9/16" - **ADD ALTERNATE (DINING, SERVERY)**
  - T2 — PORCELAIN TILE: CAESAR, STYLE: GATE, COLOR: BROADWAY, SIZE: 9 13/16" X 29 9/16" - **ADD ALTERNATE (DINING, SERVERY)**
  - T3 — PORCELAIN TILE; CAESAR, STYLE: GATE, COLOR: LICORICE, SIZE: 2" X 29 9/16" - **ADD ALTERNATE (DINING, SERVERY)**
  - T4 — PORCELAIN TILE; CAESAR, STYLE: GATE, COLOR: GREIGE, SIZE: STEP TREAD 13" X 29 9/16" - **ADD ALTERNATE**
  - T5 — PORCELAIN TILE; DALTILE, STYLE: QUARRY TEXTURES, COLOR: ADOBE FLASH 0T06, SIZE: 8" X 8" | BASE TILE: COVE, Q-3585, SIZE: 5" X 8" (ADMIN.)
  - T6 — PORCELAIN TILE: NEXT BY DALTILE, STYLE: ELITE, COLOR: TAN J201, SIZE: 16" X 32" RUNNING BOND INSTALLATION, TYP. (BILLETS)
  - T7 — PORCELAIN TILE; DALTILE, STYLE: KEYSTONES BLENDS, COLOR: TERRAIN DK10, SIZE: 1" X 1" | BASE: MB-4C (ADMIN.)
  - T8 — PORCELAIN TILE: DALTILE, STYLE: KEYSTONES, CUSTOM MOSIAC BLEND, COLOR: ELEMENTAL TAN D166 50%, SUEDE GRAY D182 25%, MARBLE D325 25%, SIZE: 1" X 1" | BASE: MB-4C, COLOR: ELEMENTAL TAN D166 100% (BILLETS)
  - T9 — PORCELAIN TILE; CAESAR, STYLE: GATE, COLOR: GREIGE, SIZE: 4 5/8" X 23 5/8"
- WT — WALL TILE
  - WT1 — PORCELAIN TILE; CAESAR, STYLE: GATE, COLOR: GREIGE, SIZE: 11 13/16" X 23 5/8"
  - WT2 — PORCELAIN TILE; CAESAR, STYLE: GATE, COLOR: GREIGE, SIZE: 11 13/16" X 23 5/8" DOGHE 3D
  - WT3 — PORCELAIN TILE; NEXT BY DALTILE, STYLE: ec1, COLOR: DOCKS J103, SIZE: 12" X 24" (BILLETS)
  - WT4 — PORCELAIN TILE; NEXT BY DALTILE, STYLE: ec1, COLOR: DOCKS J103, SIZE: 6" X 24" RANDOM LINEAR ACCENT (BILLETS)
  - WT5 — PORCELAIN TILE; ATLAS CONCORDE, STYLE: INTENSITY, COLOR: 8X08 INTENSITY LOVE, SIZE: 12" X 36"
  - WT6 — PORCELAIN TILE; ATLAS CONCORDE, STYLE: INTENSITY, COLOR: 8X18 INTENSITY LOVE INSERTO LINE, SIZE: 12" X 36"
  - WT7 — PORCELAIN TILE; DALTILE, STYLE: IDENTITY WALL, COLOR: GLOSS BISTRO CREAM MY62, SIZE: 8" X 20"
  - WT8 — PORCELAIN TILE; DALTILE, STYLE: IDENTITY WALL, COLOR: MATTE BISTRO CREAM MY62, SIZE: 8" X 20"
  - WT9 — PORCELAIN TILE; DALTILE, STYLE: MATTE, COLOR: URBAN PUTTY 0761, SIZE: 9" X 12" (BILLETS)
  - WT10 — PORCELAIN TILE; DALTILE, STYLE: MATTE, COLOR: ELEMENTAL TAN 0766, SIZE: 9" X 12" (BILLETS)
  - WT11 — PORCELAIN TILE; DALTILE, STYLE: MODERN DIMENSIONS, COLOR: ELEMENTAL TAN 0766, SIZE: 3" X 6" (BILLETS)
  - WT12 — PORCELAIN TILE; DALTILE, STYLE: MARACAS GLASS SOLIDS, COLOR: GLOSSY MUSHROOM P653, SIZE: 1" X 1" (BILLETS)
  - WT13 — PORCELAIN TILE; AMERICAN OLEAN, STYLE: LEGACY GLASS, COLOR: AUBURN LG14, SIZE: 1" X 1"
  - WT14 — PORCELAIN TILE; AMERICAN OLEAN, STYLE: LEGACY GLASS, COLOR: RED BLEND LG23, SIZE: 1" X 1"
  - WT15 — PORCELAIN TILE; AMERICAN OLEAN, STYLE: LEGACY GLASS, COLOR: CORAL LG13, SIZE: 1" X 1"
  - WT16 — PORCELAIN TILE; AMERICAN OLEAN, STYLE: LEGACY GLASS, COLOR: COPPER LG12, SIZE: 1" X 1"
  - WT17 — PORCELAIN TILE; DALTILE, STYLE: MATTE, COLOR: URBAN PUTTY 0761, SIZE: 6" X 6"

BASE FINISHES

- RB — RESILIENT BASE
  - RB1 — RUBBER BASE; ROPPE, STYLE: PINNACLE - TYPE TS, COLOR: 110 BROWN
  - RB2 — 4" RUBBER BASE; ROPPE, STYLE: PINNACLE - TYPE TS, COLOR: 140 FAWN
- MB — METAL BASE
  - MB1 — 4" ZINC-COATED BASE; FINISH TO MATCH BUILDING METAL PANELS
  - MB2 — 4" ALUMINUM BASE; CLEAR ANODIZED FINISH
- WB — WOOD BASE
  - WB1 — WOOD BASE, 4" PROFILE TBD

WALL FINISHES

- P — PAINT
  - P1 — PAINT; BENJAMIN MOORE, MOUNTAIN PEAK WHITE OC-121
  - P2 — PAINT; BENJAMIN MOORE, MANCHESTER TAN HC-81 (FIELD, ADMIN / ACCENT, BILLETS)
  - P3 — PAINT; BENJAMIN MOORE, AMBER WAVES 2159-40 (ACCENT, ADMIN)
  - P4 — PAINT; BENJAMIN MOORE, COUNTRY LANE 2088-20 (ACCENT, ADMIN)
  - P5 — PAINT; BENJAMIN MOORE, DAVENPORT TAN HC-76 (HM, ADMIN)
  - P6 — PAINT; BENJAMIN MOORE, TIMID WHITE OC-39 (FIELD, BILLETS)
  - P7 — PAINT; NOT USED
  - P8 — PAINT; BENJAMIN MOORE, SUNTAN YELLOW 2155-50
  - P9 — PAINT; BENJAMIN MOORE, PIKE'S PEAK GRAY 2127-50
  - P10 — PAINT; BENJAMIN MOORE, WOLF GRAY 2127-40
  - P11 — PAINT; BENJAMIN MOORE, KINGSPORT GRAY HC-86 (HM, BILLETS)
  - P12 — PAINT; BENJAMIN MOORE, ALEXANDRIA BEIGE HC-77 (ACCENT, ADMIN)
  - P13 — PAINT; ZOLATONE, LLUMINATIONS ZFX-DA139 (ACCENT, ADMIN)
  - P14 — WHITE BOARD PAINT
- AP — ACOUSTICAL PANEL
  - AP1 — ACOUSTICAL PANEL; ARMSTRONG, STYLE: SOUNDSCAPES SHAPES, COLOR: (CN) CRANBERRY, ITEM: #5449 LARGE RECTANGLE
  - AP2 — ACOUSTICAL PANEL; SNAPTEX, CUSTOM PRINTED FABRIC WRAPPED ACOUSTICAL PANELS; SIZE AS INDICATED ON ELEVATIONS, IMAGES BY OWNER

CEILING FINISHES

- CT — CEILING
  - CT1 — GYP. BD. CEILING; W/ 4" C-H STUD FRAMING
  - CT2 — GYP. BD. CEILING; W/ 3 5/8" STUD FRAMING (SHORT SPANS)
  - CT3 — GYP. BD. CEILING CEILING; 7/8" HAT CHANNELS WITH 1 1/2" MAIN RUNNERS LONG SPANS)
  - CT4 — ACOUSTICAL TILE; ARMSTRONG, STYLE: ULTIMA 9/16" BEVELED TEGULAR EDGE, 24" X 48"
  - CT5 — ACOUSTICAL TILE; ARMSTRONG, STYLE: ULTIMA 9/16" BEVELED TEGULAR EDGE, 24" X 24"
  - CT6 — ACOUSTICAL TILE; ARMSTRONG, STYLE: GEORGIAN (HIGH ACOUSTICS) 15/16" ANGLED TEGULAR EDGE, 24" X 24"
  - CT7 — ACOUSTICAL TILE; ARMSTRONG, STYLE: GEORGIAN 15/16 SQUARE LAY-IN, 24" X 48"
  - CT8 — ACOUSTICAL TILE; ARMSTRONG, STYLE: ULTIMA 15/16 VECTOR EDGE, 24" X 24"
  - CT9 — ACOUSTICAL TILE; ARMSTRONG, STYLE: TECHZONE, ULTIMA 9/16 BEVELED TEGULAR EDGE, FIELD PANEL: 24" X 48" & 24" X 24", TECHNICAL PANEL: 6" X 48"
  - CT10 — ACOUSTICAL TILE; ARMSTRONG, STYLE: METALWORKS MESH, 2DIAMOND WOVEN WIRE, 24" X 24", NICKEL CHROME
  - CT11 — ACOUSTICAL TILE; ARMSTRONG, STYLE: HEALTHZONE, ULTIMA 9/16 BEVELED TEGULAR EDGE, 24" X 24"
  - CT12 — ACOUSTICAL TILE; ARMSTRONG, STYLE: GEORGIAN (HIGH WASHABILITY) 15/16 SQUARE LAY-IN, 24" X 48"
  - CT13 — ACOUSTICAL TILE; ARMSTRONG, STYLE: SOUNDSCAPES - SHAPES, TRAPEZOID #5445, CUSTOM PANELS #5446, & #5447, & CUSTOM CUT PANELS, 48" X 48" & 48" X 60"

MILLWORK FINISHES

- PL — PLASTIC LAMINATE
  - PL1 — PLASTIC LAMINATE; WILSONART, COLOR 7941K-18 TAN ECHO
  - PL2 — PLASTIC LAMINATE; FORMICA, COLOR: 5342-SP EARTH, SCULPTED FINISH
  - PL3 — PLASTIC LAMINATE; WILSONART, COLOR: 4876-38 SHEER MESH
  - PL4 — PLASTIC LAMINATE; FORMICA, COLOR: 7738-58 COGNAC MAPLE
  - PL5 — PLASTIC LAMINATE; WILSONART, COLOR: 7970K-18 HIGH LINE
- SS — SOLID SURFACE
  - SS1 — SOLID SURFACE; CORIAN, STYLE: TERRA COLLECTION, COLOR: FAWN
  - SS2 — SOLID SURFACE; CORIAN, STYLE: TERRA COLLECTION, COLOR: SERENE SAGE
  - SS3 — SOLID SURFACE; HI-MACS, STYLE: VOLCANICS, COLOR: KAFFA VE13
- QS — QUARTZ SURFACE
  - QS1 — QUARTZ SURFACE; SILESTONE, COLOR: BLANCO MAPLE
  - QS2 — QUARTZ SURFACE; SILESTONE, COLOR: ALTAIR
- WD — WOOD
  - WD1 — WOOD VENEER PANEL; SPECIES: WHITE MAPLE, STAIN: TBD, FINISH: TBD, DIAMOND MATCH
  - WD2 — WOOD VENEER PANEL; SPECIES: WHITE MAPLE, STAIN: TBD, FINISH: TBD, EQUAL ~ 6" LEAVES, SLIP MATCH

GENERAL NOTES - FINISH LEGEND / SCHEDULE

A. SEE FINISH FLOOR PLANS AND ELEVATIONS FOR SPECIFIC FINISH LOCATIONS.
B. FINISH CALL-OUTS ON FINISH FLOOR PLANS & ELEVATIONS SHOWN AS (XX-X).
C. SEE ELEVATIONS FOR FOR MILLWORK FINISH LOCATIONS.
D. ALL PAINT TO BE LOCATED BASED ON PLAN NORTH.

ARCHITECTURAL NEXUS
SALT LAKE CITY PLACERVILLE SACRAMENTO

Architectural NEXUS, Inc.
2505 East Parleys Way
Salt Lake City, Utah 84109
T 801.924.5000 F 801.924.5001
http://www.archnexus.com

Original drawings remain the property of the Architect and as such the Architect retains total ownership and control. The design represented by these drawings is sold to the client for a one time use, unless otherwise agreed upon in writing by the Architect.
© Architectural Nexus, Inc. 2012

UTAH NATIONAL GUARD CAMP WILLIAMS
RTI TASS COMPLEX, PHASE II
NGB PROJECT NO. 490444
17800 SOUTH ACADEMY STREET
BLUFFDALE, UTAH 84065

#	REVISIONS	
1	4.01.13	ADD-02
2	4.08.13	ADD-03

NEXUS PROJECT #:	11024
CHECKED BY:	SMS
DRAWN BY:	Author
DATE:	21 MARCH 2013

SHEET CONTENTS:
FINISH SCHEDULE & FINISH LEGEND

VOLUME B - BID DOCUMENTS

AI601

4/5/2013 4:44:58 PM