State of Utah

GARY R. HERBERT
Governor

GREGORY S. BELL
Lt. Governor

Department of Administrative Services
KIMBERLY K. HOOD
Executive Director

Division of Facilities Construction and Management
DAVID G. BUXTON
Director

STAGE II - ADDENDUM NO. 2

Date:	September 26, 2011
To:	Jacobsen Construction Company/HKS Architects Layton Construction Company/VCBO Architects Okland Construction Company/GSBS Architects
From:	Dave McKay – Project Manager
Reference:	The Football Center at the Dee Glen Smith Athletic Center University of Utah – Salt Lake City, Utah DFCM Project No. 11062750
Subject:	**Design/Build Selection Stage II - Addendum No. 2**

Pages	Addendum Cover Sheets	2	pages
	Geotechnical Report	28	pages
	Performance Specifications	497	pages
	Total	527	pages

Note: This Addendum shall be included as part of the Contract Documents. Items in this Addendum apply to all drawings and specification sections whether referenced or not involving the portion of the work added, deleted, modified, or otherwise addressed in the Addendum. Acknowledge receipt of this Addendum in the space provided on the Bid Form. Failure to do so may subject the Bidder to Disqualification.

While we contend that SB220 should only be potentially applicable to a contract issued after the effective date of said bill, this is to clarify that for purposes of this contract, regardless of the execution or effective dates of this contract, the status of Utah Law and remedies available to the State of Utah and DFCM, as it relates to any matter referred to or affected by said SB220, shall be the Utah law in effect at the time of the issuance of this Addendum.

2.1 SCHEDULE CHANGES: There are no Project Schedule changes.

2.2 BUDGET ITEMS:

2.2.1 Kitchen equipment will be funded as FF&E not Design/Build Cost Proposal. Kitchen design, layout, and specification (subject to Owner approval) are to be included in the Design/Build Cost Proposal.

2.2.2 Hydroworx 2000 therapy pools will be ordered and funded by University of Utah. Design/Build Team shall be responsible for shop drawings, design coordination, scheduling, delivery/storage/receiving, and installation of a complete and integrated therapy pool facility.

2.2.3 Voice/data wiring will be by the University of Utah (NetCom). Pathway, i.e., cable trays, conduits, etc., scheduling and coordination shall be by the Design/Build Teams.

2.2.4 Auditorium fixed seating is to be **provided and installed** by the Design/Build Team contrary to the Project Manual Section 12610.

2.2.5 All costs for obtaining the LEED silver certification shall be included in the Cost Proposal.

2.3 GENERAL ITEMS:

2.3.1 While there is no comprehensive Hazmat report for the existing facilities that may be subject to demolition, for the purposes of the schedule and cost proposal there are no hazardous materials to be abated prior to demolition.

2.3.2 See the attached GSH Geotechnical Report.

2.3.3 Contrary to directions in Addendum No. 1, the Design/Build teams are asked to quote a cost proposal for artificial turf on the **80 yard field** not the 100 yard field.

2.4 PERFORMANCE SPECIFICATION:

2.4.1 The attached Performance Specification prepared by HFS Architects (which has been previously distributed in hard copy) is hereby made an official requirement of this Design/Build Project.

2.4.2 In addition to the clarifications, please note that it is expected that the Design/Build Team shall provide, 'a complete list of exclusions or exceptions from requirements listed in the requirements of the project.' Please include pertinent explanation or other reasoning.

2.4.3 A PVC roof will be required as indicated in the Project Manual.

2.5 INTERVIEW SCHEDULE:

Utah Room - Burbidge Academic Center – University of Utah – Salt Lake City, Utah on Friday, October 7, 2011:

8:30 AM - 9:45 AM	Okland/GSBS
10:00 AM - 11:15 AM	Jacobsen/HKS
11:30 AM - 1:00 PM	Layton/VCBO

Gordon Spilker Huber
Geotechnical Consultants, Inc.

REPORT
GEOTECHNICAL STUDY
PROPOSED DEE GLEN SMITH ATHLETIC CENTER EXPANSION
AND PROPOSED FUTURE WEST BUILDING
580 SOUTH GUARDSMAN WAY
SALT LAKE CITY, UTAH

Submitted To:

State Of Utah - DFCM
P.O. Box 141160
State Office Building, Suite 4110
Salt Lake City, Utah 84114

Submitted By:

Gordon Spilker Huber Geotechnical Consultants, Inc.
473 West 4800 South
Salt Lake City, Utah 84123

September 23, 2011

Job No. 0128-079-11

GSH
Gordon Spilker Huber
Geotechnical Consultants, Inc.

September 23, 2011
Job No. 0128-079-11

State Of Utah - DFCM
P.O. Box 141160
State Office Building, Suite 4110
Salt Lake City, Utah 84114

Attention: Mr. Dave McKay

Gentlemen:

Re: Report
Geotechnical Study
Proposed Dee Glen Smith Athletic Center Expansion
and Proposed Future West Building
580 South Guardsman Way
Salt Lake City, Utah

1. INTRODUCTION

1.1 GENERAL

This report presents the results of our geotechnical study performed for the proposed Dee Glen Smith Athletic Center expansion and proposed future west building located at 580 South Guardsman Way in Salt Lake City, Utah. The general location of the site with respect to major topographic features and existing facilities, as of 1998, is presented on Figure 1, Vicinity Map. A more detailed layout of the existing facilities and roadways, including the proposed locations of the expansion and new building, is presented on an aerial photograph based map as Figure 2, Site Plan. The locations of the borings drilled in conjunction with this study are also presented on Figure 2.

During the course of this study, many of the conclusions and recommendations summarized herein were discussed verbally with representatives presented to the owner and design team.

1.2 OBJECTIVES AND SCOPE

The objectives and scope of our study were planned in discussions between Mr. Dave McKay of the State of Utah - DFCM and Mr. Bill Gordon of Gordon Spilker Huber Geotechnical Consultants, Inc. (GSH).

Gordon Spilker Huber Geotechnical Consultants, Inc.
473 West 4800 South
Salt Lake City, Utah 84123
Tel: (801) 685-9190 Fax: (801) 685-2990
www.gshgeotech.com

In general, the objectives of this study were to:

1. Accurately define and evaluate the subsurface soil and groundwater conditions across the site.

2. Provide appropriate foundation, earthwork, and subdrain, recommendations and geoseismic information to be utilized in the design and construction of the proposed structures.

In accomplishing these objectives, our scope has included the following:

1. A field program consisting of the drilling, logging, and sampling of four borings within the Dee Glen Smith Athletic Center expansion and two borings within the proposed future west building.

2. A laboratory testing program.

3. An office program consisting of the correlation of available data, engineering analyses, and the preparation of this summary report.

1.3 AUTHORIZATION

Authorization was provided verbally for our Professional Services Agreement No. 11-0903 dated September 6, 2011.

1.4 PROFESSIONAL STATEMENTS

Supporting data upon which our recommendations are based are presented in subsequent sections of this report. Recommendations presented herein are governed by the physical properties of the soils encountered in the exploration borings, projected groundwater conditions, and the layout and design data discussed in Section 2., Proposed Construction, of this report. If subsurface conditions other than those described in this report are encountered and/or if design and layout changes are implemented, GSH must be informed so that our recommendations can be reviewed and amended, if necessary.

Our professional services have been performed, our findings developed, and our recommendations prepared in accordance with generally accepted engineering principles and practices in this area at this time.

2. PROPOSED CONSTRUCTION

Proposed construction will consist of expanding the existing Dee Glen Smith Athletic Center to the east and constructing a proposed future west building to the west of the athletic center.

Multiple design schemes for the Dee Glen Smith Athletic Center expansion are presently being considered. These schemes vary in layout, number of levels, and how they relate to the existing building. The expansion will be two to three levels maximum in height. The main floor level of the expansion will likely be at/tie into the main level floor elevation of the existing building. The current site grade slopes to the west and has a total relief on the order of 15 to 20 feet. Although the existing final vertical and lateral setting of the proposed expansion are not finalized, the first level will be 10 to 12 feet below grade along the east side and tie into the lowest at-grade level of the existing building to the west, north, and south. Depending on the design scheme selected, new building loads may or may not affect the existing building foundation loading. Should significant new loading be imposed upon existing foundations by the new construction, GSH must be provided with the existing and new loads to review settlements.

The proposed future west building will be one to two levels in height and located within a portion of the existing football practice field directly west of the Dee Glen Smith Athletic Center. The first level will be a foot or so above existing grade. The actual plan area for this new building is unavailable at this time.

The proposed expansion and future west building are projected to be constructed of light steel-frame and Portland cement concrete/CMU block construction. Structural loads will be transmitted down through bearing walls and columns to supporting foundations. Maximum column and wall loads are anticipated to be on the order of 20 to 60 kips and 3 to 4 kips per lineal foot, respectively. Maximum floor slab loads are projected to range from 150 to 200 pounds per square foot.

Site development will require a moderate amount of earthwork in the form of site grading. For the expansion, we estimate maximum cuts up to approximately 10 to 12 feet along the east perimeter with maximum fills on the order of one to two feet to achieve design grades. For the future west building, cuts and fills on the order of one to two feet are projected.

At this time, new pavements associated with the proposed construction have not been outlined. GSH can provide pavement design recommendations as needed upon request once conditions are known. To complete this, projected traffic type and frequency is requested.

3. INVESTIGATIONS

3.1 FIELD PROGRAM

In order to define and evaluate the subsurface soil and groundwater conditions at the site, 6 borings were explored to depths ranging from 12.0 to 21.5 feet below existing grade. The depths obtained in Borings B-1 and B-2 of 12.0 and 12.5 feet, respectively, were dictated by augur refusal in dense gravels. The borings were drilled using a truck-mounted drill rig equipped with hollow-stem augers. Locations of the borings are presented on Figure 2.

The field portion of our study was under the direct control and continual supervision of an experienced member of our geotechnical staff. During the course of the drilling operations, a continuous log of the subsurface conditions encountered was maintained. In addition, relatively undisturbed and small disturbed samples of the typical soils encountered were obtained for subsequent laboratory testing and examination. The soils were classified in the field based upon visual and textural examination. These classifications have been supplemented by subsequent inspection and testing in our laboratory. Detailed graphical representation of the subsurface conditions encountered is presented on Figures 3A through 3F, Log of Borings. Soils were classified in accordance with the nomenclature described on Figure 4, Unified Soil Classification System.

A 3.25-inch outside diameter, 2.42-inch inside diameter drive sampler (Dames & Moore) was utilized in the majority of the subsurface sampling at the site. Additionally, a 2.0-inch outside diameter, 1.38-inch inside diameter drive sampler (SPT) was utilized at select locations and depths. The blow-counts recorded on the boring logs were those required to drive the sampler 12 inches with a 140-pound hammer dropping 30 inches.

Following completion of drilling operations, a one and one-quarter-inch diameter slotted PVC pipe was installed in Boring B-3 in order to provide a means of monitoring the groundwater fluctuations.

3.2 LABORATORY TESTING

3.2.1 General

In order to provide data necessary for our engineering analyses, a laboratory testing program was performed. The program included moisture and density, partial and full gradation, consolidation, and chemical tests. The following paragraphs describe the tests and summarize the test data.

3.2.2 Moisture and Density Tests

To aid in classifying the soils and to help correlate other test data, moisture and density tests were performed on selected undisturbed samples. The results of these tests are presented on the boring logs, Figures 3A through 3F.

3.2.3 Partial and Full Gradation Tests

To aid in classifying the granular soils, both partial and full gradation tests were performed. Results of the tests are tabulated below:

Boring No.	Depth (feet)	Percent Passing No. 200 Sieve	Soil Classification
B-3	5.5	22.9	GC
Additional Tests to follow			

3.2.4 Consolidation Test

To provide data necessary for our settlement analyses, a consolidation test was performed on a representative sample of the brown silty clay with trace to some coarse sand encountered in occasional layers up to six inches thick within the predominately clayey gravel soils. The sample tested came from Boring B-4 at a depth of four and one-half feet below the ground surface. The data obtained from this test was used to calculate foundation movements which could occur under the anticipated foundation loadings. Based upon data obtained from the consolidation test, the silty clay soils are moderately over-consolidated and will exhibit moderately low compressibility characteristics under the anticipated loadings. Detailed results of the tests are maintained within our files and can be transmitted to you, upon your request.

3.2.5 Chemical Tests

To determine if the site soils will react detrimentally with concrete, chemical tests were performed on representative samples of the natural clayey gravel with some sand soils encountered at both the expansion and new building sites. The results of the chemical tests are tabulated below:

Boring No.	Depth (feet)	Soil Classification	pH	Total Water Soluble Sulfate (mg/kg-dry)
B-3	2.5	GC	8.84	13.6
B-5	5.5	GC	8.97	5.5

4. SITE CONDITIONS

4.1 SURFACE

4.1.1 Dee Glen Smith Athletic Center Expansion

The expansion site is located east of the existing Dee Glen Smith Athletic Center (850 South Guardsman Way, Salt Lake City, Utah). The site is presently covered with grass and sidewalks/flatwork and slopes moderately downslope from Guardsman Way to the west with a total projected fall of approximately 20 feet. At the toe of the slope, the surface flattens out for a distance of roughly 40 feet in front of the existing building. The expansion site is bound by the indoor tennis facility to the north and the indoor football practice field house building to the south.

4.1.2 Proposed Future West Building

The proposed future west building site is presently a flat, grass-covered football practice field with similar open practice fields directly to the north and south. The site is bound on the east by the existing Dee Glen Smith Athletic Center building and the Mt. Olivet Cemetery to the west. The eastern portion of the Mt. Olivet Cemetery is approximately 10 to 12 feet below the western side of the practice field. The transition between the flat practice field and the lower ground to the west is an approximately two horizontal to one vertical grass- and weed-covered slope.

4.2 SUBSURFACE SOIL AND GROUNDWATER

4.2.1 Dee Glen Smith Athletic Center Expansion

Borings B-1 through B-4 were completed within the area of the proposed Dee Glen Smith Athletic Center expansion. The subsurface soil conditions are similar at each boring location. The upper approximately three to four inches consist of sod, major roots (topsoil). The soils, including the topsoil layer, to depths of five to six inches are loose. At Borings B-1 and B-2, located near the crest of the existing sloped site, a layer of silty clay with trace to some gravel was encountered to a depth of approximately five and one-half feet below the surface. The surficial clays at Boring B-1 are very stiff, moist, brown, and comprised of natural soils. The surficial clays at Boring B-2 are medium stiff, moist, dark brown, and comprised of non-engineered fills.

Below the topsoil in Borings B-3 and B-4, located near the toe of the existing slope and from 5.5 feet in Borings B-1 and B-2, natural clayey fine and coarse gravel with some sand was encountered to the full depth penetrated, 12.0 to 21.5 feet. The depths of Borings B-1 and B-2 were dictated by auger refusal in very dense gravels at 12.0 and 12.5 feet, respectively. The clayey gravels range from medium dense to very dense, contain occasional layers of silty sand and silty clay up to six inches thick, are moist, brown, and will exhibit high strength and low

compressibility characteristics under the projected loading conditions. The silty clays encountered in occasional up to six-inch layers are moderately over-consolidated.

Groundwater was not encountered within the depths penetrated. On September 21, 2011 (nine days following drilling), GSH personnel returned to the site to measure groundwater within the piezometer installed in Boring B-3. Groundwater was not present at the time of the measurement through the depth of the boring, 21.5 feet.

4.2.2 Proposed Future West Building

Borings B-5 and B-6 were completed within the area of the proposed future west building to be located at the existing football practice field west of the Dee Glen Smith Athletic Center building.

At each boring location, the surface is blanketed with sod. The upper approximately four to five inches consist of major roots (topsoil). The soils, including the topsoil layer, to depths of five to six inches, are loose.

Non-engineered fills were encountered at the surface to a depth of one foot in Boring B-5 and a depth of seven and one-half feet in Boring B-6. At Boring B-5, the fill consists of silty clay with some fine sand and fine and coarse gravel, which is loose/disturbed grading medium stiff, moist, and brown. At Boring B-6, the fill consists of clayey fine and coarse gravel with some sand, which is medium dense grading dense, moist, and brown in color. Due to the dense condition of the clayey gravel fill encountered in Boring B-6, this fill may have been placed as structural fill. However, without verifying documentation, it must be considered as non-engineered fill.

From one to four and one-half feet in Boring B-5, a layer of clayey gravel/gravelly clay with some fine to coarse sand was encountered. This layer of clayey gravel/gravelly clay is very stiff/dense, moist, reddish-brown, and will exhibit high strength and low compressibility characteristics under the projected loading conditions. From 4.5 to 14.0 feet in Boring B-5 and from 7.5 feet to the full depth penetrated in Boring B-6, 19.5 feet, clayey fine and coarse gravel with some fine to coarse sand was encountered. The clayey fine and coarse gravels are dense to very dense, contain occasional layers of silty sand and silty clay up to six inches thick, are moist, brown and reddish-brown in color, and will exhibit high strength and low compressibility characteristics under the projected loading conditions.

From 14.0 feet to the full depth penetrated, 21.5 feet in Boring B-5, clayey fine to coarse sand with some gravel and silt was encountered. The clayey sand is dense, moist, brown to reddish-brown in color, and will exhibit high strength and low compressibility characteristics under the projected loading conditions.

Groundwater was not encountered within the depths penetrated, 19.5 to 21.5 feet, at the time of drilling.

5. DISCUSSIONS AND RECOMMENDATIONS

5.1 SUMMARY OF FINDINGS

The results of our study show that the proposed structures may be supported upon conventional spread and continuous wall foundations established upon suitable natural soils and/or structural fill extending to suitable natural soils.

The most significant geotechnical aspects of the site are the non-engineered fills encountered in Borings B-2, B-5, and B-6 to depths ranging from one to seven and one-half feet thick. Non-engineered fills encountered in Boring B-6 are medium dense to very dense and may have been placed as structural fill. However, unless verified through past documentation or by in-place density testing at the time of construction, the fill must be considered as non-engineered. Non-engineered fills will exhibit variable and poor engineering characteristics. Below the building, outside flatwork, and potential rigid pavements, all non-engineered fill must be removed and replaced with structural fill.

Past history of the area indicates that laterally and vertically variable "perched" groundwater conditions can develop, especially during the late spring and summer months. Additionally, "perched" water could develop from a utility line rupture in the area or adverse surface runoff. For this reason, it is recommended that a perimeter foundation/chimney subdrain be installed around all subgrade portions of the structures.

Detailed discussions pertaining to earthwork, foundations, subdrains, floor slabs, lateral resistance, lateral pressure, and the geoseismic setting of the site are discussed in the following sections.

5.2 EARTHWORK

5.2.1 Site Preparation

Prior to major site earthwork, existing utilities in conflict with proposed construction will need to be properly abandoned and/or relocated. Initial site preparation will consist of the removal of sod, surface vegetation, topsoil, root bulbs, any other deleterious materials, debris, and non-engineered fills from an area extending out at least three feet beyond the perimeter of the proposed building and outside flatwork. Vegetation and other deleterious materials should be removed from the site. Stripped topsoil will be unsuitable for structural fill but may be stockpiled for subsequent landscaping purposes. Non-engineered fills similar to the natural soils may be stockpiled and re-utilized as structural fill.

Subsequent to stripping and prior to the placement of structural site grading fill, floor slabs, flatwork/pavements, or footings, the exposed natural subgrade should be proofrolled by running moderate-weight rubber tire-mounted construction equipment uniformly over the surface at least two times. If excessively soft or otherwise unsuitable clay soils are encountered beneath

footings, they must be completely removed and replaced with compacted granular structural fill. If required removal of soft soils below foundations is greater than two feet thick, GSH must be notified to review conditions. In lightly loaded floor slab and outside flatwork areas, unsuitable natural soils should be removed to a maximum depth of two feet and replaced with compacted granular structural fill.

5.2.2 Excavations

Temporary construction excavations not exceeding four feet in depth and not encountering groundwater may be constructed with near-vertical sideslopes. If cohesive soils and groundwater are encountered, near-vertical sideslopes may still be used.

Deeper excavations not exceeding 12 to 14 feet in depth nor encountering loose granular soils or groundwater may be constructed with sideslopes no steeper than three-quarters horizontal to one vertical. If loose granular soils and/or groundwater are encountered, flatter sideslopes, shoring, bracing, and/or dewatering may be required.

To minimize disturbance to the underlying soils, it is our recommendation that footings be excavated with a backhoe equipped with a smooth-lip bucket.

All excavations must be inspected periodically by qualified personnel. If any signs of instability or excessive sloughing are noted, immediate remedial action must be initiated.

5.2.3 Structural Fill

Structural fill is defined as all fill which will ultimately be subjected to structural loadings, such as imposed by footings, floor slabs, pavements, etc. Structural fill will be required as backfill over foundations and utilities, as site grading fill, and potentially as replacement fill below footings and slabs. All structural fill must be free of sod, rubbish, topsoil, frozen soil, and other deleterious materials.

Structural site grading fill is defined as fill placed over fairly large open areas to raise the overall site grade. For structural site grading fill, the maximum particle size should generally not exceed four inches; although, occasional larger particles, not exceeding eight inches in diameter, may be incorporated if placed randomly in a manner such that “honeycombing” does not occur and the desired degree of compaction can be achieved. The maximum particle size within structural fill placed within confined areas should generally be restricted to two inches.

The in-situ granular soils may be re-utilized as structural fills if they meet the requirements for such as stated herein. This may require that excavated granular soils be run through a grizzly to screen the over-sized particles.

Imported granular structural fill shall consist of well-graded mixtures of sand and gravel meeting the general requirements stated herein. The maximum amount of fines within the imported granular structural fill should generally not exceed 20 percent.

Non-structural site grading fill is defined as all fill material not designated as structural fill and may consist of any cohesive or granular soils not containing excessive amounts of degradable material.

5.2.4 Fill Placement and Compaction

All structural fill shall be placed in lifts not exceeding eight inches in loose thickness. Structural fills shall be compacted in accordance with the percent of the maximum dry density as determined by the AASHTO[1] T-180 (ASTM[2] D-1557) compaction criteria in accordance with the table below:

Location	Total Fill Thickness (feet)	Minimum Percentage of Maximum Dry Density
Beneath an area extending at least 3 feet beyond the perimeter of the building 2 feet beyond the perimeter of pavements and flatwork	0 to 10	95
Beneath an area extending at least 3 feet beyond the perimeter of the building 2 feet beyond the perimeter of pavements and flatwork	10 plus	98*
Outside area defined above	0 to 5	90
Outside area defined above	5 to 10	95

* Compacted at optimum up to plus 3 percent of optimum water content

Subsequent to stripping and prior to the placement of structural site grading fill, the subgrade shall be prepared as discussed in Section 5.2.1, Site Preparation, of this report. In confined areas, subgrade preparation should consist of the removal of all loose or disturbed soils.

1 American Association of State Highway and Transportation Officials
2 American Society for Testing and Materials

Non-structural fill may be placed in lifts not exceeding 12 inches in loose thickness and compacted by passing construction, spreading, or hauling equipment over the surface at least twice.

5.2.5 Utility Trenches

All utility trench backfill material below structurally loaded facilities (flatwork, floor slabs, roads, etc.) shall be placed at the same density requirements established for structural fill. If the surface of the backfill becomes disturbed during the course of construction, the backfill shall be proofrolled and/or properly compacted prior to the construction of any exterior flatwork over a backfilled trench. Proofrolling shall be performed by passing moderately loaded rubber tire-mounted construction equipment uniformly over the surface at least twice. If excessively loose or soft areas are encountered during proofrolling, they shall be removed to a maximum depth of two feet below design finish grade and replaced with structural fill.

Most utility companies and City-County governments are now requiring that Type A-1a or A-1b (AASHTO Designation – basically granular soils with limited fines) soils be used as backfill over utilities. These organizations are also requiring that in public roadways the backfill over major utilities be compacted over the full depth of fill to at least 96 percent of the maximum dry density as determined by the AASHTO T-180 (ASTM D-1557) method of compaction. We recommend that as the major utilities continue onto the site that these compaction specifications are followed.

Fine-grained soils are not recommended as trench backfill. Properly moisture prepared on-site granular soils may be used as trench backfill. The clay granular soils at the site are not recommended because of projected difficulty in compaction.

5.3 SPREAD AND CONTINUOUS WALL FOUNDATIONS

5.3.1 Design Data

The proposed structures may be supported upon conventional spread and continuous wall foundations established on suitable undisturbed natural granular soils and/or granular structural fill extending to suitable natural granular soils. For design, considering the loading described in Section 2., Proposed Construction, of this report, the following parameters are provided:

Minimum Recommended Depth of Embedment for Frost Protection	- 30 inches
Minimum Recommended Depth of Embedment for Non-frost Conditions	- 15 inches
Recommended Minimum Width for Continuous Wall Footings	- 18 inches

Minimum Recommended Width for Isolated Spread Footings	- 24 inches
Recommended Net Bearing Pressure for Real Load Conditions	
For Minimum-Sized Footings	- 3,000 pounds per square foot*
Footings Over Two feet of Natural Granular soils or Imported Granular Structural Fill With a Minimum Width of Four Feet	- 4,500 pounds per square foot*
Bearing Pressure Increase for Seismic Loading	- 50 percent**

* For intermediate-sized footings, the appropriate bearing pressure may be interpolated on a straightline basis from these values.

** Should <u>not</u> be applied to maximum edge pressure during seismic loading for footings less than four feet wide established on granular soils.

The term "net bearing pressure" refers to the pressure imposed by the portion of the structure located above lowest adjacent final grade. Therefore, the weight of the footing and backfill to lowest adjacent final grade need not be considered. Real loads are defined as the total of all dead plus frequently applied live loads. Total load includes all dead and live loads, including seismic and wind.

5.3.2 Installation

Under no circumstances should the footings be established upon soft, loose or disturbed soils, non-engineered fills, sod, rubbish, frozen soils, debris, clay soils, or within ponded water. If the natural soils upon which the footings are to be established become loose or disturbed, they must be removed and replaced with granular structural fill. If granular structural fill upon which the footings are to be established become disturbed, they must be recompacted to the requirements for structural fill.

At the USTAR site in the north-central portion of the University of Utah Campus, similar silty/clayey gravels with some sands were observed in the exploration samples. During excavation, the silty clays were encountered to a much greater extent. This required that significant over-excavation and replacement with granular fill take place. This should not occur at this site.

The width of replacement fill below footings should be equal to the width of the footing plus one additional foot for each foot of fill thickness placed.

5.3.3 Settlements

Maximum settlements of foundations designed and installed in accordance with recommendations presented herein and supporting maximum anticipated loads as discussed in Section 2., Proposed Construction, are anticipated to be on the order of one-quarter to one-half of an inch.

Approximately 60 percent of the quoted settlement should occur during construction.

5.4 FOUNDATION SUBDRAINS

5.4.1 General

The true static groundwater table is at significant depth and will not affect design, construction, or performance of the proposed facility. However, the history of the area is that laterally and vertically variable "perched" groundwater conditions can develop, especially during the late spring and summer months. Additionally "perched" water could develop from a utility line rupture in the area or adverse surface runoff. For this reason, it is recommended that a perimeter foundation/chimney subdrain be installed around all subgrade portions of the structure.

5.4.2 Foundation/Chimney Drain

The perimeter subdrain should consist of a minimum 4-inch diameter, slotted or perforated PVC or other durable pipe, with the invert established at least 18 inches below the top of the lowest adjacent slab. The pipe should be encased in a one-half- to one-inch minus clean gap-graded crushed gravel extending two inches below and laterally around the pipe and up continuously at least 12 inches above the top of the lowest adjacent slab. The slope of the pipe should be at least 0.3 percent and connect to a suitable down-gradient point of gravity discharge. The same granular material could be utilized for the chimney subdrain against the subgrade walls. In all cases, the gravels must be separated from the natural soils or finer-grained backfill with a geotextile fabric, such as Mirafi 140N or equivalent. As an alternate, a synthetic drain board, such as Miradrain or equivalent, can be used for the chimney subdrain. The chimney portion should extend up to 12 inches below final outside grade. The upper 12 inches should consist of low permeable soils, such as the on-site clays, to reduce surface infiltration into the drain system. Prior to installing the gravels, the outside subgrade walls, as a minimum, must be dampproofed.

Present directive on campus is to discharge as much site-generated water as possible into dry well sumps and not into storm drains. At a minimum, it is recommended that the base of the discharge from the subsurface dry well sump must be below the elevations of all below-grade levels of the adjoining structures, especially down-gradient to the west. Natural bedding of the subsurface deposits is down-gradient to the west-southwest. Groundwater flows will mostly follow this gradient. Because of the clay content, the natural granular soils are not highly absorbent. For design, an infiltration rate of 30 inches per minute should be used.

5.5 LATERAL RESISTANCE

Lateral loads imposed upon foundations due to wind or seismic forces may be resisted by the development of passive earth pressures and friction between the base of the footings and the supporting soils. In determining frictional resistance, a coefficient of 0.40 should be utilized. Passive resistance provided by properly placed and compacted granular structural fill above the water table may be considered equivalent to a fluid with a density of 300 pounds per cubic foot. Below the water table, this granular soil should be considered equivalent to a fluid with a density of 150 pounds per cubic foot.

A combination of passive earth resistance and friction may be utilized provided that the friction component of the total is divided by 1.5.

5.6 LATERAL PRESSURES

The lowest level of the Dee Glen Smith Athletic Center expansion will be partially buried along the east. Mass excavation for the structure may extend as much as 12 to 14 feet below grade.

The lateral pressure parameters, as presented within this section, are for backfills, which will consist of drained granular soil, placed and compacted in accordance with the recommendations presented herein. The lateral pressures imposed upon subgrade facilities will be basically dependent upon:

1. The relative rigidity and movement of the backfilled structure.

2. The backfill material.

3. The degree and method of compaction.

For active walls, such as retaining walls which can move outward (away from the backfill), granular backfill may be considered equivalent to a fluid with a density of 35 pounds per cubic foot in computing lateral pressures. For more rigid walls, such as below grade level (basement) walls, granular backfill may be considered equivalent to a fluid with a density of 45 pounds per cubic foot. For very rigid non-yielding walls, granular backfill should be considered equivalent to a fluid with a density of at least 60 pounds per cubic foot. The above values assume that:

1. The surface of the soils slope behind the wall is horizontal.

2. The fill within three feet of the wall will be compacted with hand-operated compacting equipment.

3. The compaction requirement is associated with landscaping fills.

If the backfill is compacted as a structural fill, the above values should be increased to 45, 60, and 90 pounds per cubic foot, respectively. If the granular fill within 3 feet of the moderately rigid wall consists of angular "free-draining" gravel, the value for structural fill may remain at 45 pounds per cubic foot.

For seismic loading, the following uniform pressures should be added for active and moderately rigid (basement) walls:

Wall height (feet)	Active Case Uniform Pressure (pounds per square foot)	Moderately Yielding Case Uniform Pressure* (pounds per square foot)
4	40	70
8	80	150
10	100	180

* Intermittent heights may be linearly interpolated.

5.7 FLOOR SLABS

Floor slabs must be established upon suitable, natural soils and/or upon structural fill extending to suitable natural soils. Under no circumstances should floor slabs be established over non-engineered fills, loose or disturbed soils, sod, rubbish, construction debris, other deleterious materials, frozen soils, or within ponded water.

In order to facilitate construction, it is recommended that floor slabs be directly underlain by at least four inches of "base course" fill.

Settlements of floor slabs established on the natural suitable soils and/or structural fill extending to these soils should be negligible (less than one-quarter of an inch).

5.8 CEMENT TYPES

The laboratory tests indicate that the site soils contain negligible amounts of water soluble sulfates. Therefore, all concrete which will be in contact with the site soils may be prepared using Type I or IA cement.

5.9 GEOSEISMIC SETTING

5.9.1 General

Most of the Utah municipalities have adopted the International Building Code (IBC) 2009. The IBC 2009 code determines the seismic hazard for a site based upon 2002 mapping of bedrock

accelerations prepared by the United States Geologic Survey (USGS) and the soil site class. The USGS values are presented on maps incorporated into the IBC code and are also available based on latitude and longitude coordinates (grid points).

The structure must be designed in accordance with the procedure presented in Section 1613, Earthquake Loads, of the IBC 2009 edition.

5.9.2 Faulting

A mapped inferred portion of the East Bench fault is shown running in a northeast-southwest direction through the practice fields just north of the proposed building location. This mapped fault continues south through the Mt. Olivet Cemetery roughly 70 feet west of the proposed building. The projected inferred fault location is within a fault study zone. The eastern limit of the zone extends into the western portion of the practice field.

Over the last number of years, multiple fault studies have been performed by GSH and others along this projected fault alignment from near East High School, to the south and north through the University of Utah Campus. None of the studies uncovered evidence of active faulting. All indications are that there is an older inactive fault beneath the sediments which go back 15,000 years. Because of the above data, GSH and representatives of the University of Utah have projected that the potential of active faulting in this study zone is minimal. Therefore, in conjunction with projects in similar settings fault studies have not been required.

The Wasatch Fault zone is considered capable of generating earthquakes as large as magnitude 7.3[3].

5.9.3 Soil Class

For dynamic structural analysis, the Site Class C – Very Dense Soil and Soft Rock as defined in Table 1613.5.2, Site Class Definitions, of the IBC 2009 can be utilized.

5.9.4 Ground Motions

The IBC 2009 code is based on 2002 USGS mapping, which provides values of short and long period accelerations for the Site Class B-C boundary for the Maximum Considered Earthquake (MCE). This Site Class B-C boundary represents a hypothetical bedrock surface and must be corrected for local soil conditions. The following table summarizes the peak ground and short and long period accelerations for a MCE event and incorporates a soil amplification factor for a Site Class C soil profile in the second column. Based on the site latitude and longitude

---

[3] Arabasz, W.J., Pechmann, J.C., and Brown, E.D., 1992, Observational seismology and the evaluation of earthquake hazards and risk in the Wasatch Front area, Utah, in Gori, P.L., and Hays, W.W., eds., Assessment of regional earthquake hazards and risk along the Wasatch Front, Utah: U.S. Geological Survey Professional Paper 1500-D, 36 p.

(40.7563 degrees north and 111.8459 degrees west, respectively), the values for this site are tabulated below:

Spectral Acceleration Value, T Seconds	Site Class B-C Boundary [mapped values] (% g)	Site Class C [adjusted for site class effects] (% g)
Peak Ground Acceleration	64.7	64.7
0.2 Seconds, (Short Period Acceleration)	$S_S = 161.7$	$S_{MS} = 161.7$
1.0 Seconds (Long Period Acceleration)	$S_1 = 64.6$	$S_{M1} = 83.9$

The IBC 2009 code design accelerations (S_{DS} and S_{D1}) are based on multiplying the above accelerations (adjusted for site class effects) for the MCE event by two-thirds (⅔).

5.9.5 Liquefaction

The site is located in an area that has been identified by Salt Lake County as having "moderate" liquefaction potential. Liquefaction is defined as the condition when saturated, loose, finer-grained sand-type soils lose their support capabilities because of excessive pore water pressure which develops during a seismic event.

Where groundwater was not encountered to the maximum depth penetrated, 21.5 feet, and due to the dense nature of the in-situ granular soils, our analysis indicates that the potential for liquefaction is low to very low at the site.

We appreciate the opportunity of providing this service for you. If you have any questions or require additional information, please do not hesitate to contact us.

Respectfully submitted,

GSH Geotechnical Consultants, Inc.

Bryan N. Roberts, P.E.
State of Utah No. 276476
Project Geotechnical Engineer

Reviewed by:

William J. Gordon, P.E.
State of Utah No. 146417
Senior Geotechnical Engineer

BNR/WJG:sn

Encl. Figure 1, Vicinity Map
Figure 2, Site Plan
Figures 3A through 3F, Log of Borings
Figure 4, Unified Soil Classification System

Addressee (3 + email)
c: Mr. Ron Reaveley (1 + email)
Reaveley Engineers + Associates
675 East 500 South, Suite 400
Salt Lake City, Utah 84102

STATE OF UTAH - DFCM
JOB NO. 0128-079-11

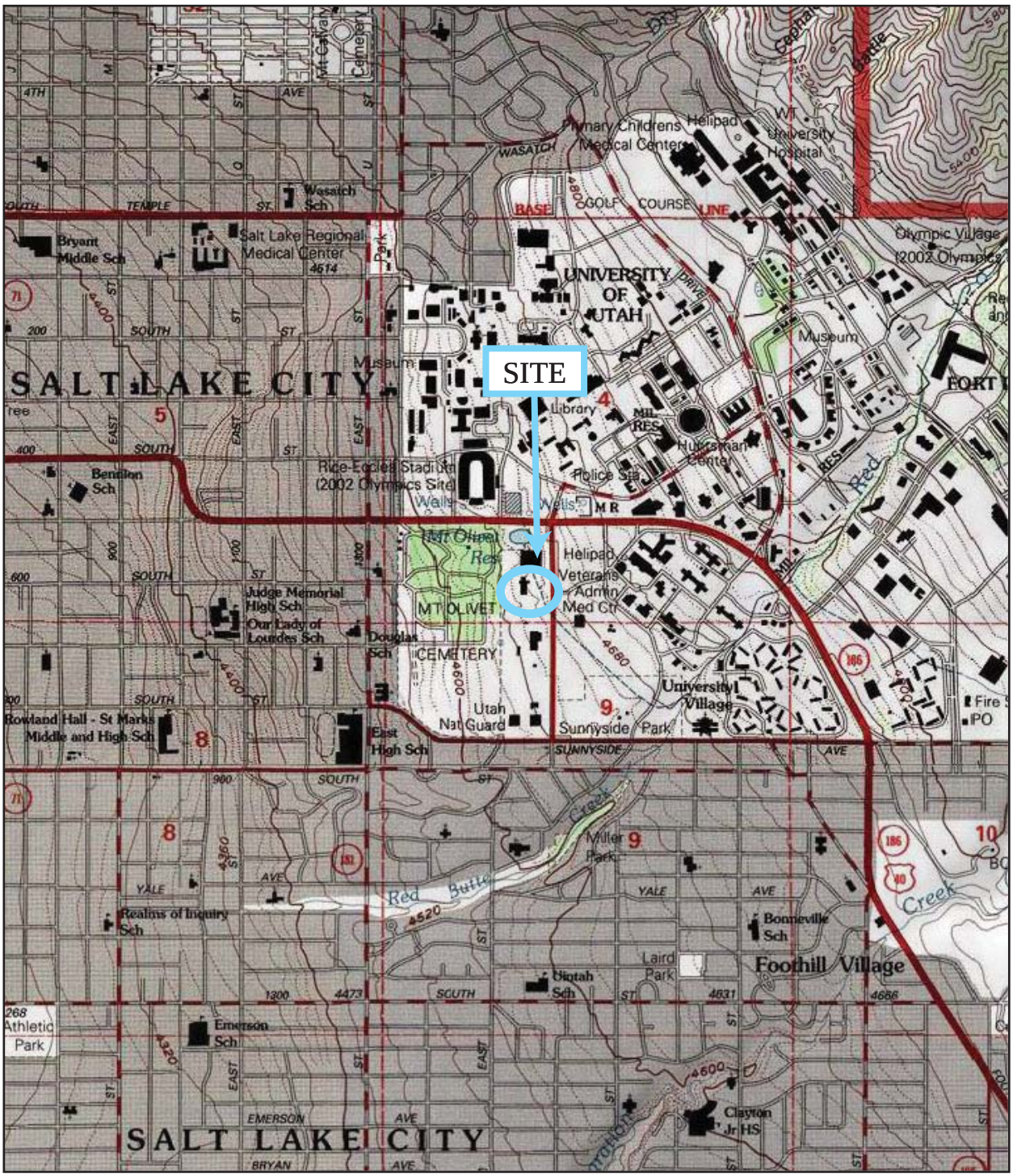

SCALE IN FEET
1000 0 1000 2000

FIGURE 1
VICINITY MAP

REFERENCE:
USGS 7.5 MINUTE TOPOGRAPHIC QUADRANGLE MAPS
TITLED "FORT DOUGLAS, UTAH" AND "SUGAR HOUSE, UTAH"
BOTH DATED 1998

GSH
Gordon Spilker Huber
Geotechnical Consultants, Inc.

STATE OF UTAH - DFCM
JOB NO. 0128-079-11

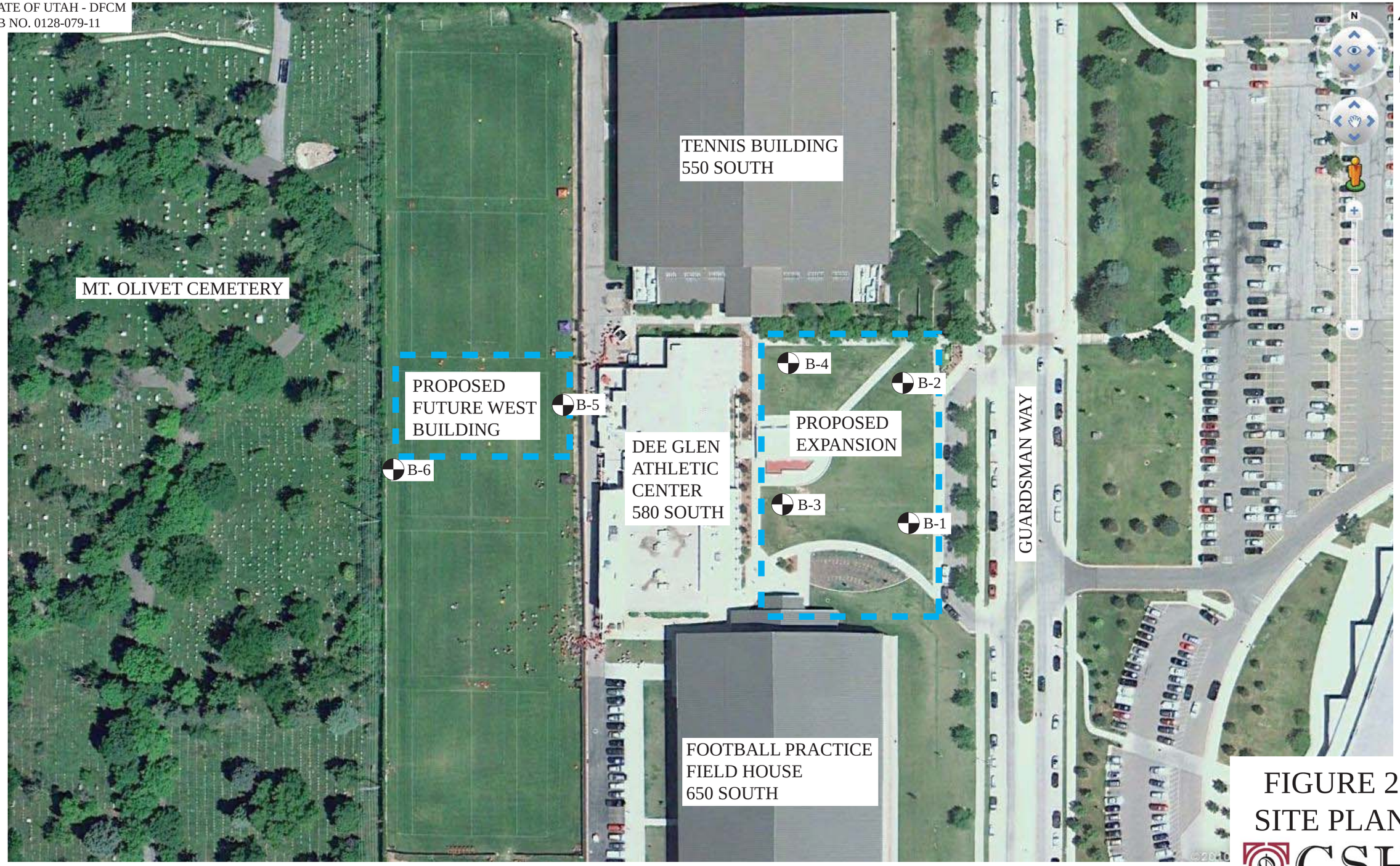

REFERENCE:
ADAPTED FROM AERIAL PHOTOGRAPH
DOWNLOADED FROM 2010 GOOGLE EARTH
IMAGERY DATE JUNE 17, 2010

APPROXIMATE SCALE: 1” = 47’’

FIGURE 2
SITE PLAN

GSH
Gordon Spilker Huber
Geotechnical Consultants, Inc.

Gordon Spilker Huber Geotechnical Consultants, Inc.
Salt Lake City, Utah 84123

Project Name: Prop. Dee Glen Smith Athletic Center Expan.
Project No.: 0128-079-11
Location: 580 South Guardsman Way, Salt Lake City, Utah
Client: State of Utah - DFCM
Drilling Method: 3-3/4" ID Hollow-Stem Auger
Date Drilled: 09-12-11
GSH Field Rep.: RJG
Elevation: ---
Water Level: No groundwater encountered (09-12-11)
Remarks:

Graphical Log	Water Level	DESCRIPTION	DEPTH FT.	BLOWS/FT	SAMPLE SYMBOL	MOISTURE (%)	% PASSING 200	DRY DENSITY (PCF)	Liquid Limit (%)	Plastic Limit (%)	REMARKS
		Ground Surface									
		SILTY CLAY with some fine to coarse sand and occasional to some fine and coarse gravel; major roots (topsoil) to 3"; brown (CL)	0								loose to 6" moist
				32							very stiff
			5								
		CLAYEY FINE AND COARSE GRAVEL with some fine to coarse sand; brown (GC)		43							moist medium dense
		very dense drilling conditions to 10.0'	10	50 5"							very dense
		Drilling refusal at 12.0' on very dense coarse gravel. Stopped sampling at 10.25'. No groundwater encountered at time of drilling.	15								
			20								
			25								

The discussion in the text under the section titled, SUBSURFACE CONDITIONS, is necessary for a proper understanding of the nature of the subsurface material.

FIGURE 3A

Gordon Spilker Huber Geotechnical Consultants, Inc.
Salt Lake City, Utah 84123

Project Name: Prop. Dee Glen Smith Athletic Center Expan.
Project No.: 0128-079-11
Location: 580 South Guardsman Way, Salt Lake City, Utah
Client: State of Utah - DFCM
Drilling Method: 3-3/4" ID Hollow-Stem Auger
Date Drilled: 09-12-11
GSH Field Rep.: RJG
Elevation: ---
Water Level: No groundwater encountered (09-12-11)
Remarks:

Graphical Log	Water Level	DESCRIPTION	DEPTH FT.	BLOWS/FT	SAMPLE SYMBOL	MOISTURE (%)	% PASSING 200	DRY DENSITY (PCF)	Liquid Limit (%)	Plastic Limit (%)	REMARKS
		Ground Surface	0								
		SILTY CLAY, FILL with some fine sand and occasional fine and coarse gravel; major roots (topsoil) to 4"; dark brown (CL-FILL)									loose to 5" moist medium stiff
				26							very stiff
			5								
		CLAYEY FINE AND COARSE GRAVEL with some fine to coarse sand; light brown (GC)		100+							moist to slightly moist very dense
			10	50 2"							no recovery
				50 2"							
		Drilling refusal at 12.0' on very dense coarse gravel. Stopped sampling at 12.25'. No groundwater encountered at time of drilling.	15								
			20								
			25								

The discussion in the text under the section titled, SUBSURFACE CONDITIONS, is necessary for a proper understanding of the nature of the subsurface material.

FIGURE 3B

Gordon Spilker Huber Geotechnical Consultants, Inc.
Salt Lake City, Utah 84123

Project Name: Prop. Dee Glen Smith Athletic Center Expan.
Project No.: 0128-079-11
Location: 580 South Guardsman Way, Salt Lake City, Utah
Client: State of Utah - DFCM
Drilling Method: 3-3/4" ID Hollow-Stem Auger
Date Drilled: 09-12-11
GSH Field Rep.: RJG
Elevation: ---
Water Level: No groundwater encountered (09-12-11)
Remarks:

Graphical Log	Water Level	DESCRIPTION	DEPTH FT.	BLOWS/FT	SAMPLE SYMBOL	MOISTURE (%)	% PASSING 200	DRY DENSITY (PCF)	Liquid Limit (%)	Plastic Limit (%)	REMARKS
		Ground Surface									
		CLAYEY FINE AND COARSE GRAVEL with some fine to coarse sand; major roots (topsoil) to 4"; reddish-brown (GC)	0								loose to 5" moist
				79		5.2		122			dense
			5	43							
				81							
			10								
		grades with trace to some silt with occasional layers of fine to coarse sand with trace silt up to 3" thick and occasional clayey layers up to 1/2" thick	15	60							medium dense
			20	72							dense
		Stopped drilling at 20.0'. Stopped sampling at 21.5'. No groundwater encountered at time of drilling. Installed 1-1/4" diameter slotted PVC pipe to 21.5'.	25								

The discussion in the text under the section titled, SUBSURFACE CONDITIONS, is necessary for a proper understanding of the nature of the subsurface material.

FIGURE 3C

Gordon Spilker Huber Geotechnical Consultants, Inc.
Salt Lake City, Utah 84123

Project Name: Prop. Dee Glen Smith Athletic Center Expan.
Project No.: 0128-079-11
Location: 580 South Guardsman Way, Salt Lake City, Utah
Client: State of Utah - DFCM
Drilling Method: 3-3/4" ID Hollow-Stem Auger
Date Drilled: 09-12-11
GSH Field Rep.: RJG
Elevation: ---
Water Level: No groundwater encountered (09-12-11)
Remarks:

Graphical Log	Water Level	DESCRIPTION	DEPTH FT.	BLOWS/FT	SAMPLE SYMBOL	MOISTURE (%)	% PASSING 200	DRY DENSITY (PCF)	Liquid Limit (%)	Plastic Limit (%)	REMARKS
		Ground Surface									
		CLAYEY FINE AND COARSE GRAVEL with some fine sand; major roots (topsoil) to 4"; reddish-brown (GC)	0								loose to 5" moist
				102		5.6		119			very dense
		grades with occasional layers up to 6" thick of silty clay with some fine to coarse sand; light brown mottling									medium dense
			5	51		20.4		107			
		very dense gravelly drilling at 6.5'-8.0', then softer drilling									
				71							
			10								
				47							
			15								
				50+							very dense
		Stopped drilling at 18.0'.	20								
		Stopped sampling at 19.5'.									
		No groundwater encountered at time of drilling.									
			25								

The discussion in the text under the section titled, SUBSURFACE CONDITIONS, is necessary for a proper understanding of the nature of the subsurface material.

FIGURE 3D

Gordon Spilker Huber Geotechnical Consultants, Inc.
Salt Lake City, Utah 84123

Project Name: Prop. Dee Glen Smith Athletic Center Expan.
Project No.: 0128-079-11
Location: 580 South Guardsman Way, Salt Lake City, Utah
Client: State of Utah - DFCM
Drilling Method: 3-3/4" ID Hollow-Stem Auger
Date Drilled: 09-13-11
GSH Field Rep.: RJG
Elevation: ---
Water Level: No groundwater encountered (09-13-11)
Remarks:

Graphical Log	Water Level	DESCRIPTION	DEPTH FT.	BLOWS/FT	SAMPLE SYMBOL	MOISTURE (%)	% PASSING 200	DRY DENSITY (PCF)	Liquid Limit (%)	Plastic Limit (%)	REMARKS
		Ground Surface	0								
		SILTY CLAY, FILL with some fine sand and some fine and coarse gravel; major roots (topsoil) to 5"; brown (CL-FILL)									loose to 6" moist medium stiff moist
		CLAYYEY GRAVEL/GRAVELLY CLAY with some fine to coarse sand; reddish-brown and brown (GC/CL)		82							very stiff/dense
		CLAYEY FINE AND COARSE GRAVEL with fine to coarse sand; brown (GC)	5								moist medium dense
				53		10.9		117			
		grades with occasional layers up to 6" thick of silty clay with some sand; light brown									
		grades with occasional layers up to 4" thick of fine to medium sand with trace to some silt	10	50+							very dense
		CLAYEY FINE TO COARSE SAND with some gravel and silt; brown/reddish-brown (SC)									moist
			15	39							dense
			20	40							
		Stopped drilling at 20.0'.									
		Stopped sampling at 21.5'.									
		No groundwater encountered at time of drilling.	25								

The discussion in the text under the section titled, SUBSURFACE CONDITIONS, is necessary for a proper understanding of the nature of the subsurface material.

FIGURE 3E

Gordon Spilker Huber Geotechnical Consultants, Inc.
Salt Lake City, Utah 84123

Project Name: Prop. Dee Glen Smith Athletic Center Expan.
Project No.: 0128-079-11
Location: 580 South Guardsman Way, Salt Lake City, Utah
Client: State of Utah - DFCM
Drilling Method: 3-3/4" ID Hollow-Stem Auger
Date Drilled: 09-16-11
GSH Field Rep.: RJG
Elevation: ---
Water Level: No groundwater encountered (09-16-11)
Remarks:

Graphical Log	Water Level	DESCRIPTION	DEPTH FT.	BLOWS/FT	SAMPLE SYMBOL	MOISTURE (%)	% PASSING 200	DRY DENSITY (PCF)	Liquid Limit (%)	Plastic Limit (%)	REMARKS
		Ground Surface									
		CLAYEY FINE AND COARSE GRAVEL, FILL with some fine to coarse sand; major roots (topsoil) to 4"; brown (GC-FILL)	0								loose to 5" moist
				56							medium dense
			5	110+		10.8		119			very dense
		CLAYEY FINE AND COARSE GRAVEL with some fine to coarse sand; reddish-brown (GC)									moist very dense
				100+		6.2		120			
			10								
				43							dense
			15								
				51							
		Stopped drilling at 18.0'.	20								
		Stopped sampling at 19.5'.									
		No groundwater encountered at time of drilling.	25								

The discussion in the text under the section titled, SUBSURFACE CONDITIONS, is necessary for a proper understanding of the nature of the subsurface material.

FIGURE 3F

UNIFIED SOIL CLASSIFICATION SYSTEM

FIELD IDENTIFICATION PROCEDURES				GRAPH SYMBOL	LETTER SYMBOL [1]	TYPICAL DESCRIPTIONS
COARSE GRAINED SOILS More than half of material is larger than No. 200 sieve size. [2] (The No. 200 sieve size is about the smallest particle visible to the naked eye)	GRAVELS More than half of coarse fraction is larger than No. 4 sieve size. (For visual classifications, the 1/4" size may be used as equivalent to the No. 4 sieve size.)	CLEAN GRAVELS (Little or no fines)	Wide range in grain size and substantial amounts of all intermediate particle sizes.		GW	Well graded gravels, gravel-sand mixtures, little or no fines.
			Predominantly one size or a range of sizes with some intermediate sizes missing.		GP	Poorly graded gravels, gravel-sand mixtures, little or no fines.
		GRAVELS WITH FINES (Appreciable amount of fines)	Non-plastic fines (for identification procedures see ML below).		GM	Silty gravels, poorly graded gravel-sand-silt mixtures.
			Plastic fines (for identification procedures see CL below).		GC	Clayey gravels, poorly graded gravel-sand-clay mixtures.
	SANDS More than half of coarse fraction is smaller than No. 4 sieve size. (For visual classifications, the 1/4" size may be used as equivalent to the No. 4 sieve size.)	CLEAN SANDS (Little or no fines)	Wide range in grain sizes and substantial amounts of all intermediate particle sizes.		SW	Well graded sands, gravelly sands, little or no fines.
			Predominantly one size or a range of sizes with some intermediate sizes missing.		SP	Poorly graded sands, gravelly sands, little or no fines.
		SANDS WITH FINES (Appreciable amount of fines)	Non-plastic fines (for identification procedures see ML below).		SM	Silty sands, poorly graded sand-silt mixtures.
			Plastic fines (for identification procedures see CL below).		SC	Clayey sands, poorly graded sand-clay mixtures.

IDENTIFICATION PROCEDURES ON FRACTION SMALLER THAN No. 40 SIEVE SIZE		DRY STRENGTH (CRUSHING CHARACTERISTICS)	DILATANCY (REACTION TO SHAKING)	TOUGHNESS (CONSISTENCY NEAR PLASTIC LIMIT)	GRAPH SYMBOL	LETTER SYMBOL [1]	TYPICAL DESCRIPTIONS
FINE GRAINED SOILS More than half of material is smaller than No. 200 sieve size. (The No. 200 sieve size is about the smallest particle visible to the naked eye)	SILTS AND CLAYS Liquid limit less than 50	None to slight	Quick to slow	None		ML	Inorganic silts and very fine sands, rock flour, silty or clayey fine sand with slight plasticity.
		Medium to high	None to very slow	Medium		CL	Inorganic clays of low to medium plasticity, gravelly clays, sandy clays, silty clays, lean clays.
		Slight to medium	Slow	Slight		OL	Organic silts and organic silt-clays of low plasticity.
	SILTS AND CLAYS Liquid limit greater than 50	Slight to medium	Slow to none	Slight to medium		MH	Inorganic silts, micaceous or diatomaceous fine sandy or silty soils, elastic silts.
		High to very high	None	High		CH	Inorganic clays of high plasticity, fat clays.
		Medium to high	None to very slow	Slight to medium		OH	Organic clays of medium to high plasticity.
HIGHLY ORGANIC SOILS		Readily identified by color, odor, spongy feel and frequently by fibrous texture.				Pt	Peat and other highly organic soils.

[1] Boundary classifications: –Soils possessing characteristics of two groups are designated by combinations of group symbols. For example GW–GC, well graded gravel–sand mixture with clay binder.
[2] All sieve sizes on this chart are U.S. standard.

GENERAL NOTES

1. In general, Unified Soil Classification Designations presented on the logs were evaluated by visual methods only. There rore, actual designations (based on laboratory testing) may differ.

2. Lines seperating strata on the logs represent approximate boundaries only Actual transitions may be gradual.

3. Logs represent general soil conditions observed at teh point of exploration onthe date indicated.

4. No warranty is provided as to the continuity of soil conditions between individual sample locations.

FINE - GRAINED SOIL

CONSISTENCY	SPT (blows/ft)	TORVANE UNDRAINED SHEAR STRENGTH (tsf)	POCKET PENETROMETER UNCONFINED COMPRESSIVE STRENGTH (tsf)	FIELD TEST
Very Soft	<2	<0.125	<0.25	Easily penetrated several inches by Thumb. Squeezes through fingers.
Soft	2 - 4	0.125 - 0.25	0.25 - 0.5	Easily penetrated 1 " by Thumb . Molded by light finger pressure.
Medium Stiff	4 - 8	0.25 - 0.5	0.5 - 1.0	Penetrated over 1/2 " by Thumb with moerate effort. Molded by strong finger pressure.
Stiff	8 - 15	0.5 - 1.0	1.0 - 2.0	Indented about 1/2 " by Thumb but penetrated only with great effort
Very Stiff	15 - 30	1.0 - 2.0	2.0 - 4.0	Readily indented by Thumbnail
Hard	>30	>2.0	>4.0	Indented with difficulty by Thumbnail

LOG KEY SYMBOLS

- Bulk / Bag Sample
- Thin Wall
- Standard Penetration Split Spoon Sampler
- No Recovery
- Rock Core
- 3-3/4" ID D&M Sampler
- 3" ID D&M Sampler
- Water Level
- California Sampler

COARSE -GRAINDE SOIL

APPERENT DENSITY	SPT (blows/ft)	RELATIVE DENSITY (%)	FIELD TEST
Very Loose	<4	0 - 15	Easily penetrated with 1/2 " reinforcing rod pushed by hand
Loose	4 - 10	15 - 35	Difficult to penetrated with 1/2 " reinforcing rod pushed by hand
Medium Dense	10 - 30	35 - 65	Easily penetrated a foot with 1/2 " reinforcing rod driven with 5-lb hammer
Dense	30 - 50	65 - 85	Difficult to penetrated a foot with 1/2 " reinforcing rod driven with 5-lb hammer
Very Dense	>50	85 - 100	Penetrated only a few inches with 1/2 " reinforcing rod driven with 5-lb hammer

STRATIFICATION

DESCRIPTION	THICKNESS
SEAM	1/16 - 1/2 "
LAYER	1/2 - 12 "

DESCRIPTION	THICKNESS
Occasional	One or less per foot of thickness
Frequent	More than on per foot of thichness

CEMENTATION

DESCRIPTION	DESCRIPTION
Weakely	Crumbles or breaks with handling of slight finger pressure
Moderately	Crumbles or breaks with considerable finger pressure
Strongly	Will not crumbles or breaks with finger pressure

MODIFIERS

DESCRIPTION	%
Trace	<5
Some	5 - 12
With	>12

MOISTURE CONTENT

DESCRIPTION	FIELD TEST
Dry	Absence of moisture, dusty, dry to the touch
Moist	Damp but no visible water
Wet	Visible water, usually soil below Water Table

FIGURE 4

GSH
Gordon Spilker Huber
Geotechnical Consultants, Inc.

PROJECT MANUAL

DFCM #11062750 dbs2
HFSA #1137.01
16 September 2011

University of Utah
Dee Glen Smith Athletic Center

Performance Specifications

HFS*Architects*

ARCHITECTURE
INTERIORS
PLANNING

DOCUMENTS

OUTLINE SPECIFICATIONS

Division 1 - GENERAL CONDITIONS

01310 PROJECT MANAGEMENT AND COORDINATION
01330 SUBMITTAL PROCEDURES
01352 LEED REQUIREMENTS
01400 QUALITY REQUIREMENTS
01500 TEMPORARY FACILITIES AND CONTROLS
01732 SELECTIVE DEMOLITION
01800 COMMISSIONING

Division 2 - SITE CONSTRUCTION

02221 BUILDING DEMOLITION
02230 SITE CLEANING
02300 EARTHWORK
02510 WATER DISTRIBUTION
02530 SANITARY SEWER
02630 STORM DRAINAGE
02741 ASPHALT PAVING
02751 CEMENT CONCRETE PAVEMENT
02810 IRRIGATION SYSTEMS
02920 LAWN AND GRASSES
02930 EXTERIOR PLANTS

Division 3 - CONCRETE

03300 CAST-IN-PLACE CONCRETE
03450 ARCHITECTURAL PRECAST CONCRETE
03491 GLASS FIBER REINFORCED CONCRETE

Division 4 - MASONRY

04810 UNIT MASONRY ASSEMBLIES
04851 DIMENSION STONE CLADDING
04860 STONE MASONRY

Division 5 - METALS

05120 STRUCTURAL STEEL
05210 STEEL JOISTS

05310 STEEL DECK
05400 COLD-FORMED METAL FRAMING
05500 METAL FABRICATIONS
05521 PIPE AND TUBE RAILINGS
05721 ORNAMENTAL RAILINGS

Division 6 - WOOD

06105 MISCELLANEOUS CARPENTRY
06402 INTERIOR ARCHITECTURAL WOODWORK

Division 7 - THERMAL AND MOISTURE PROTECTION

07142 HOT FLUID APPLIED RUBBERIZED ASPHALT WATERPROOFING
07210 BUILDING INSULATION
07241 POLYMER BASED EXTERIOR INSULATION AND FINISH SYSTEM (EIFS)
07411 METAL ROOF PANELS
07415 COMPOSITE WALL PANELS
07542 POLYVINYL-CHLORIDE (PVC) ROOFING
07620 SHEET METAL FLASHING
07720 ROOF ACCESSORIES
07841 THROUGH-PENETRATION FIRESTOP SYSTEMS
07920 JOINT SEALANTS

Division 8 - DOORS AND WINDOWS

08110 STEEL DOORS AND FRAMES
08211 FLUSH WOOD DOORS
08311 ACCESS DOORS AND FRAMES
08331 OVERHEAD COILING DOORS
08411 ALUMINUM FRAMED ENTRANCES AND STOREFRONTS
08470 REVOLVING ENTRANCE DOORS
08520 ALUMINUM WINDOWS
08710 DOOR HARDWARE
08800 GLAZING
08911 GLAZED ALUMINUM CURTAINWALLS
08950 TRANSLUCENT WALL AND ROOF ASSEMBLIES

Division 9 - FINISHES

09111 NON-LOAD-BEARING STEEL FRAMING
09250 GYPSUM BOARD
09310 CERAMIC TILE
09402 RESINOUS MATRIX TERRAZZO FLOORING
09511 ACOUSTIC PANEL CEILINGS

09512 ACOUSTICAL TILE CEILINGS
09640 WOOD FLOORING
09651 RESILIENT FLOOR TILE
09652 RESILIENT SHEET FLOORING
09653 RESILIENT WALL BASE AND ACCESSORIES
09681 CARPET TILE
09841 ACOUSTICAL WALL PANELS
09911 EXTERIOR PAINTING
09912 INTERIOR PAINTING

Division 10 - SPECIALTIES

10101 VISUAL DISPLAY SURFACES
10155 TOILET COMPARTMENTS
10431 SIGNAGE
10505 METAL LOCKERS
10522 FIRE EXTINGUISHER CABINETS
10523 FIRE EXTINGUISHER
10651 OPERABLE PANEL PARTITIONS
10801 TOILET & BATH ACCESSORIES

Division 11 - EQUIPMENT

11110 COMMERCIAL LAUNDRY EQUIPMENT
11132 PROJECTION SCREENS
11400 FOOD SERVICE EQUIPMENT

Division 12 - FURNISHINGS

12491 HORIZONTAL LOUVER BLINDS
12610 FIXED AUDIENCE SEATING

Division 13 - SPECIAL CONSTRUCTION

13001 POOLS
13038 SAUNAS

Division 14 - CONVEYING SYSTEMS

14240 HYDRAULIC ELEVATORS

BLANK PAGE

DIVISION 15
MECHANICAL

15010 GENERAL REQUIREMENTS
15050 BASIC MATERIALS & METHODS
15072 VIBRATION AND SEISMIC CONTROLS FOR FIRE-SUPPRESSION PIPING AND EQUIPMENT
15075 MECHANICAL IDENTIFICATION
15082 PLUMBING INSULATION
15110 VALVES
15140 DOMESTIC WATER PIPING
15145 DOMESTIC WATER PIPING SPECIALTIES
15150 SANITARY WASTE AND VENT PIPING
15155 SANITARY WASTE PIPING SPECIALTIES
15160 STORM DRAINAGE PIPING
15165 STORM DRAINAGE PIPING SPECIALTIES
15181 HYDRONIC PIPING
15185 HYDRONIC PUMPS
15195 FACILITY NATURAL-GAS PIPING
15410 PLUMBING FIXTURES
15469 WATER SOFTENERS
15513 CONDENSING BOILERS
15625 CENTRIFUGAL WATER CHILLERS
15640 COOLING TOWERS
15725 MODULAR INDOOR CENTRAL-STATION AIR-HANDLING UNITS
15815 METAL DUCTS
15820 DUCT ACCESSORIES
15840 AIR TERMINAL UNITS
15855 DIFFUSERS, REGISTERS, AND GRILLES
15900 HVAC INSTRUMENTATION AND CONTROLS
15950 TESTING, ADJUSTING AND BALANCING

SECTION 16001 - ELECTRICAL GENERAL PROVISIONS

PART 1 - GENERAL

1.1. RELATED DOCUMENTS:

A. Drawings and general provisions of Contract, including General and Supplementary Conditions and Division-1 Specification sections, apply to work of this section. Architectural, Structural, Mechanical and other applicable documents are considered a part of the electrical documents.

1.2. DESCRIPTION OF WORK: Extent of electrical work is indicated on drawings and/or specified in Division 16 section. Work includes.

ITEM		SECTION
1.	General Provisions	16001
2.	Electrical Connections for Equipment	16070
3.	Conduit Raceways	16110
4.	Raceway Systems	16111
5.	Conductors and Cables	16120
6.	Electrical Boxes and Fittings	16135
7.	Supporting Devices	16136
8.	Wiring Devices	16140
9.	Flat Conductor Wiring Systems	16141
10.	Busduct	16145
11.	Motor Starters	16155
12.	Variable Frequency Drives	16156
13.	Panelboards	16160
14.	Motor and Circuit Disconnects	16170
15.	Overcurrent Protective Devices	16180
16.	Transformers	16181
17.	Switchgear and Switchboards	16182
18.	Motor Control Centers	16183
19.	Power Factor Correction	16184
20.	Protective Device Study	16185
21.	Electrical Identification	16195
22.	Manholes	16400
23.	Service Entrance	16420
24.	Grounding	16452
25.	Interior and Exterior Building Lighting	16510
26.	Exterior Area Lighting	16551
27.	Lighting Control Equipment	16560
28.	Occupancy Lighting Control and Equipment	16561
29.	Transient Voltage Surge Suppression	16600
30.	Lightning Protection System	16601
31.	Emergency Electrical Systems	16610
32.	Uninterruptible Power Supply	16611
33.	Fire Alarm and Detection Systems	16721
34.	Telephone Systems (Raceways)	16740
35.	Television Systems	16780

SECTION 01310 - PROJECT MANAGEMENT AND COORDINATION

1.1 SUMMARY

A. Coordination Drawings.

B. Administrative and supervisory personnel.

C. Project meetings.

1.2 COORDINATION DRAWINGS

A. The contractor is responsible for coordination drawings, which may be required to coordinate the individual trades in particularly congested areas.

1.3 ADMINISTRATIVE AND SUPERVISORY PERSONNEL

A. The contractor Superintendent shall be on the project at all times work is being performed.

B. The Superintendent shall not be changed without express permission by DFCM.

1.4 PROJECT MEETINGS

A. Preconstruction conference.

B. Pre-installation Conferences: Before each construction activity that requires coordination with other construction.

C. Progress Meetings: At weekly intervals. Architect is responsible for documenting the meetings, using the DFCM standard form. Architect is also responsible for developing Proposal Requests, (PR); Construction Change Directives, (CCD); Architects Supplemental Instructions, ASI); and Change Orders, (CO). Contractor is responsible for updating the Schedule weekly, with a 3 week “Look Ahead”. Contractor is responsible for developing Request for Information, (RFI); Proposals for Change Orders; and Pay Requests. Pay Requests shall be coordinated with the weekly meeting so that they can be reviewed and approved at the meeting.

D. Coordination Meetings: The Contractor is responsible for organizing Coordination Meetings at appropriate stages of construction. If the Owner’s and/or Architect should be present, the Contractor shall schedule them.

E. Pre-Installation Meeting: The technical specifications list pre-installation meetings. The Contractor is responsible for scheduling these.

END OF SECTION 01310

BLANK PAGE

SECTION 01330 - SUBMITTAL PROCEDURES

1.1 SUMMARY

A. Action Submittals: Information that requires Architect's responsive action.

B. Informational Submittals: Information that does not require Architect's approval. Submittals may be rejected for not complying with requirements.

1.2 PROCEDURES

A. Electronic copies of CAD Drawings of the Contract Documents will be provided by Architect for Contractor's use.

B. Submittal Schedule: Submittals shall be delivered to the Architect for review in a timely manner, sufficient to allow for their review and the ordering, fabrication, delivery, installation, etc. at the jobsite.

1. The Contractor is to deliver the submittals as outlined below, from the date of the Notice to Proceed. There shall be deducted from any amount due, or that may become due the Contractor, a sum of $100.00 per day, per submittal for each and every day beyond the date listed below from the Notice to Proceed. Such sum is fixed and agreed upon by the DFCM and the Contractor as liquidated damages due the DFCM by reason of the inconvenience and added costs of administration, engineering, supervision and other costs resultine from the Contractor’s default, and not as a penalty.

a. 60 days for Structural, Site Utilities, Masonry, Boilers, Chillers, Transformers , Switchgear and any other long lead time items.
b. 90 days for Doors, Frames, Hardware, Storefront, Curtainwall, Glazing.
c. 120 days for Roofing, Lighting, Mechanical Equipment, and Plumbing Fixtures.
d. 150 days for finishes.
e. 180 days for Landscaping and anything else that remains.

C. Processing Time:

1. Initial Review: 14 days.
2. Resubmittal Review: 14 days.
3. Sequential Review: 21days.
4. Concurrent Consultant Review: 14 days.

D. Action Submittals:

1. Number of Copies: Six. (Architect to retain 1 copy for University of Utah)
2. Action Submittals:

a. Product Data.
b. Shop Drawings.

c. Samples.
d. Product schedule or list.
e. Contractor's Construction Schedule.
f. Submittals Schedule.
g. Application for Payment.
h. Schedule of Values.
i. Subcontract list.

E. Informational Submittals:

1. Number of Copies: Six (Architect to retain 1 copy for U OF U).
2. Informational Submittals:

a. Coordination Drawings.
b. Contractor's Construction Schedule.
c. Qualification data.
d. Welding certificates.
e. Installer certificates.
f. Manufacturer certificates.
g. Product certificates.
h. Material certificates.
i. Material test reports.
j. Product test reports.
k. Research/evaluation reports.
l. Schedule of tests and inspections.
m. Preconstruction test reports.
n. Compatibility test reports.
o. Field test reports.
p. Maintenance data.
q. Design data.
r. Manufacturer's instructions.
s. Manufacturer's field reports.
t. Insurance certificates and bonds.
u. Construction photographs and videotapes.
v. Material Safety Data Sheets: Submitted directly to Owner.

F. Contractor's Review:

1. Submittals: Marked with approval stamp before submitting to Architect.

G. Architect's Action:

1. Action Submittals: Stamped with an action stamp and returned.
2. Informational Submittals: Reviewed but not returned, or rejected if it does not comply with requirements.
3. Submittals Not Required: May not be reviewed and may be discarded.

END OF SECTION 01330

SECTION 01352 - LEED REQUIREMENTS

1.1 SUMMARY

A. LEED Silver certification based on LEED-NC, V3.0.

1.2 SUBMITTALS

A. Project Materials Cost Data: For building materials used for Project, excluding mechanical, electrical, and plumbing components, and specialty items such as elevators and equipment.

B. LEED Action Plans: Submit within seven days of the Notice of Award:

C. LEED Progress Reports: With each Application for Payment, comparing construction and purchasing with LEED action plans.

D. LEED Documentation Submittals: Product data, receipts, certification letters, chain-of-custody certificates, and other documentation needed to show compliance with requirements.

1.3 QUALITY ASSURANCE

A. LEED Coordinator: Engage an experienced LEED-Accredited Professional.

1.4 PRODUCTS

A. Contractor selects materials to comply with LEED requirements.

1.5 CONSTRUCTION INDOOR-AIR-QUALITY MANAGEMENT

A. As required to achieve rating required.

END OF SECTION 01352

BLANK PAGE

SECTION 01400 - QUALITY REQUIREMENTS

1.1 SUMMARY

A. *In addition to this Performance Specification, the Design/Build teams are bound by the all DFCM requirements, including, but not limited to the Design Manual, and Enhanced Accessibility Policy, and the University of Utah requirements, including, but not limited to the Design Standards. If there are conflicts between these documents and the Performance Specification, or between the DFCM and U of U requirements, the better quality (more expensive) option shall be used.*

B. Quality-Assurance Services: Activities, actions, and procedures performed before and during execution of the Work to guard against defects and deficiencies.

C. Quality-Control Services: Tests, inspections, procedures, and related actions during and after execution of the Work to evaluate that completed construction complies with requirements.

1.2 QUALITY ASSURANCE

A. Qualifications:

1. Installer.
2. Manufacturer.
3. Fabricator.
4. Professional engineer.
5. Specialists.
6. Factory-authorized service representative.

B. Mockups: Provide mockups for each form of construction and finish required, using materials indicated for the completed Work. Mockups establish the standard by which the Work will be judged. Mockups shall include the following:

1. Exterior: Provide a mockup of a corner. Walls shall extend at least 10 feet each side of the corner and shall include windows and all exterior finishes fro the foundation up to and including the parapet cap. The mockup can shorten the floor to floor heights, and if the fenestration is identical, intermediate floors can be left out. All finishes must be included. This mockup will serve to represent the aesthetic effect as well as serve as the standard for quality for all exterior material workmanship.
2. Interior: Provide a mock up of a typical office, including all finishes on all surfaces- floor, walls, ceiling. This mockup will include lighting, outlets, switches, window, door and frame, etc. The intent is to show all components of a room and establish the standard for quality for all interior material workmanship.
3. Disposition: Exterior: Demolished and removed at the end of construction. Interior may become part of the Work.

1.3 QUALITY CONTROL

A. Owner Responsibilities: Engage a qualified testing agency to perform quality-control services indicated as Owner's responsibility.

B. Contractor Responsibilities: Quality-control services specified and required by authorities having jurisdiction.

C. Manufacturer's field services.

D. Associated Services: Access to the Work, taking and storing samples.

E. Special Tests and Inspections: Owner will engage a testing agency and a special inspector to conduct special tests and inspections required by authorities having jurisdiction as the responsibility of Owner.

F. Test and inspection log.

G. Repair and Protection: Contractor's responsibility, regardless of the assignment of responsibility for quality-control services.

END OF SECTION 01400

SECTION 01500 - TEMPORARY FACILITIES AND CONTROLS

1.1 SUMMARY

A. Temporary Facilities:

1. Common-Use Field Office: Prefabricated or mobile units, including meeting room.
2. Storage and fabrication sheds.

B. Temporary Utilities:

1. Sewers and drainage.
2. Water Service: Contractor provided.
3. Sanitary Facilities: Toilets, wash facilities, and drinking water.
4. Heating and cooling facilities.
5. Ventilation and humidity control.
6. Electric Power Service: Underground or overhead power distribution.
7. Lighting, including exterior-yard site lighting.
8. Telephone Service: At each field office.
9. Electronic communication service including electronic mail.

C. Support Facilities:

1. Temporary Roads and Paved Areas: Located within construction limits.
2. Traffic controls and wheel wash off areas.
3. Parking: Contractor provided.
4. Dewatering facilities and drains.
5. Project identification and temporary signs.
6. Waste disposal facilities.
7. Lifts and hoists.
8. Temporary use of Elevators.
9. Temporary use of permanent stairs.

D. Security and Protection Facilities:

1. Environmental protection.
2. Temporary erosion and sedimentation control.
3. Stormwater control.
4. Pest control.
5. Site Enclosure Fence: 6' Chain link.
6. Security enclosure and lockup.
7. Barricades, warning signs, and lights.
8. Temporary Fire Protection: Fire extinguishers.

END OF SECTION 01500

BLANK PAGE

SECTION 01732 - SELECTIVE DEMOLITION

1.1 SUMMARY

A. Demolition and removal of portions of a building or structure.

1.2 PROJECT CONDITIONS

A. Owner will occupy portions of building immediately adjacent to selective demolition area.

B. Hazardous Materials: Not expected to be encountered.

1.3 EXECUTION

A. Utility Services and Mechanical/Electrical Systems: Maintained to occupied facilities.

1. Shut Off: By Owner.

B. Site Access and Temporary Controls: Minimum interference with roads, streets, walks, walkways, and other adjacent occupied and used facilities

C. Temporary Facilities:

1. Temporary barricades to prevent injury to people.
2. Temporary weather protection.
3. Protection of existing finish work to remain.
4. Protection of furnishings and equipment.

D. Temporary shoring.

E. Removed and Salvaged Items: Cleaned, crated, stored, and transported to Owner's off-site storage area.

F. Removed and Reinstalled Items: Cleaned, repaired, crated, stored, and reinstalled.

G. Existing Items to Remain: Existing construction protected against damage.

H. Disposal of Demolished Items:

1. Burning: Not permitted.
2. Disposal: Off Owner's property.

END OF SECTION 01732

BLANK PAGE

SECTION
01800 - COMMISSIONING

1. SUMMARY
   a. Systems to be Commissioned

      1) Plumbing Systems:
         a) Energy Consuming Plumbing Equipment and systems
      2) Mechanical Systems:
         a) Mechanical HVAC Systems
         b) Building BMCS Controls
      3) Electrical:
         a) Normal Power Systems
         b) Emergency Power Generators and ATSs
         c) Lighting Control Systems
         d) Daylight Dimming Control Systems
         e) Variable Frequency Controllers

   b. Commissioning Team

      1) Members representing each Contractor, including Project superintendent and subcontractors, installers, suppliers, and specialists deemed appropriate by the CxA.
      2) Members representing Owner, including CxA, facility user, and operation and maintenance personnel, and Architect and engineering design professionals.

   c. Owner's Responsibilities:

      1) Provide OPR documentation.
      2) Assign operation and maintenance personnel and schedule them for commissioning activities.

   d. Contractor's / Designer’s Responsibilities:

      1) Provide BoD documentation.
      2) Assign personnel and schedule them for commissioning activities.
      3) Complete Installation Checklists and Functional Tests.
      4) Coordinate, schedule, and report on all commissioning activities among subcontractors.
      5) Provide Requested equipment and system information to CxA for Systems Manual.

   e. CxA's Responsibilities:

      1) Organize and lead commissioning team.
      2) Provide commissioning plan.
      3) Review Basis of Design Document for compliance to Owners Project Requirements (OPR).
      4) Review Design Submittals for compliance to Owners Project Requirements.
      5) Review Operation and Maintenance (O&M) training program.

6) Review and Comment on construction submittals related to Commissioned Systems.
7) Convene commissioning team meetings.
8) Provide Project-specific checklists and test procedures.
9) Verify the execution of commissioning process activities using random sampling.
10) Inspect construction to verify compliance with the OPR, BoD, and Contract Documents
11) Prepare and maintain Issues Log.
12) Verify systems, assemblies, equipment, and component startup.
13) Compile test data, inspection reports, and certificates; include them in the systems manual and commissioning process report.

END OF SECTION 01800

SECTION 02221 - BUILDING DEMOLITION

1.1 SUMMARY

A. Demolition and removal of buildings and site improvements.

1.2 QUALITY ASSURANCE

A. Quality Standard: ANSI A10.6 and NFPA 241.

1.3 PROJECT CONDITIONS

A. Hazardous Materials: [Removed prior to start of the Work Owner will have hazardous materials abated. If any suspicious material is uncovered, do not disturb it. Notify owner who will arrange for testing, and if required abatement..

1.4 MATERIALS

A. Satisfactory Soils: Division 2 Section "Earthwork."

1.5 EXAMINATION

A. Perform an engineering survey of condition of building.

1.6 PREPARATION

A. Refrigerant: Remove according to 40 CFR 82.

B. Utility Shut Off: Owner.

1.7 DEMOLITION

A. Use of explosives is not permitted.

B. Below-Grade Construction: Demolish completely.

C. Existing Utilities: Demolish completely.

1.8 SITE RESTORATION

A. Below-Grade Areas: Rough grade.

1.9 DISPOSAL OF DEMOLISHED MATERIAL

A. Remove demolished material from site and dispose of in an EPA-approved landfill.

END OF SECTION 02221

SECTION 02230 - SITE CLEARING

1.1 SUMMARY

A. Removing existing plants, including weeds and trees

B. Clearing and grubbing obstructions, trees, shrubs, grass, and other vegetation including grinding stumps and removing roots and debris.

C. Stripping and stockpiling topsoil and stockpiling surplus topsoil.

D. Providing temporary erosion and sedimentation control measures.

END OF SECTION 02230

BLANK PAGE

SECTION 02300 - EARTHWORK

1.1 SUMMARY

A. Preparing subgrades for slabs-on-grade walks pavements lawns and grasses exterior plants.

B. Excavating and backfilling or filling for buildings and structures, including footings and foundations .

C. Excavating and backfilling for utility trenches.

D. Excavation: Unclassified.

E. Grading.

F. Subsurface drainage backfill for walls and trenches.

G. Subbase course for concrete walks and pavements.

H. Subbase course for hot-mix asphalt pavement.

I. Drainage course for cast-in-place concrete slabs-on-grade.

1.2 MATERIALS

A. Soil Materials:

1. Satisfactory Soils: ASTM D 2487 soil classification groups.
2. Unsatisfactory Soils: ASTM D 2487 soil classification groups.
3. Backfill and Fill: Satisfactory soil materials.
4. Subbase Course: Natural or crushed gravel, crushed stone, and natural or crushed sand.
5. Engineered Fill: Natural or crushed gravel, crushed stone, and natural or crushed sand.
6. Bedding Course: Natural or crushed gravel, crushed stone, and natural or crushed sand.
7. Drainage Course: Crushed stone, or crushed or uncrushed gravel.
8. Filter Material: Natural or crushed gravel, or crushed stone and natural sand.
9. Sand: Natural or manufactured.
10. Impervious Fill: Clayey gravel and sand mixture.

B. Controlled low-strength material.

C. Warning Tape: Detectable polyethylene film.

1.3 EXCAVATION

A. Explosives: Not permitted.

B. Disposal of Surplus and Waste Materials: Off Owner's property.

1.4 FIELD QUALITY CONTROL

A. Geotechnical Testing Agency: Owner engaged.

END OF SECTION 02300

SECTION 02510 - WATER DISTRIBUTION

1.1 SUMMARY

A. Combined water service and fire-service mains outside the building.

1.2 SUBMITTALS

A. Coordination Drawings.

1.3 QUALITY ASSURANCE

A. Quality Standard for Electrical Components, Devices, and Accessories: NFPA 70.

B. Quality Standard for Materials, Installations, Tests, Flushing, and Valve and Hydrant Supervision for Fire-Service-Main Piping: NFPA 24.

C. Quality Standard for Plastic Potable-Water-Service Piping: NSF 14. Include marking "NSF-pw" on piping.

D. Quality Standard for Water-Service Piping and Specialties for Domestic Water: NSF 61.

E. Quality Standard for Fire-Service-Main Products: FMG's "Approval Guide."

1.4 MATERIALS

A. Underground Water-Service Piping:

1. Pplyvinly Chloride: AWWA C900 or PVC 1120, DR 18
2. Polyvinyl Chlorice (PVC) pipe must be installed with magnetic markers such as “DEEP-1" by Berntsen, Inc. Or approved equal, taped to the top of the pipe at 50 foot maximum spacing and at all bends..

B. Underground Combined Water-Service and Fire-Service-Main Piping:

1. Ductile-iron pipe, AWWA A151, Class 50 Flange Class 53 Cement Mortar AWWA C104.
2. Fittings shall be gray ductile and shall conform with requirements of AWWA C110. Fittings shall be furnished with cement mortar lining conforming to AWWA C104. Fittings shall be tar coated on outside and Class 250. All fittings shall be wrapped with 3 mil visqueen.
3. Joints: Pushon “Tylon”, U.S. Pipe and Foundry Co.; “Fastite:, American Cast IronCo.; “Beltite”, James B Slow and Sons, Inc

C. Piping Specialties:

1. Transition fittings.

2. Tubular-sleeve pipe couplings.
3. Split-sleeve pipe couplings.
4. Flexible connectors.
5. Dielectric fittings.

D. Corrosion-Protection Piping Encasement: Required.

1.5 MANUFACTURED UNITS

A. Gate Valves: Resilient wedge in accordance with AWWA C509-80, 12" and smaller shall be bubble tight at 200psi water working pressure. Include valve box and 2' nuts for buried location. un acci

B. Ball Valves: Shall be consolidated brass coupling. “Apollo” Services or approved equal..

C. Butterfly Valves: AWWA Specification C 504, Minimum Class 150B, Valve bodies- cast iron if exposed or in meter vaults; flanged aend connection (125 pound ASA Standard) buried; then mechanical end connection; Valve disc - AWWA C504, Section 3.4; Valve shaft - AWWA c504, 18-8 type 304 Stainless Steel; Valve bearings - Sleeve type, corrosion resistant, self lubrication; Testing - AWWA C504, Section 13; Operators - AWWA C504 Munual.

D. Air and vacuum vlaves: Shall be Valve and Primer Corp. (APCO) Crisper, G-A Industries or approved equal and shall be capable of loperating up to 300 psi. Plans shuould show: (1) Weld-O-Let (for stee pipe only); (2) threaded pipe outlet; (3) corporation cock; (4) gate valve; (5) nipple; and (6) vacuum land air release valve.

E. Pressure valves and check valves should be hydraulically operated globe valve of single seated construction with replaceable stainless stee seat ring and a reversible inner valve disc and shall have a fully supported diaphragm operator..

END OF SECTION 02510

SECTION 02530 - SANITARY SEWERAGE

1.1 SUMMARY

A. Gravity-flow, nonpressure sanitary sewerage outside the building.

1.2 PERFORMANCE REQUIREMENTS

A. Gravity-Flow, Nonpressure, Drainage-Piping Pressure Rating: 10-foot head of water.

1.3 COMPONENTS

A. Pipe:

1. Concrete or Reinforced Concrete: ASTM C14 & C76
2. Polyvinyl Chloride (PVC) ASTM D 3034, SDR-35, 4' - 15"; bell and spigot
3. Polyethylene: ASTM, D 3034 (sanitary sewer), AASHTO M294, 4"-18. Pipe shall be corrugated exterior with smooth interior

B. PVC and polyethylene pipe must be installed with magnetic markers such as “DEEP-1" manufactured by Berntsen, Inc. Or approve equal, taped to the top of the pipe at 50 foot maximum spacing and at all bends.

C. Manholes: Standard precast concrete.

1. Resilient pipe connectors.
2. Reinforced-concrete grade rings.
3. Manhole frames and covers.

1.4 INSTALLATION

A. Gravity-Flow, Nonpressure Sewer Piping Applications:

1. Concrete or reinforced concrete, bell and spigot joints- meet ASTM C443.
2. PVC, bell and spigot joints, elastomeric ring gaskets ASTM D-1869.
3. Polyethylene, fitting shall be thermal molded PVC meeting SDR-35 specification with air tight gasker.

END OF SECTION 02530

BLANK PAGE

SECTION 02630 - STORM DRAINAGE

1.1 SUMMARY

A. Gravity-flow, non-pressure storm drainage outside the building.

1.2 PERFORMANCE REQUIREMENTS

A. Gravity-Flow, Nonpressure, Drainage-Piping Pressure Rating: 10-foot head of water.

1.3 COMPONENTS

A. Cleanouts: PVC.in landscape; cast iron in paving.

B. Drains: Gray-iron area drains.

C. Manholes: Standard precast concrete.

1. Resilient pipe connectors.
2. Reinforced-concrete grade rings.
3. Manhole frames and covers.

D. Catch Basins: Standard precast concrete.

1. Frames and grates.

E. Stormwater Inlets: gutter type.

1.4 INSTALLATION

A. Gravity-Flow, Nonpressure Sewer Piping Applications:

1. NPS 4 to NPS 6: Corrugated PE drainage; ABS, SDR 35, sewer; PVC sewer; or Nonreinforced-concrete sewer pipe.
2. NPS 8 to NPS 12: Corrugated PE drainage; ABS, SDR 42, sewer Corrugated PE drainage PVC sewer Nonreinforced-concrete sewer pipe.
3. NPS 15: Corrugated PE drainage; PVC profile gravity sewer; or Nonreinforced-concrete sewer pipe.
4. NPS 18 to NPS 36: Corrugated PE drainage; PVC sewer; or Reinforced-concrete sewer pipe.

END OF SECTION 02630

BLANK PAGE

SECTION 02741 - ASPHALT PAVING

1.1 SUMMARY

A. Hot-mix asphalt paving.

B. Pavement-marking paint.

1.2 QUALITY ASSURANCE

A. Regulatory Requirements: of UDOT Standard Specification for Road and Bridge Construction.

1.3 MATERIALS

A. Asphalt Materials:

1. Asphalt Binder: AASHTO M 320 or AASHTO MP 1a.
2. Asphalt Cement: ASTM D 3381 for viscosity-graded material ASTM D 946 for penetration-graded material.
3. Prime Coat: Asphalt emulsion prime coat.
4. Tack Coat: Emulsified asphalt or cationic emulsified asphalt.

B. Auxiliary Materials:

1. Herbicide.
2. Pavement-Marking Paint: Alkyd-resin type- match Owner's colors.

C. Asphalt Mixes: Designed according to AI MS-2.

1. Base Course: ASTM D 3515, 1-inch maximum aggregate size.
2. Surface Course: ASTM D 3515, 1/2-inch maximum aggregate size.

1.4 INSTALLATION

A. Hot-Mix Asphalt Paving:

1. Proof-roll subgrade at locations receiving full-depth asphalt pavement.
2. Apply herbicide.
3. Apply prime coat over compacted unbound-aggregate base course.
4. Base Course: 8".
5. Surface Course: 5" for roadways, 4" for parking lots.

END OF SECTION 02741

BLANK PAGE

SECTION 02751 - CEMENT CONCRETE PAVEMENT

1.1 SUMMARY

A. Curbs and gutters.

B. Walkways.

C. Roads/parking lots

1.2 QUALITY ASSURANCE

A. Quality Standard: ACI 301, "Specification for Structural Concrete."

1.3 MATERIALS

A. Reinforcement:

1. Reinforcing Bars and Tie Bars: Epoxy-coated deformed or Galvanized deformed steel.
2. Synthetic Fiber: Fibrillated at the rate of 1.5#/CY.
3. Welded wire mesh not allowed.

B. Concrete:

1. Portland Cement: ASTM C 150 withFly Ash: ASTM C 618, Class F; maximum 15% by weight
2. Aggregate: Normal-weight aggregate.
3. Admixture: Air entraining- 6.5% plus-or-minus 1.5%.
4. Compressive Strength: 4500 psi at 28 days.
5. Water/Cement Ratio: 0.45%.

C. Curing: Wet Curing blankets.

D. Sealer: After curing blankets are removed, provide “silane” sealer per manufacturer’s recommendation.

E. Related Materials:

1. Expansion- and Isolation-Joint-Filler Strips: Cellulosic fiber.

1.4 INSTALLATION

A. 6" of concrete over 4" base. At dumpster enclosures 7" of concrete over 4" base.

B. Finishes: Medium-to-coarse-textured broom finish.

C. Provide dowels at joints.

1.5 FIELD QUALITY CONTROL

A. Testing: By Owner-engaged agency.

END OF SECTION 02751

SECTION 02810 - IRRIGATION SYSTEMS

1.1 PERFORMANCE REQUIREMENTS

A. See U of U Design Guidelines Section 3.2 “Landscape Irrigation Systems” for full requirements.

B. Contractor must have at least one registered CIC with current certification on the work crew at all times, and meet with U of U Grounds Foreman once a day

C. Irrigation zone control shall be automatic operation with pedestal mounted controller and automatic control valves.

D. Minimum Working Pressures:

1. Irrigation Main Piping: 200 psig.
2. Circuit Piping: 150 psig.

1.2 UNDERGROUND IRRIGATION MAIN PIPING

A. Pipe:

1. Schedule 40, PVC pipe and solvent-cemented joints up to 2", Schedule 80 PVC joints for 2" to 3", ductile iron fittings 3" and above.

1.3 CIRCUIT PIPING

A. Pipe:

1. SDR 26, PVC, pressure-rated pipe; Schedule 40, PVC socket fittings; and solvent-cemented joints.

1.4 DRAIN PIPING

A. Schedule 40, PVC pipe and socket fittings; and solvent-cemented joints.

1.5 SLEEVES

A. PVC Class 160 min 4" dia. Tape magnet at each end of each sleeve.

1.6 ABOVEGROUND, SHUTOFF-DUTY VALVES

A. NPS 2 and Smaller:

1. Brass or bronze ball valve.

B. NPS 2-1/2 and Larger:

1. Iron ball valve.

1.7 THROTTLING-DUTY VALVES

A. NPS 2 and Smaller:

1. Bronze automatic control valve.

B. NPS 2-1/2 and NPS 3:

1. Bronze automatic control valve.

1.8 DRAIN VALVES

A. NPS ½ and NPS 3/4: Bronze gate valve.

B. NPS 1 to NPS 2: Bronze gate valve.

1.9 MANUFACTURED UNITS

A. Automatic Control Valves: Bronze.

B. Pop-up, Impact-Drive Rotary Sprinklers: Plastic.

C. Surface, Pop-up Spray Sprinklers: Plastic.

D. Boxes for Automatic Control Valves: Plastic.

END OF SECTION 02810

SECTION 02920 - LAWNS AND GRASSES

1.1 SUMMARY

A. See U of U Design Guidelines Section 3.6 “Sod” for additional requirements.

B. Sodded turf.

1.2 MAINTENANCE SERVICE

A. Turf: 30 days from date of Substantial Completion.

1.3 MATERIALS

A. Turfgrass Sod: Local mix with low water requirement.

B. Planting Soils: Existing, in-place surface soil, amended with inorganic and organic soil amendments and fertilizers in specified quantities.

C. Pesticides.

1.4 INSTALLATION

A. Planting Soil Depth for Newly Graded Subgrades: 6 inches.

B. Surface Soil Enrichment Depth for Unchanged Subgrades: 6 inches.

END OF SECTION 02920

BLANK PAGE

SECTION 02930 - EXTERIOR PLANTS

1.1 SUMMARY

A. See U of U Design Guidelin Section 3.3 “Specifying Plants” and 3.4 “Planting Operations” for additional information.

1.2 WARRANTY

A. Trees, Shrubs, Vines, and Ornamental Grasses: 12 months.

B. Ground Covers, Biennials, Perennials, and Other Plants: 12 months.

C. Annuals: Three months.

1.3 MAINTENANCE SERVICE

A. Trees and Shrubs: Three months.

B. Ground Cover and Other Plants: Three months.

1.4 MATERIALS

A. Plants, General: Nursery-grown and complying with ANSI Z60.1.

B. Annuals and Biennials: Healthy and acclimated to outdoor conditions.

C. Planting Soils: Existing, in-place surface soil, amended with inorganic and organic soil amendments and fertilizers in specified quantities.

D. Lightweight On-Structure Planting Soil: Modified planting soil.

E. Mulches: Ground or shredded bark and crushed stone or gravel.

F. Weed-Control Barriers: Nonwoven fabric.

G. Herbicides: Registered and approved by EPA pre-emergent and post-emergent herbicide(s).

H. Tree Stabilization: Except in rare cases, trees should not be staked.

I. Landscape Edgings: Concrete.

J. Root barrier.

1.5 INSTALLATION

A. Planting Soil Depth: 12 inches.

B. Mechanized tree spade planting of designated trees.

C. Pruning.

D. Ground Cover and Plant Planting: Space ground cover and plants other than trees, shrubs, and vines 24 inches apart in even rows with triangular spacing.

E. Mulching:

1. Trees and Tree-like Shrubs in Turf Areas: Organic mulch ring of 2-inch thickness with 12-inch] 24-inch radius.
2. Planting Areas: 2-inch average thickness of organic mulch extending 12 inches beyond edge of individual planting pit or trench and over whole surface of planting area.

END OF SECTION 02930

Section 03300 - CAST-IN-PLACE CONCRETE

1.1 SUMMARY

A. Cast-in-place concrete, including formwork, reinforcement, concrete materials, mixture design, placement procedures, and finishes, for the following:

1. Footings- (Note that U of U Design Standards require 36" frost depth)..
2. Foundation walls (must be concrete, CMU not acceptable).
3. Slabs-on-grade.
4. Suspended slabs.

1.2 QUALITY ASSURANCE

A. Quality Standard: ACI 301.

B. Mockups to demonstrate typical joints, surface finish, texture, tolerances, and standard of workmanship.

1.3 MATERIALS

A. Form-facing materials.

1. For Architectural Concrete, provide MDO plywood with rustication joints at all panel joints..

B. Steel Reinforcement:

1. Reinforcing Bars: Deformed Steel bars.

C. Concrete Materials:

1. Portland Cement: ASTM C 150, Type I/II (Type !! where in contact with soil), gray, supplemented with no more than 15% fly ash.
2. Aggregate: Normal weight and light weight
3. Water.
4. Admixtures: High range, water reducing.
5. Pigment: Mineral.

D. Curing Materials: Clear, waterborne, membrane-forming curing, dissipating compound.

E. Sealer: Seal floors to be left exposed.

F. Related Materials: Expansion- and isolation-joint-filler strips.

1.4 CONCRETE MIXTURES

A. Compressive Strength (28 Days):

1. Footings: 4500 psi.
2. Foundation Walls: 4500 psi.
3. Slabs-on-Grade: 4500 psi.
4. Suspended Slabs 4000 psi

B. Mixing: Ready mixed.

1.5 INSTALLATION

A. Formed-Surface Finish: Smooth.

B. Floor and Slab Finishes:

1. Scratch: Surfaces to receive mortar setting beds for bonded cementitious floor finishes.
2. Trowel: Surfaces exposed to view, and surfaces to be covered with resilient flooring carpet ceramic or quarry tile set over a cleavage membrane thin film-finish coating system.
3. Maximum variation shall be 1/4" in 10'

1.6 FIELD QUALITY CONTROL

A. Testing: By Owner-engaged agency.

B. Inspections: By Owner-engaged special inspector.

END OF SECTION 03300

SECTION 03450 - ARCHITECTURAL PRECAST CONCRETE

1.1 SUMMARY

A. Architectural precast concrete cladding units.

B. Precast lintels, sills, surrounds, trim elements, coping elements.

1.2 PERFORMANCE REQUIREMENTS

A. Structural Performance: Fabricator to design architectural precast concrete units.

1.3 QUALITY ASSURANCE

A. Installer: PCI-certified erector.

B. Fabricator: PCI-certified plant.

C. Design Standards: ACI 318 and PCI MNL 120.

D. Quality-Control Standard: PCI MNL 117.

E. Sample panels for each finish, color, and texture variation.

F. Mockups.

G. Preconstruction testing mockup utilizing full scale units to show intended effect.

1.4 MATERIALS

A. Reinforcing Materials:

1. Reinforcing Bars: Epoxy-coated steel

B. Concrete Materials:

1. Portland Cement: ASTM C 150, Type I or Type III.
2. Supplementary Cementitious Materials: Fly ash.
3. Aggregates: Normal weight.
4. Coloring admixture: Mineral based.
5. Admixtures: Air entraining and water reducing,

C. Steel Connections High-strength bolts and nuts, hot dip galvanized or stainless steel.

1. Finish: Hot Dip Galvanized.

D. Grout: Nonmetallic, nonshrink.

E. Latex-portland cement pointing grout for thin brick unit joints.

F. Stone facing specified in Division 4 with stainless-steel anchors.

1.5 CONCRETE MIXTURES

A. Compressive Strength (28 Days):

1. Normal-Weight Concrete Face and Backup Mixtures: 5000 psi.
2. Lightweight Concrete Backup Mixtures: 5000 psi.

1.6 FABRICATION

A. Finishes: As designed.

1.7 FIELD QUALITY CONTROL

A. Special Inspections: By Owner-engaged agency.

B. Testing and Inspections: By Owner-engaged agency.

END OF SECTION 03450

SECTION 03491 - GLASS FIBER REINFORCED CONCRETE

1.1 SUMMARY

A. Glass fiber reinforced concrete (GFRC) panels including panel frames, anchors, and connection hardware.

B. Application: Fascia units, column covers, infill. panels, spandrel panels .

1.2 PERFORMANCE REQUIREMENTS

A. Design Loads: As indicated on Drawings.

1.3 QUALITY ASSURANCE

A. Manufacturer: PCI-Certified Plant.

B. Manufacturer to engineer GFRC panels.

C. Design Standard: PCI MNL 128.

D. Quality Standard: PCI MNL 130.

E. Mockups for each form of construction and finish.

1.4 MATERIALS

A. GFRC Materials:

1. Portland Cement: ASTM C 150, Type I, II, or III, Match existing.
2. Glass fibers.
3. Facing aggregate.
4. Coloring admixture.
5. Polymer-curing admixture.
6. Air-entraining admixture.

B. Anchors and Connectors: Hot Dip Galvanized.

C. Panel Frame Materials:

1. Cold-Formed Steel Framing: C-shaped steel studs, galvanized.

D. Finishes: As designed.

END OF SECTION 03491

BLANK PAGE

SECTION 04810 - UNIT MASONRY ASSEMBLIES

1.1 SUMMARY

A. Masonry Construction:

1. Single-wythe masonry.
2. Masonry veneer, Clay brick only.
3. Installation of pre-cast trim.
4. CMU is not acceptable as an exposed exterior material.
5. CMU is not acceptable below grade.

1.2 PERFORMANCE REQUIREMENTS

A. Net-Area Compressive Strengths (f'_m) of Structural Unit Masonry: As indicated.

B. Determine net-area compressive strength (f'_m) of masonry by testing masonry prisms.

1.3 QUALITY ASSURANCE

A. Preconstruction Testing Service: Owner engaged, with payment by Owner.

B. 48" long by 48" high mockups of typical wall system.

1.4 MATERIALS

A. Concrete Masonry Units (CMUs):

1. Concrete Masonry Units: Lightweight, Grade N1 or better (minimum strength of 1900 psi). 8" x 8" x 16"; 8" x 10" x 16"; 8" x 12" x16" modular

B. Sills, Lintels and trim pieces: precast concrete.

C. Brick: Face brick. 2 1/4" H x 7 5/8" L x 3 5/8" D ASTM C-216; FBX; SW modular brick.

1. Baja Brown matte texture by Interstate Brick
2. Desert Brown, wirecut texture by Interpace Industries.
3. Colorado Rose by Robinson Brick Co.

D. Reinforcing Steel: Uncoated steel bars.

E. Masonry Joint Reinforcement:

1. Interior Walls: Mill carbon steel.

2. Exterior Walls: Hot-dip galvanized steel.

F. Ties and Anchors: Hot-dip Galvanized steel.

1. Adjustable Masonry-Veneer Anchors: Seismic (ties to engage horiz. joint reinforcement.

G. Embedded Flashing:

1. Concealed (Flexible) Flashing: asphalt/fabric-coated 5 oz. copper.

a. Used with flashing terminations.

2. Exposed Flashing: Stainless Steel- dull mill finish, 24 GA. Extend per Utah IBC ammendment.

H. Weep/Vent Holes: Open head joints.

I. Cavity drainage material: “Mortar Net”, or equal

J. Reinforcing bar positioners.

K. Cavity-Wall Insulation: Extruded-polystyrene board.

L. Mortar.

1. Masonry cement and mortar cement not allowed.

1.5 SOURCE QUALITY CONTROL

A. Testing Agency: Owner engaged, with payment by Owner.

1.6 INSTALLATION

A. Match existing masonry coursing, bonding, color, and texture.

B. Bond Pattern: As designed.

1.7 FIELD QUALITY CONTROL

A. Testing Agency: Owner engaged, with payment by Owner.

END OF SECTION 04810

SECTION 04851 - DIMENSION STONE CLADDING

1.1 SUMMARY

A. Dimension Stone:

1. Panels set with individual anchors.
2. Panels mechanically anchored on prefabricated steel trusses steel strongback frames and steel stud frames.
3. Panels mechanically anchored (field installed) on a metal-grid system.
4. Panels set in architectural precast concrete.
5. Panels glazed into aluminum curtain-wall framing system.
6. Trim units, including bands, copings, sills, jambs and soffits.

1.2 PERFORMANCE REQUIREMENTS

A. Structural Performance: Contractor to design stone cladding system.

B. Wind Loads: 20 lbf/sq. ft.

C. Seismic Design Criteria: Design in accordance with the procedure presented in Section 1613, Earthquake Loads, of the IBC 2009 edition.

1.3 QUALITY ASSURANCE

A. Stone test reports based on testing done within previous three years.

B. Preconstruction Stone Testing: Contractor-engaged agency.

1. Physical property tests.
2. Flexural strength tests.
3. Anchorage tests.
4. Mockup Tests: Anchoring and Cladding system.

C. Preconstruction sealant compatibility and adhesion testing.

D. Mockups for typical exterior wall.

1.4 MATERIALS

A. Granite.

1. Description: As selected by Architect.
2. Finish: As selected by Architect.
3. Minimum Thickness: As required by design.

B. Limestone Indiana oolitic limestone.

1. Indiana Oolitic Limestone Grade and Color: As selected by Architect.
2. Finish: As selected by Architect.
3. Minimum Thickness: As required by design.

C. Sealant: Non-staining polyurethane- test for adhesion.

D. Anchors: Stainless steel or extruded aluminum.

1. Shelf Angles: Stainless steel, hot-dip galvanized steel or extruded aluminum.

E. Framing for Backup Structure:

1. Steel Plates, Shapes, and Bars: Hot-dip galvanized after fabrication or Stainless Steel.
2. Slotted Channel Framing: Hot-dip galvanized steel or stainless steel
3. Cold-Formed Metal Framing: Galvanized.
4. Metal-Grid System Struts: Hot-dip galvanized steel or stainless steel.

1.5 SOURCE QUALITY CONTROL

A. Source Quality-Control Testing Service: Owner-engaged agency.

1. Flexural Strength Tests: One set of tests for every 3000 sq. ft.

END OF SECTION 04851

SECTION 04860 - STONE MASONRY

1.1 SUMMARY

A. Stone Masonry:

1. Anchored to concrete backup.
2. Anchored to unit masonry backup.
3. Anchored to cold-formed metal framing and sheathing.

1.2 QUALITY ASSURANCE

A. Mockups.

1.3 MATERIALS

A. Granite:

B. Limestone:

1. Indiana oolitic limestone

C. Quartz-Based Stone

D. Other Stone: Torry Sandstone

E. Veneer Anchors: Hot-dip galvanized steel.

F. Stone Trim Anchors: Stainless steel.

G. Embedded Flashing:

1. Partially Exposed Flashing: drip edge sill flashing required by Utah Stainless steel, 2B finish.
2. Concealed Flashing: laminated asphalt-coated 5 oz. copper.

a. Used with flashing terminations.

H. Asphalt dampproofing for concrete and unit masonry backup.

I. Weep Holes/Vents: round plastic tubing.

J. Cavity drainage material.

K. Cavity-Wall Insulation: Extruded-polystyrene] board.

L. Mortar:

1. Setting Mortar for Anchored Stone Masonry: Pigmented.

M. Stone Fabrication:

1. Thickness for Anchored Stone Masonry: 4 inches.
2. Finish: As indicated.

1.4 INSTALLATION

A. Pattern:

1. As desired.

B. Joints:

1. Minimum Width: 3/8 inch.
2. Maximum Width: 1/2 inch.
3. Profile: Concave.

C. Anchored Stone Masonry:

1. Anchored to Concrete or Unit Masonry: Anchored with adjustable, screw-attached seismic veneer anchors.
2. Anchored to Stud Framing: Anchored with [adjustable, screw-attached seismic veneer anchors.
3. Space Between Anchored Stone Masonry and Backup Construction: Air space.

D. Recycle clean masonry waste as fill material.

END OF SECTION 04860

SECTION 05120 - STRUCTURAL STEEL

1.1 SUMMARY

A. Structural-steel framing.

1.2 QUALITY ASSURANCE

A. Fabricator Qualifications: AISC- and DFCM Certified Plant.

B. Quality Standard: AISC's "Code of Standard Practice for Steel Buildings and Bridges" and "Specification for Structural Steel Buildings--Allowable Stress Design and Plastic Design."

1.3 MATERIALS

A. Structural-Steel Shapes: Tube and W shapes.

B. Bolts, Nuts, and Washers: High strength.

C. Connectors: Shear connectors.

D. Primer: Fabricator's standard, nonasphaltic- Note do not prime steel to receive spray on fireproofing.

E. Grout: Nonmetallic, shrinkage resistant.

1.4 FABRICATION

A. Shop Connections: high-strength bolts and welded connections.

B. Surface Preparation: SSPC-SP 2.

C. Galvanizing: Hot dip for ferrous metal exposed to weather after fabrication.

1.5 SOURCE QUALITY CONTROL

A. Testing Agency: Owner engaged.

1.6 INSTALLATION

A. Field Connections: high-strength bolts and welded connections.

1.7 FIELD QUALITY CONTROL

A. Testing Agency: Owner engaged.

END OF SECTION 05120

SECTION 05210 - STEEL JOISTS

1.1 SUMMARY

A. Open-web K-series steel joists for roof framing.

B. KCS-type, open-web K-series steel joists for roof framing.

C. Joist girders for roof framing.

D. Joist accessories, including permanent bridging.

1.2 MATERIALS

A. Bolts: High-strength carbon steel.

1. Finish: Plain, uncoated.

B. Do not prime joists to receive spray on fireproofing.

C. Open-Web K-Series Steel Joists.

D. Joist Girders:

1. End Arrangement: Underslung.
2. Provide extended bottom chords for ceiling support.

1.3 INSTALLATION

A. Connections: Welded.

1.4 FIELD QUALITY CONTROL

A. Testing Agency: Owner will engage testing agency to inspect field welds and bolted connections.

END OF SECTION 05210

BLANK PAGE

05310 - STEEL DECK

1.1 SUMMARY

A. Roof deck.

B. Composite floor deck.

1.2 QUALITY ASSURANCE

A. FMG Listing: Steel roof deck.

1.3 MATERIALS

A. Roof Deck: Galvanized steel sheet.

1. Profile Depth: As determined by structural design.
2. Gauge: As determined by structural design.
3. Galvanizing: G90 coating.

B. Composite Floor Deck: Galvanized steel sheet.

1. Profile Depth: As determined by structural design.
2. Gauge: As determined by structural design.
3. Galvanizing: G60 coating.

C. Accessories: Flexible closure strips, pour stops, girder fillers, column closures, end closures, Z-closures, and cover plates, recessed sump pans and flat sump plates.

1.4 INSTALLATION

A. Roof Deck: Welded. Touch up with zinc rich primer.

B. Floor Deck: Welded.

1.5 FIELD QUALITY CONTROL

A. Testing Agency: Owner engaged.

END OF SECTION 05310

BLANK PAGE

SECTION 05400 - COLD-FORMED METAL FRAMING

1.1 SUMMARY

A. Exterior non-load-bearing wall framing.

B. Exterior sheathing.

1.2 QUALITY ASSURANCE

A. Design Standard: AISI's "North American Specification for the Design of Cold-Formed Steel Structural Members" and its "Standard for Cold-Formed Steel Framing - General Provisions."

1.3 MATERIALS

A. Steel Sheet: ASTM A 1003/A 1003M, Structural Grade, metallic coated.

B. Exterior Non-Load-Bearing Wall Framing: Standard C-shaped, punched steel studs and U-shaped, unpunched track.

1. Minimum Steel Thickness: 16 gage
2. Design for vertical deflection at head.
3. Design for L/720 deflection where framing braces masonry veneer.

C. Framing Accessories: Supplementary framing bracing, bridging, and solid blocking stud kickers and girts.

D. Sheathing: Glass mat exterior gypsum sheathing- DensGlass or equal.

E. Insulation for inaccessible voids.

1.4 INSTALLATION

A. Fasten framing by welding.

1.5 FIELD QUALITY CONTROL

A. Testing: By Owner-engaged agency- if required.

END OF SECTION 05400

BLANK PAGE

SECTION 05500 - METAL FABRICATIONS

1.1 SUMMARY

A. Miscellaneous metal framing and supports.

B. Metal stairs.

C. Loose metal plates and shapes.

D. Ledger angles.

E. Miscellaneous fabricated metal items.

F. Metal bar gratings and frames

1.2 PRODUCTS

A. Materials: Steel plates, shapes, and bars Steel tubing Steel pipe Slotted channel framing.

B. Miscellaneous Framing and Supports:

1. Steel framing and supports for overhead doors countertops applications where framing and supports are not specified in other Sections.
2. Hot Dip Galvanize at all exterior locations.
3. Prime with zinc-rich primer where indicated.

C. Loose bearing and leveling plates , primed with zinc-rich primer.

D. Miscellaneous Steel Trim: .

1. Galvanize at all exterior locations.
2. Prime interior locations with zinc-rich primer.

E. Metal Ladders: Steel.

1. Prime interior locations with zinc-rich primer.

F. Metal Bollards: Schedule 40 steel pipe or equivalent tube- Hot dip galvanize at exterior locations.

G. Metal bar grating: ½" maximum opening, load band, hot dip galvanize at all exterior or wet locations.

END OF SECTION 05500

BLANK PAGE

SECTION 05521 - PIPE AND TUBE RAILINGS

1.1 SUMMARY

A. Steel pipe and tube railings are only allowed in interior mechanical areas.

B. Stainless-steel pipe and tube railings, at all interior public areas shall be type 304.

C. Stainless-steel pipe and tube railing, at all exterior and pool rooms shall be type 316L.

D. Handrails shall be 1.9" outside diameter.

E. See Division 5 Section ORNAMENTAL RAILINGS for guard rail construction

1.2 PERFORMANCE REQUIREMENTS

A. Engineering design of railings by Architect.

1.3 FABRICATION

A. Changes in Direction of Members: By bending or by inserting prefabricated fittings.

B. Connections: Welded.

C. Wall brackets: Stainless-steel

1.4 FINISHES

A. Steel and Iron: Primed with universal shop primer

B. Stainless Steel: Dull satin, No. 6.

END OF SECTION 05521

BLANK PAGE

SECTION 05721 - ORNAMENTAL RAILINGS

1.1 SUMMARY

A. Stainless-steel ornamental guard railings.

B. Post-supported guard railings with glass infill.

1.2 QUALITY ASSURANCE

A. Manufactured rail systems, manufacturer to engineer railings to withstand code loads.

B. Custom rail systems, architect to engineer railings to withstand code loads

C. Mockups for each form and finish of railing.

1.3 MATERIALS

A. Stainless Steel: Type 304 for interor locations, except pools and 316L for exterior or pool locations.

B. Glass Infill Panels: Tempered] glass.

1.4 FABRICATION

A. Changes in Direction of Members: By bending or by inserting prefabricated fittings.

B. Connections: Welded Mechanical.

C. Infill Panels: Glass or Stainless-steel woven-wire mesh.

D. Toe boards.

1.5 FINISHES

A. Stainless Steel: Dull satin, No. 6.

END OF SECTION 05721

BLANK PAGE

SECTION 06105 - MISCELLANEOUS CARPENTRY

1.1 SUMMARY

A. Rooftop equipment bases and support curbs.

B. Wood blocking and nailers.

C. Plywood backing panels.

1.2 MATERIALS

A. Wood-Preservative-Treated Materials:

1. Preservative Treatment: AWPA C2 with chemicals containing no arsenic or chromium.

   a. AWPA C31 (inorganic boron) may be used in protected locations.

2. Application: Items indicated and the following:

   a. Items in contact with roofing or waterproofing.
   b. Items in contact with concrete or masonry.

B. Fire-Retardant-Treated Materials:

1. Application: Items indicated and the following:

   a. Concealed blocking.
   b. Plywood backing panels.

C. Dimension Lumber Framing:

1. Maximum Moisture Content: 19 percent.
2. Other Framing: Construction or No. 2 grade hem-fir.

D. Plywood backing panels for telephone and electrical equipment: MDO- fire retardant.

E. Fasteners: Hot-dip galvanized steel where exposed to weather, in ground contact, in contact with treated wood, or in area of high relative humidity.

F. Metal Framing Anchors:

1. Metal: Hot-dip galvanized steel.

END OF SECTION 06105

BLANK PAGE

SECTION 06402 - INTERIOR ARCHITECTURAL WOODWORK

1.1 SUMMARY

A. Interior standing and running trim.

B. Wood and plastic-laminate cabinets.

C. Custom wood lockers.

D. Engineered Quartz countertops and window sills.

E. Closet and utility shelving.

1.2 QUALITY ASSURANCE

A. Quality Standard: AWI.

1.3 MATERIALS

A. Wood Species and Cut for Transparent Finish: Red oak or better, plain sawn or sliced as a minimum standard, more expensive species and or cut can be used with Owners permision.

B. Composite Wood Products: Made without urea formaldehyde.

C. Cabinet Hardware:

1. Hinges: European concealed.
2. Slides: HD full extension, 125# minimum rating
3. Pulls: Back mounted Wire.
4. Exposed Hardware Finishes: Satin chromium plated or stainless steel.

D. Interior Woodwork Grade: Premium.

E. Interior Standing and Running Trim for Transparent Finish:

1. Grade: Premium.
2. Wood Species and Cut: Red oak or better, plain sawn.
3. Minimum length: 5'.

F. Wood Cabinets for Transparent Finish:

1. Grade: Premium.
2. AWI Type of Cabinet Construction: Flush overlay.
3. Wood Species and Cut for Exposed Surfaces: Red oak or better, plain sawn or cut.

4. Cabinet Interior: Thermoset decorative panels.

G. Plastic-Laminate Cabinets:

1. Grade: Custom.
2. AWI Type of Cabinet Construction: Flush overlay.
3. Cabinet Interior: Thermoset decorative panels.

H. Engineered Quartz Countertops and window sills:

1. Grade: Custom.
2. Thickness: 2 cm with doubled up edge, or 3 cm

I. Solid Surface Countertops :

1. Not allowed.

J. Plastic Laminate Countertops:

1. Not allowed.

K. Closet and Utility Shelving: Custom grade.

L. Shop Finishing:

1. Grade: Same grade as woodwork.
2. Extent: All woodwork shop finished.

END OF SECTION 06402

SECTION 07142 - HOT FLUID-APPLIED RUBBERIZED ASPHALT WATERPROOFING

1.1 QUALITY ASSURANCE

A. Mockups for deck and wall waterproofing[, including pavers.

B. At decks, provide complete warrantied system by single manufacturer that includes: waterproofing, drainage insulation, pedestals and pavers.

1.2 WARRANTY

A. Watertightness Warranty: 10 years.

B. Installer's Warranty: Two years.

1.3 MATERIALS

A. Hot Fluid-Applied, Rubberized-Asphalt Waterproofing Membrane: Single-component, rubberized asphalt.

1. Monolithic Membrane 6125, by American Hydrotech.
2. Procor 20 and/or 76, Grace Construction Products.
3. Ram-Tough 250 DM, Barrett Co.

B. Elastomeric Flashing Sheet: Uncured sheet neoprene.

C. Protection Course: Semirigid, reinforced-asphaltic core sheet.

D. Molded-Sheet Drainage Panels: Nonwoven-geotextile-faced, molded-plastic-sheet drainage core.

E. Insulation: Extruded-polystyrene board.

F. Insulation Drainage Panels: Extruded-polystyrene board insulation, unfaced, with grooved drainage channels.

G. Plaza Deck Pavers: Heavyweight decorative concrete units, square edged with top edges beveled.

H. Paver Supports: Adjustable.

1.4 INSTALLATION

A. Unreinforced Membrane for walls: 180 mils thick, applied in two 90 mil applications.

B. Reinforced Membrane decks: 215 mils thick.

C. Plaza Deck Pavers: Paver-support pedestal application.

1.5 FIELD QUALITY CONTROL

A. Full-time site inspection representative.

B. Each deck area flood tested.

C. Testing Agency: Owner engaged to observe flood testing.

END OF SECTION 07142

SECTION 07210 - BUILDING INSULATION

1.1 SUMMARY

A. Applications:

1. Perimeter insulation at foundation wall and under slabs-on-grade.
2. Cavity-wall insulation.
3. Concealed building insulation.
4. Exposed building insulation.
5. Vapor retarders.
6. Sound attenuation insulation.
7. Under Slab vapor retarder.
8. Air infiltration barrier.

1.2 PERFORMANCE REQUIREMENTS

A. Plenum Rating: Glass-fiber insulation rated for resistance against erosion and mold growth per UL 181.

1.3 MATERIALS

A. Insulation:

1. Extruded-Polystyrene Board: Type X, 1.30 lb/cu. ft.
2. Foil-Faced Polyisocyanurate Board: Type I, Class 1 or 2..
3. Unfaced Glass-Fiber Blanket: Type I.
4. Unfaced Slag-Wool-Fiber/Rock-Wool-Fiber Blanket: Type I.

B. Vapor Retarders: FSK-25, Foil-scrim-kraft w/flame spread of 25 or less- tape all joints.

C. Under slab vapor retarders: Reinforced LDPE membrane- tape all joints

1. Install under all slab on grade.

D. Air infiltration barrier: Comply with DFCM building envelope requirements spray on water vapor permeable weather barriers.

E. Auxiliary Insulating Materials:

1. Insulation fasteners.

END OF SECTION 07210

BLANK PAGE

SECTION 07241 - POLYMER-BASED EXTERIOR INSULATION AND FINISH SYSTEM (EIFS)

1.1 SUMMARY

A. Exterior insulation and finish system (EIFS) applied over gypsum sheathing for exterior soffits.

B. Vertical (wall application) of EIFS is not allowed.

1.2 QUALITY ASSURANCE

A. Fire-Resistance Characteristics: Tested per ASTM E 119.

B. Fire Test: Full-scale multistory per UBC Standard 26-4.

C. Mockups for each form of construction and finish.

1.3 MATERIALS

A. Flexible-Membrane Flashing: Cold-applied, fully self-adhering, self-healing, rubberized-asphalt.

B. Insulation Adhesive: Factory-mixed noncementitious.

C. Board Insulation: Molded, rigid cellular polystyrene.

D. Reinforcing Mesh: Standard impact.

E. Base-Coat Materials: Factory-blended polymer-emulsion adhesive and portland cement dry mix to which only water is added.

F. Finish-Coat Materials: Premium clear 100% acrylic-based coating with multi-colored quartz aggregate.

G. Trim Accessories: PVC.

1. Type: Casing bead, Drip screed/track, Expansion joint and Window sill flashing.

H. Elastomeric Sealants: Multicomponent, nonsag urethane.

1.4 SOURCE QUALITY CONTROL

A. Testing Agency: Owner engaged.

1.5 INSTALLATION

A. Location: EIFS is only allowed for exterior soffits

B. Insulation: Adhesively and mechanically attached to substrate; grooved back for drainage.

C. Expansion Joints:

1. Where required by EIFS manufacturer.
2. Where expansion joints are in substrates behind EIFS.
3. Where EIFS adjoin dissimilar substrates, materials, and construction.
4. Where wall height changes.

D. Finish Coat: Premium clear 100% acrylic based finish with multi-colored quartz aggregates applied over base coat.

1.6 FIELD QUALITY CONTROL

A. Special Inspections and Testing: By Owner-engaged agency.

END OF SECTION 07241

SECTION 07411 - METAL ROOF PANELS

1.1 SUMMARY

A. Factory-formed and field-assembled, standing-seam and metal soffit panels.

1.2 PERFORMANCE REQUIREMENTS

A. Air Infiltration: ASTM E 1680.

B. Water Penetration: ASTM E 1646.

C. Hydrostatic-Head Resistance: ASTM E 2140.

D. Wind-Uplift Resistance: UL 580.

1. Uplift Rating: UL 90.

E. FMG listed.

1. Fire/Windstorm Classification: Class 1A-120.
2. Hail Resistance: MH.

F. Structural Performance: ASTM E 1592.

1. Wind Loads: 20 lbf/sq. ft.
2. Snow Loads: 30 lbf/sq. ft.
3. Deflection Limits: 1/240.

G. Solar Reflectivity/Emissivity: LEED.

1.3 QUALITY ASSURANCE

A. Mockups for each form of construction.

1.4 WARRANTY

A. Materials and Workmanship: Two years.

B. Finishes: 20 years.

C. Weathertightness for Standing-Seam Metal Roof Panels: 20 years.

1.5 MATERIALS

A. Polyethylene vapor retarder (if immediately over pool area).

B. Field-Installed Thermal Insulation: Faced, polyisocyanurate board.

C. Self-adhering, high-temperature sheet underlayment.

D. Felt underlayment: SBS 30# min.

E. Slip sheet.

F. Substrate Boards: Fire treated OSB or plywood

1.6 PRODUCTS

A. Standing-Seam Metal Roof Panels:

1. Profile: Vertical or trapezoidal rib, seamed joint.
2. Material: Zinc-coated (galvanized) or aluminum-zinc alloy coated steel sheet.
3. Exterior Finish: 3 or 4-coat fluoropolymer, with standard or mica or metalic look.

B. Metal Soffit Panels:
1. Profile: Flush or Reveal joint.
2. Material: Match metal roof panels.
3. Exterior Finish: Match metal roof panels.

C. Accessories:

1. Flashing and trim.
2. Gutters.
3. Downspouts.
4. Roof curbs.
5. Snow Guards: Seam-mounted, bar, painted to match metal roof panels.
6. Pipe flashing.

END OF SECTION 07411

SECTION 07415 - COMPOSITE WALL PANELS

1.1 SUMMARY

A. Factory-formed, metal-faced composite wall panels with thin thermoplastic cores.

1.2 PERFORMANCE REQUIREMENTS

A. Air Infiltration: ASTM E 283.

B. Water Penetration under Static Pressure: ASTM E 331.

C. Structural Performance: ASTM E 330.

1. Wind Loads: 20 PSF.

1.3 QUALITY ASSURANCE

A. Mockups for each form of construction.

1.4 WARRANTY

A. Materials and Workmanship: Two years.

B. Kynar finish: 20 years.

1.5 MATERIALS

A. Miscellaneous Metal Framing: Subgirts, base or sill angles or channels or hat-shaped, rigid furring channels and cold-rolled furring channels.

1.6 PRODUCTS

A. Metal-Faced Composite Wall Panels:

1. Material: Aluminum faced.
2. Thickness: 0.236 inch (6mm).
3. Exterior Finish: Clear anodized or Color anodized or three coat Kynar coating.

1.7 INSTALLATION

A. Installation Method: Clip, Track support or Subgirt and spline.

B. Joint type: reveal or sealant filled.

1.8 FIELD QUALITY CONTROL

A. Testing: By Owner-engaged agency.

END OF SECTION 07415

SECTION 07542 - POLYVINYL-CHLORIDE (PVC) ROOFING

1.1 SUMMARY

A. Adhered PVC membrane roofing system.

B. Vapor retarder (at pool areas only).

C. Roof insulation.

1.2 PERFORMANCE REQUIREMENTS

A. Roofing System Design: Uplift pressures calculated according to ASCE/SEI 7.

B. FM Approvals Listing: Class 1A-90.

1.3 QUALITY ASSURANCE

A. Exterior Fire-Test Exposure: Class A.

B. Preliminary roofing and preinstallation conference.

1.4 WARRANTY

A. Manufacturer's Materials and Workmanship Warranty: 20 year “No Dollar Limit” warranty.

B. Installer's Warranty: Two years on DFCM form.

1.5 MATERIALS

A. PVC Membrane Roofing: ASTM D 4434, Type IV, fabric-reinforced and fabric-backed PVC sheet.

1. Thickness: 80 mils.
2. Color: White, LEED Compliant.

B. Low VOC adhesives and sealants for LEED.

C. Sheet Flashing: Same as PVC sheet membrane.

D. Substrate Board: Glass-mat, water-resistant gypsum board.

E. Vapor Retarder: Polyethylene sheet.

F. Roof Insulation: Polyisocyanurate board.

1. Tapered Boards: 1/4 inch per 12 inches where slope can not be achieved with deck slope.

G. Cover Board: Glass-mat, water-resistant gypsum substrate.

1.6 INSTALLATION

A. Roof Insulation: Two layers with staggered joints. First layer mechanically fastened and second layer adhered.

B. Membrane Roofing: Adhered.

C. Membrane Roofing joints: Heat Sealed

1.7 FIELD QUALITY CONTROL

A. Testing Agency: Owner engaged, if required.

END OF SECTION 07542

SECTION 07620 - SHEET METAL FLASHING AND TRIM

1.1 SUMMARY

A. Formed Low-Slope Roof Flashing and Trim:

1. Copings.
2. Counter flashing.
3. Roof expansion joint assemblies

1.2 PERFORMANCE REQUIREMENTS

A. Copings: Capable of resisting Wind Zone 2 forces according to FMG Loss Prevention Data Sheet 1-49.

1.3 QUALITY ASSURANCE

A. Quality Standard: SMACNA's "Architectural Sheet Metal Manual."

1.4 MATERIALS

A. Sheet Metals for Flashing and Trim:

1. Prepainted, Metallic-Coated Steel: High-performance “Kynar” coating.

B. Underlayment: High Temperature Ice and Water Shield.

C. Joints: Standing seam, fold ends at 45 degrees.

END OF SECTION 07620

BLANK PAGE

SECTION 07720 - ROOF ACCESSORIES

1.1 SUMMARY

A. Roof hatches.

1.2 QUALITY ASSURANCE

A. Sheet Metal Standard: SMACNA's "Architectural Sheet Metal Manual."

1.3 WARRANTY

A. Special Warranty on Painted Finishes: 15 years from date of Substantial Completion.

1.4 PRODUCTS

A. Roof Hatches: Prepainted, metallic-coated steel.

B. Provide with extendable safety pole.

1.5 FABRICATION

A. Connections: Welded.

END OF SECTION 07720

BLANK PAGE

SECTION 07841 - THROUGH-PENETRATION FIRESTOP SYSTEMS

1.1 SUMMARY

A. Through-penetration firestop systems for penetrations through fire-resistance-rated fire walls, fire partitions, fire barriers, smoke barriers, floors, and ceiling membranes of roof/ceiling assemblies.

1.2 PERFORMANCE REQUIREMENTS

A. Provide through-penetration firestop systems with the following ratings determined per ASTM E 814 or UL 1479:

1. F-Rated Systems: F-ratings equaling or exceeding fire-resistance rating of constructions penetrated.
2. T-Rated Systems: For penetrations located outside wall cavities and outside fire-resistance-rated shaft enclosures.
3. L-Rated Systems: Where through-penetration firestop systems are indicated in smoke barriers.

1.3 QUALITY ASSURANCE

A. Installer Qualifications: A firm approved by FMG according to FMG 4991, "Approval of Firestop Contractors."

B. Fire-Test-Response Characteristics: Tested per ASTM E 814 by UL.

1.4 MATERIALS

A. Accessories: Permanent forming/damming/backing materials, temporary forming materials, substrate primers, collars and steel sleeves as needed to comply with performance requirements.

1.5 INSTALLATION

A. Identification: Preprinted metal or plastic labels, permanently attached.

1.6 FIELD QUALITY CONTROL

A. Inspection of Installed Firestop Systems: By Owner-engaged agency according to ASTM E 2174 requirements.

1.7 THROUGH-PENETRATION FIRESTOP SYSTEM SCHEDULE

A. Firestop Systems with No Penetrating Items:

1. UL rated.
2. Type of Fill Materials: Silicone sealant orIntumescent putty.

B. Firestop Systems for Metallic Pipes, Conduit, or Tubing:

1. UL rated.
2. Type of Fill Materials: Intumescent putty.

C. Firestop Systems for Nonmetallic Pipe, Conduit, or Tubing:

1. UL rated.
2. Type of Fill Materials: Intumescent putty; Intumescent wrap strip or Firestop device.

D. Firestop Systems for Electrical Cables:

1. UL
2. Type of Fill Materials: Intumescent putty.

E. Firestop Systems for Cable Trays:

1. UL rated
2. Type of Fill Materials: Intumescent pillows/bags.

F. Firestop Systems for Insulated Pipes:

1. UL rated
2. Type of Fill Materials: Intumescent putty or Intumescent wrap strips.

G. Firestop Systems for Miscellaneous Electrical Penetrants:

1. UL rated.
2. Type of Fill Materials: Intumescent putty.

H. Firestop Systems for Miscellaneous Mechanical Penetrants:

1. UL rated
2. Type of Fill Materials: Intumescent putty, silicone foam.

I. Firestop Systems for Groupings of Penetrants:

1. UL rated.
2. Type of Fill Materials: Intumescent wrap strips; Firestop device or Intumescent composite sheet.

END OF SECTION 07841

SECTION 07920 - JOINT SEALANTS

1.1 SUMMARY

A. Exterior Joints in Vertical Surfaces and Horizontal Nontraffic Surfaces:

1. Control and expansion joints in unit masonry.
2. Joints between different materials listed above.
3. Perimeter joints around frames of doors windows.

B. Exterior Joints in Horizontal Traffic Surfaces:

1. Isolation and contraction joints in cast-in-place concrete slabs.
2. Joints between different materials listed above.

C. Interior Joints in Vertical Surfaces and Horizontal Nontraffic Surfaces:

1. Control and expansion joints on exposed interior surfaces of exterior walls.
2. Perimeter joints of exterior openings.
3. Control and expansion and inside corner joints in tile.
4. Vertical joints on exposed surfaces of interior unit masonry walls.
5. Perimeter joints between interior wall surfaces and frames of interior doors windows.
6. Joints between plumbing fixtures and adjoining walls, floors, and counters.

D. Interior Joints in Horizontal Traffic Surfaces:

1. Isolation joints in cast-in-place concrete slabs.

1.2 WARRANTY

A. Installer: Two years.

B. Manufacturer: Ten years.

1.3 MATERIALS

A. Elastomeric Joint Sealants: Liquid applied, chemically curing; ASTM C 920.

1. Pourable neutral-curing silicone sealants.
2. Nonsag neutral-curing silicone sealants.
3. Acid-curing silicone sealants.
4. Mildew-resistant neutral-curing silicone sealants.
5. Nonsag and Pourable urethane sealants.

B. Latex Joint Sealants: ASTM C 834, Type P, Grade NF.

C. Acoustical Joint Sealants: Latex.

D. Preformed Tape Sealants: Back-bedding mastic, butyl based.

E. Joint-Sealant Backing: Cylindrical Closed Cell Elastomeric tubing.

END OF SECTION 07920

SECTION 08110 - STEEL DOORS AND FRAMES

1.1 SUMMARY

A. Standard hollow metal doors and frames.

1.2 QUALITY ASSURANCE

A. Standard Hollow Metal Quality Standard: ANSI/SDI A250.8.

1.3 PRODUCTS

A. Standard Hollow Metal Doors:

1. Design: Flush panel.
2. Thermal-Rated Doors: Exterior.
3. Exterior Doors: 16 ga. Galvanized steel sheet faces.

a. Model: 1 (Full Flush)
b. Top of Door: Provide closed top design sealed against water intrusion.

4. Interior Doors: 18 ga. cold-rolled steel sheet faces.

a. Model: 1 (Full Flush).

B. Standard Hollow Metal Frames:

1. Exterior Frames: Galvanized steel sheet; face welded, thermal break design.

a. 14 ga thick steel sheet.
b. Rigid insulation

2. Interior Frames: Cold-rolled steel sheet; face welded.

a. 16 ga thick steel sheet up to 4 foot wide opening, 14 ga. over 4 foot.

C. Finishes: Factory priming for field painting.

1.4 INSTALLATION

A. Concrete and Masonry Walls: Frames filled with grout.

END OF SECTION 08110

BLANK PAGE

SECTION
08211 - FLUSH WOOD DOORS

1.1
QUALITY ASSURANCE

A. Quality Standard: AWI.

1. AWI Quality Certification Labels or an AWI letter of licensing for doors.

B. Fire-Rated Wood Doors: Comply with IBC for pressure testing.

1.2 DOOR CONSTRUCTION, GENERAL

A. Low-Emitting Materials: Made with adhesives and composite wood products that do not contain urea formaldehyde.

1.3 VENEERED-FACED DOORS FOR TRANSPARENT FINISH

A. Exterior Solid-Core Doors Not acceptable

B. Interior Solid-Core Doors:

1. Grade: Premium, with Grade A faces .
2. Species: Red oak or better.
3. Cut: Plain sliced (flat sliced), Quarter sliced, or Rift cut. Rotary cut is unacceptable.
4. Match between Veneer Leaves: Book; Slip or Pleasing match.
5. Assembly of Veneer Leaves on Door Faces: Balance match.
6. Edge: Matching veneer
7. Special Matching:

a. Pair and set match.
b. Room Match: Door faces of compatible color and grain within each room.

8. Core: Particleboard.
9. Construction: Five or seven plies, bonded.
10. Face veneer thickness: 1/16" (U of U requirement).

C. Interior Hollow-Core Doors Not acceptable:

1.4 LOUVERS AND LIGHT FRAMES

A. Louvers: Not acceptable.

B. Light-Opening Frames:

1. Wood, unless metal is required for rating.

1.5 PRIMING/FINISHING

A. Factory Finishing: All doors.

B. Transparent Factory Finishes:

1. Grade: Premium.
2. Finish: Catalyzed polyurethane.
3. Effect: Semifilled finish.

END OF SECTION 08211

SECTION 08311 - ACCESS DOORS AND FRAMES

1.1 SUMMARY

A. Access doors and frames for walls and ceilings.

B. Floor access doors and frames.

1.2 QUALITY ASSURANCE

A. Fire-Rated Vertical Access Doors and Frames: NFPA 252 or UL 10B.

B. Fire-Rated Horizontal Access Doors and Frames: ASTM E 119 or UL 263.

1.3 PRODUCTS

A. Access Doors and Frames for Walls and Ceilings:

1. Type:

   a. Flush access doors and frames with exposed trim.
   b. Fire-rated, insulated, flush access doors and frames with exposed trim.

2. Material: Steel (except in restroom wall installations); Stainless steel (in restrooms if mounted in tile).
3. Fire-Resistance Rating: As required to match wall or ceiling rating..
4. Latch: Self-latching bolt operated by key (key all access doors alike) with interior release.

B. Finishes:

1. Steel: Primed finish.
2. Stainless Steel: Directional satin, No. 4 finish.

END OF SECTION 08311

BLANK PAGE

SECTION 08331 - OVERHEAD COILING DOORS

1.1 PERFORMANCE REQUIREMENTS

A. Exterior: Basic Wind Speed, Exterior Doors: 90 mph. Operability under wind load is required.

1.2 DOOR ASSEMBLYS

A. Exterior: Insulated Service Door: Door curtain of galvanized steel with end locks, and wind locks.

B. Interior Counter Door: Stainless steel with flat slats and #4 finish with stainless steel tracks

C. Finish: Powder coated, exterior, stainless steel interior.

D. Hood: Galvanized steel at service or concealed locations. In finished areas where hood is exposed provide stainless steel with #4 finish.

E. Electric Door Operator for all overhead coiling doors, including counter doors: Standard duty, up to 60 cycles per hour.

1. Obstruction-detection device.
2. Momentary Contact Remote-control station.
3. Other Equipment: Audible and visual signals Radio-control system.
4. Rated counter doors to “power” down under alarm- do not release counter balance mechanism.

1.3 INSTALLATION

A. Factory-authorized representative to perform startup service and testing and train Owner's personnel.

END OF SECTION 08331

BLANK PAGE

SECTION 08411 - ALUMINUM-FRAMED ENTRANCES AND STOREFRONTS

1.1 SUMMARY

A. Exterior storefront framing.

B. Exterior manual-swing entrance doors and door-frame units.

1.2 PERFORMANCE REQUIREMENTS

A. Structural Performance:

1. Wind Loads: 20 psf.

1.3 MAINTENANCE SERVICE

A. Entrance Door Hardware: Twelve months.

1.4 MATERIALS

A. Aluminum: Alloy and temper recommended by manufacturer.

B. Steel reinforcement.

1.5 FRAMING SYSTEMS

A. Framing Members: Manufacturer's standard extruded-aluminum framing members.

1. Construction: Thermally broken.
2. Glazing System: Retained mechanically with gaskets on at least twor sides.

B. Brackets and reinforcements.

C. Fasteners and accessories.

D. Concrete and masonry inserts.

E. Sub Sill: Provide aluminum sub sill with vertical legs turned up at the back and ends and with all joints sealed to shed water to the outside of the building.

F. Framing system gaskets and sealants.

1.6 GLAZING SYSTEMS

A. Glazing: As specified in Division 8 Section "Glazing."

B. Glazing gaskets.

C. Spacers and setting blocks.

D. Bond-breaker tape.

E. Glazing Sealants:

1. Weatherseal sealant.

1.7 ENTRANCE DOOR SYSTEMS

A. Entrance Doors:

1. Door Construction: 1-3/4-inch overall thickness.
2. Door Design: medium stile rails with 10" bottom rail and 5" top rail.
3. Glazing stops and gaskets.

B. Entrance Door Hardware: Division 8 Section "Door Hardware."

1.8 ALUMINUM FINISHES

A. Aluminum Finishes: Class II, clear or color anodic.

1.9 SOURCE QUALITY CONTROL

A. Structural-Sealant-Glazed Systems: Tested and inspected according to ASTM C 1401 recommendations.

END OF SECTION 08411

SECTION 08470 - REVOLVING ENTRANCE DOORS

1.1 SUMMARY

A. Four-wing, manual revolving entrance doors.

1.2 WARRANTY

A. Materials and Workmanship for Revolving Entrance Door Assemblies: Three years.

B. Materials and Workmanship for Speed-Control Units: Five years.

1.3 MAINTENANCE SERVICE

A. Full-Maintenance Service: 12 months.

1.4 COMPONENTS

A. Door Wings: Stile and rail.

1. Material: Extruded aluminum.
2. Glazing: Clear tempered glass.
3. Stile Design: Medium stile; 3-1/2-inch nominal width.
4. Diameter: 7' diameter- minimum.
5. Push bars: Stainless Steel, 1" diameter, #4 finish.
6. Provide keyed locks on two leaves.

B. Enclosure Walls: Curved with single-bend glass lites.

1. Material: Extruded aluminum.
2. Glazing: Clear tempered glass.

C. Ceilings: Metal-clad plywood or Metal.

D. Canopy and roof.

E. Floors: Mats.

F. Movable door-wing assembly to permit folded door wings to be moved to one side of door enclosure.

G. Finishes:

1. Aluminum: Class II, clear or color anodic finish or three coat Kynar with 20 year warranty.

END OF SECTION 08470

BLANK PAGE

SECTION 08520 - ALUMINUM WINDOWS

1.1 PERFORMANCE REQUIREMENTS

A. Engineering design of aluminum windows by Contractor.

B. Basic Wind Speed: 90 mph.

1.2 QUALITY ASSURANCE

A. Quality Standard: AAMA/WDMA 101/I.S.2/NAFS.

1.3 WINDOWS

A. Type: Fixed- thermal break construction

B. Sub Sill: Provide aluminum sub sill with vertical legs turned up at the back and ends and with all joints sealed to shed water to the outside of the building.

C. U-Factor: 0.43 Btu/sq. ft. x h x deg F or less.

D. Solar Heat-Gain Coefficient: Whole-window SHGC maximum of 0.50.

E. Glazing: Site glazed.

1. Glass: See Glazing Section.
2. Glazing System: Manufacturer's standard.

F. Finishes: Class I, clear or color anodic, or three coat Kynar system with 20 year warranty

END OF SECTION 08520

BLANK PAGE

SECTION 08710 - DOOR HARDWARE

1.1 SUMMARY

A. Commercial door hardware for swinging doors, including aluminum entrance doors.

1.2 MAINTENANCE SERVICE

A. Full-Maintenance Service: Twelve months.

1.3 PRODUCTS

A. Hinges:

1. Aluminum Doors: Gear type extruded aluminum heavy duty anodize to match window system
2. Interior: Brass or Steel.
3. Fire-Rated Assemblies: Steel or stainless steel.
4. Options: maximum security pin on outswinging exterior doors and nonremovable pins on outswinging corridor doors.
5. Other than doors to receive gear hinges, provide 4 ½" x 4 ½" ball bearing butts.

B. Continuous Hinges: Provide at all aluminum entrance and vestibule doors, and all exterior HM doors.

1. Gear Type: Extruded aluminum- HD.

C. Electronic Locks: All exterior doors on new or existing buildings shall have the C-Cure System, WITH FINGERPRINT SCANNER; (BY Tyco). See the University's standard deetails for alarm wiring for conduit and other rough-in requirements to be installed during construction. Also provide on IT equipment doors and division or department doors (doors that serve sub-corridors or office suites).

D. Mechanical Locks and Latches: Schlage "D" series with "L" lever, or prior "approved equal" (U of U decision)..

1. Cylindrical Lockset Design: heavy duty lever locks with option that allows lever to turn when locked (like Schlage "Vandelgard at exterior doors).
2. Functions:
   a. Office: Turn button.
   b. Classroom: Classroom function with ability to lock from the inside with a key.
   c. Custidial and Mechanical and Electrical: Storeroom function
   d. Restrooms: do not key restrooms.

E. Auxiliary Locks and Latches: Grade 1.

F. Door Bolts:

1. Dustproof Strikes: Grade 1.

G. Exit Devices: Von Duprin 99 or 33, or prior “approved equal” (as determined by the U of U).

1. Panic exit devices.
2. Fire exit devices.
3. Outside Trim: Match locksets and latchsets.

H. Cylinders and Keying:

1. Cylinders: University of Utah will provide High security cylinders

2. Locksets shall conform to Schlage “standard 6- pin cylinders” Smaller formats are not acceptable.

I. Key lock boxes: Contractor provided

J. Operating Trim: Stainless steel.

K. Closers:

1. Surface: Grade 1, LCN 404, or prior “approved equal” (U of U decision).
2. Closer holder release devices.
3. Coordinators- rectangular units mounted at frame head- full width of opening Glynn Johnoson COR or similar.

L. HC Door Openers.:

1. LCN #4611 or #4622 or prior “approved equal” (U of U decision).
2. Provide on at least one leaf at each accessible entry and each public restroom.

M. Protective Trim Units: Stainless steel.

N. Stops and Holders:

1. Stops and Bumpers.
2. Silencers for metal door frames w/o smoke seals.

O. Door Gasketing: As required for rating and acoustics.

P. Finishes: US 26D, (except for kick plates, mop plates, armor plates, push and pull which will all be 32D).

1.4 FIELD QUALITY CONTROL

A. Occupancy Adjustment: Twelve months.

END OF SECTION 08710

SECTION 08800 - GLAZING

1.1 SUMMARY

A. Glazing required for the following:

1. Windows.
2. Doors.
3. Glazed entrances.
4. Interior borrowed lites.
5. Storefront framing.
6. Curtain Wall framing.

1.2 WARRANTY

A. Deterioration of Coated Glass: Not less than 10 years.

B. Deterioration of Insulating Glass: Not less than 10 years.

C. Leaking through caulking or gaskets: Not less than 10 years.

1.3 MATERIALS

A. Glass Products:

1. Annealed Float Glass: Clear and Tinted.
2. Heat-Treated Float Glass: fully tempered.
3. Coated Float Glass: Pyrolytically or Sputter coated.
4. Insulating Glass: Manufacturer's standard dual-seal units.
5. Fire rated ceramic glazing.
6. Fire and safety rated laminated ceramic glazing

B. Silicone Glazing Sealants: Neutral or basic curing, Class 25.

C. Glazing Tapes: Back-bedding-mastic type.

D. Glazing Gaskets: Dense compression.

1.4 GLASS UNITS

A. Monolithic Float-Glass Units:

1. 6 mm clear

B. Safety glazing:

1. 6 mm tempered or laminated.

C. Fire Rated Safety Glazing:

1. Comply with CPSC and UL requirements. Laminated Fire rated ceramic glazing Firelite Plus or equal.

D. Insulating-Glass Units:

1. Tinted outer 6 mm lite, ½" air space, 6mm clear inner lite with low E coating on 3rd surface.
2. Spacer: Anodize or paint to match framing system.
3. Consider ceramic frit pattern on west exposures.
4. University desires a guarantee to provide for “perpetual” inventory stock of matching glass for replacement, so consider very common tints.
5. Coefficient of heat transfer to be at least .30.

END OF SECTION 08800

SECTION 08911 - GLAZED ALUMINUM CURTAIN WALLS

1.1 SUMMARY

A. Conventionally glazed aluminum curtain walls installed as stick or unitized systems.

1.2 QUALITY ASSURANCE

A. Contractor to engineer glazed aluminum curtain-wall systems to comply with performance requirements.

1.3 WARRANTY

A. Assembly Warranty: 10 years.

B. Leakage through gaskets or sealants: 10 years.

C. Coated finishes: 20 years.

1.4 COMPONENTS

A. Framing Systems: Aluminum with steel reinforcement (if required).

B. Sub Sill: Provide aluminum sub sill with vertical legs turned up at the back and ends and with all joints sealed to shed water to the outside of the building.

C. Glazing Systems:

1. Glazing: Specified in Division 8 Section "Glazing."
2. Gaskets: Pressure-glazing system.
3. Glazing Sealants: As recommended by manufacturer.

D. Aluminum Finishes: Class I, clear or color anodic, or three coat Kynar with 20 year warranty.

1.5 FABRICATION

A. Provisions for field replacement of glazing from exterior.

END OF SECTION 08911

BLANK PAGE

SECTION 08950 - TRANSLUCENT WALL AND ROOF ASSEMBLIES

1.1 QUALITY ASSURANCE

A. Quality Standard: AAMA/WDMA 101/I.S.2/NAFS.

1.2 WARRANTY

A. Materials and Workmanship: Five years.

B. Manufacturer’s special 20 year warranty against yellowing and fiber bloom.

1.3 MATERIALS

A. Fiberglass-Sandwich-Panel Glazing: Translucent, fiberglass-reinforced-polymer face sheets with a grid core (Kallwall).

B. Glazing Gaskets: Manufacturer's standard.

1.4 UNIT SKYLIGHTS

A. Integral Curb: Extruded-aluminum, self-flashing type.

B. Thermal break.

C. Finishes: Class I, clear or color anodic, or three coat Kynar with 20 year warranty.

END OF SECTION 08620

BLANK PAGE

SECTION 09111 - NON-LOAD-BEARING STEEL FRAMING

1.1 SUMMARY

A. Non-load-bearing steel framing members for interior framing and suspension systems.

1.2 MATERIALS

A. Suspension Systems:

1. Wire hangers.
2. Flat hangers.
3. Carrying channels.
4. Furring channels.

B. Steel Framing for Framed Assemblies:

1. Interior studs and runners: minimum 3 5/8" x 20 ga. Space studs at 16" O.C.
2. Studs at door jambs: 2- 18 ga. studs to structure or cross bracing.
3. Slip-Type Head Joints:

   a. Single long-leg runner.
   b. Double runner.
   c. Deflection track.

4. Firestop track.
5. Flat strap and backing plate.
6. Cold-rolled channel bridging.
7. Hat-shaped, rigid furring channels.
8. Resilient furring channels.
9. Cold-rolled furring channels.
10. Z-shaped furring.

END OF SECTION 09111

BLANK PAGE

SECTION 09250 - GYPSUM BOARD

1.1 SUMMARY

A. Interior gypsum board.

1.2 MATERIALS

A. Interior Gypsum Board: Minimum 5/8" thick.

1. Regular type.
2. Type X.
3. Ceiling Type: Manufactured to have more sag resistance than regular-type gypsum board.
4. Moisture- and mold-resistant type.
5. Glass faced waterproof gypsum panels (Georgia Pacific “DensSheild” or equal (shower and wet areas).

B. Trim Accessories:

1. Metal only- no plastic. Provide muddable types only, where exposed to view- no “J” mold is acceptable in exposed areas.

1.3 INSTALLATION

A. Install gypsum board vertically unless the space is too high for single panels (greater than 12 feet).

B. In areas with oblique lighting- i.e. corridors with a window at the end, lobby walls that end at windows, and all high end spaces (public areas, coaches offices, conference rooms), etc., provide level 5 finish.

END OF SECTION 09250

BLANK PAGE

SECTION 09310 - CERAMIC TILE

1.1 SUMMARY

A. Ceramic mosaic, porcelain paver, glazed wall and special-purpose tile.

B. Stone thresholds installed as part of tile installations.

C. Crack-suppression membrane for all tile installations.

D. Metal edge strips installed as part of tile installations.

1.2 MATERIALS

A. Glazed Wall Tile Trim Shapes: Coved base Straight base Surface bullnose cap Bullnose external corner.

B. Ceramic Mosaic Trim Shapes: Coved base.

C. Thresholds: Marble, 4" wide minimum with shallow beveled edges.

D. Crack-Suppression Membranes: Chlorinated polyethylene sheet PVC sheet Polyethylene sheet Corrugated polyethylene Fabric-reinforced, modified-bituminous sheet Fabric-reinforced, fluid-applied rubber Urethane waterproofing and tile-setting adhesive.

E. Elastomeric Sealants: One-part, mildew-resistant silicone.

1.3 FLOOR TILE INSTALLATION SCHEDULE

A. Interior Floors at “A” level spaces as identified in the program.

1. Tile Type: Large format porcelain pavers, rectified, consider metallic finish, including but not limited to 24" x 24". 24" x 48" and 36" x 36".
2. Crack suppression membrane.
3. Mortar: Latex- portland cement mortar bond coat.
4. Grout: Polymer-modified sanded grout.

B. Interior Floors: kitchen dish wash, kitchen dry storage, walk in cooler and freezer (this supercedes program requirements).

1. Tile Type: Slip resistant Quarry tile- carborundum abrasive not allowed- use Daltile “Suretread” or American Olean “Sure Step II”.
2. Crack suppression membrane.
3. Mortar: Latex- portland cement mortar bond coat.
4. Grout: Epoxy grout.

C. Interior Floors on Concrete (Slab on Grade): Cement mortar bed bonded to concrete .

1. Tile Type: Unglazed ceramic mosaic tile or porcelain pavers.
2. Crack suppression membrane.
3. Mortar: Latex- portland cement mortar bond coat.
4. Grout: Polymer-modified sanded grout.

D. Interior Floors on Crack-Suppression Membrane over Concrete (suspended slabs): Thin-set mortar.

1. Tile Type: Unglazed ceramic mosaic tile or porcelain pavers.
2. Crack suppression membrane
3. Mortar: Latex- portland cement mortar bond coat.
4. Grout: Polymer-modified sanded grout.

1.4 WALL TILE INSTALLATION SCHEDULE

A. Interior Walls over Gypsum Board on Metal Studs (Restroom Walls): Organic adhesive.

1. Tile Type: Glazed wall tile- in restrooms, all wall shall be tile floor to ceiling.
2. Grout: Polymer-modified unsanded grout.

B. Interior Walls over Glass faced waterproof gypsum panels on Metal Studs (shower walls): Thin-set mortar.

1. Tile Type: Glazed wall tile- in restrooms, all wall shall be tile floor to ceiling.
2. Grout: Polymer-modified unsanded grout.

END OF SECTION 09310

SECTION 09402 - RESINOUS MATRIX TERRAZZO FLOORING

1.1 SUMMARY

A. Thin-set epoxy-resin terrazzo flooring and base for “A” level spaces as identified in program.

1.2 QUALITY ASSURANCE

A. Installer Qualifications: A contractor member of NTMA.

B. Mockups- required.

C. Provide under slab vapor barrier at concrete slab on grade

1.3 EPOXY-RESIN TERRAZZO

A. Membrane for crack reduction with fiberglass reinforcement (General Polymers “Epoflex” or equal) for slab on grade installation.

B. Marble Chips, colored aggregates, up to 1-% to15% mother of pearl, up to 10% to 15% colored glass, and assume 10% of the floor will have 10% mirrored glass chip. Comply with NTMA gradation standards.

C. Terrazzo Thickness: 1/4 inch.

1.4 STRIP MATERIALS

A. Divider Strips:

1. Top-Section Material: White-zinc alloy.
2. Top-Section Width: 1/8 inch to 1/4 inch.

B. Control-joint strips: as required by installer

END OF SECTION 09402

BLANK PAGE

SECTION 09511 - ACOUSTICAL PANEL CEILINGS

1.1 SUMMARY

A. Acoustical panels and exposed suspension systems.

1.2 QUALITY ASSURANCE

A. Acoustical Panel Quality Standard: ASTM E 1264.

B. Metal Suspension System Quality Standard: ASTM C 635.

1.3 MATERIALS

A. Acoustical Ceiling Panels:

1. Type and Form: Type III, mineral base with painted finish; Form 2, water felted.
2. Pattern: E (lightly textured) or G (smooth).
3. LR: Not less than 0.90.
4. NRC: Not less than 0.70.
5. CAC: Not less than 25.
6. Thickness: 3/4 inch.
7. Modular Size: 24 by 24 inches with reveal (tegular) edge.

B. Kitchen Ceiling Panels:

1. Type and Form: Type III, mineral base with vinyl or aluminum film painted white.
2. Pattern: G (smooth).
3. LR: Not less than 0.90.
4. Thickness: 3/4 inch.
5. Modular Size: 24 by 48 inches with square edge.

C. Metal Suspension Systems:

1. Wire hangers, braces, and ties.
2. Hanger rods.
3. Angle hangers.
4. Seismic perimeter slips, stabilizer bars, struts, and clips.
5. Wide-Face, Capped, Double-Web Steel: Intermediate duty.
6. Aluminum capped, galvanized double-web steel at areas with high humidity, such as kitchens showers and pool areas.

D. Metal Edge Moldings and Trim: “Step” also known as “shadow” type edge molding.

E. Acoustical sealants.

1.4 INSTALLATION

A. Installation: CISCA.

END OF SECTION 09511

SECTION 09512 - ACOUSTICAL TILE CEILINGS

1.1 SUMMARY

A. Acoustical tiles directly attached to substrates with adhesive.

B. Use for all public rest room ceilings- install at 10 foot minimum.

1.2 QUALITY ASSURANCE

A. Acoustical Tile Quality Standard: ASTM E 1264.

1.3 MATERIALS

A. Acoustical Ceiling Tiles:

1. Type III, mineral base with painted finish; Form 4, cast.
2. Color:White
3. Pattern: D (fissured).
4. LR: Not less than 0.70.
5. NRC: Not less than 0.70.
6. CAC: Not less than 25.
7. Thickness: 3/4 inch.
8. Modular Size: 12 by 12 inches.

B. Metal Edge Moldings and Trim: Extruded aluminum.

C. Acoustical sealants.

END OF SECTION 09512

BLANK PAGE

SECTION 09640 - WOOD FLOORING

1.1 SUMMARY

A. Factory-finished wood flooring for possible use in “A” level spaces as identified in the program.

1. Engineered wood, planks (hardwood core). 3 ½" wide minimum

1.2 QUALITY ASSURANCE

A. Forest certification by a Forest Stewardship Council-accredited certification body.

B. Quality Standard: NOFMA's "Official Flooring Grading Rules."

C. Mockups for each form of construction and finish.

D. Provide vapor barrier under concrete slab on grade construction

1.3 MATERIALS

A. Wood Flooring:

1. Species: Something *EXOTIC*, not maple (except “birdseye”), not oak, no soft woods
2. Grade: Premium
3. Cut: Something interesting
4. Factory Finish: 10 coat aluminum oxide polyurethane.
5. Install per manufacturers recomendations.

B. Accessories:

1. Feature Strips: Solid brass or zinc.
2. Wood Trim:

a. Base.
b. Base shoe molding.

END OF SECTION 09640

BLANK PAGE

SECTION 09651 - RESILIENT FLOOR TILE

1.1 PRODUCTS

A. Vinyl Composition Floor Tile:

1. Class: Through pattern.
2. Wearing Surface: Smooth.
3. Thickness: 0.125 inch.
4. Size: 12 by 12 inches.

B. Installation Materials:

1. Trowelable leveling and patching compounds.
2. Adhesives.
3. Seamless-installation accessories.
4. Floor polish- coordinate with Owner to use what they will use for maintenance.

1.2 FLOOR TILE INSTALLATION

A. Lay tiles in pattern indicated.

END OF SECTION 09651

BLANK PAGE

SECTION 09652 - RESILIENT SHEET FLOORING

1.1 PRODUCTS

A. Vinyl Sheet Floor Covering:

1. Unbacked: 0.080 inch thick.
2. Wearing Surface: Smooth in dry areas, or embossed in wet areas.
3. Sheet Width: As standard with manufacturer.
4. Seaming Method: Heat welded.

B. Installation Materials:

1. Trowelable leveling and patching compounds.
2. Adhesives.
3. Seamless-installation accessories.
4. Integral-flash-cove-base accessories.
5. Floor polish- coordinate with Owner to match what they use for maintenance.

1.2 INSTALLATION

A. Integral-Flash-Cove Base: Cove floor coverings 4 inches up vertical surfaces.

END OF SECTION 09652

BLANK PAGE

SECTION 09653 - RESILIENT WALL BASE AND ACCESSORIES

1.1 PRODUCTS

A. Resilient Base:

1. Type (Material Requirement): TS (rubber, vulcanized thermoset).
2. Group (Manufacturing Method): I (solid).
3. Style: Cove (with top-set toe) for vinyl tile and sealed concrete
4. Style: Straight for carpet tile.
5. Minimum Thickness: 0.125 inch.
6. Height: 4 inches.
7. Lengths: Coils in manufacturer's standard length.
8. Outside Corners: Job formed.
9. Inside Corners: Job formed.
10. Surface: Smooth.

B. Resilient Molding Accessory: Rubber.

1. Transition strips.

C. Installation Materials:

1. Trowelable leveling and patching compounds.
2. Adhesives.

END OF SECTION 09653

BLANK PAGE

SECTION 09681 - CARPET TILE

1.1 QUALITY ASSURANCE

A. Mockups for each type of carpet tile installation.

1.2 MATERIALS

A. Carpet Tile: (State Contract)

B. Provide weight and style as specified in the Program “Finishes Guide”.

1.3 INSTALLATION

A. Installation Method: Glue down with releasable adhesive.

END OF SECTION 09681

BLANK PAGE

SECTION 09841 - ACOUSTICAL WALL PANELS

1.1 SUMMARY

A. Back-mounted acoustical wall panels.

B. Must be used in large volume spaces if either the floor or ceiling or both are hard surfaces.

1.2 QUALITY ASSURANCE

A. Acoustical wall panels tested for flame-spread and smoke-developed ratings.

1. Flame-Spread Index: 25 or less.
2. Smoke-Developed Index: 450 or less.

B. Mockups for each form of construction and finish.

1.3 WARRANTY

A. Materials and Workmanship: Two years.

1.4 MATERIALS

A. Core Materials: Glass-fiber board.

B. Back-Mounted, Edge-Reinforced Acoustical Wall Panels with Glass-Fiber Board Core:

1. Facing Material: Woven polyester fabric.
2. Nominal Core Thickness and System NRC: 2 inches and not less than NRC 1.00.
3. Panel Width: As designed.
4. Panel Height: As designed

C. Back-Mounting Devices: Metal "Z" clips.

END OF SECTION 09841

BLANK PAGE

SECTION 09911 - EXTERIOR PAINTING

1.1 SUMMARY

A. Surface preparation and the application of paint systems on exterior substrates.

1.2 QUALITY ASSURANCE

A. Quality Standards: "MPI Approved Products List" and "MPI Architectural Painting Specification Manual."

B. Mockups for each color and finish.

C. Acceptable manufacturers: Pratt & Lambert, Ameritone, Glidden, Sherwin Williams and Kwal-Howells

1.3 FIELD QUALITY CONTROL

A. Testing: By Owner-engaged agency- if required.

1.4 EXTERIOR PAINTING SCHEDULE

A. Galvanized-Metal Substrates:

1. Latex System: MPI EXT 5.3A.
2. Latex Over Water-Based Primer System: MPI EXT 5.3H.
3. Alkyd System: MPI EXT 5.3B.

END OF SECTION 09911

BLANK PAGE

SECTION 09912 - INTERIOR PAINTING

1.1 SUMMARY

A. Surface preparation and the application of paint systems on interior substrates.

1.2 QUALITY ASSURANCE

A. Quality Standards: "MPI Approved Products List" and "MPI Architectural Painting Specification Manual."

B. Mockups for each color and finish.

C. Acceptable manufacturers: Pratt and Lambert, Sherwin Williams, Kwal-Howells

1.3 INTERIOR PAINTING SCHEDULE

A. CMU Substrates:

1. One coat latex block filler, two coats acrylic enamel.

B. Steel Substrates:

1. One coat primer, one coat undercoater, top coat alkyd enamel.

C. Galvanized-Metal Substrates: (roof deck)

1. Water-Based Dry-Fall System: MPI INT 5.3H.

D. Gypsum Board Substrates:

1. 2 coats acrylic enamel over pva primer.

END OF SECTION 09912

BLANK PAGE

SECTION 10101 - VISUAL DISPLAY SURFACES

1.1 QUALITY ASSURANCE

A. Composite wood products made without urea formaldehyde.

1.2 WARRANTY

A. Materials and Workmanship for Porcelain-Enamel Face Sheets: 50 years.

1.3 PRODUCTS

A. Porcelain-Enamel Face Sheet: Manufacturer's standard steel.

B. Markerboard Assemblies: Porcelain enamel.

C. Tackboard Assemblies: Plastic-impregnated cork, can be fabric covered if desired.

D. Sliding Visual Display Units:

1. Horizontal-Sliding Units: Two track.

E. Visual Display Conference Units: Wood cabinets- use in high end spaces

F. Markerboard Tackboard Accessories:

1. Aluminum frames.
2. Trim: Factory-applied aluminum.
3. Chalktray: Box or Solid type.
4. Map rail with display rail clips.

G. Wood Species and Finishes: Red oak or better; natural lacquered finish.

H. Aluminum Finishes: Class II, clear or color anodic.

1.4 FABRICATION AND INSTALLATION

A. Visual Display Boards: Factory assembled and mechanically attached to walls.

END OF SECTION 10101

BLANK PAGE

SECTION 10155 - TOILET COMPARTMENTS

1.1 SUMMARY- Note that this supercedes the program requirements.

A. Phenolic-core toilet compartments configured as follows:

1. Toilet-Enclosure Style: Overhead braced Floor anchored.
2. Shower Screen Style (if used): Overhead braced Floor anchored.
3. Urinal-Screen Style: Post to ceiling.

1.2 QUALITY ASSURANCE

A. Flame-Spread Index: 25 or less.

1.3 COMPONENTS

A. Phenolic-Panel Cores: Brown or Black as standard with Manufacturer..

B. Urinal-Screen Post: square aluminum tube with satin finish, floor to ceiling with overhead bracing.

C. Brackets (Fittings):

1. Full-Height (Continuous) Type: Stainless steel or clear anodized aluminum angles.

D. Top Rail: Anti-grip design

E. Hardware and Accessories: Institutional quality Stainless steel- no plated zamac.

F. Fastners: tamper resistant

END OF SECTION 10155

BLANK PAGE

SECTION 10431 - SIGNAGE

1.1 SUMMARY

A. Dedication Plaque.

B. Dimensional characters.

C. Panel signs.

1.2 QUALITY ASSURANCE

A. Regulatory Requirements: Comply with applicable provisions in ADA-ABA Accessibility Guidelines and ICC/ANSI A117.1.

1.3 WARRANTY

A. Materials and Workmanship: Five years.

1.4 PRODUCTS

A. Plaques:

1. Cast Plaques: Aluminum with concealed stud mounting.
2. See Dedication Plaque requirements on DFCM's website

B. Dimensional Characters:

1. Cast Characters: Aluminum with concealed stud mounting.

C. Panel Signs:

1. Interior Panel Signs: ASI "Intouch" series or equivalent

a. Material: Laminated, etched photopolymer sheet with raised graphics and Braille.
b. Frame: Framed.
c. Mounting: Wall with concealed anchors.
d. Color: As selected by Architect from manufacturer's full range.

2. Changeable Message Inserts: Transparent covers with paper inserts printed by Owner.

1.5 FINISHES

A. Aluminum: Class I, clear anodized or class I, color anodized.

1.6 INSTALLATION

A. Wall-Mounted Signs: Mechanical fasteners, or where required, Mounted on glass with matching opaque plate on opposite side of glass.

B. Dimensional Characters: Manufacturer's standard projected mounting.

C. Cast-Metal Plaques: Manufacturer's standard concealed mounting.

END OF SECTION 10431

SECTION 10505 - METAL LOCKERS

1.1 PRODUCTS

A. Knocked-Down, Standard Metal Lockers:

1. Arrangement: Double tier.
2. Material: Metallic-coated steel sheet.
3. Body and Shelves: 0.024-inch steel sheet.
4. Quiet Type: Special construction to reduce noise when closing doors.
5. Door Style: Louvered vents at top and bottom.
6. Hinges: Continuous.
7. Door Handle and Latch: Recessed, single point.
8. Locks: Built-in combination lock.
9. Equipment: Hooks.
10. Accessories: continuous sloping tops filler panels boxed end panels.
11. Finish: Baked enamel or powder coat.
12. Provide ADA compliant lockers and benches as required.

B. Locker Benches:

1. Bench Tops: Laminated clear hardwood.
2. Fixed Pedestals: Tubular steel.

C. Knocked-Down Construction: Assembly at Project site or Pre-assembly at plant.

END OF SECTION 10505

BLANK PAGE

BLANK PAGE

SECTION 10522 - FIRE EXTINGUISHER CABINETS AND ACCESSORIES

1.1 PRODUCTS

A. Fire Protection Cabinet:

1. Type: For 10# fire extinguisher.
2. Construction: Nonrated or 1-hour fire rated, or 2-hour fire rated- coordinate with wall type.
3. Mounting: Semirecessed.
4. Door Style: Vertical duo panel with frame Center glass panel with frame.
5. Door Glazing: Tempered break glass.
6. Accessories: Door locks.
7. Finish: Door and Frame: Stainless-steel #4 finish.
8. Body: Steel, baked enamel or powder coated.
9. Portable fire extinguishers shall be installed with an electronically monitored technology system Theis system will transmit information from the fire extinguisher to the fire control panel as designated by the Fire Marshal. The transmitting electronics of the system may be hard-wired or wireless to the control panel with power supplied by an internal replacable battery. The system will signal an alert with the portable fire extinguisher falls below a preset, specified pressure level, removed from its designated location, when access to the extinguisher is obstructed or when the batter voltage drops to a preset rating. The system shall meet all code requiremtns and be listed by Underwriters Laboratories., Inc.

   a. The manufacturer of this system shall be En Gauge, (www.engaugeinc.net) 888-364-2843, or a pre approved equal (determined by the U of U)

END OF SECTION 10522

BLANK PAGE

SECTION 10523 - FIRE EXTINGUISHERS

1.1 SUMMARY

A. Hand-carried fire extinguishers.

1.2 QUALITY ASSURANCE

A. Fire Extinguishers: NFPA 10.

1.3 WARRANTY

A. Materials and Workmanship: Six years.

1.4 PRODUCTS

A. Portable, Hand-Carried Fire Extinguishers:

1. 4A60BC (10#) Multipurpose dry-chemical type, manufacturer's standard container with chrome plated brass valve (aluminum not acceptable).
2. 80BC (10#) Purple K, manufacturer’s standard container with chrome plated brass valve (aluminum not acceptable). For kitchen areas as required by the Fire Marshal and U of U.

B. Mounting Brackets: Galvanized steel with identification lettering (for extinguishers not in cabinets).

END OF SECTION 10523

BLANK PAGE

SECTION 10651 - OPERABLE PANEL PARTITIONS

1.1 SUMMARY

A. Section Includes:

1. Electrically operated, continuously hinged acoustical panel partitions.

1.2 PERFORMANCE REQUIREMENTS

A. Seismic Performance: SEI/ASCE 7, "Minimum Design Loads for Buildings and Other Structures."

1.3 QUALITY ASSURANCE

A. Flame-Spread Index: 25 or less.

B. Fire-Rated Assemblies: Listed or certified by a testing agency acceptable to authorities having jurisdiction.

C. Electrical Components, Devices, and Accessories: NFPA 70.

1.4 MATERIALS

A. Frame: Steel.

B. Face/Liner Sheets: Steel with gypsum board.

1.5 OPERABLE ACOUSTICAL PANELS

A. Panel Width: Standard widths.

B. STC: Not less than 52.

C. NRC: Not less than 0.50.

D. Panel Weight: 12 lb/sq. ft. maximum.

E. Panel Thickness: Not less than 4 inches.

F. Hardware: Manufacturer's standard hinges.

G. Finish Facing: Fabric wall covering.

1.6 FIELD QUALITY CONTROL

A. Light-leakage test.

B. NIC Testing: Owner will engage a qualified testing agency to perform tests and inspections and prepare test and inspection reports.

END OF SECTION 10651

SECTION 10801 - TOILET AND BATH ACCESSORIES

1.1 SUMMARY

A. Public-Use Washroom Accessories:

1. Toilet Tissue Dispenser: Not in Contract- vendor supplied.
2. Paper Towel Dispenser: Not in Contract- vendor supplied.
3. Waste Receptacle: Owner supplied garbage can.
4. Liquid-soap dispenser: Not in Contract- vendor supplied.
5. Grab bar: Stainless Steel, concealed fastners
6. Vendor: Sanitary napkin and tampon vendor, Stainless Steel, Semi-recessed, coin operation. Provide Dual #1 Vendor manufactured by Hospital Specialty Co. And distributed locally by H & R Sales. Unit is 24 cent operation and installed one per women's restroom
7. Sanitary-napkin disposal unit: Stainless Steel, #250K manufactured by Hospital Specialty Co. And distributed by H & R Sales locally. Mount on the back of each stall door in women's restrooms
8. Mirror unit: Stainless Steel frame, welded corners. Provide with a shelf for wall hung sinks.

B. Childcare Accessories:

1. Diaper-changing station, provide in both men's and women's and uni-sex resrooms.

C. Underlavatory guards. (If using wall mounted sinks)

D. Custodial Accessories:

1. Stainless Steel Mop and broom holder with shelf.

1.2 WARRANTY

A. Silver Spoilage for Mirrors: 15 years.

END OF SECTION 10801

BLANK PAGE

SECTION 11110 - COMMERCIAL LAUNDRY EQUIPMENT

1.1 SUMMARY

A. This Section includes equipment for commercial laundry facilities.

1. Washer extractors.
2. Drying tumblers

1.2 QUALITY ASSURANCE

A. Sanitation: Equipment certified for compliance with NSF/ANSI standards by NSF or UL.

B. Bakery Equipment: BISSC-certified, with certification verified by a third-party agency.

C. Electric and Fuel-Burning Equipment: UL listed for casualty hazards.

1.3 WARRANTY

A. Washer Extractor: All parts, 3 years; main frame, shaft and bearings, 5 years.

B. Drying Tumblers: All parts, 3 years.

1.4 MATERIALS

A. Washer Extractors: Stainless steel, type 304 with #4 finish.

B. Drying Tumblers: Galvanized Steel, G90 body, stainless steel door.

1.5 PRODUCTS

A. See program for quantities and capacity.

B. Additional requirements: provide lint trap for drain out of washer, and provide fire suppression for dryers.

END OF SECTION 11110

BLANK PAGE

SECTION 11160 - LOADING DOCK EQUIPMENT

1.1 WARRANTY

A. Dock Levelers:

1. Structural Assembly: 10 years.
2. Hydraulic System: Five years.

1.2 MAINTENANCE SERVICE

A. Full-Maintenance Service: 12 months.

1.3 PRODUCTS

A. Dock Bumpers:

1. Laminated-Tread Dock Bumper:Vertical style 4-1/2 inches thick.

B. Dock Lifts: MH 29.1.

1. Rated Capacity: 8000 lb.
2. Platform Surface: Nonskid, safety-tread deck plate.
3. Platform Size: 6'-0" wide by 6'-8" long.
4. Handrails: Removable.
5. Bridge Material: High-tensile aluminum tread plate.
6. Bridge Locations: Ends.
7. Vertical Travel: as required.
8. Operation: Hydraulic.
9. Scissors Configuration: manufacturer’s standard.
10. Mounting: Pit.
11. Finish: Hot-dip galvanized.

END OF SECTION 11160

BLANK PAGE

BLANK PAGE

SECTION 11400 - FOODSERVICE EQUIPMENT

1.1 SUMMARY

A. This Section includes equipment for foodservice facilities.

1.2 QUALITY ASSURANCE

A. Sanitation: Equipment certified for compliance with NSF/ANSI standards by NSF or UL.

B. Bakery Equipment: BISSC-certified, with certification verified by a third-party agency.

C. Electric and Fuel-Burning Equipment: UL listed for casualty hazards.

D. Steam Equipment: Complies with ASME Boiler and Pressure Vessel Code.

1.3 WARRANTY

A. Refrigeration Compressors: Five years.

1.4 MATERIALS

A. NSF certified for end-use application indicated.

B. All custom work, such as counter, tables, etc. : stainless steel

C. Elastomeric Joint Sealant: Complies with FDA's regulations for use in food-contact areas.

1.5 PRODUCTS

A. Coordinate with Owner

END OF SECTION 11400

BLANK PAGE

SECTION 11132 - PROJECTION SCREENS

1.1 MATERIALS

A. Manually Operated Projection Screens: (small conference rooms, small meeting rooms)

1. Bracket-mounted or ceiling-suspended, metal-encased screens.
2. No seams in viewing surface.

B. Electrically Operated Projection Screens:(large conference rooms, team meeting rooms, Auditorium)

1. Surface-mounted, metal-encased screens.
2. Suspended screens without ceiling closure. (Mount is recessed gypsum board recess).
3. Side tensioning cables to keep screen flat.
4. No seams in viewing surface.

C. Front-Projection Screen Material: Multipurpose reflective viewing surface.

1. Size: As appropriate for room size.

END OF SECTION 11132

BLANK PAGE

SECTION 12491 - HORIZONTAL LOUVER BLINDS

1.1 SUMMARY

A. Horizontal louver blinds with HD virgin aluminum slats.

1.2 QUALITY ASSURANCE

A. Fire-Test-Response Characteristics: Passes NFPA 701.

B. Mockups for each form of construction.

1.3 PRODUCTS

A. Horizontal Louver Blinds, Aluminum Slats:

1. Nominal Slat Width: 1 inch.
2. Coating: Antistatic.
3. Tilt Control: Manual with wand.
4. Lift Operation: Manual with cord.
5. Valance..

1.4 INSTALLATION

A. Mounting: Head.

END OF SECTION 12491

BLANK PAGE

SECTION 12610 - FIXED AUDIENCE SEATING

1.1 SUMMARY

A. Fixed Audience Seating:

1. Pedestal mounting.
2. Upholstered chairs.
3. Self-rising seat mechanism where appropriate.
4. Large body seating is required- normal width will not be adequate

1.2 QUALITY ASSURANCE

A. Fire-Test-Response Characteristics of Upholstered Chairs:

1. Fabric: Class 1 according to DOC CS 191 and 16 CFR 1610.61, tested according to California Technical Bulletin 117.
2. Padding: California Technical Bulletin 117.
3. Full-Scale Fire Test: California Technical Bulletin 133.

B. Mockups for each type of seating.

1.3 WARRANTY

A. Materials and Workmanship:

1. Structural: Lifetime.
2. Operating Mechanisms: Lifetime.
3. Electrical Components: Five years.
4. Plastic, Wood, and Paint Components: Five years.

1.4 MATERIALS

A. Fabric: 100 percent nylon with flame-retardant treatment, 20 oz./linear yd.

1.5 FIXED AUDIENCE SEATING

A. Chair Mounting:

1. Standards: Floor attached if there are no risers, Riser attached where there are risers.

a. Material: Steel , Cast iron or Cast aluminum.

2. Pedestal: Floor-attached jury base with swivel in training rooms
3. End Panels: Hardwood-veneer plywood.

    a. Decorative Insert: Customized medallion.
    b. Panel Style: Tapered.

B. Fabric Upholstered Chairs:

1. Backs: Padded.

    a. Rear Panel: Hardwood-veneer plywood.
    b. Top Corners: Rounded.

2. Seats: Two part.

    a. Seat Underside: Molded-plastic shell.

C. Back Height: High-style backs.

D. Back Pitch: Fixed.

E. Self-Rising Seat Mechanism: Spring-actuated, full fold- in lecture hall type setting.

F. Armrests: Plastic, and integral cup holder.

G. Aisle Lighting Fixtures: Concealed in armrest.

H. Power and Data Service Package: Power receptacles and data ports.

I. Tablet Arms: Manufacturer's standard-size foldaway tablet arm with plastic-laminate writing surface.

J. Accessible Seating:

1. Removable chairs where wheelchair spaces are indicated.

END OF SECTION 12610

SECTION 13001 - POOLS

1.1 SUMMARY

A. Freestanding appendage hydrotherapy pools and buit in hydrotherapy pools.

1.2 WARRANTY

A. Materials and Workmanship: Five years component warranty, one year moving parts and service warranty.

1.3 COMPONENTS

A. Polar Plunge by HydroWorx 7'-6" x 14'-0".

1. Provide 14 resistance jets.

B. Thermal Plunge by HydroWorx, 7'-6" x 14'-0".

1. Provide 14 resistance jets.

C. HydroWorx 2000.

1. Complete with resistance therapy jet with massage hose, underwater cameras and monitoring system, and hand held remote.

END OF SECTION 13001

BLANK PAGE

SECTION 13038 - SAUNAS

1.1 SUMMARY

A. Freestanding modular sauna.

1.2 WARRANTY

A. Materials and Workmanship: Five years.

1.3 COMPONENTS

A. Interior Wall and Ceiling Paneling: Tongue-and-groove, redwood.

B. Exterior Wall Finish: Prepared to receive gypsum board.

C. Flooring: Wood duckboards matching interior paneling.

D. Door: All-glass type.

E. Benches: Spaced wood boards matching interior paneling.

F. Sidelights.

G. Sauna Heater:

1. Finish: Stainless steel.
2. Mounting: Wall.
3. Controls: Remote digital.

H. Accessories:

1. Wood guardrail for heater.
2. Wood-slat backrests.
3. Sloping wood-slat headrest.
4. Arched wood-slat leg rest.
5. Thermometer.
6. Hygrometer.
7. Combination thermometer/hygrometer.
8. Wood light valance.
9. Wall-mounted light fixture.
10. Copper bucket.
11. Wood clothes hanger.
12. Wood-handled body brush.

END OF SECTION 13001

SECTION 14240 - HYDRAULIC ELEVATORS

1.1 SUMMARY

A. Hydraulic passenger elevators.

B. Hydraulic hospital elevator.

1.2 QUALITY ASSURANCE

A. Regulatory Requirements: ASME A17.1.

1. Effective Peak Velocity Acceleration (Av): 0.20 or more (seismic risk zones 3 and 4).

1.3 WARRANTY

A. Elevator Work: One year.

1.4 MAINTENANCE SERVICE

A. Full Maintenance Service: four (4) years after substantial completion. Also, if elevator manufacturer utilizes timers or cycle counts to disable the elevator, this function shall be turned off and the manufacturer shall provide the Owner with the bypass code. If special software is required to maintain the elevators, a copy shall be provided to the Owner to allow for future maintenance.

1.5 COMPONENTS

A. Pump Units: Submersible pump, suspended inside tank.

1. Motor: Variable-voltage variable-frequency control.

B. Hydraulic Fluid: Biodegradable and fire resistant.

C. Cylinder Protection: PVC or HDPE pipe casing with corrosion protective filler.

D. Signal Equipment:

1. Car Control Stations: Swing-return type, two per car.
2. Emergency communication system.
3. Firefighters' two-way telephone communication service.

E. Elevator Description:

1. Quantity: As recommended by elevator load analysis, but at least one elevator shall be a hospital elevator.

2. Cylinder Type: Under the car.
3. Rated Load: 3500 lb pre-engineered passenger elevators and 4500 lb pre-engineered hospital elevator.
4. Rated Speed: 125 fpm minimum.
5. Operation System: Group automatic.
6. Auxiliary Operations:

    a. Standby-powered lowering.
    b. Automatic dispatching of loaded car.
    c. Nuisance call cancel.
    d. Priority service.
    e. Independent service for all cars in group.
    f. Loaded-car bypass.

7. Security Features: Card-reader operation.

8. Cab:

    a. Inside Width: 68 inches for hospital type and 80 inches for passenger type.
    b. Inside Depth: 65 inches for passenger type and 93 inches for hospital type.
    c. Inside Height: 94 inches.
    d. Front Walls (Return Panels): Stainless steel.
    e. Side and Rear Wall Panels: Plastic laminate as a minimum.
    f. Doors: Stainless steel.
    g. Ceiling: Luminous ceiling.
    h. Handrails: Stainless steel- provide one at handrail height and one 6 inches above floor for protection from carts.
    i. Threshold: Nickel silver.
    j. Floor: Prepared to receive carpet tile.
    k. Provide hooks and full height blankets

9. Hoistway Entrances:

    a. Width: 42 inches for passenger type and 48 inches for hospital type.
    b. Height: 84 inches.
    c. Type: Single-speed side sliding for hospital type and single-speed center opening for passenger type.
    d. Frames Stainless steel.
    e. Doors Stainless steel.
    f. Threshold: Nickel silver.

10. Hall Fixtures: Stainless steel.

END OF SECTION 14240

DIVISION 15
MECHANICAL

15010 GENERAL REQUIREMENTS
15050 BASIC MATERIALS & METHODS
15072 VIBRATION AND SEISMIC CONTROLS FOR FIRE-SUPPRESSION PIPING AND EQUIPMENT
15075 MECHANICAL IDENTIFICATION
15082 PLUMBING INSULATION
15110 VALVES
15140 DOMESTIC WATER PIPING
15145 DOMESTIC WATER PIPING SPECIALTIES
15150 SANITARY WASTE AND VENT PIPING
15155 SANITARY WASTE PIPING SPECIALTIES
15160 STORM DRAINAGE PIPING
15165 STORM DRAINAGE PIPING SPECIALTIES
15181 HYDRONIC PIPING
15185 HYDRONIC PUMPS
15195 FACILITY NATURAL-GAS PIPING
15410 PLUMBING FIXTURES
15469 WATER SOFTENERS
15513 CONDENSING BOILERS
15625 CENTRIFUGAL WATER CHILLERS
15640 COOLING TOWERS
15725 MODULAR INDOOR CENTRAL-STATION AIR-HANDLING UNITS
15815 METAL DUCTS
15820 DUCT ACCESSORIES
15840 AIR TERMINAL UNITS
15855 DIFFUSERS, REGISTERS, AND GRILLES
15900 HVAC INSTRUMENTATION AND CONTROLS
15950 TESTING, ADJUSTING AND BALANCING

BLANK PAGE

SECTION 15010 - GENERAL REQUIREMENTS FOR PLUMBING

PART 1 - GENERAL

1.1 GENERAL

A. General Conditions and apply to this Division.

B. University of Utah Design and Construction standards shall be included in contract documents by this reference. Chapter 6 applies to mechanical systems. These standards can be downloaded at www.utah.edu.

1.2 SCOPE

A. Includes -

1. Furnish all labor, materials, and equipment necessary for the completion of the mechanical and plumbing scope of work.
2. Mechanical Contractor shall obtain the services of independent Test and Balance Agency.
3. The satisfactory performance of the completed systems is a requirement of this specification.

B. Related Work Specified Elsewhere

1. Conduit, line voltage wiring, outlets, and disconnect switches specified in Division 16.
2. Magnetic starters and thermal protective devices (heaters) not a factory mounted integral part of packaged equipment are specified in Electrical.

1.3 SITE OBSERVATION

A. The Contractor shall examine the site and understand the conditions which may affect the performance of work of this Division before submitting proposals for this work.

B. No subsequent allowance for time or money will be considered for any consequence related to failure to examine existing site conditions.

1.4 DRAWINGS

A. Mechanical drawings show general arrangement of piping, ductwork, equipment, etc; however, locations are to be regarded as shown diagrammatically only. Follow as closely as actual building construction and work of other trades will permit.

B. Because of the small scale of mechanical drawings, it is not possible to indicate all offsets, fittings, and accessories which may be required. Investigate existing structural and finished conditions affecting this work and arrange work accordingly, providing such fittings, valves, and accessories required to meet conditions.
If changes in location of piping, equipment, ducts, etc. are required due to lack of coordination of work under this division, such changes shall be made without charge. Contractor shall review drawings with local and state agencies having jurisdiction and any changes required by them shall be brought to the attention of the Engineer prior to bidding or commencement of work. It is understood that while Drawings are to be followed as closely as circumstances permit, this Division will be held responsible for the installation of systems according to the true intent and meaning of the Contract Documents. Anything not clear or in conflict will be explained by making application to the Engineer in writing. Should conditions arise where certain changes would be advisable, secure Owner's and Engineer approval for these changes before proceeding with work.

1.5 COORDINATION OF WORK:

A. Coordinate work of various trades in installing interrelated work. Before installation of mechanical items, make proper provision to avoid interferences in a manner approved by Engineer. Changes required in work specified caused by neglect to secure approval shall be made at no cost to Owner.

B. Arrange piping, ductwork, and equipment to permit ready access to valves, unions, starters, motors, control components, and to clear openings of doors and access panels. Contractor shall provide all necessary access doors and/or panels to provide complete access to all mechanical equipment, dampers, or accessories. Doors for dampers, etc. shall be minimum 12" x 12" and doors for mechanical equipment shall be minimum 24" x 24".

C. Furnish and install inserts and supports required unless otherwise noted. Furnish sleeves, inserts, supports, and equipment that are an integral part of other Divisions involved in sufficient time to be built into the construction as the Work proceeds. Locate these items and see that they are properly installed. Expense resulting from improper location or installation of items above shall be borne by Contractor.

D. Be responsible for required digging, cutting, and patching incident to work of this Division and make required repairs afterwards to satisfaction of Owner and Architect. Cut carefully to minimize necessity for repairs to existing work. Do not cut beams, columns, or trusses.

1. Patch and repair walls, floors and roofs with materials of same quality and appearance as adjacent surfaces unless otherwise shown. Surface finishes shall exactly match existing finishes of same materials.
2. This Division shall bear expense of cutting, patching, repairing, and replacing of work of other Divisions because of its fault, error, tardiness, or because of damage done by it.
3. Provide the necessary cutting, patching, repairing, and replacing pavements, sidewalks, etc. to permit installation of work of this Division.

E. Adjust locations of piping, ductwork, equipment, etc, to accommodate work from interferences anticipated and encountered. Determine exact route and location of each pipe and cut prior to fabrication.

1. Make offsets, transitions, and changes in direction of piping, ductwork, and electrical raceways as required to maintain proper head room and pitch of sloping lines whether or not indicated on Drawings.

F. Slots and openings through floors, walls and roofs shall be provided by this Division.

G. This Contractor shall schedule his work, store his equipment and materials, and work in harmony with other Contractors so as to not delay or jeopardize the construction.

H. This Division shall coordinate with electrical contractor to insure that all required components of control work are included and fully understood. Any discrepancies shall be called to the attention of the Engineer before completion of bids. No additional cost shall accrue to the Owner as a result of lack of such coordination.

1.6 EQUIPMENT & MATERIALS:

A. Requests for substitution shall be received in writing a minimum of seven days prior to bidding. Prior acceptance shall be by Manufacturer's name only. Items not listed in this specification or subsequent addendums shall not be considered. No oral approvals will be acceptable. Manufacturers listed in this specification are acceptable only for items listed. All other items manufacturer wishes to bid must be prior approved. All equipment shall be subject to final review in accordance with "Project Submittals".

B. Product Approvals -

1. If approval is received to use other than specified items, responsibility for specified capacities and insuring that items to be furnished will fit space available lies with this Division.

2. In the event other than specified equipment is used and will not fit job site conditions, this Division assumes responsibility for replacement with items named in Specification.

C. Use domestic made pipe, pipe fittings, and motors on Project.

D. Motor and equipment name plates as well as applicable UL labels shall be in place when Project is turned over to Owner.

E. Insure that items to be furnished fit spaces available. Make necessary field measurements to ascertain space requirements including those for connections and furnish and install equipment of size and shape so final installation shall suit true intent and meaning of Contract Documents. Do not scale off drawings.

F. All materials shall be of the best commercial quality obtainable, consistent with specified materials and for the purpose or function intended. Materials shall be new unless specifically excepted.

G. Equipment catalog or model numbers shown define the basic equipment types and quality standard only. Catalog numbers shall not be considered as all inclusive and shall be verified to include all devices, controls, operators, and appurtenances necessary for the satisfactory and complete operation of the equipment.

H. Follow manufacturer's directions in delivery, storage, protection, and installation of equipment and materials.

1. Promptly notify Engineer in writing of conflicts between requirements of Contract Documents and Manufacturer's directions and obtain Engineer's written instructions before proceeding with work. Contractor shall bear all expenses arising from correcting deficiencies of work that does not comply with Manufacturer's directions or such written instructions from.

I. Deliver equipment and material to site and tightly cover and protect against dirt, water, and chemical or mechanical injury but have readily accessible for inspection. Store items subject to moisture damage (such as controls) in a dry, heated space.

1.7 PROJECT SUBMITTALS:

A. Furnish complete catalog data for manufactured items of equipment to be used in the Work.

B. Submittals shall include, but not be limited to the following:

1. equipment scheduled
2. balancing contractor
3. insulation
4. grilles, and diffusers
5. automatic temperature controls
6. certificates of guarantee
7. valves
8. plumbing fixtures, accessories, and specialties
9. any item for which more than one manufacturer is mentioned

C. Submit and index in same order and name as they appear in Specification.

1. State sizes, capacities, brand names, motor HP, electrical requirements, accessories, materials, gauges, dimensions, and other pertinent information.
2. List on catalog covers page numbers of submitted items.
3. Underline or highlight applicable data.
4. Alternate submittal: Electronic submittals will be acceptable if compiled into a single submittal.

D. If material or equipment is not as specified or submittal is not complete, it will be rejected.

E. Catalog data or shop drawings for equipment which are noted as approved shall not supersede Contract Documents.

F. Review comments shall not relieve this Division from responsibility for deviations from Contract Documents unlessattention has been called to such deviations in writing at time of submission, nor shall they relieve this Division from responsibility for errors in items submitted.

G. Check work described by catalog data with Contract Documents for deviations and errors.

H. All items other than first named specified equipment shall show and state all exceptions and deviations taken and shall include design calculations and drawing layouts.

I. The Contractor shall review the submittals prior to submission to the to make sure that the submittals are complete in all details. No submittal will be reviewed which does not bear the contractor's notation that such checking has been made.

J. No partial submittals will be considered unless approved by the

K. Manufacturers' names shall be mentioned as acceptable prior to bidding.

L. Contractor shall verify equipment dimensions to fit the spaces provided with sufficient clearance for servicing the equipment.

M. Contractor shall review equipment submittals for compliance with schedules, specifications, and drawing plans and details. Equipment submittal shall show the proper arrangements to suit installation and maintenance such as motor location, access doors, filter removal, piping connections, etc.

N. Equipment submittal sheets shall be clearly marked indicating equipment symbol and exact selection of proposed equipment. Submittals shall clearly indicate name of manufacturer of each item.

O. For unacceptable items, the right shall be reserved to require the first named specified items.

P. Where submittals are sent towith any of the above listed information missing or are incomplete they will be returned to the contractor unchecked to be completed and resubmitted. No additional time or money shall be allowed for failure to provide complete submittals on the first review.

Q. If an item requiring submittal review is ordered, purchased, shipped, or installed prior to the submittal review and is subsequently disapproved the item shall be removed from the job site and replaced with an approved item at contractors expense.

1.8 CLEANING & FINISHING:

A. Contractor shall, at all times, keep the premises free from waste material and rubbish. Upon completion of this Section of the work, Contractor shall remove all surplus materials and rubbish; clean all spots resulting from the mechanical work from hardware, floors, glass, walls, etc.; do all required patching up and repair all work of other trades damaged by Contractor under this Section of the work, and leave the premises in a clean orderly condition. Clean heating and cooling coils, internally and externally, and replace all air filters prior to final mechanical inspection. Remove rust, plaster, dirt, grease and oil before painting, insulating, or exposing to view the equipment, piping, ductwork, etc. in completed structure. Refinish any damaged surfaces and leave in proper working order at final completion.

1.9 EQUIPMENT SERVICING:

A. Prior to starting mechanical equipment, all motors, bearings and moving parts shall be properly oiled, greased and lubricated as required. Full and adequate maintenance service shall be given and upon completion all equipment shall be cleaned and checked and placed in perfect condition for the Owner.

B. Amount and type of lubricant shall be per manufacturer's specification.

1.10 SUPERVISION:

A. The Contractor shall supervise and direct the work with his best skill and attention. He will be solely responsible for the means, methods, techniques, sequences and procedures of construction. The Contractor will be responsible to see that the finished work complies accurately with the Contract Documents.

1.11 SAFETY REGULATIONS:

A. Contractor shall provide equipment, supervision, construction, procedures, and everything necessary to assure safety of life or property.

B. Refer also to General Condition and Special Conditions for protection clauses.

1.12 TOOLS AND STORAGE OF EQUIPMENT:

A. The Contractor shall furnish all necessary tools, staging and whatever may be necessary for the installation of this work and shall at all times protect this work and others, and the materials to be used therein from damage by the weather, accident and other causes, and shall repair and make good any damage thus occurring.

1.13 WORKMANSHIP:

A. Workmanship shall be the best quality of its kind for respective industries, trades, crafts and practices and shall be acceptable in every respect to the Owner and Engineer. Nothing contained herein shall relieve the Contractor from performing good work, perfect in all details of construction.

1.14 EQUIPMENT BASES:

A. Provide reinforced concrete bases under boilers, chillers, pumps, air handling units, and other equipment as necessary or as indicated on the drawings. Coordinate work.

B. Bases shall be 6" high, above the finish floor. The base shall extend beyond the equipment 6" in all directions, where possible. Inserts and vibration isolation systems shall be provided and installed by the Mechanical Contractor at the time the concrete is poured to accommodate and anchor the equipment used. Coordinate with vibration isolation manufacturer's requirements. Provide a one inch beveled edge all around.

1.15 BELT GUARDS:

A. Shall be provided, properly enclosing each belt drive system. Guards shall be easily removable, constructed of expanded metal with suitable frames corresponding with SMACNA standard and with tachometer openings. Coordinate with equipment suppliers to avoid duplication of belt guards supplied with equipment. Guards shall comply with OSHA Regulations.

1.16 ELECTRICAL WORK:

A. Power wiring to all electrically driven apparatus shall be done under the electrical contract. See Electrical Specifications.

B. Unless specifically noted otherwise on documents, Electrical Contractor shall furnish and install all magnetic starters including properly sized heaters, and disconnect switches as indicated on drawings or required by code.

C. The Contractor shall verify the proper operation of equipment furnished by him. Costs for repair, replacing, re-wiring and retesting shall be borne by the Contractor without additional costs to the Owner.

D. Motors shall be as specified.

1.17 CONTRACTOR'S USE OF BUILDING EQUIPMENT:

A. The Contractor may use equipment such as electric motors, fans, filters, etc. when permanently installed as part of the project and with the written permission of the Owner. As each piece of equipment is used, maintenance procedures approved by the manufacturer shall be followed, a careful record shall be kept of the time used, maintenance procedure following and of any difficulty experienced with equipment. The Contractor's records on the equipment shall be submitted to the Owner upon acceptance of project. All fan belts and filter media shall be new at the beginning of the Mechanical System Operating Test Run and System Balancing. Wearing surfaces (such as bearings) shall be carefully inspected just prior to acceptance. Any excessive wear noted shall require replacement.

1.18 INSPECTION NOTICE:

A. The following is a basic list of guideline items so that the Architect, district building inspector/Owner’s representative can be at job site for these inspections as the building progresses. Mechanical Contractor shall inform these people one week in advance of test time.

1. Water tests on all sewer, waste, and rainwater piping prior to piping being concealed.
2. Pressure tests on all water service piping.
3. Pressure tests on hot, chilled, and condenser water supply and return piping.
4. All duct work prior to installation of finished ceilings, including ductwork pressure testing.
5. The initial start-up of mechanical equipment, etc.
6. Any changes or problems occurring at job site.
7. Inspect all vent flashings on roof prior to roofing.
8. Periodic inspection at their discretion will be made to insure compliance to Contract Documents and codes. Contractor shall provide ladders, access and other assistance as requested during inspections.
9. Control piping pressure tests.
10. Final inspection before giving approval for final payment.

1.19 LEAK DAMAGE: WARRANTY GUARANTEE:

A. The Contractor shall warrant all materials and equipment to be of quality consistent with specifications as represented by manufacturer's published data.

B. The Contractor shall guarantee that the installation and operation of the equipment shall be free from defects for a period of one year beginning at date of substantial completion and acceptance. The Contractor shall replace or repair any part of the installation that is found to be defective or incomplete within the guarantee period.

C. The one year guarantee on equipment and systems shall commence when equipment has been demonstrated to work and has been accepted. (Example: If an equipment item fails to perform and it takes 9 months after substantial completion to correct, then the guarantee shall commence after the item has been demonstrated to perform and has been accepted.)

D. Substantial completion and acceptance in no way relieves the Contractor from providing the systems and equipment as specified.

1.20 COMPLETION SCHEDULE:

A. Start-up and verification of basic equipment items shall be done prior to the date of substantial completion with sufficient time to allow balancing and adjusting to be performed.

B. At the time of the final inspection a date shall be agreed upon for completion of any remaining items. At least double the estimated cost of the work will be withheld from the Contractor's payment.

1.21 CODE REQUIREMENTS, FEES, AND PERMITS

A. The work shall be installed in accordance with the following applicable codes, ordinances and standards unless otherwise specified. The codes and standards shall include but not be limited to and be of the latest and current editions.

1. American Boiler and Affiliated Industries (AB and AI)
2. American Gas Association (AGA)
3. Air Movement and Control Association (AMCA)
4. American National Standards Institute (ANSI)
5. Air Conditioning & Refrigeration Institute (ARI)
6. American Society of Heating, Refrigeration and Air Conditioning Engineers (ASHRAE) - ASHRAE 90.1-2007
7. American Society of Mechanical Engineers (ASME)
8. American Society of Testing Materials (ASTM)
9. American Standards Association (ASA)
10. American Water Works Association (AWWA)
11. American Welding Society (AWS)
12. Associated Air Balance Council (AABC)
13. Heat Exchange Institute (HEI)

14. Hydraulic Institute (HI)
15. BR
16. National Electrical Code (NEC)
17. National Fire Protection Association (NFPA)
18. Sheet Metal and Air Conditioning contractors National Association (SMACNA)
19. Underwriters Laboratories (UL)
20. International Building Code (IBC) 2009 Ed
21. International Mechanical Code (IMC) 2009 Ed
22. International Plumbing Code (IPC) with Utah Amendments 2009 Ed\
23. International Energy Conservation Code (IECC) 2009 Ed
24. Utah State Safety Orders (OSHA/UOSH)
25. Utah Fire Rating Bureau
26. Utah Boiler and Pressure Vessel Law
27. Utah Air Conservation Regulations/Waste Disposal regulations.
28. ASHRAE Ventilation STD.62-2007

B. Should drawings conflict with any code, the code shall govern. If drawings and specifications establish a quality exceeding the code, the drawings and specifications shall govern. If conflicts do exist among the drawings, specifications and codes, the same shall be brought to the attention of the Engineerin writing prior to bidding, otherwise Contractor shall comply with applicable codes.

C. The latest edition of all codes shall be used.

D. Contractor shall give all notices, obtain all necessary permits, file necessary plans, prepare documents and obtain approvals, and pay all fees required for completion of the mechanical and plumbing work outlined in this Division of the specifications and shown on the Mechanical Drawings.

1.22 OPERATION AND MAINTENANCE MANUAL FOR MECHANICAL SYSTEMS

A. Upon completion of work and before final payment, Contractor shall furnish and deliver to the Owner, through the Engineer, installation, operation and maintenance manuals with instructions for all new materials and equipment used in the building. The contractor shall provide three (3) hard copies of the manuals, and three (3) CD's with electronic copies of the manuals. Electronic information shall be .PDF format. The CD's shall include the same information as the hard copies, and shall be organized in the same manner with electronic bookmarks for each section. CD case and the CD itself shall be labeled the same as the hard copies of the manuals.

B. Bind Operation and Maintenance Manual for Mechanical Systems in a hard-backed piano hinge loose-leaf binder with strong sturdy cover. The project name shall be on the spine and the front of the binder.

1.23 OPERATION AND MAINTENANCE INSTRUCTIONS

A. Contractor shall instruct building maintenance personnel in the operation and maintenance of the installed mechanical systems utilizing the Operation and Maintenance Manual when so doing.

B. Instruction periods shall occur before final site observation when systems are properly working and before final payment is made.

C. None of these instructional periods shall overlap each other.

D. Additional instruction shall be provided by each contractor, after 60 days of system operation by owner to insure proper system operation and answer questions.

1.24 RECORD DRAWINGS

A. Contractor shall keep an up-to-date set of mechanical and plumbing drawings in his custody showing all changes in red, clearly defined and neatly drafted by him. At the end of construction, he shall turn these drawings over to the Engineer. Record drawings must be completed and submitted prior to final site observation

.

PART 2 - PRODUCTS
(Not Used)

PART 3 - EXECUTION
(Not Used)

END OF SECTION 15010

BLANK PAGE

SECTION 15050 - BASIC MATERIALS AND METHODS

PART 1 - GENERAL

1.1 RELATED DOCUMENTS

A. Drawings and general provisions of the Contract, including General and Supplementary Conditions Specification Sections, apply to this Section.

1.2 SUMMARY

A. This Section includes the following:
1. Piping materials and installation instructions common to most piping systems.
2. Transition fittings.
3. Dielectric fittings.
4. Mechanical sleeve seals.
5. Sleeves.
6. Escutcheons.
7. Grout.
8. Mechanical demolition.
9. Equipment installation requirements common to equipment sections.
10. Painting and finishing.
11. Concrete bases.
12. Supports and anchorages.

1.3 DEFINITIONS

A. Finished Spaces: Spaces other than mechanical and electrical equipment rooms, furred spaces, pipe and duct shafts, unheated spaces immediately below roof, spaces above ceilings, unexcavated spaces, crawlspaces, and tunnels.

B. Exposed, Interior Installations: Exposed to view indoors. Examples include finished occupied spaces and mechanical equipment rooms.

C. Exposed, Exterior Installations: Exposed to view outdoors or subject to outdoor ambient temperatures and weather conditions. Examples include rooftop locations.

D. Concealed, Interior Installations: Concealed from view and protected from physical contact by building occupants. Examples include above ceilings and in duct shafts.

E. Concealed, Exterior Installations: Concealed from view and protected from weather conditions and physical contact by building occupants but subject to outdoor ambient temperatures. Examples include installations within unheated shelters.

F. The following are industry abbreviations for plastic materials:
1. ABS: Acrylonitrile-butadiene-styrene plastic.
2. CPVC: Chlorinated polyvinyl chloride plastic.

3. PVC: Polyvinyl chloride plastic.

1.4 SUBMITTALS

A. Product Data: For the following:
   1. Dielectric fittings.
   2. Mechanical sleeve seals.

B. Welding certificates.

1.5 QUALITY ASSURANCE

A. Steel Pipe Welding: Qualify processes and operators according to ASME Boiler and Pressure Vessel Code: Section IX, "Welding and Brazing Qualifications."
   1. Comply with provisions in ASME B31 Series, "Code for Pressure Piping."
   2. Certify that each welder has passed AWS qualification tests for welding processes involved and that certification is current.

B. All materials, piping, etc. shall be new, and domestically made of the best commercial quality obtainable, consistent with specified materials and for the purpose or function intended unless specifically approved in writing prior to bid.

1.6 DELIVERY, STORAGE, AND HANDLING

A. Deliver pipes and tubes with factory-applied end caps. Maintain end caps through shipping, storage, and handling to prevent pipe end damage and to prevent entrance of dirt, debris, and moisture.

B. Store plastic pipes protected from direct sunlight. Support to prevent sagging and bending.

1.7 COORDINATION

A. Arrange for pipe spaces, chases, slots, and openings in building structure during progress of construction, to allow for mechanical installations.

B. Coordinate installation of required supporting devices and set sleeves in poured-in-place concrete and other structural components as they are constructed.

C. Coordinate requirements for access panels and doors for mechanical items requiring access that are concealed behind finished surfaces.

PART 2 - PRODUCTS

2.1 MANUFACTURERS

A. In other Part 2 articles where subparagraph titles below introduce lists, the following requirements apply for product selection:

1. Available Manufacturers: Subject to compliance with requirements, manufacturers offering products that may be incorporated into the Work include, but are not limited to, the manufacturers specified.
2. Manufacturers: Subject to compliance with requirements, provide products by the manufacturers specified.

2.2 PIPE, TUBE, AND FITTINGS

A. Refer to individual piping Sections for pipe, tube, and fitting materials and joining methods.

B. Pipe Threads: ASME B1.20.1 for factory-threaded pipe and pipe fittings.

2.3 JOINING MATERIALS

A. Refer to individual piping Sections for special joining materials not listed below.

B. Pipe-Flange Gasket Materials: Suitable for chemical and thermal conditions of piping system contents.

1. ASME B16.21, nonmetallic, flat, asbestos-free, 1/8-inch maximum thickness unless thickness or specific material is indicated.

a. Full-Face Type: For flat-face, Class 125, cast-iron and cast-bronze flanges.
b. Narrow-Face Type: For raised-face, Class 250, cast-iron and steel flanges.

2. AWWA C110, rubber, flat face, 1/8 inch thick, unless otherwise indicated; and full-face or ring type, unless otherwise indicated.

C. Flange Bolts and Nuts: ASME B18.2.1, carbon steel, unless otherwise indicated.

D. Solder Filler Metals: ASTM B 32, lead-free alloys. Include water-flushable flux according to ASTM B 813.

E. Brazing Filler Metals: AWS A5.8, BCuP Series, copper-phosphorus alloys for general-duty brazing, unless otherwise indicated; and AWS A5.8, BAg1, silver alloy for refrigerant piping, unless otherwise indicated.

F. Welding Filler Metals: Comply with AWS D10.12 for welding materials appropriate for wall thickness and chemical analysis of steel pipe being welded.

2.4 TRANSITION FITTINGS

A. AWWA Transition Couplings: Same size as, and with pressure rating at least equal to and with ends compatible with, piping to be joined.
   1. Available Manufacturers:

      a. Cascade Waterworks Mfg. Co.
      b. Dresser Industries, Inc.; DMD Div.
      c. Ford Meter Box Company, Incorporated (The); Pipe Products Div.
      d. JCM Industries.
      e. Smith-Blair, Inc.
      f. Viking Johnson.
      g. Prior Approved Equal.

   2. Underground Piping NPS 1-1/2 and Smaller: Manufactured fitting or coupling.
   3. Underground Piping NPS 2 and Larger: AWWA C219, metal sleeve-type coupling.
   4. Aboveground Pressure Piping: Pipe fitting.

B. Flexible Transition Couplings for Underground Nonpressure Drainage Piping: ASTM C 1173 with elastomeric sleeve, ends same size as piping to be joined, and corrosion-resistant metal band on each end.
   1. Available Manufacturers:

      a. Cascade Waterworks Mfg. Co.
      b. Fernco, Inc.
      c. Mission Rubber Company.
      d. Plastic Oddities, Inc.
      e. Prior Approved Equal.

2.5 DIELECTRIC FITTINGS

A. Description: Combination fitting of copper alloy and ferrous materials with threaded, solder-joint, plain, or weld-neck end connections that match piping system materials.

B. Insulating Material: Suitable for system fluid, pressure, and temperature.

C. Dielectric Unions: Factory-fabricated, union assembly, for 250-psig minimum working pressure at 180 deg F.
   1. Available Manufacturers:
      a. Capitol Manufacturing Co.
      b. Central Plastics Company.
      c. Eclipse, Inc.
      d. Epco Sales, Inc.
      e. Hart Industries, International, Inc.
      f. Watts Industries, Inc.; Water Products Div.
      g. Zurn Industries, Inc.; Wilkins Div.
      h. Prior Approved Equal.

D. Dielectric Couplings: Galvanized-steel coupling with inert and noncorrosive, thermoplastic lining; threaded ends; and 300-psig minimum working pressure at 225 deg F.
   1. Available Manufacturers:
      a. Calpico, Inc.
      b. Lochinvar Corp.
      c. Prior Approved Equal.

E. Dielectric Nipples: Electroplated steel nipple with inert and noncorrosive, thermoplastic lining; plain, threaded, or grooved ends; and 300-psig minimum working pressure at 225 deg F.
   1. Available Manufacturers:
      a. Perfection Corp.
      b. Precision Plumbing Products, Inc.
      c. Sioux Chief Manufacturing Co., Inc.
      d. Victaulic Co. of America.
      e. Prior Approved Equal.

2.6 MECHANICAL SLEEVE SEALS

A. Description: Modular sealing element unit, designed for field assembly, to fill annular space between pipe and sleeve.
   1. Available Manufacturers:

      a. Advance Products & Systems, Inc.
      b. Calpico, Inc.
      c. Metraflex Co.
      d. Pipeline Seal and Insulator, Inc.
      e. Linkseal.
      f. Prior Approved Equal.

   2. Sealing Elements: EPDM interlocking links shaped to fit surface of pipe. Include type and number required for pipe material and size of pipe.
   3. Pressure Plates: Carbon steel. Include two for each sealing element.
   4. Connecting Bolts and Nuts: Carbon steel with corrosion-resistant coating of length required to secure pressure plates to sealing elements. Include one for each sealing element.

2.7 SLEEVES

A. Galvanized-Steel Sheet: 0.0239-inch minimum thickness; round tube closed with welded longitudinal joint.

B. Steel Pipe: ASTM A 53, Type E, Grade B, Schedule 40, galvanized, plain ends.

C. Cast Iron: Cast or fabricated "wall pipe" equivalent to ductile-iron pressure pipe, with plain ends and integral waterstop, unless otherwise indicated.

D. Molded PVC: Permanent, with nailing flange for attaching to wooden forms.

E. PVC Pipe: ASTM D 1785, Schedule 40.

2.8 ESCUTCHEONS

A. Description: Manufactured wall and ceiling escutcheons and floor plates, with an ID to closely fit around pipe, tube, and insulation of insulated piping and an OD that completely covers opening.

B. One-Piece, Stamped-Steel Type: With set screw or spring clips and chrome-plated finish.

2.9 GROUT

A. Description: ASTM C 1107, Grade B, nonshrink and nonmetallic, dry hydraulic-cement grout.

1. Characteristics: Post-hardening, volume-adjusting, nonstaining, noncorrosive, nongaseous, and recommended for interior and exterior applications.
2. Design Mix: 5000-psi, 28-day compressive strength.
3. Packaging: Premixed and factory packaged.

PART 3 - EXECUTION

3.1 MECHANICAL DEMOLITION

A. Disconnect, demolish, and remove mechanical systems, equipment, and components indicated to be removed.

1. Piping to Be Removed: Remove portion of piping indicated to be removed and cap or plug remaining piping with same or compatible piping material.
2. Piping to Be Abandoned in Place: Drain piping and cap or plug piping with same or compatible piping material.
3. Ducts to Be Removed: Remove portion of ducts indicated to be removed and plug remaining ducts with same or compatible ductwork material.
4. Ducts to Be Abandoned in Place: Cap or plug ducts with same or compatible ductwork material.
5. Equipment to Be Removed: Disconnect and cap services and remove equipment.
6. Equipment to Be Removed and Reinstalled: Disconnect and cap services and remove, clean, and store equipment; when appropriate, reinstall, reconnect, and make equipment operational.
7. Equipment to Be Removed and Salvaged: Disconnect and cap services and remove equipment and deliver to Owner.

B. If pipe, insulation, or equipment to remain is damaged in appearance or is unserviceable, remove damaged or unserviceable portions and replace with new products of equal capacity and quality.

3.2 PIPING SYSTEMS - COMMON REQUIREMENTS

A. Install piping according to the following requirements Sections specifying piping systems.

B. Drawing plans, schematics, and diagrams indicate general location and arrangement of piping systems. Drawings do not show every offset, or bend that may be required. Indicated locations and arrangements were used to size pipe and calculate friction loss, expansion, pump sizing, and other design considerations. Install piping as indicated unless deviations to layout are approved on Coordination Drawings.

C. Install piping in concealed locations, unless otherwise indicated and except in equipment rooms and service areas.

D. Install piping indicated to be exposed and piping in equipment rooms and service areas at right angles or parallel to building walls. Diagonal runs are prohibited unless specifically indicated otherwise.

E. Install piping above accessible ceilings to allow sufficient space for ceiling panel removal.

F. Install piping to permit valve servicing.

G. Install piping at indicated slopes.

H. Install piping free of sags and bends.

I. Install fittings for changes in direction and branch connections.

J. Install piping to allow application of insulation.

K. Select system components with pressure rating equal to or greater than system operating pressure.

L. Install escutcheons for penetrations of walls, ceilings, and floors where indicated on drawings and where penetrating will be visible to public.

M. Install sleeves for pipes passing through concrete and masonry walls, gypsum-board partitions, and concrete floor and roof slabs.
   1. Cut sleeves to length for mounting flush with both surfaces.
      a. Exception: Extend sleeves installed in floors of mechanical equipment areas or other wet areas 2 inches above finished floor level. Extend cast-iron sleeve fittings below floor slab as required to secure clamping ring if ring is specified.
   2. Install sleeves in new walls and slabs as new walls and slabs are constructed.
   3. Install sleeves that are large enough to provide 1/4-inch annular clear space between sleeve and pipe or pipe insulation. Use the following sleeve materials:
   4. Except for underground wall penetrations, seal annular space between sleeve and pipe or pipe insulation, using joint sealants appropriate for size, depth, and location of joint.

N. Aboveground, Exterior-Wall Pipe Penetrations: Seal penetrations using sleeves and mechanical sleeve seals. Select sleeve size to allow for 1-inch annular clear space between pipe and sleeve for installing mechanical sleeve seals.

O. Underground, Exterior-Wall Pipe Penetrations: Install cast-iron "wall pipes" for sleeves. Seal pipe penetrations using mechanical sleeve seals. Select sleeve size to allow for 1-inch annular clear space between pipe and sleeve for installing mechanical sleeve seals.
   1. Mechanical Sleeve Seal Installation: Select type and number of sealing elements required for pipe material and size. Position pipe in center of sleeve. Assemble mechanical sleeve seals and install in annular space between pipe and sleeve. Tighten bolts against pressure plates that cause sealing elements to expand and make watertight seal.

P. Fire-Barrier Penetrations: Maintain indicated fire rating of walls, partitions, ceilings, and floors at pipe penetrations. Seal pipe penetrations with firestop materials.

Q. Verify final equipment locations for roughing-in.

R. Refer to equipment specifications in other Sections of these Specifications for roughing-in requirements.

3.3 PIPING JOINT CONSTRUCTION

A. Join pipe and fittings according to the following requirements and Sections specifying piping systems.

B. Ream ends of pipes and tubes and remove burrs. Bevel plain ends of steel pipe.

C. Remove scale, slag, dirt, and debris from inside and outside of pipe and fittings before assembly.

D. Soldered Joints: Apply ASTM B 813, water-flushable flux, unless otherwise indicated, to tube end. Construct joints according to ASTM B 828 or CDA's "Copper Tube Handbook," using lead-free solder alloy complying with ASTM B 32.

E. Brazed Joints: Construct joints according to AWS's "Brazing Handbook," "Pipe and Tube" Chapter, using copper-phosphorus brazing filler metal complying with AWS A5.8.

F. Threaded Joints: Thread pipe with tapered pipe threads according to ASME B1.20.1. Cut threads full and clean using sharp dies. Ream threaded pipe ends to remove burrs and restore full ID. Join pipe fittings and valves as follows:
   1. Apply appropriate tape or thread compound to external pipe threads unless dry seal threading is specified.
   2. Damaged Threads: Do not use pipe or pipe fittings with threads that are corroded or damaged. Do not use pipe sections that have cracked or open welds.

G. Welded Joints: Construct joints according to AWS D10.12, using qualified processes and welding operators according to Part 1 "Quality Assurance" Article.

H. Flanged Joints: Select appropriate gasket material, size, type, and thickness for service application. Install gasket concentrically positioned. Use suitable lubricants on bolt threads.

3.4 PIPING CONNECTIONS

A. Make connections according to the following, unless otherwise indicated:
   1. Install unions, in piping NPS 2 and smaller, adjacent to each valve and at final connection to each piece of equipment.
   2. Install flanges, in piping NPS 2-1/2 and larger, adjacent to flanged valves and at final connection to each piece of equipment.
   3. Dry Piping Systems: Install dielectric unions and flanges to connect piping materials of dissimilar metals.
   4. Wet Piping Systems: Install dielectric coupling and nipple fittings to connect piping materials of dissimilar metals.

3.5 EQUIPMENT INSTALLATION - COMMON REQUIREMENTS

A. Install equipment to allow maximum possible headroom unless specific mounting heights are not indicated.

B. Install equipment level and plumb, parallel and perpendicular to other building systems and components in exposed interior spaces, unless otherwise indicated.

C. Install mechanical equipment to facilitate service, maintenance, and repair or replacement of components. Connect equipment for ease of disconnecting, with minimum interference to other installations. Extend grease fittings to accessible locations.

D. Install equipment to allow right of way for piping installed at required slope.

3.6 CONCRETE BASES

A. Concrete Bases: Anchor equipment to concrete base according to equipment manufacturer's written instructions and according to seismic codes at Project.
   1. Construct concrete bases of dimensions indicated, but not less than 4 inches larger in both directions than supported unit.
   2. Install dowel rods to connect concrete base to concrete floor. Unless otherwise indicated, install dowel rods on 18-inch centers around the full perimeter of the base.
   3. Install epoxy-coated anchor bolts for supported equipment that extend through concrete base, and anchor into structural concrete floor.
   4. Place and secure anchorage devices. Use supported equipment manufacturer's setting drawings, templates, diagrams, instructions, and directions furnished with items to be embedded.

5. Install anchor bolts to elevations required for proper attachment to supported equipment.
6. Install anchor bolts according to anchor-bolt manufacturer's written instructions.

3.7 GROUTING

A. Mix and install grout for mechanical equipment base bearing surfaces, pump and other equipment base plates, and anchors.

B. Clean surfaces that will come into contact with grout.

C. Provide forms as required for placement of grout.

D. Avoid air entrapment during placement of grout.

E. Place grout, completely filling equipment bases.

F. Place grout on concrete bases and provide smooth bearing surface for equipment.

G. Place grout around anchors.

H. Cure placed grout.

END OF SECTION 15050

SECTION 15072 - VIBRATION AND SEISMIC CONTROLS

PART 1 - GENERAL

1.1 RELATED DOCUMENTS

A. Drawings and general provisions of the Contract, including General and Supplementary Conditions and specification Sections, apply to this Section.

1.2 SUMMARY

A. This Section includes the following:
1. Isolation pads.
2. Freestanding and restrained spring isolators.
3. Seismic snubbers.
4. Restraining braces and cables.

1.3 SCOPE

A. Provide letter of design intent.

B. Provide full set of seismic submittals.

C. Provide a minimum of 2 on site observations.

D. Provide final letter of compliance completion.

1.4 DEFINITIONS

A. IBC: International Building Code.

B. ICC-ES: ICC-Evaluation Service.

1.5 PERFORMANCE REQUIREMENTS

A. Wind-Restraint Loading:
1. Basic Wind Speed: Per owner's design standards.
2. Building Classification Category: As defined in the IBC.
3. Minimum 10 lb/sq. ft. multiplied by the maximum area of the HVAC component projected on a vertical plane that is normal to the wind direction, and 45 degrees either side of normal.

B. Seismic-Restraint Loading:
1. Site Class: As defined in the IBC.
2. Assigned Seismic Use Group or Building Category: As defined in the IBC.
a. Component Importance Factor: 1.0.

1.6 SUBMITTALS

A. Product Data: For the following:
   1. Include rated load, rated deflection, and overload capacity for each vibration isolation device.
   2. Illustrate and indicate style, material, strength, fastening provision, and finish for each type and size of seismic-restraint component used.
      a. Tabulate types and sizes of seismic restraints, complete with report numbers and rated strength in tension and shear as evaluated by an evaluation service member of ICC-ES or an agency acceptable to authorities having jurisdiction.
      b. Annotate to indicate application of each product submitted and compliance with requirements.
   3. Interlocking Snubbers: Include ratings for horizontal, vertical, and combined loads.

B. Letter of Design intent, stating company, design criteria, compliance with specifications and only exceptions that will apply. Letter shall be stamped and signed by a licensed and qualified professional engineer in this jurisdiction.

C. Delegated-Design Submittal: For vibration isolation and seismic-restraint details indicated to comply with performance requirements and design criteria, including analysis data signed and sealed by the qualified professional engineer responsible for their preparation.
   1. Design Calculations: Calculate static and dynamic loading due to equipment weight and operation, seismic and wind forces required to select vibration isolators, seismic and wind restraints, and for designing vibration isolation bases.
      a. Coordinate design calculations with wind load calculations required for equipment mounted outdoors. Comply with requirements in other Division 22 and 23 Sections for equipment mounted outdoors.
   2. Riser Supports: Include riser diagrams and calculations showing anticipated expansion and contraction at each support point, initial and final loads on building structure, spring deflection changes, and seismic loads. Include certification that riser system has been examined for excessive stress and that none will exist.
   3. Vibration Isolation Base Details: Detail overall dimensions, including anchorages and attachments to structure and to supported equipment. Include auxiliary motor slides and rails, base weights, equipment static loads, power transmission, component misalignment, and cantilever loads.
   4. Seismic- and Wind-Restraint Details:
      a. Design Analysis: To support selection and arrangement of seismic and wind restraints. Include calculations of combined tensile and shear loads.
      b. Details: Indicate fabrication and arrangement. Detail attachments of restraints to the restrained items and to the structure. Show attachment locations, methods, and spacing's. Identify components, list their strengths, and indicate directions and values of forces transmitted to the structure during seismic events. Indicate association with vibration isolation devices.
      c. Coordinate seismic-restraint and vibration isolation details with wind-restraint details required for equipment mounted outdoors. Comply with requirements in other Sections for equipment mounted outdoors.

d. Preapproval and Evaluation Documentation: By an evaluation service member of ICC-ES or an agency acceptable to authorities having jurisdiction, showing maximum ratings of restraint items and the basis for approval (tests or calculations).

D. Coordination Drawings: Show coordination of seismic bracing for HVAC piping and equipment with other systems and equipment in the vicinity, including other supports and seismic restraints.

E. Welding certificates.

F. Qualification Data: For professional engineer and testing agency.

G. Field quality-control test reports.

1.7 QUALITY ASSURANCE

A. Testing Agency Qualifications: An independent agency, with the experience and capability to conduct the testing indicated, that is a nationally recognized testing laboratory (NRTL) as defined by OSHA in 29 CFR 1910.7, and that is acceptable to authorities having jurisdiction.

B. Comply with seismic-restraint requirements in the IBC unless requirements in this Section are more stringent.

C. Welding: Qualify procedures and personnel according to AWS D1.1/D1.1M, "Structural Welding Code - Steel."

D. Seismic-restraint devices shall have horizontal and vertical load testing and analysis and shall bear anchorage preapproval OPA number from OSHPD, preapproval by ICC-ES, or preapproval by another agency acceptable to authorities having jurisdiction, showing maximum seismic-restraint ratings. Ratings based on independent testing are preferred to ratings based on calculations. If preapproved ratings are not available, submittals based on independent testing are preferred. Calculations (including combining shear and tensile loads) to support seismic-restraint designs must be signed and sealed by a qualified professional engineer.

E. Provide a minimum of 2 site observations, and additional observations if required.

F. Upon project completion provide a final letter of acceptance for seismic restraints system and installation.

PART 2 - PRODUCTS

2.1 VIBRATION ISOLATORS

A. Manufacturers: Subject to compliance with requirements, provide products by one of the following:

1. Amber/Booth Company, Inc.
2. Vibro-acoustics.
3. ISAT
4. Mason Industries.
5. Prior approved equal.

B. Pads: Arranged in single or multiple layers of sufficient stiffness for uniform loading over pad area, molded with a nonslip pattern and galvanized-steel baseplates, and factory cut to sizes that match requirements of supported equipment.
   1. Resilient Material: Oil- and water-resistant neoprene or rubber.

C. Restrained Spring Isolators: Freestanding, steel, open-spring isolators with seismic or limit-stop restraint.
   1. Housing: Steel with resilient vertical-limit stops to prevent spring extension due to weight being removed; factory-drilled baseplate bonded to 1/4-inch- thick, neoprene or rubber isolator pad attached to baseplate underside; and adjustable equipment mounting and leveling bolt that acts as blocking during installation.
   2. Restraint: Seismic or limit stop as required for equipment and authorities having jurisdiction.
   3. Outside Spring Diameter: Not less than 80 percent of the compressed height of the spring at rated load.
   4. Minimum Additional Travel: 50 percent of the required deflection at rated load.
   5. Lateral Stiffness: More than 80 percent of rated vertical stiffness.
   6. Overload Capacity: Support 200 percent of rated load, fully compressed, without deformation or failure.

2.2 SEISMIC-RESTRAINT DEVICES

A. Manufacturers: Subject to compliance with requirements, provide products by one of the following:
   1. Amber/Booth Company, Inc.
   2. Hilti, Inc.
   3. ISAT
   4. Kinetics Noise Control.
   5. Mason Industries.
   6. Vibro-acoustics.
   7. Unistrut; Tyco International, Ltd.
   8. Prior approved equal.

B. General Requirements for Restraint Components: Rated strengths, features, and applications shall be as defined in reports by an evaluation service member of ICC-ES or an agency acceptable to authorities having jurisdiction.
   1. Structural Safety Factor: Allowable strength in tension, shear, and pullout force of components shall be at least four times the maximum seismic forces to which they will be subjected.

C. Snubbers: Factory fabricated using welded structural-steel shapes and plates, anchor bolts, and replaceable resilient isolation washers and bushings.
   1. Anchor bolts for attaching to concrete shall be seismic-rated, drill-in, and stud-wedge or female-wedge type.

2. Resilient Isolation Washers and Bushings: Oil- and water-resistant neoprene.
3. Maximum 1/4-inch air gap, and minimum 1/4-inch- thick resilient cushion.

D. Channel Support System: MFMA-3, shop- or field-fabricated support assembly made of slotted steel channels with accessories for attachment to braced component at one end and to building structure at the other end and other matching components and with corrosion-resistant coating; and rated in tension, compression, and torsion forces.

E. Restraint Cables: -steel cables with end connections made of steel assemblies with thimbles, brackets, swivel, and bolts designed for restraining cable service; and with a minimum of two clamping bolts for cable engagement.

F. Hanger Rod Stiffener: Steel tube or steel slotted-support-system sleeve with internally bolted connections or Reinforcing steel angle clamped to hanger rod.

G. Bushings for Floor-Mounted Equipment Anchor Bolts: Neoprene bushings designed for rigid equipment mountings, and matched to type and size of anchor bolts and studs.

H. Bushing Assemblies for Wall-Mounted Equipment Anchorage: Assemblies of neoprene elements and steel sleeves designed for rigid equipment mountings, and matched to type and size of attachment devices used.

I. Resilient Isolation Washers and Bushings: One-piece, molded, oil- and water-resistant neoprene, with a flat washer face.

J. Mechanical Anchor Bolts: Drilled-in and stud-wedge or female-wedge type in zinc-coated steel for interior applications and stainless steel for exterior applications. Select anchor bolts with strength required for anchor and as tested according to ASTM E 488. Minimum length of eight times diameter.

K. Adhesive Anchor Bolts: Drilled-in and capsule anchor system containing polyvinyl or urethane methacrylate-based resin and accelerator, or injected polymer or hybrid mortar adhesive. Provide anchor bolts and hardware with zinc-coated steel for interior applications and stainless steel for exterior applications. Select anchor bolts with strength required for anchor and as tested according to ASTM E 488.

2.3 FACTORY FINISHES

A. Finish: Manufacturer's standard paint applied to factory-assembled and -tested equipment before shipping.

1. Powder coating on springs and housings.
2. All hardware shall be galvanized. Hot-dip galvanize metal components for exterior use.
3. Baked enamel or powder coat for metal components on isolators for interior use.
4. Color-code or otherwise mark vibration isolation and seismic- and wind-control devices to indicate capacity range.

PART 3 - EXECUTION

3.1 EXAMINATION

A. Examine areas and equipment to receive vibration isolation and seismic- and wind-control devices for compliance with requirements for installation tolerances and other conditions affecting performance.

B. Examine roughing-in of reinforcement and cast-in-place anchors to verify actual locations before installation.

C. Proceed with installation only after unsatisfactory conditions have been corrected.

3.2 APPLICATIONS

A. Multiple Pipe Supports: Secure pipes to trapeze member with clamps approved for application by an evaluation service member of ICC-ES or an agency acceptable to authorities having jurisdiction.

B. Hanger Rod Stiffeners: Install hanger rod stiffeners where indicated or scheduled on Drawings to receive them and where required to prevent buckling of hanger rods due to seismic forces.

C. Strength of Support and Seismic-Restraint Assemblies: Where not indicated, select sizes of components so strength will be adequate to carry present and future static and seismic loads within specified loading limits.

3.3 VIBRATION-CONTROL AND SEISMIC-RESTRAINT DEVICE INSTALLATION

A. Equipment Restraints:
1. Install seismic snubbers on HVAC equipment mounted on vibration isolators. Locate snubbers as close as possible to vibration isolators and bolt to equipment base and supporting structure.
2. Install resilient bolt isolation washers on equipment anchor bolts where clearance between anchor and adjacent surface exceeds 0.125 inch.
3. Install seismic-restraint devices using methods approved by an evaluation service member of ICC-ES or an agency acceptable to authorities having jurisdiction providing required submittals for component.

B. Piping Restraints:
1. Comply with requirements in MSS SP-127.
2. Space lateral supports a maximum of 40 feet o.c., and longitudinal supports a maximum of 80 feet o.c.
3. Brace a change of direction longer than 12 feet.

C. Install cables so they do not bend across edges of adjacent equipment or building structure.

D. Install seismic-restraint devices using methods approved by an evaluation service member of ICC-ES or an agency acceptable to authorities having jurisdiction providing required submittals for component.

E. Install bushing assemblies for anchor bolts for floor-mounted equipment, arranged to provide resilient media between anchor bolt and mounting hole in concrete base.

F. Install bushing assemblies for mounting bolts for wall-mounted equipment, arranged to provide resilient media where equipment or equipment-mounting channels are attached to wall.

G. Attachment to Structure: If specific attachment is not indicated, anchor bracing to structure at flanges of beams, at upper truss chords of bar joists, or at concrete members.

H. Drilled-in Anchors:

1. Identify position of reinforcing steel and other embedded items prior to drilling holes for anchors. Do not damage existing reinforcing or embedded items during coring or drilling. Notify the structural engineer if reinforcing steel or other embedded items are encountered during drilling. Locate and avoid prestressed tendons, electrical and telecommunications conduit, and gas lines.
2. Do not drill holes in concrete or masonry until concrete, mortar, or grout has achieved full design strength.
3. Wedge Anchors: Protect threads from damage during anchor installation. Heavy-duty sleeve anchors shall be installed with sleeve fully engaged in the structural element to which anchor is to be fastened.
4. Adhesive Anchors: Clean holes to remove loose material and drilling dust prior to installation of adhesive. Place adhesive in holes proceeding from the bottom of the hole and progressing toward the surface in such a manner as to avoid introduction of air pockets in the adhesive.
5. Set anchors to manufacturer's recommended torque, using a torque wrench.
6. Install zinc-coated steel anchors for interior and stainless-steel anchors for exterior applications.

3.4 ACCOMMODATION OF DIFFERENTIAL SEISMIC MOTION

A. Install flexible connections in piping where they cross seismic joints, where adjacent sections or branches are supported by different structural elements, and where the connections terminate with connection to equipment that is anchored to a different structural element from the one supporting the connections as they approach equipment. Comply with requirements in "Hydronic Piping" for piping flexible connections.

3.5 FIELD QUALITY CONTROL

A. Testing Agency: Leave a qualified testing agency to perform tests and inspections.

B. Perform tests and inspections.

C. Tests and Inspections:

1. Provide evidence of recent calibration of test equipment by a testing agency acceptable to authorities having jurisdiction.
2. Schedule test with Owner, through Architect, before connecting anchorage device to restrained component (unless postconnection testing has been approved), and with at least seven days' advance notice.
3. Obtain Architect's approval before transmitting test loads to structure. Provide temporary load-spreading members.
4. Test at least four of each type and size of installed anchors and fasteners selected by Architect.
5. Test to 90 percent of rated proof load of device.
6. Measure isolator restraint clearance.
7. Measure isolator deflection.
8. Verify snubber minimum clearances.
9. If a device fails test, modify all installations of same type and retest until satisfactory results are achieved.

D. Remove and replace malfunctioning units and retest as specified above.

E. Prepare test and inspection reports.

3.6 ADJUSTING

A. Adjust isolators after piping system is at operating weight.

B. Adjust limit stops on restrained spring isolators to mount equipment at normal operating height. After equipment installation is complete, adjust limit stops so they are out of contact during normal operation.

C. Adjust air-spring leveling mechanism.

D. Adjust active height of spring isolators.

E. Adjust restraints to permit free movement of equipment within normal mode of operation.

3.7 DEMONSTRATION

A. Engage a factory-authorized service representative to train Owner's maintenance personnel to adjust, operate, and maintain air-mounting systems. Section "Demonstration and Training."

END OF SECTION 15072

SECTION 15075 - MECHANICAL IDENTIFICATION

PART 1 - GENERAL

1.1 RELATED DOCUMENTS

A. Drawings and general provisions of the Contract, including General and Supplementary Conditions and Specification Sections, apply to this Section.

1.2 SUMMARY

A. This Section includes the following mechanical identification materials and their installation:
   1. Equipment nameplates.
   2. Equipment signs.
   3. Access panel and door markers.
   4. Pipe markers.
   5. Warning tags.

1.3 SUBMITTALS

A. Product Data: For each type of product indicated.

B. Samples: For color, letter style, and graphic representation required for each identification material and device.

C. Valve numbering scheme.

D. Valve Schedules: For each piping system. Furnish extra copies (in addition to mounted copies) to include in maintenance manuals.

1.4 QUALITY ASSURANCE

A. ASME Compliance: Comply with ASME A13.1, "Scheme for the Identification of Piping Systems," for letter size, length of color field, colors, and viewing angles of identification devices for piping.

1.5 COORDINATION

A. Coordinate installation of identifying devices with completion of covering and painting of surfaces where devices are to be applied.

B. Coordinate installation of identifying devices with location of access panels and doors.

C. Install identifying devices before installing acoustical ceilings and similar concealment.

PART 2 - PRODUCTS

2.1 EQUIPMENT IDENTIFICATION DEVICES

A. Equipment Nameplates: Metal, with data engraved or stamped, for permanent attachment on equipment.
   1. Data:
      a. Manufacturer, product name, model number, and serial number.
      b. Capacity, operating and power characteristics, and essential data.
      c. Labels of tested compliances.
   2. Location: Accessible and visible.
   3. Fasteners: As required to mount on equipment.

B. Equipment Signs: ASTM D 709, Type I, cellulose, paper-base, phenolic-resin-laminate engraving stock; Grade ES-2, black surface, black phenolic core, with white melamine subcore, unless otherwise indicated. Fabricate in sizes required for message. Provide holes for mechanical fastening.
   1. Data: Instructions for operation of equipment and for safety procedures.
   2. Engraving: Manufacturer's standard letter style, 1/4” or larger with terms to match equipment identification.
   3. Thickness: 1/8 inch, unless otherwise indicated.
   4. Fasteners: Self-tapping, stainless-steel screws or contact-type, permanent adhesive.

C. Access Panel and Door Markers: 1/16” thick, engraved laminated plastic, with abbreviated terms and numbers corresponding to identification. Provide 1/8” center hole for attachment.
   1. Fasteners: Self-tapping, stainless-steel screws or contact-type, permanent adhesive.

2.2 PIPING IDENTIFICATION DEVICES

A. Manufactured Pipe Markers, General: Preprinted, color-coded, with lettering indicating service, and showing direction of flow.
   1. Colors: Comply with ASME A13.1, unless otherwise indicated.
   2. Lettering: Use piping system terms indicated and abbreviate only as necessary for each application length.
   3. Pipes with OD, Including Insulation, Less Than 6 Inches: Full-band pipe markers extending 360 degrees around pipe at each location.
   4. Pipes with OD, Including Insulation, 6 Inches and Larger: Either full-band or strip-type pipe markers at least three times letter height and of length required for label.
   5. Arrows: Integral with piping system service lettering to accommodate both directions; or as separate unit on each pipe marker to indicate direction of flow.

B. Self-Adhesive Pipe Markers: Plastic with pressure-sensitive, permanent-type, self-adhesive back.

PART 3 - EXECUTION

3.1 APPLICATIONS, GENERAL

A. Products specified are for applications referenced in other Sections. If more than single-type material, device, or label is specified for listed applications, selection is Installer's option.

3.2 EQUIPMENT IDENTIFICATION

A. Install and permanently fasten equipment nameplates on each major item of mechanical equipment that does not have nameplate or has nameplate that is damaged or located where not easily visible. Locate nameplates where accessible and visible. Include nameplates for the following general categories of equipment:
   1. Fuel-burning units, including boilers, furnaces, heaters, etc.
   2. Pumps, compressors, chillers, condensers, and similar motor-driven units.
   3. Heat exchangers, coils, evaporators, cooling towers, heat recovery units, and similar equipment.
   4. Fans, blowers, primary balancing dampers, and mixing boxes.
   5. Packaged HVAC central-station and zone-type units.

B. Install equipment signs with screws or permanent adhesive on or near each major item of mechanical equipment. Locate signs where accessible and visible.
   1. Identify mechanical equipment with black equipment markers with white lettering.
   2. Letter Size: Minimum 1/4 inch for name of units if viewing distance is less than 24 inches, 1/2 inch for viewing distances up to 72 inches, and proportionately larger lettering for greater viewing distances. Include secondary lettering two-thirds to three-fourths the size of principal lettering.
   3. Data: Distinguish among multiple units, indicate operational requirements, indicate safety and emergency precautions, warn of hazards and improper operations, and identify units.
   4. Include signs for the following general categories of equipment:
      a. Main control and operating valves, including safety devices and hazardous units such as gas outlets.
      b. Fuel-burning units, including boilers, furnaces, heaters, etc.
      c. Pumps, compressors, chillers, condensers, and similar motor-driven units.
      d. Heat exchangers, coils, evaporators, cooling towers, heat recovery units, and similar equipment.
      e. Fans, blowers, primary balancing dampers, and mixing boxes.
      f. Packaged HVAC central-station and zone-type units.
      g. Tanks and pressure vessels.
      h. Strainers, filters, humidifiers, water-treatment systems, and similar equipment.

C. Install access panel markers with screws on equipment access panels.

3.3 PIPING IDENTIFICATION

A. Install manufactured pipe markers indicating service on each piping system. Install with flow indication arrows showing direction of flow.

B. Locate pipe markers and color bands where piping is exposed in finished spaces; machine rooms; accessible maintenance spaces such as shafts, tunnels, and plenums; and exterior nonconcealed locations as follows:
   1. Near each valve and control device.
   2. Near each branch connection, excluding short takeoffs for fixtures and terminal units. Where flow pattern is not obvious, mark each pipe at branch.
   3. Near penetrations through walls, floors, ceilings, and nonaccessible enclosures.
   4. At access doors, manholes, and similar access points that permit view of concealed piping.
   5. Near major equipment items and other points of origination and termination.
   6. Spaced at maximum intervals of 50 feet along each run. Reduce intervals to 25 feet in areas of congested piping and equipment.
   7. On piping above removable acoustical ceilings. Omit intermediately spaced markers.

C. Locate markers near points where ducts enter into concealed spaces and at maximum intervals of 50 feet in each space where ducts are exposed or concealed by removable ceiling system.

3.4 ADJUSTING

A. Relocate mechanical identification materials and devices that have become visually blocked by other work.

3.5 CLEANING

A. Clean faces of mechanical identification devices and glass frames of valve schedules.

END OF SECTION 15075

SECTION 15082 - PLUMBING INSULATION

PART 1 - GENERAL

1.1 RELATED DOCUMENTS

A. Drawings and general provisions of the Contract, including General and Supplementary Conditions and Specification Sections, apply to this Section.

B. Related Sections:
   1. Section "Metal Ducts" for duct liners.

1.2 SUBMITTALS

A. Product Data: For each type of product indicated. Include thermal conductivity, thickness, and jackets (both factory and field applied, if any).

B. Qualification Data: For qualified Installer.

C. Material Test Reports: From a qualified testing agency acceptable to authorities having jurisdiction indicating, interpreting, and certifying test results for compliance of insulation materials, sealers, attachments, cements, and jackets, with requirements indicated. Include dates of tests and test methods employed.

D. Field quality-control reports.

1.3 QUALITY ASSURANCE

A. Installer Qualifications: Skilled mechanics who have successfully completed an apprenticeship program or another craft training program certified by the Department of Labor, Bureau of Apprenticeship and Training.

B. Fire-Test-Response Characteristics: Insulation and related materials shall have fire-test-response characteristics indicated, as determined by testing identical products per ASTM E 84, by a testing and inspecting agency acceptable to authorities having jurisdiction. Factory label insulation and jacket materials and adhesive, mastic, tapes, and cement material containers, with appropriate markings of applicable testing and inspecting agency.
   1. Insulation Installed Indoors: Flame-spread index of 25 or less, and smoke-developed index of 50 or less.
   2. Insulation Installed Outdoors: Flame-spread index of 75 or less, and smoke-developed index of 150 or less.

1.4 COORDINATION

A. Coordinate size and location of supports, hangers, and insulation shields specified in Section "Hangers and Supports."

B. Coordinate clearance requirements with piping Installer for piping insulation application, duct Installer for duct insulation application, and equipment Installer for equipment insulation application. Before preparing piping and ductwork Shop Drawings, establish and maintain clearance requirements for installation of insulation and field-applied jackets and finishes and for space required for maintenance.

C. Coordinate installation and testing of heat tracing.

1.5 SCHEDULING

A. Schedule insulation application after pressure testing systems and, where required, after installing and testing heat tracing. Insulation application may begin on segments that have satisfactory test results.

B. Complete installation and concealment of plastic materials as rapidly as possible in each area of construction.

PART 2 - PRODUCTS

2.1 INSULATION MATERIALS

A. Comply with requirements in Part 3 schedule articles for where insulating materials shall be applied.

B. Products shall not contain asbestos, lead, mercury, or mercury compounds.

C. Products that come in contact with stainless steel shall have a leachable chloride content of less than 50 ppm when tested according to ASTM C 871.

D. Insulation materials for use on austenitic stainless steel shall be qualified as acceptable according to ASTM C 795.

E. Foam insulation materials shall not use CFC or HCFC blowing agents in the manufacturing process.

PART 3 - EXECUTION

3.1 GENERAL INSTALLATION REQUIREMENTS

A. Install insulation materials, accessories, and finishes with smooth, straight, and even surfaces; free of voids throughout the length of equipment, ducts and fittings, and piping including fittings, valves, and specialties.

B. Install insulation materials, forms, vapor barriers or retarders, jackets, and thicknesses required for each item of equipment, duct system, and pipe system as specified in insulation system schedules.

C. Install accessories compatible with insulation materials and suitable for the service. Install accessories that do not corrode, soften, or otherwise attack insulation or jacket in either wet or dry state.

D. Install insulation with longitudinal seams at top when looking up and bottom of horizontal runs when looking down.

E. Install multiple layers of insulation with longitudinal and end seams staggered.

F. Do not weld brackets, clips, or other attachment devices to piping, fittings, and specialties.

G. Keep insulation materials dry during application and finishing.

H. Install insulation with tight longitudinal seams and end joints. Bond seams and joints with adhesive recommended by insulation material manufacturer.

I. Install insulation with least number of joints practical.

J. Where vapor barrier is indicated, seal joints, seams, and penetrations in insulation at hangers, supports, anchors, and other projections with vapor-barrier mastic.
   1. Install insulation continuously through hangers and around anchor attachments.
   2. For insulation application where vapor barriers are indicated, extend insulation on anchor legs from point of attachment to supported item to point of attachment to structure. Taper and seal ends at attachment to structure with vapor-barrier mastic.
   3. Install insert materials and install insulation to tightly join the insert. Seal insulation to insulation inserts with adhesive or sealing compound recommended by insulation material manufacturer.
   4. Cover inserts with jacket material matching adjacent pipe insulation. Install shields over jacket, arranged to protect jacket from tear or puncture by hanger, support, and shield.

K. Apply adhesives, mastics, and sealants at manufacturer's recommended coverage rate and wet and dry film thicknesses.

L. Install insulation with factory-applied jackets as follows:
   1. Draw jacket tight and smooth.

2. Cover circumferential joints with 3-inch- wide strips, of same material as insulation jacket. Secure strips with adhesive and outward clinching staples along both edges of strip, spaced 4 inches o.c.
3. Overlap jacket longitudinal seams at least 1-1/2 inches. Install insulation with longitudinal seams at bottom of pipe. Clean and dry surface to receive self-sealing lap. Staple laps with outward clinching staples along edge at 2 inches o.c.
   a. For below ambient services, apply vapor-barrier mastic over staples.
4. Cover joints and seams with tape as recommended by insulation material manufacturer to maintain vapor seal.
5. Where vapor barriers are indicated, apply vapor-barrier mastic on seams and joints and at ends adjacent to duct and pipe flanges and fittings.

M. Cut insulation in a manner to avoid compressing insulation more than 75 percent of its nominal thickness.

N. Finish installation with systems at operating conditions. Repair joint separations and cracking due to thermal movement.

O. Repair damaged insulation facings by applying same facing material over damaged areas. Extend patches at least 4 inches beyond damaged areas. Adhere, staple, and seal patches similar to butt joints.

P. For above ambient services, do not install insulation to the following:
1. Vibration-control devices.
2. Testing agency labels and stamps.
3. Nameplates and data plates.
4. Manholes.
5. Handholes.
6. Cleanouts.

3.2 PENETRATIONS

A. Insulation Installation at Roof Penetrations: Install insulation continuously through roof penetrations.
1. Seal penetrations with flashing sealant.
2. For applications requiring only indoor insulation, terminate insulation above roof surface and seal with joint sealant. For applications requiring indoor and outdoor insulation, install insulation for outdoor applications tightly joined to indoor insulation ends. Seal joint with joint sealant.
3. Extend jacket of outdoor insulation outside roof flashing at least 2 inches below top of roof flashing.
4. Seal jacket to roof flashing with flashing sealant.

B. Insulation Installation at Underground Exterior Wall Penetrations: Terminate insulation flush with sleeve seal. Seal terminations with flashing sealant.

C. Insulation Installation at Aboveground Exterior Wall Penetrations: Install insulation continuously through wall penetrations.
1. Seal penetrations with flashing sealant.

2. For applications requiring only indoor insulation, terminate insulation inside wall surface and seal with joint sealant. For applications requiring indoor and outdoor insulation, install insulation for outdoor applications tightly joined to indoor insulation ends. Seal joint with joint sealant.
3. Extend jacket of outdoor insulation outside wall flashing and overlap wall flashing at least 2 inches.
4. Seal jacket to wall flashing with flashing sealant.

D. Insulation Installation at Interior Wall and Partition Penetrations (That Are Not Fire Rated): Install insulation continuously through walls and partitions.

E. Insulation Installation at Fire-Rated Wall and Partition Penetrations: Install insulation continuously through penetrations of fire-rated walls and partitions. Terminate insulation at fire damper sleeves for fire-rated wall and partition penetrations. Externally insulate damper sleeves to match adjacent insulation and overlap duct insulation at least 2 inches.
1. Comply with requirements in Division 7 Section "Through-Penetration Firestop Systems" for firestopping and fire-resistive joint sealers.

F. Insulation Installation at Floor Penetrations:
1. Duct: Install insulation continuously through floor penetrations that are not fire rated. For penetrations through fire-rated assemblies, terminate insulation at fire damper sleeves and externally insulate damper sleeve beyond floor to match adjacent duct insulation. Overlap damper sleeve and duct insulation at least 2 inches.
2. Pipe: Install insulation continuously through floor penetrations.
3. Seal penetrations through fire-rated assemblies. Comply with requirements in Division 7 Section "Through-Penetration Firestop Systems."

3.3 EQUIPMENT, TANK, AND VESSEL INSULATION INSTALLATION

A. Mineral Fiber, Pipe and Tank Insulation Installation for Tanks and Vessels: Secure insulation with adhesive and anchor pins and speed washers.
1. Apply adhesives according to manufacturer's recommended coverage rates per unit area, for 100 percent coverage of tank and vessel surfaces.
2. Groove and score insulation materials to fit as closely as possible to equipment, including contours. Bevel insulation edges for cylindrical surfaces for tight joints. Stagger end joints.
3. Protect exposed corners with secured corner angles.
4. Install adhesively attached or self-sticking insulation hangers and speed washers on sides of tanks and vessels as follows:
   a. Do not weld anchor pins to ASME-labeled pressure vessels.
   b. Select insulation hangers and adhesive that are compatible with service temperature and with substrate.
   c. On tanks and vessels, maximum anchor-pin spacing is 3 inches from insulation end joints, and 16 inches o.c. in both directions.
   d. Do not overcompress insulation during installation.
   e. Cut and miter insulation segments to fit curved sides and domed heads of tanks and vessels.
   f. Impale insulation over anchor pins and attach speed washers.

g. Cut excess portion of pins extending beyond speed washers or bend parallel with insulation surface. Cover exposed pins and washers with tape matching insulation facing.

5. Secure each layer of insulation with stainless-steel or aluminum bands. Select band material compatible with insulation materials.
6. Where insulation hangers on equipment and vessels are not permitted or practical and where insulation support rings are not provided, install a girdle network for securing insulation. Stretch prestressed aircraft cable around the diameter of vessel and make taut with clamps, turnbuckles, or breather springs. Place one circumferential girdle around equipment approximately 6 inches from each end. Install wire or cable between two circumferential girdles 12 inches o.c. Install a wire ring around each end and around outer periphery of center openings, and stretch prestressed aircraft cable radially from the wire ring to nearest circumferential girdle. Install additional circumferential girdles along the body of equipment or tank at a minimum spacing of 48 inches o.c. Use this network for securing insulation with tie wire or bands.
7. Stagger joints between insulation layers at least 3 inches.
8. Install insulation in removable segments on equipment access doors, manholes, handholes, and other elements that require frequent removal for service and inspection.
9. Bevel and seal insulation ends around manholes, handholes, ASME stamps, and nameplates.
10. For equipment with surface temperatures below ambient, apply mastic to open ends, joints, seams, breaks, and punctures in insulation.

B. Insulation Installation on Pumps:
1. Fabricate metal boxes lined with insulation. Fit boxes around pumps and coincide box joints with splits in pump casings. Fabricate joints with outward bolted flanges. Bolt flanges on 6-inch centers, starting at corners. Install 3/8-inch- diameter fasteners with wing nuts. Alternatively, secure the box sections together using a latching mechanism.
2. Fabricate boxes from galvanized steel aluminum stainless steel, at least 0.040 inch 0.050 inch thick.
3. For below ambient services, install a vapor barrier at seams, joints, and penetrations. Seal between flanges with replaceable gasket material to form a vapor barrier.

3.4 GENERAL PIPE INSULATION INSTALLATION

A. Requirements in this article generally apply to all insulation materials except where more specific requirements are specified in various pipe insulation material installation articles.

B. Insulation Installation on Fittings, Valves, Strainers, Flanges, and Unions:
1. Install insulation over fittings, valves, strainers, flanges, unions, and other specialties with continuous thermal and vapor-retarder integrity, unless otherwise indicated.
2. Insulate pipe elbows using preformed fitting insulation or mitered fittings made from same material and density as adjacent pipe insulation. Each piece shall be butted tightly against adjoining piece and bonded with adhesive. Fill joints,

seams, voids, and irregular surfaces with insulating cement finished to a smooth, hard, and uniform contour that is uniform with adjoining pipe insulation.

3. Insulate tee fittings with preformed fitting insulation or sectional pipe insulation of same material and thickness as used for adjacent pipe. Cut sectional pipe insulation to fit. Butt each section closely to the next and hold in place with tie wire. Bond pieces with adhesive.
4. Insulate valves using preformed fitting insulation or sectional pipe insulation of same material, density, and thickness as used for adjacent pipe. Overlap adjoining pipe insulation by not less than two times the thickness of pipe insulation, or one pipe diameter, whichever is thicker. For valves, insulate up to and including the bonnets, valve stuffing-box studs, bolts, and nuts. Fill joints, seams, and irregular surfaces with insulating cement.
5. Insulate strainers using preformed fitting insulation or sectional pipe insulation of same material, density, and thickness as used for adjacent pipe. Overlap adjoining pipe insulation by not less than two times the thickness of pipe insulation, or one pipe diameter, whichever is thicker. Fill joints, seams, and irregular surfaces with insulating cement. Insulate strainers so strainer basket flange or plug can be easily removed and replaced without damaging the insulation and jacket. Provide a removable reusable insulation cover. For below ambient services, provide a design that maintains vapor barrier.
6. Insulate flanges and unions using a section of oversized preformed pipe insulation. Overlap adjoining pipe insulation by not less than two times the thickness of pipe insulation, or one pipe diameter, whichever is thicker.
7. Cover segmented insulated surfaces with a layer of finishing cement and coat with a mastic. Install vapor-barrier mastic for below ambient services and a breather mastic for above ambient services. Reinforce the mastic with fabric-reinforcing mesh. Trowel the mastic to a smooth and well-shaped contour.
8. For services not specified to receive a field-applied jacket except for flexible elastomeric and polyolefin, install fitted PVC cover over elbows, tees, strainers, valves, flanges, and unions. Terminate ends with PVC end caps. Tape PVC covers to adjoining insulation facing using PVC tape.
9. Stencil or label the outside insulation jacket of each union with the word "UNION." Match size and color of pipe labels.

C. Insulate instrument connections for thermometers, pressure gages, pressure temperature taps, test connections, flow meters, sensors, switches, and transmitters on insulated pipes, vessels, and equipment. Shape insulation at these connections by tapering it to and around the connection with insulating cement and finish with finishing cement, mastic, and flashing sealant.

D. Install removable insulation covers at locations indicated. Installation shall conform to the following:
1. Make removable flange and union insulation from sectional pipe insulation of same thickness as that on adjoining pipe. Install same insulation jacket as adjoining pipe insulation.
2. When flange and union covers are made from sectional pipe insulation, extend insulation from flanges or union long at least two times the insulation thickness over adjacent pipe insulation on each side of flange or union. Secure flange cover in place with stainless-steel or aluminum bands. Select band material compatible with insulation and jacket.

3. Construct removable valve insulation covers in same manner as for flanges except divide the two-part section on the vertical center line of valve body.
4. When covers are made from block insulation, make two halves, each consisting of mitered blocks wired to stainless-steel fabric. Secure this wire frame, with its attached insulation, to flanges with tie wire. Extend insulation at least 2 inches over adjacent pipe insulation on each side of valve. Fill space between flange or union cover and pipe insulation with insulating cement. Finish cover assembly with insulating cement applied in two coats. After first coat is dry, apply and trowel second coat to a smooth finish.
5. Unless a PVC jacket is indicated in field-applied jacket schedules, finish exposed surfaces with a metal jacket.

3.5 FIELD QUALITY CONTROL

A. Tests and Inspections:
1. Inspect ductwork, randomly selected by Owner, by removing field-applied jacket and insulation in layers in reverse order of their installation. Extent of inspection shall be limited to one location(s) for each duct system defined in the "Duct Insulation Schedule, General" Article.
2. Inspect field-insulated equipment, randomly selected by Architect, by removing field-applied jacket and insulation in layers in reverse order of their installation. Extent of inspection shall be limited to one location(s) for each type of equipment defined in the "Equipment Insulation Schedule" Article. For large equipment, remove only a portion adequate to determine compliance.
3. Inspect pipe, fittings, strainers, and valves, randomly selected by Architect, by removing field-applied jacket and insulation in layers in reverse order of their installation. Extent of inspection shall be limited to three locations of straight pipe, three locations of threaded fittings, three locations of welded fittings, two locations of threaded strainers, two locations of welded strainers, three locations of threaded valves, and three locations of flanged valves for each pipe service defined in the "Piping Insulation Schedule, General" Article.

B. All insulation applications will be considered defective Work if sample inspection reveals noncompliance with requirements.

3.6 DUCT INSULATION SCHEDULE, GENERAL

A. Plenums and Ducts Requiring Insulation:
1. Indoor, concealed supply and outdoor air.
2. Indoor, exposed supply and outdoor air.
3. Indoor, concealed return, Air.
4. Indoor, exposed return, Air.
5. Indoor, concealed, Type I, commercial, kitchen hood exhaust.
6. Indoor, concealed exhaust.
7. Indoor, exposed exhaust.

B. Items Not Insulated:
1. Fibrous-glass ducts.

2. Metal ducts with duct liner of sufficient thickness to comply with energy code and ASHRAE/IESNA 90.1.
3. Factory-insulated flexible ducts.
4. Factory-insulated plenums and casings.
5. Flexible connectors.
6. Vibration-control devices.
7. Factory-insulated access panels and doors.

3.7 INDOOR DUCT AND PLENUM INSULATION SCHEDULE

A. Concealed, round and flat-oval duct insulation shall be the following:
   1. Mineral-Fiber Blanket: 1-1/2 inches thick and 1.5-lb/cu. ft. nominal density.

B. Concealed, low pressure, round rectangular, and flat-oval exhaust-air duct insulation shall be the following:
   1. Mineral-Fiber Blanket: 1-1/2 inches thick and 1.5-lb/cu. ft. nominal density.

C. Rectangular, low pressure, supply-air duct insulation shall be lined per Section “Metal Ducts”.

D. Rectangular, return-air duct insulation shall be lined per Section “Metal Ducts”.

E. Concealed, Type I, Commercial, Kitchen Hood Exhaust Duct and Plenum Insulation: Fire-rated blanket or board; thickness as required to achieve 2-hour fire rating.

F. Exposed or medium pressure, round and flat-oval, supply-air, and return air duct insulation shall be a perforated linear. See Section “Metal Ducts”.

3.8 PIPING INSULATION SCHEDULE, GENERAL

A. Acceptable preformed pipe and tubular insulation materials and thicknesses are identified for each piping system and pipe size range. If more than one material is listed for a piping system, selection from materials listed is Contractor's option.

B. Items Not Insulated: Unless otherwise indicated, do not install insulation on the following:
   1. Drainage piping located in crawl spaces.
   2. Underground piping.
   3. Chrome-plated pipes and fittings unless there is a potential for personnel injury.
   4. Vertical roof drain piping.

C. Piping System insulation:
   1. Hydronic Piping - Mineral Fiber, per chart.
   2. Domestic Cold Water Piping -Mineral Fiber, ½”
   3. Domestic Hot Water Piping -Mineral Fiber, per chart
   4. Horizontal Roof Drain Piping - Mineral Fiber, 1/2”.
   5. Refrigerant Piping - Flexible elastomeric, 1”.

3.9 INDOOR PIPING INSULATION SCHEDULE

A. Minimum Pipe Insulation Thickness from ANSI/ASHRAE/IESNA Standard 90.1-2007, with modifications per 2009 IECC

Fluid Design Operating Temp. Range (°F)	Insulation Conductivity		Nominal				
	Conductivity Btu•in./(h•ft^2•°F)	Mean Rating Temp. °F	<1	1 to <1-1/2	1-1/2 to <4	4 to <8	≥8
Heating Systems (Steam, Steam Condensate, and Hot Water)							
>350	0.32-0.34	250	2.5	3.0	3.0	4.0	4.0
251-350	0.29-0.32	200	1.5	3.0	3.0	3.0	3.0
201-250	0.27-0.30	150	1.5	1.5	2.0	2.0	2.0
141-200	0.25-0.29	125	1.0	1.0	2.0	2.0	2.0
105-140	0.22-0.28	100	0.5	0.5	1.0	1.0	1.0
Domestic and Service Hot Water Systems							
105+	0.22-0.28	100	0.5	0.5	1.0	1.0	1.0
Cooling Systems (Chilled Water, Brine, and Refrigerant)							
40-60	0.22-0.28	100	0.5	1.0	1.5	1.5	1.5
<40	0.22-0.28	100	0.5	1.0	1.5	1.5	1.5

END OF SECTION 15082

SECTION 15110 - VALVES

PART 1 - GENERAL

1.1 RELATED DOCUMENTS

A. Drawings and general provisions of the Contract, including General and Supplementary Conditions and Specification Sections, apply to this Section.

1.2 SUMMARY

A. This Section includes general-duty valves:

1.3 DEFINITIONS

A. The following are standard abbreviations for valves:
   1. CWP: Cold working pressure.
   2. EPDM: Ethylene-propylene-diene terpolymer rubber.
   3. PTFE: Polytetrafluoroethylene plastic.
   4. SWP: Steam working pressure.
   5. TFE: Tetrafluoroethylene plastic.

1.4 SUBMITTALS

A. Product Data: For each type of valve indicated. Include body, seating, and trim materials; valve design; pressure and temperature classifications; end connections; arrangement; dimensions; and required clearances. Include list indicating valve and its application. Include rated capacities; shipping, installed, and operating weights; furnished specialties; and accessories.

1.5 QUALITY ASSURANCE

A. ASME Compliance: ASME B31.9 for building services piping valves.

B. ASME Compliance for Ferrous Valves: ASME B16.10 and ASME B16.34 for dimension and design criteria.

C. NSF Compliance: NSF 61 for valve materials for potable-water service.

PART 2 - PRODUCTS

2.1 VALVES, GENERAL

A. The University will require an ISOLATION VALVE near the main pipe line on branch piping which serves each specific area of the building (such as a single toilet room or a single lab, and at each floor) for all supply systems serving the building. The Designer is to provide direction to the Contractor to locate these valves for easy access, allowing local isolation for repairs without affecting adjacent areas.

B. All valves must be accessible. Specify an “approved” access door for any valve located above a hard ceiling or in a wall.

C. All pressure reducing valves (PRV) are to be located in an accessible space 5 feet above finished floor for servicing.

D. Valves 2-1/2" and larger must be flanged.

E. Valve stem installation to be horizontal or higher than the valve.

F. All valves of the same type shall be specified to be of the same manufacturer.

G. Valves shall be domestically manufactured wherever possible.

H. Control valves must be specified to be compatible with either Johnson Controls, Inc. "MSEA" or Trane or Wasatch controls, as described in the Controls section. All other manufacturers must be reviewed and approved by University Facilities Management prior to bid.

I. All Valves shall have end bores matching the pipe bore.

J. Valves shall meet all applicable MSS Standards.

2.2 Hydronic Valves:

A. Ball Valves 2" and smaller (MSS SP-110) for heating and air conditioning water service shall be specified Nibco T-580-70, rated for 125 PSIG WOG at 220° F, with bronze construction, threaded ends, bubble tight teflon seat (at 100 PSIG under water), with a hard chrome plated brass or stainless steel ball. Specify the valve to operate with flow in either direction, suitable for both throttling and tight shut off. Additional approved manufacturers are Watts, Apollo and Crane. All other manufacturers must be reviewed and approved by University Facilities Management prior to bid. Specific products furnished and installed into the project must be equal or superior to the Nibco ball valve.

B. Gate Valves (MSS SP-80) are to be specifically shown on construction drawings, due to their limited approval for use at the University. Ball valves are preferred over gate valves for 2" and smaller sizes.

C. Butterfly valves for 2-1/2" and larger sizes. Gate valves must never be specified for balancing service. When required for valves 2" and smaller, gate valves shall be based on Crane 428 or Nibco T-111, bronze, threaded, 200# WOG, with solid wedge disc and rising stem. If clearances will not allow a rising stem valve, specify a Crane 438 or Nibco T-113 non-rising stem valve.

D. Globe Valves 2" and smaller (MSS SP-80) for heating and air conditioning water service shall be based on Crane 7TF or Nibco T-235-Y, bronze, threaded, 200# WOG, with No. 6 replaceable composition discs. For both applications (heating and air conditioning), specify the composition disc to be suitable for hot water up to 220° F maximum.

E. Globe valves 2-1/2" and larger (MSS SP-85) for heating and air conditioning water service shall be based on Nibco F-718-B, Crane 351, iron body, flanged, 200# WOG, with No. 6 replaceable composition disc. For both applications (heating and air conditioning), specify the composition disc to be suitable for hot water up to 220° F maximum.

F. Butterfly Valves 2-1/2" and larger valves for use in chilled or heating hot water service shall be specified as Nibco LC2000, 150 LB and rated for a minimum of 200 degrees F, wafer or lug type, with a carbon steel body, 316 stainless steel disc material, and PTFE seat material. Specify gear operation for all valves 8" and larger. Also specify lug type valves to have the lugs drilled and tapped so that pipe may be disconnected on either end, while the opposite end is under pressure. Additional approved manufacturers are Keystone, Milwaukee, DeZURIK and Zwick Armaturen GmbH TRI-CON. All other manufacturers must be reviewed and approved by University Facilities Management prior to bid. Specific products furnished and installed into the project must be equal or superior to the Nibco butterfly valve. Note that butterfly valves are not to be specified for balancing valve service.

G. Swing Check Valves 2" and smaller (MSS SP-80) for heating and air conditioning water service shall be based on Crane 37 or Nibco T-413-B, bronze, threaded, Y-pattern, and rated for 200# WOG.

H. Swing Check Valves 2-1/2" and larger (MSS SP-71 Type 1) for heating and air conditioning water service shall be based on Crane Model 373 or Nibco F-918-B, iron body, flanged, 200# WOG, valve with bronze trim.

I. Non-Slam Check Valves 2" and smaller for heating and air conditioning water service shall be specified 125 PSIG WSP, silent, spring loaded, and all stainless steel. Approved manufacturers are Nibco T-480 and equal by APCO.

J. Non-Slam Check Valves 2-1/2" and larger for heating and air conditioning water service shall be specified Nibco W-910, 125 PSIG WSP, silent operating, with semi-steel body, bronze trim and discs. Specify the bronze seats to have a center guide and be "renewable" with special reseating tools. Specify the spring for operation in any position. Additional approved manufacturers are Crane Energy Duo-Check and ITT. All other manufacturers must be reviewed and approved by University Facilities Management prior to bid. Specific products furnished and installed into the project must be equal or superior to the Nibco check valve.

K. Strainers 2" and smaller for heating and air conditioning water service shall be based on Watts No. 77S or an equivalent strainer by Armstrong International, 250 LB iron body, threaded, Y-pattern, 20-mesh stainless steel screen, with a full size drain connection and ball valve (as described elsewhere herein).

L. Strainers 2-1/2" and larger for heating and air conditioning water service shall be based on Watts No. 77F-DI-125, 125 LB iron body, flanged, Y-pattern, stainless steel screen, with a drain connection and ball valve (as described elsewhere herein). Note that condenser water lines require a basket type strainer rated for 125 PSIG WSP, cast semi-steel body, flanged ends, stainless steel basket with 1/8" perforations. Additional approved manufacturers are O.C. Keckley Company and Armstrong International. All other manufacturers must be reviewed and approved by University Facilities Management prior to bid. Specific products furnished and installed into the project must be equal or superior to the Watts strainer.

M. Balancing Cocks 2" and smaller for heating and air conditioning water service shall be specified 175 PSIG WOG, with a cast iron body, square head, screwed ends; and, specify these to be wrench operated and lubricated.

N. Balancing Cocks 2-1/2" and larger for heating and air conditioning water service shall be specified 200 PSIG WOG, with a cast iron body, square head, flanged ends; and, specify these to be wrench operated and lubricated.

O. Balancing Valves for heating and air conditioning water service shall be specified as ITT Bell & Gossett “Circuit Setter”. Each balancing valve shall be specified to have positive shut-off valves with a memory stop on the valve and a locking tamper proof setting. Specify valves to be supplied with preformed polyurethane insulation. As stated in other sections, gate valves and butterfly valves shall not be used as balancing valves. Additional approved manufacturers are Armstrong International or Flow Design, Inc. All other manufacturers must be reviewed and approved by University Facilities Management prior to bid. Specific products furnished and installed into the project must be equal or superior to the ITT Bell & Gossett “Circuit Setter”.

2.3 Domestic Water Valves

A. Ball Valves (MSS SP-110) for use in domestic water applications (copper pipe) shall be specified as Watts B-6080 rated for 125 PSIG WOG at 220° F, with bronze construction, threaded ends, bubble tight teflon seats (at 100 PSIG under water), with a hard chrome plated brass or stainless steel ball.

B. Valve shall operate with flow in either direction, suitable for both throttling and tight shut off. Additional approved manufacturers are Nibco or Apollo. All other manufacturers must be reviewed and approved by University Facilities Management prior to bid. Specific products furnished and installed into the project must be equal or superior to the Watts ball valve.

C. Gate Valves (MSS SP-80) for use in domestic water applications (copper pipe) shall be specifically shown on construction drawings, due to their limited approval for use at the University. Ball valves are preferred over gate valves for 2" and smaller sizes. Specify butterfly valves for 2-1/2" and larger sizes. Gate valves must never be specified for

balancing service. When required for valves 2" and smaller, gate valves shall be based on Nibco T-111, Crane 428, bronze, threaded, 200# WOG, with solid wedge disc and rising stem. If clearances will not allow a rising stem valve, specify Nibco T-113 or Crane 438 non-rising stem valve. Other valves must be reviewed by Facilities Management and approved before being added to project specifications.

D. Globe Valves for use in domestic water applications (copper pipe) shall be specified as Crane Model No. 7TF or Nibco S-235, bronze, threaded, 200# WOG, with TFE discs. Specify the composition disc to be suitable for hot water up to 200° F maximum.

E. Butterfly Valves for use in domestic water applications (copper pipe) shall follow the University's requirements for heating water service. Valve selections shall be rated suitable for potable water applications.

F. Check Valves for use in domestic water applications (copper pipe) shall be based on Crane Model No. 37 or Nibco S-480-B, bronze, threaded, Y-pattern, and rated for 200# WOG. Selections shall be rated suitable for potable water applications.

G. Strainers for use in domestic water applications (copper pipe) shall be based on Watts No. 777, specified with a WWP of 250 PSIG at 210° F, with a cast bronze body, threaded ends, solid retainer cap, and a 20 mesh stainless steel screen (except the 3" size must have 3/64" perforations).

2.4 Natural Gas Valves

A. Natural Gas Valves 2" and smaller shall be specified as Apollo Ball Valves G-B-10 series. Nibco GB1A or GB2A may be used for ½" and ¾" sizes. Other valves must be reviewed by Facilities Management and approved before being added to project specifications. Specify three piece dielectric unions where applicable.

B. Natural Gas Valves 2-1/2" and larger shall be specified all iron, 125 PSIG WOG, with square head and flanged connections. Use three piece dielectric unions, where applicable.

C. Earthquake Actuated Automatic Gas Shut-Off Valves are to be required downstream of each meter set. Each valve shall be specified with a UL label and be capable of complete gas line closure within 5 seconds of a wide amplitude seismic disturbance. Use three piece dielectric unions where applicable. Include in the specifications a requirement that the valve shall allow short duration nuisance bumps without disturbing the gas supply. The manifold assembly must be designed with supports and appropriate barriers to isolate the valve and prevent vandalism. Approved manufacturer is PSP California KOSO. Other manufacturers will be considered after Owner monitored field testing on Campus.

PART 3 - EXECUTION

3.1 EXAMINATION

A. Examine piping system for compliance with requirements for installation tolerances and other conditions affecting performance.
   1. Proceed with installation only after unsatisfactory conditions have been corrected.

B. Examine valve interior for cleanliness, freedom from foreign matter, and corrosion. Remove special packing materials, such as blocks, used to prevent disc movement during shipping and handling.

C. Operate valves in positions from fully open to fully closed. Examine guides and seats made accessible by such operations.

D. Examine threads on valve and mating pipe for form and cleanliness.

E. Examine mating flange faces for conditions that might cause leakage. Check bolting for proper size, length, and material. Verify that gasket is of proper size, that its material composition is suitable for service, and that it is free from defects and damage.

F. Do not attempt to repair defective valves; replace with new valves.

3.2 VALVE APPLICATIONS

A. Refer to piping Sections and drawings for specific valve applications. If valve applications are not indicated, use the following:
   1. Shutoff Service: Ball or butterfly valves.
   2. Throttling Service: Ball or butterfly valves.
   3. Pump Discharge: Spring-loaded, lift-disc or ferrous alloy wafer check valves.

B. If valves with specified SWP classes or CWP ratings are not available, the same types of valves with higher SWP class or CWP ratings may be substituted.

C. Select valves, except wafer and flangeless types, with the following end connections:
   1. For Copper Piping, NPS 2 and Smaller: Solder-joint or threaded ends.
   2. For Copper Piping, NPS 2-1/2 to NPS 4: Flanged or grooved ends.
   3. For Copper Piping, NPS 5 and Larger: Flanged or grooved ends.
   4. For Steel Piping, NPS 2 and Smaller: Threaded ends.
   5. For Steel Piping, NPS 2-1/2 to NPS 4: Flanged or grooved ends.
   6. For Steel Piping, NPS 5 and Larger: Flanged or grooved ends.

3.3 VALVE INSTALLATION

A. Piping installation requirements are specified in other Sections. Drawings indicate general arrangement of piping, fittings, and specialties.

B. Install valves with unions or flanges at each piece of equipment arranged to allow service, maintenance, and equipment removal without system shutdown.

C. Locate valves for easy access and provide separate support where necessary.

D. Install valves in horizontal piping with stem at or above center of pipe.

E. Install valves in position to allow full stem movement.

F. Install chainwheel operators on valves NPS 4 and larger and more than 96 inches above floor. Extend chains to 60 inches above finished floor elevation.

G. Install check valves for proper direction of flow and as follows:
   1. Swing Check Valves: In horizontal position with hinge pin level.
   2. Dual-Plate Check Valves: In horizontal or vertical position, between flanges.
   3. Lift Check Valves: With stem upright and plumb.

H. Provide isolation valves in main lines at each phase in a manner to allow each phase of project to be individually isolated. Without affecting adjacent areas. Valves shall be installed in accessible locations.

3.4 JOINT CONSTRUCTION

A. Soldered Joints: Use ASTM B 813, water-flushable, lead-free flux; ASTM B 32, lead-free-alloy solder; and ASTM B 828 procedure, unless otherwise indicated.

3.5 ADJUSTING

A. Adjust or replace valve packing after piping systems have been tested and put into service but before final adjusting and balancing. Replace valves if persistent leaking occurs.

END OF SECTION 15110

BLANK PAGE

SECTION 15140 - DOMESTIC WATER PIPING

PART 1 - GENERAL

1.1 SUMMARY

A. Section Includes:
   1. Under-building slab and aboveground domestic water pipes, tubes, fittings, and specialties inside the building.
   2. Water Meters.

1.2 PERFORMANCE REQUIREMENTS

A. Seismic Performance: Domestic water piping and support and installation shall withstand effects of earthquake motions determined according to 2009 IBC.

1.3 SUBMITTALS

A. Water Samples: Specified in "Cleaning" Article.

B. Field quality-control reports.

1.4 QUALITY ASSURANCE

A. Piping materials shall bear label, stamp, or other markings of specified testing agency.

B. Comply with NSF 61 for potable domestic water piping and components.

1.5 PROJECT CONDITIONS

A. Interruption of Existing Water Service: Do not interrupt water service to facilities occupied by Owner or others unless permitted under the following conditions and then only after arranging to provide temporary water service according to requirements indicated:
   1. Notify Owner no fewer than two days in advance of proposed interruption of water service.
   2. Do not proceed with interruption of water service without Owner's written permission.

1.6 COORDINATION

A. Coordinate sizes and locations of concrete bases with actual equipment provided.

PART 2 - PRODUCTS

2.1 PIPING MATERIALS

A. Comply with requirements in "Piping Schedule" Article for applications of pipe, tube, fitting materials, and joining methods for specific services, service locations, and pipe sizes.

2.2 COPPER TUBE AND FITTINGS

A. Hard Copper Tube: ASTM B 88, Type L water tube, drawn temper.
   1. Cast-Copper Solder-Joint Fittings: ASME B16.18, pressure fittings.
   2. Wrought-Copper Solder-Joint Fittings: ASME B16.22, wrought-copper pressure fittings.
   3. Bronze Flanges: ASME B16.24, Class 150, with solder-joint ends.
   4. Copper Unions: MSS SP-123, cast-copper-alloy, hexagonal-stock body, with ball-and-socket, metal-to-metal seating surfaces, and solder-joint or threaded ends.

2.3 PIPING JOINING MATERIALS

A. Solder Filler Metals: ASTM B 32, lead-free alloys. Include water-flushable flux according to ASTM B 813.

B. Brazing Filler Metals: AWS A5.8/A5.8M, BCuP Series, copper-phosphorus alloys for general-duty brazing unless otherwise indicated.

2.4 POSITIVE DISPLACEMENT WATER METERS:

A. Manufacturers: Subject to compliance with requirements, provide products by one of the following:
   1. ABB.
   2. Badger Meter, Inc.
   3. Hays Fluid Controls.
   4. Mueller Company; Water Products Division.
   5. Sensus Metering Systems.
   6. Prior approved equal.

B. Description

   1. Standard: AWWA C701.
   2. Pressure Rating: 150 psig working pressure.
   3. Registration: In gallons or cubic feet as required by University.
   4. Case: Bronze.
   5. End Connections for Meters NPS 2 and Smaller: Threaded.
   6. End Connections for Meters NPS 2 - 1/2 and Larger: Flanged.

7. Water meter shall be capable of communicating with the campus metering automation system, unitizing a dry-contact pulse, 4-20 milliamp or modbus protocol. All communication equipment shall be included with the meter.
8. Meter shall be installed with an inline strainer upstream, and a bypass line for routine maintenance.

PART 3 - EXECUTION

3.1 EARTHWORK

A. Comply with requirements in Section "Earthwork" for excavating, trenching, and backfilling.

3.2 PIPING INSTALLATION

A. Drawing plans, schematics, and diagrams indicate general location and arrangement of domestic water piping. Indicated locations and arrangements are used to size pipe and calculate friction loss, expansion, and other design considerations. Install piping as indicated unless deviations to layout are approved on Coordination Drawings.

B. Install copper tubing under building slab according to CDA's "Copper Tube Handbook."

C. Install ductile-iron piping under building slab with restrained joints according to AWWA C600 and AWWA M41.

D. Install underground copper tube and ductile-iron pipe in PE encasement according to ASTM A 674 or AWWA C105.

E. Install shutoff valve, hose-end drain valve, strainer, pressure gage, and test tee with valve, inside the building at each domestic water service entrance. Comply with requirements in Section "Meters and Gages for Plumbing Piping" for pressure gages and Section "Domestic Water Piping Specialties" for drain valves and strainers.

F. Install shutoff valve immediately upstream of each dielectric fitting.

G. Install water-pressure-reducing valves downstream from shutoff valves. Comply with requirements in Section "Domestic Water Piping Specialties" for pressure-reducing valves.

H. Install domestic water piping level without pitch and plumb.

I. Rough-in domestic water piping for water-meter installation according to utility company's requirements.

J. Install seismic restraints on piping. Comply with requirements in Section "Vibration and Seismic Controls for Plumbing Piping and Equipment" for seismic-restraint devices.

K. Install piping concealed from view and protected from physical contact by building occupants unless otherwise indicated and except in equipment rooms and service areas.

L. Install piping indicated to be exposed and piping in equipment rooms and service areas at right angles or parallel to building walls. Diagonal runs are prohibited unless specifically indicated otherwise.

M. Install piping above accessible ceilings to allow sufficient space for ceiling panel removal, and coordinate with other services occupying that space.

N. Install piping adjacent to equipment and specialties to allow service and maintenance.

O. Install piping to permit valve servicing.

P. Install nipples, unions, special fittings, and valves with pressure ratings the same as or higher than system pressure rating used in applications below unless otherwise indicated.

Q. Install piping free of sags and bends.

R. Install fittings for changes in direction and branch connections.

S. Install unions in copper tubing at final connection to each piece of equipment, machine, and specialty.

T. Install thermostats in hot-water circulation piping. Comply with requirements in Section "Domestic Water Pumps" for thermostats.

U. Install thermometers on outlet piping from each water heater. Comply with requirements in Section "Meters and Gages for Plumbing Piping" for thermometers.

3.3 JOINT CONSTRUCTION

A. Ream ends of pipes and tubes and remove burrs. Bevel plain ends of steel pipe.

B. Remove scale, slag, dirt, and debris from inside and outside of pipes, tubes, and fittings before assembly.

C. Threaded Joints: Thread pipe with tapered pipe threads according to ASME B1.20.1. Cut threads full and clean using sharp dies. Ream threaded pipe ends to remove burrs and restore full ID. Join pipe fittings and valves as follows:

1. Apply appropriate tape or thread compound to external pipe threads.
2. Damaged Threads: Do not use pipe or pipe fittings with threads that are corroded or damaged.

D. Brazed Joints: Join copper tube and fittings according to CDA's "Copper Tube Handbook," "Brazed Joints" Chapter.

E. Soldered Joints: Apply ASTM B 813, water-flushable flux to end of tube. Join copper tube and fittings according to ASTM B 828 or CDA's "Copper Tube Handbook." Use 95-5 solder.

F. Flanged Joints: Select appropriate asbestos-free, nonmetallic gasket material in size, type, and thickness suitable for domestic water service. Join flanges with gasket and bolts according to ASME B31.9.

G. Dissimilar-Material Piping Joints: Make joints using adapters compatible with materials of both piping systems.

3.4 VALVE INSTALLATION

A. General-Duty Valves: Comply with requirements in Section "General-Duty Valves for Plumbing Piping" for valve installations.

B. Separate rooms or labs shall have isolation valves on hot and cold water supply and recirculation piping, allowing isolated maintenance to proceed in each room without affecting adjacent areas. Back-to-back restrooms shall be individually isolated with valves located in the common or adjoining wall in a 24” x 24” access panel within the restroom the valves serve.

C. Install drain valves for equipment at base of each water riser, at low points in horizontal piping, and where required to drain water piping. Drain valves are specified in Section "Domestic Water Piping Specialties."

1. Hose-End Drain Valves: At low points in water mains, risers, and branches.
2. Stop-and-Waste Drain Valves: Instead of hose-end drain valves where indicated.

D. Install balancing valve in each hot-water circulation return branch and discharge side of each pump and circulator. Set balancing valves partly open to restrict but not stop flow. Use ball valves for piping NPS 2 and smaller and butterfly valves for piping NPS 2-1/2 and larger. Comply with requirements in Section "Domestic Water Piping Specialties" for balancing valves.

3.5 HANGER AND SUPPORT INSTALLATION

A. Comply with requirements in Section "Vibration and Seismic Controls for Plumbing Piping and Equipment" for seismic-restraint devices.

B. Comply with requirements in Section "Hangers and Supports for Plumbing Piping and Equipment" for pipe hanger and support products and installation.

1. Vertical Piping: MSS Type 8 or 42, clamps.
2. Individual, Straight, Horizontal Piping Runs:

a. 100 Feet and Less: MSS Type 1, adjustable, steel clevis hangers.
b. Longer Than 100 Feet: MSS Type 43, adjustable roller hangers.

c. Longer Than 100 Feet If Indicated: MSS Type 49, spring cushion rolls.

3. Multiple, Straight, Horizontal Piping Runs 100 Feet or Longer: MSS Type 44, pipe rolls. Support pipe rolls on trapeze.
4. Base of Vertical Piping: MSS Type 52, spring hangers.

C. Support vertical piping and tubing at base and at each floor.

D. Rod diameter may be reduced one size for double-rod hangers, to a minimum of 3/8 inch.

E. Install hangers for copper tubing with the following maximum horizontal spacing and minimum rod diameters:
1. NPS 3/4 and Smaller: 60 inches with 3/8-inch rod.
2. NPS 1 and NPS 1-1/4: 72 inches with 3/8-inch rod.
3. NPS 1-1/2 and NPS 2: 96 inches with 3/8-inch rod.
4. NPS 2-1/2: 108 inches with 1/2-inch rod.
5. NPS 3 to NPS 5: 10 feet with 1/2-inch rod.
6. NPS 6: 10 feet with 5/8-inch rod.
7. NPS 8: 10 feet with 3/4-inch rod.

F. Install supports for vertical copper tubing every 10 feet.

G. Install supports for vertical steel piping every 15 feet.

H. Support piping and tubing not listed in this article according to MSS SP-69 and manufacturer's written instructions.

3.6 CONNECTIONS

A. Install piping adjacent to equipment and machines to allow service and maintenance.

B. Connect domestic water piping to water-service piping with shutoff valve; extend and connect to the following:

1. Domestic Water Booster Pumps: Cold-water suction and discharge piping.
2. Water Heaters: Cold-water inlet and hot-water outlet piping in sizes indicated, but not smaller than sizes of water heater connections.
3. Plumbing Fixtures: Cold- and hot-water supply piping in sizes indicated, but not smaller than required by plumbing code. Comply with requirements in plumbing fixture Sections for connection sizes.
4. Equipment: Cold- and hot-water supply piping as indicated, but not smaller than equipment connections. Provide shutoff valve and union for each connection. Use flanges instead of unions for NPS 2-1/2 and larger.

3.7 SLEEVE INSTALLATION

A. General Requirements: Install sleeves for pipes and tubes passing through penetrations in floors, partitions, roofs, and walls.

B. Sleeves are not required for core-drilled holes.

C. Permanent sleeves are not required for holes formed by removable PE sleeves.

D. Cut sleeves to length for mounting flush with both surfaces unless otherwise indicated.

E. Install sleeves in new partitions, slabs, and walls as they are built.

F. For interior wall penetrations, seal annular space between sleeve and pipe or pipe insulation using joint sealants appropriate for size, depth, and location of joint.

G. For exterior wall penetrations above grade, seal annular space between sleeve and pipe using joint sealants appropriate for size, depth, and location of joint.

H. For exterior wall penetrations below grade, seal annular space between sleeve and pipe using sleeve seals specified in this Section.

I. Seal space outside of sleeves in concrete slabs and walls with grout.

J. Install sleeves that are large enough to provide 1/4-inch annular clear space between sleeve and pipe or pipe insulation unless otherwise indicated.

K. Install sleeve materials according to the following applications:
   1. Sleeves for Piping Passing through Concrete Floor Slabs: Steel pipe.
   2. Sleeves for Piping Passing through Concrete Floor Slabs of Mechanical Equipment Areas or Other Wet Areas: Steel pipe.
      a. Extend sleeves 2 inches above finished floor level.
      b. For pipes penetrating floors with membrane waterproofing, extend cast-iron sleeve fittings below floor slab as required to secure clamping ring if ring is specified. Secure flashing between clamping flanges. Install section of cast-iron soil pipe to extend sleeve to 2 inches above finished floor level. Comply with requirements in Division 7 Section "Sheet Metal Flashing and Trim" for flashing.
   3. Sleeves for Piping Passing through Gypsum-Board Partitions:
      a. PVC pipe sleeves for pipes smaller than NPS 6.
      b. Galvanized-steel sheet sleeves for pipes NPS 6 and larger.
      c. Exception: Sleeves are not required for water supply tubes and waste pipes for individual plumbing fixtures if escutcheons will cover openings.
   4. Sleeves for Piping Passing through Concrete Roof Slabs: Steel pipe Insert type.
   5. Sleeves for Piping Passing through Exterior Concrete Walls:
      a. Steel pipe sleeves for pipes smaller than NPS 6.
      b. Cast-iron wall pipe sleeves for pipes NPS 6 and larger.
      c. Install sleeves that are large enough to provide 1-inch annular clear space between sleeve and pipe or pipe insulation when sleeve seals are used.
      d. Do not use sleeves when wall penetration systems are used.
   6. Sleeves for Piping Passing through Interior Concrete Walls:
      a. Steel pipe sleeves for pipes smaller than NPS 6.
      b. Galvanized-steel sheet sleeves for pipes NPS 6 and larger.

L. Fire-Barrier Penetrations: Maintain indicated fire rating of walls, partitions, ceilings, and floors at pipe penetrations. Seal pipe penetrations with firestop materials. Comply

with requirements in Section "Through-Penetration Firestop Systems" for firestop materials and installations.

3.8 SLEEVE SEAL INSTALLATION

A. Install sleeve seals in sleeves in exterior concrete walls at water-service piping entries into building.

B. Select type and number of sealing elements required for pipe material and size. Position pipe in center of sleeve. Assemble sleeve seal components and install in annular space between pipe and sleeve. Tighten bolts against pressure plates that cause sealing elements to expand and make watertight seal.

3.9 WALL PENETRATION SYSTEM INSTALLATION

A. Install wall penetration systems in new, exterior concrete walls.

B. Assemble wall penetration system components with sleeve pipe. Install so that end of sleeve pipe and face of housing are flush with wall. Adjust locking devices to secure sleeve pipe in housing.

3.10 IDENTIFICATION

A. Identify system components. Comply with requirements in Section "Identification for Plumbing Piping and Equipment" for identification materials and installation.

B. Label pressure piping with system operating pressure.

3.11 FIELD QUALITY CONTROL

A. Perform tests and inspections.

B. Piping Inspections:
   1. Do not enclose, cover, or put piping into operation until it has been inspected and approved by authorities having jurisdiction.
   2. During installation, notify authorities having jurisdiction at least one day before inspection must be made. Perform tests specified below in presence of authorities having jurisdiction:
      a. Roughing-in Inspection: Arrange for inspection of piping before concealing or closing-in after roughing-in and before setting fixtures.
      b. Final Inspection: Arrange final inspection for authorities having jurisdiction to observe tests specified below and to ensure compliance with requirements.
   3. Reinspection: If authorities having jurisdiction find that piping will not pass tests or inspections, make required corrections and arrange for reinspection.
   4. Reports: Prepare inspection reports and have them signed by authorities having jurisdiction.

C. Piping Tests:
   1. Fill domestic water piping. Check components to determine that they are not air bound and that piping is full of water.
   2. Test for leaks and defects in new piping and parts of existing piping that have been altered, extended, or repaired. If testing is performed in segments, submit a separate report for each test, complete with diagram of portion of piping tested.
   3. Leave new, altered, extended, or replaced domestic water piping uncovered and unconcealed until it has been tested and approved. Expose work that was covered or concealed before it was tested.
   4. Cap and subject piping to static water pressure of 100 psig, without exceeding pressure rating of piping system materials. Isolate test source and allow to stand for four hours. Leaks and loss in test pressure constitute defects that must be repaired.
   5. Repair leaks and defects with new materials and retest piping or portion thereof until satisfactory results are obtained.
   6. Prepare reports for tests and for corrective action required.

D. Domestic water piping will be considered defective if it does not pass tests and inspections.

E. Prepare test and inspection reports.

3.12 ADJUSTING

A. Perform the following adjustments before operation:
   1. Close drain valves, hydrants, and hose bibbs.
   2. Open shutoff valves to fully open position.
   3. Open throttling valves to proper setting.
   4. Adjust balancing valves in hot-water-circulation return piping to provide adequate flow.
      a. Manually adjust ball-type balancing valves in hot-water-circulation return piping to provide flow of hot water in each branch.
      b. Adjust calibrated balancing valves to flows indicated.
   5. Remove plugs used during testing of piping and for temporary sealing of piping during installation.
   6. Remove and clean strainer screens. Close drain valves and replace drain plugs.
   7. Remove filter cartridges from housings and verify that cartridges are as specified for application where used and are clean and ready for use.
   8. Check plumbing specialties and verify proper settings, adjustments, and operation.

3.13 CLEANING

A. Clean and disinfect potable and non-potable domestic water piping as follows:
   1. Purge new piping and parts of existing piping that have been altered, extended, or repaired before using.
   2. Use purging and disinfecting procedures prescribed by authorities having jurisdiction; if methods are not prescribed, use procedures described in either AWWA C651 or AWWA C652 or follow procedures described below:

a. Flush piping system with clean, potable water until dirty water does not appear at outlets.
b. Fill and isolate system according to either of the following:
   1) Fill system or part thereof with water/chlorine solution with at least 50 ppm of chlorine. Isolate with valves and allow to stand for 24 hours.
   2) Fill system or part thereof with water/chlorine solution with at least 200 ppm of chlorine. Isolate and allow to stand for three hours.
c. Flush system with clean, potable water until no chlorine is in water coming from system after the standing time.
d. Submit water samples in sterile bottles to authorities having jurisdiction. Repeat procedures if biological examination shows contamination.

B. Prepare and submit reports of purging and disinfecting activities.

C. Clean interior of domestic water piping system. Remove dirt and debris as work progresses.

3.14 PIPING SCHEDULE

A. Transition and special fittings with pressure ratings at least equal to piping rating may be used in applications below unless otherwise indicated.

B. Flanges and unions may be used for aboveground piping joints unless otherwise indicated.

C. Aboveground domestic water piping, NPS 2 and smaller, shall be the following:
   1. Hard copper tube, ASTM B 88, Type L; cast- or wrought- copper solder-joint fittings; and 95-5 soldered joints.

D. Aboveground domestic water piping, NPS 2-1/2 to NPS 4, shall be one of the following:
   1. Hard copper tube, ASTM B 88, Type L; wrought- copper solder-joint fittings; and 95-5 soldered joints.
   2. Hard copper tube, ASTM B 88, Type L; grooved-joint copper-tube appurtenances; and grooved joints.

3.15 VALVE SCHEDULE

A. Where specific valve types are not indicated, the following requirements apply:
   1. Shutoff Duty: Use ball valves for piping NPS 2 and smaller. Use butterfly, ball, or gate valves with flanged ends for piping NPS 2-1/2 and larger.
   2. Throttling Duty: Use ball or globe valves for piping NPS 2 and smaller. Use butterfly or ball valves with flanged ends for piping NPS 2-1/2 and larger.
   3. Hot-Water Circulation Piping, Balancing Duty: Memory-stop balancing valves.
   4. Drain Duty: Hose-end drain valves.

B. Use check valves to maintain correct direction of domestic water flow to and from equipment.

END OF SECTION 15140

BLANK PAGE

SECTION 15145 - DOMESTIC WATER PIPING SPECIALTIES

PART 1 - GENERAL

1.1 PERFORMANCE REQUIREMENTS

A. Minimum Design Working Pressure for Domestic Water Piping Specialties: 125 psig, unless otherwise indicated.

1.2 SUBMITTALS

A. Product Data: For each type of product indicated.

B. Field quality-control test reports.

C. Operation and Maintenance Data: For domestic water piping specialties to include in operation, and maintenance manuals.

1.3 QUALITY ASSURANCE

A. NSF Compliance:
   1. Comply with NSF 61, "Drinking Water System Components - Health Effects; Sections 1 through 9."

PART 2 - PRODUCTS

2.1 GENERAL

A. Water hammer arresters shall be provided on both hot and cold water lines serving fixtures and equipment using flushometer valves or quick-closing valves. One water hammer arrestor may serve more than one fixture. These devices must be installed in the upright position. Where utility access has not been provided, access panels shall be provided for access to maintain these devices.

B. Maximum water velocity in pipes shall be 7 fps.

C. Backflow preventers and vacuum breakers shall be installed as required by the Utah Plumbing Code and as required by the University.

D. Install two (2) full size reduced pressure backflow preventers piped in parallel at the building water entry of lab and research buildings. Install one (1) full size and one (1) half size reduced pressure backflow preventer in parallel at the building water entry of office and classroom buildings.

E. Parallel reduced pressure backflow preventers are also required on make-up water lines which serve vacuum pumps, compressors, cooling towers, and industrial hot and

industrial cold water. One reduced pressure backflow preventer shall be full line size and the other one shall be one pipe size smaller.

F. All devices shall be tested. Test Reports shall be submitted to the Project Manager before Substantial Completion.

G. Approved devices are as follows:
   1. DEVICE TYPE
      a. REDUCED PRESSURE TYPE
         1) Febco Model 825Y, Watts Series No. 909*
      b. ((PRESSURE TYPE))**
         1) ((Febco Model 765, Watts Series No. 800))**
      c. ATMOSPHERIC TYPE
         1) Febco Model 710/715, Watts Series No. 288A***
      d. DOUBLE CHECK TYPE
         1) Febco Model 805Y, Watts Series No. 700***

      * Required by the University.
      ** Generally not approved for use at the University unless special conditions warrant.
      ***For Atmospheric and Double Check Type devices, all other manufacturers and models must be reviewed and approved by University Facilities Management prior to bid

H. Transformer Vaults and Electrical Rooms shall have no water, waste, storm drain nor any other pipe conveying water (except fire sprinkler systems required for the vault).

I. Vending Machine Areas shall have a minimum of one floor drain or floor sink for every 10 feet of wall length. Each vending machine area shall also have a 1/2 inch (minimum) cold water line with a hose bib and atmospheric vacuum breaker at 4'-0" above the finished floor.

J. Cross Connections (any connection or arrangement of piping between two otherwise separate piping systems, one of which contains potable water and the other non-potable water or industrial fluids of questionable safety) may cause non-potable fluid to enter the potable water system by either backflow, backpressure, or backsiphonage, and shall not be allowed without protection as required by code. Reduced pressure backflow prevention devices shall be installed so as to be accessible for testing. Adequate drainage shall be provided near each device. These devices shall be located on a wall at approximately 4'6" above the floor. All devices installed shall be "Approved". "Approved" is defined as those devices appearing on a current list issued by the Foundation for Cross Connection Control and Hydraulic Research of the University of Southern California, the Utah Department of Health, and Campus Design & Construction Department, University of Utah.

K. Install a water pressure regulator where shown on the drawings. Water pressure shall not be reduced below 45 PSIG (or 15 PSIG at the farthest connection in the building).

L. The pressure regulator shall be a diaphragm type of bronze construction. Regulator pressure shall be adjustable. An inlet strainer shall be provided.
   1. Approved manufacturers are Watts Model U5B for 2" and smaller, and CLA-VAL Model 790 for units larger than 2".

M. Install a positive displacement, direct reading water meter at each building. The meter shall be located inside the building in an accessible location and approximately 4' from the floor.

N. A valve and valve box shall be provided on the water service line to the building close to the main line.

O. No water line shall be less than 1/2", except where shown on drawings.

P. Provide an isolation valve on branch piping to each toilet room which shall be located within each restroom in a 2 ft. x 2 ft. access door two (2) feet above finished floor in the plumbing chase wall, each lab, etc., and at each floor of the building. Valves shall be provided so that distinct areas may be isolated without affecting the remainder of the building.

PART 3 - EXECUTION

3.1 INSTALLATION

A. Refer to Section "Basic Mechanical Materials and Methods" for piping joining materials, joint construction, and basic installation requirements.

B. Install backflow preventers in each water supply to mechanical equipment and systems and to other equipment and water systems that may be sources of contamination. Comply with authorities having jurisdiction.
   1. Locate backflow preventers in same room as connected equipment or system.
   2. Install drain for backflow preventers with atmospheric-vent drain connection with air-gap fitting, fixed air-gap fitting, or equivalent positive pipe separation of at least two pipe diameters in drain piping and pipe to floor drain. Locate air-gap device attached to or under backflow preventer. Simple air breaks are not acceptable for this application.
   3. Do not install bypass piping around backflow preventers.

C. Install water regulators with inlet and outlet shutoff valves and bypass with memory-stop balancing valve. Install pressure gages on inlet and outlet.

D. Install balancing valves in locations where they can easily be adjusted. Install on hot water recirculating lines where they connect to hot water lines.

E. Install temperature-actuated water mixing valves with check stops or shutoff valves on inlets and with shutoff valve on outlet.
   1. Install thermometers.
   2. Install cabinet-type units recessed in or surface mounted on wall as specified.

F. Install Y-pattern strainers for water on supply side of each water pressure-reducing valve.

G. Install water hammer arresters in water piping according to PDI-WH 201.

H. Install air vents at high points of water piping. Install drain piping and discharge onto floor drain.

I. Install supply-type, trap-seal primer valves with outlet piping pitched down toward drain trap a minimum of 1 percent, and connect to floor-drain body, trap, or inlet fitting. Adjust valve for proper flow.

J. Install drainage-type, trap-seal primer valves as lavatory trap with outlet piping pitched down toward drain trap a minimum of 1 percent, and connect to floor-drain body, trap, or inlet fitting.

K. Install trap-seal primer systems with outlet piping pitched down toward drain trap a minimum of 1 percent, and connect to floor-drain body, trap, or inlet fitting. Adjust system for proper flow.

3.2 CONNECTIONS

A. Piping installation requirements are specified in other Sections. Drawings indicate general arrangement of piping and specialties.

B. Ground equipment according to Section "Grounding and Bonding."

C. Connect wiring according to Section "Conductors and Cables."

3.3 LABELING AND IDENTIFYING

A. Equipment Nameplates and Signs: Install engraved plastic-laminate equipment nameplate or sign on or near each of the following:
   1. Pressure vacuum breakers.
   2. Reduced-pressure-principle backflow preventers.
   3. Water pressure-reducing valves.
   4. Calibrated balancing valves.
   5. Primary, thermostatic, water mixing valves.
   6. Supply-type, trap-seal primer valves.
   7. Trap-seal primer systems.

B. Distinguish among multiple units, inform operator of operational requirements, indicate safety and emergency precautions, and warn of hazards and improper operations, in addition to identifying unit.

3.4 FIELD QUALITY CONTROL

A. Perform the following tests and prepare test reports:
   1. Test each reduced-pressure-principle backflow preventer according to authorities having jurisdiction and the device's reference standard.

B. Remove and replace malfunctioning domestic water piping specialties and retest as specified above.

3.5 ADJUSTING

A. Set field-adjustable pressure set points of water pressure-reducing valves.

B. Set field-adjustable flow set points of balancing valves.

C. Set field-adjustable temperature set points of temperature-actuated water mixing valves.

END OF SECTION 15145

BLANK PAGE

SECTION 15150 - SANITARY WASTE AND VENT PIPING

PART 1 - GENERAL

1.1 RELATED DOCUMENTS

A. Drawings and general provisions of the Contract, including General and Supplementary Conditions and specification Sections, apply to this Section.

1.2 SUMMARY

A. This Section includes the following for soil, waste, and vent piping inside the building:
   1. Pipe, tube, and fittings.

1.3 SUBMITTALS

A. Product Data: For pipe, tube, fittings, and couplings.

B. Field quality-control inspection and test reports.

1.4 QUALITY ASSURANCE

A. Piping materials shall bear label, stamp, or other markings of specified testing agency.

PART 2 - PRODUCTS

2.1 HUBLESS CAST-IRON SOIL PIPE AND FITTINGS

A. Cast iron "no-hub" pipe and fittings or cast iron pipe and fittings with bell and spigot joints using resilient seals such as "Ty-Seal" gaskets. (The pipe and gasket shall be of the same manufacturer). The “no-hub” couplings shall have ASTM C 564 neoprene gaskets, .008" stainless steel shields with transverse corrugations cross longitudinal corrugations, standard 304 stainless steel clamps and 305/ s/s screws. Entire assembly shall accommodate deflection.

PART 3 - EXECUTION

3.1 PIPING INSTALLATION

A. Basic piping installation requirements are specified in Section "Basic Mechanical Materials and Methods."

B. Install seismic restraints on piping. Seismic-restraint devices are specified in Section "Mechanical Vibration and Seismic Controls."

C. Install cleanouts at grade and extend to where building sanitary drains connect to building sanitary sewers.

D. Install cleanout fitting with closure plug inside the building in sanitary force-main piping.

E. Install cast-iron sleeve with water stop and mechanical sleeve seal at each service pipe penetration through foundation wall. Select number of interlocking rubber links required to make installation watertight. Sleeves and mechanical sleeve seals are specified in Section "Basic Mechanical Materials and Methods."

F. Install wall-penetration fitting at each service pipe penetration through foundation wall. Make installation watertight.

G. Install cast-iron soil piping according to CISPI's "Cast Iron Soil Pipe and Fittings Handbook," Chapter IV, "Installation of Cast Iron Soil Pipe and Fittings."

   1. Install encasement on underground piping according to ASTM A 674 or AWWA C105.

H. Make changes in direction for soil and waste drainage and vent piping using appropriate branches, bends, and long-sweep bends. Sanitary tees and short-sweep 1/4 bends may be used on vertical stacks if change in direction of flow is from horizontal to vertical. Use long-turn, double Y-branch and 1/8-bend fittings if 2 fixtures are installed back to back or side by side with common drain pipe. Straight tees, elbows, and crosses may be used on vent lines. Do not change direction of flow more than 90 degrees. Use proper size of standard increasers and reducers if pipes of different sizes are connected. Reducing size of drainage piping in direction of flow is prohibited.

I. Lay buried building drainage piping beginning at low point of each system. Install true to grades and alignment indicated, with unbroken continuity of invert. Place hub ends of piping upstream. Install required gaskets according to manufacturer's written instructions for use of lubricants, cements, and other installation requirements. Maintain swab in piping and pull past each joint as completed.

J. Install soil and waste drainage and vent piping at the following minimum slopes, unless otherwise indicated:
   1. Building Sanitary Drain: 2 percent downward in direction of flow.
   2. Horizontal Sanitary Drainage Piping: 2 percent downward in direction of flow.
   3. Vent Piping: 1 percent down toward vertical fixture vent or toward vent stack.

K. Sleeves are not required for cast-iron soil piping passing through concrete slabs-on-grade if slab is without membrane waterproofing.

L. Do not enclose, cover, or put piping into operation until it is inspected and approved by authorities having jurisdiction.

3.2 JOINT CONSTRUCTION

A. Basic piping joint construction requirements are specified in section "Basic Mechanical Materials and Methods."

B. Join hub-and-spigot, cast-iron soil piping with gasket joints according to CISPI's "Cast Iron Soil Pipe and Fittings Handbook" for compression joints.

C. Join hub-and-spigot, cast-iron soil piping with calked joints according to CISPI's "Cast Iron Soil Pipe and Fittings Handbook" for lead and oakum calked joints.

D. Join hubless cast-iron soil piping according to CISPI 310 and CISPI's "Cast Iron Soil Pipe and Fittings Handbook" for hubless-coupling joints.

3.3 HANGER AND SUPPORT INSTALLATION

A. Seismic-restraint devices are specified in section "Mechanical Vibration Controls and Seismic Restraints."

3.4 FIELD QUALITY CONTROL

A. During installation, notify authorities having jurisdiction at least 24 hours before inspection must be made. Perform tests specified below in presence of authorities having jurisdiction.
   1. Roughing-in Inspection: Arrange for inspection of piping before concealing or closing-in after roughing-in and before setting fixtures.
   2. Final Inspection: Arrange for final inspection by authorities having jurisdiction to observe tests specified below and to ensure compliance with requirements.

B. Reinspection: If authorities having jurisdiction find that piping will not pass test or inspection, make required corrections and arrange for reinspection.

C. Reports: Prepare inspection reports and have them signed by authorities having jurisdiction.

D. Test sanitary drainage and vent piping according to procedures of authorities having jurisdiction.

3.5 CLEANING

A. Clean interior of piping. Remove dirt and debris as work progresses.

B. Protect drains during remainder of construction period to avoid clogging with dirt and debris and to prevent damage from traffic and construction work.

C. Place plugs in ends of uncompleted piping at end of day and when work stops.

END OF SECTION 15150

SECTION 15155 - SANITARY WASTE PIPING SPECIALTIES

PART 1 - GENERAL

1.1 SUMMARY

A. This Section includes the following sanitary drainage piping specialties:
   1. Cleanouts.
   2. Floor drains.

1.2 SUBMITTALS

A. Product Data: For each type of product indicated. Include manufacturer, rated capacities, operating characteristics, and accessories for the following:

   1. Cleanouts.
   2. Floor drains.

PART 2 - PRODUCTS

2.1 CLEANOUTS

A. Exposed Metal Cleanouts:
   1. Standard: ASME A112.36.2M for cast iron for cleanout test tee.
   2. Size: Same as connected drainage piping
   3. Body Material: Hub-and-spigot, cast-iron soil pipe T-branch or Hubless, cast-iron soil pipe test tee as required to match connected piping.
   4. Closure: Countersunk or raised-head, cast-iron plug.
   5. Closure Plug Size: Same as or not more than one size smaller than cleanout size.

2.2 FLOOR DRAINS

A. Cast-Iron Floor Drains:
   1. Manufacturers: Subject to compliance with requirements, provide products by one of the following:
      a. Josam Company; Josam Div.
      b. Smith, Jay R. Mfg. Co.; Division of Smith Industries, Inc.
      c. Wade
      d. Zurn
      e. Prior approved equal.

2.3 MISCELLANEOUS SANITARY DRAINAGE PIPING SPECIALTIES

A. Deep-Seal Traps:

1. Description: Cast-iron or bronze casting, with inlet and outlet matching connected piping and cleanout trap-seal primer valve connection.
2. Size: Same as connected waste piping.

   a. NPS 2: 4-inch- minimum water seal.
   b. NPS 2-1/2 and Larger: 5-inch- minimum water seal.

PART 3 - EXECUTION

3.1 INSTALLATION

A. Install cleanouts in aboveground piping and building drain piping according to the following, unless otherwise indicated:

1. Size same as drainage piping up to NPS 4. Use NPS 4 for larger drainage piping unless larger cleanout is indicated.
2. Locate at each change in direction of piping greater than 45 degrees.
3. Locate at minimum intervals of 50 feet for piping NPS 4 and smaller and 100 feet for larger piping.
4. Locate at base of each vertical soil and waste stack.

B. Install floor drains at low points of surface areas to be drained. Set grates of drains flush with finished floor, unless otherwise indicated.

3.2 FIELD QUALITY CONTROL

A. Tests and Inspections:
1. Leak Test: After installation, charge system and test for leaks. Repair leaks and retest until no leaks exist.
2. Test and adjust controls and safeties. Replace damaged and malfunctioning controls and equipment.

3.3 PROTECTION

A. Protect drains during remainder of construction period to avoid clogging with dirt or debris and to prevent damage from traffic or construction work.

B. Place plugs in ends of uncompleted piping at end of each day or when work stops.

END OF SECTION 15155

SECTION 15160 - STORM DRAINAGE PIPING

PART 1 - GENERAL

1.1 RELATED DOCUMENTS

A. Drawings and general provisions of the Contract, including General and Supplementary Conditions and specification Sections, apply to this Section.

1.2 SUMMARY

A. This Section includes the following for soil, waste, and vent piping inside the building:
1. Pipe, tube, and fittings.

1.3 SUBMITTALS

A. Product Data: For pipe, tube, fittings, and couplings.

B. Field quality-control inspection and test reports.

1.4 QUALITY ASSURANCE

A. Piping materials shall bear label, stamp, or other markings of specified testing agency.

PART 2 - PRODUCTS

2.1 HUBLESS CAST-IRON SOIL PIPE AND FITTINGS

A. Cast iron "no-hub" pipe and fittings or cast iron pipe and fittings with bell and spigot joints using resilient seals such as "Ty-Seal" gaskets. (The pipe and gasket shall be of the same manufacturer). The “no-hub” couplings shall have ASTM C 564 neoprene gaskets, .008" stainless steel shields with transverse corrugations cross longitudinal corrugations, standard 304 stainless steel clamps and 305/ s/s screws. Entire assembly shall accommodate deflection.

PART 3 - EXECUTION

3.1 PIPING INSTALLATION

A. Basic piping installation requirements are specified in Section "Basic Mechanical Materials and Methods."

B. Install seismic restraints on piping. Seismic-restraint devices are specified in Section "Mechanical Vibration and Seismic Controls."

C. Install cleanouts at grade and extend to where building sanitary drains connect to building sanitary sewers.

D. Install cleanout fitting with closure plug inside the building in sanitary force-main piping.

E. Install cast-iron sleeve with water stop and mechanical sleeve seal at each service pipe penetration through foundation wall. Select number of interlocking rubber links required to make installation watertight. Sleeves and mechanical sleeve seals are specified in Section "Basic Mechanical Materials and Methods."

F. Install wall-penetration fitting at each service pipe penetration through foundation wall. Make installation watertight.

G. Install cast-iron soil piping according to CISPI's "Cast Iron Soil Pipe and Fittings Handbook," Chapter IV, "Installation of Cast Iron Soil Pipe and Fittings."

   1. Install encasement on underground piping according to ASTM A 674 or AWWA C105.

H. Make changes in direction for soil and waste drainage and vent piping using appropriate branches, bends, and long-sweep bends. Sanitary tees and short-sweep 1/4 bends may be used on vertical stacks if change in direction of flow is from horizontal to vertical. Use long-turn, double Y-branch and 1/8-bend fittings if 2 fixtures are installed back to back or side by side with common drain pipe. Straight tees, elbows, and crosses may be used on vent lines. Do not change direction of flow more than 90 degrees. Use proper size of standard increasers and reducers if pipes of different sizes are connected. Reducing size of drainage piping in direction of flow is prohibited.

I. Lay buried building drainage piping beginning at low point of each system. Install true to grades and alignment indicated, with unbroken continuity of invert. Place hub ends of piping upstream. Install required gaskets according to manufacturer's written instructions for use of lubricants, cements, and other installation requirements. Maintain swab in piping and pull past each joint as completed.

J. Install soil and waste drainage and vent piping at the following minimum slopes, unless otherwise indicated:
   1. Building Sanitary Drain: 2 percent downward in direction of flow.
   2. Horizontal Sanitary Drainage Piping: 2 percent downward in direction of flow.
   3. Vent Piping: 1 percent down toward vertical fixture vent or toward vent stack.

K. Sleeves are not required for cast-iron soil piping passing through concrete slabs-on-grade if slab is without membrane waterproofing.

L. Do not enclose, cover, or put piping into operation until it is inspected and approved by authorities having jurisdiction.

3.2 JOINT CONSTRUCTION

A. Basic piping joint construction requirements are specified in section "Basic Mechanical Materials and Methods."

B. Join hub-and-spigot, cast-iron soil piping with gasket joints according to CISPI's "Cast Iron Soil Pipe and Fittings Handbook" for compression joints.

C. Join hub-and-spigot, cast-iron soil piping with calked joints according to CISPI's "Cast Iron Soil Pipe and Fittings Handbook" for lead and oakum calked joints.

D. Join hubless cast-iron soil piping according to CISPI 310 and CISPI's "Cast Iron Soil Pipe and Fittings Handbook" for hubless-coupling joints.

3.3 HANGER AND SUPPORT INSTALLATION

A. Seismic-restraint devices are specified in section "Mechanical Vibration Controls and Seismic Restraints."

3.4 FIELD QUALITY CONTROL

A. During installation, notify authorities having jurisdiction at least 24 hours before inspection must be made. Perform tests specified below in presence of authorities having jurisdiction.
   1. Roughing-in Inspection: Arrange for inspection of piping before concealing or closing-in after roughing-in and before setting fixtures.
   2. Final Inspection: Arrange for final inspection by authorities having jurisdiction to observe tests specified below and to ensure compliance with requirements.

B. Reinspection: If authorities having jurisdiction find that piping will not pass test or inspection, make required corrections and arrange for reinspection.

C. Reports: Prepare inspection reports and have them signed by authorities having jurisdiction.

D. Test sanitary drainage and vent piping according to procedures of authorities having jurisdiction.

3.5 CLEANING

A. Clean interior of piping. Remove dirt and debris as work progresses.

B. Protect drains during remainder of construction period to avoid clogging with dirt and debris and to prevent damage from traffic and construction work.

C. Place plugs in ends of uncompleted piping at end of day and when work stops.

END OF SECTION 15160

SECTION 15165 - STORM DRAINAGE PIPING SPECIALTIES

PART 1 - GENERAL

1.1 RELATED DOCUMENTS

A. Drawings and general provisions of the Contract, including General and Supplementary Conditions and specification Sections, apply to this Section.

1.2 SUMMARY

A. This Section includes the following storm drainage piping specialties:
   1. Cleanouts.
   2. Roof drains.

1.3 SUBMITTALS

A. Product Data: For each type of product indicated.

1.4 QUALITY ASSURANCE

A. Drainage piping specialties shall bear label, stamp, or other markings of specified testing agency.

PART 2 - PRODUCTS

2.1 CLEANOUTS

A. Cleanouts:
   1. Manufacturers: Subject to compliance with requirements, provide products by one of the following:
      a. Josam Company; Josam Div.
      b. Smith, Jay R. Mfg. Co.; Division of Smith Industries, Inc.
      c. Wade
      d. Zurn
      e. Prior approved equal.

2.2 ROOF DRAINS

A. Metal Roof Drains:
   1. Manufacturers: Subject to compliance with requirements, provide products by one of the following:
      a. Josam Company; Josam Div.
      b. Smith, Jay R. Mfg. Co.; Division of Smith Industries, Inc.

c. Wade
d. Zurn
e. Prior approved equal.

2.3 MISCELLANEOUS STORM DRAINAGE PIPING SPECIALTIES

A. Downspout Boots:
1. Description: Manufactured, ASTM A 48/A 48M, gray-iron casting, with strap or ears for attaching to building; NPS 4 outlet; and shop-applied bituminous coating.
2. Size: Inlet size to match downspout.
3. Description: ASTM A 74, Service class, hub-and-spigot, cast-iron soil pipe.
4. Size: Same as or larger than connected downspout.

B. Conductor Nozzles:
1. Description: Bronze body with threaded inlet and bronze wall flange with mounting holes.
2. Size: Same as connected conductor.

C. Downspout Nozzle:
1. All nickel bronze body with decorative face of wall flange and outlet nozzle.
2. Approved Types -
a. Zurn
b. Wade
c. Smith
d. Josam

PART 3 - EXECUTION

3.1 INSTALLATION

A. Refer to Section "Common Work Results for Plumbing" for piping joining materials, joint construction, and basic installation requirements.

B. Install cleanouts in aboveground piping and building drain piping according to the following, unless otherwise indicated:

1. Size same as drainage piping up to NPS 4. Use NPS 4 for larger drainage piping unless larger cleanout is indicated.
2. Locate at each change in direction of piping greater than 45 degrees.
3. Locate at minimum intervals of 50 feet for piping NPS 4 and smaller and 100 feet for larger piping.
4. Locate at base of each vertical soil and waste stack.

C. Install roof drains at low points of roof areas according to roof membrane manufacturer's written installation instructions. Roofing materials are specified in Division 7.

1. Install roof-drain flashing collar or flange so that there will be no leakage between drain and adjoining roofing. Maintain integrity of waterproof membranes where penetrated.
2. Position roof drains for easy access and maintenance.

D. Install sleeve flashing device with each riser and stack passing through floors with waterproof membrane.

E. Install expansion joints on vertical stacks and conductors. Position expansion joints for easy access and maintenance.

F. Install manufactured, gray-iron downspout boots at grade with top 18 inches above grade. Secure to building wall.

G. Install cast-iron soil pipe downspout boots at grade with top of hub 18 inches above grade.

H. Install conductor nozzles at exposed bottom of conductors where they spill onto grade.

I. Install escutcheons at wall, floor, and ceiling penetrations in exposed finished locations and within cabinets and millwork. Use deep-pattern escutcheons if required to conceal protruding pipe fittings.

3.2 PROTECTION

A. Protect drains during remainder of construction period to avoid clogging with dirt or debris and to prevent damage from traffic or construction work.

B. Place plugs in ends of uncompleted piping at end of each day or when work stops.

END OF SECTION 15165

BLANK PAGE

SECTION 15181 - HYDRONIC PIPING

PART 1 - GENERAL

1.1 SUMMARY

A. This Section includes pipe and fitting materials, joining methods, special-duty valves, and specialties for the following:

1. Hot-water heating piping.
2. Chilled-water piping.
3. Makeup-water piping.
4. Condensate-drain piping.
5. Air-vent piping.
6. Safety-valve-inlet and -outlet piping.

1.2 PERFORMANCE REQUIREMENTS

A. Hydronic piping components and installation shall be capable of withstanding the following minimum working pressure and temperature:

1. Hot-Water Heating Piping: 125 psig at 220 deg. F.
2. Chilled-Water Piping: 125 psig at 100 deg. F.
3. Makeup-Water Piping: 125 psig at 100 deg. F.
4. Condensate-Drain Piping: 100 deg. F.
5. Air-Vent Piping: 220 deg. F.
6. Safety-Valve-Inlet and -Outlet Piping: Equal to the pressure of the piping system to which it is attached.

1.3 SUBMITTALS

A. Product Data: For each type of the following:

1. Valves. Include flow and pressure drop curves based on manufacturer's testing for calibrated-orifice balancing valves and automatic flow-control valves.
2. Air control devices.
3. Chemical treatment.
4. Hydronic specialties.

B. Welding certificates.

C. Qualification Data: For Installer.

D. Field quality-control test reports.

E. Operation and Maintenance Data: For air control devices, hydronic specialties, and special-duty valves to include in operation and maintenance manuals.

F. Water Analysis: Submit a copy of the water analysis to illustrate water quality available at Project site.

1.4 QUALITY ASSURANCE

A. Welding: Qualify processes and operators according to ASME Boiler and Pressure Vessel Code: Section IX.

1. Comply with provisions in ASME B31 Series, "Code for Pressure Piping."
2. Certify that each welder has passed AWS qualification tests for welding processes involved and that certification is current.

B. ASME Compliance: Comply with ASME B31.9, "Building Services Piping," for materials, products, and installation. Safety valves and pressure vessels shall bear the appropriate ASME label. Fabricate and stamp air separators and expansion tanks to comply with ASME Boiler and Pressure Vessel Code: Section VIII, Division 1.

PART 2 - PRODUCTS

2.1 STEEL PIPE AND FITTINGS

A. Steel Pipe: ASTM A 53/A 53M, black steel with plain ends; type, grade, and wall thickness as indicated in Part 3 "Piping Applications" Article.

2.2 JOINING MATERIALS

A. Pipe-Flange Gasket Materials: Suitable for chemical and thermal conditions of piping system contents.

1. ASME B16.21, nonmetallic, flat, asbestos free, maximum thickness unless thickness or specific material is indicated.

a. Full-Face Type: For flat-face, Class 125, cast-iron and cast-bronze flanges.
b. Narrow-Face Type: For raised-face, Class 250, cast-iron and steel flanges.

B. Flange Bolts and Nuts: ASME B18.2.1, carbon steel, unless otherwise indicated.

C. Welding Filler Metals: Comply with AWS D10.12/D10.12M for welding materials appropriate for wall thickness and chemical analysis of steel pipe being welded.

D. Gasket Material: Thickness, material, and type suitable for fluid to be handled and working temperatures and pressures.

E. Grooved couplings

2.3 VALVES

A. Ball and Butterfly Valves: Comply with requirements specified in Division 15 Section "Valves."

B. Automatic Temperature-Control Valves, Actuators, and Sensors: Comply with requirements specified in Division 15 Section "HVAC Instrumentation and Controls."

C. Cast-Iron or Steel, Calibrated-Orifice, Balancing Valves:

1. Manufacturers: Subject to compliance with requirements, provide products by one of the following:

a. Bell & Gossett Domestic Pump; a division of ITT Industries.
b. Armstrong Pumps, Inc.
c. Flow Design Inc.
d. Gerand Engineering Co.
e. Griswold Controls.
f. Prior approved equal.

D. Diaphragm-Operated, Pressure-Reducing Valves:

1. Manufacturers: Subject to compliance with requirements, provide products by one of the following:

a. Bell & Gossett Domestic Pump; a division of ITT Industries.
b. Amtrol, Inc.
c. Armstrong Pumps, Inc.
d. Conbraco Industries, Inc.
e. Spence Engineering Company, Inc.
f. Watts Regulator Co.; a division of Watts Water Technologies, Inc.
g. Prior approved equal.

E. Diaphragm-Operated Safety Valves:

1. Manufacturers: Subject to compliance with requirements, provide products by one of the following:

a. Bell & Gossett Domestic Pump; a division of ITT Industries.
b. Amtrol, Inc.
c. Armstrong Pumps, Inc.
d. Conbraco Industries, Inc.
e. Spence Engineering Company, Inc.
f. Watts Regulator Co.; a division of Watts Water Technologies, Inc.
g. Prior approved equal.

2.4 AIR CONTROL DEVICES

A. Manufacturers:
1. Bell & Gossett; Div. of ITT Industries.

2. Armstrong Pumps Inc.
3. Taco
4. Paco
5. Prior approved equal.

B. Diaphragm or Bladder-Type Expansion Tanks:

1. Tank: Welded steel, rated for 125-psig working pressure and 375 deg F maximum operating temperature. Factory test with taps fabricated and supports installed and labeled according to ASME Boiler and Pressure Vessel Code: Section VIII, Division 1.
2. Diaphragm: Securely sealed into tank to separate air charge from system water to maintain required expansion capacity.
3. Air-Charge Fittings: Schrader valve, stainless steel with EPDM seats.

C. Tangential-Type Air Eliminator:

1. Tank: Welded steel; ASME constructed and labeled for 125-psig minimum working pressure and 375 deg F maximum operating temperature.
2. Air Collector Tube: Perforated stainless steel, constructed to direct released air into expansion tank.
3. Tangential Inlet and Outlet Connections: Threaded or flanged connections per manufacturer.
4. Blowdown Connection: Threaded.
5. Size: Match system flow capacity.

2.5 CHEMICAL TREATMENT

A. Bypass Chemical Feeder: Welded steel construction; working pressure; capacity; with fill funnel and inlet, outlet, and drain valves.

1. Chemicals: Specially formulated, based on analysis of makeup water, to prevent accumulation of scale and corrosion in piping and connected equipment.

B. Propylene Glycol: Industrial grade with corrosion inhibitors and environmental-stabilizer additives for mixing with water in systems indicated to contain antifreeze or glycol solutions.
1. Glycol shall be located in mechanical rooms as necessary, and shall not be routed through occupied spaces. Provide plate and frame heat exchangers in mechanical spaces as necessary to avoid glycol distribution through building.

C. Chemical treatment shall be by Owner approved Water Treatment Service Organization (WTSO). WTSO shall be West or Prior approved equal.

PART 3 - EXECUTION

3.1 PIPING APPLICATIONS

A. Hot-water heating and chilled water piping, shall be the following:
   1. ASTM A53, Grade B, Schedule 40 black steel pipe. Grade A for pipe 1-1/2" and smaller.
   2. For 2" and smaller use 150 pound, screwed malleable iron fittings.
   3. For 2-1/2" and larger use ASTM A234 standard weight forged steel butt weld fittings, or 150 pound malleable iron fittings with mechanical grooved pipe couplings. Approved manufacturers are Victaulic Gruvlok, and Gustin-Bacon. All other manufacturers must be reviewed and approved by University Facilities Management prior to bid.

B. Condenser Water Piping:
   1. ASTM A53, Grade B, Schedule 40 black steel. Grade A for pipe 1-1/2" and smaller.
   2. For 2" and smaller use 150 LB screwed malleable iron fittings.
   3. For 2-1/2" and larger use ASTM A234, ASA B16.9, ASA B10, Grade B, Schedule 40 forged black steel butt weld fittings; or, grooved pipe and couplings may be used.

C. Condensate-Drain Piping: Type L, hard drawn copper tubing, wrought-copper fittings, and soldered joints.

D. Air-Vent Piping:

   1. Inlet: Same as service where installed.
   2. Outlet: Annealed-temper copper tubing with soldered or flared joints.

E. Safety-Valve-Inlet and -Outlet Piping for Hot-Water Piping: Same materials and joining methods as for piping specified for the service in which safety valve is installed.

3.2 VALVE APPLICATIONS

A. Install shutoff-duty valves at each branch connection to supply mains, and at supply connection to each piece of equipment.

B. Install calibrated-orifice, balancing valves at each branch connection to return main.

C. Install calibrated-orifice, balancing valves in the return pipe of each heating or cooling terminal.

D. Install check valves at each pump discharge and elsewhere as required to control flow direction.

E. Install safety valves at hot-water generators and elsewhere as required by ASME Boiler and Pressure Vessel Code. Comply with ASME Boiler and Pressure Vessel Code: Section VIII, Division 1, for installation requirements.

F. Install pressure-reducing valves at makeup-water connection to regulate system fill pressure.

3.3 HANGERS AND SUPPORTS

A. Seismic restraints are specified in Division 15 Section "Mechanical Vibration and Seismic Controls."

B. Install the following pipe attachments:

1. Adjustable steel clevis hangers for individual horizontal piping less than long.
2. Adjustable spring hangers for individual horizontal piping or longer.
3. Spring hangers to support vertical runs.
4. Provide copper-clad hangers and supports for hangers and supports in direct contact with copper pipe.

3.4 HYDRONIC SPECIALTIES INSTALLATION

A. Install manual air vents at high points in piping, at heat-transfer coils, and elsewhere as required for system air venting.

B. Install automatic air vents at high points of system piping in mechanical equipment rooms only. Manual vents at heat-transfer coils and elsewhere as required for air venting.

C. Install tangential air eliminator in pump suction. Install blowdown piping with full-port ball valve; extend full size to nearest floor drain.

D. Install expansion tank on the floor. Vent and purge air from hydronic system, and ensure tank is properly charged with air to suit system Project requirements.

3.5 CHEMICAL TREATMENT

A. Perform an analysis of makeup water to determine type and quantities of chemical treatment needed to keep system free of scale, corrosion, and fouling, and to sustain the University required water characteristics:

B. Fill system with fresh water and add liquid alkaline compound with emulsifying agents and detergents to remove grease and petroleum products from piping. Circulate solution for a minimum of 24 hours, drain, clean strainer screens, and refill with fresh water.

C. Add initial chemical treatment and glycol. Maintain water quality in ranges noted above for the first year of operation.

3.6 FIELD QUALITY CONTROL

A. Prepare hydronic piping according to ASME B31.9 and as follows:

1. Leave joints, including welds, uninsulated and exposed for examination during test.
2. Flush hydronic piping systems with clean water; then remove and clean or replace strainer screens.
3. Isolate equipment from piping. If a valve is used to isolate equipment, its closure shall be capable of sealing against test pressure without damage to valve. Install blinds in flanged joints to isolate equipment.
4. Install safety valve, set at a pressure no more than one-third higher than test pressure, to protect against damage by expanding liquid or other source of overpressure during test.

B. Perform the following tests on hydronic piping:

1. Use ambient temperature water as a testing medium.
2. While filling system, use vents installed at high points of system to release air. Use drains installed at low points for complete draining of test liquid.
3. Isolate expansion tanks and determine that hydronic system is full of water.
4. Subject piping system to hydrostatic test pressure that is not less than 1.5 times the system's working pressure. Test pressure shall not exceed maximum pressure for any vessel, pump, valve, or other component in system under test. Verify that stress due to pressure at bottom of vertical runs does not exceed 90 percent of specified minimum yield strength or 1.7 times "SE" value in Appendix A in ASME B31.9, "Building Services Piping."
5. After hydrostatic test pressure has been applied for at least 4 hours, examine piping, joints, and connections for leakage. Eliminate leaks by tightening, repairing, or replacing components, and repeat hydrostatic test until there are no leaks.
6. Prepare written report of testing.

C. Perform the following before operating the system:

1. Open manual valves fully.
2. Inspect pumps for proper rotation.
3. Set makeup pressure-reducing valves for required system pressure.
4. Inspect air vents at high points of system and determine if all are installed and operating freely (automatic type), or bleed air completely (manual type).
5. Set temperature controls so all coils are calling for full flow.
6. Inspect and set operating temperatures of hydronic equipment to specified values.
7. Verify lubrication of motors and bearings.

END OF SECTION 15181

BLANK PAGE

SECTION 15185 - HYDRONIC PUMPS

PART 1 - GENERAL

1.1 SUMMARY

A. This Section includes the following:
   1. Separately coupled, base-mounted, end-suction centrifugal pumps.

1.2 SUBMITTALS

A. Product Data: Include certified performance curves and rated capacities, operating characteristics, furnished specialties, final impeller dimensions, and accessories for each type of product indicated. Indicate pump's operating point on curves.

B. Shop Drawings: Show pump layout and connections. Include setting drawings with templates for installing foundation and anchor bolts and other anchorages.
   1. Wiring Diagrams: Power, signal, and control wiring.

C. Operation and Maintenance Data: For pumps to include in operation and maintenance manuals.

1.3 QUALITY ASSURANCE

A. Source Limitations: Obtain hydronic pumps through one source from a single manufacturer.

B. Product Options: Drawings indicate size, profiles, and dimensional requirements of hydronic pumps and are based on the specific system indicated. Refer to Division 1 Section "Product Requirements."

C. Electrical Components, Devices, and Accessories: Listed and labeled as defined in NFPA 70, Article 100, by a testing agency acceptable to authorities having jurisdiction, and marked for intended use.

D. UL Compliance: Comply with UL 778 for motor-operated water pumps.

1.4 EXTRA MATERIALS

A. Furnish extra materials described below that match products installed and that are packaged with protective covering for storage and identified with labels describing contents.
   1. Mechanical Seals: One mechanical seal(s) for each pump.

PART 2 - PRODUCTS

2.1 SEPARATELY COUPLED, BASE-MOUNTED, END-SUCTION CENTRIFUGAL PUMPS

A. Manufacturers:
1. Bell & Gossett; Div. of ITT Industries.
2. Armstrong Pumps Inc.
3. Taco
4. Paco
5. Prior approved equal.

B. Description: Factory-assembled and -tested, centrifugal, overhung-impeller, separately coupled, end-suction pump as defined in HI 1.1-1.2 and HI 1.3; designed for base mounting, with pump and motor shafts horizontal. Rate pump for 175-psig minimum working pressure and a continuous water temperature of 225 deg F.

2.2 PUMP SPECIALTY FITTINGS

A. Suction Diffuser: Angle pattern, 175-psig pressure rating, cast or ductile-iron body and end cap, pump-inlet fitting; with bronze startup and bronze or stainless-steel permanent strainers; bronze or stainless-steel straightening vanes; drain plug; and factory-fabricated support.

PART 3 - EXECUTION

3.1 EXAMINATION

A. Examine equipment foundations and anchor-bolt locations for compliance with requirements for installation tolerances and other conditions affecting performance of work.

B. Examine roughing-in for piping systems to verify actual locations of piping connections before pump installation.

C. Examine foundations and inertia bases for suitable conditions where pumps are to be installed.

D. Proceed with installation only after unsatisfactory conditions have been corrected.

3.2 CONCRETE BASES

A. Install concrete bases of dimensions indicated for pumps and controllers.
1. Install dowel rods to connect concrete base to concrete floor. Unless otherwise indicated, install dowel rods on 18-inch centers around full perimeter of base.

2. For supported equipment, install epoxy-coated anchor bolts that extend through concrete base and anchor into structural concrete floor.
3. Place and secure anchorage devices. Use setting drawings, templates, diagrams, instructions, and directions furnished with items to be embedded.
4. Install anchor bolts to elevations required for proper attachment to supported equipment.

B. Cast-in-place concrete materials and placement requirements are specified in Division 3.

3.3 PUMP INSTALLATION

A. Comply with HI 1.4.

B. Install pumps with access for periodic maintenance including removal of motors, impellers, couplings, and accessories.

C. Independently support pumps and piping so weight of piping is not supported by pumps and weight of pumps is not supported by piping.

D. Set base-mounted pumps on concrete foundation. Disconnect coupling before setting. Do not reconnect couplings until alignment procedure is complete.
1. Support pump baseplate on rectangular metal blocks and shims, or on metal wedges with small taper, at points near foundation bolts to provide a gap of 3/4 to 1-1/2 inches between pump base and foundation for grouting.
2. Adjust metal supports or wedges until pump and driver shafts are level. Check coupling faces and suction and discharge flanges of pump to verify that they are level and plumb.

3.4 ALIGNMENT

A. Align pump and motor shafts and piping connections after setting on foundation, grout has been set and foundation bolts have been tightened, and piping connections have been made.

B. Comply with pump and coupling manufacturers' written instructions.

C. Adjust pump and motor shafts for angular and offset alignment by methods specified in HI 1.1-1.5, "Centrifugal Pumps for Nomenclature, Definitions, Application and Operation."

D. After alignment is correct, tighten foundation bolts evenly but not too firmly. Completely fill baseplate with nonshrink, nonmetallic grout while metal blocks and shims or wedges are in place. After grout has cured, fully tighten foundation bolts.

3.5 CONNECTIONS

A. Piping installation requirements are specified in other Division 23 Sections. Drawings indicate general arrangement of piping, fittings, and specialties.

B. Install piping adjacent to machine to allow service and maintenance.

C. Connect piping to pumps. Install valves that are same size as piping.

D. Install suction and discharge pipe sizes as indicated on drawings.

E. Install check valve and throttling valve on discharge side of pumps.

F. Install suction diffuser and shutoff valve on suction side of pumps.

G. Install flexible connectors on suction and discharge sides of base-mounted pumps between pump casing and valves.

H. Install pressure gages on pump suction and discharge, at integral pressure-gage tapping.

I. Install electrical connections for power, controls, and devices.

J. Ground equipment according to Electrical Section "Grounding and Bonding."

K. Connect wiring according to Electrical Section "Conductors and Cables."

3.6 STARTUP SERVICE

A. Engage a factory-authorized service representative to perform startup service.
   1. Complete installation and startup checks according to manufacturer's written instructions.
   2. Check piping connections for tightness.
   3. Clean strainers on suction piping.
   4. Perform the following startup checks for each pump before starting:
      a. Verify bearing lubrication.
      b. Verify that pump is free to rotate by hand and that pump for handling hot liquid is free to rotate with pump hot and cold. If pump is bound or drags, do not operate until cause of trouble is determined and corrected.
      c. Verify that pump is rotating in the correct direction.
   5. Prime pump by opening suction valves and closing drains, and prepare pump for operation.
   6. Start motor.
   7. Open discharge valve slowly.

3.7 DEMONSTRATION

A. Engage a factory-authorized service representative to train Owner's maintenance personnel to adjust, operate, and maintain hydronic pumps. Refer to Division 1 Section "Closeout Procedures and Demonstration and Training."

END OF SECTION 15185

BLANK PAGE

SECTION 15195 - FACILITY NATURAL-GAS PIPING

PART 1 - GENERAL

1.1 PERFORMANCE REQUIREMENTS

A. Minimum Operating-Pressure Ratings:

1. Piping and Valves: 100 psig minimum unless otherwise indicated.

1.2 SUBMITTALS

A. Product Data: For each type of the following:

1. Piping specialties.
2. Corrugated, stainless-steel tubing with associated components.
3. Valves. Include pressure rating, capacity, settings, and electrical connection data of selected models.
4. Pressure regulators. Indicate pressure ratings and capacities.
5. Dielectric fittings.
6. Mechanical sleeve seals.
7. Escutcheons.

B. Welding certificates.

C. Field quality-control reports.

D. Operation and Maintenance Data: For pressure regulators to include in operation, and maintenance manuals.

1.3 QUALITY ASSURANCE

A. Steel Support Welding Qualifications: Qualify procedures and personnel according to AWS D1.1/D1.1M, "Structural Welding Code - Steel."

B. Pipe Welding Qualifications: Qualify procedures and operators according to ASME Boiler and Pressure Vessel Code.

C. Electrical Components, Devices, and Accessories: Listed and labeled as defined in NFPA 70, by a qualified testing agency, and marked for intended location and application.

1.4 PROJECT CONDITIONS

A. Perform site survey, research public utility records, and verify existing utility locations. Contact utility-locating service for area where Project is located.

B. Interruption of Existing Natural-Gas Service: Do not interrupt natural-gas service to facilities occupied by Owner or others unless permitted under the following conditions and then only after arranging to provide purging and startup of natural-gas supply according to requirements indicated:

1. Notify Owner no fewer than two days in advance of proposed interruption of natural-gas service.
2. Do not proceed with interruption of natural-gas service without Owner's written permission.

1.5 COORDINATION

A. Coordinate sizes and locations of concrete bases with actual equipment provided.

B. Coordinate requirements for access panels and doors for valves installed concealed behind finished surfaces. Comply with requirements in Division 8 Section "Access Doors and Frames."

PART 2 - PRODUCTS

2.1 PIPES, TUBES, AND FITTINGS

A. Steel Pipe: ASTM A 53/A 53M, black steel, Schedule 40, Type E or S, Grade B.

1. Malleable-Iron Threaded Fittings: ASME B16.3, Class 150, standard pattern.
2. Wrought-Steel Welding Fittings: ASTM A 234/A 234M for butt welding and socket welding.
3. Unions: ASME B16.39, Class 150, malleable iron with brass-to-iron seat, ground joint, and threaded ends.
4. Forged-Steel Flanges and Flanged Fittings: ASME B16.5, minimum Class 150, including bolts, nuts, and gaskets of the following material group, end connections, and facings:

   a. Material Group: 1.1.
   b. End Connections: Threaded or butt welding to match pipe.
   c. Lapped Face: Not permitted underground.
   d. Gasket Materials: ASME B16.20, metallic, flat, asbestos free, aluminum o-rings, and spiral-wound metal gaskets.
   e. Bolts and Nuts: ASME B18.2.1, carbon steel aboveground and stainless steel underground.

5. Protective Coating for Underground Piping: Factory-applied, three-layer coating of epoxy, adhesive, and PE.

   a. Joint Cover Kits: Epoxy paint, adhesive, and heat-shrink PE sleeves.

B. PE Pipe: ASTM D 2513, SDR 11.

1. PE Fittings: ASTM D 2683, socket-fusion type or ASTM D 3261, butt-fusion type with dimensions matching PE pipe.
2. PE Transition Fittings: Factory-fabricated fittings with PE pipe complying with ASTM D 2513, SDR 11; and steel pipe complying with ASTM A 53/A 53M, black steel, Schedule 40, Type E or S, Grade B.
3. Anodeless Service-Line Risers: Factory fabricated and leak tested.

    a. Underground Portion: PE pipe complying with ASTM D 2513, SDR 11 inlet.
    b. Casing: Steel pipe complying with ASTM A 53/A 53M, Schedule 40, black steel, Type E or S, Grade B, with corrosion-protective coating covering.
    c. Aboveground Portion: PE transition fitting.
    d. Outlet shall be threaded or flanged or suitable for welded connection.
    e. Tracer wire connection.
    f. Ultraviolet shield.
    g. Stake supports with factory finish to match steel pipe casing or carrier pipe.

4. Transition Service-Line Risers: Factory fabricated and leak tested.

    a. Underground Portion: PE pipe complying with ASTM D 2513, SDR 11 inlet connected to steel pipe complying with ASTM A 53/A 53M, Schedule 40, Type E or S, Grade B, with corrosion-protective coating for aboveground outlet.
    b. Outlet shall be threaded or flanged or suitable for welded connection.
    c. Bridging sleeve over mechanical coupling.
    d. Factory-connected anode.
    e. Tracer wire connection.
    f. Ultraviolet shield.
    g. Stake supports with factory finish to match steel pipe casing or carrier pipe.

2.2 JOINING MATERIALS

A. Joint Compound and Tape: Suitable for natural gas.

B. Welding Filler Metals: Comply with AWS D10.12/D10.12M for welding materials appropriate for wall thickness and chemical analysis of steel pipe being welded.

2.3 MANUAL GAS SHUTOFF VALVES

A. See "Underground Manual Gas Shutoff Valve Schedule" and "Aboveground Manual Gas Shutoff Valve Schedule" Articles for where each valve type is applied in various services.

B. General Requirements for Metallic Valves, NPS 2 and Smaller: Comply with ASME B16.33.

1. CWP Rating: 125 psig.
2. Threaded Ends: Comply with ASME B1.20.1.
3. Dryseal Threads on Flare Ends: Comply with ASME B1.20.3.

4. Tamperproof Feature: Locking feature for valves indicated in "Underground Manual Gas Shutoff Valve Schedule" and "Aboveground Manual Gas Shutoff Valve Schedule" Articles.
5. Listing: Listed and labeled by an NRTL acceptable to authorities having jurisdiction for valves 1 inch and smaller.
6. Service Mark: Valves 1-1/4 inches to NPS 2 shall have initials "WOG" permanently marked on valve body.

C. General Requirements for Metallic Valves, NPS 2-1/2 and Larger: Comply with ASME B16.38.

1. CWP Rating: 125 psig.
2. Flanged Ends: Comply with ASME B16.5 for steel flanges.
3. Tamperproof Feature: Locking feature for valves indicated in "Underground Manual Gas Shutoff Valve Schedule" and "Aboveground Manual Gas Shutoff Valve Schedule" Articles.
4. Service Mark: Initials "WOG" shall be permanently marked on valve body.

D. One-Piece, Bronze Ball Valve with Bronze Trim: MSS SP-110.

1. Manufacturers: Subject to compliance with requirements, available manufacturers offering products that may be incorporated into the Work include, but are not limited to, the following:

   a. BrassCraft Manufacturing Company; a Masco company.
   b. Conbraco Industries, Inc.; Apollo Div.
   c. Lyall, R. W. & Company, Inc.
   d. McDonald, A. Y. Mfg. Co.
   e. Perfection Corporation; a subsidiary of American Meter Company.
   f. Prior approved equal..

2. Body: Bronze, complying with ASTM B 584.
3. Ball: Chrome-plated brass.
4. Stem: Bronze; blowout proof.
5. Seats: Reinforced TFE; blowout proof.
6. Packing: Separate packnut with adjustable-stem packing threaded ends.
7. Ends: Threaded, flared, or socket as indicated in "Underground Manual Gas Shutoff Valve Schedule" and "Aboveground Manual Gas Shutoff Valve Schedule" Articles.
8. CWP Rating: 600 psig.
9. Listing: Valves NPS 1 and smaller shall be listed and labeled by an NRTL acceptable to authorities having jurisdiction.
10. Service: Suitable for natural-gas service with "WOG" indicated on valve body.

E. PE Ball Valves: Comply with ASME B16.40.

1. Manufacturers: Subject to compliance with requirements, available manufacturers offering products that may be incorporated into the Work include, but are not limited to, the following:

   a. Kerotest Manufacturing Corp.

b. Lyall, R. W. & Company, Inc.
c. Perfection Corporation; a subsidiary of American Meter Company.
d. Prior approved equal..

2. Body: PE.
3. Ball: PE.
4. Stem: Acetal.
5. Seats and Seals: Nitrile.
6. Ends: Plain or fusible to match piping.
7. CWP Rating: 80 psig.
8. Operating Temperature: Minus 20 to plus 140 deg F.
9. Operator: Nut or flat head for key operation.
10. Include plastic valve extension.
11. Include tamperproof locking feature for valves where indicated on Drawings.

F. Valve Boxes:

1. Cast-iron, two-section box.
2. Top section with cover with "GAS" lettering.
3. Bottom section with base to fit over valve and barrel a minimum of 5 inches in diameter.
4. Adjustable cast-iron extensions of length required for depth of bury.
5. Include tee-handle, steel operating wrench with socket end fitting valve nut or flat head, and with stem of length required to operate valve.

2.4 EARTHQUAKE VALVES

A. Earthquake Valves: Comply with ASCE 25.

1. Manufacturers: Subject to compliance with requirements, available manufacturers offering products that may be incorporated into the Work include, but are not limited to, the following:

a. Vanguard Valves, Inc.
b. Safe-T-Quake.
c. Koso
d. Trembler Tech
e. Prior approved equal.

2. Listing: Listed and labeled by an NRTL acceptable to authorities having jurisdiction.
3. Maximum Operating Pressure: 5 psig.
4. Cast-aluminum body with nickel-plated chrome steel internal parts.
5. Nitrile-rubber valve washer.
6. Sight windows for visual indication of valve position.
7. Threaded end connections complying with ASME B1.20.1.
8. Wall mounting bracket with bubble level indicator.

2.5 PRESSURE REGULATORS

A. General Requirements:

1. Single stage and suitable for natural gas.
2. Steel jacket and corrosion-resistant components.
3. Elevation compensator.
4. End Connections: Threaded for regulators NPS 2 and smaller; flanged for regulators NPS 2-1/2 and larger.

B. Pressure Regulators: Comply with ANSI Z21.80.

1. Manufacturers: Subject to compliance with requirements, available manufacturers offering products that may be incorporated into the Work include, but are not limited to, the following:

   a. Actaris.
   b. American Meter Company.
   c. Fisher Control Valves and Regulators; Division of Emerson Process Management.
   d. Invensys.
   e. Richards Industries; Jordan Valve Div.
   f. Prior approved equal..

2. Body and Diaphragm Case: Cast iron or die-cast aluminum.
3. Springs: Zinc-plated steel; interchangeable.
4. Diaphragm Plate: Zinc-plated steel.
5. Seat Disc: Nitrile rubber resistant to gas impurities, abrasion, and deformation at the valve port.
6. Orifice: Aluminum; interchangeable.
7. Seal Plug: Ultraviolet-stabilized, mineral-filled nylon.
8. Single-port, self-contained regulator with orifice no larger than required at maximum pressure inlet, and no pressure sensing piping external to the regulator.
9. Pressure regulator shall maintain discharge pressure setting downstream, and not exceed 150 percent of design discharge pressure at shutoff.
10. Overpressure Protection Device: Factory mounted on pressure regulator.
11. Atmospheric Vent: Factory- or field-installed, stainless-steel screen in opening if not connected to vent piping.
12. Maximum Inlet Pressure: 100 psig.

2.6 METERS

A. Contractor shall provide gas meter. Provide with manual read out, as well as remote monitoring through BAS.

2.7 SLEEVES

A. Steel Pipe Sleeves: ASTM A 53/A 53M, Type E, Grade B, Schedule 40, galvanized steel, plain ends.

B. Cast-Iron Pipe Sleeves: Cast or fabricated "wall pipe," equivalent to ductile-iron pressure pipe, with plain ends and integral waterstop, unless otherwise indicated.

2.8 MECHANICAL SLEEVE SEALS

A. Description: Modular sealing element unit, designed for field assembly, to fill annular space between pipe and sleeve.

1. Manufacturers: Subject to compliance with requirements, provide products by one of the following:

a. Advance Products & Systems, Inc.
b. Calpico Inc.
c. Metraflex Company (The).
d. Pipeline Seal and Insulator, Inc.
e. Link-Seal.
f. Prior approved equal.

2. Sealing Elements: EPDM interlocking links shaped to fit surface of pipe. Include type and number required for pipe material and size of pipe and sleeve.
3. Pressure Plates: Carbon steel.
4. Connecting Bolts and Nuts: Carbon steel with corrosion-resistant coating of length required to secure pressure plates to sealing elements. Include one nut and bolt for each sealing element.

PART 3 - EXECUTION

3.1 EXAMINATION

A. Examine roughing-in for natural-gas piping system to verify actual locations of piping connections before equipment installation.

B. Proceed with installation only after unsatisfactory conditions have been corrected.

3.2 PREPARATION

A. Close equipment shutoff valves before turning off natural gas to premises or piping section.

B. Inspect natural-gas piping according to the International Fuel Gas Code to determine that natural-gas utilization devices are turned off in piping section affected.

C. Comply with the International Fuel Gas Code requirements for prevention of accidental ignition.

3.3 OUTDOOR PIPING INSTALLATION

A. Comply with the International Fuel Gas Code for installation and purging of natural-gas piping.

B. Install underground, natural-gas piping buried at least 36 inches below finished grade. Comply with requirements in Division 2 Section "Earthwork" for excavating, trenching, and backfilling.

1. If natural-gas piping is installed less than 36 inches below finished grade, install it in containment conduit.
2. If underground piping is under any roads, provide PVC sleeve, at least 2 times larger.

C. Install underground, PE, natural-gas piping according to ASTM D 2774.

D. Install fittings for changes in direction and branch connections.

E. Aboveground, Exterior-Wall Pipe Penetrations: Seal penetrations using sleeves and mechanical sleeve seals. Select sleeve size to allow for 1-inch annular clear space between pipe and sleeve for installing mechanical sleeve seals.

1. Install steel pipe for sleeves smaller than 6 inches in diameter.
2. Install cast-iron "wall pipes" for sleeves 6 inches and larger in diameter.

F. Underground, Exterior-Wall Pipe Penetrations: Install cast-iron "wall pipes" for sleeves. Seal pipe penetrations using mechanical sleeve seals. Select sleeve size to allow for 1-inch annular clear space between pipe and sleeve for installing mechanical sleeve seals.

G. Mechanical Sleeve Seal Installation: Select type and number of sealing elements required for pipe material and size. Position pipe in center of sleeve. Assemble mechanical sleeve seals and install in annular space between pipe and sleeve. Tighten bolts against pressure plates that cause sealing elements to expand and make watertight seal.

H. Install pressure gage upstream and downstream from each service regulator. Pressure gages are specified in Division 15 Section "Meters and Gages."

3.4 INDOOR PIPING INSTALLATION

A. Comply with the International Fuel Gas Code for installation and purging of natural-gas piping.

B. Drawing plans, schematics, and diagrams shall indicate general location and arrangement of piping systems. Indicated locations and arrangements are used to size

pipe and calculate friction loss, expansion, and other design considerations. Install piping as indicated unless deviations to layout are approved on Coordination Drawings.

C. Locate valves for easy access.

D. Install natural-gas piping at uniform grade of 2 percent down toward drip and sediment traps.

E. Install piping free of sags and bends.

F. Install fittings for changes in direction and branch connections.

G. Fire-Barrier Penetrations: Maintain indicated fire rating of walls, partitions, ceilings, and floors at pipe penetrations. Seal pipe penetrations with firestop materials. Comply with requirements in Division 7 Section "Through-Penetration Firestop Systems."

H. Verify final equipment locations for roughing-in.

I. Comply with requirements in Sections specifying gas-fired appliances and equipment for roughing-in requirements.

J. Drips and Sediment Traps: Install drips at points where condensate may collect, including service-meter outlets. Locate where accessible to permit cleaning and emptying. Do not install where condensate is subject to freezing.

1. Construct drips and sediment traps using tee fitting with bottom outlet plugged or capped. Use nipple a minimum length of 3 pipe diameters, but not less than 3 inches long and same size as connected pipe. Install with space below bottom of drip to remove plug or cap.

K. Extend relief vent connections for service regulators, line regulators, and overpressure protection devices to outdoors and terminate with weatherproof vent cap.

L. Conceal pipe installations in walls, pipe spaces, utility spaces, above ceilings, below grade or floors, and in floor channels unless indicated to be exposed to view.

M. Concealed Location Installations: Except as specified below, install concealed natural-gas piping and piping installed under the building in containment conduit constructed of steel pipe with welded joints as described in Part 2. Install a vent pipe from containment conduit to outdoors and terminate with weatherproof vent cap.

1. Above Accessible Ceilings: Natural-gas piping, fittings, valves, and regulators may be installed in accessible spaces without containment conduit.
2. In Floors: Install natural-gas piping with welded or brazed joints and protective coating in cast-in-place concrete floors. Cover piping to be cast in concrete slabs with minimum of 1-1/2 inches of concrete. Piping may not be in physical contact with other metallic structures such as reinforcing rods or electrically neutral conductors. Do not embed piping in concrete slabs containing quick-set additives or cinder aggregate.
3. In Floor Channels: Install natural-gas piping in floor channels. Channels must have cover and be open to space above cover for ventilation.

4. In Walls or Partitions: Protect tubing installed inside partitions or hollow walls from physical damage using steel striker barriers at rigid supports.

    a. Exception: Tubing passing through partitions or walls does not require striker barriers.

5. Prohibited Locations:

    a. Do not install natural-gas piping in or through circulating air ducts, clothes or trash chutes, chimneys or gas vents (flues), ventilating ducts, or dumbwaiter or elevator shafts.
    b. Do not install natural-gas piping in solid walls or partitions.

N. Use eccentric reducer fittings to make reductions in pipe sizes. Install fittings with level side down.

O. Connect branch piping from top or side of horizontal piping.

P. Install unions in pipes NPS 2 and smaller, adjacent to each valve, at final connection to each piece of equipment. Unions are not required at flanged connections.

Q. Do not use natural-gas piping as grounding electrode.

R. Install strainer on inlet of each line-pressure regulator and automatic or electrically operated valve.

S. Install pressure gage upstream and downstream from each line regulator. Pressure gages are specified in Division 15 Section "Meters and Gages."

3.5 VALVE INSTALLATION

A. Install manual gas shutoff valve for each gas appliance ahead of corrugated stainless-steel tubing, aluminum, or copper connector.

B. Install underground valves with valve boxes.

C. Install regulators and overpressure protection devices with maintenance access space adequate for servicing and testing.

D. Install earthquake valves aboveground outside buildings according to listing.

E. Install anode for metallic valves in underground PE piping.

3.6 PIPING JOINT CONSTRUCTION

A. Ream ends of pipes and tubes and remove burrs.

B. Remove scale, slag, dirt, and debris from inside and outside of pipe and fittings before assembly.

C. Threaded Joints:

1. Thread pipe with tapered pipe threads complying with ASME B1.20.1.
2. Cut threads full and clean using sharp dies.
3. Ream threaded pipe ends to remove burrs and restore full inside diameter of pipe.
4. Apply appropriate tape or thread compound to external pipe threads unless dryseal threading is specified.
5. Damaged Threads: Do not use pipe or pipe fittings with threads that are corroded or damaged. Do not use pipe sections that have cracked or open welds.

D. Welded Joints:

1. Construct joints according to AWS D10.12/D10.12M, using qualified processes and welding operators.
2. Bevel plain ends of steel pipe.
3. Patch factory-applied protective coating as recommended by manufacturer at field welds and where damage to coating occurs during construction.

E. PE Piping Heat-Fusion Joints: Clean and dry joining surfaces by wiping with clean cloth or paper towels. Join according to ASTM D 2657.

1. Plain-End Pipe and Fittings: Use butt fusion.
2. Plain-End Pipe and Socket Fittings: Use socket fusion.

3.7 LABELING AND IDENTIFYING

A. Comply with requirements in Division 15 Section "Mechanical Identification" for piping and valve identification.

B. Install detectable warning tape directly above gas piping, 12 inches below finished grade, except 6 inches below subgrade under pavements and slabs.

3.8 PAINTING

A. Comply with requirements in Division 9 painting Sections for painting interior and exterior natural-gas piping.

B. Paint exposed, exterior metal piping, valves, service regulators, service meters and meter bars, earthquake valves, and piping specialties, except components, with factory-applied paint or protective coating.

1. Alkyd System: MPI EXT 5.1D.

a. Prime Coat: Alkyd anticorrosive metal primer.
b. Intermediate Coat: Exterior alkyd enamel matching topcoat.
c. Topcoat: Exterior alkyd enamel (flat).
d. Color: By owner.

C. Paint exposed, interior metal piping, valves, service regulators, service meters and meter bars, earthquake valves, and piping specialties, except components, with factory-applied paint or protective coating.

1. Latex Over Alkyd Primer System: MPI INT 5.1Q.

a. Prime Coat: Quick-drying alkyd metal primer.
b. Intermediate Coat: Interior latex matching topcoat.
c. Topcoat: Interior latex (semigloss).
d. Color: By owner.

D. Damage and Touchup: Repair marred and damaged factory-applied finishes with materials and by procedures to match original factory finish.

3.9 FIELD QUALITY CONTROL

A. Perform tests and inspections.

B. Tests and Inspections:

1. Test, inspect, and purge natural gas according to the International Fuel Gas Code and authorities having jurisdiction.

C. Natural-gas piping will be considered defective if it does not pass tests and inspections.

D. Prepare test and inspection reports.

3.10 OUTDOOR PIPING SCHEDULE

A. Underground natural-gas piping shall be the following:

1. PE pipe and fittings joined by heat fusion, or mechanical couplings; service-line risers with tracer wire terminated in an accessible location.

B. Aboveground natural-gas piping shall be the following:

1. Steel pipe with malleable-iron fittings and threaded joints.

3.11 INDOOR PIPING SCHEDULE

A. Aboveground, branch piping shall be the following:
1. Steel pipe with malleable-iron fittings and threaded joints.

B. Aboveground, distribution piping 2” and larger shall be the following:

1. Steel pipe with wrought-steel fittings and welded joints.

END OF SECTION 15195

SECTION 15300 – FIRE SPRINKLER SYSTEMS

PART 1 - GENERAL

1.1 SUMMARY

A. This project involves a new fire sprinkler system for the entire facility. It shall include the design drawings, hydraulic calculations, supply and installation of fire sprinkler system coverage throughout the new addition and remodeled areas of the existing building per the requirements of NFPA 13, the Utah State Codes, the local Building and Fire Departments and the Owner's Insurance Company.

1.2 WORK INCLUDED

A. The wet-pipe fire sprinkler system shall provide fire sprinkler coverage throughout all areas of the building and remodeled areas of the existing building and a dry-pipe fire sprinkler system to provide coverage throughout all attic areas. Work includes, but is not limited to:

1. Design, drawings, and hydraulic calculations.
2. Materials, equipment, and devices.

    a. Backflow prevention assembly with control and isolation valves.
    b. Pipe, fittings, hangers, seismic braces.
    c. Sprinklers, escutcheons, signs.
    d. Flow switch and horn strobe. (Wiring shall be completed under a different section of the specifications.)
    e. Fire Department Connection and FDC check valve.
    f. All other materials required for complete installation.

3. Fabrication, installation, and testing.
4. Permits, fees, and documentation.

1.3 SYSTEM DESCRIPTION

A. Risers:

1. The system risers shall meet current Codes and Standards. Work shall include but not be limited to:

    a. The existing supply to the system risers shall remain in service until the new supply to the riser manifold is installed and ready for use. The existing systems in any occupied areas shall not be "out of service" during the construction of the new addition.
    b. Provide a new double-check backflow prevention assembly at the Main Riser location. Additional devices also include:

1. A supervised control valve at both the inlet and the outlet of the backflow preventer.
2. A water gauge at both the inlet and outlet of the backflow preventer.
3. A water flow switch on the Main Riser.
4. A test and drain valve to allow testing of the water flow switch and to allow draining of the supply main.
5. A Fire Department Connection to supply both wet and dry systems shall be located where shown on the drawings.

   a) The location of the fire department connection shall be approved by the Architect and the Fire Marshal.
   b) A grooved check valve and automatic ball drip are required on the FDC.

6. All valves and devices shall be located to facilitate easy maintenance and service. See riser schematic attached to this specification.

c. Riser-check valve and dry-pipe valve shall be used.

d. A new weatherproof horn/strobe shall be located on exterior of building near the fire department connection. <u>Wiring of the electrical devices (flow switch and electric bell) shall be completed under a separate section of the specifications</u>.

B. Interior Piping and Sprinklers:

1. The automatic fire sprinkler systems shall be designed and installed to provide coverage throughout all areas of the building addition and in the remodeled areas of the existing building conforming to NFPA standards.

   a. Sprinklers shall be installed throughout all areas of the building except non-combustible concealed spaces.
   b. Piping is to be concealed above ceilings except where no ceiling exists.
   c. Exposed piping shall be run as high as possible.

      1. Any and all exposed piping <u>shall be specifically coordinated</u> with the Architect for aesthetic purposes prior to completion of the design. If piping is installed exposed without specific approval of the Architect, it shall be removed and replaced at no additional charge to the owner.
      2. Sprinklers installed on exposed piping below 7’-6” above the finished floor shall be protected with cage style head guards.

   d. Sprinkler heads shall be located in the center of the 2 ft dimension and at the quarter, half, or three quarter point of the 4 ft dimension of the ceiling tiles.
   e. Sprinkler heads shall be spaced to lights, diffusers, and other ceiling devices and shall be arranged in a geometric pattern with reference to the room or area boundaries.

      1. Sprinklers shall be centered in corridors, if possible.
      2. In rooms with folding partitions, the sprinklers shall be located such that the spacing and operation of the sprinklers shall be adequate with the

partition in either the closed or open position.

3. Sprinklers shall not be closer than 6” from a ceiling grid, light, diffuser, or other obstruction.

f. Inspector’s test valves shall be located on the system risers.
g. Auxiliary drain valves shall be located and in accessible locations at 7’-0” (+/-) above the floor.

1. Valve shall be located in mechanical, janitor, or service areas. Valves shall <u>not</u> be located in finished or public areas.
2. All test and drain valves shall be piped to the outside and shall discharge on a concrete splash block.
3. Supply mains for individual floors shall be connected to the existing main riser at each level located at the approximate center of the total building footprint.
4. Sprinklers shall be installed within the building such that the system piping and sprinkler heads will not be subject to freezing temperatures.

a) If wet system piping is to be installed in the attic and covered with insulation, plastic sheeting shall be draped over the piping to a minimum of 18” on each side of the pipe with the insulation placed on top of the sheeting. This will keep the insulation from filling in below the piping which will allow the heat of the room below to keep the piping from freezing.

h. If required, sprinklers in cold areas other than the attic may be supplied from the wet-pipe system, if the sprinklers are of the dry-barrel type or they may be installed on an auxiliary antifreeze loop.

1. If an antifreeze loop is required, it shall be installed adjacent to the system riser and piped to the area of application.
2. Antifreeze shall be Propylene Glycol as approved by NFPA 13.
3. Antifreeze solutions utilized in residential areas shall be a maximum of 40% concentration.

1.4 QUALITY ASSURANCE

A. Materials, devices, and equipment shall be Underwriters Laboratories listed or Factory Mutual approved for use in fire protection systems.

B. Designer shall be a State of Utah Registered Fire Protection Engineer or a NICET Certified Engineering Technician (Level IV).

1. The designer shall certify that the drawings and installation are in accordance with the intent of the plans and specifications.
2. The designer shall make a complete and final inspection of the system, including the operation of all alarms, control and test valves, the checking of all piping, seismic bracing, hangers, etc. and shall provide a letter certifying that the installation is complete, operational, and in accordance with the approved plans and specifications.

C. Installer shall be a licensed contractor regularly engaged in the installation of fire sprinkler systems in commercial type buildings.

1.5 REFERENCES

A. NFPA (National Fire Protection Association) 13, "Installation of Sprinkler Systems," 2010.

B. NFPA 14, “Installation of Standpipe and Hose Systems,” 2010.

C. NFPA 24, “Standard for the Installation of Private Fire Service Mains and Their Appurtenances,” 2010.

D. IBC (International Building Code), 2009.

E. IFC (International Fire Code), 2009.

F. Underwriters Laboratories "Fire Protection Equipment Directory," latest edition.

G. Factory Mutual Systems "Approval Guide," latest edition.

1.6 SYSTEM DESIGN

A. Design density and area of application:

1. Wet-Pipe System:

a. Mechanical, Electrical, Kitchen, and Janitorial Rooms: Ordinary Hazard Group 1, 0.15 gpm/ft^2 over 1,500 ft^2.
b. Storage and support areas: Ordinary Hazard Group 2, 0.20 gpm/ft^2 over 1,500 ft^2.
c. All other Common areas: Light Hazard, 0.10 gpm/ft^2 over 1,500 ft^2.
d. Areas may be reduced per NFPA 13 for the use of quick response sprinkler heads.

2. Dry-Pipe System:

a. Attic areas: Light hazard, 0.10 gpm/ft^2 over 1500 ft^2.
b. Attic sprinklers, if used, shall be designed per the individual listing of the sprinkler.

3. The design area shall be the hydraulically most remote rectangular area having a dimension parallel to the branch line equal to, or greater than, 1.2 times the square root of the area of sprinkler operation.

B. Maximum coverage per sprinkler head:

1. Ordinary Hazard areas: 130 ft^2

2. Light Hazard areas: 225 ft^2
3. Attic areas: 120 ft^2
4. Extended coverage sprinklers shall be installed per their individual listing.

C. Provide dry barrel sprinklers or an auxiliary antifreeze system to protect areas subject to temperatures less than 40 F.

1. Vestibules
2. Coolers and Freezers

D. Calculations for the seismic bracing shall be provided including all piping within the "area of influence" as described in NFPA 13.

1. Calculations for the "worst case" seismic brace may be submitted with all seismic bracing on the project similarly sized. Mark calculation as "worst case."
2. Mark the “area of influence” on the drawings for reference.

E. Water Flow Test:

1. The hydraulic calculations shall include all losses in the system and underground piping and all devices from the most remote sprinkler to the connection to the city water main.
2. System design pressure shall allow a 10% cushion under the water supply curve.
3. The water flow test taken at 601 Ft. Douglas Blvd is as follows:

a. Static Pressure 95 psi
b. Residual Pressure 60 psi
c. Water Flow 1250 gpm

1.7 SUBMITTAL

A. All drawings and calculations shall include the designers NICET number and signature or the Engineers Stamp and signature. Submittals without the appropriate signatures shall be returned unchecked.

B. Shop drawings, hydraulic calculations, seismic calculations, and equipment submittal shall be prepared, submitted and approved prior to fabrication and installation of any piping.

1. Shop drawings shall be prepared in CAD format, drawn to scale, clear and legible, and printed on sheets sized 24"x 36" minimum.

a. Minimum scale to be 1/8" - 1'-0" for plan views and sections and larger scale for details.
b. Shop drawings shall clearly show ceiling grid, lights, grills, ducts, registers and diffusers, stairs, soffits, and changes in ceiling height along with the sprinklers and piping.
c. A Building Section shall be included <u>showing the location of the sprinkler piping and sprinkler heads</u> in reference to building structural components,

ceilings, ductwork, insulation, etc.

d. Shop drawings shall include a Site Utility Plan (for reference) indicating all underground water supply piping from the Riser location to the point of connection to the city water main.

2. Hydraulic calculations generated by computer with a program, UL Listed for fire sprinkler system design. Each hydraulic calculation shall include the calculated water demand from the hydraulically most remote area to the point of connection in the street.
3. Seismic calculations with a graphical depiction of the seismic brace and detailing the type of attachment to the pipe and the structure and the corresponding loads and capabilities.
4. Equipment submittal containing catalog cut sheets for all major equipment used in the system.

    a. Pipe, valves, fittings, hangers, and seismic bracing.
    b. Grooved fittings, couplings, and gaskets.
    c. Sprinklers, escutcheons, FDC, and other sprinkler equipment.
    d. Double-check backflow prevention assembly.
    e. Flow and supervisory switches, and horn/strobe.

5. The submittal shall first be reviewed by the Architect. After corrections are made, the contractor shall submit and obtain approval from the Fire Marshal's Office and the Owner's Insurance carrier. Final drawings shall incorporate all requirements of the Architect, Fire Marshal, and Insurance carrier.

C. Submit to Architect for review and Architect's acceptance prior to fabrication and installation, six copies each:

1. Shop drawings.
2. Hydraulic calculations.
3. Seismic calculations.
4. Equipment catalog sheets.

D. Submit to Fire Marshal and obtain approval prior to fabrication, three copies each:

1. Shop drawings.
2. Hydraulic calculations.
3. Seismic calculations.
4. Contract specifications.
5. Equipment catalog sheets.

E. Submit to Owner's Insurance Company for review and acceptance prior to fabrication and installation, three copies each:

1. Shop drawings.
2. Hydraulic calculations.
3. Seismic calculations.
4. Equipment catalog sheets.

F. Upon completion of installation submit to Architect two copies each:

1. NFPA 13, "Contractor's Material & Test Certificate for Aboveground Piping."
2. As-built shop drawings with designer's signature and certification number or engineer's stamp and signature.

    a. As-built drawings shall be updated to reflect the actual installed pipe and fittings as modified in the field.
    b. As-built drawings shall be submitted in both hard copy and electronic format.

1.8 WARRANTY

A. Materials, equipment, and workmanship shall be free from defects for 12 months from the "Date Left in Service with All Control Valves Open," shown on "Contractor's Material and Test Certificate." If any Work is found to be defective, Contractor shall promptly, without cost to Owner, and in accordance with Owner's instructions, either correct such defective Work, or if Owner has rejected it, remove if from the site and replace it with non-defective work. Submit two copies of Warranty Certificates to Architect.

PART 2 - PRODUCTS

2.1 ACCEPTABLE MANUFACTURERS

A. Sprinkler equipment, heads and devices:

    1. Globe, Reliable, Tyco, Victaulic and Viking.

B. Backflow prevention assembly:

    1. Ames, Febco, Watts

2.2 PIPE AND TUBE

A. Exterior:

    1. Ductile iron pipe, AWWA 151, pressure class 150.

        a. The vertical riser through the floor shall be a cast flanged spigot piece.

            1. Clamp on flange, "Mega-lug", etc. are <u>not</u> acceptable.

        b. An "in-building-riser" as manufactured by Ames may be substituted for the flanged spigot piece.

            1. The grooved end of the in-building-riser is acceptable in lieu of the standard flange.

B. Interior:

1. 2” and larger:

   a. Ferrous piping, ASTM A53 Grade B, Schedule 40.

      1. Black Steel pipe for wet-pipe system.
      2. Galvanized pipe for dry-pipe system.

2. 1 ½” and smaller:

   a. Ferrous piping, ASTM A53 Grade A, Schedule 40.

      1. Black Steel pipe for wet-pipe system.
      2. Galvanized pipe for dry-pipe system.

3. Thin-wall piping shall not be approved.

2.3 FITTINGS

A. Exterior:

1. Ductile iron or Cast iron, mechanical joint, AWWA C110.
2. Cast iron flanged, ANSI B 16.1.

   a. “Clamp-on” or “set-screw lug” type flanges are not acceptable.

B. Interior.

1. 2” and smaller:

   a. Malleable iron threaded, ANSI/ASTM B16.3.

2. 2 ½” and larger:

   a. Ductile iron grooved, ANSI/ASTM A536.
   b. Forged steel fittings; socket welded and threaded, ANSI B16.11.

3. Plain end couplings, saddle couplings, and clamp type couplings are not acceptable.

2.4 HANGERS

A. Galvanized steel hangers conforming to the minimum requirements of NFPA 13.

1. A detail of each type of hanger shall be shown on the shop drawings.
2. Calculations for trapeze type hangers shall be provided.

2.5 SEISMIC FITTINGS AND BRACES

A. Seismic bracing shall be installed per the requirements of NFPA 13.

1. Flexible connections shall be provided at the top and bottom of the system riser and at other locations as described in NFPA 13.

2.6 SPRINKLER HEADS

A. Areas with ceilings:

1. Areas with ceilings and flush mounted light fixtures: small frame recessed pendent, glass bulb, quick response, ordinary temperature, white finish, with white recessed 2-pce threaded escutcheon.
2. Areas with ceilings and surface mounted light fixtures: small frame pendent, glass bulb, quick response, ordinary temperature, white finish, with white #401 style escutcheon.

a. Escutcheon shall be the minimum depth required that would allow the sprinkler to spray beneath the obstruction.

3. Restrooms: concealed pendent, quick response, ordinary temperature, white finish.

a. Only flat style concealed escutcheons are acceptable.

B. Areas without ceilings:

1. Standard upright or pendent, quick response, factory bronze, ordinary temperature.

C. Areas subject to freezing:

1. Wet-Pipe System:

a. Dry barrel pendent or sidewall, chrome finish, ordinary temperature.

1. Dry barrel sprinkler shall extend a minimum of 12” inside heated envelope.

b. Sprinklers on antifreeze loops shall be standard type heads.

2. Dry-Pipe System:

a. Standard Upright, bronze finish, quick response, ordinary temperature.
b. Dry barrel pendent or sidewall, chrome finish, intermediate temperature.

D. Sprinklers of intermediate and high temperature ratings shall be installed in specific locations near heat producing devices as required by NFPA 13.

1. Mechanical Rooms, Boiler Rooms, Electrical Rooms, etc. shall utilize sprinklers of high temperature rating.

2. Attic, Canopies, Coolers, etc, shall utilize sprinklers of intermediate temperature rating.

E. Spare heads in representative proportion to types installed and one head wrench for each type sprinkler. Total quantity of spare heads shall be per the requirements of NFPA 13.

1. Dry barrel sprinklers are exempt from this requirement.

2.7 VALVES

A. Drain valves as required by the design and as indicated in NFPA 13.

B. OS&Y Gate Valve with supervisory switch.

C. Butterfly Valve with integral supervisory switch.

D. Grooved swing check valve with replaceable rubber gasket.

E. One half-inch ball drip for FDC.

2.8 ALARM DEVICES

A. Vane Type Water Flow Switch with retard (DPDT).

B. Valve supervisory switch (SPDT).

C. Weatherproof horn-strobe assembly. (120 VAC)

2.9 FIRE DEPARTMENT CONNECTION

A. Exposed Siamese, straight pattern, <u>double</u> clapper, polished brass, 2-1/2" x 2-1/2" x 4", with polished brass wall escutcheon and polished brass caps and chains.

1. Cast brass escutcheon to be labeled “Fire Spkr” in raised letters 1" high.
2. Potter Roemer Fig. 5751, or equal.

2.10 BACKFLOW PREVENTION ASSEMBLY

A. Double-check backflow prevention assembly: ASSE 1015, with shut off and isolation valves, test cocks, and (2) independently operating check valves.

1. Working pressure to be 175-psi minimum.
2. Stainless Steel body and devices
3. UL Listed for use in fire sprinkler systems.
4. Ames Colt 200 or equal.

PART 3 - EXECUTION

3.1 INSPECTION

A. Inspect job site prior to fabricating materials.

1. Coordinate and sequence installation with the progress of other mechanical and structural systems and components.
2. Coordinate the design with all plans and other contractors to minimize conflicts during construction.
3. Coordinate and sequence installation with the progress of other mechanical and structural systems, and shall establish locations and elevations that will not interfere with the installation of the other mechanical, electrical, and structural systems.

    a. Conflicts shall be resolved prior to installation to eliminate any delays to the project schedule.

4. Schedule a meeting with the Architect and bring a layout of any and all exposed piping to coordinate the installation for aesthetic purposes.

3.2 INSTALLATION

A. Install systems in compliance with methods detailed in NFPA 13 and NFPA 24, including seismic requirements for Area 1, maximum potential for earthquake damage.

B. Sprinkler heads shall be located in the center of the 2 ft dimension and in the quarter, half, or three quarter point of the 4 ft dimension of acoustical ceiling tiles.

C. Piping shall not obstruct access to air control boxes, access doors, lights or other ceiling mounted equipment.

D. Install piping straight and true to bear evenly on hangers and supports. Pipes shall be run parallel to established building lines with risers run vertically.

E. Keep the interior and ends of piping clean and devoid of foreign material by closing pipe openings with caps or plugs during installation. Cover and protect components against dirt, chemical, or mechanical injury.

F. Where pipes pass through fire rated walls, partitions, ceilings and floors, maintain the fire-rated integrity with listed sealers and materials.

G. Provide white escutcheons where exposed pipe passes through walls, ceilings, or other building components.

H. Install test and drain valves at an accessible height and only in Mechanical, Service, or Janitorial Rooms. Test and drain valves shall not be installed above ceiling tiles, in access panels, etc.

1. All test and drain valves shall discharge outside the building on a concrete splash block.
2. Hose bibs on drain valves shall only be allowed if no other means is possible and only with the approval of the architect.

I. If wet system piping is to be installed in the attic and covered with insulation, plastic sheeting shall be draped over the piping to a minimum of 18” on each side of the pipe with the insulation placed on top of the sheeting. This will keep the insulation from filling in below the piping which will allow the heat of the room below to keep the piping from freezing.

J. Field Changes: Changes shall not be made in the field until <u>all</u> of the following has been accomplished:

1. Piping changes shall be laid out and submitted to the General Contractor for approval.
2. A short narrative shall be submitted as to why the change is necessary.
3. All costs, if any, associated with the change are submitted for approval.
4. <u>Written</u> approval from the General Contractor is granted.

3.3 FIELD QUALITY CONTROL

A. Obtain permits and post bonds as required by state and local AHJ's (Authorities Having Jurisdiction).

B. Inform AHJ's of job progress. Request presence of Architect, Engineer, and the AHJ's, perform tests and document results using Contractor's Material and Test Certificates.

3.4 TESTING

A. Hydrostatically test all piping and attached appurtenances for two hours at 200 psi, minimum, with no visible leakage and no loss of pressure. Conduct the testing prior to the installation of the ceilings to allow visual observation of the installed piping.

1. All tests are to be witnessed and approved by the Fire Marshall or his representative and the Architect.

B. Conduct a final inspection and operational test when the system is fully installed and complete. Provide sufficient labor and equipment to properly perform and supervise all required testing.

1. The final inspection and operational test shall be witness and approved by the Fire Marshal’s Office and the Architect.
   a. Exercise all control valves and insure the supervisory signal is sent to the fire alarm panel for each valve. Reset the fire alarm panel between each valve.
   b. Perform a full flow Inspector’s Test and verify alarms (both external horn strobe and internal fire alarm system) and record the time from valve operation to alarms. This time shall be less than 60 seconds.

c. Perform a full flow Main Drain Test and record the pressure. This test can be used on an annual basis to insure the water supply to the building is still adequate.
d. Submit copies of the completed Contractor's Materials and Test Certificate for Aboveground Piping to the Architect.

C. Train the Owner's maintenance personnel in the proper operation, testing, and maintenance of all the installed fire sprinkler system equipment.

D. Provide an inspection and operational test again at the end of the one year guarantee period. The inspection and testing shall be in accordance with the manufacturer's recommendations and according to the schedule and methods described in NFPA 25. A written Inspection Report shall be sent to the owner at the completion of the inspection.

3.5 DISINFECTION

A. Introduce dosage of 50-ppm chlorine in underground piping. During the contact period open and close all system valves several times. At end of 24-hour retention period at least 10 ppm shall remain throughout the piping.

B. At end of retention period, flush system until residual chlorine is reduced to less than 1.0 ppm.

3.6 CLEANING

A. Remove oil, scale, debris, and foreign substances from interior and exterior of devices, equipment, and materials prior to installation.

B. Upon job completion, remove tools, surplus materials and equipment. Leave all areas broom clean.

3.7 ACCEPTANCE

A. Acceptance of installation is subject to final inspection and approval by:

1. Architect or his designated representative.
2. Local Fire Marshal's Office.
3. The Owner's Insurance Carrier.

END OF SECTION 15300

BLANK PAGE

SECTION 15410 - PLUMBING FIXTURES

PART 1 - GENERAL

1.1 SUBMITTALS

A. Product Data: For each type of plumbing fixture indicated. Include selected fixture and trim, fittings, accessories, appliances, appurtenances, equipment, and supports. Indicate materials and finishes, dimensions, construction details, and flow-control rates.

B. Operation and Maintenance Data: For plumbing fixtures to include in operation, and maintenance manuals.

1.2 QUALITY ASSURANCE

A. Source Limitations: Obtain plumbing fixtures, faucets, and other components of each category through one source from a single manufacturer.
   1. Exception: If fixtures, faucets, or other components are not available from a single manufacturer, obtain similar products from other manufacturers specified for that category.

B. Regulatory Requirements: Comply with requirements in ICC A117.1, "Accessible and Usable Buildings and Facilities"; and Public Law 101-336, "Americans with Disabilities Act"; for plumbing fixtures for people with disabilities.

C. NSF Standard: Comply with NSF 61, "Drinking Water System Components--Health Effects," for fixture materials that will be in contact with potable water.

D. Select combinations of fixtures and trim, faucets, fittings, and other components that are compatible.

PART 2 - PRODUCTS

2.1 FIXTURES

A. General
   1. All water closets, urinals, and lavatories in toilet rooms shall be wall hung. Any intent to use countertop lavatories shall be prior approved with the University during design of the facility.
   2. Provide floor type service sinks in custodial closets.
   3. Atmospheric vacuum breakers shall be provided on all sink outlets in lab areas; or, where shown on plans, a branch line backflow preventer may be installed in a water line supplying an area of a lab or labs. When a branch line backflow preventer is used, the water piping downstream of the device must be labelled as "non-potable water."

4. Provide floor drains within 5'0" of all mechanical equipment which has water connections or use.
5. Provide at least one floor drain in each toilet room.
6. Provide atmospheric vacuum breakers for all service sinks.
7. All sinks, lavatories and wash basins shall have stainless steel braided flex tube and chrome plated ¼ turn ball valves.
8. All lavatories in public toilet room shall be provided with open grid strainers and not pop-up or other type of closeable drains.
9. All floor sinks shall be provided with at least a half grate.
10. Fixtures in one building shall be of one manufacturer.
11. Provide at least one set of hose bibbs (hot and cold) under the lavatories in each public toilet room.
12. Provide a floor sink near the drains of automatic sprinkler systems.
13. Provide 3" waste line risers to all urinals with approved fittings. All urinals shall be serviced with individual 2" waste arms and cleanouts (either individual 2" or a common 3" located on the riser).
14. All water closets and urinals shall have exposed flush valves with lever operator.
15. Approved manufacturers for fixtures and trim:
    a. Emergency Eye Wash and Emergency Shower Fixtures: Haws, Bradley or Guardian Equipment. All other manufacturers must be reviewed and approved by University Facilities Management prior to bid.
    b. Fixtures: American-Standard (including Eljer), Kohler, Zurn, and Elkay. All other manufacturers must be reviewed and approved by University Facilities Management prior to bid.
    c. Floor & Roof Drains, Carriers, Etc.: Zurn, J. R. Smith, Josam, and Wade. All other manufacturers must be reviewed and approved by University Facilities Management prior to bid.
    d. Trim: Chicago Faucets, Elkay, and T & S Brass. All other manufacturers must be reviewed and approved by University Facilities Management prior to bid.
    e. Flush Valves: Sloan or Zurn Z6000 Series (only). No other valves will be approved without site testing at the University. Automatic flush valves are not allowed except for handicapped toilets and urinals, and only for no more than one handicapped toilet and one handicapped urinal in each restroom. The automatic flushometers should be specified as the “aftermarket” type that can be replaced with a regular manual handle. Specify automatic flush valves to be battery operated with a manual flush button which will operate the valve when the flushometer fails to function.
    f. Automatic Faucets: shall be coordinated with University facilities.

PART 3 - EXECUTION

3.1 INSTALLATION

A. Assemble plumbing fixtures, trim, fittings, and other components according to manufacturers' written instructions.

3.2 FIELD QUALITY CONTROL

A. Test installed fixtures after water systems are pressurized for proper operation. Replace malfunctioning fixtures and components, then retest. Repeat procedure until units operate properly.

B. Install fresh batteries in sensor-operated mechanisms.

3.3 ADJUSTING

A. Operate and adjust faucets and controls. Replace damaged and malfunctioning fixtures, fittings, and controls.

B. Operate and adjust all fixtures. Replace damaged and malfunctioning units and controls.

C. Adjust water pressure at faucets and flushometer valves to produce proper flow and stream.

D. Replace washers and seals of leaking and dripping faucets and stops.

E. Install fresh batteries in sensor-operated mechanisms.

END OF SECTION 15410

BLANK PAGE

SECTION 15469 - WATER SOFTENERS

PART 1 - GENERAL

1.1 SUBMITTALS

A. Product Data: For the following:

1. Water Softeners. Include rated capacities, operating characteristics, furnished specialties, and accessories.
2. Water testing kits.

B. Shop Drawings: For water softeners. Include plans, elevations, sections, details, and connections to piping systems.

1. Wiring Diagrams: Power, signal, and control wiring.

C. Manufacturer Certificates: Signed by manufacturers certifying that water softeners comply with requirements.

D. Field quality-control test reports.

E. Operation and Maintenance Data: For water softeners to include in operation, and maintenance manuals.

F. Warranty: Special warranty specified in this Section.

G. Maintenance service agreement.

1.2 WARRANTY

A. Special Warranty: Manufacturer's standard form in which manufacturer agrees to repair or replace components of water softener that fail in materials or workmanship within specified warranty period.

1. Failures include, but are not limited to, the following:

a. Structural failures of mineral and brine tanks.
b. Faulty operation of controls.
c. Deterioration of metals, metal finishes, and other materials beyond normal use.
d. Attrition loss of resin exceeding 3 percent per year.
e. Mineral washed out of system during service run or backwashing period.
f. Effluent turbidity greater and color darker than incoming water.
g. Fouling of underdrain system, gravel, and resin, with turbidity or by dirt, rust, or scale from softener equipment or soft water, while operating according to manufacturer's written operating instructions.

2. Commercial Water Softener, Warranty Period: From date of Substantial Completion.
   a. Mineral Tanks: 10 years.
   b. Brine Tanks: Five years.
   c. Controls: Five years.
   d. Underdrain Systems: Five years.

PART 2 - PRODUCTS

2.1 MANUFACTURERS

A. In other Part 2 articles where titles below introduce lists, the following requirements apply to product selection:
   1. Manufacturers: Subject to compliance with requirements, provide products by one of the manufacturers specified.

2.2 COMMERCIAL WATER SOFTENERS

A. Water Conditioning Systems shall be designed for all buildings which supply potable (or non-potable) hot water for classroom sinks, toilet room lavatories, laboratory sinks, etc. These shall be provided with water softening equipment for this hot water.

B. All water conditioning systems shall have totalizing water meters on the inlet line and on the conditioned water supply line.

C. Verify water pressure at the conditioning system. Feed pressure at the inlet shall exceed the manufacturers recommended minimum pressure by 20%.

D. Water softeners shall have duplex resin tanks, a single brine tank which shall not exceed 48" in height, and an automatic regeneration system activated by the amount of flow, not by time clock. Provide sufficient floor space adjacent to the water softener for storage of bags of salt.

E. Water softening or conditioning equipment shall be based on GE Osmonics. All other manufacturers must be reviewed and approved by University Facilities Management prior to bid.

PART 3 - EXECUTION

3.1 WATER SOFTENER INSTALLATION

A. Install commercial water softener equipment on concrete bases, level and plumb. Maintain manufacturer's recommended clearances. Arrange units so controls and devices that require servicing are accessible. Anchor mineral and brine tanks and floor-mounting accessories to substrate.

B. Install seismic restraints for tanks and floor-mounting accessories and anchor to building structure.

C. Install brine lines and fittings furnished by equipment manufacturer but not specified to be factory installed.

D. Prepare mineral-tank distribution system and underbed for minerals and place specified mineral into mineral tanks.

E. Install water testing sets mounted on wall, unless otherwise indicated, and near water softeners.

3.2 FIELD QUALITY CONTROL

A. Manufacturer's Field Service: Engage a factory-authorized service representative to inspect, test, and adjust field-assembled components and equipment installation, including connections, and to assist in field testing. Report results in writing.

B. Perform the following field tests and inspections and prepare test reports:

1. Leak Test: After installation, charge system and test for leaks. Repair leaks and retest until no leaks exist.
2. Operational Test: After electrical circuitry has been energized, start units to confirm proper unit operation.
3. Test and adjust controls and safeties. Replace damaged and malfunctioning controls and equipment.

C. Remove and replace malfunctioning water softeners that do not pass tests and inspections and retest as specified above.

3.3 DEMONSTRATION

A. Engage a factory-authorized service representative to train Owner's maintenance personnel to adjust, operate, and maintain water softeners. Refer to Division 1 Section " Demonstration and Training."

END OF SECTION 15469

BLANK PAGE

SECTION 15513 - CONDENSING BOILERS

PART 1 - GENERAL

1.1 SUBMITTALS

A. Product Data: Include performance data, operating characteristics, furnished specialties, and accessories.

B. Shop Drawings: For boilers, boiler trim, and accessories. Include plans, elevations, sections, details, and attachments to other work.

C. Manufacturer Seismic Qualification Certification: Submit certification that boiler, accessories, and components will withstand seismic forces defined in Section "Mechanical Vibration and Seismic Controls." Include the following:

D. Source quality-control test reports.

E. Field quality-control test reports.

F. Operation and Maintenance Data: For boilers to include in operation, and maintenance manuals.

G. Warranty: Special warranty specified in this Section.

H. Other Informational Submittals:
1. ASME Stamp Certification and Report: Submit "A," "S," or "PP" stamp certificate of authorization, as required by authorities having jurisdiction, and document hydrostatic testing of piping external to boiler.

1.2 QUALITY ASSURANCE

A. Electrical Components, Devices, and Accessories: Listed and labeled as defined in NFPA 70, Article 100, by a testing agency acceptable to authorities having jurisdiction, and marked for intended use.

B. ASME Compliance: Fabricate and label boilers to comply with ASME Boiler and Pressure Vessel Code.

C. ASHRAE/IESNA 90.1 Compliance: Boilers shall have minimum efficiency according to "Gas and Oil Fired Boilers - Minimum Efficiency Requirements."

D. DOE Compliance: Minimum efficiency shall comply with 10 CFR 430, Subpart B, Appendix N, "Uniform Test Method for Measuring the Energy Consumption of Furnaces and Boilers."

E. UL Compliance: Test boilers for compliance with UL 795, "Commercial-Industrial Gas Heating Equipment." Boilers shall be listed and labeled by a testing agency acceptable to authorities having jurisdiction.

1.3 WARRANTY

A. Special Warranty: Manufacturer's standard form in which manufacturer agrees to repair or replace components of boilers that fail in materials or workmanship within specified warranty period.
   1. Warranty Period for Water-Jacketed Condensing Boilers:
      a. Leakage and Materials: Eight years from date of Substantial Completion.
      b. Heat Exchanger Damaged by Thermal Stress and Corrosion: Nonprorated for five years from date of Substantial Completion.

PART 2 - PRODUCTS

2.1 MANUFACTURERS

A. Manufacturers: Subject to compliance with requirements, provide products by one of the following:
   1. AERCO International.
   2. Hydrotherm
   3. Fulton
   4. Prior approved
   5. Due to the constantly changing nature of the high efficiency boiler industry, all manufacturers must be reviewed and approved by University Facilities Management prior to bid.

2.2 MANUFACTURED UNITS

A. Description: Factory-fabricated, -assembled, and -tested, water-jacketed condensing boiler with heat exchanger sealed pressure tight, built on a steel base; including insulated jacket; flue-gas vent; water supply, return, and condensate drain connections; and controls. Water heating service only.

B. Heat Exchanger: Stainless-steel primary and secondary combustion chamber.

C. Pressure Vessel: Carbon steel with welded heads and tube connections where not in contact with combustion or flue gases.

D. Burner: Natural gas, forced draft; swing-open front and burner observation port.

E. Blower: Centrifugal fan, forced draft. Include prepurge and postpurge of the combustion chamber.
   1. Motors: Comply with requirements specified in Section "Motors."

a. Motor Sizes: Minimum size as indicated. If not indicated, large enough so driven load will not require motor to operate in service factor range above 1.0.

2.3 VENTING KITS

A. Kit: Complete system, ASTM A 959, Type 29-4C stainless steel, pipe, vent terminal, thimble, indoor plate, vent adapter, condensate trap and dilution tank, and sealant.

B. Combustion-Air Intake: Complete system, stainless steel, pipe, vent terminal with screen, inlet air coupling, and sealant.

2.4 SOURCE QUALITY CONTROL

A. Burner and Hydrostatic Test: Factory adjust burner to eliminate excess oxygen, carbon dioxide, oxides of nitrogen emissions, and carbon monoxide in flue gas and to achieve combustion efficiency; perform hydrostatic test.

B. Test and inspect factory-assembled boilers, before shipping, according to ASME Boiler and Pressure Vessel Code.

C. Allow Owner access to source quality-control testing of boilers. Notify Architect 14 days in advance of testing.

PART 3 - EXECUTION

3.1 EXAMINATION

A. Before boiler installation, examine roughing-in for concrete equipment bases, anchor-bolt sizes and locations, and piping and electrical connections to verify actual locations, sizes, and other conditions affecting boiler performance, maintenance, and operations.

1. Final boiler locations indicated on Drawings are approximate. Determine exact locations before roughing-in for piping and electrical connections.

B. Examine mechanical spaces for suitable conditions where boilers will be installed.

C. Proceed with installation only after unsatisfactory conditions have been corrected.

3.2 BOILER INSTALLATION

A. Install boilers level on concrete base.

B. Vibration Isolation: Elastomeric isolation pads with a minimum static deflection of 0.25 inch. Vibration isolation devices and installation requirements are specified in Section "Mechanical Vibration and Seismic Controls."

C. Install gas-fired boilers according to NFPA 54.

D. Assemble and install boiler trim.

E. Install electrical devices furnished with boiler but not specified to be factory mounted.

F. Install control wiring to field-mounted electrical devices.

3.3 FIELD QUALITY CONTROL

A. Perform tests and inspections and prepare test reports.
   1. Manufacturer's Field Service: Engage a factory-authorized service representative to inspect components, assemblies, and equipment installations, including connections, and to assist in testing.

B. Tests and Inspections:

   1. Perform installation and startup checks according to manufacturer's written instructions.
   2. Leak Test: Hydrostatic test. Repair leaks and retest until no leaks exist.
   3. Operational Test: Start units to confirm proper motor rotation and unit operation. Adjust air-fuel ratio and combustion.
   4. Test and adjust controls and safeties. Replace damaged and malfunctioning controls and equipment.
      a. Check and adjust initial operating set points and high- and low-limit safety set points of fuel supply, water level and water temperature.
      b. Set field-adjustable switches and circuit-breaker trip ranges as indicated.

C. Remove and replace malfunctioning units and retest as specified above.

3.4 DEMONSTRATION

A. Engage a factory-authorized service representative to train Owner's maintenance personnel to adjust, operate, and maintain boilers. Refer to Section "Demonstration and Training."

END OF SECTION 15513

SECTION 15625 - CENTRIFUGAL WATER CHILLERS

PART 1 - GENERAL

1.1 PERFORMANCE REQUIREMENTS

A. Seismic Performance: Centrifugal chillers shall withstand the effects of earthquake motions determined according to ASCE/SEI 7.

B. Site Altitude: Chiller shall be suitable for altitude at which installed without affecting performance indicated. Make adjustments to affected chiller components to account for site altitude.

1.2 SUBMITTALS

A. Product Data: For each type of product indicated. Include refrigerant, rated capacities, operating characteristics, furnished specialties, and accessories.

1. Performance at ARI standard conditions and at conditions indicated.
2. Performance at ARI standard unloading conditions.
3. Minimum evaporator flow rate.
4. Refrigerant capacity of chiller.
5. Oil capacity of chiller.
6. Fluid capacity of evaporator, condenser.
7. Characteristics of safety relief valves.
8. Minimum entering condenser-fluid temperature.
9. Performance at varying capacities with constant design condenser-fluid temperature. Repeat performance at varying capacities for different condenser-fluid temperatures from design to minimum in 5 deg F increments.

B. Shop Drawings: Include plans, elevations, sections, details, and attachments to other work.

1. Detail equipment assemblies and indicate dimensions, weights, load distribution, required clearances, method of field assembly, components, and location and size of each field connection.
2. Wiring Diagrams: For power, signal, and control wiring.

C. Coordination Drawings: Floor plans, drawn to scale, on which the following items are shown and coordinated with each other, using input from installers of the items involved:

1. Structural supports.
2. Piping roughing-in requirements.
3. Wiring roughing-in requirements, including spaces reserved for electrical equipment.

4. Access requirements, including working clearances for mechanical controls and electrical equipment, and tube pull and service clearances.

D. Certificates: For certification required in "Quality Assurance" Article.

E. Source quality-control reports.

F. Startup service reports.

G. Operation and Maintenance Data: For each chiller to include in emergency, operation, and maintenance manuals.

H. Warranty: Sample of special warranty.

1.3 QUALITY ASSURANCE

A. ARI Certification: Certify chiller according to ARI 550 certification program.

B. ASHRAE Compliance:

1. ASHRAE 15 for safety code for mechanical refrigeration.
2. ASHRAE 147 for refrigerant leaks, recovery, and handling and storage requirements.

C. ASHRAE/IESNA Compliance: Applicable requirements in ASHRAE/IESNA 90.1

D. ASME Compliance: Fabricate and label chillers to comply with ASME Boiler and Pressure Vessel Code: Section VIII, Division 1, as applicable to chiller design. For chillers charged with R-134a refrigerant, include an ASME U-stamp and nameplate certifying compliance.

E. Comply with NFPA 70.

F. Comply with requirements of UL, and include label by a qualified testing agency showing compliance.

1.4 WARRANTY

A. Special Warranty: Manufacturer's standard form in which manufacturer agrees to repair or replace components of chillers that fail in materials or workmanship within specified warranty period.

1. Extended warranties include, but are not limited to, the following:

a. Complete chiller including refrigerant and oil charge.
b. Complete compressor and drive assembly including refrigerant and oil charge.
c. Refrigerant and oil charge.
d. Parts only and labor.

e. Loss of refrigerant charge for any reason.

2. Warranty Period: Five years from date of Substantial Completion.

PART 2 - PRODUCTS

2.1 MANUFACTURERS

A. Manufacturers: Subject to compliance with requirements, provide products by one of the following:

1. Carrier Corporation; a United Technologies company.
2. Trane; a division of American Standard.
3. YORK International Corporation.
4. Prior approved equal must be reviewed and approved by University Facilities Management prior to bid.

2.2 GENERAL

A. New chillers shall operate with EPA approved refrigerants. Required refrigerant sensors, alarms, and controls shall be supplied and installed in the Mechanical Room in accordance with current UMC, ASHRAE, etc., standards. Additionally, install a visual alarm outside the Mechanical Room near the entry. Refrigerant alarms are to include an interface connection for the Campus central control system. Relief/purge systems shall be piped outdoors.

B. Acceptable refrigerants are those with an ozone depletion potential (ODP) of 0.02 or less, and a global warming potential (GWP) of 700 or less (GWP based on CO2 = 1).

C. All new piping shall be thoroughly flushed and cleaned before being placed into service. The cleaning of these piping systems shall be accomplished by the Contractor using the University's approved water treatment supplier.

2.3 CENTRIFUGAL CHILLERS

A. Provide the following:

B. KW meter for measuring the electrical input to the chiller.

C. Soft start or VFD control on chillers 480V and above.

D. Chiller controls shall communicate with the Campus Building Automation System.

E. Provide service valves or other factory-installed accessories required to facilitate transfer of refrigerant from the chiller to a remote storage and recycling system.

F. Provide automatic purge system on sub-atmospheric refrigerants.

G. Condenser and evaporator tubes shall be smooth internal finish and enhanced exterior finish.

H. Supply an adequate lifting attachment point for head removal.

I. Epoxy coat the end bells on the condenser at the factory.

PART 3 - EXECUTION

3.1 CHILLER INSTALLATION

A. Install chillers on support structure.

B. Equipment Mounting: Install chiller on concrete bases using elastomeric pads. Comply with requirements for concrete bases specified in Division 3 Section "Cast-in-Place Concrete." Comply with requirements for vibration isolation devices specified in Division 15 Section "Vibration and Seismic Controls for HVAC Piping and Equipment."

1. Install dowel rods to connect concrete base to concrete floor. Unless otherwise indicated, install dowel rods on 18-inch centers around the full perimeter of concrete base.
2. For supported equipment, install epoxy-coated anchor bolts that extend through concrete base and anchor into structural concrete floor.
3. Place and secure anchorage devices. Use setting drawings, templates, diagrams, instructions, and directions furnished with items to be embedded.
4. Install anchor bolts to elevations required for proper attachment to supported equipment.

C. Maintain manufacturer's recommended clearances for service and maintenance.

D. Charge chiller with refrigerant and fill with oil if not factory installed.

E. Install separate devices furnished by manufacturer and not factory installed.

3.2 STARTUP SERVICE

A. Engage a factory-authorized service representative to perform startup service.

1. Complete installation and startup checks according to manufacturer's written instructions.
2. Verify that refrigerant charge is sufficient and chiller has been leak tested.
3. Verify that pumps are installed and functional.
4. Verify that thermometers and gages are installed.
5. Operate chiller for run-in period.
6. Check bearing lubrication and oil levels.
7. Verify that refrigerant pressure relief device is vented outside.
8. Verify proper motor rotation.

9. Verify static deflection of vibration isolators, including deflection during chiller startup and shutdown.
10. Verify and record performance of fluid flow and low-temperature interlocks for evaporator and condenser.
11. Verify and record performance of chiller protection devices.
12. Test and adjust controls and safeties. Replace damaged or malfunctioning controls and equipment.

B. Inspect field-assembled components, equipment installation, and piping and electrical connections for proper assembly, installation, and connection.

C. Prepare test and inspection startup reports.

3.3 DEMONSTRATION

A. Engage a factory-authorized service representative to train Owner's maintenance personnel to adjust, operate, and maintain chillers.

END OF SECTION 15625

BLANK PAGE

SECTION 15640 - COOLING TOWERS

PART 1 - GENERAL

1.1 DEFINITIONS

A. BMS: Building management system.

B. FRP: Fiber-reinforced polyester.

1.2 PERFORMANCE REQUIREMENTS

A. Delegated Design: Design cooling tower support structure and seismic restraints, including comprehensive engineering analysis by a qualified professional engineer, using performance requirements and design criteria indicated.

B. Structural Performance: Cooling tower support structure shall withstand the effects of gravity loads and the following loads and stresses within limits and under conditions indicated according to SEI/ASCE 7.

C. Seismic Performance: Cooling towers shall withstand the effects of earthquake motions determined according to SEI/ASCE 7.

1.3 SUBMITTALS

A. Product Data: For each type of product indicated. Include rated capacities, pressure drop, fan performance data, rating curves with selected points indicated, furnished specialties, and accessories.

1. Maximum flow rate.
2. Minimum flow rate.
3. Drift loss as percent of design flow rate.
4. Volume of water in suspension for purposes of sizing a remote storage tank.
5. Sound power levels in eight octave bands for operation with fans off, fans at minimum, and design speed.
6. Performance curves for the following:

    a. Varying entering-water temperatures from design to minimum.
    b. Varying ambient wet-bulb temperatures from design to minimum.
    c. Varying water flow rates from design to minimum.
    d. Varying fan operation (off, minimum, and design speed).

7. Fan airflow, brake horsepower, and drive losses.
8. Pump flow rate, head, brake horsepower, and efficiency.
9. Motor amperage, efficiency, and power factor at 100, 75, 50, and 25 percent of nameplate horsepower.

10. Electrical power requirements for each cooling tower component requiring power.

B. Shop Drawings: Complete set of manufacturer's prints of cooling tower assemblies, control panels, sections and elevations, and unit isolation. Include the following:

1. Assembled unit dimensions.
2. Weight and load distribution.
3. Required clearances for maintenance and operation.
4. Sizes and locations of piping and wiring connections.
5. Wiring Diagrams: For power, signal, and control wiring.

C. Delegated-Design Submittal: For cooling tower support structure indicated to comply with performance requirements and design criteria, including analysis data signed and sealed by the qualified professional engineer responsible for their preparation.

1. Detail fabrication and assembly of support structure.
2. Vibration Isolation Base Details: Detail fabrication including anchorages and attachments to structure and to supported equipment. Include adjustable motor bases, rails, and frames for equipment mounting.
3. Design Calculations: Calculate requirements for selecting vibration isolators and seismic restraints and for designing vibration isolation bases.

D. Coordination Drawings: Floor plans, drawn to scale, on which the following items are shown and coordinated with each other, using input from Installers of the items involved:

1. Structural supports.
2. Piping roughing-in requirements.
3. Wiring roughing-in requirements, including spaces reserved for electrical equipment.
4. Access requirements, including working clearances for mechanical controls and electrical equipment, and tube pull and service clearances.

E. Field quality-control reports.

F. Startup service reports.

G. Operation and Maintenance Data: For each cooling tower to include in emergency, operation, and maintenance manuals.

H. Warranty: Sample of special warranty.

1.4 QUALITY ASSURANCE

A. Testing Agency Qualifications: Certified by CTI.

B. Electrical Components, Devices, and Accessories: Listed and labeled as defined in NFPA 70, by a qualified testing agency, and marked for intended location and application.

C. ASHRAE/IESNA 90.1-2004 Compliance: Applicable requirements in ASHRAE/IESNA 90.1-2004, Section 6 - "Heating, Ventilating, and Air-Conditioning."

D. CTI Certification: Cooling tower thermal performance according to CTI STD 201, "Certification Standard for Commercial Water-Cooling Towers Thermal Performance."

1.5 WARRANTY

A. Special Warranty: Manufacturer's standard form in which manufacturer agrees to repair or replace the following components of cooling towers that fail in materials or workmanship within specified warranty period:

1. Fan assembly including fan, drive, and motor.
2. All components of cooling tower.
3. Warranty Period: Five years from date of Substantial Completion.

PART 2 - PRODUCTS

2.1 COOLING TOWERS

A. General:
1. Provide a concrete structure or fiberglass structure modular induced draft cooling tower as shown on the drawings. Only use cooling towers with ceramic fill.
2. All tower fans shall be controlled on supply water temperature via VFD.
3. Towers used for “Free Cooling” during winter months shall have a provision for de-icing.
4. Tower blow-downs shall be fitted with a meter and information recorded on controls graphic.
5. Concrete cooling towers shall include:
   a. Basin floor slab of continuous pour high density type II air entrained concrete. The mix shall meet a compressive strength test of 4,000 psi minimum (28 days).
   b. Reinforcing steel shall be designed for use in the basin structure.
   c. A continuous stripping of molded polyvinyl plastic water-stop (6" dumbbell) is to be located on the centerline position of all basin wall sections, basin floor slab intersections, and at all other cold pour joints, including vertical wall joints.
   d. Standard curing measures shall be used to protect the concrete while "green".
   e. Basin wall sections shall be constructed in a second continuous pour, with structural steel as designed by a structural engineer.
   f. Wall sections shall interlock with the water-stop seal in the basin slab to form a completely waterproof basin.
   g. All exposed concrete shall be rub-finished to provide a smooth and uniform surface free of form marks and defects. No honeycomb concrete will be allowed.
   h. Provide tile fill and cast iron fill support lintels guaranteed for 25 years.

i. Provide a minimum of 3 pass cellular type PVC mist eliminators. Free water carryover shall not exceed 0.0005% of the design water flow.
j. Eliminator access doors shall be stainless steel.
k. Provide a vibration switch with a time delay for start-up.
l. Gear type speed reducers shall be provided with an oil level alarm switch, sight glass, fill/drain line, and vent line. These appurtenances shall terminate outside the tower stack for maintenance.
m. All wetted parts shall be non corrosive. Fan blades shall be stainless steel or fiberglass reinforced resin. Drive shafts shall be carbon fiber with stainless steel. plate type flexible couplings. Pulleys, if used, shall be stainless steel.
n. Each drive shaft coupling shall be provided with a galvanized steel guard to protect the tower from shaft failure.
o. Motors shall be TEFC, and one size larger than selected for the rated duty of the tower.
p. Distribution system shall have no metal parts. Piping, fittings and nozzles shall be low pressure distributor type PVC or fiberglass reinforced resin. ABS nozzles may be used. Nozzles shall be bayonet coupling style with o-ring seal.
q. The fan deck shall be concrete constructed to the same specifications as the basin and walls.
r. Provide an aluminum fan screen for the tower stacks.
s. Provide adequate tower access via galvanized steel access doors and ladder rungs cast in concrete.
t. Cooling towers are to be designed with remote sumps to prevent freezing. Where impractical, provide a basin heater sized to maintain 40 degrees in the basin at an ambient temperature of -10 degrees F.
u. Cooling tower fans are to be controlled by water temperature and shall shut down when water is not present.
v. Approved manufacturers:
    1) Tower Engineering, Inc.;
    2) Marley Cooling Technologies;
    3) Composite Cooling Solutions, L.P.
    4) All other manufacturers must be reviewed and approved by University Facilities Management prior to bid.

6. Fiberglass structure cooling towers shall include:
    a. Casing, fan deck, internal supports, and basin shall be fire retardant glass reinforced polyester resin.
    b. All structure connecting surfaces and attachments shall be stainless steel (s.s.), including s.s. bolts.
    c. All joints shall be sealed with a continuous type sealant.
    d. All interior and exterior surfaces shall be coated with an all weather material to protect against UV deterioration on the outside, and to protect against wear on the inside.
    e. The tower shall be built to withstand 160 degrees F. and 30 PSF wind loading. Flame spread shall be 25 or less.
    f. Provide tile fill and fiberglass reinforced polyester fill support lintels guaranteed for 25 years.

g. Provide PVC mist eliminators with free water carryover not to exceed 0.02% of the design water flow.
h. Provide a vibration switch with a time delay for start-up.
i. All wetted parts shall be non corrosive. Fan blades shall be stainless steel, fiberglass reinforced resin, or aluminum. Pulleys, if used, shall be stainless steel.
j. Motors shall be TEAO, chemical duty, with sealed non lubrication bearings, when the motor is in the air stream otherwise the motor shall be TEFC, and one size larger than selected for the rated duty of the tower.
k. Distribution system shall have no metal parts. Piping, fittings and nozzles shall be low pressure distributor type PVC or fiberglass reinforced resin. ABS nozzles may be used. Nozzles shall be bayonet coupling style with o-ring seal.
l. Provide an aluminum fan screen for the tower stack.
m. Provide adequate tower access via access doors.
n. Provide ABS air intake louvers to shield the interior from sunlight and eliminate tower basin splash.
o. Provide a stainless steel or fiberglass ladder mounted to the tower exterior.
p. Cooling towers are to be designed with remote sumps to prevent freezing. Where impractical, provide a basin heater sized to maintain 40 degrees in the basin at an ambient temperature of -10 degrees F.
q. Cooling tower fans are to be controlled by water temperature and shall shut down when water is not present.
r. Approved manufacturers:
    1) Tower Engineering, Inc.;
    2) Marley Cooling Technologies;
    3) Composite Cooling Solutions, L.P.
    4) All other manufacturers must be reviewed and approved by University Facilities Management prior to bid.

PART 3 - EXECUTION

3.1 EXAMINATION

A. Before cooling tower installation, examine roughing-in for tower support, anchor-bolt sizes and locations, piping, and electrical connections to verify actual locations, sizes, and other conditions affecting tower performance, maintenance, and operation.

    1. Cooling tower locations indicated on Drawings are approximate. Determine exact locations before roughing-in for piping and electrical connections.

B. Proceed with installation only after unsatisfactory conditions have been corrected.

3.2 INSTALLATION

A. Install cooling towers on support structure.

B. Equipment Mounting: Install cooling tower on concrete bases using elastomeric mounts restrained spring isolators. Comply with requirements in Division 3 Section "Cast-in-Place Concrete." Comply with requirements for vibration isolation devices specified in Division 15 Section "Vibration and Seismic Controls for HVAC Piping and Equipment."

1. Provide stainless-steel plate to equally distribute weight over elastomeric pad.
2. Install dowel rods to connect concrete base to concrete floor. Unless otherwise indicated, install dowel rods on 18-inch centers around the full perimeter of concrete base.
3. For supported equipment, install epoxy-coated anchor bolts that extend through concrete base and anchor into structural concrete floor.
4. Place and secure anchorage devices. Use setting drawings, templates, diagrams, instructions, and directions furnished with items to be embedded.

C. Install anchor bolts to elevations required for proper attachment to supported equipment.

D. Maintain manufacturer's recommended clearances for service and maintenance.

E. Loose Components: Install electrical components, devices, and accessories that are not factory mounted.

3.3 FIELD QUALITY CONTROL

A. Testing Agency: Engage a qualified testing agency to perform tests and inspections.

B. Manufacturer's Field Service: Engage a factory-authorized service representative to perform field tests and inspections.

C. Perform tests and inspections.

1. Manufacturer's Field Service: Engage a factory-authorized service representative to inspect components, assemblies, and equipment installations, including connections, and to assist in testing.

D. Tests and Inspections: Comply with CTI ATC 105, "Acceptance Test Code for Water Cooling Towers."

E. Cooling towers will be considered defective if they do not pass tests and inspections.

F. Prepare test and inspection reports.

3.4 STARTUP SERVICE

A. Engage a factory-authorized service representative to perform startup service.

B. Inspect field-assembled components, equipment installation, and piping and electrical connections for proper assemblies, installations, and connections.

C. Obtain performance data from manufacturer.

1. Complete installation and startup checks according to manufacturer's written instructions and perform the following:

   a. Clean entire unit including basins.
   b. Verify that accessories are properly installed.
   c. Verify clearances for airflow and for cooling tower servicing.
   d. Check for vibration isolation and structural support.
   e. Lubricate bearings.
   f. Verify fan rotation for correct direction and for vibration or binding and correct problems.
   g. Adjust belts to proper alignment and tension.
   h. Verify proper oil level in gear-drive housing. Fill with oil to proper level.
   i. Operate variable-speed fans through entire operating range and check for harmonic vibration imbalance. Set motor controller to skip speeds resulting in abnormal vibration.
   j. Check vibration switch setting. Verify operation.
   k. Verify water level in tower basin. Fill to proper startup level. Check makeup water-level control and valve.
   l. Verify operation of basin heater and control.
   m. Verify that cooling tower air discharge is not recirculating air into tower or HVAC air intakes. Recommend corrective action.
   n. Replace defective and malfunctioning units.

D. Start cooling tower and associated water pumps. Follow manufacturer's written starting procedures.

E. Prepare a written startup report that records the results of tests and inspections.

3.5 ADJUSTING

A. Set and balance water flow to each tower inlet.

B. Adjust water-level control for proper operating level.

3.6 DEMONSTRATION

A. Engage a factory-authorized service representative to train Owner's maintenance personnel to adjust, operate, and maintain cooling towers.

END OF SECTION 15640

BLANK PAGE

SECTION 15725 - MODULAR INDOOR -CENTRAL AIR-HANDLING UNITS

PART 1 - GENERAL

1.1 PERFORMANCE REQUIREMENTS

A. Delegated Design: Design vibration isolation and seismic-restraint details, including comprehensive engineering analysis by a qualified professional engineer, using performance requirements and design criteria indicated.

B. Structural Performance: Casing panels shall be self-supporting and capable of withstanding 133 percent of internal static pressures indicated, without panel joints exceeding a deflection of L/200 where "L" is the unsupported span length within completed casings.

C. Seismic Performance: Air-handling units shall withstand the effects of earthquake motions determined according to SEI/ASCE 7.

1.2 SUBMITTALS

A. Product Data: For each air-handling unit indicated.
   1. Unit dimensions and weight.
   2. Cabinet material, metal thickness, finishes, insulation, and accessories.
   3. Fans:
      a. Certified fan-performance curves with system operating conditions indicated.
      b. Certified fan-sound power ratings.
      c. Fan construction and accessories.
      d. Motor ratings, electrical characteristics, and motor accessories.
   4. Certified coil-performance ratings with system operating conditions indicated.
   5. Dampers, including housings, linkages, and operators.
   6. Filters with performance characteristics.

B. Delegated-Design Submittal: For vibration isolation and seismic restraints indicated to comply with performance requirements and design criteria, including analysis data signed and sealed by the qualified professional engineer responsible for their preparation.

   1. Vibration Isolation Base Details: Detail fabrication including anchorages and attachments to structure and to supported equipment. Include adjustable motor bases, rails, and frames for equipment mounting.
   2. Design Calculations: Calculate requirements for selecting vibration isolators and seismic restraints and for designing vibration isolation bases.

C. Coordination Drawings: Floor plans and other details, drawn to scale, on which the following items are shown and coordinated with each other, using input from installers of the items involved:

1. Mechanical-room layout and relationships between components and adjacent structural and mechanical elements.
2. Support location, type, and weight.
3. Field measurements.

D. Seismic Qualification Certificates: For air-handling units, accessories, and components, from manufacturer.

1. Basis for Certification: Indicate whether withstand certification is based on actual test of assembled components or on calculation.
2. Dimensioned Outline Drawings of Equipment Unit: Identify center of gravity and locate and describe mounting and anchorage provisions.
3. Detailed description of equipment anchorage devices on which the certification is based and their installation requirements.

E. Source quality-control reports.

F. Field quality-control reports.

G. Operation and Maintenance Data: For air-handling units to include in operation, and maintenance manuals.

1.3 QUALITY ASSURANCE

A. Electrical Components, Devices, and Accessories: Listed and labeled as defined in NFPA 70, by a qualified testing agency, and marked for intended location and application.

B. NFPA Compliance: Comply with NFPA 90A for design, fabrication, and installation of air-handling units and components.

C. ARI Certification: Air-handling units and their components shall be factory tested according to ARI 430, "Central-Station Air-Handling Units," and shall be listed and labeled by ARI.

D. Comply with NFPA 70.

PART 2 - PRODUCTS

2.1 PACKAGED AIR HANDLING UNITS

A. Units shall be belt driven and arranged so that the number of air turns is minimized.

B. Blow-through units shall include perforated plate diffusers between the fan outlet and coils.

C. Access doors for inspection and cleaning must be provided for all internal parts. Coils are to have access to both inlet and outlet air sides. Doors shall be hinged and open against pressure.

D. Rooftop units shall be self-contained with no auxiliary condensing units, etc.

E. Provide internal isolation or vibration isolating mounting curb for all rooftop units.

F. If chilled water and/or heating hot water is required for a rooftop unit, it shall be enclosed within the unit casing and routed through the curb.

G. Dampers are to be low leak type.

H. Units are to be supplied with belt guards (including internal mounted drives). Access door trip switches may be provided in lieu of internal belt guards. A time delay is required after the door trip is operated to allow motor coast down.

I. Units with internal drives are to be supplied with extended grease fittings to the exterior casing.

J. Provide with self-contained controls that communicate with the campus Building Automation System.

K. Provide an economizer on all units.

L. Provide a convenience outlet with ground fault protection.

M. Provide slide-out drain pan.

N. Provide slide-out filter tray.

O. Provide slide-out motor and blower assembly.

P. Provide 2 years parts and labor warranty on the unit.

Q. Approved manufacturers are Carrier, York, or Trane. All other manufacturers must be reviewed and approved by University Facilities Management prior to bid.

R. Custom air handling units may be required based on building design. Manufacturers shall be reviewed and approved by University prior to bidding.

PART 3 - EXECUTION

3.1 INSTALLATION

A. Equipment Mounting: Install air-handling units on concrete bases. Secure units to anchor bolts installed in concrete bases. Comply with requirements for concrete bases specified. Comply with requirements for vibration isolation devices specified in Section "Vibration and Seismic Controls for HVAC Piping and Equipment."

1. Install dowel rods to connect concrete base to concrete floor. Unless otherwise indicated, install dowel rods on 18-inch centers around the full perimeter of concrete base.
2. Install epoxy-coated anchor bolts that extend through concrete base and anchor into structural concrete floor.
3. Place and secure anchorage devices. Use setting drawings, templates, diagrams, instructions, and directions furnished with items to be embedded.
4. Install anchor bolts to elevations required for proper attachment to supported equipment.

B. Arrange installation of units to provide access space around air-handling units for service and maintenance.

C. Do not operate fan system until filters (temporary or permanent) are in place. Replace temporary filters used during construction and testing, with new, clean filters.

D. Install filter-gage, static-pressure taps upstream and downstream of filters. Mount filter gages on outside of filter housing or filter plenum in accessible position. Provide filter gages on filter banks, installed with separate static-pressure taps upstream and downstream of filters.

3.2 FIELD QUALITY CONTROL

A. Manufacturer's Field Service: Engage a factory-authorized service representative to inspect, test, and adjust components, assemblies, and equipment installations, including connections.

B. Perform tests and inspections.
1. Manufacturer's Field Service: Engage a factory-authorized service representative to inspect components, assemblies, and equipment installations, including connections, and to assist in testing.

C. Tests and Inspections:
1. Leak Test: After installation, fill water and steam coils with water, and test coils and connections for leaks.
2. Charge refrigerant coils with refrigerant and test for leaks.
3. Fan Operational Test: After electrical circuitry has been energized, start units to confirm proper motor rotation and unit operation.
4. Test and adjust controls and safeties. Replace damaged and malfunctioning controls and equipment.

D. Air-handling unit or components will be considered defective if unit or components do not pass tests and inspections.

E. Prepare test and inspection reports.

3.3 STARTUP SERVICE

A. Engage a factory-authorized service representative to perform startup service.

1. Complete installation and startup checks according to manufacturer's written instructions.
2. Verify that shipping, blocking, and bracing are removed.
3. Verify that unit is secure on mountings and supporting devices and that connections to piping, ducts, and electrical systems are complete. Verify that proper thermal-overload protection is installed in motors, controllers, and switches.
4. Verify proper motor rotation direction, free fan wheel rotation, and smooth bearing operations. Reconnect fan drive system, align belts, and install belt guards.
5. Verify that bearings, pulleys, belts, and other moving parts are lubricated with factory-recommended lubricants.
6. Verify that zone dampers fully open and close for each zone.
7. Verify that face-and-bypass dampers provide full face flow.
8. Verify that outdoor- and return-air mixing dampers open and close, and maintain minimum outdoor-air setting.
9. Comb coil fins for parallel orientation.
10. Verify that proper thermal-overload protection is installed for electric coils.
11. Install new, clean filters.
12. Verify that manual and automatic volume control and fire and smoke dampers in connected duct systems are in fully open position.

B. Starting procedures for air-handling units include the following:
1. Energize motor; verify proper operation of motor, drive system, and fan wheel. Adjust fan to indicated rpm. Replace fan and motor pulleys as required to achieve design conditions.
2. Measure and record motor electrical values for voltage and amperage.
3. Manually operate dampers from fully closed to fully open position and record fan performance.

3.4 ADJUSTING

A. Adjust damper linkages for proper damper operation.

B. Comply with requirements in Section "Testing, Adjusting, and Balancing" for air-handling system testing, adjusting, and balancing.

3.5 CLEANING

A. After startup service, clean air-handling units internally on completion of installation, according to manufacturer's written instructions. Clean fan interiors to remove foreign material and construction dirt and dust. Vacuum clean fan wheels, cabinets, and coils entering air face.

B. After completing system installation and testing, adjusting, and balancing air-handling unit and air-distribution systems, clean filter housings and install new, clean filters.

C. Replace filters immediately prior to occupancy.

3.6 DEMONSTRATION

A. Engage a factory-authorized service representative to train Owner's maintenance personnel to adjust, operate, and maintain air-handling units.

END OF SECTION 15725

SECTION 15815 - METAL DUCTS

PART 1 - GENERAL

1.1 PERFORMANCE REQUIREMENTS

A. Delegated Duct Design: Duct construction, including sheet metal thicknesses, seam and joint construction, reinforcements, and hangers and supports, shall comply with SMACNA's "HVAC Duct Construction Standards - Metal and Flexible" and performance requirements and design criteria indicated.
   1. Static-Pressure Classes:
      a. Supply Ducts (except in Mechanical Rooms): 2-inch wg.
      b. Supply Ducts (Upstream from Air Terminal Units): 3-inch wg.
      c. Supply Ducts (Downstream from Air Terminal Units): 1-inch wg.
      d. Supply Ducts (in Mechanical Equipment Rooms): 2-inch wg.
      e. Return Ducts (Negative Pressure): 1-inch wg.
      f. Exhaust Ducts (Negative Pressure): 1-inch wg.
   2. Leakage Class:
      a. Round Supply-Air Duct: 3 cfm/100 sq. ft. at 1-inch wg.
      b. Flat-Oval Supply-Air Duct: 3 cfm/100 sq. ft. at 1-inch wg.
      c. Rectangular Supply-Air Duct: 6 cfm/100 sq. ft. at 1-inch wg.
      d. Flexible Supply-Air Duct: 6 cfm/100 sq. ft. at 1-inch wg.

B. Structural Performance: Duct hangers and supports and seismic restraints shall withstand the effects of gravity and seismic loads and stresses within limits and under conditions described in SMACNA's "HVAC Duct Construction Standards - Metal and Flexible" SMACNA's "Seismic Restraint Manual: Guidelines for Mechanical Systems."

1.2 SUBMITTALS

A. Product Data: For each type of the following products:
   1. Liners and adhesives.
   2. Sealants and gaskets.
   3. Seismic-restraint devices.

B. Field quality-control reports.

PART 2 - PRODUCTS

2.1 DUCTWORK

A. HVAC Duct shall be fabricated from galvanized steel in accordance with SMACNA requirements. Nonmetallic duct shall not be used.

B. All seams of ducts shall be sealed with mastic or mastic plus tape or gasketing as appropriate to limit the air leakage to SMACNA requirements.

C. Flexible ductwork shall only be used at terminal units and shall not exceed eight feet. Hard turns, offsets, or kinks will not be allowed. Provide duct supports every three feet.

D. High pressure ductwork shall be galvanized steel spiral lockseam construction.

E. The high pressure duct and fittings shall be manufactured by the same firm.

F. High pressure ductwork shall be tested and total allowable leakage of the system shall not exceed SMACNA requirements.

2.2 DUCT LINER

A. All supply air, return air, mixed air, and outside air ductwork shall be internally lined with 1" thick acoustical duct liner, as specified above.

B. Dimensions shown on plans of ductwork with duct liner shall be "inside clear dimensions" and shall be so noted on the drawings.

PART 3 - EXECUTION

3.1 DUCT INSTALLATION

A. Install ducts according to SMACNA's "HVAC Duct Construction Standards - Metal and Flexible" unless otherwise indicated.

B. Install round and flat-oval ducts in maximum practical lengths.

C. Install ducts with fewest possible joints.

D. Install factory- or shop-fabricated fittings for changes in direction, size, and shape and for branch connections.

E. Unless otherwise indicated, install ducts vertically and horizontally, and parallel and perpendicular to building lines.

F. Install ducts close to walls, overhead construction, columns, and other structural and permanent enclosure elements of building.

G. Install ducts with a clearance of 1 inch, plus allowance for insulation thickness.

H. Route ducts to avoid passing through transformer vaults and electrical equipment rooms and enclosures.

I. Where ducts pass through non-fire-rated interior partitions and exterior walls and are exposed to view, cover the opening between the partition and duct or duct insulation

with sheet metal flanges of same metal thickness as the duct. Overlap openings on four sides by at least 1-1/2 inches.

J. Where ducts pass through fire-rated interior partitions and exterior walls, install fire dampers. Comply with requirements in Section "Duct Accessories" for fire and smoke dampers.

K. Protect duct interiors from moisture, construction debris and dust, and other foreign materials. Comply with SMACNA's "Duct Cleanliness for New Construction Guidelines."

3.2 SEAM AND JOINT SEALING

A. Seal duct seams and joints for duct static-pressure and leakage classes specified in "Performance Requirements" Article, according to SMACNA's "HVAC Duct Construction Standards - Metal and Flexible," Table 1-2, "Standard Duct Sealing Requirements," unless otherwise indicated.
   1. For static-pressure classes 1- and 1/2-inch wg, comply with SMACNA's "HVAC Duct Construction Standards - Metal and Flexible," Seal Class C, except as follows:

      a. Ducts that are located directly in zones they serve.

3.3 HANGER AND SUPPORT INSTALLATION

A. Comply with SMACNA's "HVAC Duct Construction Standards - Metal and Flexible," Chapter 4, "Hangers and Supports."

3.4 FIELD QUALITY CONTROL

A. Perform tests and inspections.

B. Leakage Tests:

   1. Comply with SMACNA's "HVAC Air Duct Leakage Test Manual."
   2. Test the following systems:

      a. Supply air.

   3. Disassemble, reassemble, and seal segments of systems to accommodate leakage testing and for compliance with test requirements.
   4. Test for leaks before insulation application.
   5. Conduct tests at static pressures equal to maximum design pressure of system or section being tested. If static-pressure classes are not indicated, test entire system at maximum system design pressure. Do not pressurize systems above maximum design operating pressure. Give seven days' advance notice for testing.

C. Duct system will be considered defective if it does not pass tests and inspections.

D. Prepare test and inspection reports.

3.5 DUCT SCHEDULE

A. Fabricate ducts with galvanized sheet steel except as noted:
   1. Kitchen hood ductwork shall be welded stainless steel.

B. Liner:
   1. Supply- and Return-Air Ducts: Fibrous glass, Type I.

C. Double-Wall Duct Interstitial Insulation:
   1. Supply- and Return-Air Ducts: 1 inch thick.

END OF SECTION 15815

SECTION 15820 - DUCT ACCESSORIES

PART 1 - GENERAL

1.1 SUBMITTALS

A. Product Data: For the following:
   1. Volume dampers.
   2. High Efficiency Take-Offs.
   3. Turning vanes.
   4. Duct-mounting access doors.
   5. Flexible connectors.
   6. Flexible ducts.

1.2 QUALITY ASSURANCE

A. Comply with NFPA 90A, "Installation of Air Conditioning and Ventilating Systems," and NFPA 90B, "Installation of Warm Air Heating and Air Conditioning Systems."

PART 2 - PRODUCTS

2.1 SHEET METAL MATERIALS

A. Comply with SMACNA's "HVAC Duct Construction Standards--Metal and Flexible" for acceptable materials, material thicknesses, and duct construction methods, unless otherwise indicated.

B. Galvanized Sheet Steel: Lock-forming quality; complying with ASTM A 653/A 653M and having G60 coating designation; ducts shall have mill-phosphatized finish for surfaces exposed to view.

C. Reinforcement Shapes and Plates: Galvanized-steel reinforcement where installed on galvanized sheet metal ducts; compatible materials for aluminum and stainless-steel ducts.

D. Tie Rods: Galvanized steel, 1/4-inch minimum diameter for lengths 36 inches or less; 3/8-inch minimum diameter for lengths longer than 36 inches.

2.2 ACCESSORIES

A. Filters shall be specified to have a minimum efficiency of MERV 9 for pre-filters and MERV 11 for final filters by ASHRAE standard 52.5 Minimum Efficiency Reporting Value. Filter face velocity shall not exceed 350 FPM.

B. Coil filters shall be easily accessible. Where pre-filters protect higher efficiency filters downstream, either set of filters must be easily replaced without disturbing the other set.

C. A diaphragm actuated direct reading dial type differential pressure gauge shall be installed with static pressure tips across each filter section. The differential pressure gauge shall be similar to Dwyer 605 Series with appropriate operating range.

D. All roof hoods, roof exhausters, louvers and fresh air intakes shall include insect screens or bird screens. Louvers shall be anodized extruded aluminum.

E. Sound traps shall be installed wherever NC levels in the occupied space cannot be reduced to ASHRAE limits by other means.

F. Manual balancing dampers shall be opposed blade type, galvanized steel, and shall have locking quadrant operators or extended concealed ceiling operators where access is limited.

G. Fire dampers and/or fire/smoke dampers shall be installed in locations required by code and/or as directed by the Code Official. Combination fire/smoke dampers shall be auto-reset via the fire alarm panel. No pipes or conduits shall pass through any fire damper. Access doors shall be provided for all such dampers.

H. Flexible duct connections shall be installed where ducts connect to fans or other units which may cause vibration.

PART 3 - EXECUTION

3.1 APPLICATION AND INSTALLATION

A. Install duct accessories according to applicable details in SMACNA's "HVAC Duct Construction Standards--Metal and Flexible" for metal ducts and in NAIMA AH116, "Fibrous Glass Duct Construction Standards," for fibrous-glass ducts.

B. Provide duct accessories of materials suited to duct materials; use galvanized-steel accessories in galvanized-steel and fibrous-glass ducts, stainless-steel accessories in stainless-steel ducts, and aluminum accessories in aluminum ducts.

C. Install backdraft dampers on exhaust fans or exhaust ducts nearest to outside and where indicated.

D. Install volume dampers in ducts with liner; avoid damage to and erosion of duct liner.

E. Provide balancing dampers at points on supply, return, and exhaust systems where branches lead from larger ducts as required for air balancing. Install at a minimum of two duct widths from branch takeoff.

F. Provide test holes at fan inlets and outlets and elsewhere as indicated.

G. Install fire and smoke dampers, with fusible links, according to manufacturer's UL-approved written instructions.

H. Install duct access doors to allow for inspecting, adjusting, and maintaining accessories and terminal units:

I. Label access doors according to Section "Mechanical Identification."

J. Install flexible connectors immediately adjacent to equipment in ducts associated with fans and motorized equipment supported by vibration isolators.

K. For fans developing static pressures of 5-inch wg and higher, cover flexible connectors with loaded vinyl sheet held in place with metal straps.

L. Connect terminal units to supply ducts with maximum 12-inch lengths of flexible duct. Do not use flexible ducts to change directions.

M. Connect diffusers to low pressure ducts with maximum 60-inch lengths of flexible duct clamped or strapped in place.

N. Connect flexible ducts to metal ducts with draw bands.

O. Install duct test holes where indicated and required for testing and balancing purposes.

3.2 ADJUSTING

A. Adjust duct accessories for proper settings.

B. Adjust fire and smoke dampers for proper action.

C. Final positioning of manual-volume dampers is specified in Section "Testing, Adjusting, and Balancing."

END OF SECTION 15820

BLANK PAGE

SECTION 15840 - AIR TERMINAL UNITS

PART 1 - GENERAL

1.1 SUBMITTALS

A. Product Data: For each type of the following products, including rated capacities, furnished specialties, sound-power ratings, and accessories.

1. Air terminal units.
2. Sealants and gaskets.
3. Seismic-restraint devices.

B. Operation and Maintenance Data: For air terminal units to include in emergency, operation, and maintenance manuals. In addition to items specified in Division 1 Section "Operation and Maintenance Data," include the following:

1. Instructions for resetting minimum and maximum air volumes.
2. Instructions for adjusting software set points.

1.2 QUALITY ASSURANCE

A. Electrical Components, Devices, and Accessories: Listed and labeled as defined in NFPA 70, by a qualified testing agency, and marked for intended location and application.

B. ASHRAE Compliance: Applicable requirements in ASHRAE 62.1, Section 5 - "Systems and Equipment" and Section 7 - "Construction and System Start-Up."

PART 2 - PRODUCTS

2.1 SHUTOFF SINGLE-DUCT AIR TERMINAL UNITS

A. Available Manufacturers:

1. Price Industries model SDV or equal by.
2. Anemostat.
3. Krueger.
4. Titus.
5. Prior Approved Equal.

B. Configuration: Volume-damper assembly inside unit casing with control components located inside a protective metal shroud.

C. Casing: 0.034-inch steel.

1. Casing Lining: 1-inch- thick, coated, fibrous-glass duct liner complying with ASTM C 1071; secured with adhesive.
2. Air Inlet: Round stub connection or S-slip and drive connections for duct attachment.
3. Air Outlet: S-slip and drive connections.
4. Access: Removable panels for access to dampers and other parts requiring service, adjustment, or maintenance; with airtight gasket.

D. Regulator Assembly: Extruded-aluminum or galvanized-steel components; key damper blades onto shaft with nylon-fitted pivot points located inside unit casing.

1. Automatic Flow-Control Assembly: Combined spring rates shall be matched for each volume-regulator size with machined dashpot for stable operation.
2. Factory-calibrated and field-adjustable assembly with shaft extension for connection to externally mounted control actuator.

E. Volume Damper: Galvanized steel with peripheral gasket and self-lubricating bearings.

1. Maximum Damper Leakage: ARI 880 rated, 2 percent of nominal airflow at 3-inch wg inlet static pressure.
2. Damper Position: Normally open.

F. Hot-Water Heating Coil: Copper tube, mechanically expanded into aluminum-plate fins; leak tested underwater to 200 psig; and factory installed.

G. DDC Controls: Bidirectional damper operators and microprocessor-based controller and room sensor shall be compatible with temperature controls specified in Division 15 Section "HVAC Instrumentation and Controls" and shall have the following features:

1. Damper Actuator: 24 V, powered closed, spring return open.
2. Terminal Unit Controller: Pressure-independent, variable-air-volume controller with electronic airflow transducer with multipoint velocity sensor at air inlet, factory calibrated to minimum and maximum air volumes, and having the following features:

   a. Proportional, plus integral control of room temperature.
   b. Time-proportional reheat-coil control.
   c. Occupied and unoccupied operating mode.
   d. Remote reset of airflow or temperature set points.
   e. Adjusting and monitoring with portable terminal.
   f. Communication with temperature-control system specified in Division 15 Section "HVAC Instrumentation and Controls."

3. Room Sensor: Wall mounting, with temperature set-point adjustment and access for connection of portable operator terminal.

H. Control Sequence:

1. Suitable for operation with duct pressures between 0.25- and 3.0-inch wg inlet static pressure.

2. Factory-mounted and -piped, 5-micron filter; velocity-resetting, adjustable, high-limit control; and amplifying relay.
3. System-powered, wall-mounting thermostat.

2.2 SOURCE QUALITY CONTROL

A. Factory Tests: Test assembled air terminal units according to ARI 880.

1. Label each air terminal unit with plan number, nominal airflow, maximum and minimum factory-set airflows, coil type, and ARI certification seal.

PART 3 - EXECUTION

3.1 INSTALLATION

A. Install air terminal units according to NFPA 90A, "Standard for the Installation of Air Conditioning and Ventilating Systems."

B. Install air terminal units level and plumb. Maintain sufficient clearance for normal service and maintenance.

C. Install wall-mounted thermostats. See Controls Section.

3.2 IDENTIFICATION

A. Label each air terminal unit with plan number, nominal airflow, and maximum and minimum factory-set airflows. Comply with requirements in Division 15 Section "Identification for HVAC Piping and Equipment" for equipment labels.

3.3 FIELD QUALITY CONTROL

A. Testing Agency: Engage a qualified testing agency to perform tests and inspections.

B. Manufacturer's Field Service: Engage a factory-authorized service representative to inspect, test, and adjust components, assemblies, and equipment installations, including connections.

C. Perform tests and inspections.

1. Manufacturer's Field Service: Engage a factory-authorized service representative to inspect components, assemblies, and equipment installations, including connections, and to assist in testing.

D. Tests and Inspections:

1. After installing air terminal units and after electrical circuitry has been energized, test for compliance with requirements.

2. Leak Test: After installation, fill water coils and test for leaks. Repair leaks and retest until no leaks exist.
3. Test and adjust controls and safeties. Replace damaged and malfunctioning controls and equipment.

E. Air terminal unit will be considered defective if it does not pass tests and inspections.

F. Prepare test and inspection reports.

3.4 STARTUP SERVICE

A. Engage a factory-authorized service representative to perform startup service.

1. Complete installation and startup checks according to manufacturer's written instructions.
2. Verify that inlet duct connections are as recommended by air terminal unit manufacturer to achieve proper performance.
3. Verify that controls and control enclosure are accessible.
4. Verify that control connections are complete.
5. Verify that nameplate and identification tag are visible.
6. Verify that controls respond to inputs as specified.

END OF SECTION 15840

SECTION 15855 - DIFFUSERS, REGISTERS, AND GRILLES

PART 1 - GENERAL

1.1 SUBMITTALS

A. Product Data: For each product indicated, include the following:
   1. Data Sheet: Indicate materials of construction, finish, and mounting details; and performance data including throw and drop, static-pressure drop, and noise ratings.
   2. Diffuser, Register, and Grille Schedule: Indicate Drawing designation, room location, quantity, model number, size, and accessories furnished.

PART 2 - PRODUCTS

2.1 MANUFACTURERS

A. Subject to compliance with requirements, provide one of the products specified.:
   1. Anemostat
   2. Krueger
   3. Price
   4. Titus
   5. Prior approved equal. All other manufacturers must be reviewed and approved by University Facilities Management prior to bid.

2.2 SOURCE QUALITY CONTROL

A. Verification of Performance: Rate diffusers, registers, and grilles according to ASHRAE 70, "Method of Testing for Rating the Performance of Air Outlets and Inlets."

PART 3 - EXECUTION

3.1 EXAMINATION

A. Examine areas where diffusers, registers, and grilles are to be installed for compliance with requirements for installation tolerances and other conditions affecting performance of equipment.

B. Proceed with installation only after unsatisfactory conditions have been corrected.

3.2 INSTALLATION

A. Install diffusers, registers, and grilles level and plumb.

B. Ceiling-Mounted Outlets and Inlets: Drawings indicate general arrangement of ducts, fittings, and accessories. Air outlet and inlet locations shall be designed to achieve design requirements for air volume, noise criteria, airflow pattern, throw, and pressure drop. Make final locations where indicated, as much as practicable. For units installed in lay-in ceiling panels, provide lay-in ceiling module. Where architectural features or other items conflict with installation, notify Architect for a determination of final location.

C. Install diffusers, registers, and grilles with airtight connections to ducts and to allow service and maintenance of dampers, air extractors, and fire dampers.

3.3 ADJUSTING

A. After installation, adjust diffusers, registers, and grilles to air patterns indicated, or as directed, before starting air balancing.

END OF SECTION 15855

SECTION 15900 – AUTOMATIC TEMPERATURE CONTROLS

PART – 1 GENERAL

1.1 SCOPE OF WORK:

A. It is intended for the building automation system to be fully networked and installed by a qualified Automatic Temperature Control Contractor. The control system shall consist of electronic type direct digital controllers, input/output module panels, transmission equipment, training, warranty service and accessory equipment for a completely installed system of automatic temperature control.

B. The ATC Contractor shall furnish and install a complete system of DDC automatic temperature control as specified based on the approved University of Utah head ends.

D. The temperature control contractor shall install all necessary electrical control wiring of all temperature controls, heating and ventilating equipment motor starting circuit controls and all electrical control interlocks for same, and for any equipment furnished by the Owner.

E. The Automatic Temperature Control Contractor shall supply and supervise any and or all installation of control valves, water flow switches, temperature well and automatic dampers.

F. The Automatic Temperature Control Contractor shall provide all documentation and testing as required by the commissioning plan. This shall include, but not be limited to the following: filling out pre-functional test forms, completing pre-functional testing, physically checking, commissioning, and performing all functional testing for controls systems and equipment as necessary to accommodate 3rd party CxA verification.

PART – 2 EXECUTION

2.1 QUALITY ASSURANCE:

A. Acceptable Control Contractors and Control Manufacturers shall be as follows:

1 Johnson Metasys.
2 Trane Tracer
3 Honeywell by Wasatch Controls

B.It is the responsibility of the contractor to provide an installation that meets the requirements of the University. Due diligence should be followed at all times.

C. Provide unconditional ONE-YEAR parts and labor warranty as part of the overall project warranty. Warranty period shall begin AFTER the system has been commissioned and the owner has accepted it as complete.

D. Provide a two year parts only warranty. Warranty period shall begin AFTER the system has been commissioned and the owner has accepted it as complete.

E. All parts and material used, as well as how they are installed shall be in accordance with the specification as given by the manufacturer. All parts and material shall be new.

2.2 CODES:

A. Comply with NEMA standards pertaining to components and devices for electric control systems.

B. Provide electrical products that have been tested listed and labeled by UL and comply with NEMA standards.

C. Comply with NEMA 90A Standard for the Installation of Air Conditioning and Ventilation Systems where applicable to control sequences and controls.

D. Comply with NEMA 70, all current National Electric Codes, and all state and local laws, and ordinances for all electrical installation.

E. Power wiring (120 VAC or higher) to fans and to all other heating and ventilating equipment including the control panels shall be furnished by the Electrical Contractor. This Contractor is responsible for all control wiring (24 VAC or DC or lower) that is specified in connection with the Automatic Temperature Control System found in this section or elsewhere in other sections or drawings. Any such work or wiring specified in the electrical drawings or other sections as being performed by Div. 16000 electrical contractor shall be excluded from the ATC Contractors scope of work.

F. Temperature control wiring shall be installed in conduit where exposed, and plenum rated cable when concealed above accessible ceilings. State-licensed electricians and apprentices in a planned training program in compliance with state and local regulations and guidelines shall perform all conduit, wiring, and control equipment installations.

G. All wiring in equipment/mechanical rooms shall be in conduit.

2.3 SUBMITTAL AND TECHNICAL INFORMATION

A. Within 30 days of project award, the Automatic Temperature Controls (ATC) Contractor shall submit a complete control system submittal, shop Drawings (7 sets) and manufacturer's data with details of the Automatic Temperature Control and Direct Digital Control Systems. Submittals shall be both hard copy, and an electronic copy. Electronic submittals shall be pdf documents with searchable text, ie scanned copies will not be acceptable. The following items to be accredited to both the facility management operator (maintenance) and the engineer.

B. Complete system control diagrams including electrical and system flow diagrams.

C. Control sequence and material list of each component(s) and its individual description.

D. Complete and detailed sequence of operation including specific reference to points list, flow diagrams, and control valve schematics and sequence.

E. Manufactures specification sheets for each control component selected.

F. Documentation of all software and hardware. These manuals shall be complete with installation procedures as well as start up and programming instructions. They should also contain any testing or maintenance procedures required for operating the system on continuous basis.

G. Complete training schedule to include date(s), time and instructors itinerary.

H. Maintenance manuals shall provide descriptions of maintenance on all system components, including sensors and controlled devices. They shall cover inspection, periodic preventative maintenance, fault diagnosis, and repair or replacement of defective components.

I. Other hardware or parts as required.

2.4 OWNER INSTRUCTION UPON COMPLETION OF PROJECT:

A. Upon completion of the project, the temperature control contractor's representative shall spend minimum eight (8) hours training on site initially, in order to instruct the building operators on the operation of the system. Training shall be performed by individuals who are familiar with the entire project and have provided programming and installation on the project. Training shall include at a minimum:

- Routine maintenance of control equipment
- Instructions and procedures for warranty claims
- System and equipment monitoring, troubleshooting, diagnostics, etc.
- Set point adjustments, system adjustments, trending, data interpretation, etc.
- Any other issues or topics requested by owner, engineer, or commissioning agent

Training agenda and handouts shall be prepared beforehand, and submitted to owner, engineer, and commissioning agent for review and approval prior to performing training. Coordinate with General Closeout Requirements.

B. Upon completion of this project, the temperature control contractor shall provide an additional 8 hours to be used at the owner’s discretion. This may be used in up to 4 different site visits, or a combination of site visits and

formal classroom training as requested by the owner.

C. A letter of completion and acceptance of the Owner shall be delivered to the Owner and Consulting Engineering Firm after training requirements have been met.

2.5 ELECTRICAL WIRING:

A. All power wiring (120 VAC or higher) to fans and to all other heating and ventilating equipment including the control panels shall be furnished by the Electrical Contractor. This Contractor is responsible for all control wiring (24 VAC or DC or lower) not shown on electrical drawings or specified elsewhere in connection with the Automatic Temperature Control System (ATC). All exposed temperature control wiring shall be installed in conduit. Control wiring concealed above accessible ceilings may be installed in plenum rated cable. All conduit, wiring, and control equipment installation shall be performed by state licensed electricians.

2.6 GUARANTEE:

A. Components, parts, and assemblies shall be guaranteed against defects in materials and workmanship for a period of two years after acceptance. Expressed warranties are conditionally

based on the requirement that the items covered within the guarantee are used and maintained in accordance with the manufacturer's recommendations.

B. The guarantee commences at the time of project acceptance and continues for the previously indicated duration.

PART – 3 PRODUCTS – Not Used

END OF SECTION 15900

SECTION 15950 - TESTING, ADJUSTING, AND BALANCING

PART 1 - GENERAL

1.1 SUBMITTALS

A. Qualification Data: Within 15 days from Contractor's Notice to Proceed, submit 4 copies of evidence that TAB firm and this Project's TAB team members meet the qualifications specified in "Quality Assurance" Article.

B. Contract Documents Examination Report: Within 30 days from Contractor's Notice to Proceed, submit 4 copies of the Contract Documents review report as specified in Part 3.

C. Strategies and Procedures Plan: Within 60 days from Contractor's Notice to Proceed, submit 4 copies of TAB strategies and step-by-step procedures as specified in Part 3 "Preparation" Article. Include a complete set of report forms intended for use on this Project.

D. Sample Report Forms: Submit two sets of sample TAB report forms.

1.2 QUALITY ASSURANCE

A. TAB Firm Qualifications: Engage a TAB firm certified by AABC with minimum 5 years experience.

B. TAB Report Forms: Use standard forms from AABC's "National Standards for Testing and Balancing Heating, Ventilating, and Air Conditioning Systems" or NEBB's "Procedural Standards for Testing, Adjusting, and Balancing of Environmental Systems."

C. Instrumentation Type, Quantity, and Accuracy: As described in AABC's "National Standards for Testing and Balancing Heating, Ventilating, and Air Conditioning Systems.

D. Instrumentation Calibration: Calibrate instruments at least every six months or more frequently if required by instrument manufacturer.

1. Keep an updated record of instrument calibration that indicates date of calibration and the name of party performing instrument calibration.

E. Approved TAB agencies:

1. BTC Services.
2. Certified Test and Balance.
3. RS Analysis.
4. Testing and Balancing, Inc.

1.3 WARRANTY

A. National Project Performance Guarantee: Provide a guarantee on AABC's "National Standards for Testing and Balancing Heating, Ventilating, and Air Conditioning Systems" forms stating that AABC will assist in completing requirements of the Contract Documents if TAB firm fails to comply with the Contract Documents. Guarantee includes the following provisions:

1. The certified TAB firm has tested and balanced systems according to the Contract Documents.
2. Systems are balanced to optimum performance capabilities within design and installation limits.

PART 2 - PRODUCTS

PART 3 - EXECUTION

3.1 REQUIREMENTS

A. Testing and balancing shall be performed in complete accordance with AABC Standards for Field Measurements and Instrumentation Form Number 81266 Volume One, as published by the AABC; or, NEBB Procedural Standards for Testing, Adjusting and Balancing HVAC Systems, 1983; or, ASHRAE Standard 111.

B. All instruments used by the Contractor shall have been calibrated within the previous 12 months. The final balance report shall contain copies of calibration documents showing calibration tolerances, date of calibration and calibrating firm.

C. Air and water quantities shall be balanced to within 5% of the quantities shown.

D. Balance air flow at duct branch damper with outlet dampers full open.

E. Test, adjust and record fan RPM to design requirements, record initial and final readings.

F. Test and record motor amps, initial and final readings.

G. Make pitot tube traverse readings of main ducts and obtain design CFM for supply, return and outside air systems by adjusting fans and dampers.

H. Test and record systems static pressures, suction and discharge; record initial and final readings.

I. Test and adjust each terminal unit. Check and record inlet static pressures and modulation limit CFM values, initial and final readings after adjustments.

J. The Balancing Contractor shall have a Controls Mechanic available at all times to assist the balancing personnel in adjusting control devices.

K. Clearly mark the final position of all dampers, diffusers, reheat boxes, etc. with permanent identification material, neatly applied so as to be easily read and understood. Confusing or illegible markings shall be removed and reapplied as directed by the Project Manager.

L. All mechanical HVAC systems, air and water, shown on the plans shall be tested and adjusted to design flow. If heating air flow values are different than cooling, provide certification that heating CFM values are within design.

M. Replace sheaves and drives where required to meet design conditions.

N. Copies of a formal balance report shall be prepared and submitted for inclusion in the Operation and Maintenance Manuals. The report shall contain a complete, legible schedule of:
   1. All equipment outlets/inlets and their respective flows
   2. Pitot tube traverse readings and associated calculations
   3. Reheat box settings, GPM and CFM
   4. Box static pressures at inlets
   5. Box CFM limits (maximum and minimum)
   6. Status of each pump and fan, including RPM, AMPS, suction and discharge static pressures, flow
   7. A set of master plans shall be bound with the schedules (11" x 17" maximum) identifying the location of each inlet/outlet and device tested.
   8. Calibration documents

3.2 ADDITIONAL TESTS

A. Within 90 days of completing TAB, perform additional testing and balancing to verify that balanced conditions are being maintained throughout and to correct unusual conditions.

B. Seasonal Periods: If initial TAB procedures were not performed during near-peak summer and winter conditions, perform additional testing, inspecting, and adjusting during near-peak summer and winter conditions.

END OF SECTION 15950

BLANK PAGE

SECTION 16001 - ELECTRICAL GENERAL PROVISIONS

PART 1 - GENERAL

1.1. RELATED DOCUMENTS:

A. Drawings and general provisions of Contract, including General and Supplementary Conditions and Division-1 Specification sections, apply to work of this section. Architectural, Structural, Mechanical and other applicable documents are considered a part of the electrical documents.

1.2. DESCRIPTION OF WORK: Extent of electrical work is indicated on drawings and/or specified in Division 16 section. Work includes.

ITEM		SECTION
1.	General Provisions	16001
2.	Electrical Connections for Equipment	16070
3.	Conduit Raceways	16110
4.	Raceway Systems	16111
5.	Conductors and Cables	16120
6.	Electrical Boxes and Fittings	16135
7.	Supporting Devices	16136
8.	Wiring Devices	16140
9.	Flat Conductor Wiring Systems	16141
10.	Busduct	16145
11.	Motor Starters	16155
12.	Variable Frequency Drives	16156
13.	Panelboards	16160
14.	Motor and Circuit Disconnects	16170
15.	Overcurrent Protective Devices	16180
16.	Transformers	16181
17.	Switchgear and Switchboards	16182
18.	Motor Control Centers	16183
19.	Power Factor Correction	16184
20.	Protective Device Study	16185
21.	Electrical Identification	16195
22.	Manholes	16400
23.	Service Entrance	16420
24.	Grounding	16452
25.	Interior and Exterior Building Lighting	16510
26.	Exterior Area Lighting	16551
27.	Lighting Control Equipment	16560
28.	Occupancy Lighting Control and Equipment	16561
29.	Transient Voltage Surge Suppression	16600
30.	Lightning Protection System	16601
31.	Emergency Electrical Systems	16610
32.	Uninterruptible Power Supply	16611
33.	Fire Alarm and Detection Systems	16721
34.	Telephone Systems (Raceways)	16740
35.	Television Systems	16780

36.	Access Control/Security Systems	16782
37.	Intercom and Paging System	16784
38.	Clock And Program	16786
39.	Detail Drawings	Attached

1.3. INTERPRETATION OF DRAWINGS AND SPECIFICATIONS: Before bidding, Contractor shall familiarize himself with the drawings, specifications and project site.

1.4. QUALITY ASSURANCE: Comply with requirements of State and Local Ordinances. Obtain all permits, inspections, etc. Include all fees in bid. Employ only qualified craftsmen with at least three years of experience. Contractor shall have a current state contractor license.

1.5. All circuit lines will be shown. Panel schedules will be shown on the drawings with a description and the electrical load for each circuit.

1.6. SUBMITTALS:

A. SHOP DRAWINGS AND PRODUCT DATA: Prepare complete Shop Drawings and Brochures for materials and equipment. Submit 8 complete sets. Verify all dimensional information.

B. OPERATION AND MAINTENANCE MANUALS: Provide operating instruction and maintenance data books for all equipment and materials. Include complete cleaning and servicing data. Show serial numbers of each piece of equipment, complete lists of replacement parts, motor ratings, etc.

1.7. RECORD DRAWINGS:

A. Maintain, on a daily basis.

B. Record dimensions clearly and accurately, delineating the work as installed; identify locations by at least two dimensions to permanent reference points. These shall be kept on a clean set of prints of the working drawings. The Consultant will, as part of his job observation, review the "as-builts" to verify that changes are being recorded. At the conclusion of the work, the Consultant will incorporate the changes into the tracings.

C. GUARANTEE: Replace any work or materials which develop defect, within one year.

D. For new buildings or major addition or renovations to existing buildings, the Consultant shall specify that a set of electrical drawings be provided and permanently mounted in the electrical distribution room, vault or other suitable location.

PART 2 - PRODUCTS

2.1. GENERAL:

A. Products are specified by manufacturer name, description, and/or catalog number.

B. MANUFACTURERS: Provide products of manufacturers specified. Substitutions will be considered if a duplicate written application (2-copies) is submitted.

C. No materials or apparatus may be substituted after the bid opening.

D. Provide block-outs, sleeves, demolition work, etc., required for installation of work specified in this division.

E. It shall be the responsibility of the engineer to specify all basic materials and methods to be incorporated into the project. Material contained herein is intended as a guide to assist the engineer in specifying a system that will best provide for the needs and interests of the University.

F. Maintainability The engineer is directed to investigate materials and equipment intended for use in the project with regard to their maintainability. The engineer will verify that spare parts will readily be available and are likely to be so in the future. Electrical equipment and material will be U.L. labeled where such labeling is available.

2.2. CLEAN:

A. Clean up all equipment, conduit, fittings, packing cartons and other debris.

B. Clean fixtures, interiors and exteriors of all equipment, and raceways.

C. At the conclusion of the project, all electrical rooms and equipment shall be cleaned to an as new condition.

2.3. POWER OUTAGES:

A. All power outages required for execution of this work shall occur during non-standard working hours and at the convenience of the Owner. Include all costs for overtime work in bid.

2.4. UTILITIES

A. General

1. The Campus Design & Construction Department will provide all utility information available concerning the project work and surroundings.
2. The Consultant shall evaluate the utility information available against the project needs.
3. If exact elevations and locations are deemed necessary or desirable, the University will uncover the utilities and make the necessary surveys required (upon request from the Consultant). Requests for this special information should be made to the Campus Design & Construction Department.
4. Consult the Campus Design & Construction Department concerning utility connection points, capacities, etc. Coordination between the Consultant, the contractor and Facilities will be the responsibility of the Campus Design & Construction Department.
5. During the design development stage of the project, the Consultant (or his/her consulting engineer) shall identify all potential power or utility shutdowns including the following information:

   a. Duration of projected shutdown.
   b. Methods and materials to be used in the shutdown.
   c. Impact of the shutdown on adjacent facilities.
   d. Temporary service provision to be provided during the shutdown.

B. New Above Grade Structures

1. For any new above grade structure located above existing utilities, one of the following options shall be implemented (see also Chapter 4):

a. Relocate utilities.
b. A tunnel, chaseway, pipe sleeve or other suitable access must be provided for any utility being crossed by, or in the "near vicinity" of footings, retaining walls, staircases, or other concrete structures 8" in thickness. "Near vicinity" is described to mean a lateral distance 1 ½" times the depth of the utility, from each side of the pipe or conduit. This will allow for excavations to comply with OSHA trench standards and eliminate the need for costly concrete demolition and replacement during utility failures. The chosen access must extend a minimum of 2' past each side of the concrete structure.
c. Use an alternative design approved by the Design Standards Review Committee.

2.5. STORAGE AND PROTECTION OF MATERIALS:

A. Provide storage space for storage of materials and apparatus and assume complete responsibility for all losses.

2.6. EXCAVATING FOR ELECTRICAL WORK:

A. General: Locate and protect existing utilities and other underground work. Perform excavation in a manner which protects walls, footings, and other structural members.

2.7. CONCRETE BASES:

A. Provide 4" high concrete bases for electrical equipment.

2.8. ROOF PENETRATIONS:

A. Provide roof jack, sized to fit thightly to raceway for weathertight seal.

2.9. FIRE PENETRATION SEALS:

A. Seal all penetrations for work of this section through fire rated floors, walls and ceilings.

2.10. PROJECT FINALIZATION AND START-UP:

A. Assemble all equipment Factory Representatives and Subcontractors for system start-up.

B. Give personal instruction on operating and maintenance of their equipment to the Owner's maintenance and/or operation personnel.

2.11. TESTS

A. The engineer will specify and observe all pertinent tests to insure the proper operation of

the electrical system.

2.12. FINAL REVIEW:

A. Project foreman shall accompany the reviewing party, and remove coverplates, panel covers and other access panels to allow review of the entire electrical system.

B. Verify the **Substantial Completion** of the Project by conducting or assisting in a Substantial Completion Inspection. The **O&Ms** / Warranties are due from the Contractor on or before the date of the Substantial Completion Inspection. The prime consultant is to manage the collection of these documents, and the Electrical Consultant is to verify that the documents meet these requirements.

END OF SECTION 16001

BLANK PAGE

SECTION 16070 - ELECTRICAL CONNECTIONS FOR EQUIPMENT

PART 1– GENERAL

1.1. DESCRIPTION OF WORK:

A. Includes final electrical connection of all equipment having electrical requirements.

1.2. QUALITY ASSURANCE:

A. NEC Compliance and UL labels required.

PART 2 - PRODUCTS

2.1. GENERAL: Complete assembly of materials, including raceways, conductors, cords, cord caps, wiring devices, pressure connectors, terminals (lugs), electrical insulating tape, heat-shrinkable insulating tubing, cable ties, solderless wire nuts, and other items and accessories as needed to complete splices, terminations, and connections.

A. Permanently installed fixed equipment - flexible seal-tite conduit or raceway; to equipment; all wiring in raceway.

B. Movable and/or portable equipment - wiring device, cord cap, and multi-conductor cord suitable for the equipment.

C. Other methods as required by the National Electrical Code and/or as required by special equipment or field conditions.

PART 3 – EXECUTION

3.1. INSTALLATION OF ELECTRICAL CONNECTIONS:

A. In accordance with connector manufacturer's written instructions and with recognized industry practices.

B. Coordinate with equipment installation work.

C. Verify all electrical loads for equipment furnished under other Divisions.

D. Obtain and review the equipment shop drawings to determine particular final connection requirements.

END OF SECTION 16070

BLANK PAGE

SECTION 16110 - CONDUIT RACEWAYS

PART 1 - GENERAL

1.1. DESCRIPTION OF WORK:

A. Types of raceways:

1. Electrical Metallic Tubing
2. Flexible Metal Conduit
3. Intermediate Metal Conduit
4. Liquid-tight Flexible Metal Conduit
5. Rigid Metal Conduit
6. Rigid Non-metallic Conduit

1.2. QUALITY ASSURANCE:

A. MANUFACTURERS: Firms regularly engaged in manufacture raceway systems for not less than three (3) years.

B. STANDARDS: NEMA and NEMA standards, UL safety standards and UL listed and labeled.

PART 2 - PRODUCTS

2.1. METAL CONDUIT AND TUBING:

A. GENERAL: Metal conduit, tubing and fittings of types, grades, sizes and weights (wall thicknesses) as indicated; with minimum trade size of 3/4".

PART 3 - EXECUTION

3.1. INSTALLATION OF ELECTRICAL RACEWAYS:

A. Install electrical raceways where indicated; in accordance with manufacturer's written instructions, applicable requirements of NEC and NECA "Standard of Installation", and in accordance with the following.

B. SERVICE ENTRANCE CONDUCTORS: Install in rigid metal conduit (RMC), or intermediate metal conduit (IMC); except where buried below grade, install in non-metallic conduit or duct, individually encased in concrete.

C. FEEDERS UNDER 600 VOLTS: Install feeders to panels and motor control centers and individual equipment feeders rated 100 amps and greater, in rigid metal conduit (RMC), or intermediate metal conduit (IMC); except where buried below grade, install in non-metallic conduit or duct. Encase feeders 1-1/4" and larger, individually in concrete where installed below slab-on-grade, or below grade. See duct banks.

D. BRANCH CIRCUITS, SIGNAL AND CONTROL CIRCUITS, AND INDIVIDUAL EQUIPMENT CIRCUITS RATED LESS THAN 100 AMPS: Install in electric metallic tubing (EMT); except in poured walls, below concrete slab-on-grade, or in earth fill,

install in non-metallic plastic duct. Encase non-metallic duct 1-1/4" and larger in concrete. See duct banks.

E. Provide expansion fittings on all conduits crossing buildings expansion joints.

F. DUCTBANKS: Provide ductbank construction as indicated using 3000 psi concrete with red marker dye. Install #4 reinforcing bar in each corner of ductbank. Provide minimum 4" concrete cover on all sides of exterior conduits.

G. Duct banks will be provided to house high voltage underground cables. Duct banks will be concrete encased round bore plastic duct (Schedule 40 PVC). Typically the duct size should be 5 inches. Spare ducts will be provided in duct bank installations in consideration of the future needs of the campus electrical system. Duct banks will have a minimum slope of 4 inches per 100 ft. Seal around all cables entering man hole with permagum. Provide plastic plugs in both ends of all unused ducts and seal with silicon sealant. Provide two 4/0 bare copper grounds in each duct bank. Terminate grounds at manholes and building.

H. Concrete encasement will be a minimum of three inches between ducts and between ducts and earth. The top of the concrete encasement will be a minimum of 3 ft. below finished grade. Care shall be taken during installation to insure no debris gets into the line. After completion a mandrel not less than 12 inches long and approximately 1-112 inches diameter less than the duct diameter will be pulled through each duct to insure that no debris has collected in the duct. Mandrel pulls shall be witnessed by the engineer and university representative. Engineer should inspect duct bank construction before concrete is poured. Provide polypropylene pull rope in each unused duct.

I. Where duct banks enter manholes, buildings or vaults, a 10 ft. length of rigid galvanized steel conduit will be used for each duct. All elbows and offsets in duct runs will be made of rigid galvanized steel or composite resin.

J. ELECTRICAL IDENTIFICATION: Refer to Section 16195 for requirements.

END OF SECTION 16110

SECTION 16111 - RACEWAY SYSTEMS

PART 1 - GENERAL

1.1. DESCRIPTION OF WORK:

A. Extent of raceways is indicated by drawings and schedules.

B. Types of raceways in this section include the following:

1. Cable Tray Systems
2. Overhead Metal Raceways
3. Under-floor Metal Raceways
4. Header Ducts for Cellular Metal Floor Deck Units

1.2. QUALITY ASSURANCE:

A. STANDARDS: Comply with applicable portions of NEMA NEC and UL.

PART 2 - PRODUCTS

2.1. MANUFACTURED RACEWAY SYSTEMS:

A. GENERAL: Provide complete assembly of raceway including, all components and accessories as needed for complete system.

B. SURFACE METAL RACEWAYS: Provide galvanized steel surface metal raceways of sizes and channels indicated.

C. CABLE TRAY SYSTEMS: Provide tray systems of sizes, types and capacities indicated; NEMA Class III, 12" wide ladder type with 4" side rails and 6" rung spacing.

D. TRENCH DUCTS: Provide metal trench ducts, suitable for use with metal or pre-cast concrete raceways, of types, sizes and partitions indicated.

E. SINGLE-LEVEL UNDERFLOOR DUCT SYSTEMS: Provide single-level, two channel underfloor duct systems of types and sizes indicated.

PART 3 - EXECUTION

3.1. INSTALLATION OF ELECTRICAL RACEWAYS:

A. Install electrical raceways where indicated; in accordance with manufacturer's written instructions, applicable requirements of NEC and NECA "Standard of Installation", and complying with recognized industry practices.

B. All power conductors in University buildings will be run in approved conduits or other approved raceways.

C. Low voltage signal conductors (30 V or less and 1,000 V.A. or less) will be run in raceways except that they may be run without conduit where concealed in an accessible

ceiling space provided that the ceiling space is not used as an air plenum. (Low voltage signal cable assemblies UL listed for installation in air plenums may be installed without conduit.) All such signal conductors and raceways must be properly supported.

D. Low voltage security conductors will be run in conduit. They may also be run in cable trays, but only above a UCard approved secure ceiling. No loose running of security conductors will be permitted. Security conductor raceways must be properly supported.

E. Low voltage conductors run for control of mechanical equipment will be run in conduit.

F. Recessed lighting systems shall not be wired with permanent flex conduit running from fixture to fixture. This provision, however, shall not be interpreted to exclude properly installed and supported UL listed plug-in wring systems.

G. Plastic conduits should not be used inside University buildings. Where conduits are exposed to weather or other wet environment or where exposed to mechanical injury, rigid galvanized steel conduits will be used. Fire alarm conduit shall be 1/2" minimum. All other conduit shall be 3/4" minimum.

H. Condulets will not be used for splices or junction boxes.

I. Use of MC cable shall not be allowed unless specifically approved by Campus Design & Construction Electrical Engineer.

J. Flexible conduit in lengths greater than six feet shall not be used.

K. All EMT conduit fittings shall be fabricated from steel. Fittings made from pot metal shall not be allowed.

L. Conduits installed with wrinkles or kinks or otherwise in an unworkmanlike manner shall be replaced at no additional cost to the University.

END OF SECTION 16111

SECTION 16120 - CONDUCTORS AND CABLES

PART 1 - GENERAL

1.1. DESCRIPTION OF WORK:

A. Types of conductors and cables include:

1. Copper Conductors (600V)
2. Copper Conductors (15KV)

B. Applications for conductors and cables required for project include:

1. Power Distribution Service
2. Feeders
3. Branch Circuits

1.2. QUALITY ASSURANCE:

A. Comply with NEC and NEMA. Provid UL-listing and label.

1.3. SUBMITTALS:

A. PRODUCT DATA: Submit manufacturer's data on electrical cable and connectors for use above 600 volts.

B. FIELD TEST DATA: Submit test data in accordance with IEEE Standard 400-1980 showing ambient conditions, voltage levels, level durations, and conduction current for each step for cable for use above 600 volt.

C. WORKMEN'S COMPETANCY: Submit medium voltage cable Splicer/Terminator certification of competency and experience 20 days before splices or terminations are made in medium voltage cables.

PART 2 - PRODUCTS

2.1. COPPER CONDUCTORS (600V):

A. Service Entrance Conductors – Copper conductor.

B. Distribution and Panelboard Feeders; and Other Conductors, #2 AWG and Larger – Copper conductor.

C. Branch Circuit Conductors and All Conductors #3 AWG and Smaller - Copper conductor, with TW, THHN, or THWN insulation #10AWG and smaller, and THW larger than #10AWG, and where ambient temperature conditions exceed 60 degrees C. Use THHN in dry areas; in damp locations, under slab, on exterior, etc, use THWN. Minimum size #12 AWG.

D. Power conductors shall be color coded as follows:

208v 480v

phase A	black	brown
phase B	red	orange
phase C	blue	yellow
neutral	white	grey
ground	green	green

E. Conductors in sizes #6 and below shall be color coded with colored insulation. Larger sizes may be identified with colored tape. Colored tape where used shall be applied at all terminations, junction boxes and pull boxes.

F. All conductors #12 AGW and larger shall be stranded.

G. Splices for wire sizes #10 and smaller shall be screw on type similar to Scotch or Ideal wing nut connectors. Crimp on splices designed to be used without wire stripping shall not be acceptable.

H. Provide #10 AWG neutral conductor for all three and four wire fluorescent circuit home runs. Lighting circuits. Where multiple circuits serving lighting are run in a single raceway (not more than three circuits each connected to a separate electrical phase shall be allowed), a common neutral shall be allowed.

I. Outlet circuits. Where multiple circuits serving electrical outlets are run in a single raceway (not more than three circuits each connected to a separate electrical phase shall be allowed), a separate neutral shall be included for each circuit. In each outlet or junction box containing multiple neutrals, each neutral and circuit conductor shall be tagged to identify which circuit it serves.

J. All neutrals on distribution systems shall be sized to handle nonlinear loads.

K. Conductors for control circuits may be smaller and should meet the requirements of the signaling circuit they serve.

2.2. COPPER CONDUCTORS 15V:

A. All high voltage cables installed on the University's underground power distribution system will have a 15 KV **with 220 mils** ungrounded neutral 133% minimum insulation level. All conductors will be shielded and shall have an outer protective jacket to protect the shield. Concentric neutral cables with exposed neutral conductors will not be acceptable. Insulation shall be ethylene propylene rubber (EPR). The conductor material shall be copper. Okoguard-Okoseal Type MV- 105 #115-23-3131 (with 5 mil bare copper tape shield). Insulation for HV feeders from manholes to transformer vaults or transformer pads shall be ethylene propylene rubber (EPR). The conductor material shall be copper. Okoguard-Okoseal Type MV-105 #115-23-3131 or approved equal. **Provide 4/0 minimum THHN ground.** No three conductor cables shall be allowed.

B. Approved manufacturers for 15 KV cable are Okonite, Kerite, and General cable.

C. All High Voltage splices and terminations shall be 600 amp load brake and 200 amp dead brake elbows. All splices shall be Raychem or 3M.

D. The portion of all 15kV cables running through manholes and vaults will be fireproofed with 3M tape specifically designed for that purpose.

E. All ITV underground feeders will include a ground conductor. The ground shall be minimum 4/0 copper and have 600 V insulation. The ground conductor will be grounded at all manholes and transformer vaults.

F. Cable fault indicators will be provided on each HV single conductor cable leaving a manhole or transformer vault.

G. Phase indication will be provided for each HV cable in each manhole or transformer vault via a permanently installed metal tag and colored tape. Tag cables with feeder # and identification at all visible points on phase B. Phasing will be consistent with the rest of the University System and shall be marked as follows:

Phase 1 - Red
Phase 2 - Yellow
Phase 3 – Blue

2.3. SPLICES AND TERMINATIONS:

A. General. Splice and terminate cables as indicated on drawings. Furnish splicing material (premolded or splicing kit) as recommended by cable manufacturer.

B. Stress Cone. Provide stress cones of either wrapped tape construction of preformed rubber cone with semiconducting inlay for shield termination; to form Class I terminations in accordance with IEEE Standard 48.

PART 3 - EXECUTION

3.1. INSTALLATION:

A. General: Comply with manufacturer's written instructions and in accordance with recognized industry practices.

3.2. FIELD QUALITY CONTROL:

A. Test cable and wire for continuity and for short circuits. For cable rated above 600 volts perform complete acceptance testing before energizing in accordance with IEEE Standard 400-1980.

3.3. ELECTRICAL IDENTIFICATION: Refer to Section 16195 for requirements.

END OF SECTION 16120

BLANK PAGE

SECTION 16135 - ELECTRICAL BOXES AND FITTINGS

PART 1 - GENERAL

1.1. DESCRIPTION OF WORK:

A. Types of electrical boxes and fittings in this section include the following:

Outlet Boxes	Miscellaneous Boxes and Fittings
Knockout closures	Locknuts
Junction Boxes	Bushings
Pull Boxes	Conduit Bodies
Floor Boxes	

1.2. QUALITY ASSURANCE:

A. Comply with NEC AND ANSI. Provide UL label.

PART 2 - PRODUCTS

2.1. FABRICATED MATERIALS:

A. INTERIOR OUTLET BOXES: One piece, galvanized flat rolled sheet steel minimum depth 1-1/4".

B. WEATHERPROOF OUTLET BOXES: Corrosion-resistant cast-metal weatherproof outlet wiring boxes.

C. JUNCTION AND PULL BOXES: Code-gage sheet steel junction and pull boxes, with screw-on covers; of types, shapes and sizes to suit each respective location and installation;equipped with stainless steel nuts, bolts, screws and washers.

D. FLOOR BOXES: Cast-iron waterproof adjustable floor boxes.

E. CONDUIT BODIES: Galvanized cast-metal conduit bodies, of types, shapes and sizes to suit respective locations and installation, construct with threaded-conduit-entrance ends, removable covers, and corrosion-resistant screws.

F. BUSHINGS, KNOCKOUT CLOSURES AND LOCKNUTS: Corrosion-resistant punched-steel box knockout closures, conduit locknuts and malleable iron conduit bushings and offset connectors.

PART 3 - EXECUTION

3.1. INSTALLATION OF ELECTRICAL BOXES AND FITTINGS:

A. GENERAL: Comply with recognized industry practices. Provide coverplates for all boxes, weatherproof outlets for locations exposed to moisture, knockout closures to cap unused knockout holes, and install to ensure accessiblity. Fasten boxes rigidly to substarters or embed in concrete or masonry.

END OF SECTION 16135

BLANK PAGE

SECTION 16136 - SUPPORTING DEVICES

PART 1 - GENERAL

1.1. DESCRIPTION OF WORK: Include supports, anchors, sleeves and seals required for raceway support system.

1.2. QUALITY ASSURANCE: Comply with NEC. Provide UL label.

PART 2 - PRODUCTS:

2.1. SUPPORTING DEVICES

A. Complying with manufacturer's standard materials, design and construction in accordance with published product information, and as required for a complete installation.

PART 3 - EXECUTION

3.1. INSTALLATION OF SUPPORTING DEVICES:

A. Install in accordance with manufacturer's instructions and with recognized industry practices.

3.2. RACEWAYS: Support raceways in accordance with the following:

NUMBER OF RUNS	3/4" TO 1-1/4"	1-1/2" & LARGER 0
1	Full straps, clamps	Hanger or hangers.
2	Full straps, clamps	Mounting Channel or hangers.
3 or more	Mounting Channel	Mounting Channel

A. Do not use "tie wire". Do not support raceway from ceiling support wires.

3.3. FLOOR MOUNTED EQUIPMENT: Provide rigid attachment of all floor slab or strucutural system.

3.4. CABLE TRAYS: Provide vertical and lateral support systems.

END OF SECTION 16136

BLANK PAGE

SECTION 16140 - WIRING DEVICES

PART 1 - GENERAL

1.1. DESCRIPTION OF WORK:

A. Types include:

1. Receptacles
2. Switches
3. Dimmer controls
4. Cord caps
5. Cord connectors
6. Floor service outlets

1.2. QUALITY ASSURANCE:

A. Comply with NEC and NEMA standards. UL listing and label.

1.3. SUBMITTALS:

A. PRODUCT DATA: Submit manufacturer's data.

PART 2 - PRODUCTS

2.1. FABRICATED WIRING DEVICES:

A. Provide wiring devices of proper voltage rating. Manufacturer as specified.

B. The minimum outlet rating will be 20A. All outlets shall be grounded. In each outlet, each wire shall be tagged to identify which circuit it serves. Label box and cover with circuit and panel numbers in permanent marker.

C. Emergency Outlets. **Outlets installed on emergency power circuits shall be red.** Other permanent identification of emergency outlets is acceptable only upon written approval of Campus Design & Construction Electrical Engineer.

D. GROUND-FAULT INTERRUPTER: Provide general-duty, duplex receptacle, ground-fault circuit interrupters.

E. CORD CAPS AND CONNECTORS: Provide 3-wire grounding, cap plugs, and connectors of ampere and voltage rating required.

F. INCANDESCENT LAMP DIMMERS: Provide branch lighting solid-state AC dimmer controls for incandescent fixtures; wattage and voltage as indicated.

G. FLUORESCENT LAMP DIMMERS: Single-pole, semi-conductor modular type AC dimmers for fluorescent fixtures; continuously adjustable slider control, and with electromagnetic filters to reduce noise and interference to minimum.

2.2. WIRING DEVICE ACCESSORIES:

A. WALL PLATES: Plate color to match wiring devices, nylon coverplates in all finished areas.

B. FLOOR SERVICE OUTLETS: Leveling and fully adjustable with finish as selected by Architect.

C. POKE-THROUGH ASSEMBLY DEVICES: Factory-assembled poke-through assembly devices equipped with wiring devices.

D. TELEPHONE/POWER POLES: Factory-assembled telephone/power poles for use with telephone and power systems installed above suspended ceilings.

PART 3 - EXECUTION

3.1. Comply with manufacturer's instructions and recognized industry practices.

3.2. TESTING: Test for continuity and proper polarity connections.

3.3. ELECTRICAL IDENTIFICATION: Refer to Section 16195 for requirements.

END OF SECTION 16140

SECTION 16141 - FLAT CONDUCTOR WIRING SYSTEMS

PART 1- GENERAL

1.1. DESCRIPTION OF WORK:

A. Flat-Conductor Cable
B. Transition Boxes
C. Wall Plates
D. Tap Insulators And End-Cap Tape
E. Outlet Pedestals
F. Steel Tape
G. Special Tools And Materials Required For Installation

1.2. QUALITY ASSURANCE:

A. Comply with NEC and NEMA standards. Provide UL-listing and label.

B. SUBMITTALS: Submit shop drawings.

PART 2 - PRODUCTS

2.1. FLAT CONDUCTOR WIRING SYSTEM POWER:

A. General: Provide Flat-Conductor Cable (Type FCC) branch wiring systems as indicated.

B. Flat-Conductor Cable: Factory laminated unit consisting of a two-piece assembly including, conductor assembly and ground shield attached to the ground conductor.

C. TOP SHIELD: A grounded metal shield steel tape.

D. Tap and Splice Insulator Kit (T & B Cat. No. FCIK):

E. PVC Tape (T & B Cat. No. FCC10):

1. End-Cap Tape (T & B Cat. No. FCEC):
2. Pressure-Sensitive tape (T & B Cat. No. FCWT1):
3. Tap Splice and Connector (T & B Cat. No. FCSFF):

2.2. OUTLET PEDESTALS:

A. Low profile Direct Contact Pedestal: Metal mounting base plate with insulated top cover; 20 amp three-wire, receptacle with insulation piercing teeth center ground screw molded high impact top cover.

B. Transition Boxes and Covers: Constructed of .062" thick cold rolled strip steel conforming to AISI 1010, and finished with electro-deposited tin plate conforming to MIL-T-10727A-1.

C. FCTRBG-1 Transition Box, Modular Wall (Kit)

D. FCBCRC Transition Box, Column Mounted with duplex receptacle cutout in cover.

E. FCTBRK Robertson cellular duct conversion kit.

F. FCTRGH Transition Box, Surface Mounted.

G. FCST Surface mounted transition assembly.

H. FCTRBT Transition Box, Stud Mounted, 2-1/4" deep.

I. FCTRBX1 Single Cable Transition Box 2-1/4" deep.

J. FCTRBCT Concrete rough-in box.

K. FCTRBCT-2 Top activating ring kit.

L. Provide Transition Box covers constructed of .063" thick cold-rolled strip steel conforming to AISI 1010, baked enamel finish; and slot seal fabricated from semi-rigid vinyl.

M. Terminal Block (T & B Cat. No. FCTB5/3)

2.3. PRODUCTS (TELEPHONE/SIGNAL)

A. FLAT CONDUCTOR WIRING SYSTEM - TELEPHONE/SIGNAL

1. General: This system shall meet AT&T Specifications, Product Evaluation Criteria, Flat Undercarpet Communication Cable, dated October 22, 1980 and Federal Communication Specification, Part 68.

2.4. MATERIALS:

A. Flat Communication Cable (3-, 4-, and 25 Pair): Provide 26 AWG copper conductors insulated with .010" high density polyethylene insulation.

PART 3 – EXECUTION

3.1. INSTALLATION OF FLAT CONDUCTOR WIRING SYSTEMS

A. General: Install transition boxes where indicated, complying with manufacturer's written instructions, applicable requirements of NEC and NECA's "Standard of Installation", and in compliance with recognized industry practices to ensure that products fulfill requirements.

3.2. TESTING:

A. Test for continuity, short circuit and proper polarity connections.

END OF SECTION 16141

SECTION 16145 - BUSDUCT

PART 1- GENERAL

1.1. DESCRIPTION OF WORK:

A. Plug-in busduct

B. Feeder busduct

1.2. QUALITY ASSURANCE:

A. Provide UL listing. Comply with NEC.

1.3. SUBMITTALS:

A. PRODUCT DATA: Manufacturer data installation instructions and general recommendations.

B. SHOP DRAWINGS: Dimensioned isometric and sectional drawings.

PART 2 – PRODUCTS

A. ACCEPTABLE MANUFACTURES: As specified.

2.2. BUSDUCT:

A. GENERAL: Provide low impedance type, totally enclosed. Provide firestops or barriers.

2.3. FEEDER BUSDUCT:

A. Provide volts,phase wire busduct with full neutral, and 50 percent capacity integral ground bus. Provide aluminum busbars

B. PLUG-IN UNITS: Provide circuit breaker type, fusible switch type.

PART 3 – EXECUTION

3.1. Install busducts in accordance with manufacturer's recommendations and instructions.

3.2. Install all cable tap boxes, bus plug-in units, etc.

3.3. ELECTRICAL IDENTIFICATION: Refer to Section 16195 for requirements.

END OF SECTION 16145

BLANK PAGE

SECTION 16155 - MOTOR STARTERS

PART 1 - GENERAL

1.1. DESCRIPTION OF WORK:

A. Types of motor starters in this section includes:

1. AC Fraction Horsepower Manual Starters
2. AC Line Voltage Manual Starters
3. AC Non-Reversing Magnetic Starters
4. AC Combination Non-Reversing Magnetic Starters

1.2. QUALITY ASSURANCE:

A. Comply with NEC and NEMA. Provide UL-listing and label.

1.3. SUBMITTALS:

A. PRODUCT DATA: Submit manufacturer's data.

B. SHOP DRAWINGS: Submit dimensioned drawings.

C. MOTOR VOLTAGE/CURRENT REPORT: After installation is complete, measure voltage of each phase of each motor.

PART 2 - PRODUCTS

2.1. MANUFACTURER: As specified.

2.2. MAINTENANCE STOCK, FUSES: Furnish spare fuses.

2.3. MOTOR STARTERS:

A. GENERAL: Provide motor starters and ancillary components; of types, sizes, ratings and electrical characteristics indicated which comply with manufacturer's standard materials.

B. THERMAL OVERLOAD UNITS: Provide thermal overload units, sized to actual running full load current.

C. AC FRACTIONAL HP MANUAL STARTERS (EQUAL TO SQUARE D CLASS 2510):

D. AC LINE VOLTAGE MANUAL STARTERS (EQUAL TO SQUARE D CLASS 2510):

E. AC COMBINATION NON-REVERSING MAGNETIC STARTERS (EQUAL TO SQUARE D CLASS 8539):

F. AC COMBINATION NON-REVERSING MAGNETIC STARTERS (EQUAL TO SQUARE D CLASS 8538):

© BNA Consulting, Inc.

PART 3 - EXECUTION

3.1. INSTALLATION OF MOTOR STARTERS:

A. Comply with manufacturer's written instructions, recognized industry practices.

3.2. POWER FACTOR CORRECTION:

A. Provide individual capacitors for each motor rated 10HP or more,selected to improve power factor to a minimum of 95%. Connect at motor terminals.

3.3. ADJUST AND CLEAN:

A. Inspect operating mechanisms. Adjust units.

3.4. FIELD QUALITY CONTROL:

A. Energize and demonstrate functioning.

3.5. ELECTRICAL IDENTIFICATION: Refer to Section 16195 for requirements.

END OF SECTION 16155

© BNA Consulting, Inc.

SECTION 16156 - VARIABLE FREQUENCY DRIVES

PART 1 – GENERAL

1.1 DESCRIPTION OF WORK:

A. Extent of variable frequency drive (VFD) work as shown by drawings, schedules and shown herein. Work includes complete installation, electrical connections, testing, and commissioning.

1.2 QUALITY ASSURANCE:

A. Comply with NEC, NEMA and IEEE. Comply with applicable requirements of UL 508, "Power Conversion Equipment".

PART 2 – PRODUCTS

2.1 ACCEPTABLE MANUFACTURERS:

A. GENERAL: Subject to compliance with requirements, provide products as specified.

2.2 GENERAL:

A. Provide pulse width modulated variable frequency A.C. drives and ancillary components; of types, sizes, ratings and electrical characteristics indicated which comply with manufacturer's standard materials, design and construction in accordance with published information and as required for a complete installation.

B. Soft starting systems shall be provided for motors 10 ½ hp and larger.

C. The entire variable frequency drive installation shall conform to the latest applicable standard of the following:

IEEE - Institute of Electrical and Electronic Engineers
NEC - National Electrical Code
NEMA - National Electrical Manufacturers Association

D. Each complete variable frequency drive package shall be listed and carry the label of at least one of the following:

UL - Underwriters Laboratory
ETL - ETL Testing Laboratories, Inc.

2.3 VARIABLE FREQUENCY DRIVE SYSTEM:

A. The variable frequency AC drive shall convert 3 phase, 60 Hertz input power to an adjustable AC frequency and voltage for controlling the speed of AC squirrel cage motors. The rectifier section (converter) shall employ a diode or fully gated bridge to develop a constant DC bus voltage. Variable voltage rectifiers utilizing partially gated SCR's are unacceptable. The DC bus shall utilize filter capacitors and DC link inductors to minimize generated harmonics. The PWM inverter control scheme shall produce an output wave form which closely approximates actual sine wave current.

B. For motor installations, the VFD specifications shall require complete schematic drawings, catalog sheets, and diagrams / pictures showing actual components and parts numbers. This information is required in operation and maintenance manuals. The maintenance manuals shall include test certificates, warranty information, and a listing of service personnel responsible for warranty repairs.

C. Variable frequency drives shall be rated for continuous operation at a minimum of 10 percent greater than the full load current rating of the motor served. The variable frequency drive inverter shall be altitude compensated and sized for the elevation at which installed.

D. The variable frequency drive inverter unit shall be mounted on a removable panel to facilitate maintenance.

E. Door mounted operator devices shall be industrial oil tight similar to those found on motor control centers.

F. Control power for operator devices and field connections shall be 120 volts.

G. Cooling fans and filters are required in all variable frequency drive enclosures.

H. Specify surge suppressors for the line side conductors feeding each variable frequency drive. Also specify reactive filters for the load side conductors feeding each variable frequency drive.

I. Verify the compatibility of the VFD system and the motor being controlled.

J. Each system shall have an engraved label on each door operator and pilot device.

K. Each VFD is to be supplied with an input disconnect motor circuit protector (MCP). The MCP shall allow trip adjustment sufficient to start the motor across the line in the bypass mode, and normally will be set at a minimum setting for maximum protection in the VFD mode. The door mounted handle shall be lockable in the off position. Each VFD is to be supplied with an isolation input disconnect switch on the line side of the inverter to disconnect all power from the inverter during maintenance operations. The inverter isolating switch operator shall be door mounted and shall be lockable in the off position.

L. As a minimum, specify the following door mounted operator controls:
   1. Hand/Off/Auto Switch
   2. Local/Remote Switch
   3. Frequency Setting Speed Pot
   4. Power On Light
   5. VFD Enable Light
   6. VFD Fault Light
   7. External Fault Light (safeties interlock)
   8. Bypass switch

M. The inverter shall be specified with a minimum of the following protective features and an alarm display indication:
   1. Overcurrent Shut-Off
   2. Regenerative Overvoltage
   3. Electronic Thermal Protector
   4. Heatsink Overheat
   5. Instantaneous Power Failure
   6. Ground Fault

N. Specify the following termination points on a terminal strip for field connections:
   1. Safeties Interlock (N.C. contacts located remote)
   2. Remote Start/Stop Contact (N.O. Contacts located remote)
   3. Remote VFD Fault Contacts (N.C.)
   4. Remote VFD/Bypass Enable Contacts (N.O.)
   5. Remote Electronic Signal Input

O. Auto Restart is to be initiated by means of an automatic time delay restart after recovering from undervoltage or loss of power. The inverter shall not automatically restart after overcurrent, overvoltage, overtemperature, or any other damaging condition, but shall require a manual restart.

P. Specify remote signal connection terminals (0-10 VDC = 0-100% speed, or, 4-20 mA - 20-100% speed) Provide label on VFD specifying which control signal is used.

Q. AC Line Reactors shall be specified.

R. Multi Motor Units shall be specified with separate overload protection for each motor.

S. Variable frequency drives shall be specified as a complete system, and shall include an enclosure and a manually selected motor rated contactor-type maintenance bypass arrangement. The bypass shall include a minimum of 2 contactors (mechanically interlocked). The system shall be assembled in a single enclosure. The enclosure shall be suitable for the conditions in which the unit is located. No louvered cans shall be allowed unless protected by filters and fans. The maintenance bypass shall allow maintenance operations to be safely performed while the system is operating in the bypass mode. Each mechanical system driven by a VFD shall be specified to be designed and constructed to operate at specified conditions and safely at full capacity in the bypass mode during maintenance operations. Variable frequency drives shall be UL or ETL labeled as a complete system and not merely contain UL or ETL labeled components.

T. When variable frequency drives are specified, complete provisions shall be included in the design, equipment selection, and specifications to insure power quality. The installation shall be designed and constructed to insure compliance with IEEE STD. 519-1992 (Recommended

U. Practices for Harmonic Control in Electrical Power Systems). The Consultant shall be responsible to see that complete testing is performed to insure that electrical system voltage and current harmonic distortions operate within acceptable limits as recommended in IEEE STD. 519-1992.

V. The specifications shall require the Contractor to protect stored VFD systems. Storage must be in areas free of dirt, dust, vibration and moisture. VFDs shall not be exposed to excessive heat or cold. The specifications shall require the installation of new filters in VFD units just prior to substantial completion, when system maintenance will become the University's responsibility.

W. Vendor start up shall be specified for each variable frequency drive system.

X. Suppliers of VFD systems must be in the primary business of supplying Variable Frequency Drives, and shall have a minimum of five (5) years of experience supplying and maintaining VFDs. Suppliers must have local service center with factory spare parts inventory and factory authorized service technicians available 24 hours/day.

Y. The following variable frequency drive manufacturers are the only manufacturers approved:

ABB Inc.
Danfoss
General Electric Company (GE ASTAT XT Soft Starters)
Mitsubishi Electric Automation
Rockwell Automation Allen Bradley
Yaskawa Electric America

PART 3 – EXECUTION

3.1 INSTALLATION OF VARIABLE FREQUENCY DRIVES:

A. Install variable frequency drives as shown, in accordance with manufacturer's written instructions, applicable requirements of NEC, NEMA standards, and NECA's "Standards of Installation", and in compliance with recognized industry practices to ensure that products fulfill requirements.

3.2 START-UP SERVICES:

A. The supplier of the AC drive described herein, shall provide field start-up service by an authorized factory trained service representative. The factory representative shall be trained in

the maintenance and troubleshooting of the equipment as shown herein. Start-up service shall include system check-out, start-up and system run, and harmonic testing.

B. Variable frequency drives (VFD) shall have a five year warranty for parts and labor from date of Vendor start-up.

3.3 ELECTRICAL IDENTIFICATION: Refer to Section 16195 for requirements.

END OF SECTION 16156

SECTION 16160 - PANELBOARDS

PART 1– GENERAL

1.1. DESCRIPTION OF WORK:

A. Types of panelboards and enclosures in this section include lighting and appliance panelboards.

1.2. QUALITY ASSURANCE:

A. Provide UL listing. Comply with NEC and NEMA Stds. Pub No. 250, and Pub No. 1.

1.3. SUBMITTALS:

A. PRODUCT DATA: Submit manufacturer data.

B. SHOP DRAWINGS: Submit dimensioned drawings of panelboards and enclosures.

PART 2 - PRODUCTS

2.1. PANELBOARDS:

A. POWER DISTRIBUTION PANELBOARDS: Dead-front safety type. Equip with copper bus bars, full-sized neutral bus and ground bus. The engineer must analyze the system for coordination and short circuit interrupting duty. All circuit breakers in the distribution panel and in branch panels downstream shall have interrupting ratings sufficient to interrupt the maximum short circuit current available. Due to the expanding nature of the campus high voltage distribution system, short circuit calculations should assume an infinite bus on the primary side of the building distribution transformer. Internal busing for distribution panels shall be constructed of copper (aluminum bus will not be acceptable). Provide minimum 50 percent spare space and capacity. Lugs for distribution panels shall be rated copper only (cu-al rated lugs shall not be acceptable).

2.2. BRANCH PANELS

A. Branch panels for lighting and general use power will be circuit breaker type with bolt-on breakers. Provide minimum 50 percent spare space and capacity. Provide sufficient spare conduits stubbed into ceiling spaces or other suitable location to allow for future utilization of space capacity. Provide minimum of one grounded and one insulated ground bus in each branch panel. Internal busing for branch panels shall be constructed of copper (aluminum bus will not be acceptable) Lugs for branch panels shall be rated copper only (cu-al rated lugs shall not be acceptable).

B. Approved manufacturers for distribution panels are Sq-D, GE, Cutler Hammer, and Siemens.

PART 3 - EXECUTION

3.1. INSTALLATION OF PANELBOARDS:

A. GENERAL: Install in accordance with manufacturer's written instructions, applicable requirements of NEC and NECA's "Standard of Installation".

B. Panel Directories

1. Specify typed directories or individual circuit labels for all distribution panels, branch panels and motor control centers. Circuit descriptions shall include and adequate description of the location in the building of the equipment serves. Where room numbers are used to specify location University assigned room numbers shall be used.

3.2. ELECTRICAL IDENTIFICATION: Refer to Section 16195 for requirements.

END OF SECTION 16160

SECTION 16170 - MOTOR AND CIRCUIT DISCONNECTS

PART 1 - GENERAL

1.1. DESCRIPTION OF WORK:

A. Complete installation and electrical connections.

1.2. QUALITY ASSURANCE:

A. Comply with NEMA Standards and NEC. Provide UL listing.

1.3. SUBMITTALS:

A. PRODUCT DATA: Submit manufacturer's data including specifications, installation and general recommendations.

B. SHOP DRAWINGS: Submit dimensioned drawings of switches which have rating of 100 amperes and larger.

PART 2 - PRODUCTS

2.1. ACCEPTABLE MANUFACTURERS:

A. MANUFACTURER: As specified.

2.2. FABRICATED SWITCHES:

A. GENERAL: Provide:

1. General duty switches on 240 Volt rated circuits.
2. Heavy duty switches on 480 volt rated circuits.
3. HP rated switches on all motor circuits.

2.3. FUSES: Provide fuses for switches. Provide spare fuses.

PART 3 - EXECUTION

3.1. INSTALLATION OF MOTOR AND CIRCUIT DISCONNECT SWITCHES:

A. Install switches where indicated, complying with manufacturer's written instructions, requirements of NEC, NEMA, and NECA's "Standard of Installation" and in accordance with recognized industry practices.

B. Coordinate with electrical raceway and cable work.

3.2. ELECTRICAL IDENTIFICATION: Refer to Section 16195 for requirements.

END OF SECTION 16170

BLANK PAGE

SECTION 16180 - OVERCURRENT PROTECTIVE DEVICES

PART 1 - GENERAL

1.1. DESCRIPTION OF WORK:

A. Types of overcurrent protective devices include:

1. Molded case circuit breakers
2. Power circuit breakers
3. Fusible switches
4. Molded case systems breakers
5. Bolted pressure switches
6. Fuses

1.2. QUALITY ASSURANCE:

A. Comply with NEC NEMA and ANSI standards.

1.3. SUBMITTALS:

A. PRODUCT DATA: Submit manufacturer's data.

B. SHOP DRAWINGS: Submit layout drawings.

C. MAINTENANCE STOCK, FUSES: Furnish spare fuses. Specify adequate spare fuses for all fused equipment. Provide spare fuse cabinet in vicinity of the building main distribution panel.

PART 2 - PRODUCTS

2.1. MOLDED CASE CIRCUIT BREAKERS: Provide breakers with permanent thermal trip and adjustable instantaneous magnetic trip in each pole.

2.2. FUSIBLE SWITCHES: Provide fusible switch units with quick-break, quick break mechanisms, visible blades and dual horpsepower ratings. Equip with lockable handles. Provide with Class R rejection fuse clip kits.

2.3. BOLTED PRESSURE SWITCHES: Equip switches with electric capacitor operated trip and Buss KAZ signal activating fuses open. Provide "blown fuse protection" in HPC switches.

2.4. PHASE FAILURE PROTECTION: Provide on overcurrent protective devices as indicated.

2.5. GROUND FAULT PROTECTION: Provide on all overcurrent protective devices where phase to ground voltage is in excess of 150 volts and the overcurrent protection device is capable of being set at or over 1000 amps.

PART 3 - EXECUTION

3.1. INSTALLATION OF OVERCURRENT PROTECTIVE DEVICES:

A. Install in accordance with the manufacturer's instructions.

B. Comply with NEC and NEMA standards.

C. Set field-adjustable circuit breakers for trip settings as indicated.

D. Field test all ground fault devices.

3.2. FIELD QUALITY CONTROL:

A. Test devices for continuity of circuitry and for short-circuits.

3.3. ELECTRICAL IDENTIFICATION: Refer to Section 16195 for requirements.

END OF SECTION 16180

SECTION 16181 - TRANSFORMERS

PART 1– GENERAL

1.1. DESCRIPTION OF WORK:

A. Types of transformers include the following:

1. Liquid-Filled transformers
2. Dry-type transformer

1.2. QUALITY ASSURANCE:

A. Comply with NEC as applicable portions of NEMA Std. Pub. Nos. TR1 and TR27; and with ANSI/IEEE standards.

B. Comply with ANSI/UL 506. Provide UL listing.

1.3. SUBMITTALS:

A. PRODUCT DATA: Submit manufacturer's data.

B. SHOP DRAWINGS: Submit dimensioned drawings.

PART 2 -PRODUCTS

2.1. ACCEPTABLE MANUFACTURERS: As specified.

2.2. DISTRIBUTION TRANSFORMERS

A. Distribution transformers will be provided for all University buildings. In general, transformers will be located in transformer vaults located within the confines of the building. The use of padmounted transformers located outside the building must be approved by the University Campus Design & Construction Department Electrical Engineer and comply with Rocky Mountain Power. Building clearance requirements. The type of transformers will be selected by the engineer in consultation with Campus Design & Construction (No single phase liquid filled transformers). **Provide feed-thru design.** Oil transformers may be used depending on the needs of the particular project. All liquid or oil-filled transformers shall be certified and labeled to contain no P.C.B. compounds. FR3 shall be used in all oil-filled transformers. Transformers shall be G.E., *Cooper or* approved equal. All transformers will he provided with properly sized fuse protection. **No internal fuses are allowed.** The transformer fuse protection shall be housed separate from the transformer. An externally operated, internal load break switch shall be provided on the primary side of the transformer. Externally operated loadbreak switch shall be an integral part of the transformer. Transformers will have two 2&1/2% taps above and below normal. Transformers will be provided with externally operated tap changer. Transformers will be provided with all accessories needed for their proper operation and maintenance such as drain valve with sampling device, filling plug and filter, liquid level gauge, dial thermometer, oil temperature gauge, anchor lugs and lifting eyes, cooling fans for dry type transformers, **load break lighting arrestor** (3 **phase),** voltage surge suppression for all transformers. The internal impedance of transformer

shall meet NEMA recommendations, but shall not be less than 2% (except that transformers rated 750 KVA and larger shall not be less than 2.5%).

B. Transformers shall have copper windings (aluminum windings will not be acceptable). Oil filled transformers shall have a nitrogen blanket per manufacturer's recommendation. Transformer tank color shall be light gray or green. Pad mount transformers located outdoors shall have protective bollards or other effective physical protection for cooling fins. Minimum wire size feeding a distribution transformer shall be 15KV ##2/0 copper EPR insulated cable.

C. Adequate overcurrent protection shall be specified by the engineer to protect the transformer under both overload and short circuit conditions. Overcurrent protection shall include a separately mounted Solid Dialectric switch (see paragraph 16360A High Voltage Solid Dialectric switches) Specified overcurrent protection shall be selected so as to allow for transformer inrush and to coordinate with the University's primary circuit protection. Coordination curves for the University's primary circuit protection may be obtained from Campus Design & Construction upon request.

D. The University, at present, uses three different 3 phase high distribution voltages on campus: 4,160/2400V wye, 7,200/4160V wye, 12,470/7200V wye. Where transformers are connected to the 4,160 V system, they shall be constructed to be reconnectable to the 12,470 V system in the future. Where transformers are connected to the 7,200 V system, they shall be constructed to be re-connectable to the 12,470 V system in the future.

E. Dry type Transformers Where electrical power is needed at a voltage other than that provided by the building electrical service, that voltage may be furnished by the use of dry-type transformers. Where such are used, they shall be Class H. 3 through 15 KVA shall be rated 115 degrees C rise. 30 KVA and larger shall be rated 150 degrees C rise. Sound rating of dry-type transformers shall not exceed 45 DB. <u>All transformers 30 KVA and larger shall be pad mounted on the floor. All 120/208 volt transformers shall have K-20 or better rating to handle non linear loads.</u>

PART 3 - EXECUTION

3.1. INSTALLATION OF TRANSFORMERS:

A. Comply with manufacturer's instructions, requirements of NEC, NEMA and IEEE standards.

B. Transformer Vaults, Electrical Distribution Rooms and Transformer Pads

1. Transformer vaults will meet the requirements of the National Electrical Code. Where transformers are installed with wiring connected to open insulators, the high voltage side will be against the wall. An adequate working space will be provided on the secondary side. Transformers and associated switch gear will be supported by individual concrete pads 6" above floor level.

2. Transformer vaults will be provided with doors opening directly to the outside of sufficient size to provide for replacement of transformers and switches. Adequate ventilation for proper transformers cooling directly from outside will be provided.

3. Generators shall not be placed in Transformer Vaults or Electrical Panel Rooms.

C. TESTING: Energize test.

END OF SECTION 16181

BLANK PAGE

SECTION 16182 - SWITCHGEAR AND SWITCHBOARDS

PART 1 - GENERAL

1.1. RELATED DOCUMENTS:

A. AC Dead Front Switchboards (600V)
B. AC Metal Clad Switchgear (600V)
C. Metal Enclosed Interrupter Switchgear ( )
D. Load Interrupting Oil Switches (KV)(Type RAC)(Type RAM)
E. Fault Interrupting Oil Switches (KV)(Type IFLDR)

1.2. QUALITY ASSURANCE:

A. Comply with NEC, NEMA, ANSI and IEEE. Provide UL-listing and label.

1.3. SUBMITTALS:

A. PRODUCT DATA: Submit manufacturer's data.

B. SHOP DRAWINGS: Submit dimensioned drawings.

C. MAINTENANCE STOCK FUSES: Furnish stock fuses.

PART 2 - PRODUCTS

2.1. ACCEPTABLE MANUFACTURERS: As specified.

2.2. AC DEAD FRONT SWITCHBOARDS (600V):

A. Factory assembled, dead front, metal enclosed, group mounted, secondary power switch boards, of ratings and characteristics indicated; consisting of panel (vertical) units, and containing circuit breaker and fusible switch assemblies. Provide copper main bus.

2.3. LOAD INTERRUPTING OIL SWITCHES (15KV):

A. High Voltage Solid Dialectic Switches

1. In the design of extensions to the underground high voltage electrical distribution system, provisions will be made for sectionalizing the system through the use of high voltage load break switches located in the manholes and vaults. Cooper and G & W switches shall be approved**.**
2. Solid dialectric gas switches or other floor mounted electrical equipment installed in manholes or on concrete pads shall have stainless steel support structures. If the switch is damaged before or during installation, the contractor shall be responsible for all costs to remove and repair the switch. Provide provisions for lockout capability.
3. All switches shall be installed with adequate seismic bracing.
4. Provide solid dialectric load break switch rated 15KV, 200 amp continuous and load bread for each distribution transformer. Equip cable entry terminations with

G&W universal bushings or 600 Amp dead break elbows. Exit terminations shall be of the 200 Amp load break style. Provide coordination of switch so that:

a. Each section of the switch shall have a means of indication if it has opened.
b. Manual control of load break operation is possible.
c. Single phasing is automatically prevented.
d. Isolation of faulted circuits beyond the switch is obtained.

5. Switches shall be constructed so that the contacts or open/closed indicators are readily visible as to their open - closed positions.

B. G&W load interrupting (RAC) (RAM) type oil switches rated (15KV) (100Bil), 600 amp continuous.

PART 3– EXECUTION

3.1. INSTALLATION OF SWITCHGEAR AND SWITCHBOARDS:

A. Comply with manufacturer's written instructions, and recognized industry practices.

3.2. ADJUST AND CLEAN:

A. Adjust operating mechanisms.

3.3. FIELD QUALITY CONTROL:

A. Test switchgear and switchboards for electrical continuity of circuits, and for short circuits.

END OF SECTION 16182

SECTION 16183 - MOTOR CONTROL CENTERS

PART 1– GENERAL

1.1. DESCRIPTION OF WORK: As specified herein and indicated on drawings.

1.2. QUALITY ASSURANCE: Comply with NEMA, IEEE and UL.

1.3. SUBMITTALS: PRODUCT DATA: Submit manufacturer's data.

PART 2 – PRODUCTS

2.1. MOTOR CONTROL CENTERS AND COMPONENTS

A. GENERAL: Provide NEMA Class I, Type B motor control centers of sizes, ratings, and characteristics indicated.

B. BUS SYSTEM: Provide 3 phase, 4 wire system unless indicated otherwise.

C. Motor control centers shall be circuit breaker type. Internal busing for motor control centers shall be constructed of copper (aluminum bus will not be acceptable). Lugs for motor control centers shall be rated copper only (cu-al rated lugs shall not be acceptable).

D. Provide two normally open and two normally closed spare contacts for all controllers. No external control wiring (such as JC85 status signals) shall be connected directly to the motor coil and MCC controllers (auxiliary contacts shall be used for all such functions).

E. All wiring in motor control centers shall be neatly installed and dressed down with tie wraps.

F. Approved manufacturers for motor control centers are Sq-D, GE, and Siemens.

G. STARTER UNITS: See Section 16155 MOTOR STARTERS.

PART 3 – EXECUTION

3.1. INSTALLATION OF MOTOR CONTROL CENTERS: Comply with equipment manufacturer's instructions.

3.2. ADJUST AND CLEAN: Adjust operating mechanisms for free mechanical movement.

3.3. FIELD QUALITY CONTROL: Energize motor control center circuitry and demonstrate capability and compliance with requirements. Correct malfunctioning units at site.

3.4. ELECTRICAL IDENTIFICATION: Refer to Section 16195 for requirements.

END OF SECTION 16183

© BNA Consulting, Inc.

BLANK PAGE

© BNA Consulting, Inc.

SECTION 16184 - POWER FACTOR CORRECTION

PART 1 - GENERAL

1.1. DESCRIPTION OF WORK:

A. Types of power factor correction equipment in this section include the following:

B. Corrective capacitors

PART 2 - PRODUCTS

2.1. ACCEPTABLE MANUFACTURERS:

A. MANUFACTURER: Provide products of one of the following:

1. General Electric Co.
2. Sprague Electric Co.
3. Westinghouse Electric Co.

2.2. POWER FACTOR CORRECTION CAPACITORS:

2.3. CAPACITORS: Provide factory-assembled power factor correction capacitors. Construct of internally fused, individually replaceable, unit cells enclosed in protective enclosure. Provide capacitors with discharge resistors.

2.4. MOUNTING: Mount capacitors in motor control centers or adjacent to motors as indicated.

PART 3 - EXECUTION

3.1. INSTALLATION OF POWER FACTOR CORRECTION CAPACITORS:

A. Install power factor correction capacitors as indicated, in accordance with the manufacturer's written instructions and with recognized industry practices to ensure that capacitors comply with requirements.

END OF SECTION 16184

© BNA Consulting, Inc.

BLANK PAGE

© BNA Consulting, Inc.

SECTION 16185 - PROTECTIVE DEVICE STUDY

PART 1 GENERAL

1.1. DESCRIPTION OF WORK:

A. Protective device studies in this section include the following:

1. Fault current protective device and equipment evaluation

2. Protective device coordination study

PART 2 STUDIES

2.1. ANALYSIS/REPORT

A. Include the following in the study.

1. Description, purpose, basis and scope of the study and a single line diagram of that portion of the power system which is included within the scope of the study.

2. Tabulations of circuit breaker, fuse and other protective device ratings versus calculated short circuit duties and commentary regarding same. Include formulas and description of methods used.

3. Protective device time versus current coordination curves, tabulations of relay and circuit breaker trip settings, fuse selection, and commentary regarding same.

4. Fault current calculations including a definition of terms and guide for interpretation of computer printout.

5. Recommended size for power fuses and recommended settings for ground fault relays and for all adjustable trip relays, circuit breakers, etc.

PART 3 EXECUTION

3.1. PROTECTIVE DEVICE TESTING, CALIBRATION AND ADJUSTMENT

A. Provide the services of a qualified field engineer employed by the equipment manufacturer, and necessary tools and equipment to test, calibrate and adjust the protective relays, ground fault relays and circuit breaker trip devices as recommended in the Protective Device Study.

END OF SECTION 16185

BLANK PAGE

SECTION 16195 - ELECTRICAL IDENTIFICATION

PART 1 - GENERAL

1.1 RELATED DOCUMENTS:

A. Drawings and general provisions of Contract, including General and Supplementary Conditions and Division-1 Specification sections, apply to work of this section.

B. Requirements of the following Division 16 Sections apply to this section:

1. “Basic Electrical Requirements”.
2. “Basic Electrical Materials and Methods”.

1.2 SUMMARY

A. This section includes identification of electrical materials, equipment and installations. It includes requirements for electrical identification components including but not limited to the following:

1. Buried electrical line warnings.
2. Identification labels for raceways, cables and conductors.
3. Operational instruction signs.
4. Warning and caution signs.
5. Equipment label and signs.

B. Related Sections: The following sections contain requirements that relate to this section:

C. Division 9 Section “Painting” for related identification requirements.

D. Refer to other Division 16 sections for additional specific electrical identification associated with specific items.

1.3 QUALITY ASSURANCE

A. Electrical Component Standard: Components and installation shall comply with NFPA 70 “National Electrical Code”

1.4 SUBMITTALS:

A. PRODUCT DATA: Submit manufacturer’s data on each type of electrical identification products.

B. SAMPLES: Submit one sample of each component of the electrical identification system as follows:

1. Pre-tensioned flexible sleeves for raceway.
2. Wire/cable tape marker.
3. Tags
4. Engraved, plastic laminate labels.

PART 2 – PRODUCTS

2.1 MANUFACTURERS

A. Manufacturers: Subject to compliance with requirements, provide products by the following:

1. American Labelmark Co.
2. Calpico, Inc.
3. Cole-Flex Corp.
4. Emed Co., Inc.
5. George-Ingraham Corp.
6. Ideal Industries, Inc.
7. Kraftbilt
8. LEM Products, Inc.
9. Markal Corp
10. National Band and Tag Co.
11. Panduit Corp.
12. Radar Engineers Div., EPIC Corp.
13. Seton Name Plate Co.
14. Standard Signs, Inc.
15. W.H Brady, Co.

2.2 ELECTRICAL IDENTIFICATION PRODUCTS

A. Color Adhesive Marking Tape for Raceways, Wires and Cables:

1. Self-adhesive vinyl tape not less than 3 mills thick by 1” to 2” in width.

B. Pre-tensioned Flexible Wraparound Colored Plastic Sleeves for Raceway and Cable Identification:

1. Flexible acrylic bands sized to suit the raceway diameter and arranged to stay in place by pre-tensioned gripping action when coiled around the raceway or cable.

C. Underground Line Marking Tape:

1. Permanent, bright colored, continuous-printed, plastic tape compounded for direct-burial service not less than 6” wide by 4 mills thick
2. Printed legend indicative of general type of underground line below.

D. Wire/Cable Designation Tape Markers:

1. Vinyl or vinyl-cloth, self-adhesive, wraparound, cable/conductor markers with pre-printed numbers and letters.

E. Brass or Aluminum Tags:

1. Metal tags with stamped legend, punched for fastener.
2. Dimensions: 2” X 2” 19 gage.

F. Engraved, Plastic Laminated Labels, Signs and Instruction Plates:

1. Engraving stock melamine plastic laminate, 1/16” minimum thickness for signs up to 20” sq.“, or 8” in length; 1/8 “ thick for larger sizes. Engraved legend in ¼” high white letters on black face and punched for mechanical fasteners.

G. Baked Enamel Warning and Caution Signs for Interior Use:

1. Preprinted aluminum signs, punched for fasteners, with colors legend and size appropriate to location.

H. Fasteners for Plastic-Laminated and Metal Signs:

1. Self-tapping stainless steel screws or # 10/32 stainless steel machine screws with nuts, flat and lock washers.

I. Cable Ties:

1. Fungus-inert, self-extinguishing, one-piece, self-locking nylon cable ties, 0.18” minimum width, 50-lb. Minimum tensile strength, and suitable for a temperature range from minus 50° F. to 350° F. Provide ties for specified colors when used for color coding.

PART 3 – EXECUTION

3.1 INSTALLATION

A. Lettering and Graphics:

1. Coordinate names, abbreviations, colors and other designations used in electrical identification work with corresponding designations specified or indicated. Install numbers, lettering and colors as approved in submittals and as required by code.

B. Install identification devices in accordance with manufacturer’s written instructions and requirements of NEC.

C. Sequence of Work:

1. Where identification is to be applied to surfaces that require a finish, install identification after completion of finish work.

D. Conduit Identification:

1. Identify Raceways of Certain Systems with Color Banding:

a. Band exposed or accessible raceways of the following systems for identification. Bands shall be pre-tensioned, snap-around colored plastic sleeves, colored adhesive marking tape, or a combination of the two. Make each color band 2 inches wide, completely encircling conduit, and place adjacent bands of two-color markings in contact, side by side. Install bands at changes in direction, at penetrations of walls and floors, and at 40-root maximum intervals in straight runs. Apply the following colors:

i. Fire Alarm System: Red
ii. Sound/IC: Blue

iii. Telephone: Yellow
iv. Data: Green
v. MATV: Black
vi. Security: Orange

2. Identify Junction, Pull and Connection Boxes.

   a. Code-required caution sign for boxes shall be pressured-sensitive, self-adhesive label indication system voltage in black, preprinted on orange background. Install on outside of box cover. Also label box covers with identity of contained circuits. Use pressure-sensitive plastic labels at exposed locations and similar labels or plasticized card stock tags at concealed boxes.

3. Label and paint the covers of the systems junction boxes as follows:

SYSTEM	COLOR (ALL COLORS ARE KWAL HOWELLS)	
Fire Alarm	Red Alert	AC118R
Sound/IC	Neon Blue	7076A
Telephone	Competition Yellow	7225A
Data	Java Green	AC098N
MATV	Flat Black	
Security	Fiesta Orange	AC107Y

E. Underground Electrical Line Identification.

1. During trench backfilling, for exterior underground power, signal, and communications lines, install continuous underground plastic line marker, located directly above line at 6 to 8 inches below finished grade. Where multiple lines are installed in a common trench or concrete envelope, do not exceed an overall width of 16 inches; install a single line marker.

2. Install line marker for underground wiring, both direct-buried and in raceway.

3. Provide red marker dye applied to concrete encased ductbank.

4. Identification Tags

   a. HV cable / duct bank identification tags:

      i. ID tags must be placed by each duct at duct banks leaving the man hole.
      ii. The ID tag must identify where the duct bank is going.
      iii. ID tags are to be 3"x5" yellow with black letters, laminated plastic.
      iv. Letters are to be engraved.
      v. ID tags are to include a'/4" hole in each corner.
      vi. ID tags are to be attached to the wall next to the duct bank with plastic anchors and screws.

EXAMPLE DUCT BANK IDENTIFICATION TAG

5. HV switch cabinet identification tags:

   a. ID tag identifies the switch cabinet.
   b. ID tags are to be 3"x5" yellow with black letters, laminated plastic.
   c. Letters are to be engraved.
   d. Affix to the cabinet with double sided adhesive tape covering the back of the tag.
   e. ID tags identify the cabinet as containing an HV switch and include pad number and voltage.

   EXAMPLE H-V SWITCH CABINET IDENTIFICATION TAG

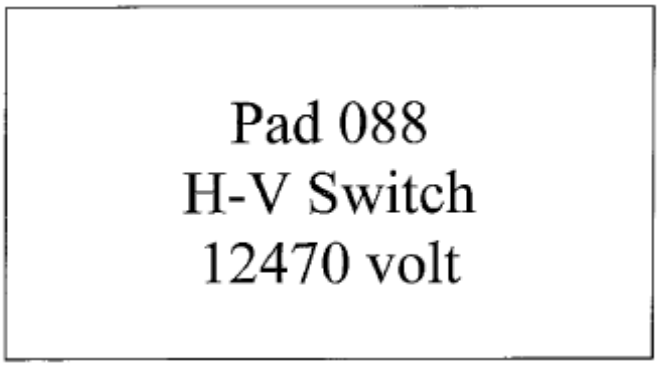

6. HV switch identification tags:
   a. ID tag identifies the device the switch will operate, or the switch and section it will go to.
   b. ID tag goes on the switch.
   c. ID tags are to be 3"x5" yellow with black letters, laminated plastic.
   d. Letters are to be engraved.
   e. Affix to the switch with double sided adhesive tape covering the back of the tag.

EXAMPLE SWITCH IDENTIFICATION TAG

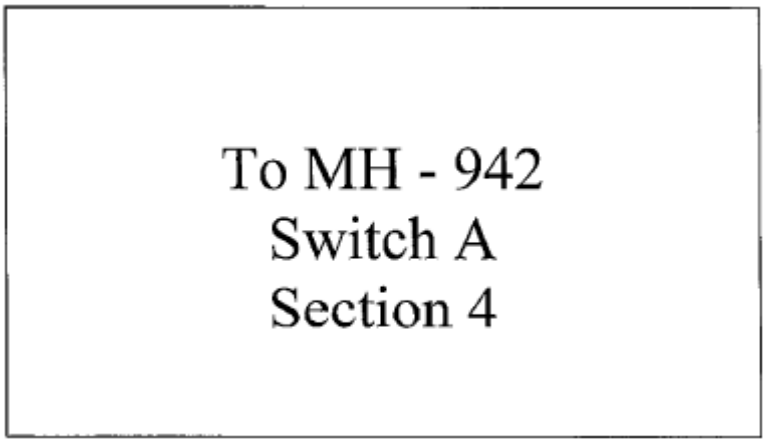

7. Transformer identification tags:
   a. ID tag identifies the transformer.
   b. ID tags are to be 3"x5" yellow with black letters, laminated plastic.
   c. Letters are to be engraved.
   d. Affix to the cabinet with double sided adhesive tape covering the back of the tag.
   e. ID tags designate transformer, pad number (same as building number), primary and secondary voltages, and KVA rating.

EXAMPLE TRANSFORMER IDENTIFICATION TAG

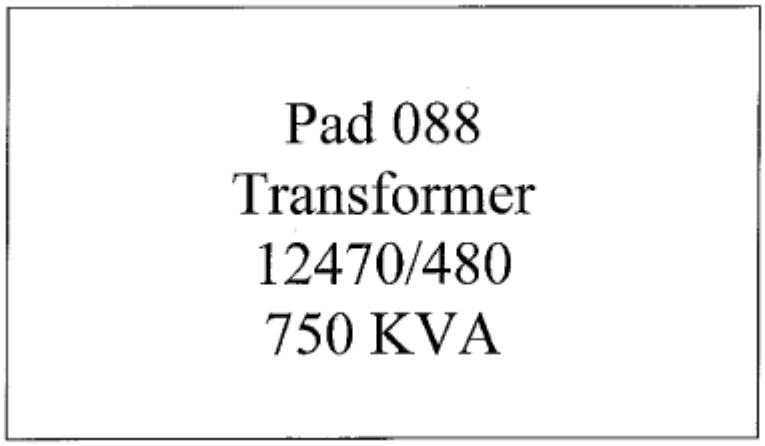

8. Manhole identification tags:

   a. This identification tag is supplied to the Contractor by the University Electric Shop.
   b. This tag identifies the manhole.
   c. The tag is to be mounted on the north side of the concrete ring as you enter the man hole, with plastic anchors and screws.
   d. It is mounted with plastic anchors and screws.
   e. The tag is mounted on the north side so the person entering can orient himself from inside the manhole.

F. Conductor Color Coding.

1. Provide color coding for secondary service, feeder and branch circuit conductors throughout the project secondary electrical system as follows:

208/ 120 Volts	Phase	480/ 277 Volts
Black	A	Brown
Red	B	Purple
Blue	C	Yellow
White	Neutral	Gray
Green	Ground	Green

2. Switch legs, travelers and other wiring for branch circuits shall be of colors other than those listed above.

3. Provide color phase taping of medium voltage conductors (5kV) (15kV) as follows:

A Phase – Black	Neutral – White
B Phase – Red	Ground – Green
C Phase – Orange	

4. Use conductors with color factory applied the entire length of the conductors except as follows:

   a. The following field-applied color-coding methods may be used in lieu of factory-coded wire for sizes larger than No. 10 AWG.

   b. Apply colored, pressure-sensitive plastic tape in half-lapped turns for a distance of 6 inches from terminal points and in boxes where splices or taps are made. Apply the last two laps of tape with no tension to prevent possible unwinding. Use 1-inch-wide tape in colors as specified. Do not obliterate cable identification markings by taping. Tape locations may be adjusted slightly to prevent such obliteration.

   c. In lieu of pressure-sensitive tape, colored cable ties may be used for color identification. Apply three ties of specified color to each wire at each terminal or splice point starting 3 inches from the terminal and spaced 3 inches apart. Apply with a special tool or pliers, tighten for snug fit, and cut off excess length.

G. Power Circuit Identification.

1. Securely fasten identifying metal tags or aluminum wraparound marker bands to cables, feeders, and power circuits in vaults, pull boxes, junction boxes, manholes, and switchboard rooms with ¼-inch steel letter and number stamps with legend to correspond with designations on Drawings. If metal tags are provided, attach them with approximately 55-lb monofilament line or one-piece self-locking nylon cable ties.

2. Tag or label conductors as follows:

   a. Future Connections: Conductors indicated to be for future connection or connection under another contract with identification indicting source and circuit numbers.

b. Multiple Circuits: Where multiple branch circuits or control wiring or communications/ signal conductors are present in the same box or enclosure (except for three-circuit, four-wire home runs), label each conductor or cable. Provide legend indicating source, voltage, circuit number, and phase for branch circuit wiring. Phase and voltage of branch circuit wiring may be indicated by mean of coded color of conductor insulation. For control and communications/signal wiring, use color coding or wire/cable marking tape at terminations and at intermediate locations where conductors appear in wiring boxes, troughs, and control cabinets. Use consistent letter/number conductor designations throughout on wire/cable marking tapes.

3. Match identification markings with designations used in panelboards shop drawings, Contract Documents, and similar previously established identification schemes for the facility's electrical installations.

4. Apply warning, caution and instruction signs and stencils as follows:

a. Install warning, caution, or instruction signs where required by NEC, where indicated, or where reasonably required to assure safe operation and maintenance of electrical systems and of the items to which they connect. Install engraved plastic-laminated instruction signs with approved legend where instructions or explanations are needed for system or equipment operation. Install butyrate signs with metal backing for outdoor items.

H. Emergency Operating Signs: Install engraved laminated signs with white legend on red background with minimum 3/8-inch high lettering for emergency instructions on power transfer, load shedding, or other emergency operations.

I. Install equipment/system circuit/device identification as follows:

1. Apply equipment identification labels of engraved plastic-laminate on each major unit of electrical equipment in building, including central or master unit of each electrical system. This includes communication/signal/alarm systems, unless unit is specified with its own self-explanatory identification. Except as otherwise indicated, provide single line of text, with ¼-inch-high lettering on 1-inch-high label (1 ½-inch-high where two lines are required) white lettering in black field. White lettering in red field for Emergency Power Systems. Text shall match terminology and numbering of the Contract Documents and shop drawings. Apply labels for each unit of the following categories of electrical equipment.

a. Panelboards (exterior and interior), electrical cabinets, and enclosures. For subpanels, identify feeder circuit from which served.

b. Switches in fusible panelboards shall be labeled. Main switches shall be identified.

c. Access doors and panels for concealed electrical items.

d. Electrical switchgear and switchboards.

e. Motor control centers.

f. Motor starters, including circuit origination, HP, heater size, FLA, and mechanical equipment designation.

g. Disconnect switches.

h. Pushbutton stations.

i. Power transfer equipment.

j. Contactors.

k. Dimmers.

l. Control devices.

m. Transformers.

n. Power generating units, to include transformer switches.

o. Telephone switching equipment.

p. Clock/program master equipment.

q. Call system master station.

r. TV/audio monitoring master station.

s. Fire alarm master station or control panel.

t. Busduct – Label all cable tap boxes, bus plug-in units, etc. with plastic laminate labels designating load served.

u. Variable frequency drives.

v. Lighting Control Equipment.

w. Uninterruptable Power Supply.

J. Apply circuit/control/item designation labels of engraved plastic laminate for disconnect switches, breakers, pushbuttons, pilot lights, motor control centers, and similar items for power distribution and control components above, except panelboards and alarm/signal components, where labeling is specified elsewhere.

K. Install labels at locations indicated and at locations for best convenience of viewing without interference with operation and maintenance of equipment.

L. Engrave all receptacle plates other than those serving 120 volt, single phase devices. State voltage and amperage characteristics: Example; “208V 30A”.

M. Mark each device box (for each type of wiring device) with a permanent ink felt tip marker, indicating the circuit to which the device is connected: Example; “CKT A-1”

N. Label circuit breaker feeding fire alarm panel “Fire Alarm Circuit”. Using plastic laminate label, white lettering on a red background.

END OF SECTION 16195

SECTION 16400 MANHOLES

PART 1 GENERAL:

1.1. DESCRIPTION OF WORK:

A. Provide cast-in place or precast utility vaults.

PART 2 CONSTRUCTION:

2.1. MANHOLES

A. Manholes will be provided for the underground high voltage electrical distribution system. Spacing of manholes will be carefully considered to unsure allowing reasonable pulling tensions for cable pulls between manholes and to provide opportunity for feeding electrical power to existing and future buildings.

B. Manholes will have a minimum of 128 square feet of floor area and an 9'-0" ceiling and will be constructed of reinforced concrete. They may be poured in place or pre-cast. They must be suitable for H2O highway loading. Each manhole will be provided with a rock sump and drain. Where trunk high voltage cables (as opposed to branch feeders cables to buildings) are pulled into manholes, the cable shall ring the manhole before terminating on the oil switch or other terminating equipment. The engineer will prepare completely detailed scale drawings showing cable placement and cable supporting provisions. A complete set of accessories will be specified and provided for each manhole including, but not limited to, the following:

1. Manhole cover and seat.
2. Cast-in provisions for cable supports (such as Super Strut Series No. C300 galvanized or equal).
3. Ground rod minimum of two 314" X 10' copper clad steel for each manhole.
4. Grounding conductors to bond all metal surfaces (see typical detail).
5. Portable manhole ladder (stainless steel).
6. Cable racks and insulated cable seats (rubber cushioned clamp style), sleeves.
7. Water proofing of manhole and entrance structure. The entrance hatch shall be in the corner of the manhole opposite of the switch.
8. Pulling eyes on all walls.
9. Bell end entrance for all conduits.
10. Seal all conduit entrances with UL approved plugs (no duct seal).
11. Full width lift off panel on roof for equipment access.
12. Threaded metalic type O.Z. Gedney Bell End Entrances or equal for all conduits. Install flush in manhole and building walls.

C. Existing manholes shall be upgraded to match new manhole design.

2.2. CABLE RACK VERTICAL RISERS:

A. In each of the electric manholes, furnish and install twelve (12) vertical cable rack risers (four for each side wall and two on each end wall).

2.3. SWITCH SUPPORTS

A. Shall be of stainless steel.

2.4. DUCT CELL PLUGS:

A. Each active or spare duct cell in a duct bank running from a manhole to a building or transformer vault and the downward side of each manhole as noted shall be fitted with an approved cell plug as to make a watertight seal.

2.5. SLEEVES FOR FUTURE DUCT ENTRANCES:

A. Unused walls of each manhole shall be provided with a depressed area for the future installation of additional duct banks.

2.6. DAMPPROOFING:

A. The exterior side of manhole walls, roof and chimney shall be thoroughly cleaned and dampproofed with two coats of Hydrocide 648 as manufactured by Sonneborn Building Products Division, Contech Inc. or Karnack Chemical Corp. 83 or W.R. Meadows, Inc. Salmastic Solvent-Type Dampproofing.

END OF SECTION 16400

SECTION 16420 - SERVICE ENTRANCE

PART 1 GENERAL

1.1. DESCRIPTION OF WORK:

A. Extent of service-entrance work is indicated by drawings and schedules.

B. Consult local utility relative to all costs for line extensions, connections, etc.

C. Provide labor and materials as required to accomplish power company metering in accordance with power company standards and requirements.

1.2. QUALITY ASSURANCE:

A. Comply with NEC and NEMA standards.

1.3. SUBMITTALS:

A. PRODUCT DATA: Submit manufacturer's data.

B. SHOP DRAWINGS: Submit dimensioned layouts.

C. MAINTENANCE STOCK, FUSES: Furnish spare fuses.

PART 2 PRODUCTS

2.1. SERVICE - ENTRANCE EQUIPMENT:

A. GENERAL: Provide service-entrance equipment and accessories, of types, sizes, ratings and electrical characteristics indicated.

B. Provide each service entrance switchboard with transient voltage surge suppressors.

C. Electrical service to University buildings should be either 120/208 V 3 PH 4 wire or 277/480 V 3 PH 4 wire. The engineer is directed to analyze his particular installation and design the system which most economically serves the needs of the project. When sizing service entrance conductors and service equipment, consideration must be given to the future expansion of electrical use in the building.

2.2. OVERCURRENT PROTECTIVE DEVICES:

A. METERING SOCKETS: Provide meter sockets which comply with requirements of local utility company.

B. METERING: Provide meters, current and potential transformers, selector switches, wiring, etc. for a complete metering system.

C. Provisions must be made to meter the use of electrical power in all University buildings. Provide meters, current and potential transformers, selector switches, wiring, etc. for a complete metering system with the capability to connect by Ethernet to the main campus

© BNA Consulting, Inc.

utility management system.

D. For buildings less than 2000 square feet, provide solid state power meter. For buildings over 2000 square feet, provide Square D Power Logic Circuit Monitor, Class 3020, Model CM-2350 with instrumentation .2% accuracy, data logging, waveform capture, disturbance monitoring and extended memory features, integrally mounted in service equipment, completely wired with control power input. Provide capability for metering the following data:

INSTANTANEOUS READINGS

RMS Current Values
- Phase A Current
- Phase B Current
- Phase C Current
- 3-Phase Average Current
- Apparent RMS Current
- RMS Voltage Values
- Phase A-B Voltage
- Phase B-C Voltage
- Phase C-A Voltage
- Phase A-N Voltage
- Phase B-N Voltage
- Phase C-N Voltage
- Power Factor Values
- Phase A Power Factor
- Phase B Power Factor
- Phase C Power Factor
- 3-Phase Total Power Factor
- 3-Phase Total Power Values
- Real Power, 3-Phase Total
- Reactive Power, 3-Phase Total
- Apparent Power, 3-Phase Total
- Frequency

DEMAND READINGS

Current Values
- Average Demand Current Phase A
- Average Demand Current Phase B
- Average Demand Current Phase C
- Peak Demand Current Phase A
- Peak Demand Current Phase B
- Peak Demand Current Phase C
- Real Power Values
- Average Demand Real Power
- Predicted Demand Real Power
- Peak Demand Real Power

ENERGY READINGS

- Energy Accumulated
- Reactive Energy Accumulated

2.3. RACEWAYS AND CONDUCTORS:

PART 3 EXECUTION

3.1. INSTALLATION OF SERVICE-ENTRANCE EQUIPMENT:

A. Comply with manufacturer's written instructions, and with recognized industry practices.

3.2. GROUNDING:

A. Provide system and equipment grounding.

3.3. ADJUST AND CLEAN:

A. Adjust operating mechanisms.

© BNA Consulting, Inc.

3.4. FIELD QUALITY CONTROL:

A. Test service-entrance equipment and electrical circuitry, energize circuitry and demonstrate capability and compliance with requirements.

END OF SECTION 16420

© BNA Consulting, Inc.

BLANK PAGE

© BNA Consulting, Inc.

SECTION 16452 - GROUNDING

PART 1 GENERAL

1.1. DESCRIPTION OF WORK:

A. Types of grounding in this section include the following:

1. Underground Metal Water Piping
2. Metal Building Frames
3. Grounding Electrodes
4. Grounding Rods
5. Separately Derived Systems
6. Service Equipment
7. Enclosures
8. Systems
9. Equipment
10. Other items indicated on drawings

1.2. QUALITY ASSURANCE:

A. Comply with NEC, ANSI and IEEE requirements. Provide UL listing.

PART 2 PRODUCTS

2.1. GROUNDING:

A. MATERIALS AND COMPONENTS:

1. GENERAL: Provide grounding system including cables, connectors, terminals, ground rods, bonding jumper braid, and accessories.

B. A grounding system meeting the requirements of State adopted Code and the NEC will be designed for each University building. The neutral of 120/208 V and 277/480 V systems will be grounded at the service equipment. All electrical equipment will be connected to the grounding system. All separately derived electrical systems (such as from step-down transformers) will be grounded per code requirements including a separate grounding electrode conductor to a building grounding electrode.

1. All electrical equipment shall be properly grounded.
2. All Metallic conduits shall be properly grounded and bonded. In addition provide separate code sized insulated ground conductor terminated to an insulated/isolated ground buss for the following applications:

   a. All conduits serving as panel feeders or other feeders.
   b. All conduits serving as branch circuits
   c. All conduits serving outlets anticipated to serve computers or word processors.
   d. All conduits serving isolated ground receptacles.
   e. Full length of all plug strips and other surface wireways.
   f. All flex conduits.
3. Un-insulated ground conductors shall not be installed unless approved by the University

Campus Design & Construction Department Electrical Engineer.

4. All lugs used in the building system shall be rated copper.
5. Branch Circuits. All raceways used to contain single or multiple branch circuits shall include a code sized green insulated ground conductor. Circuits used for isolated ground outlets shall be run in separate raceways or shall have a separate green insulated ground conductor installed and tagged for identification at all outlet and junction boxes, and include separate neutrals.
6. Feeders
   a. 480v feeders. All raceways used to contain 480 volt feeders shall include a code sized green insulated ground conductor.
   b. 208v feeders. All raceways used to contain 208 volt feeders shall include two code sized green insulated ground conductors.
      1. Common ground. One ground conductor is intended to supplement the conduit grounding system. This conductor shall be connected to an electrical panel's bonded ground bus at each end.
      2. Isolated ground. The other ground conductor is intended to provide an isolated ground system for sensitive equipment. This conductor shall be connected to an electrical panel's insulated ground bus at each end.
7. Panels and Distribution boards
   a. 480v Panels. All 480 volt panels and distribution boards shall include a bonded ground bus.
   b. 208v Panels. All 208 volt panels and distribution boards shall include both a bonded ground bus and an insulated ground bus. The insulated ground bus is intended to provide an isolated ground system for sensitive equipment.
   c. Provide 50% spare circuit breaker space for future needs.

C. GROUND RODS AND PLATES:

1. GROUND RODS: Steel with copper welded exterior, 3/4" dia. x 10'.

PART 3 – EXECUTION

3.1. INSTALLATION OF GROUNDING SYSTEMS:

A. Comply with manufacturer and with recognized industry practices.

B. Provide grounding for the entire raceway, enclosure, equipment and device system.

END OF SECTION 16452

SECTION 16510 - INTERIOR AND EXTERIOR BUILDING LIGHTING

PART 1 GENERAL

1.1. DESCRIPTION OF WORK:

A. Types of lighting fixtures in this section include the following:

1. High-Intensity-Discharge (HID)
2. Fluorescent
3. Incandescent
4. LED

B. The engineer's design should follow the guidelines set forth in the IES Lighting Handbook. The lighting design shall meet the requirements of the Utah State Energy Code. Lighting equipment shall be selected so as to insure maintainability. Where possible fluorescent lighting shall utilize energy saving ballasts and lamps. The placement of lighting fixtures shall be made to allow for lamp replacement. Where lamp replacement will reasonably require the use of special equipment such as telescoping poles, man lifts or lowering devices, they shall be specified to be supplied as part of the contract. Placement of lighting above stairways and atriums should be avoided unless convenient relamping provisions are included in the design and construction. Placement of lighting fixtures in locations which cannot be reasonably be serviced and relamped without erecting scaffolding or using telescoping poles shall not be allowed without written approval from the University Campus Design & Construction Department Electrical Engineer.

1.2. QUALITY ASSURANCE:

A. Comply with NEC, NEMA and ANSI 132,1. Provide UL-listing.

1.3. SUBMITTALS:

A. PRODUCT DATA: Submit manufacturer's data.

B. SHOP DRAWINGS: Submit dimensioned drawings of lighting fixtures.

PART 2 PRODUCTS

2.1. ACCEPTABLE MANUFACTURERS:

A. FLUORESCENT AND HID BALLASTS INCANDESCENT AND FLUORESCENT LAMPS HID LAMPS: As Specified.

2.2. INTERIOR AND EXTERIOR LIGHTING FIXTURES:

A. SUPPORT REQUIREMENTS: Provide pendant and stem hung fixtures with flexible ball joint hangers. Provide all detachable fixture parts, luminous ceiling accessories, louvers, diffusers, lenses, and reflectors with locking catches, screws, safety chain, or safety cable.

B. FLUORESCENT-LAMP BALLASTS: Provide Class P; sound-rated A, and with internal

thermal protection. For interior fixtures, provide full light output energy conserving ballasts.

C. FLUORESCENT LAMPS: Equip interior fixtures with full light output, energy conserving lamps.

D. DIFFUSERS: 100 percent virgin acrylic compound; minimum thickness, .125 inches.

PART 3 EXECUTION

3.1. INSTALLATION OF LIGHTING FIXTURES

A. Emergency lighting of the path of egress must be provided for University buildings. In addition, in locations where critical experiments or other critical activities warrant, emergency lighting shall be provided to allow for the continued occupancy of the space during the power outage. All emergency lighting and illuminated exit signs will be powered from an alternate power source.

B. Where possible, the alternate power source will be an engine generator set. In small buildings or remodeling projects, rechargeable batteries may provide the alternate power source only if approved in writing by the University Campus Design & Construction Department Electrical Engineer. Where battery powered systems are approved, the system shall include automatic charger and automatic exerciser.

C. Lighting and a minimum of one electrical convenience outlet for transformer vaults, transformer pads, main electrical switch rooms, and emergency generator areas shall be powered from the emergency electrical system.

D. Exit Signs - Tritium containing exit signs are not to be used on campus. Photo luminescent exit signs may be appropriate in areas where they can be installed in accordance with applicable UL or FM ratings and specifications, one of the requirements being a minimum of 5 foot candles of illumination present to charge such signs. In exceptional circumstances, and only with the formal approval of campus Radiological Health, tritium exit signs may be considered for limited and controlled use.

E. Install lighting fixtures in accordance with fixture manufacturer's instructions, applicable requirements of NEC.

F. Provide all necessary supports, brackets, and miscellaneous equipment for mounting of fixtures.

G. COORDINATION MEETINGS: Meet at least twice with the ceiling installer. Coordinate depth and location of all fixtures and duct work in all areas.

H. ADJUST AND CLEAN: Clean lighting fixtures of dirt and debris.

I. Protect installed fixtures from damage.

J. Locate light fixtures so the relamping and servicing can be safely and easily performed.

K. Light fixture types must be approved by Campus Design & Construction. Lamps must be those types easily obtained and stocked by the University.

L. Fluorescent tubes in elevators should be of a standard size which are easily obtained from local distributors.

3.2. FIELD QUALITY CONTROL:

A. Demonstrate capability and compliance with requirements.

B. Replace lamps not working at Substantial Completion.

C. GROUNDING: Provide equipment grounding connections for each lighting fixture.

END OF SECTION 16510

BLANK PAGE

SECTION 16551 - EXTERIOR AREA LIGHTING

PART 1 GENERAL

1.1. DESCRIPTION OF WORK: Extent of area lighting is indicated by drawings.

1.2. QUALITY ASSURANCE: Comply with NEC, NEMA and ANSI/IES requirements. Provide UL listing.

1.3. SUBMITTALS: Product Data: Submit manufacturer's.

PART 2 PRODUCTS:

2.1. MANUFACTURER: As specified.

2.2. FUSES: Provide spare fuses for each type and size used.

PART 3 EXECUTION:

3.1. OUTDOOR LIGHTING

A. Where outdoor lighting is specified, close coordination will be conducted with the University Campus Design & Construction Department.

B. Where non-standard outdoor lighting exists in and around the project site, coordinate with Campus Design & Construction on the extent of replacement of existing lighting with new luminaries and poles in accordance with these Standards.

C. In general, the light source shall be from metal halide or multi-vapor lamps. For walkway lighting, use 100w metal halide lamps. For parking lots and road ways, use 250w high pressure sodium lamps. Luminaries and poles specified shall conform to the current Campus Design & Construction standard. Contact the Campus Design & Construction Office for details. The following pole/fixtures are required unless otherwise approved by Campus Design & Construction Electrical Engineer:

1. Walkway Lighting:

a. 10' pole lights - LSJ SPL-ENS-100-MH-2-H-F-PT-BLK-TE-0450SFTR with 100 watt metal halide lamp. Sterner 10' x 4-1/2" straight round aluminum pole with hinged base. (277 V unless otherwise approved).
b. 20' pole lights - Same as 10' pole lights with 20' x 4-1/2" surface hinged pole.

2. Parking Lot Lighting:

a. 20' pole lights - Lithonia Type KVR2 250HPS TB SYM RPF20 DNA BGL with 250 watt high pressure sodium lamp. Sterner 20' x 4-1/2" straight round aluminum pole with surface hinged base (277v unless otherwise approved).

D. Provide fusing of all ungrounded conductors on taps feeding all exterior lights. Fusing

shall incorporate Buss type HEBJJ inline waterproof fuse holder with insulating boots with appropriately sized fuses. No substitutes approved. No crimp type fuses approved. Buss KTK6 600 volt fuse type.

E. The voltage used and power source for outdoor light fixtures shall be carefully coordinated with the University Campus Design & Construction Department. 277v ballasts shall be used wherever possible. Use of other voltages shall not be allowed without specific approval of the Campus Design & Construction Electrical Engineer.

F. Where existing pole lights are specified to be removed and/or relocated, the specifications shall require that the contractor replace lost or damaged lights and/or poles with new equipment at no additional cost to the University.

G. The folding direction for each hinged pole shall be selected by the engineer with due regard for maintainability and shown on the drawings. Conflict with trees and shrubs must be avoided. Hinge direction must allow a pole to tip a full 90. Hinging onto the rising slope of a hill is not acceptable.

H. Minimum conduit size throughout will be 1 1/4”. Circuit conductors shall be 3 phase 5 wire from beginning to every fixture. Minimum wire size shall be #6 copper with #8 green ground wire. All time switches shall incorporate carryover feature.

3.2. Install in accordance with manufacturer's written instructions, applicable requirements of NEC, NESC and NEMA.

3.3. Coordinate with other work interface installation of roadway and parking area lighting with other work.

3.4. Mount lighting units on concrete bases as indicated.

3.5. Provide Bussman HEB fuseholder with "breakaway" receptacles. Provide equipment grounding connections.

3.6. GROUNDING: Provide equipment grounding connections.

3.7. OUTDOOR LIGHTING

A. Adequate outdoor lighting must be provided in parking lots and walkways within the contract limit lines. Fixture placement and lighting patterns must conform to the criteria established for the particular area involved by the master plan for the Campus. Harmony with the surrounding established features is emphasized.

END OF SECTION 16551

SECTION 16560 - LIGHTING CONTROL EQUIPMENT

PART 1 GENERAL

1.1. DESCRIPTION OF WORK:

A. Type of lighting control equipment specified in this section includes the following:

B. Building lighting control systems.

PART 2 PRODUCTS

2.1. ACCEPTABLE MANUFACTURERS: As specified

2.2. LIGHTING CONTROL EQUIPMENT:

A. Building: Provide a low-voltage lighting control system to comply with ASHRAE. Provide relay panels.

B. Relay panels will be programmable. Interior lighting circuits will be programmed to respond to low voltage switch inputs for manual control, and by time-of-day for automatic control. Lighting circuits in public areas will be programmed to operate by a time-of-day work schedule. Exterior lighting will be programmed to operate by a combination of photosensor and time-of-day.

PART 3 EXECUTION

3.1. INSTALLATION OF LIGHTING CONTROL EQUIPMENT:

A. Coordinate with other electrical work, including raceways, and electrical boxes and fittings, as necessary to interface installation of lighting control equipment work with other work. Contractor shall be on site as required, to adjust lighting control units for proper light levels as directed by engineer.

3.2. MANUFACTURER AUTHORIZED PERSONNEL TRAINING:

A. Building Operating Personnel Training: Train Owner's building personnel in procedures for starting-up, testing and operating lighting control system equipment.

END OF SECTION 16560

BLANK PAGE

SECTION 16561 - OCCUPANCY LIGHTING CONTROL AND EQUIPMENT

PART 1 – GENERAL

1.1 DESCRIPTION OF WORK:

A. The extent of occupancy sensor work is indicated by drawings.

B. Types of occupancy sensors in this section include the following:

1. Passive Infrared Wall Switch
2. Dual Technology Ceiling Sensor w/ Control Pack

1.2 QUALITY ASSURANCE:

A. Comply with NEC and NEMA standards as applicable to construction and installation of occupancy sensors. Provide occupancy sensors which have been UL listed and labeled.
B. All sensors shall be capable of operating normally with electronic ballasts, PL lamp systems, motor loads and any other passive infrared or microwave systems.

PART 2 - PRODUCTS

2.1 OCCUPANCY SENSORS:

A. PASSIVE INFRARED WALL SWITCH: Where units are indicated provide a sensor that meets the following minimum requirements:

1. Sensor shall utilize a dual element pyroelectric detector behind a lens to detect the motion of infrared energy emitted by the human.
2. Lens shall be of the multi-element type that divides the field of view into forty zones of detection.
3. Sensor shall fit a single gang switch box and utilize a decorator cover plate.
4. Sensor shall have a time-out delay, adjustable from 1 minute to 30 minutes.
5. Sensor shall have an Automatic/OFF switch on front of unit.
6. Sensor shall have a 170 degree field of view. Detection beam shall be horizontal.
7. Sensor shall be rated for 0 to 600 watts at 120VAC and 277VAC and adapt automatically to the operating voltage.

B. DUAL TECHNOLOGY CEILING SENSOR: Where units are indicated, provide a sensor that meets the following minimum requirements:

1. Sensor shall incorporate ultrasonic (microphonics) and infrared technologies in a single unit.
2. Sensor shall have automatic self-adjustment algorithm which adjusts timer and sensitivity settings to maximize performance and minimize energy usage.
3. Sensor shall have manual time-out adjustment from 8 minutes to 32 minutes and automatic time out from 8 minutes to 100 minutes.
4. Sensor’s microprocessor shall automatically reduce either PIR or ultrasonic sensitivity in response to false on condition.
5. Sensor microprocessor will automatically monitor PIR background threshold signal level and makes corresponding sensitivity adjustments automatically.

6. Infrared lens shall have 360 degree field of view. Two types of lens shall be available, standard and extra dense.

PART 3 – EXECUTION

3.1 INSTALLATION OF LIGHTING CONTROL EQUIPMENT:

A. Install occupancy lighting control system components and ancillary equipment as indicated, in accordance with equipment manufacturer's written instructions, and with recognized industry practices, to ensure that lighting control equipment complies with requirements.

3.2 MANUFACTURER AUTHORIZED PERSONNEL TRAINING:

A. Building Operating Personnel Training: Train Owner's building personnel in procedures for starting-up, testing and operating lighting control system equipment.

END OF SECTION 16561

SECTION 16600 - TRANSIENT VOLTAGE SURGE SUPPRESSION (TVSS)

PART 1 – GENERAL

1.1 DESCRIPTION OF WORK:

A. Extent of TVSS work is indicated by drawings, schedules and specified herein. Work includes complete installation, electrical connections and testing.

1.2 QUALITY ASSURANCE:

A. Comply with NEC, NEMA and IEEE Standards as applicable to wiring methods, construction and installation of TVSS devices. Comply with applicable requirements of ANSI/IEEE C62.11, C62.41, and C62.45; and UL 1449. Provide complete packaged units that have been listed and labeled by Underwriters Laboratory. UL surge ratings (UL 1449) must be permanently affixed to the TVSS device.

PART 2 - PRODUCTS:

2.1 GENERAL:

A. Except as otherwise indicated, provide high energy transient voltage surge suppression devices, with high frequency line noise filtering. Provide types, sizes, ratings and electrical characteristics that comply with manufacturer's standard materials, design, and construction in accordance with published information and as required for a complete installation.

2.2 TVSS SYSTEM DESCRIPTION:

A. Provide TVSS devices that comply with the following:

1. Have a maximum continuous operating voltage not less than 125% of the nominal system operating voltage, and a frequency operating range of 47 to 63 hertz.
2. Provide protection modes of line-to-neutral (when neutral is present in the system), line-to-ground, and neutral-to-ground (when neutral is present).

B. Provide units consisting of engineered solid-state high-performance suppression and filtering modules consisting of arrays of nonlinear voltage dependent metal oxide varistors, selenium cells, and/or silicon avalanche diodes that optimally share surge currents in a seamless, low-stress manner assuring maximum performance.

2.3 UNITS INSTALLED AT LEVEL ONE LOCATIONS:

A. Where units are shown on the drawings installed at MDP (or required by other sections of the specification), provide a TVSS, sine wave tracking, high frequency filtering device, which meets the following minimum requirements:

1. Minimum single impulse surge current rating:

a. Line to neutral (each individual phase): 160,000
b. Line to ground (each individual phase 160,000
c. Neutral to ground: 100,000

2. UL 1449 suppressed voltage rating not exceeding:

   a.

Voltage	L-N	L-G
120/208	400	400

3. Category C3 clamping voltage ANSI/IEEE C.62.41-1991(Reaffirmed 1995) (20KV-1.2/50 microsec., 10KA microsec.) Not exceeding:

   a.

Voltage	L-N	L-G
120/208	625	625

PART 3 – INSTALLATION

A. Install TVSS devices as shown in accordance with manufacturer's recommendations and as necessary to meet requirements. Install with conductors of minimum length practicable, but in no case exceeding 30" in length; minimum conductor size - #8 AWG copper.

END OF SECTION 16600

SECTION 16601 - LIGHTNING PROTECTION SYSTEMS

PART 1- GENERAL

1.1. DESCRIPTION OF WORK:

A. Work is indicated by drawings and schedules. Work includes materials and installation for complete lightning protection system including:

Conductors	Rod Clamps
Air Terminals	Ground Plates
Connectors	Bonding Plates
Splicers	Surge Arresters
Ground Rods	

1.2. QUALITY ASSURANCE:

A. Provide supervision of installation by an LPI certified installer. Submit certification that system meets UL Master Label requirements.

B. ANSI/NFPA Compliance: Comply with NEC, NFPA ANSI and UL.

1.3. SUBMITTALS:

A. Product Data: Submit manufacturer's data.

B. UL Certificate: Provide Owner with UL Master Label for overall system.

PART 2 - PRODUCTS

2.1. LIGHTNING PROTECTION SYSTEM COMPONENTS:

A. GENERAL: Provide air terminals, fasteners, splices, connectors, roof and wall penetrations and flashings, conductors, solid strips and rods, and other accessories as required. Provide copper materials unless otherwise indicated.

B. SURGE ARRESTER: Provide GE Cat. No. 9L15 BCC003 at service entrance.

C. PROTECTIVE CAPACITOR: Provide GE Cat. No. 9L18 BAB301 at service entrance.

PART 3 – EXECUTION

3.1. INSTALLATION OF LIGHTNING PROTECTION SYSTEMS:

A. Comply with equipment manufacturer's instructions, NFPA and UL.

3.2. TESTING:

A. Resistance to ground test.

END OF SECTION 16601

BLANK PAGE

SECTION 16610 - EMERGENCY ELECTRICAL SYSTEMS

PART 1 GENERAL

1.1. DESCRIPTION OF WORK: Types include the following:

A. Automatic Transfer Switches
B. Isolation
C. Emergency Generators (Diesel)
D. Day Tanks
E. Exhaust and Fuel Systems

1.2. QUALITY ASSURANCE: Comply with NEC UL 924, and UL 1008. Provide system components which are UL-listed and labeled.

1.3. SUBMITTALS:

A. PRODUCT DATA: Submit manufacturer's data.

B. SHOP DRAWINGS: Submit dimensioned drawings of emergency system components; indicate spatial relationship to associated equipment.

C. Provide components suitable for:

1. Altitude: 4800 feet above sea level

2. Maximum ambient temperature: 50 degrees C.

3. Minimum ambient temperature: 9 degrees C.

D. AUTOMATIC TRANSFER SWITCHES: OT II AUTOMATIC TRANSFER SWITCH

1. Contactor type switches with:

a. Adjustable voltage sensors to start and transfer engine.

b. Time delay for transfer and retransfer.

c. Clock exerciser.

E. RATING AND PERFORMANCE: Continuous duty; NEMA 1 enclosure, 4 pole, transfer switch and bypass/isolation switches shall be in one enclosure.

1.4. ENGINE GENERATOR SETS

A. Various activities conducted in University buildings require the availability of emergency power to supply critical activities, experiments or emergency lighting. Such power may be supplied by the use of engine generator sets. Engine generator sets shall, in general, be located within the confines of the building. Where it is necessary to locate a generator outside specific building, approval shall be obtained from the University Campus Design & Construction Department. No engine generator sets are to be located inside buildings.

B. Engine generator sets will be provided with an automatic transfer switch and with all necessary accessories to insure proper operation, automatic (10 second) start-up and maintainability. Where transfer switch connects to a load which has ground fault protection in the switch gear, the transfer switch shall be four pole with switched neutral.

C. Engine generator sets will be fueled by diesel fuel from a storage tank to be provided as part of the installation. Fuel tanks for emergency generators shall be skid mounted and should have capacity for 8 hours operation. Buried tanks will not be acceptable. Before acceptance of the engine generator set installation, a full load test run for a minimum of 2 hours shall be conducted. The test shall verify all aspects of the installation's operation. Fuel and suitable load bank equipment shall be specified as the responsibility of the Contractor for the test.

D. Engine generator sets shall not be located in transformer vaults or switch rooms. Where located outdoors, generator sets shall be effectively isolated from pad mount transformers and other electrical gear so as to permit effective transformer maintenance without excess sound or other interference from the generator set during a power outage. Generator sets shall be provided with effective, top quality sound isolating muffler.

E. Engine generator sets shall be specified to comply with EPA Tier 3 standards. After installation, but prior to acceptance by the University, each engine generator must pass a qualifying opacity test.

F. Approved manufacturers for engine generator sets are Caterpillar, Generac, Kohler, Onan, or Smith Detroit Diesel.

1.5. ENGINE INSTRUMENTS:

A. Oil Pressure Gauge
B. Coolant Temperature Gauge
C. Battery Charge Rate Ammeter

1.6. EXHAUST SYSTEM: Critical type exhaust silencer.

1.7. MOUNTING: Vibration isolators between the electric set and base.

1.8. FUEL SYSTEM: Primary and secondary fuel filters with replaceable elements, and an engine driven fuel pump. Provide fuel system piping.

1.9. ELECTRIC ALTERNATOR: Direct connected, engine driven, single bearing, synchronous type alternator.

1.10. MANUFACTURER: As specified.

PART 2 EXECUTION

2.1. INSTALLATION OF ENGINE-GENERATOR SYSTEMS: Install equipment as indicated, in accordance with the equipment manufacturer's instructions, and with recognized industry practices.
2.2. GROUNDING: Provide equipment grounding.

2.3. TESTING: Demonstrate standby capability.

2.4. ELECTRICAL IDENTIFICATION: Refer to Section 16195 for requirements.

END OF SECTION 16610

BLANK PAGE

SECTION 16611 - UNINTERRUPTIBLE POWER SUPPLY

PART 1 GENERAL

1.1. RELATED DOCUMENTS:

A. Drawings and general provisions of Contract, including general and supplementary conditions and Division-1 specification sections, apply to work of this section.

B. Division-16 Basic Materials and Methods sections apply to work specified in this section.

1.2. DESCRIPTION OF WORK:

A. Extent of uninterruptible power supply system work is indicated by drawings and specified here-in.

B. U.P.S. System shall be designed in accordance with applicable sections of the following publications.

NEMA	NEC	ASA
IEEE (Inverter)	SHA	ASMC

C. All components shall be listed by underwriters laboratories, UL electronic testing laboratories, etc.

1.3. SUBMITTALS:

A. PRODUCT DATA: Submit manufacturer's data on U.P.S. systems including, but not limited to, roughing-in diagrams and instructions for installation, operation and maintenance, suitable for inclusion in maintenance manuals. Also include standard or typical riser and complete wiring diagrams for panel and system.

B. SHOP DRAWINGS: Provide shop drawings showing equipment/device locations and connecting wiring of entire U.P.S. system. Include wiring diagrams and riser diagrams.

PART 2 PRODUCTS

2.1. ACCEPTABLE MANUFACTURERS:

A. MANUFACTURE: Subject to compliance with requirements, provide U.P.S. system of the following:

1. EMERGENCY POWER ENGINEERING INC.:
   a. Topaz Inc.
   b. Elgar Inc.

2. UNINTERRUPTIBLE POWER SUPPLY SYSTEM:

   a. Provide a continuous duty, solid state, uninterruptible power supply system, hereafter referred to as the UPS. The UPS shall operate in

conjunction with the existing building electrical system to provide precise power for critical equipment loads. The system shall consist of the solid state inverter, rectifier/battery charger, a storage battery, and a static bypass transfer switch and mini pac power center as described in the following specification.

2.2. GENERAL REQUIREMENTS:

A. All materials and parts comprising the UPS shall be new, of current manufacture, and shall not have been in prior service, except as required during factory testing.

B. All active electronic devices shall be solid state and not exceed manufacturer recommended tolerances for maximum reliability. All semiconductor devices shall be sealed. Vacuum tubes shall not be used. All relays shall be provided with dust covers.

2.3. SYSTEM DESCRIPTION AND OPERATION:

A. System Definition: The UPS shall consist of a rectifier/battery charger, batteries, inverter, static bypass transfer switch, synchronizing equipment, protective devices power center and accessories as specified herein that shall automatically continuity of electric power within specified tolerances, without interruption, upon failure or deterioration of the normal AC power source. Continuity of electric power to the load shall be maintained for an emergency period with the inverter supplied by the batteries, up to the specified maximum time or until restoration of the normal AC power source.

B. Modes of Operation: The UPS shall be designed to operate as an on-line, reverse transfer system in the following modes.

C. Normal -- The critical load shall be continuously supplied by the inverter. The rectifier/battery charger shall derive power from the utility AC source and supply DC power to the inverter while simultaneously float charging the battery.

D. Emergency -- Upon failure of the utility AC power the critical load shall be supplied by the inverter, which without any switching, shall obtain its power from the storage battery. There shall be no interruption to the ritical load upon failure or restoration of the utility AC source.

E. Recharge -- Upon restoration of the utility AC source (prior to battery discharge), the rectifier/battery charger shall power the inverter and simultaneously recharge the battery. This shall be an automatic function and shall cause no interruption to the critical load.

F. Bypass Mode -- If the UPS must be taken out of service for maintenance or repair of internal failures, the static ypass transfer switch shall be used to transfer the load to the alternate source without interruption. Automatic retransfer of the load shall be accomplished after the UPS inverter synchronized to the alternate bypass input source. Then the static bypass transfer switch shall transfer the load from the bypass input source to the UPS inverter output without interruption and without paralleling of the sources.

G. Downgrade -- If the battery only is to be taken out of service for maintenance, it shall be disconnected from the rectifier/battery charger and inverter by means of an external circuit breaker. The UPS shall continue to function as specified herein, except for power

outage protection and transient characteristics.

2.4. UPS REQUIREMENTS

A. System Rating: The UPS system shall be sized to maintain the design load. The UPS system shall be equipped with a battery. The battery shall be able to supply the design load, at rated voltage, for a minimum protection period of 20 minutes.

B. Electrical Characteristics

System Input Requirements

AC input to Rectifier/Battery Charger

Voltage: 208 volts AC, +10%, 3 phase, 3 wires plus equipment ground.

Frequency: 60 Hz +5%

Power Factor: Typically 0.8 lagging with full load at nominal input voltage and normal float voltage on battery.

AC Bypass Input

Voltage: 208 volts AC, 3 phase, 3 wires plus equipment ground.

Frequency: 60 HZ nominal +0.5 Hz

Power Rating: 10 KVA continuous minimum

PART 3 EXECUTION

3.1. ELECTRICAL IDENTIFICATION: refer to 16195 for requirements.

END OF SECTION 16611

BLANK PAGE

SECTION 16721 - FIRE ALARM AND DETECTION SYSTEMS

PART 1 - GENERAL

1.1. DESCRIPTION OF WORK:

A. Comply with NEC. Provide UL-listing

1.2. SUBMITALS:

A. PRODUCT DATA: Submit manufacturer's data; typical riser and complete wiring diagrams.

B. SHOP DRAWINGS: Provide shop drawings showing equipment/device locations and connecting wiring

PART 2 - PRODUCTS

2.1. ACCEPTABLE MANUFACTURERS:

2.2. FIRE ALARM AND DETECTION SYSTEMS:

A. SYSTEM TYPE: (Addressable) (Combination, zoned, coded Style D) (Class A).

B. General:

1. Fire alarm systems shall be addressable analog and shall operate as non-coded, continuous sounding systems with reverse polarity remote signal transmission. All equipment, devices, and installations shall be compatible with existing system of operation. The following manufacturer is approved provided they meet specifications: Fire Control instruments (Nelson Fire Systems). No other manufacturers will be approved.

C. Codes and Standards

D. Fire alarm systems shall comply with R710-4 Buildings under the jurisdiction of the Utah Fire Prevention Board, the fire alarm requirements of National fire Protection Association Pamphlets 72 1993 Edition, National Electric Code, NFPA 70 1993 Edition. The following provisions shall apply:

1. Fire Alarm Panel

a. The location of the fire alarm panel and/or annunciator shall be approved by the University Fire Marshal. Panel mounting height shall be at eye level to facilitate maintenance and visual reference by fire crews during emergency responses.

2. Battery Standby Power

a. Batteries shall be of the gel cell type. Battery standby power shall meet the requirements outlined in Rules and Regulations, plus an additional 25 percent ampere-hour capacity. Battery standby system must have automatic tester and

charger

3. Alarm Devices

   a. Indicating Alarm devices shall be strobe/horns with a minimum rating of 97 DB. Exception: Patient care areas may incorporate Chime or other approved alarm devices. Comply with ADA requirements. Electronic horns are not acceptable. The horns shall have a temporal pattern signal.

4. Smoke and Fire Detectors

   a. Smoke and fire detectors shall have removable bases such that the detector can be removed for servicing without disconnecting the system wiring.
   b. All non-addressable smoke and heat detectors (installed on existing systems) shall have an LED alarm indicator.
5. Wiring
   a. All connections into the fire alarm panel and final check and testing of all fire alarm devices and wiring shall be made by a representative of the equipment supplier or manufacturer regularly employed and qualified to perform such work.
6. Interconnections with Central Fire Alarm Panel in Building 301
   a. The specifications will require that all necessary provisions be made for automatic reporting of all alarms from the project fire alarm system to the remote station receiving console in Building 301 via telephone lines leased from The Telephone Company. The University Environmental Health & Safety Department will make the final connection to the leased telephone line on the Building 301 end. On the project end the contractor will provide a conductor pair run in conduit from the fire alarm panel to the telephone panel and will make the final connection to the leased telephone line.
   b. b. When the project fire alarm system installation has progressed to the appropriate stage of completion, the contractor will make written request to the University Campus Design & Construction Department to arrange for the leased telephone line. This request must be made a minimum of two weeks prior to fmal connection. (Campus Design & Construction will make request to the University Telecommunications Department for the leased line and will pay the Telephone Company and University Public Safety Department connection fees. The University Public Safety Department will cover the ongoing lease costs. Campus Design & Construction will inform the University Fire marshal of the final connection date).
7. Final Inspection and Approval
   a. Upon completion of the work the building official shall be notified in writing so that the system and work may be inspected.
   b. At the time of the final inspection, all fire alarm devices shall be tested by the contractor and witnessed by the building official. At the completion of the test, as-built drawings and corrected supportive data shall be provided to the University. An operating and maintenance manual complete with equipment specifications data, schematics, and maintenance information on all devices shall be submitted to the University.
8. Service
   a. The equipment manufacturer shall be represented by the local service organization (Nelson Fire Systems). The name of this organization shall be provided to the owner and included in the operating and maintenance manual.
9. Guarantee
   a. Furnish a three-year guarantee for all equipment, materials and installation, including

all labor, transportation, and equipment.

b. Emergency Response. The fire alarm equipment supplier shall provide an emergency response within four hours of any reported system failure to resolve the problem on a continuous basis.

10. The following shall be required for Fire Alarms in University Buildings (Rules and regulations providing for Life Safety in buildings regulated by the Utah State Fire Prevention Board)
    a. The main panel on the system shall be addressable analog and shall have the following features:
    b. The panel shall be capable of supervising the fire alarm circuits, and of detecting shorts in circuits on either side of the power supply to ground.
    c. The panel shall have a battery standby power supply which is capable of operating the system for twenty-four hours at normal load, with five minutes of alarm sounding at the end of the period. The batteries shall be provided with a recharging system and a trouble alarm to indicate battery disconnect.
    d. The panel shall have the capability of resounding the alarm once silenced, if a subsequent alarm is received from another initiating device.
    e. The panel shall have the capability of shutting down individual initiating devices for maintenance purposes without affecting the continued operation of other initiating devices.
    f. The following rules pertain to newly installed systems or changes made to existing systems, except where noted.
    g. Pre-signal (alarm delay) systems of any type are prohibited. Exception: Approved smoke detection alarm verification systems in accordance with UL 864.
    h. All fire protection systems within a building, to include special extinguishing systems
    i. and elevator lobby detectors, shall be interconnected with the fire alarm system to sound the evacuation alarm when activated. Note: The fire alarm system shall not activate elevator recall.
    j. The fire alarm system shall be extended to all out-buildings subject to human occupancy which are used in connection with the primary building where the alarm system is installed.
11. Main Board
    a. An approved key plan drawing shall be posted at the main fire alarm panel which graphically displays the location of all indicating appliances , initiation devices, their addresses, area occupancy and smoke separation walls. Provide a high quality plastic sign (map holder) with two layers. The front layer shall be clear for viewing the CAD file alarm drawings.
    b. The main panel shall be located in a normally attended area such as the main office or lobby. Where this is not possible (and only if approved in writing by the University Fire Marshall), an electrically supervised remote annunciator from the main panel shall be located in a supervised area of the building. The remote annunciator shall visually indicate system power status, alarms for each zone, and give both a visual and audible indication of trouble conditions in the system. All indicators of both the main panel and remote annunciator shall be adequately labeled. The main panel shall not be mounted in a custodial closet.
    c. Power for the panel, battery charger, or any other device which affects the operation of the system, shall be controlled through a single circuit breaker labeled 'Fire Alarm System - Do Not Turn Off.' Connect to engine generator supported emergency circuit where available.
12. System Wiring (System Wiring shall be in accordance with the following):
    a. The alarm initiating circuits (IDC) shall be Style D as defined in NFPA Pamphlet 72.
    b. The notification appliance circuits (NAC) shall be Z as defined in NFPA Pamphlet 72.

Horn and strobe circuits shall be separate. The horns shall have a temporal pattern signal.

c. Signal line circuits (SLC) shall be style 6 or 7 as defined in NFPA 72.
d. IDC, NAC, and SLC wiring shall have independent feeds and returns from the panel to form a loop.

    Note: All University fire alarm system wiring shall be installed in steel conduit (minimum 112").

e. All junction boxes shall be adequately identified as part of the fire alarm system. Covers for the concealed boxes shall be painted red.

13. System Devices
    a. All equipment and devices shall be listed and/or labeled by a nationally recognized testing laboratory for fire alarm use.
    b. Indication devices in newly installed systems shall be of the strobe/horn type. Electronic indication Horn/Strobes are not acceptable.
    c. Indicating Appliance sounding devices shall be red in color.
    d. Exception: Emergency voice alarm systems.
    e. External Indicating Appliance Horn/Strobes shall be provided to allow the alarm to be heard in the direction of parking lot and playground areas.
    f. Any auxiliary equipment to be connected into the system and not supplied by the fire alarm contractor, shall be complete, to be controlled by standard auxiliary contacts in the fire alarm system.
    g. Manual alarm initiating stations shall be provided at all required building exits, boiler rooms, kitchens, and main administrative offices, and elsewhere to provide a maximum 200' travel distance to a pull station from any point in the building.
    h. Automatic alarm initiating devices shall he provided as follows:
        a. Products-of-combustion (smoke) detectors installed throughout all corridors and common areas of egress at the minimum prescribed spacing of thirty feet on center, and no more than fifteen feet from the walls.
        b. In other than fully sprinklered buildings, Rate-of-rise and/or rate anticipation thermal detectors installed in each enclosed space, other than corridors, at maximum prescribed spacing of fifty feet on center, and no more than twenty five feet from the walls. Space to be included are specified in NFPA Standards.
    i. UFC Appendix III-C, Section 7.(c) (Pull Station Height) is amended to read as follows: "...with the bottom of the device not more than 4 feet above the floor level".
    j. Where elevator recall is required, recall initiating detectors shall have auxiliary contacts. Appropriate wiring in conduit shall be run from the initiating devices to the elevator control panel. These devices shall also initiate an evacuation alarm.
    k. All Initiating Devices shall be labeled with their appropriate address. The label shall be 36 point kroy labels.
14. Fan Shut Down
    a. All circulating air supply fans shall shut down upon activation of the fire alarm.
    b. The fan shut down relay(s) in the air handling equipment required by code shall be normally energized and connected through and controlled by a normally closed contact in the fire alarm panel or by a normally closed contact of a remote relay under supervision by the main panel. Relays shall be mounted in a separate enclosure next to the starters.
    c. The relays will transfer on alarm and shall not restore until the panel is reset. Fume hood fans shall not be shut down unless approved by EH&S.
    d. Duct detectors required by the UMC shall be manufactured by Fire Control Instruments. (Nelson Fire Systems) and shall be interconnected and compatible with the fire alarm system and shall be addressable.

15. Approvals, Inspections and Tests
    a. Complete plans to scale and specifications showing all devices and equipment locations, supportive data, and building alterations, shall be prepared on each system and submitted to the AHJ for approval, prior to the commencement of any work.
    b. Upon completion of the work, the AHJ shall be notified so the system and work may be inspected and tested. Final acceptance testing shall be conducted by the fire alarm contractor/supplier and witnessed by the AHJ.
    c. The disks containing the files shall be supplied to the owner. These disks shall include all information required to allow the University to change the fire alarm program themselves. These computer disks shall contain a minimum of the following
        a. CAD drawing files of building fire alarm map.
        b. CAD drawing files of as build fire alarm components and point to point connections.
        c. General configuration programming.
        d. Job specific configuration programming.
        e. Tutorial file on complete programming of fire alarm system.
    d. A complete set of CAD "as built" drawings showing installed wiring, color coding, specific interconnections between all equipment, and internal wiring of equipment shall be delivered to the owner upon completion of the system installation.

PART 3 EXECUTION

3.1. INSTALLATION OF FIRE ALARM AND DETECTION SYSTEMS:

A. Install as indicated, in accordance with equipment manufacturer's written instructions.

B. Wire initiating circuits are four wire, Class A circuits with separate conduit runs for outgoing and return portions of the Class A loop.

C. Install all wiring in raceway. Minimum raceway size, 3/4"; minimum conductor size, #14 AWG.

3.2. TESTING:

A. Provide factory trained representative to perform complete system testing.

3.3. ELECTRICAL IDENTIFICATION: Refer to Section 16195 for requirements.

END OF SECTION 16721

BLANK PAGE

SECTION 16740 - TELEPHONE SYSTEMS (RACEWAYS)

PART 1 - GENERAL

1.1. DESCRIPTION OF WORK: Includes raceway, outlets, device plates, backboards, cabinets, grounding.

1.2. QUALITY ASSURANCE: Comply with NEC. Provide UL listing.

PART 2 - PRODUCTS

2.1. GENERAL: Provide complete raceway system.

PART 3 - EXECUTION

3.1. INSTALLATION OF TELEPHONE RACEWAY SYSTEM:

A. Install to comply recognized industry practices. Telephone/Data cables will be run in conduits from outlets to corridor communications cable tray or to backboard locations.

A. GROUNDING: Provide one #6 bare copper ground from each telephone terminal board to the service entrance.

3.2. UNIVERSITY STANDARDS

A. This document provides design consultants with detailed requirements and minimum standards for the construction or remodeling of facilities on Campus. The consultant is expected to incorporate these requirements and standards into project documents to ensure that the finished product meets these specific needs of the University.

B. The University expects a high quality, standards-based communications infrastructure on Campus. The design of communications infrastructure for new or remodeled facilities shall be engineered by a qualified Registered Communications Distribution Designer (RCDD) actively affiliated with the Building Industry Consulting Services International (BICSI) organization. Further, engineering designs must meet all applicable Federal, State, and local codes and standards, and must be designed in accordance with these Design Standards.

C. The Designer shall produce all floor plans in a CAD format with layering in accordance with National CAD Standards, with DFCM Supplement (note that telecommunications wiring, conduit, and raceways are to be layered separately from electrical layers). Prepare drawings in accordance with the DFCM supplement to the National CAD Standard found at irttp:lldfcm.utah.gov,. The acceptable CAD formats in order of preference are MicroStation (.dgn), AutoCAD 2000 (.dwg) or generic (.dxf).

D. *Note: In an effort to maintain a consistent structured wiring system throughout Campus, University Information Technology department (UIT) is the only entity on Campus authorized to install new communication cabling, both inside and between buildings. Therefore, the Designer is to notify Contractors that the University of Utah installs their own telecommunications wiring in new and remodeled spaces. Project specifications are to require the Contractor to coordinate the work with the University, thereby properly sequencing the installation of the wiring with the rest of the construction work. Wiring must be completed prior to the installation of drop ceiling grid.

E. The University has experienced problems in many buildings where the installation of

communications wiring resulted in penetrations of fire rated partitions, which were left untreated. The Designer is to refer to University of Utah Design Standards Chapter 2 Architecture, Section 2.2 Project Construction for instructions.

3.3. TELECOMMUNICATIONS SERVICE ENTRANCE AND TERMINATION

A. General Information

1. Telecommunications service entrance on Campus is defined as the means by which connections for Local Exchange Carrier's, Campus Distribution, Interexchange Common Carrier, etc. will enter and terminate in Campus buildings. Entrance conduit begins at the communications manhole nearest the structure and ends when terminated in the Equipment Room (see Section 10.2) for that structure.

B. Types of Entrances

1. The acceptable means of service entrance on Campus is an underground conduit system. All entrance conduit must be four inch (4") PVC conduit, encased in concrete, and buried at a minimum of twenty four (24) inches below grade. The actual number of conduits designed for any campus structure will be determined by the Campus Design and Construction (CD&C) and University Information Technology (UIT) Project Managers during the design phase of the project.
2. On each new building, and where approved for each remodel, include a two inch (2") roof mounted galvanized rigid conduit with weather-head in the system design. The new conduit is to extend two feet (2') above the finished roof. The base is to be sufficiently secured to support future electronic equipment which may be attached to the conduit. Coordinate with the Consultant Architect for a location a) which is reasonably close to (preferably directly over) a Telecommunications Room; b) which is near a roof access for maintenance and service; and, c) which would have walkway approach protection to limit the possibility of roof damage. If possible, this roof conduit should be located directly over the top floor Telecommunications Room. Extend conduit into the building either to the Telecommunications Room or to the nearest communications cable tray. Review the design with the UIT Project Manager for approval at Design Development Review or prior to completion of the bidding documents.

C. Bends

1. Bends in service entrance conduit are generally considered unacceptable. However, should bends be unavoidable, they shall be reviewed for approval by Campus Design & Construction and UIT prior to installation; and, they will be long, sweeping bends with a radius not less than ten times the internal diameter of the conduit. There shall be no more than the equivalent of two quarter bends (180° total) between pull points. All bends and sweeps are to be in rigid conduit.

D. Preventing Shearing

1. In order to prevent shearing of conduits, each entrance conduit is required to have 10 ft of rigid steel conduit leaving and entering any structure including buildings, manholes, etc. Ends of metallic conduit must be reamed and bushed.

E. Manholes

1. Manholes used for communications will not be used for the distribution or termination of any electrical cables. Communications manholes will have a minimum of 96 square feet of floor area (unless preapproved by UIT) with a minimum 8' ceiling height; and, are to be reinforced concrete, either poured in place or pre-cast; and, must be suitable for H2O highway loading. Covers will be clearly marked "COMMUNICATIONS". Manholes must be equipped with bonding inserts and struts for racking, pulling eyes at least 2.2 centimeters in diameter, and a sump of at least one (1) cubic yard of crushed rock with a three (3) foot diameter. See Chapter 9 for additional requirements.

2. The University of Utah requires all manholes to be fitted with a secure access system. Coordinate with the University's Project Manager and UIT for current approved details regarding manhole security and access systems. The only approved secure access system is manufactured by the University Metal Shop, with a lock provided by the University's Key Shop. Coordinate with the University Project Manager to either cover the cost by internal work order or include an allowance on the Bid Response Form when manholes are included in the design. The work order amount or allowance shall be $1,000 for each manhole.

F. Terminating Conduit Inside a Building

1. Service entrance conduits should enter the communications room without bends. If the conduits enter the building below the finished floor, this is best accomplished by creating a trench for the conduits to enter. The trench must be a minimum of three (3) feet wide to allow the bending of cable inside the trench. The trench must be fitted with a steel grate to cover the entire span of the trench. Knockouts in the grate, for cable entrance and exit, must be provided. The grate must be capable of withstanding weight in excess of 1,000 pounds. If conduits enter from the ceiling, they should terminate four inches (4") below the finished ceiling. It is imperative that slope and grade be considered in the design and installation of entrance conduits, ensuring that conduits inside the building are not lower than the conduits leaving the manhole, thus creating drainage problems.

G. Redundant Entrance Provision

1. All new buildings shall be equipped with dual entrance facilities, originating from separate manhole structures. All standards that apply to the primary entrance facility apply to the redundant facility. Any deviation from this standard must be approved by both Campus Design and Construction (CD&C) and University Information Technology (UIT).

H. Fill

1. All conduit must be concrete encased.

3.4. EQUIPMENT ROOMS (ER)

A. Definition

1. Equipment Rooms (or "ER") provide secure space and maintain suitable operating environments for large communications and/or computer equipment. Equipment Rooms are generally considered to serve a building, where Telecommunications Rooms (or "TR") generally serve only one floor of a building. *Any or all functions of a Telecommunications Room may be provided by an Equipment Room.*
2. The Equipment Room is typically the point of demarcation (dmarc) for the following services:
   - Local Exchange Carrier (Qwest)
   - Fiber Optic Network
   - Building Maintenance Systems
   - Security Systems

B. Considerations for Design

1. When designing Equipment Rooms, consider incorporating building information systems other than traditional voice and data communications systems (e.g. CATV distribution systems, alarm / security systems, and audio/paging systems). In most instances, the Equipment Room may also serve as the entrance facility for the building communication.
2. The design of a new Equipment Room should begin with an assessment that considers each of the factors listed below. The information gathered from this assessment must be considered by the Designer at all stages of the project

design, along with guidelines and requirements of applicable local, state, federal standards and these Design Standards.

- Customer Requirements
- Telecommunications Pathway Locations
- Service Provider (Local Exchange Carrier [LEC]) Requirements
- Environment/Facility Conditions and Resources

C. Locating the Equipment Room

1. The location of the Main Equipment Room can have significant impact on all other aspects of communications systems distribution design. Location selection is to include consideration of spaces immediately adjacent to the Equipment Room (beside, below, and above). In general, the Main Equipment Room should be located near the building center to minimize cable distance.
2. Design of Equipment Rooms must take in to consideration:
   - Services to be terminated
   - Access and proximity to distribution cable pathways
   - Building facilities and access to the Equipment Room
   - Local Exchange Carrier (LEC) requirements
   - Proximity to electrical service and EMI sources
   - Space required for equipment
   - Provisions for future expansion
3. Do not locate Equipment Rooms in places that are subject to the following conditions:
   - Water Infiltration
   - Steam Infiltration
   - Humidity from nearby water or steam
   - Heat (e.g. direct sunlight)
   - Any other corrosive atmospheric or environmental conditions
4. Shared use of Equipment Room space with other building facilities must be avoided. Locations which are unsatisfactory for Equipment Rooms include space in or adjacent to:
   - Electrical Closets
   - Boiler Rooms
   - Washrooms
   - Janitor Closets
   - Storage Rooms
   - and any space that contains:
   - sources of excessive EMI
   - hydraulic equipment or other heavy machinery that may cause excessive vibration
   - steam pipes
   - drains
   - clean-outs
5. Note: Avoid locations that are below the water level unless preventive measures against water infiltration are employed. The room must be free of plumbing and electrical utilities that are not directly required to support the Equipment Room function. A floor drain is required if there is any risk of water entering the facility.
6. Working Clearances
   NEC Section 110-16 requires three (3) feet of clear working space around equipment with exposed live parts. This applies to communication Equipment Rooms.
7. Conduit Accessibility
   It is essential that clear, unobstructed access to cable trays and conduits be

provided within the Equipment Room. Entrance conduit and distribution conduit/cable trays should enter and exit on the same wall. If this is not possible, a cable tray inside the room should be provided for distribution from wall to wall.

8. Electrical Systems
   Power for telecommunications equipment in Equipment Rooms should be supplied by feeders dedicated only to supplying that equipment (NEC Article 215). Quadplex power receptacles with separate 20 amp feeders and isolated grounds, should be mounted on every wall in the Equipment Room, spacing should be on six foot (6') centers, and located eighty four inches (84") above the finished floor. Other power requirements (e.g. fluorescent lighting, motors, air conditioning equipment, etc.) should be supplied by a separate feeder, conduit, and branch panel.
9. Dimensions
   Determination of "adequate size" for the Equipment Room depends upon what services are to be terminated there. Input from UIT personnel, LAN support groups, Electronics Shop, HVAC and UCard personnel should be considered. Minimum size for an Equipment Room is ten by 15 feet. (10' x 15') The actual size of the Equipment Room will be determined during the design phase of the project when more information, pertinent to the size and application of the building, is available.
10. Space Allocation & Layout
    The layout of major communications equipment in the Main Equipment Room must facilitate the effective routing of power and communications cabling. The Main Equipment Room must provide adequate space for:
    - All Planned Equipment
    - Access to Equipment for Maintenance & Administration
    - Future Growth
11. In addition to space for communications and security system requirements, an Equipment Room may also include space requirements for environmental control equipment, power distribution/conditioners, and UPS systems.

D. Determining Size of Equipment Rooms (Based on Area Served)
   1. When specific equipment that may be used in an Equipment Room is not yet known, the following criteria may be used to determine the minimum size of the Equipment Room.
      a. Divide the amount of useable floor space (building area used by occupants during normal daily activity, including hallways, copier rooms, etc.) by 100 ft.2 (or smaller if average work area size is less) to determine the number of individual work areas; or, count the number of individual work areas (offices, conference rooms, cubicles, etc.).
      b. Multiply the number of work areas to be served by 0.75 ft. 2 to determine the minimum Equipment Room size.
   2. Note: If there are fewer than 200 work areas, the Equipment Room must be no less than 150 ft2. In special use buildings (hospitals, hotels, etc.) Equipment Room sizes may vary. Refer to ANS11EIAITIA- 569-B.

E. Fire Protection / Fire Rating I Fire Suppression
   1. All ER spaces shall be designed with pre-action fire suppression systems (the space remains water free until both heat and smoke detectors are activated). Fire alarms should be installed in accordance with these Design Standards. Portable fire extinguishers should be located in the room as close to the entrance as possible. A minimum of a 2 hour fire rating should be provided with a fire sprinkling system exterior to the room.

F. Environmental Considerations

1. Environmental considerations should be determined prior to design; however, assume that air conditioning will be a year-round requirement and should be capable of maintaining a maximum temperature of 75 degrees F and a relative humidity of 30% to 50%.

G. Floor Requirements
1. Equipment Room spaces are generally considered to be computer rooms. Design these rooms with raised floors, 18 inches clearance (minimum), to ensure maximum flexibility of power and communication cabling.

H. Loading Requirements
1. The floor rating under distributed loading must be greater than 12 Kpa (250 lb/ft. 2).
2. The floor loading under concentrated loading must be greater than 4.4 M (1,000 lbs) in areas that will support communications equipment, racks, and cabinets.

I. Ceiling Requirements
1. The recommended height of the finished ceiling to the finished floor in an Equipment Room is sufficient height to allow 8 fl:. 6 in. clear space below light fixtures Any ceiling protrusions (ventilation, sprinklers, etc.) must be located with a minimum clearance height of 8 ft. 6 in. The ceiling finish must minimize the introduction of dust, and be light colored to enhance room lighting.

J. Lighting Requirements
1. Equipment Rooms shall be designed with adequate and uniform lighting that provides a minimum equivalence of 540 lux (50 footcandles) when measured 3 ft. above the finished floor. Locate lighting fixtures a minimum of 8 ft. 6 in. above the finished floor. Locate light switches near the entrance(s) to the Equipment Room. Power for lighting should not come from the same circuits as power for the communications equipment. Provide emergency lighting as required by applicable building codes.

K. Security
1. DESIGN: Provide adequate clear wall space to accommodate the required number of CCure iStar security control panels as determined by UCard. Provide an adequate quantity of power outlets to serve the iStar panels.

L. Cable Management
1. Cable management, either overhead or under the floor, must be given careful consideration during design. As a minimum, all communication spaces shall be designed with cable trays installed at a height of one hundred eight inches (108") above the finished floor, with minimum dimensions of (4"d x 12"w) and which wraps the entire room. Considerations for additional cable trays and/or raised floor will require consultation with Campus Design and Construction (CD&C), University Information Technology (UIT), and the tenants of the proposed building or space.

M. HVAC Requirements
1. Telecommunications equipment requires full time operation of heating, ventilating, and air conditioning in the room to meet the criteria shown below. If the building's HVAC system cannot provide continuous service to satisfy the ER room ' s environmental requirements, consult with the University 's Project Manager and UIT to consider an independent HVAC system. If approved, each ER space would be designed with an independent cooling system capable of operation when other chiller and ventilation systems may be interrupted (e.g. fire alarm tests, maintenance, season off-times for cooling or heating, etc.). The system should be designed with a high performance cooling system utilizing positive pressure techniques.

Temperature Range:	64 degrees to 75 degrees F
Humidity Range:	30 percent to 55 percent relative
Heat Dissipation	750 to 5,000 BTUs per hour per cabinet (number of cabinets to be determined through consultation with CD&C).

N. Electromagnetic Interference (EMI)
   1. Because EMI causes severe problems with electronic equipment, telecommunications rooms must not be shared with electrical feeders, branch circuits of noisy equipment or transformers.

O. Un-interruptible Power Systems (UPS)
   1. A building UPS system shall be installed and connected to all Communication spaces; and, should be equipped with access to building emergency generator power to protect critical voice and data systems.
      The sizing of the UPS would depend on the size and use of the building. This would be determined in the design phase of the building with the assistance of Net-Corn, and the building occupants' IT staff.

P. Telecommunications Grounding and Bonding
   1. A proper grounding and bonding infrastructure is essential for the reliable operations of today's sensitive telecommunications equipment and systems.
   2. The building telecommunications grounding and bonding should follow ANSI-J-STD-607-A. This standard is intended to augment (not replace) the requirements specified in the NEC.
   3. The grounding and bonding infrastructure originates at the electrical power service entrance and extends throughout the building. Predrilled copper grounding bus bars are to be installed in all TR's and ER's.
   4. Whenever two or more telecommunications bonding backbones (TBB) are used within a multistory building, they are to be bonded together with a grounding equalizer (GE) at the top floor and every third floor in between.
   5. The size of wire used in the telecommunications bonding backbone is distance driven. See Drawing Detail COM-2.

Telecommunications bonding backbone length (ft)	Telecommunications bonding backbone (AWG)
1-13 feet	6 AWG
14-20 feet	4 AWG
21-26 feet	3 AWG
27-33 feet	2 AWG
34-41 feet	1 AWG
42-52 feet	1/0 AWG
53-66 feet	2/0 AWG

3.5. Telecommunication Rooms (TR)
   A. Telecommunication Rooms
      1. Telecommunications Rooms or TR's differ from Equipment Rooms and entrance facilities in that they are generally considered to be "floor-serving" (as opposed to "building-serving") spaces that provide a connection point between backbone and horizontal distribution pathways. Requirements for the design of ERs found

in this document, specifically Power/UPS, HVAC, Fire Alarm 1 Suppression, Security, Cable Management, and Electrical Systems also apply to TR design.

B. General

1. Telecommunication Rooms are "floor-serving" spaces for housing:
   - Voice equipment (e.g. KSU's, etc.)
   - Data equipment (routers, concentrators, etc.)
   - Cable terminations (both horizontal and backbone)
   - Fiber optic terminations (both horizontal and backbone)
   - Cross-connect wiring

C. Size

1. TRs vary in size depending on their function and the size of the floor area they serve. Typically size requirements are based on distributing telecommunications service to one individual work area per 100 feet 2 of occupied work space. While the actual size of Telecommunications Rooms will depend on the application of the building and therefore will require input from various entities during the design phase of the project, minimum Telecommunications Room sizes are shown in the table below:

IF THE SERVING AREA IS....	THEN THE TR MUST BE AT LEAST....
Below 740 meters^2 (8,000 feet^2)	3.0 meters x 3.0 meters (10 feet x 10 feet)
Larger than 740 meters 2 (8,000 feet2)	3.0 meters x 3.6 meters (10 feet x 12 feet)

D. Working Clearances

1. NEC Section 110-16 requires three (3) feet of clear working space around equipment with exposed live parts. This applies to Telecommunication Rooms.

E. Conduit Accessibility

1. It is essential that clear, unobstructed access to cable tray and conduits be provided within the Telecommunication Room. When possible entrance conduit and distribution conduit/cable tray should enter and exit on the same wall, if this is not possible cable tray inside the room should be provided for distribution from wall to wall.

F. Electrical Systems

1. Power for telecommunications equipment in Telecommunications Room should be supplied by feeders dedicated only to supplying that equipment (NEC Article 215). Quadplex power receptacles with separate 20 amp feeders and isolated grounds, should be mounted on every wall in the Telecommunications Room, spacing should be on six (6) foot centers, located eighty four inches (84") above the finished floor. Other power requirements (e.g. fluorescent lighting, motors, air conditioning equipment) should be supplied by a separate feeder, conduit, and branch panel. Refer to Section 10.2.12 for grounding requirements.

G. Lighting

1. Telecommunication Rooms should have adequate and uniform lighting. Design room lighting to maintain an intensity of 50 foot candles (LM/ft2) at 3 feet above floor level. Coordinate light fixture positions with the equipment layout, especially overhead cable trays, to ensure the light is not obstructed.

H. HVAC Requirements

1. Telecommunications equipment requires full time operation of heating, ventilating, and air conditioning systems. If the building's HVAC system cannot ensure continuous operation (including weekends, holidays, off-season, maintenance, etc.), coordinate with the University's Project Manager and UIT to consider stand alone systems with independent controls. Typical room requirements are as follows:

Temperature Range	64 degrees to 75 degrees F
Humidity Range:	30 percent to 55 percent relative
Heat Dissipation	750 to 5,000 BTUs per hour per cabinet (number of cabinets to be determined through consultation with CD&C).

I. Structural Guidelines
   1. Telecommunications Room walls should extend from the finished floor to the structural ceiling (e.g. the slab). Walls shall consist of/4" fire treated or Hypalon coated plywood encased between layers of sheetrock. The plywood shall carry a minimum fire rating of two hours (or as required by applicable codes and regulations).
   2. If ceilings must be installed they must be a minimum of 2.6 meters high to provide space over the equipment frames for cables and suspended racks.

J. Fire Alarm
   1. A fire alarm should be installed in all Telecommunications Rooms. A portable fire extinguisher should be made available inside all Telecommunications Rooms.

K. Locating Telecommunication Room
   1. It is imperative that TRs be located so as to minimize cable lengths for both horizontal and vertical cable runs.
   2. *Vertical Distribution* - When designing TRs for vertical distribution it is preferable to "stack" TRs so that the Telecommunication Room on level one is located directly below the Telecommunications Room on level two, etc. TRs should be connected to one another via four (4), four (4") inch conduits. Conduits should penetrate the floor in the TR on the far left corner of the TR, and extend no less than two inches (2") above the finished floor.
   3. *Horizontal Distribution* - Telecommunication Rooms must be located so as to maintain a distance no greater than ninety (90) meters (cable length) from the furthest termination point (communication outlet) being served by that TR. Ensure that conduits and cable trays feeding the Telecommunication Room terminate *completely inside* the TR.

3.6. Communications Distribution Systems (Pathways & Spaces)

A. Definition
   1. Communications Pathways and Spaces are facilities used to distribute and support cable and connecting hardware between Equipment Rooms; and, between Equipment Rooms and the work area outlet. These spaces may include conduit, cable tray, open air plenums, cellular floor duct, etc.

B. Backbone Communication Pathways
   1. Backbone Communication Pathways may consist of shafts, conduits, raceways, and floor penetrations (i.e. sleeves or slots) which provide routing space for communication cables.

C. Sleeves & Slots
   1. Vertically aligned TRs with connecting sleeves or slots are the most common type of backbone pathway.
   2. Position cable sleeves or slots adjacent to a wall, which can support backbone cables. Sleeves or slots must not obstruct wall terminating space. All sleeves and slots must be constructed in accordance with the National Electrical Code (NEC) and local fire codes, and must have curb, a minimum 2 inches high from the finished floor.
   3. Design sleeves with a 4 in. diameter, unless a smaller size is required by the structural engineer.
   4. The following table provides general guidelines for determining the number of 4

in. sleeves required, based on ANSIIEIA/TIA-569.

TOTAL SQUARE FEET	QTY-OF SLEEVES
Up to 50,000	3
50,000 to 100,000	4
100,000 to 300,000	5-8
300,000 to 500,000	9 - 12

5. The following table provides general guidelines for determining the sizes of slots required, based on ANSIIEIAITIA-569.

TOTAL SQUARE FEET	SIZE OF SLOT
Up to 250,000	6” X 9”
250,000 to 500,000	15” X 46”
500,000 to 1,000,000	23” X 51”
1,000,000 to 2,000,000	38” X 61”

D. Open Shafts
1. Open shafts should only be used where large quantities of cables are required. Backbone cables should never be located in elevator shafts.

E. Conduit/Enclosed Metallic Raceways
1. Conduit or Enclosed Raceways may be used to run cables "point to point" where intermediate splicing is not required, or where physical protection or enhanced security is required.
2. The table below indicates the "conduit fill ratio" based on area and the minimum bend radius. Apply these fill percentages to straight runs with nominal offsets equivalent to no more than two 90° bends.

Conduit		Area of Conduit				Minimum Bend Radius
Trade Size (in.)	Internal Diameter	Area= $.79D^2$ Total 100%	Maximum Occupancy A (1 Cable) 53% Fill	Maximum Occupancy B (2 Cables) 31% Fill	Maximum Occupancy C (3 or more) 40% Fill	10X Conduit Diameter
¾	0.82	0.53	0.28"	0.16"	0.21"	8
1	1.05	0.87	0.46"	0.27"	0.35"	11
1 ¼	1.30	1.51	0.80"	0.47"	0.60"	14
1 ½	1.61	2.05	1.09"	0.64"	0.82"	16
2	2.07	3.39	1.80"	1.05"	1.36"	21
2 ½	2.47	4.82	2.56"	1.49"	1.93'	25
3	3.07	7.45	3.95"	2.31"	2.98"	31
3 ½	3.55	9.96	5.28"	3.09"	3.98"	36
4	4.03	12.83	6.80"	3.98"	5.13"	40
5	5.05	20.15	10.68"	6.25"	8.06"	50
6	6.07	29.11	15.43"	9.02"	11.64"	60

F. Horizontal Communication Pathways
1. Horizontal Distribution Systems (or horizontal pathways & spaces) consist of structures that conceal, protect, and support horizontal cables between the communications workstation outlet and the horizontal cross-connect in the

serving Telecommunications Room.

2. Horizontal communications pathways are used to distribute and support horizontal cable and connecting hardware between the workstation outlet and the Telecommunications Room. These pathways & spaces are the "container" for the horizontal cabling.
3. Note: It is the responsibility of the Designer to review all proposed Horizontal Distribution Systems with the University Information Technology (UIT) to ensure that the systems design:
   - Makes optimum use of the ability of the horizontal cabling system to accommodate change,
   - Is as unconstrained as possible by vendor-dependence,
   - Complies with ANSI/NFPA 70 (ref. 7.1), these Design Standards, Local, State, and Federal Codes, and,
   - Complies with ANSI/EIA-TIA-569 (Ref. 7.20).

G. Design Considerations

1. Horizontal Distribution Systems must be designed to accommodate diverse user applications including:
   - Voice Communications
   - Data Communications
   - Local Area Networks (LANs)
   - Wireless Applications
2. Note: The Designer should also consider any other building information systems (e.g. CATV, building alarms / security, audio PA systems, etc.), which may require area/space in the Horizontal Distribution System, and should allow for these systems accordingly.
3. An effective design of a building's Horizontal Distribution System should meet the following criteria:
   - All applicable local, state, and federal, codes.
   - All applicable BICSI, ANSI, NFPA, EIA/TIA, UL, NEC, IEEE, ASTM, BOCA, FCC, SBC, ISO, and State adopted codes.- Provide flexible cable distribution to workstation locations
   - Facilitate ongoing maintenance
   - Easily accommodate future changes in equipment and services
   - Minimize occupant disruption when horizontal pathways and spaces are accessed.
   - A minimum of three cable runs per individual workstation.
4. The horizontal distribution system must be designed to handle all types of communications cabling (i.e., UTP, STP, Coax, and Fiber Optic). When determining the type and size of the cable pathway, consider the quantity and size of the cables that the pathway is intended to house, and allow for growth of the area served over the planning cycle.
5. When designing the horizontal distribution system it is important to consider Adds, Moves, and Changes, and minimal disruption to immediate occupants.

H. Number of Cable Runs per Work Area

1. The pathway design should allow for a minimum of three cable runs per individual work area.

I. Electromagnetic Interference (EMI)

1. Because EMI causes severe problems with electronic equipment, telecommunications, and data communications, avoidance of all potential sources or electromagnetic interference must be a primary consideration when designing a horizontal distribution system. To avoid electromagnetic interference, all distribution pathways should provide clearances of at least

a. Four ft. (4' or 1.2 m) from large motors and/or transformers
b. One ft. (1' or 0.3 in) from conduit and cables used for electrical power distribution
c. Five in. (5" or 12 cm) from fluorescent lighting

2. Note: Horizontal Distribution Pathways should cross perpendicular to fluorescent lighting and electrical power cables or conduits.
3. For additional clearance requirements, see ANSI/EIA-TIA-569 and ANSI/NFPA 70.

J. Grounding & Bonding
1. Horizontal Pathways must be grounded and bonded in accordance with the requirements specified in ANSI J-STD-607-A, except where other codes or local authorities impose more stringent requirements.

K. Firestopping: Install Removable Fire Pillows
1. All horizontal pathways that penetrate fire-rated barriers must be sealed in accordance with applicable codes. Provide smoke rated protection as required for smoke rated wall and floor penetrations.

L. Administration of Horizontal Distribution Systems
1. Utilize standard methods and procedures for labeling and managing horizontal pathways. Locate markings so that they are clearly visible after installation, and easily distinguishable from any markings that appear on individual components. For details on guidelines and requirements for the administration of horizontal pathways and spaces, see BICSI TDM Manual Chapter 4 and ANSI/TIA/EIA-606.

M. Types of Horizontal Distribution Systems
1. Many types of horizontal distribution systems are acceptable for installation at the University of Utah. Many buildings may require two or more of the following systems to meet all distribution needs. Acceptable types of horizontal pathways are:
a. Unlimited access (raised floors).
b. Ceiling zones and grids
c. Cellular floors.
d. Conduit
e. Underfloor ducts (one-level or two-level)
f. Cable tray

N. Sizing of Horizontal Pathways
1. The size requirements for horizontal distribution pathways depend on the following:
- Usable floor space served by the pathway.
- Maximum occupant density (i.e. floor space required per individual work area).
- Cable type and diameter.
- Pathway capacity (requires that the fill factor be taken into account).

	CABLE OUTSIDE DIAMETER									
Trade Size In.	0.13	0.18	0.22	0.24	0.29	0.31	0.37	0.53	0.62	0.70
½	1	1	0	0	0	0	0	0	0	0
¾	6	5	4	3	2	2	1	0	0	0
1	8	8	7	6	3	3	2	1	0	0
1 ¼	16	14	12	10	6	4	3	1	1	1
1 ½	20	18	16	15	7	6	4	2	1	1
2	30	26	22	20	14	12	7	4	3	2
2 ½	45	40	36	30	17	14	12	6	3	3
3	70	60	50	40	20	20	17	7	6	6
3 ½	-	-	-	-	-	-	22	12	7	6
4	-	-	-	-	-	-	30	14	12	7

2. The usable floor space (also referred to as "Office Space ") is generally considered to be the building area used by the occupants for their normal daily work functions. For design purposes, this space should include hallways. All other common areas in the building should be disregarded.
3. The occupant density or floor space allocation per office or individual work area for the University of
4. Utah is 100 ft2 of usable floor space.
5. *Cable Density* - Design for pathway capacity to accommodate a minimum of three horizontal cable runs per workstation location.
6. *Cable Diameter* - For planning purposes use the following table to determine the minimum amount of Horizontal Pathway Distribution capacity.

Horizontal Cable Type	Typical Outside Diameter
Four-Pair Category 5, 100-ohm UTP	0.25 to 0.28 inches
Two-Pair Shielded Twisted Pair, 150-ohm STP	0.31 to 0.43 inches
Duplex 62.5/125pm Optical Fiber Cable	0.11 to 0.18 inches

7. *Conduit Capacity* - Adequate planning should allow for a minimum of two 314 inch conduits to each workstation location. Maximum conduit fill capacities shall not be exceeded in accordance with ANSI/NFPA 70, Chapter 9.

O. General Conduit Distribution
1. A horizontal conduit system consists of conduits radiating from the Telecommunications Room to the work station outlets in the floor, walls, ceilings, and columns of a building.

P. Suitable Conduit
1. The following types of conduit are deemed suitable for building installation at the University of Utah:
   -Flexible Metal Tubing - (limitations apply, check with University Information Technology (UIT) for specifications)
   -Rigid metal conduit (typical two (2), 314 inch conduits to each workstation location for horizontal distribution)

Q. Conduit Runs
1. Conduit runs should be designed for the most direct route, parallel to building lines, with no more than two (2), 90 degrees bends between pull points or pull boxes. Design each run with a maximum horizontal cable run of ninety (90) meters (295 ft.). Continuous sections shall not be longer than thirty (30) meters

without pull points or pull boxes installed.

2. It is recommended that conduit runs be kept to no more than 45 meters (150 ft.) in total length including sections through pull boxes.

R. Conduit Quantity and Size

1. The University recommends that a minimum of two (2), 3/4 inch metal conduits be installed from the Telecommunications Room and terminated to each four square workstation outlet.
2. Include in the design, the installation of one %" metal conduit from the Telecommunications Room to termination at each wireless access point.

S. Conduit Bend Radii

1. The radius of a conduit bend must be at least 6 to 10 times the diameter of the conduit. Conduits designated for Futureflex tubing must be installed with a minimum bend radius of 12 times the diameter of the conduit.

T. Conduit Entering Telecommunications Rooms

1. Horizontal distribution conduits entering a Telecommunications Room should terminate near the corners and allow for proper cable racking. If conduits are entering through the floor, they must terminate four inches (4") above the finished floor. If conduits are entering through a wall, the conduits must be reamed and bushed, and terminated as close as possible to the terminating rack or wall.

U. Completing Conduit Installation

1. Upon completion of Horizontal Distribution Conduit, the conduits will be:
   - Left clean, dry and unobstructed
   - Capped for protection
   - Labeled for easy identification
2. All conduits will be equipped with a contiguous length of plastic or nylon pull string with a minimum rating of 200 lbs. (90 Kg) or a 12 AWG wire.

V. General Cable Tray Systems

1. Cable tray systems are used primarily as main corridor distribution apparatus. Cable tray systems should be designed as equipped to support only telecommunications and data communications cable. Shared systems with power are not acceptable under the guidelines listed in avoiding EMI.

W. Suitable Cable Tray Systems

1. The following cable tray systems are acceptable for installation at the University:
   - Channel
   - Ladder
   - Solid Bottom
   - Trough
   - Wire Mesh (basket), dual hung with no center support

X. Cable Tray Runs

1. Cable tray systems should be installed with a minimum number of bends installed, if more than three 15 degree turns are installed in a contiguous length, then de-rate the effective capacity of the cable tray by twenty five (25) percent. Delineations in a level cable tray installation are often unavoidable, however these delineations should be kept at a minimum with each delineation not exceeding 30 degrees and 24 inches offset. The total delineation for the tray span should not exceed 180 degrees.

Y. Cable Tray Size and Capacity

1. Cable tray size and capacity will be determined by the amount and type of cable installed, the static load capacity of the tray, and the length of the support span. Cable tray systems should be designed to accommodate 100 percent future growth.

Z. Cable Tray Installation Clearance
1. It is recommended that the cable tray system be installed with as much clearance as possible from other building facilities, and installed in the lowest position below all other building facilities but above the ceiling grid, in accordance with ANSIINFPA standards and meeting the following criteria:
   - 8 in. clearance from obstructions on both sides.
   - 8 in. clearance from obstructions to the top.
2. Installation of cable tray pulley systems installed in a solid ceiling environment should provide access points at 20 ft. on-center, and at any directional deviation greater than 15 degrees and/or 90 degree turns.

AA. Cable Tray Entering Telecommunications Rooms
1. Cable tray entering a Telecommunications Room should wrap around the room and allow for proper cable racking.

BB. Completing Cable Tray Installation
1. Upon completion of horizontal cable trays, the trays shall be inspected by the Designer to verify that the trays are:
   - Free and clear of all obstructions and debris
   - Free of burrs, sharp edges, and projections
   - Labeled for easy identification
   - Identified as "Telecommunications Cable Tray Only"

CC. Other Types Of Horizontal Distributions Systems
1. The university has identified other types of acceptable horizontal distribution systems that may be installed. These include, but are not limited to:
   - Unlimited access (raised floors).
   - Ceiling Zones and Grids
   - Cellular Floors.
   - Conduit
   - Underfloor ducts (one-level or two-level)
2. Due to the individuality, complexity, and the broad scope of requirements for these systems. The University Information Technology (UIT) will review each of these specified systems on a `case-by-case' basis.

DD. Outlet Boxes, General
1. Telecommunications outlet boxes installed in dry-wall, plaster, or concrete block wall shall be Single Gang Plaster (Mud) Rings. Wall phones and wireless connections shall use Single Gang Plaster (Mud) Rings.

EE. Mounting Outlet Boxes, Office Environment
1. Outlet boxes installed in an office environment must be specified to meet the following criteria:
   - At least 4 in2 by 2-118 in. deep
   - Mounted at least 18 inches above the finished floor or even with adjacent electrical duplex services
   - Outlet boxes shall not be placed back to back

FF. Mounting Outlet Boxes, Above Counters
1. Outlet boxes installed above a counter will meet the following criteria:
   - Counter with backsplash: At least 6 inches above the top of the counter to the center of the outlet
   - Counter without a backsplash: At least 12 inches above the top of the counter to the center of the outlet

GG. Mounting Outlet Boxes, Wireless
   - At least 4 in2 by 2-118 in. deep
   - Mounted at 10 inches below the finished ceiling
   - Outlet boxes shall not be placed back to back

- Distance between units determined by the project Designer

HH. Elevator Phone
1. Elevator phones on Campus are installed and maintained by University Information Technology (UIT).

II. Communication Connection
1. Include in specifications that the contractor will be responsible for the installation of the traveling cable from the elevator panel to the Car Operating Panel (COP). A minimum of four (4) 18 gauge wires will be provided in the traveling cable for the purpose of communication services transport. The communication wires will extend from the COP to the access panel opening that is provided for the communication device.

JJ. Conduit
1. Include in the design: The Contractor must provide a home run 3/4 inch conduit extending from the top of the elevator panel and extending to the nearest Telecommunication Room (TR or ER). UIT will provide the necessary cable to connect the emergency line to the elevator panel.

KK. Communication Device
1. The elevator communication device (phone panel) will be a standard design and configuration per drawing Detail COM-l. The `back-box' is required per the drawing. The University's UIT Department will furnish and install the device. The approved device for elevator installation is Ramtel Model RR833. The unit is a stainless steel, brushed finish panel which meets ADA requirements. The minimum required opening that must be provided for the approved device is 9 114" H x 6-5/8" W with a minimum 4 inch clearance for the back of the device.
2. The elevator car is to be factory prepared for this device; or, the Contractor shall prepare the car to receive the device per Detail COM-1. Note that the device must be mounted at a height which positions the activation button no higher than 48-3/4" above the finished floor.

LL. Emergency Service Line
1. The telephone line that is used in the elevators is a standard Centrex line that automatically rings to Public Safety.
2. It is the responsibility of the University's Project Manager (Campus Design & Construction) to order the line for the elevator and to notify Public Safety that a new elevator phone is being added to their system.

MM. During the design of University projects, it will be the responsibility of the project engineer to consult with the project architect, the University's Network and Communication Services (NetCom), and with the University Campus Design & Construction Department to determine the telephone and communications needs of the project. See Chapter 10 for specific information. The requirements for Emergency Phones on site are described in Chapter 1 General Guidelines, and a detail drawing is provided in Chapter 2 Architecture.

NN. Communications Entrance The design for new buildings will include a communications service entrance and provisions for running communications conductors to various parts of the building. The scope of these provisions will be determined in consultation with the University Campus Design & Construction Department. The communications service entrance will interconnect the building with the University underground communications duct system. The communications service entrance will include a minimum of six 4" ducts into the building. The service entrance ducts shall be run without bends. Where this is not possible specific approval of the Campus Design & Construction Electrical Engineer will be required.

OO. Communication Manholes will be provided for the underground communications distribution system. Spacing of manholes will be carefully considered to allow

reasonable pulling tensions for cable pulls between manholes. Spacing between manholes shall not exceed 400 feet.

PP. Manholes will be fabricated in accordance with Chapter 10. A complete set of accessories will be specified (see Chapter 10) including, but not limited to, the following:
1. Manhole cover and seat.
2. Cast-in provisions for cable supports (such as Super Strut Series No. C300).
3. Ground rod minimum of two 314" X 10' copper clad steel for each manhole.
4. Portable manhole ladder (stainless steel).
5. Water proofing of manhole and entrance structure.
6. Pulling eyes on all walls.
7. Bell end entrance for all conduits.
8. Seal all conduit entrances.
9. Threaded metallic type O.Z. Gedney Bell End Entrances for all conduits.

QQ. Communications Duct Banks Duct banks will be provided to house underground communication cables. Duct banks will be concrete encased round bore plastic duct. Typically the duct size should be 4 inches. Spare ducts will be provided in duct bank installations in consideration of the future needs of the campus communications system. Duct banks will have a minimum slope of 4 inches per 100 ft. Seal around all cables entering man hole with permagum. Provide plastic plugs in both ends of all unused ducts and seal with silicon sealant. Concrete encasement will be a minimum of three inches between ducts and between ducts and earth. The top of the concrete encasement will be a minimum of 3 ft. below finished grade. Care shall be taken during installation to insure no debris gets into the line. After completion a mandrel not less than 12 inches long and approximately 1-112 inches diameter less than the duct diameter will be pulled through each duct to insure that no debris has collected in the duct. Mandrel pulls shall be witnessed by the engineer and university representative. Engineer should inspect duct bank construction before concrete is poured. Provide polypropylene pull rope in each unused duct.

RR. Where duct banks enter manholes, buildings or vaults, a 10 ft. length of rigid galvanized steel conduit will be used for each duct. All elbows and offsets in duct runs will be made of rigid galvanized steel.

SS. All communications ducts must be installed in such a manner as to be free of bends, twists, turns etc.. Absolutely no 90, 45, 30 degree bends shall be allowed. A maximum bend radius of 5 degrees shall be allowed. Any other bend necessary shall require approval of the University Campus Design and Construction Department electrical engineer (in consultation with the Campus Utility Services Electronics Shop). Any Bends required greater than 5 degrees shall be rigid steel. The architect shall provide elevation drawings that show elevation differences.

END OF SECTION 16740

BLANK PAGE

SECTION 16780 - TELEVISION SYSTEM (RACEWAYS)

PART 1 - GENERAL

1.1. DESCRIPTION OF WORK: Raceway, outlets, device plates, backboards, cabinets, grounding and miscellaneous items.

PART 2 - PRODUCTS:

2.1. Complete system for television.

PART 3 - EXECUTION:

3.1. Comply with NEC.

END OF SECTION 16780

BLANK PAGE

SECTION 16782 – ACCESS CONTROL/SECURITY SYSTEMS

PART 1 – GENERAL

1.1 DESCRIPTION OF WORK

A. Provide access control system as is hereby defined to include, but not be limited to raceway, outlets, coverplates, backboards, cabinets, grounding and miscellaneous items required for complete system.

B. SYSTEM DESCRIPTION

1. The Security Management System specified shall be fully integrated and installed as a complete package by the Access/Security Control Contractor. The SMS shall be able to provide for and integrate the following subsystems:

a. Integrated Access Control.
b. Alarm Monitoring.
c. Associated Access Control and Alarm Equipment Control.
d. Access Initiated and Event Initiated Control

C. The Campus Design and Construction project manager will bid and contract directly with the security contractor. Budgeting for the security installation will be a soft cost. The project manager will be responsible to insure that O&M manuals, if any, and as-built drawings are submitted directly to the UCard Office.

D. Prior to security system installation in an existing building, a routing plan must be developed and an asbestos survey performed for that routing, per State EPA regulations. If asbestos is detected, abatement may be necessary unless alternate routing can be determined that avoids the asbestos.

E. DESIGN: Design of alarm and access systems will follow Chapter 2. All buildings shall be constructed with provisions for future installation of card readers, magnetic alarm contacts and electric door strikes for card access to all outside doors, inside doors to computer (IT) and UIT rooms, and inside doors to mechanical rooms.

F. SPECIFICATIONS: The UCard office would like to meet with the Project Manager, designer and user department to understand the needs and expectations of the project. UCard would also like to provide a definition of the capabilities of the CCURE alarm and access system. This process should best begin during project programming, but at the latest during the Design Development phase.

G. Alarm and access system wiring will reside in conduit, as described in Chapter 9 - Raceway Systems.

1. Lock power; 4 wire, 18 awg
2. Door contact; 22 awg wire
3. REX, (request to exit); 4 wire, 22 awg
4. Reader; 3 pair, 6 wire, 22 awg

H. Ucard will determine if the existing wire is adequate.

I. Supported devices:
   1. Software House RM Series Card Readers
   2. SCR Series - Smart Cards and Biometric/Smart Card Readers
   3. HID Proximity Readers and Cards
   4. Keri Systems Proximity Readers and Cards
   5. Indala Proximity Readers and Cards
   6. HID Wiegand Readers
   7. HID Stand Alone Readers
   8. Supported cameras:
   9. American Dynamics Cameras
   10. Intellex Digital Video Management Systems
   11. IntelleView Systems
   12. iClass Smart Prox

J. Placement and number of devices will be defined by client needs and funding resources. Members of the

K. TOCAC (Technical Operations Campus Alarm Committee) will provide approval where alarms are requested, and should be involved in related programming and design meetings.

L. It is requested that door access readers be installed on all University communications rooms to allow access for appropriate individuals.

M. Security system training will be by the installing contractor directly and only with the designated end user representative(s).

N. Building Card access All Buildings shall be constructed with provisions for installation of card readers, **magnetic alarm** contacts, and electric door strikes for card access to all outside doors, inside doors to computer rooms and Netcom **rooms,** inside doors to mechanical rooms, and as indicated in the program. Provisions shall include the installation of conduits and outlet boxes as required **for card readers, alarm contacts and door strikes.**

The SMS shall be based upon a distributed system of fully intelligent, stand-alone controllers, operating in a multi-tasking, multi-user environment on a true peer-to-peer, token passing Local Area Network (LAN).

1.2 SUBMITTALS:

A. Product Data: Submit manufacturer's data: Typical riser and complete wiring diagrams.

B. SHOP DRAWINGS: Provide shop drawings showing equipment/device locations and connecting wiring.

PART 2 PRODUCTS

2.1 GENERAL: Provide and install a complete and operable access control system which utilize devices to maintain building security.

A. Acceptable manufacturers: As directed by the University.

B. Materials: Furnish and install at locations shown, the specified equipment to provide a completely operational Access Control/Security Management system. The following list of main items of the installation shall not be considered to be all-inclusive:

1. Door hardware and accessories
2. Readers
3. Monitors
4. Distributed Control Units (DCU's) – Main Controller
5. Door Processing Units (DPU's) – Main Door Controllers
6. Alarm relays
7. Miscellaneous cable, wire, associated connectors, and hardware
8. Power supplies

C. All materials and equipment shall be standard, regularly manufactured equipment.

D. All systems and components shall be thoroughly tested and proven in actual field use.

E. All system main control components shall be from one manufacturer.

PART 3 – EXECUTION

3.1 INSTALLATION OF ACCESS CONTROL SYSTEM

A. GENERAL: Install access control system as indicated, in accordance with equipment manufacturers written instructions, and with recognized industry practices, to ensure that system equipment complies with requirements. Comply with requirements of NEC, and applicable portions of NECA's "Standards of Installation" practices.

1. FINAL ACCEPTANCE TEST:

a. After the testing report and as built drawings have been approved by the customer's representative, the completed system shall be tested in the presence of the customer's representative.

B. GROUNDING

1. Take particular attention to the grounding of equipment cases and shielded cables to eliminate noise interference and avoid electrical loops. Provide shielded cable for all communications cabling. Correctly terminate shields at ground bars and connect to the main building ground or as specified by the manufacturer.

C. Coordinate all equipment locations and mounting details with other trades and suppliers.

END OF SECTION 16782

BLANK PAGE

SECTION 16784 - INTERCOM AND PAGING SYSTEMS

PART 1 GENERAL

1.1. DESCRIPTION OF WORK:

A. Raceway, cables, backboxes, grilles, speakers, amplifiers, intercom stations, cabinets, grounding and miscellaneous items.

1.2. QUALITY ASSURANCE:

A. Comply with NEC. Provide UL-listing.

PART 2 – PRODUCTS

2.1. SYSTEM COMPONENTS:

A. Loudspeakers - JBL 8130H, Lowell WB-8 grille, and XCP84 backbox.

B. Power Amplifiers - Bogen TU-60A

2.2. OPERATION:

A. Paging is accomplished through the telephone system by dialing a predetermined telephone number assigned to each zone, and a predetermined number for all-call.

PART 3 EXECUTION

3.1. INSTALLATION:

A. GENERAL: Comply with recognized industry practices. Install speaker and intercom cabling in corridor communications cable tray.

B. Connection shall be made from the telephone switchboard.

END OF SECTION 16784

BLANK PAGE

SECTION 16786 - CLOCKS AND PROGRAM

PART 1 GENERAL

1.1. A self-correcting clock system will be installed in University buildings either as called for in the project program, or to extend / replace existing building clock systems. The new clock system will consist of the following:

A. Clocks and Clock System Controls

1. Self-correcting clocks will operate on A/C power, shall correct via a wireless signal and be compatible with the current University system. Battery operated clocks will not be approved.

2. The clock system shall be limited to the products of SimplexGrinnell; Primex Wireless; or, Sapling, Inc. All other manufacturers must be reviewed and approved by University Facilities Management prior to bid.

3. The clock system will be furnished and installed by the Contractor; however, the Contractor is required to coordinate with the University's Electronics Shop prior to ordering / installing the equipment.

B. Front-End Controller:

1. The clock system's wireless front end controller shall be located in one of the building's telecommunications rooms where an Ethernet connection is available. Coordinate with the Electronics Shop for an approved location to install the device. The front-end controller will monitor the precise time from an internet based master clock and relay time signals wirelessly to building clocks.

C. Installation and Set-Up

1. The University's Plant Operations Electronics Shop must be contacted for coordination.
2. The Electronics Shop will:

a. Review the intended system for approval prior to the Contractors' initial material order,
b. Coordinate with the Contractor for equipment location prior to installation, and
c. Work with the Contractor during system set-up.

END OF SECTION 16786

BLANK PAGE

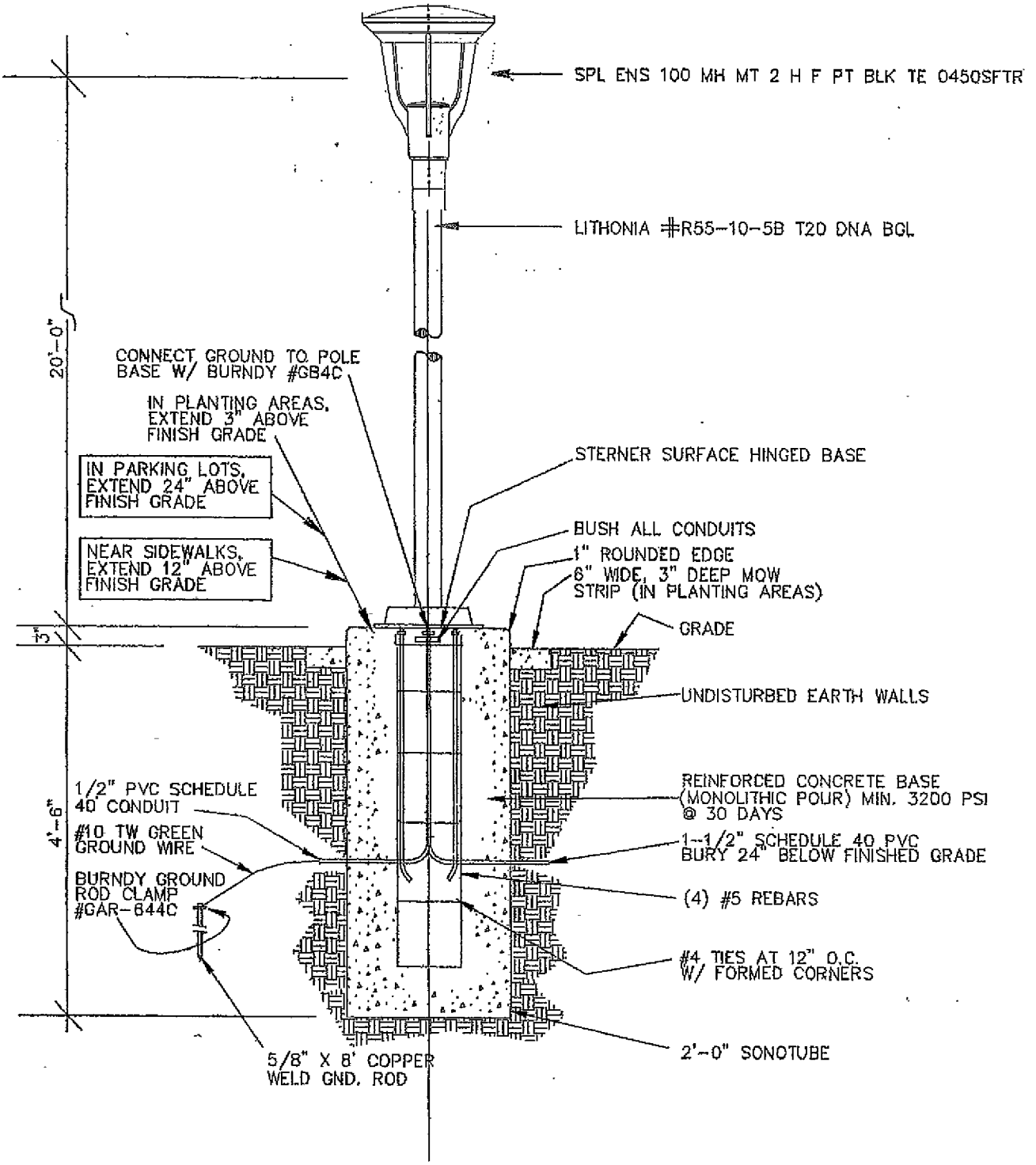

THE UNIVERSITY of UTAH

The Department of
CAMPUS DESIGN & CONSTRUCTION
1795 E. So. Campus Drive, Rm 201
Salt Lake City, UT 84112-9403
Phone: (801)581-6883
FAX: (801)581-6081

Drawing Title:

WALKWAY LIGHTING ASSEMBLY DETAIL — 10'-0" POLE

Revision Date:

DEC. 2009

Drawing No.:

ELEC-1

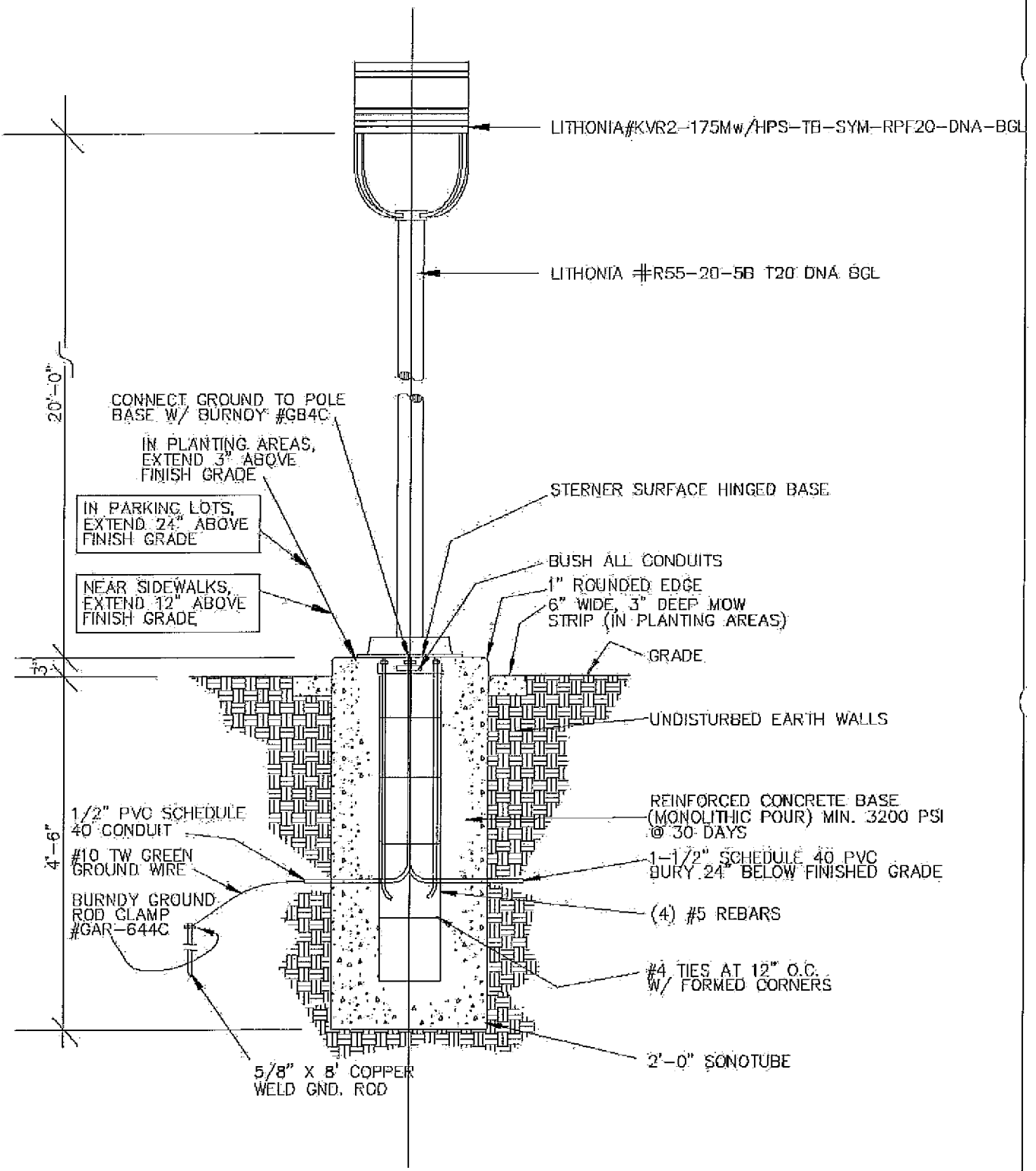

THE UNIVERSITY of UTAH

The Department of
CAMPUS DESIGN & CONSTRUCTION
1795 E. So. Campus Drive, Rm 201
Salt Lake City, UT 84112-9403
Phone: (801)581-6883
FAX: (801)581-6081

Drawing Title:

PARKING LOT ASSEMBLY DETAIL – 20'-0" POLE

Revision Date:

DEC. 2009

Drawing No.:

ELEC-3

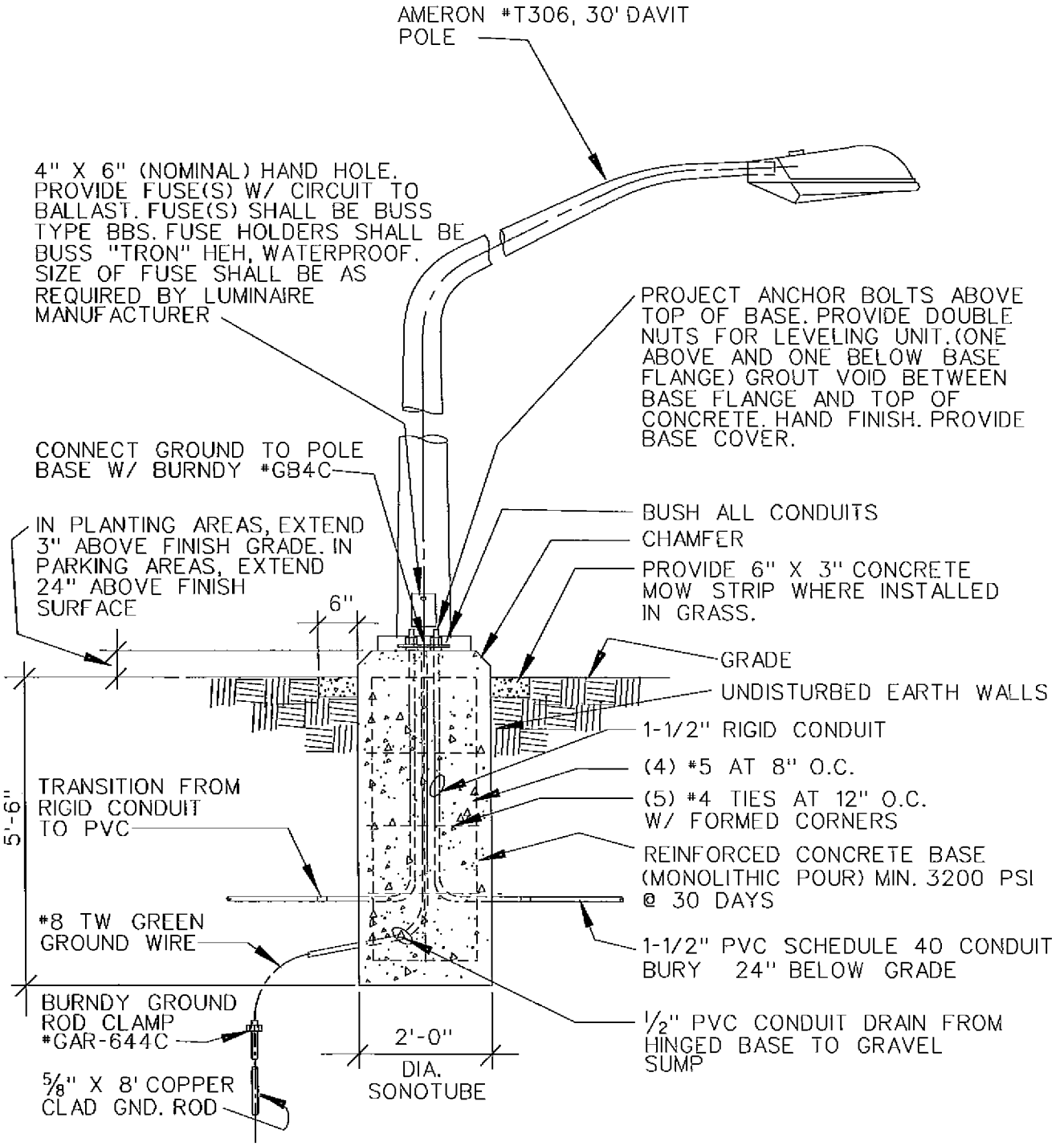

THE UNIVERSITY OF UTAH

The Department of
CAMPUS DESIGN & CONSTRUCTION
1795 E. So. Campus Drive, Rm 201
Salt Lake City, UT 84112-9403
Phone: (801)581-6883
FAX: (801)581-6081

Drawing Title:

POLE LIGHTING DETAIL (STREET LIGHT)

Revision Date:

DEC.1993

Drawing No.:

ELEC-4

MicroStation: Licensed For Academic Use Only

NOTE–MANHOLE OPENING SHALL BE IN THE CORNER (AWAY FROM EQUIPMENT) KEEP 18" OFF WALL. THE LID SHALL BE A 4'–0" x 4'–0" BILCO STEEL, H20 LOADED HATCH.

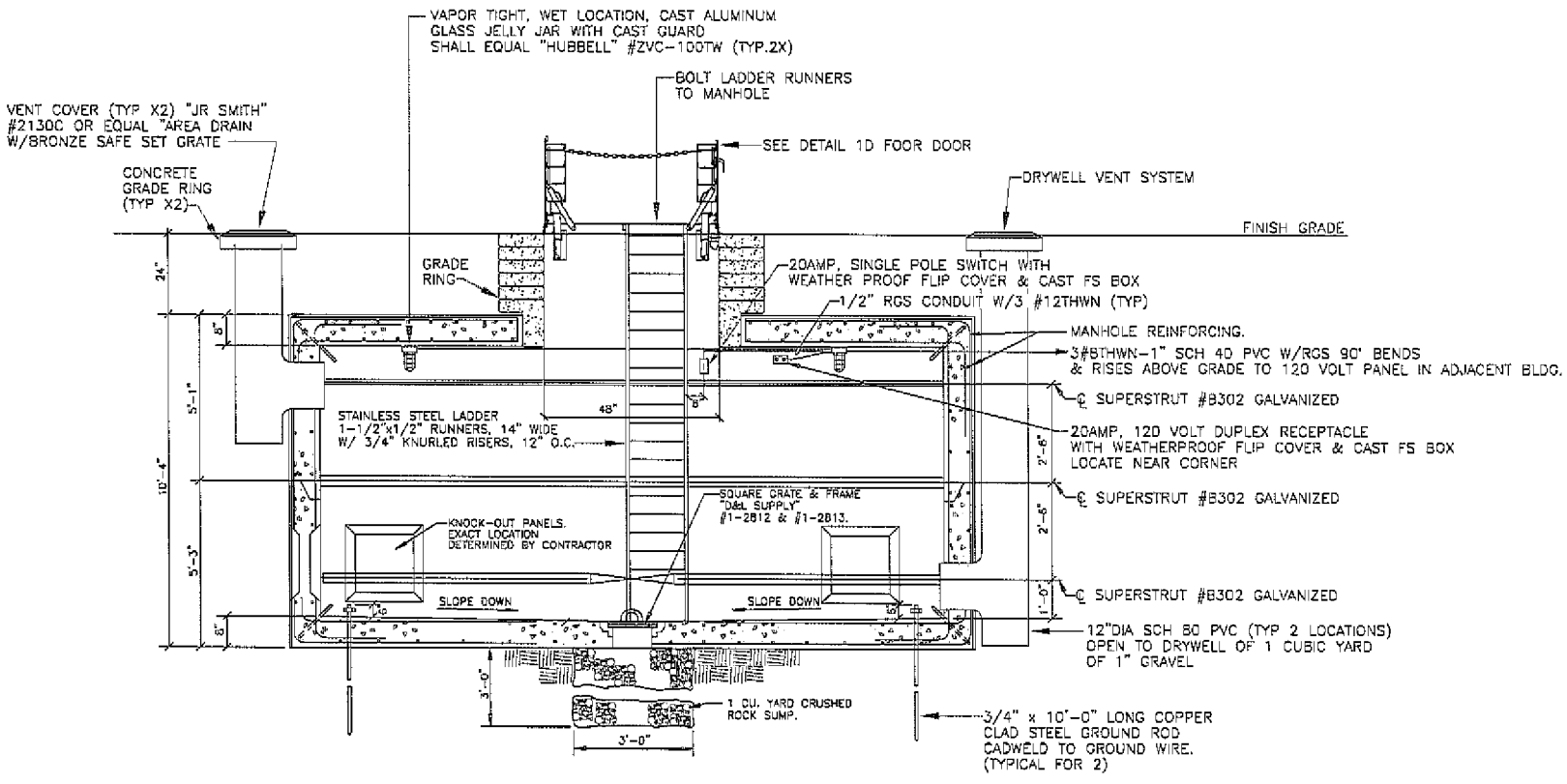

MANHOLE SECTION

NO SCALE

THE UNIVERSITY of UTAH

The Dept. of
CAMPPUS DESIGN & CONSTRUCTION
1795 E. So. Campus Drive, Rm 201
Salt Lake City, UT 84112-9403
Phone: (801)581-6883
FAX: (801)581-6081

Drawing Title:

MANHOLE SECTION

Revision Date:

DEC. 2009

Drawing No.:

ELEC–5

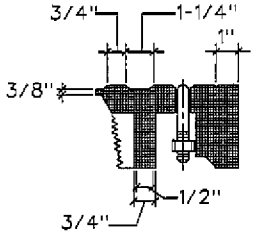

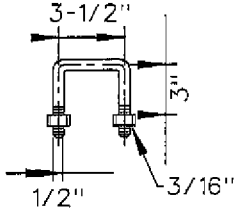

HANDLE DETAIL
(2-REQ'D.)

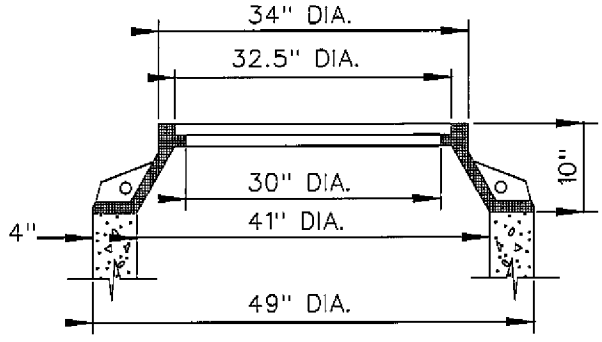

SECTION VIEW

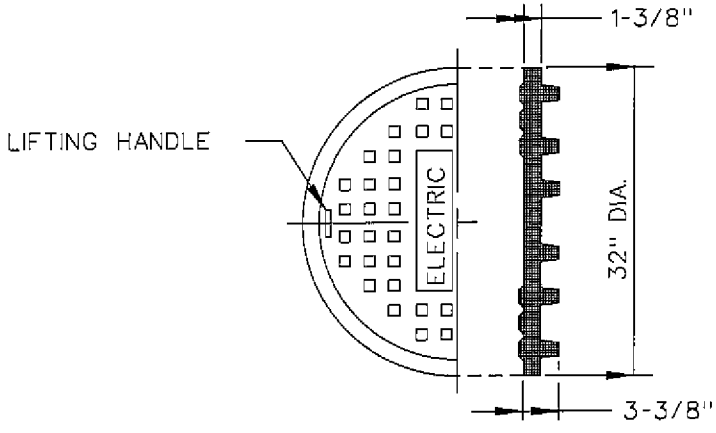

COVER

RING & COVER BY "CONCO FOUNDRY INC." CAT. NO. C-1380.

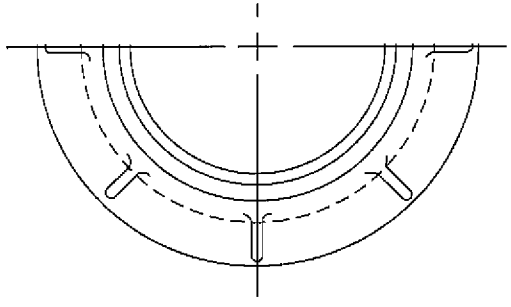

FRAME - TOP VIEW

THE UNIVERSITY OF UTAH

The Dept. o
CAMPUS DESIGN
CONSTRUCTIO
1795 E. So. Campus Drive, Rm 2
Salt Lake City, UT 84112-94
Phone: (801)581-68
FAX: (801)581-60

Drawing Title:

MANHOLE RING & COVER DETAIL

Revision Date:

FEB. 1992

Drawing No.:

ELEC-6

MicroStation: Licensed For Academic Use Only

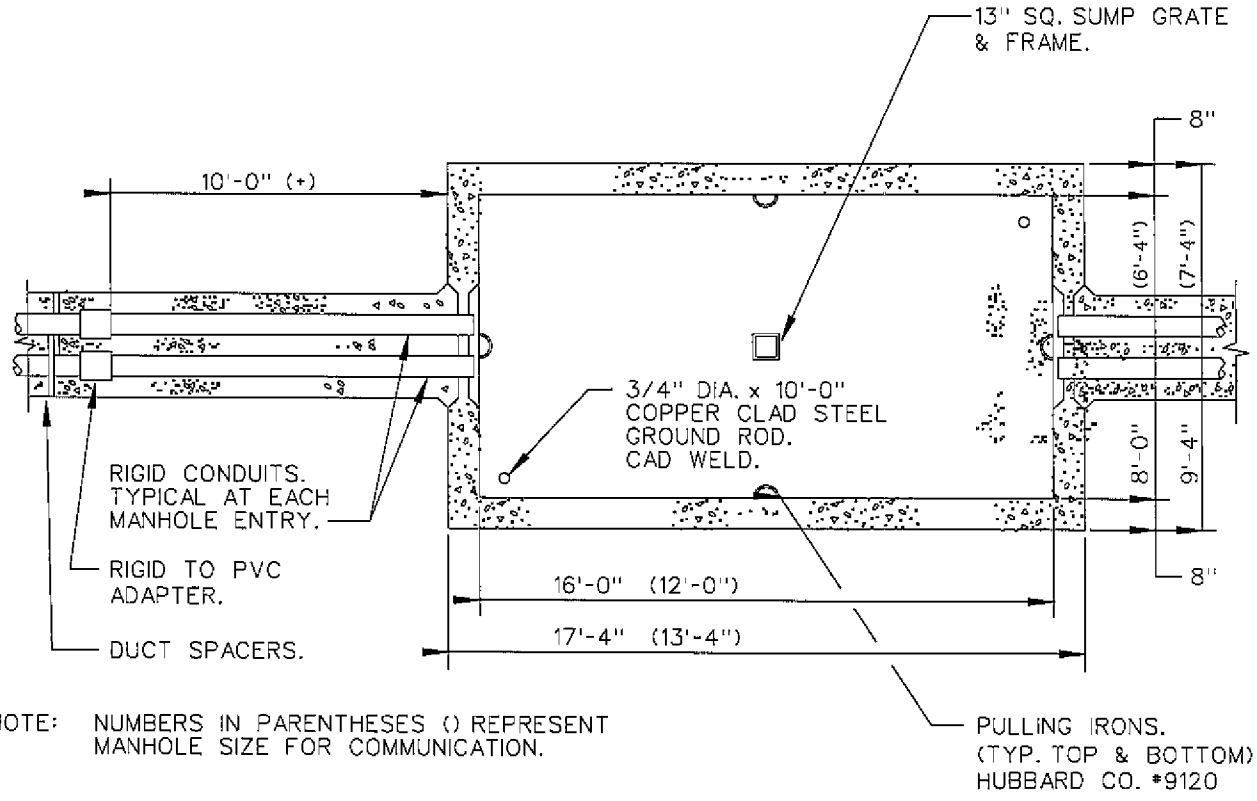

NOTE: NUMBERS IN PARENTHESES () REPRESENT MANHOLE SIZE FOR COMMUNICATION.

NOTES:
1. SHALL BE SUITABLE FOR HIGHWAY LOADING.
2. ALL METAL SURFACES & NEUTRAL CONDUCTORS SHALL BE GROUNDED. (MINIMUM SIZE NO. 2 COPPER)
3. PROVIDE CABLE RACKS & INSULATED CABLE SEATS & SLEEVES.
4. PROVIDE BELL END ENTRANCE FOR ALL CONDUITS.
5. CAST-IN PROVISIONS FOR CABLE SUPPORTS SHALL BE MADE.

THE UNIVERSITY OF UTAH

The Dept. o
CAMPUS DESIGN
CONSTRUCTIO
1795 E. So. Campus Drive, Rm 2
Salt Lake City, UT 84112-94
Phone: (801)581-68
FAX: (801)581-60

Drawing Title:

PLAN VIEW OF POWER MANHOLE

Revision Date:

MARCH 1992

Drawing No.:

ELEC-7

MicroStation: License For Academic Use Only

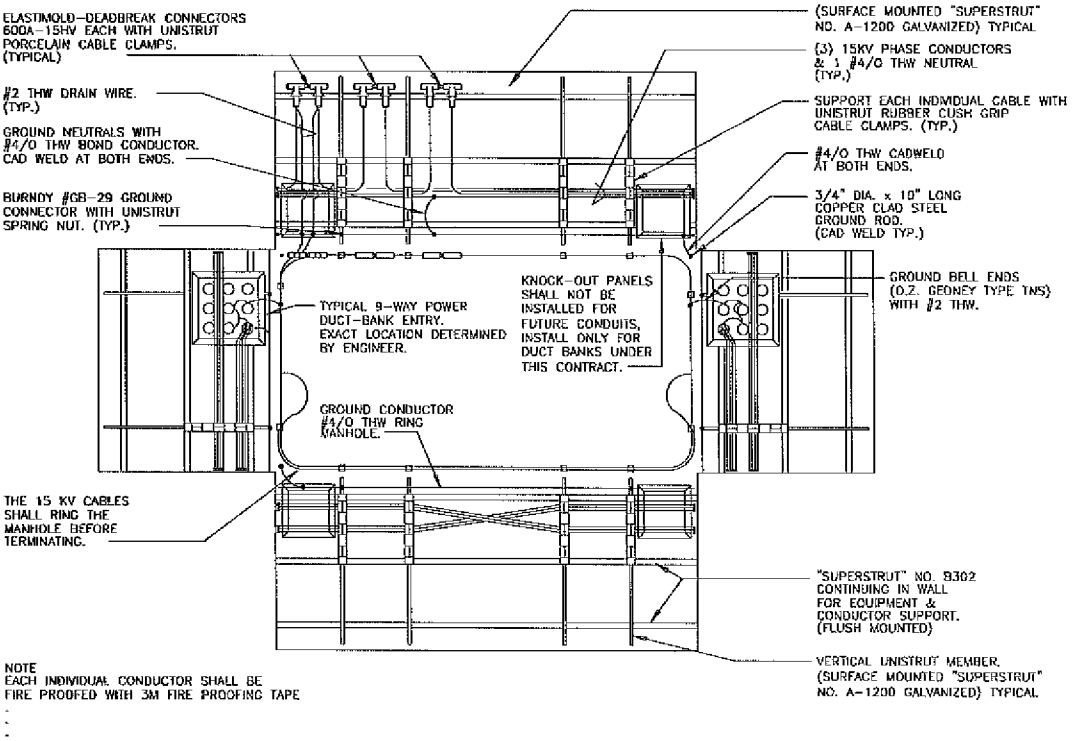

NOTE
EACH INDIVIDUAL CONDUCTOR SHALL BE FIRE PROOFED WITH 3M FIRE PROOFING TAPE

EXPLODED VIEW OF TYPICAL MANHOLE

SCALE: NTS

THE UNIVERSITY of UTAH

The Department of
CAMPUS DESIGN & CONSTRUCTION
1795 E. So. Campus Drive, Rm 201
Salt Lake City, UT 84112-9403
Phone: (801)581-6883
FAX: (801)581-6081

Drawing Title:

EXPLODED VIEW OF MANHOLE

Revision Date:

DECEMBER 2009

Drawing No.:

ELEC-8

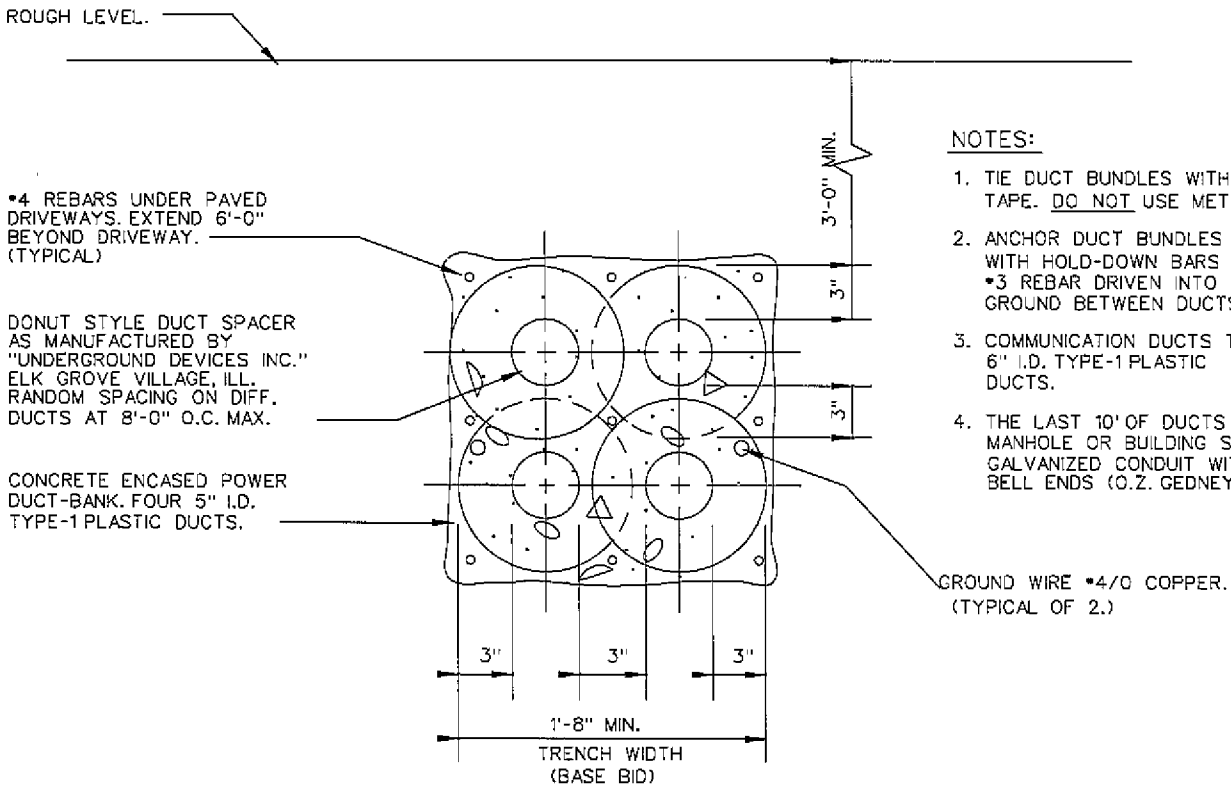

NOTES:

1. TIE DUCT BUNDLES WITH PLASTIC TAPE. DO NOT USE METAL WIRE.
2. ANCHOR DUCT BUNDLES DOWN WITH HOLD-DOWN BARS WITH #3 REBAR DRIVEN INTO GROUND BETWEEN DUCTS.
3. COMMUNICATION DUCTS TO BE 6" I.D. TYPE-1 PLASTIC DUCTS.
4. THE LAST 10' OF DUCTS ENTERING MANHOLE OR BUILDING SHALL BE RIGID GALVANIZED CONDUIT WITH FLUSH BELL ENDS (O.Z. GEDNEY TYPE TNS).

THE UNIVERSITY OF UTAH

The Dept. of
CAMPUS DESIGN &
CONSTRUCTION
1795 E. So. Campus Drive, Rm 2
Salt Lake City, UT 84112-94
Phone: (801)581-68
FAX: (801)581-60

Drawing Title:

COMMUNICATION DUCT BANK

Revision Date:

December 2002

Drawing No.:

ELEC-9

MicroStation: License For Academic Use Only

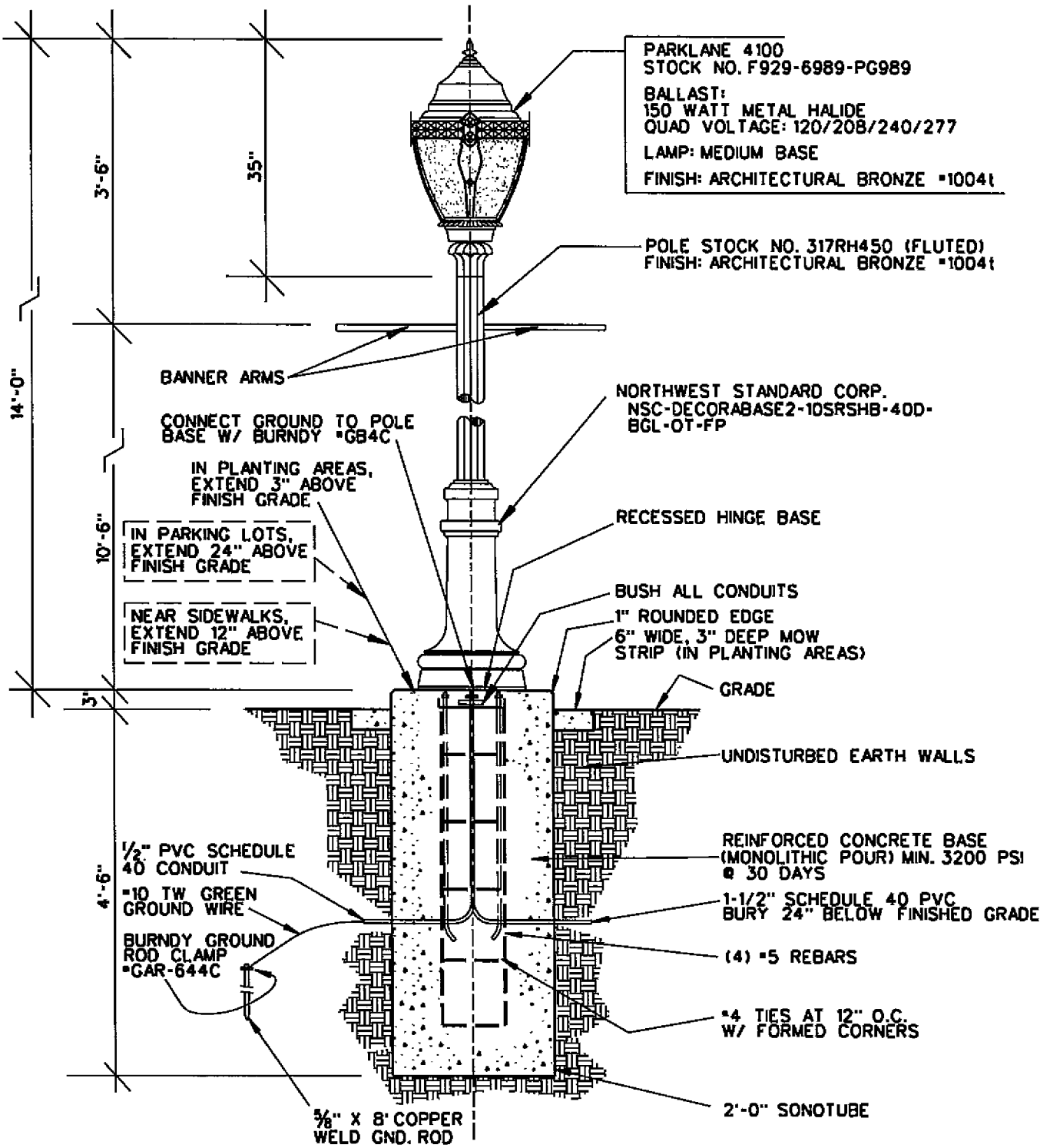

TRADITIONAL ASSEMBLY FOR HISTORICAL AREAS

THE UNIVERSITY OF UTAH

The Department of
CAMPUS DESIGN & CONSTRUCTION
1795 E. So. Campus Drive, Rm 201
Salt Lake City, UT 84112-9403
Phone: (801)581-6883
FAX: (801)581-6081

Drawing Title:

LT-5 ASSEMBLY DETAIL

Revision Date:

FEB. 2002

Drawing No.:

ELEC-47

[Academic use only] N:\DGN\DETAILS\ELEC\ELEC-47.dgn 1/9/2004 11:37:46 AM

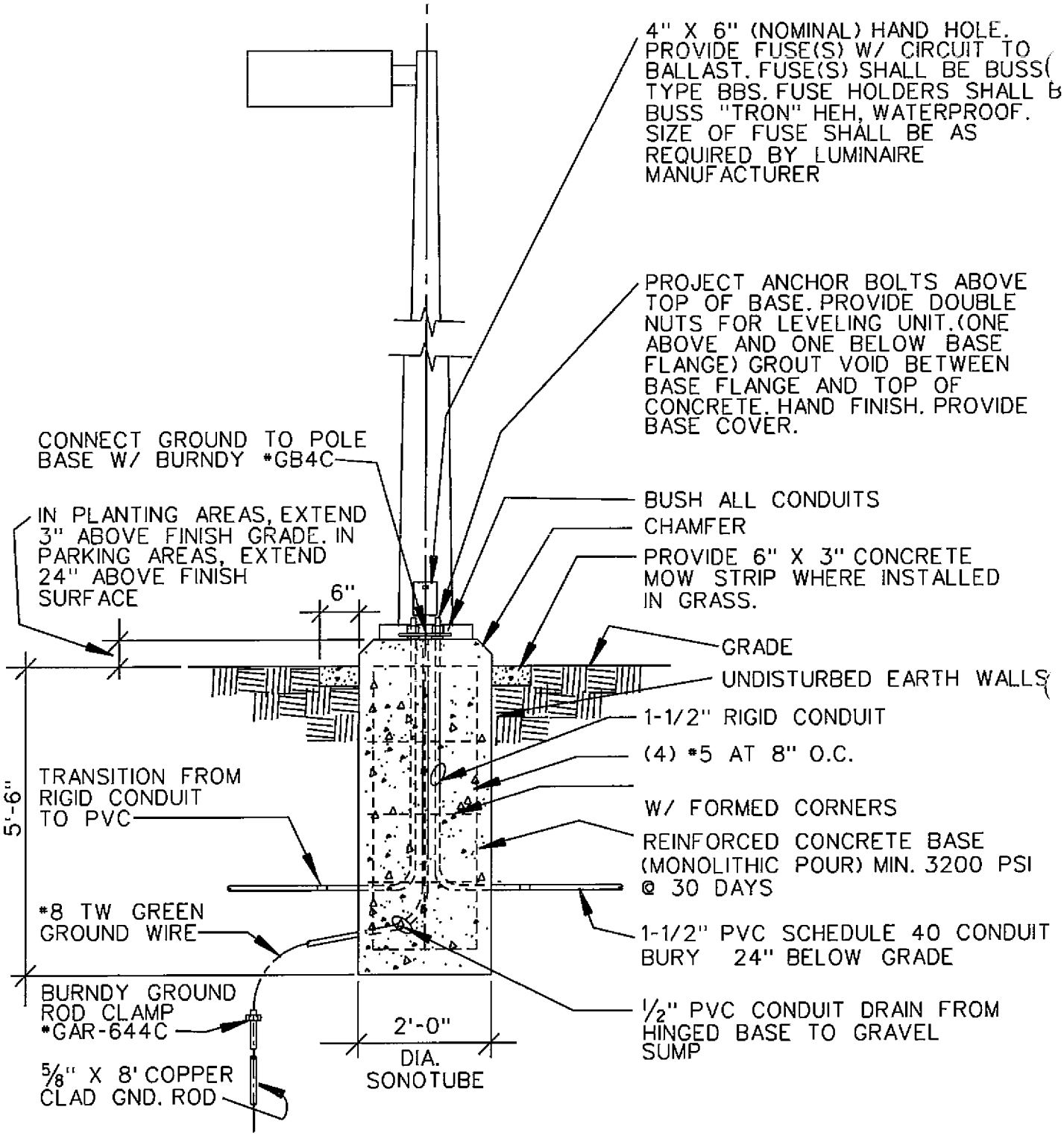

THE UNIVERSITY OF UTAH

The Department of
CAMPUS DESIGN & CONSTRUCTION
1795 E. So. Campus Drive, Rm 201
Salt Lake City, UT 84112-9403
Phone: (801)581-6883
FAX: (801)581-6081

Drawing Title:

POLE LIGHTING DETAIL FOR BOX LIGHT

Revision Date:

DEC.1993

Drawing No.:

ELEC-48

[Academic use only] N:\DGN\DETAILS\ELEC\ELEC-48.dgn 1/9/2004 11:56:11 AM

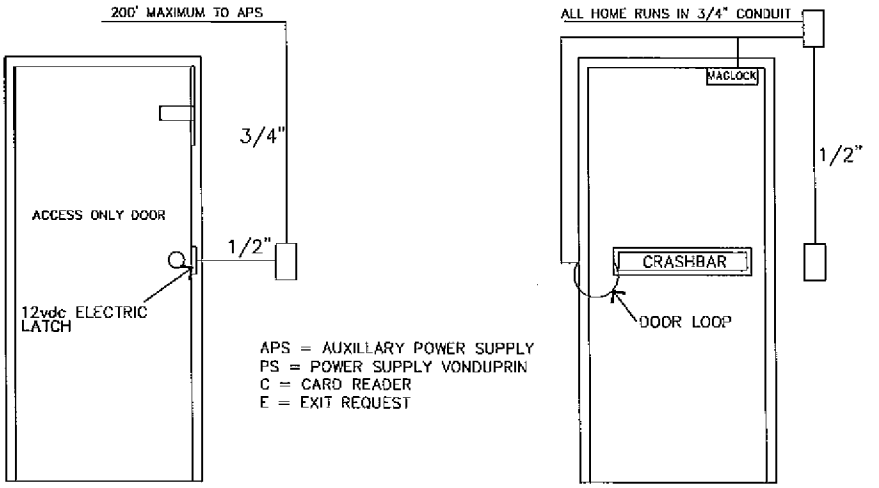

APS = AUXILLARY POWER SUPPLY
PS = POWER SUPPLY VONDUPRIN
C = CARD READER
E = EXIT REQUEST

ALL CARD READER DOORS REQUIRE 2 BELDEN 8723 CABLES TO EACH DOOR FROM APS FOR ACCESS ONLY DOOR. THREE CABLES ARE REQUIRED FOR ALARM DOOR. MAGLOCKS REQUIRE A CRASHBAR FOR EGRESS FOR FIRE MARSHALL APPROVAL, AND A KEY OVERRIDE FOR EMERGENCY ENTRY ONLY

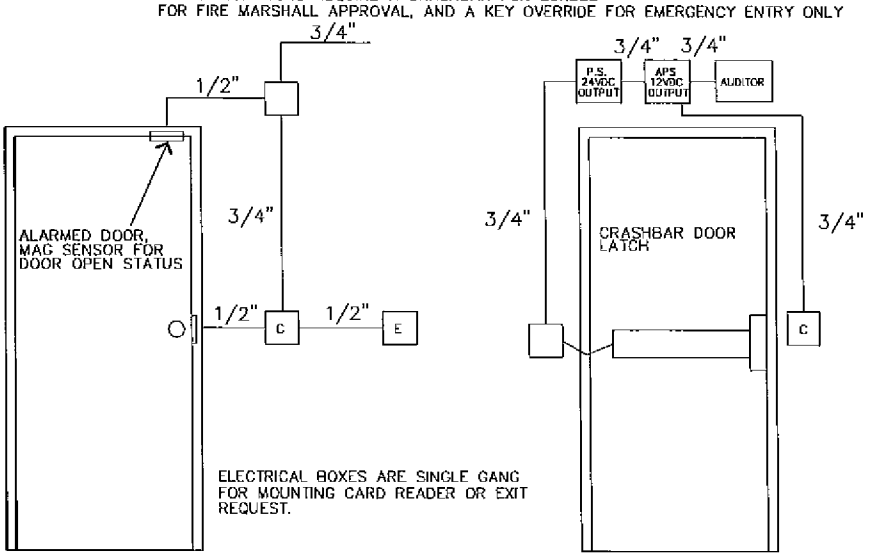

ELECTRICAL BOXES ARE SINGLE GANG FOR MOUNTING CARD READER OR EXIT REQUEST.

THE UNIVERSITY of UTAH

CAMPUS DESIGN & CONSTRUCTION
1795 E. So. Campus Drive, Rm 201
Salt Lake City, UT 84112-9403
Phone: (801)581-6883
FAX: (801)581-6081

Drawing Title:

C CURE DOOR ACCESS & ALARM WIRING

Revision Date:

07 DEC. 2005

Drawing No.:

EA-1

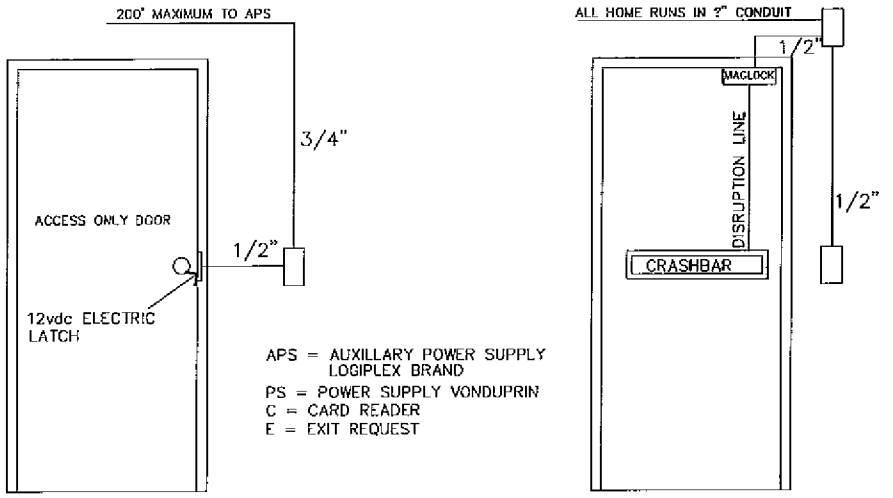

ALL CARD READER DOORS REQUIRE 2 BELDEN 8723 CABLES TO EACH DOOR FROM APS FOR ACCESS ONLY DOOR. THREE CABLES ARE REQUIRED FOR ALARM DOOR. MAGLOCKS REQUIRE A CRASHBAR FOR EGRESS FOR FIRE MARSHALL APPROVAL, AND A KEY OVERRIDE FOR EMERGENCY ENTRY ONLY

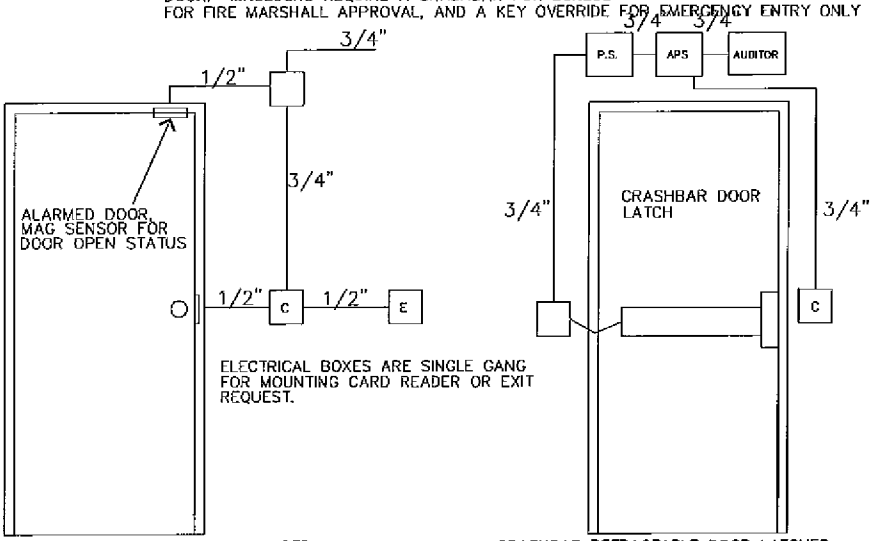

EACH PS, APS, AUDITOR OR INQUIRER REQUIRES 120VAC CONNECTION. PREFERABLY EMER. BACK-UP POWER. AUDITORS AND INQUIRERS ALSO REQUIRE A DIAL- UP PHONE LINE.

CRASHBAR RETRACTABLE DOOR LATCHES REQUIRE A SECOND POWER SUPPLY DUE TO INCREASED CURRENT DRAW.

THE UNIVERSITY of UTAH The Department of CAMPUS DESIGN & CONSTRUCTION 1795 E. So. Campus Drive, Rm 201 Salt Lake City, UT 84112-9403 Phone: (801)581-6883 FAX: (801)581-6081	Drawing Title: C CURE DOOR ACCESS & ALARM WIRING	Revision Date: 07 DEC. 2009 Drawing No.: EA-2

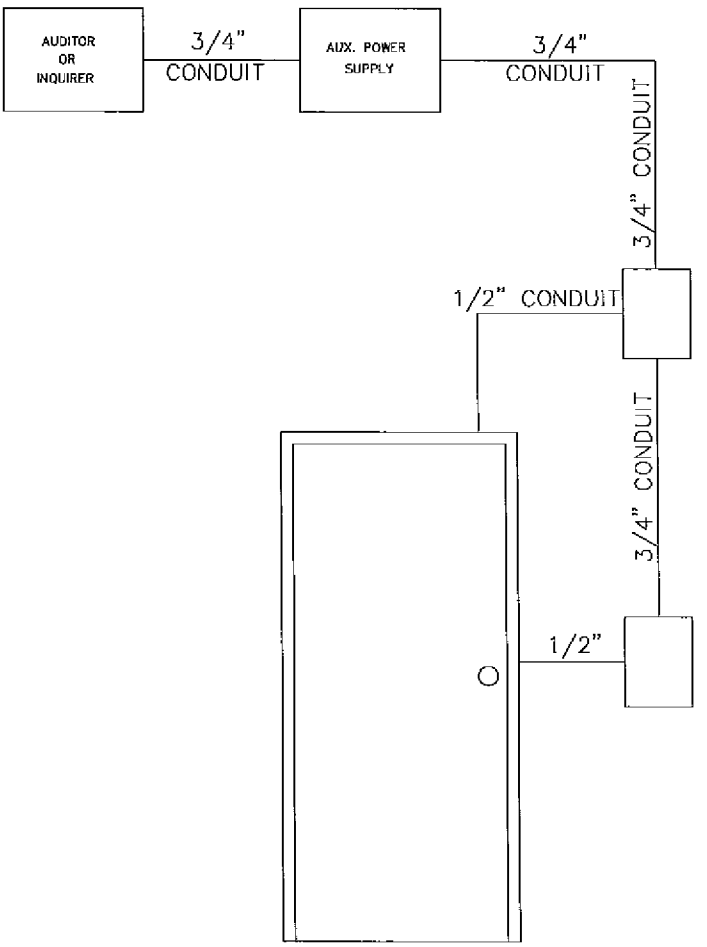

THE UNIVERSITY of UTAH

The Department of
CAMPUS DESIGN & CONSTRUCTION
1795 E. So. Campus Drive, Rm 201
Salt Lake City, UT 84112-9403
Phone: (801)581-6883
FAX: (801)581-6081

Drawing Title:
C CURE ACCESS DOOR W/DOOR MONITOR SWITCH

Revision Date:
07 DEC. 2009

Drawing No.:
EA-3

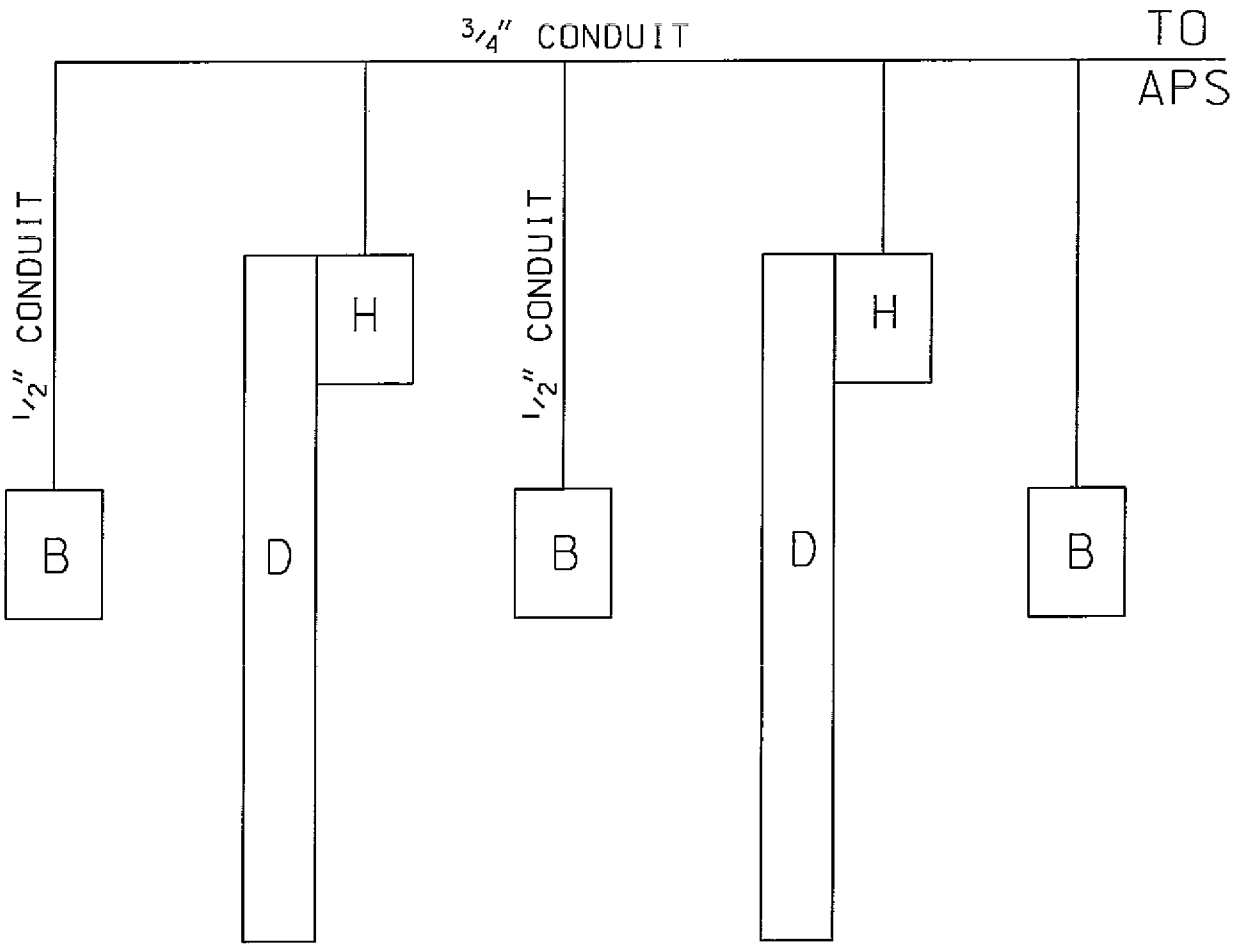

D = SIDE VIEW OF DOOR
B = HANDICAP BUTTON
H = HANDICAP DOOR OPENER

THIS DRAWING SHOWS 2 DOORS WITH AN ATRIUM IN THE MIDDLE. ALL BUTTONS INTERCONNECT TO THE CARD READER CONDUITS FOR INTERFACE INTO SECURITY AS WELL AS CONNECTING TO THE OPENER. THIS EQUIPMENT IS IN ADDITION TO CARD READER HARDWARE.

THE UNIVERSITY OF UTAH

The Department of
CAMPUS DESIGN & CONSTRUCTION
1795 E. So. Campus Drive, Rm 201
Salt Lake City, UT 84112-9403
Phone: (801)581-6883
FAX: (801)581-6081

Drawing Title:
HANDICAP DOOR W/ BREEZEWAY ALARM WIRING

Revision Date:
21 NOV. 2003

Drawing No.:
EA-4

[Academic use only] N:\DGN\DETAILS\ELEC\EA-4.DGN 12/22/2003 12:46:53 PM

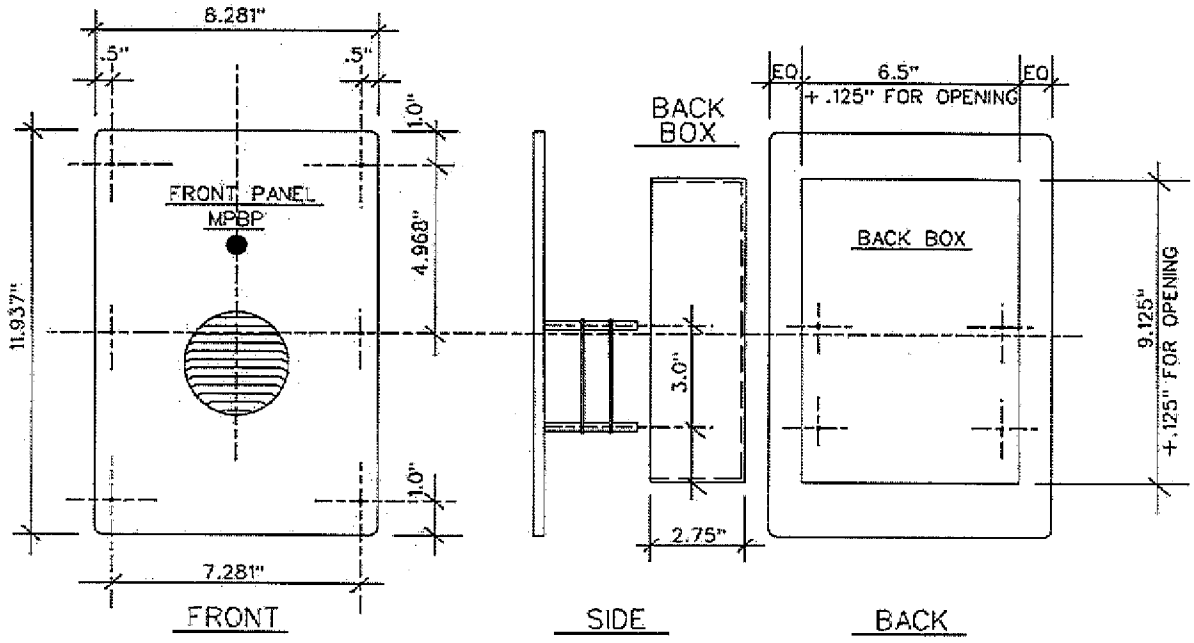

RAMTEL MODEL RR833

PHONE PANEL DETAIL

THE UNIVERSITY OF UTAH

The Dept. of
CAMPUS DESIGN & CONSTRUCTION
1795 E. So. Campus Drive, Rm 201
Salt Lake City, UT 84112-9403
Phone: (801)581-6883
FAX: (801)581-6081

Drawing Title:

PHONE PANEL DETAIL

Revision Date:

APR., 2006

Drawing No.:

COM-1

[Academic use only] COM-1.dgn 4/28/2006 3:09:19 PM

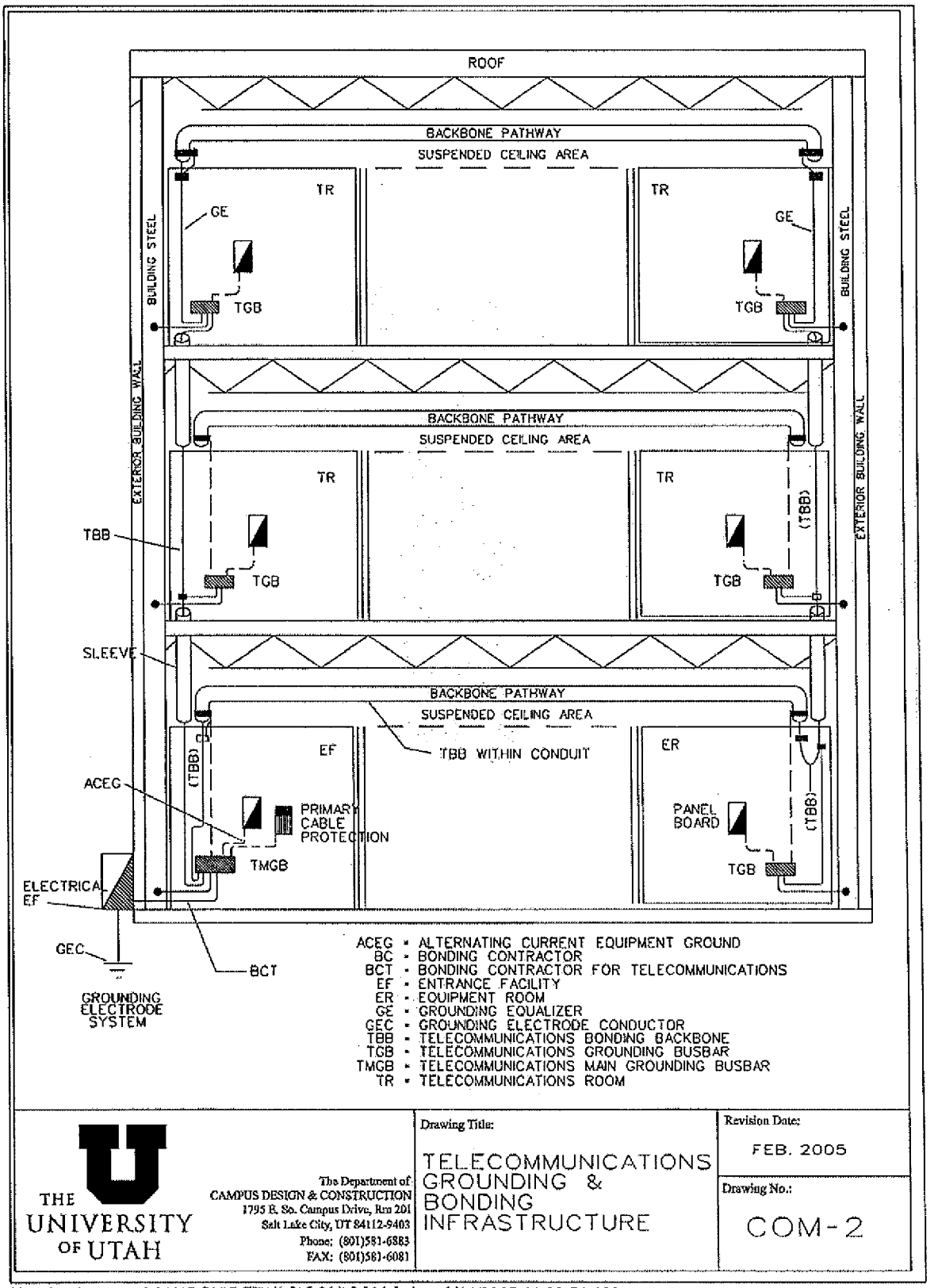

(Academic use only) N:\DGN\DETAILS\COM\COM-2.dgn 2/14/2005 11:20:51 AM