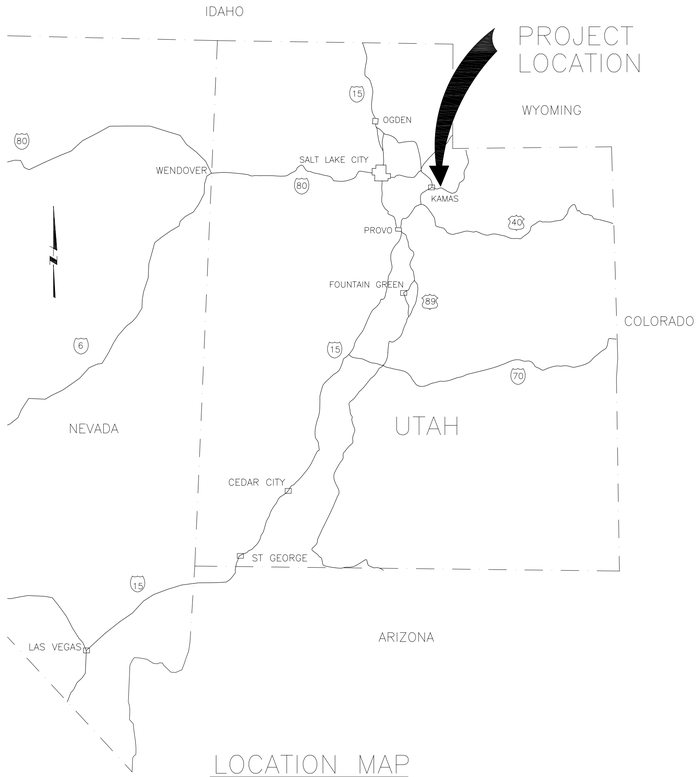

LOCATION MAP

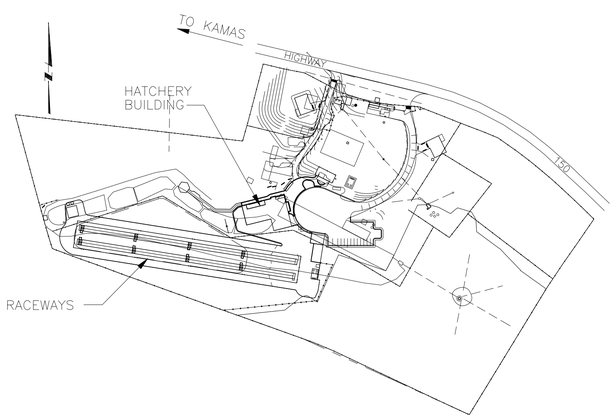

VICINITY MAP

DRAWING INDEX

DRAWING NO.

GENERAL

G-1 COVER SHEET
G-2 LOCATION AND VICINITY MAPS, DRAWING INDEX
G-3 SYMBOLS
G-4 ABBREVIATIONS
G-5 DESIGN CRITERIA
G-6 PROCESS WATER SUPPLY SCHEMATIC
G-7 HYDRAULIC PROFILES NORTH AND SOUTH SPRINGS

CIVIL

GC-1 STANDARD CIVIL DETAILS - 1
GC-2 STANDARD CIVIL DETAILS - 2
GC-3 MISCELLANEOUS CIVIL DETAILS - 1
GC-4 MISCELLANEOUS CIVIL DETAILS - 2

C-1 OVERALL SITE PLAN
C-2 SITE DEMOLITION PLAN
C-3 SITE COORDINATES
C-4 PAVING AND GRADING PLAN - 1
C-5 PAVING AND GRADING PLAN - 2
C-6 PAVING AND GRADING PLAN - 3
C-7 NOT USED
C-8 YARD PIPING PLAN - 1
C-9 YARD PIPING PLAN - 2
C-10 YARD PIPING PLAN - 3
C-11 ROAD PROFILES
C-11A ROAD CURVE DATA TABLES
C-12 WETLAND NATIVE SOIL GRADING PLAN
C-13 WETLANDS SUBSOIL GRADING PLAN
C-14 FINISHED WETLAND SOIL GRADING PLAN AND PROFILES
C-15 WASTEWATER DISPOSAL SYSTEM DETAILS

ARCHITECTURAL

GA-1 DOOR SCHEDULE, DOOR TYPES AND FRAMES
GA-2 FINISH SCHEDULE AND FINISH SELECTIONS

A-1 HATCHERY AND OPERATIONS BUILDING ABBREVIATIONS AND BUILDING SUMMARY
A-2 HATCHERY AND OPERATIONS BUILDING ARCHITECTURAL FLOOR PLAN
A-3 HATCHERY AND OPERATIONS BUILDING REFLECTED CEILING PLAN
A-4 HATCHERY AND OPERATIONS BUILDING ARCHITECTURAL ROOF PLAN & DETAILS
A-5 HATCHERY AND OPERATIONS BUILDING HATCHERY ELEVATIONS
A-6 HATCHERY AND OPERATIONS BUILDING HATCHERY ELEVATIONS
A-7 HATCHERY AND OPERATIONS BUILDING BUILDING SECTIONS
A-8 HATCHERY AND OPERATIONS BUILDING ENLARGED FLOOR PLANS AND INTERIOR ELEVATIONS
A-9 HATCHERY AND OPERATIONS BUILDING WALL SECTIONS
A-10 AQUARIUM PLANS, ELEVATIONS AND SECTIONS
A-11 NOT USED
A-12 NOT USED
A-13 FEED STORAGE/VEHICLE STORAGE BUILDING FLOOR PLAN AND ROOF PLAN
A-14 FEED STORAGE/VEHICLE STORAGE BUILDING BUILDING ELEVATIONS AND SECTIONS
A-15 FEED STORAGE/VEHICLE STORAGE BUILDING WALL SECTIONS

LANDSCAPE ARCHITECTURE

L-1 PLANTING PLAN - 1
L-2 PLANTING PLAN - 2
L-3 PLANTING PLAN - 3
L-4 IRRIGATION PLAN
L-5 IRRIGATION NOTES AND DETAILS
L-6 LANDSCAPE AND IRRIGATION DETAILS
L-7 WETLANDS AREA WALKWAY PLAN AND DETAILS

DRAWING NO.

STRUCTURAL

GS-1 GENERAL STRUCTURAL DETAILS - 1
GS-2 GENERAL STRUCTURAL DETAILS - 2
GS-3 GENERAL STRUCTURAL DETAILS - 3
GS-4 GENERAL STRUCTURAL DETAILS - 4
GS-5 GENERAL STRUCTRUAL DETAILS - 5

S-1 HATCHERY AND OPERATIONS BUILDING FOUNDATION PLAN
S-2 HATCHERY AND OPERATIONS BUILDING FLOOR PLAN
S-3 HATCHERY AND OPERATIONS BUILDING ROOF PLAN
S-4 HATCHERY AND OPERATIONS BUILDING SECTIONS AND DETAILS - 1
S-5 HATCHERY AND OPERATIONS BUILDING SECTIONS AND DETAILS - 2
S-6 HATCHERY AND OPERATIONS BUILDING SECTIONS AND DETAILS - 3
S-7 HATCHERY AND OPERATIONS BUILDING SECTIONS AND DETAILS - 4
S-8 HATCHERY AND OPERATIONS BUILDING SECTIONS AND DETAIILS - 5
S-9 HATCHERY AND OPERATIONS BUILDING SECTIONS AND DETAILS - 6
S-10 RACEWAYS PLAN AND SECTIONS - 1
S-11 RACEWAYS PLAN AND SECTIONS - 2
S-12 RACEWAYS SECTIONS AND DETAILS - 1
S-13 RACEWAYS SECTIONS AND DETAILS - 2
S-14 PRIMARY DEGASSING STRUCTURE PLANS AND DETAIL
S-15 PRIMARY DEGASSING STRUCTURE SECTIONS AND DETAILS
S-16 VEHICLE STORAGE AND FOOD STORAGE BUILDING FLOOR PLAN AND ROOF PLAN
S-17 VEHICLE STORAGE AND FOOD STORAGE BUILDING SECTIONS AND DETAILS
S-18 VEHICLE STORAGE AND FOOD STORAGE BUILDING SECTIONS AND DETAILS
S-19 WOOD WALKWAY AND PAVILION PLAN AND SECTIONS
S-20 WOOD WALKWAY AND PAVILION SECTIONS AND DETAILS
S-21 SECONDARY DEGASSING STRUCTURE FLOOR PLAN AND DECK PLAN
S-22 SECONDARY DEGASSING STRUCTURE SECTIONS AND DETAILS
S-23 RACEWAY EFFLUENT MICROSCREEN BUILDING FLOOR PLAN AND ROOF PLAN
S-24 RACEWAY EFFLUENT MICROSCREEN BUILDING SECTIONS AND DETAILS
S-25 LOX TANK FOUNDATION AND BARRIER WALL PLAN AND SECTION
S-26 CEDAR GULCH DEGASSING STRUCTURE PLANS AND SECTIONS
S-27 OUTFALL STRUCTURE PLAN AND SECTION
S-28 AQUARIUM ROOF PLAN, SECTIONS AND DETAILS

MECHANICAL

GM-1 MECHANICAL SCHEDULES
GM-2 STANDARD MECHANICAL DETAILS - 1
GM-3 STANDARD MECHANICAL DETAILS - 2
GM-4 STANDARD MECHANICAL DETAILS - 3
GM-5 MISCELLANEOUS MECHANICAL DETAILS - 1

M-1 NORTH AND SOUTH SPRING HEADBOX STRUCTURES PLANS AND DETAILS
M-2 PRIMARY DEGASSING STRUCTURE PLAN AND SECTION
M-3 SECONDARY DEGASSING STRUCTURE PLAN AND SECTIONS
M-4 CEDAR GULCH DEGASSING STRUCTURE PLAN AND SECTIONS
M-5 HATCHERY AND OPERATIONS BUILDING MECHANICAL PLAN
M-6 HATCHERY AND OPERATIONS BUILDING SECTIONS - 1
M-6A HATCHERY AND OPERATIONS BUILDING SECTIONS - 2
M-7 HATCHERY TANK DETAILS
M-8 HATCHERY AND OPERATIONS BUILDING PLUMBING AND DRAINAGE PLAN
M-9 HATCHERY AND OPERATIONS BUILDING HVAC FLOOR PLAN
M-10 HVAC FLOOR PLANS AND SCHEMATICS
M-11 HVAC SCHEDULES
M-12 RACEWAY 101-102, 201-202, 301-302, AND 401-402 PARTIAL PLAN AND TYPICAL SECTION

DRAWING NO.

MECHANICAL (CONTINUED)

M-13 RACEWAY 103-104, 203-204, 303-304, AND 403-404 PARTIAL PLAN AND TYPICAL SECTION
M-14 RACEWAY DETAILS - 1
M-15 RACEWAY DETAILS - 2
M-16 RACEWAY DRAIN MICROSCREEN/PUMP BUILDING PLAN, SECTIONS AND DETAIL
M-17 LIQUID OXYGEN TANK PLAN, SECTION AND DETAILS
M-18 TRUCK WASH/FILL STATION PLAN, SECTION AND DETAIL

ELECTRICAL

GE-1 ELECTRICAL SYMBOLS
GE-2 ELECTRICAL ABBREVIATIONS AND GENERAL NOTES
GE-3 STANDARD ELECTRICAL DETAILS SHEET 1
GE-4 STANDARD ELECTRICAL DETAILS SHEET 2

E-1 POWER PANELS ONE LINE DIAGRAM - 1
E-2 POWER PANELS ONE LINE DIAGRAM - 2
E-3 ELECTRICAL SITE PLAN
E-4 POWER PANELS SCHEDULES - 1
E-5 LTG PANELS SCHEDULES - 2
E-6 LIGHTING FIXTURE SCHEDULES AND HVAC CONTROL
E-7 CONDUIT DEVELOPMENT
E-8 ELECTRICAL AREA C LIGHTING AND RECEPTACLES PLAN
E-9 LIGHTING, POWER AND RECEPTACLE PLANS

REV	DATE	BY	DESCRIPTION
R	9/00	PDH	RECORD DRAWINGS

SCALE: NONE

WARNING 0 1/2 1 IF THIS BAR DOES NOT MEASURE 1" THEN DRAWING IS NOT TO SCALE.

DESIGNED D. S. Barbeau
DRAWN M. R. Waln
CHECKED L. H. Allen

RECORD DRAWING
This record drawing has been prepared, in part, on the basis of information compiled and furnished by others. The engineer is not responsible for any errors or omissions which have been incorporated into this document as a result.

MONTGOMERY WATSON
Boise, Idaho

APPROVED ____ DATE
APPROVED ____ DATE

UTAH DIVISION OF WILDLIFE RESOURCES
KAMAS FISH HATCHERY
LOCATION AND VICINITY MAPS, DRAWING INDEX

SHEET G-2 OF * SHTS

JOB No. 1132073 FILE No. $$$$$$$$$directory/filename$$$$$$$$$ $$time$$ $$date$$

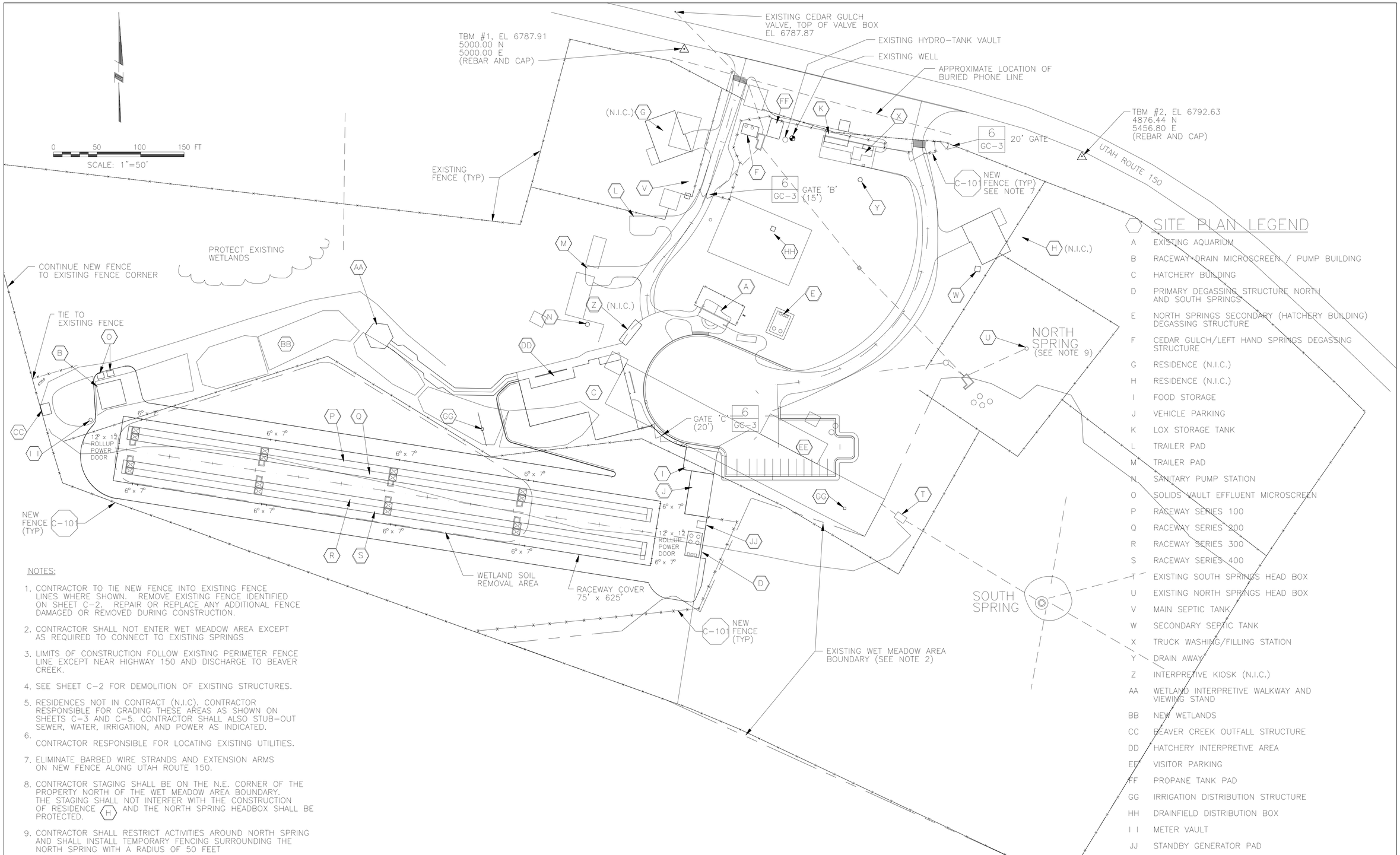

SITE PLAN LEGEND

A	EXISTING AQUARIUM
B	RACEWAY DRAIN MICROSCREEN / PUMP BUILDING
C	HATCHERY BUILDING
D	PRIMARY DEGASSING STRUCTURE NORTH AND SOUTH SPRINGS
E	NORTH SPRINGS SECONDARY (HATCHERY BUILDING) DEGASSING STRUCTURE
F	CEDAR GULCH/LEFT HAND SPRINGS DEGASSING STRUCTURE
G	RESIDENCE (N.I.C.)
H	RESIDENCE (N.I.C.)
I	FOOD STORAGE
J	VEHICLE PARKING
K	LOX STORAGE TANK
L	TRAILER PAD
M	TRAILER PAD
N	SANITARY PUMP STATION
O	SOLIDS VAULT EFFLUENT MICROSCREEN
P	RACEWAY SERIES 100
Q	RACEWAY SERIES 200
R	RACEWAY SERIES 300
S	RACEWAY SERIES 400
T	EXISTING SOUTH SPRINGS HEAD BOX
U	EXISTING NORTH SPRINGS HEAD BOX
V	MAIN SEPTIC TANK
W	SECONDARY SEPTIC TANK
X	TRUCK WASHING/FILLING STATION
Y	DRAIN AWAY
Z	INTERPRETIVE KIOSK (N.I.C.)
AA	WETLAND INTERPRETIVE WALKWAY AND VIEWING STAND
BB	NEW WETLANDS
CC	BEAVER CREEK OUTFALL STRUCTURE
DD	HATCHERY INTERPRETIVE AREA
EE	VISITOR PARKING
FF	PROPANE TANK PAD
GG	IRRIGATION DISTRIBUTION STRUCTURE
HH	DRAINFIELD DISTRIBUTION BOX
I I	METER VAULT
JJ	STANDBY GENERATOR PAD

NOTES:

1. CONTRACTOR TO TIE NEW FENCE INTO EXISTING FENCE LINES WHERE SHOWN. REMOVE EXISTING FENCE IDENTIFIED ON SHEET C-2. REPAIR OR REPLACE ANY ADDITIONAL FENCE DAMAGED OR REMOVED DURING CONSTRUCTION.
2. CONTRACTOR SHALL NOT ENTER WET MEADOW AREA EXCEPT AS REQUIRED TO CONNECT TO EXISTING SPRINGS
3. LIMITS OF CONSTRUCTION FOLLOW EXISTING PERIMETER FENCE LINE EXCEPT NEAR HIGHWAY 150 AND DISCHARGE TO BEAVER CREEK.
4. SEE SHEET C-2 FOR DEMOLITION OF EXISTING STRUCTURES.
5. RESIDENCES NOT IN CONTRACT (N.I.C). CONTRACTOR RESPONSIBLE FOR GRADING THESE AREAS AS SHOWN ON SHEETS C-3 AND C-5. CONTRACTOR SHALL ALSO STUB-OUT SEWER, WATER, IRRIGATION, AND POWER AS INDICATED.
6. CONTRACTOR RESPONSIBLE FOR LOCATING EXISTING UTILITIES.
7. ELIMINATE BARBED WIRE STRANDS AND EXTENSION ARMS ON NEW FENCE ALONG UTAH ROUTE 150.
8. CONTRACTOR STAGING SHALL BE ON THE N.E. CORNER OF THE PROPERTY NORTH OF THE WET MEADOW AREA BOUNDARY. THE STAGING SHALL NOT INTERFER WITH THE CONSTRUCTION OF RESIDENCE (H) AND THE NORTH SPRING HEADBOX SHALL BE PROTECTED.
9. CONTRACTOR SHALL RESTRICT ACTIVITIES AROUND NORTH SPRING AND SHALL INSTALL TEMPORARY FENCING SURROUNDING THE NORTH SPRING WITH A RADIUS OF 50 FEET

REV	DATE	BY	DESCRIPTION
R	9/00	PDH	RECORD DRAWINGS

SCALE: 1" = 50'

WARNING: 0 1/2 1 — IF THIS BAR DOES NOT MEASURE 1" THEN DRAWING IS NOT TO SCALE.

DESIGNED D.S. Barbeau
DRAWN M. R. Waln
CHECKED E.T. Cryer

RECORD DRAWING
This record drawing has been prepared, in part, on the basis of information compiled and furnished by others. The engineer is not responsible for any errors or omissions which have been incorporated into this document as a result.

MONTGOMERY WATSON
Boise, Idaho

APPROVED ____ DATE
APPROVED ____ DATE

UTAH DIVISION OF WILDLIFE RESOURCES
KAMAS FISH HATCHERY
OVERALL SITE PLAN

SHEET C-1 OF * SHTS

JOB No. 1132073 FILE No. $$$$$$$$$directory/filename$$$$$$$$$ $$time$$ $$$$date$$$$

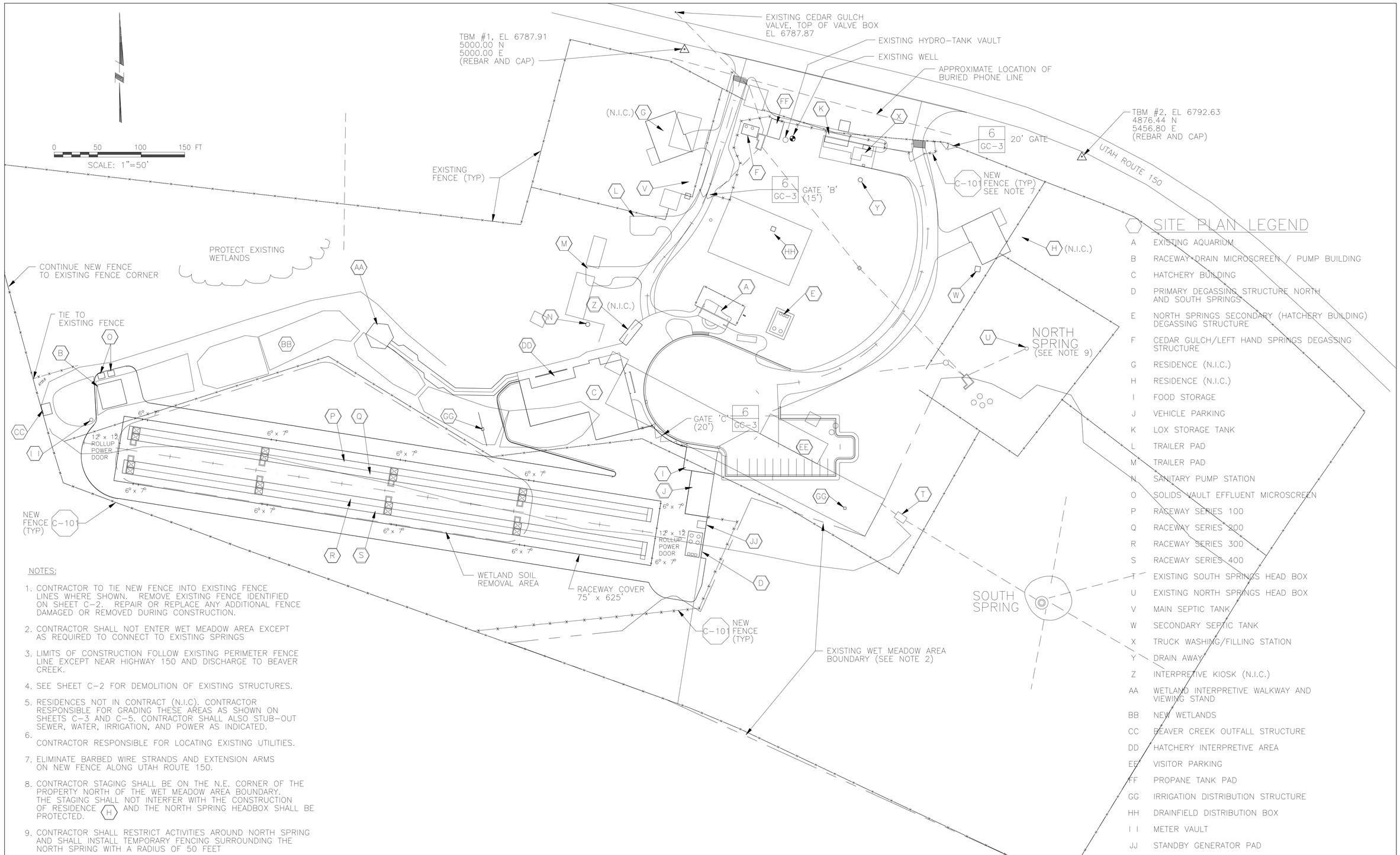

SITE PLAN LEGEND

A	EXISTING AQUARIUM
B	RACEWAY/DRAIN MICROSCREEN / PUMP BUILDING
C	HATCHERY BUILDING
D	PRIMARY DEGASSING STRUCTURE NORTH AND SOUTH SPRINGS
E	NORTH SPRINGS SECONDARY (HATCHERY BUILDING) DEGASSING STRUCTURE
F	CEDAR GULCH/LEFT HAND SPRINGS DEGASSING STRUCTURE
G	RESIDENCE (N.I.C.)
H	RESIDENCE (N.I.C.)
I	FOOD STORAGE
J	VEHICLE PARKING
K	LOX STORAGE TANK
L	TRAILER PAD
M	TRAILER PAD
N	SANITARY PUMP STATION
O	SOLIDS VAULT EFFLUENT MICROSCREEN
P	RACEWAY SERIES 100
Q	RACEWAY SERIES 200
R	RACEWAY SERIES 300
S	RACEWAY SERIES 400
T	EXISTING SOUTH SPRINGS HEAD BOX
U	EXISTING NORTH SPRINGS HEAD BOX
V	MAIN SEPTIC TANK
W	SECONDARY SEPTIC TANK
X	TRUCK WASHING/FILLING STATION
Y	DRAIN AWAY
Z	INTERPRETIVE KIOSK (N.I.C.)
AA	WETLAND INTERPRETIVE WALKWAY AND VIEWING STAND
BB	NEW WETLANDS
CC	BEAVER CREEK OUTFALL STRUCTURE
DD	HATCHERY INTERPRETIVE AREA
EE	VISITOR PARKING
FF	PROPANE TANK PAD
GG	IRRIGATION DISTRIBUTION STRUCTURE
HH	DRAINFIELD DISTRIBUTION BOX
I I	METER VAULT
JJ	STANDBY GENERATOR PAD

NOTES:

1. CONTRACTOR TO TIE NEW FENCE INTO EXISTING FENCE LINES WHERE SHOWN. REMOVE EXISTING FENCE IDENTIFIED ON SHEET C-2. REPAIR OR REPLACE ANY ADDITIONAL FENCE DAMAGED OR REMOVED DURING CONSTRUCTION.
2. CONTRACTOR SHALL NOT ENTER WET MEADOW AREA EXCEPT AS REQUIRED TO CONNECT TO EXISTING SPRINGS
3. LIMITS OF CONSTRUCTION FOLLOW EXISTING PERIMETER FENCE LINE EXCEPT NEAR HIGHWAY 150 AND DISCHARGE TO BEAVER CREEK.
4. SEE SHEET C-2 FOR DEMOLITION OF EXISTING STRUCTURES.
5. RESIDENCES NOT IN CONTRACT (N.I.C). CONTRACTOR RESPONSIBLE FOR GRADING THESE AREAS AS SHOWN ON SHEETS C-3 AND C-5. CONTRACTOR SHALL ALSO STUB-OUT SEWER, WATER, IRRIGATION, AND POWER AS INDICATED.
6. CONTRACTOR RESPONSIBLE FOR LOCATING EXISTING UTILITIES.
7. ELIMINATE BARBED WIRE STRANDS AND EXTENSION ARMS ON NEW FENCE ALONG UTAH ROUTE 150.
8. CONTRACTOR STAGING SHALL BE ON THE N.E. CORNER OF THE PROPERTY NORTH OF THE WET MEADOW AREA BOUNDARY. THE STAGING SHALL NOT INTERFER WITH THE CONSTRUCTION OF RESIDENCE (H) AND THE NORTH SPRING HEADBOX SHALL BE PROTECTED.
9. CONTRACTOR SHALL RESTRICT ACTIVITIES AROUND NORTH SPRING AND SHALL INSTALL TEMPORARY FENCING SURROUNDING THE NORTH SPRING WITH A RADIUS OF 50 FEET

REV	DATE	BY	DESCRIPTION
R	9/00	PDH	RECORD DRAWINGS

SCALE: 1" = 50'

WARNING: 0 1/2 1 — IF THIS BAR DOES NOT MEASURE 1" THEN DRAWING IS NOT TO SCALE.

DESIGNED D.S. Barbeau
DRAWN M. R. Waln
CHECKED E.T. Cryer

RECORD DRAWING

This record drawing has been prepared, in part, on the basis of information compiled and furnished by others. The engineer is not responsible for any errors or omissions which have been incorporated into this document as a result.

MONTGOMERY WATSON
Boise, Idaho

APPROVED ____ DATE
APPROVED ____ DATE

UTAH DIVISION OF WILDLIFE RESOURCES
KAMAS FISH HATCHERY
OVERALL SITE PLAN

SHEET C-1 OF * SHTS

JOB No. 1132073 FILE No. $$$$$$$$$directory/filename$$$$$$$$ $$time$$ $$$$$date$$$$

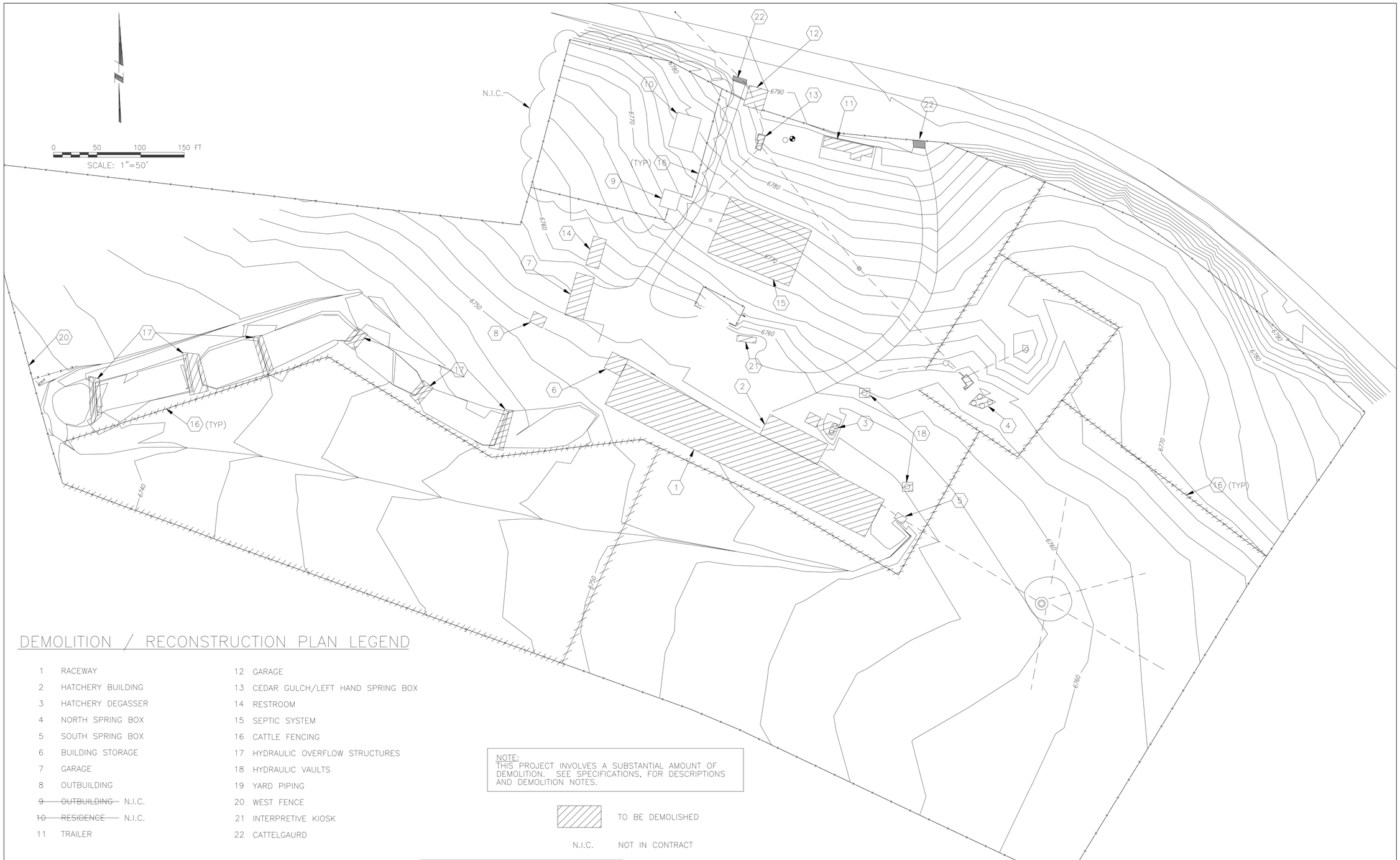

DEMOLITION / RECONSTRUCTION PLAN LEGEND

1	RACEWAY	12	GARAGE
2	HATCHERY BUILDING	13	CEDAR GULCH/LEFT HAND SPRING BOX
3	HATCHERY DEGASSER	14	RESTROOM
4	NORTH SPRING BOX	15	SEPTIC SYSTEM
5	SOUTH SPRING BOX	16	CATTLE FENCING
6	BUILDING STORAGE	17	HYDRAULIC OVERFLOW STRUCTURES
7	GARAGE	18	HYDRAULIC VAULTS
8	OUTBUILDING	19	YARD PIPING
~~9~~	~~OUTBUILDING~~ N.I.C.	20	WEST FENCE
~~10~~	~~RESIDENCE~~ N.I.C.	21	INTERPRETIVE KIOSK
11	TRAILER	22	CATTELGAURD

NOTE:
THIS PROJECT INVOLVES A SUBSTANTIAL AMOUNT OF DEMOLITION. SEE SPECIFICATIONS, FOR DESCRIPTIONS AND DEMOLITION NOTES.

TO BE DEMOLISHED

N.I.C. NOT IN CONTRACT

REV	DATE	BY	DESCRIPTION
R	9/00	PDH	RECORD DRAWINGS

SCALE: 1" = 50'

WARNING
0 1/2 1
IF THIS BAR DOES NOT MEASURE 1" THEN DRAWING IS NOT TO SCALE.

DESIGNED D. S. Barbeau
DRAWN M. R. Waln
CHECKED L. H. Allen

RECORD DRAWING
This record drawing has been prepared, in part, on the basis of information compiled and furnished by others. The engineer is not responsible for any errors or omissions which have been incorporated into this document as a result.

MONTGOMERY WATSON
Boise, Idaho

APPROVED _____ DATE
APPROVED _____ DATE

UTAH DIVISION OF WILDLIFE RESOURCES
KAMAS FISH HATCHERY
SITE DEMOLITION PLAN

SHEET C-2 OF * SHTS

JOB No. 1132073 FILE No. $$$$$$$$$$directory/filename$$$$$$$$$$ $$$$date$$$$ $$time$$

POINT NO.	DESCRIPTION	NORTH	EAST	ELEVATION	REMARKS
	SITE FEATURES				
1	STA.0+00 ROAD 'A'	4939.70	5272.62		CENTERLINE
2	PC ROAD 'A'	4900.31	5263.03		CENTERLINE
3	PT ROAD 'A'	4874.10	5263.72		CENTERLINE
4	POINT OF RADIUS ROAD 'A'	4888.48	5311.61		CENTERLINE
5	PC ROAD 'A'	4927.06	5324.44		EAST EDGE
6	PCC ROAD 'A'	4897.73	5274.76		EAST EDGE
7	POINT OF RADIUS ROAD 'A'	4888.54	5313.68		EAST EDGE
8	PC ROAD 'A'	4845.98	5272.17		CENTERLINE
9	POINT OF RADIUS ROAD 'A'	4794.07	5099.82		CENTERLINE
10	PT ROAD 'A', END ROAD 'A'	4614.20	5104.55		CENTERLINE
11	PCC ROAD 'A'	4799.14	5291.75		EAST EDGE
12	POINT OF RADIUS ROAD 'A'	4799.40	5301.75		EAST EDGE
13	PT ROAD 'A'	4790.38	5306.06		EAST EDGE
14	END OF DRIVEWAY	4796.44	5318.74		EAST EDGE
15	PC & END OF PAVEMENT ROAD 'A'	4760.87	5293.04		EAST EDGE
16	POINT OF RADIUS ROAD 'A'	4751.85	5297.35		EAST EDGE
17	PCC ROAD 'A'	4753.94	5287.58		EAST EDGE
18	PCC ROAD 'A'	4603.51	5123.28		EAST EDGE
19	POINT OF RADIUS ROAD 'A'	4588.62	5125.11		EAST EDGE
20	PT ROAD 'A', BEG OF CURB	4588.62	5110.11		EAST EDGE
21	PCC ROAD 'A'	4631.70	5142.94		WEST EDGE
22	POINT OF RADIUS ROAD 'A'	4670.36	5132.67		WEST EDGE
23	PT ROAD 'A', END OF CURB	4631.84	5121.90		WEST EDGE
24	PCC ROAD 'A'	4842.39	5260.72		WEST EDGE
25	POINT OF RADIUS ROAD 'A'	4836.63	5241.56		WEST EDGE
26	PC ROAD 'A'	4856.18	5245.79		WEST EDGE
27	CORNER POINT	4868.06	5190.78		TRUCK WASHDOWN AREA
28	CORNER POINT	4887.61	5195.00		TRUCK WASHDOWN AREA
29	PT ROAD 'A', EDGE OF PAVEMENT	4881.36	5223.93		TRUCK WASHDOWN AREA
30	POINT OF RADIUS ROAD 'A'	4888.69	5225.52		TRUCK WASHDOWN AREA
31	PC ROAD 'A', EDGE OF PAVEMENT	4896.03	5227.10		TRUCK WASHDOWN AREA
32	FENCE TIE-IN	4893.75	5287.19		
33	FENCE CORNER	4869.67	5290.37		
34	FENCE CORNER	4851.33	5243.85		
35	FENCE CORNER	4863.75	5187.70		
36	FENCE CORNER	4898.84	5195.13		
37	FENCE CORNER	4964.70	5077.29		
38	FENCE CORNER	4973.47	5054.64		
39	FENCE TIE-IN	4952.12	5048.52		
40	NOT USED				NORTH BERM
41	NOT USED				NORTH BERM
42	NOT USED				NORTH BERM
43	NOT USED				NORTH BERM
44	NOT USED				NORTH BERM
45	NOT USED				NORTH BERM
46	NOT USED				NORTH BERM
47	NOT USED				NORTH BERM
48	NOT USED				NORTH BERM
49	NOT USED				NORTH BERM
50	NOT USED				NORTH BERM
51	NOT USED				NORTH BERM
52	PC EDGE OF PAVEMENT	4921.49	5109.18		
53	POINT OF RADIUS	4941.04	5113.40		
54	PT EDGE OF PAVEMENT	4933.22	5094.99		
55	PC EDGE OF PAVEMENT	4964.50	5081.72		
56	POINT OF RADIUS ROAD 'B'	4962.54	5077.12		EAST EDGE
57	PT ROAD 'B'	4963.92	5072.31		EAST EDGE
58	STA. 0+00 ROAD 'B'	4989.07	5071.19		CENTERLINE
59	PC ROAD 'B'	4995.61	5042.94		WEST EDGE
60	POINT OF RADIUS ROAD 'B'	4976.14	5038.36		WEST EDGE
61	PT ROAD 'B'	4970.63	5057.59		WEST EDGE
62	PC ROAD 'B'	4913.91	5041.35		WEST EDGE
63	POINT OF RADIUS ROAD 'B'	4916.66	5031.73		WEST EDGE
64	END OF PAVEMENT ROAD 'A'	4906.67	5031.35		WEST EDGE
65	PC & END OF PAVEMENT ROAD 'A'	4885.56	5016.75		WEST EDGE
66	POINT OF RADIUS ROAD 'B'	4876.15	5020.13		WEST EDGE
67	PCC ROAD 'B'	4873.39	5029.75		WEST EDGE
68	PC ROAD 'B'	4888.98	5050.85		EAST EDGE
69	POINT OF RADIUS ROAD 'B'	4886.78	5058.54		EAST EDGE
70	PT ROAD 'B'	4883.69	5051.16		EAST EDGE
71	PC ROAD 'B'	4871.15	5056.41		EAST EDGE
72	POINT OF RADIUS ROAD 'B'	4868.06	5049.02		EAST EDGE
73	PT ROAD 'B'	4865.86	5056.71		EAST EDGE
74	PC ROAD 'B'	4852.09	5052.77		EAST EDGE
75	POINT OF RADIUS ROAD 'B'	4854.30	5045.08		EAST EDGE
76	PT ROAD 'B'	4847.70	5049.61		EAST EDGE
77	PC ROAD 'B'	4839.78	5038.06		EAST EDGE
78	POINT OF RADIUS ROAD 'B'	4833.18	5042.59		EAST EDGE
79	PCC ROAD 'B'	4835.94	5035.08		EAST EDGE
80	PC ROAD 'B'	4852.67	5032.13		CENTERLINE
81	POINT OF RADIUS ROAD 'B'	4907.72	4839.86		CENTERLINE
82	PT ROAD 'B'	4773.99	4988.58		CENTERLINE
83	PC ROAD 'B'	4758.97	4975.07		CENTERLINE
84	POINT OF RADIUS ROAD 'B'	4712.16	5027.12		CENTERLINE
85	PT ROAD 'B'	4699.05	4958.36		CENTERLINE
86	END OF PAVEMENT ROAD 'B'	4723.12	4966.09		EAST EDGE
87	PC ROAD 'B'	4824.93	5013.10		WEST EDGE
88	POINT OF RADIUS RV SITE	4837.87	4986.03		WEST EDGE
89	PT RV SITE	4807.87	4986.03		WEST EDGE
90	CORNER POINT RV SITE	4807.87	4937.33		
91	PC RV SITE	4791.87	4937.33		
92	POINT OF RADIUS RV SITE	4791.87	4943.33	6767.0	
93	PT RV SITE	4785.87	4943.33		
94	PC RV SITE	4785.87	4961.33		

POINT NO.	DESCRIPTION	NORTH	EAST	ELEVATION	REMARKS
	SITE FEATURES (CONT.)				
95	POINT OF RADIUS RV SITE	4791.87	4961.33	6767.0	
96	PCC RV SITE	4790.87	4967.25		
97	POINT OF RADIUS RV SITE	4789.87	4973.16		
98	PT RV SITE	4795.87	4973.16		
99	PC RV SITE	4795.87	4975.05		WEST EDGE
100	POINT OF RADIUS RV SITE	4785.87	4975.05		WEST EDGE
101	PT ROAD 'B'	4779.18	4982.49		WEST EDGE
102	PC ROAD 'B'	4760.95	4966.26		WEST EDGE
103	POINT OF RADIUS RV SITE	4779.71	4942.85		WEST EDGE
104	PT RV SITE	4749.71	4942.85		WEST EDGE
105	CORNER POINT RV SITE	4749.71	4886.67		
106	PC RV SITE	4733.71	4886.67		
107	POINT OF RADIUS RV SITE	4733.71	4892.67	6759.0	
108	PT RV SITE	4727.71	4892.67		
109	PC RV SITE	4727.71	4910.67		
110	POINT OF RADIUS RV SITE	4733.71	4910.67	6759.0	
111	PCC RV SITE	4732.71	4916.58		
112	POINT OF RADIUS RV SITE	4731.71	4922.50		
113	PT RV SITE	4737.71	4922.50		
114	PC RV SITE	4737.71	4940.50		
115	POINT OF RADIUS RV SITE	4727.71	4940.50		
116	END OF PAVEMENT ROAD 'B'	4725.94	4950.35		
117	END ROAD 'B'	4696.29	4967.03		EAST EDGE
118	END ROAD 'B'	4689.02	4952.13		WEST EDGE
119	END ROAD 'B'	4693.19	4959.47		CENTERLINE
120	RADIUS POINT CONTOR	4887.4	4931.3		
121	DELETED				
122	POINT CONTOR	4999.5	4925.9		
123	RADIUS POINT CONTOR	4899.7	5131.1		
124	RADIUS POINT CONTOR	4901.6	5151.0		
125	RADIUS POINT CONTOR	4893.6	5184.3		
126	RADIUS POINT CONTOR	4881.8	5200.9		
127	RADIUS POINT CONTOR	4836.2	5376.4		
128	RADIUS POINT CONTOR	4755.1	5447.1		
129	NW COR. STANDBY GEN. PAD	4457.72	5015.45		
130	SW COR. STANDBY GEN PAD	4449.82	5014.19		
131	POINT OF RADIUS CURB	4597.46	4794.87		
132	POINT OF RADIUS CURB	4556.94	4804.46		
133	PT CORNER CURB	4575.36	5110.11		
134	PT CORNER CURB	4575.36	5174.11	6753.00	
135	POINT OF RADIUS TOP OF CURB	4559.36	5178.11		
136	POINT OF RADIUS TOP OF CURB	4550.36	5191.11		
137	POINT OF RADIUS TOP OF CURB	4533.36	5191.11		
138	POINT OF RADIUS TOP OF CURB	4524.36	5178.11		
139	CORNER PT CURB	4508.36	5174.11		
140	CORNER PT CURB	4508.36	5046.61		
141	POINT OF RADIUS EDGE OF SIDEWALK	4531.64	5037.61		
142	PC CURB	4546.10	5004.10		
143	POINT OF RADIUS TOP OF CURB	4608.34	5016.45		
144	PT CURB	4666.64	5041.61		
145	EAST POINT OF STAIRS	4670.87	5027.54		
146	WEST POINT OF STAIRS	4671.46	5009.49		
147	POINT OF RADIUS	4649.46	4998.39		
148	POINT OF RADIUS	4679.71	4988.61		
149	PT CURB	4664.49	4986.79		
150	POINT OF RADIUS	4707.57	5005.66		
151	POINT OF RADIUS	4634.72	4987.85		
152	CORNER POINT	4661.82	4928.77		
153	CORNER POINT	4651.50	4887.38		
154	PT CURB	4590.56	4955.49		
155	POINT OF RADIUS	4586.64	4942.05		
156	FENCE CORNER	4456.12	5060.52		
157	NOT USED				
158	FENCE CORNER	4356.88	5016.96		
159	NOT USED				
160	NOT USED				
161	NOT USED				
162	STA. 0+00 ROAD 'C'	4437.56	5001.20		
163	END OF CURB	4508.60	4917.08		
164	POINT OF RADIUS CURB	4511.29	4917.85		
165	FENCE CORNER	4330.61	4757.90		
166	FENCE CORNER	4501.05	4285.75		
167	PC EDGE OF PAVEMENT	4483.22	4348.57		
168	POINT OF RADIUS	4532.60	4356.39		
169	PCC EDGE OF PAVEMENT	4567.99	4321.07		
170	POINT OF RADIUS	4575.07	4314.01		
171	PT EDGE OF PAVEMENT	4575.69	4323.99		
172	END OF ROAD 'C'	4547.26	4308.59		
173	POINT OF RADIUS	4618.59	4331.35		
174	POINT OF RADIUS	4625.80	4360.60		
175	PC EDGE OF PAVEMENT	4600.30	4377.19		
176	POINT OF RADIUS	4602.69	4386.90		
177	PT EDGE OF PAVEMENT	4592.82	4385.33		
178	CONTOR POINT	4684.85	4484.70	6740	
179	PT EDGE OF PAVEMENT	4628.10	4807.33		
180	PT EDGE OF PAVEMENT	4645.84	4878.48		
181	POINT OF RADIUS CURB	4606.14	4803.98		
	SITE FACILITES				
200	SW COR. RACEWAY 204	4551.32	4359.69		
201	NW COR. OUTFALL STRUCTURE	4590.87	4260.04		
202	NE COR. OUTFALL STRUCTURE	4593.38	4270.24		
203	HEADWALL 'C'	4571.22	4265.91		
204	NW COR. RACEWAY 205	4626.35	4325.12		
205	NW COR. RACEWAY 304	4527.61	4355.94		

POINT NO.	DESCRIPTION	NORTH	EAST	ELEVATION	REMARKS
	SITE FACILITIES (CONT.)				
206	NW COR. MICROSCREEN/PUMP BLDG	4613.47	4324.38		
207	NE COR. MICROSCREEN/PUMP BLDG	4620.33	4352.21		
208	SE COR. MICROSCREEN/PUMP BLDG	4592.50	4359.07		
209	NW COR. SOLIDS VAULT #1	4629.13	4336.37		
210	NE COR. SOLIDS VAULT #1	4630.94	4343.73		
211	NE COR. SOLIDS VAULT #2	4628.17	4332.49		
212	POE PAVILION	4678.44	4638.29		
213	IRRIGATION DISTRIBUTION STRUCTURE	4471.79	5184.24		
214	POE WALKWAY, POB PAVILION	4661.75	4660.76		
215	ANGLE POINT WALKWAY	4606.28	4735.41		
216	ANGLE POINT WALKWAY	4605.51	4779.40		
217	ANGLE POINT WALKWAY	4621.09	4795.75		
218	POB WALKWAY	4624.22	4808.29		
219	NW CORNER HATCHERY BUILDING	4618.40	4809.75		
220	SW CORNER HATCHERY BUILDING	4566.00	4822.81		
221	SE CORNER HATCHERY BUILDING	4562.69	4947.31		
222	NE CORNER HATCHERY BUILDING	4642.88	4927.32		
223	SO. CORNER INTERPRETIVE KIOSK	4659.14	4932.89		
224	EAST CORNER INTERPRETIVE KIOSK	4682.65	4951.52		
225	NOT USED				
226	SW CORNER FOOD STORAGE BLDG	4516.58	4998.44		
227	DRAIN AWAY	4849.60	5202.14		
228	SE CORNER RACEWAY SERIES 200	4456.15	4960.53		
229	NE CORNER RACEWAY SERIES 300	4432.37	4957.27		
230	SW CORNER PRIMARY DEGASSER	4417.77	5000.43		
231	NE CORNER PRIMARY DEGASSER	4443.20	5020.99		
232	SE CORNER VEHICLE PARKING	4461.56	5026.18		
233	SW CORNER VEHICLE PARKING	4465.63	5000.50		
234	NE CORNER FOOD STORAGE BLDG	4536.63	5038.07		
235	SW COR. SEC. DEGASSING STRUCT.	4676.02	5097.49		
236	SE COR. SEC. DEGASSING STRUCT.	4669.53	5112.48		
237	NW CORNER CONCRETE PAD	4918.65	5179.19		
238	NE CORNER CONCRETE PAD	4916.11	5190.92		
239	NE CORNER DEGASSING STRUCT.	4909.61	5086.06		
240	NW CORNER DEGASSING STRUCT.	4914.65	5068.43		
241	NE CORNER PROPANE TANK PAD	4916.21	5114.67		
242	SE CORNER PROPANE TANK PAD	4896.02	5108.88		
243	NW CORNER LOX STOR. TANK	4905.31	5163.24		
244	SE CORNER LOX STOR. TANK	4887.79	5187.43		
245	NW CORNER CONC. PAD	4846.33	5007.90		
246	NE CORNER CONC. PAD	4747.06	5336.95		
247	NW COR IRR. DISTRIBUTION STRUCT.	4563.97	4766.07		
248	SW COR IRR. DISTRIBUTION STRUCT.	4561.06	4766.80		
249	SW COR DRAINFIELD DIST. BOX	4787.54	5096.97		
250	SE COR DRAINFIELD DIST. BOX	4785.62	5101.58		
	YARD PIPING			(INVERT)	
300	INLET 12"SD(32)	4793.60	5294.90	6779.0	
301	OUTLET 12"SD(32)	4758.72	5291.61	6776.3	
302	INLET 12"SD(32)	4907.34	5028.67	6779.1	
303	OUTLET 12"SD(32)	4885.19	5022.56	6778.8	
304	INLET 12"SD(32)	4698.43	4968.37	6753.5	
305	OUTLET 12"SD(32)	4692.26	4949.34	6733.3	
306	CATCH BASIN NO 1	4634.24	5125.17		
307	CATCH BASIN NO 2	4582.72	5114.53		
308	CATCH BASIN NO 3	4542.11	5039.16		
309	CATCH BASIN NO 4	4594.24	4956.13		
310	MANHOLE	4683.43	4888.70		CENTERLINE
311	HEADWALL 'B'	4445.17	4468.41		
312	130 DEG. ELBOW 18"SD(32)	4495.56	4307.88	6737.0	
313	45 DEG. ELBOW 18"SD(32)	4566.28	4278.05	6735.5	
314	MANHOLE	4573.59	4318.05	6731.1	AT METER
315	45 DEG. ELBOW 12"SD(19)	4616.52	4277.20	6736.1	
316	45 DEG. ELBOW 12"SD(19)	4638.84	4362.83	6736.2	
317	INLET 12"SD(19)	4635.02	4371.04	6736.3	
318	NOT USED				
319	TIE-IN 10"SW(19) DEGASSING STR.	4912.68	5075.32	6781.0	
320	TIE-IN PROPANE TANK PAD	4915.47	5098.85	6790.0	
321	ELBOW PROPANE LINE	4923.78	5069.84	6786.0	
322	TIE-IN 12"SW(19) DEGASSING STR.	4898.69	5080.59	6780.5	
323	TIE-IN 6"SW(19) DEGASSING STR.	4899.65	5077.23	6780.5	
324	NOT USED				
325	TEE FOR 3/4" NON-FREEZE HYDRANT	4891.41	5101.33	6783.0	
326	ELBOW 4"UW(16)	4871.71	5170.14	6784.2	
327	ELBOW 4"UW(16)	4886.31	5192.68	6785.2	
328	ELBOW 1"UW(19)	4801.73	5217.99	6776.5	
329	ELBOW PROPANE LINE	4835.74	5193.57	6780.3	
330	TEE FOR 3/4" NON-FREEZE HYDRANT	4797.34	5245.57	6776.5	
331	STUB OUT 1"UW(19)	4787.48	5307.42	6774.5	
332	STUB OUT 1"UW(19)	4884.06	5021.20	6772.5	
333	ELBOW 12"SW(19)	4754.89	5039.41	6763.5	
334	3/4" NON-FREEZE HYDRANT FOR RV	4807.04	4944.95	6763.5	
335	RV SEWAGE DISPOSAL DROP	4817.05	4941.94	6763.2	
336	3/4" NON-FREEZE HYDRANT FOR RV	4748.22	4895.31	6756.5	
337	RV SEWAGE DISPOSAL DROP	4748.66	4891.65	6755.2	
338	ELBOW 4"SS(16)	4744.08	4881.67	6754.0	
339	ELBOW 3"SS(16)	4744.88	4879.67	6754.0	
340	NOT USED				
341	NOT USED				
342	NOT USED				
343	ELBOW 4"SS(16)	4736.67	5332.26	6770.62	
344	STUB UP FOR 1 1/2"UW(16)	4792.98	4974.98	6772.70	
345	ELBOW 12"SW(19)	4735.31	5012.47	6762.50	
346	ELBOW 4"SS(16)	4691.58	4881.67	6759.50	
347	ELBOW 3"SS(16)	4690.75	4879.67	6748.0	
				6751.0	

POINT NO.	DESCRIPTION	NORTH	EAST	ELEVATION	REMARKS
	YARD PIPING (CONT.)			(INVERT)	
348	TIE-IN 6"SS(27) HATCHERY BUILDING	4643.97	4898.53	6747.5	
349	ELBOW 18"SW(19)	4667.38	4952.47	6747.8	
350	TIE-IN 1"UW(16) HATCHERY BUILDING	4614.03	4935.20	6747.5	
351	ELBOW 1"UW(16)	4616.19	4943.88	6747.5	
352	ELBOW 18"SW(19)	4666.07	5034.18	6748.5	
353	ELBOW 18"SW(19)	4690.06	5094.86	6754.0	
354	TIE-IN 18"SW(19) DEGASSING STR.	4686.81	5102.30	6754.0	
355	TIE-IN 20"SW(19) DEGASSING STR.	4684.06	5118.77	6754.0	
356	TIE-IN 24"SW(19) DEGASSING STR.	4680.39	5117.18	6754.0	
357	ELBOW 24"SW(19)	4676.42	5126.35	6754.0	
358	ELBOW 20"SW(19)	4642.51	5214.68	6756.5	
359	ELBOW 20"SW(19)	4648.73	5377.84		FIELD VERIFY
360	NOT USED				
361	ELBOW 24"SW(19)	4497.86	5049.00	6745.5	
362	TEE 24"SW(19)	4456.67	5042.47	6744.5	
363	ELBOW 24"SW(19)	4451.08	5041.59	6744.5	
364	TIE-IN 18"SW(19) DEGASSING STR.	4443.86	5016.86	6744.5	
365	TIE-IN 18"SW(19) DEGASSING STR.	4445.11	5008.98	6744.5	
366	STUB UP FOR 2"UW(16)	4500.71	5056.86	6748.0	
367	ELBOW 2"UW(16)	4441.04	5047.41	6744.5	
368	TIE-IN 3"IW(19) IRR. DIST. BOX	4471.88	5182.85		FIELD VERIFY
369	TIE-IN 1 1/2"UW(16) DISCONNECT	4427.08	5022.34	6744.5	
370	TIE-IN 18"SW(19) DEGASSING STR.	4424.03	5018.30	6744.5	
371	ELBOW 18"SW(19)	4411.75	5095.99		FIELD VERIFY
372	TIE-IN EXIST. SPRING HEAD BOX	4449.67	5267.59		FIELD VERIFY
373	TIE-IN 1"OX(24) DEGASSING STR.	4426.33	5001.78	6747.0	
374	TIE-IN 12"SW(19) DEGASSING STR.	4432.95	5002.83	6744.5	
375	TIE-IN 24"SW(19) DEGASSING STR.	4437.32	5002.71	6744.5	
376	TIE-IN 16"RW(19) DEGASSING STR.	4442.79	5004.39	6744.5	
377	TEE 12"SW(19) DEGASSING STR.	4438.86	4965.52	6743.0	
378	TEE 24"SW(19) DEGASSING STR.	4443.44	4964.09	6744.5	
379	TIE-IN 18"OF(19) RACEWAYS	4413.27	4951.63	6744.5	
380	ELBOW 18"OF(19)	4401.96	4949.84	6744.5	
381	END 18"OF(19) HEADWALL	4377.97	4916.83	6742.0	
382	ELBOW 16"RW(19)	4444.46	4993.87	6744.5	
383	ELBOW 16"RW(19)	4480.31	4967.82	6745.7	
384	TIE-IN 6"SW(19) HATCHERY BUILDING	4620.21	4817.02	6746.0	
385	TIE-IN 18SW(19) HATCHERY BUILDING	4619.73	4815.08	6743.4	
386	ELBOW 18"SW(19)	4632.34	4811.94	6743.4	
387	ELBOW 2"D(16)	4635.24	4812.20	6746.0	
388	TIE-IN 2"D(16) IRR. DIST. STR.	4563.24	4769.35	6745.0	
389	TIE-IN 18"RW(19) HATCHERY BUILDING	4566.97	4826.69	6747.5	
390	TIE-IN 4"TE(19) HATCHERY BUILDING	4566.67	4825.48	6747.3	
391	TIE-IN 4"D(19) HATCHERY BUILDING	4824.59	4824.59	6747.3	
392	ELBOW 16"RW(19)	4544.96	4832.18	6746.5	
393	TEE 16"RW(19)	4502.85	4825.51	6742.5	
394	ELBOW 12"RW(19)	4468.28	4820.03	6742.5	
395	TEE 12"D(19)	4465.60	4817.74	6741.6	
396	CROSS 1 1/2"OX(24)	4465.71	4797.86	6742.5	
397	CROSS 1 1/2"OX(24)	4489.17	4649.71	6740.5	
398	TEE 1 1/2"OX(24)	4512.64	4501.55	6736.5	
399	TEE 2""UW(16)	4506.79	4816.62	6743.2	
400	3/4"UW(16) NON-FREEZE HYDRENT	4522.97	4819.14	6743.2	
401	TEE 2""UW(16)	4530.25	4668.47	6740.4	
402	3/4"UW(16) NON-FREEZE HYDRENT	4546.44	4670.99	6740.4	
403	TEE 1 1/2""UW(16)	4553.73	4520.26	6737.8	
404	3/4"UW(16) NON-FREEZE HYDRENT	4569.91	4522.78	6737.8	
405	NOT USED				
406	TIE-IN 1"UW(16) MICRO./PUMP BLDG.	4590.42	4350.65	6733.8	
407	ELBOW 3"IW(16)	4579.57	4369.87	6736.8	
408	TIE-IN 3"IW(16) MICRO./PUMP BLDG.	4602.37	4356.64	6736.4	
409	ELBOW 3"IW(16)	4604.14	4363.82	6736.4	
410	TIE-IN 4"D(16) MICRO./PUMP BLDG.	4618.41	4344.42	6735.6	
411	TIE-IN 4"D(16) SOLIDS VAULT #1	4624.23	4342.98	6735.5	
412	TIE-IN 4"D(16) SOLIDS VAULT #1	4625.81	4336.16	6736.2	
413	NOT USED				
414	NOT USED				
415	TIE-IN 12"D(19) MICRO./PUMP BLDG.	4605.22	4326.41	6735.2	
416	TIE-IN 12"D(19) MICRO./PUMP BLDG.	4602.30	4324.13	6735.2	
417	TIE-IN 3"RE(16) MICRO./PUMP BLDG.	4597.89	4328.22	6733.0	
418	TIE-IN 12"D(16) MICRO./PUMP BLDG.	4589.80	4348.15	6731.7	
419	ELBOW 12"D(19)	4564.43	4354.41	6731.8	
420	ELBOW 12"D(19)	4539.61	4350.48	6732.1	
421	ELBOW 30"RE(19)	4522.70	4337.52	6732.0	
422	TEE 30"RE(19)	4561.65	4343.69	6731.9	
423	ELBOW 24"RE(19)	4563.09	4334.52	6731.7	
424	ELBOW 30"RE(19)	4589.30	4293.39	6730.5	
425	TIE-IN 12"D(19) OUTFALL STR.	4587.41	4266.73	6735.0	
426	TIE-IN 12"D(19) OUTFALL STR.	4590.32	4266.01	6735.0	
427	TEE 4"UW(16)	4881.57	5135.69	6789.5	
428	STUB OUT 1"UW(16) IRR STUB	4944.85	5153.81	6787.5	
429	ELBOW 4"D(19)	4503.48	4821.56	6741.6	
430	ELBOW 18"SW(19)	4411.75	5095.99	6745.5	
431	ELBOW 24"SW(19)	4640.14	5110.63	6745.5	
432	ELBOW 12"SW(19)	4699.39	5006.78	6746.0	
433	45 DEG. ELBOW 12"SD(19)	4598.84	4266.83		
434	TIE-IN 12"SD(19) OUTFALL STR.	4592.91	4268.29		
435	ELBOW 12"D(19)	4465.03	4821.39		
436	TIE-IN 4"D(19) HATCHERY BUILDING	4566.97	4826.69	4826.69	
437	TIE-IN 4"D(19) SOLIDS VAULT #2	4625.10	4333.24		
438	MANHOLE	4420.56	5040.36		
439	MANHOLE	4674.91	5139.89		
440	TIE-IN 1 1/2"UW(19) DISCONNECT	4686.86	5097.83		
441	NOT USED				

$$time$$
$$$$date$$$$$

$$$$$$$$$$directory/filename$$$$$$$$$$ FILE No.

JOB No. 1132073

REV	DATE	BY	DESCRIPTION
R	9/00	PDH	RECORD DRAWINGS

SCALE: NONE

WARNING
0 1/2 1
IF THIS BAR DOES NOT MEASURE 1" THEN DRAWING IS NOT TO SCALE.

DESIGNED E. T. Cryer
DRAWN P. D. Hunter
CHECKED L. H. Allen

RECORD DRAWING

This record drawing has been prepared, in part, on the basis of information compiled and furnished by others. The engineer is not responsible for any errors or omissions which have been incorporated into this document as a result.

MONTGOMERY WATSON
Boise, Idaho

APPROVED _____ DATE
APPROVED _____ DATE

UTAH DIVISION OF WILDLIFE RESOURCES
KAMAS FISH HATCHERY
SITE COORDINATES

SHEET C-3 OF * SHTS

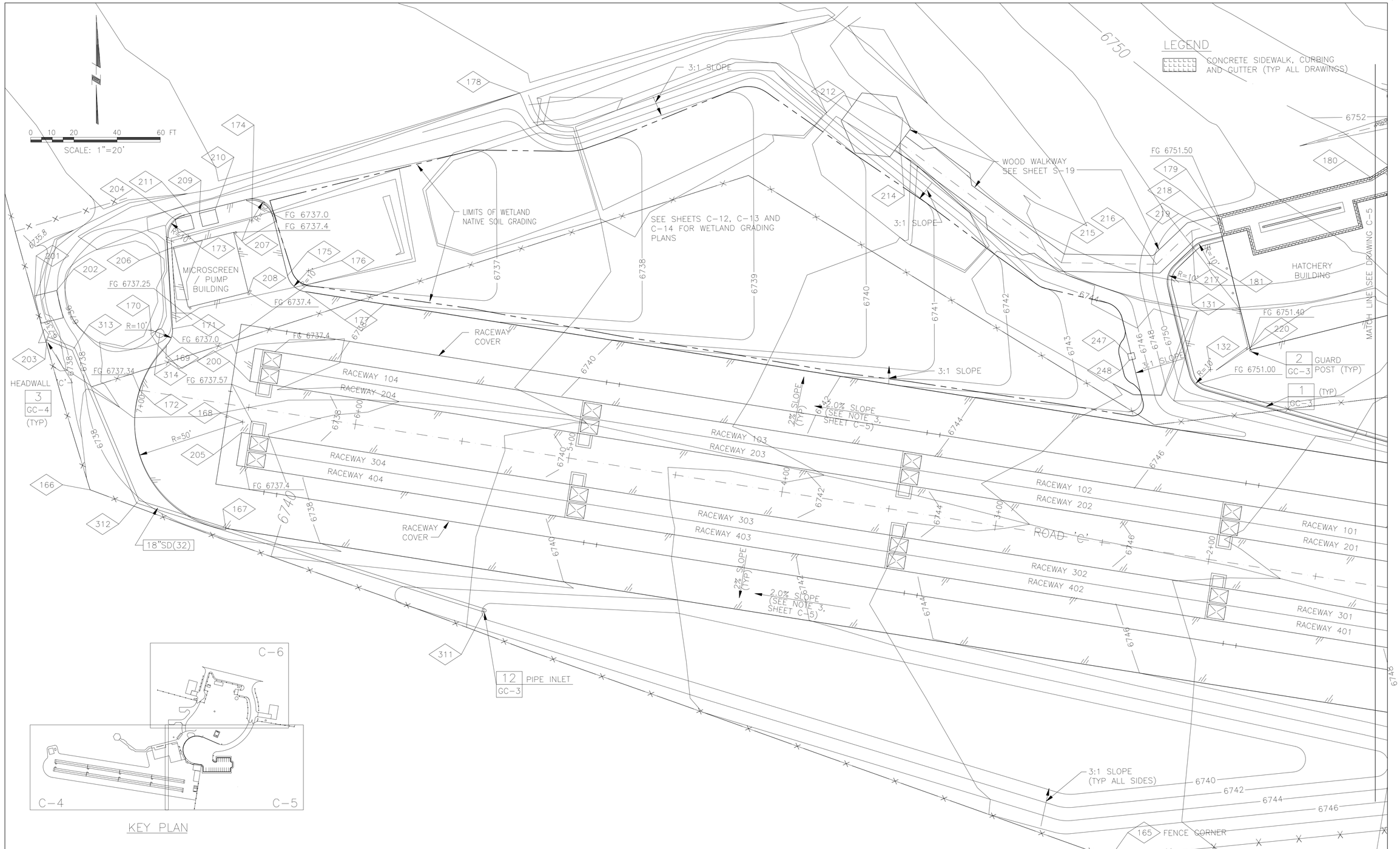

REV	DATE	BY	DESCRIPTION
R	9/00	PDH	RECORD DRAWINGS

SCALE: 1" = 20'

WARNING: 0 1/2 1 — IF THIS BAR DOES NOT MEASURE 1" THEN DRAWING IS NOT TO SCALE.

DESIGNED E. T. Cryer
DRAWN P. D. Hunter
CHECKED L. H. Allen

RECORD DRAWING

This record drawing has been prepared, in part, on the basis of information compiled and furnished by others. The engineer is not responsible for any errors or omissions which have been incorporated into this document as a result.

MONTGOMERY WATSON
Boise, Idaho

APPROVED _____ DATE
APPROVED _____ DATE

UTAH DIVISION OF WILDLIFE RESOURCES
KAMAS FISH HATCHERY
PAVING AND GRADING PLAN – 1

SHEET C-4 OF * SHTS

JOB No. 1132073 FILE No. $$$$$$$$$directory/filename$$$$$$$$$ $$$$$date$$$$ $$time$$

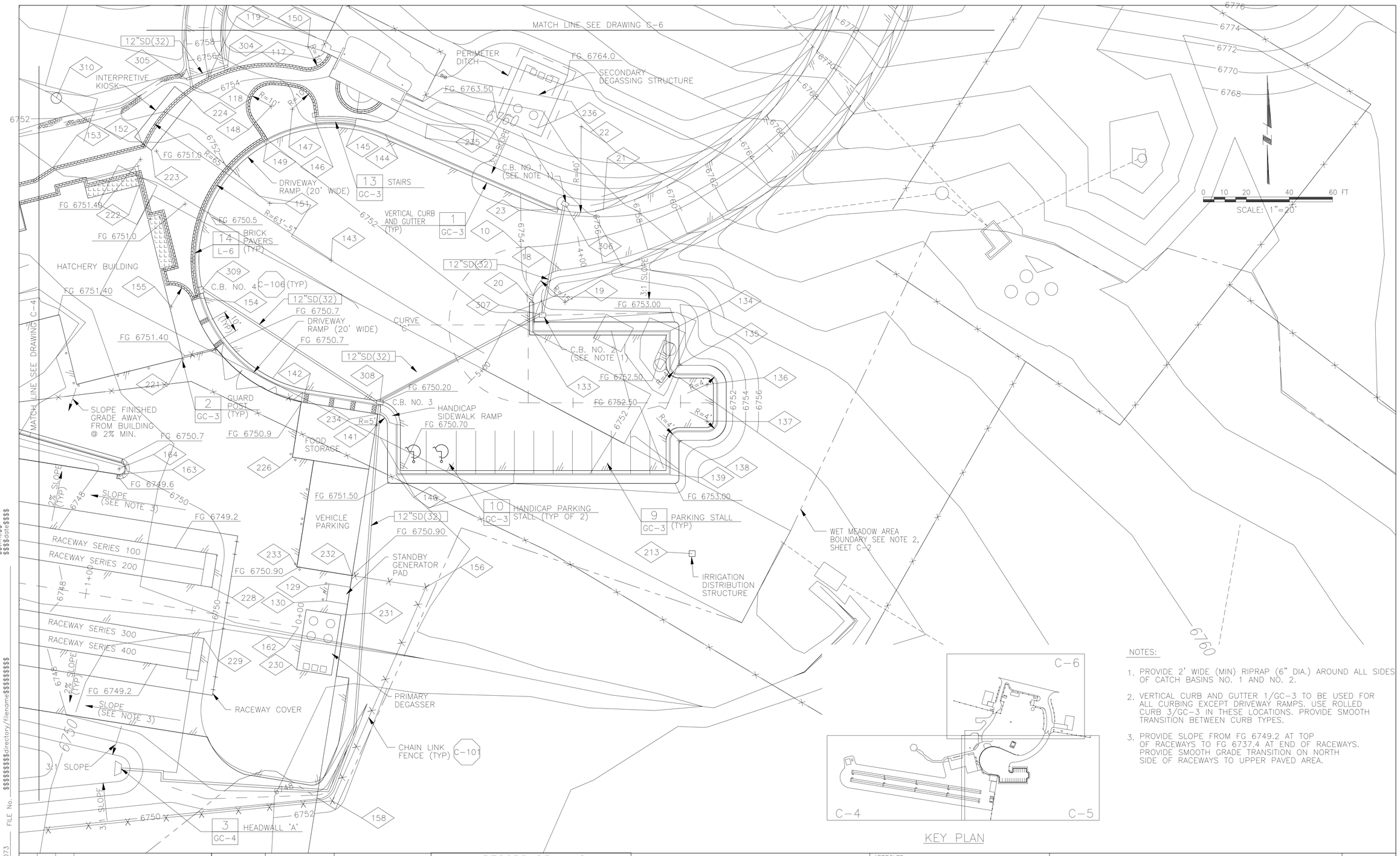

NOTES:

1. PROVIDE 2' WIDE (MIN) RIPRAP (6" DIA.) AROUND ALL SIDES OF CATCH BASINS NO. 1 AND NO. 2.
2. VERTICAL CURB AND GUTTER 1/GC-3 TO BE USED FOR ALL CURBING EXCEPT DRIVEWAY RAMPS. USE ROLLED CURB 3/GC-3 IN THESE LOCATIONS. PROVIDE SMOOTH TRANSITION BETWEEN CURB TYPES.
3. PROVIDE SLOPE FROM FG 6749.2 AT TOP OF RACEWAYS TO FG 6737.4 AT END OF RACEWAYS. PROVIDE SMOOTH GRADE TRANSITION ON NORTH SIDE OF RACEWAYS TO UPPER PAVED AREA.

REV	DATE	BY	DESCRIPTION
R	9/00	PDH	RECORD DRAWINGS

SCALE: 1" = 20'

WARNING: 0 1/2 1 — IF THIS BAR DOES NOT MEASURE 1" THEN DRAWING IS NOT TO SCALE.

DESIGNED E. T. Cryer
DRAWN P.D.Hunter
CHECKED L. H. Allen

RECORD DRAWING

This record drawing has been prepared, in part, on the basis of information compiled and furnished by others. The engineer is not responsible for any errors or omissions which have been incorporated into this document as a result.

MONTGOMERY WATSON
Boise, Idaho

APPROVED ____ DATE
APPROVED ____ DATE

UTAH DIVISION OF WILDLIFE RESOURCES
KAMAS FISH HATCHERY
PAVING AND GRADING PLAN – 2

SHEET C-5 OF * SHTS

JOB No. 1132073 FILE No. $$$$$$$$$directory/filename$$$$$$$$$ $$$$date$$$$ $$time$$

REV	DATE	BY	DESCRIPTION
R	9/00	PDH	RECORD DRAWINGS

SCALE: 1" = 20'

WARNING: 0 1/2 1 — IF THIS BAR DOES NOT MEASURE 1" THEN DRAWING IS NOT TO SCALE.

DESIGNED E. T. Cryer
DRAWN P. D. Hunter
CHECKED L. H. Allen

RECORD DRAWING

This record drawing has been prepared, in part, on the basis of information compiled and furnished by others. The engineer is not responsible for any errors or omissions which have been incorporated into this document as a result.

MONTGOMERY WATSON
Boise, Idaho

APPROVED ____ DATE
APPROVED ____ DATE

UTAH DIVISION OF WILDLIFE RESOURCES
KAMAS FISH HATCHERY
PAVING AND GRADING PLAN – 3

SHEET C-6 OF * SHTS

JOB No. 1132073 FILE No. $$$$$$$$$$directory/filename$$$$$$$$$$ $$time$$ $$$$date$$$$

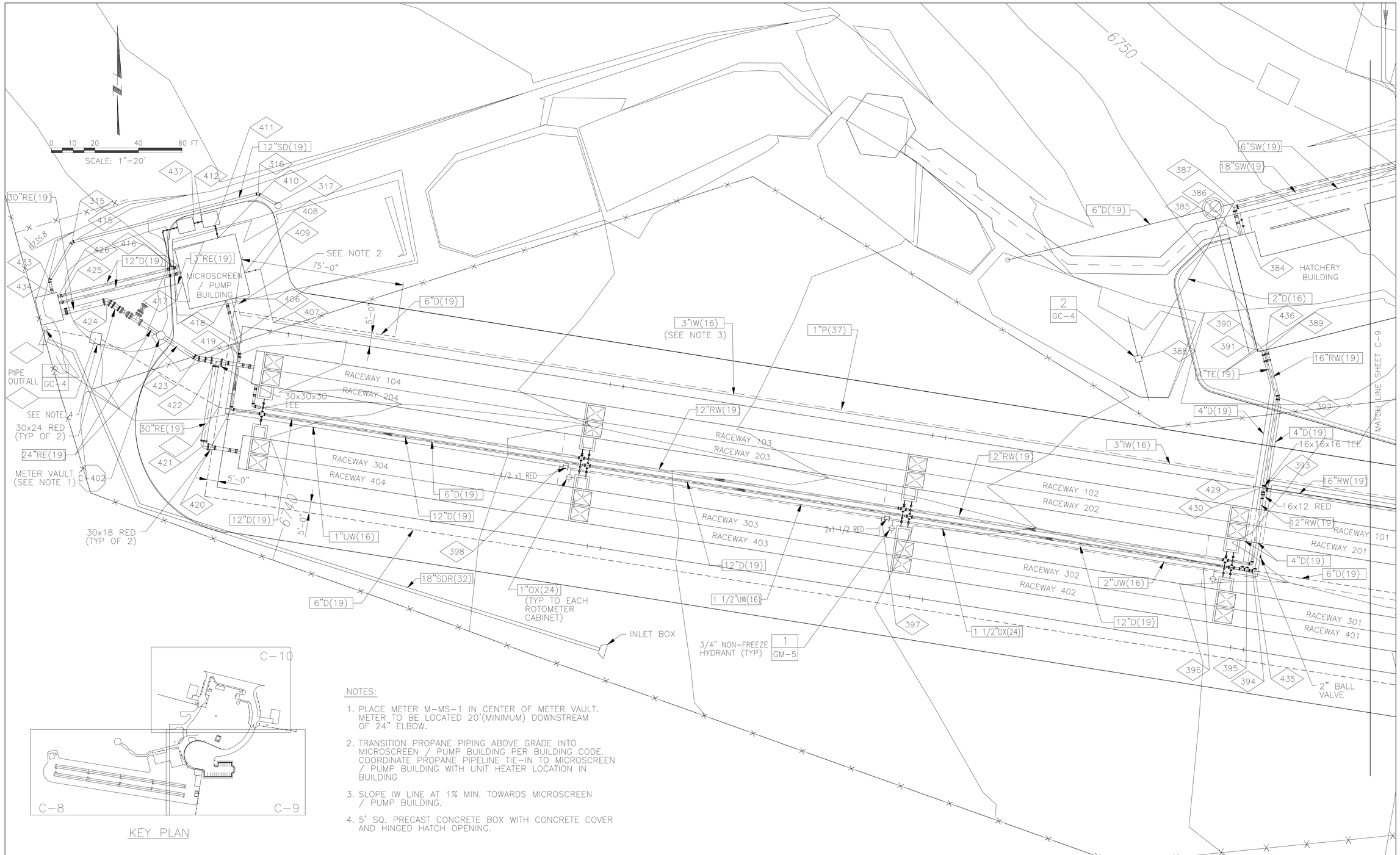

KEY PLAN

NOTES:

1. PLACE METER M-MS-1 IN CENTER OF METER VAULT. METER TO BE LOCATED 20'(MINIMUM) DOWNSTREAM OF 24" ELBOW.
2. TRANSITION PROPANE PIPING ABOVE GRADE INTO MICROSCREEN / PUMP BUILDING PER BUILDING CODE. COORDINATE PROPANE PIPELINE TIE-IN TO MICROSCREEN / PUMP BUILDING WITH UNIT HEATER LOCATION IN BUILDING
3. SLOPE IW LINE AT 1% MIN. TOWARDS MICROSCREEN / PUMP BUILDING.
4. 5' SQ. PRECAST CONCRETE BOX WITH CONCRETE COVER AND HINGED HATCH OPENING.

REV	DATE	BY	DESCRIPTION
R	9/00	PDH	RECORD DRAWINGS

SCALE: 1" = 20'

WARNING: 0 1/2 1 — IF THIS BAR DOES NOT MEASURE 1" THEN DRAWING IS NOT TO SCALE.

DESIGNED E. T. Cryer
DRAWN P. D. Hunter
CHECKED L. H. Allen

RECORD DRAWING

This record drawing has been prepared, in part, on the basis of information compiled and furnished by others. The engineer is not responsible for any errors or omissions which have been incorporated into this document as a result.

MONTGOMERY WATSON
Boise, Idaho

APPROVED _____ DATE
APPROVED _____ DATE

UTAH DIVISION OF WILDLIFE RESOURCES
KAMAS FISH HATCHERY
YARD PIPING PLAN - 1

SHEET C-8 OF * SHTS

JOB No. 1132073 FILE No. $$$$$$$$$directory/filename$$$$$$$$$ $$time$$ $$$$$date$$$$$

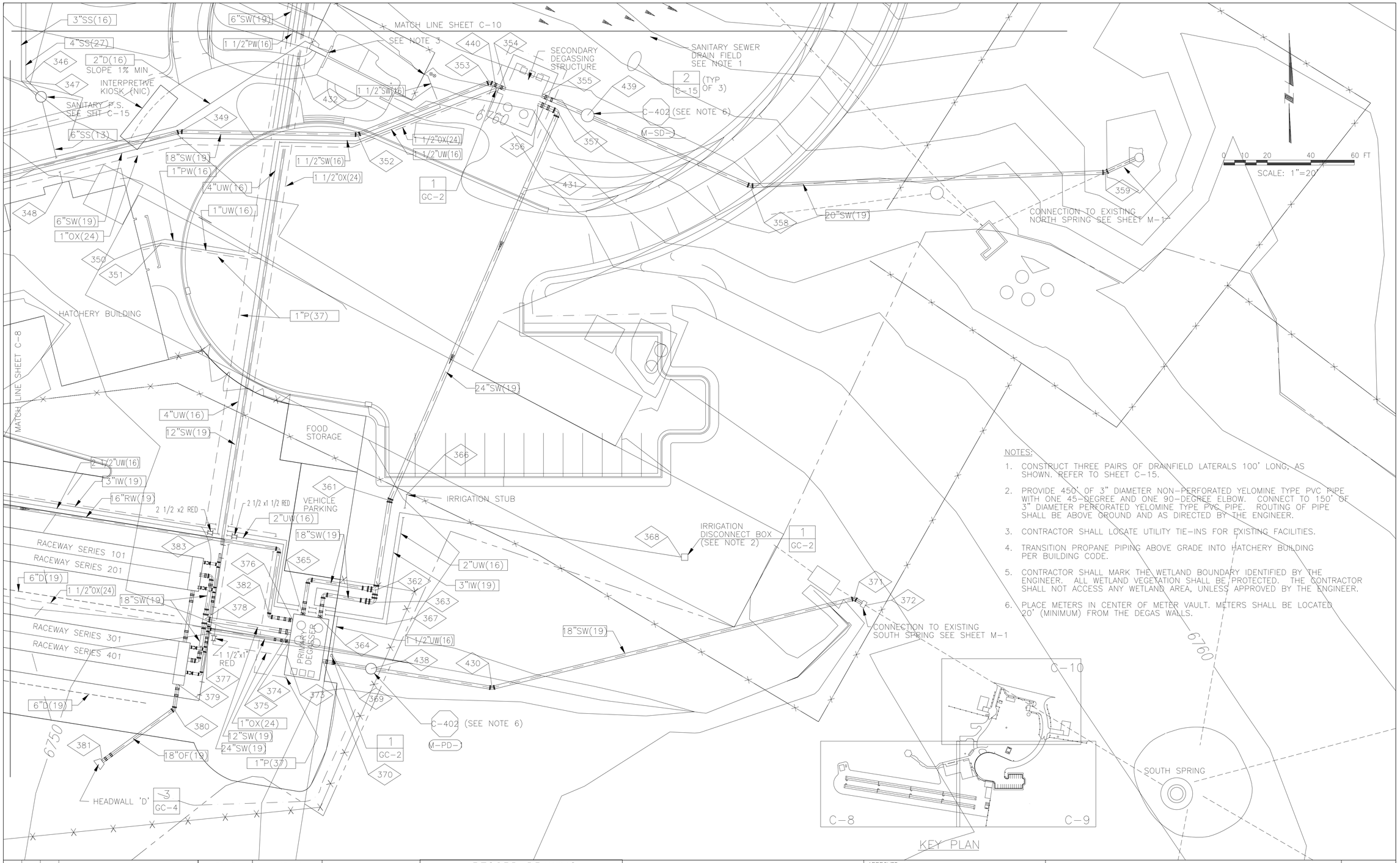

NOTES:

1. CONSTRUCT THREE PAIRS OF DRAINFIELD LATERALS 100' LONG, AS SHOWN. REFER TO SHEET C-15.
2. PROVIDE 450' OF 3" DIAMETER NON-PERFORATED YELOMINE TYPE PVC PIPE WITH ONE 45-DEGREE AND ONE 90-DEGREE ELBOW. CONNECT TO 150' OF 3" DIAMETER PERFORATED YELOMINE TYPE PVC PIPE. ROUTING OF PIPE SHALL BE ABOVE GROUND AND AS DIRECTED BY THE ENGINEER.
3. CONTRACTOR SHALL LOCATE UTILITY TIE-INS FOR EXISTING FACILITIES.
4. TRANSITION PROPANE PIPING ABOVE GRADE INTO HATCHERY BUILDING PER BUILDING CODE.
5. CONTRACTOR SHALL MARK THE WETLAND BOUNDARY IDENTIFIED BY THE ENGINEER. ALL WETLAND VEGETATION SHALL BE PROTECTED. THE CONTRACTOR SHALL NOT ACCESS ANY WETLAND AREA, UNLESS APPROVED BY THE ENGINEER.
6. PLACE METERS IN CENTER OF METER VAULT. METERS SHALL BE LOCATED 20' (MINIMUM) FROM THE DEGAS WALLS.

REV	DATE	BY	DESCRIPTION
R	9/00	PDH	RECORD DRAWINGS

SCALE: 1" = 20'

WARNING: 0 1/2 1 — IF THIS BAR DOES NOT MEASURE 1" THEN DRAWING IS NOT TO SCALE.

DESIGNED E. T. Cryer
DRAWN P. D. Hunter
CHECKED L. H. Allen

RECORD DRAWING

This record drawing has been prepared, in part, on the basis of information compiled and furnished by others. The engineer is not responsible for any errors or omissions which have been incorporated into this document as a result.

MONTGOMERY WATSON
Boise, Idaho

APPROVED ____ DATE ____
APPROVED ____ DATE ____

UTAH DIVISION OF WILDLIFE RESOURCES
KAMAS FISH HATCHERY
YARD PIPING PLAN – 2

SHEET C-9 OF * SHTS

JOB No. 1132073 FILE No. $$$$$$$$$directory/filename$$$$$$$$ $$$$date$$$$ $$time$$

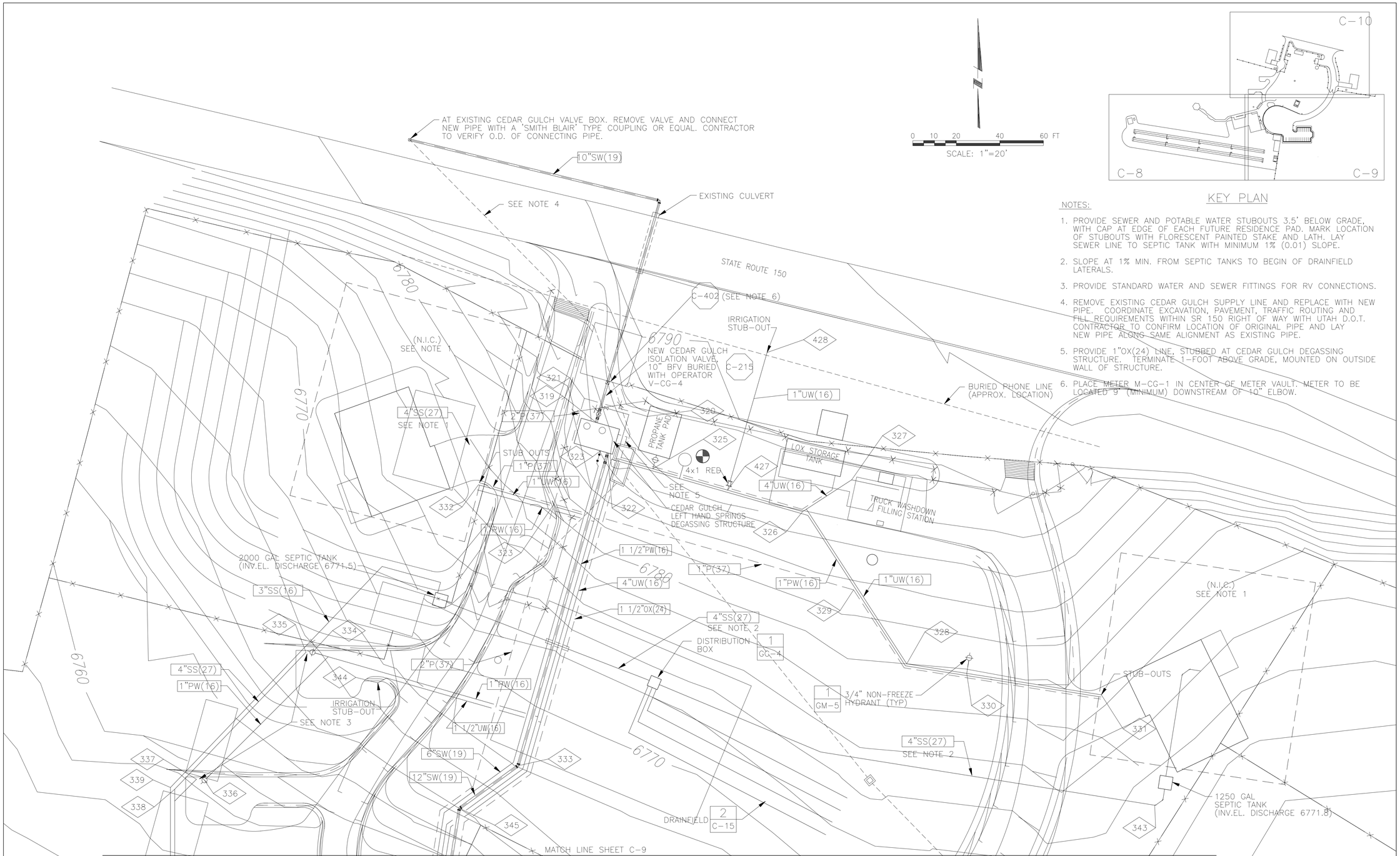

KEY PLAN

0 10 20 40 60 FT
SCALE: 1"=20'

NOTES:

1. PROVIDE SEWER AND POTABLE WATER STUBOUTS 3.5' BELOW GRADE, WITH CAP AT EDGE OF EACH FUTURE RESIDENCE PAD. MARK LOCATION OF STUBOUTS WITH FLORESCENT PAINTED STAKE AND LATH. LAY SEWER LINE TO SEPTIC TANK WITH MINIMUM 1% (0.01) SLOPE.
2. SLOPE AT 1% MIN. FROM SEPTIC TANKS TO BEGIN OF DRAINFIELD LATERALS.
3. PROVIDE STANDARD WATER AND SEWER FITTINGS FOR RV CONNECTIONS.
4. REMOVE EXISTING CEDAR GULCH SUPPLY LINE AND REPLACE WITH NEW PIPE. COORDINATE EXCAVATION, PAVEMENT, TRAFFIC ROUTING AND FILL REQUIREMENTS WITHIN SR 150 RIGHT OF WAY WITH UTAH D.O.T. CONTRACTOR TO CONFIRM LOCATION OF ORIGINAL PIPE AND LAY NEW PIPE ALONG SAME ALIGNMENT AS EXISTING PIPE.
5. PROVIDE 1"OX(24) LINE, STUBBED AT CEDAR GULCH DEGASSING STRUCTURE. TERMINATE 1-FOOT ABOVE GRADE, MOUNTED ON OUTSIDE WALL OF STRUCTURE.
6. PLACE METER M-CG-1 IN CENTER OF METER VAULT. METER TO BE LOCATED 9' (MINIMUM) DOWNSTREAM OF 10" ELBOW.

REV	DATE	BY	DESCRIPTION
R	9/00	PDH	RECORD DRAWINGS

SCALE: 1" = 20'

WARNING: 0 1/2 1 — IF THIS BAR DOES NOT MEASURE 1" THEN DRAWING IS NOT TO SCALE.

DESIGNED E. T. Cryer
DRAWN P. D. Hunter
CHECKED L. H. Allen

RECORD DRAWING

This record drawing has been prepared, in part, on the basis of information compiled and furnished by others. The engineer is not responsible for any errors or omissions which have been incorporated into this document as a result.

MONTGOMERY WATSON
Boise, Idaho

APPROVED ____ DATE
APPROVED ____ DATE

UTAH DIVISION OF WILDLIFE RESOURCES
KAMAS FISH HATCHERY
YARD PIPING PLAN – 3

SHEET C-10 OF * SHTS

JOB No. 1132073 FILE No. $$$$$$$$$directory/filename$$$$$$$$$ $$$$date$$$$ $$time$$

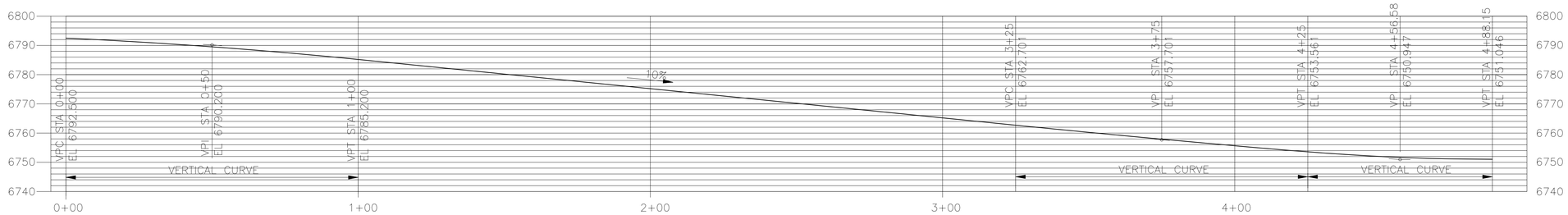

ROAD 'A'

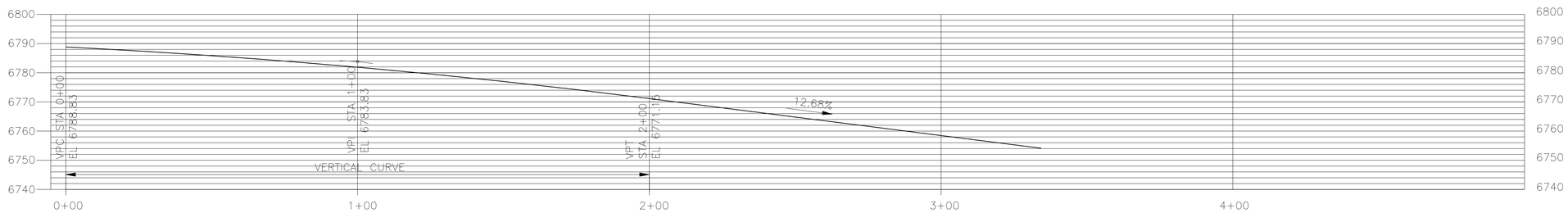

ROAD 'B'

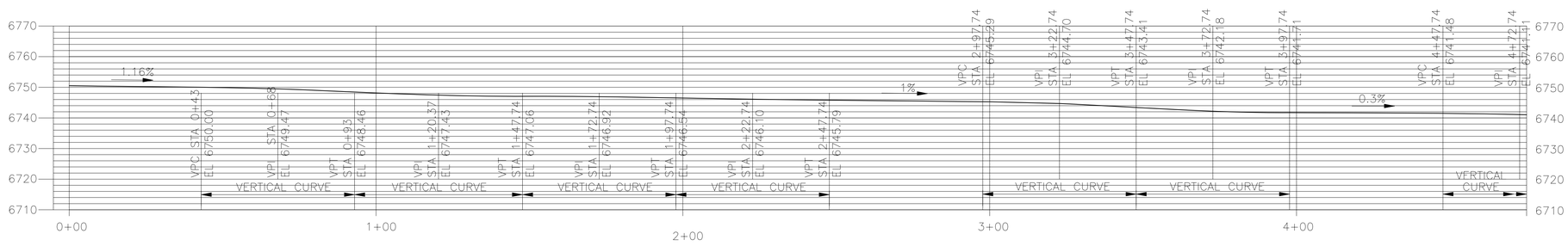

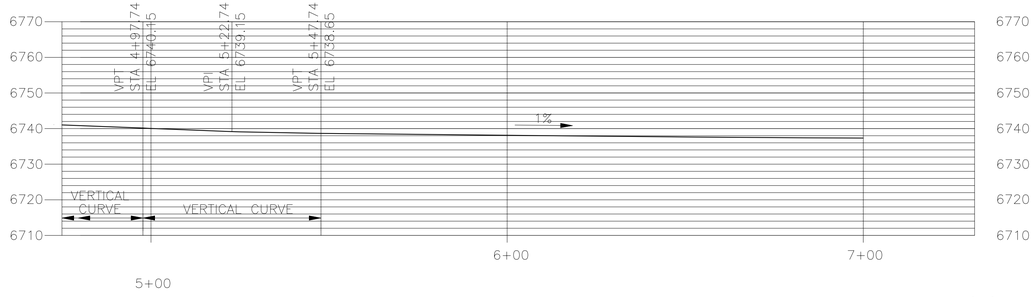

ROAD 'C'

REV	DATE	BY	DESCRIPTION
R	9/00	PDH	RECORD DRAWINGS

SCALE: 1"=20' HORIZ 1"=20' VERT

WARNING 0 1/2 1 IF THIS BAR DOES NOT MEASURE 1" THEN DRAWING IS NOT TO SCALE.

DESIGNED P. R. Walker
DRAWN P. D. Hunter
CHECKED L. H. Allen

RECORD DRAWING

This record drawing has been prepared, in part, on the basis of information compiled and furnished by others. The engineer is not responsible for any errors or omissions which have been incorporated into this document as a result.

MONTGOMERY WATSON
Boise, Idaho

APPROVED _____ DATE
APPROVED _____ DATE

UTAH DIVISION OF WILDLIFE RESOURCES
KAMAS FISH HATCHERY
ROAD PROFILES

SHEET C-11 OF * SHTS

JOB No. 1132073 FILE No. $$$$$$$$$$directory/filename$$$$$$$$$$ $$time$$ $$$$date$$$$

VERTICAL CURVE DATA TABLES

ROAD 'A'

STATION	CENTERLINE ELEVATION (FEET)	EDGE OF PAVEMENT ELEVATION 12.5 FEET RIGHT (FEET)	EDGE OF PAVEMENT ELEVATION 12.5 FEET LEFT (FEET)
VPC 0+00	6792.50	6792.50	6792.50
0+10.1	6792.01	6792.01	6792.01
0+25	6791.18	6791.18	6791.18
0+27.01	6791.06	6791.06	6791.06
0+41.35	6790.14	6790.14	6790.14
VPI 0+50	6789.53	6789.53	6789.53
0+53.98	6789.23	6789.23	6789.23
0+65.39	6788.34	6788.34	6788.34
0+75.88	6787.46	6787.46	6787.46
0+85.65	6786.58	6786.63	6786.63
0+94.82	6785.71	6785.81	6785.81
VPT 1+00	6785.20	6785.33	6785.33
1+03.54	6784.85	6784.99	6784.99
1+08.64	6784.34	6784.50	6784.50
1+17.27	6783.47	6783.68	6783.68
1+25	6782.70	6782.95	6782.95
1+29.45	6782.26	6782.51	6782.51
1+38.08	6781.39	6781.64	6781.64
1+46.72	6780.53	6780.78	6780.78
1+50	6780.20	6780.45	6780.45
1+55.4	6779.66	6779.91	6779.91
1+64.34	6778.77	6779.02	6779.02
1+73.58	6777.84	6778.09	6778.09
1+75	6777.70	6777.95	6777.95
1+83.14	6776.89	677.14	677.14
1+93.07	6775.89	6776.14	6776.14
2+00	6775.20	6775.45	6775.45
2+03.39	6774.86	6775.11	6775.11
2+13.81	6773.82	6774.07	6774.07
2+24.23	6772.78	6773.03	6773.03
2+25	6772.70	6772.95	6772.95
2+50	6770.20	6770.45	6770.45
2+75	6767.70	6767.95	6767.95
3+00	6765.20	6765.45	6765.45
VPC 3+25	6762.70	6762.95	6762.95
3+50	6760.26	6760.51	6760.51
VPI 3+75	6757.92	6758.04	6758.04
4+00	6755.69	6755.69	6755.69
4+23.8	6753.66	6753.66	6753.66
VPT 4+25	6753.56		
4+50	6752.00		
VPI 4+56.58	6751.70		
4+75	6751.16		
VPT 4+88.15	6751.05		

ROAD 'B'

STATION	CENTERLINE ELEVATION (FEET)	EDGE OF PAVEMENT ELEVATION 7.5 FEET RIGHT (FEET)	EDGE OF PAVEMENT ELEVATION 7.5 FEET LEFT (FEET)
VPC 0+00	6788.83	6788.83	6788.83
0+08.43	6788.40	6787.39	6787.39
0+20.62	6787.72	6787.39	6787.39
0+25	6787.46	6787.39	6787.39
0+30.32	6787.14	6787.02	6787.02
0+39.85	6786.53	6786.38	6786.38
0+49.34	6785.90	6785.75	6785.75
0+50	6785.85	6785.70	6785.70
0+75	6784.00	6783.85	6783.85
VPI 1+00	6781.91	6781.76	6781.76
1+25	6779.58	6779.43	6779.43
1+50	6777.01	6776.86	6776.86
1+75	6774.20	6774.05	6774.05
VPT 2+00	6771.15	6771.00	6771.00
2+25	6767.98	6767.83	6767.83
2+50	6764.81	6764.66	6764.66
2+75	6761.64	6761.49	6761.49
3+00	6758.47	6758.32	6758.32
3+25	6755.30	6755.23	6755.23
3+34.2	6754.13		

ROAD 'C'

	STATION	CENTERLINE ELEVATION (FEET)	EDGE OF PAVEMENT ELEVATION 12.0 FEET RIGHT (FEET)	EDGE OF PAVEMENT ELEVATION 12.0 FEET LEFT (FEET)
	0+00.0	6750.50		
	0+16.74	6750.31		
	0+25.00	6750.21		
	VPC 0+43.00	6750.00		
	0+50.00	6749.90	6749.90	6749.90
	VPI 0+60.00	6749.47	6749.47	6749.47
	0+75.00	6749.24	6747.24	6747.24
	VPRC 0+93.00	6748.46	6748.46	6748.46
	1+00.00	6748.13	6748.25	6748.25
	VPI 1+20.37	6747.43	6748.15	6748.15
	1+25.00	6747.32	6748.04	6748.04
	VPRC 1+47.74	6747.06	6747.78	6747.78
	1+50.00	6747.06	6747.78	6747.78
	VPI 1+72.74	6746.92	6747.44	6747.44
	1+75.00	6746.90	6747.38	6747.38
*	VPRC 1+97.74	6746.54	6747.17	6747.17
	2+00.00	6746.49	6747.08	6747.08
	VPI 2+22.74	6746.10	6747.16	6747.16
	2+25.0	6746.07	6746.07	6746.07
	VPT 2+47.74	6745.79	6745.79	6745.79
	2+50.00	6745.77	6745.77	6745.77
	2+75.00	6745.52	6745.52	6745.52
	VPC 2+97.74	6745.29	6745.29	6745.29
	3+00.00	6745.26	6745.26	6745.26
	VPI 3+22.74	6744.70	6744.94	6744.94
*	VPRC 3+47.74	6743.41	6743.97	6743.97
	3+50.00	6743.27	6743.70	6743.70
	VPI 3+72.74	6742.18	6742.36	6742.36
	3+75.00	6742.10	6742.22	6742.22
	VPT 3+97.74	6741.71	6742.07	6742.07
	4+00.00	6741.71	6742.07	6742.07
	4+25.00	6741.63	6741.99	6741.99
	VPC 4+47.74	6741.48	6741.84	6741.84
	4+50.00	6741.47	6741.83	6741.83
	VPI 4+72.74	6741.11	6741.23	6741.23
*	VPRC 4+97.74	6740.15	6740.77	6740.77
	5+00.00	6740.04	6740.68	6740.68
	VPI 5+22.74	6739.15	6739.15	6739.15
	5+25.00	6739.08	6739.08	6739.08
	VPT 5+47.74	6738.65	6738.89	6738.89
	5+50.00	6738.63	6738.87	6738.87
	5+75.00	6738.38	6738.74	6738.74
	5+97.74	6738.15	6738.63	6738.63
	6+00.00	6738.13	6738.61	6738.61
	6+25.00	6737.88	6738.36	6738.36
	6+47.7 4	6737.65	6737.57	6737.57
	6+50.00	6737.63		
	6+75.00	6737.47		
*	6+97.74	6737.35		
	7+00.00	6737.34		

* STATION IS CORRESPONDING TO ONE OF THE COMMON VALVE BOXES – DISTANCE FROM CENTERLINE (LEFT AND RIGHT) IS 6–FEET. ALL OTHER OFFSETS FROM CENTERLINE ARE 12–FEET (LEFT AND RIGHT).

VPRC VERTICAL POINT OF REVERSE CURVE

HORIZONTAL CURVE DATA

ROAD 'A'

CURVE A	
R	50'
△	30.40°
S	26.53'
T	13.58'
CURVE B	
R	180'
△	104.58°
S	328.55'
T	232.82'
CURVE C	
R	36.18'
△	180.00°
S	113.66'
T	---

ROAD 'B'

CURVE D	
R	200'
△	25.99°
S	90.71'
T	46.15'
CURVE E	
R	70'
△	52.76°
S	64.46'
T	34.72'

REV	DATE	BY	DESCRIPTION
R	9/00	PDH	RECORD DRAWINGS

SCALE: NONE

WARNING 0 1/2 1 IF THIS BAR DOES NOT MEASURE 1" THEN DRAWING IS NOT TO SCALE.

DESIGNED L. H. Allen
DRAWN M. R. Waln
CHECKED L. H. Allen

RECORD DRAWING

This record drawing has been prepared, in part, on the basis of information compiled and furnished by others. The engineer is not responsible for any errors or omissions which have been incorporated into this document as a result.

MONTGOMERY WATSON
Boise, Idaho

APPROVED ____ DATE
APPROVED ____ DATE

UTAH DIVISION OF WILDLIFE RESOURCES
KAMAS FISH HATCHERY
ROAD CURVE DATA TABLES

SHEET C11A OF * SHTS

JOB No. 1132073 FILE No. $$$$$$$$$directory/filename$$$$$$$$$ $$time$$ $$$$date$$$$

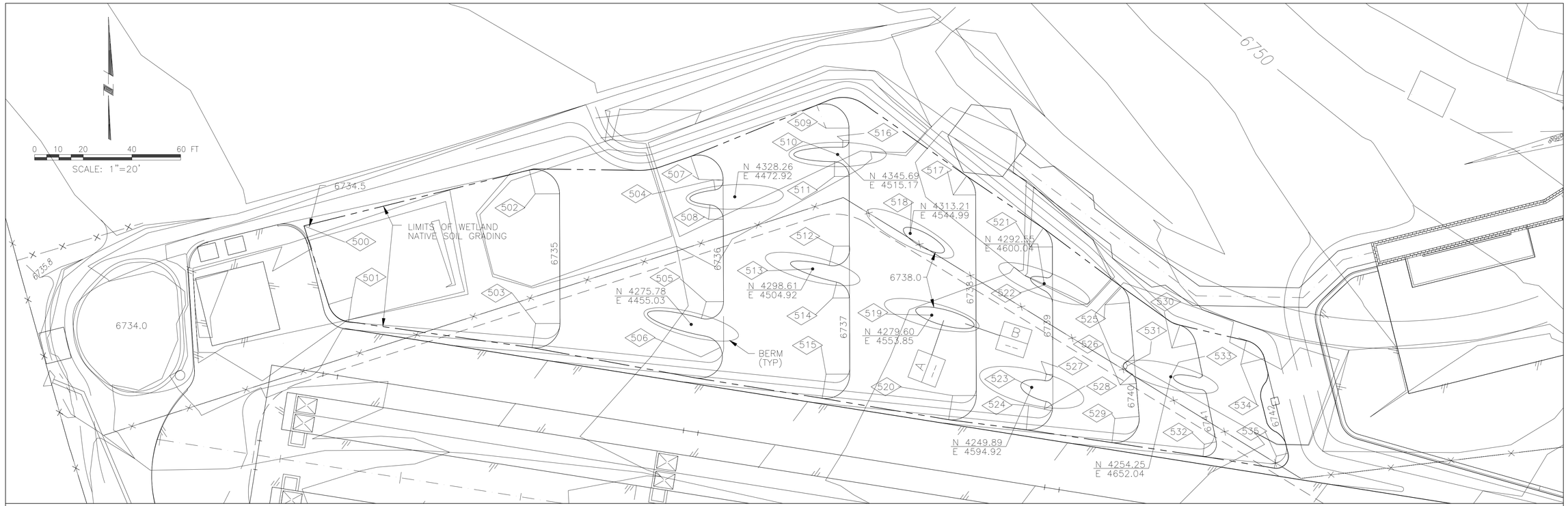

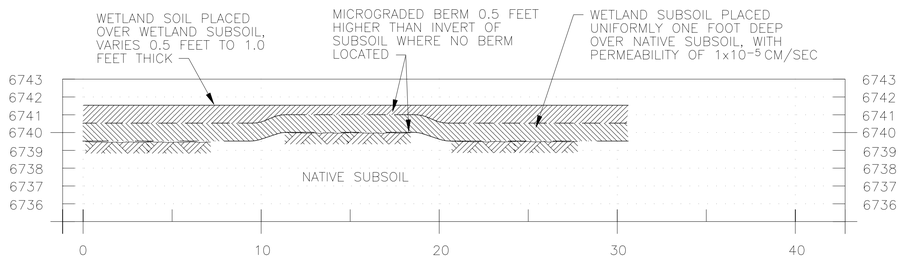

CROSS SECTION OF MICROGRADED BERM (TYP) | A | --

HORIZONTAL SCALE: 1"=5'
VERTICAL SCALE: 1"=4'

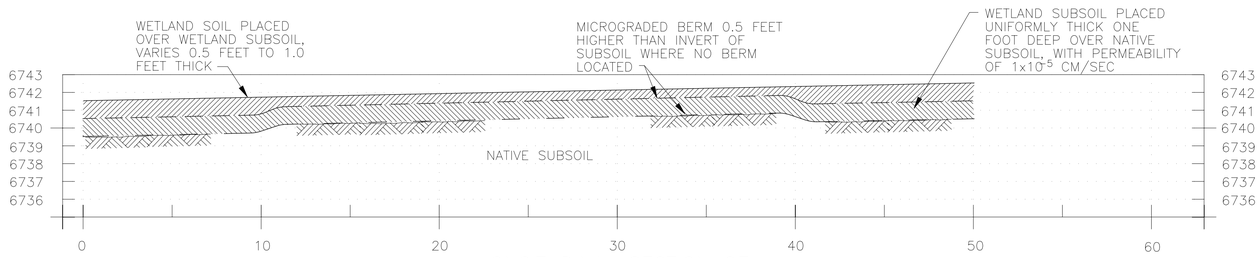

LONGITUDINAL SECTION OF MICROGRADED BERM (TYP) | B | --

HORIZONTAL SCALE: 1"=5'
VERTICAL SCALE: 1"=4'

NOTES:

1. WETLAND DEVELOPMENT AREA = 0.76 ACRE
2. BERMS SHALL BE APPROVED BY ENGINEER PRIOR TO PLACEMENT OF WETLAND SUBSOIL.
3. SEE SPECIFICATIONS, SECTION 02200 (EARTHWORK), FOR WETLAND SOIL AND SUBSOIL REQUIREMENTS.

COORDINATE NO.	NORTHING	EASTING	CURVE RADIUS
500	4316.32	4295.95	---
501	4282.99	4315.67	10'
502	4329.48	4390.95	10'
503	4276.15	4391.10	10'
504	4335.24	4464.28	3'9"
505	4285.14	4461.20	7'1"
506	4262.43	4459.03	8'7"
507	4335.44	4458.14	10'
508	4319.02	4462.15	6'
509	4356.51	4510.42	10'
510	4345.69	4515.17	---
511	4336.63	4513.82	6'
512	4308.00	4513.51	6'10"
513	4292.61	4504.92	---
514	4286.66	4513.21	6'8"
515	4255.31	4510.41	10'
516	4351.45	4517.31	2'8"
517	4329.02	4562.67	10'
518	4313.21	4544.99	---
519	4279.60	4553.85	---
520	4246.51	4562.43	10'
521	4307.59	4594.35	10'
522	4292.55	4600.04	---
523	4249.88	4594.91	---
524	4242.38	4593.61	10'
525	4283.89	4625.03	10'
526	4250.92	4631.25	6'8"
527	4255.21	4600.91	2'8"
528	4240.95	4600.09	3'2"
529	4237.09	4629.06	6'
530	4266.03	4652.52	10'
531	4258.75	4634.25	1'8"
532	4226.50	4665.82	5'
533	4254.25	4652.04	---
534	4259.36	4680.81	10'
535	4221.60	4695.38	5'

REV	DATE	BY	DESCRIPTION
R	9/00	PDH	RECORD DRAWINGS

SCALE: AS SHOWN

WARNING: 0 1/2 1 — IF THIS BAR DOES NOT MEASURE 1" THEN DRAWING IS NOT TO SCALE.

DESIGNED C. Whittaker B. Liming
DRAWN P. Hunter
CHECKED L. H. Allen

RECORD DRAWING

This record drawing has been prepared, in part, on the basis of information compiled and furnished by others. The engineer is not responsible for any errors or omissions which have been incorporated into this document as a result.

MONTGOMERY WATSON
Boise, Idaho

APPROVED ____ DATE
APPROVED ____ DATE

UTAH DIVISION OF WILDLIFE RESOURCES
KAMAS FISH HATCHERY
WETLAND NATIVE SOIL GRADING PLAN

SHEET C-12 OF * SHTS

JOB No. 1132073 FILE No. $$$$$$$$$directory/filename$$$$$$$$ $$$$date$$$$ $$time$$

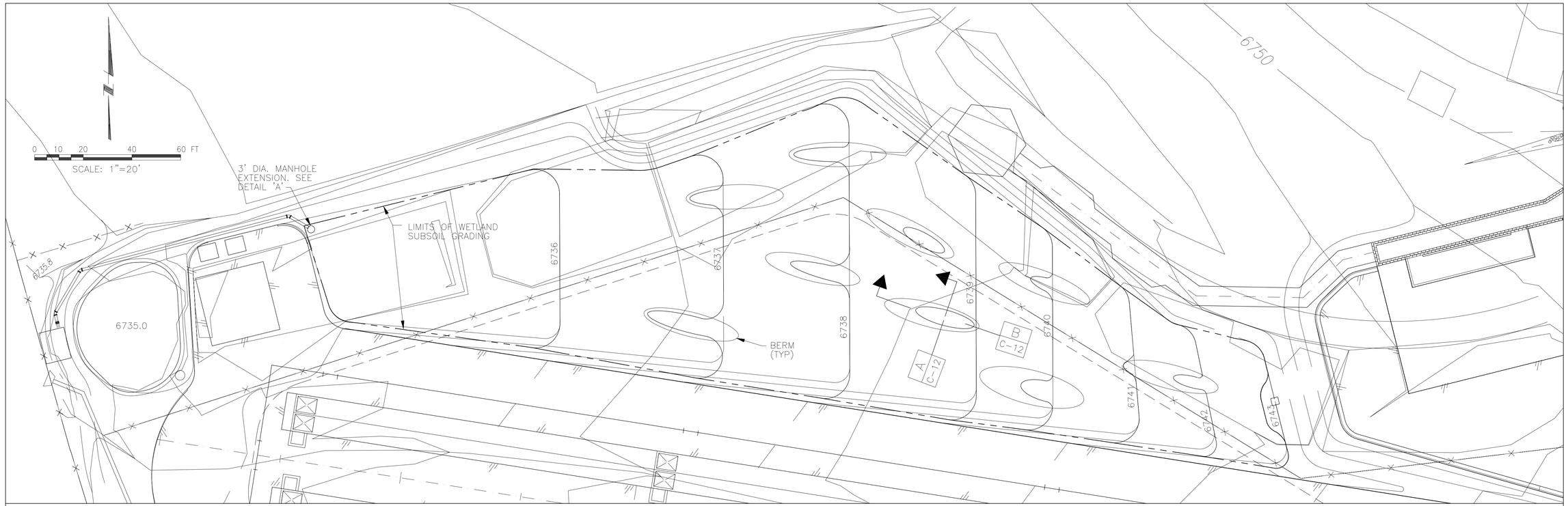

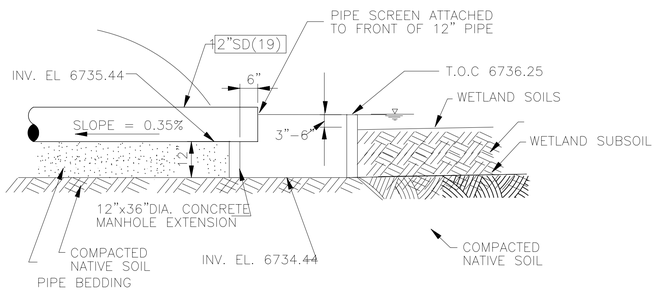

SECTION

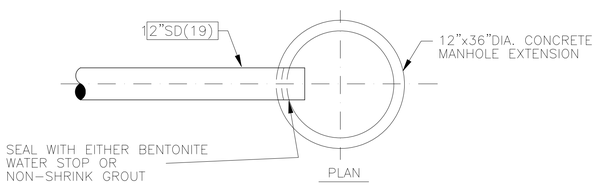

PLAN

DETAIL A
NTS --

NOTES:

1. SUBSOIL GRADING AND BERMS SHALL BE APPROVED BY ENGINEER PRIOR TO PLACEMENT OF WETLAND SOIL.
2. NATIVE SOIL GRADING SHALL BE APPROVED BY ENGINEER PRIOR TO PLACEMENT OF SUBSOIL.

REV	DATE	BY	DESCRIPTION
R	9/00	PDH	RECORD DRAWINGS

SCALE: AS SHOWN

WARNING: 0 1/2 1 — IF THIS BAR DOES NOT MEASURE 1" THEN DRAWING IS NOT TO SCALE.

DESIGNED C. Whittaker B. Liming
DRAWN P. Hunter
CHECKED L. H. Allen

RECORD DRAWING

This record drawing has been prepared, in part, on the basis of information compiled and furnished by others. The engineer is not responsible for any errors or omissions which have been incorporated into this document as a result.

MONTGOMERY WATSON
Boise, Idaho

APPROVED ____ DATE
APPROVED ____ DATE

UTAH DIVISION OF WILDLIFE RESOURCES
KAMAS FISH HATCHERY
WETLAND SUBSOIL GRADING PLAN

SHEET C-13 OF * SHTS

JOB No. 1132073 FILE No. $$$$$$$$$directory/filename$$$$$$$$ $$$$date$$$$ $$time$$

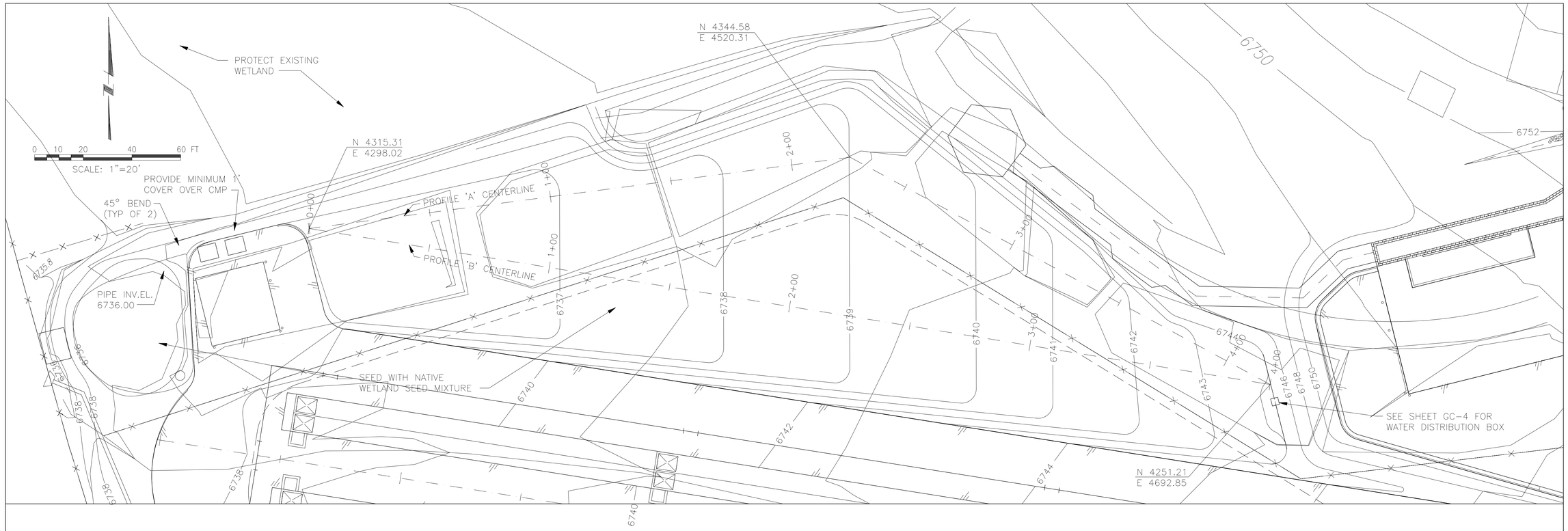

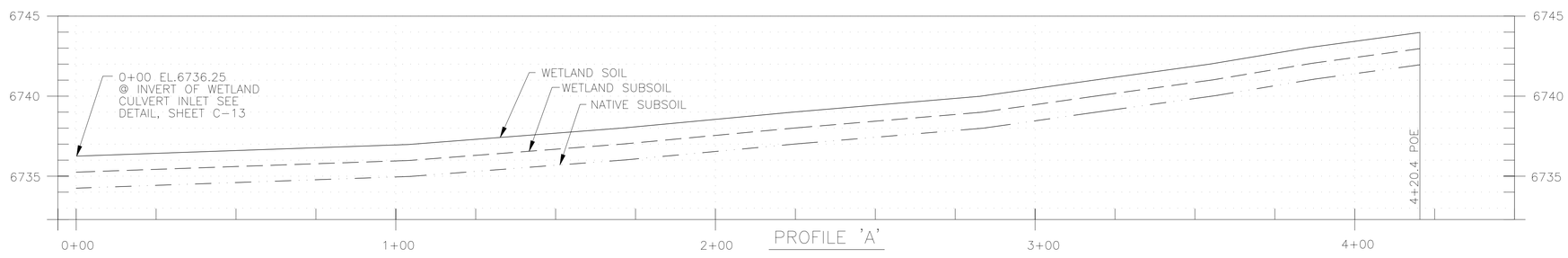

PROFILE 'A'

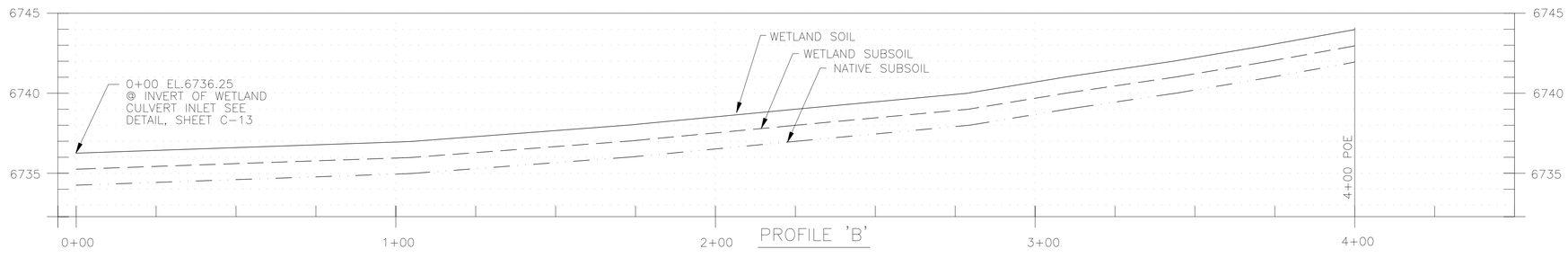

PROFILE 'B'

GENERAL NOTES:

1. FINISHED GRADING SHALL BE APPROVED BY ENGINEER PRIOR TO SEEDING.
2. SEED ENTIRE WETLAND AREA WITH WETLAND SEED MIXTURE. SEE SPECIFICATION SECTION 02900.
3. APPLY SPECIFIED FERTILIZER AS PER SPECIFICATION SECTION 02900.
4. BERMS NOT SHOWN ON PROFILES THIS SHEET.

SCALE:
HORIZONTAL SCALE: 1"=20'
VERTICAL SCALE: 1"=4'

REV	DATE	BY	DESCRIPTION
R	9/00	PDH	RECORD DRAWINGS

SCALE: 1" = 20'

WARNING: 0 1/2 1 — IF THIS BAR DOES NOT MEASURE 1" THEN DRAWING IS NOT TO SCALE.

DESIGNED C. Whittaker B. Liming
DRAWN P. Hunter
CHECKED L. H. Allen

RECORD DRAWING

This record drawing has been prepared, in part, on the basis of information compiled and furnished by others. The engineer is not responsible for any errors or omissions which have been incorporated into this document as a result.

MONTGOMERY WATSON
Boise, Idaho

APPROVED ____ DATE
APPROVED ____ DATE

UTAH DIVISION OF WILDLIFE RESOURCES
KAMAS FISH HATCHERY
FINISHED WETLAND SOIL GRADING PLAN AND PROFILES

SHEET C-14 OF * SHTS

JOB No. 1132073 FILE No. $$$$$$$$$$directory/filename$$$$$$$$$ $$$$date$$ $$time$$

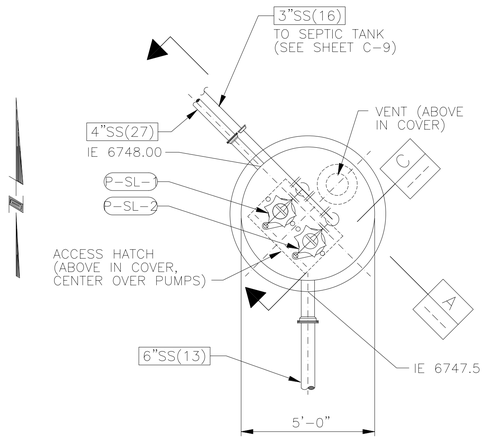

SANITARY PUMP STATION DETAIL | 1 / C-9
NO SCALE

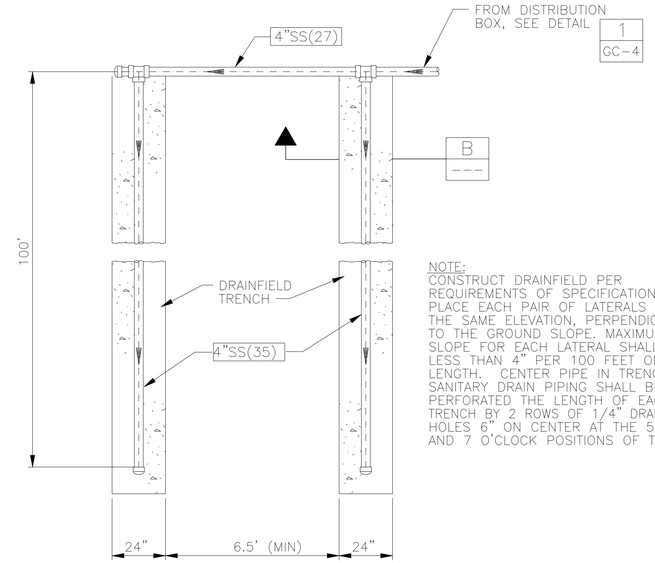

NOTE:
CONSTRUCT DRAINFIELD PER REQUIREMENTS OF SPECIFICATIONS. PLACE EACH PAIR OF LATERALS AT THE SAME ELEVATION, PERPENDICULAR TO THE GROUND SLOPE. MAXIMUM SLOPE FOR EACH LATERAL SHALL BE LESS THAN 4" PER 100 FEET OF LATERAL LENGTH. CENTER PIPE IN TRENCH. SANITARY DRAIN PIPING SHALL BE PERFORATED THE LENGTH OF EACH TRENCH BY 2 ROWS OF 1/4" DRAIN HOLES 6" ON CENTER AT THE 5 O'CLOCK AND 7 O'CLOCK POSITIONS OF THE PIPE.

TYPICAL PAIR OF DRAINFIELD LATERALS | 2 / C-9
NO SCALE

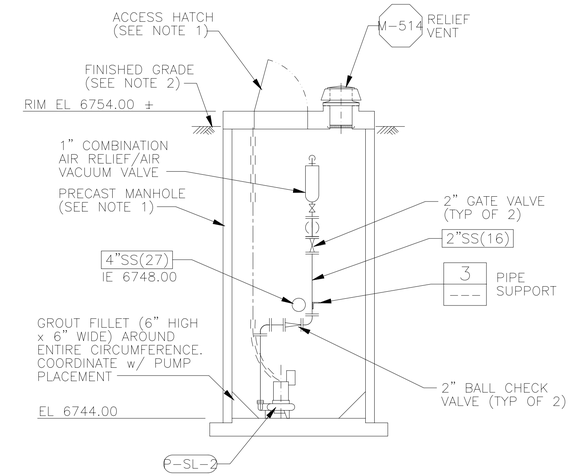

SECTION | C / ---
NO SCALE

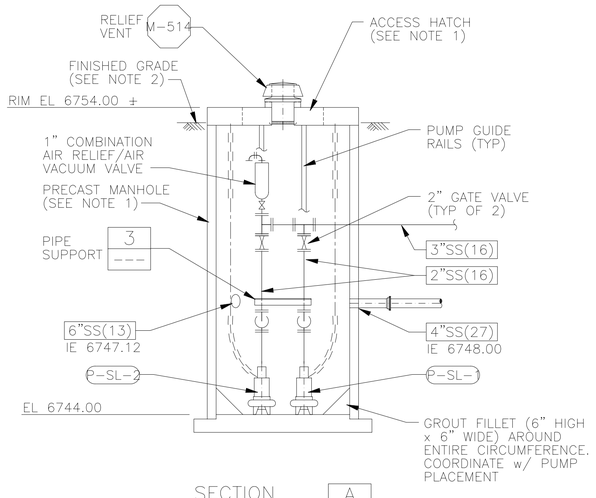

SECTION | A / ---
NO SCALE

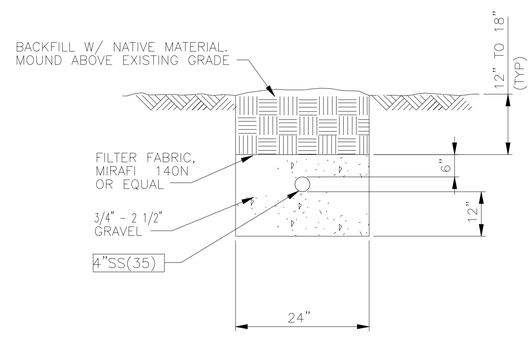

SECTION | B / ---
NO SCALE

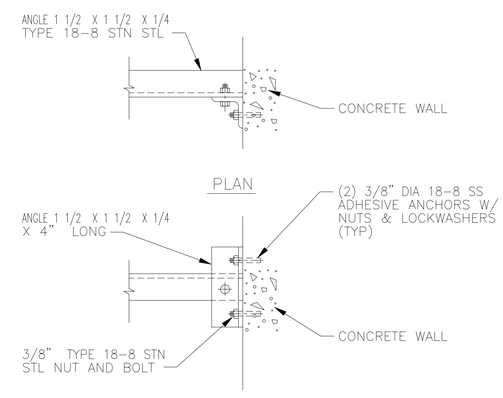

PIPE SUPPORT | 3 / ---
NO SCALE

NOTES:

1. SANITARY PUMP STATION VAULT TO BE CONSTRUCTED FROM PRECAST CONCRETE MANHOLE RINGS PER DETAIL WITHOUT ECCENTRIC CONE. COVER TO BE PRECAST CONCRETE WITH RECTANGULAR, 304 STAINLESS STEEL, HINGED ACCESS HATCH, AS SHOWN. COORDINATE VAULT LAYOUT WITH PUMP MANUFACTURER TO ENSURE THAT DIMENSIONS MATCH PUMPING SYSTEM REQUIREMENTS. HATCH SHALL BE DESIGNED FOR A 200 PSF LOADING. CONTRACTOR TO SUBMIT STRUCTURAL CALCULATIONS
2. FINISHED GRADE TO BE 6" BELOW RIM. SLOPE GRADE AWAY FROM PUMP STATION ON ALL SIDES.

C-402

REV	DATE	BY	DESCRIPTION
R	9/00	PDH	RECORD DRAWINGS

SCALE: AS SHOWN

WARNING: 0 1/2 1 — IF THIS BAR DOES NOT MEASURE 1" THEN DRAWING IS NOT TO SCALE.

DESIGNED P. R. Walker
DRAWN M. R. Waln
CHECKED L. H. Allen

RECORD DRAWING
This record drawing has been prepared, in part, on the basis of information compiled and furnished by others. The engineer is not responsible for any errors or omissions which have been incorporated into this document as a result.

MONTGOMERY WATSON
Boise, Idaho

APPROVED ____ DATE
APPROVED ____ DATE

UTAH DIVISION OF WILDLIFE RESOURCES
KAMAS FISH HATCHERY
WASTEWATER DISPOSAL SYSTEM
DETAILS

SHEET C-15 OF * SHTS

JOB No. 1132073 FILE No. $$$$$$$$$$directory/filename$$$$$$$$$$ $$time$$ $$$$$date$$$$$

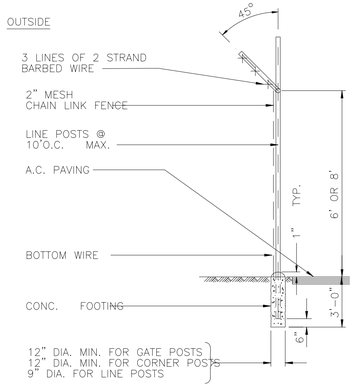

NOTE:

EXTENSION ARM MAY BE TURNED IN. AT OPTION OF OWNER.

SPECIFICATION

BARBED WIRE . . . . . 2 STRANDS OF NO. 12 1/2 STEEL WIRE WITH 4 POINT BARBS.

. . FABRIC . . . . . NO. 9 GALV. STEEL WIRE, 2" MESH.

FABRIC TIES . . . . . NO. 9 GALV. STEEL WIRE SPACED 14" APART ON POSTS AND 24" APART ON RAILS.

CORNER POST . . . . . 3" O.D. PIPE, 5.79#/FT.

LINE POSTS . . . . . 2.25" H – COLUMN SECTION, 4.1#/FT. OR STD. WEIGHT 2 1/2" O.D. PIPE, 3.65#/FT.

SWING GATE POSTS. . . . 4" O.D. PIPE, 9.1#/FT.

TOP RAIL & BRACES. . . 1 5/8" O.D. PIPE, 2.27#/FT. OR 1 1/2" x 1 5/16" H – COLUMN SECTION, 2.00#/FT.

BOTTOM WIRE . . . . . COIL SPRING WIRE 7 GA.

ALL FENCING MATERIALS. . TO BE HOT – DIPPED GALVANIZED AFTER FABRICATION.

CHAIN LINK FENCE DETAIL — C-101

1. ALTERNATIVE TRENCH SECTIONS (A,B, AND C) ARE FOR USE ONLY WHERE STABLE, COMPACT SOIL CONDITIONS EXIST. WHERE BOULDERS OR LARGE OBSTRUCTIONS ARE ENCOUNTERED, THE TRENCH SECTIONS MAY BE WIDER & DEEPER THAN THAT SHOWN:
   A. VERTICAL TRENCH WALLS – SECTION
      1. THE NEED FOR PROTECTIVE SYSTEMS SHALL BE DETERMINED IN ACCORDANCE WITH THE STATE STANDARDS AND REGULATIONS.
      2. PROTECTIVE SYSTEMS SHALL BE DESIGNED AND BUILT IN ACCORDANCE WITH APPLICABLE STATE STANDARDS AND REGULATIONS.
   B. SLOPING TRENCH WALLS – SECTION
      1. SLOPING TRENCH WALL SECTION SHALL NOT BE USED WITHOUT APPROVAL OF ENGINEER, UNLESS SPECIFICALLY DESIGNATED ON PLANS OR SPECIFICATIONS.
      2. UNSUPPORTED SLOPING TRENCH WALLS SHALL NOT BE STEEPER THAN ALLOWED BY APPLICABLE SAFETY STANDARDS AND REGULATIONS.
   C. COMBINATION OF VERTICAL AND SLOPING TRENCH WALLS – SECTION
      1. TRENCH DEPTHS NOT EXCEEDING 5 FEET SHALL HAVE VERTICAL WALLS IN PIPE ZONE UNLESS OTHERWISE APPROVED, BY ENGINEER, OR WHERE SPECIFIED.
      2. FOR TRENCHES WITH COMBINED WALLS AND ANY DEPTH EXCEEDING 5 FEET, DESIGN CALCULATIONS BY A REGISTERED CIVIL ENGINEER AND APPROVAL BY GOVERNING AGENCY OF SUPPORTED METHODS ARE REQUIRED.
2. WHERE WET, UNSTABLE OR RUNNING SOIL IS ENCOUNTERED, A SYSTEM SHALL BE DESIGNED AND BUILT IN ACCORDANCE WITH APPLICABLE SAFETY STANDARDS AND REGULATIONS TO PROTECT EMPLOYEES AND PREVENT CAVE INS.
3. FOR TRENCHES WITH MULTIPLE PIPES, PROVIDE ADEQUATE SPACING BETWEEN PIPES TO ACHIEVE COMPACTION REQUIREMENTS AROUND ALL PIPES.

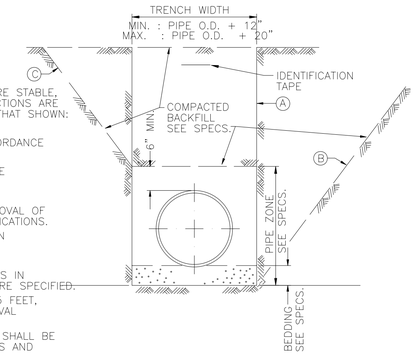

TYPICAL TRENCH SECTION — C-204

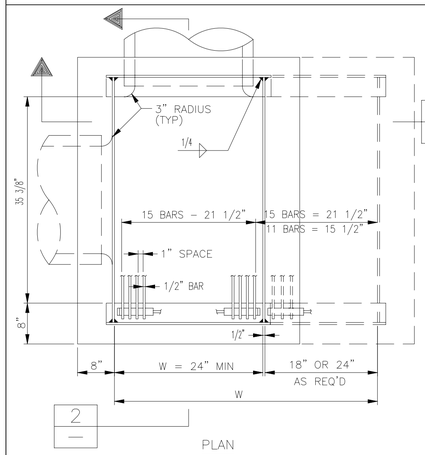

PLAN

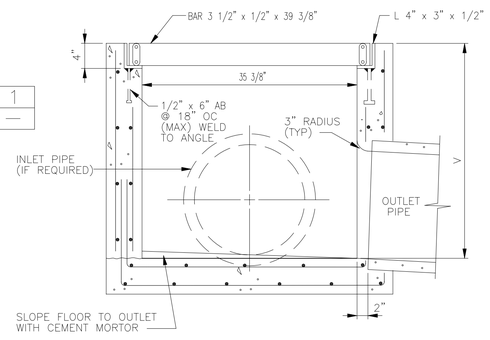

SECTION 2

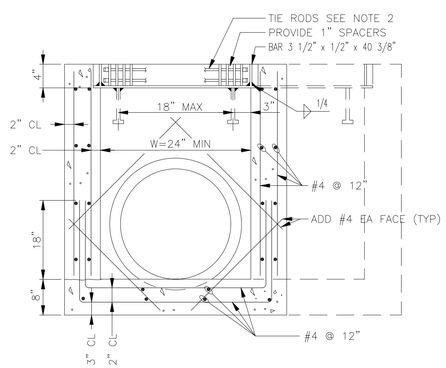

SECTION 1

NOTES:

1. GRATING AND FRAME SHALL BE GALVANIZED AFTER FABRICATION. ALL DIMENSIONS ARE FINISH DIMENSIONS AND INCLUDE GALVANIZING.
2. TIE RODS FOR GRATING SHALL BE 1/2" DIA. x 23 1/2" BOLT THREADED 1 1/4" ON BOTH ENDS. USE TWO 1/2" DIA. NUTS EACH END. ALL GALVANIZED.
3. FOR LOCATION OF OUTLET PIPE AND INLET PIPE IF REQUIRED SEE PLANS.
4. IF INSTALLED IN A TRAFFIC AREA, GRATING BARS SHALL BE ORIENTED PERPENDICULAR TO FLOW OF TRAFFIC.
5. IF CATCH BASIN IS 5 FEET OR DEEPER PROVIDE INDIVIDUAL RUNG LADDER OR FIXED LADDER CONFORMING TO OSHA REQUIREMENTS.

CATCH BASIN DATA

NO.	W	V	TOP ELEVATION	INVERT OF INLET	INVERT OF OUTLET	PIPE SIZE INLET	PIPE SIZE OUTLET
CB-1	24"	30"	6754.5	---	6752.0	---	12"
CB-2	24"	24"	6750.5	6749.0	6748.5	12"	12"
CB-3	24"	24"	6750.2	6748.5	6748.2	12"	12"
CB-4	24"	24"	6751.0	---	6749.0	---	12"
CB-5	24"	24"	6788.5	---	6786.5	---	8"

CATCH BASIN DETAILS — C-106

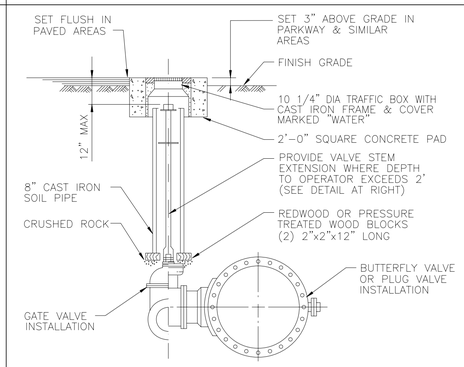

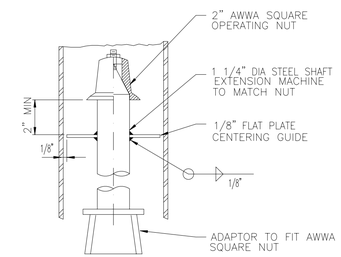

NOTES:

1. PROVIDE PROTECTIVE COATING TO EXTERIOR SURFACE OF VALVE BODY IN ACCORDANCE WITH SPECIFICATIONS.
2. FOR LUBRICATED PLUG VALVE, EXTEND LUBRICATION LINE TO GRADE PER MANUFACTURER'S INSTRUCTIONS.
3. CONTRACTOR TO PROVIDE EXTENSION TEE HANDLE.

BURIED VALVE INSTALLATION — C-215

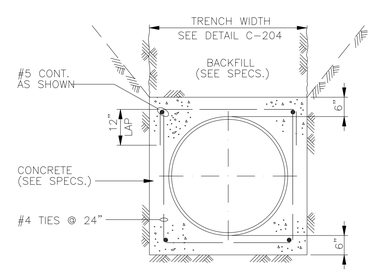

CONCRETE ENCASEMENT DETAIL — C-228

REV	DATE	BY	DESCRIPTION
R	9/00	PDH	RECORD DRAWINGS

SCALE: NONE

WARNING: 0 1/2 1 — IF THIS BAR DOES NOT MEASURE 1" THEN DRAWING IS NOT TO SCALE.

DESIGNED ---
DRAWN ---
CHECKED L. H. Allen

RECORD DRAWING

This record drawing has been prepared, in part, on the basis of information compiled and furnished by others. The engineer is not responsible for any errors or omissions which have been incorporated into this document as a result.

MONTGOMERY WATSON
Boise, Idaho

APPROVED ____ DATE
APPROVED ____ DATE

UTAH DIVISION OF WILDLIFE RESOURCES
KAMAS FISH HATCHERY
STANDARD CIVIL DETAILS – 1

SHEET GC-1 OF * SHTS

JOB No. 1132073 FILE No. $$$$$$$$$directory/filename$$$$$$$$$ $$$$date$$$$ $$time$$

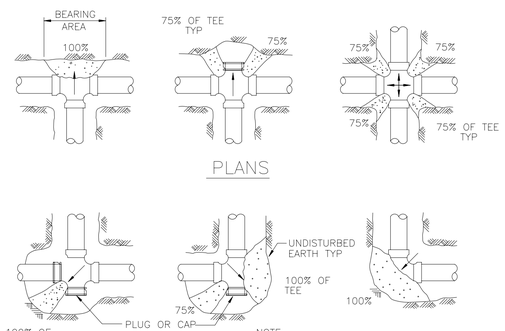

NOTE:
ARROWS (←) INDICATE THRUST DIRECTION

NOTE:
FIGURE (100%) AT THRUST BLOCK INDICATES PERSENT OF TOTAL THRUST TO BE APPLIED FOR BEARING AREA.

THRUST PER PSI OF WATER PRESSURE AT VARIOUS FITTINGS				
PIPE SIZE	DEAD END OR TEE	90° ELBOW	45° ELBOW	22 1/2 ° ELBOW
4	19	27	15	7
6	39	55	30	15
8	67	94	51	26
10	109	154	84	43
12	155	218	119	61
14	210	296	161	82
16	275	383	209	106
18	351	494	269	137
20	434	611	333	169
24	623	878	478	244
30	971	1379	757	377
36	1400	1988	1078	539
42	1904	2704	1485	743
48	2487	3531	1940	970

EXAMPLE:
8-INCH 90° ELBOW, PRESSURE=200 lb/SQ IN
FROM TABLE: THRUST=94 x 200=18,800 lb
ASSUME BEARING STRENGTH OF SOIL=2000 lb/SQ FT

$\frac{18,800}{2000}$ =9.4 SQ FT= AREA OF BEARING REQUIRED FOR THRUST BLOCK

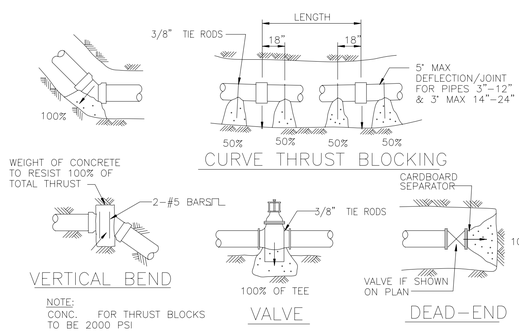

NOTE:
CONC. FOR THRUST BLOCKS TO BE 2000 PSI

SIDE THRUST PERM 100 lb/SQ IN PRESSURE PER DEGREE OF DEFLECTION			
PIPE SIZE	SIDE THRUST-lb.	PIPE SIZE	SIDE THRUST-lb.
4	35	14	377
6	72	16	486
8	122	18	665
10	197	20	790
12	278	24	1150

MULTIPLY THRUST BY DEGREE OF DEFLECTION TO OBTAIN TOTAL THRUST

NOTES:

1. IN USING THE ABOVE TABLES, USE THE MAXIMUM INTERNAL PRESSURE ANTICIPATED (i.e. HYDROSTATIC TEST PRESSURE, POSSIBLE SURGE PRESSURE DUE TO PUMP SHUT-OFF, ETC.
2. SEE SOILS REPORT FOR BEARING STRENGTH OF SOIL. IN THE ABSENCE OF A SOILS REPORT, AN AVERAGE SOIL (SPADABLE MEDIUM CLAY) CAN BE ASSUMED TO HAVE A BEARING STRENGTH OF 2000 PSF.
3. THRUST BLOCKS ARE NOT REQUIRED ON PVC PIPE WITH SOLVENT WELDED JOINTS.

CONCRETE THRUST BLOCKS FOR CAST IRON AND PVC PIPE — C-224

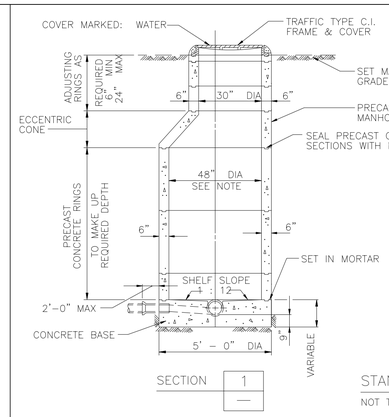

SECTION 1 —

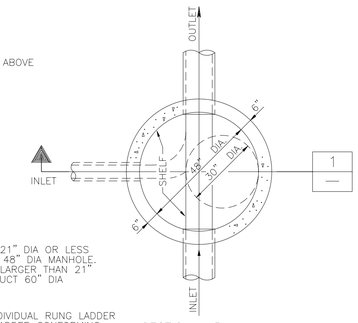

NOTE:

1. FOR PIPES 21" DIA OR LESS CONSTRUCT 48" DIA MANHOLE. FOR PIPES LARGER THAN 21" DIA CONSTRUCT 60" DIA MANHOLE.
2. PROVIDE INDIVIDUAL RUNG LADDER OR FIXED LADDER CONFORMING TO OSHA REQUIREMENTS.

SECTIONAL PLAN

STANDARD SEWER MANHOLE WITH ECCENTRIC CONE — C-224

NOT TO SCALE

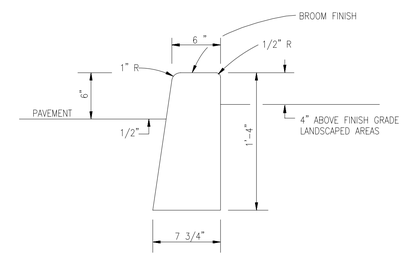

CEMENT CONCRETE BARRIER CURB — C-105

NTS

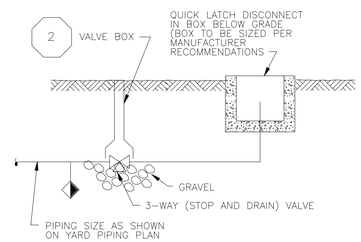

IRRIGATION DISCONNECT — 1 / C-9

NTS

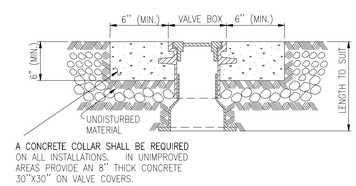

A CONCRETE COLLAR SHALL BE REQUIRED ON ALL INSTALLATIONS. IN UNIMPROVED AREAS PROVIDE AN 8" THICK CONCRETE 30"X30" ON VALVE COVERS.

VALVE BOX DETAIL — 2

NTS

REV	DATE	BY	DESCRIPTION
R	9/00	PDH	RECORD DRAWINGS

SCALE: NONE

WARNING: 0 1/2 1 — IF THIS BAR DOES NOT MEASURE 1" THEN DRAWING IS NOT TO SCALE.

DESIGNED ---
DRAWN ---
CHECKED L. H. Allen

RECORD DRAWING

This record drawing has been prepared, in part, on the basis of information compiled and furnished by others. The engineer is not responsible for any errors or omissions which have been incorporated into this document as a result.

MONTGOMERY WATSON
Boise, Idaho

APPROVED ____ DATE
APPROVED ____ DATE

UTAH DIVISION OF WILDLIFE RESOURCES
KAMAS FISH HATCHERY
STANDARD CIVIL DETAILS - 2

SHEET GC-2 OF * SHTS

JOB No. 1132073 FILE No. $$$$$$$$$directory/filename$$$$$$$$$
$$time$$
$$date$$

NOTES:
1. 1/2" EXPANSION JOINT MATERIAL AT TERMINAL POINTS OF RADII
2. CONTINUOUS PLACEMENT PREFERRED, SCORE INTERVALS AT 8 FEET MIN.

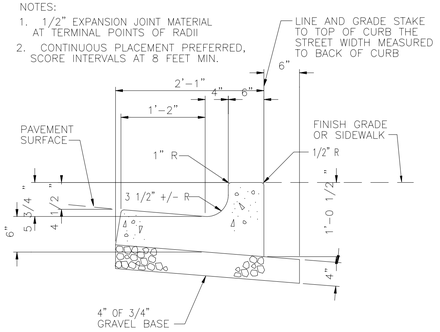

VERTICAL CURB AND GUTTER — 1 / VAR

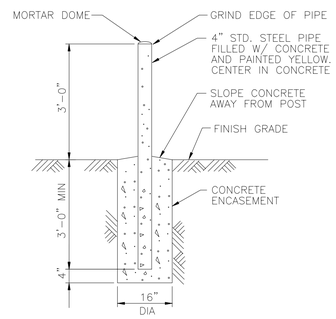

BOLLARD DETAIL — 2 / VAR

NOTES:
1. 1/2" EXPANSION JOINT MATERIAL AT TERMINAL POINTS OF RADII
2. CONTINUOUS PLACEMENT PREFERRED, SCORE INTERVALS AT 8 FEET MIN.

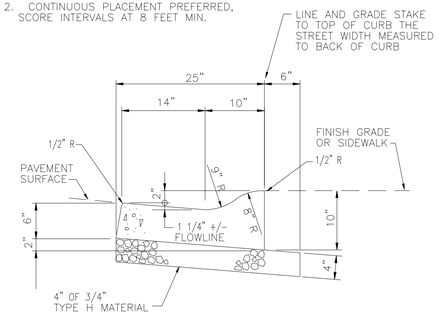

ROLLED CURB AND GUTTER — 3 / VAR

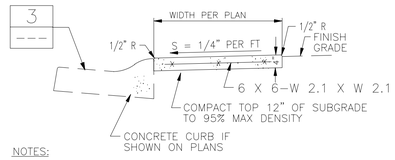

NOTES:
1. SIDEWALK SHALL BE CONSTRUCTED OF PORTLAND CEMENT CONCRETE.
2. EXPANSION JOINTS OF ONE-HALF INCH RIGID BITUMINOUS MATERIAL SHALL BE PLACED AT APPROXIMATELY 10-FOOT SPACING.
3. SCORE LINES AT RIGHT ANGLES TO CENTERLINE SHALL BE MARKED AT 60-INCH INTERVALS.
4. SIDEWALK SURFACE SHALL BE TROWELED AND BROOM FINISHED.
5. BRICK PAVERS SHALL BE PLACED ALONG SIDEWALK AS SHOWN ON SHEET C-5.

CONCRETE SIDEWALK — 4 / VAR

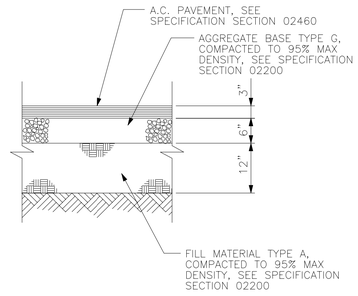

AC PAVEMENT DETAIL — 5 / VAR

NOTE:
CONTRACTOR SHALL ACCOUNT FOR ROAD CROWN AT GATES "A" AND "B" TO ENSURE THAT GATES CLEAR THE ROAD CENTERLINE BY 6" AND THAT GATES ARE LEVEL.

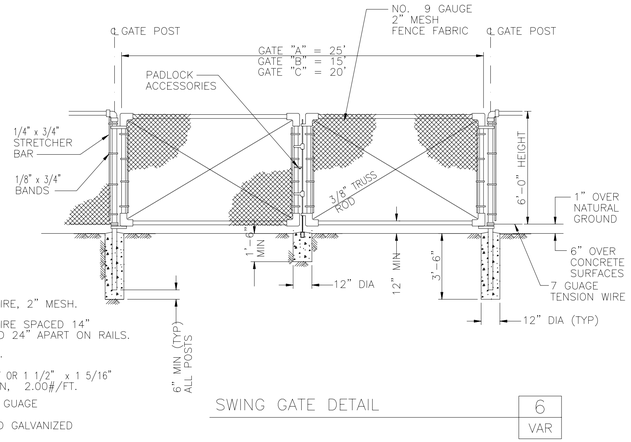

SPECIFICATION

FABRIC. . . . . .NO. 9 GALV STEEL WIRE, 2" MESH.
FABRIC TIES. . . . . NO. 9 GALV STEEL WIRE SPACED 14" APART ON POSTS AND 24" APART ON RAILS.
SWING GATE POSTS. . . . . 4" OD PIPE, 9.1#/FT.
TOP RAIL & BRACES. . . . 1 5/8" OD PIPE, 2.27#/FT OR 1 1/2" x 1 5/16" H - COLUMN SECTION, 2.00#/FT.
BOTTOM WIRE. . . . . .COIL SPRING WIRE 7 GUAGE
ALL FENCING MATERIALS . .TO BE HOT - DIPPED GALVANIZED AFTER FABRICATION.

SWING GATE DETAIL — 6 / VAR

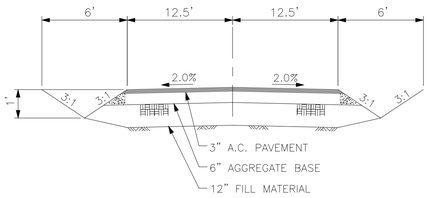

NOTE:
SEE AC PAVEMENT DETAIL 5, THIS SHEET, FOR MATERIALS AND SPECIFICATIONS.

TYPICAL ROAD SECTION - ROAD "A" — 7 / VAR

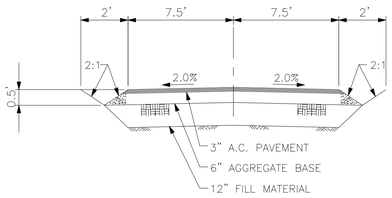

NOTE:
SEE AC PAVEMENT DETAIL 5, THIS SHEET, FOR MATERIALS AND SPECIFICATIONS.

TYPICAL ROAD SECTION - ROAD "B" — 8 / VAR

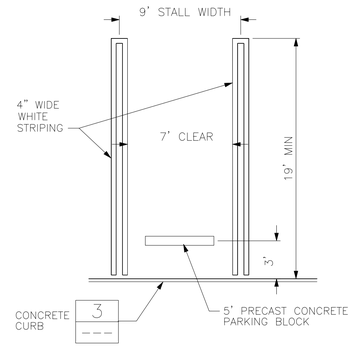

PARKING STALL — 9 / VAR

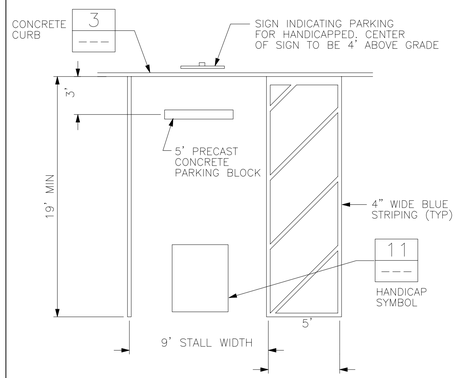

HANDICAPPED PARKING STALL — 10 / VAR

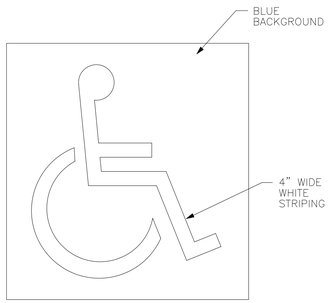

HANDICAPPED SYMBOL — 11 / VAR

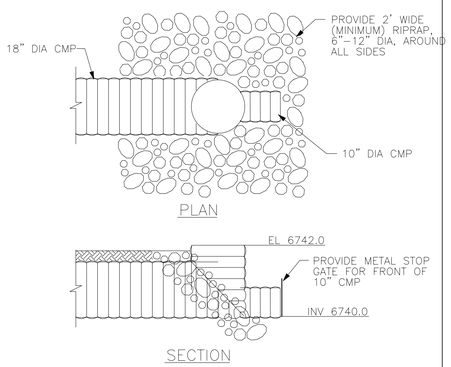

PIPE INLET — 12 / VAR

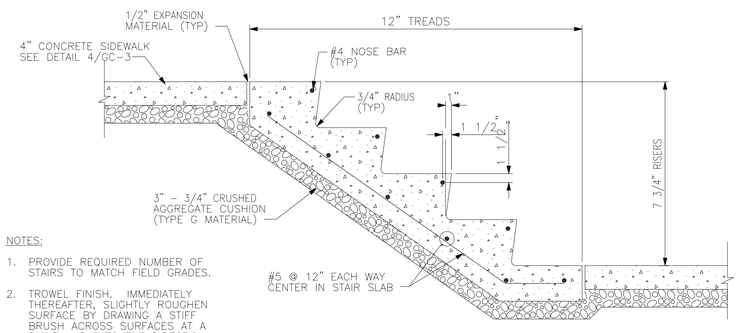

NOTES:
1. PROVIDE REQUIRED NUMBER OF STAIRS TO MATCH FIELD GRADES.
2. TROWEL FINISH. IMMEDIATELY THEREAFTER, SLIGHTLY ROUGHEN SURFACE BY DRAWING A STIFF BRUSH ACROSS SURFACES AT A RIGHT ANGLE TO THE DIRECTION OF TRAFFIC.

EXTERIOR CONCRETE STAIR DETAIL — 13 / GC-3

REV	DATE	BY	DESCRIPTION
R	9/00	PDH	RECORD DRAWINGS

SCALE: NONE

WARNING: 0 1/2 1 — IF THIS BAR DOES NOT MEASURE 1" THEN DRAWING IS NOT TO SCALE.

DESIGNED ---
DRAWN ---
CHECKED L. H. Allen

RECORD DRAWING
This record drawing has been prepared, in part, on the basis of information compiled and furnished by others. The engineer is not responsible for any errors or omissions which have been incorporated into this document as a result.

MONTGOMERY WATSON
Boise, Idaho

APPROVED ____ DATE
APPROVED ____ DATE

UTAH DIVISION OF WILDLIFE RESOURCES
KAMAS FISH HATCHERY
MISCELLANEOUS CIVIL DETAILS - 1

SHEET GC-3 OF * SHTS

JOB No. 1132073 FILE No. $$$$$$$$$$directory/filename$$$$$$$$$$ $$$date$$$$ $$time$$

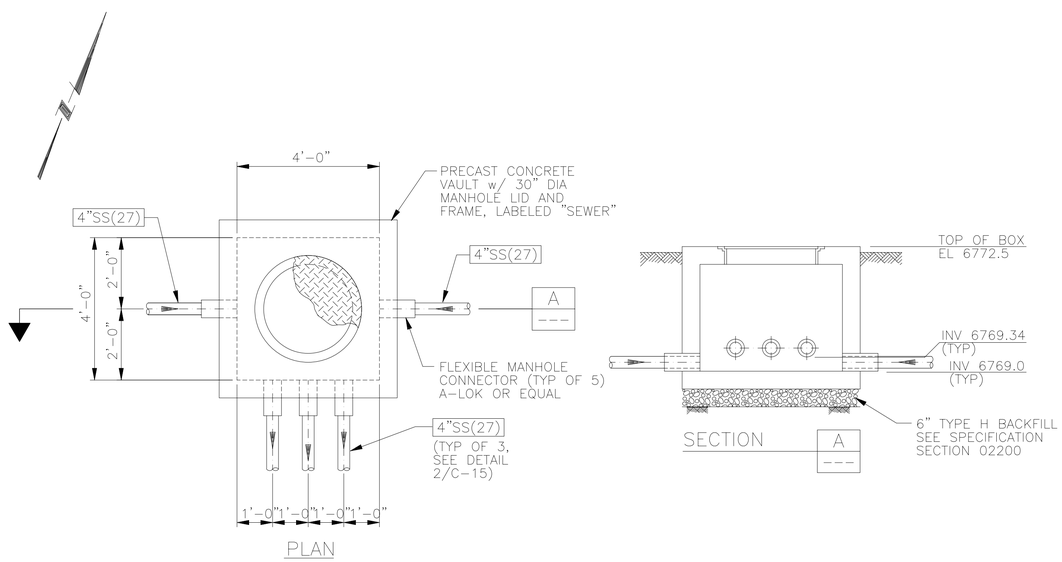

DRAINFIELD DISTRIBUTION BOX DETAIL — 1 / VAR

SCALE : 1/2"= 1'-0"

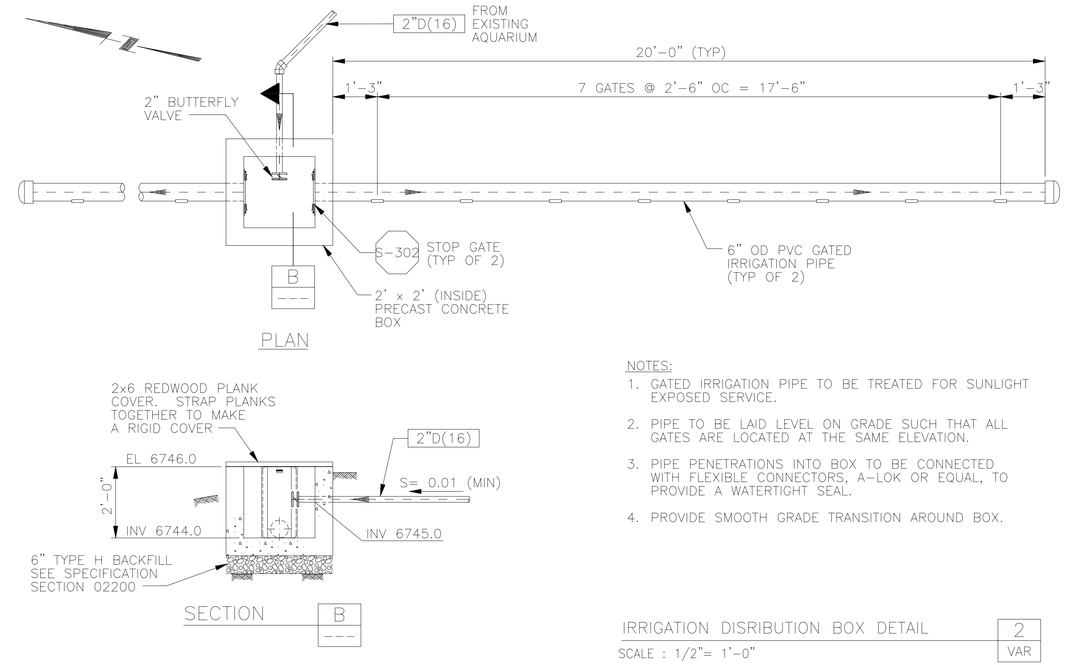

NOTES:

1. GATED IRRIGATION PIPE TO BE TREATED FOR SUNLIGHT EXPOSED SERVICE.
2. PIPE TO BE LAID LEVEL ON GRADE SUCH THAT ALL GATES ARE LOCATED AT THE SAME ELEVATION.
3. PIPE PENETRATIONS INTO BOX TO BE CONNECTED WITH FLEXIBLE CONNECTORS, A-LOK OR EQUAL, TO PROVIDE A WATERTIGHT SEAL.
4. PROVIDE SMOOTH GRADE TRANSITION AROUND BOX.

IRRIGATION DISRIBUTION BOX DETAIL — 2 / VAR

SCALE : 1/2"= 1'-0"

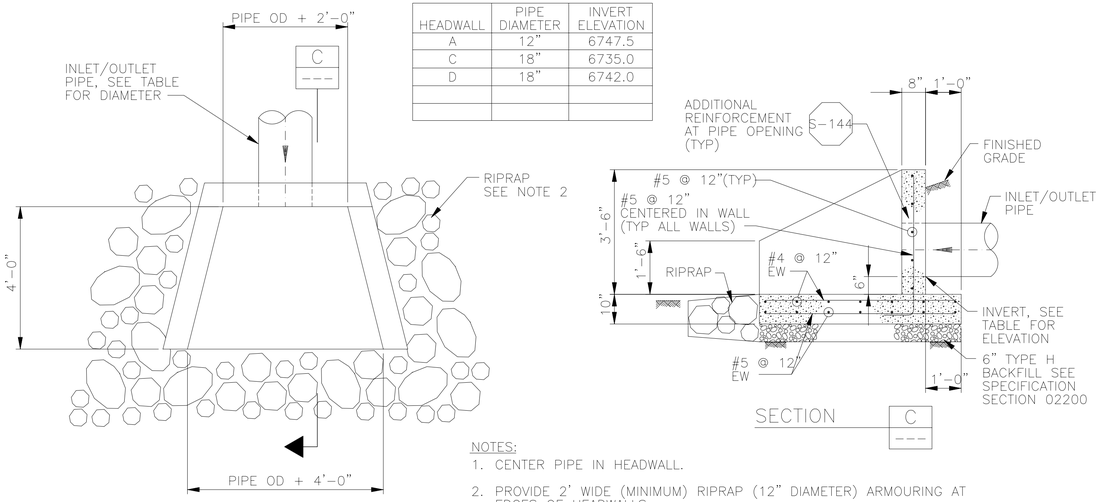

HEADWALL	PIPE DIAMETER	INVERT ELEVATION
A	12"	6747.5
C	18"	6735.0
D	18"	6742.0

NOTES:

1. CENTER PIPE IN HEADWALL.
2. PROVIDE 2' WIDE (MINIMUM) RIPRAP (12" DIAMETER) ARMOURING AT EDGES OF HEADWALLS.
3. REINFORCEMENT SHOWN IS TYPICAL FOR ALL HEADWALLS.

HEADWALL DETAIL — 3 / VAR

SCALE : 1/2"= 1'-0"

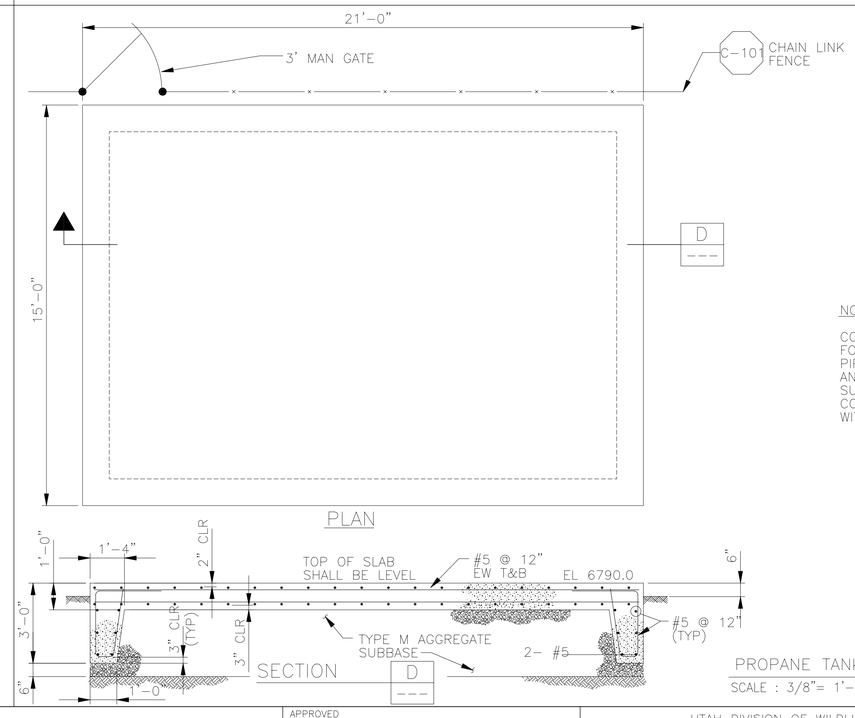

NOTE:

CONTRACTOR SHALL BE RESPONSIBLE FOR FOUNDATION, FENCING, AND YARD PIPING. 2- 1000 GALLON PROPANE TANKS AND EXPOSED PIPING AND VALVES TO BE SUPPLIED UNDER SEPARATE CONTRACT. COORDINATE PIPING AND TANK REQUIREMENTS WITH PROPANE TANK SUPPLIER.

PROPANE TANK FOUNDATION — 4 / VAR

SCALE : 3/8"= 1'-0"

REV	DATE	BY	DESCRIPTION
R	9/00	PDH	RECORD DRAWINGS

SCALE: AS SHOWN

WARNING: 0 1/2 1 — IF THIS BAR DOES NOT MEASURE 1" THEN DRAWING IS NOT TO SCALE.

DESIGNED R. P. Walker
DRAWN M. R. Waln
CHECKED L. H. Allen

RECORD DRAWING

This record drawing has been prepared, in part, on the basis of information compiled and furnished by others. The engineer is not responsible for any errors or omissions which have been incorporated into this document as a result.

MONTGOMERY WATSON
Boise, Idaho

APPROVED ____ DATE
APPROVED ____ DATE

UTAH DIVISION OF WILDLIFE RESOURCES
KAMAS FISH HATCHERY
MISCELLANEOUS CIVIL DETAILS – 2

SHEET GC-4 OF * SHTS

JOB No. 1132073 FILE No. $$$$$$$$$$directory/filename$$$$$$$$$$ $$time$$ $$$$date$$$$$

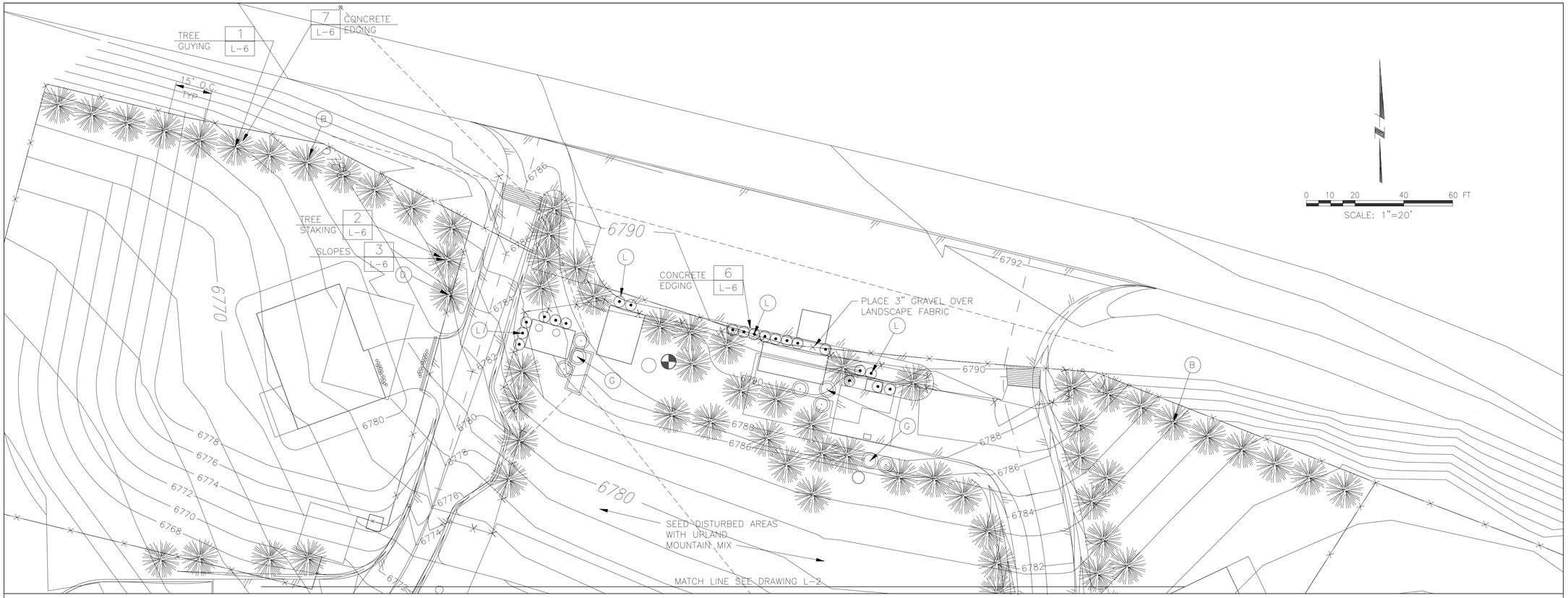

NOTES:

1. PROVIDE DRIP IRRIGATION TO ALL TREES SHOWN ON THIS SHEET, AS SPECIFIED IN THE CONTRACT DOCUMENTS.
2. PROVIDE CONCRETE EDGING AROUND ALL TREES PER DETAIL 7/L-6, EXCEPT THOSE TREES IN BERMED PLANTER AREA.

GENERAL LANDSCAPE NOTES APPLY TO ALL LANDSCAPING

1. THE CONTRACTOR IS RESPONSIBLE FOR FIELD VERIFYING LOCATIONS OF ALL EXISTING SITE UTILITIES PRIOR TO COMMENCING ANY LANDSCAPE WORK.
2. ALL PLANTS SHALL BE PLACED IN THE APPROXIMATE LOCATION SHOWN ON THE DRAWINGS. THE CONTRACTOR SHALL NOTIFY THE ENGINEER IF THERE IS A CONFLICT WITH PLANT LOCATIONS AND EXISTING FACILITIES INCLUDING UNDERGOUND UTILITIES AND PIPING. ALL TREES AND SHRUBS SHALL BE A MINIMUM OF 6 FEET HORIZONTAL SEPARATION FROM ALL UTILITIES. FOR YARD PIPING SEE SHEET C-9.
3. PRIOR TO BEGINNING ANY PLANTING OR HYDROSEEDING, CONSTRUCTION OF THE IRRIGATION SYSTEM SHALL BE COMPLETED, AND THE APPLICABLE TESTS ACCEPTED BY THE ENGINEER.
4. ALL DISTURBED AREAS SHALL BE SEEDED WITH THE UPLAND MOUNTAIN MIX LISTED IN THE SPECIFICATIONS.
5. ALL AREAS DESIGNATED AS TURF SHALL BE HYDROSEEDED WITH THE SPECIFIED TURF MIXTURE.
6. ALL AREAS TO BE HYDROSEEDED SHALL BE TREATED FOR WEEDS WITH APPROVED WEED CONTROL PRODUCT PRIOR TO PLANTING.
7. NO SUBSTITUTIONS OF SPECIFIED PLANT MATERIALS SHALL BE ALLOWED UNLESS APPROVED BY THE ENGINEER PRIOR TO INSTALLATION.
8. ALL PLANT MATERIALS SHALL BE WATERED-IN DURING THE PLANTING PROCEDURE TO ELIMINATE AIR POCKETS WITHIN THE ROOT ZONE.
9. ALL PLANTING BEDS SHALL BE TILLED TO A DEPTH OF 10 INCHES. THREE INCHES OF DECOMPOSED WOOD DERIVITIVES OR ROTTED MANURE SHALL BE SPREAD OVER THE TILLED SURFACE AND MIXED INTO THE TOP SIX INCHES OF THE TILLED SOIL PRIOR TO PLANTING.
10. LANDSCAPE FABRIC SHALL BE INSTALLED IN ALL PLANTING BEDS PRIOR TO PLACEMENT OF COBBLE OR GRAVEL. THE CONTRACTOR SHALL SUBMIT A SHOP DRAWING OF THE PROPOSED LANDSCAPE FABRIC TO THE ENGINEER FOR APPROVAL PRIOR TO INSTALLATION.
11. ALL PLANTING BEDS INCLUDING THOSE IN PARKING AREAS SHALL BE MULCHED WITH A MINIMUM OF 3 INCHES OF APPROVED COBBLE, GRAVEL OR MULCH, PLACED OVER LANDSCAPE FABRIC.

PLANT AND SYMBOL LIST

SYMBOL	SCIENTIFIC NAME	COMMON NAME	SIZE/CONDITION	QTY. *
	TREES			
B	PINUS NIGRA	Austrian Pine	8'-10' Ht. (B&B)	65
	SHRUBS			
F	BERBERIS THUNBERGII 'CRIMSON PYGMY'	Dwarf Red Barbery	2 Gallon	26
G	CORNUS ALBA 'SIBIRKA'	Red Twig Dogwood	5 Gallon	7
L	JUNIPERUS SCOPULORUM 'MOONGLOW'	Moonglow Juniper	5 Gallon	20
M	JUNIPERUS SQUAMATA 'BLUE CARPET'	Blue Carpet Juniper	2 Gallon	20
	MISCELLANEOUS			
	Boulder			
	Metal Edging			
	Concrete Edging			
	Turf			

* QUANTITIES FOR THIS SHEET ONLY.

REV	DATE	BY	DESCRIPTION
R	9/00	PDH	RECORD DRAWINGS

SCALE: 1" = 20'

WARNING 0 1/2 1 IF THIS BAR DOES NOT MEASURE 1" THEN DRAWING IS NOT TO SCALE.

DESIGNED C. L. Whittaker
DRAWN P. D. Hunter
CHECKED L. H. Allen

RECORD DRAWING

This record drawing has been prepared, in part, on the basis of information compiled and furnished by others. The engineer is not responsible for any errors or omissions which have been incorporated into this document as a result.

MONTGOMERY WATSON
Boise, Idaho

APPROVED _____ DATE
APPROVED _____ DATE

UTAH DIVISION OF WILDLIFE RESOURCES
KAMAS FISH HATCHERY
PLANTING PLAN - 1

SHEET L-1 OF * SHTS

JOB No. 1132073 FILE No. $$$$$$$$$directory/filename$$$$$$$$$ $$$$date$$$$ $$time$$

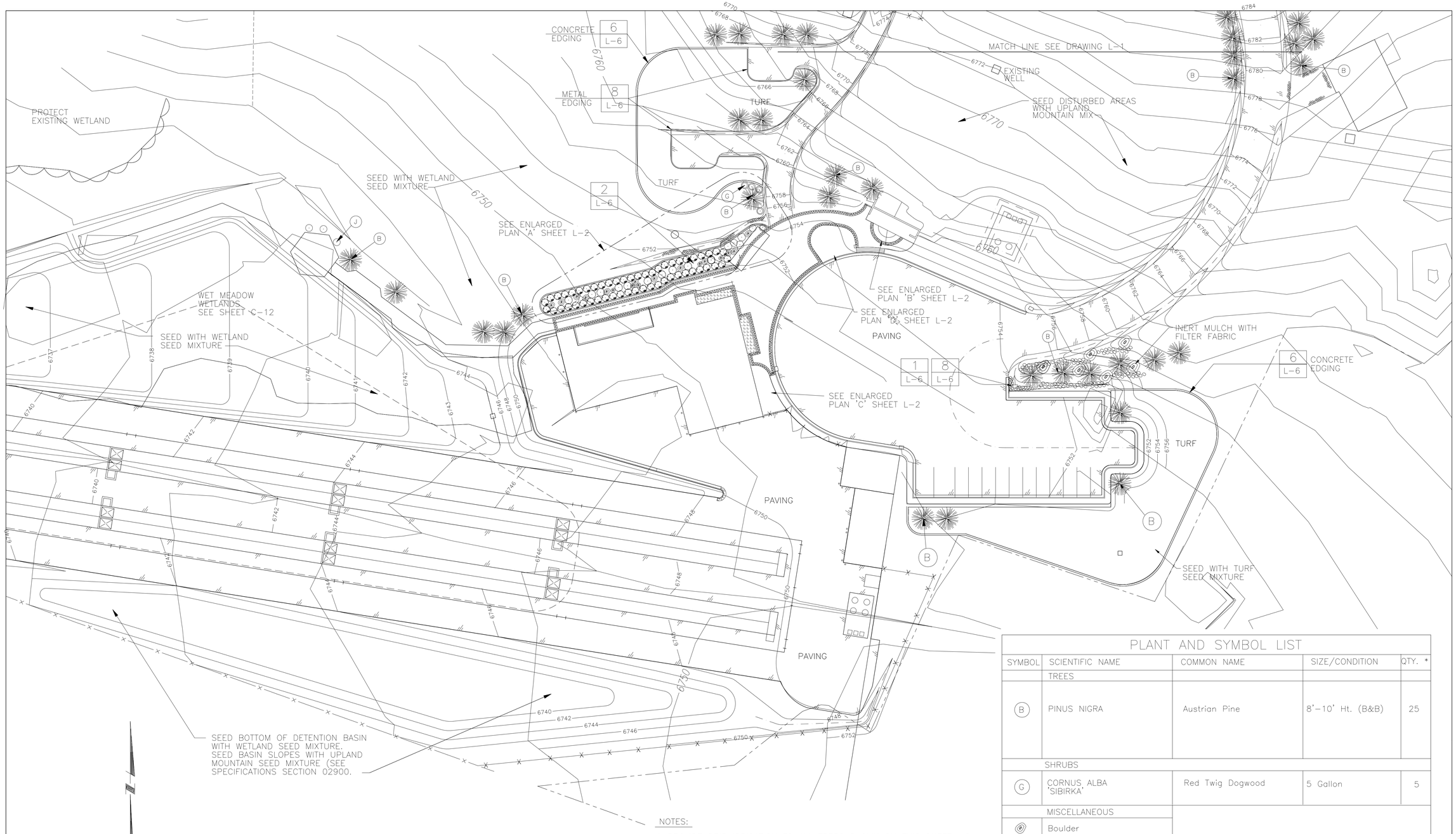

PLANT AND SYMBOL LIST

SYMBOL	SCIENTIFIC NAME	COMMON NAME	SIZE/CONDITION	QTY. *
	TREES			
(B)	PINUS NIGRA	Austrian Pine	8'–10' Ht. (B&B)	25
	SHRUBS			
(G)	CORNUS ALBA 'SIBIRKA'	Red Twig Dogwood	5 Gallon	5
	MISCELLANEOUS			
	Boulder			
	Metal Edging			
	Concrete Edging			
	Turf			

* QUANTITIES FOR THIS SHEET ONLY.

NOTES:

1. PROVIDE DRIP IRRIGATION TO ALL TREES SHOWN ON THIS SHEET, AS SPECIFIED IN THE CONTRACT DOCUMENTS.
2. PROVIDE CONCRETE EDGING AROUND ALL TREES PER DETAIL 7/L-6, EXCEPT THOSE TREES IN PLANTER AREAS.
3. LOCATE UTILITIES PRIOR TO EXCAVATING.

REV	DATE	BY	DESCRIPTION
R	9/00	PDH	RECORD DRAWINGS

SCALE: 1" = 30'

WARNING: 0 1/2 1 — IF THIS BAR DOES NOT MEASURE 1" THEN DRAWING IS NOT TO SCALE.

DESIGNED C. L. Whittaker
DRAWN P. D. Hunter
CHECKED L. H. Allen

RECORD DRAWING

This record drawing has been prepared, in part, on the basis of information compiled and furnished by others. The engineer is not responsible for any errors or omissions which have been incorporated into this document as a result.

MONTGOMERY WATSON
Boise, Idaho

APPROVED ____ DATE ____
APPROVED ____ DATE ____

UTAH DIVISION OF WILDLIFE RESOURCES
KAMAS FISH HATCHERY
PLANTING PLAN – 2

SHEET L-2 OF * SHTS

JOB No. 1132073 FILE No. $$$$$$$$$directory/filename$$$$$$$$$ $$time$$ $$$$date$$$$$

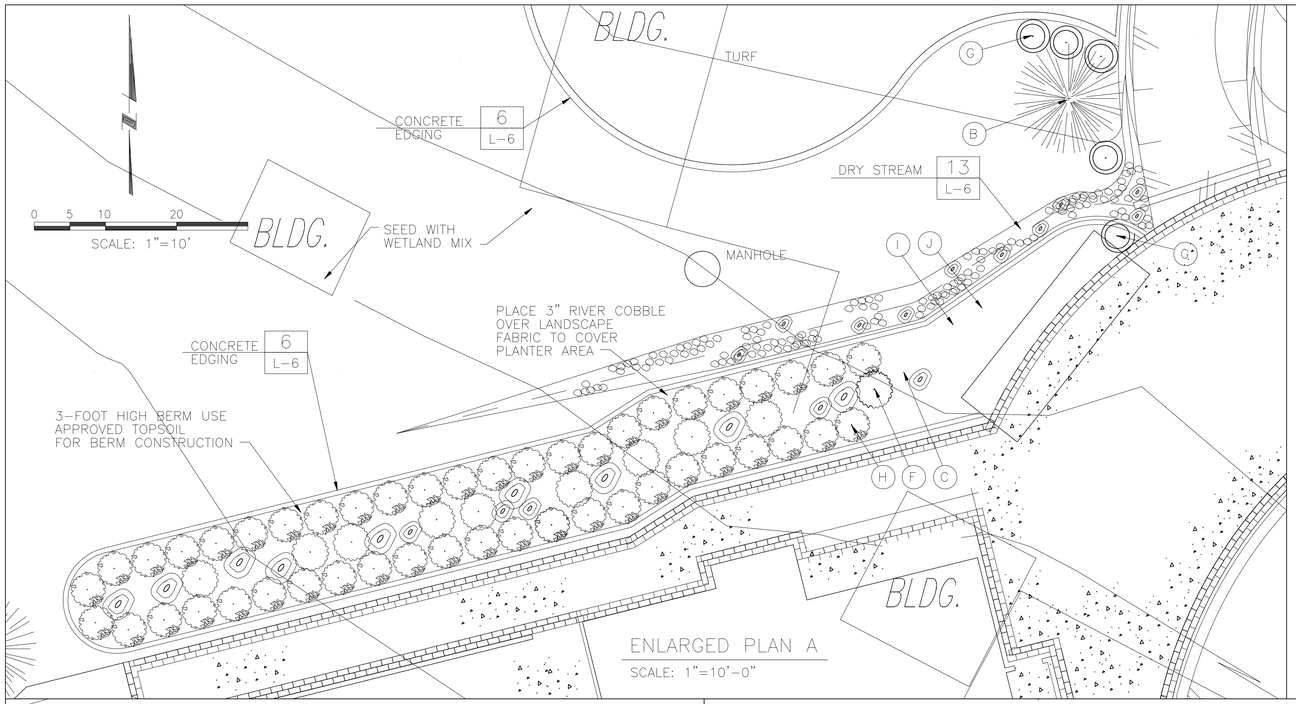

ENLARGED PLAN A

SCALE: 1"=10'-0"

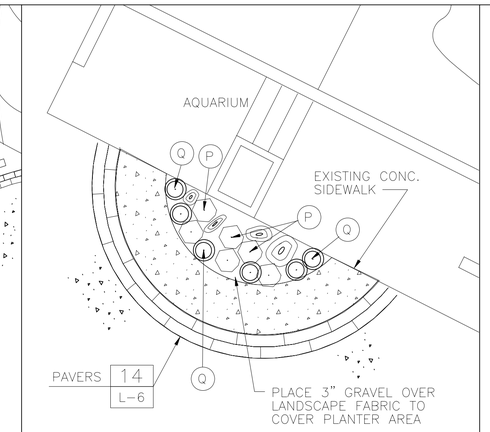

ENLARGED PLAN B

SCALE: 1"=5'-0"

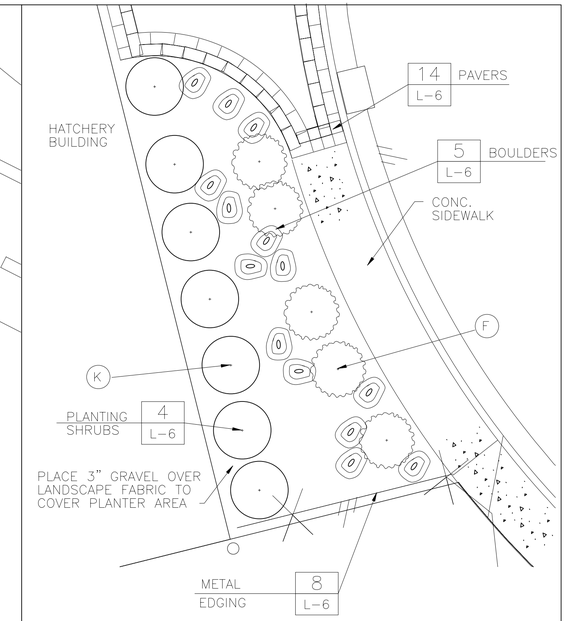

ENLARGED PLAN C

SCALE: 1"=5'-0"

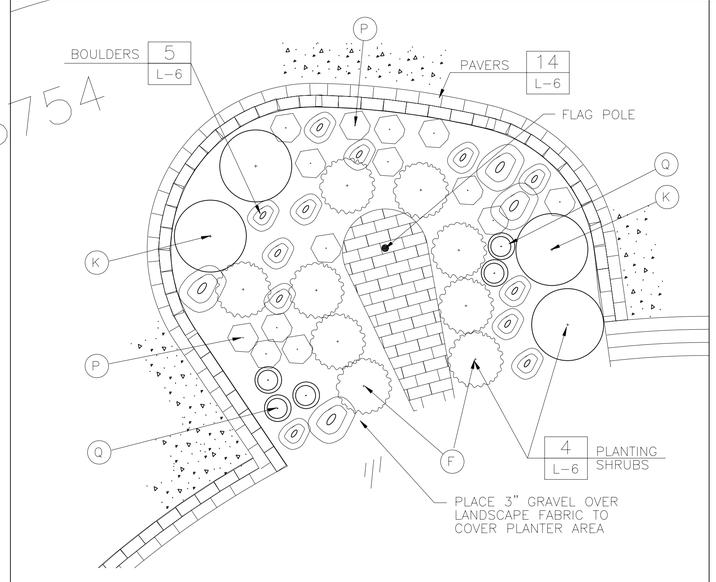

ENLARGED PLAN D

SCALE: 1"=5'-0"

PLANT AND SYMBOL LIST

WATER ELEVATION

SYMBOL	SCIENTIFIC NAME	COMMON NAME	SIZE/CONDITION	QTY. *
	TREES			
B	PINUS NIGRA	Austrian Pine	8' - 10' (B&B)	1
	SHRUBS			
F	BERBERIS THUNBERGII 'CRIMSON PYGMY'	Dwarf Red Barbery	2 Gallon	24
G	CORNUS ALBA 'SIBIRKA'	Red Twig Dogwood	5 Gallon	5
H	MAHONIA COMPACTA	Compact Oregon Grape	2 Gallon	52
I	SPIREA X BULMALDA 'LIMEMOUND'	Limemound Spirea	2 Gallon	3
J	VIBURNUM OPULUS 'NANUM'	Dwarf Viburnum	2 Gallon	2
K	EUONYMUS ALATA 'COMPACTA'	Dwarf Burning Bush	5 Gallon	11
	PERENNIALS			
P	ARMERIA MARITMA "COMPACTA"	Compact Sea Pink	1 Gallon	19
Q	IBERIS SEMPERVIRENS	Little Gem Dwarf Candytuft	1 Gallon	5
	MISCELLANEOUS			
	Boulder			
	Metal Edging			
	Concrete Edging			
	Turf			

* QUANTITIES FOR TIS SHEET ONLY.

REV	DATE	BY	DESCRIPTION
R	9/00	PDH	RECORD DRAWINGS

SCALE: AS SHOWN

WARNING 0 1/2 1 — IF THIS BAR DOES NOT MEASURE 1" THEN DRAWING IS NOT TO SCALE.

DESIGNED C. L. Whittaker
DRAWN P. D. Hunter
CHECKED L. H. Allen

RECORD DRAWING

This record drawing has been prepared, in part, on the basis of information compiled and furnished by others. The engineer is not responsible for any errors or omissions which have been incorporated into this document as a result.

MONTGOMERY WATSON
Boise, Idaho

APPROVED _____ DATE
APPROVED _____ DATE

UTAH DIVISION OF WILDLIFE RESOURCES
KAMAS FISH HATCHERY
PLANTING PLAN – 3

SHEET L-3 OF * SHTS

JOB No. 1132073 FILE No. $$$$$$$$$$directory/filename$$$$$$$$$$$ $$time$$ $$$$date$$$$$ 0754

NOTES:

1. FOR GENERAL IRRIGATION NOTES SEE SHEET L-5.
2. ALL LATERIAL LINES SHALL BE 1-INCH SIZE UNLESS OTHERWISE INDICATED.
3. ALL SPRINKLERS SHALL BE INSTALLED WITH SWING JOINTS.
4. LOCATE UTILITIES PRIOR TO EXCAVATING.

REV	DATE	BY	DESCRIPTION
R	9/00	PDH	RECORD DRAWINGS

SCALE: 1" = 20'

WARNING: 0 1/2 1 — IF THIS BAR DOES NOT MEASURE 1" THEN DRAWING IS NOT TO SCALE.

DESIGNED C. L. Whittaker
DRAWN P. D. Hunter
CHECKED L. H. Allen

RECORD DRAWING

This record drawing has been prepared, in part, on the basis of information compiled and furnished by others. The engineer is not responsible for any errors or omissions which have been incorporated into this document as a result.

MONTGOMERY WATSON
Boise, Idaho

APPROVED _____ DATE
APPROVED _____ DATE

UTAH DIVISION OF WILDLIFE RESOURCES
KAMAS FISH HATCHERY
IRRIGATION PLAN

SHEET L-4 OF * SHTS

JOB No. 1132073 FILE No. $$$$$$$$$$directory/filename$$$$$$$$$$ $$time$$ $$$$date$$$$

GENERAL IRRIGATION NOTES

1. THE CONTRACTOR SHALL VERIFY ALL SITE CONDITIONS, TREE AND SHRUB LOCATIONS, AND DIMENSIONS SHOWN ON THE PLANS PRIOR TO COMMENCEMENT OF ALL WORK.
2. CONTACT ENGINEER AND COORDINATE ALL REVIEWS PRIOR TO COMMENCEMENT OF WORK.
3. THE SPRINKLER SYSTEM DESIGN IS BASED ON THE MINIMUM OPERATING PRESSURE OF 20 TO 25 POUNDS PER SQUARE INCH.
4. SEE SPECIFICATIONS AND DETAILS AS THEY APPLY TO THIS AND RELATED WORK.
5. THE CONTRACTOR SHALL EXERCISE EXTREME CAUTION IN EXCAVATING AND WORKING NEAR EXISTING UTILITIES. VERIFY THE LOCATION AND CONDITION OF ALL UTILITIES PRIOR TO COMMENCING WORK. REPAIR ANY DAMAGE CAUSED DURING THE PERFORMANCE OF WORK AT NO ADDITIONAL COST TO THE OWNER. FIELD ADJUST SPRINKLER EQUIPMENT LOCATIONS TO AVOID CONFLICTS WITH UTILITIES AND PLANT MATERIALS.
6. BECAUSE OF THE SCALE OF THE IRRIGATION DRAWINGS, IT IS NOT POSSIBLE TO INDICATE ALL OFFSETS, FITTINGS, SLEEVES, ETC., WHICH MAY BE REQUIRED. THE CONTRACTOR SHALL CAREFULLY INVESTIGATE THE STRUCTURAL AND FINISHED CONDITIONS AFFECTING ALL OF THE WORK AND PLAN HIS WORK ACCORDINGLY.
7. THE CONTRACTOR SHALL NOT WILLFULLY INSTALL ANY PART OF THE IRRIGATION SYSTEM AS SHOWN ON THE DRAWINGS WHEN FIELD CONDITIONS INDICATE THAT OBSTRUCTION, GRADE DIFFERENCES, OR DIFFERENCES IN AREA DIMENSIONS EXIST THAT MAY INTERFERE WITH THE INTENT OF THE DESIGN. SUCH DISCREPANCIES SHALL BE BROUGHT TO THE ATTENTION OF THE ENGINEER PRIOR TO PROCEEDING WITH CONSTRUCTION. IN THE EVENT THIS NOTIFICATION IS NOT CONDUCTED, THE CONTRACTOR SHALL ASSUME FULL RESPONSIBILITY AND COSTS FOR ALL NECESSARY REVISIONS.
8. THE CONTRACTOR SHALL SUBMIT DRAWINGS OF ANY PROPOSED CHANGES TO THE IRRIGATION SYSTEM TO THE ENGINEER PRIOR TO COMMENCING ANY WORK IN THE FIELD. THE DRAWINGS SHALL SHOW NUMBER OF HEADS, DRIP EMITTERS, PLACEMENT OF ALL VALVES, MAIN-LINE CONNECTIONS, LATERALS, AND OTHER PERTINENT ITEMS. THESE DRAWINGS SHALL BE APPROVED PRIOR TO COMMENCING WORK.
9. THE CONTRACTOR SHALL PROVIDE DRIP IRRIGATION TO ALL PLANTERS AND TREES LOCATED OUTSIDE OF TURF AREAS.
10. THE NUMBER OF SPRINKLERS AND SPACING SHALL BE VERIFIED BY THE CONTRACTOR BASED ON SITE SPECIFIC SOIL CONDITIONS AND PLANT MATERIAL CHARACTERISTICS AS RECOMMENDED BY THE MANUFACTURER. THE MAXIMUM NUMBER OF DRIP EMITTERS REQUIRED THROUGHOUT THE LIFE STAGES OF EACH PLANT SPECIES SHALL BE POSITIONED AND INSTALLED AS PART OF THE INITIAL CONSTRUCTION.
11. THE CONTRACTOR SHALL BE RESPONSIBLE FOR CONDUCTING A SOILS PERCOLATION TEST USING THE DOUBLE RING INFILTROMETER METHOD DESCRIBED IN THE U.S. DEPARTMENT OF INTERIOR BUREAU OF RECLAMATION DRAINAGE MANUAL 1984 EDITION TO DETERMINE THE OPTIMUM GALLONS PER MINUTE FOR SPRINKLER AND DRIP EMITTERS, FOR ESTABLISHING THE NUMBER OF DRIP EMITTERS REQUIRED, AND THE LENGTH OF IRRIGATION TIME REQUIRED FOR EACH ZONE BASED ON SPECIFIC PLANT REQUIREMENTS.
12. THE CONTRACTOR SHALL MAKE PROVISIONS FOR RELOCATION OF DRIP EMITTERS AS PLANTINGS MATURE. ALL UNUSED EMITTERS SHALL BE CLOSED OFF AT INITIAL INSTALLATION.
13. ALL DRIP EMITTERS SHALL BE FITTED WITH FILTERS AS RECOMMENDED BY MANUFACTURER. WYE STRAINERS SHALL BE INSTALLED AT THE POINT OF CONNECTION, UP-LINE OF EACH VALVE.
14. ALL BUBBLERS AND DRIP EMITTERS INSTALLED ON SLOPES SHALL BE POSITIONED ON THE UPHILL SIDE OF PLANT MATERIALS.
15. THE CONTRACTOR SHALL FLUSH AND ADJUST ALL SPRINKLERS FOR OPTIMUM PERFORMANCE. THIS WORK SHALL INCLUDE SELECTING THE OPTIMUM FLOW RATE TO SERVE THE EXISTING SITE CONDITIONS AND SPECIFIED PLANT MATERIALS AND TO THROTTLE THE FLOW AT EACH VALVE TO OBTAIN THE OPTIMUM OPERATING PRESSURE FOR EACH STATION. THE CONTRACTOR SHALL MAKE A VISUAL INSPECTION OF DRIP OUTLET LINES AND CLEAR ALL OBSTRUCTED LINES TO ENSURE FUNCTIONALITY OF THE DRIP SYSTEM.
16. THE MAINLINE SHALL BE LOCATED THREE FEET FROM ALL PAVEMENTS WHERE POSSIBLE.
17. THE CONTRACTOR SHALL PROTECT ALL WORK FROM DAMAGE AND THEFT AT ALL TIMES. REPLACEMENT OF ALL DAMAGED OR STOLEN PARTS WILL BE AT THE CONTRACTOR'S EXPENSE UNTIL THE WORK IS ACCEPT IN WRITING BY OWNER.

IRRIGATION LEGEND

SYMBOL	DESCRIPTION	PSI	GPM	RADIUS *
○	4" (POP-UP) SPRINKLER, FULL CIRCLE, 15 DEG. LOW ANGLE	20-25	4.3	17
◔	4" (POP-UP) SPRINKLER, THREE-QUARTER CIRCLE, 15 DEG. LOW ANGLE	20-25	3.1	17
◗	4" (POP-UP) SPRINKLER, HALF CIRCLE, 15 DEG. LOW ANGLE	20-25	2.4	16
◕	4" (POP-UP) SPRINKLER, QUARTER CIRCLE, 15 DEG. LOW ANGLE	20-25	0.9	15
◜	4" (POP-UP) SPRINKLER, 120 DEG, 15 DEG. LOW ANGLE	20-25	1.9	17
(32)	SPRAY RADIUS FOR THROTTLED DOWN SPRINKLER			
⧗	ELECTRIC CONTROL VALVE			
⋈	GATE VALVE			
[2]	IRRIGATION ZONE			

ADJUSTABLE ARC BETWEEN 1 DEG. AND 360 DEG. SPRINKLERS ARE DESIGNED AS HUNTER PS SERIES 4" POP-UP OR APPROVED EQUAL.

$$time$$
$$$$date$$$$

JOB No. 1132073 FILE No. $$$$$$$$$directory/filename$$$$$$$$

REV	DATE	BY	DESCRIPTION
R	9/00	PDH	RECORD DRAWINGS

SCALE: NONE

WARNING: 0 1/2 1 — IF THIS BAR DOES NOT MEASURE 1" THEN DRAWING IS NOT TO SCALE.

DESIGNED C. L. Whittaker
DRAWN P. D. Hunter
CHECKED L. H. Allen

RECORD DRAWING
This record drawing has been prepared, in part, on the basis of information compiled and furnished by others. The engineer is not responsible for any errors or omissions which have been incorporated into this document as a result.

MONTGOMERY WATSON
Boise, Idaho

APPROVED ____ DATE
APPROVED ____ DATE

UTAH DIVISION OF WILDLIFE RESOURCES
KAMAS FISH HATCHERY
IRRIGATION NOTES AND DETAILS

SHEET L-5 OF * SHTS

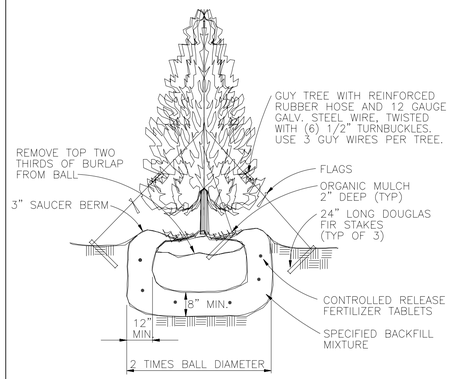

TREE GUYING (CONIFERS) — 1 / VAR

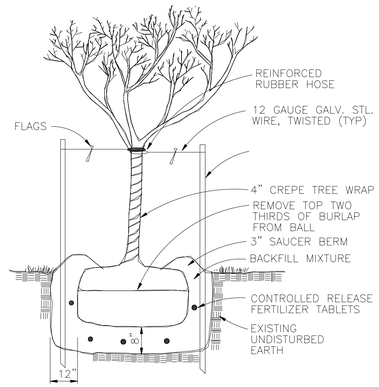

TREE STAKING (ORNAMENTAL) — 2 / VAR

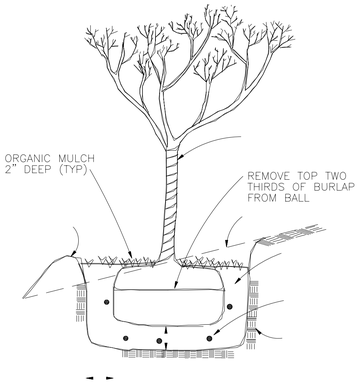

PLANTING ON SLOPES — 3 / L-1

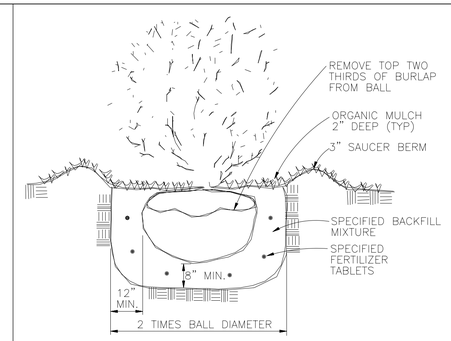

NOTE:
1. SHRUB SHALL BEAR SAME RELATION TO FINISHED GRADE AS IT BORE TO PREVIOUS PLANTING.

PLANTING SHRUBS — 4 / L-1

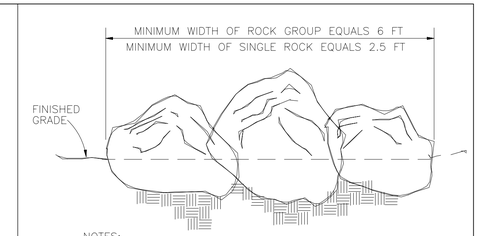

NOTES:
1. BOULDERS SHALL BE PLACED A MAXIMUM OF 1/4 THEIR SIZE AND A MINIMUM OF 4 INCHES BELOW GROUND.
2. BOULDERS SHALL BE PLACED IN GROUPS AS INDICATED ON PLANS. BOULDERS SHALL NEVER BE EVENLY SPACED OR CONFIGURED IN LINES.
3. BOULDER GROUPS SHALL CONSIST OF DIFFERING ROCK SIZES, SHAPES AND FORMS.
4. ALL BOULDERS SHALL BE NATURAL ROCK.

BOULDER PLACEMENT — 5 / VAR

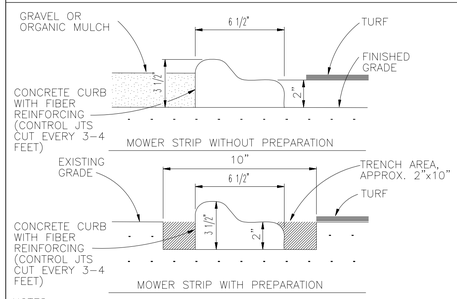

NOTES:
1. CONCRETE EDGING SHALL BE INSTALLED WHERE SHOWN ON DRAWINGS.
2. CONCRETE SHALL BE 3000 PSI CAST IN PLACE.
3. COLOR SHALL BE TAUPE (2 LBS 677) AS SUPPLIED BY DAVIS COLORS OR APPROVED EQUAL.
4. CONCRETE EDGING SHALL BE INSTALLED ON COMPACTED SUBGRADE.
5. CONCRETE EDGING SHALL BE CURED AND SEALED.
6. THE CURB SHALL BE EXTRUDED FROM AN AUTOMATIC CURB FORMING MACHINE.

CONCRETE EDGING — 6 / VAR

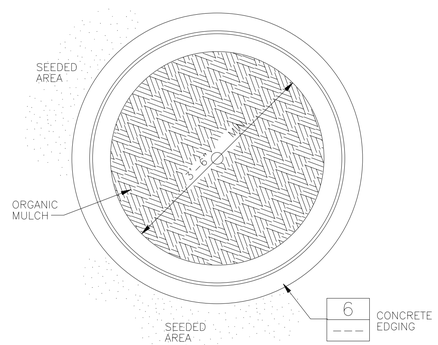

CONCRETE EDGING AROUND TREE — 7 / VAR

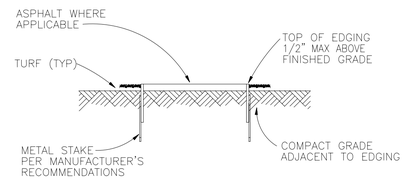

NOTES:
1. METAL EDGING SHALL BE INSTALLED AT ALL LOCATIONS WHERE ASPHALT PAVING ABUTS TURF, GRAVEL MULCH OR AS SHOWN ON DRAWINGS.
2. SEE SPECIFICATIONS RELATED TO METAL EDGING.

METAL EDGING — 8 / VAR

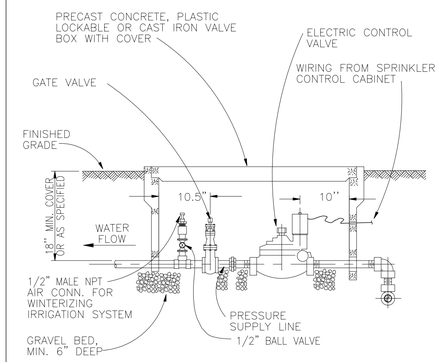

GATE VALVE AND ELECTRIC CONTROL VALVE — 9 / VAR

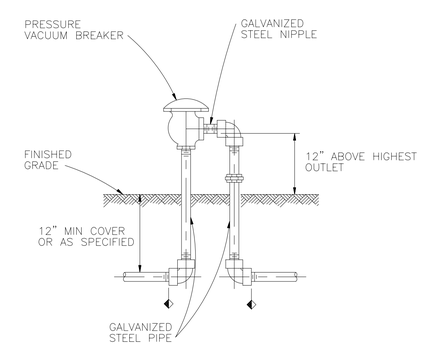

PRESSURE VACUUM BREAKER — 10 / VAR

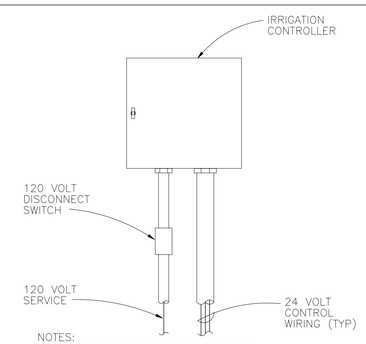

NOTES:
1. LOCATE CONTROLLER AS DIRECTED BY ENGINEER OR STATE OF UTAH.
2. PAINT CONTROLLER AND CONDUIT TO MATCH WALL COLOR.
3. SEE SHEET E-9 AREA I AND J FOR ELECTRICAL.

WALL-MOUNTED CONTROLLER — 11 / ---

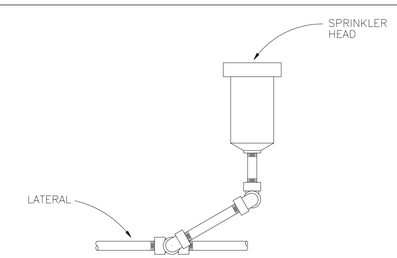

NOTE:
1. ALL ROTARY SPRINKLERS SHALL BE INSTALLED WITH SWING JOINT ASSEMBLIES.

SWING JOINT — 12 / L-4

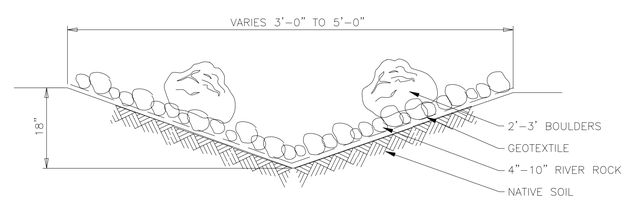

NOTE:
BOULDERS PLACED AS DIRECTED BY ENGINEER.

DRY STREAM — 13 / VAR

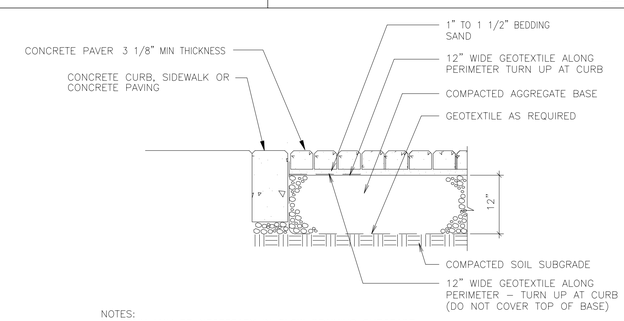

NOTES:
1. DRAIN MAY BE NECESSARY IN SLOW DRAINING SUBGRADE.
2. DO NOT COVER ENTIRE TOP OF AGGREGATE BASE WITH GEOTEXTILE.

CONCRETE PAVERS — 14 / L-2

REV	DATE	BY	DESCRIPTION
R	9/00	PDH	RECORD DRAWINGS

SCALE: NONE

WARNING: 0 1/2 1 — IF THIS BAR DOES NOT MEASURE 1" THEN DRAWING IS NOT TO SCALE.

DESIGNED C.L. Whittaker
DRAWN P.D. Hunter
CHECKED L. H. Allen

RECORD DRAWING
This record drawing has been prepared, in part, on the basis of information compiled and furnished by others. The engineer is not responsible for any errors or omissions which have been incorporated into this document as a result.

MONTGOMERY WATSON
Boise, Idaho

APPROVED ____ DATE
APPROVED ____ DATE

UTAH DIVISION OF WILDLIFE RESOURCES
KAMAS FISH HATCHERY
LANDSCAPE AND IRRIGATION DETAILS

SHEET L-6 OF * SHTS

JOB No. 1132073 FILE No. $$$$$$$$$directory/filename$$$$$$$$$ $$$$date$$$$ $$time$$

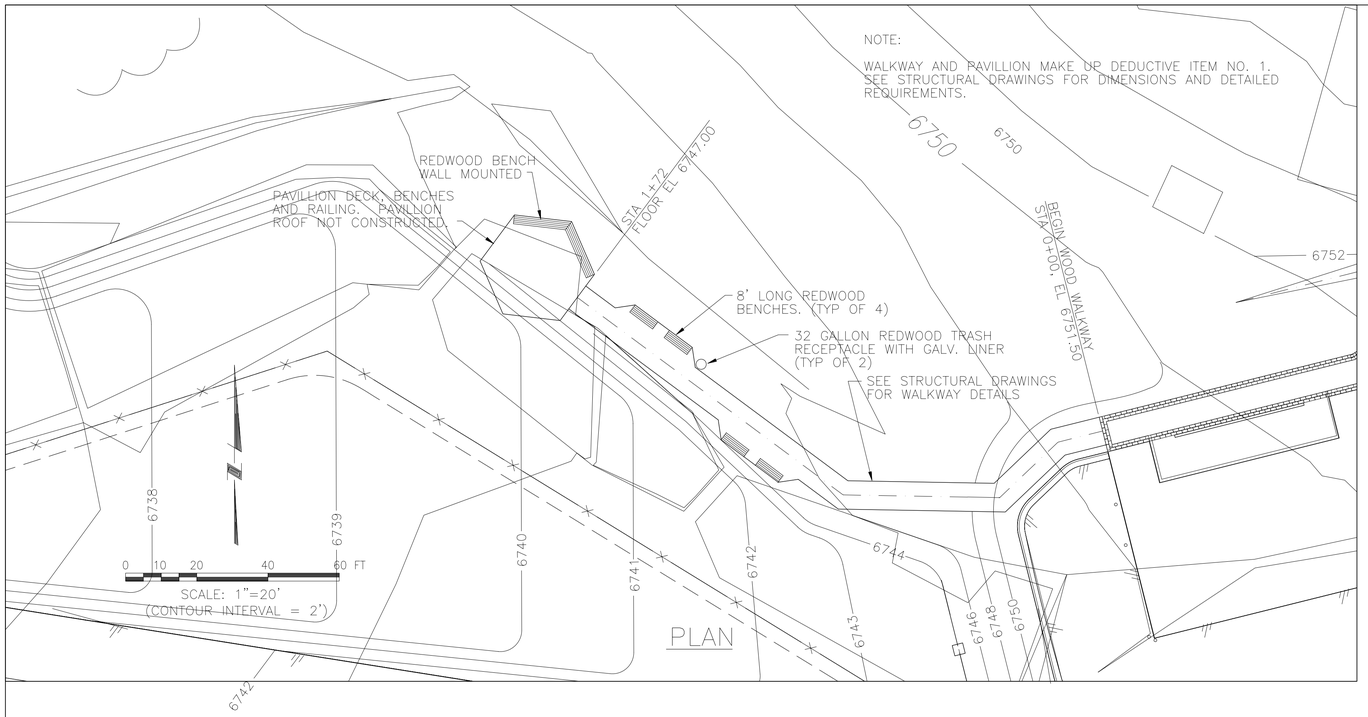

PLAN

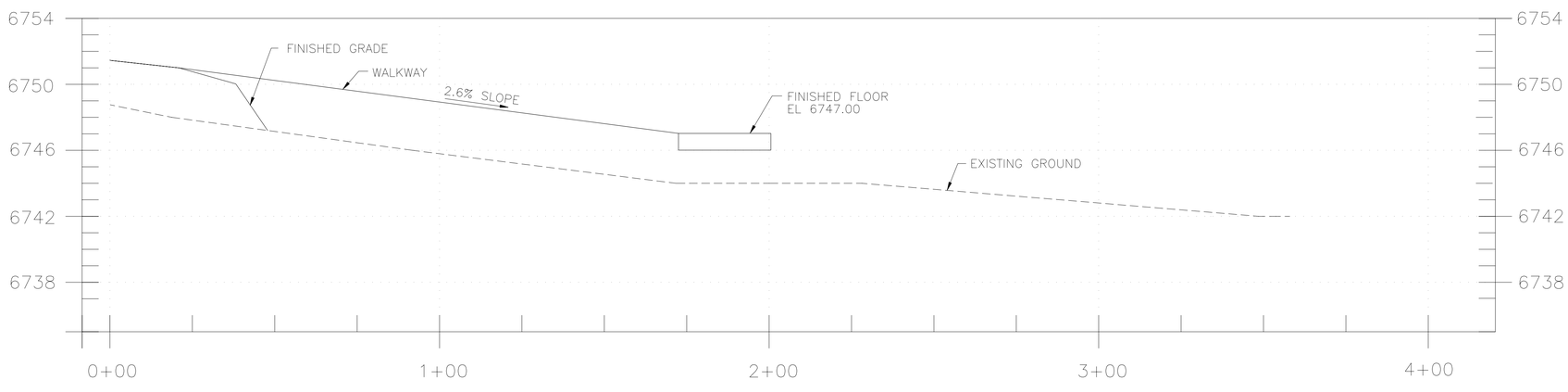

WALKWAY PROFILE

SCALE: 1"=20' HORIZ
1"=4' VERT

REV	DATE	BY	DESCRIPTION
R	9/00	PDH	RECORD DRAWINGS

SCALE: AS SHOWN

WARNING 0 1/2 1 IF THIS BAR DOES NOT MEASURE 1" THEN DRAWING IS NOT TO SCALE.

DESIGNED C. L. Whittaker
DRAWN P. D. Hunter
CHECKED L. H. Allen

RECORD DRAWING

This record drawing has been prepared, in part, on the basis of information compiled and furnished by others. The engineer is not responsible for any errors or omissions which have been incorporated into this document as a result.

MONTGOMERY WATSON
Boise, Idaho

APPROVED _____ DATE
APPROVED _____ DATE

UTAH DIVISION OF WILDLIFE RESOURCES
KAMAS FISH HATCHERY
WETLANDS AREA WALKWAY
PLAN AND DETAILS

SHEET L-7 OF * SHTS

JOB No. 1132073 FILE No. $$$$$$$$$$directory/filename$$$$$$$$ $$time$$ $$$$date$$$$