PHYSICAL EDUCATION FACILITY

FOR

WEBER STATE COLLEGE

3750 HARRISON BLVD. OGDEN, UTAH 84408

DFCM PROJECT NO. RW: 84-058

RECORD DOCUMENTS JUL 2 1990
THESE DOCUMENTS HAVE BEEN REVISED TO RECORD INFORMATION SUBMITTED BY THE CONTRACTOR, WHILE THEY ARE ASSUMED TO BE RELIABLE THE ARCHITECT DOES NOT GUARANTEE THEIR ACCURACY.

JONES/RICHARDS AND ASSOCIATES. . . . . .ARCHITECTS
533 26TH STREET SUITE 101 OGDEN, UTAH 84401 PHONE (801) 394-3033
(Seal: STATE OF UTAH — BRETT J. RICHARDS — NO. 1107 — LICENSED ARCHITECT)

ADAMSON ENGINEERING. . . . . .STRUCTURAL
1140 36TH STREET SUITE 204 OGDEN, UTAH 84403 PHONE (801) 621-8130
(Seal: REGISTERED PROFESSIONAL ENGINEER — O. KENT RICH — 3660 — State of Utah)

DAVID C. RACKER & ASSOCIATES. . . . .LANDSCAPE
3120 SOUTH 950 EAST BOUNTIFUL, UTAH 84010 PHONE (801) 295-5335

VANBOERUM/FRANK ASSOCIATES. . . . .MECHANICAL
220 SOUTH 200 EAST SALT LAKE CITY, UTAH 84111 PHONE (801) 530-3148
(Seal: REGISTERED PROFESSIONAL ENGINEER — No. 7122 KIM P. HARRIS — STATE OF UTAH)

BOYD JARMAN. . . . . .PE CONSULTANT
1180 WEST 820 NORTH PROVO, UTAH 84601

BECHERER-NIELSON ASSOCIATES. . . . .ELECTRICAL
146 PIERPONT AVE. SALT LAKE CITY, 84101 PHONE (801) 532-2196
(Seal: REGISTERED PROFESSIONAL ENGINEER — ROBERT J. BECHERER — No. 4222 — STATE OF UTAH)

ACOUSTICAL ENGINEERS INC.. . . . . .ACOUSTICS
1864 So STATE #270 SALT LAKE CITY, UTAH 84115 PHONE (801) 467-4206

ABBREVIATIONS

@	AT	HC	HOLLOW CORE
#	POUND OR NUMBER	HDWD	HARDWOOD
AB	ANCHOR BOLT	HDWR	HARDWARE
ACT	ACOUSTICAL TILE	HDRL	HANDRAIL
ADJ	ADJUSTABLE	HM	HOLLOW METAL
AFF	ABOVE FINISH FLOOR		
ALUM	ALUMINUM	ID	INSIDE DIA
BD	BOARD	INCL	INCLUDE(D)(ING)
BLDG	BUILDING	INSUL	INSULATION
BM	BEAM	INT	INTERIOR
BOT	BOTTOM		
BRG	BEARING	JT	JOINT
BRK	BRICK		
BS	BOTH SIDES	MAS	MASONRY
BSMT	BASEMENT	MAX	MAXIMUM
BUR	BUILT-UP ROOFING	MECH	MECHANICAL
		MEJC	MTL EXPANSION JT COVER
		MTL	METAL
CAB	CABINET	MFR	MANUFACTURER
CJT	CONTROL JOINT	MIN	MINIMUM
℄	CENTER LINE	MO	MASONRY OPENING
CLG	CEILING		
CMU	CONCRETE MASONRY UNITS	NIC	NOT IN CONTRACT
COL	COLUMN	NTS	NOT TO SCALE
CONC	CONCRETE		
CONSTR	CONSTRUCTION	OC	ON CENTER
CONSTR JT	CONSTRUCTION JOINT		
CONT	CONTINUOUS	PBD	PARTICLE BD
CONTR	CONTRACT(OR)	PL	PLATE
CORR	CORRIDOR	℞	PROPERTY LINE
CPT	CARPET	PLAS LAM	PLASTIC LAMINATE
CT	CERAMIC TILE	PLYWD	PLYWOOD
CTSK	COUNTERSINK		
		QT	QUARRY TILE
DET	DETAIL		
DF	DRINKING FOUNTAIN	RB	RESILIENT BASE
Ø	DIAMETER	RD	ROOF DRAIN
DIM	DIMENSION	REINF	REINFORCE(D)(ING)
DN	DOWN	RFG	ROOFING
DR	DOOR	RM	ROOM
		RO	ROUGH OPENING
EA	EACH	RW	REDWOOD
EB	EXPANSION BOLT		
EIFS	EXTERIOR INSUL & FINISH SYSTEM	SC	SOLID CORE
ELEC	ELECTRICAL	SCH	SCHEDULE
ELEV	ELEVATION	SEC	SECTION
EQ	EQUAL	SIM	SIMILAR
EQUIP	EQUIPMENT	SMS	SHEET METAL SCREW
EWC	ELECTRIC WATER COOLER	SPEC	SPECIFICATION
EXIST	EXISTING	SQ	SQUARE
EXP JT	EXPANSION JOINT	STL	STEEL
EXT	EXTERIOR	SYN	SYNTHETIC
		SYS	SYSTEM
FDN	FOUNDATION	T & B	TOP AND BOTTOM
FECB	FIRE EXTINGUISHER CAB	TEMP GL	TEMPERED GLASS
FIN	FINISH (ED)	TYP	TYPICAL
FL	FLOOR		
FT	FOOT OR FEET	VCT	VINYL COMPOSITION TILE
FTG	FOOTING		
FUR	FURRING	W/	WITH
		WD	WOOD
GA	GAUGE	WDW	WINDOW
GALV	GALVANIZED	W/O	WITHOUT
GC	GENERAL CONTRACTOR	WR-GL	WIRED GLASS
GL	GLASS	WSCT	WAINSCOT
GYP BD	GYPSUM WALLBOARD	WWF	WELDED WIRE FABRIC

MATERIAL SCHEDULE

- EARTH
- ROCK FILL
- SAND/MORTAR/PLASTER
- CONCRETE – CAST IN PLACE OR PRECAST
- BRICK
- CONCRETE BLOCK
- STONE
- METAL – OMIT INDICATION IN THIN MATERIAL
- METAL LATH
- WOOD, FRAMING THROUGH MEMBER, NUMBERS=NOM SIZE
- WOOD, FRAMING INTERRUPTED MEMBER
- PLYWOOD
- GLASS – OMIT INDICATION IN THIN MATERIAL
- ACOUSTICAL TILE OR BOARD
- GYPSUM BOARD DOUBLE LINES OMITTED AT SMALL SCALE
- INSULATION, BLANKET
- INSULATION, RIGID
- CERAMIC TILE SHOW PROFILE ONLY
- BITUMINOUS CONCRETE SHOW PROFILE ONLY
- WOOD STUD WALL
- METAL STUD WALL

SYMBOL LEGEND

SECTION
- A — SECTION IDENTIFICATION
- A25 — SHEET WHERE SECTION IS DRAWN

DETAIL
- 9 — DETAIL IDENTIFICATION
- A13 — SHEET WHERE DETAIL IS DRAWN

INTERIOR ELEVATIONS
- A8 — SHEET WHERE DETAIL IS DRAWN
- 1, 2, 3, 4 — ELEVATION IDENTIFICATION

ROOM IDENTIFICATION
- OFFICE — ROOM NAME
- 079 — ROOM NO

SPOT ELEVATIONS
- 725 (NEW)
- 716 (EXIST)

CONTRACT LIMIT LINE

NEW OR FINISHED CONTOURS

EXISTING CONTOURS TO BE CHANGED

5 — KEYED NOTES

DOOR SYMBOL
- 102 — ROOM ENTERED
- A — DOOR IDENTIFICATION IN ROOM

WINDOW SYMBOL
- W — WINDOW DESIGNATION
- 2 — WINDOW NUMBER

WORK POINT, CONTROL POINT OR DATUM POINT

APPROVALS

Prime Agency: J. Robert Folsom	Date: 6/21/88
DFCM: Wayne J. Bingham	Date: 6/27/88
Chalmers Gail Norris	6-27-88

APPROVAL DOES NOT RELIEVE A/E OF DESIGN LIABILITY

DFCM PRE-BID STAFF REVIEW
Division of Facilities Construction and Management

Architectural (staff): [signature]	Date: 6/27/88	HVAC: [signature]	Date: 6/27
Arch Specs & Dwgs: [signature]	Date: 6/27/88	Plumbing: [signature]	Date: 6/27
Handicapped: Larry Naccarato	Date: 6/27/88	Energy: [signature]	Date: 6/27
Program: Larry Naccarato — STRUCTURAL	Date: 6/27/88	Electrical: [signature]	Date: 6/27/88

OTHER AGENCIES
Fire Marshal: Marc Ottenimzer — Date: 6/23/88
State Department of Health — Date — Agency — Date

REVIEW DOES NOT RELIEVE A/E OF DESIGN LIABILITY

State of Utah—Department of Administrative Services
DIVISION OF FACILITIES CONSTRUCTION AND MANAGEMENT
4110 State Office Building/Salt Lake City Utah 84114/533 5561

VICINITY MAP

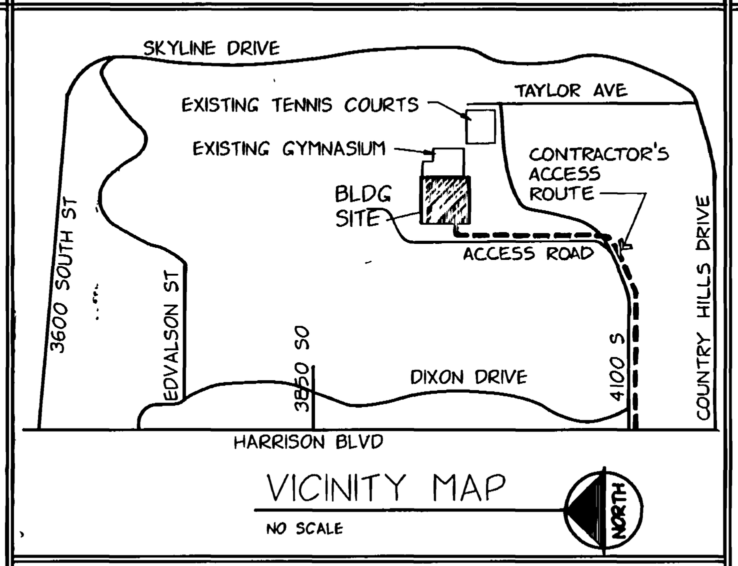

VICINITY MAP
NO SCALE

DFCM DESIGN & CODE CRITERIA
(For owners use only)

- Seismic Zone: II — Gross Sq Feet: 80,992
- Occupancy(ies)[1]: A2.1 and B2 — Net Sq Feet: 67,865 SF
- Building Type(s)[1]: II - 1 Hr. — Ratio
- Construction Budget
- Miscellaneous
- Architectural[2]: 1985 UBC
- Handicapped[2]: 4th Revision Utah State Handicapped Code
- HVAC[2]: 1985 UMC
- Plumbing[2]: 1985 UPC
- Energy[2]: Utah Code for Energy Conservation 1983
- Handicapped[2]
- Electrical[2]: 1987 NEC

[1]Approved by State Fire Marshal
[2]Applicable Issue(s) of Codes & Supplements

DRAWING INDEX

0 TITLE SHEET

ARCHITECTURAL
- SD-1 SITE PLAN
- SD-2 SITE DETAILS
- SD-3 SITE DETAILS
- SD-4 SITE ALTERNATES
- A-1 MAIN LEVEL PLAN – NORTH
- A-2 MAIN LEVEL PLAN – SOUTH
- A-3 MAIN LEVEL PLAN – LINK
- A-4 MID LEVEL PLAN – LINK
- A-5 PLAZA LEVEL PLAN – LINK
- A-6 BALCONY LEVEL PLAN AND DETAILS
- A-7 ROOF PLAN AND DETAILS
- A-8 PLAZA AND ROOF DETAILS
- A-9 REFLECTED CEILING PLANS
- A-10 EXTERIOR ELEVATIONS
- A-11 EXTERIOR ELEVATIONS
- A-12 BUILDING SECTIONS
- A-13 WALL SECTIONS
- A-14 WALL SECTIONS
- A-15 STAIR SECTIONS AND DETAILS
- A-16 ROOM FINISH SCHEDULE & DETAILS
- A-17 ENLARGED PLANS AND INTERIOR ELEVATIONS
- A-18 INTERIOR ELEVATIONS
- A-19 INTERIOR ELEVATIONS
- A-20 MILLWORK DETAILS
- A-21 MILLWORK & MISC DETAILS
- A-22 DOOR SCHEDULE & DETAILS
- A-23 WINDOW SCHEDULE & DETAILS
- A-24 FACIA DETAILS
- A-25 MISC DETAILS

LANDSCAPE
- L-1 PLANTING PLAN
- L-2 PLAZA IRRIGATION & PLANTING
- L-3 IRRIGATION PLAN
- L-4 LANDSCAPE DETAILS

STRUCTURAL
- S-1 MAIN LEVEL FOUNDATION PLAN
- S-2 MAIN LEVEL FOUNDATION PLAN – LINK
- S-3 INTERIOR ROOF FRAMING & DETAILS
- S-4 FLOOR FRAMING PLAN – LINK
- S-5 ROOF FRAMING PLAN – NORTH
- S-6 ROOF FRAMING PLAN – SOUTH
- S-7 ROOF FRAMING PLAN – LINK
- S-8 ROOF FRAMING PLAN – NEW ENTRY
- S-9 FOUNDATION SECTIONS & DETAILS
- S-10 FOUNDATION SECTIONS & DETAILS
- S-11 WALL ELEVATIONS & DETAILS
- S-12 WALL ELEVATIONS
- S-13 WALL ELEVATIONS & DETAILS
- S-14 STRUCTURAL DETAILS
- S-15 TRUSS DETAILS
- S-16 TRUSSES
- S-17 TRUSSES & DETAILS
- S-18 STRUCTURAL DETAILS & NOTES

MECHANICAL
- SP-1 SITE UTILITIES PLAN
- SP-2 ENLARGED TUNNEL PLANS & SECTION
- SP-3 SITE UTILITY DETAILS
- SP-4 SITE UTILITY DETAILS
- SP-5 SITE UTILITY DETAILS AND LEGEND
- P-1 PLUMBING PLAN – MAIN LEVEL – NORTH
- P-2 PLUMBING PLAN – MAIN LEVEL – SOUTH
- P-3 PLUMBING PLAN – MAIN LEVEL – LINK
- P-4 PLUMBING PLAN – MID LEVEL – LINK
- P-5 PLUMBING PLAN – PLAZA LEVEL – LINK
- P-6 PLUMBING PLANS, DETAILS AND SCHEDULES
- M-0 MECHANICAL LEGENDS & ABBREVIATIONS
- M-1 MECHANICAL PLAN – MAIN LEVEL – NORTH
- M-2 MECHANICAL PLAN – MAIN LEVEL – SOUTH
- M-3 MECHANICAL PLAN – MAIN LEVEL – LINK
- M-4 MECHANICAL PLAN – MID LEVEL – LINK
- M-5 MECHANICAL PLAN – PLAZA LEVEL – LINK
- M-6 MECHANICAL ROOM & SECTIONS
- M-7 PIPE SCHEMATIC
- M-8 MECHANICAL EQUIPMENT SCHEDULES
- M-9 MECHANICAL EQUIPMENT SCHEDULES
- M-10 MECHANICAL DETAILS
- M-11 SEISMIC DETAILS

ELECTRICAL
- E-1 SCHEDULES & NOTES
- E-2 SITE PLAN
- E-3 LIGHTING PLAN MAIN LEVEL – NORTH
- E-4 LIGHTING PLAN MAIN LEVEL – SOUTH
- E-5 LIGHTING PLAN MAIN LEVEL – LINK
- E-6 LIGHTING PLAN MID LEVEL – LINK
- E-7 LIGHTING PLAN PLAZA LEVEL – LINK
- E-8 POWER PLAN MAIN LEVEL – NORTH
- E-9 POWER PLAN MAIN LEVEL – SOUTH
- E-10 POWER PLAN MAIN LEVEL – LINK
- E-11 POWER PLAN MID LEVEL – LINK
- E-12 POWER PLAN PLAZA LEVEL
- E-13 ELECTRICAL PLAN BALCONY LEVEL
- E-14 ONE LINE DIAGRAM
- E-15 DETAILS
- E-16 PANEL SCHEDULES

0000TV0
Weber State College, Physical Education Facility - RW 84-058
Cover Sheet - 26674

NOTE: THIS SHEET IS COMPRISED OF DRAWINGS AND DETAILS FROM THE ORIGINAL 1990 BUILDING CONSTRUCTION CONFORMED SET & HAS BEEN INCLUDED FOR INFORMATIONAL PURPOSES ONLY. CONDITIONS SHOWN ON THIS SHEET HAVE NOT BEEN VERIFIED WITH EXISTING CONSTRUCTED CONDITIONS.

jra JONES/ RICHARDS & ASSOCIATES
ARCHITECTURE (801)394-3033 — PLANNING 533 26TH STREET — CONSTRUCTION MANAGEMENT OGDEN, UTAH

REVISED: AS BUILT 7-90

PROJECT NUMBER: 8403 — DATE: 8-21-88 — DRAWN BY: S. DEATON

PROJECT: PHYSICAL EDUCATION FACILITY — WEBER STATE COLLEGE

SHEET TITLE: TITLE SHEET

SHEET NO. 0

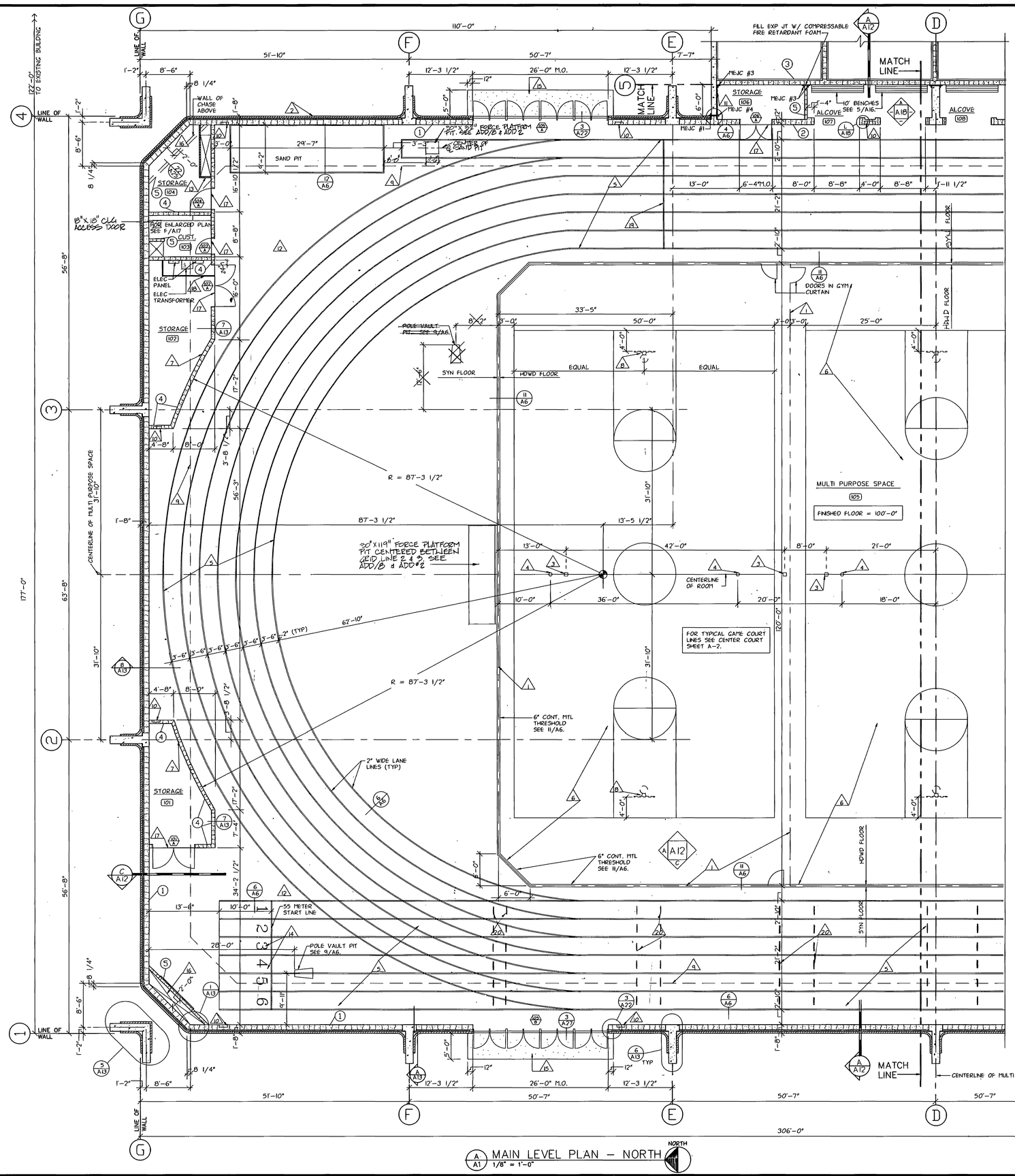

GENERAL NOTES

1. FIELD VERIFY EXISTING DIMENSIONS.
2. DIMENSIONS ARE TO FACE OF MASONRY UNLESS NOTED OTHERWISE.
3. ALL 4", 6", 8" & 10" CMU TO BE SCORED @ 8" O.C. (UNLESS NOTED OTHERWISE) WHERE EXPOSED TO VIEW EXCEPT STORAGE, CUST. & MECHANICAL ROOMS. RAKE JOINTS OF SCORED CMU. IF CMU IS EXPOSED BOTH SIDES, BOTH SIDES ARE TO BE SCORED.
4. TAPER SYNTHETIC GYM SURFACE TO 1/4" THICK WHERE IT ABUTS CONCRETE OR TILE FLOOR SURFACES.

KEYED NOTES

1. FOLD UP GYM CURTAIN. CENTER OVER EXPANSION JOINT COVER @ PERIMETER OF HARDWOOD FLOOR. SEE BUILDING SECTIONS SHEET A12.
2. PROVIDE WATERPROOFING, PROTECTION BOARD AND DRAIN BOARD ON EAST SIDE OF FOUNDATION WALL FROM MSR CORNER @ GRID LINE "F" TO NORTH-EAST CORNER OF BUILDING. TIE DRAIN BD TO FOOTING DRAIN (6'± EAST) WITH 4" LAYER OF WASHED GRAVEL.
3. TENNIS NET POST INSERTS. SEE 13/A6.
4. VOLLYBALL POST INSERTS. SEE 13/A6.
5. THICKEN SYN FLOOR 5mm AT TRACK. SEE 6/A6.
6. RECESS CONCRETE FLOOR 2-1/4" AT HARDWOOD FLOOR AREA. SEE 11/A6. SLAB THICKNESS UNDER HARDWOOD TO BE 4". (5" UNDER SYNTHETIC FLOOR)
7. USE 8" LONG CMU IN LIEU OF 16" AT CURVED WALLS.
8. RETRACTABLE BASKETBALL BACKBOARDS. SEE 16 & 17/A25.
9. ACOUSTIC BAFFLE ABOVE. SEE ELEVATION SHEETS A12 AND A18.
10. FIRE EXTINGUISHER CABINET. SEE 12/A25.
11. 5/8" GYPSUM BOARD OVER 1 1/2" Z FURRING CHANNELS WITH 1 1/2" RIGID INSULATION. (ROOM 106)
12. FOR MECHANICAL EQUIPMENT PLATFORM ABOVE SEE TYP. ELEVATIONS ON SHEET A/12 & DETAIL 11/A25.
13. FURR AROUND DUCT WITH 2 1/2" METAL STUDS & 5/8" GYPSUM BOARD. (TYP VERTICAL & HORIZONTAL DUCTWORK).
14. PAINTED LANE NUMBERS, 24" HIGH (MIN). COORDINATE EXACT LOCATION WITH COLLEGE.
15. 4" THICK CONCRETE STOOP. THICKEN EDGES TO 12", DOWEL EDGE AT BUILDING TO FND WALL WITH #4 @ 18" O.C.
16. MASONRY JOINTS IN CHASES ARE TO BE FLUSH CUT. (TYP)
17. PROVIDE METAL THRESHOLD TRANSITION BETWEEN SYN GYM FLOOR AND CONCRETE FLOOR.
18. PAINT A 2" WIDE LINE ON FLOOR, 3'-0" IN FRONT OF ELECTRICAL PANELS.
19. 1500 METER START LINE, LOCATE 100 METERS FROM COMMON FINISH LINE.
20. HURDLE MARKS. COORDINATE LOCATION WITH COLLEGE.

DDOOTVA1
Weber State University Physical Education Facility - RW-84-058
Maryland Parkway
Ogden, Utah 84408-1705

WALL SYSTEM

(SEE GENERAL NOTE #3 & ROOM ELEVATIONS FOR SPECIAL CMU TYPES & INSTRUCTIONS).

1. 12" CMU, 3-1/2" RIGID INSULATION & FACE BRICK
2. 12" CMU
3. 10" CMU (SCORED 8" O.C. WHERE EXPOSED)
4. 8" CMU (SCORED 8" O.C. WHERE EXPOSED)
5. 6" CMU (SCORED 8" O.C. WHERE EXPOSED)
6. 12" CONCRETE
7. 10" CONCRETE WITH 2" RIGID INSULATION & 4" CMU VENEER (8" SCORED)
8. 8" CONCRETE WITH 2" RIGID INSULATION & 4" CMU VENEER (8" SCORED)

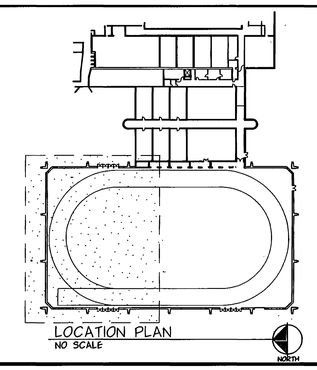

RECORD DOCUMENTS JUL 6 1990

THESE DOCUMENTS HAVE BEEN REVISED TO RECORD INFORMATION SUBMITTED BY THE CONTRACTOR, WHILE THEY ARE ASSUMED TO BE RELIABLE THE ARCHITECT DOES NOT GUARANTEE THEIR ACCURACY.

STATE OF UTAH — BRENT RICHARDS — NO. 4107 — REGISTERED ARCHITECT

NOTE: THIS SHEET IS COMPRISED OF DRAWINGS AND DETAILS FROM THE ORIGINAL 1990 BUILDING CONSTRUCTION CONFORMED SET & HAS BEEN INCLUDED FOR INFORMATIONAL PURPOSES ONLY. CONDITIONS SHOWN ON THIS SHEET HAVE NOT BEEN VERIFIED WITH EXISTING CONSTRUCTED CONDITIONS.

jra JONES/ RICHARDS & ASSOCIATES
PLANNING — CONSTRUCTION MANAGEMENT
533 26TH STREET — OGDEN, UTAH
ARCHITECTURE (801)394-3033

REVISED:

PROJECT NUMBER: 8403
DATE: 6-21-88
DRAWN BY: S. DEATON

PROJECT: PHYSICAL EDUCATION FACILITY
WEBER STATE COLLEGE

SHEET TITLE: MAIN LEVEL PLAN - NORTH

SHEET NO. A-1

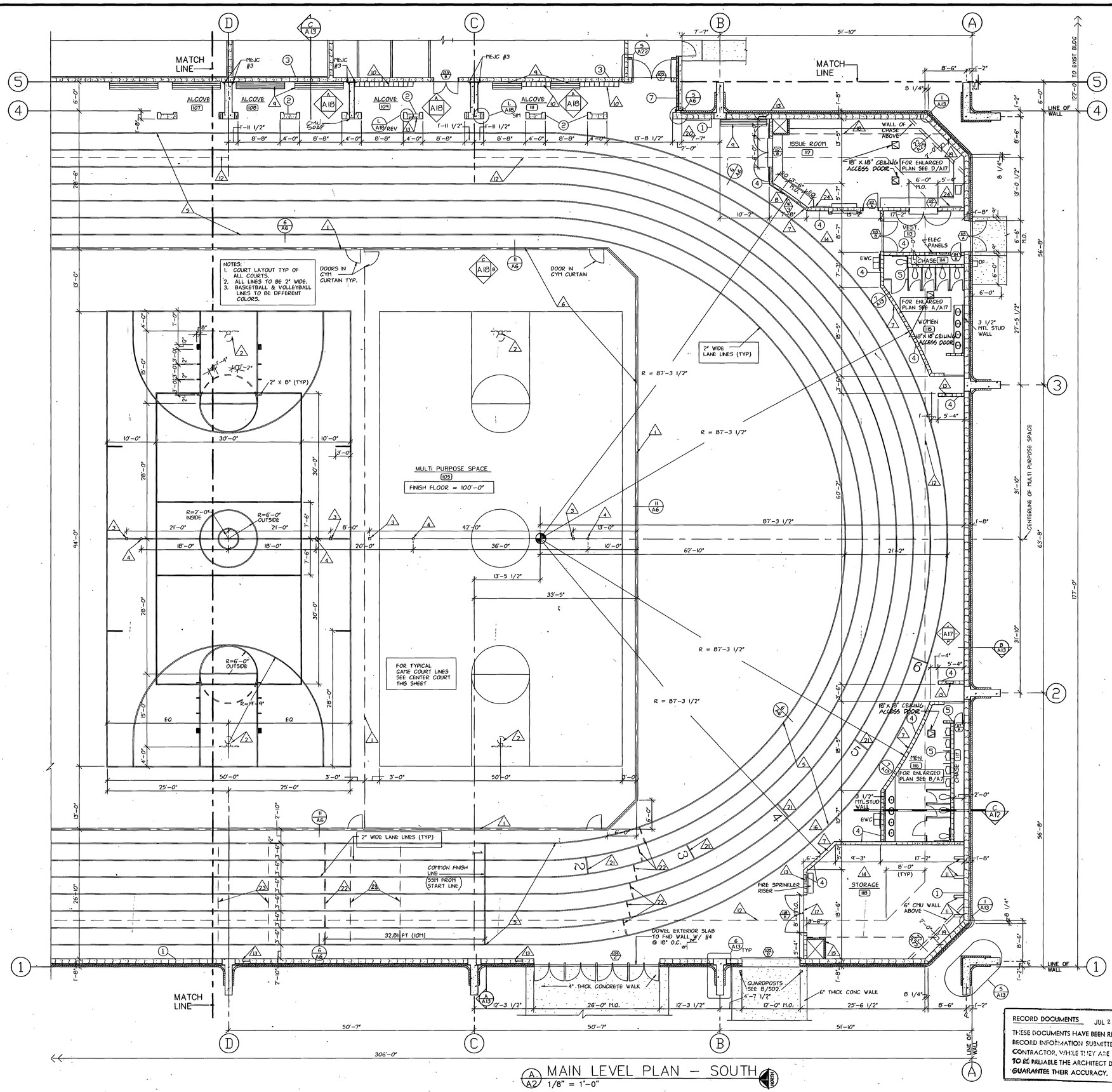

A/A2 MAIN LEVEL PLAN – SOUTH
1/8" = 1'-0"

GENERAL NOTES

1. FIELD VERIFY EXISTING DIMENSIONS.
2. DIMENSIONS ARE TO FACE OF MASONRY UNLESS NOTED OTHERWISE.
3. ALL 4", 6", 8" & 10" CMU TO BE SCORED @ 8" O.C. (UNLESS NOTED OTHERWISE) WHERE EXPOSED TO VIEW, EXCEPT STORAGE, CUST. & MECHANICAL ROOMS. RAKE JOINTS OF SCORED CMU. IF CMU IS EXPOSED BOTH SIDES, BOTH SIDES ARE TO BE SCORED.
4. TAPER SYNTHETIC GYM SURFACE TO 1/4" THICK WHERE IT ABUTS CONCRETE OR TILE FLOOR SURFACES.

KEYED NOTES

1. FOLD UP GYM CURTAIN. CENTER OVER EXPANSION JOINT COVER @ PERIMETER OF HDWD FLOOR. SEE BUILDING SECTIONS SHEET A12.
2. RETRACTABLE BASKETBALL BACKBOARD. SEE 16 & 17/A25.
3. TENNIS NET POST INSERTS. SEE 13/A6.
4. VOLLEYBALL POST INSERTS. SEE 13/A6.
5. THICKEN SYN FLOOR 5 mm @ TRACK, SEE 6/A6.
6. RECESS CONCRETE FLOOR 2 1/4" @ HARDWOOD FLOORING AREA. SEE 11/A6. SLAB THICKNESS UNDER HARDWOOD TO BE 4". (5" UNDER SYNTHETIC FLOOR.)
7. USE 8" LONG CMU IN LIEU OF 16" AT CURVED WALLS.
8. WINDOW, 4'-0" X 3'-8". SEE WINDOW SCHEDULE
9. HARDWOOD BENCHES, SEE 5/A16.
10. LOCKERS, SEE A/A18 & 3/A16.
11. METAL BRACKETS @ 4'-0" O.C. SEE 4/A16.
12. ACOUSTIC BAFFLE ABOVE. SEE ELEVATION SHEETS A12 & A18.
13. FIRE EXTINGUISHER CABINET. SEE 12/A25.
14. FOR MECHANICAL EQUIPMENT PLATFORM ABOVE SEE TYP ELEVATIONS ON SHEET A/12 AND DETAIL 11/A25.
15. FURR AROUND DUCT W/ 2 1/2" METAL STUDS AND 5/8" GYPSUM BD.
16. FOR ROOF ACCESS HATCH ABOVE SEE A/A7.
17. PROVIDE METAL THRESHOLD TRANSITION BETWEEN SYNTHETIC GYM FLOOR AND CONCRETE SLABS. (TYP)
18. METAL STUD AND GYPSUM BOARD SOFFIT AROUND MECHANICAL DUCT.
19. MASONRY JOINTS IN CHASES ARE TO BE FLUSH CUT.
20. BULLETIN BOARD – SEE SPEC.
21. 200 METER START LINES. STAGGER FOR UNIFORM 200 METER DISTANCE TO COMMON FINISH LINE.
22. DASHED RELAY EXCHANGE LINE 10 METER EITHER SIDE OF COMMON FINISH LINE.
23. HURDLE MARKS. COORDINATE LOCATION WITH COLLEGE.
24. TACK BOARD. SEE ENLARGED PLAN A17.

WALL SYSTEM

(SEE GENERAL NOTE #3 & ROOM ELEVATIONS FOR SPECIAL CMU TYPES & INSTRUCTIONS.)

1. 12" CMU, 3-1/2" RIGID INSULATION & FACE BRICK
2. 12" CMU
3. 10" CMU (SCORED 8" O.C. WHERE EXPOSED)
4. 8" CMU (SCORED 8" O.C. WHERE EXPOSED)
5. 6" CMU (SCORED 8" O.C. WHERE EXPOSED)
6. 12" CONCRETE
7. 10" CONCRETE WITH 2" RIGID INSULATION & 4" CMU VENEER (8" SCORED)
8. 8" CONCRETE WITH 2" RIGID INSULATION & 4" CMU VENEER (8" SCORED)

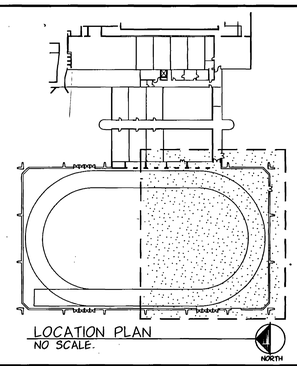

LOCATION PLAN
NO SCALE.

RECORD DOCUMENTS JUL 2 1990

THESE DOCUMENTS HAVE BEEN REVISED TO RECORD INFORMATION SUBMITTED BY THE CONTRACTOR. WHILE THEY ARE ASSUMED TO BE RELIABLE THE ARCHITECT DOES NOT GUARANTEE THEIR ACCURACY.

STATE OF UTAH ROBERT RICHARDS RICHARDS No. 1107 LICENSED ARCHITECT

NOTE: THIS SHEET IS COMPRISED OF DRAWINGS AND DETAILS FROM THE ORIGINAL 1990 BUILDING CONSTRUCTION CONFORMED SET & HAS BEEN INCLUDED FOR INFORMATIONAL PURPOSES ONLY. CONDITIONS SHOWN ON THIS SHEET HAVE NOT BEEN VERIFIED WITH EXISTING CONSTRUCTED CONDITIONS.

0000TVA2
Weber State College, Physical Education Facility - RNY-84-008
Main Level Plan South - 26660

jra JONES/ RICHARDS & ASSOCIATES
ARCHITECTURE (801)394-3033
PLANNING 533 26TH STREET CONSTRUCTION MANAGEMENT OGDEN, UTAH

REVISED: AS BUILT 7-90
PROJECT NUMBER: 8403
DATE: 6-21-88
DRAWN BY: S. DEATON

PROJECT: PHYSICAL EDUCATION FACILITY
WEBER STATE COLLEGE

SHEET TITLE: MAIN LEVEL PLAN – SOUTH

SHEET NO. A-2

RECORD DOCUMENTS - JUN 1 1990

THESE DOCUMENTS HAVE BEEN REVISED TO RECORD INFORMATION SUBMITTED BY THE CONTRACTOR. THEY ARE ASSUMED TO BE RELIABLE THE ARCHITECT DOES NOT GUARANTEE THEIR ACCURACY.

GENERAL NOTES

1. FIELD VERIFY EXISTING DIMENSIONS.
2. DIMENSIONS ARE TO FACE OF MASONRY UNLESS NOTED OTHERWISE.
3. ALL 4", 6", 8" & 10" CMU TO BE SCORED @ 8" O.C. (UNLESS NOTED OTHERWISE) WHERE EXPOSED TO VIEW EXCEPT STORAGE, CUST. & MECHANICAL ROOMS. RAKE JOINTS OF SCORED CMU. IF CMU IS EXPOSED BOTH SIDES, BOTH SIDES ARE TO BE SCORED.
4. EXTEND ALL CORRIDOR WALLS TO DECK ABOVE, AS A FIRE SEAL BETWEEN TOP OF WALL AND DECK. PROVIDE GROUT OR APPROVED FIRE RATED FOAM INSULATION.
5. IN CORRIDOR 133 AND HALL 134 PROVIDE SCORED CMU BASE ABOVE 4" RES. BASE. SEE 1/A4.

KEYED NOTES

1. TACK BOARD – MOUNT TOP 7'-0" AFF.; SEE B/A16.
2. STUDY CARRELS N.I.C.
3. 15" X 24" BENCH, SEE 5/A16.
4. 15" X 8'-0" BENCH, SEE 5/A16.
5. FIREWALL STENCILING ABOVE CEILING. SEE NOTE 29 SHT A-4.
6. COMBINATION MARKER & TACK BOARD. SEE B/A16.
7. 4' WIDE X 9'-0" HIGH CERAMIC TILE BEHIND EWC.
8. FURR OUT WALL WITH HAT CHANNEL @ 16" O.C. AND PROVIDE 5/8" GYPSUM BOARD.
9. 2 1/2" METAL STUDS @ 16" O.C. 1" FROM EXISTING CONCRETE WALL. PROVIDE SOUND INSULATION AND 5/8" GYPSUM BOARD.
10. REMOVE EXISTING DOOR AND FRAME. INFILL OPENING WITH 8" CMU DOWELED TO EXISTING CONCRETE WALLS WITH #4 BARS @ 24" O.C.– PLASTER EAST SIDE TO MATCH EXIST CONCRETE. PAINT ENTIRE WEST SIDE OF CORRIDOR 161.
11. BALLET BARRE, MIRRORS AND CURTAIN. SEE ELEVATIONS, C & D/A19.
12. LAMINATED COURT PANEL SYSTEM OVER 2 1/2" 18 GA. METAL STUDS FURRING @ 16" O.C. WITH R-11 BATT INSULATION AND 6 MIL POLY VAPOR RETARDER. BLOCK @ 8'-0" O.C. BRACE BLOCKING BACK AT CONCRETE WALL.
13. LAMINATED COURT PANEL SYSTEM OVER 2 X 3 OR 2 X 4 TREATED WOOD FURRING LAID FLAT @ 12" O.C.. PROVIDE 6 MIL POLY VAPOR BELOW @ GRADE. SOLID BLOCK @ 8'-0" O.C.
14. LAMINATED COURT PANEL SYSTEM OVER 2 X 3 OR 2 X 4 TREATED WOOD FURRING LAID FLAT @ 16" O.C.. SOLID BLOCK @ 8'-0" O.C.
15. LAMINATED COURT PANEL SYSTEM OVER 1/2" 2 X 3 OR 2 X 4 TREATED WOOD FURRING LAID FLAT @ 16" O.C.. PROVIDE 1 1/2" FIBERGLASS SOUND INSUL BETWEEN FURRING. SOLID BLK @ 8'-0" O.C.
16. LAMINATED COURT PANEL SYSTEM OVER 1 X 4 TREATED WOOD FURRING @ 16" O.C.
17. DEPRESS SLAB 1 3/8" @ RACQUETBALL COURTS.
18. DEPRESS SLAB 1 3/4" @ DANCE STUDIO.
19. FILL NON GROUTED CORES OF CMU WALL WITH SAND.
20. RECESSED RACQUETBALL STORAGE BOX – SEE SPEC.
21. PROVIDE COAT ROD AND 3/4" HDWD PLYWOOD SHELF.
22. REMOVE EXISTING WOOD FLOORING IN EXISTING RACQUETBALL COURT. SAW CUT CONCRETE SLAB UNDER NEW CORRIDOR WALL AND INSTALL NEW CONCRETE FOOTING. POUR NEW CONCRETE TOPPING SLAB OVER ENTIRE COURT, FLUSH WITH EXISTING AND NEW SLABS.
23. SAW CUT AND REMOVE EXISTING CONCRETE WALL FOR NEW OPNG.
24. PROVIDE 3 1/2" SOUND BATTS IN WALLS AND CEILING OF ROOM 125.
25. DIVIDER CURTAIN WITH TRACK. 7'-8" HIGH X 7'-0" WIDE.
26. RECESSED FIRE EXTINGUISHER CABINET. SEE 12/A25.
27. LOOSE LAY CARPET OVER HDWD FLOOR. USE DOUBLE STICK TAPE AT EDGES AND PROVIDE CARPET BAR ALONG JUNCTION BETWEEN WOOD AND CARPET.
28. ACCESS LADDER TO MECHANICAL RM ABOVE, SEE 1/A16.
29. 1'-6" WIDE X 7'-0" HIGH LADDER FOR ELEV PIT. SEE 1/A16.
30. GROUT CORES OF WALL SOLID TO ACHIEVE A 2 HOUR FIRE RATING IN ROOM 149.
31. PLUMBNESS OF SHAFT WALL SHALL MEET REQUIREMENTS OF ELEV SUPPLIER.
32. (5) 18" X 12'-5" X 1" (24" X 8'-0" X 1" IN RM 124) PART BD SHELVES W/ HDO & PLASTIC TEE EDGE. USE HEAVY DUTY STANDARDS & BRACKETS. SEE 17/A21 FOR ELEVATIONS.
33. FURR OUT CMU WALL W/ 2 1/2" MTL STUDS @ 24" O.C. W/ 2 1/2" SOUND INSUL & (2) LAYERS OF 5/8" GYP BD. BRACE EA STUD AT 1/3 POINTS W/ SOUND ISOLATION MOUNT. SEE 11/A25
34. CHALK AND TACK BOARD.
35. 18" COAT RACK. SEE 13/A21.

WALL SYSTEM

(SEE ROOM ELEVATIONS FOR SPECIAL CMU TYPES & INSTRUCTIONS).

1. 12" CMU, 3-1/2" RIGID INSULATION & FACE BRICK
2. 12" CMU
3. 10" CMU (SCORED 8" O.C. WHERE EXPOSED)
4. 8" CMU (SCORED 8" O.C. WHERE EXPOSED)
5. 6" CMU (SCORED 8" O.C. WHERE EXPOSED)
6. 12" CONCRETE
7. 10" CONCRETE WITH 2" RIGID INSULATION & 4" CMU VENEER (8" SCORED)
8. 8" CONCRETE WITH 2" RIGID INSULATION & 4" CMU VENEER (8" SCORED)
9. 8" CONCRETE
10. 3 5/8" MTL STUDS @ 16" O.C. W/ 5/8" GYP BD BOTH SIDES
11. 3 5/8" 20 GA STL STUDS @ 16" O.C. W/ 5/8" GYP BD BOTH SIDES

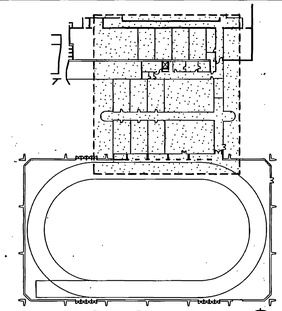

A/A3 MAIN LEVEL PLAN – LINK
1/8" = 1'-0"

NOTE: THIS SHEET IS COMPRISED OF DRAWINGS AND DETAILS FROM THE ORIGINAL 1990 BUILDING CONSTRUCTION CONFORMED SET & HAS BEEN INCLUDED FOR INFORMATIONAL PURPOSES ONLY. CONDITIONS SHOWN ON THIS SHEET HAVE NOT BEEN VERIFIED WITH EXISTING CONSTRUCTED CONDITIONS.

BRETT J. RICHARDS No. 7107 LICENSED ARCHITECT

jra JONES/ RICHARDS & ASSOCIATES
ARCHITECTURE (801)394-3033
PLANNING
CONSTRUCTION MANAGEMENT
533 26TH STREET OGDEN, UTAH

REVISED: AS BUILTS 6-90

PROJECT NUMBER: 8403
DATE: 15-21-88
DRAWN BY: S. DEATON

PROJECT: PHYSICAL EDUCATION FACILITY
WEBER STATE COLLEGE

SHEET TITLE: MAIN LEVEL PLAN – LINK

SHEET NO. A-3

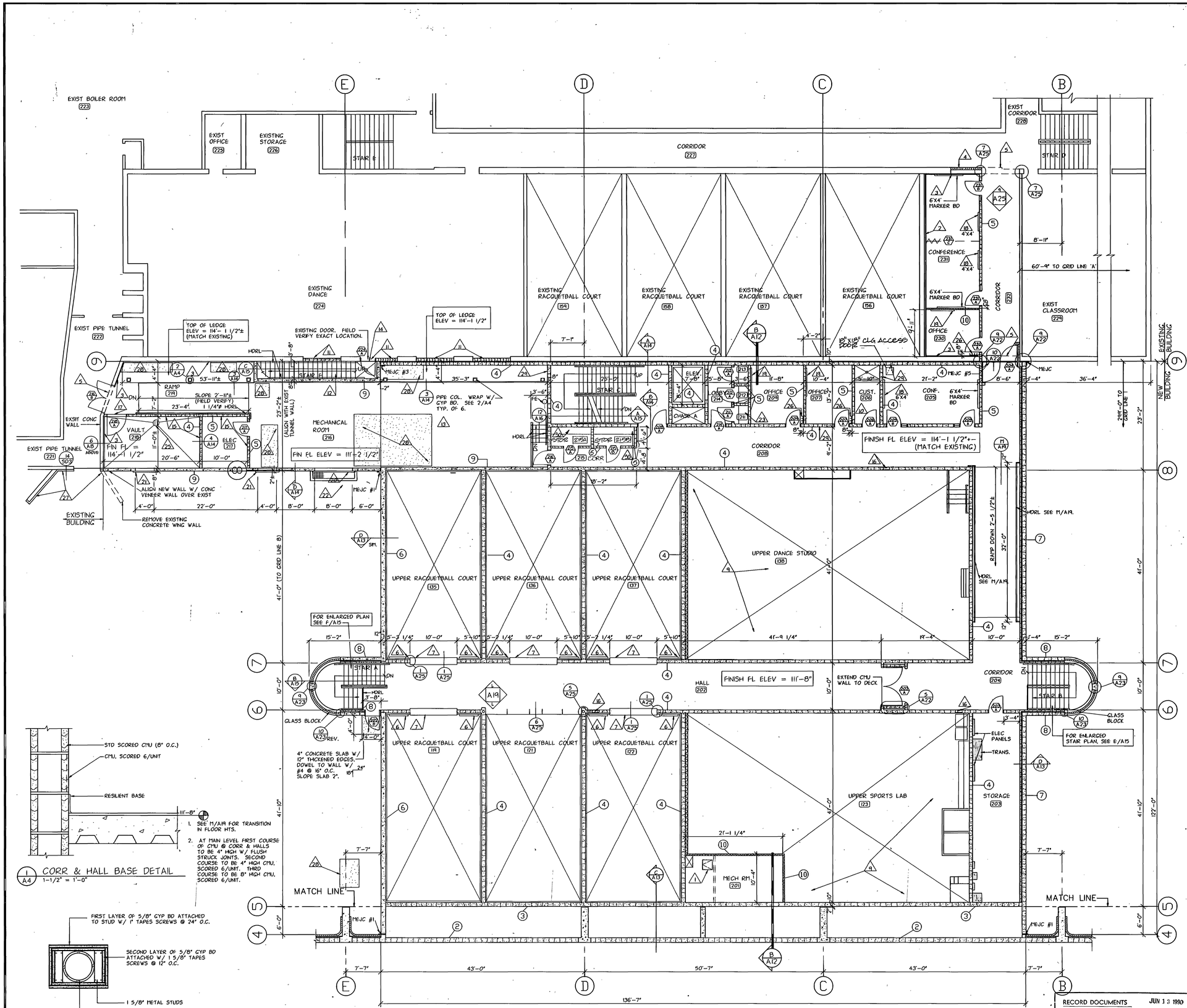

A/A4 MID LEVEL PLAN – LINK
1/8" = 1'-0"

1. SEE 11/A19 FOR TRANSITION IN FLOOR HTS.
2. AT MAIN LEVEL FIRST COURSE OF CMU @ CORR & HALLS TO BE 4" HIGH W/ FLUSH STRUCK JOINTS. SECOND COURSE TO BE 4" HIGH CMU, SCORED 6/UNIT. THIRD COURSE TO BE 8" HIGH CMU, SCORED 6/UNIT.

1/A4 CORR & HALL BASE DETAIL
1-1/2" = 1'-0"

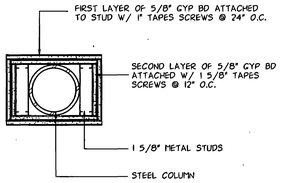

2/A4 COLUMN FIRE PROOFING
1-1/2" = 1'-0"

GENERAL NOTES

1. FIELD VERIFY EXISTING DIMENSIONS.
2. DIMENSIONS ARE TO FACE OF MASONRY UNLESS NOTED OTHERWISE.
3. ALL 4", 6", 8" & 10" CMU TO BE SCORED @ 8" O.C. (UNLESS NOTED OTHERWISE) WHERE EXPOSED TO VIEW (EXCEPT STORAGE, CUST. & MECHANICAL ROOMS). RAKE JOINTS OF SCORED CMU. IF CMU IS EXPOSED BOTH SIDES, BOTH SIDES ARE TO BE SCORED.
4. EXTEND ALL CORRIDOR WALLS TO DECK ABOVE AS A FIRE SEAL BETWEEN TOP OF WALL AND DECK. PROVIDE GROUT OR APPROVED FIRE RATED FOAM INSULATION.
5. IN CORRIDOR 204 & HALL 202 PROVIDE SCORED CMU BASE ABOVE RES. BASE. SEE 1/A4.
6. PROVIDE 1 HOUR SPRAYED ON FIRE PROOFING OVER PLAZA MTL JOISTS AND DECK IN ROOMS 205, 208, 215, 216, 214 & EAST 10' OF CORRIDOR 204.

KEYED NOTES

1. FLOOR ACCESS DOOR. SEE DETAIL 1/A-1
2. 2 1/2" METAL STUDS @ 16" O.C. 1" FROM EXISTING CONCRETE WALL. PROVIDE SOUND INSUL & 5/8" GYPSUM BOARD.
3. FURR OUT WALL WITH 3/4" HAT CHANNEL @ 16" O.C. AND PROVIDE 5/8" GYPSUM BOARD.
4. INFILL EXISTING OPENING WITH 6" CMU DOWELED 6" INTO EXISTING WALLS WITH 18" X #4 @ @ 24" O.C. MAX. PLASTER EAST SIDE TO MATCH EXISTING CONCRETE, PAINT WEST SIDE OF CORRIDOR 227.
5. SAW CUT AND REMOVE EXISTING CONCRETE WALL FOR NEW OPENING.
6. 4' X 4' ACOUSTICAL PANEL TYPE 'B'. MOUNT @ 15' AFF.
7. TERMINATE LAMINATED COURT PANEL SYSTEM ON BACK WALL @ 12'-0" AFF. IN LIEU OF PANEL PROVIDE 3/8" GYPSUM BOARD LAMINATED OVER 1/2" GYPSUM BOARD APPLIED TO 1 X 4 FURRING @ 16" O.C.
8. NOT USED
9. FOR ACOUSTIC PANEL LOCATIONS SEE ROOM ELEVATIONS SHEET A19.
10. FOR ENLARGED PLAN SEE E/A17.
11. REMOVE EXISTING WINDOW, STOOL, DRAPERY & AC UNITS. INFILL OPENING W/ 8" CMU INTO EXIST CONCRETE WALL @ 16" W/ #4 X 18" @ 24" O.C. COVER INSIDE OF EXIST WALL & CMU INFILL (APPROX 30") W/ 5/8" GYPSUM BD ON METAL FURRING. PLASTER EXTERIOR OF CMU WHERE EXPOSED @ STAIRWELL. PATCH EXISTING PLASTER AS REQUIRED FOR FINISHED APPEARANCE.
12. REMOVE EXISTING CONCRETE STAIR AND SURROUNDING CONCRETE WALL & FOOTINGS. PROVIDE NEW STAIR AND WALL AS SHOWN. PATCH AND REPAIR FINISH PLASTER ON EXTERIOR OF EXISTING BASEMENT WALL AS REQUIRED FOR NEAT, FINISH APPEARANCE.
13. FOR EQUIPMENT PAD LOCATION SEE SHEET M6.
14. REMOVE EXISTING DOOR AND FRAME AND PROVIDE NEW.
15. EXTEND CMU WALLS TO DECK AND FIRE SEAL JOIST PENETRATIONS. HOLD CMU DOWN 1" TO ALLOW FOR JOIST DEFLECTION.
16. RECESSED FIRE EXTINGUISHER CABINET. SEE 12/A25.
17. PROVIDE A 4" HIGH X 6" WIDE CONCRETE CURB @ DOOR WAY. SET DOOR AND FRAME ABOVE CURB.
18. TACK BOARD – MOUNT 7'-0" AFF.
19. COMBINATION MARKER BOARD AND TACK BOARD, SEE 8/A16.
20. 9'-0" X 8'-0" WALL LOUVER, SEE 10/A25.
21. 4'-0" X 3'-0" WALL LOUVER, SEE 10/A25.
22. 9'-0" X 2'-0" CONCRETE AREA WAY, SEE 14/SD2.
23. (5) 24" X 3'-9" X 1" PART BOARD SHELVES. USE HEAVY DUTY STANDARDS AND BRACKETS, SEE 17/A21. (TYP OF RMS 211, 212 AND 213.)
24. NOT USED
25. SLOPE FLOOR 2" TO SUMP. SUMP TO BE 18"Ø X 24" DEEP PRECAST CONCRETE PIPE SECTION WITH 4" CONCRETE FLOOR. PIPE TO HAVE BELL END AND METAL GRATING COVER.
26. 18" COAT RACK, SEE 13/A21.
27. NEW 6" MIN THICK CONCRETE VENEER WALL W/ #4 @ 16" O.C. EW. TIE TO EXISTING WALL W/ 3/8"Ø POWER ACTIVATED STUD DRIVEN INTO EXISTING CONCRETE @ 2'-0" O.C. EW. STUD TO EXTEND 1" MIN INTO NEW CONCRETE AND 1 1/2" MIN INTO EXISTING.
28. 6" THCK CONCRETE EQUIPMENT PAD. COORDINATE EXACT SIZE AND LOCATION WITH MECHANICAL.
29. STENCILE THE FOLLOWING. NOTE AT 20' O.C. ON THIS WALL ABOVE THE CEILING: "FIREWALL – DO NOT PENETRATE". LETTERING TO BE 1 1/2" HIGH AND RED.
30. (5) 18"X24'-0" X 1" SHELVES W/ HEAVY DUTY STDS & BRACKETS. SEE 17/A21 & ADD #1, 2 #16 & ADD-1.

WALL SYSTEM

(SEE ROOM ELEVATIONS FOR SPECIAL CMU TYPES & INSTRUCTIONS).

1. 12" CMU, 3-1/2" RIGID INSULATION & FACE BRICK
2. 12" CMU
3. 10" CMU (SCORED 8" O.C. WHERE EXPOSED)
4. 8" CMU (SCORED 8" O.C. WHERE EXPOSED)
5. 6" CMU (SCORED 8" O.C. WHERE EXPOSED)
6. 12" CONCRETE
7. 10" CONCRETE WITH 2" RIGID INSULATION & 4" CMU VENEER (8" SCORED)
8. 8" CONCRETE WITH 2" RIGID INSULATION & 4" CMU VENEER (8" SCORED)
9. 8" CONCRETE
10. 3 5/8" MTL STUDS @ 16" O.C. W/ 5/8" GYP BD BOTH SIDES W/ SOUND INSUL BATTS @ MECH ROOM 201
11. 3 5/8" 20 GA STL STUDS @ 16" O.C. W/ 5/8" GYP BD BOTH SIDES

RECORD DOCUMENTS JUN 13 1990

THESE DOCUMENTS HAVE BEEN REVISED TO RECORD INFORMATION SUBMITTED BY THE CONTRACTOR, WHILE THEY ARE ASSUMED TO BE RELIABLE THE ARCHITECT DOES NOT GUARANTEE THEIR ACCURACY.

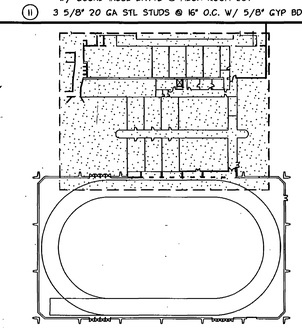

LOCATION PLAN
NO SCALE

STATE OF UTAH — BRETT L. RICHARDS — No. 7107 — REGISTERED ARCHITECT

NOTE: THIS SHEET IS COMPRISED OF DRAWINGS AND DETAILS FROM THE ORIGINAL 1990 BUILDING CONSTRUCTION CONFORMED SET & HAS BEEN INCLUDED FOR INFORMATIONAL PURPOSES ONLY. CONDITIONS SHOWN ON THIS SHEET HAVE NOT BEEN VERIFIED WITH EXISTING CONSTRUCTED CONDITIONS.

jra JONES/ RICHARDS & ASSOCIATES
ARCHITECTURE (801)394-3033
PLANNING 533 26TH STREET
CONSTRUCTION MANAGEMENT OGDEN, UTAH

REVISED: 10/15/90 ADDED NOTE AS BUILTS 6-4-90

PROJECT NUMBER: 8403
DATE: 6-21-88
DRAWN BY: S. DEATON

PROJECT: PHYSICAL EDUCATION FACILITY
WEBER STATE COLLEGE

SHEET TITLE: MID LEVEL PLAN – LINK

SHEET NO. A-4

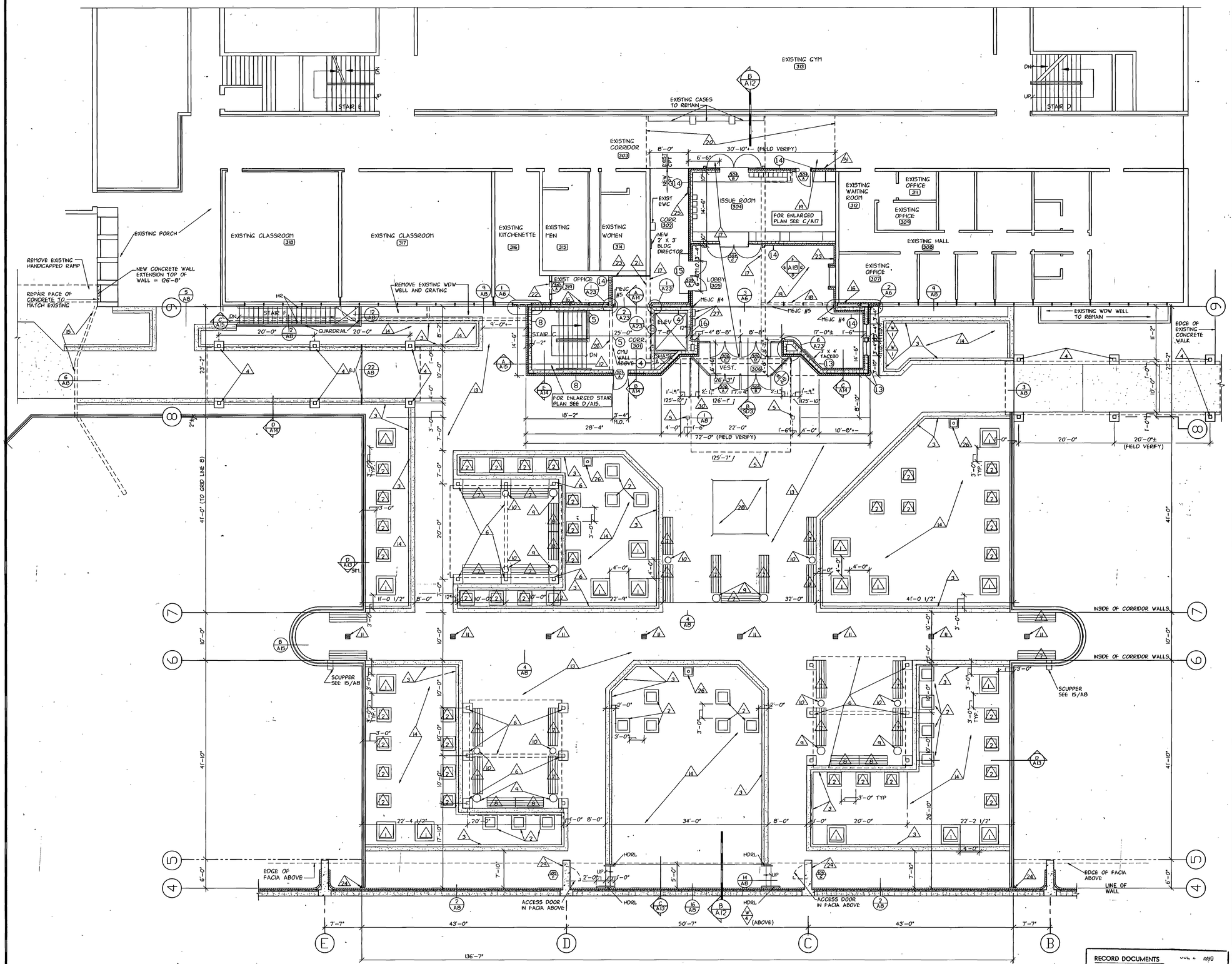

PLAZA LEVEL PLAN – LINK

A5 — 1/8" = 1'-0"

GENERAL NOTES

1. FIELD VERIFY ALL EXISTING DIMENSIONS.
2. DIMENSIONS ARE TO FACE OF MASONRY UNLESS NOTED OTHERWISE.
3. ALL 4", 6", 8" & 10" CMU TO BE SCORED @ 8" O.C. (UNLESS NOTED OTHERWISE) WHERE EXPOSED TO VIEW (EXCEPT STORAGE, CUST. & MECHANICAL ROOMS). RAKE JOINTS OF SCORED CMU. IF CMU IS EXPOSED BOTH SIDES, BOTH SIDES ARE TO BE SCORED.
4. FOR SLOPE ON PLAZA SEE SHEET A7.

KEYED NOTES

1. 4' X 4' RW PLANTER BOX, SEE 6/SD3.
2. 3' X 3' RW PLANTER BOX, SEE 6/SD3.
3. CONCRETE CURB WALL, SEE 10/AB.
4. SIDEWALK ENTRY STRUCTURE, SEE C & D/SD3.
5. ENTRY STRUCTURE, SEE A & B/SD3.
6. SHADE STRUCTURE, SEE E & F/SD3.
7. 8' LONG WOOD BENCH, SEE 7/SD3.
8. 6' LONG WOOD BENCH, SEE 7/SD3.
9. CONCRETE RUBBISH CONTAINER, SEE 9/SD3.
10. CONCRETE ASH CAN, SEE 8/SD3.
11. PLAZA DECK DRAIN, SEE MECHANICAL & 13/AB.
12. FOR ENLARGED STAIR PLAN, SEE D/A15.
13. 24" X 24" CONCRETE PAVERS, SEE SPEC.
14. SOD OVER DIRT FILL, SEE L-2.
15. EXTEND EXISTING CONCRETE WALL OF PIPE TUNNEL UP. SEE 6/AB.
16. REMOVE EXISTING ALUM WINDOW & GLAZING. STRUCTURAL TUBES SHALL REMAIN EXCEPT AS NOTED. INFILL OPENING WITH 3 5/8" STL STUDS, 5/8" GYPSUM BOARD & BRICK AS SHOWN. SEE DETAILS.
17. REMOVE EXISTING LOBBY WALLS & CONCRETE ROOF SYSTEM. REMOVE ENTRY DOORS & CLEAR STORY WINDOWS ON PROJECTED PORTION OF EXISTING LOBBY THAT EXTENDS WEST OF GRID LINE 4. REMOVE FND, FOOTING & FLOOR SLAB. (SAW CUT SLAB) REMOVE ALL EXISTING FINISHES BULLETIN BOARDS, ETC TO ALLOW INSTALLATION OF NEW LOBBY & ISSUE ROOM. PATCH & CLEAN CONCRETE FLOOR AS REQURED WHERE WALLS ARE REMOVED.
18. REMOVE EXISTING WINDOW WALLS & TUBE COLUMNS.
19. REMOVE EXISTING CONCRETE T ROOF STRUCTURE ABOVE OLD ISSUE ROOM AND UNDER CORRIDOR 303 EAST TO GYM. PROVIDE NEW STRUCTURAL WALLS & ROOF SYSTEM AS SHOWN. PROTECT EXPOSED BUILDING FROM DAMAGE BY ELEMENTS.
20. PROVIDE NEW SUSP. GYPSUM BOARD & AC TILE CEILING SYSTEM TO MATCH EXISTING IN CORRIDOR 303.
21. AFTER WALL IS REMOVED, PROVIDE TEMP DUST TIGHT PARTITION FOR EXISTING OFFICE.
22. REMOVE EXISTING MASONRY WALL & PROVIDE NEW DOOR & FRAME IN WALL. REMOVE FLOORING IN OFFICE 311 & REPLACE WITH NEW VINYL TILE.
23. APPLY FACE BRICK OVER EXISTING CMU.
24. EXTEND MEJC OVER TOP OF PARAPET & DOWN INSIDE EDGE TO DECK. SEAL TOP JOINT WITH FOAM JT FILLER & SEALANT.
25. RECESSED FIRE EXTINGUISHER CABINET. SEE 12/A25.
26. LIGHT POLE AND BASE. SEE ELECTRICAL FOR POLE AND 12/SD3 FOR BASE DETAIL.
27. TELEPHONE ENCLOSURES, SEE E/A18.
28. 8" THICK CONCRETE PAD W/ 3" CHAMFER AT TOP EDGES. PROVIDE W/ SPECIAL CONCRETE FINISH.
29. EXTEND EXPANSION JOINT AROUND PIER, SEE 17/AB.
30. THICKEN SLAB WEST OF ENTRY TO 8"± TO ALLOW FINISHED PLAZA PAVERS TO MATCH EXISTING FLOOR ELEVATION. TAPER SLAB TO ALLOW 3% FINISHED GRADE FOR FIRST 5' & 5% FOR NEXT 10'± UNTIL SLAB IS 4" THICK. TYP NORTH, SOUTH & WEST FROM ENTRY.
- 5/A1 REMOVE EXIST BRICK & BLOCK. PROVIDE NEW CMU & FACE BRICK.
- 6/A2 ELEV OF CMU WALL 126'-8" - SEE ADD #1 PKG - 17

WALL SYSTEM

(SEE GENERAL NOTE #3 & ROOM ELEVATIONS FOR SPECIAL CMU TYPES & INSTRUCTIONS.)

1. 12" CMU, 3-1/2" RIGID INSULATION & FACE BRICK
2. 12" CMU
3. 10" CMU (SCORED 8" O.C. WHERE EXPOSED)
4. 8" CMU (SCORED 8" O.C. WHERE EXPOSED)
5. 6" CMU (SCORED 8" O.C. WHERE EXPOSED)
6. 12" CONCRETE
7. 10" CONCRETE WITH 2" RIGID INSULATION & 4" CMU VENEER (8" SCORED)
8. 8" CONCRETE WITH 2" RIGID INSULATION & 4" CMU VENEER (8" SCORED)
9. 8" CONCRETE
10. 3 5/8" MTL STUDS @ 16" O.C. W/ 5/8" GYP BD BOTH SIDES
11. 3 5/8" 20 GA STL STUDS @ 16" O.C. W/ 5/8" GYP BD BOTH SIDES
12. 8" CMU W/ 2" RIGID INSUL & FACE BRICK
13. 8" CMU W/ 2" RIGID INSUL & FACE BRICK BOTH SIDES
14. 6" CMU & FACE BRICK
15. 2 WYTHES OF FACE BRICK W/ 2" GROUTED CORE (SEE E/A18.)
16. 8" CMU W/ FACE BRICK

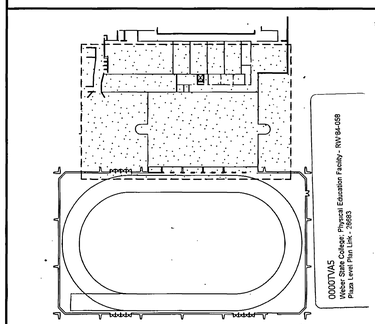

LOCATION PLAN
NO SCALE

RECORD DOCUMENTS — VOL 4 — 1990

THESE DOCUMENTS HAVE BEEN REVISED TO RECORD INFORMATION SUBMITTED BY THE CONTRACTOR, WHILE THEY ARE ASSUMED TO BE RELIABLE THE ARCHITECT DOES NOT GUARANTEE THEIR ACCURACY.

BRENT J. RICHARDS — No. 7107 — LICENSED ARCHITECT

NOTE: THIS SHEET IS COMPRISED OF DRAWINGS CONSTRUCTION CONFORMED SET & HAS BEEN INCLUDED FOR INFORMATIONAL PURPOSES ONLY. CONDITIONS SHOWN ON THIS SHEET HAVE NOT BEEN VERIFIED WITH EXISTING CONSTRUCTED CONDITIONS.

JONES/ RICHARDS & ASSOCIATES
CONSTRUCTION MANAGEMENT
PLANNING
533 26TH STREET
OGDEN, UTAH
jra
ARCHITECTURE
(801)394-3033

REVISED: AS BUILTS 6-90

PROJECT NUMBER: 8403
DATE: 6-21-88
DRAWN BY: S. DEATON

PROJECT: PHYSICAL-EDUCATION FACILITY
WEBER STATE COLLEGE

SHEET TITLE: PLAZA LEVEL PLAN – LINK

SHEET NO. A-5

GENERAL NOTES

1. FIELD VERIFY EXISTING DIMENSIONS.
2. DIMENSIONS ARE TO FACE OF MASONRY UNLESS NOTED OTHERWISE.
3. ALL 4", 6", 8" & 10" CMU TO BE SCORED @ 8' O.C. (UNLESS NOTED OTHERWISE) WHERE EXPOSED TO VIEW (EXCEPT STORAGE, CUST. & MECHANICAL ROOMS). RAKE JOINTS OF SCORED CMU. IF CMU IS EXPOSED BOTH SIDES, BOTH SIDES ARE TO BE SCORED.

KEYED NOTES

1. REMOVE EXISTING MASONRY WALL INCLUDING DOOR & FRAME. CUT OFF ANY REBAR BELOW FLOOR SLAB. GRIND & PATCH CONCRETE FLOOR AS REQUIRED FOR FINISHED APPEARANCE.
2. REMOVE WOOD STUD WALL STRUCTURE INCLUDING WOOD CEILING JOISTS, WINDOWS & UPPER RAILING ETC.
3. EXISTING CONCRETE SLAB TO REMAIN. PATCH AREAS DAMAGED BY REMOVAL OF EXISTING STRUCTURE. PROVIDE A 4" X 3" X 1/4" EDGE ANGLE BOLTED TO SLAB W/ 3/8" EXPANSION BOLTS @ 4'-0" O.C.
4. EXTEND EXISTING GUARDRAIL WEST TO BALCONY 403. MATCH EXISTING CONSTRUCTION.
5. REMOVE EXISTING WOODEN STRUCTURE & SUPPORTING BEAMS.
6. NEW BALCONY ALONG WEST WALL OF EXISTING GYM 313. SEE 10/A6.
7. PROVIDE NEW GUARDRAIL & SCREEN AT EDGE OF EXISTING CONCRETE SLAB.—SEE-10/A6 FOR DETAIL.
8. SAW CUT OPENING IN EXISTING WALL & PROVIDE NEW DOOR & FRAME.
9. FURR INTERIOR OF CMU W/ 1 1/2" Z FURRING CHANNELS @ 16" O.C. & 5/8" GYPSUM BOARD. INSTALL 1 1/2" RIGID INSULATION WHERE WALL IS EXTERIOR.
10. CUT BACK EXISTING ROOFING AND REMOVE FOR NEW CONSTRUCTION. POUR NEW 2"± CONCRETE TOPPING SLAB OVER EXISTING DOUBLE TEE ROOF DECK AT LOBBY 402.
11. PATCH EXISTING ROOFING @ NEW WALL AND PROVDE NEW CANT STRIP AND FLASHING AS SHOWN.
12. 3'-0" X 2'-0" LOUVER IN EAST FACE WITHIN 24" OF TOP OF WALL.
13. SAW CUT AND REMOVE CONCRETE DOUBLE TEE OVERHANG AT NEW CONSTRUCTION.
14. FIRE SEAL TOP OF SHAFT WALL WITH GROUT OR FIRE RATED FOAM INSULATION.

RECORD DOCUMENTS — THESE DOCUMENTS HAVE BEEN REVISED TO RECORD INFORMATION SUBMITTED BY THE CONTRACTOR. THE ENTITIES ARE ASSUMED TO BE RELIABLE THE ARCHITECT DOES NOT GUARANTEE THEIR ACCURACY.

NOTE: THIS SHEET IS COMPRISED OF DRAWINGS AND DETAILS FROM THE ORIGINAL 1990 BUILDING CONSTRUCTION CONFORMED SET & HAS BEEN INCLUDED FOR INFORMATIONAL PURPOSES ONLY. CONDITIONS SHOWN ON THIS SHEET HAVE NOT BEEN VERIFIED WITH EXISTING CONSTRUCTED CONDITIONS.

BALCONY LEVEL FLOOR PLAN
A/A6 — 1/8" = 1'-0"

11/A-6 THRESHOLD DETAIL — 1/2 SCALE

12/A-6 SAND PIT DETAIL — 3/4" = 1'-0"

9/A-6 POLE VAULT PIT — 3/4" = 1'-0"

7/A-6 FLOOR EDGE DETAIL — FULL SIZE

4/A-6 JOINT DETAIL - RM. 106 — 1 1/2" = 1'-0"

1/A-6 INFILL DETAIL - RM. 316 — 3/4" = 1'-0"

13/A-6 POST INSERT DETAIL — 1" = 1'-0"

14/A-6 POST INSERT COVER DET. — 3" = 1'-0"

10/A-6 BALCONY DETAIL - RM. 403 — 3/4" = 1'-0"

6/A-6 EXP. JT. DETAIL (BALCONY LEVEL) — 3/4" = 1'-0"

C/A-6 JOINT DETAIL - RM. 105 — 1 1/2" = 1'-0"

D/A-6 SLAB DETAIL - RM. 105 — 1/4 SCALE

3/A-6 EXP. JOINT DETAIL (TYP. FLOOR) — 1 1/2" = 1'-0"

WALL SYSTEM

(SEE ROOF ELEVATIONS FOR SPECIAL CMU TYPES & INSTRUCTIONS).

1. 12" CMU, 3-1/2" RIGID INSULATION & FACE BRICK
2. 12" CMU
3. 10" CMU (SCORED 8" O.C. WHERE EXPOSED)
4. 8" CMU (SCORED 8" O.C. WHERE EXPOSED)
5. 6" CMU (SCORED 8" O.C. WHERE EXPOSED)
6. 12" CONCRETE
7. 10" CONCRETE WITH 2" RIGID INSULATION & 4" CMU VENEER (8" SCORED)
8. 8" CONCRETE WITH 2" RIGID INSULATION & 4" CMU VENEER (8" SCORED)
9. 8" CONCRETE
10. 3 5/8" MTL STUDS @ 16" O.C. W/ 5/8" GYP BD BOTH SIDES
11. 3 5/8" 20 GA STL STUDS @ 16" O.C. W/ 5/8" GYP BD BOTH SIDES
12. 8" CMU W/ 2" RIGID INSUL & FACE BRICK
13. 8" CMU W/ 2" RIGID INSUL & FACE BRICK BOTH SIDES
14. 6" CMU & FACE BRICK
15. 2 WYTHES OF FACE BRICK W/ 2" GROUTED CORE
16. 8" CMU W/ FACE BRICK
17. 6" CMU W/ 2" RIGID INSUL & FACE BRICK
18. 3 5/8" 20 GA STL STUDS @ 16" O.C. W/ 5/8" GYP BD INSIDE R-11 INSUL & CEMENT BD SHEATHING. OVERLAY SHEATHING W/ 3/4" RIGID INSUL & SIMULATED CAST STONE FINISH.

LOCATION PLAN — NO SCALE

STATE OF UTAH — BRENT L. PERKINS — REGISTERED LANDSCAPE ARCHITECT — NO. 11107

JONES/ RICHARDS & ASSOCIATES — CONSTRUCTION MANAGEMENT — PLANNING — 533 26TH. STREET — OGDEN, UTAH — ARCHITECTURE — (801)394-3033

REVISED: AS BUILTS — 6-90

PROJECT NUMBER: 8403 — DATE: 8-27-90 — DRAWN BY: S. DEATON

PROJECT: PHYSICAL EDUCATION FACILITY — WEBER STATE COLLEGE

SHEET TITLE: BALCONY LEVEL PLAN & DETAILS

SHEET NO. A-6

0000TVA5 — Weber State College, Physical Education Facility - RW-84-069 — Balcony Level Plan & Details — 03884

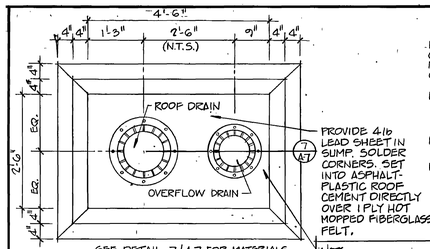

SEE DETAIL 7/A-7 FOR MATERIALS

PROVIDE 4lb LEAD SHEET IN SUMP. SOLDER CORNERS. SET INTO ASPHALT-PLASTIC ROOF CEMENT DIRECTLY OVER 1 PLY HOT MOPPED FIBERGLASS FELT.

NOTE: BUILD UP LOW END OF SUMP W/ BITUMEN OR TAPERED INSULATION TO PREVENT PONDING OF WATER.

6 / A-7 **ROOF DRAIN PLAN** 3/4" = 1'-0"

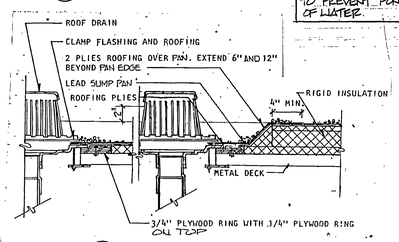

7 / A-7 **ROOF DRAIN DETAIL** 1½" = 1'-0"

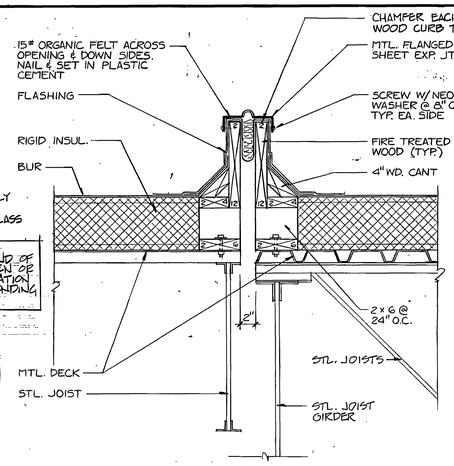

1 / A-7 **EXPANSION JT. DETAIL** 1½" = 1'-0"

ROOF INSULATION SYSTEMS

1. 1-1/2" PERLITE (BELOW VAPOR BARRIER) 1.6"POLYISOCYANURATE 1.9"PERLITE/POLYISO.
2. 1-1/2" EXTRUDED POLYSTYRENE
3. 1-1/2" PERLITE (BELOW VAPOR BARRIER) 1.8"POLYISO. 3-1/4" TO 3/4" TAPERED PERLITE.
4. 3" TO 1-1/2" TAPERED PERLITE
5. 1-1/2" PERLITE (BELOW VAPOR BARRIER) 1.8"POLYISO. 5-1/4" TO 3/4" TAPERED PERLITE.
6. 1-1/2" PERLITE (BELOW VAPOR BARRIER) 1.8" POLYISO. 3/4" PERLITE TAPERED PERLITE CRICKETS (1/4"/FT. MIN. SLOPE, 3/4" MIN. THICKNESS).
7. 1-1/2" PERLITE
8. 5" TO 1-1/2" TAPERED PERLITE.

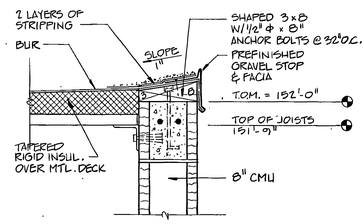

B / A-7 **ROOF DETAIL AT ELEV. TOWER** 1 1/2" = 1'-0"

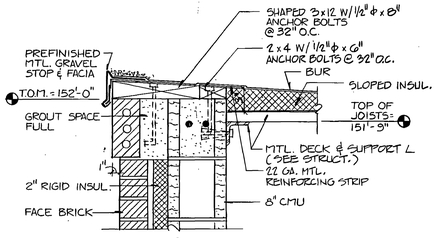

2 / A-7 **ROOF DETAIL AT ELEV. TOWER** 1½" = 1'-0"

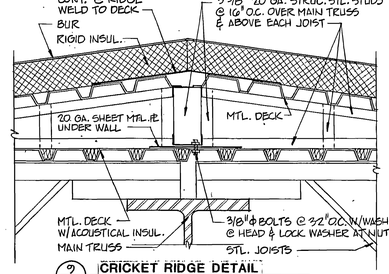

9 / A-7 **CRICKET RIDGE DETAIL** 1 1/2" = 1'-0"

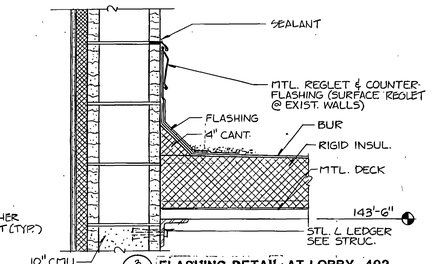

3 / A-7 **FLASHING DETAIL AT LOBBY 402** 1½" = 1'-0"

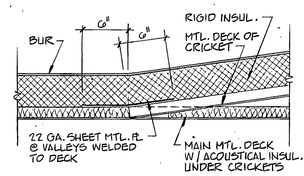

10 / A-7 **CRICKET VALLEY DETAIL** 1 1/2" = 1'-0"

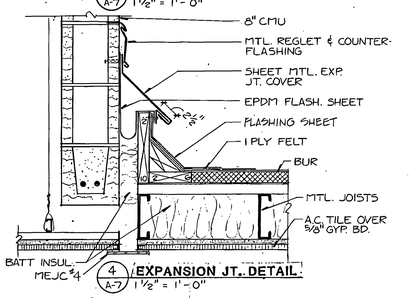

4 / A-7 **EXPANSION JT. DETAIL** 1½" = 1'-0"

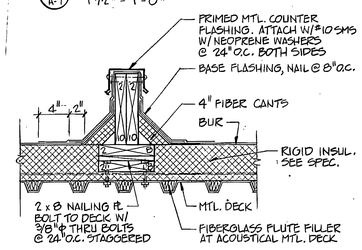

11 / A-7 **AREA DIVIDER DETAIL** 1 1/2" = 1'-0"

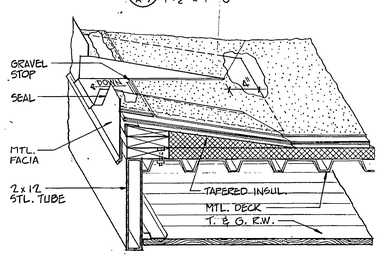

5 / A-7 **SCUPPER DETAIL AT ENTRY STRUCTURE** 1 1/2" = 1'-0"

KEYED NOTES

1. ROOF DRAIN & ROOF OVERFLOW DRAIN SEE 6/A7.
2. CRICKET MADE OF MTL DECK SET ON COLD ROLLED MTL FRAMING. SEE 9&10/A7
3. ENTRY STRUCTURE, SEE A & B/SD3

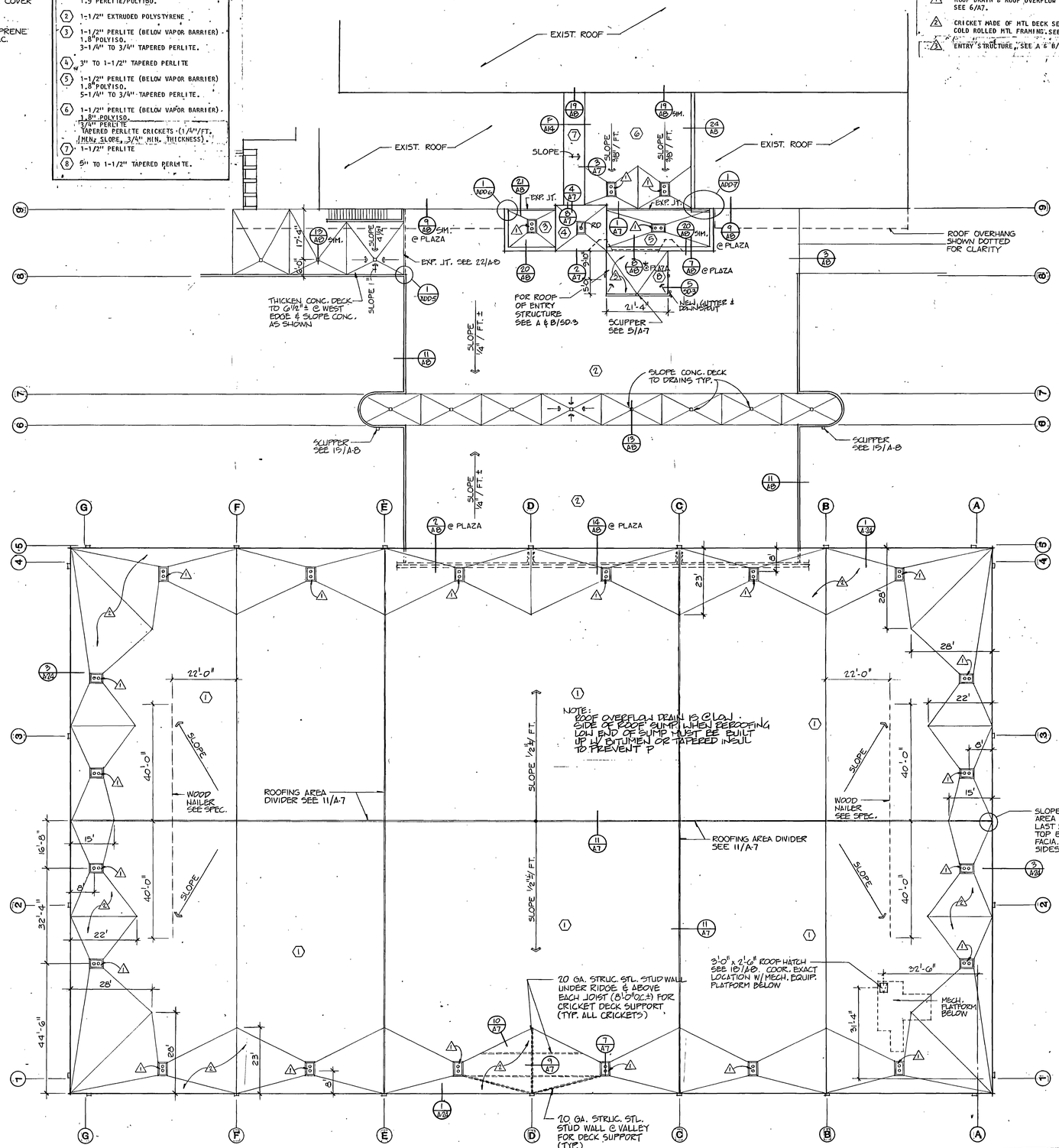

A / A-7 **ROOF PLAN** 1/16" = 1'-0"

RECORD DOCUMENTS JUN 2 5 1990

THESE DOCUMENTS HAVE BEEN REVISED TO RECORD INFORMATION FURNISHED BY THE CONTRACTOR. WHILE THEY ARE ASSUMED TO BE RELIABLE THE ARCHITECT DOES NOT GUARANTEE THEIR ACCURACY.

NOTE: THIS SHEET IS COMPRISED OF DRAWINGS AND DETAILS FROM THE ORIGINAL 1990 BUILDING CONSTRUCTION CONFORMED SET & HAS BEEN INCLUDED FOR INFORMATIONAL PURPOSES ONLY. CONDITIONS SHOWN ON THIS SHEET HAVE NOT BEEN VERIFIED WITH EXISTING CONSTRUCTED CONDITIONS.

BRETT L. RICHARDS NO. 7107 STATE OF UTAH

jrg JONES / RICHARDS & ASSOCIATES
ARCHITECTURE (801) 364-3333
PLANNING 333 - 28TH STREET
CONSTRUCTION MANAGEMENT OGDEN, UTAH

REVISED: As Builts 6-90
PROJECT NUMBER: 8693
DATE: 8-27-90
DRAWN BY: K. SEKO

PROJECT: PHYSICAL EDUCATION FACILITY
WEBER STATE COLLEGE
SHEET TITLE: ROOF PLAN & DETAILS

0000V1A7
Weber State College, Physical Education Facility - RW-Mar-009
Roof Plan & Details - 29585

SHEET NO. A-7

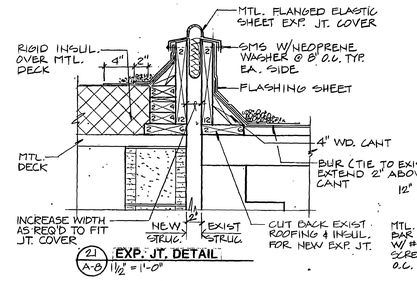

21 / A-8 **EXP. JT. DETAIL**
1½" = 1'-0"

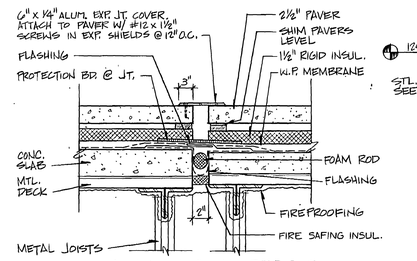

22 / A-8 **PLAZA EXP. JOINT DETAIL**
1½" = 1'-0"

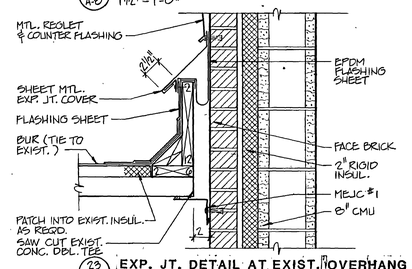

23 / A-8 **EXP. JT. DETAIL AT EXIST. OVERHANG**
1½" = 1'-0"

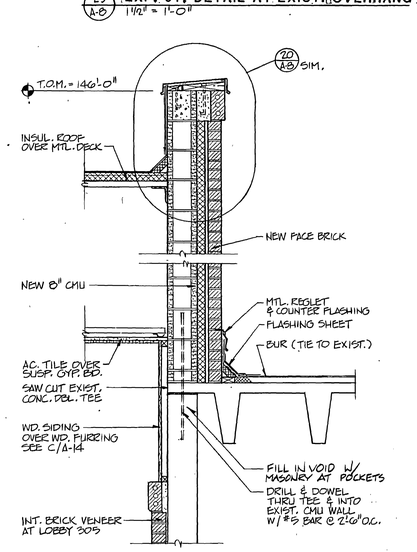

24 / A-8 **ROOF DETAIL AT LOBBY 305**
3/4" = 1'-0"

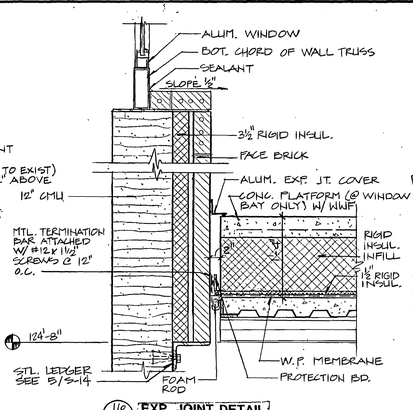

16 / A-8 **EXP. JOINT DETAIL**
1" = 1'-0"

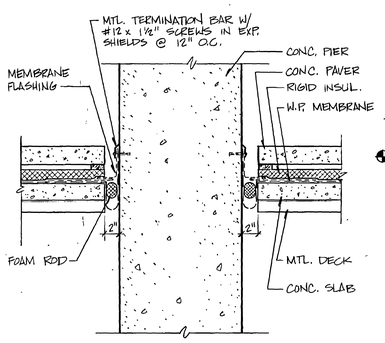

17 / A-8 **EXP. JOINT AT PIER**
1½" = 1'-0"

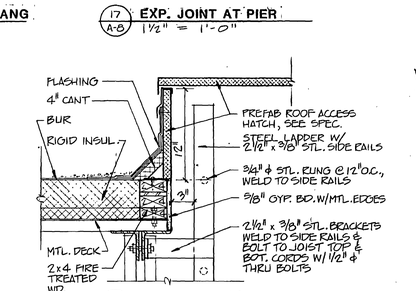

18 / A-8 **ROOF ACCESS HATCH**
1½" = 1'-0"

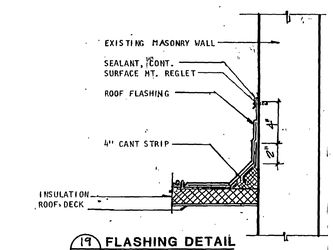

19 / A-8 **FLASHING DETAIL**
NO SCALE

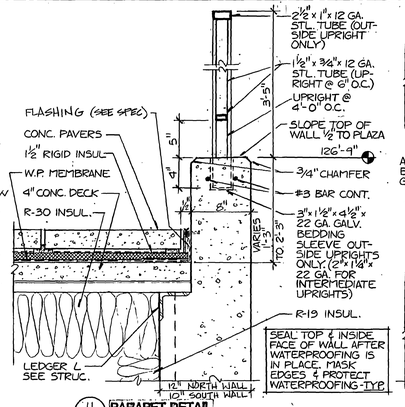

11 / A-8 **PARAPET DETAIL**
1½" = 1'-0"

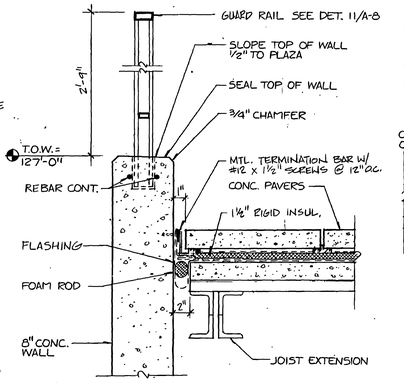

12 / A-8 **STAIR WALL EXP. JT. DETAIL**
1½" = 1'-0"

13 / A-8 **PLAZA DRAIN DETAIL**
1½" = 1'-0"

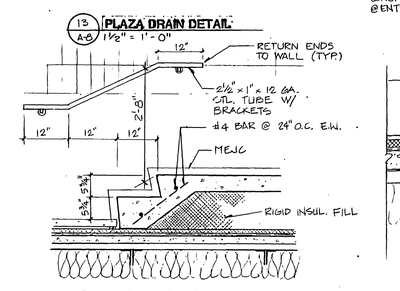

14 / A-8 **PLAZA STAIR DETAIL**
3/4" = 1'-0"

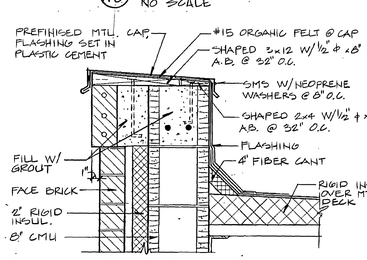

20 / A-8 **PARAPET DETAIL**
1½" = 1'-0"

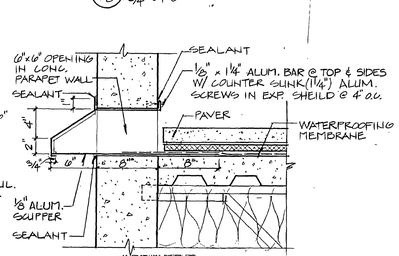

15 / A-8 **SCUPPER**
1½" = 1'-0"

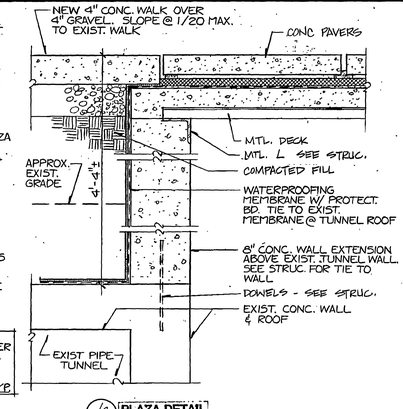

6 / A-8 **PLAZA DETAIL**
1½" = 1'-0"

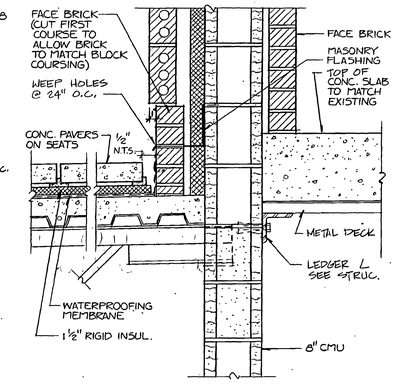

7 / A-8 **PLAZA DETAIL**
1½" = 1'-0"

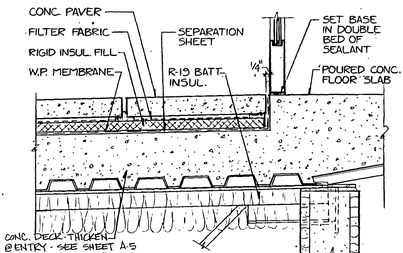

8 / A-8 **PLAZA DETAIL**
1½" = 1'-0"

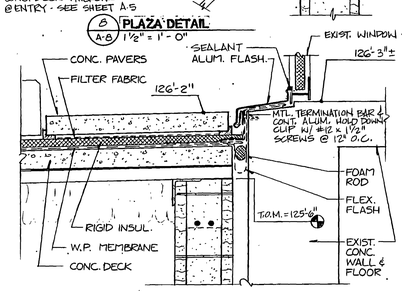

9 / A-8 **PLAZA DETAIL**
1½" = 1'-0"

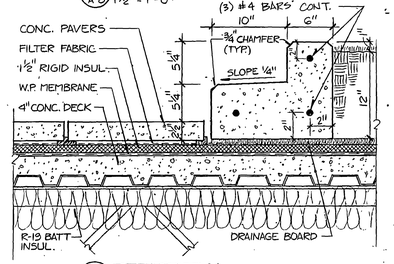

10 / A-8 **PLAZA DETAIL**
1½" = 1'-0"

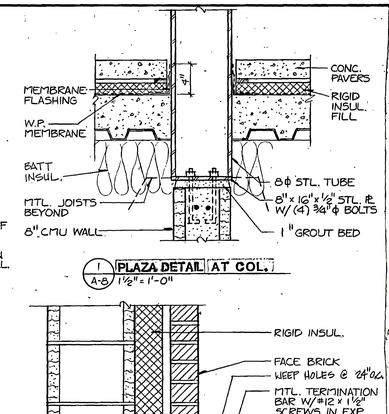

1 / A-8 **PLAZA DETAIL AT COL.**
1½" = 1'-0"

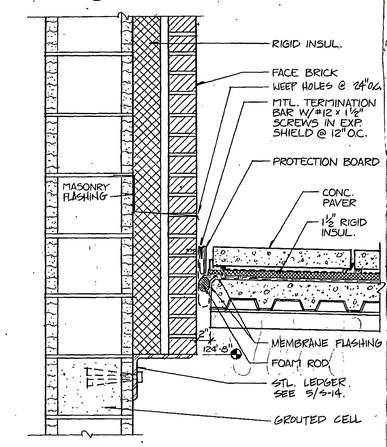

2 / A-8 **PLAZA DETAIL**
1½" = 1'-0"

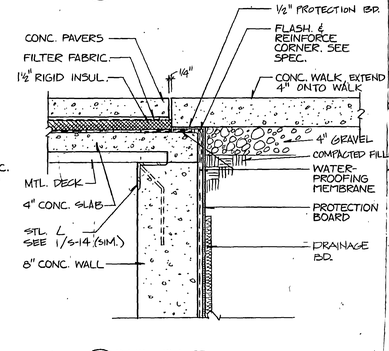

3 / A-8 **PLAZA DETAIL**
1½" = 1'-0"

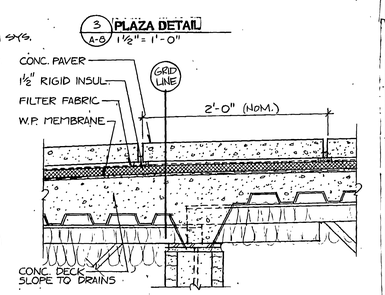

4 / A-8 **PLAZA DETAIL - CORR. WALL**
1½" = 1'-0"

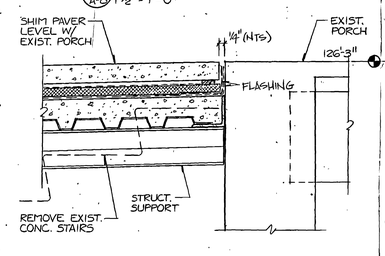

5 / A-8 **PLAZA DETAIL AT EXIST. PORCH**
1½" = 1'-0"

RECORD DOCUMENTS JUN 2 5 1990
THIS IS FOR THE PURPOSE OF REFERENCE ONLY. THE CONTRACTOR SHOULD VERIFY THE INFORMATION ... THE ARCHITECT DOES NOT GUARANTEE THEIR ACCURACY.

NOTE: THIS SHEET IS COMPRISED OF DRAWINGS AND DETAILS FROM THE ORIGINAL 1990 BUILDING CONSTRUCTION CONFORMED SET & HAS BEEN INCLUDED FOR REFERENCE PURPOSES ONLY. ALL CONDITIONS SHOWN ON THIS SHEET CANNOT BE VERIFIED WITH EXISTING CONSTRUCTED CONDITIONS.

BEST AVAILABLE COPY

jra JONES / RICHARDS & ASSOCIATES
ARCHITECTURE PLANNING CONSTRUCTION MANAGEMENT
521 SECOND STREET SACRAMENTO, CA 95814

REVISED: AS BUILTS 6-90
PROJECT NUMBER: 8409
DATE: 5-21-82
DRAWN BY: KS 2210

PROJECT: PHYSICAL EDUCATION FACILITY
WEBER STATE COLLEGE
SHEET TITLE: PLAZA & ROOF DETAILS

SHEET NO. A-8

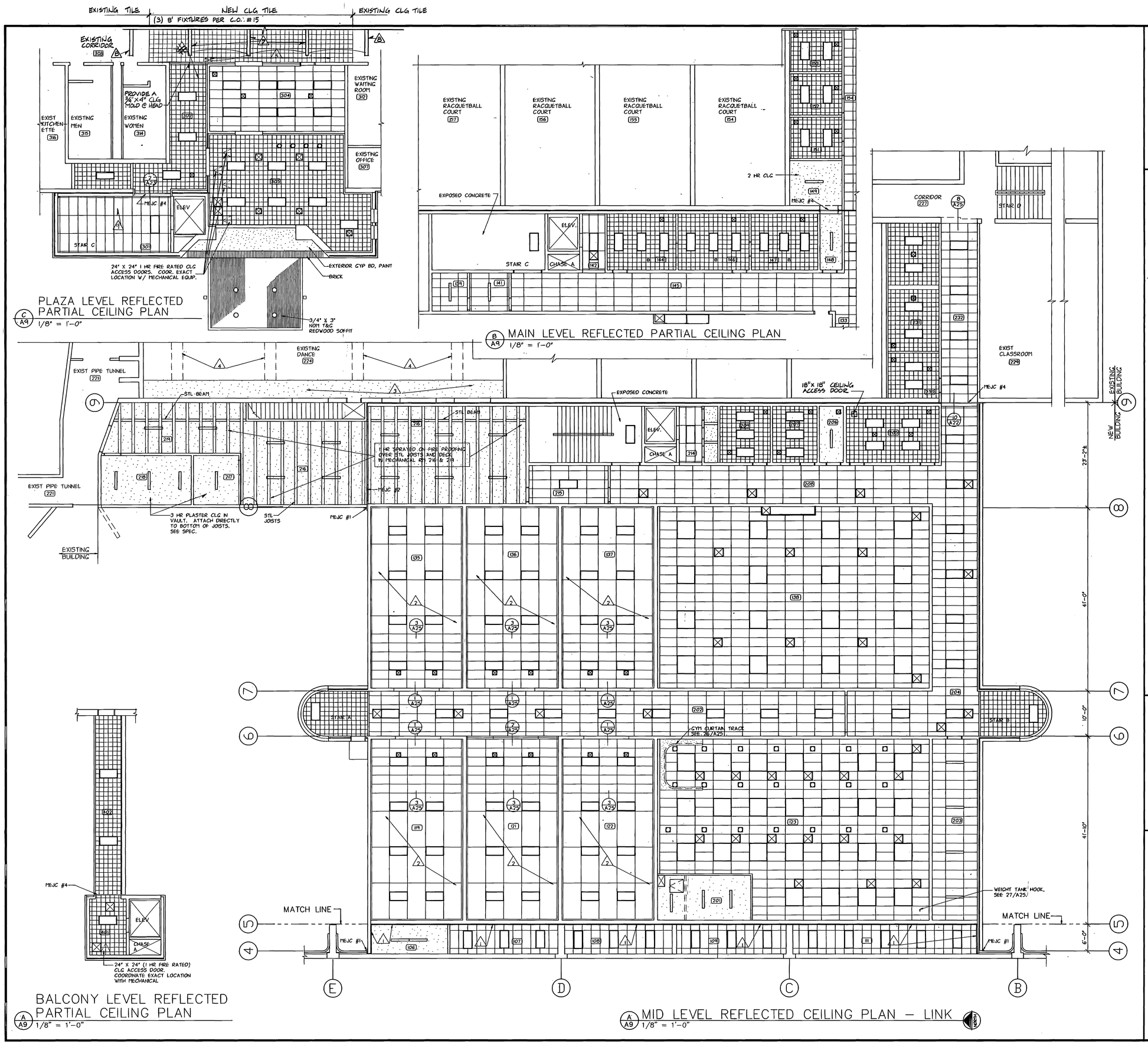

PLAZA LEVEL REFLECTED PARTIAL CEILING PLAN
C A9 1/8" = 1'-0"

MAIN LEVEL REFLECTED PARTIAL CEILING PLAN
B A9 1/8" = 1'-0"

BALCONY LEVEL REFLECTED PARTIAL CEILING PLAN
A A9 1/8" = 1'-0"

MID LEVEL REFLECTED CEILING PLAN – LINK
A A9 1/8" = 1'-0"

GENERAL NOTES

1. REFLECTED CEILING PLANS FOR CORRIDORS 133, 134, 145, & 152 SIMILAR TO 202, 204, 208 & 232.
2. PROVIDE 1 HOUR SPRAYED ON FIRE PROOFING OVER PLAZA JOISTS AND DECK IN ROOMS 205, 208, 215, 216, 219 & THE EAST 10' OF CORRIDOR 204.

KEYED NOTES

1. MEJC TYPE #3.
2. COURT PANEL CEILING, SEE SPECIFICATIONS.
3. PROVIDE NEW 2 1/2" METAL STUD & 5/8" GYPSUM BD FURRED CEILING SPACE FOR NEW DUCT WORK IN EXIST DANCE 224.
4. REMOVE AND REINSTALL EXIST TILE AND GYP BD CLG AS REQUIRED FOR INSTALLATION OF NEW DUCT WORK IN DANCE 224.
6. ~~ALIGN NEW TILE IN CORRIDOR 201 WITH EXISTING TILE REINSTALLED IN CORRIDOR 203.~~
5. INSTALL NEW CEILING TILE IN CORRIDOR 303 SO THAT THE NEW GRID LINES UP WITH THE OLD CLG GRID AND SO THAT THE ODD SIZE TILE WILL BE INSTALLED UNDER NEW LIGHT FIXTURE PER C.O. #15.
7. NEW LIGHT FIXTURE. LITHONIA 8TCB240A-120
8. EXISTING LIGHT FIXTURE
9. ADD #1-3-17

RECORD DOCUMENTS JUN 2 6 1990
THESE DOCUMENTS HAVE BEEN REVISED TO RECORD [illegible] BY THE CO[illegible] ASSUMED TO BE [illegible] DOES NOT GUARANTEE THEIR ACCURACY.

LEGEND

- 2X4 LAY-IN GRID OR AS NOTED
- SUSPENDED GYPSUM BOARD
- 12"X12" AC TILE OVER SUSPENDED GYPSUM BOARD
- LIGHT FIXTURES
- DIFFUSERS

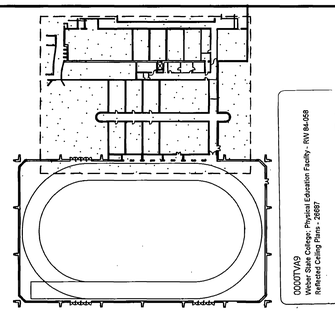

LOCATION PLAN
NO SCALE

NOTE: THIS SHEET IS COMPRISED OF DRAWINGS AND DETAILS FROM THE ORIGINAL 1990 BUILDING CONSTRUCTION CONFORMED SET & HAS BEEN INCLUDED FOR INFORMATIONAL PURPOSES ONLY. CONDITIONS SHOWN ON THIS SHEET HAVE NOT BEEN VERIFIED WITH EXISTING CONSTRUCTED CONDITIONS.

STATE OF UTAH BRETT J. RICHARDS NO. 1107 LICENSED ARCHITECT

jra JONES/ RICHARDS & ASSOCIATES
ARCHITECTURE (801)394-3033
PLANNING 533 26TH STREET
CONSTRUCTION MANAGEMENT OGDEN, UTAH

REVISED: AS BUILT 6-90
PROJECT NUMBER: 8403
DATE: 8-21-88
DRAWN BY: S. DEATON

PROJECT: PHYSICAL EDUCATION FACILITY
WEBER STATE COLLEGE

SHEET TITLE: REFLECTED CEILING PLANS

SHEET NO. A-9

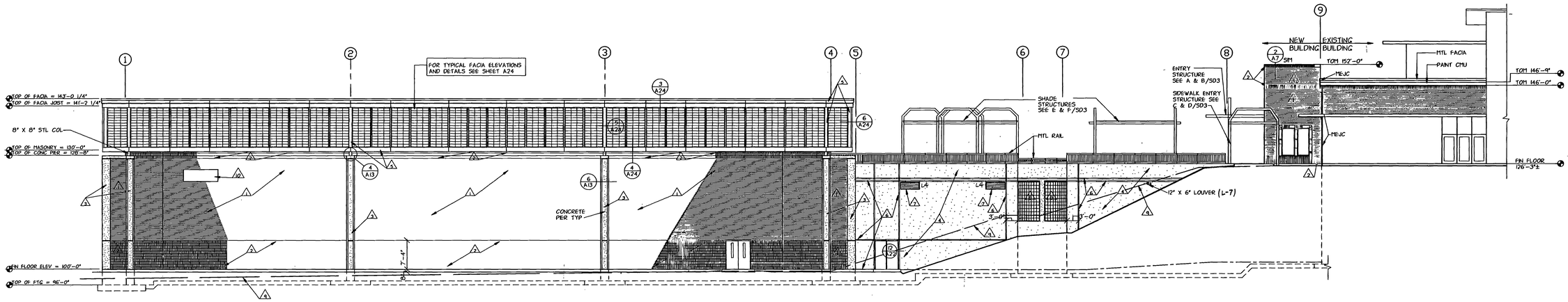

A SOUTH ELEVATION
A10 3/32" = 1'-0"

RECORD DOCUMENTS JUN. 1990
THESE DOCUMENTS HAVE BEEN REVISED TO REFLECT ... THE CONSTRUCTION ... ASSUMED TO BE RELIABLE THE ARCHITECT DOES NOT GUARANTEE THEIR ACCURACY.

KEYED NOTES

1. FACE BRICK TYPE 'A'. RUNNING BOND.
2. FACE BRICK TYPE 'B'. SOLDIER COURSE.
3. CONCRETE PIER WITH SPECIAL CONCRETE FINISH, SEE SPEC.
4. EXPOSED ARCHITECTURAL CONCRETE WITH SPECIAL CONCRETE FINISH, SEE SPEC.
5. EFS TYPE 3 PREFABRICATED FACIA PANELS.
6. CONCRETE CONTROL JOINTS. SEE 4/SD2.
7. 2'-0" X 5'-0" LOUVERS. SEE 10/A25.
8. GLASS BLOCK
9. APPROX EXISTING GRADE.
10. BUILDING SIGN, SEE SPEC. COORDINATE EXACT MOUNTING LOCATION WITH COLLEGE.

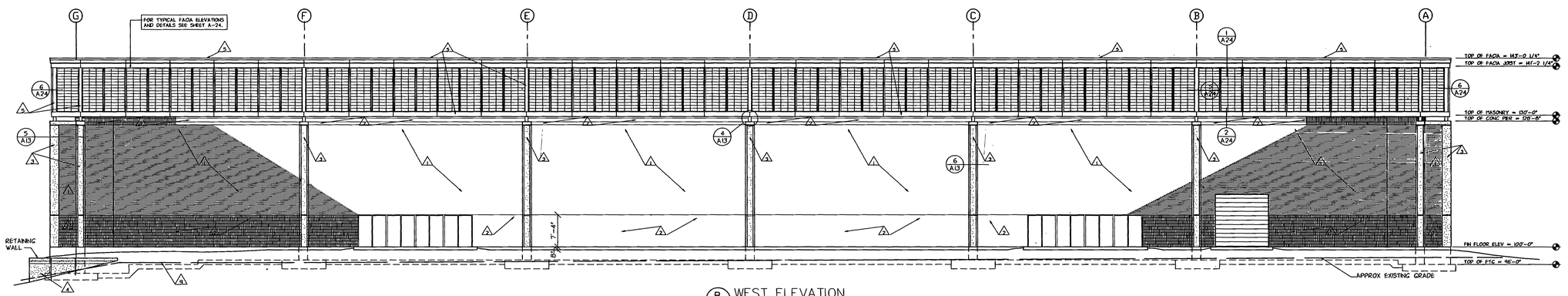

B WEST ELEVATION
A10 3/32" = 1'-0"

0000TVA10
Weber State College, Physical Education Facility - RW 84-058
Exterior Elevations - 26688

NOTE: THIS SHEET IS COMPRISED OF DRAWINGS AND DETAILS FROM THE ORIGINAL 1990 BUILDING CONSTRUCTION CONFORMED SET & HAS BEEN INCLUDED FOR INFORMATIONAL PURPOSES ONLY. CONDITIONS SHOWN ON THIS SHEET HAVE NOT BEEN VERIFIED WITH EXISTING CONSTRUCTED CONDITIONS.

BRETT J. RICHARDS NO. 1107 LICENSED

jra JONES/ RICHARDS & ASSOCIATES
PLANNING 533 28TH STREET
CONSTRUCTION MANAGEMENT OGDEN, UTAH
ARCHITECTURE (801)394-3033

REVISED: AS BUILTS 6-90

PROJECT NUMBER: 8304
DATE: 8-21-88
DRAWN BY: S. DEATON

PROJECT: PHYSICAL EDUCATION FACILITY
WEBER STATE COLLEGE

SHEET TITLE: EXTERIOR ELEVATIONS

SHEET NO. A-10

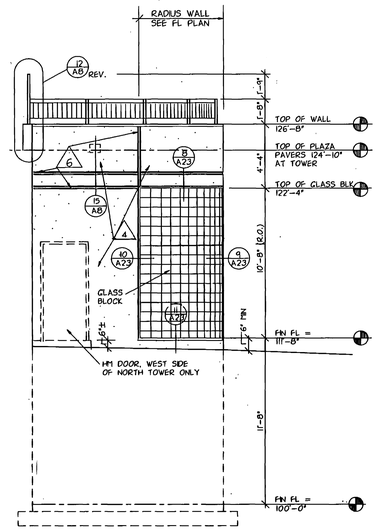

E A11 STAIR TOWER ELEV (OPPOSITE SIDE REV.)
1/4" = 1'-0"

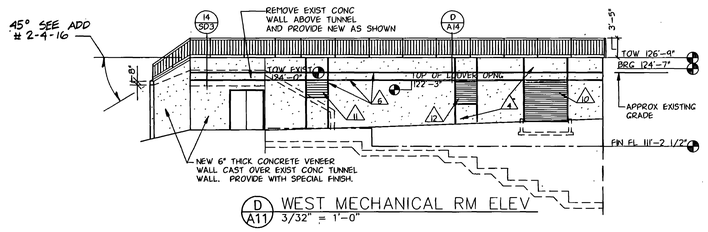

D A11 WEST MECHANICAL RM ELEV
3/32" = 1'-0"

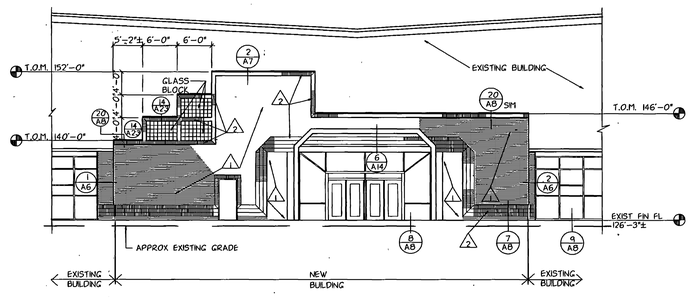

C A11 WEST ENTRY ELEVATION
3/32" = 1'-0"

KEYED NOTES

1. FACE BRICK TYPE 'A'. RUNNING BOND.
2. FACE BRICK TYPE 'B'. SOLDIER COURSE.
3. CONCRETE PIER WITH SPECIAL CONCRETE FINISH, SEE SPEC.
4. EXPOSED ARCHITECTURAL CONCRETE WITH SPECIAL CONCRETE FINISH, SEE SPEC.
5. EIFS 'TYPE 3 PREFABRICATED FACIA PANELS.
6. CONCRETE CONTROL JOINTS. SEE 4/SD2.
7. 1'-8" X 6'-0" LOUVERS. SEE 10/A25.
8. GLASS BLOCK.
9. EXTERIOR INSULATION AND FINISH SYSTEM TYPE 2.
10. 8'-0" X 9'-0" LOUVER, SEE 10/A25.
11. 4'-0" X 3'-0" LOUVER, SEE 10/A25.
12. 4'-0" X 4'-0" LOUVER, SEE 10/A25.
13. BUILDING SIGN, SE SPEC. COORDINATE EXACT MOUNTING LOCATION W/ COLLEGE.

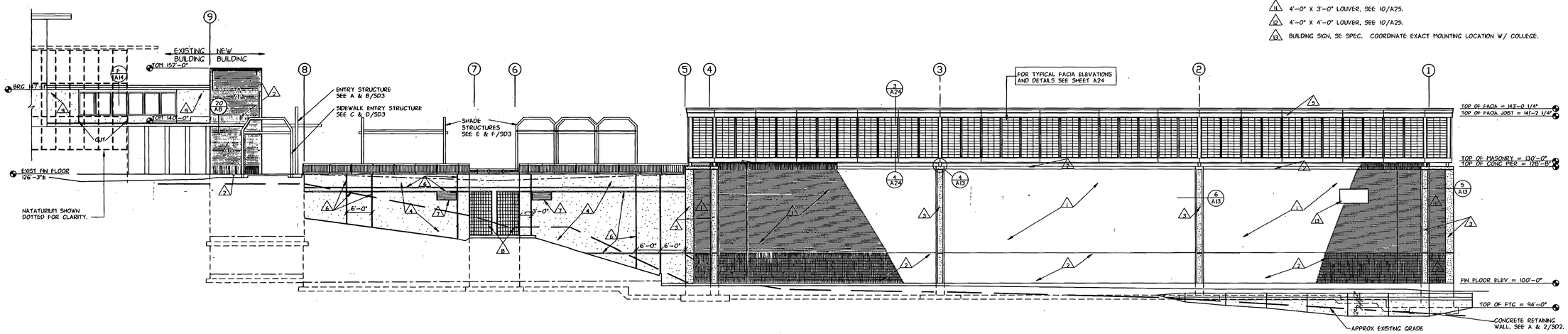

B A11 NORTH ELEVATION
3/32" = 1'-0"

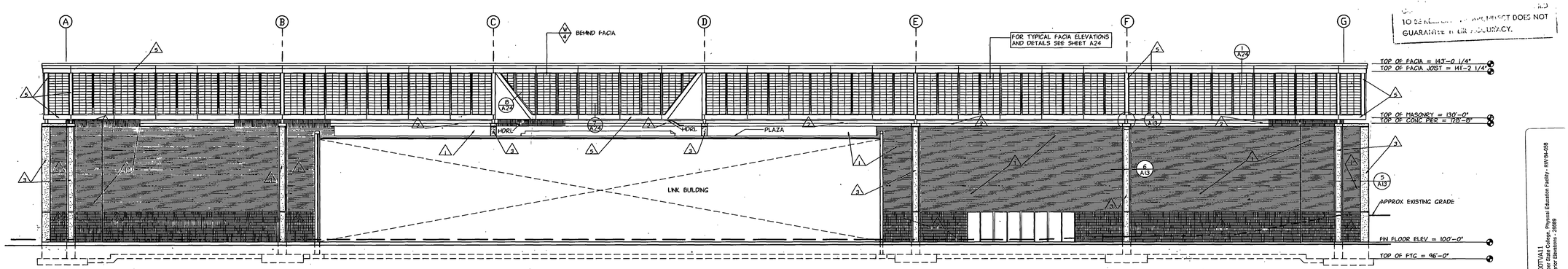

A A11 EAST ELEVATION
3/32" = 1'-0"

BECO JUN 25 1990
10 BE READ IN CONJUNCTION WITH ORIGINAL SET. BECO DOES NOT GUARANTEE THEIR ACCURACY.

0007\A11
Weber State College, Physical Education Facility - WW 84-058
Exterior Elevations - 28889

BRETT J. RICHARDS No. 7107 REGISTERED ARCHITECT

NOTE: THIS SHEET IS COMPRISED OF DRAWINGS AND DETAILS FROM THE ORIGINAL 1990 BUILDING CONSTRUCTION CONFORMED SET & HAS BEEN INCLUDED FOR INFORMATIONAL PURPOSES ONLY. CONDITIONS SHOWN ON THIS SHEET HAVE NOT BEEN VERIFIED WITH EXISTING CONSTRUCTED CONDITIONS.

jra JONES/ RICHARDS & ASSOCIATES
ARCHITECTURE (801)394-3033
PLANNING
533 26TH STREET
CONSTRUCTION MANAGEMENT
OGDEN, UTAH

REVISED: AS BUILTS 6-90

PROJECT NUMBER: 8403
DATE: 8-21-89
DRAWN BY: S. DEATON

PROJECT: PHYSICAL EDUCATION FACILITY
WEBER STATE COLLEGE

SHEET TITLE: EXTERIOR ELEVATIONS

SHEET NO. A-11

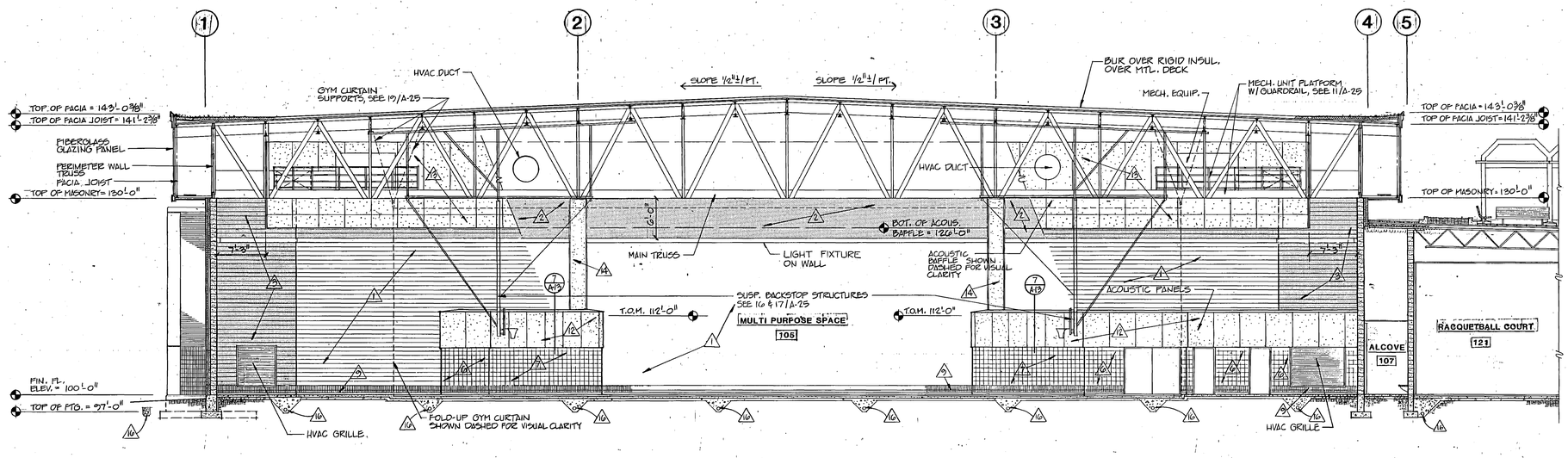

A A-12 **TRANSVERSE BUILDING SECTION**
1/8" = 1'-0"

KEYED NOTES

1. 12"x8"x16" CMU, FLUSH CUT JTS.
2. 12"x8"x16" CMU, SPLIT FACED
3. 6"x8"x16" CMU, SPLIT FACED
4. 4"x8"x16" CMU, SCORED AT 8" O.C., RAKED JTS. (VENEER)
5. 6"x8"x16" CMU, SCORED AT 8" O.C. STACK BOND, RAKED JTS.
6. 8"x8"x16" CMU, SCORED AT 8" O.C., STACK BOND, RAKED JTS.
7. 8"x8"x8" CMU, STACK BOND, RAKED JTS., (AT RADIUS)
8. NOT USED
9. TYPICAL BASE TO CONSIST OF 1 COURSE 4" HIGH STD. CMU WITH FLUSH CUT JTS. 1 COURSE 4" HIGH AND 1 COURSE 8" HIGH CMU SCORED 6/UNIT WITH RAKED JOINTS.
10. NOT USED
11. NOT USED
12. ACOUSTIC PANELS (TYPE B)
13. ACOUSTIC BAFFLE , " EACH PANEL -4'X12'X 0-2". PANELS TO BE CONTINUOUS AROUND MULTIPURPOSE SPACE(EXCEPT AT VIEW WINDOW). AT EAST AND WEST WALLS CENTER PANELS IN BAYS AND NOTCH END PANEL OF EACH BAY 7". SEE SPECIFICATIONS.
14. EXPOSED CONCRETE PIERS WITH SPECIAL CONCRETE FINISH (SANDBLAST) DO NOT PAINT. SEE SPEC. FOR SEALER.
15. REMOVE EXISTING STRUCTURE WEST OF GRID LINE 3. ALSO REMOVE EXISTING ROOF SYSTEM AT LOBBY 305, ISSUE ROOM 304 & CORRIDOR 303.
16. FOUNDATION DRAIN, SEE SHEETS P1, P2 & P3.

GENERAL NOTES

1. SPLIT FACED CMU TO RECEIVE DIFFERENT COLOR PAINT THAN OTHER CMU.
2. MAIN TRUSSES TO RECEIVE DIFFERENT COLOR PAINT THAN STEEL JOISTS AND ROOF DECK.
3. ALL CMU BELOW GRADE (1 OR BOTH SIDES) SHALL BE NORMAL WEIGHT AND GROUTED SOLID.
4. PROVIDE WATERPROOFING MEMBRANE ON ALL WALLS OF ROOMS BELOW GRADE, ON EARTH SIDE.

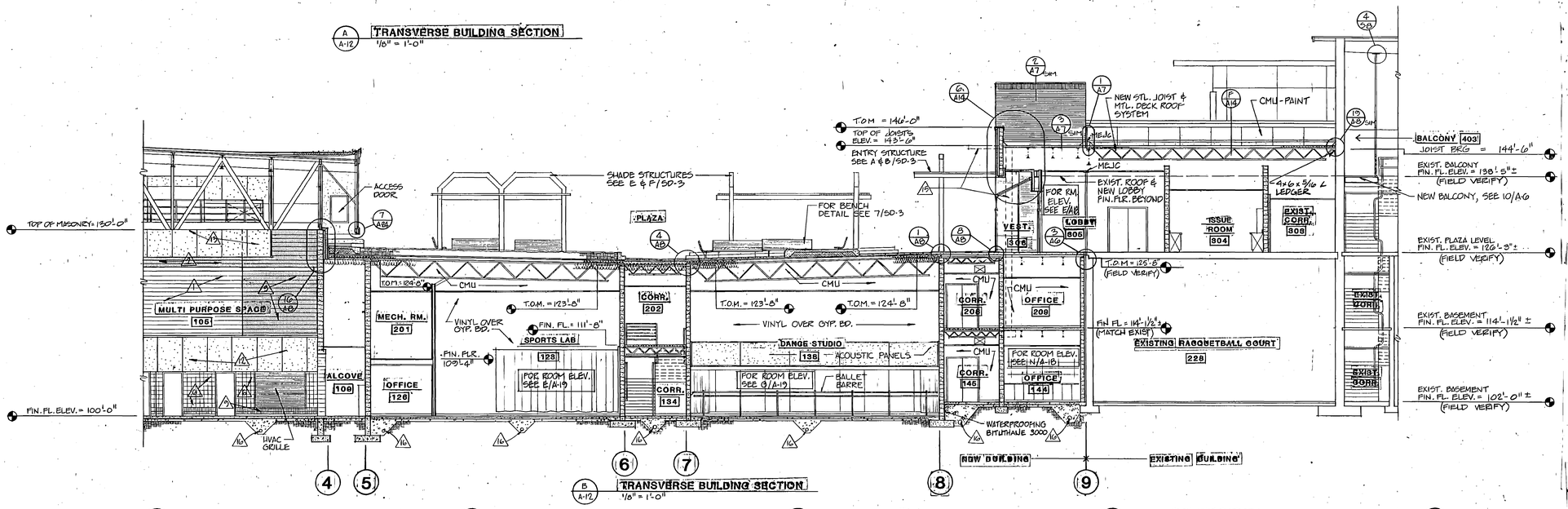

B A-12 **TRANSVERSE BUILDING SECTION**
1/8" = 1'-0"

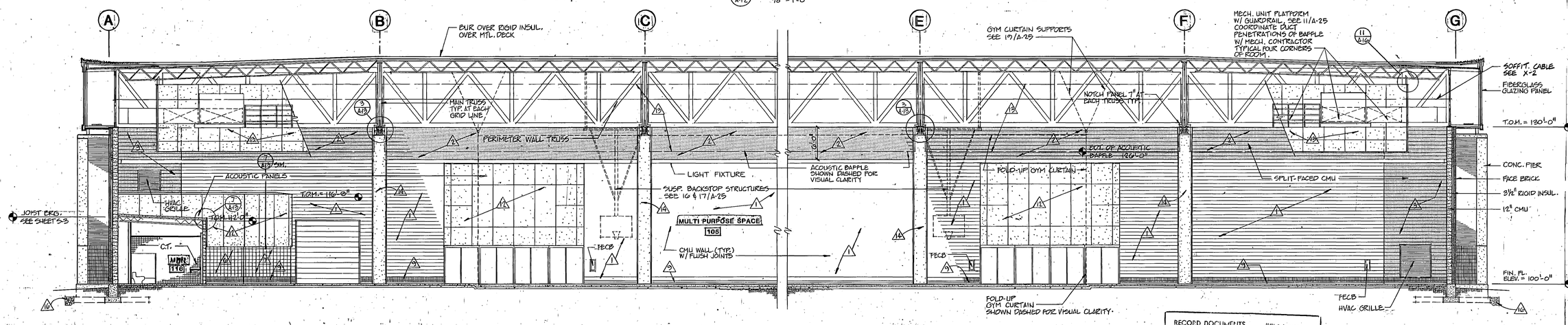

C A-12 **LONGITUDINAL BUILDING SECTION**
1/8" = 1'-0"

RECORD DOCUMENTS JUN 2 5 1990

THESE DOCUMENTS HAVE BEEN REVISED TO RECORD INFORMATION SUBMITTED BY THE CONTRACTOR. WHILE THEY ARE ASSUMED TO BE RELIABLE THE ARCHITECT DOES NOT GUARANTEE THEIR ACCURACY.

0000TVA12
Weber State College; Physical Education Facility - RW.84-058
Building Sections - 26690

NOTE: THIS SHEET IS COMPRISED OF DRAWINGS AND DETAILS FROM THE ORIGINAL 1990 BUILDING CONSTRUCTION CONFORMED SET & HAS BEEN INCLUDED FOR INFORMATIONAL PURPOSES ONLY. CONDITIONS SHOWN ON THIS SHEET HAVE NOT BEEN VERIFIED WITH EXISTING CONSTRUCTED CONDITIONS.

BRETT J. RICHARDS REGISTERED ARCHITECT NO. 4014

jra JONES / RICHARDS & ASSOCIATES
ARCHITECTURE
901 26TH STREET
OGDEN, UTAH
PLANNING
CONSTRUCTION MANAGEMENT

REVISED: AS BUILTS 6-90
PROJECT NUMBER: 8403
DATE: 8-21-88
DRAWN BY: SLND

PROJECT: PHYSICAL EDUCATION FACILITY
WEBER STATE COLLEGE
SHEET TITLE: BUILDING SECTIONS

SHEET NO. A-12

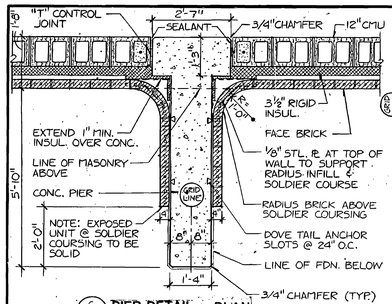

6 A-13 **PIER DETAIL - PLAN**
1/2" = 1'-0"

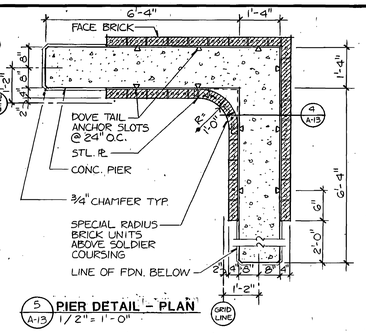

5 A-13 **PIER DETAIL - PLAN**
1/2" = 1'-0"

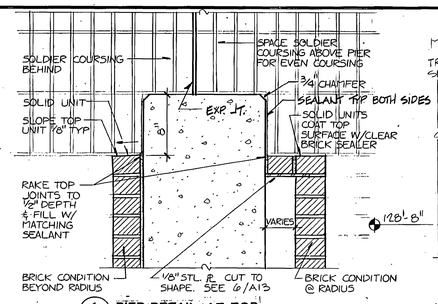

4 A-13 **PIER DETAIL AT TOP**
1½" = 1'-0"

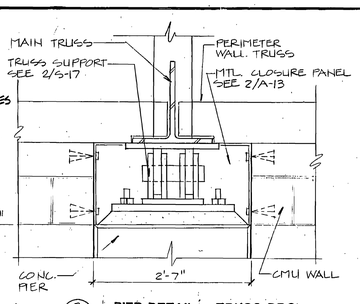

3 A-13 **PIER DETAIL - TRUSS BRG.**
1" = 1'-0"

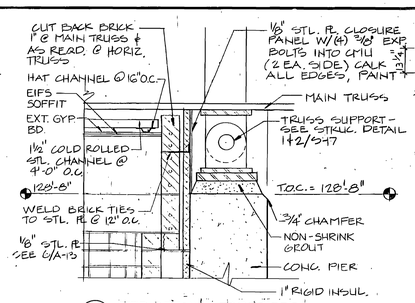

2 A-13 **PIER DETAIL - TRUSS BRG.**
1" = 1'-0"

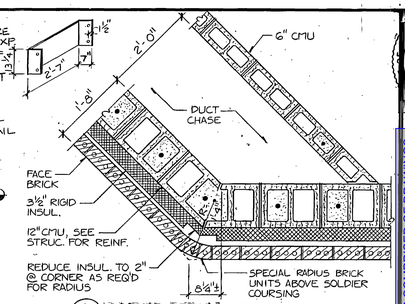

1 A-13 **CORNER DETAIL - PLAN**
3/4" = 1'-0"

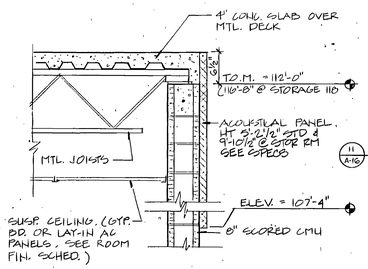

7 A-13 **WALL SECTION**
3/4" = 1'-0"

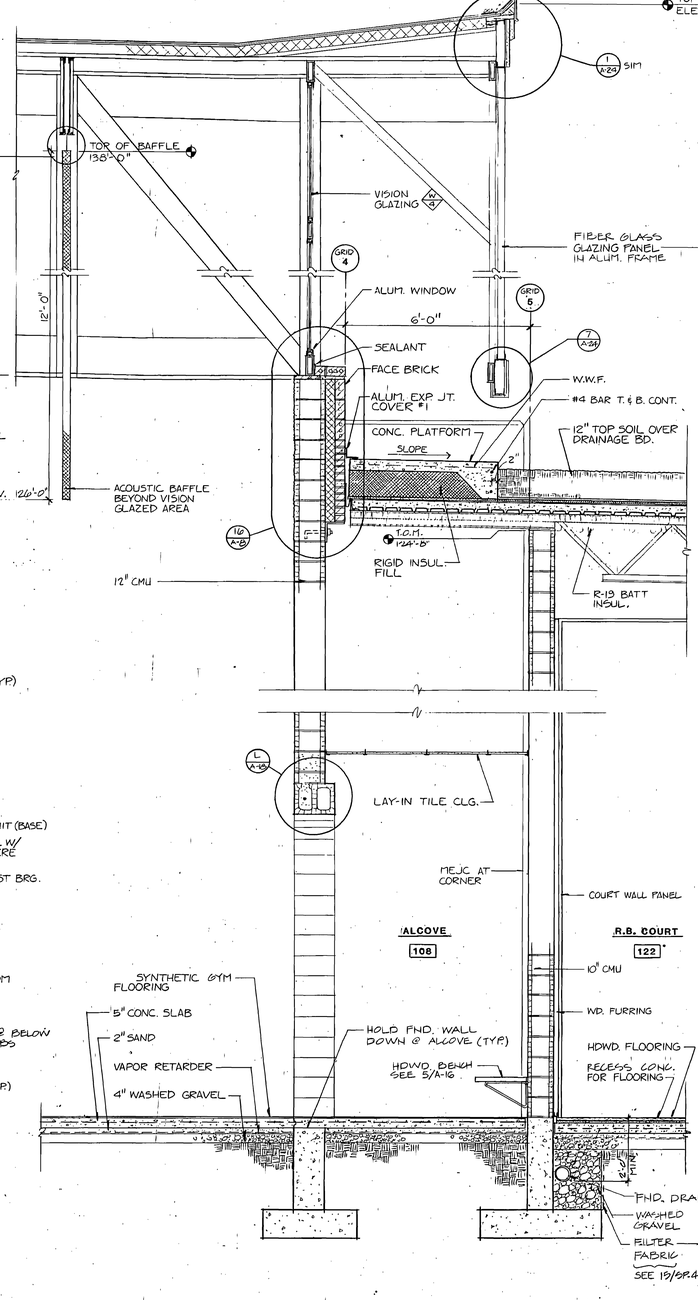

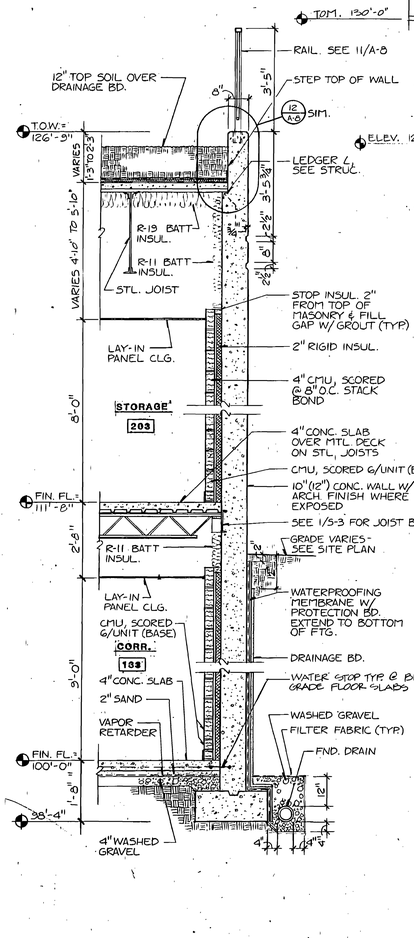

D A-13 **SOUTH WALL SECTION - PLAZA**
1/2" = 1'-0"

C A-13 **EAST WALL SECTION**
1/2" = 1'-0"

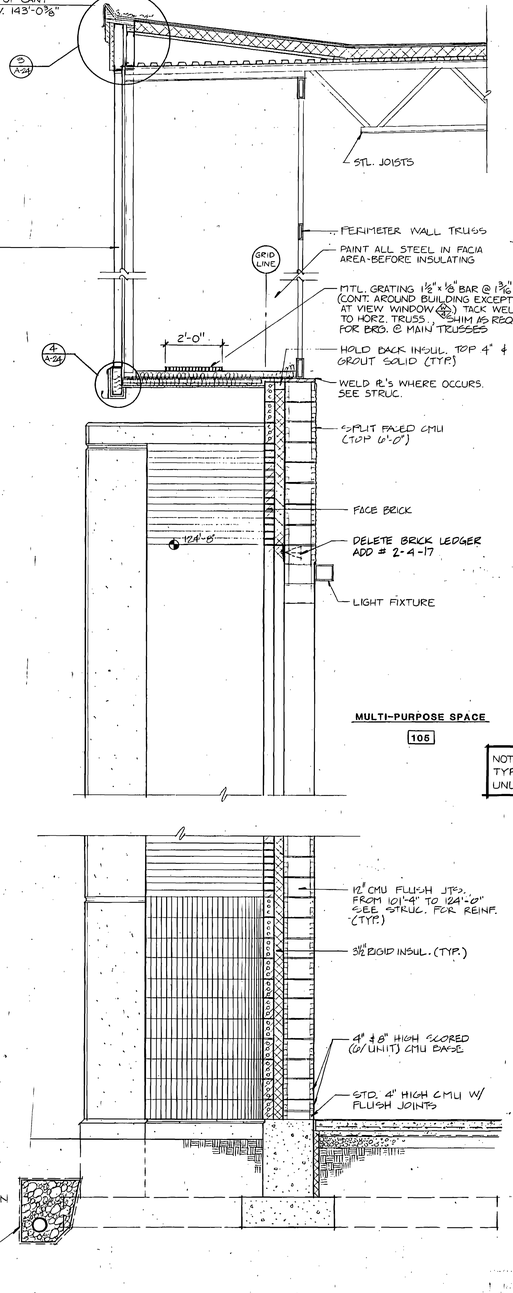

NOTES ON A/A-13 & B/A-13 TYP. FOR ALL SECTIONS UNLESS NOTED OTHERWISE.

B A-13 **NORTH/SOUTH WALL SECTION**
1/2" = 1'-0"

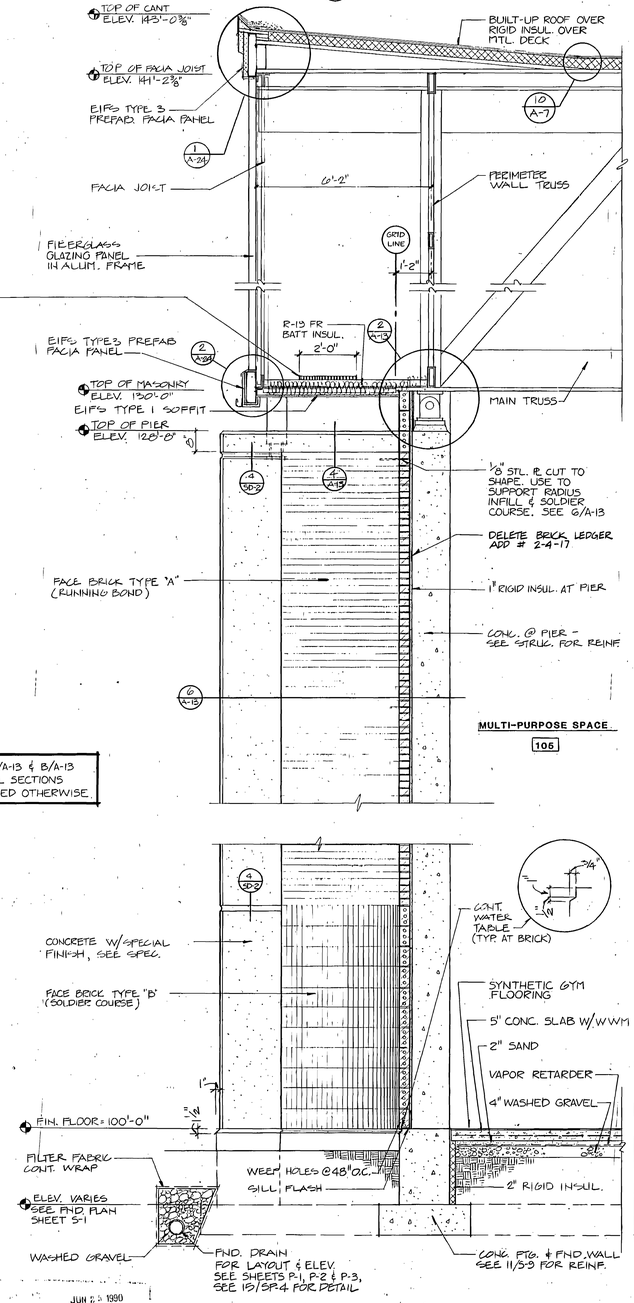

A A-13 **WEST WALL SECTION AT PIER**
½" = 1'-0"

JUN 2 5 1990

TO BE RE... DOES NOT ...

0000TVA13
Weber State College; Physical Education Facility - RW:84-058
Wall Sections - 20691

BRENT L. RICHARDS NO. 4107 REGISTERED ARCHITECT

NOTE: THIS SHEET IS COMPRISED OF DRAWINGS AND DETAILS FROM THE ORIGINAL 1990 BUILDING CONSTRUCTION CONFORMED SET & HAS BEEN INCLUDED FOR INFORMATIONAL PURPOSES ONLY. CONDITIONS SHOWN ON THIS SHEET HAVE NOT BEEN VERIFIED WITH EXISTING CONSTRUCTED CONDITIONS.

jra JONES / RICHARDS & ASSOCIATES
ARCHITECTURE (801) 394-3033
PLANNING 533 - 26TH STREET
CONSTRUCTION MANAGEMENT OGDEN, UTAH

REVISED: AS BUILTS 6-90
PROJECT NUMBER: 8493
DATE: 9-21-88
DRAWN BY: R. BERTOLDI

PROJECT: PHYSICAL EDUCATION FACILITY
WEBER STATE COLLEGE

SHEET TITLE: WALL SECTIONS

SHEET NO. A-13

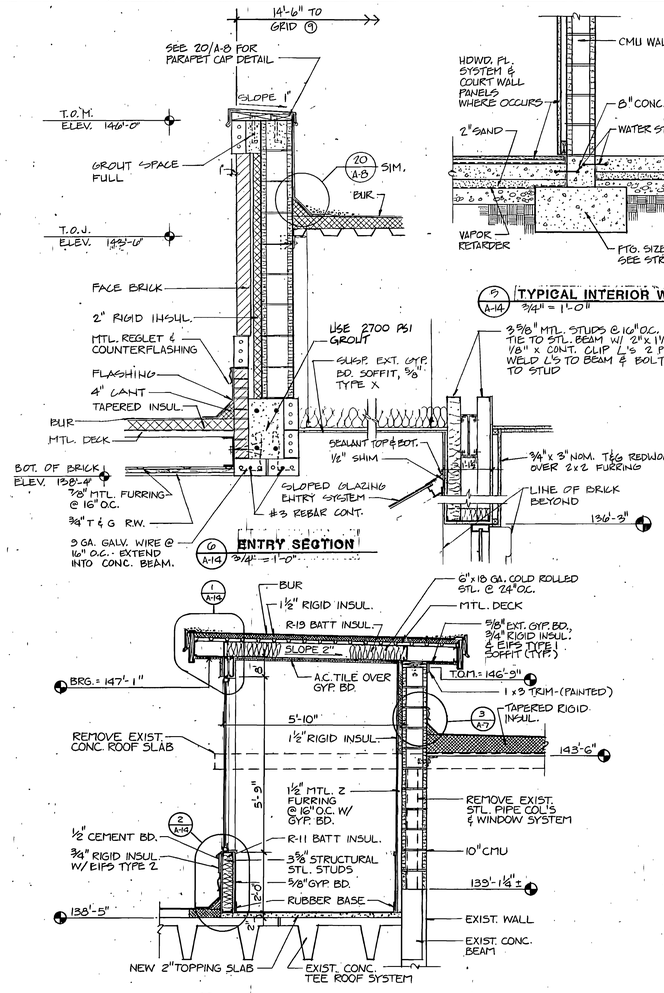

5 A-14 **TYPICAL INTERIOR WALL/FTG. DETAIL** 3/4" = 1'-0"

4 A-14 **WALL SECTION** 3/4" = 1'-0"

3 A-14 **WALL SECTION** 3/4" = 1'-0"

2 A-14 **SILL DETAIL** SEE DETAIL 9A A-1 1 1/2" = 1'-0"

1 A-14 **HEAD DETAIL** 1 1/2" = 1'-0"

F A-14 **LOBBY SECTION** 1/2" = 1'-0"

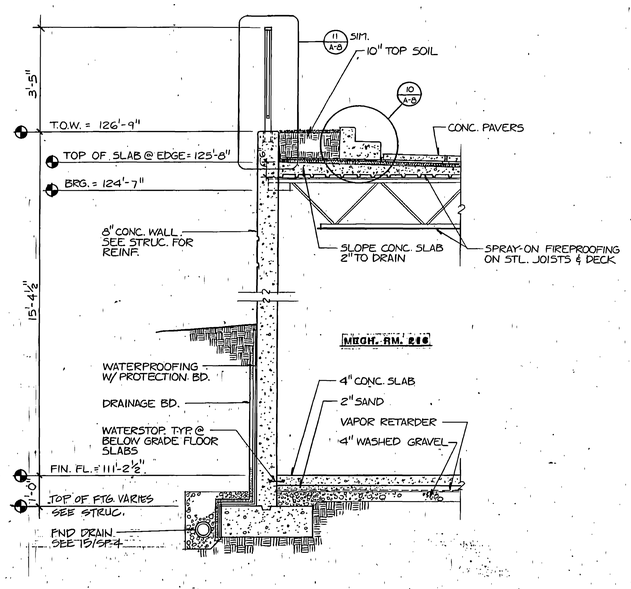

D A-14 **WALL SECTION - MECH. RM. 216** 1/2" = 1'-0"

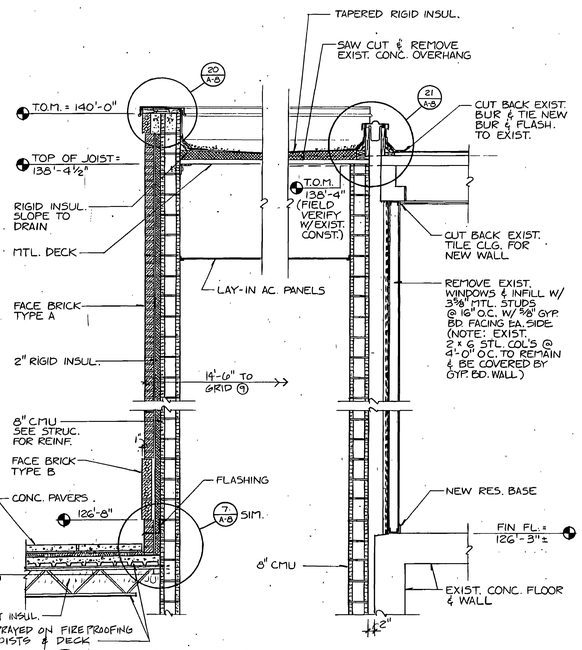

E A-14 **WALL SECTION - STAIR C** 1/2" = 1'-0"

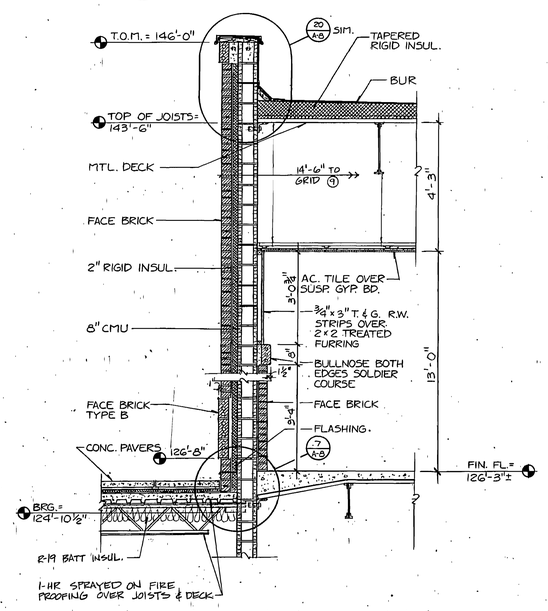

C A-14 **WALL SECTION - LOBBY 005** 1/2" = 1'-0"

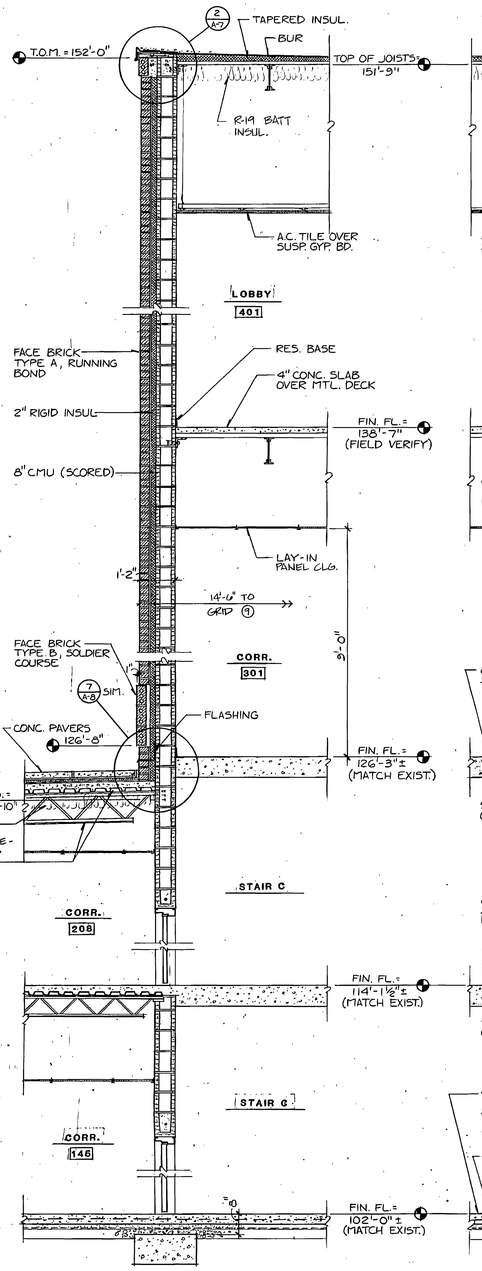

B A-14 **WEST WALL SECTION - STAIR C** 1/2" = 1'-0"

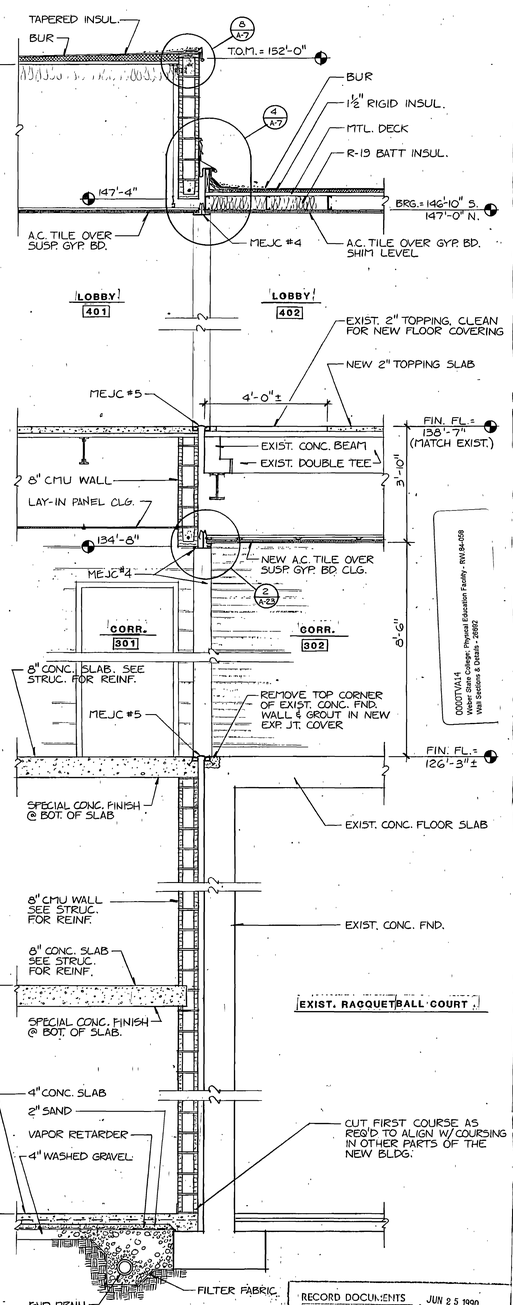

A A-14 **EAST WALL SECTION - STAIR C** 1/2" = 1'-0"

RECORD DOCUMENTS JUN 25 1990

THESE DOCUMENTS HAVE BEEN REVISED TO RECORD [illegible] SUBMITTED BY THE CONTR[illegible] ARE ASSUMED TO BE M[illegible] ARCHITECT DOES NOT GUARANTEE THEIR ACCURACY.

NOTE: THIS SHEET IS COMPRISED OF DRAWINGS AND DETAILS FROM THE ORIGINAL 1990 BUILDING CONSTRUCTION CONFORMED SET & HAS BEEN INCLUDED FOR INFORMATIONAL PURPOSES ONLY. CONDITIONS SHOWN ON THIS SHEET HAVE NOT BEEN VERIFIED WITH EXISTING CONSTRUCTED CONDITIONS.

PRATT-J-RICHARDS NCF-110

jra JONES / RICHARDS & ASSOCIATES
ARCHITECTURE INTERIOR DESIGN
5 LANNING CIRCLE P.O. BOX 1986 ALEXANDRIA, VA 22313 (703) 548-5151
CONSTRUCTION MANAGEMENT SPACE PLANNING

REVISED: 46 BULLETS 6-90
PROJECT NUMBER: 9470
DATE: 5-21-90
DRAWN BY: K. SE/CO

PROJECT: PHYSICAL EDUCATION FACILITY
WEBER STATE COLLEGE

SHEET TITLE: WALL SECTIONS & DETAILS

SHEET NO. A-14

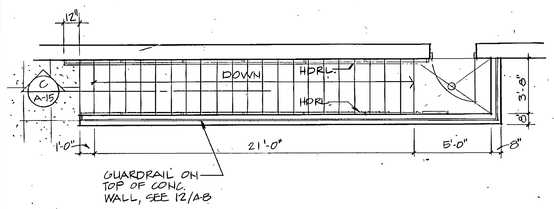

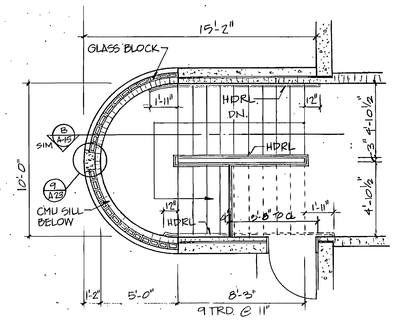

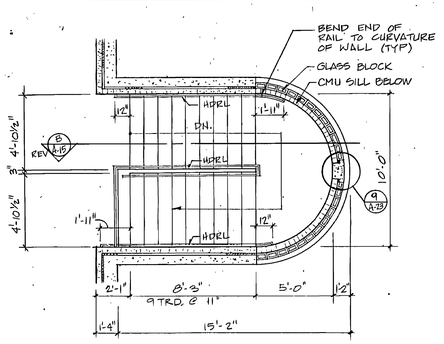

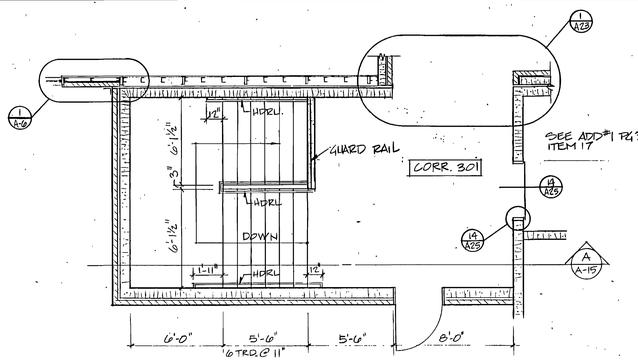

NOTE: THIS SHEET IS COMPRISED OF DRAWINGS AND DETAILS FROM THE ORIGINAL 1990 BUILDING CONSTRUCTION CONFORMED SET & HAS BEEN INCLUDED FOR INFORMATIONAL PURPOSES ONLY. CONDITIONS SHOWN ON THIS SHEET HAVE NOT BEEN VERIFIED WITH EXISTING CONSTRUCTED CONDITIONS.

C A-15 STAIR F PLAN
SCALE: 1/4" = 1'-0"

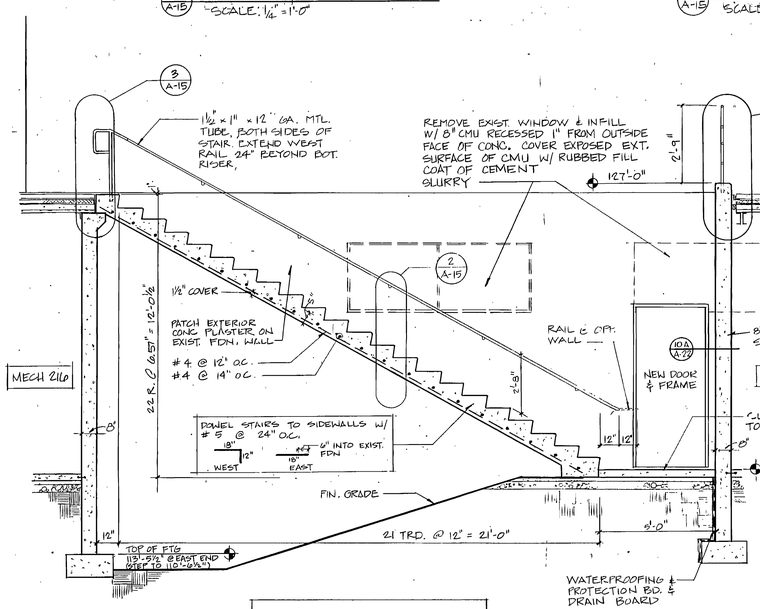

NOTE: REMOVE EXIST. CONC STAIR, FDN. WALLS & LANDING.

C A-15 STAIR F SECTION
SCALE: 3/8" = 1'-0"

E A-15 STAIR A PLAN
SCALE: 1/4" = 1'-0"

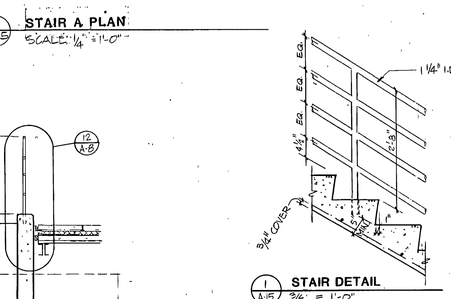

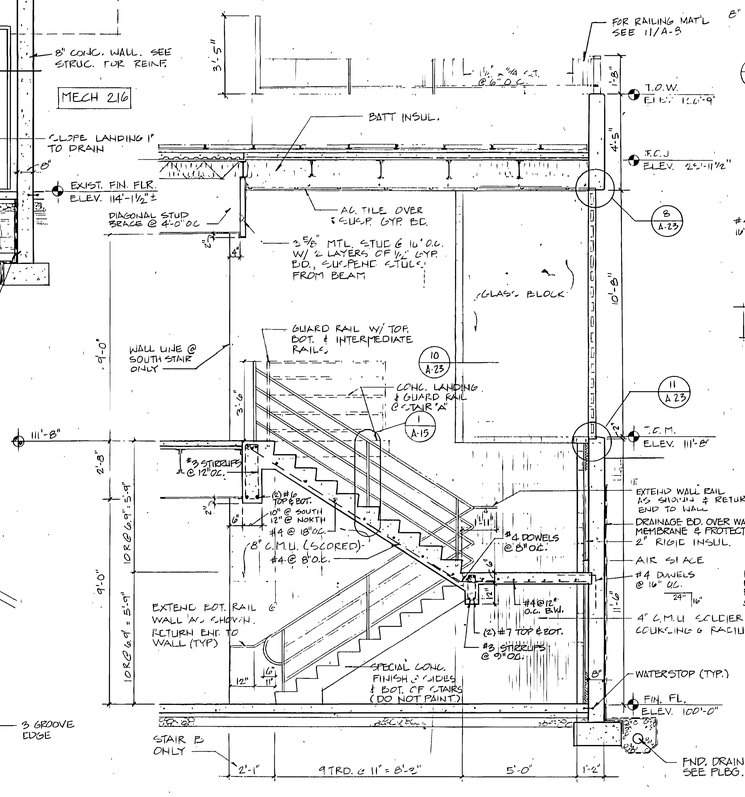

E A-15 STAIR B PLAN
SCALE: 1/4" = 1'-0"

B A-15 STAIR A & B SECTION
SCALE: 3/8" = 1'-0"

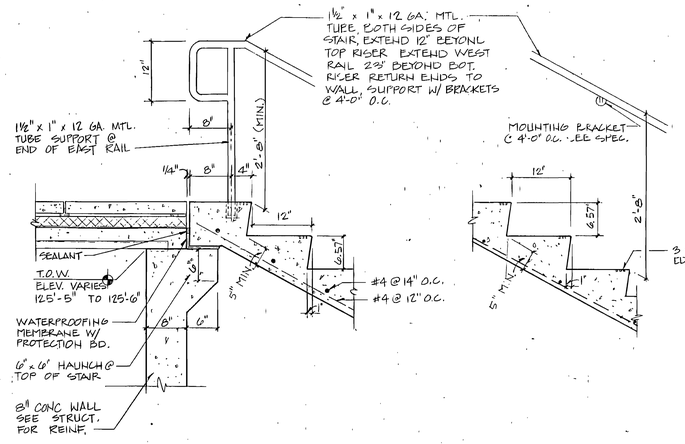

3 A-15 EXT. STAIR DETAIL
SCALE: 1" = 1'-0"

2 A-15 EXT. STAIR DETAIL
SCALE: 1" = 1'-0"

D A-15 STAIR G PLAN
SCALE: 1/4" = 1'-0"

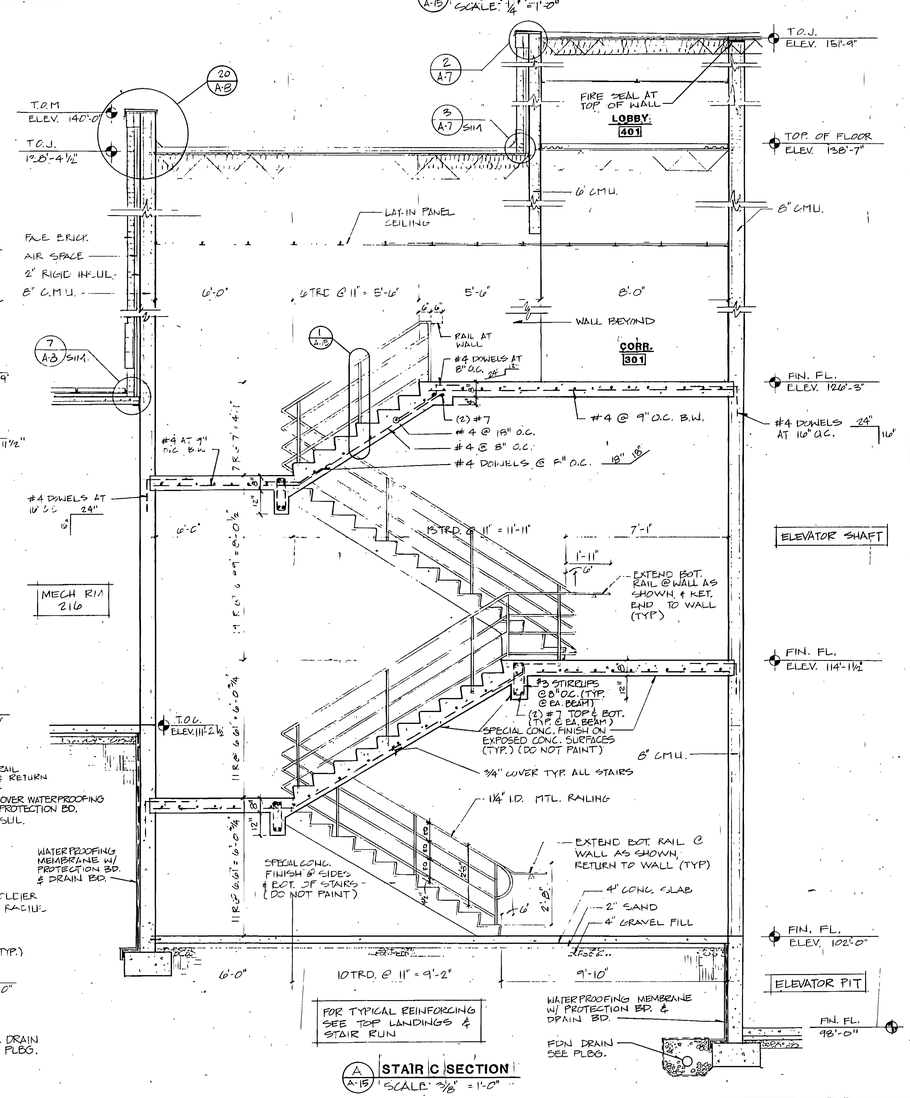

FOR TYPICAL REINFORCING SEE TOP LANDINGS & STAIR RUN

A A-15 STAIR C SECTION
SCALE: 3/8" = 1'-0"

RECORD DOCUMENTS JUL. 2, 2001

THESE DOCUMENTS HAVE BEEN REVISED TO RECORD INFORMATION SUBMITTED BY THE CONTRACTOR. WHILE THEY ARE ASSUMED TO BE RELIABLE THE ARCHITECT DOES NOT GUARANTEE THEIR ACCURACY.

0000TVA15
Weber State College; Physical Education Facilty - RIV 84-058
Stair Sections & Details - 26693

JAMES R. CHARLES No. 1107 REGISTERED ARCHITECT

jra JONES / RICHARDS & ASSOCIATES
CONSTRUCTION MANAGEMENT
OGDEN, UTAH
PLANNING
ARCHITECTURE
333 - 25TH STREET
(801) 394-3023

REVISED:
PROJECT NUMBER: 8405
DATE: 6/21/88
DRAWN BY: R. BEITZLER

PROJECT: PHYSICAL EDUCATION FACILITY
WEBER STATE COLLEGE
SHEET TITLE: STAIR SECTIONS & DETAILS

SHEET NO. A-15

(8/A-16) **TACKBOARDS & MARKER/CHALK BOARDS**
1/4" = 1'-0"

(9/A-16) **SIGN DETAIL**
NO SCALE

(10/A-16) **BENCH DETAIL**
1 1/2" = 1'-0"

(4/A-16) **STORAGE BRACKET**
3/4" = 1'-0"

(11/A-16) **LIGHT & AC BAFFLE DETAIL**
3" = 1'-0"

(5/A-16) **BENCH DETAIL**
1 1/2" = 1'-0"

(12/A-16) **STAIR SECTION - MECH. 216**
3/4" = 1'-0"

(6/A-16) **STAIR DETAIL**
3/4" = 1'-0"

(7/A-16) **STAIR SECTION - DANCE 138**
3/4" = 1'-0"

(2/A-16) **SIGN DETAIL**
1/2" = 1'-0"

(3/A-16) **LOCKER DETAIL**
3/4" = 1'-0"

(1/A-16) **LADDER DETAIL**

ROOM FINISH SCHEDULE CONT'D

LEGEND
FIN CODE (EG F1) = SEE CODE LEGEND BELOW
* = SEE REMARKS
--- = NO NEW FINISH
(#) = SEE NOTES BELOW
X = EXISTING

RM #	ROOM NAME	FLOOR	BASE	WALLS MAT	WALLS FIN	CEILINGS MAT	CEILINGS FIN	CLG HT	SPECIAL	---	REMARKS
301	CORRIDOR	FL1	B1	M1	F1	M6	---	9'-0"	S1	---	---
302	CORRIDOR	FL1	---	M4	F5	M3	F3	8'-6"*	S1	---	MATCH EXISTING
303	EXIST CORRIDOR	X (4)	---	M4 *	F5 *	X (4)	X (4)	X	S1	---	AT NEW WALL ONLY
304	ISSUE ROOM	FL1	B1	M1	F1	M7	---	9'-0"	S1	---	---
305	LOBBY	FL1	---	M4 *	F5	M3	F3	13'-0"	S1,2	---	W/ REWOOD INFILL, SEE SHT A18
306	VESTIBULE	FL6	---	M4 *	F5	---	---	VARIES	---	---	WHERE SHOWN
307	EXIST OFFICE	X (4)	B1 *	M2 *	F2 *	X (4)	---	X	---	---	AT INFILL ONLY
313	EXIST GYM	X	X	X	X	M2 *	F1 *	11'-3"+*	---	---	AT NEW BALCONY
316	EXIST KITCHENETTE	X (4)	B1 *	M2 *	F2 *	X (4)	---	X	---	---	AT INFILL ONLY
319	EXIST OFFICE	X (4)	B1	MX,X,1,2	F1	X (4)	---	X	---	---	---
-	---	---	---	---	---	---	---	---	---	---	---
401	LOBBY A	FL3	B1	M1	F1	M3	F3	8'-2"	---	---	---
402	LOBBY B	FL3	B1	M2	F1	M3	F3	8'-2"	---	---	---
403	BALCONY	FL5	---	X	X	X	X	---	S6	---	---
-	---	---	---	---	---	---	---	---	---	---	---
-	---	---	---	---	---	---	---	---	---	---	---
-	---	---	---	---	---	---	---	---	---	---	---
-	---	---	---	---	---	---	---	---	---	---	---

ROOM FINISH CODE LEGEND

NOTE: IF MORE THAN ONE FINISH CODE APPEARS IN A WALL BOX IT IS TO DESIGNATE THE LOCATION OF THE FINISH. EG. F1,2,1,3 — NORTH WALL, EAST WALL, SOUTH WALL, WEST WALL

FLOOR
FL1 – CARPET
FL2 – HDWD
FL3 – VINYL COMP. TILE
FL4 – CERAMIC TILE
FL5 – CONC., SEALED
FL6 – ENTRANCE MAT
FL7 – SYN TRACK SURFACE
FL8 – SYN – GYM SURFACE
FL9 – RAISED PROFILE RUBBER TILE/TREAD

BASE
B1 – 4" RES., STRAIGHT
B2 – RES., COVED
B3 – METAL ANGLE
B4 – CERAMIC TILE
B5 – RES STAIR SKIRTING & BASE

WALL & CLG MAT.
M1 – CMU
M2 – GYP BOARD
M3 – SUSP. GYP BD
M4 – BRICK
M5 – CONCRETE
M6 – LAY-IN AC PANELS TYPE A.
M7 – LAY-IN AC PANELS TYPE B.
M8 – COURT PANEL SYSTEM
M9 – NOT USED
M10 – EXPOSED MTL DECK & JTS

WALL & CLG FIN.
F1 – PAINT
F2 – VINYL FABRIC
F3 – ACOUSTIC TILE
F4 – EPOXY PAINT
F5 – SEAL
F6 – CERAMIC TILE
F7 – SPRAYED ON FIRE PROOFING

SPECIALTIES
S1 – PAINT HM DOORS & FRAMES
S2 – STAIN & VARNISH WD TRIM & MILLWORK
S3 –
S4 – PAINT MTL TRUSSES A CONTRASTING COLOR
S5 – NOT USED
S6 – PAINT METAL RAILS

NOTES:

(1) COMBINATION OF STANDARD, SCORED & SPLIT FACED CMU. SEE ROOM ELEVATIONS A, B, C/A11 & A & B/A17.

(2) SLOPE CEILING W/ RAMP (REDUCE CEILING HT. TO 8'-4" BY TOP OF RAMP @ CORRIDOR 204).

(3) FURR CEILING AROUND NEW DUCTS ALONG WEST WALL. EXTEND FURRING & GYP BD APPROX 30" DOWN WEST WALL TO COVER WINDOWS. PAINT TO MATCH EXISTING WALL.

(4) PROTECT OR REMOVE AND REPLACE EXISITNG FINISHES AT NEW CONSTRUCTION.

(5) EXPOSED CONCRETE SHALL RECEIVE A SAND BLASTED FINISH (SPECIAL CONCRETE FINISH). DO NOT PAINT!

(6) PROVIDE (2) 2" WIDE FEATURE STRIPS FULL LENGTH OF CORRIDOR. SEE ARCHITECT FOR EXACT LOCATION.

(7) FOR CORRIDOR & HALL BASE DETAIL, SEE 1/A4.

GENERAL NOTES

1. UNLESS SHOWN OTHERWISE ALL ROOMS WITH 4", 6", 8" OR 10" CMU FINISH (EXCEPT STORAGE & MECHANICAL ROOMS) SHALL UTILIZE 8" SCORED UNITS STACK BONDED WITH RAKED JOINTS. WHERE ROOMS SHARE A COMMON WALL USE UNITS SCORED BOTH SIDES.
2. PAINT ALL EXPOSED FERROUS METAL.
3. STAIN & VARNISH ALL EXPOSED WOOD UNLESS NOTED OTHERWISE.

RECORD DOCUMENTS JUN ...
THESE ... REVISED TO ... THE ... ED TO ... DOES NOT GUARA... ACCURACY.

ROOM FINISH SCHEDULE

LEGEND
FIN CODE (EG F1) = SEE CODE LEGEND BELOW
* = SEE REMARKS
--- = NO NEW FINISH
(#) = SEE NOTES
X = EXISTING

RM #	ROOM NAME	FLOOR	BASE	WALLS MAT	WALLS FIN	CEILINGS MAT	CEILINGS FIN	CLG HT	SPECIAL	---	REMARKS
A	STAIR	FL9	B5	M1	F1	M3	F3	*	S6	---	SEE SECTION B/A15
B	STAIR	FL9	B5	M1	F1	M3	F3	*	S6	---	SEE SECTION B/A15
C	STAIR	FL9	B5	M1	F1	M6	---	*	S1,6	---	SEE SECTION B/A15
-	---	---	---	---	---	---	---	---	---	---	---
-	---	---	---	---	---	---	---	---	---	---	---
100	NOT USED	---	---	---	---	---	---	---	---	---	---
101	STORAGE	FL5	B2	M1	F1	M3	F1	10'-0"	S1	---	---
102	STORAGE	FL5	B2	M1	F1	M3	F1	10'-0"	S1	---	---
103	CUST.	FL5	B2	M1	F1	M3	F1	10'-0"	S1,2	---	Q.T. @ SERVICE SINL, SEE F/A17.
104	STORAGE	FL5	B2	M1	F1	M3	F1	10'-0"	S1	---	---
105	MULTI-PURPOSE SPACE	FL2,7,8	---	M1 (1)	F1,4(5)*	M10	F1	VARIES 41' TO 44'-8"	S1,4	---	EPOXY PAINT TO 7'-4" AFF. STD PAINT ABOVE. PAINT ALL EXPOSED METAL
106	STORAGE	FL5	B2	M1	F1	M3	F1	10'-0"	S1	---	---
107	ALCOVE	FL8	---	M1	F1	M6	---	11'-0"	S2	---	---
108	ALCOVE	FL8	---	M1	F1	M6	---	11'-0"	S2	---	---
109	ALCOVE	FL8	---	M1	F1	M6	---	11'-0"	S1,2	---	---
110	NOT USED	---	---	---	---	---	---	---	---	---	---
111	ALCOVE	FL8	---	M1	F1	M6	---	11'-0"	S1,2	---	---
112	ISSUE ROOM	FL3	B2	M1	F1	M3	F1	10'-0"	S1	---	---
113	VESTIBULE	FL6	B2	M1	F1	M6	---	10'-0"	S1	---	---
114	CHASE	FL5	---	M1	---	M10	---	12'-0"±	S1	---	---
115	WOMEN	FL4	B4	M1	F1&6 *	M3	F1	9'-0"	---	---	SEE ENLARGED PLAN SHEET A17
116	MEN	FL4	B4	M1	F1&6 *	M3	F1	9'-0"	S1	---	SEE ENLARGED PLAN SHEET A17
117	CHASE	FL5	---	M1	---	M10	---	12'-0"±	S1	---	---
118	STORAGE	FL5	B2	M1	F1	M3	F1	15'-0"	S1	---	---
119	RACQUETBALL COURT	FL2	---	M8	---	M8,7 *	---	20'-0"	---	---	SEE REFLECTED CEILING PLAN
120	NOT USED	---	---	---	---	---	---	---	---	---	---
121	RACQUETBALL COURT	FL2	---	M8	---	M8,7 *	---	20'-0"	---	---	SEE REFLECTED CEILING PLAN
122	RACQUETBALL COURT	FL2	---	M8	---	M8,7 *	---	20'-0"	---	---	SEE REFLECTED CEILING PLAN
123	SPORTS LAB	FL1,8*	B1	M1&2 *	F1&F2*	M7	---	20'-0"	S1	---	SEE FLOOR PLAN & ELEVATIONS
124	EQUIP STORAGE	FL3	B2	M1,2,2,1	F1	M2	F1	8'-0"	S1	---	---
125	VIDEO ROOM	FL1	B1	M2,2,2,1	F1	M2	F3	8'-0"	S1	---	---
126	OFFICE	FL1	B1	M2,2,2,1	F1	M2	F3	8'-0"	S1	---	---
127	NOT USED	---	---	---	---	---	---	---	---	---	---
128	NOT USED	---	---	---	---	---	---	---	---	---	---
129	WEIGHING AREA	FL4	B4	M,2,1,1	F,2,1,1	---	---	---	---	---	---
130	NOT USED	---	---	---	---	---	---	---	---	---	---
131	DRESS ROOM	FL1	B1	M2,2,1,2*	F1	---	---	---*	---	---	8' HIGH PARTITION W/ NO CLG
132	DRESS ROOM	FL1	B1	M2,2,1,2*	F1	---	---	---*	---	---	8' HIGH PARTITION W/ NO CLG
133	CORRIDOR	FL3(6)	B2(7)	M1	F1	M6	---	9'-0"(2)	S1,6	---	---
134	HALL	FL3(6)	B2(7)	M1	F1	M6	---	9'-0"	S1,2	---	---
135	RACQUETBALL COURT	FL2	---	M8	---	M8,7 *	---	20'-0"	---	---	SEE REFLECTED CEILING PLAN
136	RACQUETBALL COURT	FL2	---	M8	---	M8,7 *	---	20'-0"	---	---	SEE REFLECTED CEILING PLAN
137	RACQUETBALL COURT	FL2	---	M8	---	M8,7 *	---	20'-0"	---	---	SEE REFLECTED CEILING PLAN
138	DANCE STUDIO	FL2	B3	M2,1,1,1*	F2,1,1,1*	M7	---	20'-0"	S1,2	---	DRESS CONC STAIR WALLS AND PAINT SEE INTERIOR ELEV SHEET A19.
139	ELEVATOR EQUIP RM	FL5	B2	M1	F1	M7	---	9'-0"	S1	---	---
140	NOT USED	---	---	---	---	---	---	---	---	---	---
141	ELECTRICAL	FL5	B2	M1	F1	M7	---	9'-0"	S1	---	---
142	LOBBY	FL3	B2	M1	F1	M6	---	9'-0"	S1	---	---
143	CLOSET	FL1	B1	M2	F1	M3	F1	9'-0"	S1	---	---
144	OFFICE	FL1	B1	M2	F2	M3	F3	9'-0"	S1,2	---	---
145	CORRIDOR	FL3(6)	B2	M1	F1	M6	---	9'-0"	S1	---	---
146	OFFICE	FL1	B1	M1,2,1,1	F1,2,1,1	M3	F3	9'-0"	S1,2	---	---
147	OFFICE	FL1	B1	M1,2,1,1	F1,2,1,1	M3	F3	9'-0"	S1,2	---	---
148	STORAGE	FL3	B2	M1	F1	M3	F1	9'-0"	S1	---	---
149	STORAGE	FL3	B2	M5,1,1,5	F1	M3	F1	9'-0"	S1	---	
150	NOT USED	---	---	---	---	---	---	---	---	---	---
151	OFFICE	FL1	B1	M2,2,1,1	F1	M3	F3	8'-6"	S1	---	ALT #3
152	OFFICE	FL1	B1	M2,2,1,2	F1	M3	F3	8'-6"	S1	---	ALT #3
153	OFFICE	FL1	B1	M2,2,1,2	F1	M3	F3	8'-6"	S1	---	ALT #3
154	CORRIDOR	FL3(6)	B2	M1,-,5,1	F1	M6	---	8'-6"*	S1	---	MATCH EXISTING
161	CORRIDOR	X	X	X	X *	X	X	X	X	X	PATCH EXIST FINISHES @ CORR CONNECTION PAINT WEST WALL
-	---	---	---	---	---	---	---	---	---	---	---
-	---	---	---	---	---	---	---	---	---	---	---
-	---	---	---	---	---	---	---	---	---	---	---
200	NOT USED	---	---	---	---	---	---	---	---	---	---
201	MECHANICAL	FL5	B2	M1,2,2,1	F1	M7	---	9'-0"	S1	---	---
202	HALL	FL3	B2(7)	M1 *	F1	M6	---	9'-6"	S1,2	---	VINYL OVER GYP BD @ COURT OPNG'S SEE 1/A19.
203	STORAGE	FL5	B2	M1	F1	M7	---	8'-0"	S1	---	---
204	CORRIDOR	FL3(6)	B2(7)	M1	F1	M6	---	9'-0"(2)	S1,6	---	---
205	CONFERENCE RM	FL1	B1	M1	F1	M3	F3	9'-0"	S1	---	---
206	CUST	FL5	B2	M1	F1 *	M3	F1	9'-0"	S1,2	---	Q.T. @ SERVICE SINK, SEE E/A17.
207	OFFICE	FL1	B1	M1	F1	M3	F3	8'-4"	S1	---	---
208	CORRIDOR	FL3(6)	B2	M1	F1	M6	---	8'-4"	S1	---	---
209	OFFICE	FL1	B1	M1	F1	M3	F3	8'-4"	S1	---	---
210	NOT USED	---	---	---	---	---	---	---	---	---	---
211	STORAGE	FL3	B2	M1	F1	M3	F1	8'-0"	S1	---	---
212	STORAGE	FL3	B2	M1	F1	M3	F1	8'-0"	S1	---	---
213	STORAGE	FL3	B2	M1	F1	M3	F1	8'-0"	S1	---	---
214	LOBBY	FL3	B2	M1	F1	M6	---	9'-0"	S1	---	---
215	CORRIDOR	FL3	B2	M1	F1	M6	---	8'-4"	S1	---	---
216	MECHANICAL	FL5	---	M1	F1	M10	F7	---	S1	---	---
217	ELECTRICAL	FL5	---	M1	F1	M3	F1	11'-0"	S1	---	---
218	VAULT	FL5	---	M1	F1	M3	F1	8'-0"	S1	---	---
219	RAMP	FL5	---	M1	F1	M10	F7	---	S1	---	---
220	NOT USED	---	---	---	---	---	---	---	---	---	---
221	EXIST PIPE TUNNEL	X	X	X	X	X	X	X	X	---	---
222	EXIST PIPE TUNNEL	X	X	X	X	X	X	X	S1	---	---
224	EXIST DANCE	X	X	X (3)	X (3)	X (3)	X *(3)	X	X	---	PATCH EXISTING ACT AS REQ'D FOR NEW DUCT WORK
227	EXIST CORRIDOR	X	X	X	X *	X	X	X	X	---	PAINT EXIST FINISHES @ CORR CONNECTION PAINT WEST WALL
230	OFFICE	FL1	B1	M2,2,1,2	F1	M3	F3	9'-0"	S1	---	ALT #3
231	CONFERENCE	FL1	B1	M2,2,1,2	F1	M3	F3	9'-0"	S1	---	ALT #3
232	CORRIDOR	FL3(6)	B2	M1,-5,1	F1	M6	---	8'-6"*	S1	---	MATCH EXISITNG
215A	--- STORAGE	FL3	B2	M1	F1	M7	---	8'-4"	S1	---	---
215B	--- STORAGE	FL3	B2	M1	F1	M7	---	8'-4"	S1	---	---
-	---	---	---	---	---	---	---	---	---	---	---

NOTE: THIS SHEET IS COMPRISED OF DRAWINGS AND DETAILS FROM THE ORIGINAL 1990 BUILDING CONSTRUCTION CONFORMED SET & HAS BEEN INCLUDED FOR INFORMATIONAL PURPOSES ONLY. CONDITIONS SHOWN ON THIS SHEET HAVE NOT BEEN VERIFIED WITH EXISTING CONSTRUCTED CONDITIONS.

BRETT J. RICHARDS NO. 1107 LICENSED ARCHITECT STATE OF UTAH

jra JONES / RICHARDS & ASSOCIATES
ARCHITECTURE (801) 394-3033
PLANNING 533 - 26TH STREET
CONSTRUCTION MANAGEMENT OGDEN, UTAH

REVISED: AS BUILTS JUN 1990
PROJECT NUMBER: 8403
DATE: 8-21-88
DRAWN BY: R. BERTOLDI
PROJECT: PHYSICAL EDUCATION FACILITY WEBER STATE COLLEGE
SHEET TITLE: ROOM FINISH SCHEDULE & DETAILS
SHEET NO. A-16

0000TVA16
Weber State College; Physical Education Facility - RW:84-056
Room Finish Schedules & Details - 26694

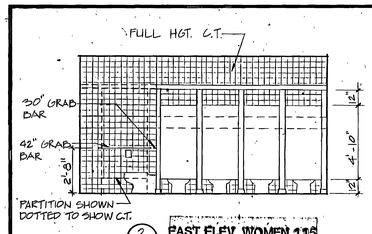

2 A-17 EAST ELEV. WOMEN 116 1/4" = 1'-0"

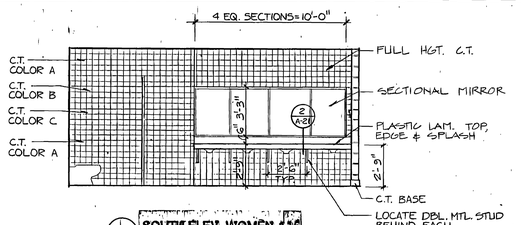

1 A-17 SOUTH ELEV. WOMEN 116 1/4" = 1'-0"

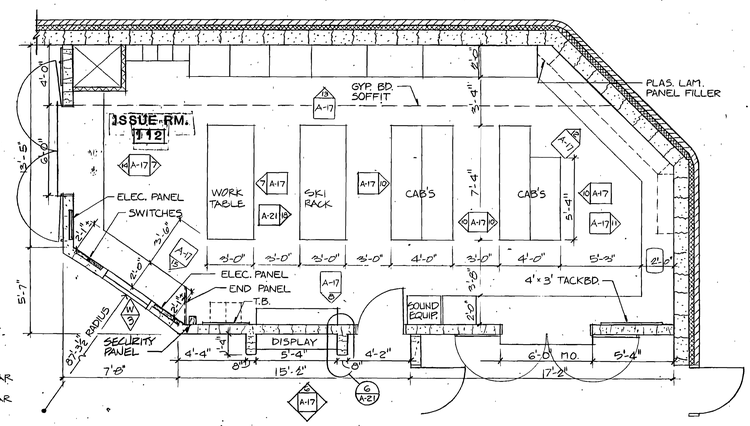

D A17 ISSUE ROOM 112 - ENLARGED PLAN 1/4" = 1'-0"

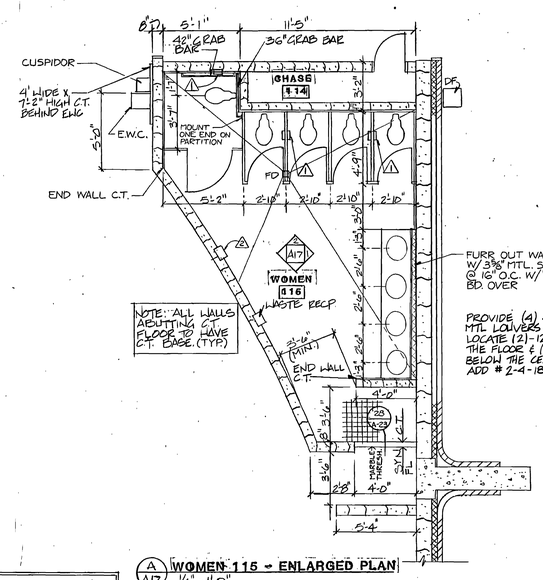

A A17 WOMEN 116 - ENLARGED PLAN 1/4" = 1'-0"

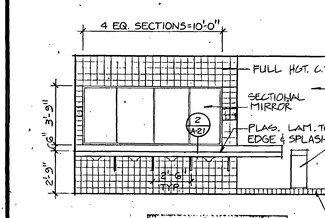

4 A-17 NORTH ELEV. MEN 110 1/4" = 1'-0"

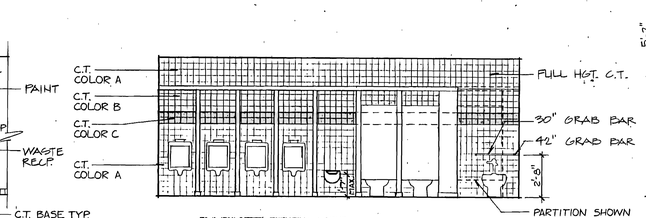

3 A-17 SOUTH ELEV. MEN 110 1/4" = 1'-0"

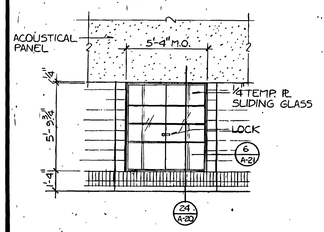

6 A-17 DISPLAY CASE ELEV. 1/4" = 1'-0"

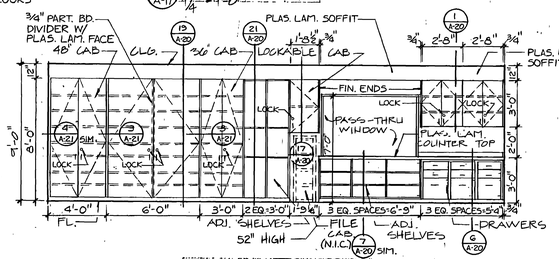

5 A-17 WEST ELEV. ISSUE RM. 604 1/4" = 1'-0"

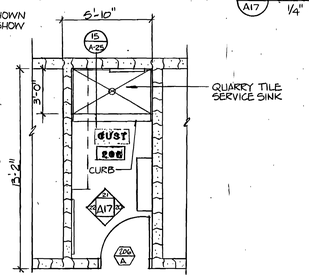

E A17 CUST 206 - ENLARGED PLAN 1/4" = 1'-0"

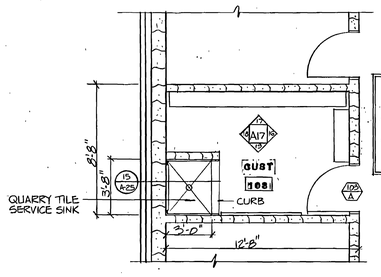

F A17 CUST 103 - ENLARGED PLAN 1/4" = 1'-0"

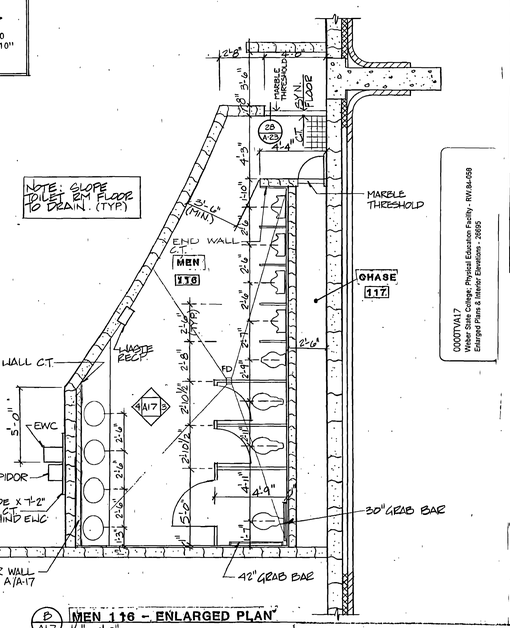

B A17 MEN 116 - ENLARGED PLAN 1/4" = 1'-0"

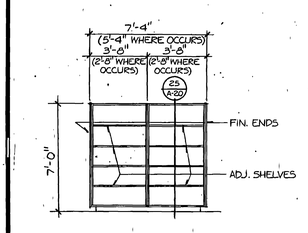

10 A-17 CABINET ELEV. 1/4" = 1'-0"

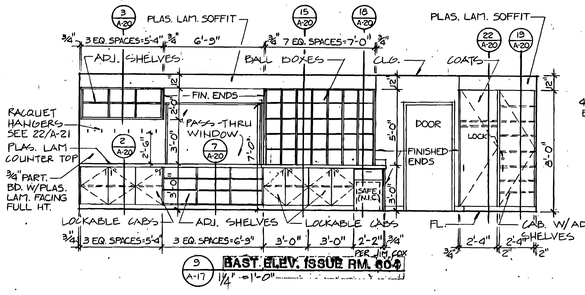

9 A-17 EAST ELEV. ISSUE RM. 604 1/4" = 1'-0"

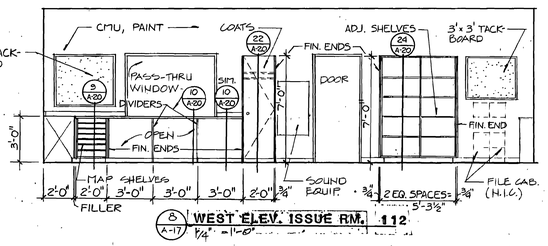

8 A-17 WEST ELEV. ISSUE RM. 112 1/4" = 1'-0"

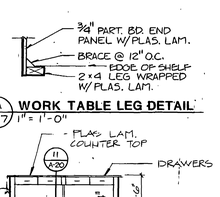

7A A-17 WORK TABLE LEG DETAIL 1" = 1'-0"

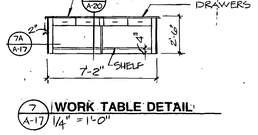

7 A-17 WORK TABLE DETAIL 1/4" = 1'-0"

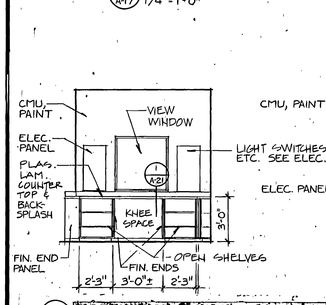

15 A-17 NORTHWEST ELEV. ISSUE RM. 112 1/4" = 1'-0"

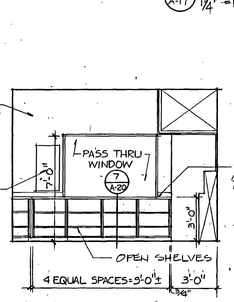

14 A-17 NORTH ELEV. ISSUE RM. 112 1/4" = 1'-0"

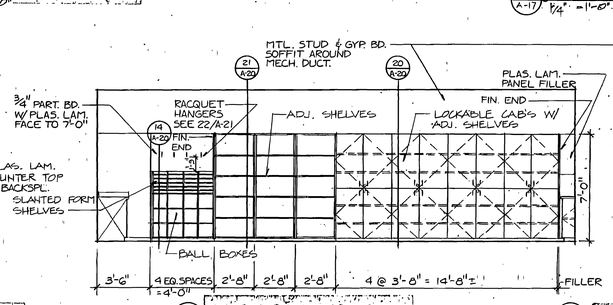

13 A-17 EAST ELEV. ISSUE RM. 112 1/4" = 1'-0"

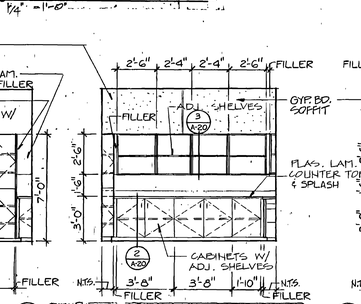

12 A-17 SOUTHEAST ELEV. ISSUE RM. 112

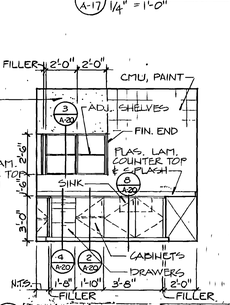

11 A-17 SOUTH ELEV. ISSUE RM. 112

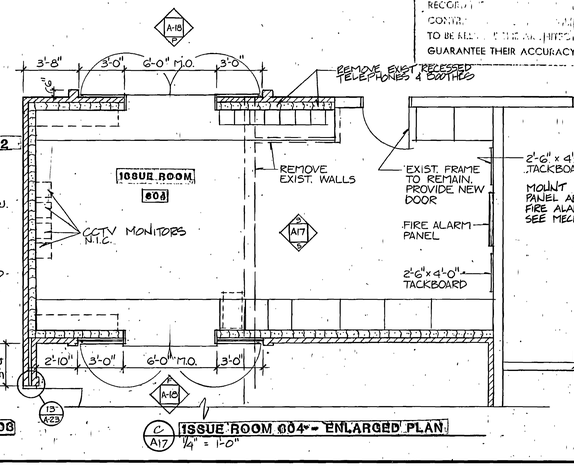

C A17 ISSUE ROOM 604 - ENLARGED PLAN 1/4" = 1'-0"

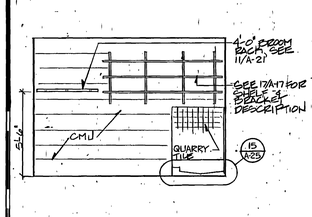

22 A-17 NORTH ELEV - CUST 206 1/4" = 1'-0"

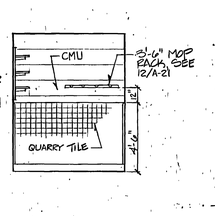

21 A-17 EAST ELEV - CUST 206 1/4" = 1'-0"

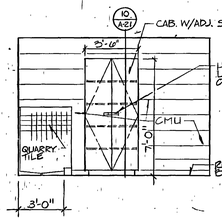

20 A-17 SOUTH ELEV - CUST 206 1/4" = 1'-0"

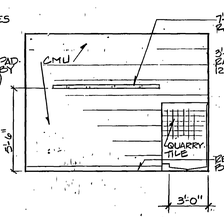

19 A-17 WEST ELEV - CUST 103 1/4" = 1'-0"

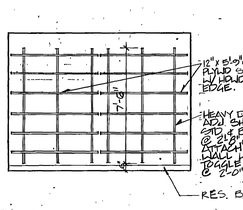

18 A-17 NORTH ELEV - CUST 103 1/4" = 1'-0"

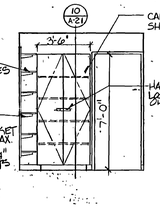

17 A-17 EAST ELEV - CUST 103 1/4" = 1'-0"

16 A-17 SOUTH ELEV - CUST 103 1/4" = 1'-0"

RECORD DOCUMENTS JUN 25 1990

THE DRAWINGS HAVE BEEN REVISED TO RECORD [illegible] BY THE CONTR[illegible] ARE ASSUMED TO BE RE[illegible] DOES NOT GUARANTEE THEIR ACCURACY.

NOTE: THIS SHEET IS COMPRISED OF DRAWINGS AND DETAILS FROM THE ORIGINAL 1990 BUILDING CONSTRUCTION CONFORMED SET & HAS BEEN INCLUDED FOR INFORMATIONAL PURPOSES ONLY. CONDITIONS SHOWN ON THIS SHEET HAVE NOT BEEN VERIFIED WITH EXISTING CONSTRUCTED CONDITIONS.

DRAFT J.S. PORTALIS REG. 1107

JONES / RICHARDS & ASSOCIATES
CONSTRUCTION MANAGEMENT
OGDEN, UTAH
PLANNING
532 - 26TH STREET

jra
ARCHITECTURE
(801) 394-3333

REVISED: AS BUILTS 6-90

PROJECT NUMBER: 1-9409

DATE: 6-27-88

DRAWN BY: R. BERTOLDI

PROJECT: PHYSICAL EDUCATION FACILITY
WEBER STATE COLLEGE

SHEET TITLE: ENLARGED PLANS & INTERIOR ELEVATIONS

SHEET NO. A-17

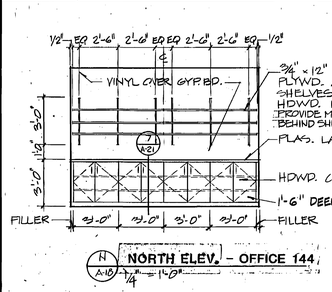

N A-18 NORTH ELEV. - OFFICE 144, 1/4" = 1'-0"

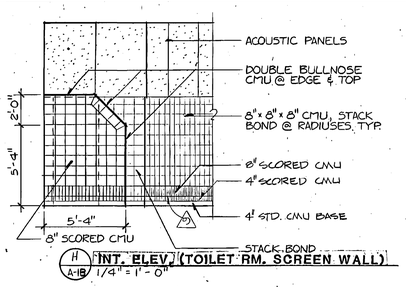

H A-18 INT. ELEV. (TOILET RM. SCREEN WALL) 1/4" = 1'-0"

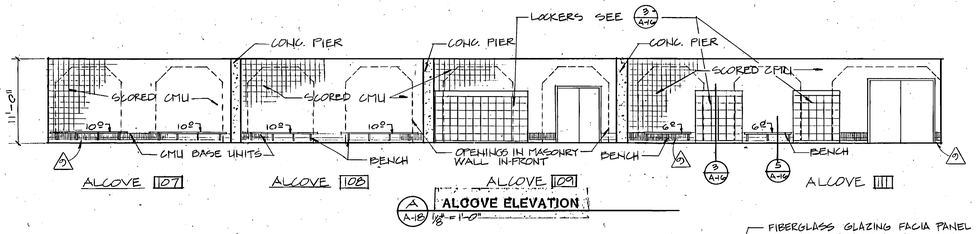

A A-18 ALCOVE ELEVATION 1/8" = 1'-0"

KEYED NOTES

1. 12"x8"x16" CMU, FLUSH CUT JTS.
2. 12"x8"x16" CMU, SPLIT FACED
3. 6"x8"x16" CMU, SPLIT FACED
4. 4"x8"x16" CMU, SCORED AT 8" O.C., RAKED JTS. (VENEER)
5. 6"x8"x16" CMU, SCORED AT 8" O.C. STACK BOND, RAKED JTS.
6. 8"x8"x16" CMU, SCORED AT 8" O.C., STACK BOND, RAKED JTS.
7. 8"x8"x8" CMU, STACK BOND, RAKED JTS., (AT RADIUS)
8. NOT USED
9. TYPICAL BASE TO CONSIST OF 1 COURSE 4" HIGH STD. CMU WITH FLUSH CUT JTS. 1 COURSE 4" HIGH AND 1 COURSE 8" HIGH CMU SCORED 6/UNIT WITH RAKED JOINTS.
10. NOT USED
11. NOT USED
12. ACOUSTIC PANELS (TYPE B).
13. ACOUSTIC BAFFLE, EACH PANEL 4'-1"X12'-1" X 0'-2". PANELS TO BE CONTINUOUS AROUND MULTIPURPOSE SPACE (EXCEPT AT VIEW WINDOW). AT EAST AND WEST WALLS CENTER PANELS IN BAYS AND NOTCH END PANEL OF EACH BAY 2". SEE SPECIFICATIONS.
14. EXPOSED CONCRETE PIERS WITH SPECIAL CONCRETE FINISH (SANDBLAST) DO NOT PAINT. SEE SPEC. FOR SEALER.

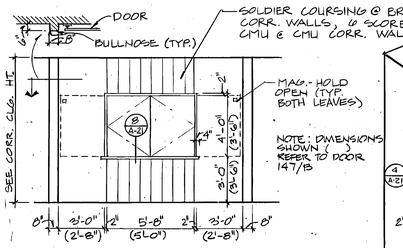

P A-18 COUNTER ELEV. at CORR. 145 & 303 1/4" = 1'-0"

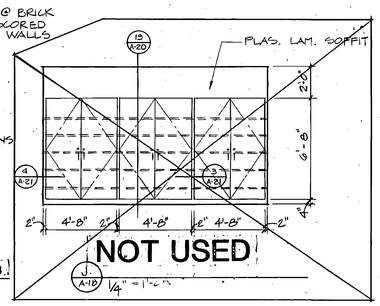

J A-18 1/4" = 1'-0"

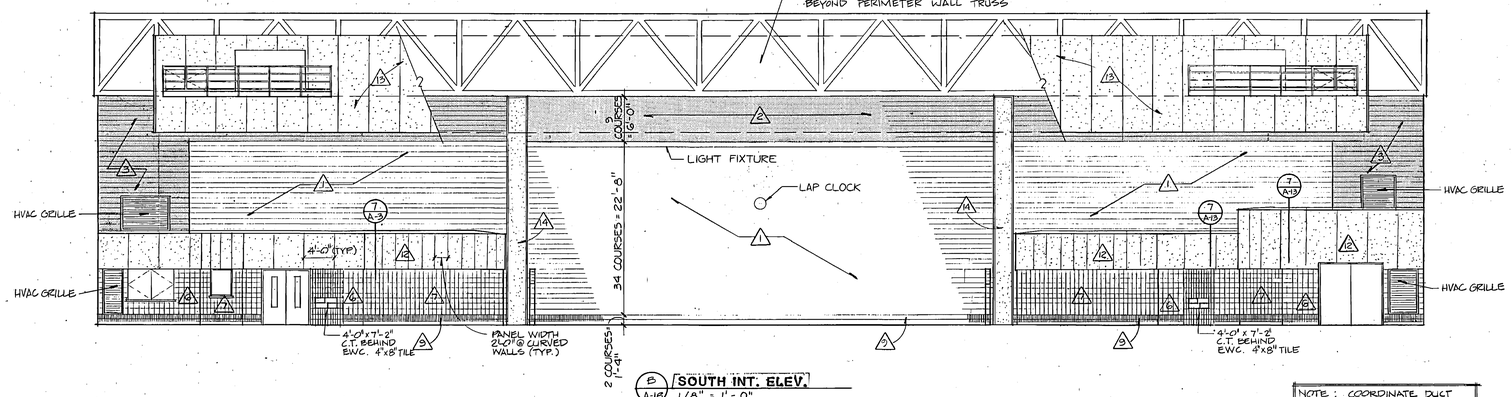

B A-18 SOUTH INT. ELEV. 1/8" = 1'-0"

NOTE: THIS SHEET IS COMPRISED OF DRAWINGS AND DETAILS FROM THE ORIGINAL 1990 BUILDING CONSTRUCTION CONFORMED SET & HAS BEEN INCLUDED FOR INFORMATIONAL PURPOSES ONLY. CONDITIONS SHOWN ON THIS SHEET HAVE NOT BEEN VERIFIED WITH EXISTING CONSTRUCTED CONDITIONS.

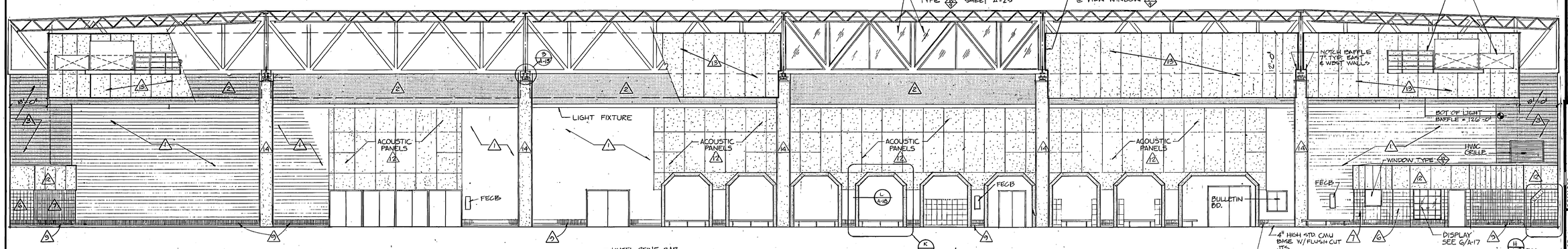

L A-18 EAST INT. ELEV. 1/8" = 1'-0"

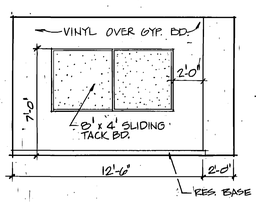

Q A-18 EAST ELEV. - OFFICE 147 1/4" = 1'-0"

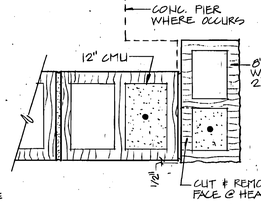

L A-18 JAMB/HEAD SIM. DETAIL 1 1/2" = 1'-0"

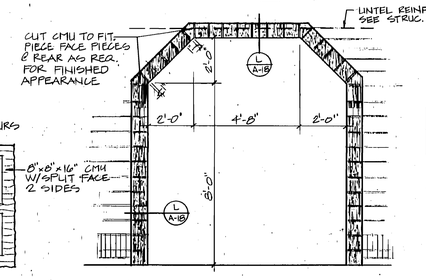

K A-18 ARCH ELEV. 3/8"=1'-0"

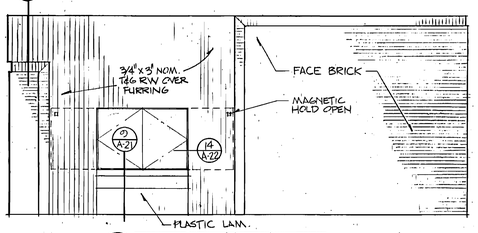

F A-18 EAST ELEV. - LOBBY 306 1/4" = 1'-0"

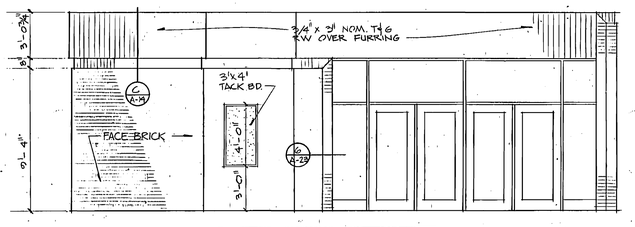

D A-18 WEST ELEV. - LOBBY 306 1/4" = 1'-0"

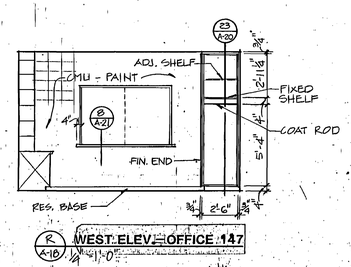

R A-18 WEST ELEV. - OFFICE 147 1/4" = 1'-0"

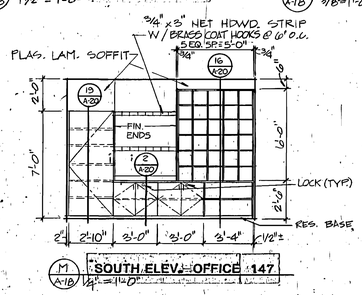

M A-18 SOUTH ELEV. - OFFICE 147 1/2" = 1'-0"

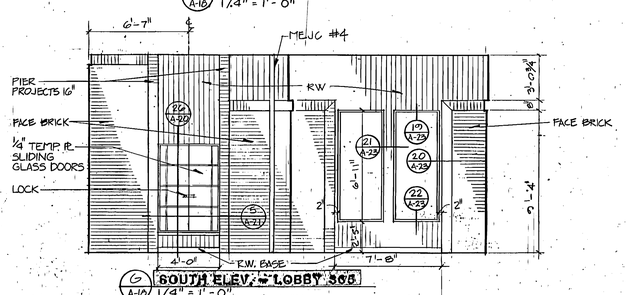

G A-18 SOUTH ELEV. - LOBBY 305 1/4" = 1'-0"

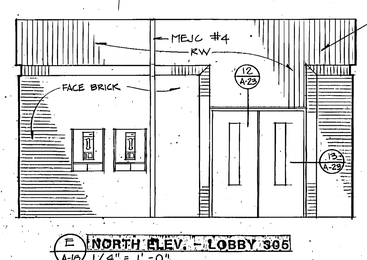

E A-18 NORTH ELEV. - LOBBY 305 1/4" = 1'-0"

RECORD DOCUMENTS JUN 25 1990

THESE DOCUMENTS HAVE BEEN REVISED TO RECORD INFORMATION SUBMITTED BY THE CONTRACTOR. THEY ARE ASSUMED TO BE RELIABLE THE ARCHITECT DOES NOT GUARANTEE THEIR ACCURACY.

BRETT J. RICHARDS No. 110?

jra JONES / RICHARDS & ASSOCIATES
ARCHITECTURE (801) 394-3323
PLANNING 531 - 26TH STREET
CONSTRUCTION MANAGEMENT OGDEN, UTAH

REVISED: As Builts 6-90
PROJECT NUMBER: 8463
DATE: 6-21-88
DRAWN BY: K. SEELEY

PROJECT: PHYSICAL EDUCATION FACILITY
WEBER STATE COLLEGE

SHEET TITLE: INTERIOR ELEVATIONS

SHEET NO. A-18

0000TVA18
Weber State College: Physical Education Facility - RW-84-058
Interior Elevations - 00000

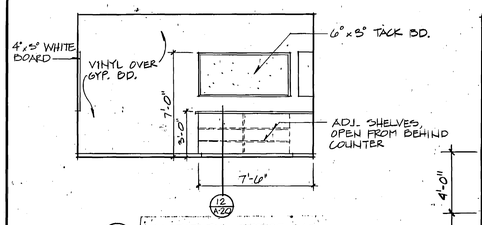

J A-19 1/4" = 1'-0" **EAST ELEV.–OFFICE 146**

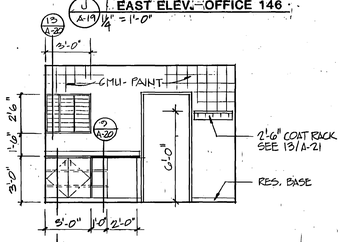

2 A-20 K A-19 1/4" = 1'-0" **SOUTH ELEV.–OFFICE 146**

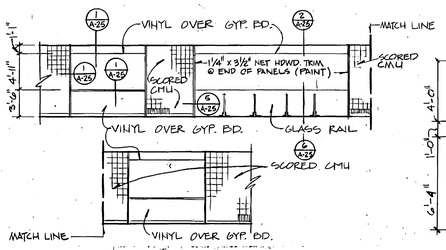

L A-19 1/8" = 1'-0" **COURT VIEW WINDOW ELEV. – HALL 202**

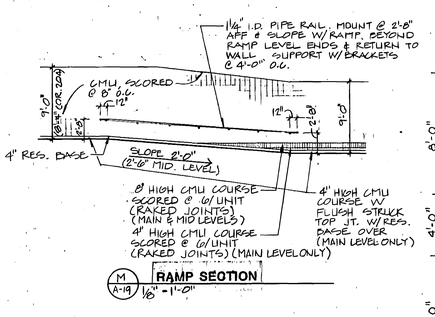

M A-19 1/8" = 1'-0" **RAMP SECTION**

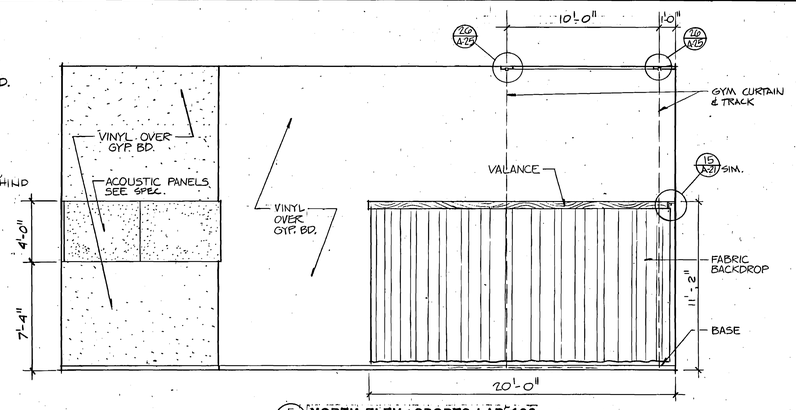

E A-19 1/4" = 1'-0" **NORTH ELEV.–SPORTS LAB 123**

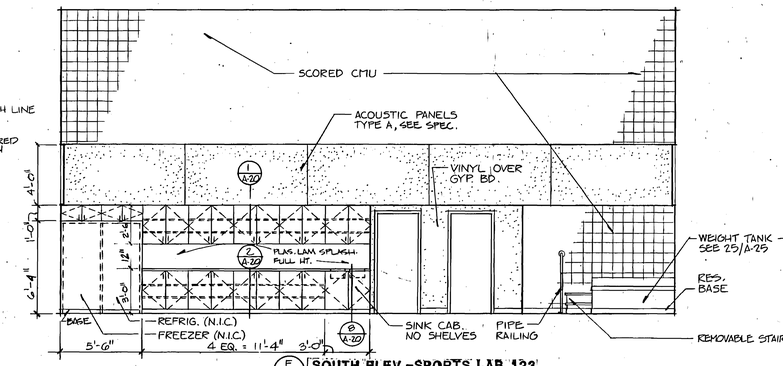

F A-19 1/4" = 1'-0" **SOUTH ELEV.–SPORTS LAB 123**

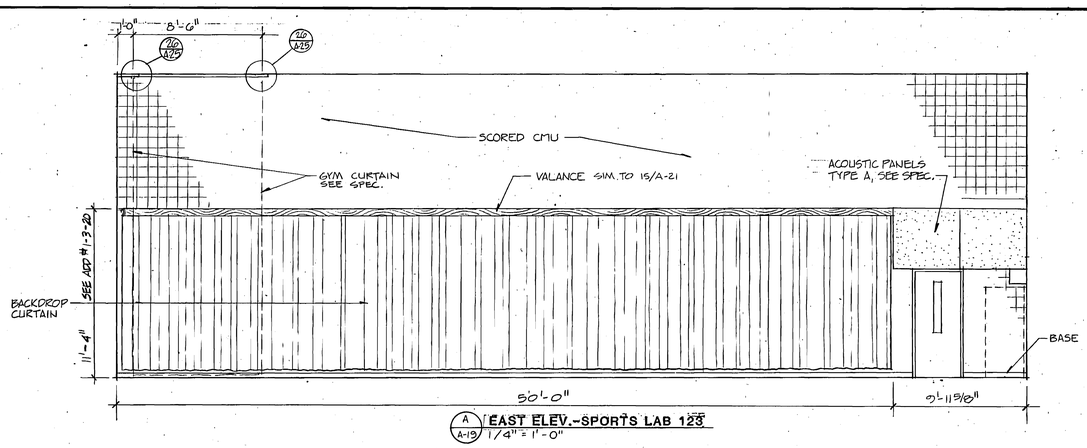

A A-19 1/4" = 1'-0" **EAST ELEV.–SPORTS LAB 123**

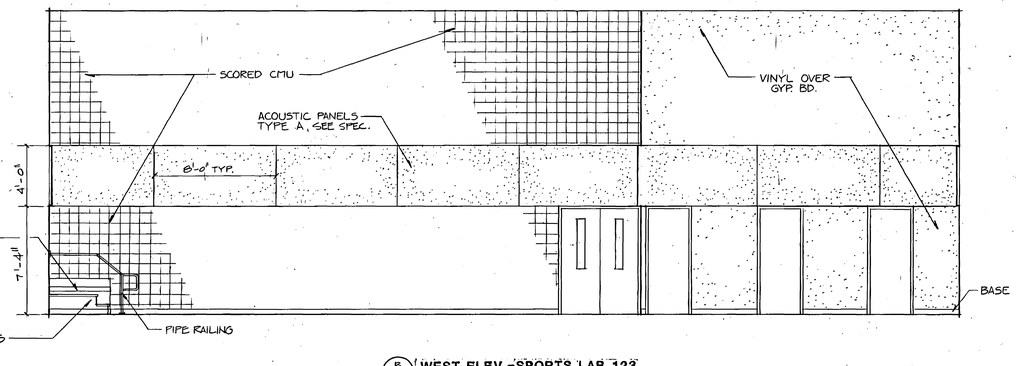

B A-19 1/4" = 1'-0" **WEST ELEV.–SPORTS LAB 123**

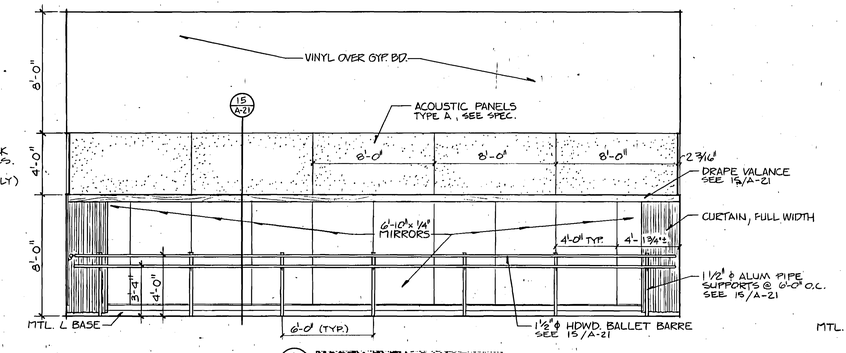

G A-19 1/4" = 1'-0" **NORTH ELEV.–DANCE 138**

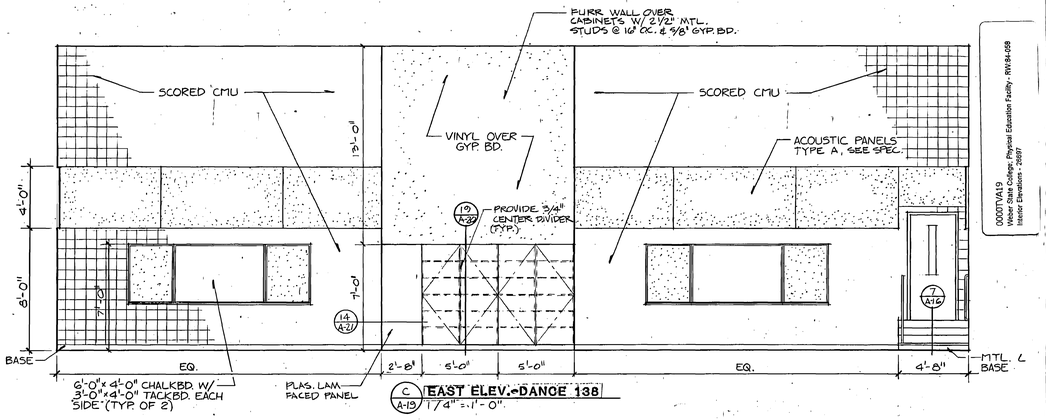

C A-19 1/4" = 1'-0" **EAST ELEV.–DANCE 138**

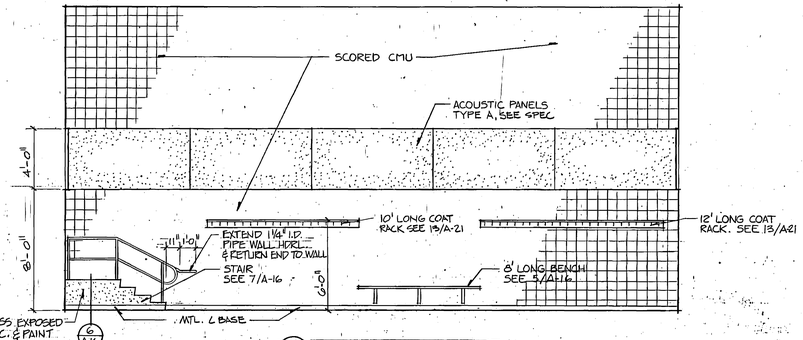

H A-19 1/4" = 1'-0" **SOUTH ELEV.–DANCE 138**

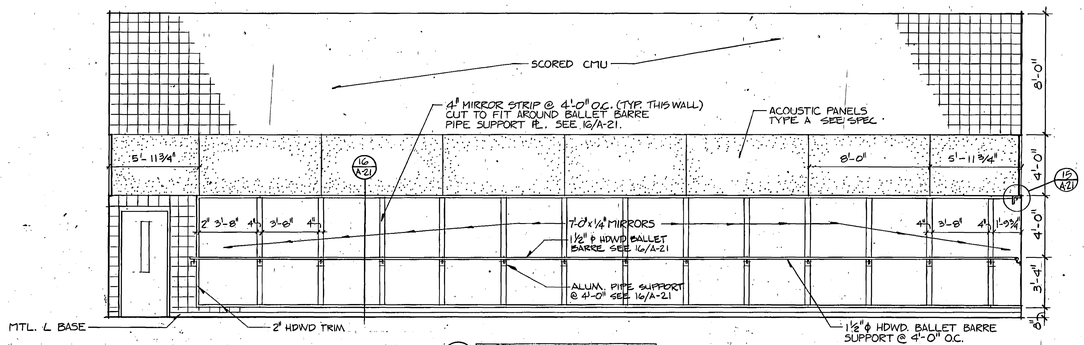

D A-19 1/4" = 1'-0" **WEST ELEV.–DANCE 138**

RECORD DOCUMENTS JUN 2 5 1990

THESE DOCUMENTS HAVE BEEN REVISED TO RECORD INFORMATION SUBMITTED BY THE CONTRACTOR. THEY ARE ASSUMED TO BE RELIABLE THE ARCHITECT DOES NOT GUARANTEE THEIR ACCURACY.

STATE OF UTAH BRENT J. RICHARDS 107 REGISTERED ARCHITECT

NOTE: THIS SHEET IS COMPRISED OF DRAWINGS AND DETAILS FROM THE ORIGINAL 1990 BUILDING AND DETAILS FROM ADDITIONAL PLANS HAVE BEEN INCLUDED FOR INFORMATIONAL PURPOSES ONLY. CONDITIONS SHOWN ON THIS SHEET HAVE NOT BEEN VERIFIED WITH EXISTING CONSTRUCTED CONDITIONS.

jra JONES / RICHARDS & ASSOCIATES
ARCHITECTURE (801) 394-3333
PLANNING 533 - 28TH STREET
CONSTRUCTION MANAGEMENT OGDEN, UTAH

REVISED:	DATE:
AS BUILTS	JUN 1990

PROJECT NUMBER: 8493
DATE: 6-21-89
DRAWN BY: K. SEKO

PROJECT: PHYSICAL EDUCATION FACILITY
WEBER STATE COLLEGE

SHEET TITLE: INTERIOR ELEVATIONS

SHEET NO. A-19

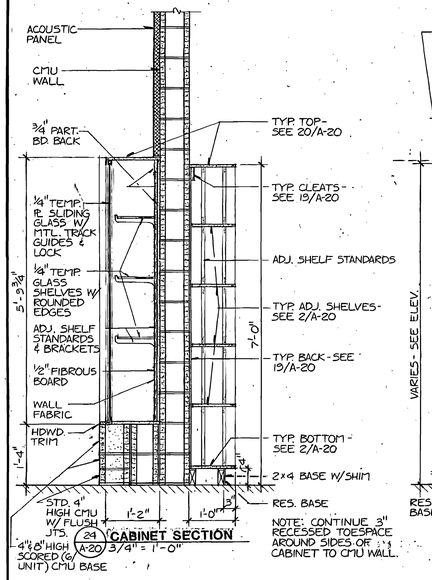

25 A-20 CABINET SECTION 3/4" = 1'-0"

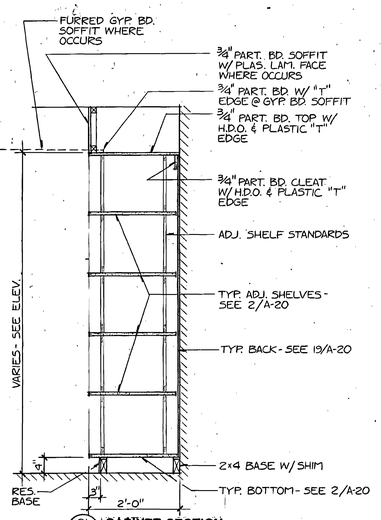

21 A-20 CABINET SECTION 3/4" = 1'-0"

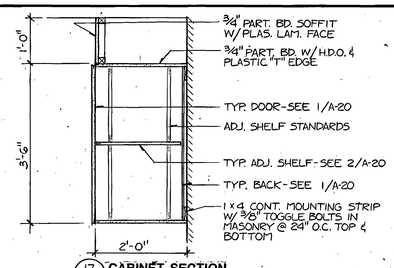

17 A-20 CABINET SECTION 3/4" = 1'-0"

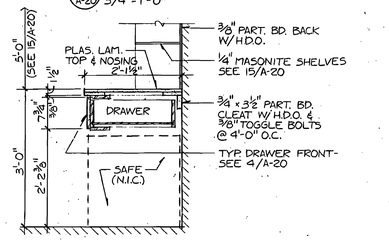

18 A-20 CABINET SECTION 3/4" = 1'-0"

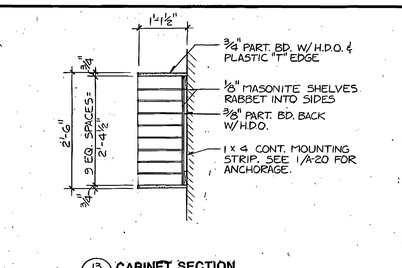

13 A-20 CABINET SECTION 3/4" = 1'-0"

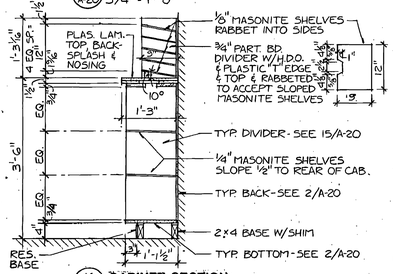

19 A-20 CABINET SECTION 3/4" = 1'-0"

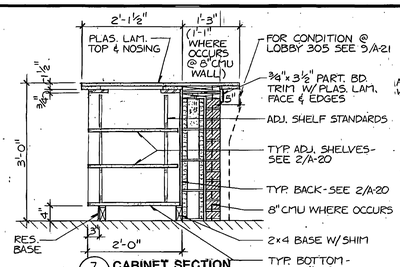

7 A-20 CABINET SECTION 3/4" = 1'-0"

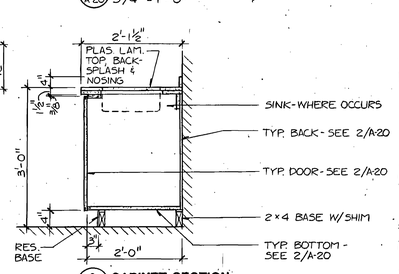

8 A-20 CABINET SECTION 3/4" = 1'-0"

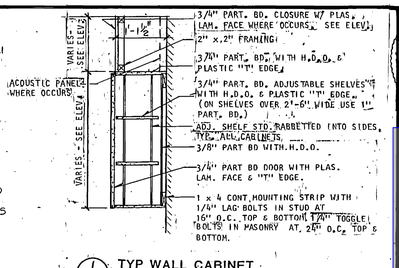

1 A-20 TYP WALL CABINET 3/4" = 1'-0"

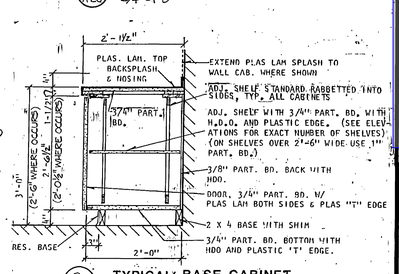

2 A-20 TYPICAL BASE CABINET 3/4" = 1'-0"

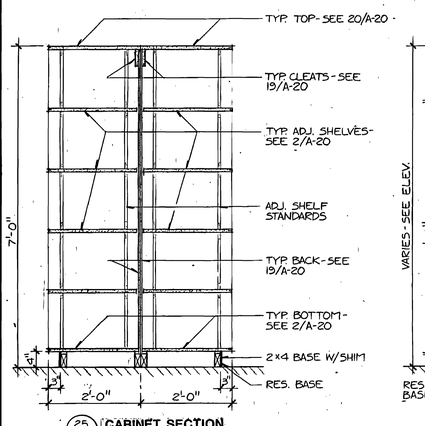

25 A-20 CABINET SECTION 3/4" = 1'-0"

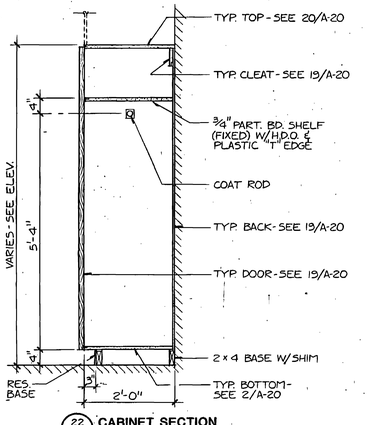

22 A-20 CABINET SECTION 3/4" = 1'-0"

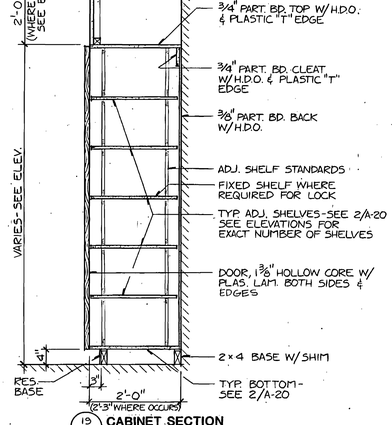

19 A-20 CABINET SECTION 3/4" = 1'-0"

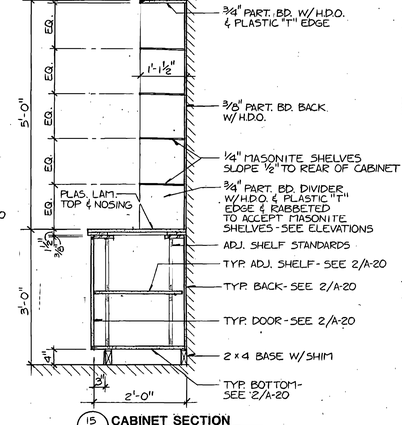

15 A-20 CABINET SECTION 3/4" = 1'-0"

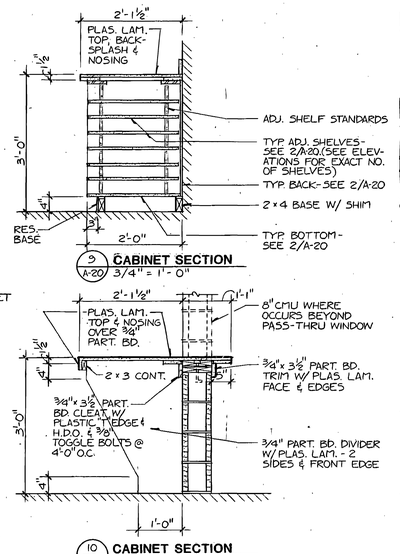

9 A-20 CABINET SECTION 3/4" = 1'-0"

10 A-20 CABINET SECTION 3/4" = 1'-0"

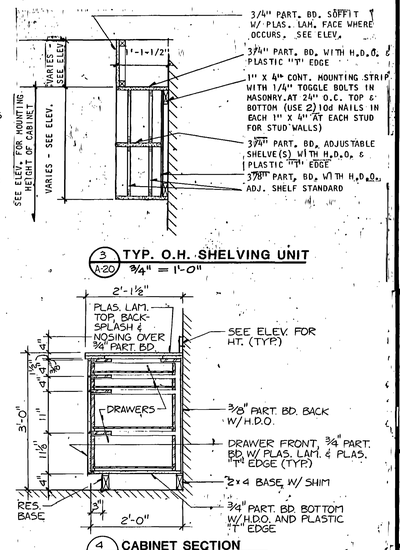

3 A-20 TYP. O.H. SHELVING UNIT 3/4" = 1'-0"

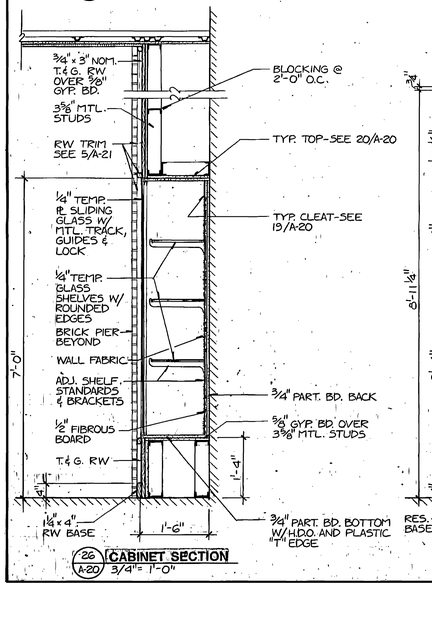

26 A-20 CABINET SECTION 3/4" = 1'-0"

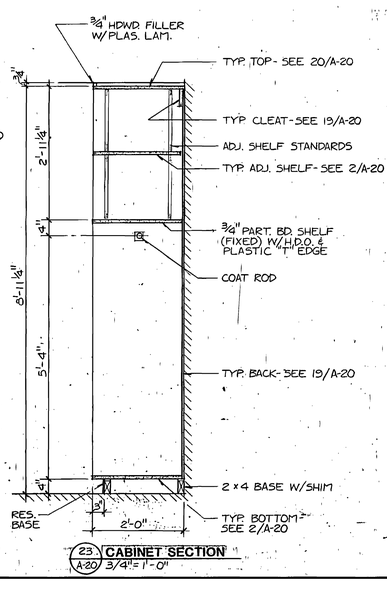

23 A-20 CABINET SECTION 3/4" = 1'-0"

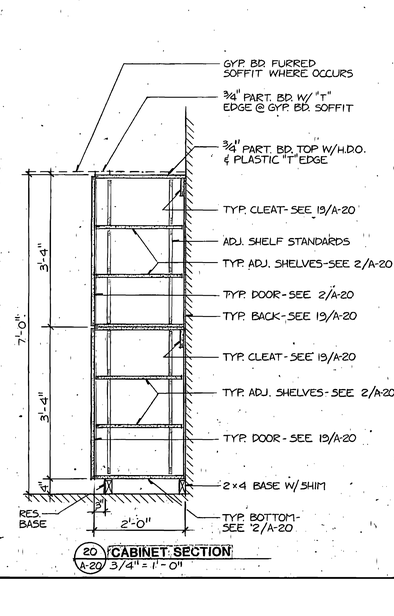

20 A-20 CABINET SECTION 3/4" = 1'-0"

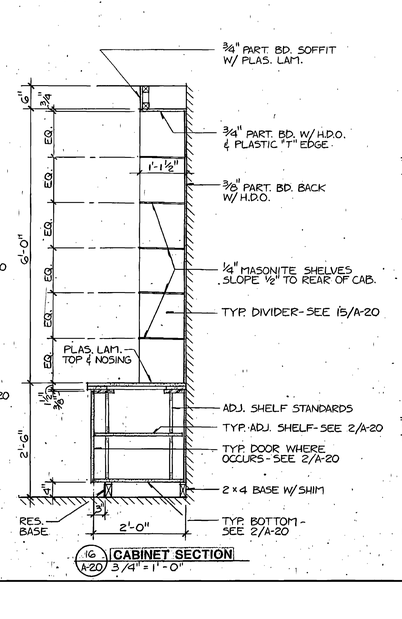

16 A-20 CABINET SECTION 3/4" = 1'-0"

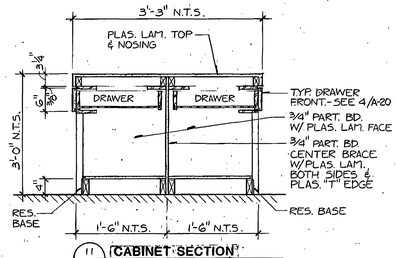

11 A-20 CABINET SECTION 3/4" = 1'-0"

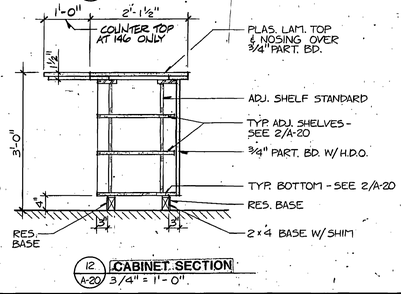

12 A-20 CABINET SECTION 3/4" = 1'-0"

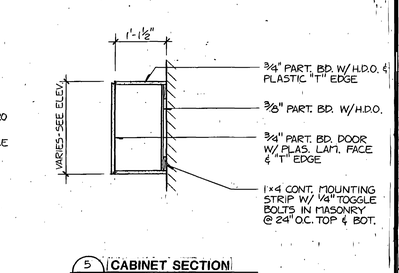

5 A-20 CABINET SECTION 3/4" = 1'-0"

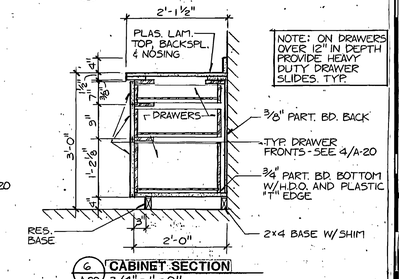

6 A-20 CABINET SECTION 3/4" = 1'-0"

RECORD DOCUMENTS JUN 2 6 1990
THESE DRAWINGS HAVE NOT BEEN REVISED TO RECORD [illegible] AS BUILT. ASSUMED CONDITIONS TO BE REASONABLE, THE ARCHITECT DOES NOT GUARANTEE THEIR ACCURACY.

NOTE: THIS SHEET IS COMPRISED OF DRAWINGS AND DETAILS FROM THE ORIGINAL 1990 BUILDING CONSTRUCTION CONFORMED SET & HAS BEEN INCLUDED FOR INFORMATIONAL PURPOSES ONLY. CONDITIONS SHOWN ON THIS SHEET HAVE NOT BEEN VERIFIED WITH EXISTING CONSTRUCTED CONDITIONS.

BRENT H. RICHARDS No. 4107 REGISTERED ARCHITECT STATE OF UTAH

jra JONES / RICHARDS & ASSOCIATES
ARCHITECTURE MULTI-DISCIPLINED
CONSTRUCTION MANAGEMENT
PLANNING
333 - 26TH STREET

REVISED: 6 BULLETS 6-90
PROJECT NUMBER: 8403
DATE: 3-1-88
DRAWN BY: K.SCERO

PROJECT: PHYSICAL EDUCATION FACILITY
WEBER STATE COLLEGE
SHEET TITLE: MILLWORK DETAILS
SHEET NO. A-20

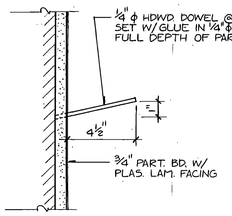

22 A-21 **RACQUETBALL HANGER DETAIL**
3" = 1'-0"

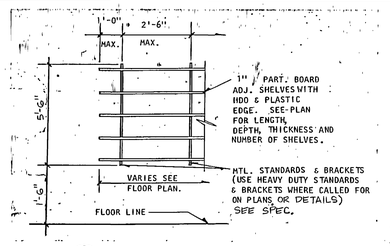

17 A-21 **ADJ. SHELVING**
3/8" = 1'-0"

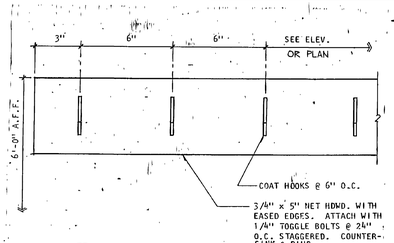

13 A-21 **COAT RACK**
3" = 1'-0"

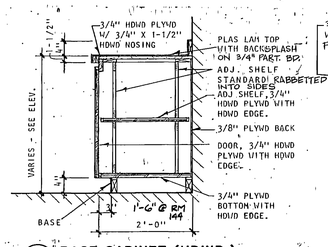

7 A-21 **BASE CABINET (HDWD.)**
3/4" = 1'-0"

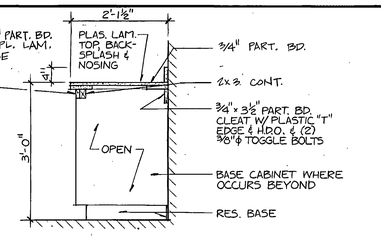

1 A-21 **COUNTER SECTION**
3/4" = 1'-0"

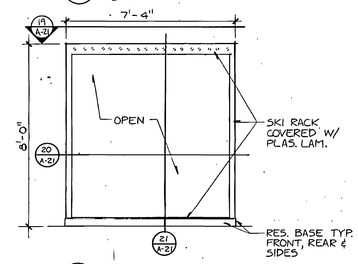

18 A-21 **SKI RACK ELEV.**
3/8" = 1'-0"

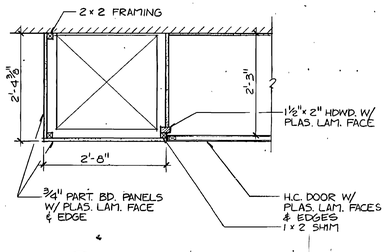

14 A-21 **CABINET DETAIL (DANCE 138)**
3/4" = 1'-0"

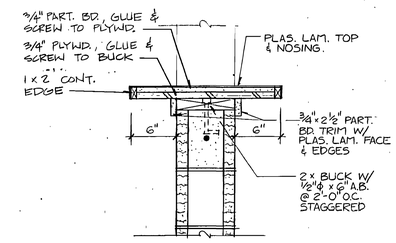

8 A-21 **PASS-THRU SECTION**
1 1/2" = 1'-0"

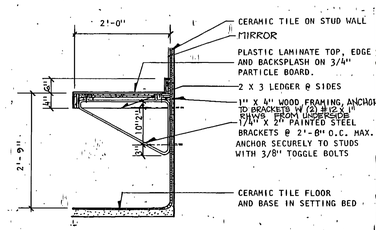

2 A-21 **VANITY SECTION**
3/4" = 1'-0"

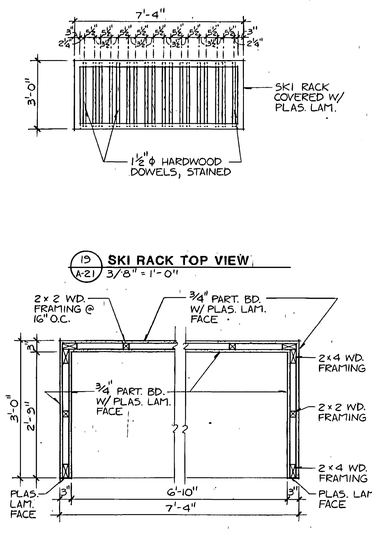

15 A-21 **SKI RACK TOP VIEW**
3/8" = 1'-0"

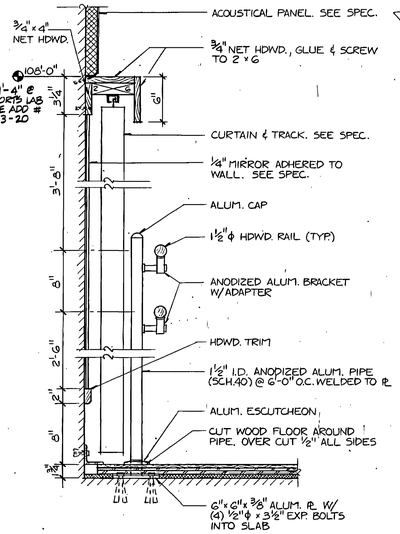

15 A-21 **DANCE STUDIO DETAIL**
1 1/2" = 1'-0"

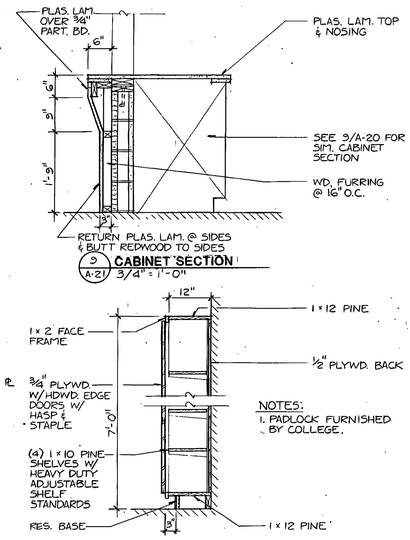

5 A-21 **CABINET SECTION**
3/4" = 1'-0"

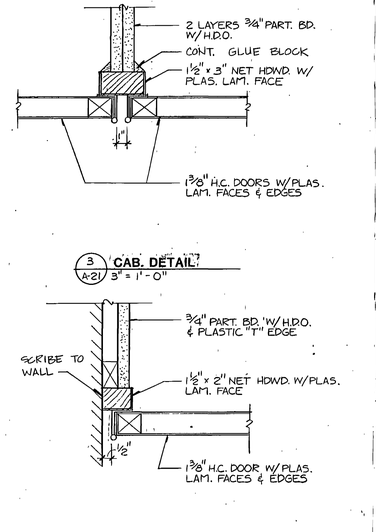

3 A-21 **CAB. DETAIL**
3" = 1'-0"

20 A-21 **SKI RACK DETAIL (PLAN)**
3/4" = 1'-0"

4 A-21 **CAB. DETAIL**
3" = 1'-0"

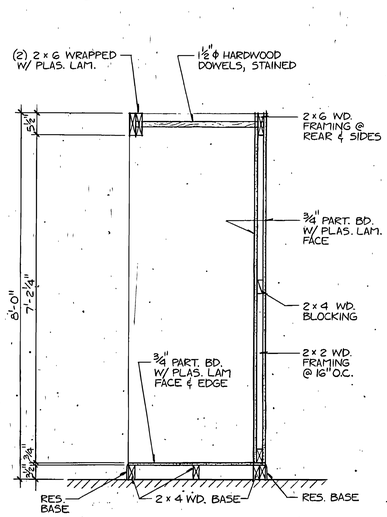

21 A-21 **SKI RACK SECTION**
3/4" = 1'-0"

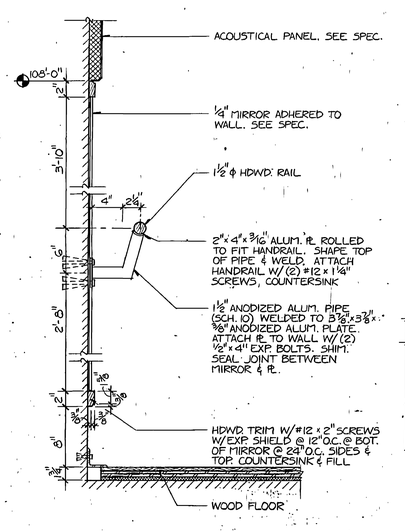

16 A-21 **DANCE STUDIO DETAIL**
1 1/2" = 1'-0"

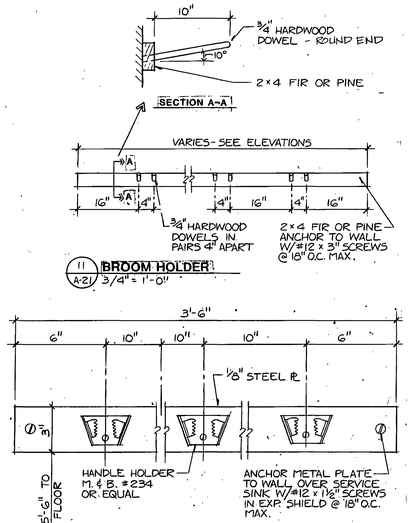

11 A-21 **BROOM HOLDER**
3/4" = 1'-0"

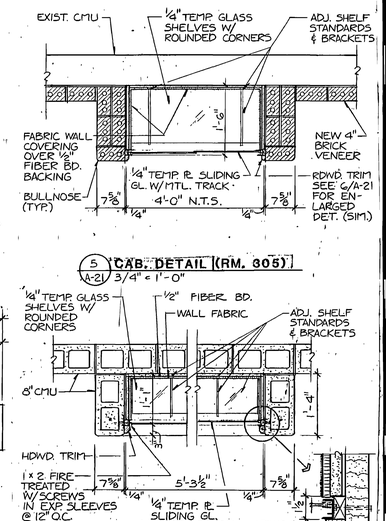

5 A-21 **CAB. DETAIL (RM. 305)**
3/4" = 1'-0"

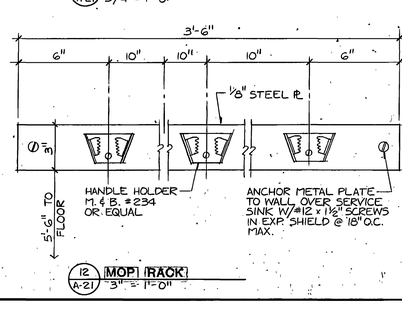

12 A-21 **MOP RACK**
3" = 1'-0"

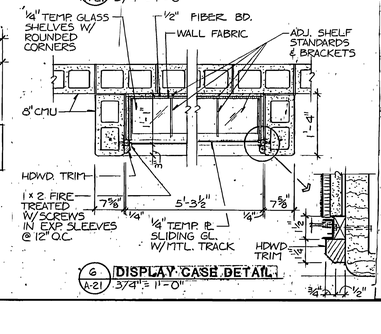

6 A-21 **DISPLAY CASE DETAIL**
3/4" = 1'-0"

RECORD DOCUMENTS JUN 2 6 1990

THESE DOCUMENTS HAVE BEEN REVISED TO RECORD INFORMATION SUBMITTED BY THE CONTRACTOR. WHILE THEY ARE ASSUMED TO BE RELIABLE THE ARCHITECT DOES NOT GUARANTEE THEIR ACCURACY.

STATE OF UTAH — BRETT L. RICHARDS — REGISTERED ARCHITECT — No. 2107

NOTE: THIS SHEET IS COMPRISED OF DRAWINGS AND DETAILS FROM THE ORIGINAL 1990 BUILDING CONSTRUCTION CONFORMED SET & HAS BEEN INCLUDED FOR INFORMATIONAL PURPOSES ONLY. CONDITIONS SHOWN ON THIS SHEET HAVE NOT BEEN VERIFIED WITH EXISTING CONSTRUCTED CONDITIONS.

jra JONES / RICHARDS & ASSOCIATES
ARCHITECTURE (801) 394-3333
PLANNING 533 - 28TH STREET
CONSTRUCTION MANAGEMENT OGDEN, UTAH

REVISED: AS BUILTS 6-90
PROJECT NUMBER: 8603
DATE: 2-2-90
DRAWN BY: K. SECO

PROJECT: PHYSICAL EDUCATION FACILITY
WEBER STATE COLLEGE
SHEET TITLE: MILLWORK & MISC. DETAILS
SHEET NO. A-21

DOOR SCHEDULE

DOOR MARK	DOOR: WIDTH	HEIGHT	THICKNESS	TYPE	CONSTRUCTION	FACING/FINISH	GLASS	FIRE RATING	FRAME: WIDTH	TYPE	CONSTRUCTION	SIDELITE	TRANSOM	DETAILS: HEAD	JAMB	THRESHOLD	HARDWARE: GROUP	LOCK FUNCTION	KEY		REMARKS
TYP.	3'-0"	7'-0"	1-3/4"	A	S.C.	HDWD STAIN	1/4" WIRED	20 MIN.	8-3/4"	1	H.M.	1/4" WIRED	INSUL. GLASS	1/A22	1/A22	2/A22					
101/A	PR 4'0"	#	#	#	H.M.	PAINT	—	1 HR	#	2	#	—	—	#	#	#	11	F-07	AB1		—
102/A	PR 4'0"	#	#	#	H.M.	PAINT	—	1 HR	#	2	#	—	—	#	#	#	11	F-07	AB2		—
103/A	#	#	#	#	H.M.	PAINT	—	—	#	#	#	—	—	#	#	#	(1)12	F-07	AA2		—
104/A	4'-0"	#	#	#	H.M.	PAINT	—	1 HR	#	2	#	—	—	#	#	#	18	F-07	AB3		—
105/A	#	#	#	#	H.M.	PAINT	—	—	#	3	#	—	—	3/A22	3/A22	#	1	—	—		4 PAIR DOORS PER SYMBOL
105/B	#	#	#	#	H.M.	PAINT	—	—	#	3	#	—	—	3/A22	3/A22	#	1	—	—		4 PAIR DOORS PER SYMBOL
105/C	#	#	#	#	H.M.	PAINT	—	—	#	3	#	—	—	3/A22	3/A22	#	1	—	—		4 PAIR DOORS PER SYMBOL
105/D	12'-0"	12'-0"	N/A	E	STEEL	PAINT	—	—	N/A	N/A	N/A	—	—	17/A23	18/A23	—	3	N/A	BB2		—
105/E	PR 4'0"	7-10"	#	#	#	#	—	1 HR	6-3/4"	2	#	—	—	4/A22	5/A22	—	15	F-05	AA3		—
105/F	2'-6"	4'-0"	#	#	H.M.	PAINT	—	—	7"	#	#	—	—	12/A24 SIM	11/A24	12/A24	21	N/A	BB3		FACIA DOOR SEE SHEET A5
105/G	2'-6"	4'-0"	#	#	H.M.	PAINT	—	—	7"	#	#	—	—	12/A24 SIM	11/A24	12/A24	21	N/A	BB3		FACIA DOOR SEE SHEET A5
106/A	PR 3'0"	#	#	#	H.M.	PAINT	—	1 HR	6-3/4"	2	#	—	—	4/A22	4/A22	#	11	F-07	AB4		—
112/A	#	#	#	#	#	#	—	1 HR	#	#	#	—	—	#	#	#	13	F-05	AA4		—
112/B	PR2'10"	4'-0"	#	#	#	#	—	1 HR	#	2	#	—	—	4/A22	4/A22	—	17	N/A	AA4		—
112/C	PR2'10"	4'-0"	#	#	#	#	—	1 HR	#	2	#	—	—	4/A22	4/A22	—	17	N/A	AA4		—
113/A	PR 3'0"	#	#	B	H.M.	PAINT	1/4" TEMP	—	#	4	#	—	—	3/A22	3/A22	2/A22	2	N/A	BB1		—
113/B	PR 3'0"	#	#	B	#	#	1/4" TEMP	#	#	4	#	—	—	#	#	# SIM	14	N/A	—		—
114/A	2'-0"	#	#	#	H.M.	PAINT	—	#	#	#	#	—	—	#	#	#	(1)13	F-07	AA5		—
117/A	1'-8"	#	#	#	H.M.	PAINT	—	—	6-3/4"	#	#	—	—	#	#	—	(1)12	F-07	AA5		PROVIDE (2) 8"x18" METAL LOUVER ONE 8" FROM BOT & 8" FROM TOP
118/A	PR 4'0"	7'-10"	#	#	H.M.	PAINT	—	1 HR	#	2	#	—	—	#	#	#	11	F-07	AB5		—
119/A*	2'-6"±	6'-8"±	1-1/2"±	D	#	PLAS. LAM.	PLASTIC	—	6"±	5	WD	—	—	6/A22	6/A22	7/A22	*	—	—		PREFAB COURT DOOR, PROVIDE W/ COURT SYSYTEM
121/A*	2'-6"±	6'-8"±	1-1/2"±	—	TEMP GLASS	—	TEMP GLASS	—	N/A	—	TEMP GLASS	—	—	—	—	—	*	—	—		PREFAB GLASS COURT DOOR, PROVIDE W/ COURT SYSTEM
122/A*	2'-6"±	6'-8"±	1-1/2"±	D	#	PLAS. LAM.	PLASTIC	—	6"±	5	WD	—	—	6/A22	6/A22	7/A22	*	—	—		PREFAB COURT DOOR, PROVIDE W/ COURT SYSTEM
123/A	#	#	#	B	#	#	—	#	#	#	#	—	—	#	#	—	23	F-05	AA6		—
123/B	PR 2'6"	#	#	B	#	#	1/4" TEMP	—	6-3/4"	2	#	—	—	4/A22	4/A22	#	20	F-05	AA6		—
124/A	#	#	#	#	#	#	—	—	5-7/8"	#	#	—	—	8/A22	8/A22	—	12	F-07	AA6		—
125/A	#	#	#	#	#	#	—	—	5-7/8"	#	#	—	—	8/A22	8/A22	—	12	F-05	AA6		—
126/A	#	#	#	#	#	#	—	—	5-7/8"	#	#	—	—	8/A22	8/A22	—	12	F-04	AA6		—
131/A	2'-8"	6'-8"	#	#	#	#	—	—	5-7/8"	#	#	—	—	8/A22	8/A22	—	12	F-02	—		—
132/A	2'-8"	6'-8"	#	#	#	#	—	—	5-7/8"	#	#	—	—	8/A22	8/A22	—	12	F-02	—		—
133/A	PR 3'0"	#	#	#	H.M.	PAINT	—	—	#	4	#	—	—	12/A22	12/A22	# SIM	1	—	—		—
133/B	PR 3'8"	7'-10"	#	#	H.M.	PAINT	—	1-1/2HR	5-3/4"	6	#	—	—	9/A22	10/A22	—	16	—	—		—
134/A	PR 4'0"	7'-10"	#	#	#	#	—	#	6-3/4"	2	#	—	—	4/A22	5/A22	—	15		AA7		—
135/A*	2'-6"±	6'-8"±	1-1/2"±	D	#	PLAS. LAM.	PLASTIC	—	6"	5	WD	—	—	6/A22	6/A22	7/A22	*	—	—		PREFAB COURT DOOR, PROVIDE W/ COURT SYSYTEM
136/A*	2'-6"±	6'-8"±	1-1/2"±	D	#	PLAS. LAM.	PLASTIC	—	6"	5	WD	—	—	6/A22	6/A22	7/A22	*	—	—		PREFAB COURT DOOR, PROVIDE W/ COURT-SYSTEM
137/A*	2'-6"±	6'-8"±	1-1/2"±	D	#	PLAS. LAM.	PLASTIC	—	6"	5	WD	—	—	6/A22	6/A22	7/A22	*	—	—		PREFAB COURT DOOR, PROVIDE W/ COURT SYSTEM
138/A	#	#	#	B	#	#	#	#	#	#	#	—	—	#	#	11/A22	23		AA8		—
138/B	#	#	#	B	#	#	#	#	#	#	#	—	—	#	#	—	(1)23		AA8		KNURLED KNOB ON CORR SIDE ONLY
130/A	#	#	#	#	#	#	—	—	6-3/4"	#	#	—	—	#	#	—	12	F-07	CC1		—
141/A	#	#	#	#	#	#	—	1 HR	6-3/4"	#	#	—	—	#	#	—	(1)13	F-07	CC1		—
142/A	#	#	#	#	#	#	—	1-1/2HR	#	#	#	—	—	#	#	—	13	F-01	—		—
143/A	2'-6"	#	#	#	#	#	—	—	5-7/8"	#	#	—	—	8/A22	8/A22	—	12	F-01	—		—
144/A	#	#	#	#	#	#	—	1-1/2HR	10-1/4"	#	#	—	—	# SIM	# SIM	—	13	F-04	AA8		—
144/B	2'-8"	#	#	#	#	#	—	—	7-3/4"	#	#	—	—	# SIM	# SIM	—	12	F-04	AA8		—
145/A	PR 3'0"	#	#	#	H.M.	PAINT	—	1-1/2HR	#	6	#	—	—	# SIM	# SIM	—	19	F-01	—		—
146/A	#	#	#	#	#	#	—	1-1/2HR	#	#	#	—	—	#	#	—	13	F-04	AA9		—
147/A	#	#	#	#	#	#	—	1-1/2HR	#	#	#	—	—	#	#	—	12	F-04	AA10		—
147/B	PR2'6"	3'-6"	#	#	#	#	—	#	#	2	#	—	—	#	#	—	17	N/A	AA10		—
148/A	#	#	#	#	#	#	—	1 HR	#	#	#	—	—	#	#	—	(1)13	F-07	AA11		—
148/B	#	#	#	#	#	#	—	1-1/2HR	5-3/4"	#	#	—	—	30/A23	30/A23	—	13	F-01	—		—
149/A	#	#	#	#	#	#	—	1 HR	6-3/4"	#	#	—	—	#	#	—	(1)13	F-07	AA11		—
151/A	#	#	#	#	#	#	—	#	6-3/4"	7	#	—	—	#	#	—	13	F-04	AA12		—
152/A	#	#	#	#	#	#	—	#	6-3/4"	7	#	#	—	#	#	—	13	F-04	AA13		—
153/A	#	#	#	#	#	#	—	#	6-3/4"	7	#	—	—	#	#	—	13	F-04	AA14		—
202/A	PR 4'0"	7'-10"	#	#	#	#	—	#	6-3/4"	2	#	—	—	4/A22	5/A22	—	15	F-05	AA7		—
202/B	#	#	#	#	H.M.	PAINT	—	—	5-3/4"	#	#	—	—	12/A22	12/A22	# SIM	1	—	—		—
203/A	#	#	#	#	#	#	—	1 HR	#	#	#	—	—	#	#	—	13	F-07	AB6		—
204/A	PR 3'8"	7'-10"	#	#	H.M.	PAINT	—	1-1/2HR	5-3/4"	6	#	—	—	9/A22	10/A22	—	16	—	—		—
205/A	#	#	#	#	#	#	—	#	#	7	#	#	—	#	#	—	13	F-05	AA15		—
205/B	#	#	#	#	#	#	—	#	#	7	#	—	—	#	#	—	13	F-05	AA15		—
206/A	#	#	#	#	#	#	—	#	#	#	#	—	—	#	#	—	(1)13	F-07	AA2		—
207/A	#	#	#	#	#	#	—	#	#	7	#	#	—	#	#	—	13	F-05	AA16		—
208/A	PR 3'0"	#	#	#	H.M.	PAINT	—	1-1/2 HR	#	6	#	—	—	# SIM	# SIM	—	19	F-01	—		—
209/A	#	#	#	#	#	#	—	#	#	7	#	#	—	#	#	—	13	F-05	AA17		—
211/A	2'-8"	#	#	#	#	#	—	—	6-3/4"	#	#	—	—	#	#	—	12	F-07	AB7		—
212/A	2'-8"	#	#	#	#	#	—	—	6-3/4"	#	#	—	—	#	#	—	12	F-07	AB8		—
213/A	2'-8"	#	#	#	#	#	—	—	6-3/4"	#	#	—	—	#	#	—	12	F-07	AB9		—
214/A	#	#	#	#	#	#	—	#	#	#	#	—	—	#	#	—	(1)13	F-01	—		—
215/A	#	#	#	#	#	#	—	1 HR	6-3/4"	#	#	—	—	#	#	—	(1)13	F-05	AB10		—
216/A	#	#	#	#	H.M.	PAINT	—	1 HR	#	#	#	—	—	#	#	—	(1)13	F-07	CC1		—
216/B	PR 3'0"	#	#	#	H.M.	PAINT	—	1-1/2HR	5-3/4"	2	#	—	—	13/A22	13/A22	—	11	F-07	CC1		—
217/A	#	#	#	#	H.M.	PAINT	—	1 HR	6-3/4"	#	#	—	—	#	#	—	12	F-07	CC1		—
218/A	4'-0"	#	#	#	H.M.	PAINT	—	3 HR	6-3/4"	#	#	—	—	#	#	—	13	F-07	CC1		—
224/A	#	#	#	#	H.M.	PAINT	—	1-1/2HR	10"	#	#	—	—	10A/A22	10A/A22	#	12	N/A	BB1		—
230/A	#	#	#	#	#	#	—	#	6-3/4"	7	#	—	—	#	#	—	13	F-05	AA18		—
231/A	#	#	#	#	#	#	—	#	6-3/4"	7	#	—	—	#	#	—	13	F-05	AA19		—
231/B	#	#	#	#	#	#	—	#	6-3/4"	7	#	#	—	#	#	—	13	F-05	AA19		—
231/C	11'-2"±	9'-0"	N/A	G	STEEL	VINYL	—	—	N/A	N/A	N/A	—	—	#	#	—	—	—	—		FOLDING DOOR
215/B	#	—	—	—	—	—	—	1 HR	—	—	—	—	—	—	#	—	(1)13	F-05	AB10		SEE ADD #1-3-21C
301/A	#	#	#	#	H.M.	PAINT	—	—	#	#	#	—	—	3/A22 SIM	3/A22 SIM	# SIM	1	—	—		—
304/A	#	6'-8"	#	#	#	#	—	1 HR	#	#	#	—	—	*	—	—	13	F-05	AA20		PROVIDE BOND BEAM AT DOOR HEAD
304/B	PR2'10"	4'-0"	#	#	#	#	—	1 HR	#	2	#	—	—	4/A22 SIM	4/A22 SIM	—	17	N/A	AA20		—
304/C	PR2'10"	4'-0"	#	#	#	#	—	1 HR	6-3/4"	2	#	—	—	14/A22	14/A22	—	17	N/A	AA20		—
305/A	PR3'0"	#	#	#	#	#	—	#	#	4	#	—	—	12/A23	13/A23	—	22	N/A	AA22		—
306/A	PR 3'0"	#	#	C	ALUM	ANOD	1/4" TINT TEMP	—	4-1/2"	9	ALUM	TINTED TEMP	(2)	—	4/A23	#	3	*	BB1		SEE ALUM ENTRY SPEC
306/B	PR 3'0"	#	#	C	ALUM	ANOD	1/4" TINT TEMP	—	4-1/2"	9	ALUM	TINTED TEMP	(2)	—	4/A23	#	3	*	BB1		SEE ALUM ENTRY SPEC
306/C	PR 3'0"	#	#	C	ALUM	ANOD	1/4" TEMP	—	4-1/2"	10	ALUM	TEMP INSUL	#	#	6/A23	#	*	*	—		SEE ALUM ENTRY SPEO
306/D	PR 3'0"	#	#	C	ALUM	ANOD	1/4" TEMP	—	4-1/2"	10	ALUM	TEMP INSUL	#	#	6/A23	#	*	*	—		SEE ALUM ENTRY SPEC
319/A	2'-8"	6'-8"	#	#	#	#	—	—	6-3/4"	#	#	—	—	#	#	—	12	F-04	AA23		FIELD VERIFY EXIST WALL WID
402/A	#	#	#	#	#	#	—	1-1/2HR	#	#	#	—	—	7/A23	7/A23	—	13	F-05	AA21		—

LEGEND
- # SEE TYPICAL
- X EXISTING
- — NONE
- N/A NOT APPLICABLE
- * SEE REMARKS

(1) PROVIDE KNURLED KNOB.
(2) SEE FRAME TYPE ELEVATION.

NOTES 1. FOR BORROWED LIGHT FRAME (WDW W/3) SEE WDW SCH SHEET A-23.
2. PROVIDE 4" LONG x 2" HIGH PLASTIC SIGN ON EACH 1½ HR. FIRE DOOR WITH THE FOLLOWING WORDING: "FIRE DOOR - DO NOT REMOVE"

RECORD DOCUMENTS JUN 2 6 1990
THESE DOCUMENTS HAVE BEEN REVISED TO RECORD ... BY THE CONTR... ARE ASSUMED TO BE RELIABLE THE ARCHITECT DOES NOT GUARANTEE THEIR ACCURACY.

NOTE: THIS SHEET IS COMPRISED OF DRAWINGS AND DETAILS FROM THE ORIGINAL 1990 BUILDING CONSTRUCTION CONFORMED SET & HAS BEEN INCLUDED FOR INFORMATIONAL PURPOSES ONLY. CONDITIONS SHOWN ON THIS SHEET HAVE NOT BEEN VERIFIED WITH EXISTING CONSTRUCTED CONDITIONS.

STATE OF UTAH BRETT J. RICHARDS No. 1107

JRA JONES / RICHARDS & ASSOCIATES
ARCHITECTURE (801) 394-3033
PLANNING 533 - 26TH STREET
CONSTRUCTION MANAGEMENT OGDEN, UTAH

REVISED: AS BUILTS 6-90
PROJECT NUMBER: 8403
DATE: 8-21-88
DRAWN BY: DEATON, SEKO
PROJECT: WEBER STATE COLLEGE
SHEET TITLE: DOOR SCHEDULE & DETAILS
SHEET NO. A-22

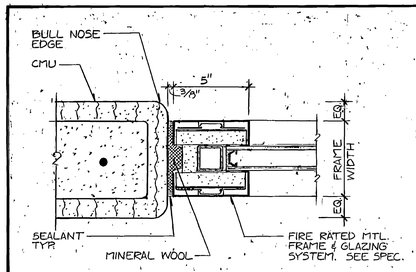

25 A-23 **JAMB (HEAD & SILL SIM.)** 3" = 1'-0"

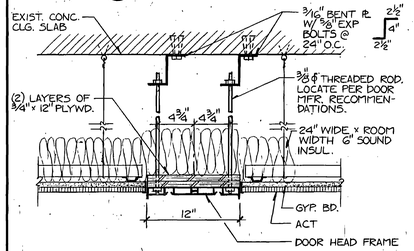

26 A-23 **FOLDING DOOR HEAD** 1½" = 1'-0"

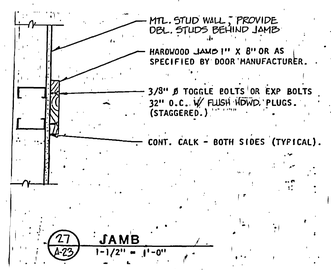

27 A-23 **JAMB** 1-1/2" = 1'-0"

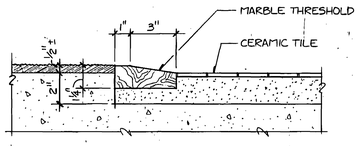

28 A-23 **MARBLE THRESHOLD DETAIL** 3" = 1'-0"

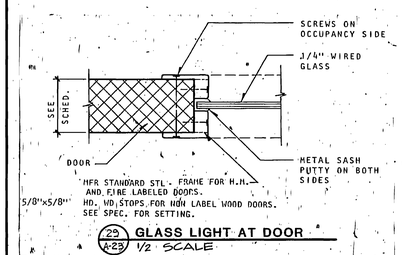

23 A-23 **GLASS LIGHT AT DOOR** 1/2 SCALE

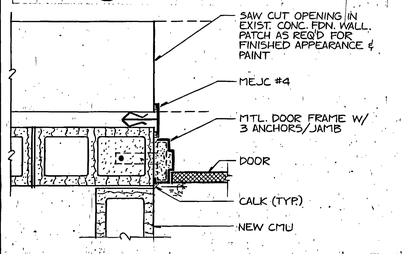

30 A-23 **JAMB/HEAD SIM. (148/B)** 1½" = 1'-0"

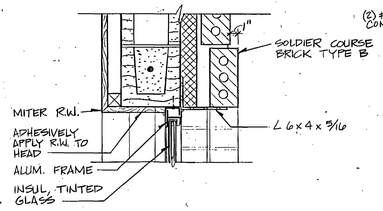

19 A23 **HEAD** 1½" = 1'-0"

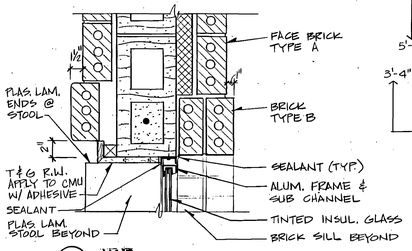

20 A23 **JAMB** 1½" = 1'-0"

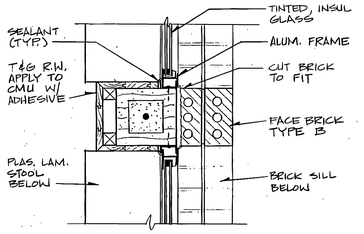

21 A23 **JAMB** 1½" = 1'-0"

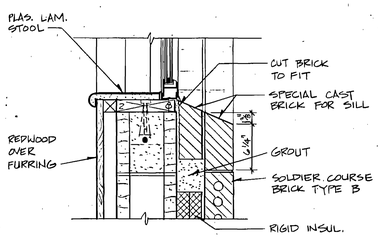

22 A23 **SILL** 1½" = 1'-0"

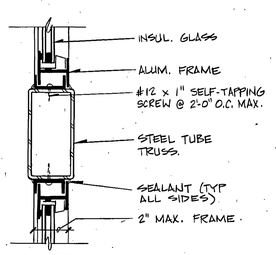

23 A23 **JAMB/HEAD SIM.** 3" = 1'-0"

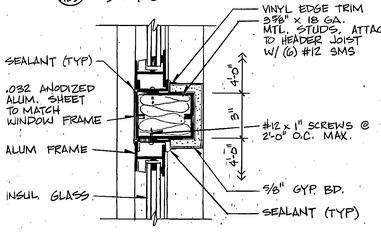

24 A23 **JAMB** 3" = 1'-0"

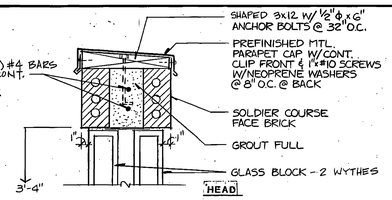

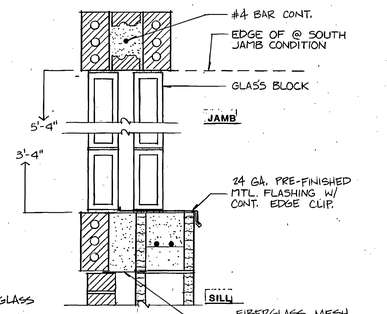

14 A23 **WALL DETAIL** 1½" = 1'-0"

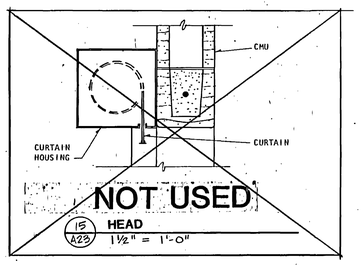

15 A23 **HEAD** 1½" = 1'-0"

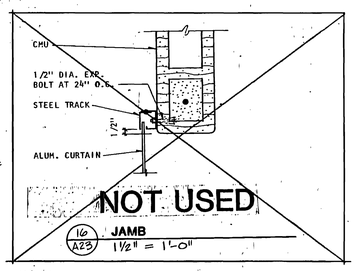

16 A23 **JAMB** 1½" = 1'-0"

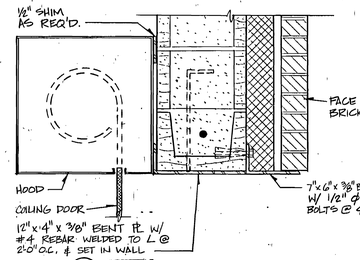

17 A23 **HEAD** 1½" = 1'-0"

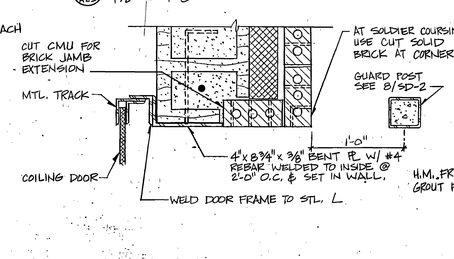

18 A23 **JAMB** 1½" = 1'-0"

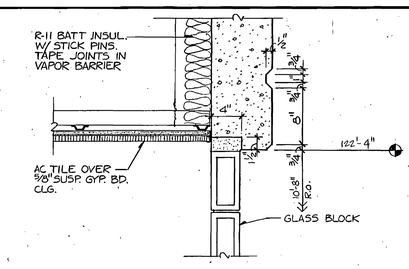

8 A23 **HEAD** 1½" = 1'-0"

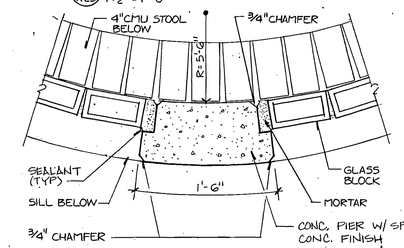

9 A23 **JAMB** 1½" = 1'-0"

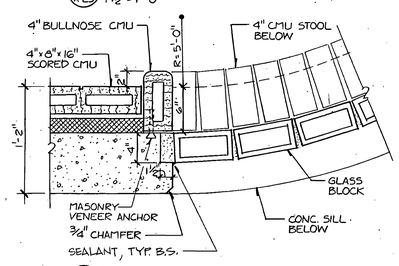

10 A23 **JAMB** 1½" = 1'-0"

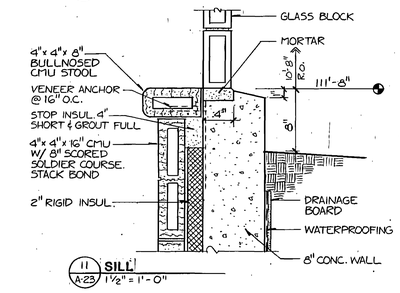

11 A23 **SILL** 1½" = 1'-0"

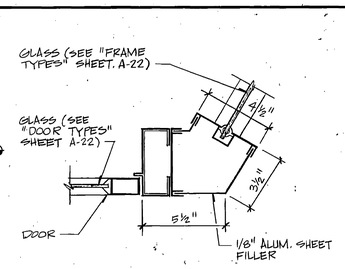

4 A23 **ANGLED CORNER** 3" = 1'-0"

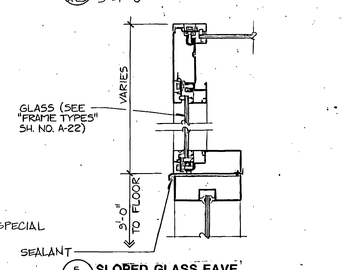

5 A23 **SLOPED GLASS EAVE** 3" = 1'-0"

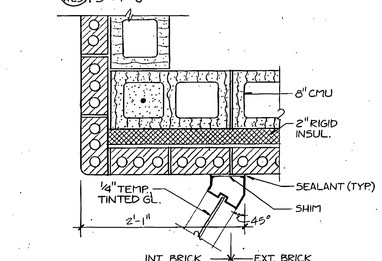

6 A23 **ENTRY DETAIL** 1½" = 1'-0"

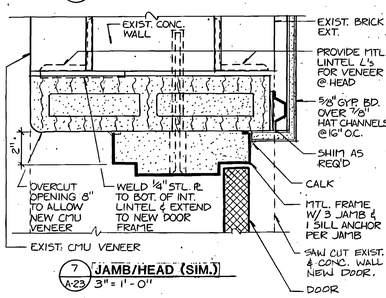

7 A23 **JAMB/HEAD (SIM.)** 3" = 1'-0"

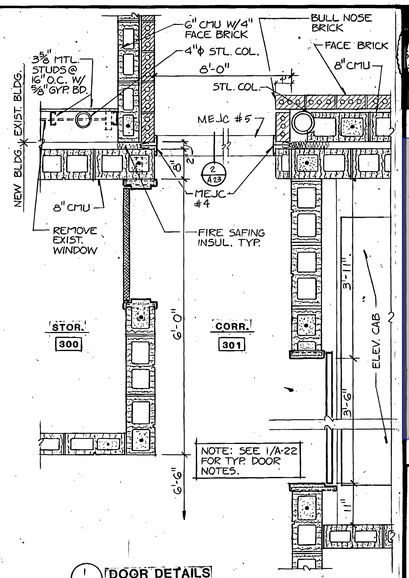

1 A-23 **DOOR DETAILS** 3/4" = 1'-0"

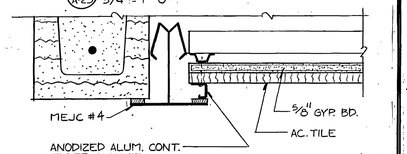

2 A-23 **HEAD** 3" = 1'-0"

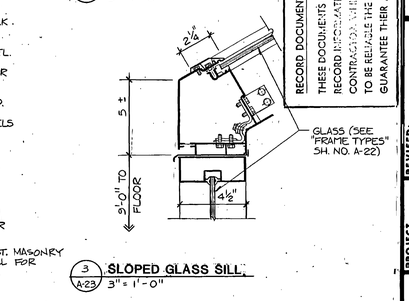

3 A-23 **SLOPED GLASS SILL** 3" = 1'-0"

12 A23 **HEAD** 3" = 1'-0"

13 A23 **JAMB** 3" = 1'-0"

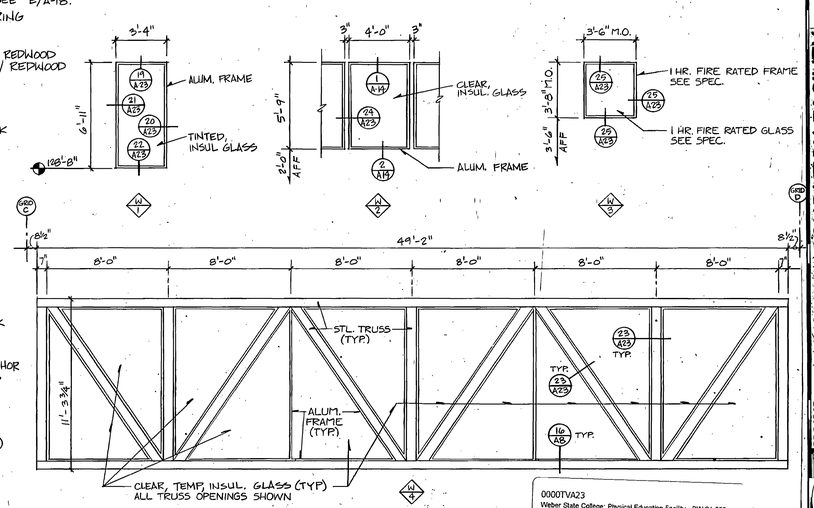

WINDOW SCHEDULE

0000TVA23
Weber State College; Physical Education Facility - RW:84-058
Door & Window Details - 28701

BRENT A. RICHARDS 163107 REGISTERED ARCHITECT STATE OF UTAH

NOTE: THIS SHEET IS COMPRISED OF DRAWINGS AND DETAILS FROM THE ORIGINAL 1990 BUILDING CONSTRUCTION CONFORMED SET & HAS BEEN INCLUDED FOR INFORMATIONAL PURPOSES ONLY. CONDITIONS SHOWN ON THIS SHEET HAVE NOT BEEN VERIFIED WITH EXISTING CONSTRUCTED CONDITIONS.

jra JONES / RICHARDS & ASSOCIATES
ARCHITECTURE (801) 394-3053
CONSTRUCTION MANAGEMENT OGDEN, UTAH
PLANNING 322 - 20TH STREET

RECORD DOCUMENTS
THESE DOCUMENTS HAVE BEEN REVISED TO RECORD MODIFICATIONS MADE TO THE CONSTRUCTION DOCUMENTS BY THE CONTRACTOR. WHILE THESE DOCUMENTS ARE ASSUMED TO BE REASONABLE THE ARCHITECT DOES NOT GUARANTEE THEIR ACCURACY.

REVISED: JUN 8 5 1995 AS BUILTS 6-30
PROJECT NUMBER: 2469
DATE: 6-21-89
DRAWN BY: K. SEKO, S. SCOTT

PROJECT: PHYSICAL EDUCATION FACILITY
WEBER STATE COLLEGE
SHEET TITLE: DOOR & WINDOW DETAILS

SHEET NO. A-23

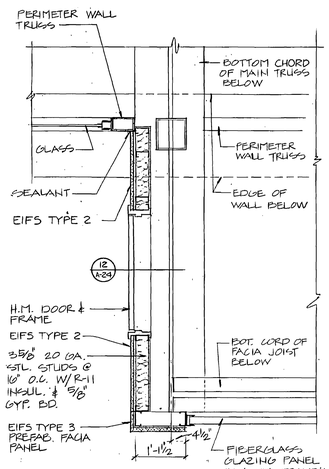

11/A-24 FACIA TERMINATION WALL DETAIL
3" = 1'-0"

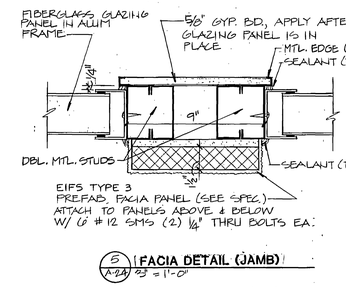

6/A-24 FACIA DETAIL (JAMB)
3" = 1'-0"

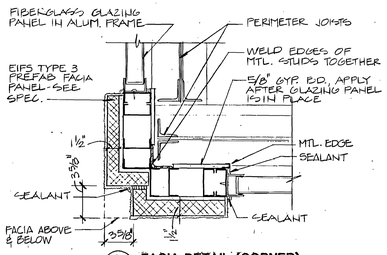

10/A-24 FACIA DETAIL (CORNER)
1½" = 1'-0"

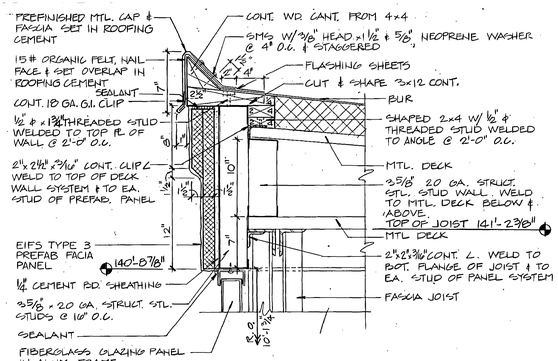

1/A-24 FACIA DETAIL (HEAD)
1½" = 1'-0"

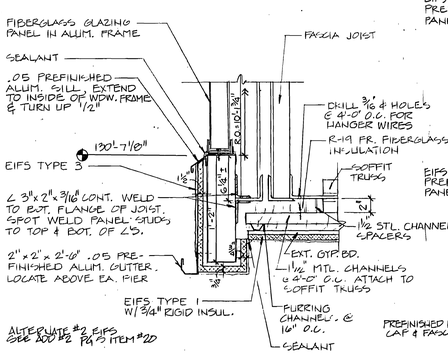

ALTERNATE #2 EIFS SEE ADD #2 PG 5 ITEM #20

2/A-24 FACIA DETAIL (SILL)
1½" = 1'-0"

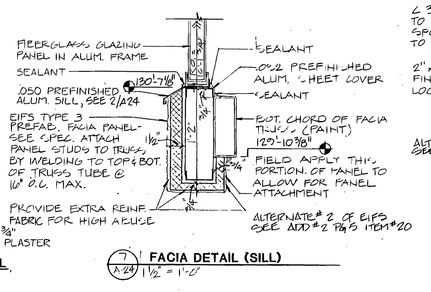

12/A-24 FACIA TERMINATION WALL DETAIL
1½" = 1'-0"

7/A-24 FACIA DETAIL (SILL)
1½" = 1'-0"

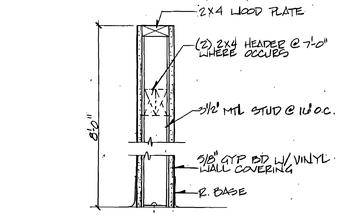

19/A-24 SIGHT SCREEN DETAIL
1½" = 1'-0"

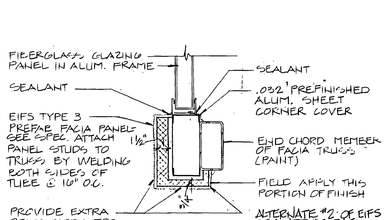

8/A-24 FACIA DETAIL (EDGE)
1½" = 1'-0"

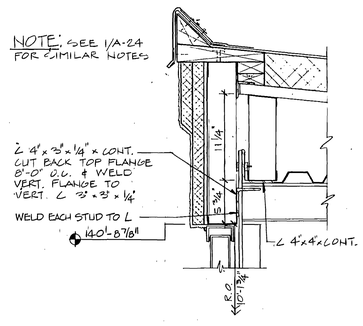

3/A-24 FACIA DETAIL HEAD
1½" = 1'-0"

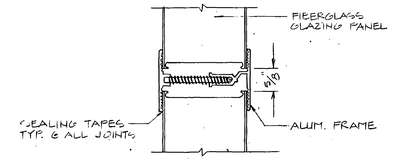

9/A-24 FACIA GLAZING JOINT
HALF SCALE

ALTERNATE #2 OF EIFS SEE ADD #2 PG 5 ITEM 20

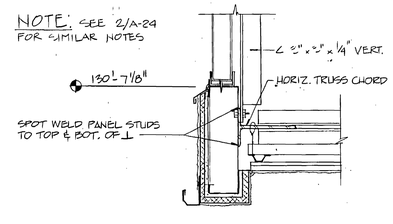

4/A-24 FACIA DETAIL (SILL)
1½" = 1'-0"

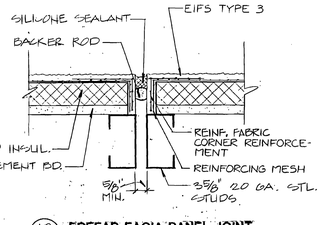

10/A-24 PREFAB FACIA PANEL JOINT
1½" = 1'-0"

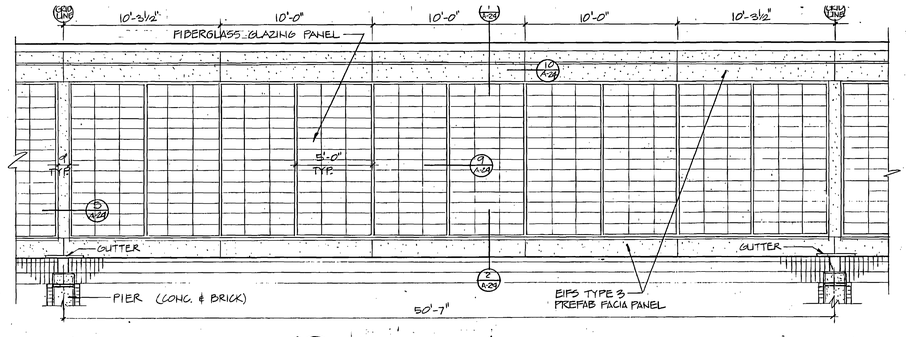

A/A-24 STD. BAY: E-W SIDE
¼" = 1'-0"

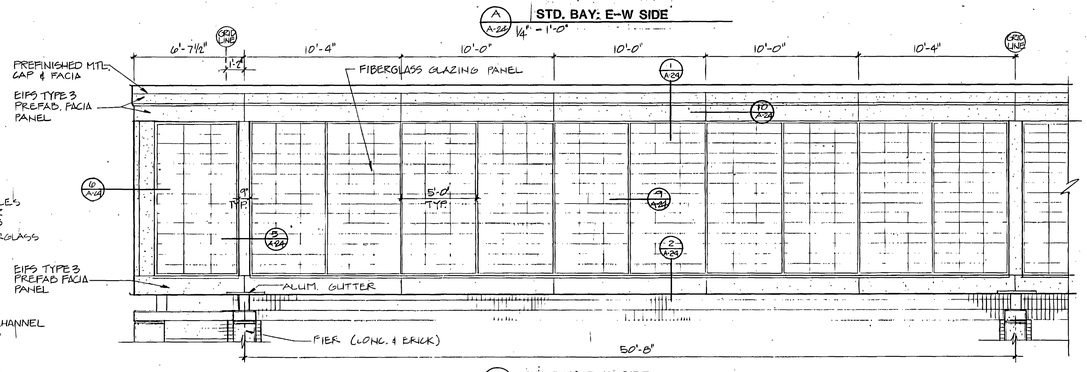

B/A-24 END BAY: E-W SIDE
¼" = 1'-0"

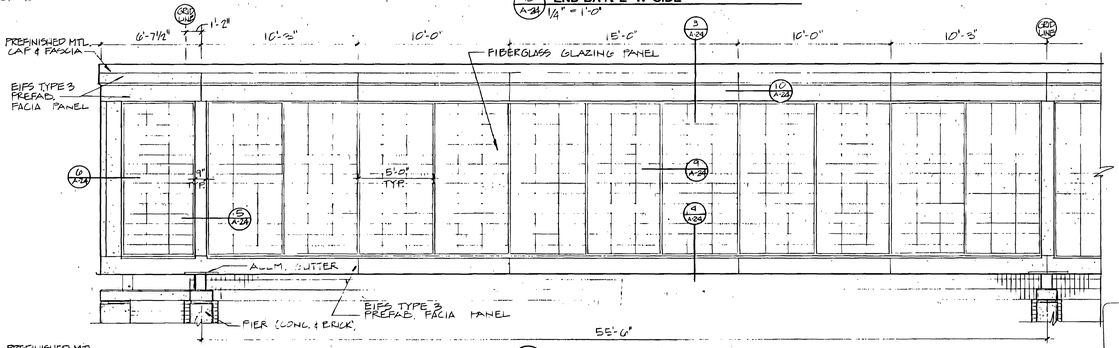

C/A-24 END BAY: N-S SIDE
¼" = 1'-0"

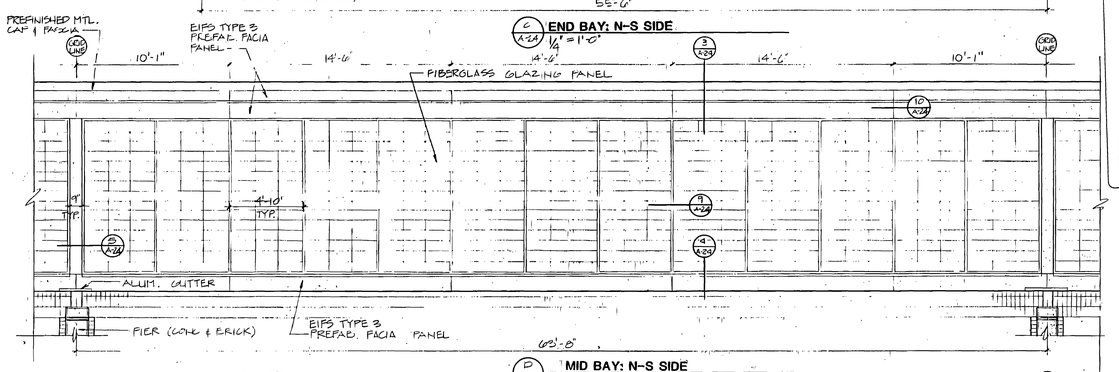

D/A-24 MID BAY: N-S SIDE
¼" = 1'-0"

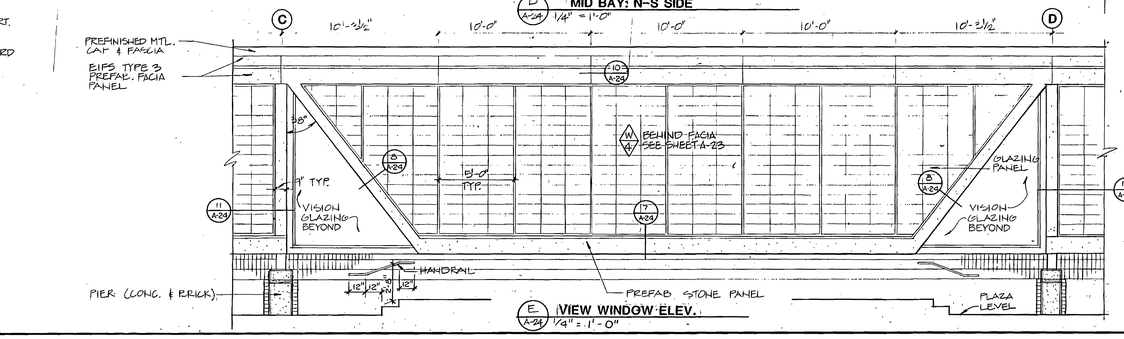

E/A-24 VIEW WINDOW ELEV.
1/4" = 1'-0"

00017/A24
Weber State College, Physical Education Facility - NW 84-608
Facia Details - 20702

NOTE: THIS SHEET IS COMPRISED OF DRAWINGS AND DETAILS FROM THE ORIGINAL 1990 BUILDING CONSTRUCTION CONFORMED SET & HAS BEEN INCLUDED FOR INFORMATIONAL PURPOSES ONLY. CONDITIONS SHOWN ON THIS SHEET HAVE NOT BEEN VERIFIED WITH EXISTING CONSTRUCTED CONDITIONS.

jra JONES / RICHARDS & ASSOCIATES
PLANNING 532 - 28TH STREET
CONSTRUCTION MANAGEMENT OGDEN, UTAH
ARCHITECTURE (801) 394-3523

REVISED: AS BUILTS 6-92
PROJECT NUMBER: 8403
DATE: 6-21-88
DRAWN BY: K. BERTOLDI

PROJECT: PHYSICAL EDUCATION FACILITY
WEBER STATE COLLEGE
SHEET TITLE: FACIA DETAILS

SHEET NO. A-24

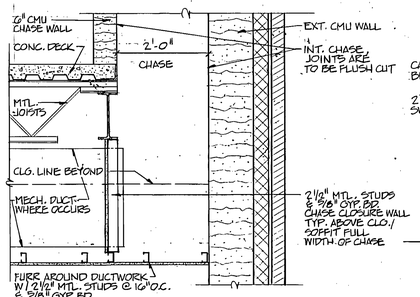

22 A-25 **DUCT & CHASE DETAIL** 3/4" = 1'-0"

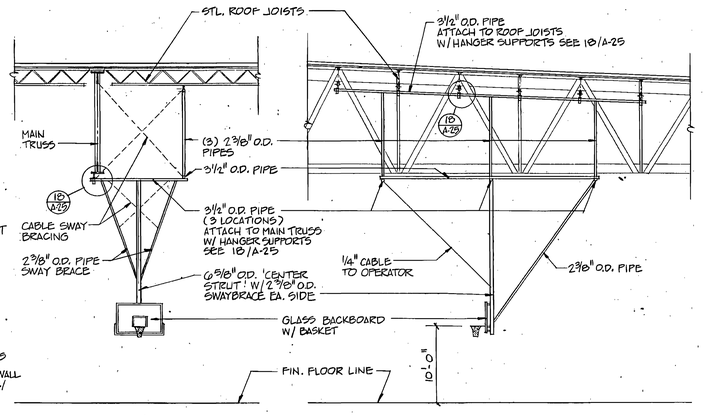

16 A-25 **SIDE COURT BACKBOARD SUPERSTRUCTURE ELEVATIONS** 1/8" = 1'-0"

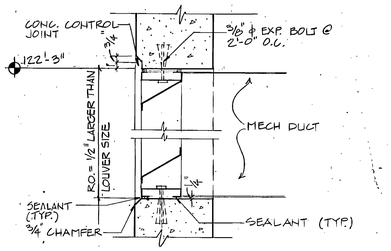

10 A-25 **LOUVER HEAD & SILL DETAIL (JAMB SIM.)** 1½" = 1'-0"

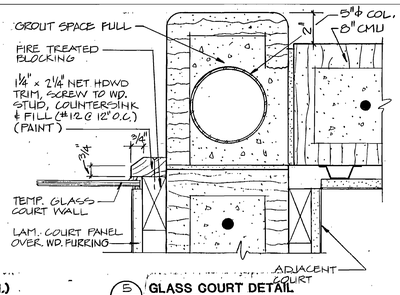

5 A-25 **GLASS COURT DETAIL** 3/4" = 1'-0"

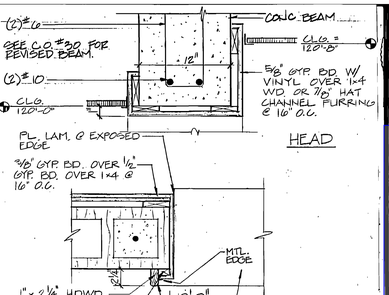

1 A-25 **COURT VIEW WINDOW DETAILS** 1½" = 1'-0"

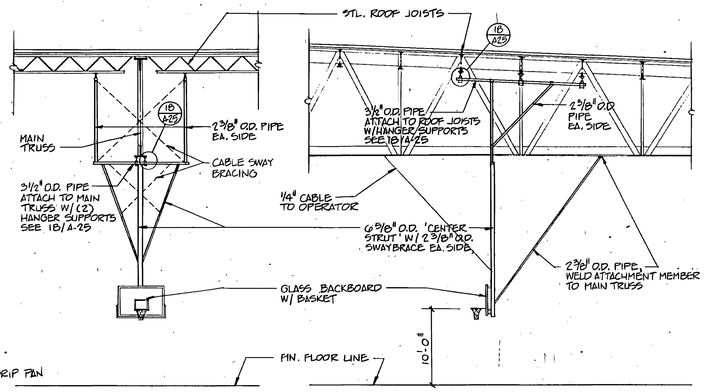

17 A-25 **MAIN COURT BACKBOARD SUPERSTRUCTURE ELEVATIONS** 1/8" = 1'-0"

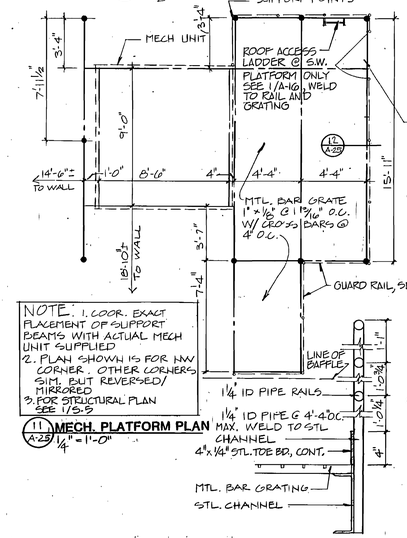

11 A-25 **MECH. PLATFORM PLAN** 1/4" = 1'-0"

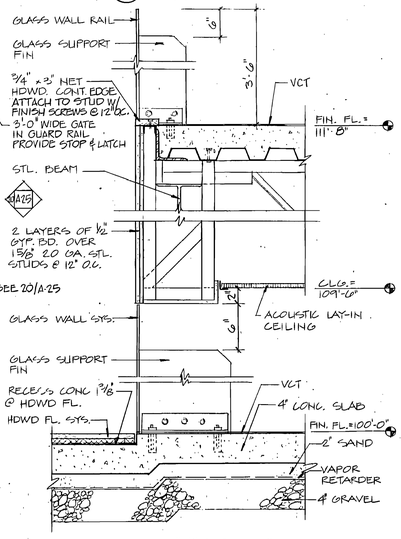

6 A-25 **GLASS COURT DETAIL** 1½" = 1'-0"

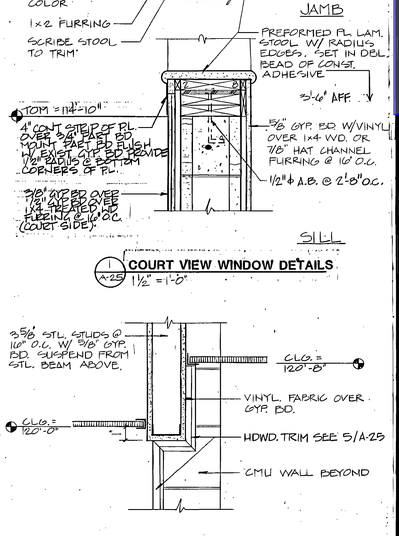

2 A-25 **COURT CLG. DETAIL AT GLASS COURT** 1½" = 1'-0"

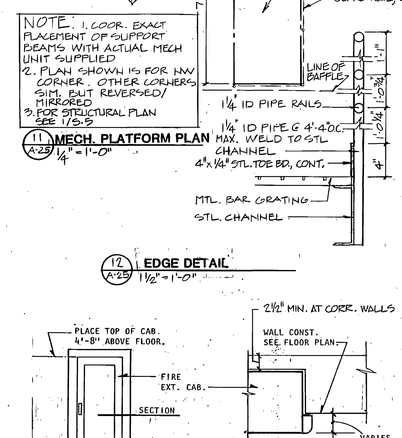

12 A-25 **EDGE DETAIL** 1½" = 1'-0"

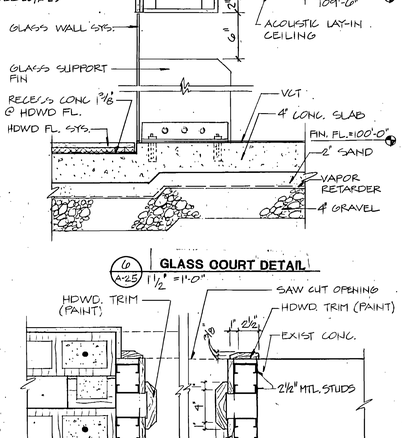

7 A-25 **OPENING DETAIL AT CORR. 154 & 232** 1½" = 1'-0"

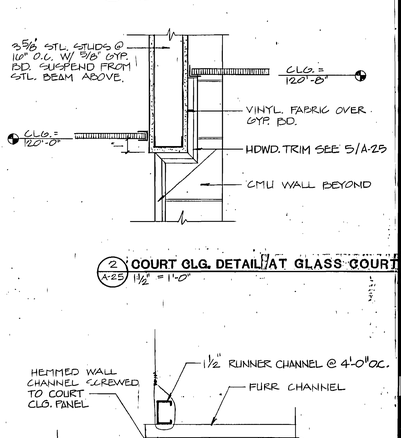

3 A-25 **COURT CLG. DETAIL** 3" = 1'-0"

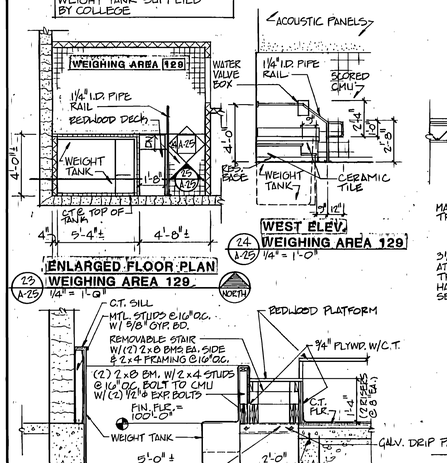

23 A-25 **ENLARGED FLOOR PLAN WEIGHING AREA 129** 1/4" = 1'-0"

24 A-25 **WEST ELEV. WEIGHING AREA 129** 1/4" = 1'-0"

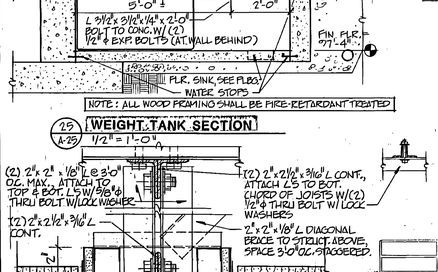

29 A-25 **WEIGHT TANK SECTION** 1/2" = 1'-0"

26 A-25 **GYM CURTAIN TRACK DETAIL (SPORTS LAB 123)** 3" = 1'-0"

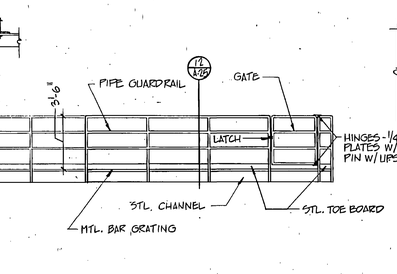

20 A-25 **MECH. PLATFORM ELEVATION** 1/4" = 1'-0"

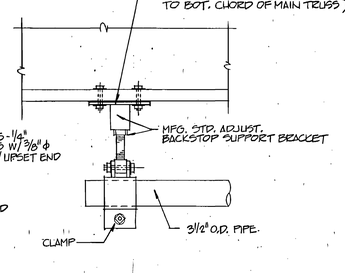

18 A-25 **HANGER SUPPORT DETAIL** NO SCALE

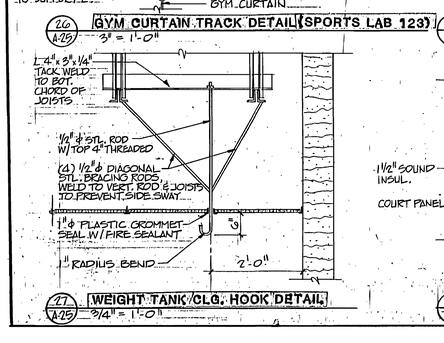

27 A-25 **WEIGHT TANK CLG. HOOK DETAIL** 3/4" = 1'-0"

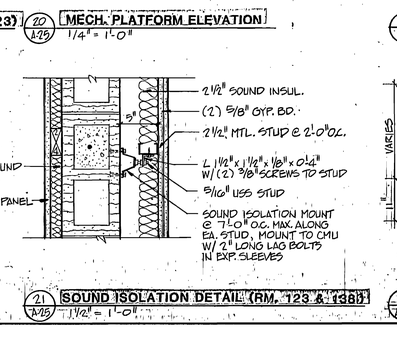

21 A-25 **SOUND ISOLATION DETAIL (RM. 123 & 138)** 1½" = 1'-0"

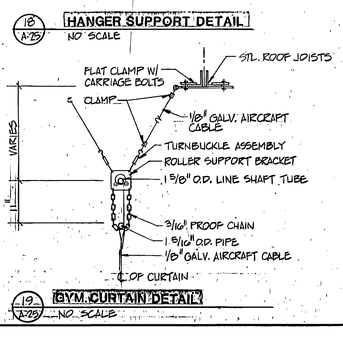

19 A-25 **GYM. CURTAIN DETAIL** NO SCALE

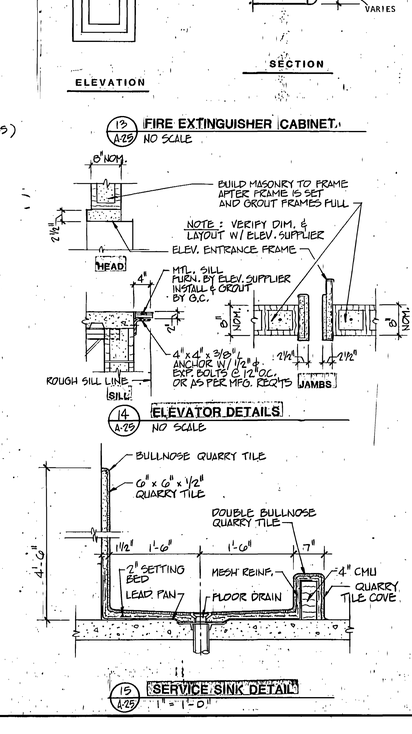

14 A-25 **ELEVATOR DETAILS** NO SCALE

15 A-25 **SERVICE SINK DETAIL** 1" = 1'-0"

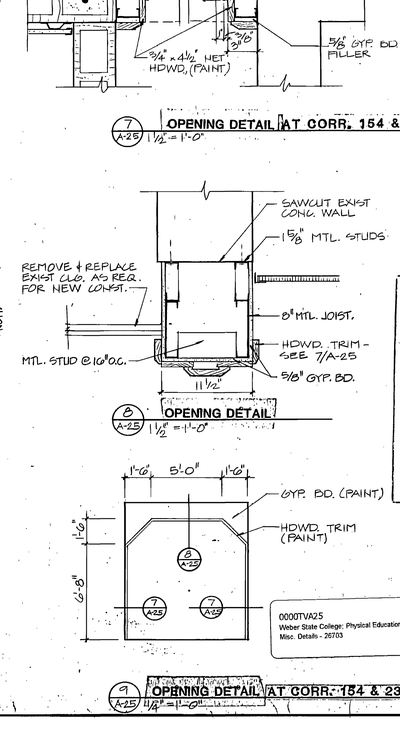

8 A-25 **OPENING DETAIL** 1½" = 1'-0"

9 A-25 **OPENING DETAIL AT CORR. 154 & 232** 1½" = 1'-0"

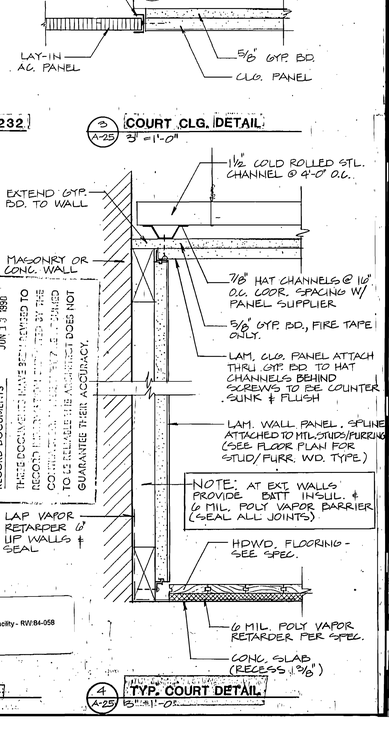

4 A-25 **TYP. COURT DETAIL** 3" = 1'-0"

0000TVA25
Weber State College: Physical Education Facility - RW:84-058
Misc. Details - 26703

NOTE: THIS SHEET IS COMPRISED OF DRAWINGS AND DETAILS FROM THE ORIGINAL 1990 BUILDING CONSTRUCTION CONFORMED SET & HAS BEEN INCLUDED FOR INFORMATIONAL PURPOSES ONLY. CONDITIONS SHOWN ON THIS SHEET HAVE NOT BEEN VERIFIED WITH EXISTING CONSTRUCTED CONDITIONS.

SHEET 1 OF 1 SHEETS
NO. 107

jra JONES / RICHARDS & ASSOCIATES
ARCHITECTURE (801) 399-3023
PLANNING 533 - 25TH STREET
CONSTRUCTION MANAGEMENT OGDEN, UTAH

REVISED: AS BUILTS 6-90
PROJECT NUMBER: 8405
DATE: 8-21-88
DRAWN BY: K. BERGOLDI

PROJECT: PHYSICAL EDUCATION FACILITY
WEBER STATE COLLEGE
SHEET TITLE: MISC. DETAILS

SHEET NO: A-25

LIGHTING CONTACTOR SCHEDULE

CONTACTOR CABINET	CONTACTOR NUMBER	NO. OF POLES	METHOD OF CONTROL	CONTROLLED CIRCUITS	CONTROLLED AREA	CONTACTOR LOCATION	SWITCH IDENTIFICATION
CC6	C13	2	20A MECHANICALLY HELD CONTACTOR	H6-7	COLUMN LIGHTS	GUTTER EXTENSION OF PANEL 'H6'	AC1 ◇4
CC6	C14	2		H6-9	EXTERIOR LIGHTS		AC2
CC6	C15	3		H6-11, 13	STREET LIGHTS		AC3
CC6	C16	3		H6-15, 17	PARKING LOT LTS		AC4
CC6	C17	2		H6-19	YARD LIGHTS		AC5
CC6	C18	2		H6-21	PLAZA LIGHTS		AC6
CC5	C19	2		SPARE	ART PIECE LTS	GUTTER EXTENSION OF PANEL 'H5'	AC7
CC5	C20	2		H5-11	ENTRY-WAY LTS		AC8
CC5	C21	2		H5-13	WALK-THROUGH STRUCTURE LTS		AC9
CC5	C22	2		SPARE	YARD LIGHTS		AC5
CC5	C23	2		L5-25	GARDEN LIGHTS	GUTTER EXTENSION OF PANEL 'L5'	AC10

CONTROL POWER - L5-24 - 120 VOLT COILS

LIGHTING CONTACTOR SCHEDULE

CONTACTOR CABINET	CONTACTOR NUMBER	NO. OF POLES	METHOD OF CONTROL	CONTROLLED CIRCUITS	CONTROLLED AREA	CONTACTOR LOCATION	SWITCH IDENTIFICATION
CC1	C1	3	20A MECHANICALLY HELD CONTRACTOR	H1-1,3,5	COURTS	GUTTER EXTENSION OF PANEL 'H1'	c
CC1	C2	10		H1-2,4,6,8, 10,12,14, 16,18	COURTS		d
CC1	C3	3		H1-7,9	SOUTH END		e
CC2	C4	3		H2-1,3	NORTH END	GUTTER EXTENSION OF PANEL 'H2'	f
CC1	C5	4		H1-11,13,15,17	EAST AND WEST TRACK	GUTTER EXTENSION OF PANEL 'H1'	g
CC1	C6	6		H1-19,21,23,25 27	SOUTH END		h
CC2	C7	10		H2-5,7,9, 2,4,6,29	NORTH END	GUTTER EXTENSION OF PANEL 'H2'	i
CC1	C8	3	CONTROLLED BY SAME SWITCH	H1-20,22,24	SOUTH END PERIMETER	GUTTER EXTENSION OF PANEL 'H1'	j
CC2	C9	3		H2-8,10,12	NORTH END PERIMETER	GUTTER EXTENSION OF PANEL 'H2'	j
CC3	C10	3		H1E-28	PERIMETER EGRESS	GUTTER OF PANEL 'H1E'	SWITCH BANK4 b TRANSFER SWITCH
CC4	C11	3	ELECTRICALLY HELD COIL 120 V A.C.	LIE-1,3,5 LIE-2,4,6	EMERGENCY QUARTZ LAMPS	GUTTER OF PANEL PANEL 'LIE'	-
CC3	C12	2		H1E-4	NIGHT LIGHTS	GUTTER OF PANEL 'H1E'	SWITCH BANK, 3-WAY a 1 TRANSFER SWITCH

CONTROL POWER LIE-B

CONTROL POWER - L1-28 - 120 VOLT COILS
LIE-B

DETAIL
PHOTOCELL-AUTOMATION CONTACTOR CONTROL (1/E-1)

DANCE STUDIO
SOUND SYSTEM RISER DIAGRAM (2/E-1)

RACQUETBALL
SOUND SYSTEM RISER DIAGRAM (3/E-1)

MULTI-PURPOSE ROOM
SOUND SYSTEM RISER DIAGRAM (4/E-1)

SOUND SYSTEM LEGEND

Ⓜ	MICROPHONE
▷	AMPLIFIER
(speaker symbol)	SPEAKER
(horn symbol)	HORN

EQUIPMENT SCHEDULE

NOTES

1. MAGNETIC STARTER
2. MANUAL STARTER
3. DISCONNECT SWITCH
4. DIRECT CONNECTION

A. FURNISHED AND INSTALLED BY OTHERS
B. FURNISHED BY OTHERS, INSTALLED UNDER DIVISION 16
C. FURNISHED AND INSTALLED UNDER DIVISION 16

UNIT #	FUNCTION	LOAD	VOLTS	PHASE	FULL LOAD AMPS	CONDUIT SIZE	WIRES NO.	WIRES SIZE	BKRS POLE	BKRS AMPS			NOTE #	REMARKS
BB-1	BACKBOARD MOTOR	3/4HP	120	1	13	3/4	2		1	30			2C	
NT-1	NET MOTOR	3/4HP	120	1	13	3/4	2		1	30			2C	
EV-1	ELEVATOR	25HP	480	3	32	1	3	4	3	80			3C	
WH-1	WATER HEATER	3KW	208	1	16	3/4	2	10	2	30			3C	
AH-1	AIR HANDLER	20HP	480	3	27	1	3	6	3	60			1C	PROVIDE 6 KVAR PFCC
AH-2	AIR HANDLER	20HP	480	3	27	1	3	6	3	60			1C	PROVIDE 6KVAR PFCC
AH-3	AIR HANDLER	20HP	480	3	27	1	3	6	3	60			1C	PROVIDE 6KVAR PFCC
AH-4	AIR HANDLER	20HP	480	3	27	1	3	6	3	60			1C	PROVIDE 6KVAR PFCC
AH-5	AIR HANDLER	25HP	480	3	34	1	3	4	3	70			1C	PROVIDE 7.5KVAR PFCC
EF-1	EXHAUST FAN	3/4HP	480	3	1.4	3/4	3	12	3	20			1C	
EF-2	EXHAUSUT FAN	3/4HP	480	3	1.4	3/4	3	12	3	20			1C	
EF-3	EXHAUST FAN	3/4HP	480	3	1.4	3/4	3	12	3	20			1C	
EF-4	EXHAUST FAN	3/4HP	480	3	1.4	3/4	3	12	3	20			1C	
EF-5	EXHAUST FAN	1/4HP	120	1	5.8	3/4	1	12	1	20			2C	
EF-6	EXHAUST FAN	1/4HP	120	1	5.8	3/4	1	12	1	20			2C	
FC-1	FAN COIL	1/3HP	120	1	7.2	3/4	1	12	1	20			2C	
FC-2	FAN COIL	1/3HP	120	1	7.2	3/4	1	12	1	20			2C	
FC-3	FAN COIL	1/4HP	120	1	5.8	3/4	1	12	1	20			2C	
FC-4	FAN COIL	1/4HP	120	1	5.8	3/4	1	12	1	20			2C	
CP-1	PUMP	3/4HP	480	3	1.4	3/4	3	12	3	20			1C	
CP-2	PUMP	3/4HP	480	3	1.4	3/4	3	12	3	20			1C	
CP-3	PUMP	3/4HP	480	3	1.4	3/4	3	12	3	20			1C	
CP-4	PUMP	3/4HP	480	3	1.4	3/4	3	12	3	20			1C	
CP-5	PUMP	3/4HP	480	3	1.4	3/4	3	12	3	20			1C	
CP-6	PUMP	7½HP	480	3	11	3/4	3	12	3	20			1C	PROVIDE 3KVAR PFCC
CP-7	PUMP	7½HP	480	3	11	3/4	3	12	3	20			1C	PROVIDE 3KVAR PFCC
CP-8	PUMP	15HP	480	3	21	3/4	3	8	3	40			1C	PROVIDE 5KVAR PFCC
CRU-1	AIR COND. UNIT	30.6A	480	3	30.6	3/4	3	8	3	40			3C	
DC-1	DRY COOLER	3/4HP	480	1	5.5	3/4	2	12	2	20			3C	
DTP-1	DAY TANK PUMP	1/3HP	120	1	7.2	3/4	2	12	2	20			2C	
RTP-1	REMOTE TNK.PUMP	1/3HP	120	1	3.2	3/4	2	12	2	20			1C	
AC-1	AIR COMPRESSOR	1 HP(2)	480	3	3.6	3/4	3	12	3	20			1C	
AD-1	AIR DRYER	1/6HP	120	1	4.4	3/4	2	12	2	20			2C	
EF-7	EXHAUST FAN	68W	120	1	.71A	3/4	2	12	1	20			2C	
EF-8	EXHAUST FAN	135W	120	1	1.92A	3/4	2	12	1	20			2C	
EF-9	EXHAUST FAN	1/2HP	120	1	9.8	3/4	2	12	1	20			2C	
EF-10	EXHAUST FAN	1/3HP	120	1	7.2	3/4	2	12	1	20			2C	
CP-9	PUMP	1/20HP	120	1	1.16	3/4	2	12	1	20			2C	
T-1	TREAD MILL	2HP	208	3	7.82	3/4	3	12	3	20				◇6
T-2	TREAD MILL	1HP	120	1	25	3/4	2	8	1	20				◇6
WTP-1	WEIGHT TANK RM	1 ½HP	230	1	9.3/33	3/4"	2	10	2	20			1C	PROVIDE TWO SPEED STARTER
WTH-1	WEIGHT TANK HT	11KW	240	1	45	1"	3	4	2	60			3C	

REFERENCE NOTES

◇1 FIXTURE SHALL PROVIDE INDIRECT LIGHT ONLY AND SHALL HAVE A BLANK BOTTOM.

◇2 DISTANCE FROM CEILING TO BOTTOM OF FIXTURE SHALL VARY FROM 9' - 0" TO 13' - 1 3/4". BOTTOM OF FIXTURE SHALL BE PARALLEL TO AND AT LEVEL OF BOTTOM OF TRUSS. MOUNT FROM CHANNEL IRON W/ AIRCRAFT CABLE.

◇3 NOT USED.

◇4 PROVIDE 3/4" CONDUIT WITH 8 #12 TW CU. FROM CONTACTOR TO AUTOMATION CONTROL PANEL LOCATED IN MECHANICAL ROOM. COIL OF CONTACTOR TO BE OPERATED BY AUTOMATION CONTACTOR INDICATED. AUTOMATION PANEL AND CONTACTORS IN AUTOMATION PANEL TO BE FURNISHED UNDER DIVISION 15. ALSO PROVIDE 3/4" CONDUIT WITH 5 #12 FROM CONTACTOR TO PHOTOCELL. SEE DETAIL 1/E-1.

◇5 WALL MOUNT AT 24' A.F.F. TO TOP OF FIXTURE.

◇6 PROVIDE SPECIAL PURPOSE OUTLET AS REQUIRED. VERIFY NEMA CONFIGURATION OF OUTLETS WITH COLLEGE.

◇7 VERIFY ALL REQUIREMENTS WITH COLLEGE.

GENERAL NOTES

1. CONSULT ARCHITECTURAL REFLECTED CEILING PLANS FOR EXACT LOCATION AND QUANITY OF ALL LIGHTING FIXTURES.
2. VERIFY ALL EQUIPMENT DIMENSIONS AND LOCATIONS BEFORE BEGINNING ROUGH-IN. CONSULT ALL APPLICABLE CONTRACT DRAWINGS AND SHOP DRAWINGS TO INSURE NEC CODE CLEARENCES REQUIRED AROUND ALL ELECTRICAL EQUIPMENT.
3. CONTRACTOR SHALL VERIFY ALL ELECTRICAL LOADS (VOLTAGE, PHASE, CONNECTION REQUIREMENTS, ETC.) OF EQUIPMENT FURNISHED UNDER DIVISION 15 WITH APROVED MECHANICAL SHOP DRAWINGS BEFORE BEGINNING ROUGH-IN.
4. SEE SECTION 16510 OF THE SPECIFICATION FOR REQUIRED COORDINATION MEETINGS WITH MECHANICAL AND CEILING CONTRACTORS.
5. SEE APPLICABLE SHOP DRAWINGS FOR ROUGH-IN LOCATION OF ALL EQUIPMENT, WIRING DEVICES, ETC. WHERE APPLICABLE MOUNT ALL WIRING DEVICES ABOVE BACKSPLASH EXCEPT THOSE SERVING UNDER COUNTER EQUIPMENT.
6. SEE SPECIFICATION FOR ENERGY SAVING LAMP AND BALLAST REQUIREMENTS
7. FINISHES OF ALL LIGHT FIXTURES SHALL BE SELECTED BY ARCHITECT.
8. THE ELECTRICAL CONTRACTOR SHALL NOTIFY AND COOPERATE WITH THE MECHANICAL CONTRACTOR SUCH THAT NO PIPING, DUCTS, OR EQUIPMENT FOREIGN TO THE OPERATION OF THE ELECTRICAL EQUIPMENT SHALL BE PERMITTED TO BE INSTALLED IN, ENTER OR PASS THRU ELECTRICAL ROOMS OR SPACES; OR ABOVE OR BELOW ELECTRICAL EQUIPMENT IN OTHER AREAS.
9. ELECTRICAL BOXES SHALL NOT BE LOCATED IN MASONRY COLUMNS IN BRICK WALLS OR IN GROUTED CELLS ADJACENT TO OPENINGS. COORDINATE LOCATION OF BOXES WITH MASONRY CONTRACTOR.
10. ALL PENETRATIONS OF FIRE RATED FLOORS, WALLS AND CEILINGS SHALL BE SEALED WITH APPROVED MATERIAL TO MAINTAIN FIRE RATING OF SURFACE PENETRATED.
11. THE NEW ELECTRICAL EQUIPMENT AND APPARATUS SHALL BE COORDINATED AND CONNECTED INTO THE EXISTING SYSTEM AS REQUIRED. AUXILIARY SYSTEMS SHALL COMPLY, UNLESS OTHERWISE SPECIFIED.
12. THE EXISTING ELECTRICAL DEVICES, CONDUIT AND/OR EQUIPMENT THAT FOR ANY REASON OBSTRUCTS CONSTRUCTION SHALL BE RELOCATED.
13. WHEN INSTALLING EQUIPMENT IN THE EXISTING BUILDING, IT SHALL BE CONCEALED, EXCEPT WHERE APPROVAL FOR USE OF WIREMOLD IS RECEIVED FROM THE ARCHITECT.
14. ALL EXISTING ELECTRICAL EQUIPMENT IN PORTIONS OF THE BUILDING NOT BEING REMODELED SHALL BE LEFT IN WORKING CONDITIONS. RESTORE ANY CIRCUITS INTERRUPTED.
15. EXISTING RACEWAYS MAY BE USED WHERE POSSIBLE. CONTRACTOR SHALL INSURE INTEGRITY OF RE-USED RACEWAY. UNDERFLOOR RACEWAY SHALL NOT BE REUSED UNLESS ABSOLUTELY DRY.
16. ALL CIRCUITS, CONDUIT AND WIRE THAT ARE NOT USED IN THE REMODELING SHALL BE REMOVED BACK TO THE FIRST ACCESSIBLE JUNCTION BOX, WHERE IT SHALL BE TIED OFF, TAPED AND LABELED AS SPARE.
17. OBTAIN PERMISSION FROM THE COLLEGE BEFORE PENETRATING ANY CEILING, FLOOR, AND WALL SURFACES.
18. ANY AND ALL EQUIPMENT HAVING ELECTRICAL CONNECTIONS THAT REQUIRE DISCONNECTING AND RECONNECTION AT THE SAME OR ANOTHER LOCATION THROUGHOUT THE COURSE OF CONSTRUCTION SHALL BE INCLUDED AS PART OF THIS CONTRACT.
19. ALL ELECTRICAL EQUIPMENT REMOVED AND NOT RE-USED SHALL BE DISPOSED OF PROPERLY.

W/ AIRPLANE CABLE (4) PER LIGHT SEE ADD#2 PG6-31A

SYLVANIA LAMPS ONLY FOR A1 & A2

LIGHT FIXTURE SCHEDULE

TYPE	MANUFACTURER	CATALOG NUMBER	MOUNTING	LAMPS
◇2 A	SPI MCGRAW-EDISON	SDE-2601-277	PENDENT @ 30' AFF	(2) MS400/C/HOR
B	DEVOE	RH-70-9	RECESSED	(6) F40 RS/CW/WM
C	DAYBRITE	SG448-SRA20F-277	RECESSED	(8) F40RS/WW/WM
D	PRESCOLITE	1285-928	RECESSED	(1) 150 R40
F	DAYBRITE	SG242-SRS12D-277	RECESSED	(2) F40RS/WW/WM
G	DAYBRITE	SG243-SRS12D-277	RECESSED	(3) F40RS/WW/WM
H	DAYBRITE	SG244-SRS12D-277	RECESSED	(4) F40RS/WW/WM
I	LITECONTROL	RD66N-1-4-RS-277 ADD#2 PG6-31E	RECESSED	(1) F40RS/WW/WM
J	DAYBRITE	C240-277	SURFACE	(2) F40RS/WW/WM
K	RAB	VXBRIOOP	WALL	(1) 100 A-19
L	DAYBRITE	SF142-SRS12D-277	RECESSED	(2) F40RS/WW/WM
M	LEVITON	9875	WALL	(1) 150 A19
N	LITECONTROL	ADD#2 PG6 31F W-AID-66N 28 RS/48RS	WALL +24' A.F.F.	(6) F40RS/CW/WM
X1	LITHONIA	ES1G-277	UNIVERSAL	INCLUDED
X2	LITHONIA	ES2G-277	UNIVERSAL	INCLUDED
O	LITECONTROL	ADD#2 PG6-31E W-A1D-66N-14RS/14RS	WALL	(2) F40RS/WW/WM
◇2 A1	SPI MCGRAW-EDISON	SDE-2601-277-QM-QM (IR)	PENDANT @ +30' AFF	(2) MS400/C/HOR (2) 150W QUARTZ
◇2 A2	SPI MCGRAW-EDISON	SDE-2601-277-QS0-QS0	PENDANT @ +30' AFF	(2) MS400/C/HOR (2) 150W QUARTZ
P	LITHONIA	LB440A-277	SURFACE	(4) F40RS/WW/WM
◇1 N1	LITECONTROL	W-AID-66N-28RS	◇5	(2) F40RS/CW/WM
N2	LITECONTROL	ADD#2 PG6-31F W-AID-66N-14RS/24RS	◇5	(3) F40RS/CW/WM
Q	DAYBRITE	SF242-SRS12D-277	RECESSED	(2) F40RS/WW/WM
R	DAYBRITE	SF244-SRS12D-277	RECESSED	(4) F40RS/WW/WM
S	LITHONIA	SS10	SURFACED	(2) 60/A19
T	KURT VERSON	R7380-100MHS-277	RECESSED	1-M100/BU/BD
U	PRESCOLITE	HD10C03-277V	SURFACE	1-H38AV-100/DX
V	STONCO	5600E/LB100/4B W/DIOPE	GROUND	1-300 PAR56/MFL
W	STERNER 2" TENSION W/STERNER DARK BRONZE	KT-S-15-R-1A-N-175M-277-C SSA-09-R-P-N-C ADD#2-6-31C	POLE	1-H39KC-175/DX
X	BEGA	2576M50	STEEL TUBE	1-H45/46DL-50/DX
Y	STERNER	KT-1WB-15-R-100M-277-C FINISH DARK BRONZE	WALL	1-H38J4-100/DX
Z	PRESCOLITE	MBX75-HL85-277	RECESSED	1-H43AV-75/DX
AA	PRESCOLITE	1059-732	RECESSED	1-300M/IF ADD#2 PG6-31B
BB	SPAULDING W/SPAULDING	CVII-400—M-FG 30-SQA-614-ANDBZ	POLE	1-H400/C/U
◇1 N4	LITECONTROL	ADD#2 PG6-31F W-AID-66N-14RS	WALL +24' A.F.F.	(1) F40RS/CW/WM
CC	LAM	FW-904-80/80-WE	WALL +6' A.F.F.	(4) F40RS/WW/WM PER 8' SECTIONS
DD	LAM	FW-904-56/56-WE	WALL +6' A.F.F.	(4) F40RS/WW/WM PER 8' SECTIONS
EE	SPAULDING W/SPAULDING	(2) CVII-400-M-FG-30-SQA-614-ANDBZ	POLE	(2) M400/4U
FF	Mc PHILBEN	5BP44-3	BOLLARD	1-H43AV-75/DX

GYM FIXTURES FED W/ RUBBER COVERED CORD FOR CABLE HUNG FIXTURES

RECORD DOCUMENTS JUN 25 1990

THESE DOCUMENTS HAVE BEEN REVISED TO RECORD INFORMATION SUBMITTED BY THE CONTRACTOR, WHILE THEY ARE ASSUMED TO BE RELIABLE THE ARCHITECT DOES NOT GUARANTEE THEIR ACCURACY.

ELECTRICAL SYMBOL SCHEDULE

1. SEE FIXTURE SCHEDULE FOR TYPE, MOUNTING AND WATTAGE.
2. WIRED FROM ADJACENT OUTLET BOX.
3. REFER TO DRAWINGS FOR DIRECTIONAL ARROWS.
4. SUBSCRIPT KEYS SWITCH TO FIXTURES CONTROLLED.
5. NEMA TYPE 'ND' NON-FUSED UNLESS NOTED 'F' (FUSED). USE 'HD' 480 V.
6. SEE SPECS FOR SIZE AND/OR TYPE.
7. PROVIDE H.O.A. AND S.S. PUSHBOTTONS AS REQUIRED.
8. DOUBLE ARROWS DENOTE A DOUBLE FACE UNIT.
9. COORDINATE WITH SHOP DRAWINGS.

STANDARD MOUNTING HEIGHT UNLESS OTHERWISE NOTED ON PLANS

SYMBOL	DESCRIPTION	MOUNTING HEIGHT	NOTES
	ONE CICUIT, TWO WIRE HOME RUN TO PANEL		
	2 CIRCUIT, 3 WIRE, COMMON NEUTRAL HOME RUN		
	3 CIRCUIT, 4 WIRE, COMMON NEUTRAL HOME RUN		
	CONDUIT RUN CONCEALED IN WALL OR CEILING		
	CONDUIT RUN CONCEALED IN FLOOR OR GROUND		
	CONDUIT UP		
	CONDUIT DOWN		
	CEILING LIGHT OUTLET	CEILING	1.
	WALL LIGHT OUTLET	AS NOTED	1.
	RECESSED INCANDESCENT OR H.I.D. FIXTURE	CEILING	1.2.
	FLUORESCENT LIGHT FIXTURE	AS NOTED	1.2.
	FLUORESCENT EGRESS LIGHT FIXTURE	AS NOTED	UNSWITCHED
	INDIRECT HID FIXTURE (2-400W MH)	+30' AFF	
	INDIRECT HID FIXTURE (2-400W MH AND 2-150 QUARTZ)	+30' AFF	
	INDIRECT HID FIXTURE (2-400W MH, 2-150 QUARTZ, AND 1-QUARTZ AUX. LAMP RESTRIKE RELAY)	+30' AFF	
	CEILING MOUNTED EXIT LIGHT	CEILING	1.3.8.
	WALL MOUNTED EXIT LIGHT	AS NOTED	1.3.8.
$	SINGLE POLE SWITCH	+4'-0" TO CENTER OF BOX	
$a	SINGLE POLE SWITCH	+4'-0"	4.
$3	THREE-WAY SWITCH	+4'-0"	
$4	FOUR-WAY SWITCH	+4'-0"	
$K	KEY OPERATED SWITCH	+4'-0"	
$T	THERMAL OVERLOAD SWITCH WITH PILOT LIGHT	+4'-0"	SQ.D 2510
	DUPLEX RECEPTACLE	+16" TO BOTTOM OF BOX	
A	DUPLEX RECEPTACLE		9.
WP	WEATHERPROOF RECEPTACLE	+24"	SIERRA WPD-8
IG	ISOLATED GROUND RECEPTACLE	+16"	
GFI	GROUND FAULT INTERUPTER DUPLEX RECEPTACLE		9.
	FOURPLEX RECEPTACLE		9.
	FLOOR OUTLET WITH 20A DEVICE	FLOOR	SEE DETAIL 10/E15
	SPECIAL PURPOSE OUTLET 'F' IN FLOOR	+24" OR AS NOTED	WITH CAP
	TELEVISION OUTLET	AS NOTED	4" SQUARE J-BOX
	DATA OUTLET 'F' IN FLOOR	+16" OR AS NOTED	
	TELEPHONE OUTLET	+16"	
J	JUNCTION BOX ('F' IN FLOOR)	AS NOTED	
	MOTOR OUTLET	TO SUIT EQUIP.	
P	PHOTO-ELECTRIC CONTROL	AS NOTED	TORK 2000A
T	TIMED SWITCH	+5'-0"	
	PUSHBUTTON	+4'-6"	
	NON-FUSED DISCONNECT SWITCH	+5'-0"	SQ.D GEN. DUTY, 5
F	FUSED DISCONNECT SWITCH	+5'-0"	SQ.D GEN. DUTY, 5
	MAGNETIC STARTER / BREAKER COMBINATION	+5'-0"	SQ.D 8539, 7
	PANEL BOARD	TOP AT +5'-0"	
	MAIN DISTRIBUTION PANEL		
	TELEPHONE TERMINAL BOARD		
	CLOCK OUTLET	+7'-6"	8.
F	FIRE ALARM MANUAL STATION		
	CABLE TRAY		
H	FIRE ALARM SIGNAL HORN	+7'-6"	
S	SMOKE DETECTOR	CEILING	
D	DUCT SMOKE DETECTOR		MTD. IN DUCT
H	HEAT DETECTOR	CEILING	6.
D	DOOR HOLDER	AS NOTED	
DS	SECURITY SYSTEM RECESSED MAGNETIC DOOR SWITCH		9.
	PUSHBUTTON	+4'-6"	
	SOUND SYSTEM SPEAKER OUTLET	+8'-0" OR AS NOTED	
M	MICROPHONE OUTLET	+16"	
M	MICROPHONE FLOOR OUTLET	FLOOR	
	SOUND EQUIPMENT CABINET		CIRCUIT TO 120V
2 M	MICROPHONE OUTLETS (2)		
A	LIGHT FIXTURE (LETTER DESIGNATES TYPE)		
EQ 34	EQUIPMENT NUMBER		
	CLOSED CIRCUIT T.V. CAMERA OUTLET	+20'	
	VARIABLE INTENSITY SWITCH	+4'-0"	
	BUSDUCT		
FS	FLOW SWITCH		
TS	TAMPER SWITCH		
PFCC	POWER FACTOR CORRECTION CAPACITOR.		

INDEX TO ELECTRICAL DRAWINGS

E-1 SCHEDULES, NOTES
E-2 SITE PLAN
E-3 LIGHTING PLAN MAIN LEVEL NORTH
E-4 LIGHTING PLAN MAIN LEVEL SOUTH
E-5 LIGHTING PLAN MAIN LEVEL LINK
E-6 LIGHTING PLAN MID LEVEL LINK
E-7 LIGHTING PLAN PLAZA LEVEL
E-8 POWER PLAN MAIN LEVEL NORTH
E-9 POWER PLAN MAIN LEVEL SOUTH
E-10 POWER PLAN MAIN LEVEL LINK
E-11 POWER PLAN MID-LEVEL LINK
E-12 POWER PLAN PLAZA LEVEL
E-13 ELECTRICAL PLAN BALCONY LEVEL
E-14 ONE LINE DIAGRAM
E-15 DETAILS
E-16 PANEL SCHEDULES

0000TVE1
Weber State College, Physical Education Facility - RW 84-058
Schedules & Notes - 26749

REGISTERED PROFESSIONAL ENGINEER
ROBERT J. [illegible]
No. 4222
STATE OF UTAH

NOTE: THIS SHEET IS COMPRISED OF DRAWINGS AND DETAILS FROM THE ORIGINAL 1990 BUILDING CONSTRUCTION CONFORMED SET & HAS BEEN INCLUDED FOR INFORMATIONAL PURPOSES ONLY. CONDITIONS SHOWN ON THIS SHEET HAVE NOT BEEN VERIFIED WITH EXISTING CONSTRUCTED CONDITIONS.

jra JONES/ RICHARDS & ASSOCIATES
ARCHITECTURE (801) 394-3033
PLANNING 533 26TH. STREET
CONSTRUCTION MANAGEMENT OGDEN, UTAH

REVISED: AS BUILTS 6-90
PROJECT NUMBER: 8403
DATE: 8-21-88
DRAWN BY: L REMBER

PROJECT: PHYSICAL EDUCATION COMPLEX
WEBER STATE COLLEGE

SHEET TITLE: SCHEDULES & NOTES

SHEET NO. E-1

REFERENCE NOTES

1. VERIFY EXACT LOCATION OF EXISTING AUTOMATION CABLE. REROUTE CONDUIT AS REQUIRED. PROVIDE CONDUIT SIZED TO MATCH EXISTING. ALL CABLE AND WIRING BY MECHANICAL CONTRACTOR.
2. PROVIDE CONCRETE PULL BOX. SEE DETAIL 8/E-15
3. NOT USED.
4. PROVIDE ALL GROUND WORK AND REPAIR OF EXISTING CONCRETE PATH AS REQUIRED.
5. FIELD VERIFY EXACT LOCATION OF EXISTING POLE BASE. PROVIDE NEW BASE FOR NEW TYPE 'W' FIXTURE AS REQUIRED. FIELD VERIFY AVAILABILITY OF EXISTING CIRCUIT AND RE-USE IF CAPACITY EXISTS. OTHERWISE, PROVIDE CIRCUITING AS SHOWN.
6. EXISTING LIGHT POLE TO BE REMOVED.
7. EXISTING OVERHEAD POWER LINE TO BE REMOVED.
8. REMOVE AS REQUIRED.

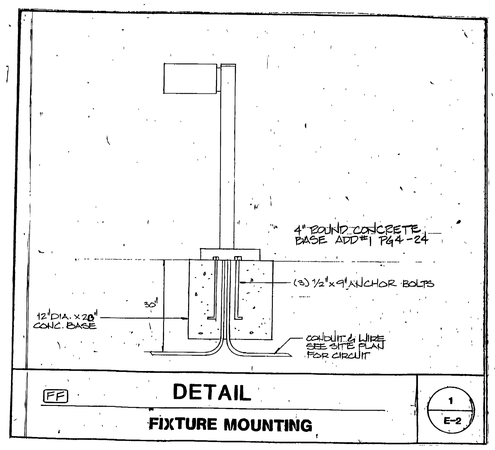

DETAIL — FIXTURE MOUNTING — FF — 1/E-2

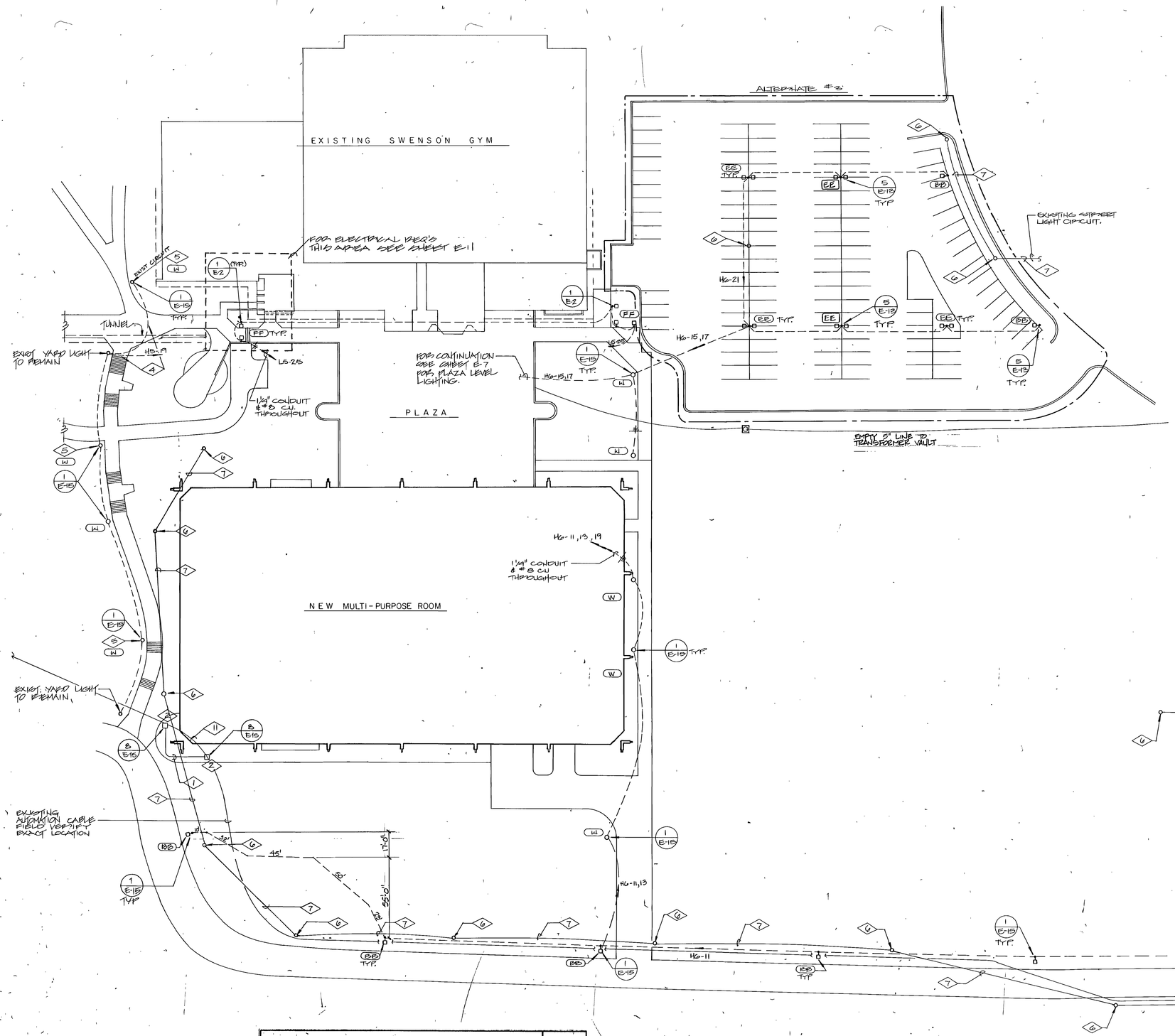

SITE PLAN — SCALE 1"= 30'-0"

RECORD DOCUMENTS JUN 05 1990

THESE DOCUMENTS HAVE BEEN REVISED TO RECORD INFORMATION SUBMITTED BY THE CONTRACTOR. WHILE THEY ARE ASSUMED TO BE RELIABLE THE ARCHITECT DOES NOT GUARANTEE THEIR ACCURACY.

0000TVE2
Weber State College, Physical Education Facility - RW 84-058
Site Plan - 26750

NOTE: THIS SHEET IS COMPRISED OF DRAWINGS AND DETAILS FROM THE ORIGINAL 1990 BUILDING CONSTRUCTION CONFORMED SET & HAS BEEN INCLUDED FOR INFORMATIONAL PURPOSES ONLY. CONDITIONS SHOWN ON THIS SHEET HAVE NOT BEEN VERIFIED WITH EXISTING CONSTRUCTED CONDITIONS.

REGISTERED PROFESSIONAL ENGINEER — ROBERT L. REMBER — No. 5222 — STATE OF UTAH

jra JONES/ RICHARDS & ASSOCIATES
ARCHITECTURE / PLANNING / CONSTRUCTION MANAGEMENT
(801) 394-3033 — 533 25TH STREET — OGDEN, UTAH

REVISED: As Builts
PROJECT NUMBER: 8404
DATE: 6-21-90
DRAWN BY: L. REMBER

PROJECT: PHYSICAL EDUCATION COMPLEX
WEBER STATE COLLEGE

SHEET TITLE: SITE PLAN

SHEET NO. E-2

REFERENCE NOTES

1. CONNECT TO EMERGENCY QUARTZ LAMPS.
2. CONNECT FIXTURE TO CIRCUIT H1E-3
3. CONNECT ALL a NOTED FIXTURES TO CIRCUIT H1E-7, ALL b NOTED FIXTURES TO CIRCUITS H1E-1, 5 AND ALL j NOTED FIXTURES TO CIRCUITS H2-8, 10, 12.
4. PROVIDE UNISTRUT CHANNEL AS REQUIRED TO SPAN BETWEEN JOISTS FOR MOUNTING OF INDIRECT METAL HALIDE FIXTURES.
5. DO NOT SCALE DRAWING FOR EXACT LOCATION OF TYPE 'A', 'A1', & 'A2' LIGHT FIXTURES, REFER TO DIMENSIONS AS SHOWN.
6. PROVIDE 3/4" CONDUIT WITH 3#8 TO GUTTER EXTENSION OF PANEL 'H5'. SEE DETAIL 1/E-1

LIGHTING PLAN

SCALE 1/8"=1'-0" MAIN LEVEL – NORTH

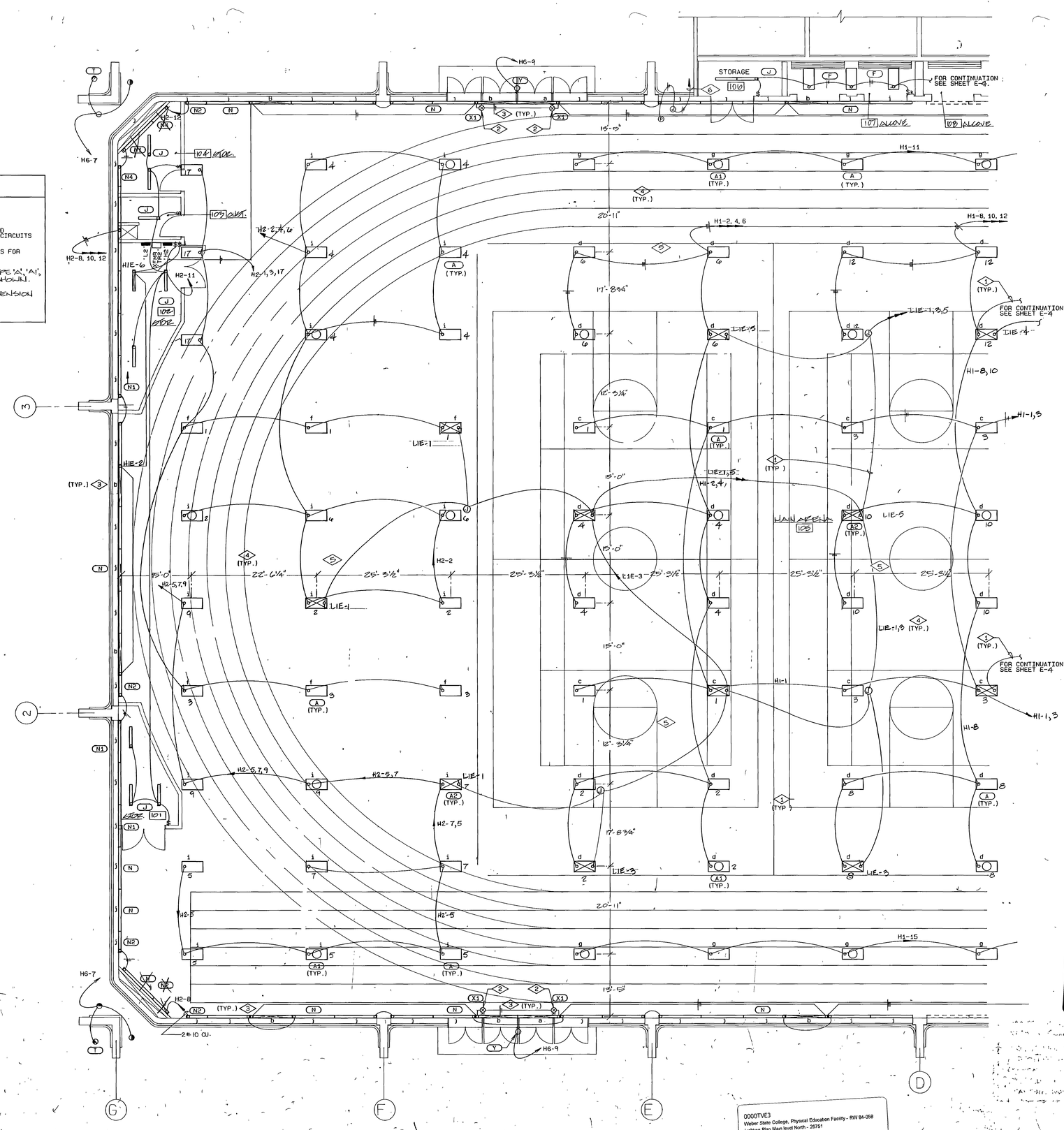

RECORD DOCUMENTS JUN 20 1990
THESE DOCUMENTS HAVE BEEN REVISED TO RECORD INFORMATION SUBMITTED BY THE CONTRACTOR, WHILE THEY ARE ASSUMED TO BE RELIABLE THE ARCHITECT DOES NOT GUARANTEE THEIR ACCURACY.

0000TVE3
Weber State College, Physical Education Facility - RW 84-058
Lighting Plan Main level North - 26751

ROBERT J. BECHEER No. 4222 REGISTERED PROFESSIONAL ENGINEER STATE OF UTAH

NOTE: THIS SHEET IS COMPRISED OF DRAWINGS AND DETAILS FROM THE ORIGINAL 1990 BUILDING CONSTRUCTION CONFORMED SET & HAS BEEN INCLUDED FOR INFORMATIONAL PURPOSES ONLY. CONDITIONS SHOWN ON THIS SHEET HAVE NOT BEEN VERIFIED WITH EXISTING CONSTRUCTED CONDITIONS.

jra JONES/ RICHARDS & ASSOCIATES
ARCHITECTURE (801) 394-3033
PLANNING 533 26TH STREET
CONSTRUCTION MANAGEMENT OGDEN, UTAH

REVISED: AS BUILTS 6-90

PROJECT NUMBER: 8403 DATE: 6-21-88 DRAWN BY: L. REMBER

PROJECT: PHYSICAL EDUCATION COMPLEX
WEBER STATE COLLEGE

SHEET TITLE: LIGHTING PLAN
MAIN LEVEL – NORTH

SHEET NO. E-3

REFERENCE NOTES

1. CONNECT TO EMERGENCY QUARTZ LAMPS.
2. CONNECT EMERGENCY FIXTURE TO CIRCUIT H1E-3.
3. CONNECT ALL a NOTED FIXTURES TO CIRCUIT H1E-9. ALL b NOTED FIXTURES TO CIRCUITS H1E-1, 5 AND ALL j NOTED FIXTURES TO CIRCUITS H1-20, 22, 24.
4. PROVIDE UNISTRUT CHANNEL AS REQUIRED TO SPAN BETWEEN JOISTS FOR MOUNTING OF INDIRECT METAL HALIDE FIXTURES.
5. SWITCHING CABINET (INCLUDES CONTROLS FOR SWITCHING OF MAIN SPORTS AREA LIGHTS, MOTORIZED NETTING AND BACKBOARDS) SEE DETAIL 7/E-15 SWITCHING CABINET TO BE FLUSH MOUNTED.
6. DO NOT SCALE DRAWING FOR EXACT LOCATION OF TYPE 'A', 'A1', & 'A2' LIGHT FIXTURES REFER TO DIMENSIONS AS SHOWN.
7. CONNECT EMERGENCY CIRCUIT TO 2 INBOARD LAMPS IN FIXTURE. CONNECT TO CIRCUIT H1E-3.

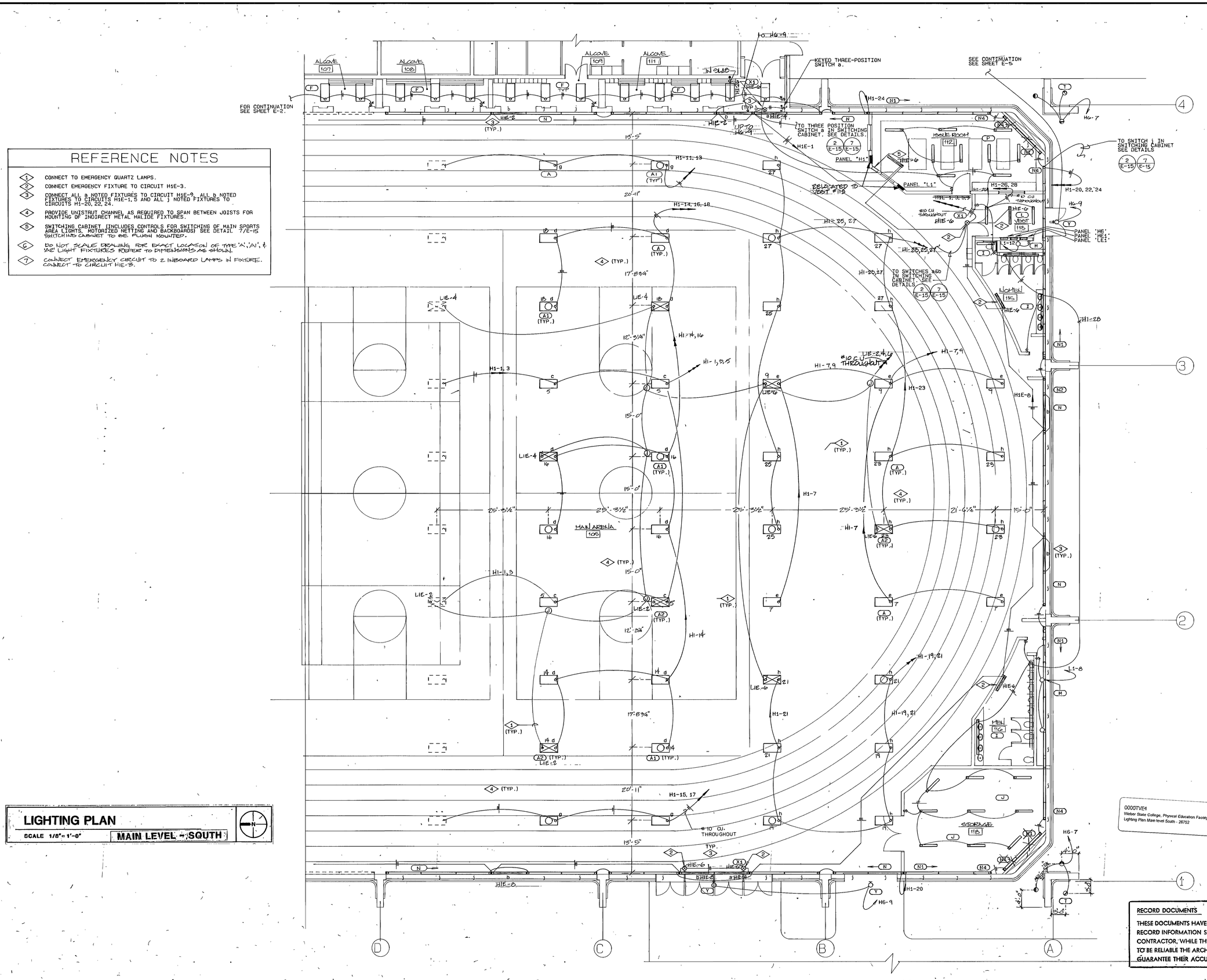

LIGHTING PLAN
SCALE 1/8"= 1'-0" — MAIN LEVEL - SOUTH

0000TVE4
Weber State College, Physical Education Facility - RW 84-058
Lighting Plan Main level South - 26752

RECORD DOCUMENTS JUN 2 2 1990
THESE DOCUMENTS HAVE BEEN REVISED TO RECORD INFORMATION SUBMITTED BY THE CONTRACTOR, WHILE THEY ARE ASSUMED TO BE RELIABLE THE ARCHITECT DOES NOT GUARANTEE THEIR ACCURACY.

REGISTERED PROFESSIONAL ENGINEER — ROBERT J. BOTHNER — No. 94222 — STATE OF UTAH

NOTE: THIS SHEET IS COMPRISED OF DRAWINGS AND DETAILS FROM THE ORIGINAL 1990 BUILDING CONSTRUCTION CONFORMED SET & HAS BEEN INCLUDED FOR INFORMATIONAL PURPOSES ONLY. CONDITIONS SHOWN ON THIS SHEET HAVE NOT BEEN VERIFIED WITH EXISTING CONSTRUCTED CONDITIONS.

JONES/ RICHARDS & ASSOCIATES
ARCHITECTURE (801) 394-3033
PLANNING 533 26TH STREET
CONSTRUCTION MANAGEMENT OGDEN, UTAH

REVISED: AS BUILTS 6-90
PROJECT NUMBER: 8403
DATE: 8-21-88
DRAWN BY: L. REMBER

PROJECT: PHYSICAL EDUCATION COMPLEX
WEBER STATE COLLEGE
SHEET TITLE: LIGHTING PLAN
MAIN LEVEL - SOUTH

SHEET NO. E-4

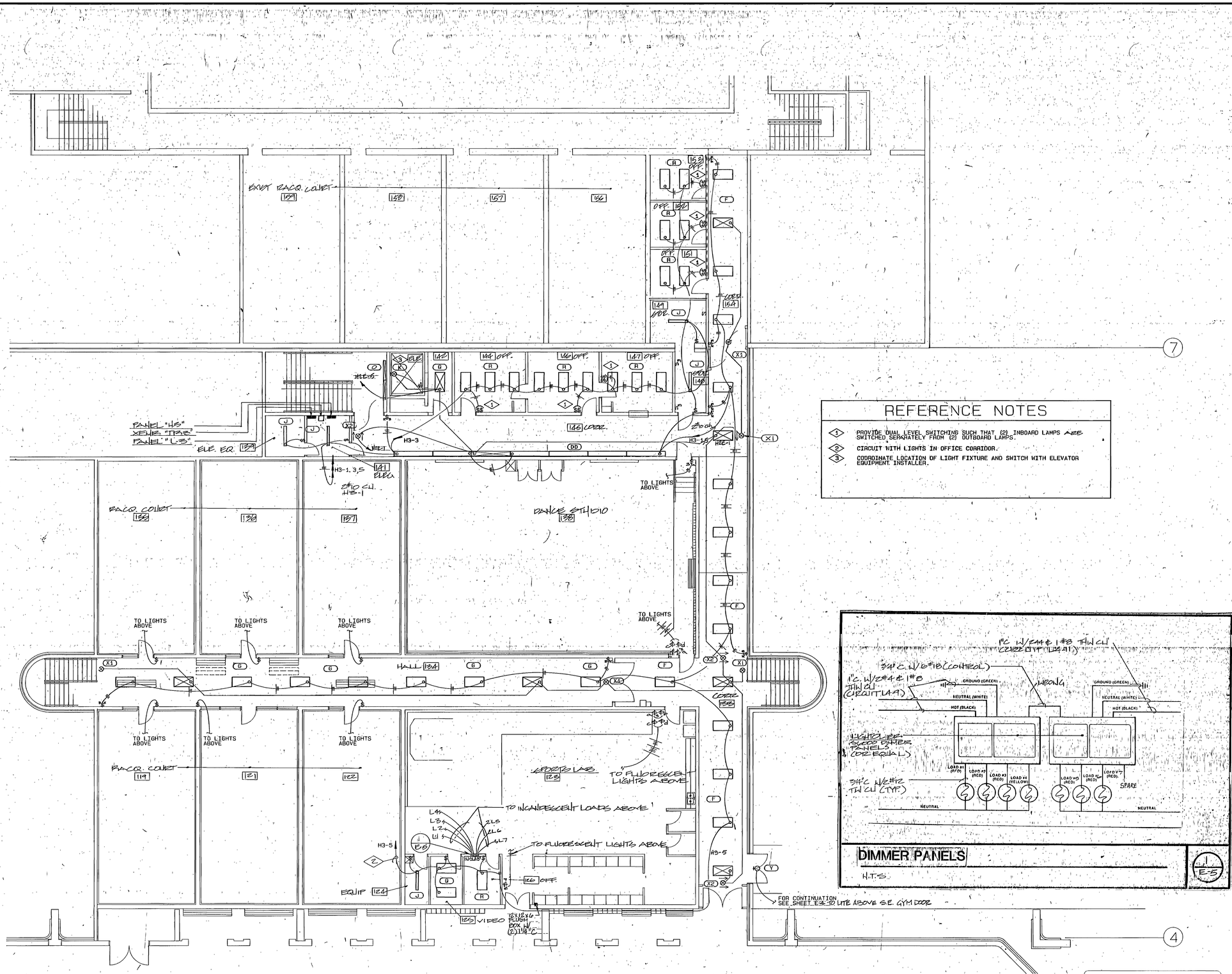

NOTE: THIS SHEET IS COMPRISED OF DRAWINGS AND DETAILS FROM THE ORIGINAL 1990 BUILDING CONSTRUCTION CONFORMED SET & HAS BEEN INCLUDED FOR INFORMATIONAL PURPOSES ONLY. CONDITIONS SHOWN ON THIS SHEET HAVE NOT BEEN VERIFIED WITH EXISTING CONSTRUCTED CONDITIONS.

RECORD DOCUMENTS JUN 29 1990

THESE DOCUMENTS HAVE BEEN REVISED TO RECORD INFORMATION SUBMITTED BY THE CONTRACTOR. WHILE THEY ARE ASSUMED TO BE RELIABLE THE ARCHITECT DOES NOT GUARANTEE THEIR ACCURACY.

00007VE5
Weber State College, Physical Education Facility - RW 84-058
Lighting Plan Main level Link - 26763

jra JONES/ RICHARDS & ASSOCIATES
ARCHITECTURE PLANNING CONSTRUCTION MANAGEMENT
(801) 394-3033 533 26TH STREET OGDEN, UTAH

REVISED: AS BUILTS G-90
PROJECT NUMBER: 8403
DATE: 5-21-93
DRAWN BY: L. REMBER

PROJECT: PHYSICAL EDUCATION COMPLEX
WEBER STATE COLLEGE

SHEET TITLE: LIGHTING PLAN
MAIN LEVEL - LINK

SHEET NO. E-5

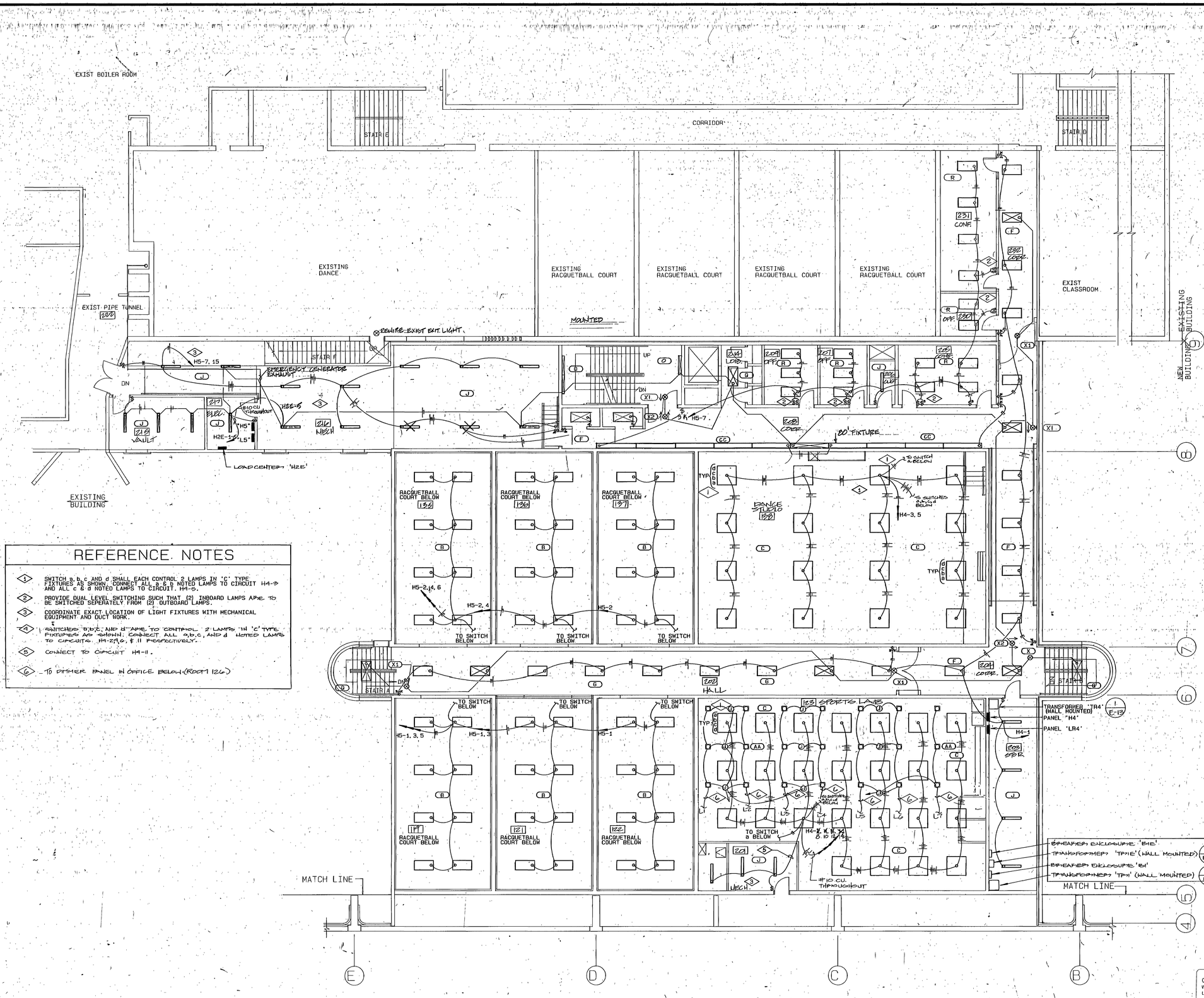

REFERENCE NOTES

1. SWITCH a, b, c AND d SHALL EACH CONTROL 2 LAMPS IN 'C' TYPE FIXTURES AS SHOWN. CONNECT ALL a, b, & b NOTED LAMPS TO CIRCUIT H4-3 AND ALL c & d NOTED LAMPS TO CIRCUIT H4-5.
2. PROVIDE DUAL LEVEL SWITCHING SUCH THAT (2) INBOARD LAMPS ARE TO BE SWITCHED SEPERATELY FROM (2) OUTBOARD LAMPS.
3. COORDINATE EXACT LOCATION OF LIGHT FIXTURES WITH MECHANICAL EQUIPMENT AND DUCT WORK.
4. SWITCHES b, b, c, AND d ARE TO CONTROL 2 LAMPS IN 'C' TYPE FIXTURES AS SHOWN. CONNECT ALL a, b, c, AND d NOTED LAMPS TO CIRCUITS H4-2, 4, 6, & 11 RESPECTIVELY.
5. CONNECT TO CIRCUIT H4-11.
6. TO DIMMER PANEL IN OFFICE BELOW (ROOM 126)

LIGHTING PLAN

SCALE 1/8" = 1'-0" — MID LEVEL - LINK

0000TVE6
Weber State College, Physical Education Facility - RW 84-058
Lighting Plan Mid level Link - 26754

RECORD DOCUMENTS — JUN 2 9 1990

THESE DOCUMENTS HAVE BEEN REVISED TO RECORD INFORMATION SUBMITTED BY THE CONTRACTOR. WHILE THEY ARE ASSUMED TO BE RELIABLE THE ARCHITECT DOES NOT GUARANTEE THEIR ACCURACY.

REGISTERED PROFESSIONAL ENGINEER — STATE OF UTAH — RICHARD H. HEMMERT — 5/9/1990

NOTE: THIS SHEET IS COMPRISED OF DRAWINGS AND DETAILS FROM THE ORIGINAL 1990 BUILDING CONSTRUCTION CONFORMED SET & HAS BEEN INCLUDED FOR INFORMATIONAL PURPOSES ONLY. CONDITIONS SHOWN ON THIS SHEET HAVE NOT BEEN VERIFIED WITH EXISTING CONSTRUCTED CONDITIONS.

JONES/ RICHARDS & ASSOCIATES
ARCHITECTURE PLANNING CONSTRUCTION MANAGEMENT
(801) 394-3033 — 533 26TH STREET — OGDEN, UTAH

REVISED: As Builts 6-90

PROJECT NUMBER: 9403 — DATE: 5-21-89 — DRAWN BY: L. REMBER

PROJECT: PHYSICAL EDUCATION COMPLEX
WEBER STATE COLLEGE

SHEET TITLE: LIGHTING PLAN
MID LEVEL - LINK

SHEET NO. E-6

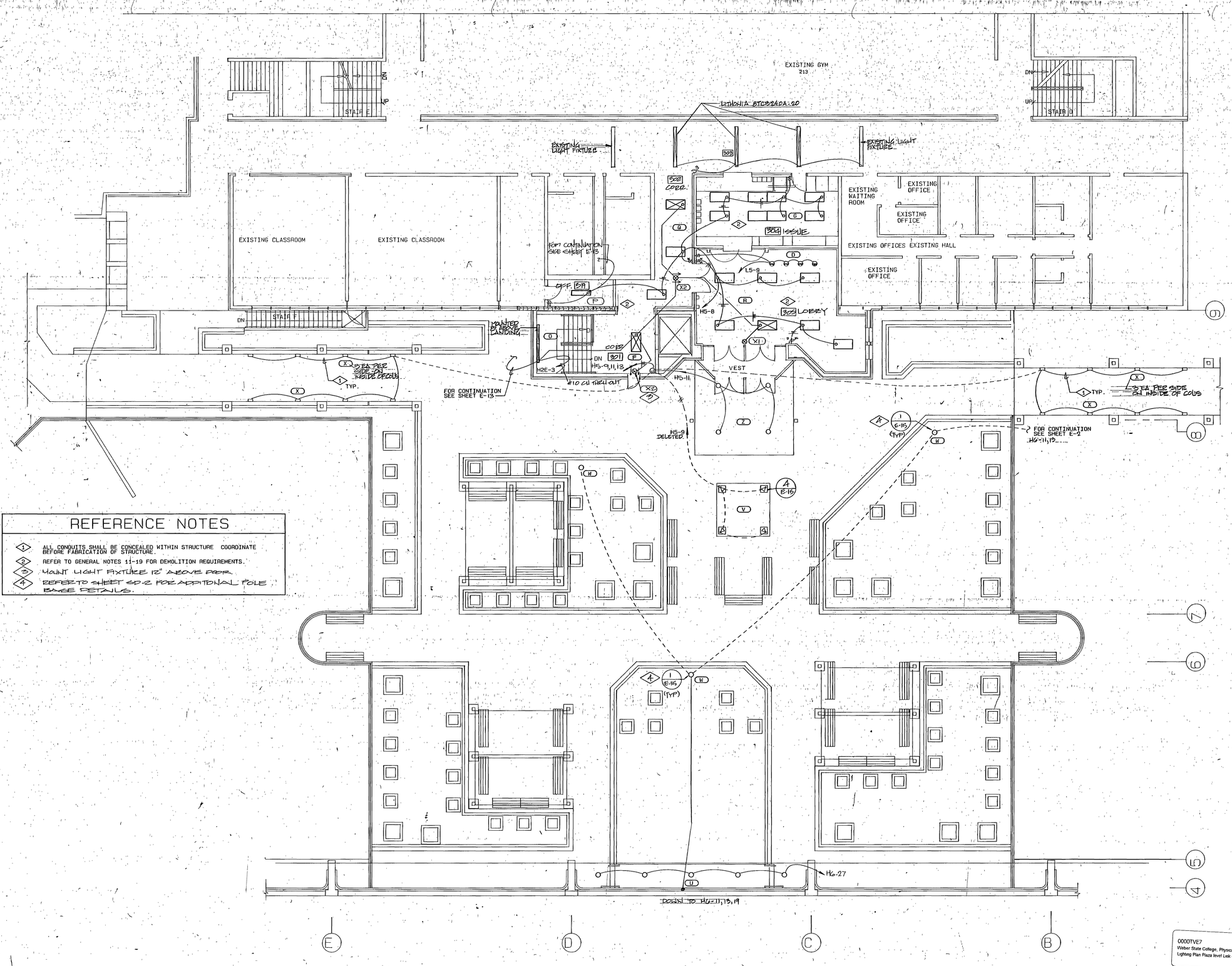

REFERENCE NOTES

1. ALL CONDUITS SHALL BE CONCEALED WITHIN STRUCTURE COORDINATE BEFORE FABRICATION OF STRUCTURE.
2. REFER TO GENERAL NOTES 11-19 FOR DEMOLITION REQUIREMENTS.
3. MOUNT LIGHT FIXTURE 12" ABOVE DOOR.
4. REFER TO SHEET SD-2 FOR ADDITONAL POLE BASE DETAILS.

LIGHTING PLAN

SCALE 1/0"= 1'-0" PLAZA LEVEL

0000TVE7
Weber State College, Physical Education Facility - RW 84-058
Lighting Plan Plaza level Link - 28755

RECORD DOCUMENTS JUN 2 9 1990

THESE DOCUMENTS HAVE BEEN REVISED TO RECORD INFORMATION SUBMITTED BY THE CONTRACTOR, WHILE THEY ARE ASSUMED TO BE RELIABLE THE ARCHITECT DOES NOT GUARANTEE THEIR ACCURACY.

REGISTERED PROFESSIONAL ENGINEER
DOBLE J. BECKLEBE
No. 4222
STATE OF UTAH

NOTE: THIS SHEET IS COMPRISED OF DRAWINGS AND DETAILS FROM THE ORIGINAL 1990 BUILDING CONSTRUCTION CONFORMED SET & HAS BEEN INCLUDED FOR INFORMATIONAL PURPOSES ONLY. CONDITIONS SHOWN ON THIS SHEET HAVE NOT BEEN VERIFIED WITH EXISTING CONSTRUCTED CONDITIONS.

jra JONES/ RICHARDS & ASSOCIATES
ARCHITECTURE (801) 394-3033
PLANNING 533 26TH STREET
CONSTRUCTION MANAGEMENT OGDEN, UTAH

REVISED: AS BUILTS 6-90

PROJECT NUMBER: 8403
DATE: 3-21-88
DRAWN BY: L. REMBER

PROJECT: PHYSICAL EDUCATION COMPLEX
WEBER STATE COLLEGE

SHEET TITLE: LIGHTING PLAN
PLAZA LEVEL - LINK

SHEET NO. E-7

REFERENCE NOTES

1. PROVIDE 4" BOX FOR RECEPTACLE TO BE FURNISHED BY EQUIPMENT MANUFACTURER. VERIFY ALL REQUIREMENTS AND EXACT LOCATION OF BACKBOARD MOTOR WITH EQUIPMENT MANUFACTURER.
2. PROVIDE 4" SQ. BOX WITH 20A, 4 PRONG, TWIST-LOCK RECEPTACLE. VERIFY ALL REQUIREMENTS AND EXACT LOCATION OF NET MOTOR WITH EQUIPMENT MANUFACTURER.
3. MOUNT MAGNETIC STARTER/BREAKER COMBINATION SWITCH SUCH THAT TOP OF ENCLOSURE IS 6'-6" A.F.F..
4. MOUNT POWER FACTOR CORRECTION CAPACITORS ABOVE SWITCH.
5. ALL TELEPHONE CONDUITS IN MULTIPURPOSE AREA TO BE SENT TO TELEPHONE BOARD IN SOTRAGE ROOM 106.
6. EXTEND EMPTY 2" CONDUIT WITH PULL WIRE TO TELEPHONE BOARD IN ELECTRICAL ROOM 217.
7. PROVIDE FLOOR BOX WITH BLANK FLUSH MOUNTED COVER PLATE EXTEND EMPTY 3/4" CONDUIT WITH PULL WIRE TO PANEL 'L2'.

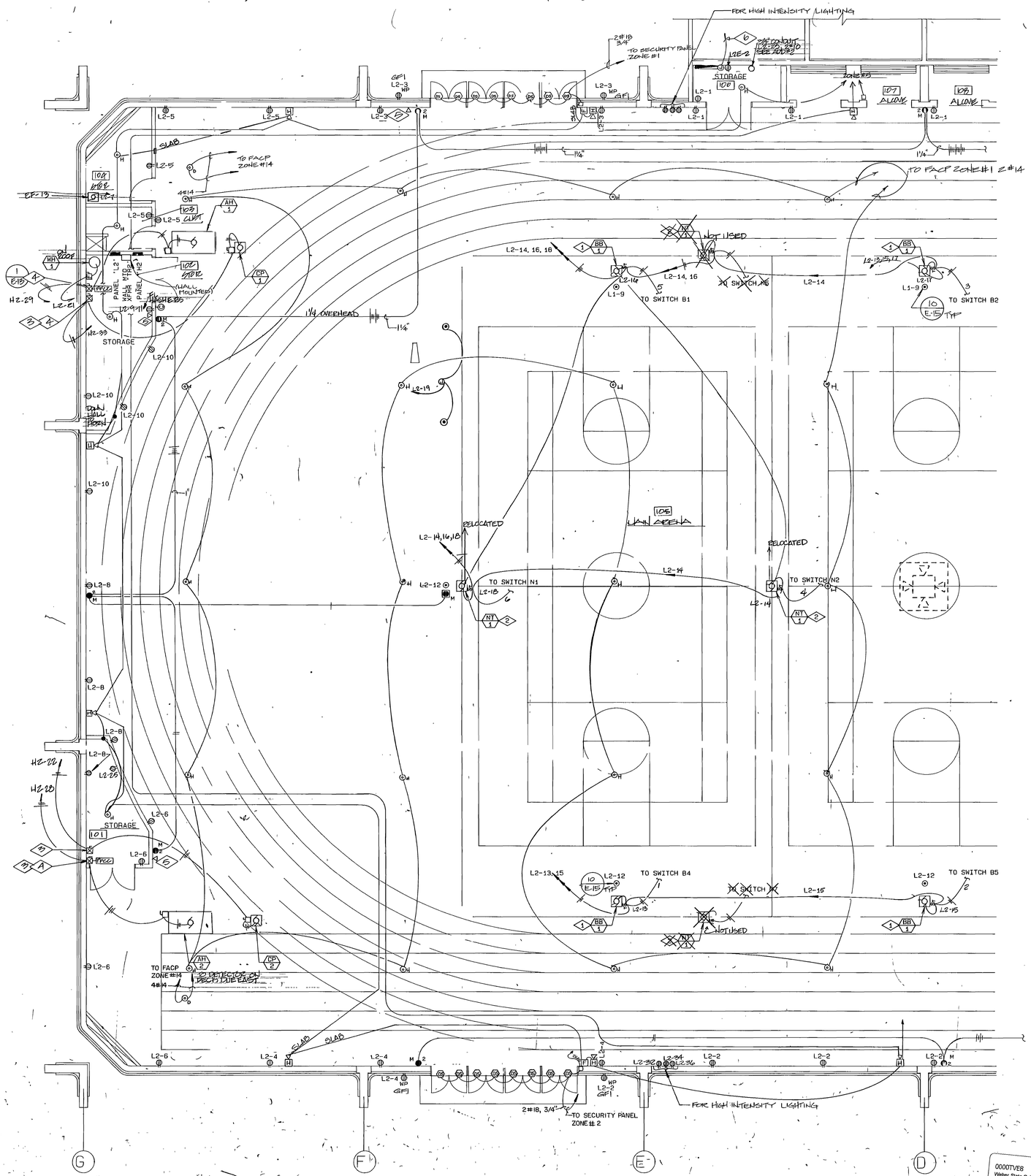

POWER PLAN

SCALE 1/8"=1'-0"

MAIN LEVEL - NORTH

NOTE: THIS SHEET IS COMPRISED OF DRAWINGS AND DETAILS FROM THE ORIGINAL 1990 BUILDING CONSTRUCTION CONFORMED SET & HAS BEEN INCLUDED FOR INFORMATIONAL PURPOSES ONLY. CONDITIONS SHOWN ON THIS SHEET HAVE NOT BEEN VERIFIED WITH EXISTING CONSTRUCTED CONDITIONS.

REGISTERED PROFESSIONAL ENGINEER ROBERT J. BECHERER No. 4222 STATE OF UTAH

JONES/ RICHARDS & ASSOCIATES

PLANNING
533 26TH STREET

CONSTRUCTION MANAGEMENT
OGDEN, UTAH

ARCHITECTURE
(801) 394-3033

REVISED: AS BUILT 6-90

PROJECT NUMBER: 8403

DATE: 3-21-88

DRAWN BY: L. REMBER

PROJECT: PHYSICAL EDUCATION COMPLEX
WEBER STATE COLLEGE

SHEET TITLE: POWER PLAN
MAIN LEVEL-NORTH

SHEET NO. E-8

RECORD DOCUMENTS
THESE DOCUMENTS HAVE BEEN REVISED TO RECORD INFORMATION SUBMITTED BY THE CONTRACTOR, WHILE THEY ARE ASSUMED TO BE RELIABLE THE ARCHITECT DOES NOT GUARANTEE THEIR ACCURACY.

0000TVE8
Weber State College, Physical Education Facility - RW 84-058
Power Plan Main Level North - 26756

REFERENCE NOTES

1. PROVIDE 4" SQ. BOX FOR RECEPTACLE TO BE FURNISHED BY EQUIPMENT MANUFACTURER. VERIFY ALL REQUIREMENTS AND EXACT LOCATION OF BACKBOARD MOTOR WITH EQUIPMENT MANUFACTURER.
2. PROVIDE 4" SQ. BOX WITH 20A, 4 PRONG, TWIST-LOCK RECEPTACLE. VERIFY ALL REQUIREMENTS AND EXACT LOCATION OF NET MOTOR WITH EQUIPMENT MANUFACTURER.
3. SWITCHING CABINET (INCLUDES CONTROLS FOR SWITCHING OF MAIN ARENA LIGHTS, MOTORIZED NETTING AND BACKBOARDS. TO BE FLUSH MOUNTED.
4. PROVIDE EMPTY 3/4" CONDUIT WITH PULL WIRE TO DATA CABLE IN EXISTING PIPE TUNNEL.
5. PROVIDE DOOR HOLDERS FOR ISSUE WINDOW DOOR. PROVIDE ADDITIONAL CONTROL SUCH THAT DOOR HOLDERS CAN BE DEACTIVATED BY PUSHBOTTON AS WELL AS BY SIGNAL FROM SMOKE DETECTORS.
6. NOT USED.
7. PROVIDE TWO CONCENTRIC SQUARES OF 3" PIPE OR CHANNEL, 3' X 3' AND 16' X 16'. CENTER SMALLER SQUARE IN LARGER SQUARE ON SAME PLANE. REFER TO STRUCTURAL DRAWINGS FOR MOUNTING DETAIL. MOUNT SPEAKERS ON CABLE ATTACHED TO SQUARES.
8. PROVIDE 12" X 12" X 4" JUNCTION BOX MOUNTED AT +16" A.F.F. FOR SOUND CABINET INSTALLER.
9. MOUNT MAGNETIC STARTER/BREAKER COMBINATION SWITCH SUCH THAT TOP OF ENCLOSURE IS 6'-6" A.F.F.
10. MOUNT POWER FACTOR CORRECTION CAPACITORS ABOVE SWITCH.
11. PROVIDE HUBBELL 5252, 20A SURGE SUPPRESION RECEPTACLE (OR EQUAL) FOR FIRST RECEPTACLE IN CIRCUIT.
12. PROVIDE 1 #12 GREEN GROUND WIRE BACK TO PANEL FOR COMPUTER CIRCUITS.
13. ALL TELPEHONE CONDUITS TO BE SENT TO TELEPHONE BOARD IN STORAGE ROOM 106.

POWER PLAN

SCALE 1/8" = 1'-0" **MAIN LEVEL - SOUTH**

RECORD DOCUMENTS JUN 29 1990

THESE DOCUMENTS HAVE BEEN REVISED TO RECORD INFORMATION SUBMITTED BY THE CONTRACTOR, WHILE THEY ARE ASSUMED TO BE RELIABLE THE ARCHITECT DOES NOT GUARANTEE THEIR ACCURACY.

0000TVE9
Weber State College, Physical Education Facility - RW 84-058
Power Plan Main Level South - 26757

NOTE: THIS SHEET IS COMPRISED OF DRAWINGS AND DETAILS FROM THE ORIGINAL 1990 BUILDING CONSTRUCTION CONFORMED SET & HAS BEEN INCLUDED FOR INFORMATIONAL PURPOSES ONLY. CONDITIONS SHOWN ON THIS SHEET HAVE NOT BEEN VERIFIED WITH EXISTING CONSTRUCTED CONDITIONS.

ROBERT J. BECHEBER 122 — REGISTERED PROFESSIONAL ENGINEER — STATE OF UTAH

jra JONES/ RICHARDS & ASSOCIATES
ARCHITECTURE (801) 394-3033 · PLANNING 533 26TH STREET · CONSTRUCTION MANAGEMENT OGDEN, UTAH

REVISED: AS BUILTS 6-90

PROJECT NUMBER: 8403 | DATE: 5-21-88 | DRAWN BY: L REMBER

PROJECT: PHYSICAL EDUCATION COMPLEX
WEBER STATE COLLEGE

SHEET TITLE: POWER PLAN
MAIN LEVEL - SOUTH

SHEET NO. E-9

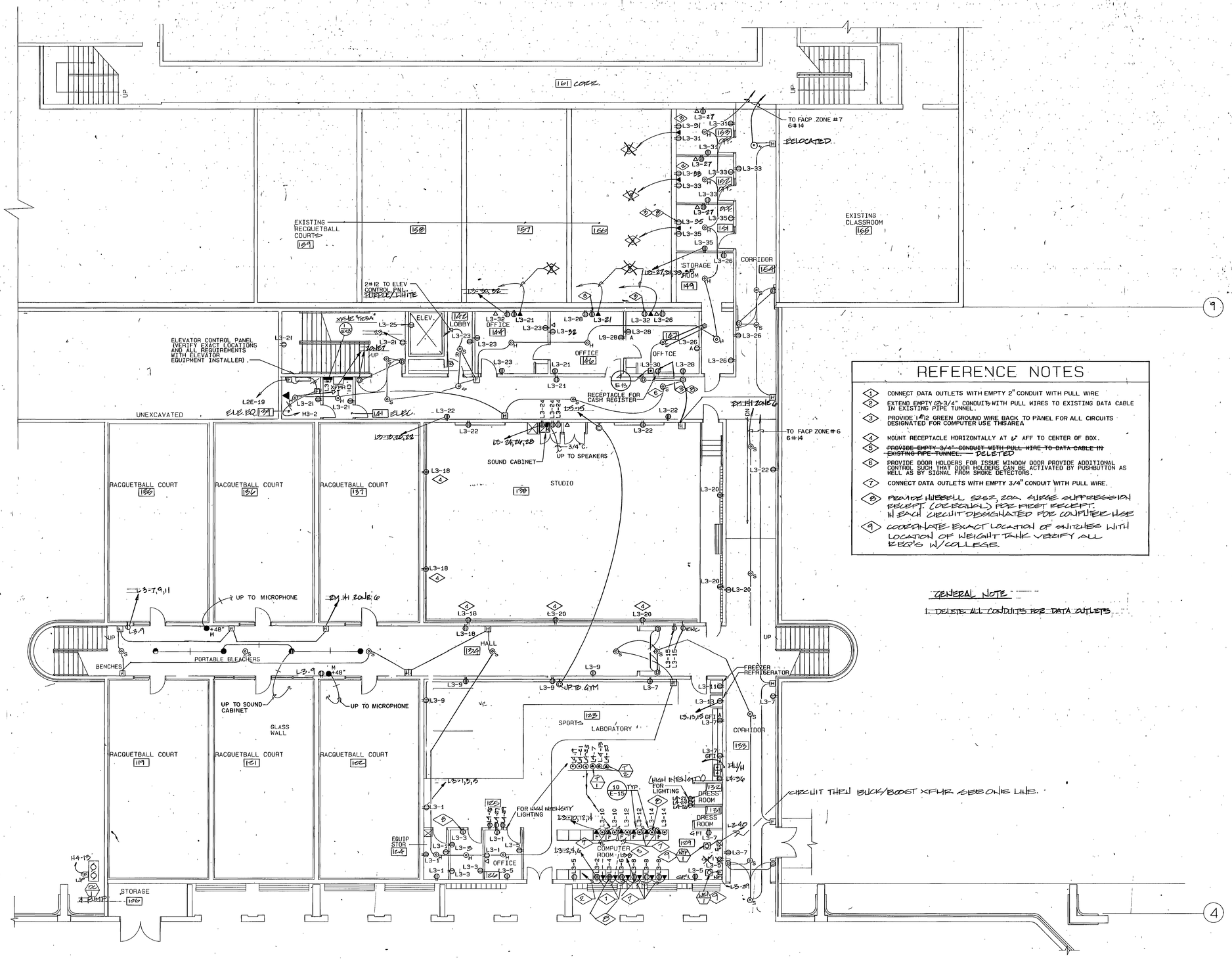

REFERENCE NOTES

1. CONNECT DATA OUTLETS WITH EMPTY 2" CONDUIT WITH PULL WIRE
2. EXTEND EMPTY (2)-3/4" CONDUITS WITH PULL WIRES TO EXISTING DATA CABLE IN EXISTING PIPE TUNNEL.
3. PROVIDE 1#12 GREEN GROUND WIRE BACK TO PANEL FOR ALL CIRCUITS DESIGNATED FOR COMPUTER USE THISAREA
4. MOUNT RECEPTACLE HORIZONTALLY AT 6" AFF TO CENTER OF BOX.
5. ~~PROVIDE EMPTY 3/4" CONDUIT WITH PULL WIRE TO DATA CABLE IN EXISTING PIPE TUNNEL.~~ DELETED
6. PROVIDE DOOR HOLDERS FOR ISSUE WINDOW DOOR PROVIDE ADDITIONAL CONTROL SUCH THAT DOOR HOLDERS CAN BE ACTIVATED BY PUSHBUTTON AS WELL AS BY SIGNAL FROM SMOKE DETECTORS.
7. CONNECT DATA OUTLETS WITH EMPTY 3/4" CONDUIT WITH PULL WIRE.
8. PROVIDE HUBBELL 5262, 20A SURGE SUPPRESSION RECEPT. (DUPLEX) FOR FIRST RECEPT. IN EACH CIRCUIT DESIGNATED FOR COMPUTER USE
9. COORDINATE EXACT LOCATION OF SWITCHES WITH LOCATION OF WEIGHT TANK VERIFY ALL REQ'S W/COLLEGE.

GENERAL NOTE

1. DELETE ALL CONDUITS FOR DATA OUTLETS

POWER PLAN

SCALE 1/0"=1'-0" MAIN LEVEL - LINK

0000TVE10
Weber State College, Physical Education Facility - RW 84-058
Power Plan Main Level Link - 26758

RECORD DOCUMENTS JUN 2 9 1990

THESE DOCUMENTS HAVE BEEN REVISED TO RECORD INFORMATION SUBMITTED BY THE CONTRACTOR. WHILE THEY ARE ASSUMED TO BE REASONABLE THE ARCHITECT DOES NOT GUARANTEE THEIR ACCURACY.

REGISTERED PROFESSIONAL ENGINEER — ROBERT J. BECKSTEAD — No. 4222 — STATE OF UTAH

NOTE: THIS SHEET IS COMPRISED OF DRAWINGS AND DETAILS FROM THE ORIGINAL 1990 BUILDING CONSTRUCTION CONFORMED SET & HAS BEEN INCLUDED FOR INFORMATIONAL PURPOSES ONLY. CONDITIONS SHOWN ON THIS SHEET HAVE NOT BEEN VERIFIED WITH EXISTING CONSTRUCTED CONDITIONS.

JONES/ RICHARDS & ASSOCIATES
PLANNING — CONSTRUCTION MANAGEMENT
533 26TH STREET. — OGDEN, UTAH
ARCHITECTURE (801) 394-3033

REVISED: AS BUILTS 6-90

PROJECT NUMBER: 8408
DATE: 9-21-88
DRAWN BY: L. REMBER

PROJECT: PHYSICAL EDUCATION COMPLEX
WEBER STATE COLLEGE

SHEET TITLE: POWER PLAN MAIN LEVEL-LINK

SHEET NO. E-10

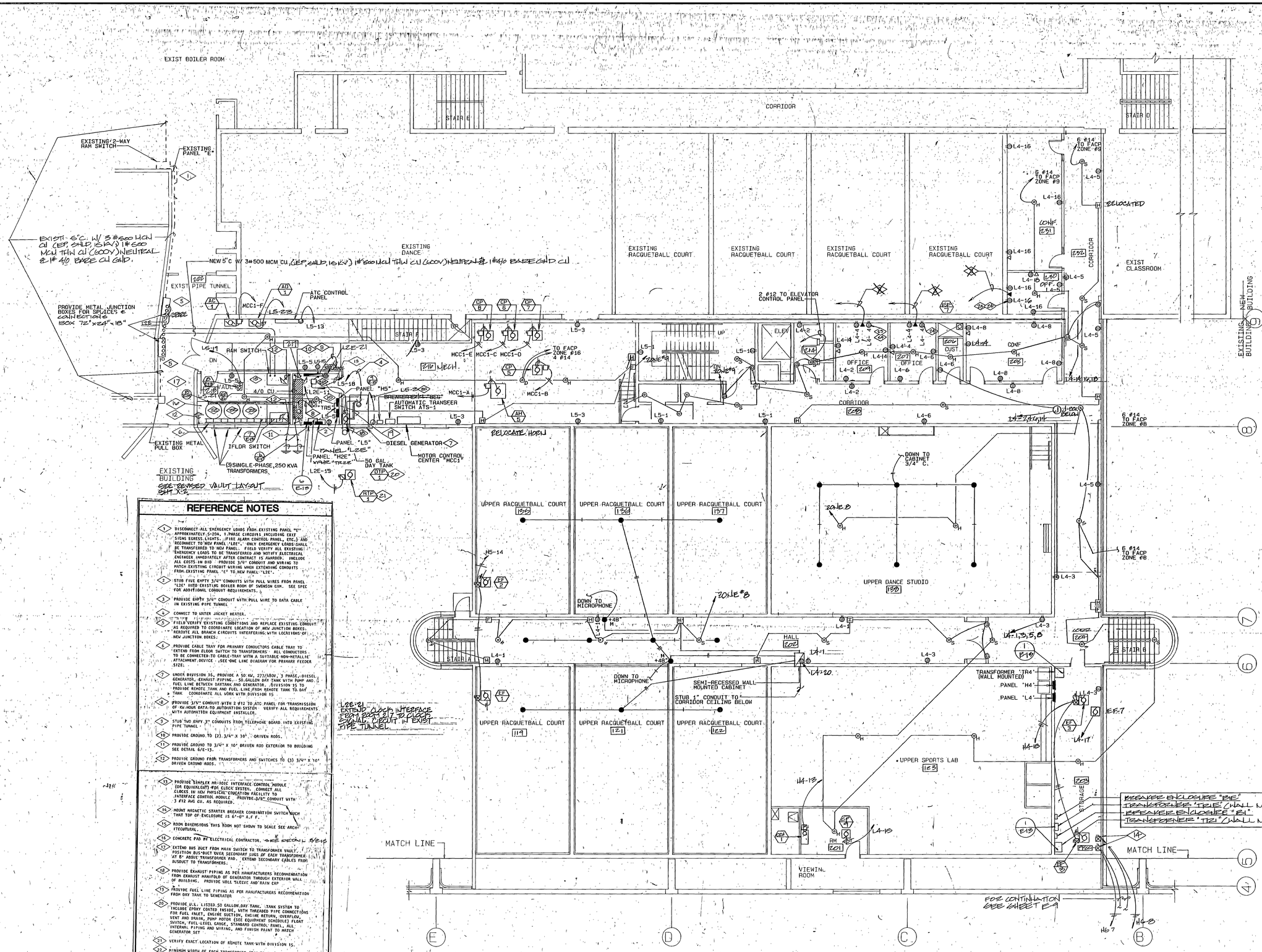

REFERENCE NOTES

1. DISCONNECT ALL EMERGENCY LOADS FROM EXISTING PANEL "E" APPROXIMATELY 5-20A, 1-PHASE CIRCUITS INCLUDING EXIT SIGNS EGRESS LIGHTS, FIRE ALARM CONTROL PANEL, ETC.) AND RECONNECT TO NEW PANEL 'L2E'. ONLY EMERGENCY LOADS SHALL BE TRANSFERRED TO NEW PANEL. FIELD VERIFY ALL EXISTING EMERGENCY LOADS TO BE TRANSFERRED AND NOTIFY ELECTRICAL ENGINEER IMMEDIATELY AFTER CONTRACT IS AWARDED. INCLUDE ALL COSTS IN BID. PROVIDE 3/4" CONDUIT AND WIRING TO MATCH EXISTING CIRCUIT WIRING WHEN EXTENDING CONDUITS FROM EXISTING PANEL 'E' TO NEW PANEL 'L2E'.
2. STUB FIVE EMPTY 3/4" CONDUITS WITH PULL WIRES FROM PANEL 'L2E' INTO EXISTING BOILER ROOM OF SWENSON GYM. SEE SPEC FOR ADDITIONAL CONDUIT REQUIREMENTS.
3. PROVIDE EMPTY 3/4" CONDUIT WITH PULL WIRE TO DATA CABLE IN EXISTING PIPE TUNNEL.
4. CONNECT TO WATER JACKET HEATER.
5. FIELD VERIFY EXISTING CONDITIONS AND REPLACE EXISTING CONDUIT AS REQUIRED TO COORDINATE LOCATION OF NEW JUNCTION BOXES. REROUTE ALL BRANCH CIRCUITS INTERFERING WITH LOCATIONS OF NEW JUNCTION BOXES.
6. PROVIDE CABLE TRAY FOR PRIMARY CONDUCTORS CABLE TRAY TO EXTEND FROM FLOOR SWITCH TO TRANSFORMERS. ALL CONDUCTORS TO BE CONNECTED TO CABLE TRAY WITH A SUITABLE NON-METALLIC ATTACHMENT DEVICE. SEE ONE LINE DIAGRAM FOR PRIMARY FEEDER SIZE.
7. UNDER DIVISION 16, PROVIDE A 50 KW, 277/480V, 3 PHASE, DIESEL GENERATOR, EXHAUST PIPING, 50 GALLON DAY TANK WITH PUMP AND FUEL LINE BETWEEN DAYTANK AND GENERATOR. DIVISION 15 TO PROVIDE REMOTE TANK AND FUEL LINE FROM REMOTE TANK TO DAY TANK. COORDINATE ALL WORK WITH DIVISION 15.
8. PROVIDE 3/4" CONDUIT WITH 2 #12 TO ATC PANEL FOR TRANSMISSION OF 60 HOUR DATA TO AUTOMATION SYSTEM. VERIFY ALL REQUIREMENTS WITH AUTOMATION EQUIPMENT INSTALLER.
9. STUB TWO EMPTY 3" CONDUITS FROM TELEPHONE BOARD INTO EXISTING PIPE TUNNEL.
10. PROVIDE GROUND TO (2) 3/4" X 10' DRIVEN RODS.
11. PROVIDE GROUND TO 3/4" X 10' DRIVEN ROD EXTERIOR TO BUILDING SEE DETAIL 6/E-13.
12. PROVIDE GROUND FROM TRANSFORMERS AND SWITCHES TO (3) 3/4" X 10' DRIVEN GROUND RODS.
13. PROVIDE SIMPLEX MR-101C INTERFACE CONTROL MODULE (OR EQUIVALENT) FOR CLOCK SYSTEM. CONNECT ALL CLOCKS IN NEW PHYSICAL EDUCATION FACILITY TO INTERFACE CONTROL MODULE. PROVIDE 3/4" CONDUIT WITH 3 #12 AWG CU. AS REQUIRED.
14. MOUNT MAGNETIC STARTER BREAKER COMBINATION SWITCH SUCH THAT TOP OF ENCLOSURE IS 6'-6" A.F.F.
15. ROOM DIMENSIONS THIS ROOM NOT SHOWN TO SCALE SEE ARCHITECTURAL.
16. CONCRETE PAD BY ELECTRICAL CONTRACTOR. SEE DETAIL 6/E-13
17. EXTEND BUS DUCT FROM MAIN SWITCH TO TRANSFORMER VAULT. POSITION BUS-DUCT OVER SECONDARY LUGS OF EACH TRANSFORMER AT 8' ABOVE TRANSFORMER PAD. EXTEND SECONDARY CABLES FROM BUSDUCT TO TRANSFORMERS.
18. PROVIDE EXHAUST PIPING AS PER MANUFACTURERS RECOMMENDATION FROM EXHAUST MANIFOLD OF GENERATOR THROUGH EXTERIOR WALL OF BUILDING. PROVIDE WALL SLEEVE AND RAIN CAP.
19. PROVIDE FUEL LINE PIPING AS PER MANUFACTURERS RECOMMENTION FROM DAY TANK TO GENERATOR
20. PROVIDE U.L. LISTED 50 GALLON DAY TANK. TANK SYSTEM TO INCLUDE EPOXY COATED INSIDE, WITH THREADED PIPE CONNECTIONS FOR FUEL INLET, ENGINE SUCTION, ENGINE RETURN, OVERFLOW, VENT AND DRAIN, PUMP MOTOR (SEE EQUIPMENT SCHEDULE) FLOAT SWITCH, FUEL LEVEL GAUGE, STANDARD CONTROL PANEL, ALL INTERNAL PIPING AND WIRING, AND FINISH PAINT TO MATCH GENERATOR SET
21. VERIFY EXACT LOCATION OF REMOTE TANK WITH DIVISION 15.
22. MINIMUM WIDTH OF EACH TRANSFORMER (FIN TO FIN) MUST BE 48" OR LESS.
23. PROVIDE HUBBELL 5252 'ZOA SURGE SUPPRESSOR (OR EQUAL) FOR EACH RECEPTACLE IN EACH CIRCUIT DESIGNATED FOR COMPUTER USE.
24. PROVIDE #12 GREEN GROUND WIRE BACK TO PANEL FOR COMPUTER OUTLETS.
25. CONNECT TO LEAK PROTECTOR. VERIFY EXACT LOCATION WITH MECHANICAL
26. MOUNT TRANSFORMER HIGH ON WALL THIS ROOM.

GENERAL NOTES

1. DELETE ALL CONDUITS FOR DATA OUTLETS

POWER PLAN

SCALE 1/8" = 1'-0" — MID LEVEL LINK

N

OOOOTVE11
Weber State College, Physical Education Facilty - RW 84-058
Power Plan Mid Level Link - 26759

RECORD DOCUMENTS JUL 2 1990

THESE DOCUMENTS HAVE BEEN REVISED TO RECORD INFORMATION SUBMITTED BY THE CONTRACTOR. WHILE THEY ARE ASSUMED TO BE RELIABLE THE ARCHITECT DOES NOT GUARANTEE THEIR ACCURACY.

REGISTERED PROFESSIONAL ENGINEER — ROBERT L. RECHTER — 5/6/1922 — STATE OF UTAH

NOTE: THIS SHEET IS COMPRISED OF DRAWINGS AND DETAILS FROM THE ORIGINAL 1990 BUILDING CONSTRUCTION CONFORMED SET & HAS BEEN INCLUDED FOR INFORMATIONAL PURPOSES ONLY. CONDITIONS SHOWN ON THIS SHEET HAVE NOT BEEN VERIFIED WITH EXISTING CONSTRUCTED CONDITIONS.

jra JONES/ RICHARDS & ASSOCIATES
ARCHITECTURE (801) 394-3033
PLANNING CONSTRUCTION MANAGEMENT
533 26TH STREET OGDEN, UTAH

REVISED: AS BUILTS 6-90
PROJECT NUMBER: 8403
DATE: 5-21-89
DRAWN BY: L. REHBER

PROJECT: PHYSICAL EDUCATION COMPLEX
WEBER STATE COLLEGE

SHEET TITLE: POWER PLAN MID LEVEL LINK

SHEET NO. E-11

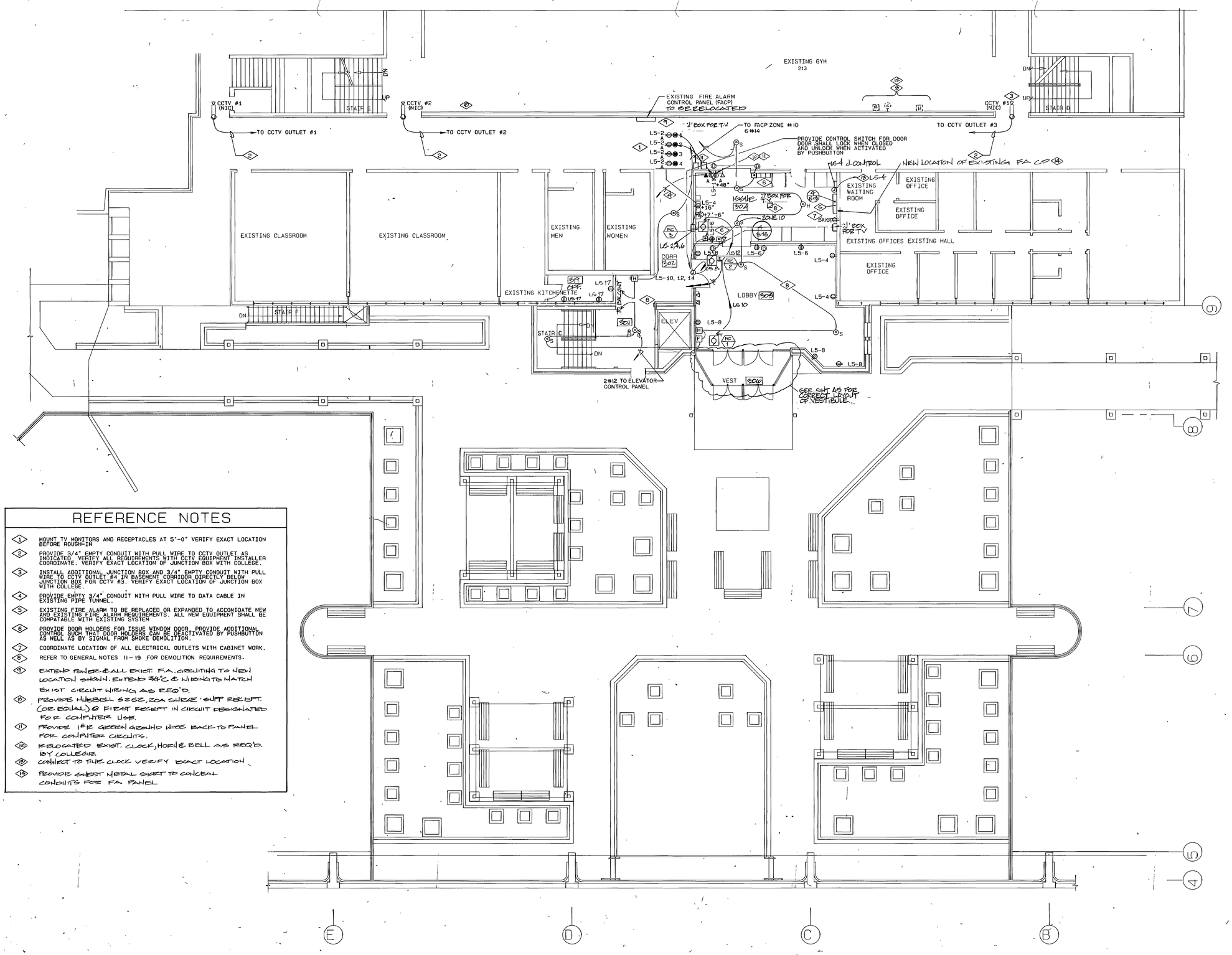

REFERENCE NOTES

1. MOUNT TV MONITORS AND RECEPTACLES AT 5'-0" VERIFY EXACT LOCATION BEFORE ROUGH-IN
2. PROVIDE 3/4" EMPTY CONDUIT WITH PULL WIRE TO CCTV OUTLET AS INDICATED. VERIFY ALL REQUIREMENTS WITH CCTV EQUIPMENT INSTALLER COORDINATE. VERIFY EXACT LOCATION OF JUNCTION BOX WITH COLLEGE.
3. INSTALL ADDITIONAL JUNCTION BOX AND 3/4" EMPTY CONDUIT WITH PULL WIRE TO CCTV OUTLET #4 IN BASEMENT CORRIDOR DIRECTLY BELOW JUNCTION BOX FOR CCTV #3. VERIFY EXACT LOCATION OF JUNCTION BOX WITH COLLEGE.
4. PROVIDE EMPTY 3/4" CONDUIT WITH PULL WIRE TO DATA CABLE IN EXISTING PIPE TUNNEL.
5. EXISTING FIRE ALARM TO BE REPLACED OR EXPANDED TO ACCOMODATE NEW AND EXISTING FIRE ALARM REQUIREMENTS. ALL NEW EQUIPMENT SHALL BE COMPATABLE WITH EXISTING SYSTEM
6. PROVIDE DOOR HOLDERS FOR ISSUE WINDOW DOOR. PROVIDE ADDITIONAL CONTROL SUCH THAT DOOR HOLDERS CAN BE DEACTIVATED BY PUSHBUTTON AS WELL AS BY SIGNAL FROM SMOKE DEMOLITION.
7. COORDINATE LOCATION OF ALL ELECTRICAL OUTLETS WITH CABINET WORK.
8. REFER TO GENERAL NOTES 11-19 FOR DEMOLITION REQUIREMENTS.
9. EXTEND POWER & ALL EXIST. F.A. CIRCUITING TO NEW LOCATION SHOWN. EXTEND 3#12 & 1#12 GND TO MATCH EXIST CIRCUIT WIRING AS REQ'D.
10. PROVIDE HUBBELL 5252, 20A SHREW 'SUPP RECEPT. (OR EQUAL) @ FIRST RECEPT IN CIRCUIT DESIGNATED FOR COMPUTER USE.
11. PROVIDE 1#12 GREEN GROUND WIRE BACK TO PANEL FOR COMPUTER CIRCUITS.
12. RELOCATED EXIST. CLOCK, HORN & BELL AS REQ'D. BY COLLEGE.
13. CONNECT TO TIME CLOCK VERIFY EXACT LOCATION
14. PROVIDE SHEET METAL SKIRT TO CONCEAL CONDUITS FOR FA PANEL

POWER PLAN
SCALE 1/8"-1'-0" PLAZA LEVEL

0000TVE12
Weber State College, Physical Education Facility - RW 84-058
Power Plan Plaza Level - 26760

RECORD DOCUMENTS JUN 15 1990
THESE DOCUMENTS HAVE BEEN REVISED TO RECORD INFORMATION SUBMITTED BY THE CONTRACTOR. WHILE THEY ARE BELIEVED TO BE RELIABLE THE ARCHITECT DOES NOT GUARANTEE THEIR ACCURACY.

REGISTERED PROFESSIONAL ARCHITECT
ROBERT J. REMBER
No. 3033
STATE OF UTAH

NOTE: THIS SHEET IS COMPRISED OF DRAWINGS AND DETAILS FROM THE ORIGINAL 1990 BUILDING CONSTRUCTION CONFORMED SET & HAS BEEN INCLUDED FOR INFORMATIONAL PURPOSES ONLY. CONDITIONS SHOWN ON THIS SHEET HAVE NOT BEEN VERIFIED WITH EXISTING CONSTRUCTED CONDITIONS.

JONES/ RICHARDS & ASSOCIATES
ARCHITECTURE
PLANNING
CONSTRUCTION MANAGEMENT
(801) 394-3033
533 25TH STREET
OGDEN, UTAH

REVISED: As Builts 6-90
PROJECT NUMBER: 8403
DATE: 9-21-88
DRAWN BY: L. REMBER

PROJECT: PHYSICAL EDUCATION COMPLEX
WEBER STATE COLLEGE
SHEET TITLE: POWER PLAN PLAZA LEVEL

SHEET NO. E-12

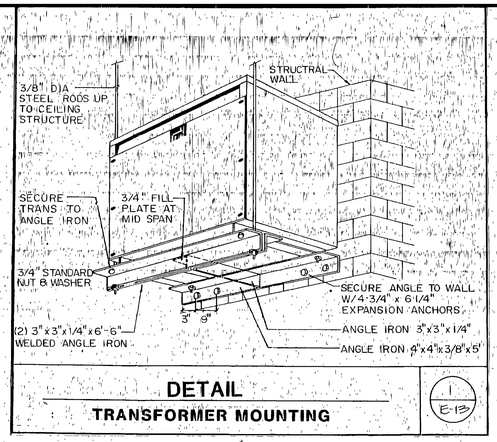

DETAIL
TRANSFORMER MOUNTING
1 / E-13

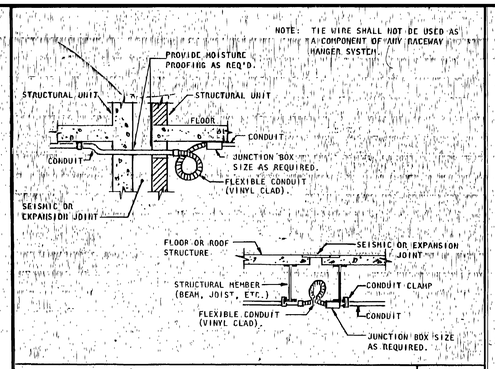

DETAIL
CONDUIT CROSSING SEISMIC OR EXPANSION JOINT
2 / E-13

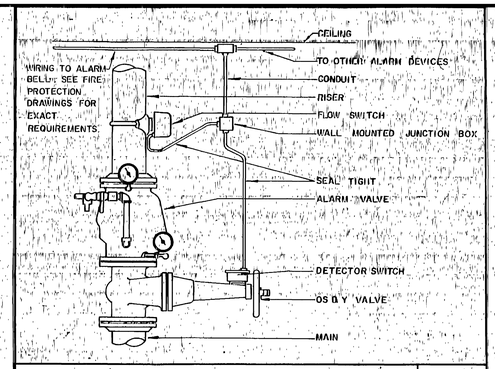

FIRE SPRINKLER CONNECTION DETAIL
3 / E-13

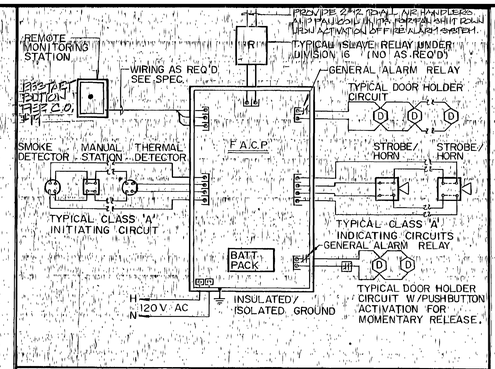

TYPICAL FIRE ALARM DIAGRAM
4 / E-13

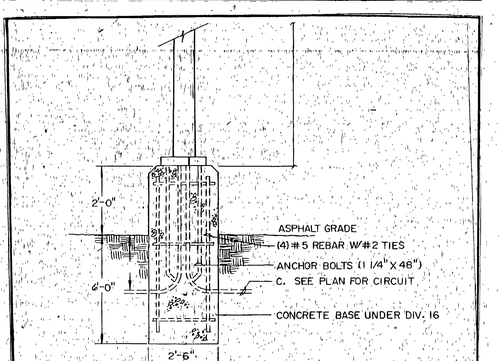

DETAIL
POLE MOUNTING
NO SCALE
5 / E-13

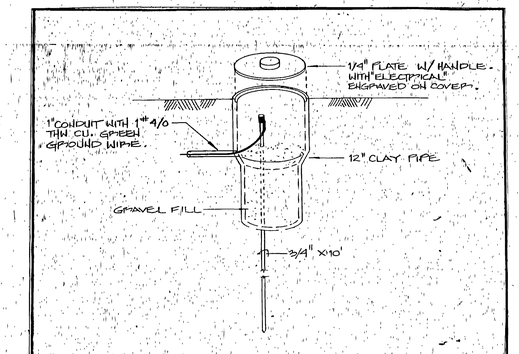

DETAIL
GROUND ROD
6 / E-13

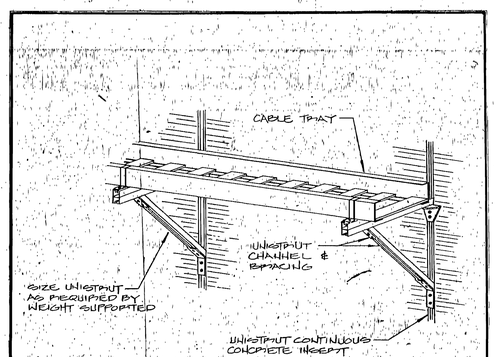

DETAIL
CABLE TRAY MOUNTING
7 / E-13

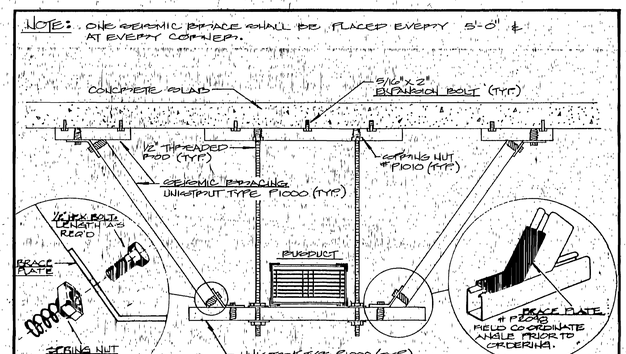

DETAIL
BUSDUCT MOUNTING WITH SIESMIC BRACING
8 / E-13

REFERENCE NOTES

1. REFER TO GENERAL NOTES 11-19 FOR DEMOLITION REQUIREMETS THIS AREA.

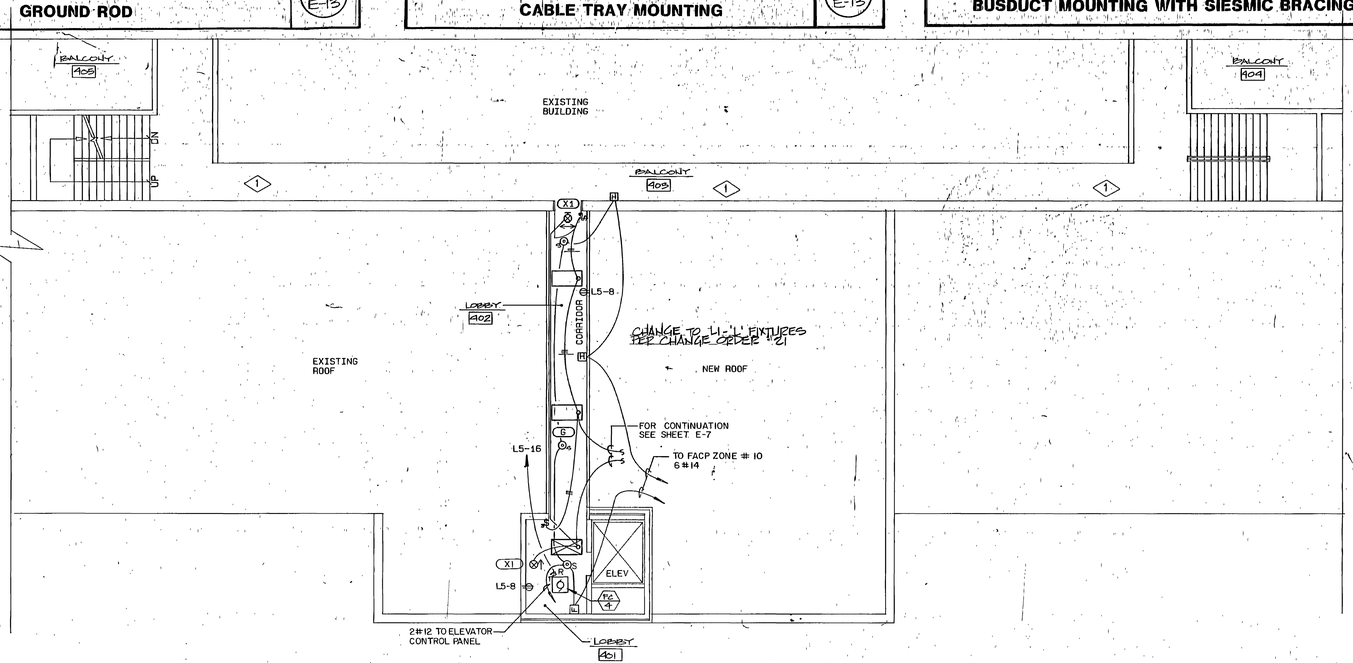

ELECTRICAL PLAN
SCALE 1/8"= 1'-0" **BALCONY LEVEL**

0000TVE13
Weber State College, Physical Education Facility - RW 84-058
Electrical Plan Balcony Level - 26761

RECORD DOCUMENTS JUL 2 1990
THESE DOCUMENTS HAVE BEEN REVISED TO RECORD INFORMATION SUBMITTED BY THE CONTRACTOR. WHILE THEY ARE ASSUMED TO BE RELIABLE THE ARCHITECT DOES NOT GUARANTEE THEIR ACCURACY.

REGISTERED PROFESSIONAL ENGINEER — RONALD J. REMBER — 154222 — STATE OF UTAH

NOTE: THIS SHEET IS COMPRISED OF DRAWINGS AND DETAILS FROM THE ORIGINAL 1990 BUILDING CONSTRUCTION CONFORMED SET & HAS BEEN INCLUDED FOR INFORMATIONAL PURPOSES ONLY. CONDITIONS SHOWN ON THIS SHEET HAVE NOT BEEN VERIFIED WITH EXISTING CONSTRUCTED CONDITIONS.

JONES/ RICHARDS & ASSOCIATES
ARCHITECTURE PLANNING CONSTRUCTION MANAGEMENT
(801) 394-3033 539 26TH STREET OGDEN, UTAH

REVISED: AS BUILTS 6-90
PROJECT NUMBER: 2403
DATE: 9-21-88
DRAWN BY: L. REMBER

PROJECT: PHYSICAL EDUCATION COMPLEX
WEBER STATE COLLEGE
SHEET TITLE: ELECTRICAL PLAN BALCONY LEVEL

SHEET NO. E-13

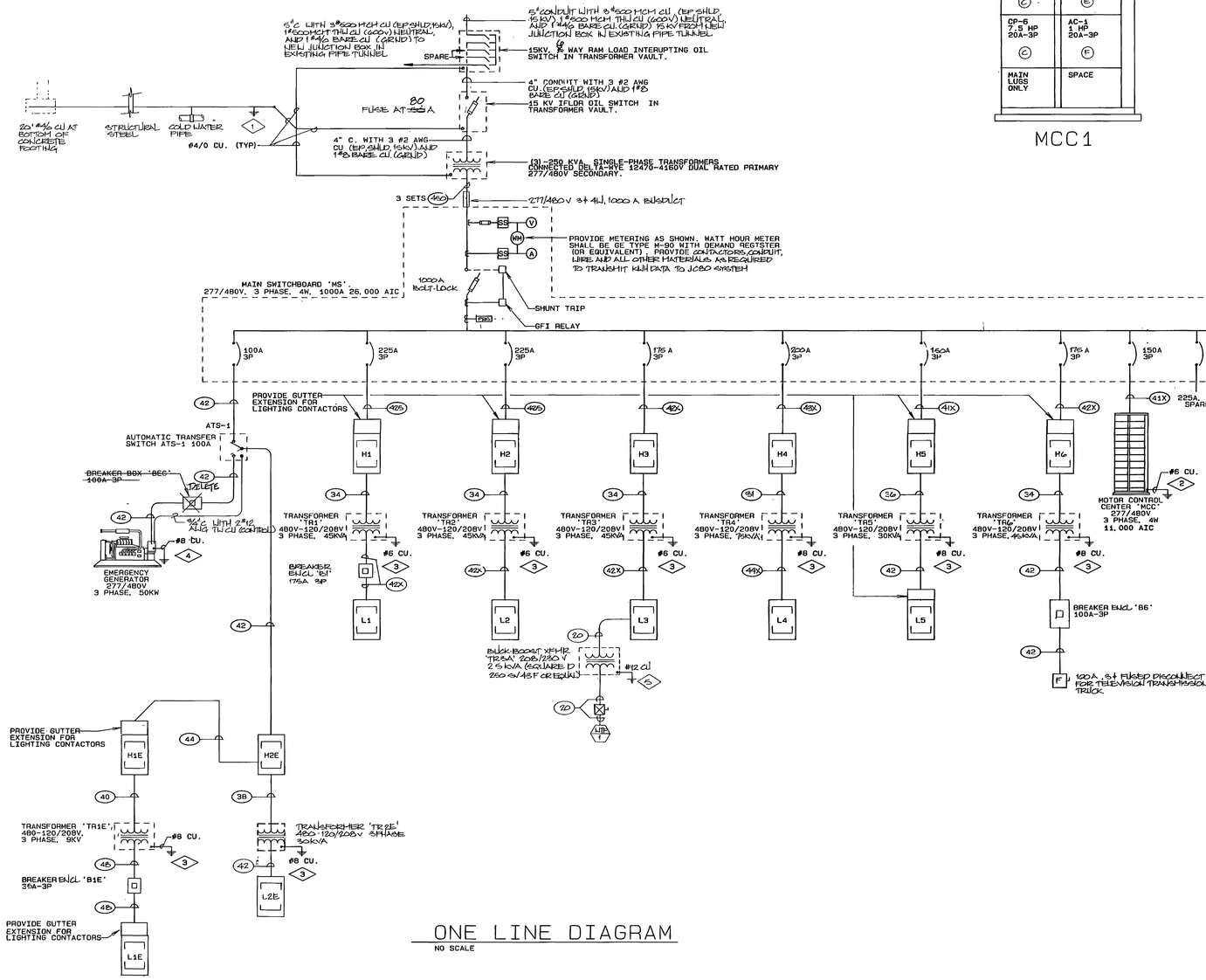

ONE LINE DIAGRAM

NO SCALE

7.5 KVAR (A)	3 KVAR (D)
AH-5 25 HP 701-3P (A)	CP-7 7.5 HP 20A-3P (D)
CP-5 3/4 HP 20A-3P (B)	5 KVAR (E)
3 KVAR (C)	CP-8 15 HP 40A-3P (E)
CP-6 7.5 HP 20A-3P (C)	AC-1 1 HP 20A-3P (F)
MAIN LUGS ONLY	SPACE

MCC1

REFERENCE NOTES

1. SEE SHEET E-11 FOR DETAILED GROUNDING REQUIREMENTS.
2. PROVIDE GROUND FROM MOTOR CONTROL CENTER TO 3/4"x10' DRIVEN GROUND ROD.
3. PROVIDE GROUND FROM GROUNDING BUS IN ALL 277/480V PANELS TO NEUTRAL LUG ON TRANSFORMERS TO 3/4"x10' DRIVEN GROUND ROD.
4. PROVIDE GROUND FROM GENERATOR TO 3/4"x10' DRIVEN GROUND ROD.
5. PROVIDE GROUND FROM GROUNDING BUS IN 120/208V PANEL TO NEUTRAL LUG ON BULK BOOST TRANSFORMER TO 3/4"x 10' DRIVEN GROUND ROD

CONDUCTOR & CONDUIT SCHEDULE

TYPE	AMP.	COND. SIZE	CONDUCTOR GUAN	CONDUCTOR SIZE	INSULATION
20	30	3/4	2	10	TW
30	"	"	3	"	"
40	"	"	4	"	"
28	45	"	2	8	THW
38	"	"	3	"	"
48	"	1	4	"	"
26	65	3/4	2	6	"
36	"	1	3	"	"
46	"	"	4	"	"
24	85	"	2	4	"
34	"	"	3	"	"
44	"	1 1/4	4	"	"
32	115	"	3	2	"
42	"	"	4	"	"
31	130	"	3	1	"
41	"	1 1/2	4	"	"
31X	150	"	3	1/0	"
41X	"	2	4	"	"
32X	175	1 1/2	3	2/0	"
42X	"	2	4	"	"
33X	200	"	3	3/0	"
43X	"	"	4	"	"
34X	230	"	3	4/0	"
44X	"	2 1/2	4	"	"
325	255	"	3	250	"
425	"	"	4	"	"
335	310	"	3	350	"
435	"	3	4	"	"
340	335	"	3	400	"
440	"	"	4	"	"
350	380	3 1/2	3	500	XHHW
450	"	"	4	"	"

0000TVE14
Weber State College, Physical Education Facility - RW 84-058
One-Line Diagram - 26782

RECORD DOCUMENTS JUL 2 1990

THESE DOCUMENTS HAVE BEEN REVISED TO RECORD INFORMATION SUBMITTED BY THE CONTRACTOR. WHILE THEY ARE ASSUMED TO BE RELIABLE THE ARCHITECT DOES NOT GUARANTEE THEIR ACCURACY.

REGISTERED PROFESSIONAL ENGINEER — ROBERT J. BEUTNER — 154222 — STATE OF UTAH

NOTE: THIS SHEET IS COMPRISED OF DRAWINGS AND DETAILS FROM THE ORIGINAL 1990 BUILDING CONSTRUCTION CONFORMED SET & HAS BEEN INCLUDED FOR INFORMATIONAL PURPOSES ONLY. CONDITIONS SHOWN ON THIS SHEET HAVE NOT BEEN VERIFIED WITH EXISTING CONSTRUCTED CONDITIONS.

JONES/ RICHARDS & ASSOCIATES
PLANNING · CONSTRUCTION MANAGEMENT
533 25TH STREET · OGDEN UTAH
ARCHITECTURE (801) 394-3033

REVISED: AS BUILTS 6-90

PROJECT NUMBER: 8403.
DATE: 6-21-88
DRAWN BY: L. REMBER

PROJECT: PHYSICAL EDUCATION COMPLEX
WEBER STATE COLLEGE

SHEET TITLE: ONE LINE DIAGRAM

SHEET NO. E-14

RECORD DOCUMENTS JUL 2 1990
THESE DOCUMENTS HAVE BEEN REVISED TO RECORD INFORMATION SUBMITTED BY THE CONTRACTOR, WHILE THEY ARE ASSUMED TO BE RELIABLE THE ARCHITECT DOES NOT GUARANTEE THEIR ACCURACY.

REGISTERED PROFESSIONAL ENGINEER
ROBERT J. RICHARDS
No. 233222
STATE OF UTAH

NOTE: THIS SHEET IS COMPRISED OF DRAWINGS AND DETAILS FROM THE ORIGINAL 1990 BUILDING CONSTRUCTION CONFORMED SET & HAS BEEN INCLUDED FOR INFORMATIONAL PURPOSES ONLY. CONDITIONS SHOWN ON THIS SHEET HAVE NOT BEEN VERIFIED WITH EXISTING CONSTRUCTED CONDITIONS.

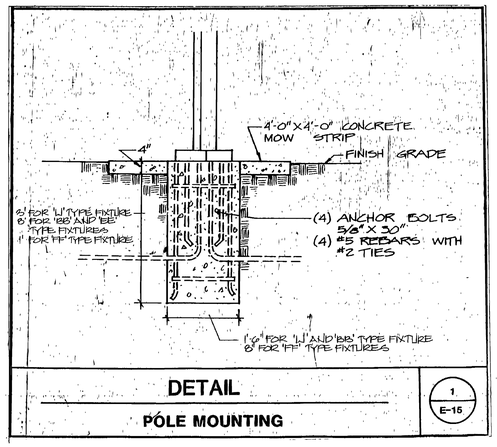

DETAIL
POLE MOUNTING
1 / E-15

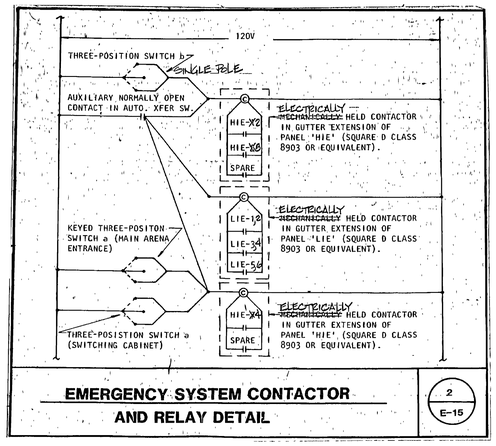

EMERGENCY SYSTEM CONTACTOR AND RELAY DETAIL
2 / E-15

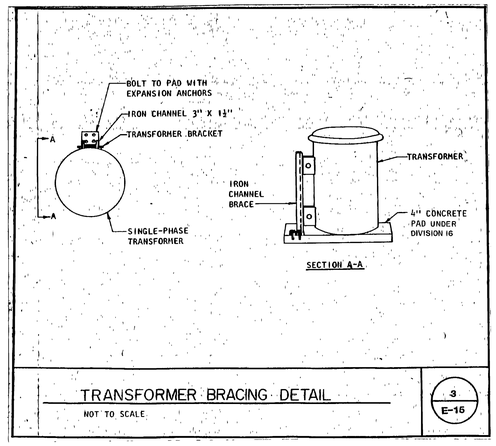

TRANSFORMER BRACING DETAIL
NOT TO SCALE
3 / E-16

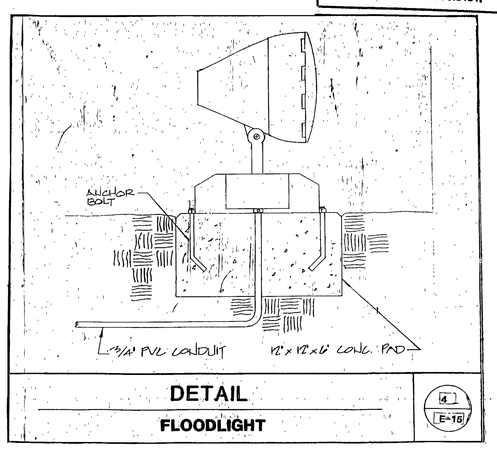

DETAIL
FLOODLIGHT
4 / E-15

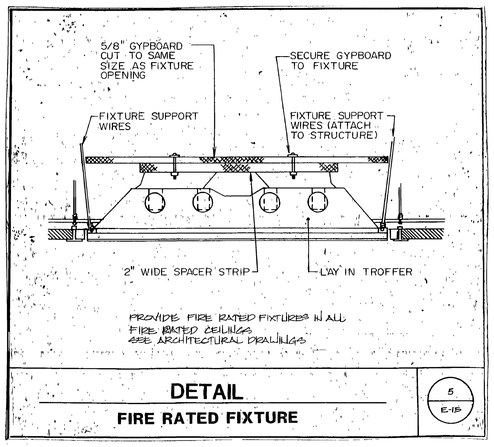

DETAIL
FIRE RATED FIXTURE
5 / E-15

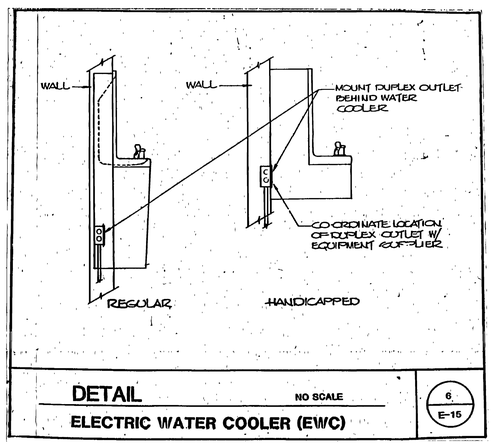

DETAIL NO SCALE
ELECTRIC WATER COOLER (EWC)
6 / E-15

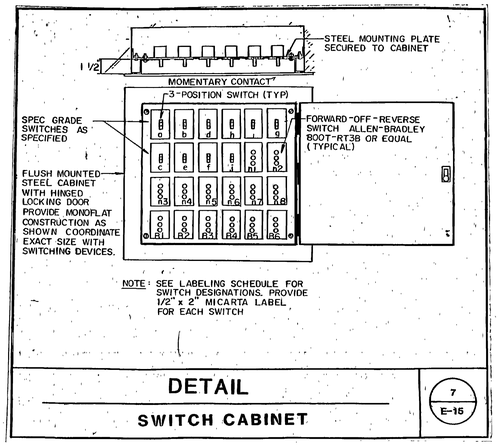

DETAIL
SWITCH CABINET
7 / E-15

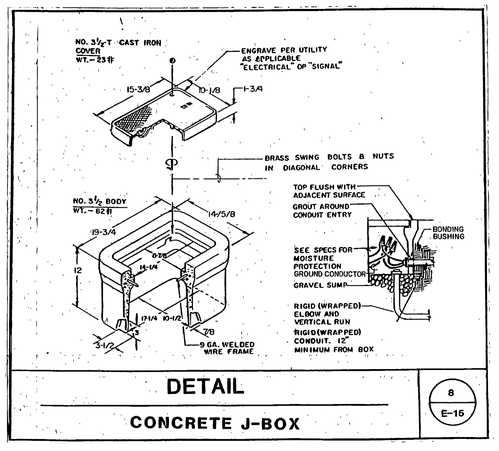

DETAIL
CONCRETE J-BOX
8 / E-15

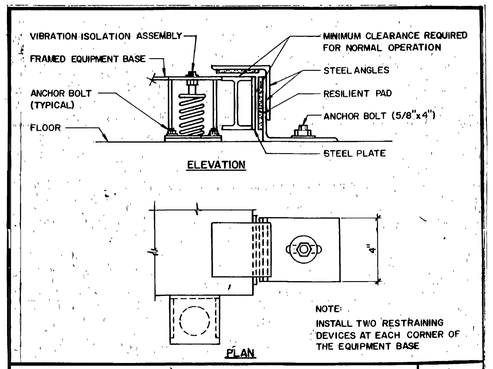

GENERATOR RESTRAINT DETAIL
9 / E-15

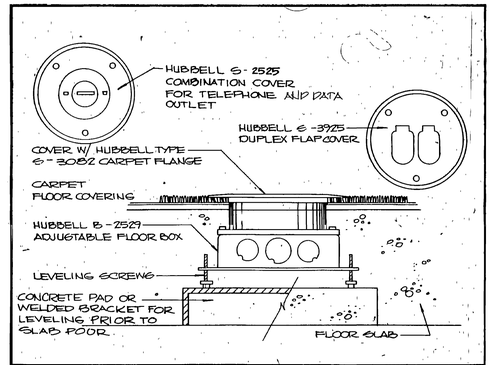

FLOOR BOX INSTALLATION DETAIL
ABOVE GRADE SLAB
10 / E-15

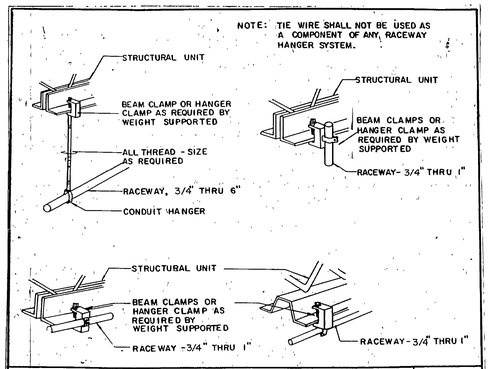

TYPICAL RACEWAY SUPPORT METHODS DETAIL
11 / E-15

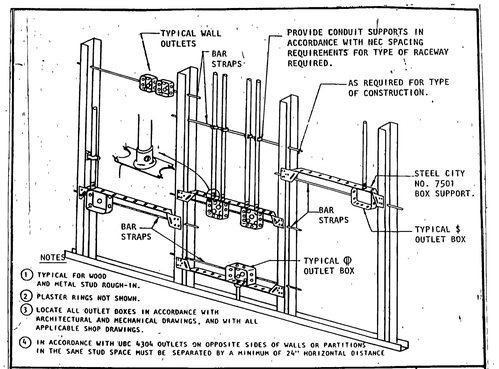

TYPICAL ROUGH-IN REQUIREMENTS DETAIL
12 / E-15

0000TVE15
Weber State College, Physical Education Facelty - RW 84-058
Details - 29763

jra JONES/ RICHARDS & ASSOCIATES
ARCHITECTURE (801) 394-3033
PLANNING CONSTRUCTION MANAGEMENT
533 26TH STREET OGDEN, UTAH

REVISED: 4-90 AS BUILTS
PROJECT NUMBER: 8403.
DATE: 6-21-88
DRAWN BY: L REMBER

PROJECT: PHYSICAL EDUCATION COMPLEX
WEBER STATE COLLEGE

SHEET TITLE: DETAILS

SHEET NO E-15

PANELBOARD SCHEDULE

PANEL 'L1E' TYPE NQOB 120/208 VOLTS 3 Ø 4 W
MOUNTING ■ FLUSH □ SURFACE DIMENSIONS 20 W 5 3/4 D H LOCATION EQUIP. STOR. 100 AMP. MAINS ■ LUGS □ BREAKER

BRANCH BREAKERS

ITEM	AMPS	POLE	WIRE SIZE	CIR NO	LEFT A	LEFT B	LEFT C	RIGHT A	RIGHT B	RIGHT C	CIR NO	AMPS	POLE	WIRE SIZE	ITEM
EMERG. QUARTZ LTS	20	1	8	1	900			900			2	20	1	10	EMERG. QUARTZ LTS.
				3		900			900		4				
				5			900			900	6				
~~SPACE~~ SPARE				7							8				~~SPARE~~ EM CONTROL
SPARE				9							10				
				11							12				
				13							14				SPACE
				15							16				
				17							18				
				19							20				MAIN BREAKER
				21							22				
				23							24				
				25							26				
				27							28				
				29							30				
				31							32				
				33							34				
				35							36				
				37							38				
				39							40				
				41							42				
					900	900	900	900	900	900					
TOTAL					1800	1800	1800								
AMPS / PHASE					15	15	15								

FEEDER: □ TOP □ BOTTOM — TOTAL CONNECTED LOAD 5400 VA
CONDUIT SIZE 3/4" WIRE SIZE 4 #[illegible] AWG THW CU — EQUIPMENT RATING 10,000 AMPS RMS SYM

PANELBOARD SCHEDULE

PANEL 'L2E' TYPE NQOD 120/208 VOLTS 3 Ø 4 W
MOUNTING □ FLUSH ■ SURFACE DIMENSIONS 20 W 5 3/4 D H LOCATION [illegible] AMP. MAINS □ LUGS ■ BREAKER

BRANCH BREAKERS

ITEM	AMPS	POLE	WIRE SIZE	CIR NO	LEFT A	LEFT B	LEFT C	RIGHT A	RIGHT B	RIGHT C	CIR NO	AMPS	POLE	WIRE SIZE	ITEM
EXIST. EXIT SIGNS	20	1		1	425			1000			2	20	1		~~SPARE~~ TEL BOARD
EXIST. EXIT SIGNS				3		425			1000		4				(SWENSON GYM
EXIST. EGRESS LTS				5			600			1000	6				EMERGENCY LIGHTS)
~~EXIST. FACP~~ FIRE ALARM				7	500			1000			8				
~~EXIST. FACP~~ FIRE ALARM				9		500			1000		10				
DTP-1			12	11			865			1000	12				
RTP-1	20	2	12	13	387			1000			14				
			–	15		387			1000		16				
SPARE			–	17			387			1000	18				
~~ELEV~~ CONT. PNL	20		12	19	500			1000			20				
TELEPHONE			12	21		500			1000		22				
SPACE				23						1000	24				
				25				1000			26				
				27					1000		28				
				29						1000	30				
				31							32				SPARE
				33							34				
				35							36				
				37							38				
				39							40				
				41							42				
					1810	1812	1850	5000	5000	5000					
TOTAL					6810	6812	6850								
AMPS / PHASE					57	57	57								

FEEDER: □ TOP □ BOTTOM — TOTAL CONNECTED LOAD 20,470 VA
CONDUIT SIZE 1-1/4" WIRE SIZE 4 #[illegible] AWG THW CU — EQUIPMENT RATING 10,000 AMPS RMS SYM

PANELBOARD SCHEDULE

PANEL 'H1E' TYPE NEHB 277/480 VOLTS 3 Ø 4 W
MOUNTING ■ FLUSH □ SURFACE DIMENSIONS 20 W 5 3/4 D H LOCATION EQUIP. STORAGE 100 AMP. MAINS ■ LUGS □ BREAKER

BRANCH BREAKERS

ITEM	AMPS	POLE	WIRE SIZE	CIR NO	LEFT A	LEFT B	LEFT C	RIGHT A	RIGHT B	RIGHT C	CIR NO	AMPS	POLE	WIRE SIZE	ITEM
~~LIGHTS~~ SPARE	20	1	10	1	3300			1800			2	20	3	12	~~XFMR 'TR1E'~~ LIGHTS
~~LIGHTS~~ SPARE				3		650			1800		4	–	–	–	LIGHTS
LIGHTS				5			2100			1800	6	–	–	–	LIGHTS
SPARE-TR1E				7							8	20	1		~~SPACE~~ LIGHTS
LIGHTS			12	9		1200					10				SPACE
SPARE				11							12				
SPACE				13							14				
				15							16				
				17							18				
				19							20				
				21							22				
				23							24				
				25							26				
				27							28				
				29							30				
				31							32				
				33							34				
				35							36				
				37							38				
				39							40				
				41							42				
					3300	1850	2100	1800	1800	1800					
TOTAL					5100	3650	3900								
AMPS / PHASE					18	13	14								

FEEDER: □ TOP □ BOTTOM — TOTAL CONNECTED LOAD 12,650VA
CONDUIT SIZE 3/4" WIRE SIZE 4 #[illegible] AWG THW CU — EQUIPMENT RATING 14,000 AMPS RMS SYM.

PANELBOARD SCHEDULE

PANEL 'H2E' TYPE NEHB 277/480 VOLTS 3 Ø 4 W
MOUNTING □ FLUSH ■ SURFACE DIMENSIONS 20 W 5 3/4 D H LOCATION ELEC. RM. 100 AMP. MAINS ■ LUGS □ BREAKER

BRANCH BREAKERS

ITEM	AMPS	POLE	WIRE SIZE	CIR NO	LEFT A	LEFT B	LEFT C	RIGHT A	RIGHT B	RIGHT C	CIR NO	AMPS	POLE	WIRE SIZE	ITEM
LIGHTS	20	1	10	1	2350			6810			2	50	3	8	~~XFMR 'TR2E'~~ SPARE
				3		750			6310		4	–	–	–	– SPARE
				5			1800			6850	6	–	–	–	– SPARE
SPARE				7				5100			8	30	3	4	~~PANEL 'H1E'~~ TR2E
PANEL H1E				9					3650		10	–	–	–	–
				11						3900	12	–	–	–	–
SPACE				13							14	20	1		SPACE
				15							16				
				17							18				
				19							20				
				21							22				
				23							24				
				25							26				
				27							28				
				29							30				
				31							32				
				33							34				
				35							36				
				37							38				
				39							40				
				41							42				
					2350	750	1800	1410	9960	10750					
TOTAL					14160	10710	12550								
AMPS / PHASE					51	39	45								

FEEDER: □ TOP □ BOTTOM — TOTAL CONNECTED LOAD 37420 VA
CONDUIT SIZE 1-1/4" WIRE SIZE 4 #[illegible] AWG THW CU — EQUIPMENT RATING 14,000 AMPS RMS SYM

PANELBOARD SCHEDULE

PANEL 'L1' TYPE NQOD 120/208 VOLTS 3 Ø 4 W
MOUNTING □ FLUSH ■ SURFACE DIMENSIONS 20 W 5 3/4 D H LOCATION ISSUE ROOM 225 AMP. MAINS ■ LUGS □ BREAKER

BRANCH BREAKERS

ITEM	AMPS	POLE	WIRE SIZE	CIR NO	LEFT A	LEFT B	LEFT C	RIGHT A	RIGHT B	RIGHT C	CIR NO	AMPS	POLE	WIRE SIZE	ITEM
RECEPTACLES-S.E.GYM	20	1	12	1	1000			800			2	20	1	10	RECEPTACLES-GYM
-ISSUE RM				3		1200			1000		4				-SW STOR
-VEST				5			1200			1000	6				-SW. STOR
~~EWC~~ EWC				7	800			1200			8				
RECEPTACLES-GYM FL			10	9		800			1000		10				
SOUND CABINET			12	11			1200			450	12			12	LIGHT
~~WH-1~~ SPARE	30	2	10	13	1500			1560			14	30	1	8	~~NT-1~~ W CURTAIN WALL
"	–	–	–	15		1500			1560		16	–	–	–	BB-1 SW BB
~~WH-1~~ "	30	2	10	17			1500			1560	18	–	–	–	NT-1 S CURTAIN WALL
– "	–	–	–	19	1500			1560			20	30	1	10	NT-1 S CENTRE CURTAIN WALL
EF-5	20	1	12	21		700			1560		22	–	–	–	NT-1 E CURTAIN WALL
EF-6	20	1	12	23			700			1560	24	–	–	–	BB-1 S E BB
~~[illegible]~~ SPARE	20	1	12	25	400			200			26	20	1	12	RECEPTACLE - COMP
~~SECURITY~~ W. WILT			12	27		500					28	20	1		~~SPARE~~ SWITCH CAB
SPACE				29							30				SECURITY PANEL
				31							32				E W.H.
				33							34				
				35							36				
				37							38				
				39							40				
				41							42				
					5200	4700	4600	5320	5120	4570					
TOTAL					10520	9820	9170								
AMPS./PHASE					88	82	76								

FEEDER: □ TOP □ BOTTOM — TOTAL CONNECTED LOAD 29510 VA
CONDUIT SIZE 2" WIRE SIZE 4 #2/0 AWG THW CU — EQUIPMENT RATING 10,000 AMPS RMS SYM

PANELBOARD SCHEDULE

PANEL 'H1' TYPE NEHB 277/480 VOLTS 3 Ø 4 W
MOUNTING ■ FLUSH □ SURFACE DIMENSIONS 20 W 5 3/4 D H LOCATION EQUIP. STORAGE 225 AMP. MAINS ■ LUGS □ BREAKER

BRANCH BREAKERS

ITEM	AMPS	POLE	WIRE SIZE	CIR NO	LEFT A	LEFT B	LEFT C	RIGHT A	RIGHT B	RIGHT C	CIR NO	AMPS	POLE	WIRE SIZE	ITEM
LIGHTS	20	1	8	1	3520			3520			2	20	1	10	LIGHTS
				3		3520			3520		4				
				5			3520			3520	6				
			12	7	2640			3520			8				
				9		2640			3520		10				
				11			2640			3520	12				
				13	2640			3520			14			12	
			10	15		2640			3520		16				
			10	17			2640			3520	18				
			12	19	2640			3300			20				
				21		2640			3450		22				
				23			3520			3000	24				
				25	2640			3000			26				ISSUE RM & WOMENS LIGHTS
				27		3520			1900		28				MENS & S W STOR LIGHTS
SPARE				29							30				SPARE
				31							32				
				33							34				
				35							36				
				37				10520			38	70	3	4	~~XFMR 'TR1'~~
				39					9820		40	–	–	–	–
TR1				41						9170	42	–	–	–	–
					14080	14960	12320	27380	24780	22730					
TOTAL					41460	39690	35050								
AMPS / PHASE					150	143	126								

FEEDER: □ TOP □ BOTTOM — TOTAL CONNECTED LOAD 116,200 VA
CONDUIT SIZE 2-1/2" WIRE SIZE 4 [illegible] THW CU — EQUIPMENT RATING 14,000 AMPS RMS SYM

PANELBOARD SCHEDULE

PANEL 'L2' TYPE NQOD 120/208 VOLTS 3 Ø 4 W
MOUNTING □ FLUSH ■ SURFACE DIMENSIONS 20 W 5 3/4 D H LOCATION STORAGE ROOM 175 AMP. MAINS □ LUGS ■ BREAKER

BRANCH BREAKERS

ITEM	AMPS	POLE	WIRE SIZE	CIR NO	LEFT A	LEFT B	LEFT C	RIGHT A	RIGHT B	RIGHT C	CIR NO	AMPS	POLE	WIRE SIZE	ITEM
RECEPTACLES	20	1	12	1	800			800			2	20	1	10	RECEPTACLES
				3		800			800		4				
				5			1000			800	6				
~~SPARE~~ EF.13	20	1	[illegible]	7	[illegible]			800			8			12	
~~SPARE~~ FLOOR WASH	20	1	[illegible]	9		[illegible]			1000		10			12	
~~BB-1~~ FLOOR WASHER	30	1	8	11			1560			800	12			10	GYM FL OUTLET
~~N-1~~ N.W BB				13	1560			1560			14	30	1	10	~~BB-1~~ N.C. CURTAIN WALL
~~BB-1~~ W BB				15		1560			1560		16				~~N-1~~ NE. BB
~~N-1~~ E BB			10	17			1560			1560	18				~~BB-1~~ N CURTAIN WALL
~~N-1~~ TRACK FLOOR OUTLET			10	19	1560			1300			20	20	1	10	~~LIGHTING~~ NE. HIGH INTENSITY LIGHTS S.E.
WH-1	30	2	10	21		1500			1300		22				
–	–	–	–	23			1500			1300	24				
SPARE	20	1		25				1300			26				HIGH INTENSITY LIGHTING
				27					1300		28				
JOHNSON CONTROL				29						1300	30				
SPARE				31				1300			32			8	N W HIGH INTENSITY LIGHTS
				33					1300		34				
				35						1300	36				
				37				1300			38				SW. HIGH INTENSITY LIGHTS
				39					1300		40				
				41						1300	42				
					3920	3860	3620	8360	3560	8360					
TOTAL					12,280	12,420	13980								
AMPS./PHASE					182	164	117								

FEEDER: □ TOP □ BOTTOM — TOTAL CONNECTED LOAD [illegible]
CONDUIT SIZE 2" WIRE SIZE 4 #2/0 AWG THW CU — EQUIPMENT RATING 10,000 AMPS RMS SYM

PANELBOARD SCHEDULE

PANEL 'H2' TYPE NEHB 277/480 VOLTS 3 Ø 4 W
MOUNTING □ FLUSH ■ SURFACE DIMENSIONS 20 W 5 3/4 D H LOCATION STORAGE 225 AMP. MAINS ■ LUGS □ BREAKER

BRANCH BREAKERS

ITEM	AMPS	POLE	WIRE SIZE	CIR NO	LEFT A	LEFT B	LEFT C	RIGHT A	RIGHT B	RIGHT C	CIR NO	AMPS	POLE	WIRE SIZE	ITEM
LIGHTS	20	1	12	1	2640			3520			2	20	1	10	LIGHTS
			12	3		2640			2640		4				
			10	5			3520			3520	6				
				7	2640			3750			8				
				9		2640			550		10			12	
STOR RMS LIGHTS			12	11			900			3900	12			12	
~~AH-2~~ SPARE	60	3	6	13	7480			390			14	20	3	12	CP-2
– SPARE	–	–	–	15		7480			390		16	–	–	–	–
-GYM LIGHTS	–	–	–	17			7480			390	18	–	–	–	–
~~AH-1~~ SPARE	60	3	6	19	7480			390			20	20	3	12	CP-1
–	–	–	–	21		7480			390		22	–	–	–	–
– CP1	–	#3	–	23			7480			390	24	–	–	–	–
~~SPACE~~	20	1		25				12280			26	70	3	4	XFMR 'TR2'
SPACE			–	27					12280		28	–	–	–	–
~~LIGHTS~~ AH1	20	#3	10	29			2640			12280	30	–	–	–	–
SPACE				31							32	20	1		SPARE
				33							34				
				35							36				
				37							38				
				39							40				
TR2				41							42				
					20240	20240	22020	20330	19390	22180					
TOTAL					40570	39630	44200								
AMPS / PHASE					146	143	160								

FEEDER: □ TOP □ BOTTOM — TOTAL CONNECTED LOAD 111800 VA
CONDUIT SIZE 2-1/2" WIRE SIZE 4 [illegible] THW CU — EQUIPMENT RATING 14,000 AMPS RMS SYM

PANELBOARD SCHEDULE

PANEL 'L3' TYPE NQOD 120/208 VOLTS 3 Ø 4 W
MOUNTING □ FLUSH ■ SURFACE DIMENSIONS 20 W 5 3/4 D H LOCATION STORAGE ROOM 150 AMP. MAINS □ LUGS ■ BREAKER

BRANCH BREAKERS

ITEM	AMPS	POLE	WIRE SIZE	CIR NO	LEFT A	LEFT B	LEFT C	RIGHT A	RIGHT B	RIGHT C	CIR NO	AMPS	POLE	WIRE SIZE	ITEM
RECEPTACLES	20	1	12	1	1000			600			2	20	1	12	RECEPTACLES COMP
				3		1000			600		4				
				5			1000			600	6				
				7	1200			900			8				
				9		1200			600		10				
FREEZER				11			1500			600	12				
REFRIGERATOR				13	1500			600			14				
EWC				15		1200					16				SPARE
~~[illegible]~~ SPARE	20	2	10	17			1570			1000	18			12	RECEPTACLES
RECEPTACLE HEIGH TANK	–	–	–	19	1570			1000			20				
RECEPTACLES	20	1	12	21		1000			1000		22				
				23			800			600	24				
				25	800			1000			26				
REC-COMP.				27		600			1000		28				
SPARE				29			[illegible]			300	30				CASH REGISTER
RECEPTACLE				31	800			600			32				RECEPTACLES COMP
				33		1000					34				~~SPARE~~ WATER HEATER
				35			800				36		2		RM 206
SPARE				37	[illegible]						38				
JTP-1	60	2	6	39		5500					40				
			–	41			5500				42				
					6370	11500	10670	4700	3200	3100					
TOTAL					11070	14700	11700								
AMPS / PHASE					92	123	98								

FEEDER: □ TOP □ BOTTOM — TOTAL CONNECTED LOAD 37470 VA
CONDUIT SIZE 2" WIRE SIZE 4 #2/0 AWG THW CU — EQUIPMENT RATING 10,000 AMPS RMS SYM

PANELBOARD SCHEDULE

PANEL H3 TYPE NEHB 277/480 VOLTS 3 Ø 4 W
MOUNTING □ FLUSH ■ SURFACE DIMENSIONS 20 W 5 3/4 D H LOCATION STORAGE RM. 225 AMP. MAINS ■ LUGS □ BREAKER

BRANCH BREAKERS

ITEM	AMPS	POLE	WIRE SIZE	CIR NO	LEFT A	LEFT B	LEFT C	RIGHT A	RIGHT B	RIGHT C	CIR NO	AMPS	POLE	WIRE SIZE	ITEM
~~LIGHTS — HALL~~	20	1	10	1	2350			8870			2	80	3	4	~~ELEVATOR~~ NOT USEABLE
~~LIGHTS — OFFICE~~ ELEVATOR			12	3		3200			8870		4	–	–	–	–
~~LIGHTS — LAB~~			12	5			2100			8870	6	–	–	–	–
SPACE				7				11070			8	70	3	4	XFMR 'TR3'
NOT USEABLE				9					14700		10	–	–	–	–
				11						11700	12	–	–	–	–
				13							14	20	1		~~SPARE~~ LIGHTS-HALL
				15							16				LIGHTS-OFFICE
				17							18				LIGHTS-LAB
				19							20				SPARE
				21							22				
				23							24				
				25							26				
				27							28				
				29							30				
				31							32				
				33							34				
				35							36				
				37							38				
				39							40				
				41							42				
					2350	3200	2100	19940	23570	20570					
TOTAL					22290	26770	22670								
AMPS./PHASE					80	97	82								

FEEDER: □ TOP □ BOTTOM — TOTAL CONNECTED LOAD 71730 VA
CONDUIT SIZE [illegible]2" WIRE SIZE 4 #[illegible] AWG THW CU — EQUIPMENT RATING 14,000 AMPS RMS SYM

PANELBOARD SCHEDULE

PANEL 'L4' TYPE NQOD 120/208 VOLTS 3 Ø 4 W
MOUNTING □ FLUSH ■ SURFACE DIMENSIONS 20 W 5 3/4 D H LOCATION STORAGE ROOM 225 AMP. MAINS □ LUGS ■ BREAKER

BRANCH BREAKERS

ITEM	AMPS	POLE	WIRE SIZE	CIR NO	LEFT A	LEFT B	LEFT C	RIGHT A	RIGHT B	RIGHT C	CIR NO	AMPS	POLE	WIRE SIZE	ITEM
RECEPTACLES HALL	20	1	12	1	800			800			2	20	1	12	RECEPTACLES
HALL				3		800			1000		4				
HALL				5			1000			1000	6				
LT-2			8	7	5000			1000			8				
DINNER PNL A	70		4	9		6000					10				SPARE
DINNER PNL B	70		4	11			6000				12				SPARE
T-2	20		8	13	5000			400			14	20	1	12	RECEP. COMP.
~~EF-9~~ SPARE			12	15		140			1200		16	20	1	10	RECEPTACLES
EF-7			12	17			70			200	18			12	RECEPT. COMP
LIGHTING			12	19	1300			500			20			12	SOUND/LAB ~~SPARE~~ HIGH INT LIGHTS
				21		1300					22				
				23			1300				24				
HIGH INT. LIGHTS				25	1300						26				
"				27		1300					28				
"				29			1300				30				JOHNSON CONTROL
				31	1300						32				~~SPARE~~ SPARE
T-1 - TRED MILL				33		1300					34	60	2	6	SPORTS LAB W.H.
				35			1300				36				SPORTS LAB PNL
T-1	20	3	12	37	940						38				
–	–	–	–	39		940					40				
–	–	–	–	41			940				42				
					11640	11780	11910	2700	2200	1200					
TOTAL					14340	13980	13110								
AMPS / PHASE					124	117	109								

FEEDER: □ TOP □ BOTTOM — TOTAL CONNECTED LOAD 41,430VA
CONDUIT SIZE 2-1/2" WIRE SIZE 4 #2 AWG THW CU — EQUIPMENT RATING 10,000 AMPS RMS SYM

PANELBOARD SCHEDULE

PANEL H4 TYPE NEHB 277/480 VOLTS 3 Ø 4 W
MOUNTING □ FLUSH ■ SURFACE DIMENSIONS 20 W 5 3/4 D H LOCATION ELEC. RM. 225 AMP. MAINS ■ LUGS □ BREAKER

BRANCH BREAKERS

ITEM	AMPS	POLE	WIRE SIZE	CIR NO	LEFT A	LEFT B	LEFT C	RIGHT A	RIGHT B	RIGHT C	CIR NO	AMPS	POLE	WIRE SIZE	ITEM
LIGHTS - HALL	20	1	12	1	2350			3200			2	20	1	10	LIGHTS ~~LAB~~
LIGHTS - DANCE				3		3200			3500		4		3		TR 4
LIGHTS - DANCE				5			3200			2500	6				
~~DC-1~~ SPARE	20	2	12	7	1320			775			8	20	3	12	~~EF-3, EF-4~~ SPORTS LIGHTS
- SPARE	–	–	–	9		1320			775		10	–	–	–	-LIGHTS
LIGHTS - LAB	20	1		11			2800			775	12	–	–	–	-LIGHTS
~~[illegible]~~ DRYCOOLER	40	3	8	13	8480						14				~~SPARE~~ LIGHTS
			–	15		8480					16				
			–	17			8480				18		3		EF 3 & 4
~~XFMR "TR4"~~	~~135~~	3	1	19	14340						20				
SPORTS LAB AC.			–	21		13980					22				
			–	23			13110				24				
SPARE	20	1		25							26				
				27							28				
				29							30				
				31							32				
				33							34				
				35							36				
				37							38				
				39							40				
				41							42				
					26490	26980	27390	3975	4275	3275					
TOTAL					30465	31265	30865								
AMPS./PHASE					110	115	111								

FEEDER: □ TOP □ BOTTOM — TOTAL CONNECTED LOAD 92,585 VA
CONDUIT SIZE [illegible] WIRE SIZE 4 #[illegible] AWG THW CU — EQUIPMENT RATING 14,000 AMPS RMS SYM

PANELBOARD SCHEDULE

PANEL 'L5' TYPE NQOD 120/208 VOLTS 3 Ø 4 W
MOUNTING □ FLUSH □ SURFACE DIMENSIONS 20 W 5 3/4 D H LOCATION ELECT RM. 100 AMP. MAINS □ LUGS ■ BREAKER

BRANCH BREAKERS

ITEM	AMPS	POLE	WIRE SIZE	CIR NO	LEFT A	LEFT B	LEFT C	RIGHT A	RIGHT B	RIGHT C	CIR NO	AMPS	POLE	WIRE SIZE	ITEM
RECEPTACLES	20	1	12	1	800			800			2	20	1	12	RECEPTACLES TV
				3		800			800		4				RECEPTACLES
				5			600			800	6				
~~SPACE~~ LEAK DETECTOR	–	–		7				1200			8				
LIGHT			12	9		850			865		10				FC-1
RECEP.- COMP.			10	11			400			700	12				FC-3
[illegible] ATC	20	1	12	13	500			865			14				FC-2
CLOCKS	20	1	12	15		500			700		16				FC-4
RECEPT			12	17			600			3000	18	30	1	10	WATER JACK. HTR.
EF-8				19	1175						20	20			~~SPARE~~ EF 10
EF-9				21		185					22				EF 11
AD-1				23			530				24				PHOTO CELL POWER
GARDEN LTS			8	25	410						26				SPARE
SPARE				27							28				
				29							30				
				31							32				SPACE
				33							34				
				35							36				
				37							38				
				39							40				
				41							42				
					2885	2335	2130	2865	2365	4500					
TOTAL					5750	4700	6650								
AMPS / PHASE					48	39	55								

FEEDER: ☑ TOP □ BOTTOM — TOTAL CONNECTED LOAD 17080 VA
CONDUIT SIZE 1-1/4" WIRE SIZE 4 #2 AWG THW CU — EQUIPMENT RATING 10,000 AMPS RMS SYM

PANELBOARD SCHEDULE

PANEL 'H5' TYPE NEHB 277/480 VOLTS 3 Ø 4 W
MOUNTING □ FLUSH ■ SURFACE DIMENSIONS 20 W 5 3/4 D H LOCATION ELEC. RM. 225 AMP MAINS ■ LUGS □ BREAKER

BRANCH BREAKERS

ITEM	AMPS	POLE	WIRE SIZE	CIR NO	LEFT A	LEFT B	LEFT C	RIGHT A	RIGHT B	RIGHT C	CIR NO	AMPS	POLE	WIRE SIZE	ITEM
RACQUETBALL LTS	20	1	12	1	2400			2400			2	20	1	12	RAQUETBALL LIGHTS
				3		2400			2400		4				
				5			2400			2500	6				
LIGHTS - [illegible] OFF.				7	3500			3200			8				LIGHTS - ~~GYM~~ PLAZA
~~LIGHTS~~ - SPARE				9		310					10				SPARE
LIGHTS - VEST				11			330				12				SPARE
LIGHTS - ARCHES				13	880			775			14	20	3	12	EF-1, EF-2
LIGHTS - HALL	20	1		15		2600			775		16	–	–	–	–
SPARE				17						775	18	–	–	–	–
~~YARD~~ SPARE			10	19				5760			20	50	3	6	~~XFMR 'TR5'~~
SPACE				21					4700		22	–	–	–	-EF 1 & 2
XFMR TR5				23						6630	24	–	–	–	–
				25							26	20	1		SPARE
				27							28				
				29							30				
				31							32				
				33							34				
				35							36				
				37							38				
				39							40				
				41							42				
					7740	5310	2730	12125	7875	9985					
TOTAL					19865	13185	12638								
AMPS / PHASE					72	48	46								

FEEDER: □ TOP □ BOTTOM — TOTAL CONNECTED LOAD 45,688VA
CONDUIT SIZE [illegible] WIRE SIZE 4 #[illegible] AWG THW CU — EQUIPMENT RATING 15,000 AMPS RMS SYM

PANELBOARD SCHEDULE

PANEL H6 TYPE NEHB 277/480 VOLTS 3 Ø 4 W
MOUNTING ■ FLUSH □ SURFACE DIMENSIONS 20 W 5 3/4 D H LOCATION VESTIBULE 225 AMP MAINS ■ LUGS □ BREAKER

BRANCH BREAKERS

ITEM	AMPS	POLE	WIRE SIZE	CIR NO	LEFT A	LEFT B	LEFT C	RIGHT A	RIGHT B	RIGHT C	CIR NO	AMPS	POLE	WIRE SIZE	ITEM
~~AH-4~~ CP3	60	3	6	1	7480			390			2	20	3	12	CP-4
–	–	–	–	3		7480			390		4	–	–	–	–
–	–	–	–	5			7480			390	6	–	–	–	–
~~AH-3~~ LIGHTS	60	3	6	7	7480			390			8	20	3	12	CP-3
- LIGHTS	–	–	–	9		7480			390		10	–	–	–	–
STREET LIGHTS	–	–	–	11			7480			390	12	–	–	–	–
LIGHTS - STREET	20	1	10	13	1320			12000			14	70	3	4	TRANSFORMER TR6
PARKING LOT			10	15		1155			12000		16	–	–	–	
PARKING LOT			8	17			1760			12000	18	–	–	–	
SIDEWALK			8	19	1320						20	20	1		SPARE
PLAZA OB LIGHTS			8	21		2200					22				
			8	23			3080				24				
			8	25	1540						26				
			12	27		550					28				
SPARE				29							30				
AH3				31							32				
				33							34				
				35							36				
				37							38				
				39							40				
				41							42				
					19,140	18865	19800	12390	12390	12780					
TOTAL					31,920	31,645	32580								
AMPS / PHASE					115	114	118								

FEEDER: □ TOP □ BOTTOM — TOTAL CONNECTED LOAD 96,145VA
CONDUIT SIZE 2" WIRE SIZE 4 #2/0 AWG THW CU. — EQUIPMENT RATING 14,000 AMPS RMS SYM

0000TVE16
Weber State College, Physical Education Facility - RW 84-058
Panel Schedules - 26764

RECORD DOCUMENTS JUL 2 1990
THESE DOCUMENTS HAVE BEEN REVISED TO RECORD INFORMATION SUBMITTED BY THE CONTRACTOR, WHILE THEY ARE ASSUMED TO BE RELIABLE THE ARCHITECT DOES NOT GUARANTEE THEIR ACCURACY.

REGISTERED PROFESSIONAL ENGINEER — ROBERT [illegible] No. 4222 — STATE OF UTAH

NOTE: THIS SHEET IS COMPRISED OF DRAWINGS AND DETAILS FROM THE ORIGINAL 1990 BUILDING CONSTRUCTION CONFORMED SET & HAS BEEN INCLUDED FOR INFORMATIONAL PURPOSES ONLY. CONDITIONS SHOWN ON THIS SHEET HAVE NOT BEEN VERIFIED WITH EXISTING CONSTRUCTED CONDITIONS.

jra JONES/ RICHARDS & ASSOCIATES
ARCHITECTURE (801) 394-3033 — PLANNING 533 26TH STREET — CONSTRUCTION MANAGEMENT OGDEN, UTAH

REVISED: AS BUILTS 6-90
PROJECT NUMBER: 8403 — DATE: 6-21-88 — DRAWN BY: L. REMBER

PROJECT: PHYSICAL EDUCATION COMPLEX — WEBER STATE COLLEGE
SHEET TITLE: PANEL SCHEDULES
SHEET NO. E-6

GENERAL LANDSCAPE NOTES:

1. TOP SOIL UNDER THE EXISTING SOD AREAS MAY BE STOCK PILED FOR REUSE ON THIS PROJECT. IT IS ANTICIPATED THAT GENERAL CONSTRUCTION TRAFFIC WILL DESTROY ALL EXISTING TURF AREAS IN THE EXISTING PLAY FIELDS. THOSE AREAS ARE TO BE RESTORED TO A FRIABLE STATE OF REPAIR PRIOR TO RE-SEEDING. PROTECT THOSE AREAS FROM TOXIC SPILLS OF ANY KIND THAT WOULD BE DETRIMENTAL TO THE REESTABLISHMENT OF HEALTHY LAWNS. PROVIDE ADDITIONAL TOP SOIL AS NEEDED TO HAVE TOPSOIL 12" DEEP ON ROOF GARDEN AND IN SHRUB BEDS AND 4" DEEP IN OTHER GRASS AREAS. THE IMPORTED TOP SOIL SHALL CONSIST OF NATURAL SANDY LOAM OF UNIFORM QUALITY, FREE FROM SUBSOIL, HARD CLODS, STIFF CLAY HARD-PAN, SOD, DEBRIS, OR OTHER UNDESIRABLE MATERIAL. SOIL SHALL BE FREE OF PLANTS, ROOTS, OR SEEDS THAT WOULD BE TOXIC OR HARMFUL TO GROWTH AND OBTAINED FROM NATURALLY DRAINED SOURCES, AND SHALL CONTAIN AT LEAST 4% ORGANIC MATTER DETERMINED BY LOSS ON IGNITION OF MOISTURE-FREE SAMPLE DRIED IN ACCORDANCE WITH CURRENT METHODS OF THE ASSOCIATION OF OFFICIAL AGRICULTURAL CHEMISTS. ACIDITY RANGE SHALL BE PH 5.5 TO PH 7.7 INCLUSIVE.

2. SODDED AREAS SHALL BE ALL NEW FRESH CUT KENTUCKY BLUE GRASS SOD PLACED ON A MINIMUM OF FOUR INCHES OF RICH LOAMY TOPSOIL. LAY SOD TO FORM A SOLID MASS WITH TIGHTLY-FITTED JOINTS. BUTT ENDS AND SIDES TOGETHER; DO NOT OVERLAP. STAGGER STRIPS TO OFFSET JOINTS. TOP DRESS BY WORKING SIFTED SOIL INTO MINOR CRACKS BETWEEN PIECES OF SOD; REMOVE EXCESS SOD TO PREVENT SMOTHERING ADJACENT GRASS. TAMP OR ROLL LIGHTLY TO COMPLETE THE OPERATION. LAWN AREAS TO RECEIVE SOD SHALL BE PREPARED IDENTICALLY TO AREAS TO RECEIVE SEED.

3. THE SLOPES TO BE PLANTED IN EUONYMUS GROUND COVER ARE TO BE PREPARED BY ROTO-TILLING ONE LARGE BALE OF PEAT MOSS PER 200 S.F. OF SURFACE AREA INTO THE TOP FIVE INCHES OF NATURAL EARTH. WHEN PLANTING THE EUONYMUS EACH PLANT SHALL BE BACK FILLED WITH A MIX OF 1 PART PEAT MOSS AND 1 PART RICH IMPORTED TOP SOIL.

4. ALL NEWLY EXCAVATED AREAS SUBJECT TO EROSION AND EXISTING TURF AREAS SHALL BE PROTECTED DURING ALL PHASES OF THE LANDSCAPE OPERATION AND ANY DAMAGES OCCURRING SHALL BE REPAIRED AT THE CONTRACTORS EXPENSE.

5. PROVIDE SHREDDED BARK MULCH TOP DRESSING TWO INCHES DEEP IN ALL SHRUB BEDS AND PLANTING AREAS. TOP DRESS PLANTER BOXES WITH 1" DEEP BARK MULCH UNDER AND AROUND THE CENTRAL SHRUB AND/OR GROUNDCOVER MASS.

6. PROVIDE UNDERGROUND EXTENSIONS FOR ALL DOWN SPOUTS AND GUARANTEE POSITIVE DRAINAGE FOR ALL SURFACE AREAS. SLOPE GROUND AWAY FROM THE BUILDING AT A MINIMUM SLOPE OF 3%. ALL NEWLY EXCAVATED AREAS SUBJECT TO EROSION SHALL BE PROTECTED DURING ALL PHASES OF THE LANDSCAPE OPERATION AND ANY DAMAGES OCCURRING SHALL BE REPAIRED AT THE CONTRACTORS EXPENSE.

7. NO SHRUBS OR TREES ARE TO BE PLANTED IN THERE ORIGINAL SHIPPING CONTAINERS. IF THE TREES ARE NOT PLANTED WITHIN 36 HOURS AFTER THEY ARE REMOVED FORM THE TRUCK THEY ARE TO BE HEELED IN AND WATERED DOWN FREQUENTLY AND SUFFICIENTLY FOR PROPER PROTECTION UNTIL PLANTED.

8. THE CONTRACTOR SHALL FORMALLY NOTIFY THE LANDSCAPE ARCHITECT IN WRITING 48 HOURS PRIOR TO THE ACTUAL TREE PLANTING TO ENABLE EFFECTIVE MONITORING OF THE TREE HANDLING AND PLANTING PROCEDURES DURING THE INITIAL INSTALLATION OF THE TREES. TREES PLANTED INITIALLY WITHOUT THE LANDSCAPE ARCHITECT PRESENT WILL BE OUTRIGHT REJECTED.

9. THE 2X6 REDWOOD LAWN EDGE SHALL BE CONSTRUCTED OF CONSTRUCTION HEART REDWOOD STAKED WITH 1x2x16" STAKES 3'o/c FASTENED WITH 2 EA. 8d HOT DIPPED GALVANIZED NAILS. CUT TOP OF STAKES OFF 1" BELOW TOP OF EDGING MATERIAL. PLACE EVERY TIME SHRUB/GROUNDCOVER BEDS COME ADJACENT TO GRASS AREAS. 4x6 REDWOOD HEADER AGAINST BUILDING WALLS AND LAWNS SHALL BE INSTALLED IN LIKE FASHION.

10. PROVIDE ADEQUATE DRAINAGE IN ALL TREE AND SHRUB PLANTER POCKETS AND PITS. SURFACE WATER STANDING LONGER THAN 24 HOURS WILL CONSTITUTE PRIMA FACIE EVIDENCE THAT PROPER DRAINAGE HAS NOT BEEN PROVIDED AND THE CONTRACTOR WILL BE INSTRUCTED TO MAKE THE NECESSARY CORRECTIONS.

11. THESE PLANS WERE PREPARED BY THE LANDSCAPE ARCHITECT BASED ON OVERLAY DRAWINGS PROVIDED BY THE ARCHITECT. THE CONTRACTOR SHALL REFER TO THE ARCHITECTS SITE PLAN FOR GRADING REQUIREMENTS. COORDINATE PROBLEMS OR DISCREPANCIES IN HORIZONTAL AND VERTICAL DISTANCES WITH BOTH THE OWNER AND THE LANDSCAPE ARCHITECT PRIOR TO ANY CONSTRUCTION ON THOSE CONFLICTING AREAS.

12. THE CONTRACTOR SHALL MAKE PROVISIONS FOR ADEQUATE DRAINAGE OF ROOF TOP PLANTER BOXES. TOP SOIL SHALL BE PLACED TO WITHIN 3" OF THE TOP OF THE PLANTERS AND TOP DRESSED WITH 2" OF SHREDDED BARK MULCH. SEE ARCHITECTURAL DETAILS OF PLANTER BOXES FOR COORDINATION OF THE SPRINKLER LINES TO EACH SHRUB. SOD SHALL SURROUND THE ENTIRE BASE OF EACH PLANTER BOX EXCEPT THOSE PLACED DIRECTLY NEXT TO A CURB. THE OWNER SHALL MAINTAIN THE GRASS AREAS BETWEEN THE PLANTERS USING SMALL MOWERS AND LINE WEED TRIMMER.

ALL AREAS TO BE LANDSCAPED WHICH HAVE NOT PREVIOUSLY BEEN CLEARED & PREPARED BY OTHERS SHALL BE CLEARED & PREPARED BY THE LANDSCAPE CONTRACTOR. SEE ARCH. SITE PLAN, COORD. W/ GENERAL.

PLANT MASTER SCHEDULE FILE - PROJECT:WSC

KEY	BOTANICAL NAME	COMMON NAME	SIZE	NOTE
TREES				
x	A tree to be preserved	Prune as needed	-	F
A	Picea pungens	Colorado Spruce	8'H.	B&B
B	Pinus nigra	Austrian Pine	8'H.	B&B
C	Prunus bliriana	Bliriana Flowering Plum	3"Cal.	B&B
D	Malus ioensis 'Plena'	Bechtel Improved Crab	3"Cal.	B&B
E	Tilia tomentosa	Silver Linden	3"Cal.	B&B
F	Sophora japonica	Japanese Pagoda Tree	3"Cal.	B&B
G	Zelkova serrata	Chinese Zelkova	3"Cal.	B&B
H		MARSHALL ASH (SEEDLESS)	3"CAL.	B&B
SHRUBS				
1	Chaenomeles speciosa 'Simonii'	Early Simoni Quince	5 Gal.	
2	Cornus stolonifera 'Redosier'	Red twig dogwood	5 GAL.	
3	Cotoneaster congesta	Pyrenees Cotoneaster	5 Gal.	
4	Euonymus alatus 'Compacta'	Dwarf Winged Euonymus	5 Gal.	
5	Juniperus sabina 'Broadmoor'18"	Broadmoor Juniper	5 Gal.	
6	Magnolia stellata	Star Magnolia	7 Gal.	
7	Pieris x 'Forest Flame'	Forest Flame Pieris	5 Gal.	
8	Prunus glandulosa	Double Flowering Almond	5 Gal.	
9	Cotoneaster acutifolia	Peking Cotoneaster	5 Gal.	
10	Miscanthus sinensis 'Gracillimus'	Maiden Grass	5 Gal.	
11	Hibiscus syriacus 'Ardens'	Blue Rose of Sharon	5 Gal.	
12	Weigelia florida 'Vanicek'	Vanicek Cardinal Shrub	5 Gal.	
VINES AND GROUND COVER				
ww	Cerastium tomentosum	Snow in Summer	6" Pot	12"o/c
xx	Vinca minor	Dwarf Periwinkle	f-8/12	12"o/c
yy	Euonymus fortunei 'Colorata'	Purple Leaf Wint. Creep.	1 Gal.	24"o/c
zz	Hypericum calycinum	St. John's Wort	F 8/4	12"o/c

NOTE: THIS SHEET IS COMPRISED OF DRAWINGS AND DETAILS FROM THE ORIGINAL 1990 BUILDING CONSTRUCTION CONFORMED SET & HAS BEEN INCLUDED FOR INFORMATIONAL PURPOSES ONLY. CONDITIONS SHOWN ON THIS SHEET HAVE NOT BEEN VERIFIED WITH EXISTING CONSTRUCTED CONDITIONS.

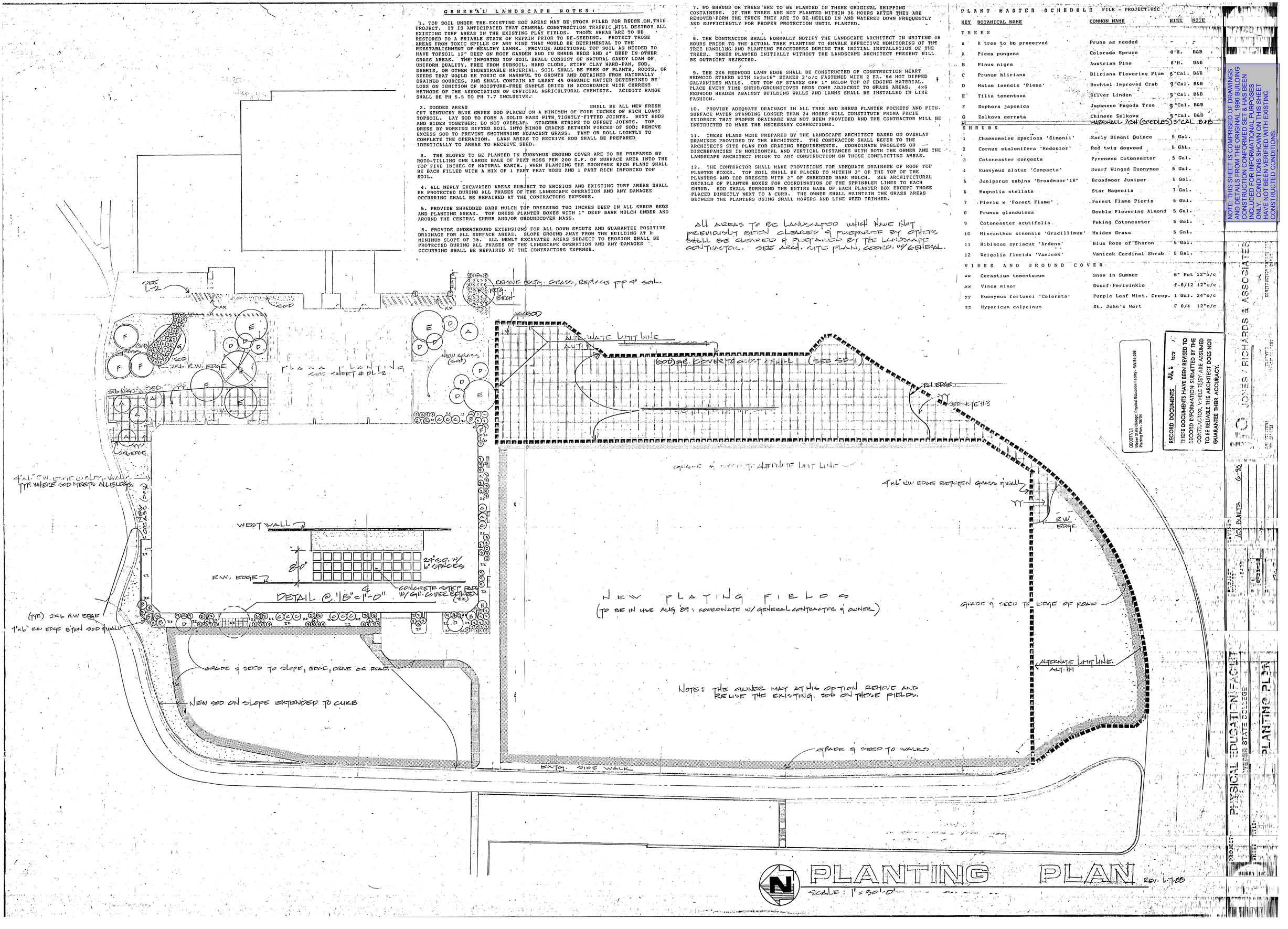

PLANTING PLAN

SCALE: 1" = 30'-0"

REV. 6-7-89

DOCUMENTS
Weber State College, Physical Education Facility - RW 84-009
Planting Plan - 29704

RECORD DOCUMENTS JUL 6 1989
THESE DOCUMENTS HAVE BEEN REVISED TO RECORD INFORMATION SUBMITTED BY THE CONTRACTOR, WHILE THEY ARE ASSUMED TO BE RELIABLE THE ARCHITECT DOES NOT GUARANTEE THEIR ACCURACY.

JONES / RICHARDS & ASSOCIATES

REVISIONS	DATE
AS BUILTS	6-89

PROJECT: PHYSICAL EDUCATION FACILITY
WEBER STATE COLLEGE

SHEET TITLE: PLANTING PLAN

SHEET NO. L-1

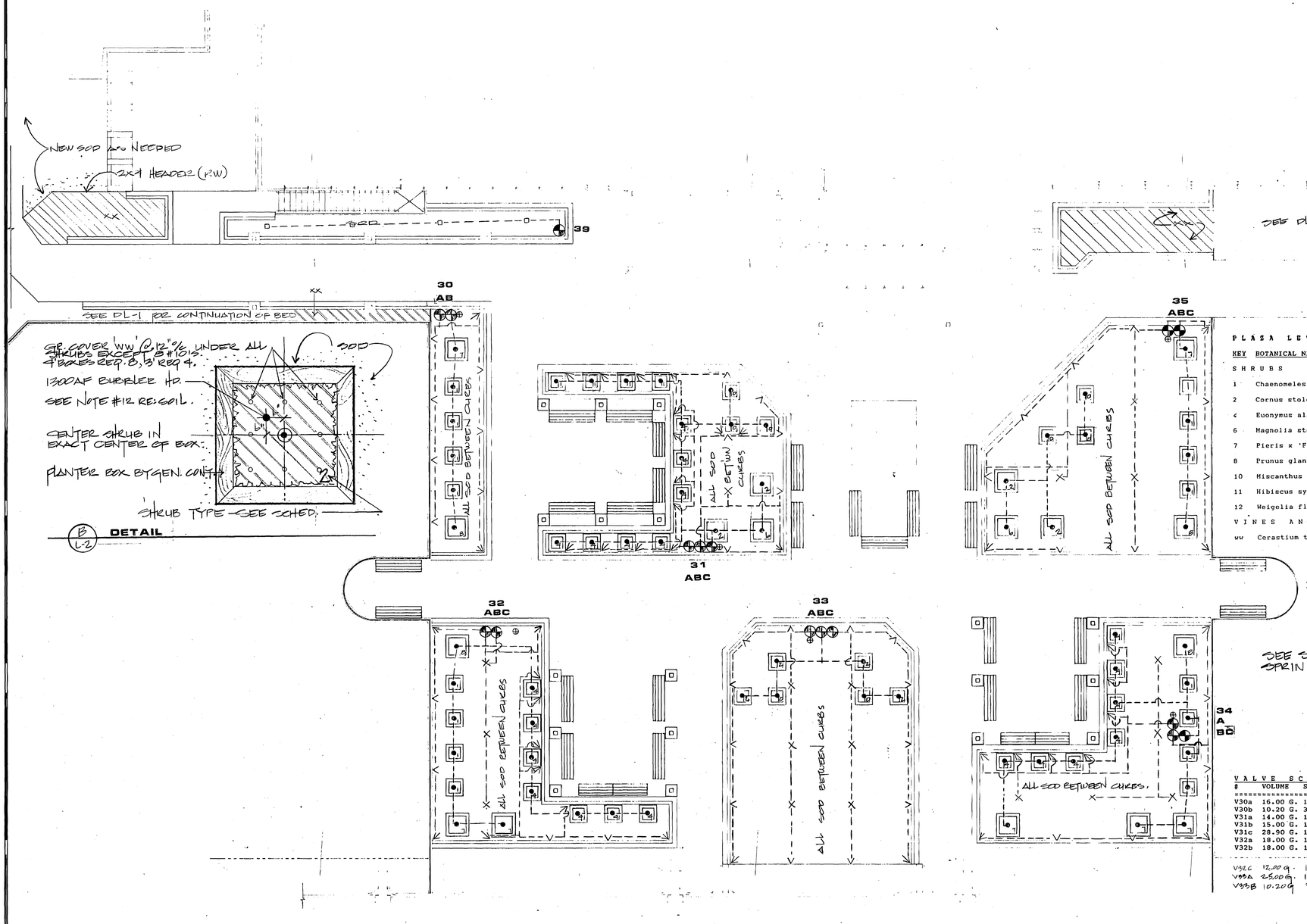

XX = VINCA MINOR - SEE SHT. L-1

SEE SHT. P-4 FOR CONTINUATION OF 1 1/4" SPRINKLER LINES IN BUILDING.

PLAZA LEVEL PLANT SCHEDULE

KEY	BOTANICAL NAME	COMMON NAME	SIZE	NOTE
SHRUBS				
1	Chaenomeles speciosa 'Simonii'	Early Simoni Quince	5 Gal.	
2	Cornus stolonifera 'Redosier'	Red twig dogwood	5 GAL.	
<	Euonymus alatus 'Compacta'	Dwarf Winged Euonymus	5 Gal.	
6	Magnolia stellata	Star Magnolia	7 Gal.	
7	Pieris x 'Forest Flame'	Forest Flame Pieris	5 Gal.	
8	Prunus glandulosa	Double Flowering Almond	5 Gal.	
10	Miscanthus sinensis 'Gracillimus'	Maiden Grass	5 Gal.	
11	Hibiscus syriacus 'Ardens'	Blue Rose of Sharon	5 Gal.	
12	Weigelia florida 'Vanicek'	Vanicek Cardinal Shrub	5 Gal.	
VINES AND GROUND COVER				
ww	Cerastium tomentosum	Snow in Summer	6" Pot 12"o/c	

VALVE SCHEDULE / CIRCUITS (ROOF GARDEN PLAZA)

#	VOLUME	SIZE	BODY/RISER	#	VOLUME	SIZE	BODY/RISER
V30a	16.00 G.	1"		V33c	25.00 G.	1 1/4"	
V30b	10.20 G.	3/4"		V34a	19.00 G.	1"	
V31a	14.00 G.	1"		V34b	19.00 G.	1"	
V31b	15.00 G.	1"		V34c	25.50 G.	1 1/4"	
V31c	28.90 G.	1 1/4"		V35a	15.00 G.	1"	
V32a	18.00 G.	1"		V35b	20.40 G.	1"	
V32b	18.00 G.	1"		V35c	16.00 G.	1"	
V32C	12.00 G.	1"		V39.	5.20 G	3/4"	
V33A	25.00 G.	1 1/4"					
V33B	10.20 G	3/4"					

PLAZA PLAN

A L-2

SCALE: 1/8" = 1'-0"

REV. 6/7/88

NOTE: THIS SHEET IS COMPRISED OF DRAWINGS AND DETAILS FROM THE ORIGINAL 1990 BUILDING CONSTRUCTION CONFORMED SET & HAS BEEN INCLUDED FOR INFORMATIONAL PURPOSES ONLY. CONDITIONS SHOWN ON THIS SHEET HAVE NOT BEEN VERIFIED WITH EXISTING CONSTRUCTED CONDITIONS.

RECORD DOCUMENTS JUL 8 1990

THESE DOCUMENTS HAVE BEEN REVISED TO RECORD INFORMATION SUBMITTED BY THE CONTRACTOR, WHILE THEY ARE ASSUMED TO BE RELIABLE THE ARCHITECT DOES NOT GUARANTEE THEIR ACCURACY.

jra JONES / RICHARDS & ASSOCIATES

ARCHITECTURE (801) 394-3033

PLANNING 533 - 26TH STREET

CONSTRUCTION MANAGEMENT OGDEN, UTAH

0000TVL2
Weber State College, Physical Education Facility - RW 84-058
Plaza Irrigation & Planting - 26705

REVISED: AS BUILTS 6-90

PROJECT NUMBER: 8403

DATE: 6-21-88

DRAWN BY: DOR

PROJECT: PHYSICAL EDUCATION FACILITY
WEBER STATE COLLEGE

SHEET TITLE: PLAZA IRRIGATION & PLANTING

SHEET NO. L-2

NOTICE TO CONTRACTOR: Sizing of pipe servicing the impact heads is provided as a convenience only. All sizing is to be verified against actual pressure availability at the time of installation. Sizing of spray head lines shall be provided by the irrigation contractor by means of shop drawings and shall be submitted to the Architect before beginning the work. Sizing shall be based on sizes listed in the pipe sizing chart on this plan. 1" minimum lines shall be used and circuits shall be looped when feasible as shown.

PIPE SIZING CHART @ 5.0 fps

FLOW IN GPM	CLASS 200 PIPE	FLOW IN GPM	SCHEDULE 40 PIPE
UP TO 15.0	1"	UP TO 13.0	1"
UP TO 22.5	1 1/4"	UP TO 23.0	1 1/4"
UP TO 32.5	1 1/2"	UP TO 33.5	1 1/2"
UP TO 55.0	2"	UP TO 53.0	2"
UP TO 75.0	2 1/2"	UP TO 73.0	2 1/2"
UP TO 120.0	3"	UP TO 115.0	3"

IRRIGATION MATERIALS SCHEDULE

POC 2 POINTS OF CONNECTION TO EXISTING 3" WSC WATER MAIN. (PINEVIEW WATER) INCLUDE 3" SPEERS FILTER AT EACH CONNECTION WITH MANUAL FLUSH VALVES.

ENDS OF PINEVIEW LINES TO BE CAPPED.

L3 L2 L2 GEE OR McDONALD BRASS GLOBE VALVES FOR MANUAL CONTROL OF CIRCUITS.

WILKENS #600 PRESSURE REDUCTION VALVE ON EACH SPRAY HEAD CIRCUIT.

EXISTING GALVANIZED MAIN LINES.

PROPOSED NEW 3" PVC SCHEDULE 40 MAIN LINES.

PROPOSED NEW PVC SCHEDULE 40 LATERAL LINES. 1" MINIMUM SIZE AS NOTED.

GATE VALVES SERVING AS CIRCUIT ISOLATION VALVES. (OR AT MANIFOLDS)

RAINBIRD RC51 HEAD W/ 1/4" x3/16" NOZ. 62'R. 20.7 GPM @ 60 PSI FULL CR.

RAINBIRD RC47 HEAD W/ 9/32" NOZ. 57'R. 17.6 GPM @ 60 PSI PART CR.

RAINBIRD CST-MPR BRASS NOZ. 7x36' 1.30 GPM @ 30 PSI ON 2800A BRASS HEAD.

RAINBIRD Q-MPR BRASS NOZ. 14'R. 1.00 GPM @ 30 PSI ON 2800A BRASS HEAD.

RAINBIRD H-MPR BRASS NOZ. 14'R. 2.00 GPM @ 30 PSI ON 2800A BRASS HEAD.

RAINBIRD F-MPR BRASS NOZ. 14'R. 4.00 GPM @ 30 PSI ON 2800A BRASS HEAD.

RAINBIRD Q-MPR 2400 NOZ. 14'R. 1.00 GPM @ 30 PSI ON GALVANIZED RISER.

RAINBIRD H-MPR 2400 NOZ. 14'R. 2.00 GPM @ 30 PSI ON GALVANIZED RISER.

RAINBIRD F-MPR 2400 NOZ. 14'R. 4.00 GPM @ 30 PSI ON GALVANIZED RISER.

RAINBIRD 1300AF ADJ. FULL CR. BUBBLER 1.70 GPM @ 30 PSI ON GALV RISER.

RAINBIRD 5RC/NP 1" ONE PIECE QUICK COUPLE VALVE FOR WINTERIZATION.

GENERAL IRRIGATION SYSTEM NOTES:

The contractor shall provide a shop drawing showing the proposed sizing of all pipe used in the circuiting of lateral lines servicing the small spray heads.

1. ENSURE POSITIVE GRAVITY DRAINAGE OF THE SYSTEM BY PROVIDING MARKED MANUAL DRAIN VALVES AND SUMPS AT ALL LOW POINTS AND AT THE ENDS OF ALL LATERAL LINES WHICH ARE SLOPING DOWN HILL FROM THE VALVES. PROVIDE 1" FORD BALL GATE DRAIN VALVE OR EQUAL WITH GAS COCK TO DRAIN ALL MAIN LINES AT EACH LOW POINT.

2. INSTALL ALL HEADS ON RISER ASSEMBLIES AS DETAILED. WRAP ALL THREADED PRESSURE CONNECTIONS WITH TEFLON TAPE. SET HEADS PLACED IN GRASS ADJACENT TO PAVING OR CURBS 1/4" BELOW THE LIP OF THE CURB, WALK, DRIVE, OR BUILDING BY USING ADJUSTMENT SCREW IN EACH NOZZLE AS NEEDED.

3. MARK VALVE MANIFOLD LOCATIONS WITH PAINT ON CURB OR WALK TO MATCH CAMPUS STANDARD. PROVIDE AN ISOLATION VALVE SEPARATING MANIFOLD FROM MAIN LINE. HOUSE MANUAL VALVES IN 2" PVC SLEEVES WITH LOCKING CAPS AS DETAILED. PROVIDE 12" DEEP GRAVEL SUMPS UNDER EACH VALVE.

4. REMOVE HEADS, VALVES, AND OTHER FIXTURES FROM THE EXISTING SYSTEM WITHIN THE CONTRACT LIMIT LINES AND RETURN TO CAMPUS GROUNDS DEPARTMENT FOR RESTOCKING AND STORAGE. OLD PIPE ENCOUNTERED DURING CONSTRUCTION SHALL BE REMOVED FROM THE SITE.

5. LATERAL LINES SERVING IMPACT HEADS SHALL BE A MINIMUM OF 18" DEEP AND THOSE SERVING SPRAY HEADS SHALL BE A MINIMUM OF 6" DEEP. MAIN PRESSURE LINES SHALL BE 24" DEEP MINIMUM. ALL 3" MAIN LINES SHALL HAVE THRUST BLOCKS AT ALL VERTICAL AND HORIZONTAL CHANGES IN DIRECTION.

6. THE WATER SOURCE FOR THIS PROJECT IS PINEVIEW IRRIGATION WATER FROM AN EXISTING MAIN LINE AS SHOWN. (ALSO SEE INSET ON PLAN SHOWING EXISTING CONDITIONS.) AN EXISTING STOP/WASTE CONNECTION SERVES THE MAIN THE LOCATION OF WHICH IS TO BE COORDINATED THROUGH THE GROUNDS DEPARTMENT OF THE COLLEGE. A BACKFLOW PREVENTION DEVICE WILL NOT BE NECESSARY ON THIS SYSTEM.

7. DAMAGE TO SOD OR OTHER PLANT MATERIALS CAUSED BY SETTLING SHALL BE BACK CHARGED TO THE IRRIGATION INSTALLER. WATER DOWN AND COMPACT TRENCHES COMPLETELY.

8. PROVIDE OWNER WITH COMPLETE HANDS ON INSTRUCTION FOR THE OPERATION OF THE VALVES, DRAINS, AND WINTER SERVICING OF THE SYSTEM. ASTERISKS (*) ON PLAN DESIGNATE PROPOSED QUICK COUPLER VALVES FOR WINTERIZATION OF THE SYSTEM PER CAMPUS STANDARDS. DRAIN LOCATIONS AND ARE TO BE FIELD VERIFIED FOR ACTUAL SLOPE CONDITIONS OF PIPE. PROVIDE AS BUILT DRAWINGS TO THE OWNER AND LANDSCAPE ARCHITECT SHOWING ALL CHANGES AND DEVIATIONS TO THE DRAWN PLAN WHEN INSTALLED.

9. COORDINATE ALL ASPECTS OF THIS PLAN WITH THE IRRIGATION DETAILS AND SPECIFICATIONS PROVIDED AS A PORTION OF THESE DOCUMENTS. CAMPUS STANDARDS REQUIRE ALL SWING JOINT RISERS AND STATIONARY RISERS AND FITTINGS TO BE OF GALVANIZED STEEL. NO LINES SHALL BE SMALLER THAN 1" PIPE. LINES ARE SHOWN IN WALKS ARE FOR CLARITY ONLY. LOCATE THE LINES PARALLEL TO THE WALKS.

10. THIS SYSTEM IS BASED ON CAMPUS PLANNING DEPARTMENT DATA OF 85 PSI STATIC PRESSURE FLUCTUATING TO 120 PSI. THIS SYSTEM IS DESIGNED FOR 30 PSI OPERATING PRESSURE AT EACH SPRAY HEAD AND 60 PSI AT EACH IMPACT HEAD. PERFORM FRICTION LOSS CALCULATIONS BASED ON THE ACTUAL PSI AVAILABLE AT THE SITE AND ADJUST PIPE SIZING AS PRESSURE REQUIRES.

EXISTING CONDITIONS

EXIST. PINEVIEW MAIN

POC

PLAZA ILLUMINATION SEE SHEET L-2

ADJUST HEADS (FROM LIKE SPACING) AS PART CIRCLE HEADS OVER CREST OF SLOPE TO COVER GREY UP SLOPE ON SLOPE

EXIST. PINE VIEW WATER

BASE CONTRACT LIMIT LINE

ALL HEADS, & LINES & VALVES SERVING HEADS INSIDE THIS ALTERNATE LIMIT LINE ARE ALTERNATE #1.

IF ALT #1 REJECTED, LOCATE HEADS AS SHOWN

3" MAINS

3" MAIN

1,2,3,4,5,6,7

SHRUB BEDS, ALL HEADS IN SHRUB BEDS ARE TO BE RAINBIRD 2400 HEADS ON GALV. RISERS, ALL OTHER SPRAY HEADS TO BE 2800A SERIES BRASS LAWN POP-UPS.

VALVE SCHEDULE / CIRCUITS

#	VOLUME	SIZE	BODY/RISER	#	VOLUME	SIZE	BODY/RISER
V1.	82.80	G.	2"	V21.	68.00	G.	1 1/2"
V2.	82.80	G.	2"	V22.	42.00	G.	1 1/4"
V3.	82.80	G.	2"	V23.	64.00	G.	1 1/2"
V4.	82.80	G.	2"	V24.	105.60	G.	2"
V5.	82.80	G.	2"	V25.	123.20	G.	2"
V6.	105.60	G.	2"	V26.	42.00	G.	1 1/4"
V7.	105.60	G.	2"	V27.	57.00	G.	1 1/2"
V8.	105.60	G.	2"	V28.	57.00	G.	1 1/2"
V9.	82.80	G.	2"	V29.	6.50	G.	3/4"
V10.	82.80	G.	2"	V30.	SEE SCHED. DL-2		
V11.	82.80	G.	2"	V31.	SEE SCHED. DL-2		
V12.	105.60	G.	2"	V32.	SEE SCHED. DL-2		
V13.	82.80	G.	2"	V33.	SEE SCHED. DL-2		
V14.	43.00	G.	1 1/4"	V34.	SEE SCHED. DL-2		
V15.	123.20	G.	2"	V35.	SEE SCHED. DL-2		
V16.	58.00	G.	1 1/2"	V36.	32.00	G.	1 1/4"
V17.	26.00	G.	1"	V37.	123.20	G.	2"
V18.	36.00	G.	1 1/4"	V38.	~~000.00~~	G.	2"
V19.	27.00	G.	1"	V39.	SEE SCHED. DL-2		
V20.	45.00	G.	1 1/4"	V40.	N/A		

VALVE #38 DELETED 6.6.88

IRRIGATION PLAN

SCALE: 1"=30'-0"

REV: 6/1/88

JONES / RICHARDS & ASSOCIATES
ARCHITECTURE PLANNING CONSTRUCTION MANAGEMENT
532 - 25TH STREET OGDEN, UTAH (801) 394-3023

NOTE: THIS SHEET IS COMPRISED OF DRAWINGS AND DETAILS FROM THE ORIGINAL 1990 BUILDING CONSTRUCTION CONFORMED SET & HAS BEEN INCLUDED FOR INFORMATIONAL PURPOSES ONLY. CONDITIONS SHOWN ON THIS SHEET HAVE NOT BEEN VERIFIED WITH EXISTING CONSTRUCTED CONDITIONS

REVISED: As Built 6-90
PROJECT NUMBER: 8403
DATE: 6-27-1988
DRAWN BY: PC

PROJECT: PHYSICAL EDUCATION FACILITY
WEBER STATE COLLEGE
SHEET TITLE: IRRIGATION PLAN

SHEET NO. L-3

0000TVL3
Weber State College, Physical Education Facility - NW/84-009
Irrigation Plan - 20F46

RECORD DOCUMENTS JUL 13 1990

THESE DOCUMENTS HAVE BEEN REVISED TO RECORD INFORMATION SUBMITTED BY THE CONTRACTOR, WHILE THEY ARE ASSUMED TO BE RELIABLE THE ARCHITECT DOES NOT GUARANTEE THEIR ACCURACY.

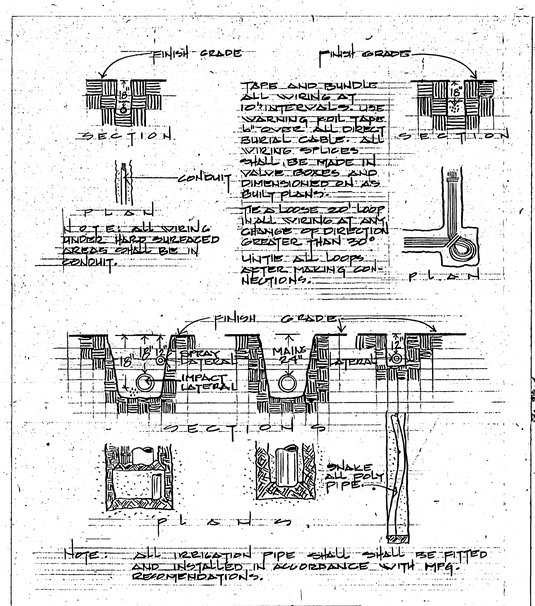

TRENCHING

THIS DETAIL APPLYS TO ALL EVERGREEN TREES 6' TALL & TALLER & ALL DECIDUOUS TREES 2" ϕ CAL. OR GREATER. CONIFERS LESS THAN 6' SHALL BE SINGLE GUYED STAKED ON 'UPWIND' SIDE OF TREE.

APPLY ANTI-DESICCANT SPRAY.

TREE TO BE PLANTED TO A DEPTH ESTABLISHING THE SAME RELATIONSHIP TO FINISH GRADE AS BEFORE TRANSPLANTING.

3 GUYS REQUIRED EQ. SPACED.

PROVIDE 18"R. GRASS FREE WATERWELL SURROUNDING TREE TRUNKS.

6" GALVANIZED TURNBUCKLES.

FABRIC-BEARING RUBBER HOSE ON #12 GA. WIRE, 3 REQUIRED @ 1/2" TO 9/4" ϕ.

2"x2" x 3' STAKES, POINTED ON ONE END, DRIVEN FREE OF BALL TO A DEPTH OF 24".

3" TO 4" DEEP DONUT SHAPE SAUCER

2" DEEP SHREDDED BARK MULCH.

REMOVE BURLAP FROM TOP 1/3 OF BALL OR CUT & REMOVE NON-BIODEGRADEABLE CONTAINERS.

SCARIFY SIDES OF HOLE IF AUGERED.

PLANTING BACKFILL MIX TO CONSIST OF 1/3 NATIVE SOIL FROM ORIGINAL HOLE, 1/3 SAND, & 1/3 HUMUS I.E. PEAT OR SOIL-AID. MIX THOROUGHLY & PLACE 6" ALL AROUND.

TREE GUYING

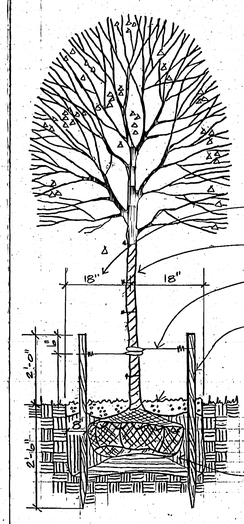

APPLY ANTI-DESICCANT SPRAY.

THIN BRANCHES BY 1/3; PAINT CUTS OVER 1/2" ϕ.

TREES W/CUT LEADERS WILL BE REJECTED.

PROVIDE 18"R. GRASS FREE WATERWELL SURROUNDING TREE TRUNKS.

WRAP ALL DECID. TREES OVER 2" CAL.

FABRIC-BEARING RUBBER HOSE ON #12 GA. WIRE, SET @ 1'-6" ABOVE FINISH GRADE.

2"x2" x 4' STAKES, POINTED ON ONE END, DRIVEN FREE OF BALL TO A DEPTH OF 30".

3" TO 4" DEEP DONUT SHAPE SAUCER.

2" DEEP SHREDDED BARK MULCH.

REMOVE BURLAP FROM TOP 1/3 OF BALL OR CUT & REMOVE NON-BIODEGRADEABLE CONTAINERS.

SCARIFY SIDES OF HOLE IF AUGERED.

PLANTING BACKFILL MIX TO CONSIST OF 1/3 NATIVE SOIL FROM ORIGINAL HOLE, 1/3 SAND, & 1/3 HUMUS I.E. PEAT OR SOIL-AID. MIX THOROUGHLY & PLACE 6" ALL AROUND.

WIRE BASKETS TO BE REMOVED BEFORE INSTALLATION

TREE STAKING

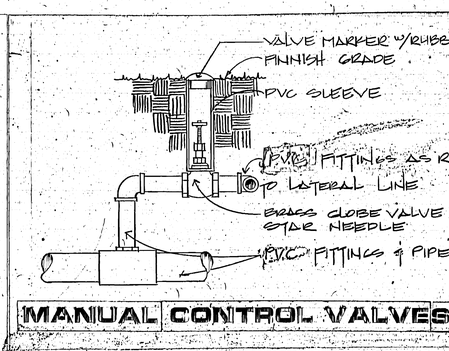

MANUAL CONTROL VALVES

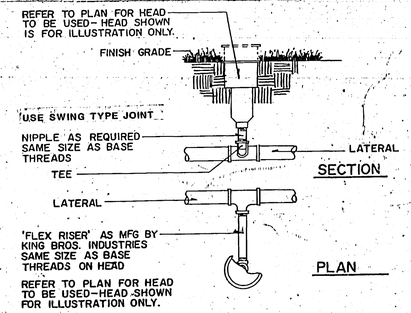

HEAD INSTALLATION
NOT TO SCALE

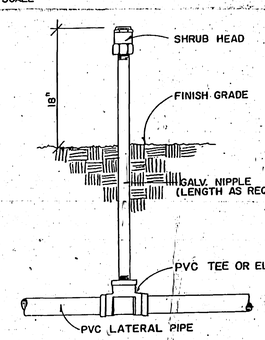

SHRUB HEAD DETAIL
NOT TO SCALE

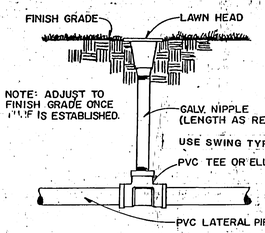

TYPICAL POP-UP DETAIL
NOT TO SCALE

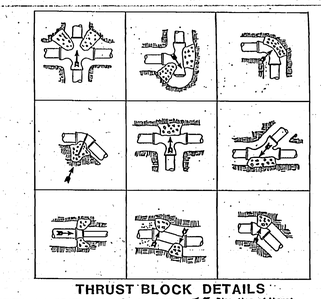

THRUST BLOCK DETAILS
← Direction of thrust

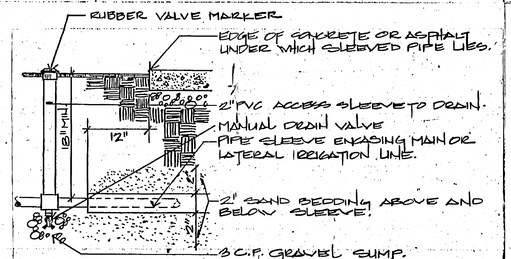

PIPE SLEEVES

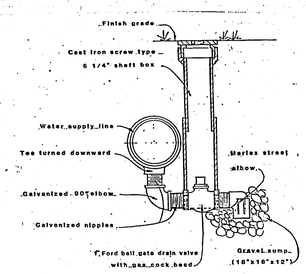

MANUAL DRAIN VALVE DETAIL

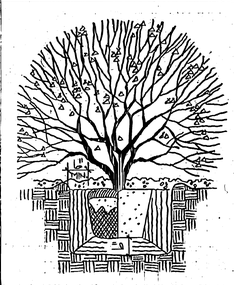

PROVIDE WATER SAUCER @ LIP OF EACH HOLE.

2" DEEP SHREDDED BARK MULCH.

SCARIFY SIDES OF HOLE IF AUGERED.

CUT AND LAY BACK BURLAP FROM TOP 1/3 OF BALL OR REMOVE FROM METAL CONTAINER, OR IF BARE ROOT STOCK SPREAD ROOTS IN THEIR NORMAL POSITION.

PLANTING MIX TO CONSIST OF 1/3 NATIVE SOIL FROM ORIGINAL HOLE, 1/3 SAND, & 1/3 HUMUS I.E. PEAT OR SOIL-AID. MIX THOROUGHLY & PLACE 6" ALL AROUND.

ON LEGGY SHRUBS WHERE GROUND COVER IS USED, PLANT GROUND COVER UP TO TRUNK.

SHRUB PLANTING

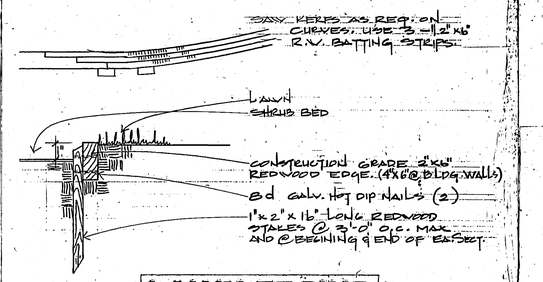

LAWN EDGING

RECORD DOCUMENTS JUL 3 1990

THESE DOCUMENTS HAVE BEEN REVISED TO RECORD INFORMATION SUBMITTED BY THE CONTRACTOR. WHILE THEY ARE ASSUMED TO BE RELIABLE THE ARCHITECT DOES NOT GUARANTEE THEIR ACCURACY.

0000TV1x1
Weber State College Physical Education Facility - WW-84-059
Landscape Details - 07/90

NOTE: THIS SHEET IS COMPRISED OF DRAWINGS AND DETAILS FROM THE ORIGINAL 1990 BUILDING CONSTRUCTION CONFORMED SET & HAS BEEN INCLUDED FOR INFORMATIONAL PURPOSES ONLY. CONDITIONS SHOWN ON THIS SHEET HAVE NOT BEEN VERIFIED WITH EXISTING CONSTRUCTED CONDITIONS.

jra JONES / RICHARDS & ASSOCIATES
ARCHITECTURE
(801) 544-3333
PLANNING
823 - 25TH STREET
CONSTRUCTION MANAGEMENT
OGDEN, UTAH

REVISED: AS BUILT 7-90

PROJECT NUMBER: 8403
DATE: 5-3-88
DRAWN BY: DLR

PROJECT: PHYSICAL EDUCATION FACILITY
WEBER STATE COLLEGE

SHEET TITLE: LANDSCAPE DETAILS

SHEET NO. L-4

DETAILS
NOT TO SCALE
REV. 6/7/88

MECHANICAL LEGEND AND ABBREVIATIONS

- POSITIVE PRESSURE DUCT - RISE
- POSITIVE PRESSURE DUCT - DROP
- NEGATIVE PRESSURE DUCT - RISE
- NEGATIVE PRESSURE DUCT - DROP
- ROUND DUCT - RISE
- ROUND DUCT - DROP
- RECTANGULAR DUCT
- ROUND DUCT
- UNDER FLOOR DUCT
- MEDIUM OR HIGH PRESSURE FLEX CONNECTION TO TERMINAL UNIT
- INCLINED DUCT RISE (UP)
- INCLINED DUCT DROP (DN)
- MANUAL DAMPER
- FIRE DAMPER W/ ACCESS DOOR
- ATC DAMPER
- FLEXIBLE DUCT
- FLEXIBLE CONNECTION
- SUPPLY DIFFUSER
- EXHAUST AIR REGISTER
- TURNING VANES
- FRESH AIR LOUVER
- RELIEF AIR OR EXHAUST AIR LOUVER
- RECTANGULAR TO RECTANGULAR TRANSITION
- ROUND TO ROUND TRANSITION
- RECTANGULAR TO ROUND TRANSITION
- NATURAL GAS (G)
- ARROW INDICATES DIRECTION OF FLOW IN PIPE LEADER INDICATES DOWNWARD SLOPE
- PIPE INTO PLANE
- PIPE OUT OF PLANE
- PIPE DIRECTION CHANGE
- PIPE BRANCH - OUT OF PLANE
- PIPE BRANCH - IN TO PLANE
- PIPE BRANCH - IN PLANE

- 90 ELBOW
- 45 ELBOW
- RISER TURNED UP
- RISER TURNED DOWN
- LR ELBOW
- SIDE OUT DOWN ELBOW
- SIDE UP OUT ELBOW
- BASE ELBOW
- DOUBLE ELBOW
- REDUCED ELBOW
- SWEEP TEE
- STRAIGHT TEE
- TEE UP
- TEE DOWN
- SIDE OUT UP
- SIDE OUT DOWN
- STRAIGHT TEE
- CONCENTRIC REDUCER
- ECCENTRIC REDUCER
- LATERAL STRAINER
- LATERAL STRAINER W/ BLOW-OFF VALVE
- GATE VALVE
- ATC VALVE - 2 WAY
- ATC VALVE - 3 WAY
- GLOBE VALVE
- HOSE GATE VALVE
- HOSE GLOBE VALVE
- ANGLE GLOBE VALVE
- ANGLE GLOBE VALVE DOWN
- ANGLE GATE VALVE
- ANGLE GATE VALVE DOWN
- PRESSURE REDUCING, SELF CONTAINED VALVE
- PRESSURE REDUCING, EXTERNAL PRESSURE VALVE
- BALL VALVE (2" AND SMALLER)
- BUTTERFLY VALVE (2-1/2" AND LARGER)
- CHECK VALVE
- 90 CHECK VALVE
- COCK VALVE
- SAFETY VALVE
- QUICK OPENING VALVE
- EXPANSION JOINT
- FLOAT VALVE
- MOTOR OPER. GATE VALVE
- MOTOR OPER. GLOBE VALVE
- RELIEF VALVE
- DIAPHRAGM

- PE — PNEUMATIC-ELECTRIC CONTROL VALVE
- S — SOLINOID VALVE
- ALIGNMENT GUIDE
- ANCHOR
- PRESSURE GAUGE W/COCK
- PS — PRESSURE SWITCH
- FLANGE
- UNION
- GPM / LB/HR — FLOW METER-ORIFICE
- AIR VENT-AUTO
- H — AIR VENT-MANUAL
- AIR SEPERATOR
- REDUCE FLANGE
- FLOW SWITCH
- SLEEVE
- 0 - 100 F — THERMOMETER 0-100° F
- 30 - 240 F — THERMOMETER 30-240° F
- T — THERMOSTAT
- T_N — NIGHT THERMOSTAT
- STEAM TRAP
- SD — DUCT SMOKE DETECTOR
- H — DUCT HUMIDIFIER
- SHUT OFF COCK FOR USE W/ PRESSURE GUAGE
- PUMP
- REDUCER
- EXPANSION LOOP
- FLEXIBLE CONNECTION
- GPM / Δ/HT. — FLOW METER
- LPR — LOW PRESSURE RETURN
- HPS — HIGH PRESSURE STEAM
- LPS — LOW PRESSURE STEAM
- HPR — HIGH PRESSURE STEAM RETURN
- P — PUMP DISCHARGE
- MU — MAKEUP WATER
- V — AIR RELIEF LINE(VENT)
- CH — CHILLED WATER SUPPLY
- CHR — CHILLED WATER RETURN
- HWS — HEATING HOT WATER SUPPLY
- HWR — HEATING HOT WATER RETURN
- GPM — FLOW CONTROL VALVE
- CIRCUIT SETTER BALANCING VALVE

- A / M4.1 — SECTION TAG - TOP FIGURE IS SECTION NO. BOTTOM FIGURE IS SHEET NO.
- 1 / M4.1 — DETAIL/DIAGRAM TAG - TOP FIGURE IS D/D NO. BOTTOM FIGURE IS SHEET NO.
- EF-1 — EQUIPMENT IDENTIFICATION
- (1) — KEYED NOTE IDENTIFICATION
- P-1 — PLUMBING FIXTURES

QQQQTVWD
Weber State University, Physical Education Facility - RW 84-058
Mechanical Legends & Abbreviations - 28737

RECORD DOCUMENTS JUL 3 1990
THESE DOCUMENTS HAVE BEEN REVISED TO RECORD INFORMATION SUBMITTED BY THE CONTRACTOR. WHILE THEY ARE ASSUMED TO BE RELIABLE THE ARCHITECT DOES NOT GUARANTEE THEIR ACCURACY.

REGISTERED PROFESSIONAL ENGINEER — No. 7122 — KIM P. HARRIS — 7-4-90 — STATE OF UTAH

NOTE: THIS SHEET IS COMPRISED OF DRAWINGS AND DETAILS FROM THE ORIGINAL 1990 BUILDING CONSTRUCTION CONFORMED SET & HAS BEEN INCLUDED FOR INFORMATIONAL PURPOSES ONLY. CONDITIONS SHOWN ON THIS SHEET HAVE NOT BEEN VERIFIED WITH EXISTING CONSTRUCTED CONDITIONS.

jra JONES/ RICHARDS & ASSOCIATES
ARCHITECTURE (801)394-3033
PLANNING 533 26TH STREET
CONSTRUCTION MANAGEMENT OGDEN, UTAH

REVISED: As Built 6-90

PROJECT NUMBER: 8403 | DATE: 6-21-88 | DRAWN BY:

PROJECT: PHYSICAL EDUCATION FACILITY
WEBER STATE COLLEGE

SHEET TITLE: MECHANICAL LEGENDS & ABBREVIATIONS

SHEET NO. M-0

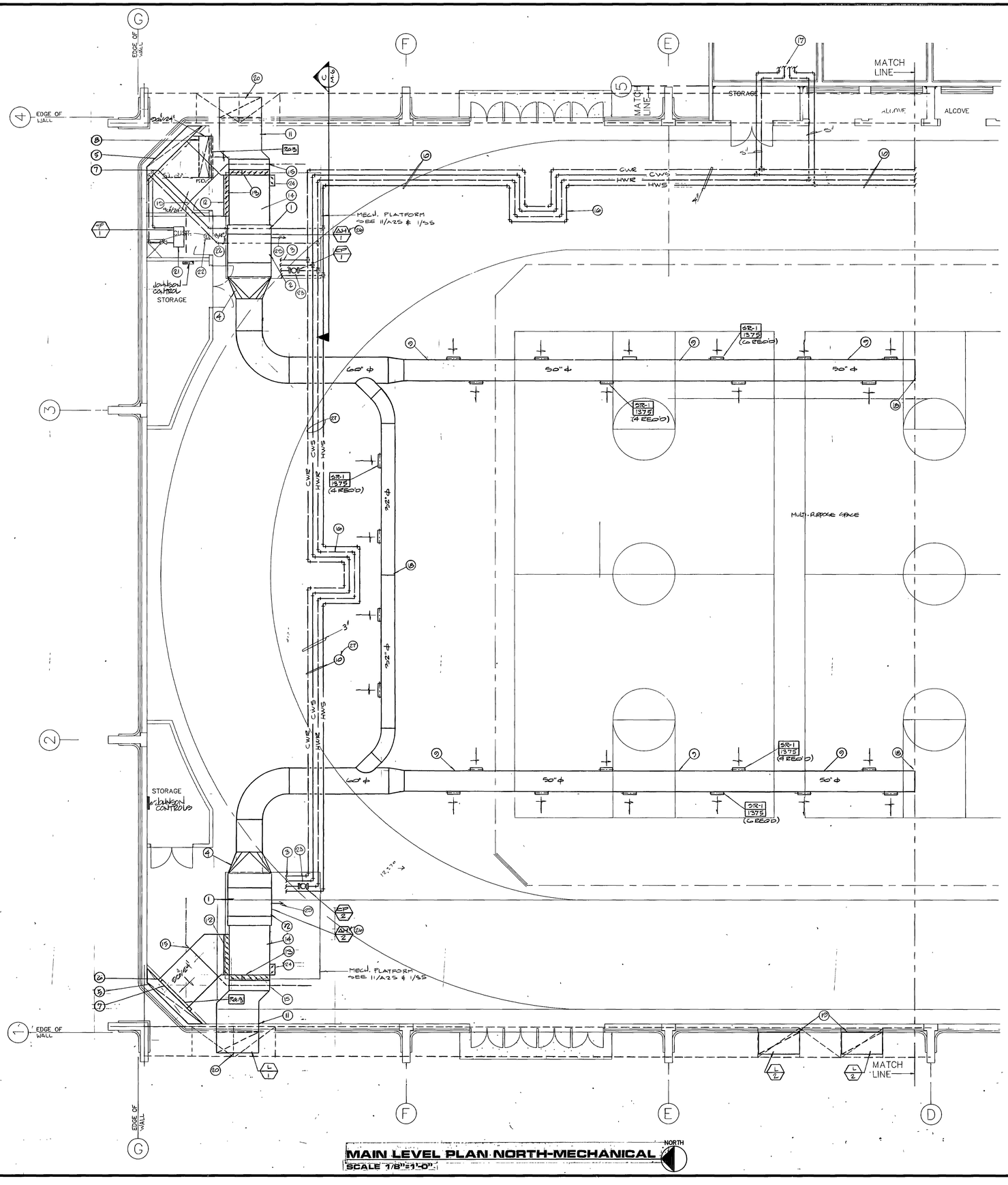

MAIN LEVEL PLAN NORTH-MECHANICAL

SCALE 1/8"=1'-0"

KEYED NOTES

1. SEE TYPICAL SECTION C/M-6 FOR MOUNTAIN HEIGHT OF AIR HANDLER.
2. MOUNT AIR HANDLER ON ELEVATED PLATFORM PROVIDED BY THE GENERAL CONTRACTOR.
3. EXTEND HOT AND CHILLED WATER PIPING TO AIR HANDLER COILS. SEE PIPING SCHEMATIC FOR ALL VALVES AND COIL PIPING REQUIRED.
4. RECTANGULAR TO ROUND TRANSITION.
5. PROVIDE A SHEET METAL COVER ON TOP OF THE MECHANICAL CHASE, TYPICAL.
6. CONNECT 96"/24" RETURN AIR DUCT TO RETURN AIR SHAFT. SEAL AIR TIGHT, AND EXTEND TO AIR-HANDLER.
7. MOUNT RETURN AIR GRILLE IN FACE OF THE RETURN AIR SHAFT AT FLOOR LEVEL.
8. RISE 96"/24" DUCT FROM THE RETURN AIR GRILLE AT FLOOR AND RUN AT CEILING OF THE STORAGE ROOM. CONNECT DUCT TO RETURN AIR SHAFT, AND SEAL AIR TIGHT.
9. RUN ALL ROUND SPIRAL SUPPLY AIR DUCT THROUGH THE OPEN WEBBS OF JOISTS, TYPICAL.
10. RUN ALL HOT WATER AND CHILLED WATER PIPING AS HIGH AS POSSIBLE, THRU TRUSSES.
11. EXTEND 96"/24" DUCT THROUGH THE OPEN WEBBS OF THE JOIST TO THE FRESH AIR LOUVER IN SOFFIT.
12. 96"/24" RETURN AIR DAMPER WITH PARALLEL BLADES TO DIRECT THE AIR FLOW AS SHOWN.
13. PROVIDE A 24"/24" MINIMUM FRESH AIR DAMPER AND A 72" X 24" FRESH AIR DAMPER WITH PARALLEL BLADES TO DIRECT THE AIR FLOW AS SHOWN.
14. PROVIDE A MIXED AIR PLENUM AT INLET OF AIR HANDLER, THE SAME SIZE AS THE INLET TO FAN.
15. 96"/24" DUCT SHALL PENETRATE THE ACOUSTICAL BARRIER PERPENDICULAR TO THE BARRIER. SEE THE ARCHITECTURAL DRAWINGS FOR EXACT LOCATION.
16. PROVIDE AN EXPANSION LOOP IN HOT WATER AND CHILLED WATER PIPES.
17. SEE SHEET M-3 FOR CONTINUATION OF PIPING.
18. CONNECT SUPPLY AIR DUCTS TOGETHER WITH A DIVIDER BETWEEN THEM TO PREVENT AIR FROM CROSSING OVER INTO THE OTHER DUCTS.
19. 96" X 48" RELIEF AIR LOUVER, L-2, PROVIDED WITH ATC DAMPER AND BACKDRAFT DAMPER. EXTEND DUCT FROM LOUVER THROUGH CROSS MEMBERS OF THE HORIZONTAL TRUSS TO THE ATC & BACKDRAFT DAMPER. SEAL DUCT WHERE THE STRUCTURAL MEMBERS PASS THROUGH. ONE RELIEF DAMPER SHALL BE INTERLOCKED TO AH-1 AND THE OTHER TO AH-2.
20. DROP 96" X 48" DUCT FROM BOTTOM OF THE 96" X 24" DUCT TO FA INTAKE LOUVER L-1. RUN DUCT THROUGH CROSS MEMBERS AND VERTICAL MEMBERS OF THE HORIZONTAL TRUSS. SEAL DUCT WHERE THE STRUCTURAL MEMBERS PASS THROUGH.
21. DROP HWS AND HWR LINES TO RADIANT HEATING PANELS. MOUNT PANELS IN CEILING OF ROOM, COORDINATE PANEL LOCATION WITH LIGHTING.
22. THERMOSTAT FOR RADIANT HEATING PANELS.
23. ALL VALVES, PUMPS, AND DAMPER OPERATORS ETC. SHALL BE MOUNTED ABOVE PLATFORM IN ORDER TO BE SERVICED FROM THE PLATFORM, TYPICAL.
24. 20"/24" AUXILLARY RETURN AIR DAMPER, SEE SPECIFICATIONS FOR SEQUENCE OF OPERATION.
25. EXTEND DRAIN LINE FROM COOLING COIL PAN TO NEAREST FLOOR DRAIN.
26. PROVIDE NIGHT THERMOSTAT FOR EACH AIR HANDLER SEE ADD#2 P&S #29.
27. PROVIDE UNISTRUT SUPPORT BETWEEN THE JOISTS TO SUPPORT ALL PIPING WHEN THE PIPES ARE RUNNING PARALLEL TO THE JOISTS FROM WHICH THE PIPES ARE SUPPORTED. SEE ADD#2 P&S #30

00007VM1
Weber State College, Physical Education Facility - RW 84-058
Mechanical Plan Main Level North - 26738

RECORD DOCUMENTS — JUN 20 1990
THESE DOCUMENTS HAVE BEEN REVISED TO RECORD INFORMATION SUBMITTED BY THE CONTRACTOR. THE ARCHITECT ARE ASSUMED TO BE RELIABLE THE ARCHITECT DOES NOT GUARANTEE THEIR ACCURACY.

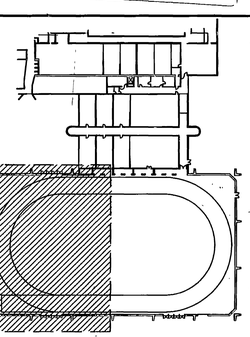

LOCATION PLAN
NO SCALE

REGISTERED PROFESSIONAL ENGINEER — No. 7122 KIM P. HARRIS — STATE OF UTAH

NOTE: THIS SHEET IS COMPRISED OF DRAWINGS AND DETAILS FROM THE ORIGINAL 1990 BUILDING CONSTRUCTION CONFORMED SET & HAS BEEN INCLUDED FOR INFORMATIONAL PURPOSES ONLY. CONDITIONS SHOWN ON THIS SHEET HAVE NOT BEEN VERIFIED WITH EXISTING CONSTRUCTED CONDITIONS.

JONES/ RICHARDS & ASSOCIATES
CONSTRUCTION MANAGEMENT
PLANNING
533 28TH STREET
OGDEN, UTAH

jra
ARCHITECTURE
(801)394-3033

REVISED: AS BUILTS 6-90
PROJECT NUMBER: 8403
DATE: 9-21-88
DRAWN BY:

PROJECT: PHYSICAL EDUCATION FACILITY
WEBER STATE COLLEGE

SHEET TITLE: MECHANICAL PLAN-MAIN LEVEL-NORTH

SHEET NO. M-1

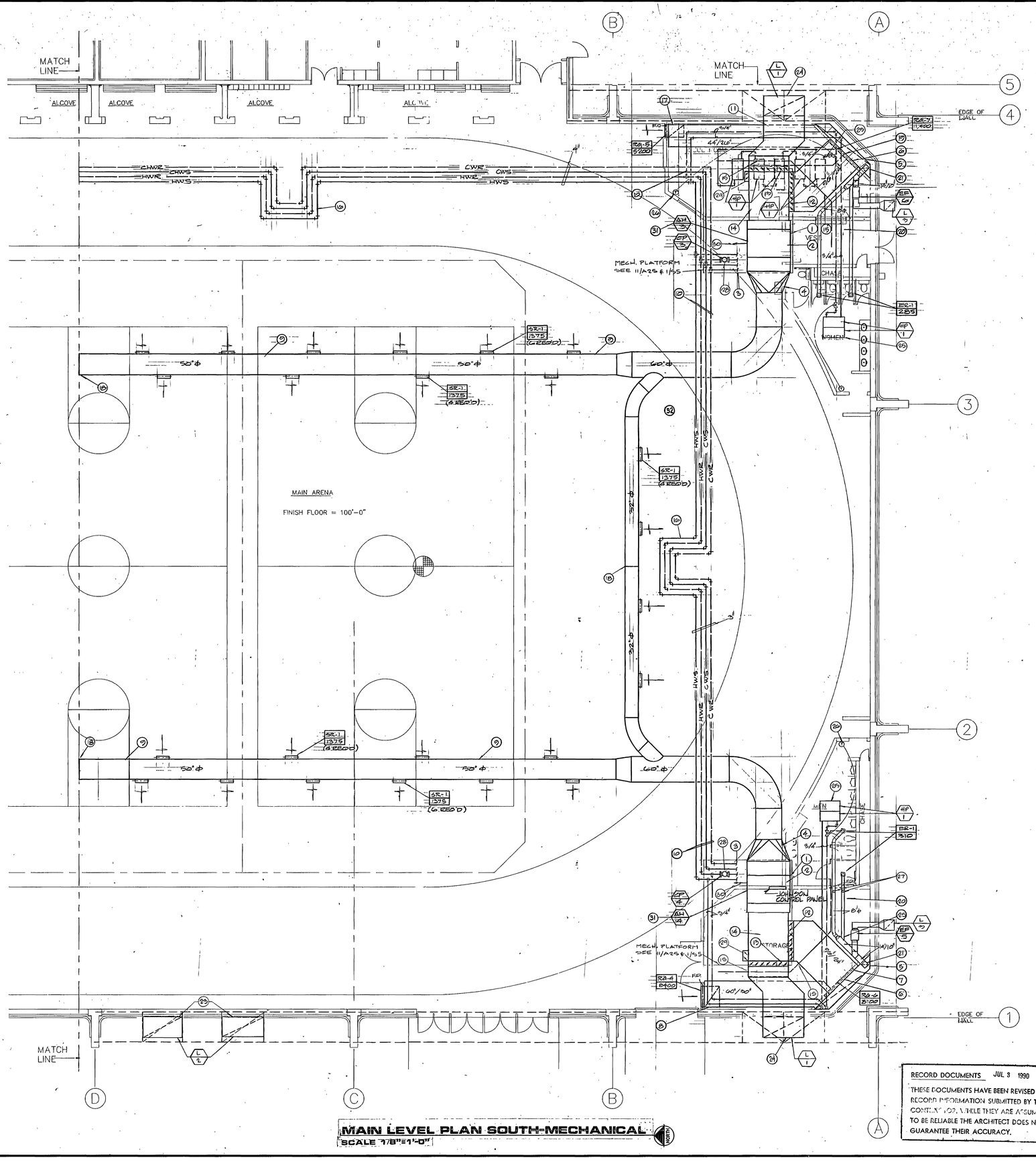

MAIN LEVEL PLAN SOUTH-MECHANICAL

SCALE 1/8"=1'-0"

KEYED NOTES

1. SEE TYPICAL SECTION C/H-6 FOR MOUNTING HEIGHT OF AIR HANDLER.
2. MOUNT AIR HANDLER ON ELEVATED PLATFORM PROVIDED BY THE GENERAL CONTRACTOR.
3. EXTEND HOT AND CHILLED WATER PIPING TO AIR HANDLER COILS. SEE PIPING SCHEMATIC FOR ALL VALVES AND COIL PIPING REQUIRED.
4. RECTANGULAR TO ROUND TRANSITION.
5. PROVIDE A SHEET METAL COVER ON TOP OF THE MECHANICAL CHASE, TYPICAL.
6. CONNECT 96"/24" RETURN AIR DUCT TO RETURN AIR SHAFT. SEAL AIR TIGHT, AND EXTEND TO AIR-HANDLER.
7. MOUNT RETURN AIR GRILLE IN FACE OF THE RETURN AIR SHAFT ABOVE THE CEILING OF THE STORAGE ROOM.
8. RISE 48"/36" DUCT FROM THE RETURN AIR GRILLE AT FLOOR. CONNECT TO THE 60"/30" DUCT AND RUN AT CEILING OF THE STORAGE ROOM. CONNECT DUCT TO RETURN AIR SHAFT, AND SEAL AIR TIGHT.
9. RUN ALL ROUND SPIRAL SUPPLY AIR DUCT THROUGH THE OPEN WEBBS OF JOISTS, TYPICAL.
10. RUN ALL HOT WATER AND CHILLED WATER PIPING AS HIGH AS POSSIBLE.
11. EXTEND 36"/36" DUCT THROUGH THE OPEN WEBBS OF THE JOISY TO THE FRESH AIR LOUVER IN SOFFIT.
12. 96"/24" RETURN AIR DAMPER WITH PARALLEL BLADES TO DIRECT THE AIR FLOW AS SHOWN.
13. PROVIDE A 24"/24" MINIMUM FRESH AIR DAMPER AND A 72"/24" FRESH AIR DAMPER WITH PARALLEL BLADES TO DIRECT THE AIR FLOW AS SHOWN.
14. PROVIDE A MIXED AIR PLENUM AT INLET OF AIR HANDLER, THE SAME SIZE AS THE INLET TO FAN.
15. 96"/24" DUCT SHALL PENETRATE THE ACOUSTICAL BARRIER PERPENDICULAR TO THE BARRIER. SEE THE ARCHITECTURAL DRAWINGS FOR EXACT LOCATION.
16. PROVIDE AN EXPANSION LOOP IN HOT WATER AND CHILLED WATER PIPES.
17. RISE 30"/36" DUCT FROM THE RETURN AIR GRILLE AT FLOOR. CONNECT TO THE 44"/26" DUCT AND RUN AT CEILING OF THE ISSUE ROOM. CONNECT DUCT TO THE RETURN AIR SHAFT AND SEAL AIR TIGHT.
18. CONNECT SUPPLY AIR DUCTS TOGETHER WITH A DIVIDER BETWEEN THEM TO PREVENT AIR FROM CROSSING OVER INTO THE OTHER DUCT.
19. MOUNT RETURN AIR GRILLE IN FACE OF THE RETURN AIR SHAFT ABOVE THE CEILING OF THE ISSUE ROOM.
20. RUN EXHAUST DUCTWORK BETWEEN JOISTS SUPPORTING THE CEILING OVER THE STORAGE AND TOILET ROOMS.
21. RISE EXHAUST DUCT IN THE RETURN AIR SHAFT, AND OFFSET BELOW ROOF STRUCTURE AS SHOWN.
22. RISE DUCT THROUGH ROOF TO EXHAUST FAN ON ROOF.
23. 96" X 48" RELIEF AIR LOUVER L-2, PROVIDED WITH ATC DAMPER AND BACKDRAFT DAMPER. EXTEND DUCT FROM LOUVER THROUGH CROSS MEMBERS OF THE HORIZONTAL TRUSS TO THE ATC AND BACKDRAFT DAMPERS. SEAL DUCT WHERE THE STRUCTURAL MEMBERS PASS THROUGH. ONE RELIEF DAMPER SHALL BE INTERLOCKED TO AH-3 AND THE OTHER TO AH-4.
24. DROP 96" X 48" DUCT FROM BOTTOM OF THE 96" X 24" DUCT TO F.A. INTAKE LOUVER, L-1. RUN DUCT THROUGH CROSS MEMBERS AND VERTICAL MEMBERS OF THE HORIZIONTAL TRUSS. SEAL DUCT WHERE THE STRUCTURAL MEMBERS PASS THROUGH.
25. DROP HWS AND HWR LINES TO RADIANT HEATING PANELS. MOUNT PANELS IN CEILING OF ROOM. COORDINATE PANEL LOCATIONS WITH LIGHTING.
26. THERMOSTAT FOR RADIANT HEATING PANELS.
27. RISE DUCTS TO CEILING OF THE STORAGE ROOM.
28. ALL VALVES, PUMPS, AND DAMPER OPERATORS ETC. SHALL BE MOUNTED ABOVE PLATFORM IN ORDER TO BE SERVICED FROM THE PLATFORM, TYPICAL.
29. 20"/24" AUXILLARY RETURN AIR DAMPER, SEE SPECIFICATIONS FOR SEQUENCE OF OPERATION.
30. EXTEND DRAIN LINE FROM COOLING COIL PAN TO NEAREST FLOOR DRAIN.
31. PROVIDE NIGHT THERMOSTAT FOR EACH AIR HANDLER UNIT. SEE ADDENDUM # 2-G-29.
32. PROVIDE A UNISTRUT SUPPORT BETWEEN THE JOISTS TO SUPPORT ALL PIPING WHEN THE PIPES ARE RUNNING PARALLEL TO THE JOISTS FROM WHICH THE PIPES ARE SUPPORTED. ADD # 2-G-30

0000TVM2
Weber State College, Physical Educaton Facility - RW 84-058
Mechanical Plan Main Level South - 26739

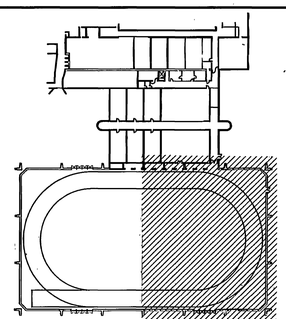

LOCATION PLAN
NO SCALE

RECORD DOCUMENTS JUL 3 1990

THESE DOCUMENTS HAVE BEEN REVISED TO RECORD INFORMATION SUBMITTED BY THE CONTRACTOR. WHILE THEY ARE ASSUMED TO BE RELIABLE THE ARCHITECT DOES NOT GUARANTEE THEIR ACCURACY.

REGISTERED PROFESSIONAL ENGINEER No. 7122 JEFF HARRIS STATE OF UTAH

NOTE: THIS SHEET IS COMPRISED OF DRAWINGS AND DETAILS FROM THE ORIGINAL 1990 BUILDING CONSTRUCTION CONFORMED SET & HAS BEEN INCLUDED FOR INFORMATIONAL PURPOSES ONLY. CONDITIONS SHOWN ON THIS SHEET HAVE NOT BEEN VERIFIED WITH EXISTING CONSTRUCTED CONDITIONS.

JONES/ RICHARDS & ASSOCIATES
PLANNING
CONSTRUCTION MANAGEMENT
533 26TH STREET
OGDEN, UTAH
ARCHITECTURE
(801)394-3033

REVISED: AS BUILT 6-90

PROJECT NUMBER: 8403
DATE: 6-21-88
DRAWN BY:

PROJECT: PHYSICAL EDUCATION FACILITY
WEBER STATE COLLEGE

SHEET TITLE: MECHANICAL PLAN-MAIN LEVEL-SOUTH

SHEET NO. M-2

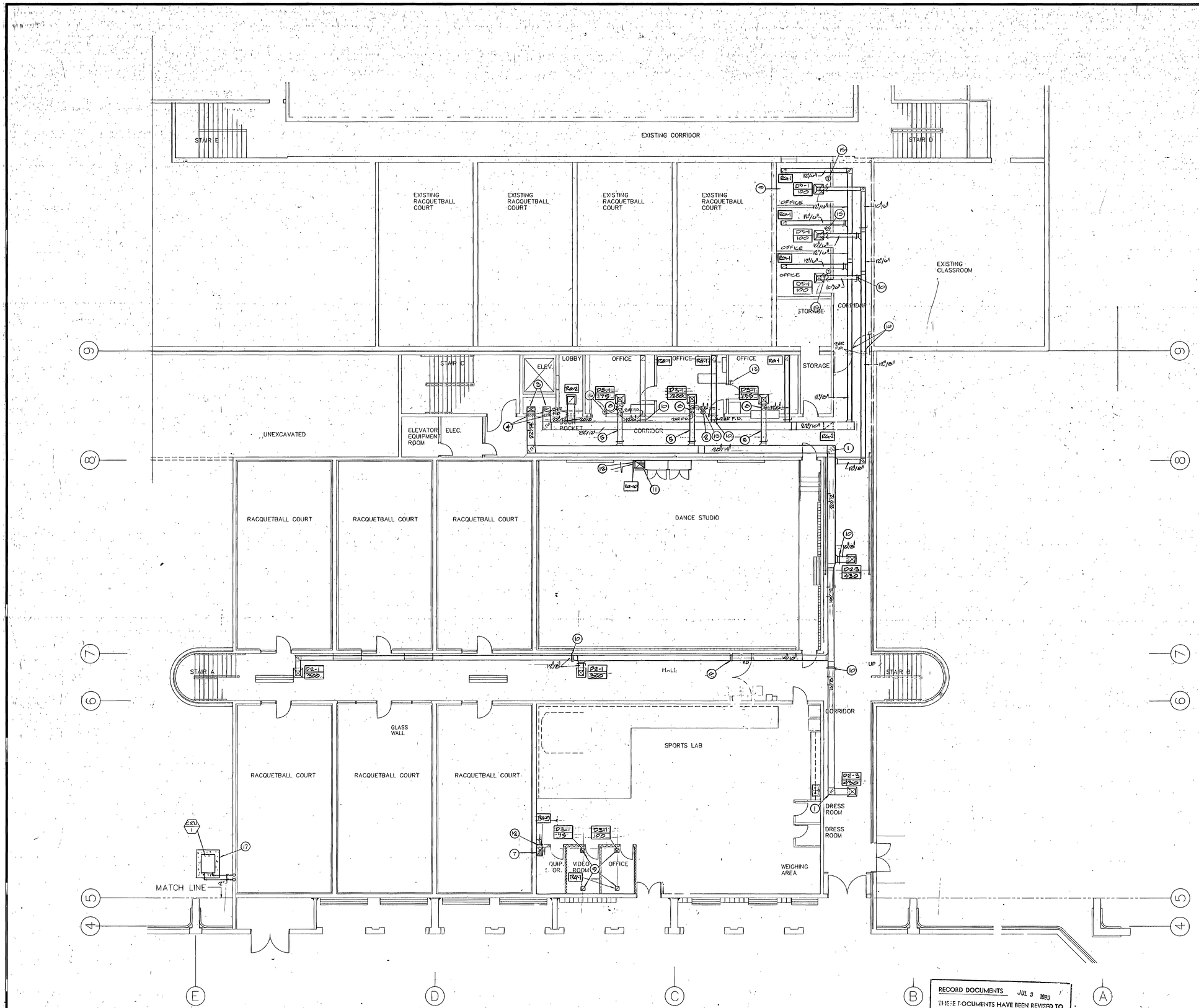

MAIN LEVEL PLAN LINK-MECHANICAL

SCALE 1/8"=1'-0"

RECORD DOCUMENTS JUL 3 1990

THESE DOCUMENTS HAVE BEEN REVISED TO RECORD INFORMATION SUBMITTED BY THE CONTRACTOR, WHILE THEY ARE ASSUMED TO BE RELIABLE THE ARCHITECT DOES NOT GUARANTEE THEIR ACCURACY.

KEYED NOTES

1. TURNING VANES, TYPICAL.
2. THERMOSTAT, TYPICAL.
3. RISE DUCTS TO FLOOR ABOVE, SEE SHEET M-4 FOR CONTINUATION.
4. 2 HOUR FIRE DAMPER WITH ACCESS DOOR.
5. RUN DUCT BETWEEN TRUSSES.
6. 1 HOUR FIRE DAMPER, WITH ACCESS DOOR.
7. RISE 18" X 24" R.A. DUCT TO LEVEL ABOVE. SEE SHEET M-4.
8. DROP DUCT BELOW TRUSS.
9. SEE SHEET M-4, FOR DUCTWORK TO DIFFUSERS AND RETURN AIR GRILLES.
10. RISE 18" X 24" DUCT, SEE SHEET M-4 FOR CONTINUATION.
11. RISE 24" X 24" DUCT, SEE SHEET M-4 FOR CONTINUATION.
12. MOUNT RETURN AIR GRILLE AT THE FLOOR.
13. MAIN THERMOSTAT TO CONTROL AIR HANDLER ZONE DAMPERS.
14. MANUAL VOLUME DAMPER, TYPICAL.
15. OFFICE ZONE THERMOSTAT TO CONTROL ATC DAMPER IN THE BRANCH DUCT SERVING THAT OFFICE ONLY.
16. PROVIDE FLEXIBLE DUCT CONNECTION AT BUILDING EXPANSION JOINT.
17. MOUNT DRY COOLER ON A 6" CONCRETE PAD BY GC, FOR THE COMPUTER ROOM AIR-CONDITIONING UNIT ON GRADE OUTSIDE. GLYCOL SUPPLY AND RETURN LINES SHALL RISE IN WALL TO CEILING SPACE ABOVE, SHEET M-4 FOR CONTINUATION.
18. PROVIDE NIGHT THERMOSTAT FOR AIR HANDLERS ADD # 2-6-29

0000TVM3
Weber State College, Physical Education Facility - RW 84-058
Mechanical Plan Main Level - 28740

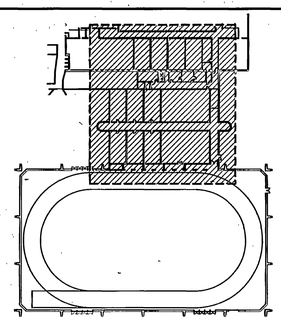

LOCATION PLAN
NO SCALE

REGISTERED PROFESSIONAL ENGINEER No. 7122 KIM P. HARRIS STATE OF UTAH

NOTE: THIS SHEET IS COMPRISED OF DRAWINGS AND DETAILS FROM THE ORIGINAL 1990 BUILDING CONSTRUCTION CONFORMED SET & HAS BEEN INCLUDED FOR INFORMATIONAL PURPOSES ONLY. CONDITIONS SHOWN ON THIS SHEET HAVE NOT BEEN VERIFIED WITH EXISTING CONSTRUCTED CONDITIONS.

jra JONES/ RICHARDS & ASSOCIATES
ARCHITECTURE (801)394-3033
PLANNING 533 26TH STREET
CONSTRUCTION MANAGEMENT OGDEN, UTAH

REVISED: AS BUILTS 6-90

PROJECT NUMBER: 8403
DATE: 8-21-88
DRAWN BY:

PROJECT: PHYSICAL EDUCATION FACILITY
WEBER STATE COLLEGE

SHEET TITLE: MECHANICAL PLAN - MAIN LEVEL LINK

SHEET NO. M-3

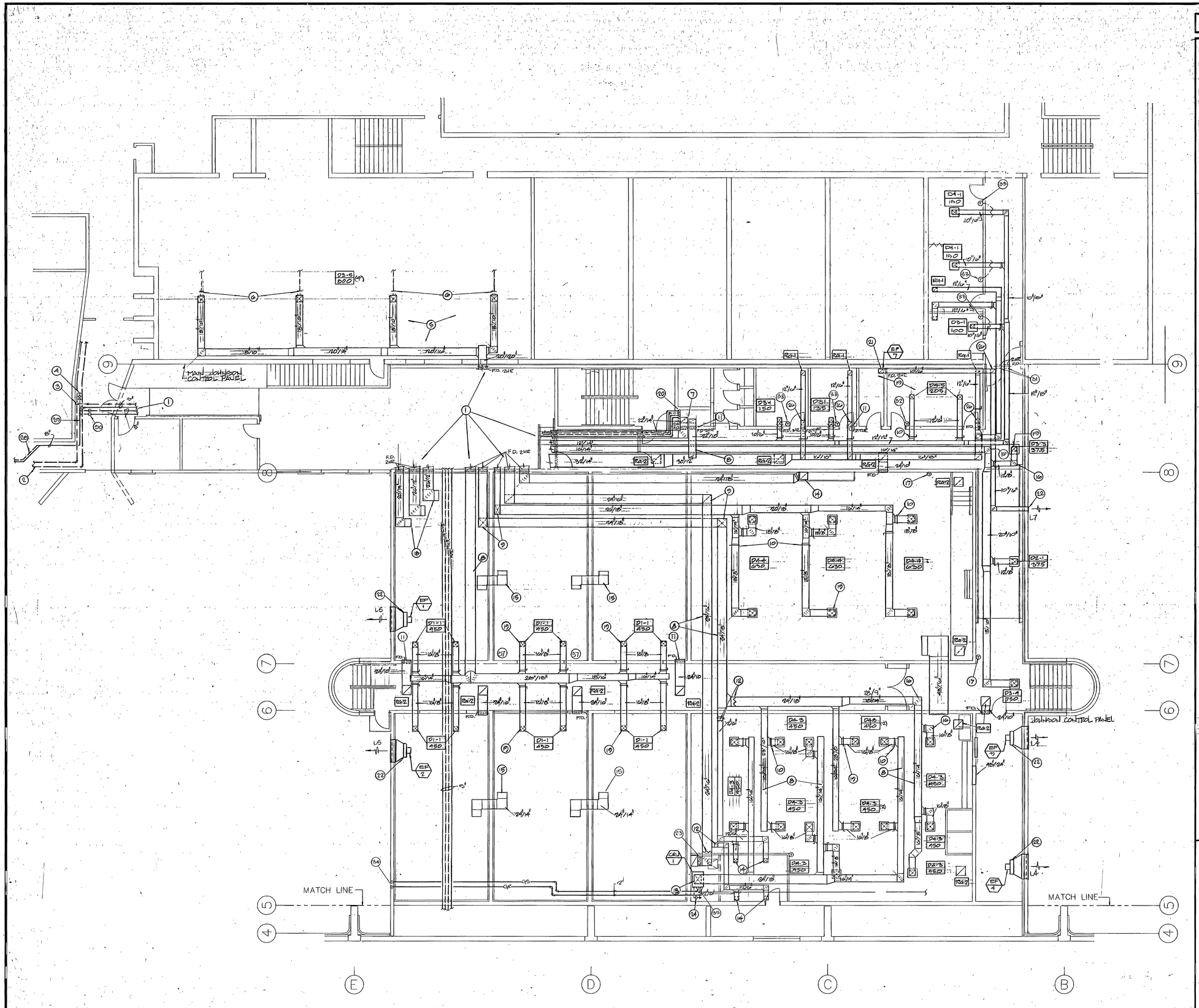

MID LEVEL PLAN - MECHANICAL
SCALE 1/8"=1'-0"

KEYED NOTES

1. FOR CONTINUATION OF DUCTS AND PIPING, SEE MECHANICAL ROOM PLAN SHEET M-6, FIRE DAMPER ALL DUCT PENETRATIONS WITH 2 HR F.D., TYPICAL.
2. FOR CONTINUATION OF EXISTING STEAM AND CONDENSATE AND THE NEW CHILLED WATER LINES IN THE EXISTING TUNNEL, SEE SITE PLAN.
3. CONNECT NEW STEAM AND CONDENSATE LINE TO EXISTING LINES.
4. CAP AND VALVE 5" CHILLED WATER SUPPLY AND RETURN LINES FOR FUTURE EXTENSION TO THE EXISTING GYMNASIUM.
5. EXTEND NEW DUCTWORK INTO THE EXISTING DANCE ROOM IN FURRED DOWN CEILING. RISE BRANCH DUCTS AND EXTEND DUCTWORK BETWEEN EXISTING STRUCTURE. DROP THE NEW CEILING DIFFUSERS IN THE SAME LOCATION AS THE EXISTING DIFFUSERS.
6. DISCONNECT THE EXISTING DIFFUSERS AND REMOVE. CAP THE EXISTING DUCTWORK ABOVE THE CEILING.
7. DROP SUPPLY AND RETURN DUCTS TO FLOOR BELOW IN MECHANICAL SHAFT, SEE SHEET M-3 FOR CONTINUATION.
8. RUN DUCT BETWEEN JOISTS.
9. RISE DUCTS INTO JOIST SPACE, TYPICAL.
10. MANUAL VOLUME DAMPER, TYPICAL.
11. FIRE DAMPER WITH 2 HR F.D. AND ACCESS DOOR, TYPICAL.
12. ATC DAMPER.
13. DROP DUCT TO CR4/1 UNIT BELOW.
14. DROP DUCT TO LEVEL BELOW, SEE SHEET M-3.
15. PROVIDE A TRANSFER DUCT WITH SOUND BOOT THROUGH WALL.
16. TURNING VANES, TYPICAL.
17. THERMOSTAT, TYPICAL.
18. PROVIDE SOUND BOOT ON END OF RETURN AIR DUCTS.
19. FOR FINAL DIFFUSER, AND RETURN AIR GRILLE LOCATIONS SEE ARCHITECTURAL REFLECTED CEILING PLANS, TYPICAL.
20. RISE PIPES IN MECHANICAL SHAFT TO FLOOR ABOVE, SEE SHEET M-5.
21. CEILING MOUNTED EXHAUST FAN.
22. RELIEF AIR FANS, EXHAUST AIR THROUGH RELIEF AIR LOUVERS, SEE ARCHITECTURAL DRAWINGS FOR ELEVATIONS AND LOCATIONS OF EXTERIOR LOUVERS.
23. PROVIDE A 24" X 24" OPENING INTO THE R.A. DUCT WITH AN ATC DAMPER. DAMPER SHALL BE OPEN ONLY WHEN CRU/1 IS OPERATIONAL.
24. EXTEND DRAIN LINE FROM COOLING COIL PAN TO NEAREST FLOOR DRAIN.
25. PROVIDE OPENING IN WALL ABOVE CEILING.
26. DROP DUCT AND RUN BELOW TRUSSES.
27. SEE ARCHITECTURAL DRAWINGS FOR ELEVATION AND LOCATION OF EXTERIOR LOUVER.
28. EXTEND NEW CHILLED WATER PIPES FROM EXISTING PIPE RACK ACROSS TUNNEL, ON THE FLOOR OF THE TUNNEL. RUN ONE PIPE ABOVE THE OTHER.
29. RUN NEW CHILLED WATER PIPING BELOW THE EXISTING STEAM AND CONDENSATE PIPING AS CLOSE TO THE EXISTING WALL AS POSSIBLE.
30. EXTEND BRANCH LINES FROM THE NEW CHILLED WATER PIPING AT THE FLOOR. RISE TO THE CEILING AND CONTINUE AS SHOWN.
31. PROVIDE FLEXIBLE DUCT CONNECTION AT BUILDING EXPANSION JOINT.
32. MAIN THERMOSTAT TO CONTROL AIR-HANDLER ZONE DAMPERS.
33. OFFICE ZONE THERMOSTAT TO CONTROL ATC DAMPER IN THE BRANCH DUCT SERVING THAT OFFICE ONLY.
34. DROP GLYCOL SUPPLY AND RETURN LINES IN WALL. SEE SHEET M-3 FOR CONTINUATION.
35. DROP GLYCOL LINES TO AIR CONDITIONING UNIT.
36. PROVIDE A NIGHT THERMOSTATE FOR AIR HANDLER. SEE ADD#2 PG6-29.
37. MODIFY DUCT @ CONC BEAM.

0000TVM4
Weber State College, Physical Education Facility - RW 84-058
Mechanical Plan Mid Level link - 26741

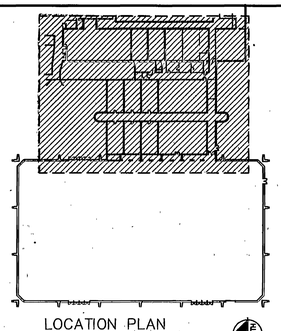

LOCATION PLAN
NO SCALE

REGISTERED PROFESSIONAL ENGINEER No. 7122 KIM P. HARRIS STATE OF UTAH

NOTE: THIS SHEET IS COMPRISED OF DRAWINGS AND DETAILS FROM THE ORIGINAL 1990 BUILDING CONSTRUCTION CONFORMED SET & HAS BEEN INCLUDED FOR INFORMATIONAL PURPOSES ONLY. CONDITIONS SHOWN ON THIS SHEET HAVE NOT BEEN VERIFIED WITH EXISTING CONSTRUCTED CONDITIONS.

jra JONES/ RICHARDS & ASSOCIATES
ARCHITECTURE (801)394-3033
PLANNING 533 26TH STREET
CONSTRUCTION MANAGEMENT OGDEN, UTAH

REVISED: AS BUILTS 6-90

PROJECT NUMBER: 8403
DATE: 8-21-88
DRAWN BY:

PROJECT: PHYSICAL EDUCATION FACILITY
WEBER STATE COLLEGE

SHEET TITLE: MECHANICAL PLAN - MID LEVEL - LINK

SHEET NO. M-4

BALCONY FLOOR PLAN-MECHANICAL
SCALE 1/8"=1'-0"

PLAZA LEVEL FLOOR PLAN-MECHANICAL
SCALE 1/8"=1'-0"

RECORD DOCUMENTS JUL 3 1990
THESE DOCUMENTS HAVE BEEN REVISED TO RECORD INFORMATION SUBMITTED BY THE CONTRACTOR. WHILE THEY ARE ASSUMED TO BE RELIABLE THE ARCHITECT DOES NOT GUARANTEE THEIR ACCURACY.

KEYED NOTES

1. RISE HOT AND CHILLED WATER PIPING FROM BELOW, SEE SHEET M-4.
2. FLEXIBLE CONNECTION, TYPICAL.
3. FOR FAN COIL PIPING, SEE PIPING SCHEMATIC SHEET M-7, TYPICAL.
4. MINIMUM FRESH AIR FROM INTAKE HOODS EXTEND TO INLET OF EACH FAN COIL WITH MANUAL VOLUME DAMPER. BALANCE TO 15% OUTSIDE AIR ON EACH FAN COIL UNIT.
5. PROVIDE A PLENUM ON INLET TO FAN COIL UNIT.
6. MANUAL VOLUME DAMPER, TYPICAL.
7. THERMOSTAT, TYPICAL.
8. FOR FINAL DIFFUSER AND RETURN AIR GRILLE LOCATIONS, SEE ARCHITECTURAL REFLECTED CEILING PLANS, TYPICAL.
9. REMOVE AND ABANDON EXISTING DUCTWORK AND DIFFUSER.
10. CAP EXISTING DUCT.
11. REMOVE AND ABANDON EXISTING FAN COIL UNIT IN THE GYMNASIUM. CAP EXISTING PIPING TO THE FAN COIL UNIT.
12. 36" X 24" OPENING IN ELEVATOR SHAFT WITH NORMALLY CLOSED FIRE DAMPER.
13. REMOVE AND REPLACE EXISTING FAN COIL UNITS IN REQ'D OFFICES.

0000TVM5
Weber State College, Physical Education Facility - RW 84-058
Mechanical Plan Plaza Level link - 26742

LOCATION PLAN
NO SCALE

REGISTERED PROFESSIONAL ENGINEER No. 7122 KIM P. HARRIS STATE OF UTAH

NOTE: THIS SHEET IS COMPRISED OF DRAWINGS AND DETAILS FROM THE ORIGINAL 1990 BUILDING CONSTRUCTION CONFORMED SET & HAS BEEN INCLUDED FOR INFORMATIONAL PURPOSES ONLY. CONDITIONS SHOWN ON THIS SHEET HAVE NOT BEEN VERIFIED WITH EXISTING CONSTRUCTED CONDITIONS.

jra JONES/ RICHARDS & ASSOCIATES
ARCHITECTURE (801)394-3033
PLANNING 533 26TH STREET
CONSTRUCTION MANAGEMENT OGDEN, UTAH

REVISED: AS BUILTS 6-90

PROJECT: PHYSICAL EDUCATION FACILITY
WEBER STATE COLLEGE

PROJECT NUMBER: 8403
DATE: 6-21-88
DRAWN BY:

SHEET TITLE: MECHANICAL PLAN - PLAZA LEVEL - LINK

SHEET NO. M-5

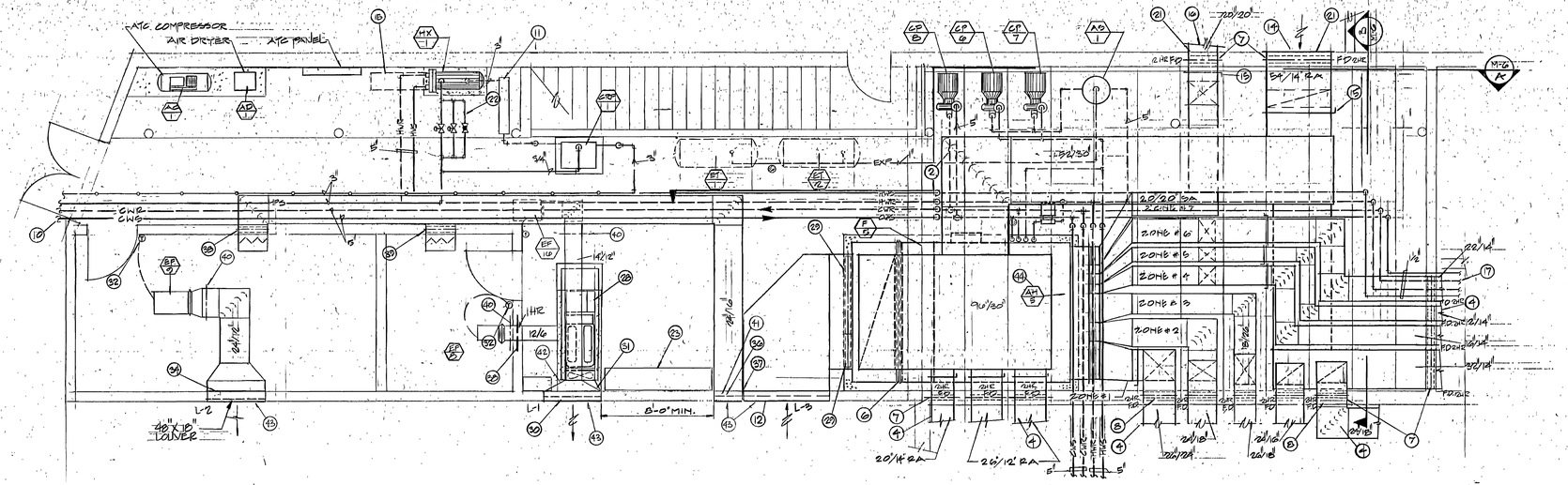

MECHANICAL ROOM PLAN
SCALE 1/4"=1'-0"

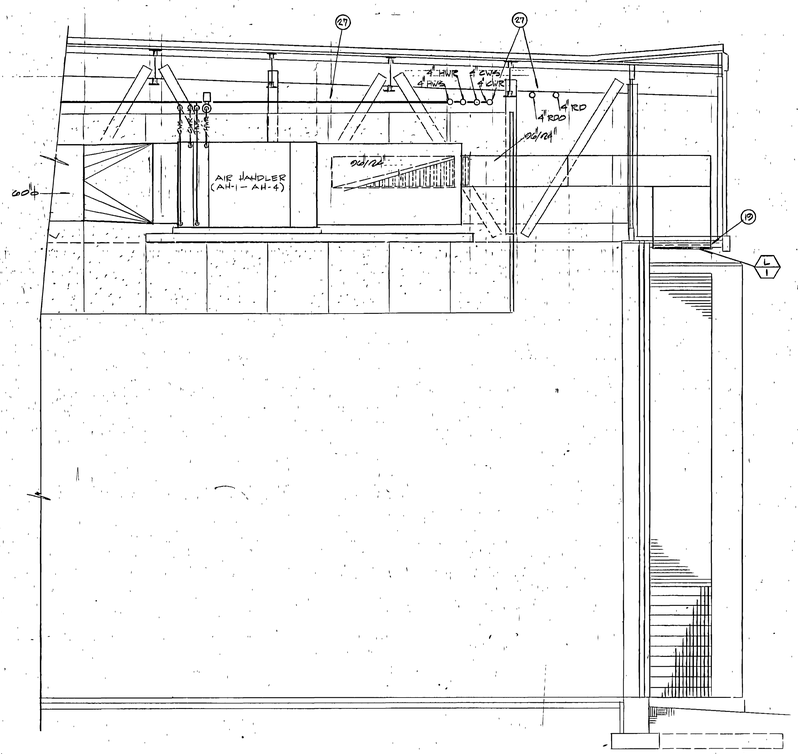

SECTION (TYP. OF AH-1 - AH-4)
SCALE 1/4"=1'-0"

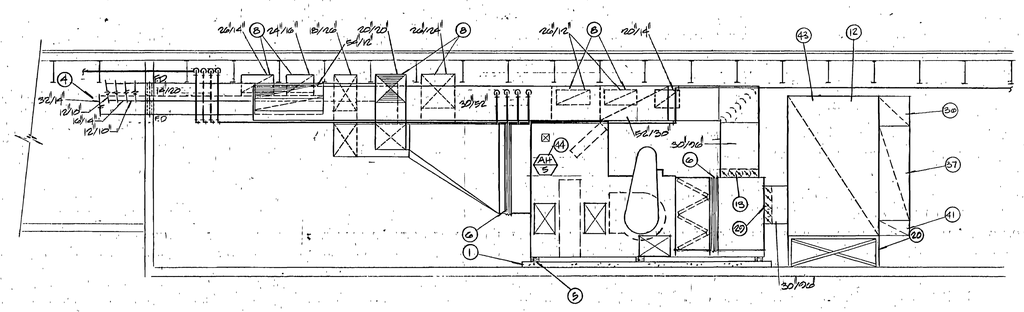

SECTION
SCALE 1/4"=1'-0"

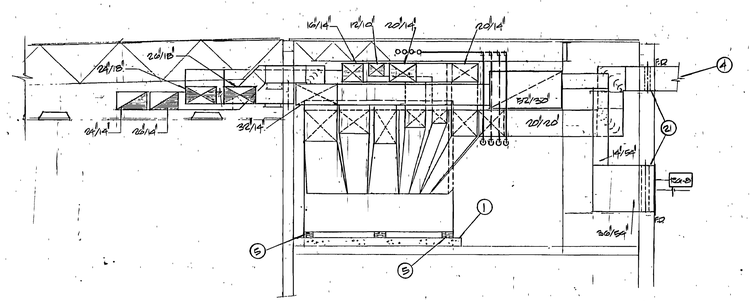

SECTION
SCALE 1/4"=1'-0"

RECORD DOCUMENTS JUL 2 1990

THESE DOCUMENTS HAVE BEEN REVISED TO RECORD INFORMATION SUBMITTED BY THE CONTRACTOR. WHILE THEY ARE ASSUMED TO BE RELIABLE THE ARCHITECT DOES NOT GUARANTEE THEIR ACCURACY.

KEYED NOTES

1. 5" HIGH CONCRETE PAD BY GENERAL CONTRACTOR, TYPICAL.
2. TURNING VANES, TYPICAL.
3. COLD WATER MANIFOLD, SEE PLUMBING PLANS FOR DETAIL.
4. FOR CONTINUATION OF DUCTS, SEE SHEET M-4.
5. VIBRATION ISOLATORS, TYPICAL.
6. FLEXIBLE CONNECTION, TYPICAL.
7. PROVIDE 2-HOUR FIRE DAMPER AT ALL DUCT PENETRATIONS OF MECHANICAL ROOM WALL, WITH ACCESS DOOR TO DAMPER, TYPICAL.
8. EXTEND ALL DUCTWORK THROUGH MECHANICAL ROOM WALL BETWEEN STRUCTURAL JOISTS AND BETWEEN THE HORIZONTAL BOND BEAMS. SEE STRUCTURAL DRAWINGS FOR COORDINATION OF EXACT DUCT LOCATIONS.
9. FOR CONTINUATION OF COLD WATER LINE, SEE PLUMBING PLANS.
10. FOR CONTINUATION OF THE CHILLED WATER PIPING AND THE STEAM PIPING, SEE SHEET M-4.
11. 6" DIAMETER PIPE, AS RECEIVER FOR CONDENSATE.
12. 96" X 108" O.A. LOUVER BY GENERAL CONTRACTOR.
13. 30" X 96" R.A. DAMPER. DAMPERS SHALL HAVE PARALLEL BLADES TO DIRECT THE AIR FLOW AS SHOWN.
14. PROVIDE RETURN AIR GRILLE NEAR FLOOR IN EXISTING WALL OF THE EXISTING DANCE ROOM.
15. MANUAL BALANCING DAMPERS.
16. FOR CONTINUATION OF DUCTWORK, SEE SHEET M-5.
17. FOR CONTINUATION OF PIPING, SEE SHEET M-4.
18. TUBE PULL SPACE.
19. DROP 48" X 96" DUCT FROM THE BOTTOM OF THE 24" X 96" DUCT TO THE F.A. LOUVER L-1. RUN DUCT THROUGH CROSS MEMBERS AND THE VERTICAL MEMBERS OF THE HORIZONTAL TRUSSES. SEAL DUCT WHERE THE STRUCTURAL MEMBERS PASS THROUGH.
20. PROVIDE ANGLE IRON SUPPORT FOR F.A. PLENUM.
21. SAW CUT OPENING IN EXISTING CONCRETE WALL FOR NEW DUCTWORK.
22. SEE PIPING SCHEMATIC FOR PIPING AND VALVING OF THE HEAT EXCHANGER.
23. MCC PANELS. SEE ELECTRICAL DRAWINGS.
24. MOUNT AIR HANDLER ON PLATFORM BY GENERAL CONTRACTOR.
25. RECTANGULAR TO ROUND TRANSITION.
26. AIR HANDLER. SEE SHEETS M-1 AND M-2 FOR LOCATION.
27. ALL PIPING SHALL BE RUN AS HIGH AS POSSIBLE, ABOVE ACOUSTICAL PARTITION.
28. EMERGENCY GENERATOR BY DIVISION 16000. SEE ELECTRICAL PLANS.
29. PROVIDE A 30" X 30" MINIMUM O.A. DAMPER AND A 30" X 66" OUTSIDE AIR DAMPER WITH PARALLEL BLADES TO DIRECT THE AIR FLOW AS SHOWN.
30. 48" X 48" EXHAUST LOUVER BY GENERAL CONTRACTOR.
31. PROVIDE A SHEET METAL CONNECTION FROM THE EMERGENCY GENERATOR TO 48" X 36" AREA OF THE EXHAUST LOUVER WITH A BACKDRAFT DAMPER AT THE LOUVER FACE.
32. THERMOSTAT SHALL OPERATE EXHAUST FAN AND ATC DAMPER.
33. 48" X 12" EXHAUST LOUVER BY GENERAL CONTRACTOR.
34. CONNECT 24"/12" TO 36" OF THE EXHAUST LOUVER.
35. PROVIDE BACKDRAFT DAMPER AT DISCHARGE OF EXHAUST FAN.
36. CONNECT 24"/16" DUCT TO 24" X 24" PORTION OF THE O.A. LOUVER.
37. PROVIDE A 24" X 72" ATC DAMPER BELOW THE 24" X 16" DUCT AT LOUVER. DAMPER SHALL BE INTERLOCKED TO THE EMERGENCY GENERATOR TO OPEN WHEN IT IS OPERATIONAL.
38. FIRE DAMPER DUCT PENETRATION WITH A 3 HR. FIRE DAMPER.
39. 2 H.R. FIRE DAMPER.
40. PROVIDE BACKDRAFT DAMPER AT DISCHARGE OF EXHAUST FAN.
41. PROVIDE A 24" X 12" ATC DAMPER BELOW THE 24" X 72" EMERGENCY GENERATOR DAMPER, INTERLOCKED TO EF-10.
42. TRANSITION 14"/12" DUCT TO 48"/12" PORTION OF THE EXHAUST LOUVER.
43. SEE ARCHITECTURAL BUILDING ELEVATIONS FOR EXACT LOCATION OF ALL EXTERIOR LOUVERS.
44. PROVIDE A NIGHT THERMOSTATE FOR AIR HANDLER. SEE ADD #2 PAG. ITEM #29

0000TVM6
Weber State College_Physical Education Facility - RW 84-058
Mechanical Room & Sections - 26743

NOTE: THIS SHEET IS COMPRISED OF DRAWINGS AND DETAILS FROM THE ORIGINAL 1990 BUILDING CONSTRUCTION CONFORMED SET & HAS BEEN INCLUDED FOR INFORMATIONAL PURPOSES ONLY. CONDITIONS SHOWN ON THIS SHEET HAVE NOT BEEN VERIFIED WITH EXISTING CONSTRUCTED CONDITIONS.

REGISTERED PROFESSIONAL ENGINEER AND LAND SURVEYOR — No. 7122 — KIM F. HARRIS — STATE OF UTAH

JONES/ RICHARDS & ASSOCIATES
jra
ARCHITECTURE
PLANNING
CONSTRUCTION MANAGEMENT
533 26TH STREET OGDEN, UTAH
(801)394-3033

REVISED: AS BUILTS 6-90

PROJECT NUMBER: 8403
DATE: 6-21-89
DRAWN BY:

PROJECT: PHYSICAL EDUCATION FACILITY
WEBER STATE COLLEGE

SHEET TITLE: MECHANICAL ROOM & SECTIONS

SHEET NO. M-6

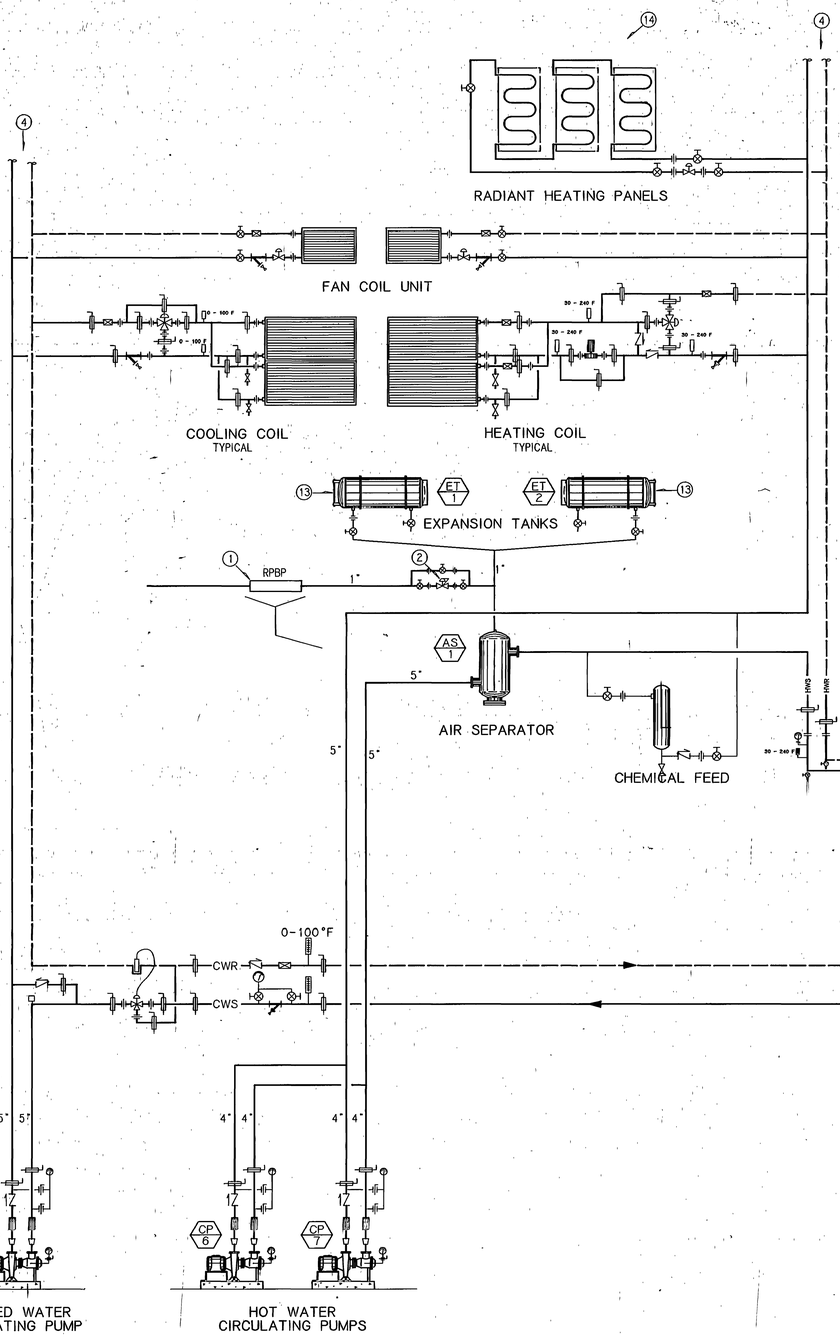

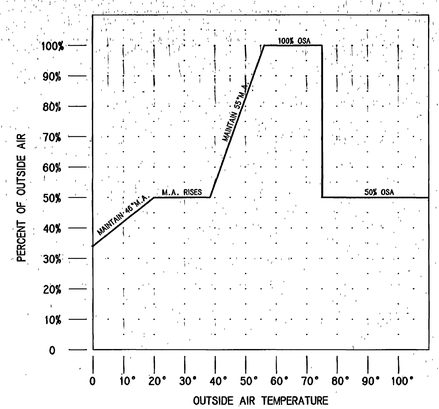

MULTIZONE UNIT AH-5

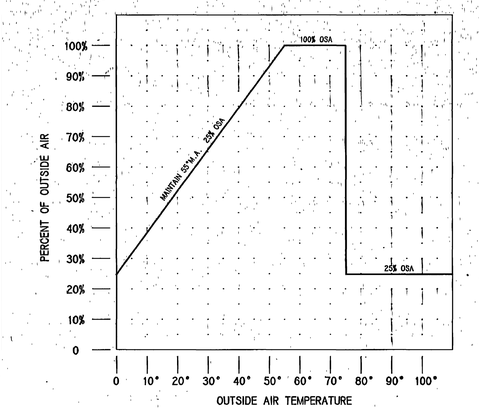

MULTI-PURPOSE AREA AH-1 THRU AH-4

OUTSIDE AIR REQUIREMENT GRAPH

KEYED NOTES

1. MAKE-UP WATER FROM COLD WATER MANIFOLD, THROUGH REDUCED PRESSURE BACKFLOW PREVENTER. PROVIDE DRAIN WITH FUNNEL BELOW RPBP. EXTEND TO NEAREST FLOOR DRAIN.
2. MAKE-UP WATER CONTROL VALVE.
3. MANUAL AIR VENT AT ALL HIGH POINTS OF THE SYSTEM, TYPICAL.
4. PIPING TO CONTINUE TO ADDITIONAL COILS AND RADIANT PANELS.
5. F & T TRAP, 500 LBS/HR CAPACITY AT 1/2 PSI PRESSURE DIFFERENTIAL.
6. 4'-0" x 6" DIA PIPE SHALL BE USED AS A RECEIVER TANK.
7. PRESSURE RELIEF VALVES, PIPE DISCHARGE TO OUTSIDE THROUGH EXTERIOR WALL WITH TURNED DOWN ELL.
8. BALANCED PRESSURE THERMOSTATIC AIR VENT, PIPE DISCHARGE TO OUTSIDE THROUGH EXTERIOR WALL W/TURNED DOWN ELL.
9. STEAM TRAP LOSS DETECTOR.
10. THERMODYNAMIC TRAP.
11. CONNECT TO EXISTING STEAM AND CONDENSATE LINES. SEE SHEET M-3 FOR LOCATION OF EXISTING LINES.
12. EXTEND NEW CHILLED WATER PIPES FROM THE NEW 8" CHILLED WATER MAINS. SEE SHEET M-3 FOR LOCATION OF THE MAIN CHILLED WATER LINES.
13. SIGHT GLASS, TYPICAL.
14. SEE PLANS FOR NUMBER OF PANELS FOR EACH ROOM.
15. EQUALIZING LINE.
16. 1/3 AND 2/3 STEAM TEMPERATURE CONTROL VALVES.

PIPING SCHEMATIC

NOTE: THIS SHEET IS COMPRISED OF DRAWINGS AND DETAILS FROM THE ORIGINAL 1990 BUILDING CONSTRUCTION CONFORMED SET & HAS BEEN INCLUDED FOR INFORMATIONAL PURPOSES ONLY. CONDITIONS SHOWN ON THIS SHEET HAVE NOT BEEN VERIFIED WITH EXISTING CONSTRUCTED CONDITIONS.

0000TVM7
Weber State College, Physical Education Facelty - RW 84-058
Piping Schematic - 26744

RECORD DOCUMENTS JUL 3 1990
THESE DOCUMENTS HAVE BEEN REVISED TO INCLUDE INFORMATION SUBMITTED BY THE CONTRACTOR. VARIATIONS MAY EXIST AND SHOULD TO BE REPORTED. THE ARCHITECT DOES NOT GUARANTEE THEIR ACCURACY.

REGISTERED PROFESSIONAL ENGINEER No. 7122 KIM P. HARRIS STATE OF UTAH

JONES/ RICHARDS & ASSOCIATES
jra ARCHITECTURE (801)394-3033
PLANNING 533 26TH STREET
CONSTRUCTION MANAGEMENT OGDEN, UTAH

REVISED: AS BUILT 7-90

PROJECT NUMBER: 8403 DATE: 5-21-89 DRAWN BY:

PROJECT: PHYSICAL EDUCATION FACILITY
WEBER STATE COLLEGE

SHEET TITLE: PIPING SCHEMATIC

SHEET NO. M-7

SUPPLY FAN SCHEDULE

FAN TAG	MFR. CATALOG NO.	SERVICE	FAN CAPACITY						MOTOR			
			CFM	OV FPM	RPM	SP -"WG	BHP	WHEEL NO-SIZE	HP	RPM	VOLT	Ø
SF-1	PACE A-30 AF	AH-1	16,500	1800	1020	3.0	11.2	30	20	1750	480	3
SF-2	PACE A-30 AF	AH-2	16,500	1800	1020	3.0	11.2	30	20	1750	480	3
SF-3	PACE A-30 AF	AH-3	16,500	1800	1020	3.0	11.2	30	20	1750	480	3
SF-4	PACE A-30 AF	AH-4	16,500	1800	1020	3.0	11.2	30	20	1750	480	3
SF-5	TRANE 41G FC	AH-5	21,000	500	1165	3.5	17.0	41	25	1750	480	3

SC-06

EXHAUST FAN SCHEDULE

FAN TAG	MFR. CATALOG NO.	SERVICE	FAN CAPACITY						MOTOR			
			CFM	OV FPM	RPM	SP "WC	BHP	WHEEL NO-SIZE	HP	RPM	VOLT	Ø
EF-1	PENN FB 244	RELIEF AIR	5000	NA	990	0.375	.75	24"	3/4	1750	480	3
EF-2	PENN FB 244	RELIEF AIR	5000	NA	990	0.375	.75	24"	3/4	1750	480	3
EF-3	PENN FB 244	RELIEF AIR	5000	NA	990	0.375	.75	24"	3/4	1750	480	3
EF-4	PENN FB 244	RELIEF AIR	5000	NA	990	0.375	.75	24"	3/4	1750	480	3
EF-5	COOK 120 C2B	MENS T.R.	620	--	1200	0.5	.11	12"	1/4	1750	120	1
EF-6	COOK 120 C2B	WOMENS T.R.	570	--	1200	0.5	.11	12"	1/4	1750	120	1
EF-7	PENN Z-7	JANITORS CLOSET	145	--	1550	0.375	--	--	68 WATTS	1750	120	1
EF-8	PENN Z-9	ELECTRICAL ROOM	250	--	1550	0.25	--	--	185 WATTS	1750	120	1
EF-9	PENN SX 125B	TRANSFORMER VAULT	1500	--	1200	0.25	.25	13.25"	1/2	1750	120	1
EF-10	PENN SX 105B	MECHANICAL ROOM	1000		1200	0.25	.15	12"	1/3	1750	120	1

SC-07

AIR HANDLER SCHEDULE

SYMBOL	MFR. CATALOG NO.	SERVICE	SUPPLY FAN(S)	RETURN FAN(S)	COILS	FILTERS
AH-1	PACE A-30	MAIN ARENA	SF-1	--	CC-1, HC-1	F-1
AH-2	PACE A-30	MAIN ARENA	SF-2	--	CC-2, HC-2	F-2
AH-3	PACE A-30	MAIN ARENA	SF-3	--	CC-3, HC-3	F-3
AH-4	PACE A-30	MAIN ARENA	SF-4	--	CC-4, HC-4	F-4
AH-5	TRANE 41G	COURTS & DANCE STUD.	SF-5	--	CC-5, HC-5	F-5

SC-08

EXPANSION TANK SCHEDULE

SYMBOL	MFR. CATALOG NO.	SERVICE	TYPE	CAPACITY GALL.	DIMENSIONS	TANK FITTING	REMARKS
ET-1	B&G 220	HOT WATER	HORIZONTAL	220	30" DIA X 72" L	ATFL	W/SIGHT GLASS
ET-2	B&G 220	HOT WATER	HORIZONTAL	220	30" DIA X 77" L	ATFL	W/SIGHT GLASS

SC-21

CEILING RADIANT HEAT PANEL SCHEDULE

SYMBOL	MANUFACTURER / CATALOG NO.	GPM	WATER IN/OUT	MAX P.D. (FT)	BTU/SQ FT
HP-1	AIRTEX 48"x 24"	.16 / PANEL	180/160	.30	142

SC-22

AIR SEPARATOR SCHEDULE

SYMBOL	MFR. CAT. NO.	CAP. GPM.	OPTIONS	REMARKS
AS-1	B&G R-5	320	--	SERVES HOT WATER

SC-24

FILTER SCHEDULE

SYMBOL	TYPE	CFM	SIZE	ARRANGMENT	MAX. S.P. DROP	
					INITIAL	FINAL
F-1	FARR 30/30 2" DEEP	16,500	(12) 20 X 25 (4) 20 X 20	VEE-BANK	.12	.9
F-2	FARR 30/30 2" DEEP	16,500	(12) 20 X 25 (4) 20 X 20	VEE-BANK	.12	.9
F-3	FARR 30/30 2" DEEP	16,500	(12) 20 X 25 (4) 20 X 20	VEE-BANK	.12	.9
F-4	FARR 30/30 2" DEEP	16,500	(12) 20 X 25 (4) 20 X 20	VEE-BANK	.12	.9
F-5	FARR 30/30 2" DEEP	21,000	(20) 20 X 25	VEE-BANK	.12	.9

SC-41

DIFFUSER SCHEDULE

SYMBOL	MANUFACTURER	SIZE	THROW	MODEL	REMARKS
D1-1	KRUEGER	12 X 12	1-WAY	S	FRAME 23
D2-1	KRUEGER	12 X 12	2-WAY	SH	FRAME 23
D2-3	KRUEGER	15 X 15	2-WAY	SH	FRAME 23
D3-1	KRUEGER	6 X 6	3-WAY	SH	FRAME 22
D3-2	KRUEGER	9 X 9	3-WAY	SH	FRAME 23
D3-3	KRUEGER	12 X 12	3-WAY	SH	FRAME 23
D3-4	KRUEGER	18 X 18	3-WAY	SH	FRAME 23
D3-5	KRUEGER	18 X 18	3-WAY	SH	FRAME 22
D4-1	KRUEGER	9 X 9	4-WAY	SH	FRAME 23
D4-2	KRUEGER	12 X 12	4-WAY	SH	FRAME 23
D4-3	KRUEGER	15 X 15	4-WAY	SH	FRAME 23
D4-4	KRUEGER	18 X 18	4-WAY	SH	FRAME 23
D4-5	KRUEGER	9 X 9	4-WAY	SH	FRAME 22
SR-1	KRUEGER	10 X 30	1-WAY	DPL	DRUM LOUVER

SC-02

REGISTER AND GRILLE SCHEDULE

SYMBOL	MANUFACTURER	SIZE (IN)	MODEL	LOCATION	REMARKS
RG-1	KRUEGER	12 X 12	1190	CEILING	SURFACE MOUNTED FRAME 22
RG-2	KRUEGER	24 X 24	1190	CEILING	LAY-IN FRAME 23
RG-3	KRUEGER	96 X 68	S480H	SIDEWALL	HEAVY DUTY
RG-4	KRUEGER	48 X 68	S480H	SIDEWALL	HEAVY DUTY
RG-5	KRUEGER	30 X 68	S480H	SIDEWALL	HEAVY DUTY
RG-6	KRUEGER	72 X 48	S480H	SIDEWALL	HEAVY DUTY
RG-7	KRUEGER	96 X 48	S480H	SIDEWALL	HEAVY DUTY
RG-8	KRUEGER	54 X 30	S480H	SIDEWALL	HEAVY DUTY
RG-9	KRUEGER	18"X72"	S480H	SIDEWALL	HEAVY DUTY
RG-10	KRUEGER	24"X72"	S480H	SIDEWALL	HEAVY DUTY
ER-1	KRUEGER	12"X12"	490	CEILING	FRAME 22 W/OBD

PUMP SCHEDULE

PUMP TAG	MFR. CATALOG NO.	SERVICE	CAPACITY		EFF. %	BHP	MOTOR			
			GPM	HEAD FT WATER			HP	RPM	VOLT	Ø
CP-1	B&G SERIES 60 2AA	AH-1 HW COIL	65	20	57	.65	3/4	1750	480	3
CP-2	B&G SERIES 60 2AA	HA-2 HW COIL	65	20	57	.65	3/4	1750	480	3
CP-3	B&G SERIES 60 2AA	AH-3 HW COIL	65	20	57	.65	3/4	1750	480	3
CP-4	B&G SERIES 60 2AA	AH-4 HW COIL	65	20	57	.65	3/4	1750	480	3
CP-5	B&G SERIES 60 2AA	AH-5 HW COIL	55	20	57	.50	3/4	1750	480	3
CP-6	B&G 1531 2BC	HOT WATER	160	80	70	4.8	7-1/2	1750	480	3
CP-7	B&G 1531 2BC	HOT WATER	160	80	70	4.8	7-1/2	1750	480	3
CP-8	B&G 1531 5E	CHILLED WATER	450	75	75	12.0	15	1750	480	3

SC-04

COIL SCHEDULE

SYMBOL	SYSTEM SERVED	SERVICE	MBH	SIZE W" X H" PER COLL.	AREA SQ FT	FACE VELOCITY FPM	ROWS/FPI	TOTAL GPM	WATER TEMP °F		AIR TEMP °F		AIR P.D. W.S.	WATER P.D. FT.
									EWT	LWT	EDB/EWB	LDB/LWB		
CC-1	AH-1	CHILLED WATER	452	92 X 54	34.5	478	8/8	80	50	61.5	83/63	54/52	.80	5.0
HC-1	AH-1	HOT WATER	652	92 X 54	34.5	478	2/7	65	180	160	54	97	.18	2.7
CC-2	AH-2	CHILLED WATER	452	92 X 54	34.5	478	8/8	80	50	61.5	83/63	54/52	.80	5.0
HC-2	AH-2	HOT WATER	652	92 X 54	34.5	478	2/7	65	180	160	54	97	.18	2.7
CC-3	AH-3	CHILLED WATER	452	92 X 54	34.5	478	8/8	80	50	61.5	83/63	54/52	.80	5.0
HC-3	AH-3	HOT WATER	652	92 X 54	34.5	478	2/7	65	180	160	54	97	.18	2.7
CC-4	AH-4	CHILLED WATER	452	92 X 54	34.5	478	8/8	80	50	61.5	83/63	54/52	.80	5.0
HC-4	AH-4	HOT WATER	652	92 X 54	34.5	478	2/7	65	180	160	54	97	.18	2.7
CC-5	AH-5	CHILLED WATER	620	108 X 54	40.5	518	8/8	110	50	61.5	87/63	55/52	.55	9.8
HC-5	AH-5	HOT WATER	567	99 X 30	20.6	582	2/7	55	180	160	46	97	.18	4.9

SC-05

DOMESTIC HOT WATER HEATER SCHEDULE

SYMBOL	MANUFACTURERS CATALOG NUMBER	SERVICE	CAPACITY GALLONS	FUEL TYPE	INPUT CAPACITY	POWER VOLTS/Ø	RECOVERY RATE GPH	WATER TEMP IN/OUT	STACK SIZE IN. ϕ	TANK SIZE
WH-1	A.O. SMITH DSE-20	TOILET ROOMS	20	ELEC	3KW	208/1PH	12	40/140	--	27 X 20
WH-2	A.O. SMITH DSE-5	SERVICE SINKS	5	ELEC	3KW	208/1PH	12	40/140	--	16 X 20

SC-13

0000TVMS
Weber State College, Physical Education Facilty - RW 84-058
Mechanical Equipment Schedules - 26745

...DRAWINGS ... SHEET ... CONFORMED TO ... ORIGINAL ... DRAWINGS ... BE THEIR ACCURACY.

PROFESSIONAL ENGINEER
No. 7122
KIM P. HARRIS
STATE OF UTAH
REGISTERED

NOTE: THIS SHEET IS COMPRISED OF DRAWINGS AND DETAILS FROM THE ORIGINAL 1990 BUILDING CONSTRUCTION CONFORMED SET & HAS BEEN INCLUDED FOR INFORMATIONAL PURPOSES ONLY. CONDITIONS SHOWN ON THIS SHEET HAVE NOT BEEN VERIFIED WITH EXISTING CONSTRUCTED CONDITIONS.

JONES/ RICHARDS & ASSOCIATES
PLANNING
533 26TH STREET
OGDEN, UTAH
CONSTRUCTION MANAGEMENT
ARCHITECTURE
(801)394-3033

REVISED: AS BUILT 7-90

PROJECT NUMBER: 8403
DATE: 8-21-88
DRAWN BY:

PROJECT: PHYSICAL EDUCATION FACILITY
WEBER STATE COLLEGE

SHEET TITLE: MECHANICAL EQUIPMENT SCHEDULES

SHEET NO. M-8

COMPUTER ROOM AIR CONDITIONING UNIT SCHEDULE

SYMBOL	MANUFACTURERS CATALOG NO.	CAPACITY (MBH)		INDOOR DESIGN TEMPERATURES			FANS				COMPRESSOR		EVAPORATOR		REHEAT		HUMIDIFIER		FILTERS			GLYCOL		ELECTRICAL						REMOTE DRY COOLER					PUMP		
		TOTAL	SEN.	°F db.	°F wb.	% RH	CFM	EXT. SP.	HP	No.	No.	HP	FACE AREA	ROWS	KW	STAGE	LBS/HR	KW	EFF	DEPTH	FACE AREA (SQ. FT.)	GPM	MAX. P.D.	FLA	WSA	OPD	VOLTS	Ø	HZ	FLA	MCA	Ø	HZ	VOLTS	FLA	Ø	HZ
CRU-1	LIEBERT CF/CU 60G	57	53	72	60	50	2800	.3	1-1/2	1	1	--	6.94	4	15	2	11.0	4.8	40%	2	15.75	20	15	30.6	37.6	40	480	3	60	5.5	3/4	1	60	480	--	1	3/4

SC-65

SHELL & TUBE HEAT EXCHANGER SCHEDULE

SYMBOL	MFR. CATALOG NO.	SERVICE	PASSES	MBH	HEATING SURFACE (FT.²)	FOULING FACTOR	HEATING SIDE					SECONDARY SIDE				
							ENT STEAM PRESS. PSI	LVG	P.D. (PSI)	LOCATION	GPM	EWT (°F)	LWT (°F)	P.D. (PSI)	LOCATION	GPM
HX-1	B&G SU 14-3-2	HOT WATER	2	3200	86	.0005	90	COND	--	SHELL	NA	160	180	1.0	TUBES	320

SC-58

CONDENSATE RETURN PUMP SCHEDULE

PUMP TAG	MFR. CATALOG NO.	SERVICE	CAPACITY		TYPE	STORAGE CAPACITY	BHP	MOTOR			
			#/HR	HEAD FT WATER				HP	RPM	VOLT	Ø
CRP-1	SPIRAX/SARCO 2" X 2" PPC	HX-1	3500	--	NON-ELECTRIC	NA	NA	NA	NA	NA	NA

SC-51

FAN COIL SCHEDULE

UNIT NO.	MANUFACTURER & MODEL	AREA SERVED	CFM	MBH		GPM/P.D.(FT)		E.A.T. DB/WB		EWT/LWT		MOTOR		
				COOLING SENSIBLE	HEATING	COOLING	HEATING	COOLING	HEATING	COOLING	HEATING	H.P.	RPM	VOLT/ø
FC-1	TRANE C34DL12	LOBBY	1200	22.9	25	3.9/2.5	2.5/3.5	80/63	70	50/62	180/160	1/3	1750	120/1
FC-2	TRANE D34DL12	LOBBY	1200	22.9	25	3.9/2.5	2.5/3.5	80/63	70	50/62	180/160	1/3	1750	120/1
FC-3	TRANE C34DL08	ISSUE ROOM	400	10.2	10.0	2.9/6.1	1.0/1.0	80/63	70	50/62	180/160	1/4	1750	120/1
FC-4	TRANE C34A108	CORRIDOR	600	9.0	15.0	2.6/8.2	1.5/3.0	75/63	70	50/62	180/160	1/4	1750	120/1

LOUVER SCHEDULE

SYMBOL	MANUFACTURER	SIZE (IN)	MODEL	LOCATION	REMARKS
L-1	AIROLITE	96"x 48"	AC 505	SOFFIT	FA INTAKE
L-2	AIROLITE	96"x 48"	AC 505	SOFFIT	RELIEF AIR
L-3	AIROLITE	18"x 18"	AC 505	SOFFIT	EXHAUST AIR

SC-48

HOOD SCHEDULE

SYMBOL	MODEL & MFR	SERVICE	HEIGHT	CFM	MAX APD	THROAT SIZE	REMARKS
H-1	PENN AIRETTE	FA INTAKE	NA	NA	NA	12"x 12"	SEE DETAIL 2/M-10

SC-23

AIR COMPRESSOR

PLAN SYMBOL	MANUFACTURER AND MODEL NUMBER	CAPACITY (SCFM)	PRESSURE (PSIG)	MOTOR HP	ELECTRICAL VOLTS/PHASE	TYPE	RECEIVER (CU. FT)	SEAL WATER (GPM)	CHILLED WATER GPM	ACCESSORIES
AC-1	BY ATC CONTRACTOR	--	--	(2)1	480/3/60	--	--	--	--	--

SC-28

AIR DRYER SCHEDULE

PLAN SYMBOL	MANUFACTURER AND MODEL NUMBER	SCFM @ 100°F INLET TEMP 100 PSI & 35°F DEWPOINT	REFRIGERATION COMPRESSOR H.P.	ELECTRICAL VOLTS / PHASE	HEAT REJECTED 100°F AMB (BTU)	MAXIMUM PRESS DROP (PSI)	REMARKS
AD-1	BY ATC CONTRACTOR		1/6	120/1/60	--	--	--

SC-30

RECORD DOCUMENTS JUL 2 1990

THESE DOCUMENTS HAVE BEEN REVISED TO INCLUDE INFORMATION SUPPLIED BY THE CONTRACTOR. WHILE THEY ARE BELIEVED TO BE RELIABLE THE ARCHITECT DOES NOT GUARANTEE THEIR ACCURACY.

0000TVM9
Weber State College, Physical Education Facility - RW 84-058
Mechanical Equipment Schedules - 26746

NOTE: THIS SHEET IS COMPRISED OF DRAWINGS AND DETAILS FROM THE ORIGINAL 1990 BUILDING CONSTRUCTION CONFORMED SET & HAS BEEN INCLUDED FOR INFORMATIONAL PURPOSES ONLY. CONDITIONS SHOWN ON THIS SHEET HAVE NOT BEEN VERIFIED WITH EXISTING CONSTRUCTED CONDITIONS.

REGISTERED PROFESSIONAL ENGINEER — No. 7122 — KIM P. HARRIS — STATE OF UTAH

jra JONES/ RICHARDS & ASSOCIATES
ARCHITECTURE (801)394-3033
PLANNING 533 25TH STREET
CONSTRUCTION MANAGEMENT OGDEN, UTAH

REVISED:

PROJECT NUMBER: 8403
DATE: 6-21-88
DRAWN BY:

PROJECT: PHYSICAL EDUCATION FACILITY
WEBER STATE COLLEGE

SHEET TITLE: MECHANICAL EQUIPMENT SCHEDULES

SHEET NO. M-9

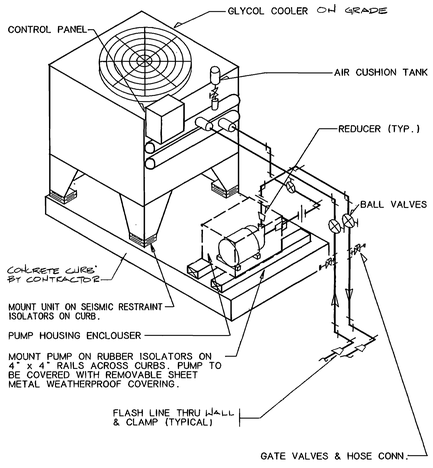

GLYCOL DRY COOLER DETAIL (10 M-10)
NO SCALE

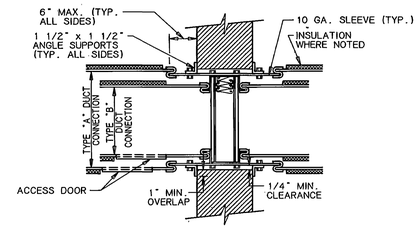

WALL MOUNTED FIRE DAMPER DETAIL (6 M-10)
NO SCALE

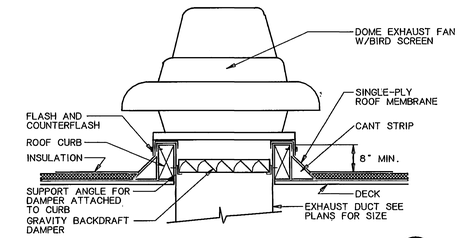

EXHAUST FAN DETAIL (1 M-10)
NO SCALE

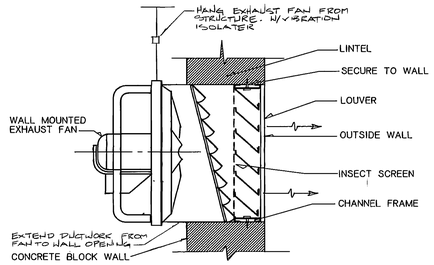

WALL EXHAUST FAN DETAIL (7 M-10)
NO SCALE

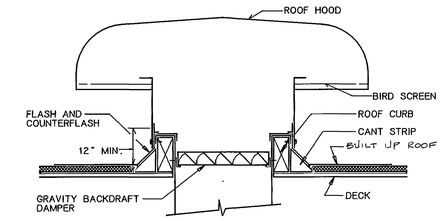

ROOF HOOD DETAIL (2 M-10)
NO SCALE

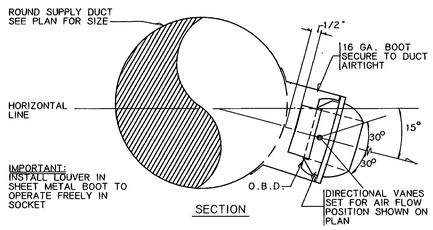

DRUM LOUVER DETAIL (11 M-10)
NO SCALE

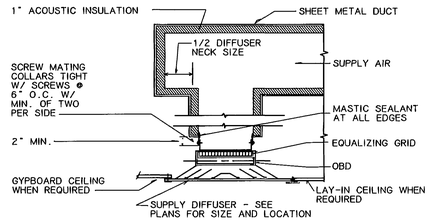

TYPICAL CEILING DIFFUSER DETAIL (8 M-10)
NO SCALE

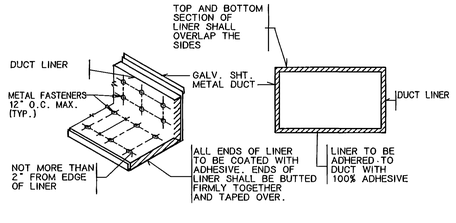

DUCT LINER DETAIL (3 M-10)
NO SCALE

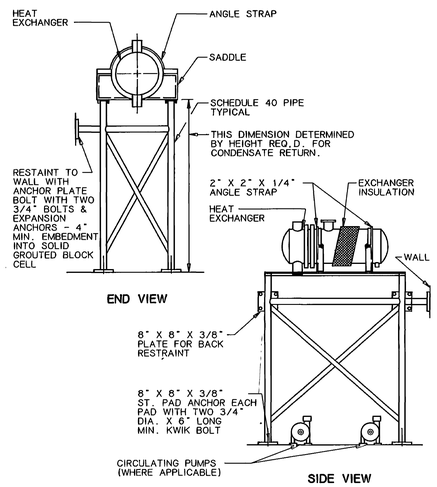

STEAM HEAT EXCHANGER BASE DETAIL (12 M-10)
NO SCALE

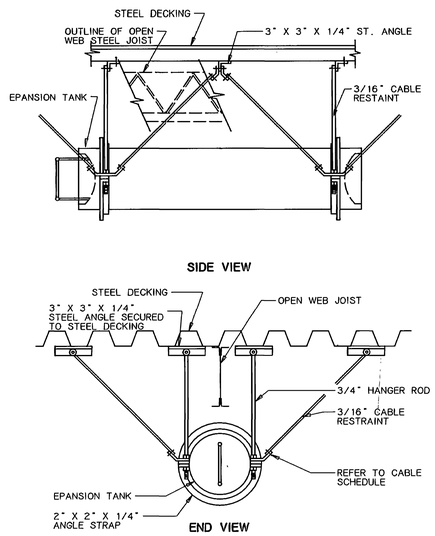

EXPANSION TANK HANGER DETAIL (9 M-10)
NO SCALE

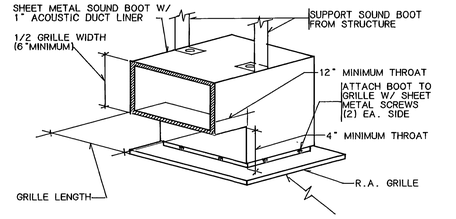

R.A. GRILLE WITH SOUND BOOT (4 M-10)
NO SCALE

0000TVM10
Weber State College, Physical Education Facility - RW 84-058
Mechanical Details - 26747

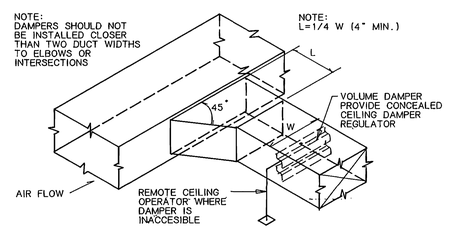

BRANCH DUCT TAKE-OFF & DAMPER DETAIL (5 M-10)
NO SCALE

RECORD DOCUMENTS JUL 5 1985
THESE DRAWINGS HAVE BEEN REVISED TO REFLECT INFORMATION SUBMITTED BY THE CONTRACTOR, WHICH HAS BEEN RELIED UPON TO BE ACCURATE BUT ARE NOT GUARANTEED THEIR ACCURACY.

NOTE: THIS SHEET IS COMPRISED OF DRAWINGS AND DETAILS FROM THE ORIGINAL 1900 BUILDING CONSTRUCTION CONFORMED SET & HAS BEEN INCLUDED FOR INFORMATIONAL PURPOSES ONLY. CONDITIONS SHOWN ON THIS SHEET HAVE NOT BEEN VERIFIED WITH EXISTING CONSTRUCTED CONDITIONS.

REGISTERED PROFESSIONAL ENGINEER — No. 7122 — KIM P. HARRIS — STATE OF UTAH

jra JONES/ RICHARDS & ASSOCIATES
ARCHITECTURE PLANNING CONSTRUCTION MANAGEMENT
(801)394-5033 533 26TH STREET OGDEN, UTAH

REVISED:

PROJECT NUMBER: 8403
DATE: 8-21-85
DRAWN BY:

PROJECT: PHYSICAL EDUCATION FACILITY
WEBER STATE COLLEGE

SHEET TITLE: MECHANICAL DETAILS

SHEET NO. M-10

DUCT BRACING GENERAL NOTES

1 DETAILS SHOWN PROVIDE GENERAL GUIDELINES FOR A LATERAL BRACING SYSTEM. A TYPICAL VERTICAL SUPPORT SYSTEM MUST ALSO BE USED.

2 BRACE ALL RECTANGULAR DUCTS OF AREA 6 SQ. FT. AND LARGER. BRACE ALL ROUND DUCTS 28" IN DIAMETER AND LARGER.

3 CABLE RESTRAINTS AND BRACING NOT TO EXCEED 30'-0" CENTERS AND SHALL BE PROVIDED AT EACH TURN, AT THE END OF EACH DUCT RUN, AND ON EACH SIDE OF FLEXIBLE CONNECTIONS. BRACE POINTS SHALL NOT EXCEED 15'-0" FROM FLEXIBLE CONNECTION.

4 WHEN COMBINING DUCT GROUPS ON COMMON BRACING SYSTEMS, USE WEIGHTS AND DIMENSIONS FROM BRACING SCHEDULE.

5 ALL HOLES IN ANGLES ARE TO BE 1/16 INCH OVERSIZED. PLACE STANDARD CUT WASHERS BETWEEN SHEET METAL ANGLES AND NUT.

6 DUCTS NOT BRACED SHALL BE INSTALLED WITH A 6" MIN. CLEARANCE TO VERTICAL CEILING HANGER WIRES.

7 REHEAT BOXES AND OTHER ITEMS WHICH ATTACH TO THE DUCT SYSTEM SHALL BE BRACED INDEPENDENTLY OF THE DUCTS.

8 ALL SHEET METAL FOR BRACING TO BE FY = 33 KSI MINIMUM. GAUGE FOR SHEET METAL BRACING SHALL BE AS FOLLOWS:

16 GA = (0.0598 INCH)
14 GA = (0.0747 INCH)
12 GA = (0.1046 INCH)

9 MINIMUM DISTANCE FROM EDGE OF ANGLE TO BOLTS SHALL BE AS FOLLOWS:

BOLT DIAMETER	DISTANCE FROM EDGE
1/4" TO 1/2"	1"
5/8"	1 1/8"
3/4"	1 1/4"
7/8"	1 1/2"

10 DO NOT FASTEN RESTRAINT SYSTEM TO TWO DISSIMILAR PARTS OF A BUILDING THAT MAY RESPOND IN A DIFFERENT MODE DURING AN EARTHQUAKE. FOR EXAMPLE, A WALL AND A ROOF.

11 ALTERNATE EVERY OTHER CABLE RESTRAINT IN OPPOSITE DIRECTION (SHOWN DOTTED).

DUCT CABLE BRACING SCHEDULE

DUCT SIZE (MAX.)	*WT/ LIN FT (MAX)	BOLT SIZE	HORIZONTAL ANGLE	VERTICAL ANGLE	CABLE DIA.**	CABLE DES. ***	ANCHOR CONN. TYPE
12"	5#	3/8"	2 X 2 X 16 GA	2 X 2 X 12 GA	1/8"	7x19 GALV	I
18"	8#	3/8"	2 X 2 X 16 GA	2-1/2 X 2-1/2 X 12 GA	1/8"	7x19 GALV	I
24"	10#	3/8"	2 X 2 X 16 GA	2-1/2 X 2-1/2 X 12 GA	1/8"	7x19 GALV	I
30"	13#	3/8"	2 X 2 X 16 GA	2-1/2 X 2-1/2 X 12 GA	1/8"	7x19 GALV	I
42"	20#	3/8"	2-1/2 X 2-1/2 X 16 GA	4 X 4 X 12 GA	3/16"	7x19 GALV	II
54"	27#	3/8"	2-1/2 X 2-1/2 X 16 GA	4 X 4 X 12 GA	3/16"	7x19 GALV	II
60"	36#	3/8"	3 X 3 X 16 GA	4 X 4 X 12 GA	3/16"	7x19 GALV	II
84"	53#	3/8"	4 X 4 X 14 GA	4 X 4 X 1/4	1/4"	7x19 GALV	III
96"	80#	1/2"	4 X 4 X 12 GA	5 X 3 X 1/4	5/16"	7x19 GALV	IV

* MAXIMUM WEIGHT OF DUCTS OR COMBINATIONS OF DUCTS PER LINEAR FOOT. THE DUCTS MAXIMUM DIMENSION SHALL GOVERN WHAT BRACING IS REQUIRED. FOR ANCHOR CONNECTIONS SEE SCHEDULE. SEE DUCT BRACING DETAILS.

** TWO CABLES REQUIRED AT EACH RESTRAINT POINT. EACH CABLE TO BE INSTALLED 45° TO HORIZONTAL AND 45° TO LONGITUDINAL DIRECTION OF DUCT.

*** CABLE SYSTEMS TO BE EQUAL TO AMBER BOOTH C/W THIMBLES, CLAMPS AND GROMMETS.

CABLE BRACING FOR RECTANGULAR DUCTS (5/M-11)
NO SCALE

SCHEDULE FOR TYPICAL CONNECTIONS TO STRUCTURAL SUPPORTING MEMBERS

TYPE	MAX. LOAD CAPACITY POUNDS	PHILLIP'S REDHEAD ANCHORS TO CONC. LT. WT.	PHILLIP'S REDHEAD ANCHORS TO CONC. HARD ROCK	CONC. CAST-IN PLACE INSERT	BOLT OF STL. BM. CLAMP
I II	500 1000	3/8" 3/8"	3/8" 3/8"	3/8" 1/2"	3/8" 3/8"
III IV	1500 2000	3/8" 1/2"	3/8" 1/2"	1/2" 5/8"	3/8" 1/2"
V VI	3000 4000	2-1/2" 2-5/8"	2-1/2" 2-5/8"	2-1/2" 2-5/8"	5/8" 5/8"

TYPE	SPREADER SIZE	BOLT THRU WOOD	SPAN-CRETE ROD	ANGLE TO SUPPORTING STRUCTURAL MEMBER	ROD SIZE FOR PIPES
I II	C4X5.4 C5X6.7	1/2" 3/4"	3/8" 3/8"	3X2X1/4"X0'-3" LLH 3-1/2X2-1/2X5/16X0'-3" LLH	1/2" 1/2"
III IV	C6X8.5 C8X11.5	*** ***	1/2" 1/2"	3-1/2X2-1/2X7/16X0'-4" LLH 5X3X1/2X0'-4" LLH	5/8" 3/4"
V VI	C9X13.4 C10X15.3	***		2-3-1/2X2-1/2X7/16X0'-4" 2-5X3X1/2X0'-4"	7/8" * 7/8" **

NOTES:

1 FOR SLABS LESS THAN 5" THICK ONLY, THIN SLAB INSERTS MAY BE USED.

*2 FOR USE W/CONC. CAST-IN PLACE INSERTS OR PHILLIPS REDHEAD IN HARD ROCK ONLY

**3 FOR USE WITH CONC. CAST-IN PLACE INSERTS ONLY.

***4 WHERE TYPE III CONNECTIONS ARE REQUIRED FOR WOOD SYSTEMS, TYPE II CONNECTIONS SHALL BE USED WITH REDUCED RESTRAINT SPACING TO 20 FT. O.C. WHERE TYPE IV CONNECTIONS ARE REQUIRED FOR WOOD SYSTEMS, TYPE II CONNECTIONS SHALL BE USED WITH REDUCED RESTRAINT SPACING TO 15 FT. O.C. WHERE TYPE V CONNECTIONS ARE REQUIRED FOR WOOD SYSTEMS, TYPE II CONNECTIONS SHALL BE USED WITH REDUCED RESTRAINT SPACING TO 10 FT. O.C.

5 THE MECHANICAL CONTRACTOR SHALL SUBMIT SHOP DRAWINGS TO THE STRUCTURAL ENGINEER AND THEN TO THE MECHANICAL ENGINEER, SHOWING CONNECTION TYPE AND LOCATION OF ALL RESTRAINT CONNECTIONS TO THE STRUCTURE.

6 FOR ESSENTIAL FACILITIES WHERE CONCRETE ANCHOR BOLTS OF THE "REDHEAD" EXPANSION TYPE ARE LOADED IN PULL OUT, 50 PERCENT OF THE BOLTS (ALTERNATE BOLTS IN ANY GROUP ARRANGEMENT) SHALL BE PROOF TESTED TO TWICE THE ALLOWABLE LOAD. IF THERE ARE FAILURES, THE IMMEDIATELY ADJACENT BOLTS MUST THEN ALSO BE TESTED.

& "HILTI" AND "RAMSET" ANCHORS ARE EQUAL SUBSTITUTES FOR "REDHEAD".

EQUIPMENT ANCHORAGE TO CONCRETE FLOOR SCHEDULE

EQUIPMENT WEIGHT PER ANCHOR BOLT	MINIMUM ANCHOR DIAMETER (INCHES)	MINIMUM DEPTH OF EMBEDMENT (INCHES)	ICBO ALLOWABLE SHEAR PER BOLT (LBF)	ICBO ALLOWABLE TENSION PER BOLT (LBF)
UP TO 150#	1/4"	1-1/2"	380	215
300#	3/8"	2-1/2"	860	355
600#	1/2"	3"	1710	665
900#	5/8"	4-1/2"	2500	855
1300#	3/4"	6"	3050	1585
2000#	1"	6"	6280	2020

1 THE SIZES AND EMBEDMENT ARE FOR ANCHORS INSTALLED IN STONE AGGREGATE CONCRETE HAVING A FC = 2000 PSI ULTIMATE COMPRESSIVE STRENGTH AT THE TIME OF INSTALLATION. ALL BOLTS ARE TO BE INSTALLED PER MANUFACTURER INSTRUCTIONS AND TO BE INSTALLED NO CLOSER THAN 12 DIAMETERS ON CENTER AND WITH A MINIMUM EDGE DISTANCE OF 6 DIAMETERS.
2 EACH EQUIPMENT SUPPORT LEG WILL BE ANCHORED AND ALL EQUIPMENT WILL BE ANCHORED AT ALL CORNERS. A MINIMUM OF TWO ANCHORS WILL BE REQUIRED FOR ALL EQUIPMENT.
3 SIZES REFER TO "HILTI" KWIK-BOLT, EQUAL SUBSTITUTES ARE "REDHEAD" AND "RAMSET", PROVIDING THAT THE ICBO VALUES ARE EQUAL OR GREATER.
4 EQUIPMENT WEIGHT PER ANCHOR IS THE TOTAL OPERATING OF EQUIPMENT PLUS BASES AND SUPPORTS DIVIDED BY THE NUMBER OF ANCHORS.
5 ANCHORAGE IS TO PREVENT HORIZONTAL MOVEMENT, IF EQUIPMENT GEOMETRY IS SUCH THAT THE VERTICAL DISTANCE FROM SUPPORT LEG TO CENTER OF GRAVITY IS GREATER THAN FOUR TIMES THE SHORTEST DISTANCE FROM A SUPPORT LEG TO THE CENTER OF GRAVITY, ADDITIONAL ANCHORAGE AND RESTRAINTS WILL BE REQUIRED TO PREVENT OVERTURNING.

NOTE: THIS SHEET IS COMPRISED OF DRAWINGS AND DETAILS FROM THE ORIGINAL 1990 BUILDING CONSTRUCTION CONFORMED SET & HAS BEEN INCLUDED FOR INFORMATIONAL PURPOSES ONLY. CONDITIONS SHOWN ON THIS SHEET HAVE NOT BEEN VERIFIED WITH EXISTING CONSTRUCTED CONDITIONS.

PIPE BRACING GENERAL NOTES

1 DETAILS SHOWN PROVIDE GENERAL GUIDELINES FOR A LATERAL BRACING SYSTEM. A TYPICAL VERTICAL SUPPORT SYSTEM MUST ALSO BE USED.
2 BRACE ALL PIPES 1-1/2" I.D. AND LARGER.
3 CABLE RESTRAINTS AND BRACING NOT TO EXCEED 30'-0" CENTERS AND SHALL BE PROVIDED AT ALL CHANGES IN DIRECTION OF PIPE. ALL DROPS TO EQUIPMENT, AND ON EACH SIDE OF FLEXIBLE CONNECTIONS. BRACE POINTS SHALL NOT EXCEED 15'-0" FROM FLEXIBLE CONNECTION.
4 ALL HOLES IN ANGLES ARE TO BE 1/16 INCH OVERSIZED. PLACE STANDARD CUT WASHERS BETWEEN SHEET METAL ANGLES AND NUT.
5 EQUIPMENT WHICH ATTACHES TO THE PIPING SYSTEM SHALL BE BRACED INDEPENDENTLY OF THE PIPES.
6 ALL SHEET METAL FOR BRACING TO BE FY=33 KSI MINIMUM. GAUGE FOR SHEET METAL BRACING SHALL BE AS FOLLOWS:

16 GA = (0.0598 INCH)
14 GA = (0.0747 INCH)
12 GA = (0.1046 INCH)

7 MINIMUM DISTANCE FROM EDGE OF ANGLE TO BOLTS SHALL BE AS FOLLOWS:

BOLT DIAMETER	DISTANCE FROM EDGE
1/4" TO 1/2"	1"
5/8"	1 1/8"
3/4"	1 1/4"
7/8"	1 1/2"

8 DO NOT FASTEN RESTRAINT SYSTEM TO TWO DISSIMILAR PARTS OF A BUILDING THAT MAY RESPOND IN A DIFFERENT MODE DURING AN EARTHQUAKE. FOR EXAMPLE, A WALL AND A ROOF.
9 PROVIDE LARGE ENOUGH PIPE SLEEVES THROUGH WALLS OR FLOORS TO ALLOW FOR ANTICIPATED DIFFERENTIAL MOVEMENTS.
10 DO NOT FASTEN ONE RIGID PIPING SYSTEM TO TWO DISSIMILAR PARTS OF A BUILDING THAT MAY RESPOND IN A DIFFERENT MODE DURING AN EARTHQUAKE. FOR EXAMPLE, A WALL AND A ROOF.
11 BRACING DETAILS, SCHEDULE AND NOTES ARE TO BE USED WITH THE FOLLOWING TYPES OF PIPE: STEEL PIPE SCHEDULE 40 AND 80, COPPER PIPE TYPE K,L,M (ONLY SILVER SOLDERED BRAZED JOINTS TO BE USED WITH COPPER PIPE).
12 FOR GAS PIPING, THE BRACING DETAILS, SCHEDULES AND NOTES MAY BE USED EXCEPT THAT RESTRAINTS SHALL BE INSTALLED AT EVERY 20'-0" O.C. ALSO ALL PIPE 1 INCH AND LARGER SHALL BE BRACED.
13 WASTE, VENT AND ROOF DRAINAGE PIPING SYSTEMS ARE EXCLUDED FROM THE RESTRAINT GUIDELINES.
14 ALTERNATE EVERY OTHER CABLE RESTRAINT IN OPPOSITE DIRECTION (SHOWN DOTTED).

PIPE CABLE BRACING SCHEDULE

PIPE SIZE	HANGER ROD SIZE	MAX. ROD LENGTH	HANGER TYPE	BOLTS TO CABLE	*CABLE SIZE	**CABLE TYPE	ANCHOR CONN. TYPE
1-1/2"	1/2"	25"	CLEVIS	3/8"	1/8"	7X19 GALV	I
2"	1/2"	25"	CLEVIS	3/8"	1/8"	7X19 GALV	I
2-1/2"	5/8"	31"	CLEVIS	3/8"	1/8"	7X19 GALV	I
3"	5/8"	31"	CLEVIS	3/8"	3/16"	7X19 GALV	II
3-1/2"	5/8"	31"	CLEVIS	3/8"	3/16"	7X19 GALV	II
4"	3/4"	37"	CLEVIS	3/8"	3/16"	7X19 GALV	II
5"	3/4"	37"	CLEVIS	1/2"	1/4"	7X19 GALV	III
6"	3/4"	37"	CLEVIS	5/8"	1/4"	7X19 GALV	IV
8"	7/8"	43"	CLEVIS	5/8"	5/16"	7X19 GALV	V
10"	7/8"	43"	CLEVIS	3/4"	3/8"	7X19 GALV	VI

FOR ANCHOR CONNECTIONS SEE SCHEDULE.

SEE PIPE BRACING DETAILS.

*TWO CABLES REQUIRED AT EACH RESTRAINT POINT. EACH CABLE TO BE INSTALLED 45° TO HORIZONTAL AND 45° TO LONGITUDINAL DIRECTION OF PIPE.

**CABLE SYSTEMS TO BE EQUAL TO AMBER BOOTH C/W CLAMPS THIMBLES AND GROMMETS.

PIPING RESTRAINT DETAIL (6/M-11)
NO SCALE

NOTES:

1. CABLES, THIMBLES, CLIPS, GROMMETS & FLAT WASHERS ARE TO BE FURNISHED BY RESTRAINT MANUFACTURER. ALL OTHER HARDWARE TO BE PROVIDED BY CONTRACTOR.
2. ENTIRE SYSTEM TO BE EQUAL TO AMBER BOOTH.
3. CABLE CLIPS MUST BE ORIENTED AS SHOWN WITH SHORT END OF CABLE ON THE CURVED PART OF THE CLIP.

CABLE SCHEDULE

CABLE DIA.	CABLE DESIGN	A	B	C	BOLT SIZE	ALLOWABLE LOAD (lbf)	BREAKING STRENGTH (lbf)
1/8"	7X19 GALV.	5-1/4"	1-5/8"	5/8"	3/8"	660	2000
3/16"	7X19 GALV.	5-3/4"	1-7/8"	5/8"	3/8"	1400	4200
1/4"	7X19 GALV.	6-3/4"	2-3/8"	11/16"	3/8"	2330	7000
5/16"	7X19 GALV.	7-3/8"	2-5/8"	13/16"	5/8"	3260	9800
3/8"	7X19 GALV.	8-7/8"	3-1/4"	1"	5/8"	4800	14400
7/16"	6X19 IWRC	17"	3-5/8"	1"	5/8"	5920	17800
1/2"	6X19 IWRC	18"	3-7/8"	1-1/8"	3/4"	7660	23000

CABLE RESTRAINT DETAIL (3/M-11)
NO SCALE

NOTES:

1. SNUBBERS SHALL BE DESIGNED TO WITHSTAND 1.0 g AND VERTICAL LOADS.
2. SNUBBERS SHALL BE SERIES Z-1011 AS MANUFACTURED BY MASON INDUSTRIES, INC. OR APPROVED EQUAL.
3. INSTALL 4 ALL-DIRECTIONAL SNUBBERS THAT ARE DOUBLE ACTING AND LOCATED AS CLOSE TO THE VIBRATION ISOLATORS AS POSSIBLE.
4. SNUBBERS SHALL CONSIST OF INTERLOCKING STEEL MEMBERS RESTRAINED BY 3/4" MIN. REMOVABLE NEOPRENE COMPOUNDED TO BRIDGE BEARING SPECIFICATIONS.
5. SNUBBERS SHALL BE MANUFACTURED WITH AN AIR GAP BETWEEN STEEL AND NEOPRENE OF NOT LESS THAN 1/8" NOR MORE THAN 1/4".

SNUBBER RESTRAINT DETAIL (1/M-11)
NO SCALE

0000TVM11
Weber State College, Physical Education Facility - RW 84-058
Seismic Details - 28748

CABLE BRACING FOR ROUND AND OVAL DUCTS (7/M-11)
NO SCALE

(A) TYPE I, II, III, IV (B) TYPE I, II, III, IV
(WELD THICKNESS EQUAL TO THICKNESS OF ANGLE)

RESTRAINT CONNECTIONS TO STEEL (4/M-11)
NO SCALE

ISOLATION ASSEMBLE MUST BE DESIGNED TO WITHSTAND 0.5g LATERAL AND VERTICAL LOADS

RESILIENT PAD ISOLATOR RESTRAINT DETAIL (2/M-11)
NO SCALE

RECORD DOCUMENTS JUL 3 1990

jra JONES/ RICHARDS & ASSOCIATES
ARCHITECTURE (801)394-3033
PLANNING 533 26TH STREET
CONSTRUCTION MANAGEMENT OGDEN, UTAH

REVISED:

PROJECT NUMBER: 8403
DATE: 6-21-88
DRAWN BY:

PROJECT: PHYSICAL EDUCATION FACILITY
WEBER STATE COLLEGE

SHEET TITLE: SEISMIC DETAILS

SHEET NO. M-11

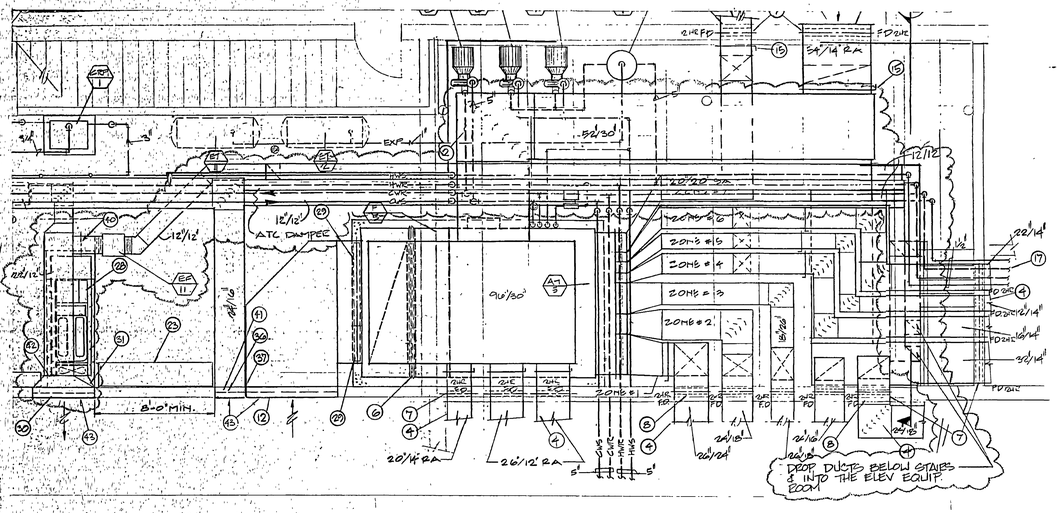

REVISED MECHANICAL ROOM PLAN SHEET M-6

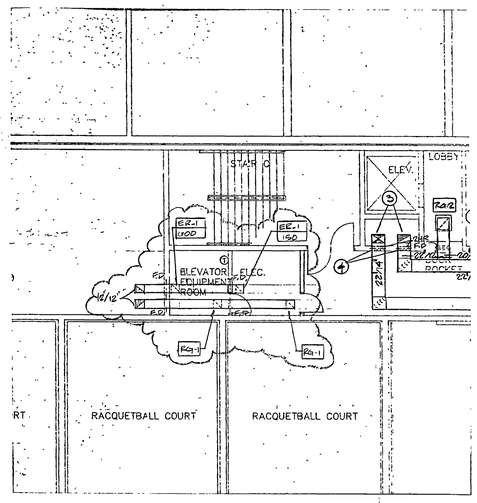

REVISED MAIN LEVEL PLAN
LINK-MECHANICAL SHEET M-3

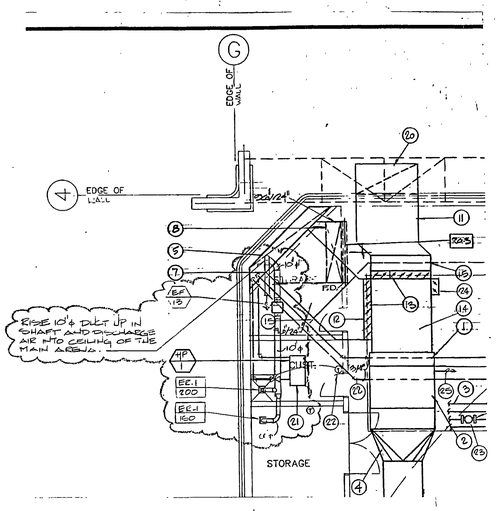

REVISED MAIN LEVEL PLAN
NORTH-MECHANICAL SHEET M-1

EXHAUST FAN SCHEDULE

FAN TAG	MFR. CATALOG NO.	SERVICE	FAN CAPACITY						MOTOR			
			CFM	OV FPM	RPM	SP "WC	BHP	WHEEL NO-SIZE	HP	RPM	VOLT	Ø
EF-5	COOK 120 SQI-B	MENS T.R.	770	--	1250	0.50	.12	12"	1/4	1750	120	1
EF-11	COOK 120 SQI-B	ELEV. EQUIP.	750	--	1350	0.75	.20	12"	1/3	1750	120	1
EF-12	PENN Z10	STORAGE 203	375	--	--	0.25	--	--	239 WATTS	1050	120	1
EF-13	COOK 90 SQI-B	STOR 102 & CUST 103	350	--	1165	0.375	.05	9"	1/4	1750	120	1

SC-07

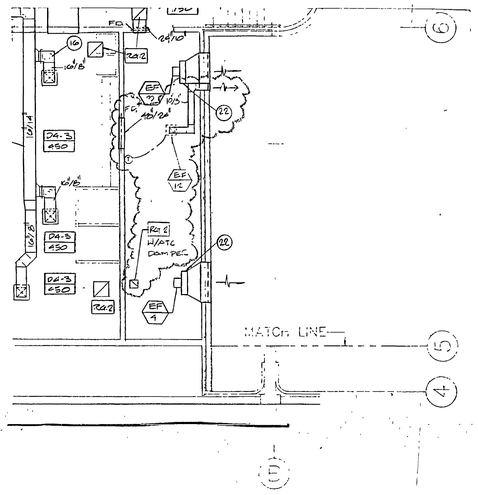

REVISED MID LEVEL PLAN
MECHANICAL SHEET M-4

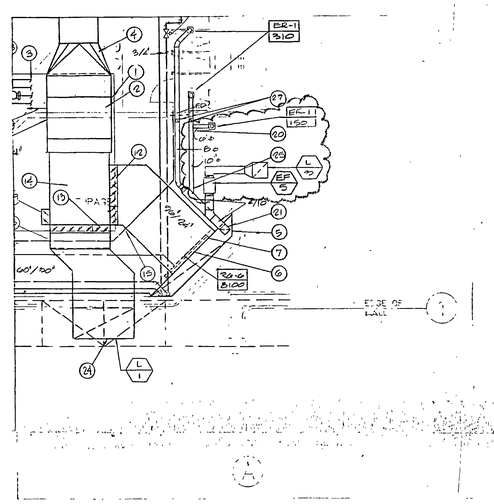

REVISED MAIN LEVEL PLAN
SOUTH-MECHANICAL SHEET M-2

RECORD DOCUMENTS
JUN 21 1990
THESE DOCUMENTS HAVE BEEN REVISED TO RECORD INFORMATION SUBMITTED BY THE CONTRACTOR. THEY ARE ASSUMED TO BE RELIABLE THE ARCHITECT DOES NOT GUARANTEE THEIR ACCURACY.

0000TVMX1
Weber State College, Physical Education Facility - R/W 84-058
Mechanical Modifications - 28774

NOTE: THIS SHEET IS COMPRISED OF DRAWINGS AND DETAILS FROM THE ORIGINAL 1990 BUILDING CONSTRUCTION CONFORMED SET & HAS BEEN INCLUDED FOR INFORMATIONAL PURPOSES ONLY. CONDITIONS SHOWN ON THIS SHEET HAVE NOT BEEN VERIFIED WITH EXISTING CONSTRUCTED CONDITIONS

jfa JONES/ RICHARDS & ASSOCIATES
ARCHITECTURE (801)394-3033
PLANNING CONSTRUCTION MANAGEMENT
533 26TH STREET OGDEN, UTAH

REVISED: AS BUILTS 6-90
PROJECT NUMBER: 8714
DATE: 12/15/88
DRAWN BY:

PROJECT: PHYSICAL EDUCATION FACILITY
WEBER STATE COLLEGE
SHEET TITLE: MECHANICAL MODIFICATIONS

SHEET NO. X-1 M

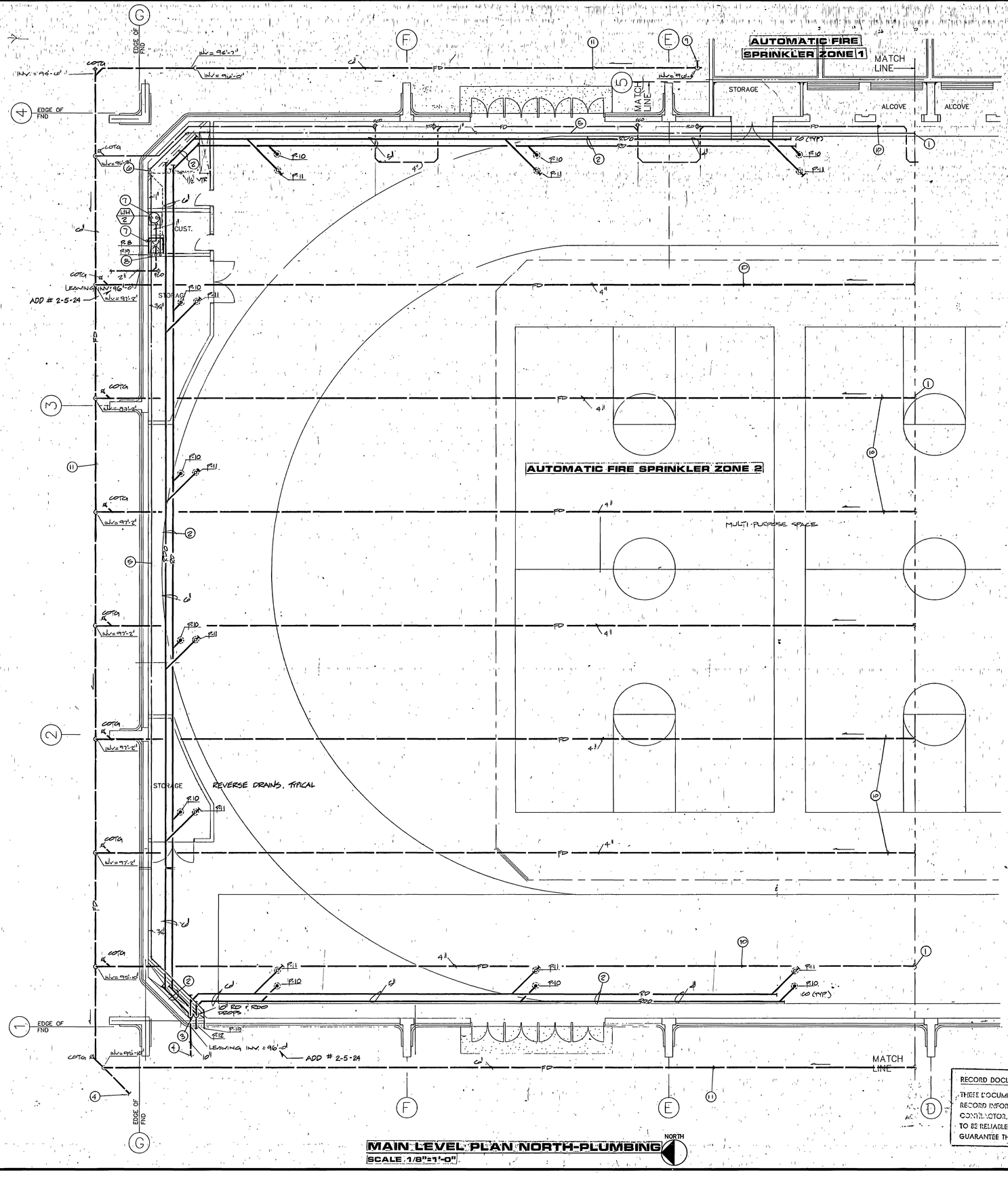

KEYED NOTES

1. FOR CONTINUATION OF PIPING, REFER TO SHEET P-2.
2. RUN ROOF DRAIN PIPING AS HIGH AS POSSIBLE IN STRUCTURE. SUPPORT ROOF DRAIN PIPING TO STRUCTURE. ROOF DRAIN SLOPE TO BE 1/8" PER FOOT. COORDINATE WITH OTHER TRADES TO AVOID CONFLICT.
3. DROP ROOF DRAIN PIPING IN CORNER OF CHASE. CONTINUE ROOF DRAIN PIPING BELOW GRADE, ROOF DRAIN OVERFLOW TO 18" ABOVE FINISHED GRADE.
4. FOR CONTINUATION OF ROOF DRAIN PIPING, REFER TO SITE UTILITIES PLAN. SP-1
5. RUN DOMESTIC WATER PIPE IN STRUCTURE.
6. DROP DOMESTIC WATER PIPING IN CORNER OF CHASE. RISE VENT LINE UP TO ROOF, CONTINUE AS SHOWN.
7. WATER HEATER TO BE MOUNTED ON ROOF OF CUSTODIAN ROOM. SECURE TO ROOF STRUCTURE AND EXTERIOR WALL. PROVIDE DRAIN PAN UNDER WATER HEATER WITH 1" COPPER DRAIN TUBE. RUN DRAIN TUBE IN CEILING SPACE AND DROP IN WALL TO SPILL INTO SERVICE SINK.
8. DROP WATER PIPING IN WALL TO SERVE SERVICE SINK.
9. FOR CONTINUATION, SEE SHEET P-3.
10. SUB FLOOR DRIAN, TYPICAL. SEE DETAIL 1/SP-4.
11. FOOTING DRAIN, TYPICAL. PLACE NEXT TO SPREAD FOOTINGS. SEE DETAIL 15/SP-4.

NOTE: THIS SHEET IS COMPRISED OF DRAWINGS AND DETAILS FROM THE ORIGINAL 1990 BUILDING CONSTRUCTION CONFORMED SET & HAS BEEN INCLUDED FOR INFORMATIONAL PURPOSES ONLY. CONDITIONS SHOWN ON THIS SHEET HAVE NOT BEEN VERIFIED WITH EXISTING CONSTRUCTED CONDITIONS.

0000TVP1
Weber State College, Physical Education Facilty - RW 84-058
Plumbing Plan Main Level North - 26731

RECORD DOCUMENTS JUL 3 1990
THESE DOCUMENTS HAVE BEEN REVISED TO RECORD INFORMATION SUBMITTED BY THE CONTRACTOR. WHILE THEY ARE ASSUMED TO BE RELIABLE THE ARCHITECT DOES NOT GUARANTEE THEIR ACCURACY.

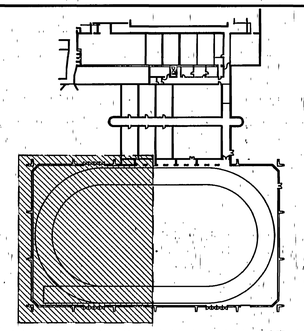

LOCATION PLAN
NO SCALE

KIM P. HARRIS No. 7122 REGISTERED PROFESSIONAL ENGINEER STATE OF UTAH

jra JONES/ RICHARDS & ASSOCIATES
ARCHITECTURE (801)394-3033
PLANNING CONSTRUCTION MANAGEMENT
533 26TH STREET OGDEN, UTAH

REVISED: AS BUILT 7-90
PROJECT NUMBER: 9403
DATE:
DRAWN BY:

PROJECT: PHYSICAL EDUCATION FACILITY
WEBER STATE COLLEGE
SHEET TITLE: PLUMBING PLAN - MAIN LEVEL - NORTH

SHEET NO. P-1

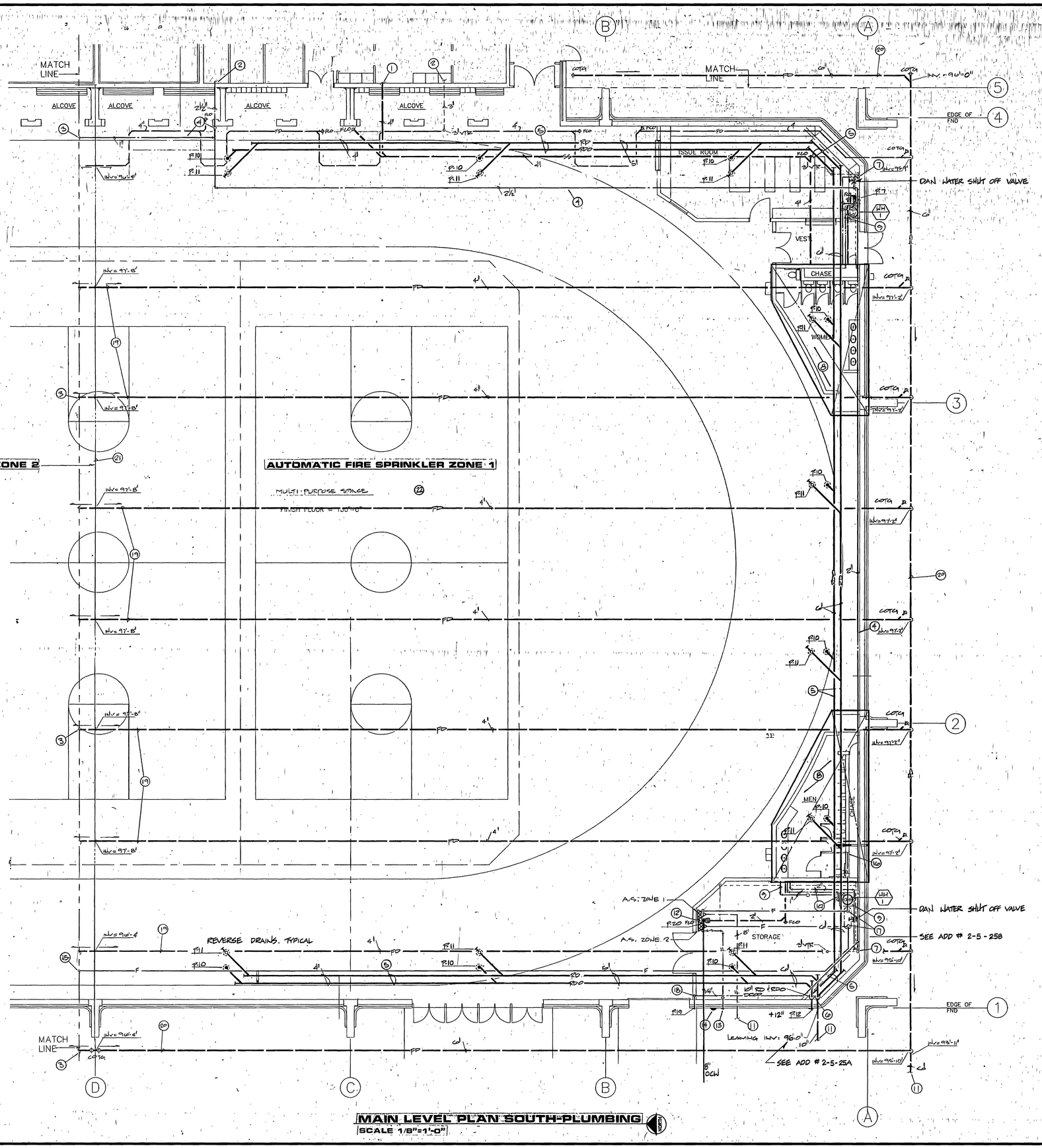

KEYED NOTES

1. FOR CONTINUATION OF PIPING, REFER TO SHEET P-3.
2. FOR CONTINUATION OF PIPING, REFER TO SHEET P-4.
3. FOR CONTINUATION OF PIPING, REFER TO SHEET P-1.
4. RISE DOMESTIC WATER LINE UP INTO STRUCTURE OF MAIN ARENA. RUN PIPING IN STRUCTURE.
5. RUN ROOF DRAIN AS HIGH AS POSSIBLE IN STRUCTURE. ROOF DRAIN SLOPE TO BE 1/8" PER FOOT. COORDINATE WITH OTHER TRADES TO AVOID CONFLICT.
6. DROP ROOF DRAIN PIPING IN CORNER OF CHASE. CONTINUE ROOF DRAIN LINE TO BELOW GRADE. ROOF DRAIN OVERFLOW TO 18" ABOVE FINISHED GRADE.
7. DROP DOMESTIC COLD WATER LINE IN CORNER OF CHASE. RUN WATER LINE OVER TO TOILET ROOM IN CEILING SPACE. DROP IN WALL OF TOILET ROOM. RISE VENT LINE UP TO ROOF, CONTINUE AS SHOWN.
8. FOR PIPING IN THIS AREA, REFER TO ENLARGED PLANS ON SHEET P-6.
9. HOT WATER HEATER TO BE MOUNTED ON ROOF OF ISSUE AND STORAGE ROOM. SECURE TO ROOF STRUCTURE AND EXTERIOR WALL. PROVIDE DRAIN PAN UNDER WATER HEATER WITH 1" COPPER DRAIN TUBE. DROP DRAIN TUBE IN WALL, RUN UNDER COUNTER AND TIE INTO INLET SIDE OF P-TRAP OF SINK P-7 IN ISSUE ROOM AND LAVATORY P-5 OF MENS TOILET ROOM.
10. DROP DOMESTIC HOT WATER LINE AND DRAIN LINE THROUGH ROOF OF STORAGE ROOM. RUN IN CEILING SPACE. DROP IN WALL OF TOILET ROOM.
11. FOR CONTINUATION OF PIPING, REFER TO SITE UTILITIES PLAN.
12. FIRE SPRINKLER RISERS.
13. FIRE DEPARTMENT CONNECTION. MOUNT 24" ABOVE FINISHED GRADE.
14. WATER MOTOR GONG.
15. FIRE SPRINKLER PIPING SERVING FIRE SPRINKLER ZONE 2. SIZE AS PER HYDRAULIC CALCULATIONS.
16. FIRE SPRINKLER PIPING SERVING FIRE SPRINKLER ZONE 1. SIZE AS PER HYDRAULIC CALCULATIONS.
17. RUN FIRE SPRINKLER PIPE IN CEILING SPACE OF STORAGE ROOM. RISE FIRE SPRINKLER PIPING TO STRUCTURE. HOLD TIGHT TO WALL. RUN PIPING IN STRUCTURE.
18. DROP 3/4" WATER LINE FROM STRUCTURE TO SERVE HOSEE BIBB P-19.
19. UNDER SLAB DRAIN. SEE DETAIL 17/SP-8, TYPICAL.
20. FOOTING DRAIN SEE DETAIL 15/SP-4, TYPICAL. PLACE NEXT TO FOOTING AT SPREAD FOOTINGS.
21. LIMIT OF AUTOMATIC FIRE SPRINKLER ZONE, TYPICAL.
22. GYM FIRE SPRINKLER ORDINARY HAZARD

NOTE: THIS SHEET IS COMPRISED OF DRAWINGS AND DETAILS FROM THE ORIGINAL 1990 BUILDING CONSTRUCTION CONFORMED SET & HAS BEEN INCLUDED FOR INFORMATIONAL PURPOSES ONLY. CONDITIONS SHOWN ON THIS SHEET HAVE NOT BEEN VERIFIED WITH EXISTING CONSTRUCTED CONDITIONS.

0000TVP2
Weber State College, Physical Education Facility - RW 84-005
Plumbing Plan Main Level South - 28732

RECORD DOCUMENTS
JUL 3 1990
THESE DOCUMENTS HAVE BEEN REVISED TO REFLECT CONSTRUCTION AS BUILT. THE CONTRACTOR IS RESPONSIBLE TO REVIEW THESE DOCUMENTS AND GUARANTEE THEIR ACCURACY.

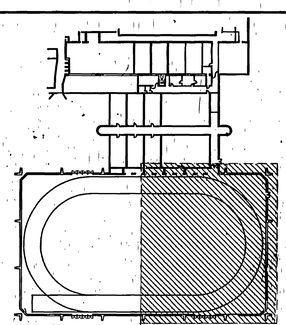

LOCATION PLAN
NO SCALE
NORTH

JONES / RICHARDS & ASSOCIATES
jra
CONSTRUCTION MANAGEMENT
PLANNING
533 26TH STREET OGDEN, UTAH
ARCHITECTURE
(801)394-3033

REVISED: AS BUILT 7-90
PROJECT NUMBER: 8403
DATE:
DRAWN BY:

PROJECT: PHYSICAL EDUCATION FACILITY
WEBER STATE COLLEGE

SHEET TITLE: PLUMBING PLAN - MAIN LEVEL - SOUTH

SHEET NO. P-2

KEYED NOTES

E. FOR CONTINUATION OF ROOF DRAIN PIPING, REFER TO SHEET P-4 AND P-5.

2. RUN WASTE PIPING BELOW GRADE.

3. RUN ROOF DRAIN PIPING BELOW GRADE.

4. FOR CONTINUATION OF PIPING, REFER TO SITE UTILITIES PLAN.

5. FOR CONTINUATION OF WASTE PIPING, REFER TO SHEET P-2.

6. WATER PIPING FROM FLOOR ABOVE TO SERVE PLUMBING FIXTURE AND POINT OF USE WATER HEATER. FOR CONTINUATION OF PIPING REFER TO SHEET P-4.

7. RISE PINEVIEW WATER TO LEVEL ABOVE. FOR CONTINUATION, REFER TO SHEET P-4. PINEVIEW WATER TO BE USED FOR IRRIGATION PURPOSES ONLY.

8. FOR CONTINUATION, SEE SHEET P-1.

9. CUP END OF FOOTING DRAIN LINE, TYPICAL.

10. VENT PIPING TO RISE UP WALL TO FLOOR ABOVE. FOR CONTINUATION OF PIPING REFER TO SHEET P-4.

11. WASTE PIPING SERVING PLUMBING FIXTURES FROM FLOOR ABOVE.

12. POINT OF USE WATER HEATER TO MOUNT INSIDE OF CABINET IN METAL DRAIN PAN. RUN DRAIN LINE FROM DRAIN PAN TO FLOOR DRAIN OUTSIDE OF CABINET.

13. 1-1/2" COLD WATER LINE FROM LEVEL ABOVE TO SERVE WEIGHT TANK. CONNECT TO WEIGHT TANK HEATER AS PER MANUFACTURER'S INSTRUCTIONS. FOR CONTINUATION OF LINE REFER TO SHEET P-4. SEE ADD # 2-5-26A

14. CONNECT AND EXTEND LINE TO EXTERIOR OF BUILDING AND TURN DOWN WITH GALVANIZED PIPE. VALVE TO BE NORMALLY CLOSED EXCEPT FOR WINTER SHUTDOWN.

15. UNDER SLAB DRAIN TYPICAL SEE DETAIL 17/SP-4.

16. FOOTING DRAIN, TYPICAL. PLACE NEXT TO FOOTING AT SPREAD FOOTINGS. SEE DETAIL 15/SP-4.

17. PROVIDE 1¼" VENT LINE FROM FLOOR DRAIN, EXTEND THE VENT LINE BELOW THE FLOOR TO THE SOUTH WALL AND RISE TO THE LEVEL ABOVE AND CONNECT TO THE 3" VENT LINE IN THE CEILING OF THE SPORTS LABS. SEE ADD # 2-5-26B, ADD # 2-6-27B, SEE SHT. P-4 FOR 8" VENT.

NOTE: THIS SHEET IS COMPRISED OF DRAWINGS AND DETAILS FROM THE ORIGINAL 1990 BUILDING CONSTRUCTION CONFORMED SET & HAS BEEN INCLUDED FOR INFORMATIONAL PURPOSES ONLY. CONDITIONS SHOWN ON THIS SHEET HAVE NOT BEEN VERIFIED WITH EXISTING CONSTRUCTED CONDITIONS.

RECORD DOCUMENTS JUL 3 1990

THESE DOCUMENTS HAVE BEEN REVISED TO INCORPORATE INFORMATION SUPPLIED BY THE CONTRACTOR. THE ARCHITECT IS REQUIRED TO BE RELIANT ON THE CONTRACTOR AND DOES NOT GUARANTEE THEIR ACCURACY.

0000TVP3
Weber State College, Physical Education Facility - RW 84-058
Plumbing Plan Main Level Link - 26733

MAIN LEVEL PLAN-PLUMBING
SCALE 1/8"=1'-0"

LOCATION PLAN
NO SCALE

NE 7122
KIM PE
MARTIN
7-1-90
REGISTERED PROFESSIONAL ENGINEER
STATE OF UTAH

jra JONES/ RICHARDS & ASSOCIATES
ARCHITECTURE (801)394-5033
PLANNING 533 26TH STREET
CONSTRUCTION MANAGEMENT OGDEN, UTAH

REVISED:

PROJECT NUMBER: 9903
DATE:
DRAWN BY: PEPE

PROJECT: PHYSICAL EDUCATION FACILITY
WEBER STATE COLLEGE
SHEET TITLE: PLUMBING PLAN - MAIN LEVEL

SHEET NO. P-3

KEYED NOTES

1. EXISTING PRV MANIFOLD IN EXISTING BUILDING.
2. CONNECT DOMESTIC COLD WATER LINE TO EXISTING PRV MANIFOLD. PROVIDE SHUT-OFF VALVE AT CONNECTION.
3. RUN DOMESTIC COLD WATER LINE IN STRUCTURE. COORDINATE WITH OTHER TRADES TO AVOID CONFLICT.
4. ROOF DRAIN DROPS FROM LEVEL ABOVE. FOR CONTINUATION, REFER TO SHEET P-5.
5. RUN ROOF DRAIN PIPE IN STRUCTURE. SLOPE TO BE 1/8" PER FOOT. COORDINATE PIPING WITH OTHER TRADE TO AVOID CONFLICT.
6. DROP ROOF DRAIN PIPE TO BELOW STRUCTURAL BOND BEAM. CONTINUE AS SHOWN.
7. DROP ROOF DRAIN TO LEVEL BELOW. FOR CONTINUATION OF PIPING, REFER TO SHEET P-3.
8. RISE DOMESTIC COLD WATER TO RISE TO LEVEL ABOVE. FOR CONTINUATION OF PIPING, REFER TO P-4.
9. VENT LINE TO BE RUN AS HIGH AS POSSIBLE IN STRUCTURE. RISE UP WALL, CONTINUE AS SHOWN ON SHEET P-5.
10. FOR CONTINUATION OF PIPING, REFER TO SHEET P-2.
11. VENT LINE RISING IN WALL FROM LEVEL BELOW. CONTINUE AS SHOWN.
12. PINEVIEW WATER LINE TO RUN IN STRUCTURE. RISE UP FOR SPRINKLERS. REFER TO SHEET P-5 FOR CONTINUATION. PINEVIEW WATER TO BE USED FOR IRRIGATION PURPOSES ONLY.
13. PINEVIEW WATER LINE TO RISE FROM BELOW. REFER TO SHEET P-3 FOR CONTINUATION. PINEVIEW WATER TO BE USED FOR IRRIGATION PURPOSES ONLY.
14. DROP WATER LINE IN WALL TO SERVE FIXTURES ON LEVEL BELOW. FOR CONTINUATION OF LINE REFER TO SHEET P-3.
15. POINT OF USE WATER HEATER TO BE SUPPORTED IN METAL FRAME AND SECURED TO WALL 6'-0" A.F.F. REFER TO DETAIL SHEET P-6.

AUTOMATIC FIRE SPRINKLER ZONE 1

MID LEVEL PLAN-PLUMBING

SCALE 1/8"=1'-0"

RECORD DOCUMENTS JUL 3 1990

THESE DOCUMENTS HAVE BEEN REVISED TO RECORD INFORMATION SUBMITTED BY THE CONTRACTOR. WHILE THEY ARE ASSUMED TO BE RELIABLE THE ARCHITECT DOES NOT GUARANTEE THEIR ACCURACY.

0000TVP4
Weber State College, Physical Education Facelty - RW 84-058
Plumbing Plan Md Level Letr - 26734

LOCATION PLAN
NO SCALE

NOTE: THIS SHEET IS COMPRISED OF DRAWINGS AND DETAILS FROM THE ORIGINAL 1990 BUILDING CONSTRUCTION CONFORMED SET & HAS BEEN INCLUDED FOR INFORMATIONAL PURPOSES ONLY. CONDITIONS SHOWN ON THIS SHEET HAVE NOT BEEN VERIFIED WITH EXISTING CONSTRUCTED CONDITIONS.

jra JONES/ RICHARDS & ASSOCIATES
ARCHITECTURE (801)394-3033
PLANNING 533 28TH STREET CONSTRUCTION MANAGEMENT OGDEN, UTAH

REVISED:

PROJECT NUMBER: 8403
DATE:
DRAWN BY:

PROJECT: PHYSICAL EDUCATION FACILITY
WEBER STATE COLLEGE

SHEET TITLE: PLUMBING PLAN - MID LEVEL

SHEET NO. P-4

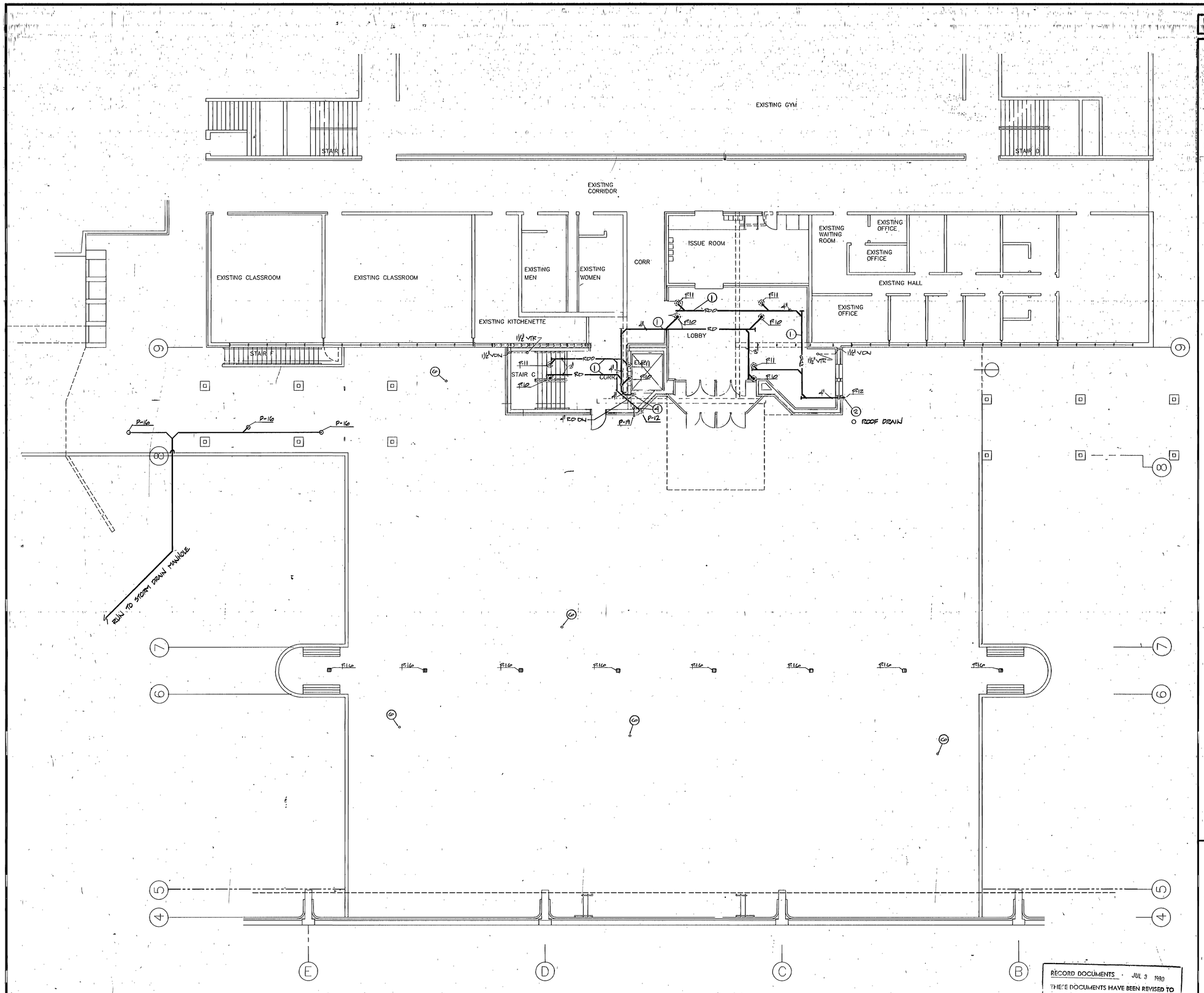

PLAZA LEVEL PLAN-PLUMBING

SCALE 1/8"=1'-0"

NORTH

KEYED NOTES

1. ROOF DRAIN AND ROOF DRAIN OVERFLOW PIPING TO BE RUN AT 1/8" PER FOOT SLOPE. RUN PIPING TIGHT INTO STRUCTURE. COORDINATE WITH MECHANICAL DUCTWORK TO AVOID ANY CONFLICT.
2. DROP ROOF DRAIN OVERFLOW IN WALL TO 18" ABOVE FINISHED CONCRETE SLAB.
3. VENT PIPING FROM FLOOR BELOW. FOR CONTINUATION REFER TO SHEET P-4.
4. ROOF DRAIN LINE TO DROP IN CHASE AND COMESTIC COLD WATER LINE TO RISE IN CHASE. FOR CONTINUATION OF THESE LINES, REFER TO SHEET P-4.
5. WASTE DROP FROM FIXTURE ON LEVEL ABOVE.
6. STUB UP AND CAP 1-1/4" SECONDARY WATER LINE FOR SPRINKLERS. REFER TO SHEET L-2 FOR EXACT LOCATION OF SPRINKLERS.

0000TVP5
Weber State College, Physical Education Facility - RW 84-058
Plumbing Plan Plaza Level Link - 26735

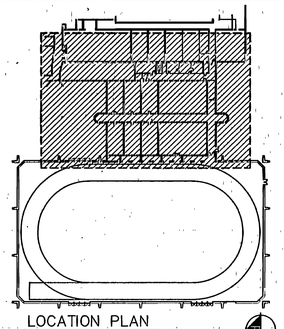

LOCATION PLAN
NO SCALE

NORTH

RECORD DOCUMENTS JUL 3 1990

THESE DOCUMENTS HAVE BEEN REVISED TO RECORD INFORMATION SUBMITTED BY THE CONTRACTOR. WHILE THEY ARE ASSUMED TO BE RELIABLE THE ARCHITECT DOES NOT GUARANTEE THEIR ACCURACY.

NOTE: THIS SHEET IS COMPRISED OF DRAWINGS AND DETAILS FROM THE ORIGINAL 1990 BUILDING CONSTRUCTION CONFORMED SET & HAS BEEN INCLUDED FOR INFORMATIONAL PURPOSES ONLY. CONDITIONS SHOWN ON THIS SHEET HAVE NOT BEEN VERIFIED WITH EXISTING CONSTRUCTED CONDITIONS.

REGISTERED PROFESSIONAL ENGINEER No. 7122 KIM P. HARRIS STATE OF UTAH

jra JONES/ RICHARDS & ASSOCIATES
ARCHITECTURE (801)394-3033
PLANNING 533 26TH STREET
CONSTRUCTION MANAGEMENT OGDEN, UTAH

REVISED: AS BUILT 6-90

PROJECT NUMBER: 3453
DATE:
DRAWN BY:

PROJECT: PHYSICAL EDUCATION FACILITY
WEBER STATE COLLEGE

SHEET TITLE: PLUMBING PLAN - PLAZA LEVEL - LINK

SHEET NO. P-5

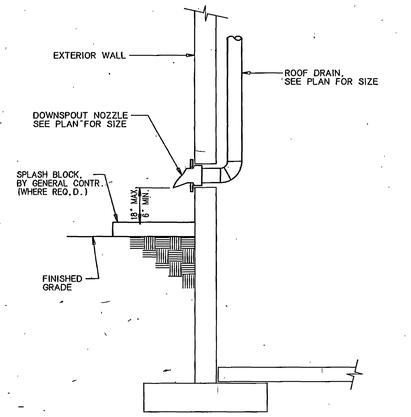

DOWNSPOUT NOZZLE DETAIL (3/P.6)
NO SCALE

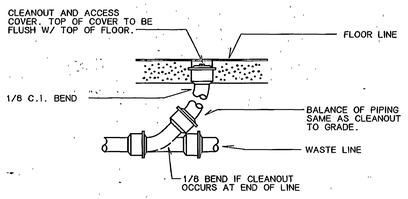

FLOOR CLEANOUT DETAIL (1/P.6)
NO SCALE

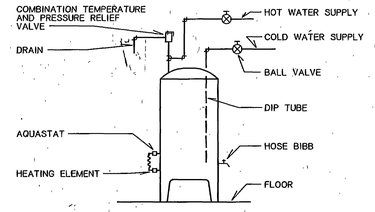

WATER HEATER DETAIL (2/P.6)
NO SCALE

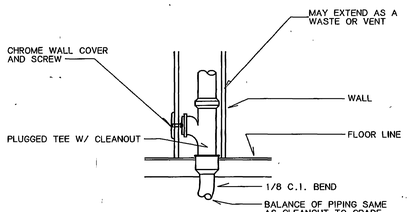

WALL CLEANOUT DETAIL (4/P.6)
NO SCALE

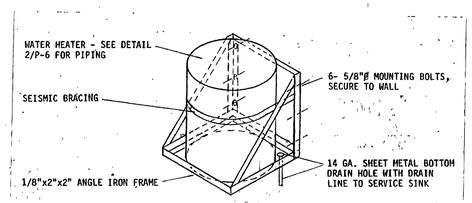

WATER HEATER SUPPORT DETAIL (5/P.6)
NO SCALE

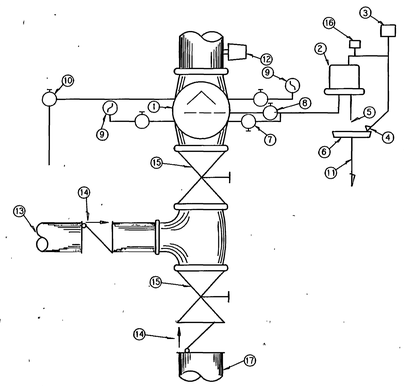

MANIFOLD TYPE SPRINKLER ALARM VALVE DETAIL (6/P.6)
NO SCALE

PLUMBING FIXTURE SCHEDULE

SYMBOL	FIXTURE	CW	HW	W	V	REMARKS
P-1	WATER CLOSET	1-1/2"		4"	3"	WALL HUNG
P-2	WATER CLOSET	1-1/2"		4"	3"	HANDICAPPED
P-3	URINAL	3/4"		2"	1-1/2"	WALL HUNG
P-4	URINAL	3/4"		2"	1-1/2"	HANDICAPPED
P-5	LAVATORY	1/2"	1/2"	1-1/2"	1-1/2"	COUNTERMOUNT
P-6	SINK	1/2"	1/2"	1-1/2"	1-1/2"	DBL-COMP
P-7	SINK	1/2"	1/2"	1-1/2"	1-1/2"	SINGLE-COMP
P-8	SERVICE SINK	3/4"	3/4"	2"	1-1/2"	FAUCET AND FLOOR DRAIN
P-9	DRINKING FOUNTAIN	1/2"		2"	1-1/2"	
P-10	ROOF DRAIN					SEE PLAN FOR SIZE
P-11	ROOF DRAIN OVERFLOW					SEE PLAN FOR SIZE
P-12	DOWNSPOUT NOZZLE					ELEPHANT LIP STYLE SEE PLAN FOR SIZE
P-13	FLOOR DRAIN			2"	1-1/2"	
P-14	FLOOR SINK			4"	3"	12" SQUARE
P-15	HOSE BIBB	1/2"	1/2"			
P-16	ROOF DRAIN			2"	1-1/2"	SEE PLAN FOR SIZE
P-17	NOT USED					
P-18	DRINKING FOUNTAIN	1/2"		2"	1-1/2"	HANDICAPPED
P-19	WALL HYDRANT	1/2"				
~~P-20~~	~~FLOOR SINK~~ ADDED PER ADDEN. TAG 22			~~2"~~	~~1-1/2"~~	~~3-1/2" SQUARE~~

SC-43

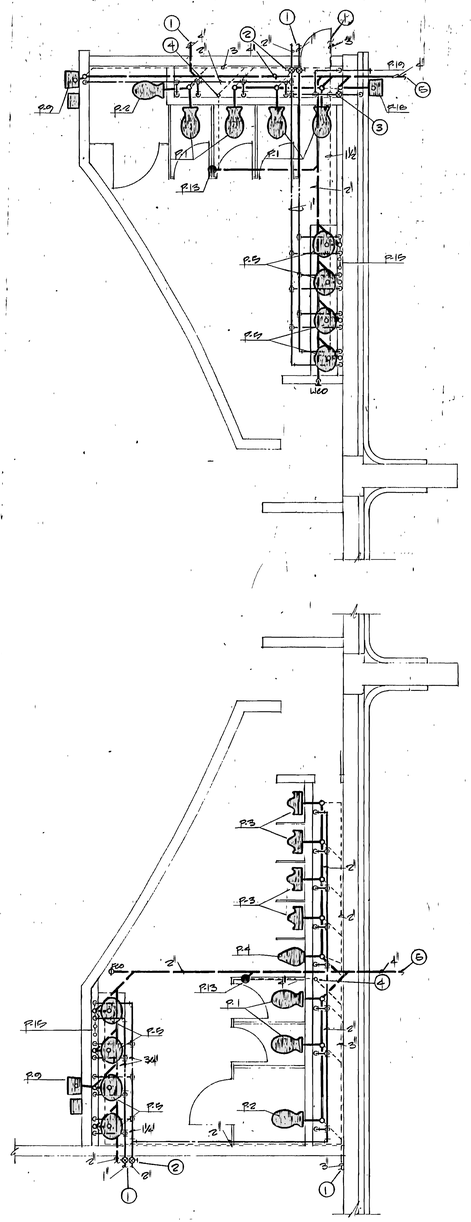

ENLARGED TOILET ROOM PLANS-PLUMBING
SCALE 1/8"=1'-0"

KEYED NOTES

1. FOR CONTINUATION OF PIPING, REFER TO SHEET P-2.
2. SHUT-OFF VALVES.
3. PROVIDE SHUT-OFF VALVE AND DRAIN ON WATER PIPE SERVING EXTERIOR DRINKING FOUNTAIN.
4. VENT LINE FROM FLOOR DRAIN TO RISE IN CHASE, CONTINUE AS SHOWN.
5. FOR CONTINUATION OF PIPING, REFER TO SITE UTILITY PLAN.

RECORD DOCUMENTS JUL 3 1990
THESE DOCUMENTS HAVE BEEN REVISED TO INCORPORATE INFORMATION SUBMITTED BY THE CONTRACTOR. WHILE THESE ARE ASSUMED TO BE RELIABLE THE ARCHITECT DOES NOT GUARANTEE THEIR ACCURACY.

0000TVP6
Weber State College, Physical Education Facelty - RW 84-058
Plumbing Plans, Details & Schedules - 28736

REGISTERED PROFESSIONAL ENGINEER No. 7122 KIM P. HARRIS STATE OF UTAH

NOTE: THIS SHEET IS COMPRISED OF DRAWINGS AND DETAILS FROM THE ORIGINAL 1990 BUILDING CONSTRUCTION CONFORMED SET & HAS BEEN INCLUDED FOR INFORMATIONAL PURPOSES ONLY. CONDITIONS SHOWN ON THIS SHEET HAVE NOT BEEN VERIFIED WITH EXISTING CONSTRUCTED CONDITIONS.

jra JONES/ RICHARDS & ASSOCIATES
ARCHITECTURE PLANNING CONSTRUCTION MANAGEMENT
(801)394-5033 533 26TH STREET OGDEN, UTAH

REVISED: AS BUILT 6-90

PROJECT NUMBER: 8403
DATE: 7-24-87
DRAWN BY:

PROJECT: PHYSICAL EDUCATION FACILITY
WEBER STATE COLLEGE

SHEET TITLE: PLUMBING PLANS, DETAILS AND SCHEDULES

SHEET NO. P-6

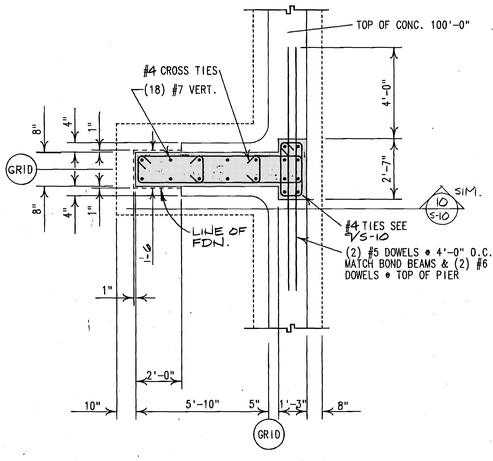

DETAIL (SIDEWALL PIER) 2 S-1
SCALE : 3/8" = 1'-0"

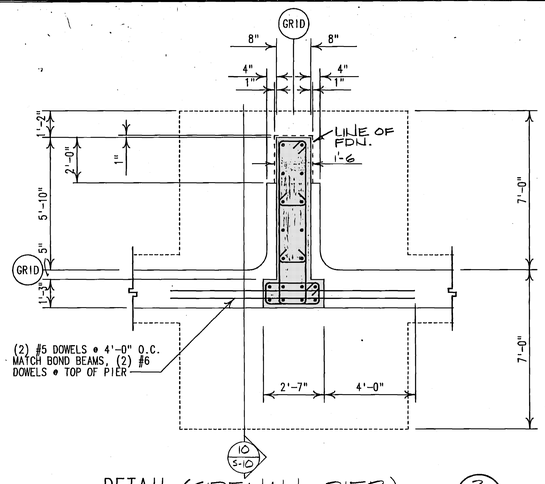

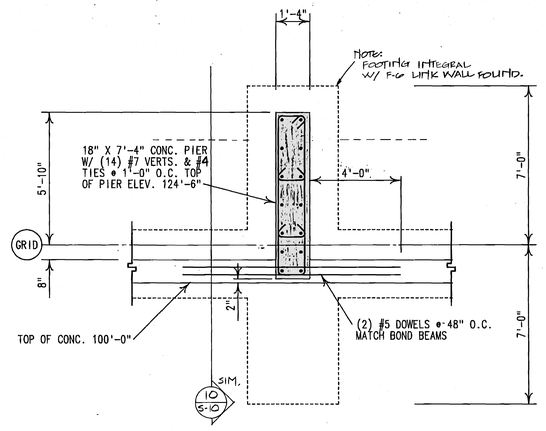

DETAIL (SPEC. PIER) 1 S-1
SCALE : 3/8" = 1'-0"

FOOTING SCHEDULE

MARK	WIDTH	LENGTH	THICK.	CROSSWISE REINFORCING				LENGTHWISE REINFORCING				REMARKS
				NO.	SIZE	LENGTH	SPAC.	NO.	SIZE	LENGTH	SPAC.	
F-1	2'-0"	CONT.	12"	—	#3	1'-6"	48"	2	#4	CONT.	18"	
F-2	2'-6"	CONT.	12"	—	#3	2'-0"	48"	2	#4	CONT.	24"	
F-3	3'-0"	CONT.	12"	—	#4	2'-6"	24"	2	#5	CONT.	30"	
F-4	3'-6"	CONT.	12"	—	#4	3'-0"	24"	3	#5	CONT.	12"	
F-5	4'-0"	CONT.	12"	—	#5	3'-6"	12"	3	#5	CONT.	21"	
F-6	4'-6"	CONT.	12"	—	#5	4'-0"	10"	3	#5	CONT.	24"	
F-7	3'-0"	3'-0"	12"	3	#5	2'-6"	15"	3	#5	2'-6"	15"	
F-8	4'-0"	4'-0"	12"	5	#5	3'-6"	10.5"	5	#5	3'-6"	10.5"	
F-9	4'-6"	4'-6"	12"	5	#5	4'-0"	12"	5	#5	4'-0"	12"	
F-10	5'-0"	5'-0"	12"	5	#5	4'-6"	13.5"	5	#5	4'-6"	13.5"	
F-11	6'-0"	6'-0"	12"	6	#5	5'-6"	13.2"	6	#5	5'-6"	13.2"	
F-12	4'-0"	9'-0"	12"	9	#5	3'-6"	12.75"	4	#5	8'-6"	12.75"	
F-13	4'-0"	14'-0"	24"	14	#5	3'-6"	12.5"	6	#5	13'-6"	12.5"	
F-14	10'-0"	14'-0"	24"	17	#6	9'-6"	10.1"	12	#8	13'-6"	10.1"	
F-15	12'-0"	12'-0"	18"	15	#5	11'-6"	10"	15	#5	11'-6"	10"	
F-16	2'-0"	CONT	12	—	#3	1'-6"	4'-0"	2	#5	CONT	18	THK. SLAB 5/S-9

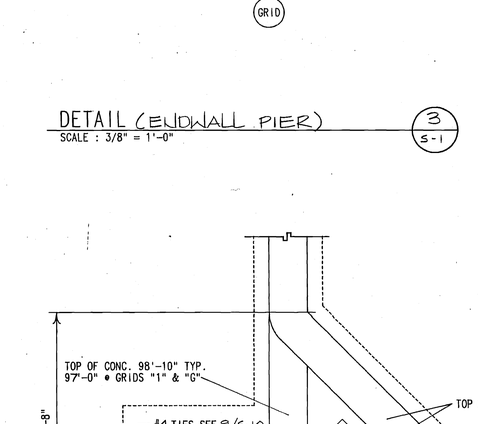

DETAIL (ENDWALL PIER) 3 S-1
SCALE : 3/8" = 1'-0"

DETAIL (CORNER PIER) 4 S-1
SCALE : 3/8" = 1'-0"

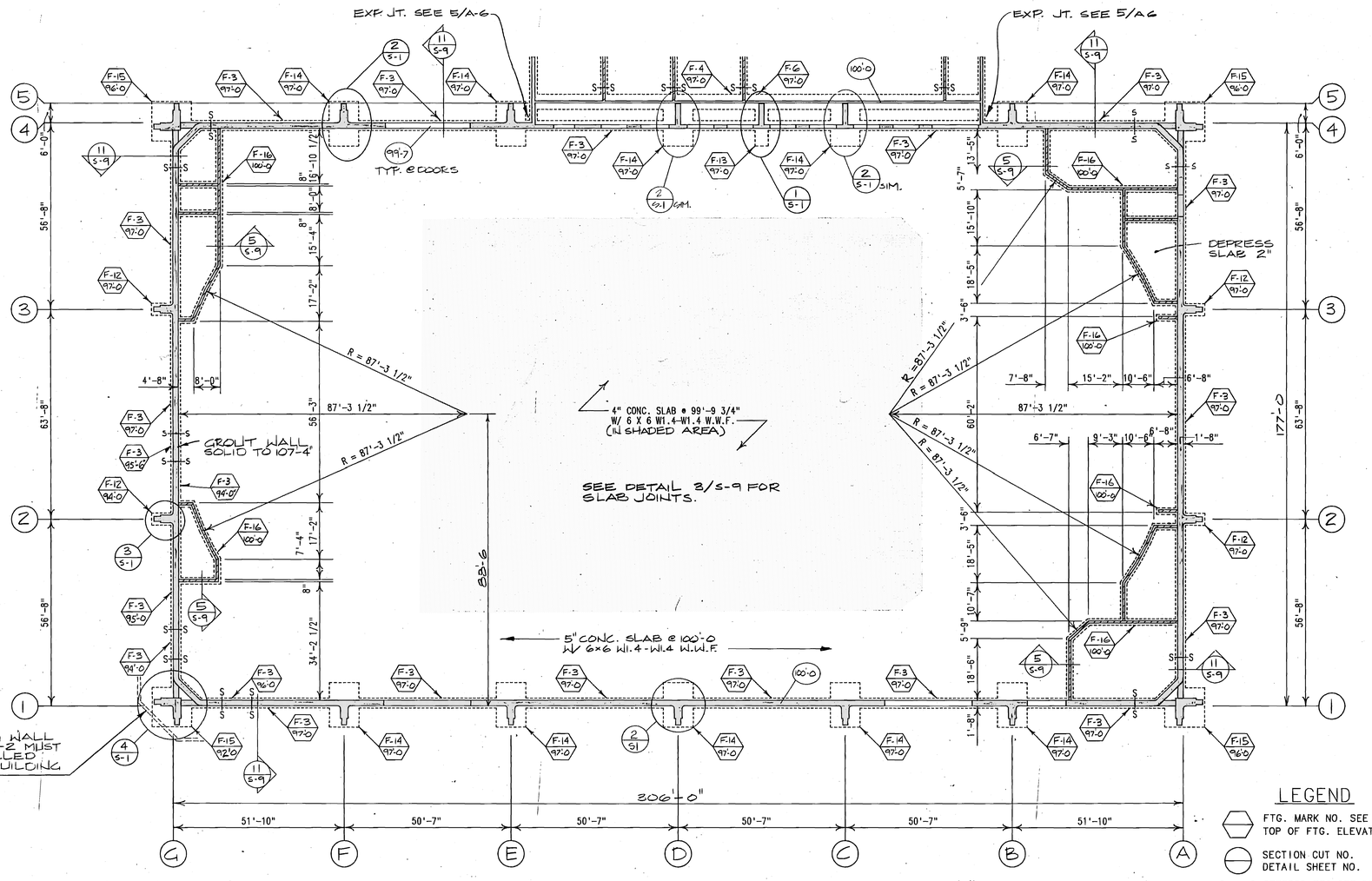

NOTE!
FOOTING ELEV. ARE APPROXIMATE FOOTINGS MUST EXTEND THROUGH ANY EXISTING FILL AND BEAR ON SUITABLE NATURAL SOILS OR ON COMPACTED STRUCTURAL FILL (SEE SOILS REPORT)

FOOTING & FOUNDATION LAYOUT
SCALE : 1/16" = 1'-0"

NORTH

LEGEND

- FTG. MARK NO. SEE SCHEDULE / TOP OF FTG. ELEVATION
- SECTION CUT NO. / DETAIL SHEET NO.
- S——S STEPPED FTG SEE DET. 6/S-9
- TOP OF FOUNDATION EL.
- H.S. HEADED STUD ANCHOR
- D.A. WELDABLE BAR ANCHOR

RECORD DRAWINGS JUN 1 & 1990
THIS SHEET HAS BEEN REVISED TO RECORD THE INFORMATION FURNISHED BY THE CONTRACTOR AS BUILT AS REQUIRED TO BE MAINTAINED BY THE ARCHITECT. THE ARCHITECT DOES NOT GUARANTEE THEIR ACCURACY.

0000TVS1
Weber State College; Physical Education Facility - RW:84-058
Main Level Foundation Plan - 26708

NOTE: THIS SHEET IS COMPRISED OF DRAWINGS AND DETAILS FROM THE ORIGINAL 1990 BUILDING CONSTRUCTION CONFORMED SET & HAS BEEN INCLUDED FOR INFORMATIONAL PURPOSES ONLY. CONDITIONS SHOWN ON THIS SHEET HAVE NOT BEEN VERIFIED WITH EXISTING CONSTRUCTED CONDITIONS.

JONES / RICHARDS & ASSOCIATES
CONSTRUCTION MANAGEMENT
OGDEN, UTAH
PLANNING
533 - 25TH STREET
ARCHITECTURE
(801) 394-3333

REVISED: 12 BUILTS 6-90
PROJECT NUMBER: 9409
DATE: 6-21-88
DRAWN BY: S.D.K.

PROJECT: PHYSICAL EDUCATION FACILITY
WEBER STATE COLLEGE
SHEET TITLE: MAIN LEVEL FOUNDATION PLAN

SHEET NO. S-1

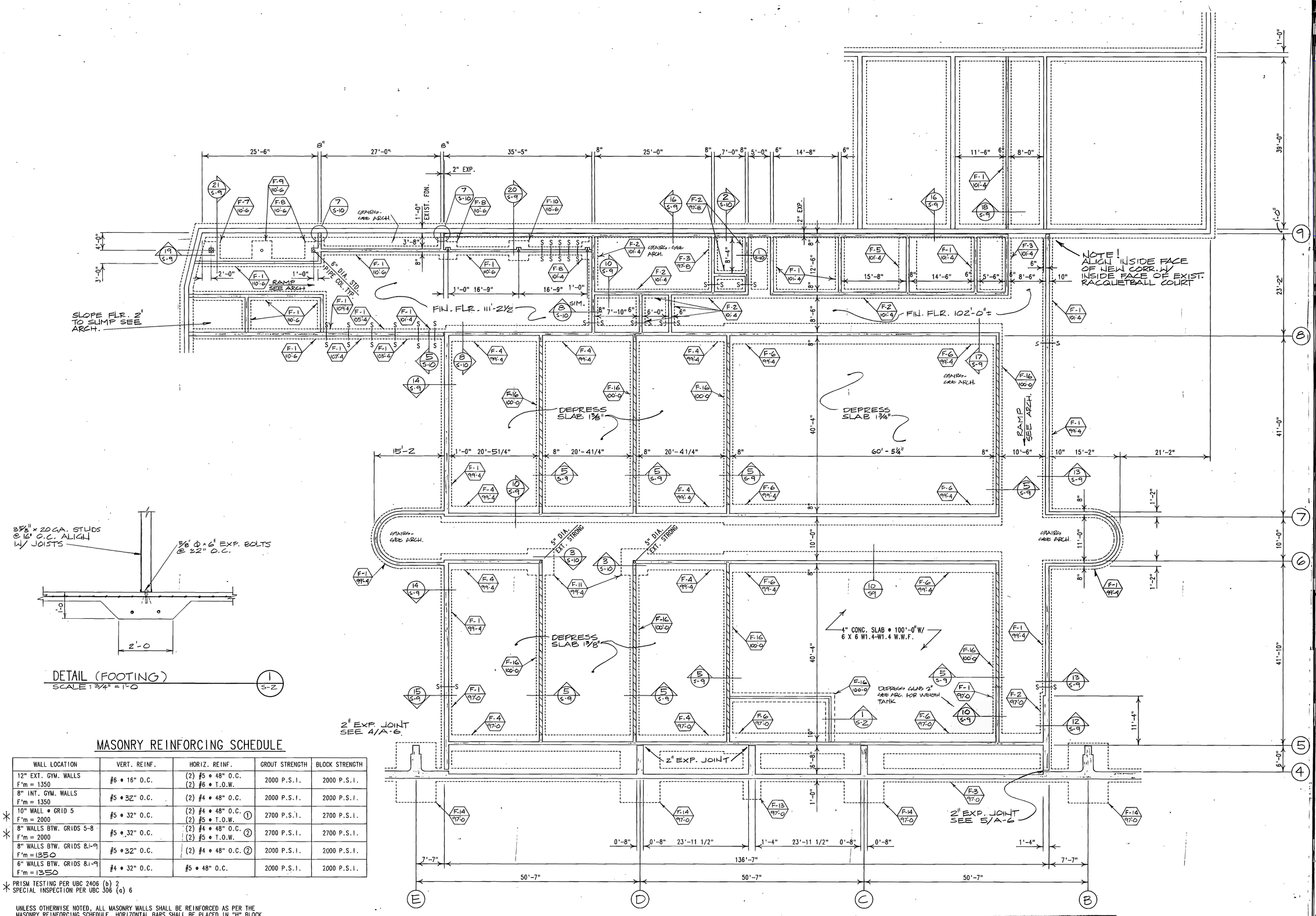

DETAIL (FOOTING)
SCALE : 3/4" = 1'-0"
1 S-2

MASONRY REINFORCING SCHEDULE

WALL LOCATION	VERT. REINF.	HORIZ. REINF.	GROUT STRENGTH	BLOCK STRENGTH
12" EXT. GYM. WALLS F'm = 1350	#6 ● 16" O.C.	(2) #5 ● 48" O.C. (2) #6 ● T.O.W.	2000 P.S.I.	2000 P.S.I.
8" INT. GYM. WALLS F'm = 1350	#5 ● 32" O.C.	(2) #4 ● 48" O.C.	2000 P.S.I.	2000 P.S.I.
✳ 10" WALL ● GRID 5 F'm = 2000	#5 ● 32" O.C.	(2) #4 ● 48" O.C. ① (2) #5 ● T.O.W.	2700 P.S.I.	2700 P.S.I.
✳ 8" WALLS BTW. GRIDS 5-8 F'm = 2000	#5 ● 32" O.C.	(2) #4 ● 48" O.C. ② (2) #5 ● T.O.W.	2700 P.S.I.	2700 P.S.I.
8" WALLS BTW. GRIDS 8-9 F'm = 1350	#5 ● 32" O.C.	(2) #4 ● 48" O.C. ②	2000 P.S.I.	2000 P.S.I.
6" WALLS BTW. GRIDS 8-9 F'm = 1350	#4 ● 32" O.C.	#5 ● 48" O.C.	2000 P.S.I.	2000 P.S.I.

✳ PRISM TESTING PER UBC 2406 (b) 2
SPECIAL INSPECTION PER UBC 306 (a) 6

UNLESS OTHERWISE NOTED, ALL MASONRY WALLS SHALL BE REINFORCED AS PER THE MASONRY REINFORCING SCHEDULE. HORIZONTAL BARS SHALL BE PLACED IN "H" BLOCK BOND BEAM UNITS AT SPACING NOTED & AT FLOORS, ROOF, AND TOP OF WALL.

① (2) #5 ● 40" O.C. FOR STACK BOND
② (2) #5 ● 48" O.C. FOR STACK BOND

LINK BUILDING FOOTING & FOUNDATION LAYOUT

SCALE : 1/8" = 1'-0"

NORTH

RECORD DOCUMENTS ... JUN 1 8 1990 ... THESE DOCUMENTS HAVE BEEN REVISED TO RECORD ... AS SUBMITTED BY THE CONTR... ARE ASSUMED TO BE ... THE ARCHITECT DOES NOT GUARANTEE THEIR ACCURACY.

0000TVS2
Weber State College; Physical Education Facility - RW:84-058
Main Level Foundation Plan Link - 26709

PROFESSIONAL ENGINEER ... O. KENT RICHARDS ... REGISTERED ... State of Utah

NOTE: THIS SHEET IS COMPRISED OF DRAWINGS AND DETAILS FROM THE ORIGINAL 1990 BUILDING CONSTRUCTION CONFORMED SET & HAS BEEN INCLUDED FOR INFORMATIONAL PURPOSES ONLY. CONDITIONS SHOWN ON THIS SHEET HAVE NOT BEEN VERIFIED WITH EXISTING CONSTRUCTED CONDITIONS.

jra JONES / RICHARDS & ASSOCIATES
ARCHITECTURE (801) 394-3333 — PLANNING 933 - 28TH STREET — CONSTRUCTION MANAGEMENT OGDEN, UTAH

REVISED: AS BUILTS 6-90
PROJECT NUMBER: 8405
DATE: 6-21-88
DRAWN BY: S.D.K.

PROJECT: PHYSICAL EDUCATION FACILITY
WEBER STATE COLLEGE
SHEET TITLE: MAIN LEVEL FOUNDATION PLAN-LINK

SHEET NO. S-2

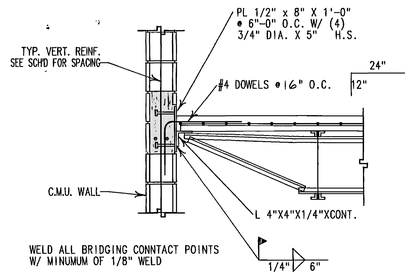

DETAIL (DECK TO WALL) 5 S-3
SCALE : 3/4" = 1'-0"

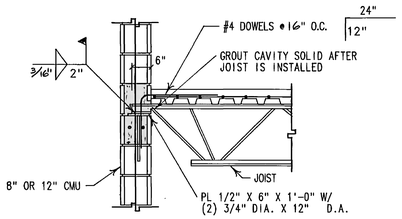

DETAIL (JOIST TO WALL) 4 S-3
SCALE : 3/4" = 1'-0"

DETAIL (JOIST TO WALL) 3 S-3
SCALE : 3/4" = 1'-0"

DETAIL (JOIST TO BEAM) 2 S-3
SCALE : 3/4" = 1'-0"

DETAIL (JOIST TO WALL) 1 S-3
SCALE : 3/4" = 1'-0"

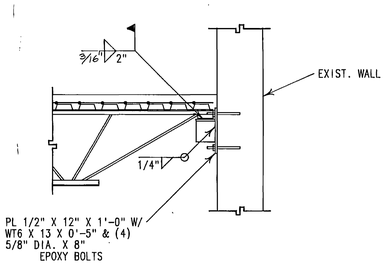

DETAIL (JOIST TO WALL) 6 S-3
SCALE : 3/4" = 1'-0"

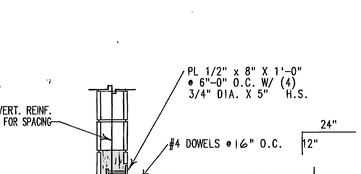

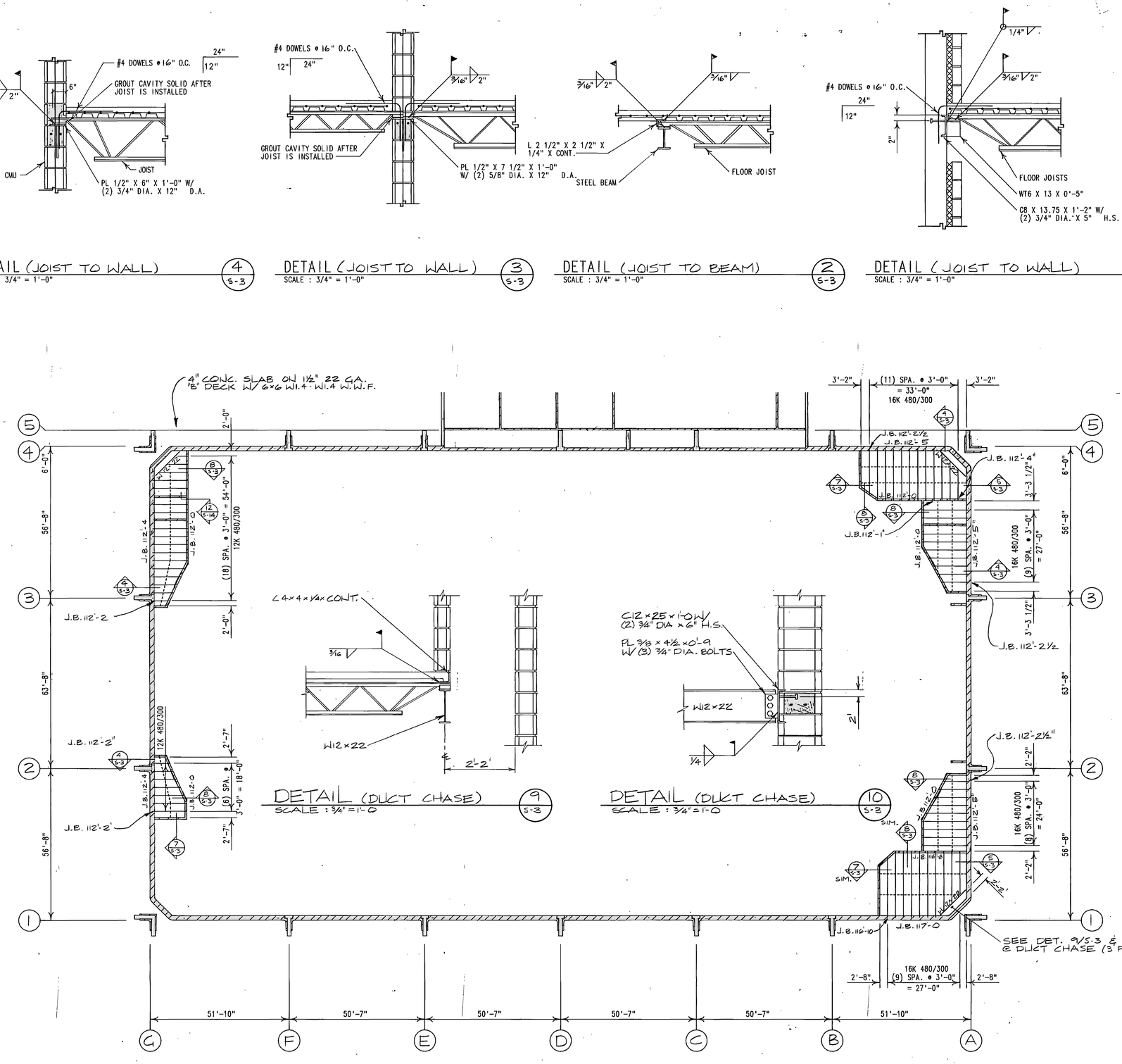

DETAIL (DUCT CHASE) 9 S-3
SCALE : 3/4" = 1'-0"

DETAIL (DUCT CHASE) 10 S-3
SCALE : 3/4" = 1'-0"

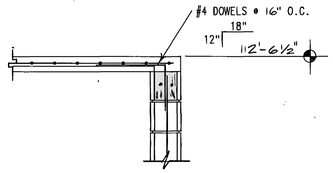

DETAIL (DECK TO WALL) 7 S-3
SCALE : 3/4" = 1'-0"

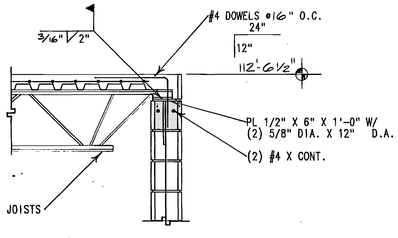

DETAIL (JOIST TO WALL) 8 S-3
SCALE : 3/4" = 1'-0"

INTERIOR ROOF FRAMING LAYOUT
SCALE : 1/16" = 1'-0"
NORTH

RECORD DOCUMENTS JUN 1 8 2020
THESE DOCUMENTS HAVE BEEN REVISED TO RECORD INFORMATION SUBMITTED BY THE CONTRACTOR. WHILE THEY ARE ASSUMED TO BE RELIABLE THE ARCHITECT DOES NOT GUARANTEE THEIR ACCURACY.

0000TYS3
Weber State College, Physical Education Facility - RW 84-058
Interior Roof Framing & Details - 29710

NOTE: THIS SHEET IS COMPRISED OF DRAWINGS AND DETAILS FROM THE ORIGINAL 1990 BUILDING CONSTRUCTION CONFORMED SET & HAS BEEN INCLUDED FOR INFORMATIONAL PURPOSES ONLY. CONDITIONS SHOWN ON THIS SHEET HAVE NOT BEEN VERIFIED WITH EXISTING CONSTRUCTED CONDITIONS.

REGISTERED PROFESSIONAL ENGINEER — DENNIS KENT HICKEN — 3660 — STATE OF UTAH

JONES / RICHARDS & ASSOCIATES
ARCHITECTURE 801.359.3353
PLANNING 535 SOUTH STREET
CONSTRUCTION MANAGEMENT OGDEN, UTAH

REVISED: AS BUILTS 6-90
PROJECT NUMBER: 8405
DATE: 6-27-88
DRAWN BY: S.D.K.

PROJECT: PHYSICAL EDUCATION FACILITY
WEBER STATE COLLEGE
SHEET TITLE: INTERIOR ROOF FRAMING & DETAILS

SHEET NO. S-3

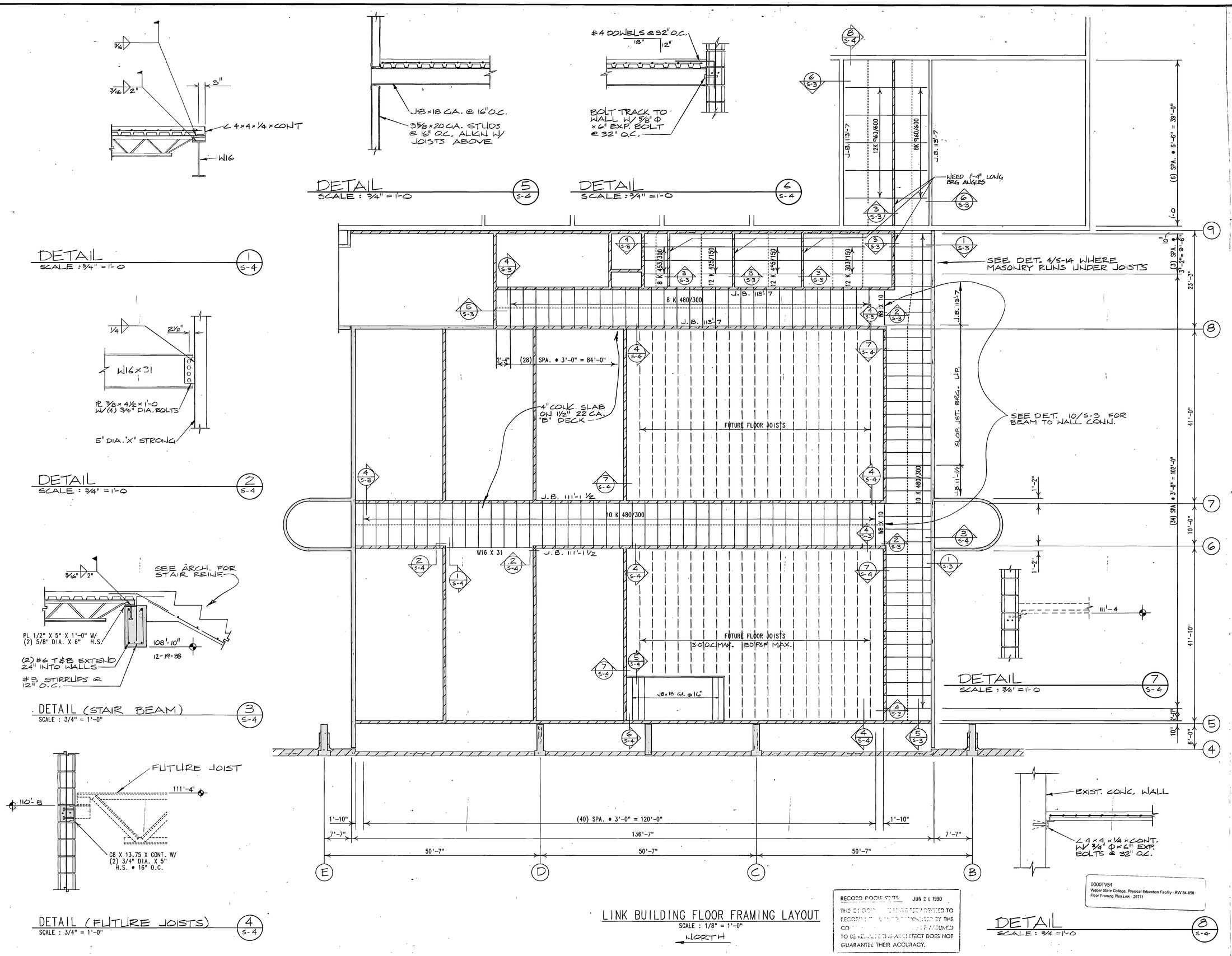

RECORD DOCUMENTS JUN 20 1990
THE [illegible] REVISED TO RECORD [illegible] BY THE CO[illegible] ASSUMED TO BE RE[illegible] THE ARCHITECT DOES NOT GUARANTEE THEIR ACCURACY.

0000TVS4
Weber State College, Physical Education Facility - RW 84-058
Floor Framing Plan Link - 28711

NOTE: THIS SHEET IS COMPRISED OF DRAWINGS AND DETAILS FROM THE ORIGINAL 1990 BUILDING CONSTRUCTION CONFORMED SET & HAS BEEN INCLUDED FOR INFORMATIONAL PURPOSES ONLY. CONDITIONS SHOWN ON THIS SHEET HAVE NOT BEEN VERIFIED WITH EXISTING CONSTRUCTED CONDITIONS.

jra JONES / RICHARDS & ASSOCIATES
ARCHITECTURE (801) 394-3033
PLANNING 533 - 28TH STREET
CONSTRUCTION MANAGEMENT OGDEN, UTAH

REVISED: AS BUILTS 6-90
PROJECT NUMBER: 8403
DATE: 6-21-88
DRAWN BY: S.D.K.

PROJECT: PHYSICAL EDUCATION FACILITY
WEBER STATE COLLEGE
SHEET TITLE: FLOOR FRAMING PLAN-LINK

SHEET NO. S-4

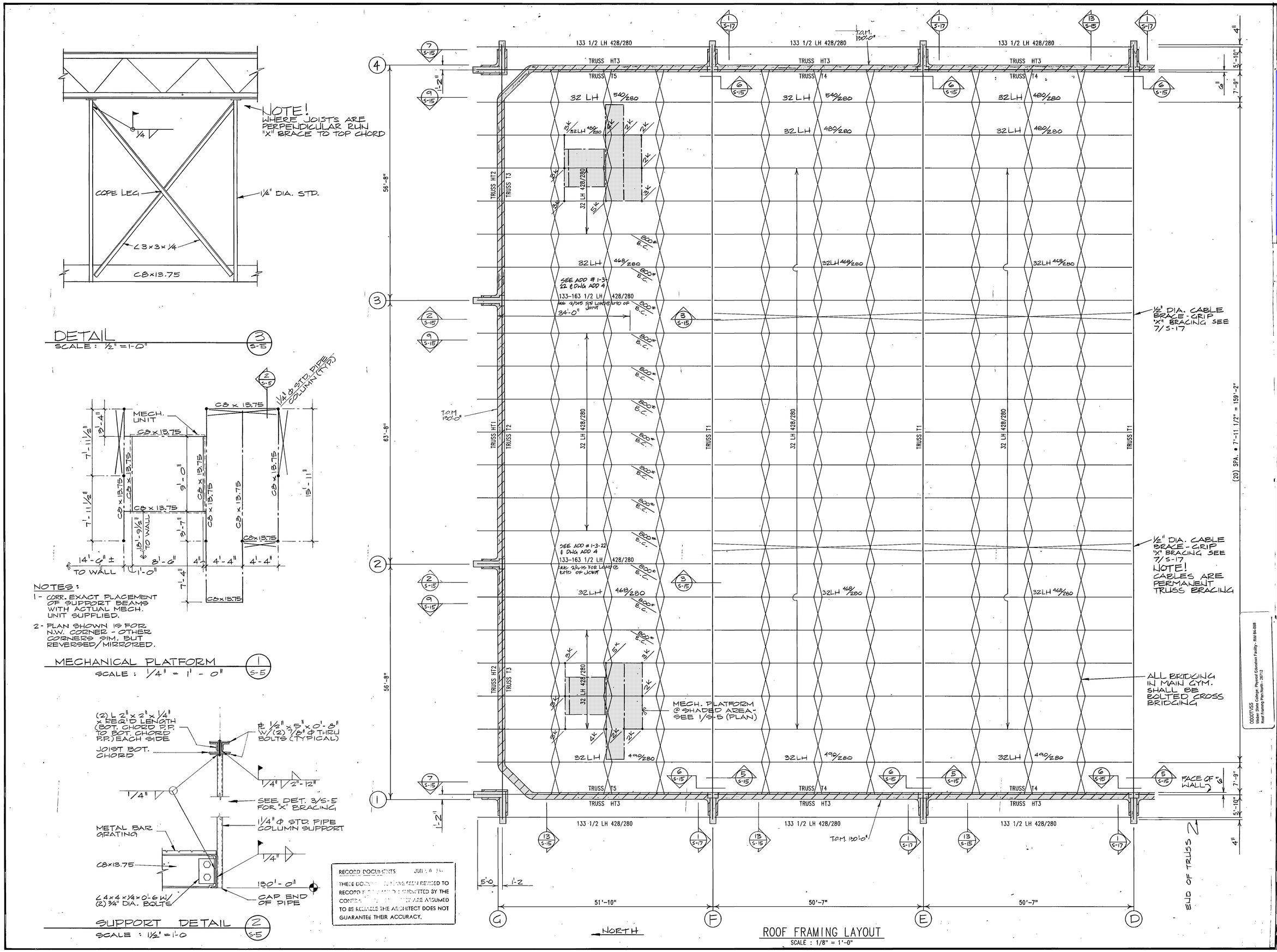

NOTE: THIS SHEET IS COMPRISED OF DRAWINGS AND DETAILS FROM THE ORIGINAL 1990 BUILDING CONSTRUCTION CONFORMED SET & HAS BEEN INCLUDED FOR INFORMATIONAL PURPOSES ONLY. CONDITIONS SHOWN ON THIS SHEET HAVE NOT BEEN VERIFIED WITH EXISTING CONSTRUCTED CONDITIONS.

REGISTERED PROFESSIONAL ENGINEER O. KENT RICH 36600 State of Utah

jra JONES / RICHARDS & ASSOCIATES
ARCHITECTURE (801) 394-3033
PLANNING 533 - 26TH STREET
CONSTRUCTION MANAGEMENT OGDEN, UTAH

REVISED: AS BUILTS 6-90
PROJECT NUMBER: 8403
DATE: 6-21-89
DRAWN BY: S.D.K.

PROJECT: PHYSICAL EDUCATION FACILITY
WEBER STATE COLLEGE
SHEET TITLE: ROOF FRAMING PLAN - NORTH
SHEET NO. S-5

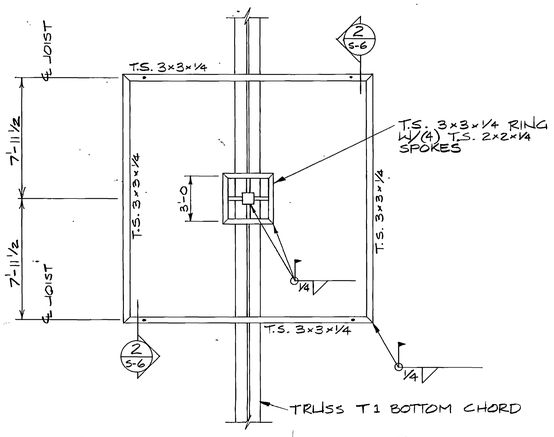

DETAIL 1/S-6
SCALE: 1/4"=1'-0

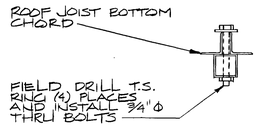

DETAIL 2/S-6
SCALE: 3/4" = 1'-0

NOTE!
SEE SHEET A-7 FOR CRICKET DETAILS & DRAINAGE LAYOUT USE 1 1/2" 22 GA. "B" DECK ABOVE ALL CRICKETS

NOTE!
MAIN TRUSSES T1 HAVE THE CAPACITY TO SUPPORT AN ADDITIONAL LOAD OF 800# LOCATED AT ANY BOTTOM CHORD PANEL POINT (ONE LOAD PER TRUSS)

NOTE!
JOISTS MUST BE CAPABLE OF RESISTING A NET UPLIFT DUE TO WIND OF 51#/FT. ADDITIONAL BRIDGING MAY BE REQ'D

ROOF DECK SCHEDULE

ROOF AREA	DECK GA.	SHEAR CAPACITY	ATTACHMENT @ JOISTS	SIDE SEAM ATTACHMENT
BTW A-B BTW G-F	16 GA. ACOUSTICAL	1710 #/FT.	(7) 5/8" DIA. PUDDLE WELDS PER 36" SHEET	TOP SEAM WELDS @ 12" O.C.
BTW B-C BTW E-F	18 GA. ACOUSTICAL	1140 #/FT.	(7) 5/8" DIA. PUDDLE WELDS PER 36" SHEET	TOP SEAM WELDS @ 12" O.C.
BTW C-E	20 GA. ACOUSTICAL	840 #/FT.	(7) 5/8" DIA. PUDDLE WELDS PER 36" SHEET	TOP SEAM WELDS @ 24" O.C.

DECK ATTACHMENT ON LINES A & G SHALL BE 5/8" DIA. PUDDLE WELDS AT 12" O.C.
DECK ATTACHMENT ON LINES 1 & 4 SHALL BE (7) 5/8" DIA. PUDDLE WELDS PER 36".
SHEET W/ SHEAR TRANSFER ELEMENT

ROOF DECK SUPPLIER SHALL SUBMIT ICBO REPORT TO SHOW THAT DECK SUPPLIED AND ATTACHMENTS PROPOSED WILL PROVIDE SHEAR VALUES SHOWN ABOVE.

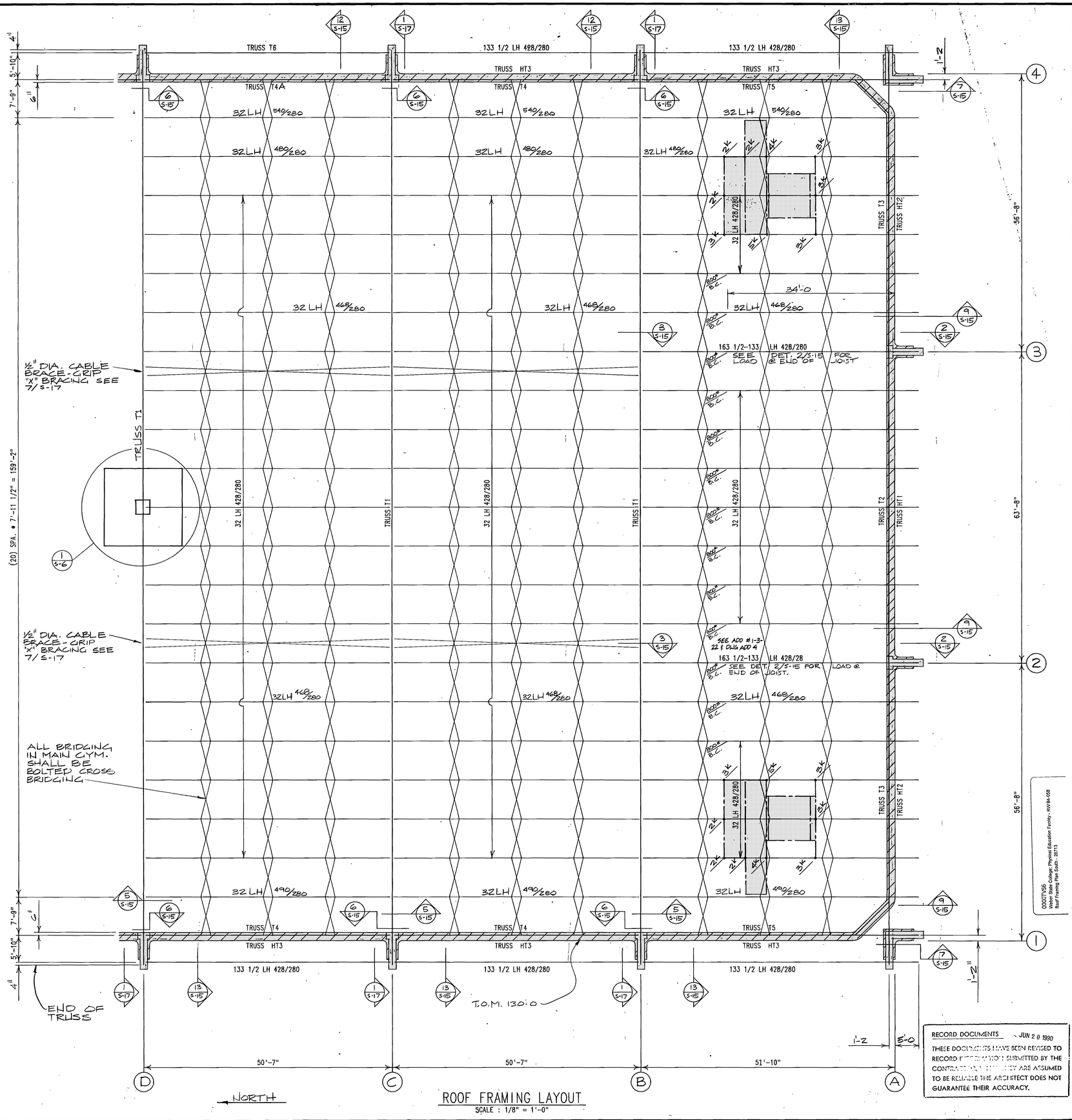

ROOF FRAMING LAYOUT
SCALE: 1/8" = 1'-0"

RECORD DOCUMENTS JUN 20 1990
THESE DOCUMENTS HAVE BEEN REVISED TO RECORD INFORMATION SUBMITTED BY THE CONTRACTOR. THEY ARE ASSUMED TO BE RELIABLE THE ARCHITECT DOES NOT GUARANTEE THEIR ACCURACY.

NOTE: THIS SHEET IS COMPRISED OF DRAWINGS AND DETAILS FROM THE ORIGINAL 1990 BUILDING CONSTRUCTION CONFORMED SET & HAS BEEN INCLUDED FOR INFORMATIONAL PURPOSES ONLY. CONDITIONS SHOWN ON THIS SHEET HAVE NOT BEEN VERIFIED WITH EXISTING CONSTRUCTED CONDITIONS.

REGISTERED PROFESSIONAL ENGINEER O. KENT RICH 3600 State of Utah

jra JONES / RICHARDS & ASSOCIATES
ARCHITECTURE (801) 394-3033
PLANNING 533 - 28TH STREET
CONSTRUCTION MANAGEMENT OGDEN, UTAH

REVISED: AS BUILTS 6-90
PROJECT NUMBER: 8403
DATE: 6-23-88
DRAWN BY: S.D.K.

PROJECT: PHYSICAL EDUCATION FACILITY
WEBER STATE COLLEGE
SHEET TITLE: ROOF FRAMING PLAN - SOUTH

SHEET NO. S-6

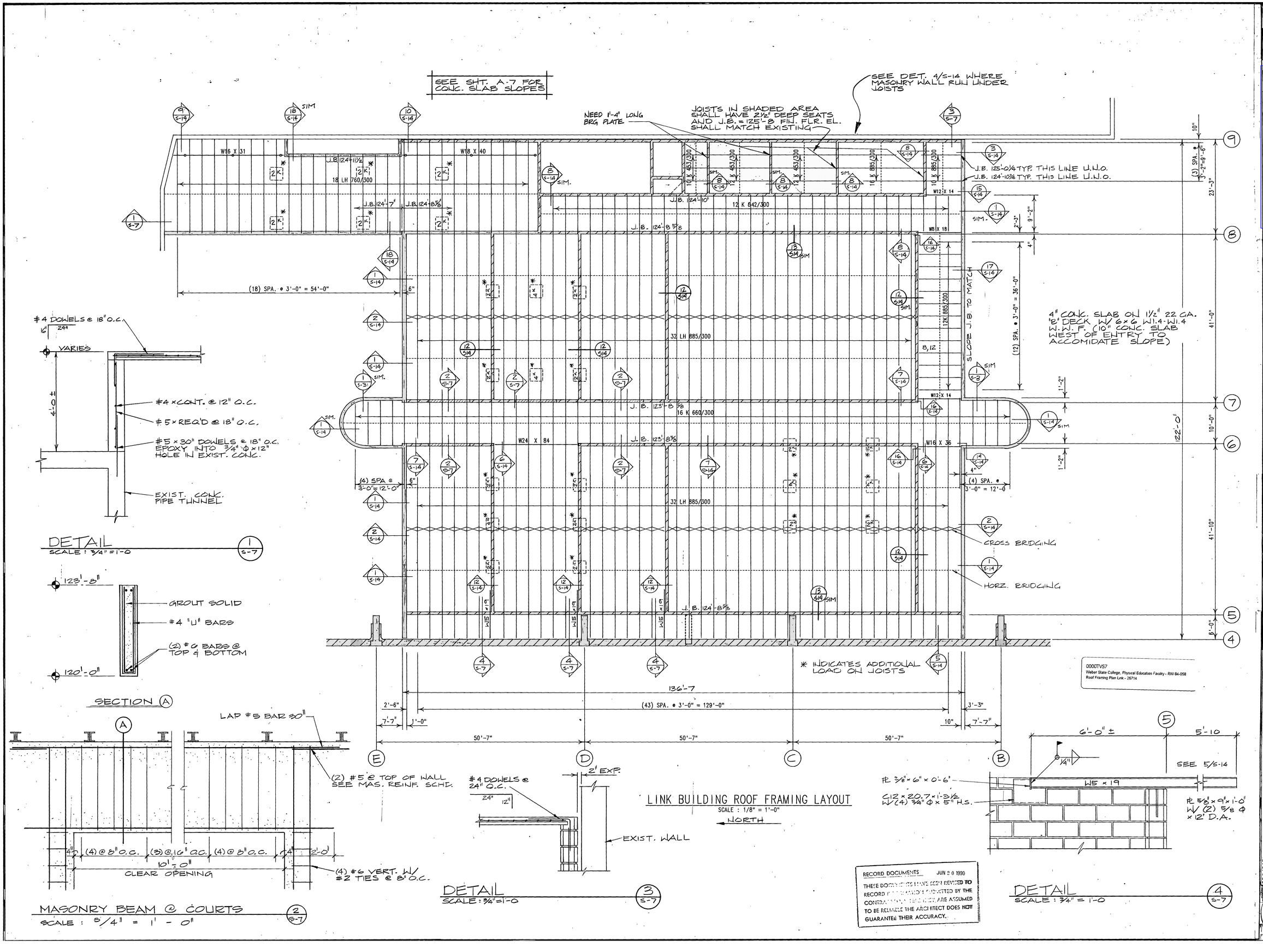

0000TVS7
Weber State College, Physical Education Facility - RW 84-058
Roof Framing Plan Link - 26714

RECORD DOCUMENTS JUN 20 1990
THESE DOCUMENTS HAVE BEEN REVISED TO RECORD [illegible] SUBMITTED BY THE CONTRA[illegible] ARE ASSUMED TO BE RELIABLE THE ARCHITECT DOES NOT GUARANTEE THEIR ACCURACY.

NOTE: THIS SHEET IS COMPRISED OF DRAWINGS AND DETAILS FROM THE ORIGINAL 1990 BUILDING CONSTRUCTION CONFORMED SET & HAS BEEN INCLUDED FOR INFORMATIONAL PURPOSES ONLY. CONDITIONS SHOWN ON THIS SHEET HAVE NOT BEEN VERIFIED WITH EXISTING CONSTRUCTED CONDITIONS.

REGISTERED PROFESSIONAL ENGINEER O. KENT RICH 3660 State of Utah

jra JONES / RICHARDS & ASSOCIATES
ARCHITECTURE (801) 394-3033
PLANNING 533 - 28TH STREET
CONSTRUCTION MANAGEMENT OGDEN, UTAH

REVISED: AS BUILTS 6-90
PROJECT NUMBER: 8403
DATE: 6-21-88
DRAWN BY: S.D.K.

PROJECT: PHYSICAL EDUCATION FACILITY
WEBER STATE COLLEGE
SHEET TITLE: ROOF FRAMING PLAN-LINK

SHEET NO. S-7

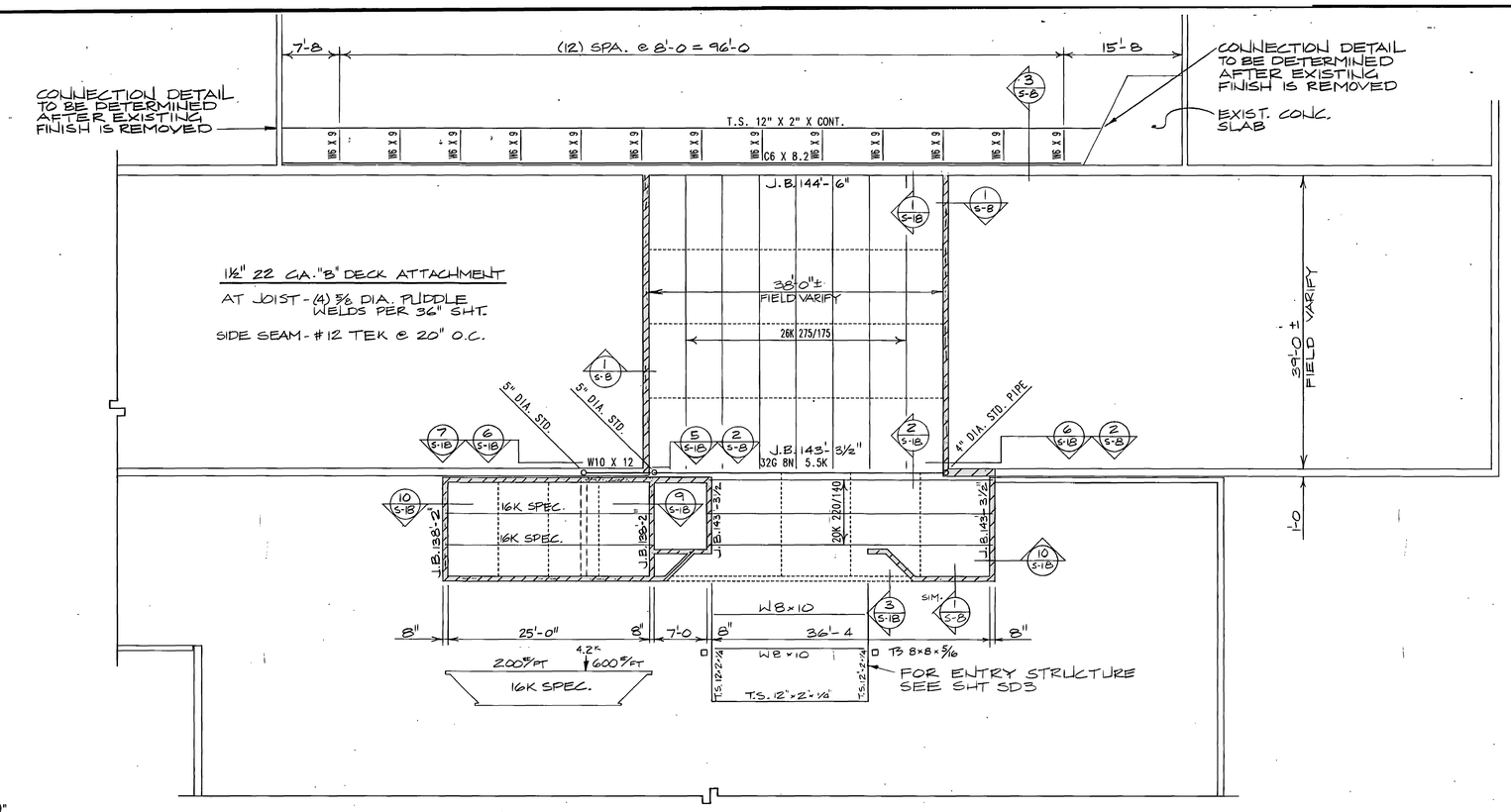

UPPER GYM. WALKWAY & ENTRY ROOF FRAMING

SCALE : 1/8" = 1'-0"

NORTH

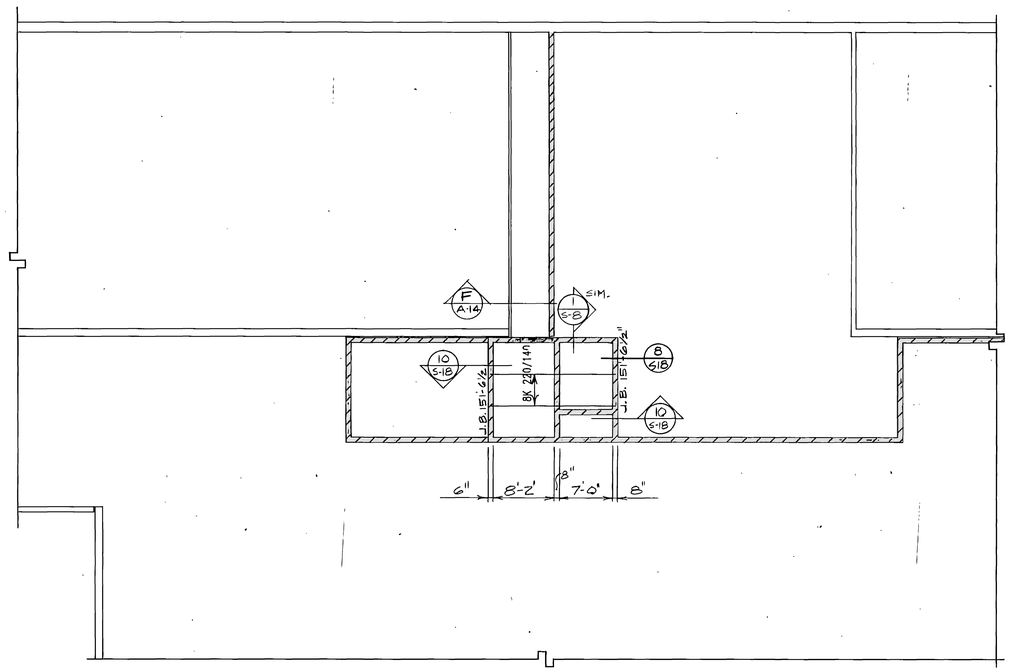

UPPER CORRIDOR ROOF FRAMING LAYOUT

SCALE : 1/8" = 1'-0"

NORTH

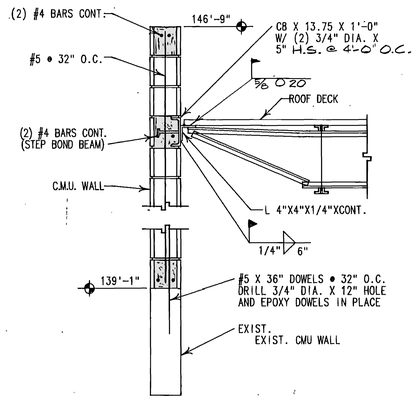

DETAIL 1 S-8

SCALE : 3/4" = 1'-0"

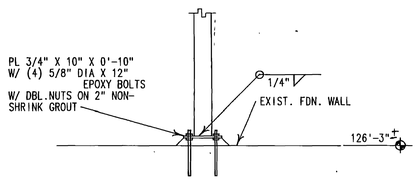

DETAIL 2 S-8

SCALE : 3/4" = 1'-0"

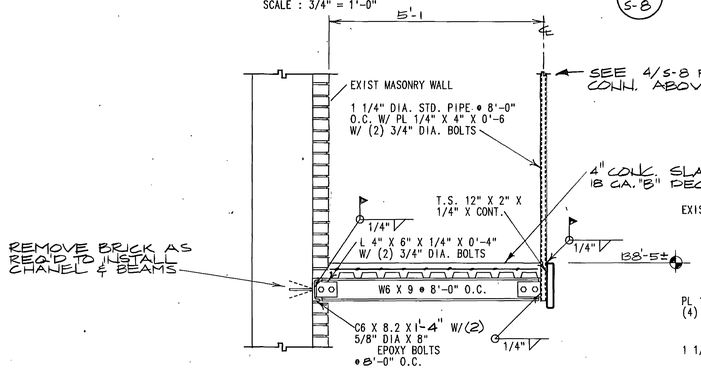

DETAIL 3 S-8

SCALE : 3/4" = 1'-0"

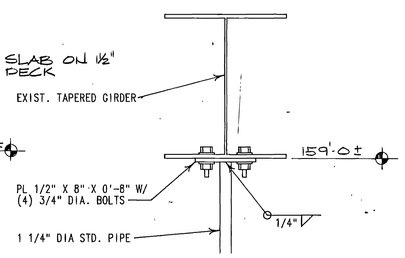

DETAIL 4 S-8

SCALE : 1 1/2" = 1'-0"

RECORD DOCUMENTS JUN 20 [illegible]

THESE DOCUMENTS HAVE BEEN REVISED TO RECORD INFORMATION SUBMITTED BY THE CONTRACTOR. WHILE THEY ARE APPROVED TO BE RELIABLE THE ARCHITECT DOES NOT GUARANTEE THEIR ACCURACY.

0007\DSB
Weber State College: Physical Education Facility - RW 86-059
Roof Framing Plan New Entry - 20115

NOTE: THIS SHEET IS COMPRISED OF DRAWINGS AND DETAILS FROM THE ORIGINAL 1990 BUILDING CONSTRUCTION CONFORMED SET & HAS BEEN INCLUDED FOR INFORMATIONAL PURPOSES ONLY. CONDITIONS SHOWN ON THIS SHEET HAVE NOT BEEN VERIFIED WITH EXISTING CONSTRUCTED CONDITIONS.

REGISTERED PROFESSIONAL ENGINEER — STATE OF UTAH — O. KENT RICHARDS — No. 3660

jra JONES / RICHARDS & ASSOCIATES
ARCHITECTURE
CONSTRUCTION MANAGEMENT
PLANNING
532 24TH STREET OGDEN, UTAH 801-393-2030

REVISED: AS BUILTS 6-90

PROJECT NUMBER: 8403
DATE: 9-24-90
DRAWN BY: S.D.K.

PROJECT: PHYSICAL EDUCATION FACILITY — WEBER STATE COLLEGE

SHEET TITLE: ROOF FRAMING PLAN-NEW ENTRY

SHEET NO. S-8

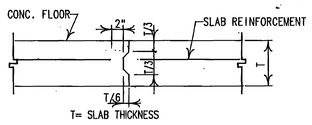

DETAIL (CONSTRUCTION JOINT) 1 S-9
SCALE : NONE

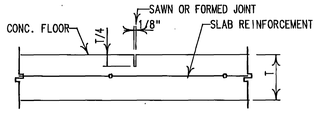

DETAIL (CONTROL JOINT) 2 S-9
SCALE : NONE

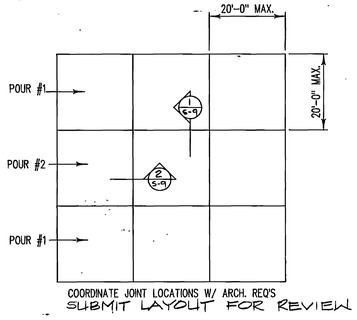

DETAIL (SLAB SEQUENCE) 3 S-9
SCALE : NONE

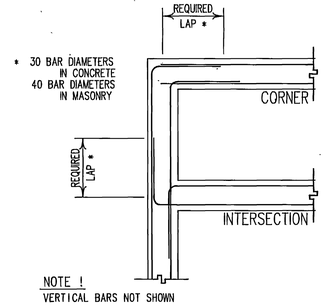

DETAIL (CORNER BARS) 4 S-9
SCALE : NONE

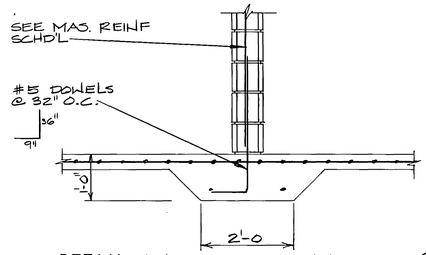

DETAIL (INTERIOR WALL) 5 S-9
SCALE : NONE

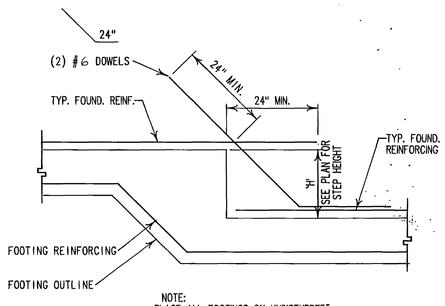

DETAIL (FOOTING STEP) 6 S-9
SCALE : 3/4" = 1'-0"

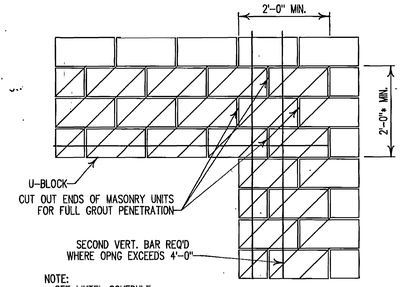

DETAIL (MASONRY LINTEL) 7 S-9
SCALE : 3/4" 1'-0"

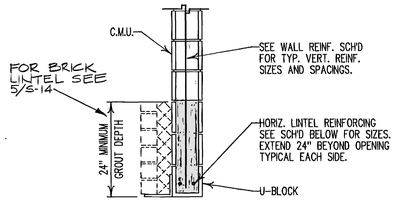

CLEAR OPENING	C.M.U. REINF.
UP TO 7'-0"	(2) #4 BARS CONT.
7'-1" TO 9'-0"	(2) #5 BARS CONT.
9'-1" TO 12'-0"	(2) #6 BARS CONT.
12'-1" TO 26'-0"	(2) #7 BARS CONT.

DETAIL (LINTEL SCHEDULE) 8 S-9
SCALE : 3/4" = 1'-0"

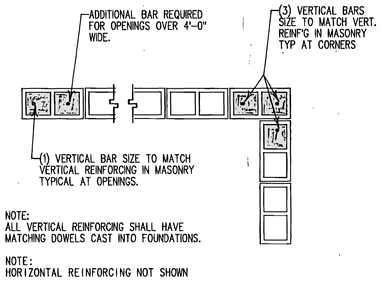

DETAIL (VERTICAL REINF.) 9 S-9
SCALE : 3/4" = 1'-0"

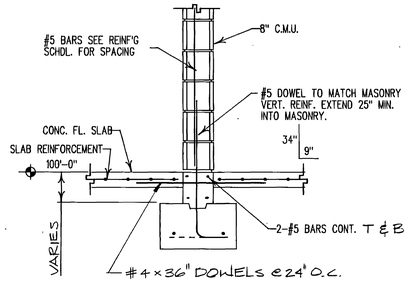

DETAIL (INTERIOR WALL) 10 S-9
SCALE : 3/4" = 1'-0"

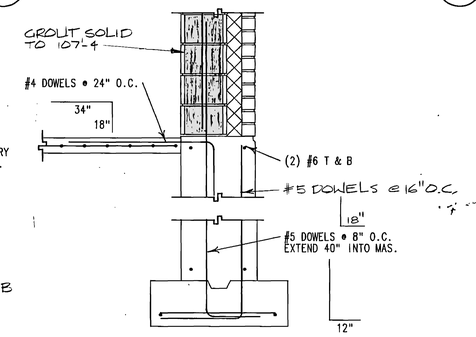

DETAIL (CMM. WALL 11 S-9
SCALE : 3/4" = 1'-0"

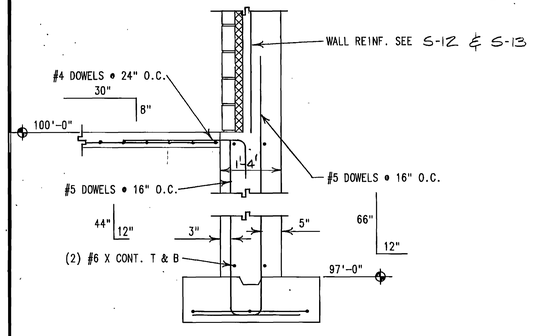

DETAIL (LINK SOUTH WALL) 12 S-9
SCALE : 3/4" = 1'-0"

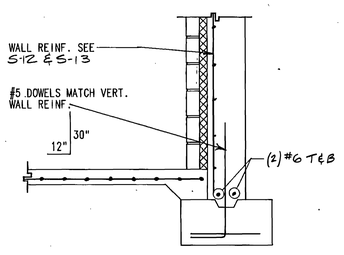

DETAIL (LINK SOUTH WALL) 13 S-9
SCALE : 3/4" = 1'-0"

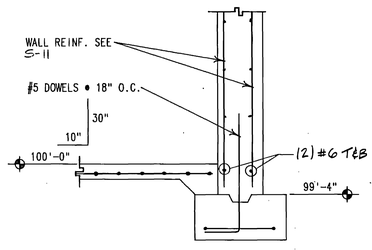

DETAIL (LINK NORTH WALL) 14 S-9
SCALE : 3/4" = 1'-0"

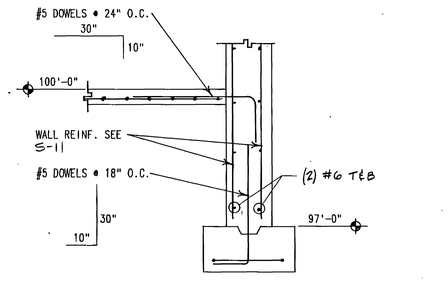

DETAIL (LINK NORTH WALL) 15 S-9
SCALE : 3/4" = 1'-0"

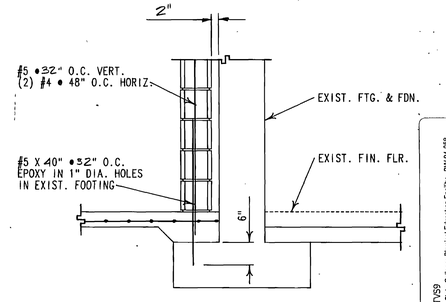

DETAIL (LINK EAST WALL) 16 S-9
SCALE : 3/4" = 1'-0"

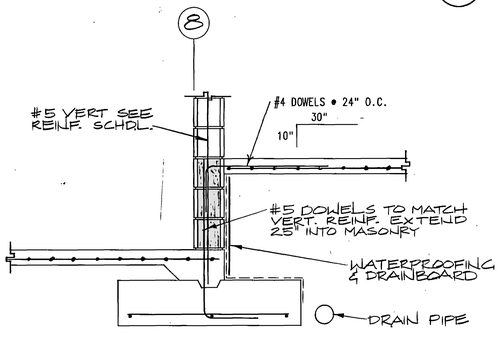

DETAIL 17 S-9
SCALE : 3/4" = 1'-0"

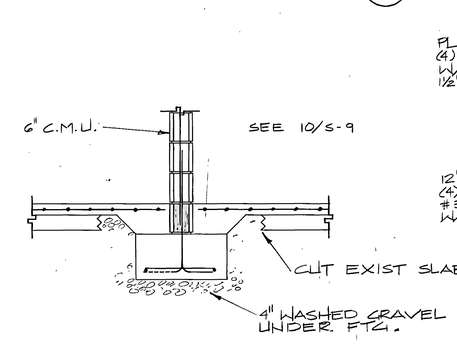

DETAIL (NEW WALL IN EXIST.) 18 S-9
SCALE : 3/4" = 1'-0"

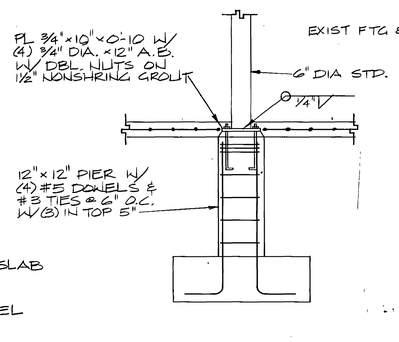

DETAIL (COL. TO PIER) 19 S-9
SCALE : 3/4" = 1'-0"

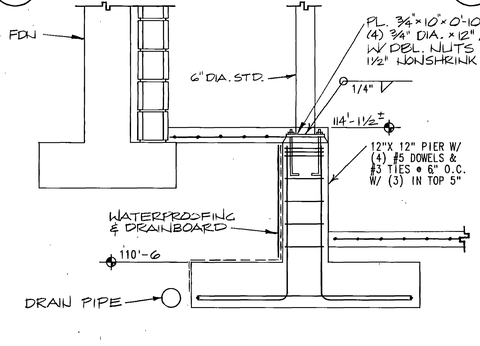

DETAIL (MECH. EAST WALL) 20 S-9
SCALE : 3/4" = 1'-0"

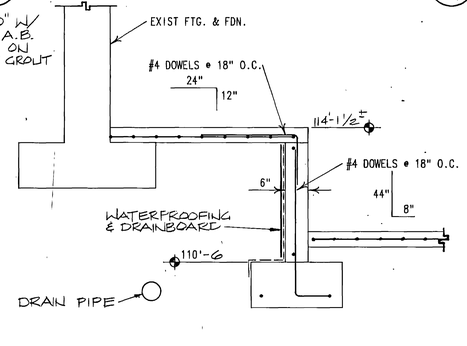

DETAIL (MECH. EAST WALL) 21 S-9
SCALE : 3/4" = 1'-0"

RECORD DRAWINGS JUN 20 1990

THESE DRAWINGS ARE BEING REVISED TO RECORD [illegible] SUBMITTED BY THE CONTRACTOR. THEY ARE ASSUMED TO BE REASONABLE. THE ARCHITECT DOES NOT GUARANTEE THEIR ACCURACY.

NOTE: THIS SHEET IS COMPRISED OF DRAWINGS AND DETAILS FROM THE ORIGINAL 1990 BUILDING CONSTRUCTION CONFORMED SET & HAS BEEN INCLUDED FOR INFORMATIONAL PURPOSES ONLY. CONDITIONS SHOWN ON THIS SHEET HAVE NOT BEEN VERIFIED WITH EXISTING CONSTRUCTED CONDITIONS.

REGISTERED PROFESSIONAL ENGINEER D. KENT KEITH 3660 STATE OF UTAH

JONES / RICHARDS & ASSOCIATES
ARCHITECTURE (801) 364-3323
PLANNING 333 - 28TH STREET
CONSTRUCTION MANAGEMENT OGDEN, UTAH

REVISED: As Builts 10-90
PROJECT NUMBER: 8403
DATE: 9-21-88
DRAWN BY: S.D.K.

PROJECT: PHYSICAL EDUCATION FACILITY
WEBER STATE COLLEGE
SHEET TITLE: FOUNDATION SECTIONS & DETAILS

0000TV59 Weber State College- Physical Education Facility- RW-84-058 Foundation Sections & Details - 20116

SHEET NO. S-9

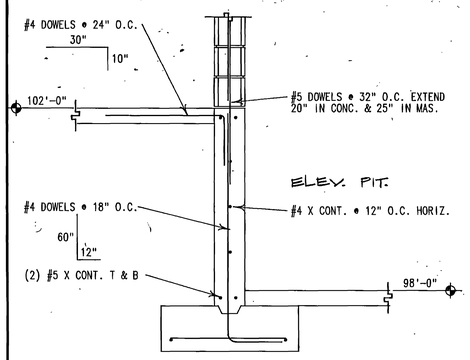

DETAIL (ELEV. PIT) — 1 / S-10
SCALE : 3/4" = 1'-0"

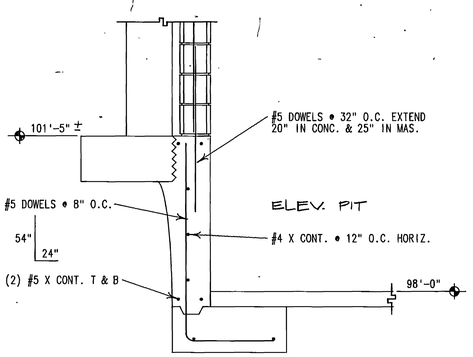

DETAIL (ELEV. PIT) — 2 / S-10
SCALE : 3/4" = 1'-0"

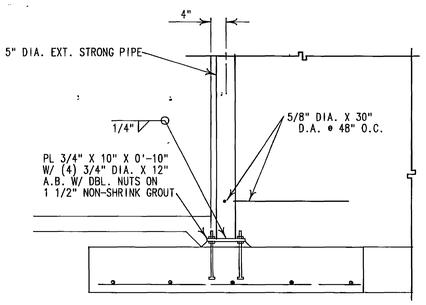

DETAIL (STL. COL. IN MASONRY) — 3 / S-10
SCALE : 3/4" = 1'-0"

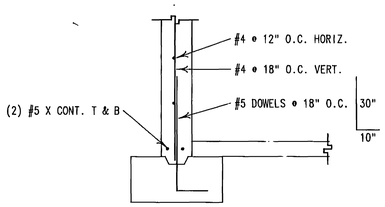

DETAIL — 4 / S-10
SCALE : 3/4" = 1'-0"

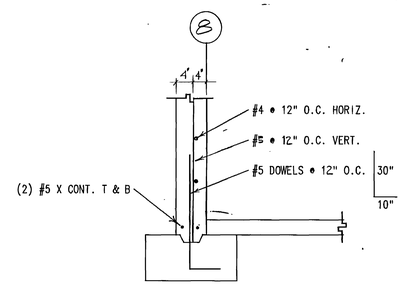

DETAIL (MECH. WEST WALL) — 5 / S-10
SCALE : 3/4" = 1'-0"

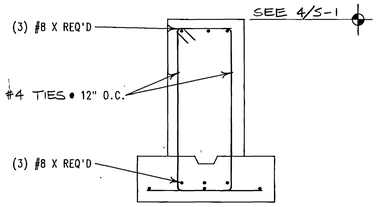

DETAIL (CORNER PIER GRADE BM) — 6 / S-10
SCALE : 3/4" = 1'-0"

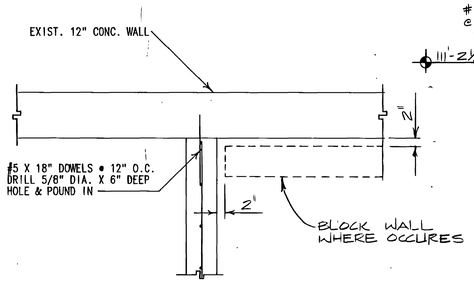

DETAIL (STAIRWELL TO EXIST.) — 7 / S-10
SCALE : 3/4" = 1'-0"

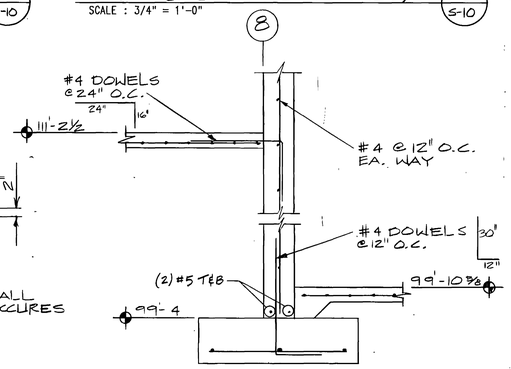

DETAIL (MECH. WEST WALL) — 8 / S-10
SCALE : 3/4" = 1'-0"

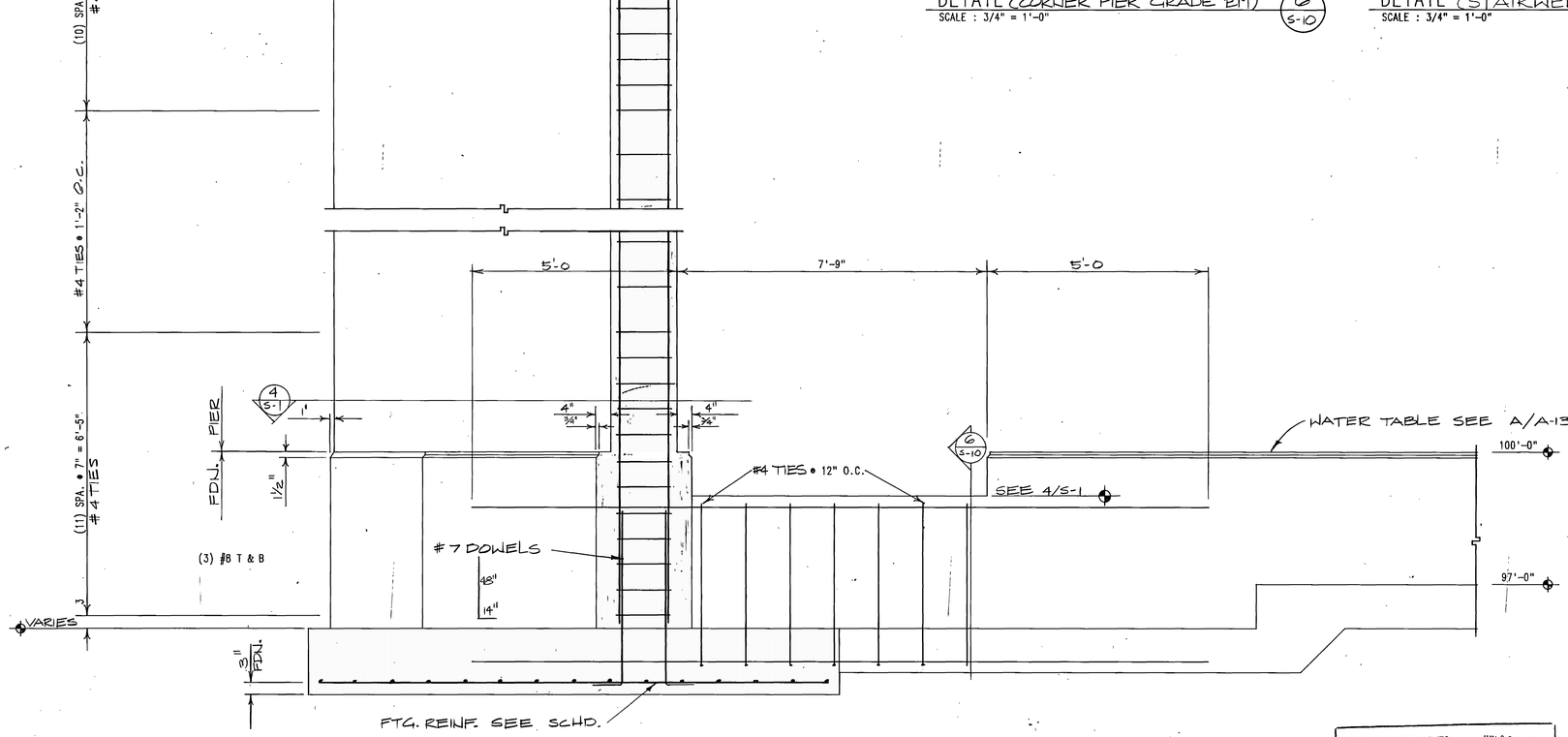

DETAIL (CORNER PIER) — 9 / S-10
SCALE : 3/4" = 1'-0"

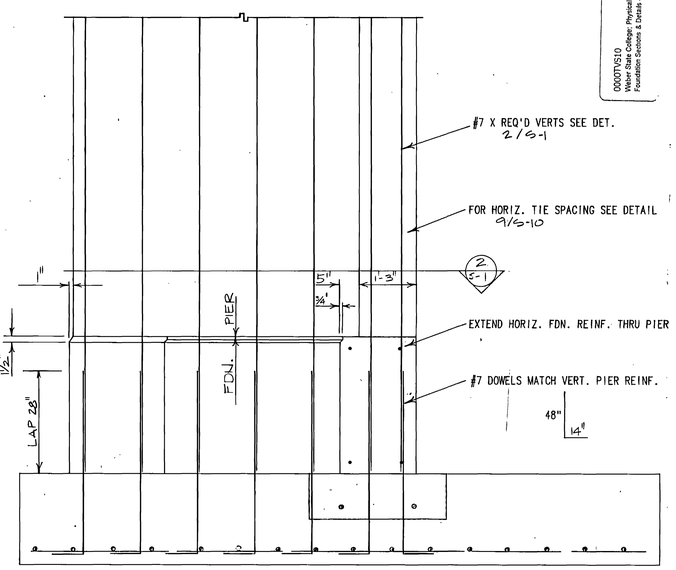

DETAIL (TYP. PIER) — 10 / S-10
SCALE : 3/4" = 1'-0"

RECORD DOCUMENTS JUN 20 1990

THESE DOCUMENTS HAVE BEEN REVISED TO RECORD INFORMATION SUBMITTED BY THE CONTRACTOR. WHILE THEY ARE ASSUMED TO BE RELIABLE THE ARCHITECT DOES NOT GUARANTEE THEIR ACCURACY.

0007VS10
Weber State College- Physical Education Facility - RW-84-058
Foundation Sections & Details - 2017

O. KENT RICH, P.E. 3460 REGISTERED PROFESSIONAL ENGINEER STATE OF UTAH

NOTE: THIS SHEET IS COMPRISED OF DRAWINGS AND DETAILS FROM THE ORIGINAL 1990 BUILDING CONSTRUCTION CONFORMED SET & HAS BEEN INCLUDED FOR INFORMATIONAL PURPOSES ONLY. CONDITIONS SHOWN ON THIS SHEET HAVE NOT BEEN VERIFIED WITH EXISTING CONSTRUCTED CONDITIONS.

jra JONES / RICHARDS & ASSOCIATES
ARCHITECTURE (801) 394-3023
PLANNING 533 - 20TH STREET
CONSTRUCTION MANAGEMENT OGDEN, UTAH

REVISED: AS BUILTS 6-90
PROJECT NUMBER 8409
DATE: 6-21-88
DRAWN BY: S.D.K.

PROJECT: PHYSICAL EDUCATION FACILITY — WEBER STATE COLLEGE —
SHEET TITLE: FOUNDATION SECTIONS & DETAILS

SHEET NO. S-10

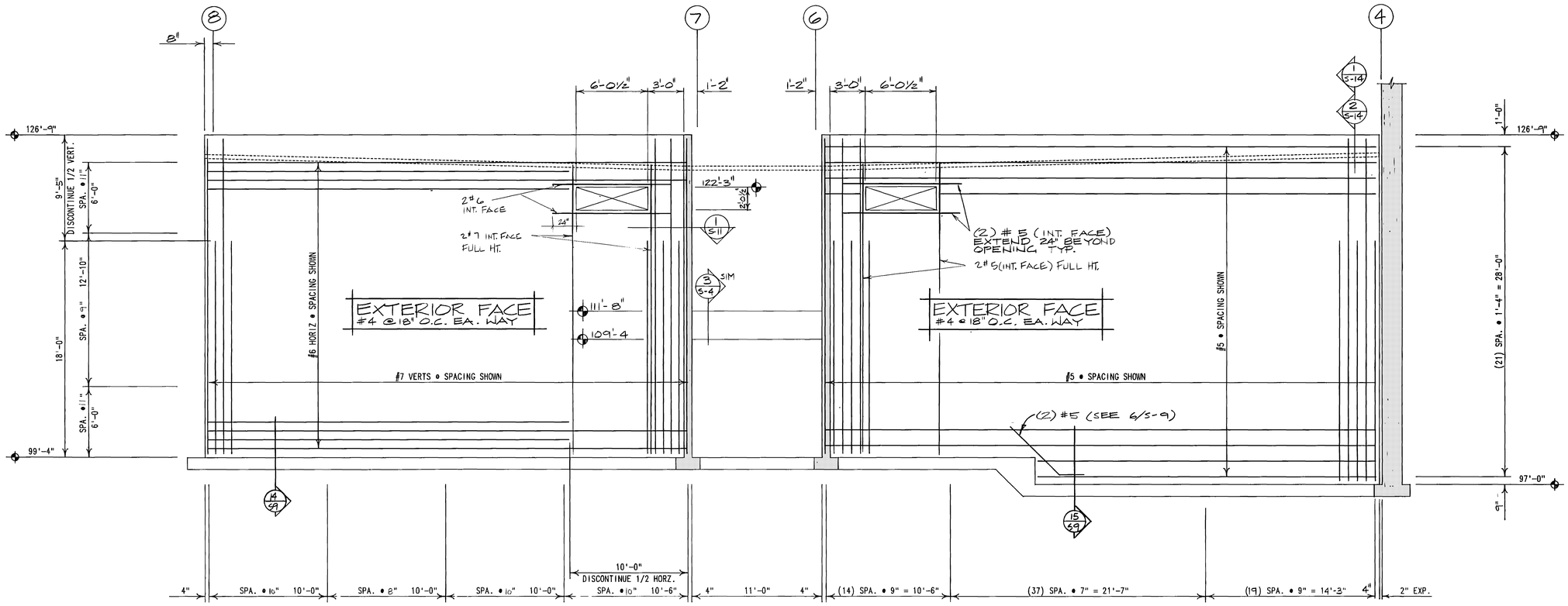

LINK BUILDING NORTH WALL REINFORCING (INTERIOR FACE)

SCALE : 1/4" = 1'-0"

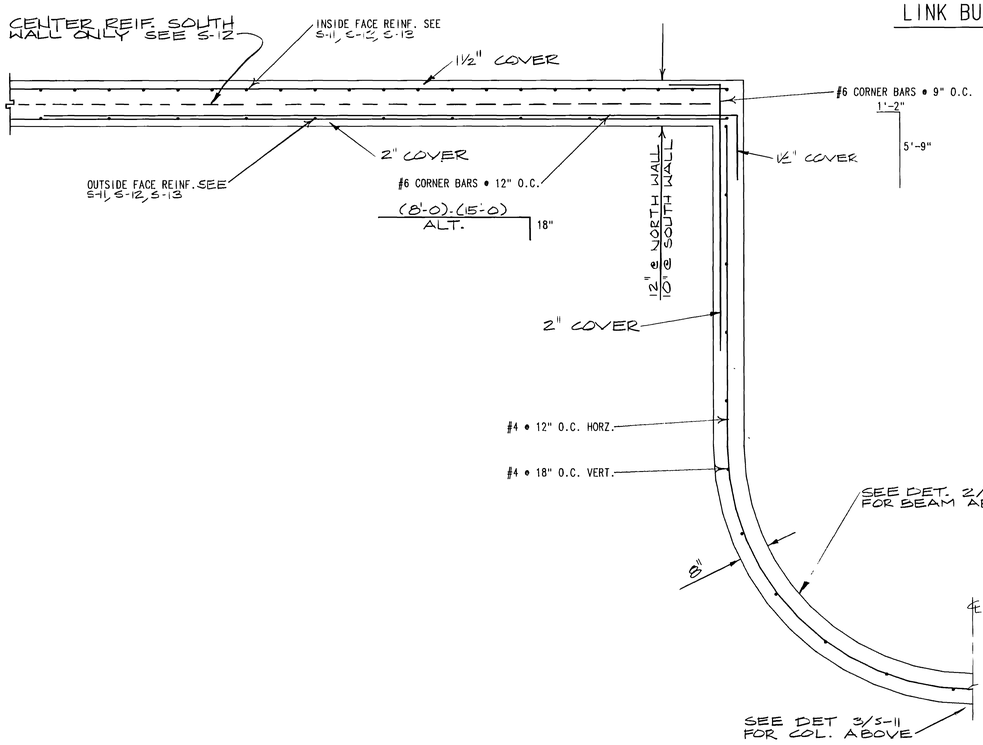

DETAIL (STAIRWELL REINF.) 1/S-11

SCALE : 3/4" = 1'-0"

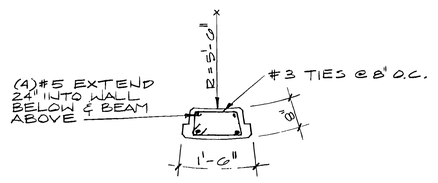

DETAIL (CONC. COL. @ STAIRWELL) 2/S-11

SCALE : 3/4" = 1'-0

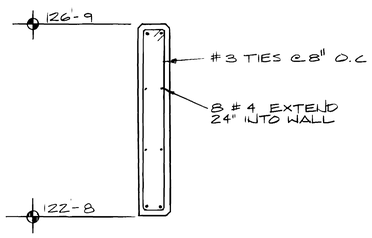

DETAIL (CONC BEAM @ STAIRWELL) 3/S-11

SCALE : 3/4" = 1'-0

0000TVS11
Weber State College, Physical Education Facility - RW 84-058
Wall Elevations & Details - 26718

RECORD DOCUMENTS JUN 20 1990

THESE DOCUMENTS HAVE BEEN REVISED TO RECORD INFORMATION SUBMITTED BY THE CONTRACTOR, WHILE THEY ARE ASSUMED TO BE RELIABLE THE ARCHITECT DOES NOT GUARANTEE THEIR ACCURACY.

NOTE: THIS SHEET IS COMPRISED OF DRAWINGS AND DETAILS FROM THE ORIGINAL 1990 BUILDING CONSTRUCTION CONFORMED SET & HAS BEEN INCLUDED FOR INFORMATIONAL PURPOSES ONLY. CONDITIONS SHOWN ON THIS SHEET HAVE NOT BEEN VERIFIED WITH EXISTING CONSTRUCTED CONDITIONS.

jra JONES / RICHARDS & ASSOCIATES
ARCHITECTURE (801) 394-3033
PLANNING 533 - 26TH STREET
CONSTRUCTION MANAGEMENT OGDEN, UTAH

REVISED: AS BUILTS 6-90

PROJECT NUMBER: 8403

DATE: 6-21-88

DRAWN BY: S.D.K.

PROJECT: PHYSICAL EDUCATION FACILITY
WEBER STATE COLLEGE

SHEET TITLE: WALL ELEVATIONS & DETAILS

SHEET NO. S-11

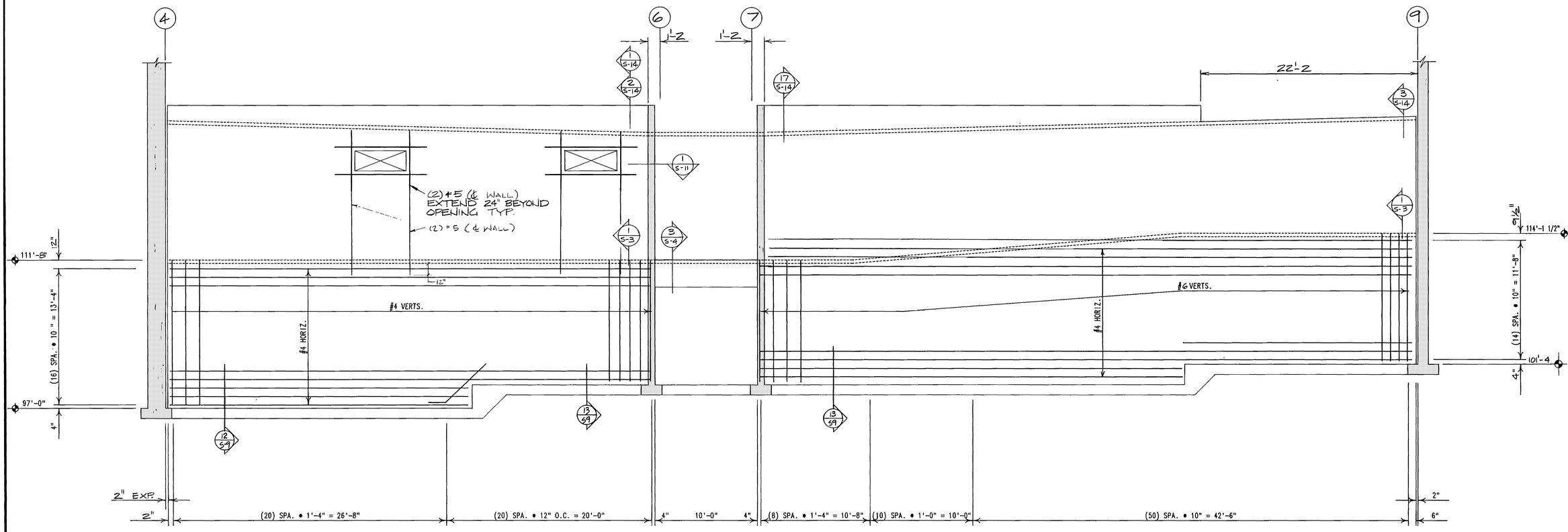

LINK BUILDING SOUTH WALL REINFORCING (INTERIOR FACE)

SCALE : 1/4" = 1'-0"

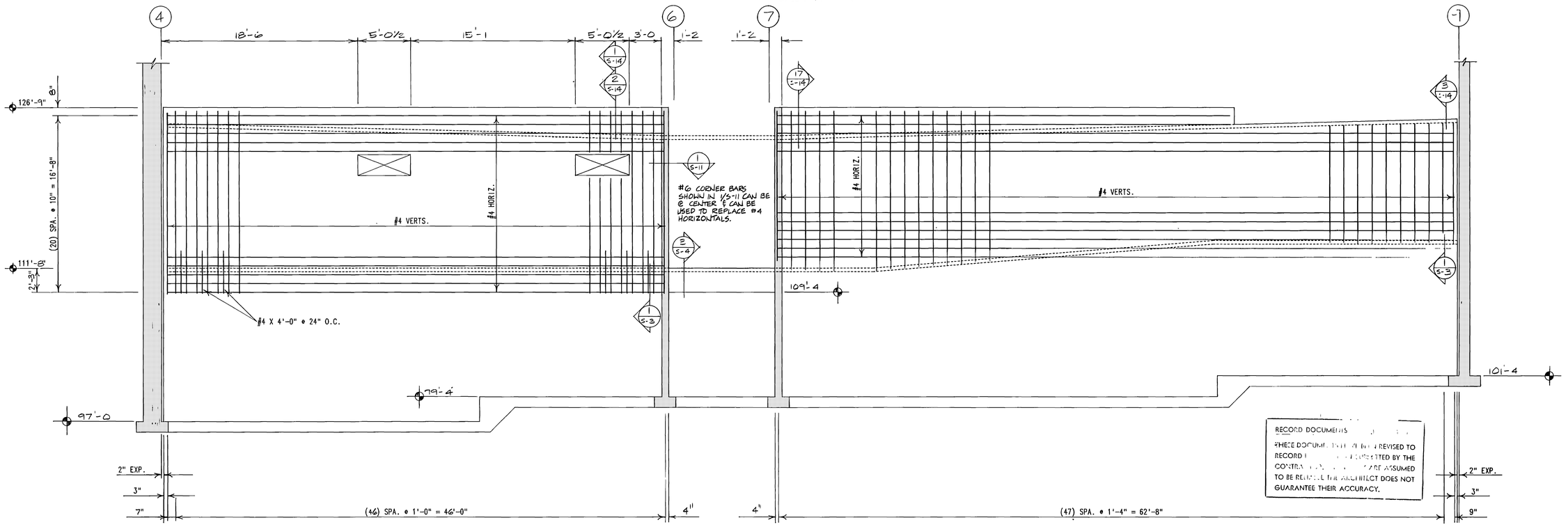

RECORD DOCUMENTS

THESE DOCUMENTS WERE REVISED TO RECORD INFORMATION SUBMITTED BY THE CONTRACTOR AND ARE ASSUMED TO BE REVISED. THE ARCHITECT DOES NOT GUARANTEE THEIR ACCURACY.

LINK BUILDING SOUTH WALL REINFORCING (CENTER REINFORCING)

SCALE : 1/4" = 1'-0"

NOTE: THIS SHEET IS COMPRISED OF DRAWINGS AND DETAILS FROM THE ORIGINAL 1990 BUILDING CONSTRUCTION CONFORMED SET & HAS BEEN INCLUDED FOR INFORMATIONAL PURPOSES ONLY. CONDITIONS SHOWN ON THIS SHEET HAVE NOT BEEN VERIFIED WITH EXISTING CONSTRUCTED CONDITIONS.

jfa JONES / RICHARDS & ASSOCIATES
ARCHITECTURE (801) 394-3333
PLANNING 533 - 26TH STREET
CONSTRUCTION MANAGEMENT OGDEN, UTAH

REVISED: As Builts 6-92

PROJECT NUMBER: 8403

DATE: 6-21-28

DRAWN BY: S.D.K.

PROJECT: PHYSICAL EDUCATION FACILITY
WEBER STATE COLLEGE

SHEET TITLE: WALL ELEVATIONS

SHEET NO. S-12

0000TVS12
Weber State College, Physical Education Facility - RW 84-268
Wall Elevations - 28719

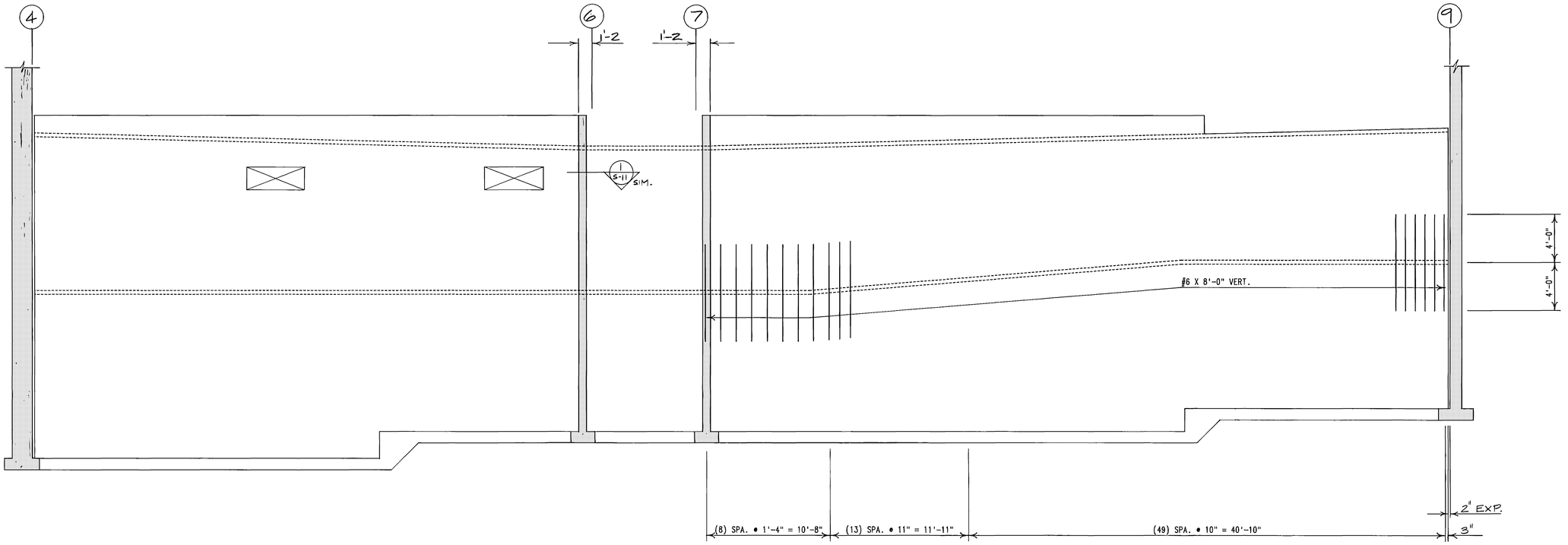

LINK BUILDING SOUTH WALL REINFORCING (EXTERIOR FACE)

SCALE : 1/4" = 1'-0"

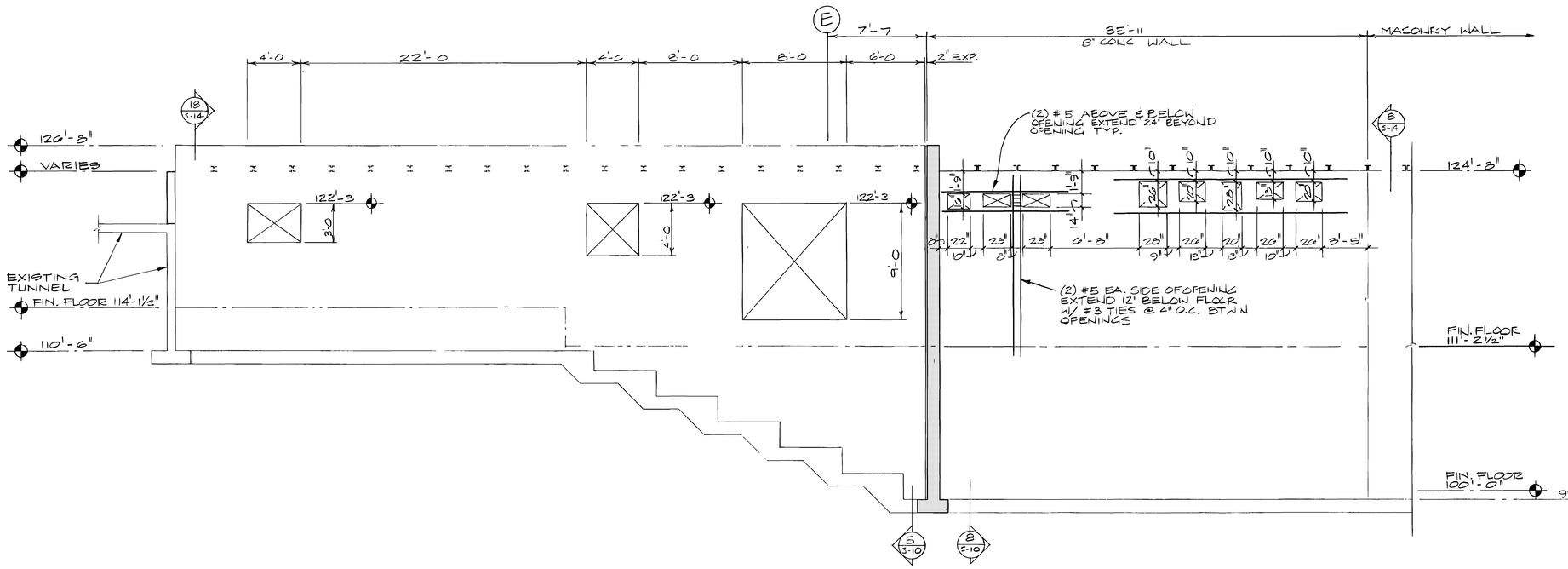

LINK BUILDING EAST WALL @ GRID 8

SCALE : 1/4" = 1'-0"

RECORD DOCUMENTS JUN 20 1999

THESE DOCUMENTS HAVE BEEN REVISED TO RECORD INFORMATION SUBMITTED BY THE CONTRACTOR. [illegible] ARE ASSUMED TO BE RELIABLE THE ARCHITECT DOES NOT GUARANTEE THEIR ACCURACY.

NOTE: THIS SHEET IS COMPRISED OF DRAWINGS AND DETAILS FROM THE ORIGINAL 1990 BUILDING CONSTRUCTION CONFORMED SET & HAS BEEN INCLUDED FOR INFORMATIONAL PURPOSES ONLY. CONDITIONS SHOWN ON THIS SHEET HAVE NOT BEEN VERIFIED WITH EXISTING CONSTRUCTED CONDITIONS.

jra JONES / RICHARDS & ASSOCIATES

ARCHITECTURE (801) 394-3033 | PLANNING 533 - 26TH STREET | CONSTRUCTION MANAGEMENT OGDEN, UTAH

REVISED: As Builts 6-90

PROJECT NUMBER: 84C3

DATE: 6-21-88

DRAWN BY: S.D.K.

PROJECT: PHYSICAL EDUCATION FACILITY
WEBER STATE COLLEGE

SHEET TITLE: WALL ELEVATIONS & DETAILS

SHEET NO. S-13

00001\S13
Weber State College, Physical Education Facility - RW 84-058
Wall Elevations & Details - 28720

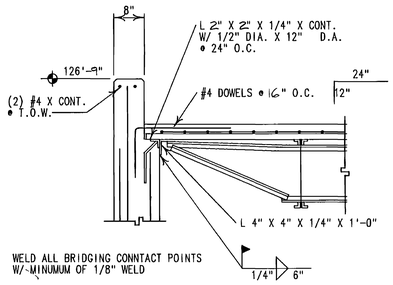

DETAIL (BRIDGING ANCHOR) 1 S-14
SCALE : 3/4" = 1'-0"

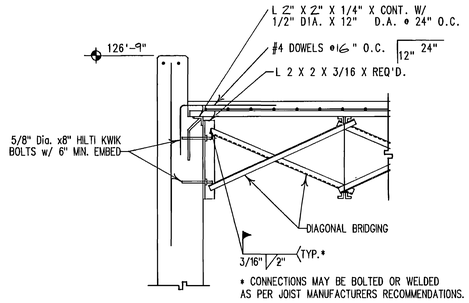

DETAIL (BRIDGING ANCHOR) 2 S-14
SCALE : 3/4" = 1'-0"

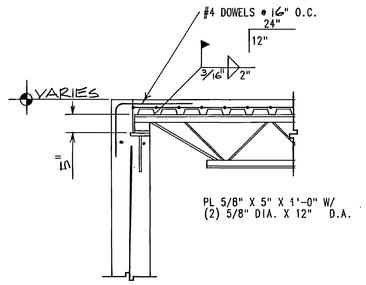

DETAIL (JOIST TO WALL) 3 S-14
SCALE : 3/4" = 1'-0"

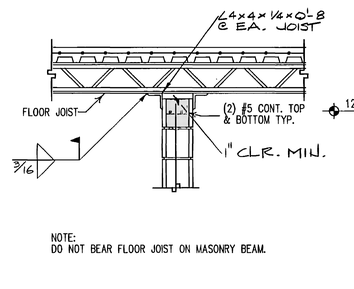

DETAIL (JOIST OVER WALL) 4 S-14
SCALE : 3/4" = 1'-0"

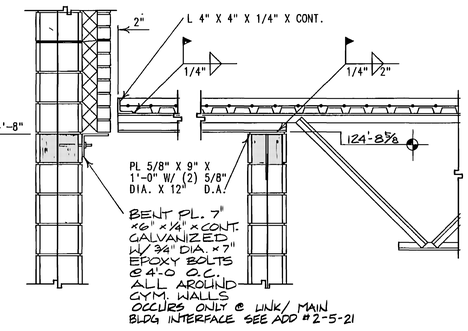

DETAIL (JOIST TO WALL) 5 S-14
SCALE : 3/4" = 1'-0"

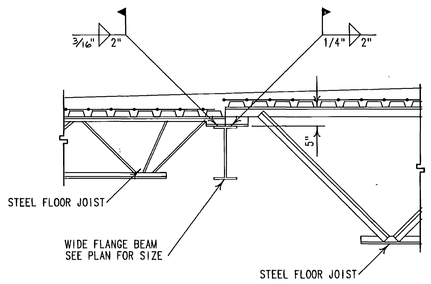

DETAIL (JOIST TO BEAM) 6 S-14
SCALE : 3/4" = 1'-0"

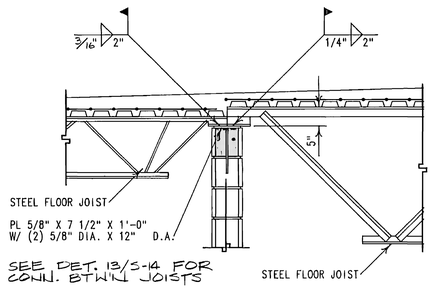

DETAIL (JOIST TO WALL) 7 S-14
SCALE : 3/4" = 1'-0"

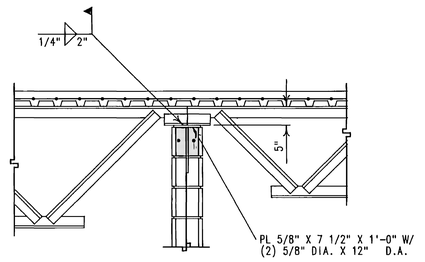

DETAIL (JOIST TO WALL) 8 S-14
SCALE : 3/4" = 1'-0"

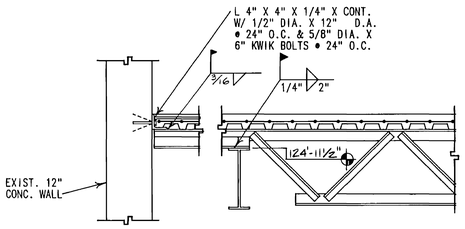

DETAIL (JOIST TO BEAM) 9 S-14
SCALE : 3/4" = 1'-0"

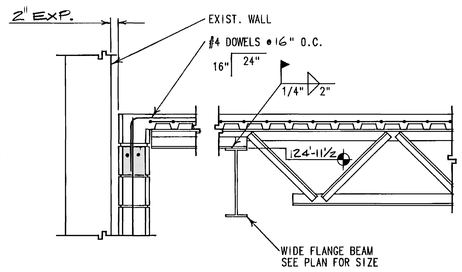

DETAIL (JOIST TO BEAM) 10 S-14
SCALE : 3/4" = 1'-0"

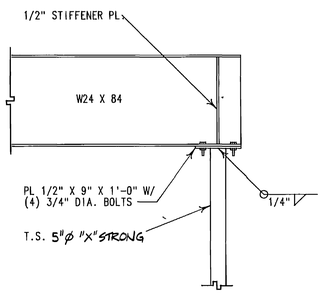

DETAIL (BEAM TO COL.) 11 S-14
SCALE : 3/4" = 1'-0"

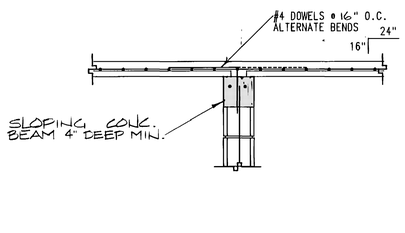

DETAIL (DECK TO WALL) 12 S-14
SCALE : 3/4" = 1'-0"

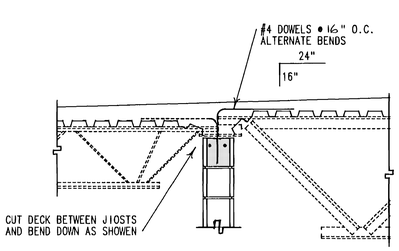

DETAIL (FLOOR SLAB TO WALL) 13 S-14
SCALE : 3/4" = 1'-0"

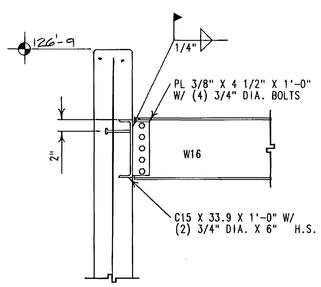

DETAIL (BEAM TO WALL) 14 S-14
SCALE : 3/4" = 1'-0"

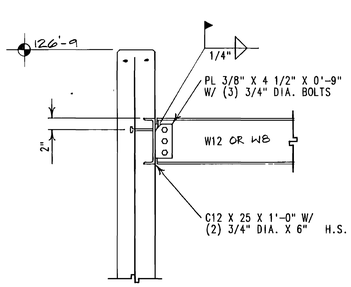

DETAIL (BEAM TO WALL) 15 S-14
SCALE : 3/4" = 1'-0"

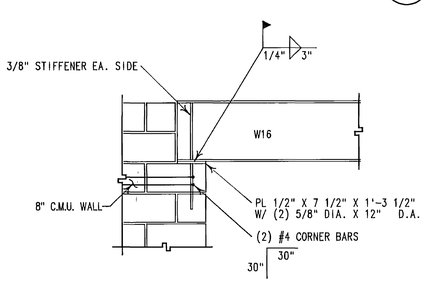

DETAIL (BEAM TO WALL) 16 S-14
SCALE : 3/4" = 1'-0"

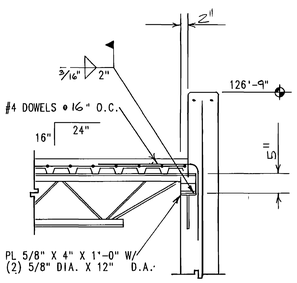

DETAIL (JOIST TO WALL) 17 S-14
SCALE : 3/4" = 1'-0"

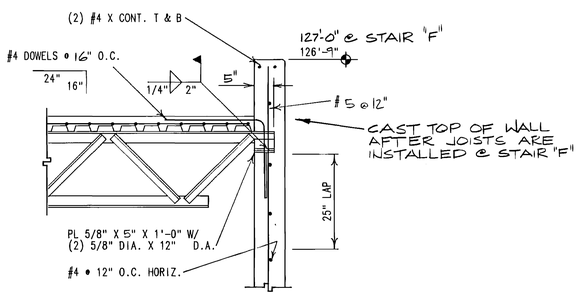

DETAIL (JOIST TO WALL) 18 S-14
SCALE : 3/4" = 1'-0"

RECORD DOCUMENTS JUN [illegible]
THESE CONTRACT DOCUMENTS HAVE BEEN REVISED TO REFLECT INFORMATION SUBMITTED BY THE CONTRACTOR. ALL DIMENSIONS MAY ARE ASSUMED TO BE RELIABLE THE ARCHITECT DOES NOT GUARANTEE THEIR ACCURACY.

00007\S14
Weber State College - Physcal Education Facility - RW 84-058
Structural Details - 29721

NOTE: THIS SHEET IS COMPRISED OF DRAWINGS AND DETAILS FROM THE ORIGINAL 1990 BUILDING CONSTRUCTION CONFORMED SET & HAS BEEN INCLUDED FOR INFORMATIONAL PURPOSES ONLY. CONDITIONS SHOWN ON THIS SHEET HAVE NOT BEEN VERIFIED WITH EXISTING CONSTRUCTED CONDITIONS.

jra JONES / RICHARDS & ASSOCIATES
ARCHITECTURE 583-3993 PLANNING CONSTRUCTION MANAGEMENT OGDEN, UTAH

REVISED: AS BUILTS 10-92
PROJECT NUMBER: 9403.
DATE: 6-21-93
DRAWN BY: S.D.K.

PROJECT: PHYSICAL EDUCATION FACILITY
WEBER STATE COLLEGE
SHEET TITLE: STRUCTURAL DETAILS

SHEET NO. S-14

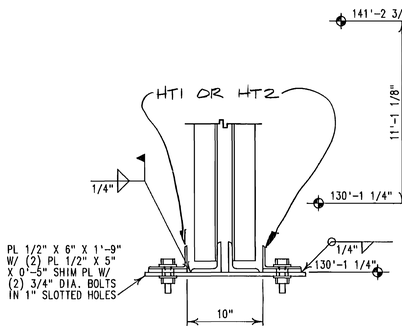

DETAIL (HORIZ. TRUSS TO JOIST) 1 S-15
SCALE : 1 1/2" = 1'-0"

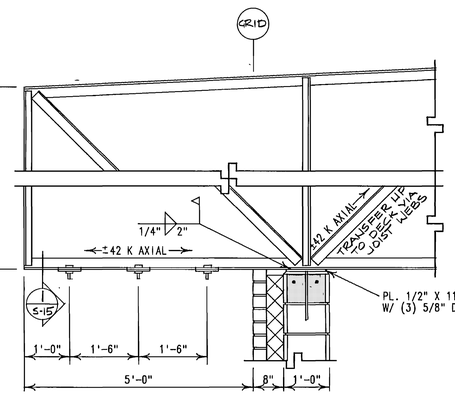

DETAIL (JOIST TO WALL 2 S-15
SCALE : 3/4" = 1'-0"

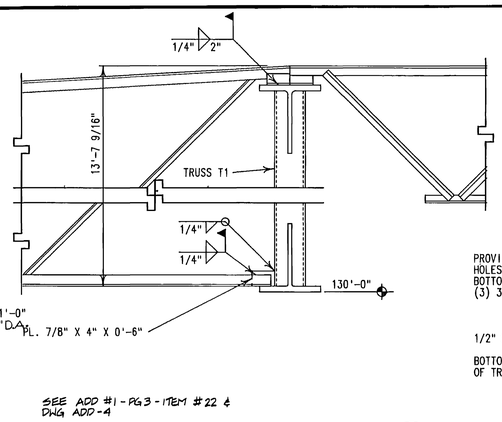

DETAIL (DEEP JOIST TO TRUSS) 3 S-15
SCALE : 3/4" = 1'-0"

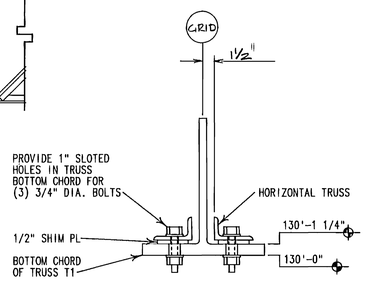

DETAIL (HORIZ. TRUSS TO MAIN TRUSS) 4 S-15
SCALE : 1 1/2" = 1'-0"

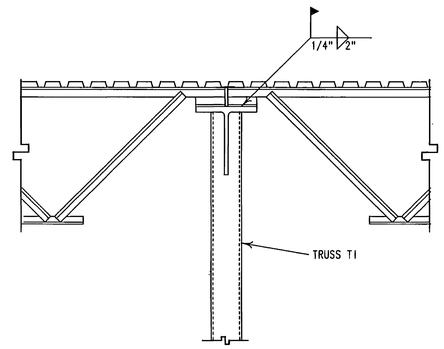

DETAIL (JOIST TO TRUSS) 5 S-15
SCALE : 3/4" = 1'-0"

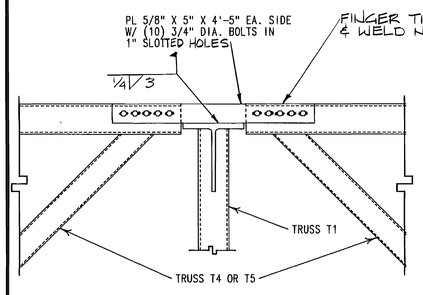

DETAIL (WALL TRUSS TO MAIN TRUSS) 6 S-15
SCALE : 3/4" = 1'-0"

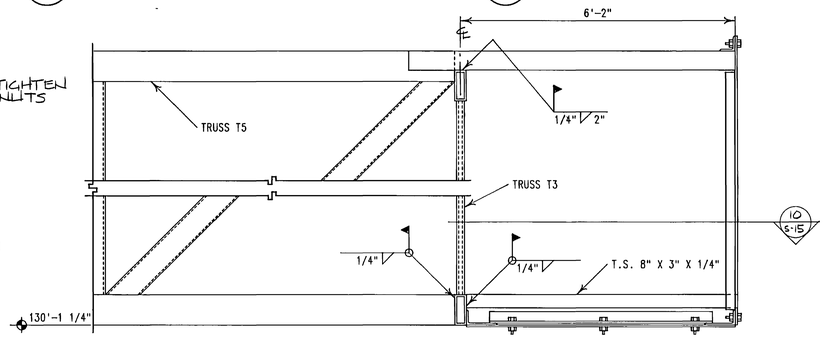

DETAIL (WALL TRUSS & CORNER 7 S-15
SCALE : 3/4" = 1'-0"

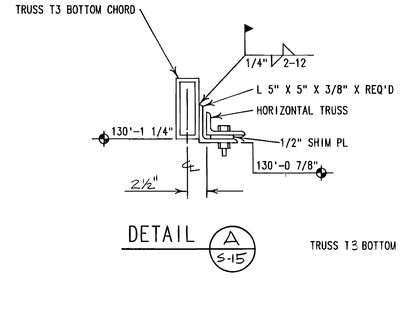

DETAIL A S-15

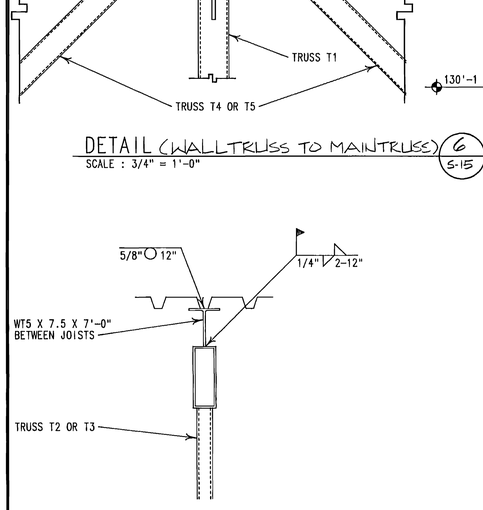

DETAIL (WALL TRUSS TO MAIN TRUSS) 6 S-15
SCALE : 3/4" = 1'-0"

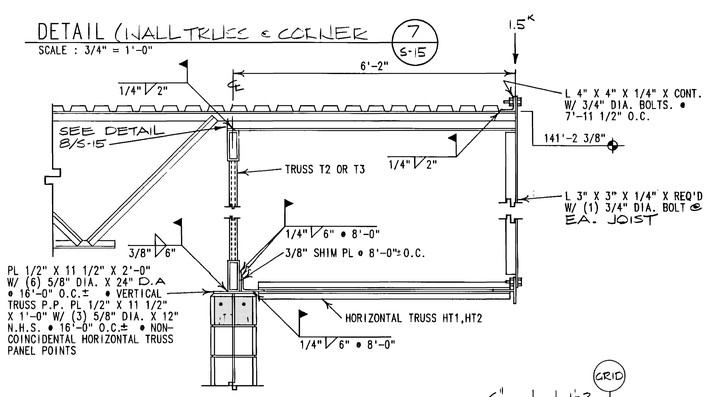

DETAIL (WALL TRUSS & CORNER 7 S-15
SCALE : 3/4" = 1'-0"

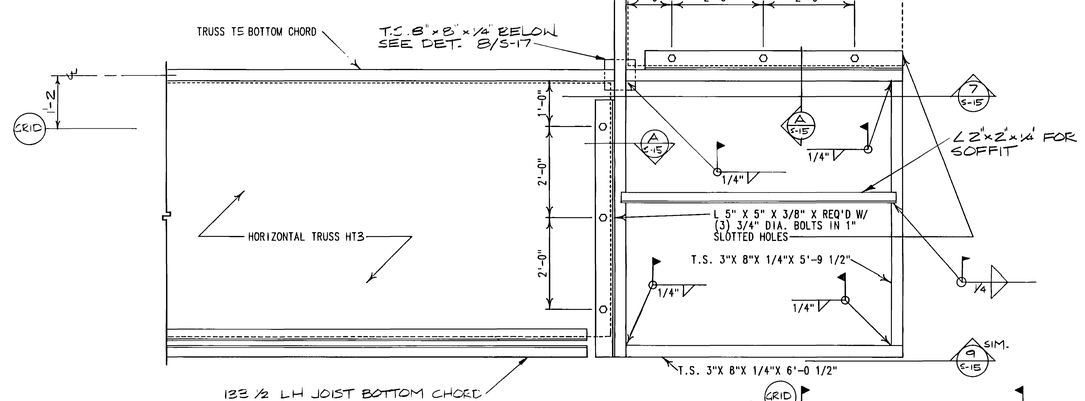

DETAIL (ROOF DECK TO WALL TRUSS) 8 S-15
SCALE : 1 1/2" = 1'-0"

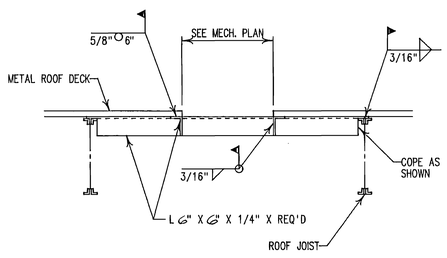

DETAIL (ROOF HATCH OPENING) 11 S-15
SCALE : 3/4" = 1'-0"

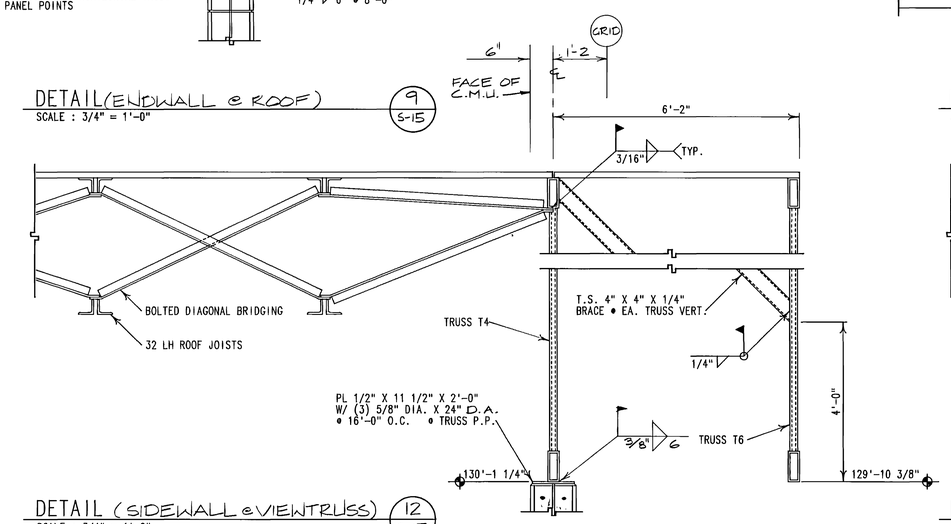

DETAIL (ENDWALL & ROOF) 9 S-15
SCALE : 3/4" = 1'-0"

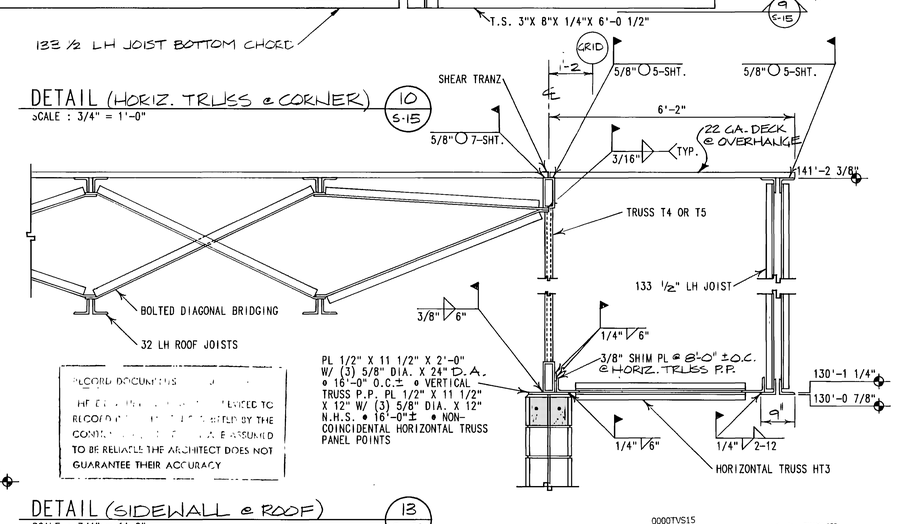

DETAIL (HORIZ. TRUSS & CORNER) 10 S-15
SCALE : 3/4" = 1'-0"

RECORD DRAWINGS
THE INFORMATION REVISED TO RECORD DRAWINGS WAS SUPPLIED BY THE CONTRACTOR AND IS ASSUMED TO BE RELIABLE. THE ARCHITECT DOES NOT GUARANTEE THEIR ACCURACY

DETAIL (SIDEWALL & VIEWTRUSS) 12 S-15
SCALE : 3/4" = 1'-0"

DETAIL (SIDEWALL & ROOF) 13 S-15
SCALE : 3/4" = 1'-0"

NOTE: THIS SHEET IS COMPRISED OF DRAWINGS AND DETAILS FROM THE ORIGINAL 1990 BUILDING CONSTRUCTION CONFORMED SET & HAS BEEN INCLUDED FOR INFORMATIONAL PURPOSES ONLY. CONDITIONS SHOWN ON THIS SHEET HAVE NOT BEEN VERIFIED WITH EXISTING CONSTRUCTED CONDITIONS.

O. KENT RICH 10/31/25 REGISTERED PROFESSIONAL ENGINEER

JONES / RICHARDS & ASSOCIATES
CONSTRUCTION MANAGEMENT
OGDEN, UTAH
PLANNING
323 - 26TH STREET
ARCHITECTURE
(801) 394-3053

REVISED: 42 PULLTS 12-02

PROJECT NUMBER: 8403

DATE: 6-21-95

DRAWN BY: S.D.K.

PROJECT: PHYSICAL EDUCATION FACILITY
WEBER STATE COLLEGE

SHEET TITLE: TRUSS DETAILS

SHEET NO. S-15

0000TVS15
Weber State College, Physical Education Facility - RW 84-058
Truss Details - 26722

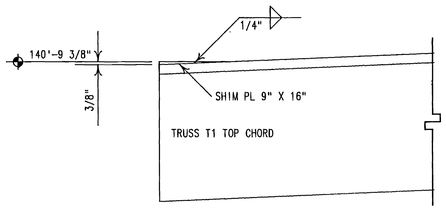

DETAIL
SCALE : 3/4" = 1'-0"
1 / S-16

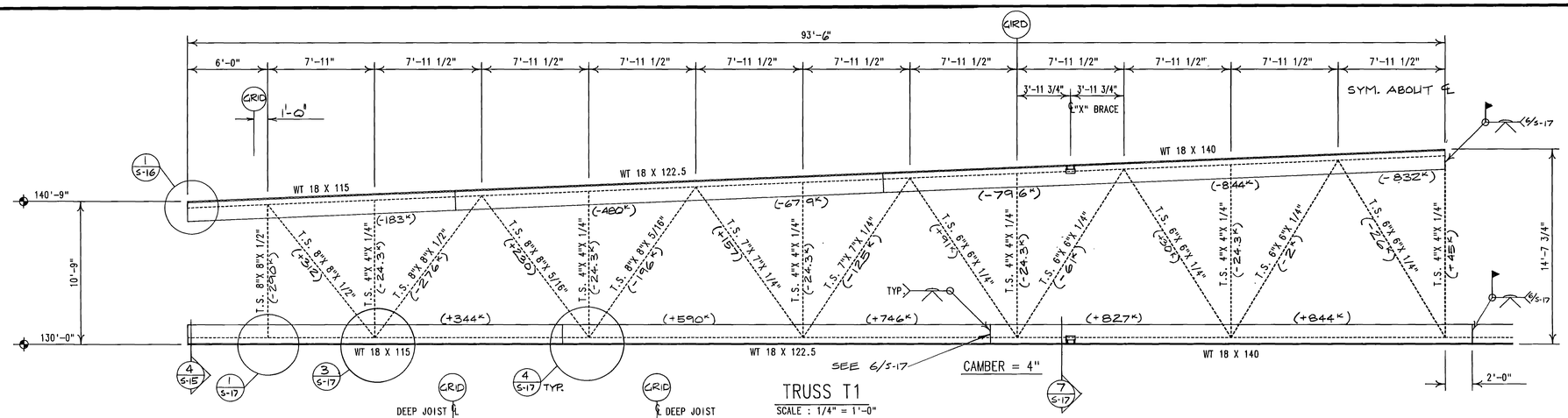

TRUSS T1
SCALE : 1/4" = 1'-0"

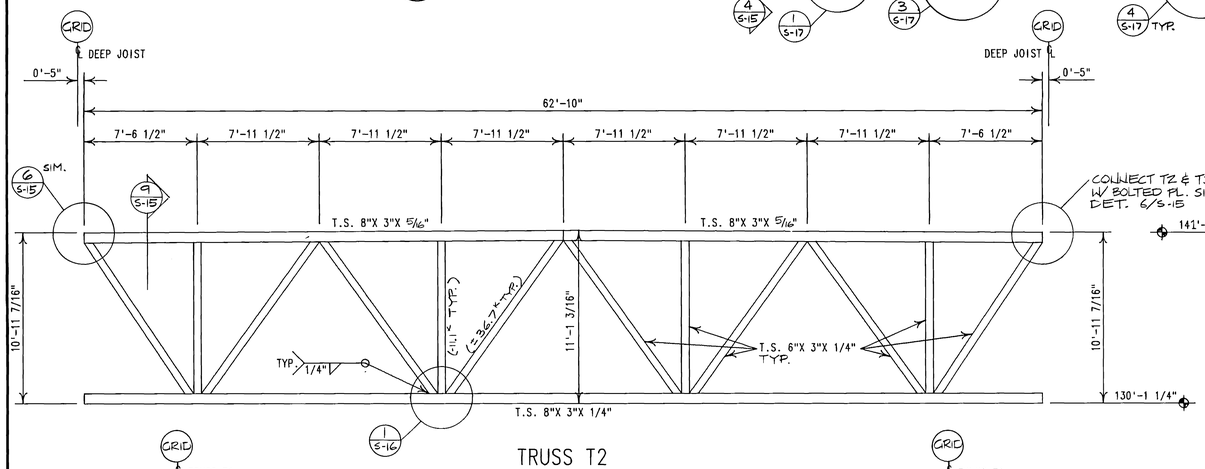

TRUSS T2
SCALE : 1/4" = 1'-0"

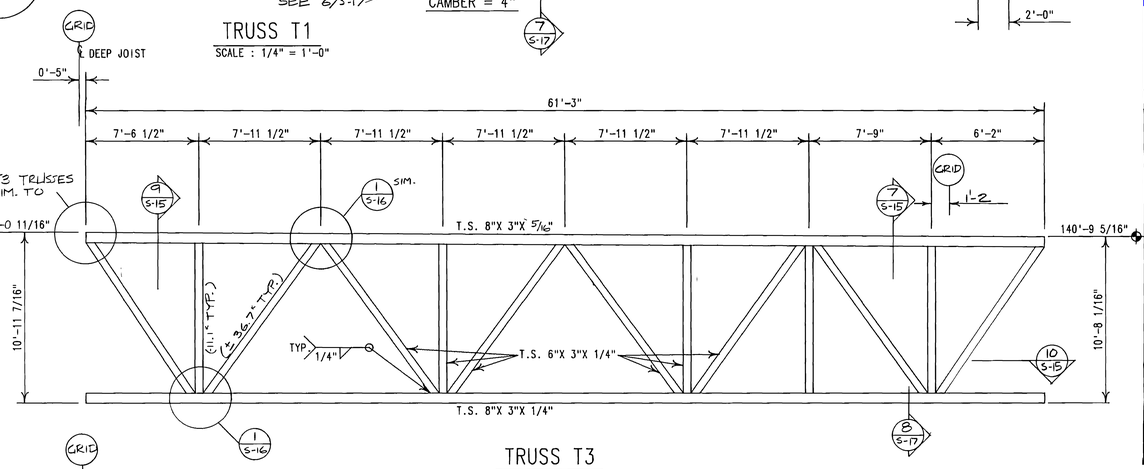

TRUSS T3
SCALE : 1/4" = 1'-0"

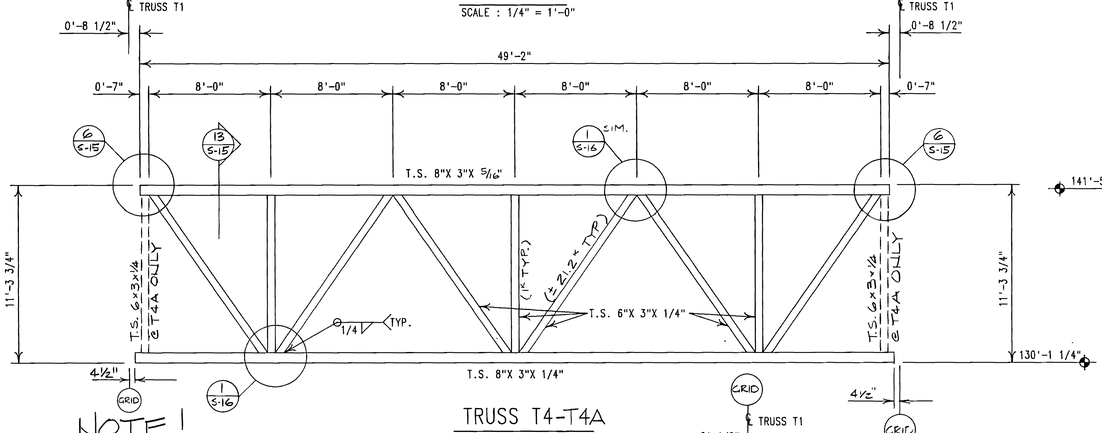

TRUSS T4-T4A
SCALE : 1/4" = 1'-0"

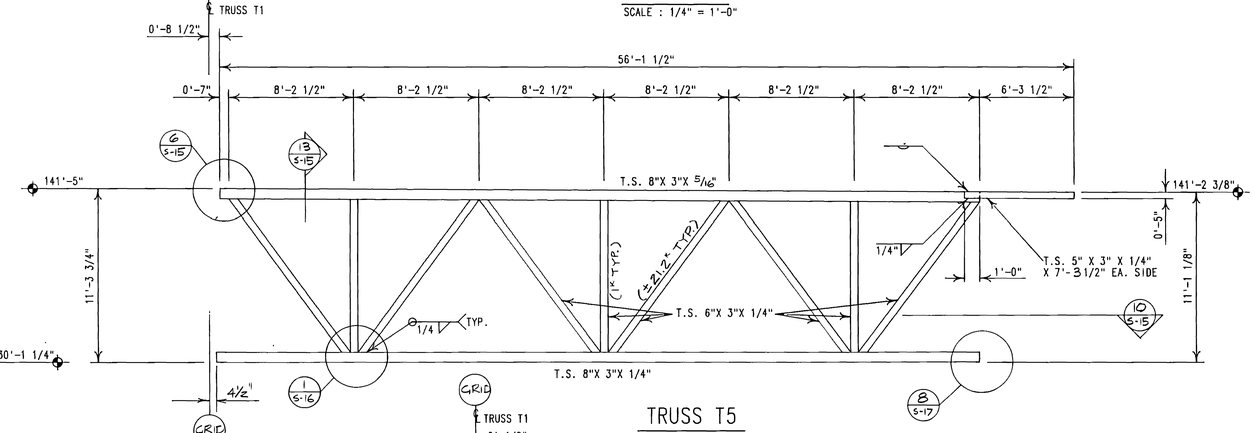

TRUSS T5
SCALE : 1/4" = 1'-0"

NOTE!
CENTERLINES OF WEBS & CHORDS FOR T2 - T6 DO NOT CONVERGE

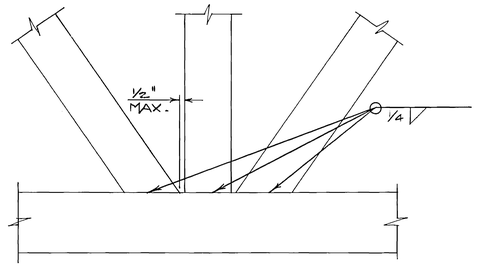

DETAIL
SCALE : 1 1/2" = 1'-0"
1 / S-16

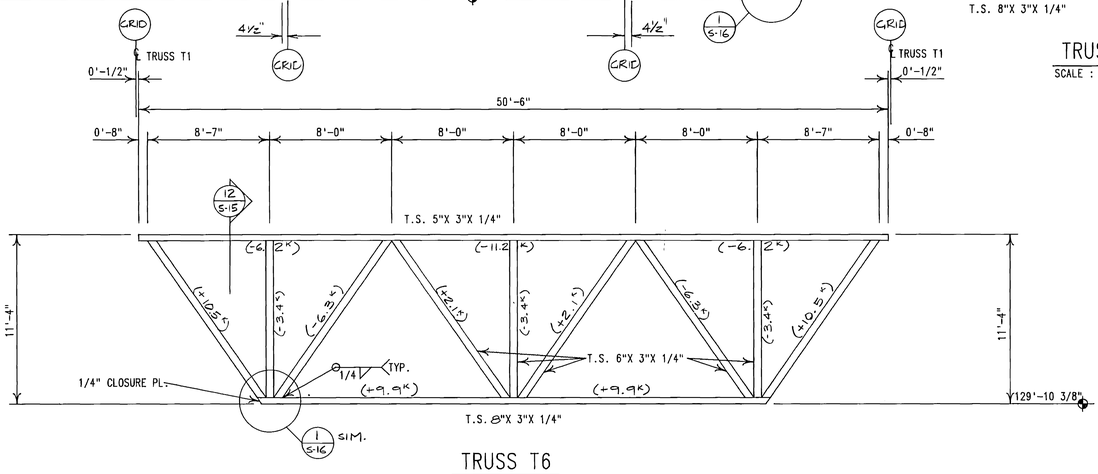

TRUSS T6
SCALE : 1/4" = 1'-0"

WELD INSPECTION FOR TRUSS T1

1. 100% RADIOGRAPHIC TESTING OF ALL BUTT WELDS (FIELD AND SHOP IN TOP & BOTTOM CHORDS.
2. SPOT ULTRASONIC TESTING OF FILLET WELDS JOINING WEB MEMBERS TO TOP AND BOTTOM CHORDS AS FOLLOWS:
   - A. 100% OF THE WELD ON EACH MEMBER IN THE 32' SECTION AT EACH END OF THE TRUSS.
   - B. 50% OF THE WELD ON EACH MEMBER IN THE SECTION BETWEEN 32' & 64' FROM EACH END OF TRUSS.
   - C. 20% OF THE WELD ON EACH MEMBER LOCATED IN THE CENTER 59' SECTION.

PREHEAT. PREHEAT BUTT WELD JOINTS TO MIN. TEMPERATURE REQUIRED BY AWS D1.1-88 4.2 USING ELECTRIC HEATERS. ALLOW 2 HOURS GRADUAL COOL DOWN AFTER WELDING.

RECORD DOCUMENT
JUL 20 1990
THESE DRAWINGS ARE PREPARED TO REQUIREMENTS ESTABLISHED BY THE CONTRACT DOCUMENTS AND ARE ASSUMED TO BE ACCURATE. THE ARCHITECT DOES NOT GUARANTEE THEIR ACCURACY.

0000TVS16
Weber State College, Physical Education Facility - RW 84-058
Trusses - 26723

NOTE: THIS SHEET IS COMPRISED OF DRAWINGS AND DETAILS FROM THE ORIGINAL 1990 BUILDING CONSTRUCTION CONFORMED SET & HAS BEEN INCLUDED FOR INFORMATIONAL PURPOSES ONLY. CONDITIONS SHOWN ON THIS SHEET HAVE NOT BEEN VERIFIED WITH EXISTING CONSTRUCTED CONDITIONS.

PROFESSIONAL ENGINEER
O. KENT BRADY
No. 3560
STATE OF UTAH
jra JONES / RICHARDS & ASSOCIATES
ARCHITECTURE
801/359-5533
PLANNING
533 - 25TH STREET
CONSTRUCTION MANAGEMENT
OGDEN, UTAH

REVISED: AS BUILTS 6-90
PROJECT NUMBER: 8405
DATE: 5-31-88
DRAWN BY: S.D.K.

PROJECT: PHYSICAL EDUCATION FACILITY
WEBER STATE COLLEGE
SHEET TITLE: TRUSSES

SHEET NO. S-16

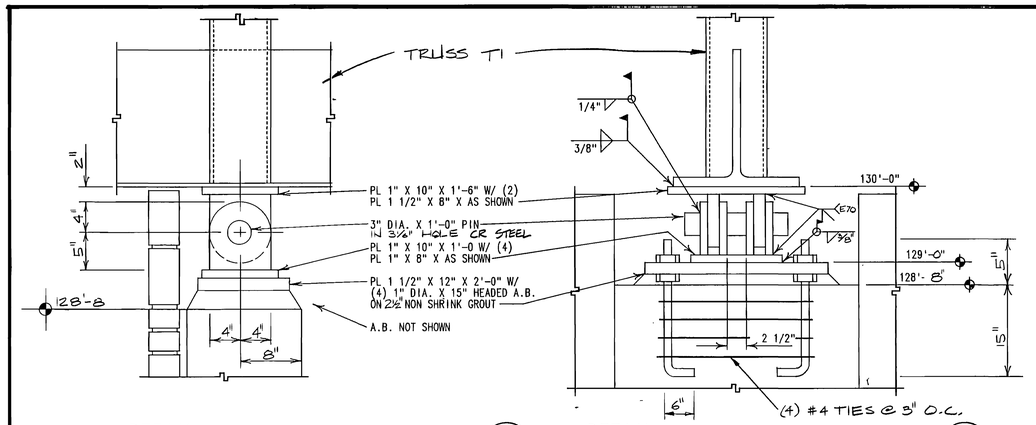

DETAIL
SCALE : 1 1/2" = 1'-0"
1 / S-17

DETAIL
SCALE : 1 1/2" = 1'-0"
2 / S-17

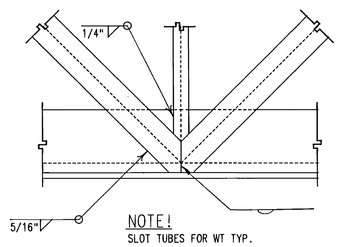

DETAIL(TRUSS T1 CONNECTION)
SCALE : 3/4" = 1'-0"
3 / S-17

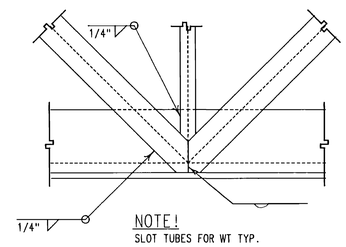

DETAIL(TRUSS T1 CONNECTION)
SCALE : 3/4" = 1'-0"
4 / S-17

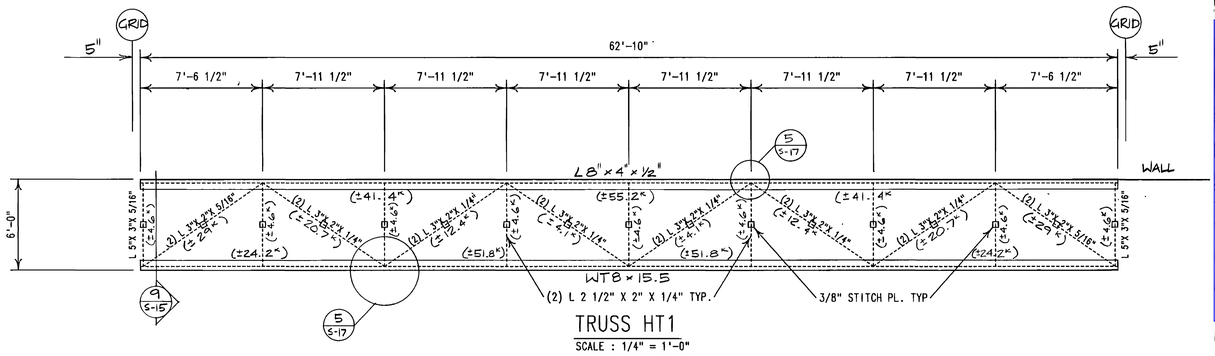

TRUSS HT1
SCALE : 1/4" = 1'-0"

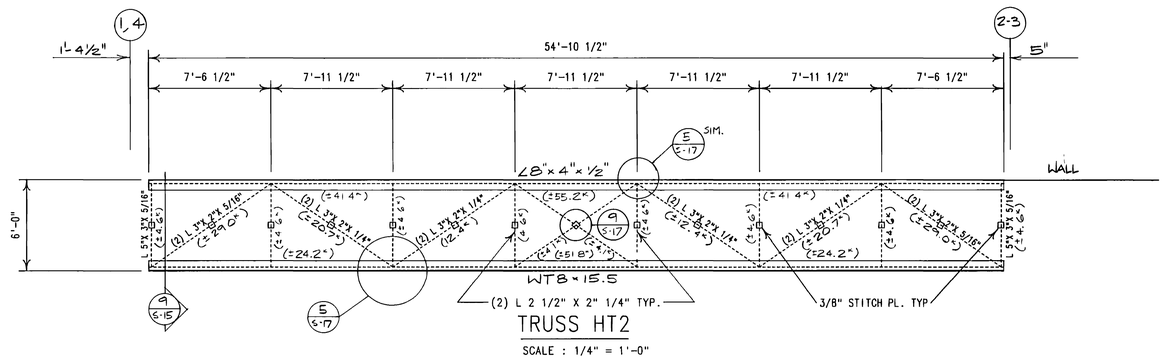

TRUSS HT2
SCALE : 1/4" = 1'-0"

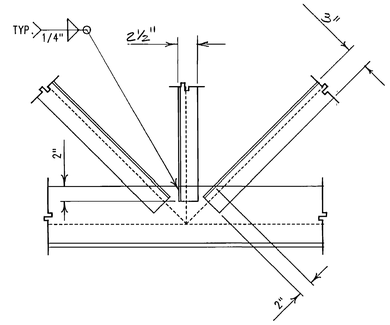

DETAIL(HT1, HT2, HT3 CONNECTION)
SCALE : 1 1/2" = 1'-0"
5 / S-17

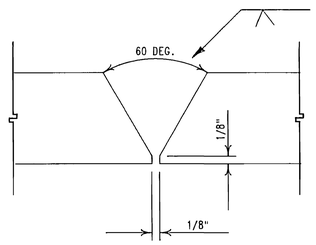

DETAIL(TRUSS T1 WELDED SPLICE)
SCALE : 1" = 1"
6 / S-17

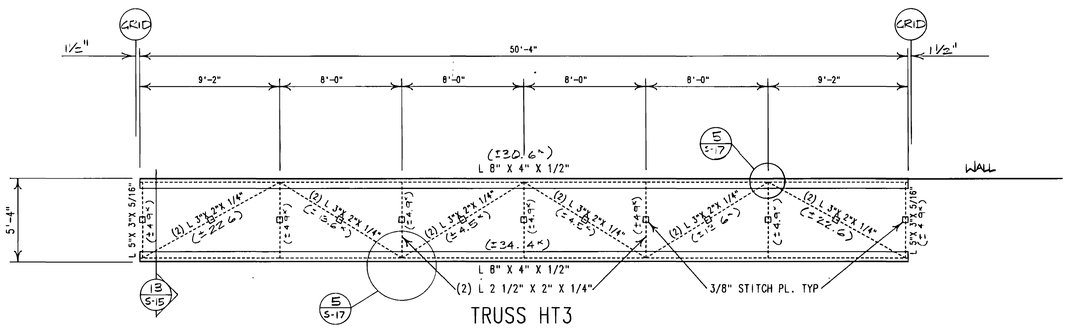

TRUSS HT3
SCALE : 1/4" = 1'-0"

NOTE!
DBL. 4s LONG LEGS BACK TO BACK

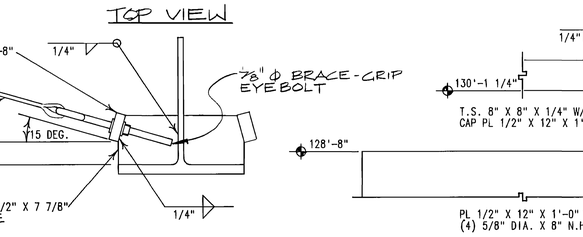

TOP VIEW

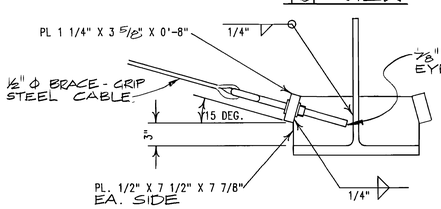

DETAIL(CABLE "X" BRACE CONN.
SCALE : 1 1/2" = 1'-0"
7 / S-17

DETAIL(CORNER PIER COL.
SCALE : 3/4" = 1'-0"
8 / S-17

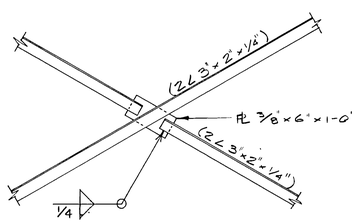

DETAIL
SCALE : 3/4" = 1'-0
9 / S-17

CITY	
TO BE	
SUBMITTED	

0000TYS17
Weber State College, Physical Education Facility - RW 84-058
Trusses & Details - 29724

NOTE: THIS SHEET IS COMPRISED OF DRAWINGS AND DETAILS FROM THE ORIGINAL 1990 BUILDING CONSTRUCTION CONFORMED SET & HAS BEEN INCLUDED FOR INFORMATIONAL PURPOSES ONLY. CONDITIONS SHOWN ON THIS SHEET HAVE NOT BEEN VERIFIED WITH EXISTING CONSTRUCTED CONDITIONS.

JONES / RICHARDS & ASSOCIATES
jra
ARCHITECTURE
INTERIORS
PLANNING
532 JOHN STREET
CONSTRUCTION MANAGEMENT
OGDEN, UTAH

REVISED: AS BUILTS 6-90
PROJECT NUMBER: 6403
DATE: 6-21-93
DRAWN BY: S.D.K

PROJECT: PHYSICAL EDUCATION FACILITY
WEBER STATE COLLEGE
SHEET TITLE: TRUSSES & DETAILS
SHEET NO. S-17

DETAIL 1/S-18
SCALE : 3/4" = 1'-0"

DETAIL 2/S-18
SCALE : 3/4" = 1'-0"

DETAIL 3/S-18
SCALE : 3/4" = 1'-0"

DETAIL 4/S-18
SCALE : 3/4" = 1'-0"

DETAIL 5/S-18
SCALE : 3/4" = 1'-0"

DETAIL 6/S-18
SCALE : 3/4" = 1'-0"

DETAIL 7/S-18
SCALE : 3/4" = 1'-0"

DETAIL 8/S-18
SCALE : 3/4" = 1'-0"

DETAIL 9/S-18
SCALE : 3/4" = 1'-0"

DETAIL 10/S-18
SCALE : 3/4" = 1'-0"

STRUCTURAL NOTES

A. GENERAL

1. THE CONTRACTOR SHALL VERIFY ALL CONDITIONS AND DIMENSIONS AT THE SITE.
2. ALL OMISSIONS OR CONFLICTS BETWEEN THE VARIOUS ELEMENTS OF THE WORKING DRAWINGS AND/OR SPECIFICATIONS SHALL BE BROUGHT TO THE ATTENTION OF THE ARCHITECT AND/OR THE STRUCTURAL ENGINEER BEFORE PROCEEDING WITH ANY WORK INVOLVED.
3. DURING AND AFTER CONSTRUCTION, BUILDER AND/OR OWNER SHALL KEEP LOADS ON STRUCTURE WITHIN THE LIMITS OF DESIGN LOADS.
4. TYPICAL DETAILS AND SECTIONS SHALL APPLY WHERE SPECIFIC DETAILS ARE NOT SHOWN.

B. BASIS OF DESIGN

1. GOVERNING BUILDING CODE...UBC 1985
2. SEISMIC DESIGN:
   ZONE........................III
   K............1.33 (BOX SYSTEM)
   I..........................1.25
3. WIND DESIGN:
   BASIC WIND SPEED...........100 MPH
   EXPOSURE........................B
   I............................1.15
4. SNOW LOAD................30 PSF
   ICE LOAD..................5 PSF
   (25% OF SNOW & ICE INCLUDED IN SEISMIC DESIGN)
5. SUSPENDED FLOOR LIVE LOADS
   PLAZA......................100 PSF
   PLAZA SUPERIMPOSED DEAD LOAD 110
   CORRIDORS..................100 PSF
   OFFICE AREAS................50 PSF
   FUTURE FLOOR IN COURT AREA..100 PSF
   GYM STORAGE ROOMS...........100 PSF

C. FOUNDATION

1. SOIL CLASSIFICATION: SILTY SAND (Sm, Sp) PER DAMES & MOORE REPORT 4000-057-06, JUNE 25, 1984.
2. DESIGN SOIL PRESSURE: 3000 PSF.
3. ALL FOOTINGS SHALL BE PLACED ON THE UNDISTURBED NATURAL SOIL OR ON GRANULAR FILL MECHANICALLY COMPACTED TO NOT LESS THAN 95% OF MODIFIED PROCTOR DENSITY (ASTM D-1557) EXTENDING TO UNDISTURBED NATURAL SOIL.

D. CONCRETE

1. ALL CONCRETE SHALL HAVE A DESIGN 28-DAY COMPRESSIVE STRENGTH AS FOLLOWS:
   A. FOOTINGS, WALLS, PIERS & COLUMNS ....3000 PSI
   B. INTERIOR & EXTERIOR SLABS, WALKS, CURBS, RAMPS & GUTTERS..4000 PSI
2. NO PIPES, DUCTS, SLEEVES, ETC. SHALL BE PLACED IN STRUCTURAL CONCRETE UNLESS SPECIFICALLY DETAILED OR APPROVED BY STRUCTURAL ENGINEER. NO ALUMINUM PRODUCTS SHALL BE EMBEDDED IN CONCRETE.
3. ALL WALLS SHALL BE ADEQUATELY BRACED AGAINST LATERAL MOVEMENT PRIOR TO BACKFILLING, EXCEPT CANTILEVERED RETAINING WALLS.
4. UNLESS OTHERWISE NOTED, REINFORCE ALL CONCRETE FOUNDATION WALLS AS FOLLOWS:
   6" WALLS (2) #5 BARS, (1) TOP & (1) BOTTOM CONTINUOUS
   8" WALLS (4) #5 BARS, (2) TOP & (2) BOTTOM CONTINUOUS
   10" & 12" WALLS (4) #6 BARS, (2) TOP & (2) BOTTOM CONTINUOUS
5. UNLESS OTHERWISE NOTED, MAKE ALL CONCRETE SLABS ON EARTH AT LEAST 4" THICK AND REINFORCE WITH 6 X 6 – W1.4/W1.4 WELDED WIRE FABRIC. BEARING EARTH TO BE UNDISTURBED SOIL OR FILL COMPACTED TO 90% OF MODIFIED PROCTOR DENSITY (ASTM D-1557).
6. ALL OPENINGS GREATER THAN 6" IN ANY DIRECTION IN CONCRETE FLOOR SLAB ON METAL DECK SHALL BE FRAMED ON 4 SIDES WITH STEEL ANGLE 4"X3"X1/4".
7. AROUND OPENINGS IN CONCRETE WALLS ADD (2) #5 BARS ALL SIDES IN ADDITION TO REGULAR WALL REINFORCING AND EXTEND 24" EACH WAY BEYOND OPENING.
8. CONSTRUCTION JOINTS NOT SHOWN ON THE PLANS SHALL BE MADE AND LOCATED SO AS TO NOT IMPAIR THE STRENGTH OF THE STRUCTURE AND AS APPROVED BY THE STRUCTURAL ENGINEER. PROVIDE 2 X 4 (SHAPED) KEYWAY IN ALL VERTICAL AND HORIZONTAL JOINTS. ALL STEEL REINFORCING SHALL BE CONTINUOUS THROUGH COLD JOINTS UNLESS NOTED OTHERWISE.

E. REINFORCING STEEL

1. ALL REINFORCING BARS SHALL CONFORM TO ASTM STANDARD A-615 GRADE 60 AND ALL WELDED WIRE FABRIC SHALL CONFORM TO ASTM STANDARD A-185. ADEQUATELY TIE AND SUPPORT ALL REINFORCING STEEL AS SPECIFIED BY ACI 315, TO MAINTAIN EXACT REQUIRED POSITION. ALL FIELD BENT DOWELS SHALL BE GRADE 40.
2. REINFORCEMENT SHALL HAVE THE FOLLOWING CONCRETE COVERAGE:

   CAST AGAINST AND PERMANENTLY EXPOSED TO EARTH.......3"
   EXPOSED TO EARTH OR WEATHER
   #6 & LARGER....................................2"
   #5 & SMALLER...............................1-1/2"
   NOT EXPOSED TO WEATHER OR EARTH
   SLABS, WALLS, #11 & SMALLER.........3/4"
   BEAMS, COLUMNS: MAIN REINFORCING OR TIES..1-1/2"
   SLABS ON GRADE
   PLACE REINFORCING AT CENTER OF SLAB UNLESS INDICATED OTHERWISE.
3. EXCEPT WHERE NOTED, CONTINUOUS REINFORCEMENT SHALL BE SPLICED AT POINTS OF MINIMUM STRESS BY LAPPING 30 BAR DIAMETERS (18" MIN.) IN CONCRETE AND 40 BAR DIAMETERS IN MASONRY.

F. STRUCTURAL STEEL

1. STRUCTURAL STEEL SHALL BE FABRICATED AND ERECTED IN ACCORDANCE WITH THE LATEST EDITION OF THE FOLLOWING:

A. AISC "SPECIFICATIONS FOR THE DESIGN, FABRICATION AND ERECTION OF STRUCTURAL STEEL FOR BUILDINGS", WITH "COMMENTARY".
B. AISC "CODE OF STANDARD PRACTICE".
C. AISC "SPECIFICATIONS FOR THE DESIGN OF COLD-FORMED STEEL STRUCTURAL MEMBERS"

2. STRUCTURAL STEEL SHALL CONFORM TO ASTM A-36.
3. COLD-FORMED STRUCTURAL STEEL TUBING SHALL CONFORM TO ASTM A-500, GRADE B.
4. ALL WELDING SHALL BE PERFORMED BY WELDERS CERTIFIED WITHIN THE LAST 12 MONTHS IN ACCORDANCE WITH AMERICAN WELDING SOCIETY AWS D1.1-88. EVIDENCE OF CERTIFICATION SHALL BE SUBMITTED TO ARCHITECT. USE E 70XX ELECTRODES EXCEPT E 7018 (LOW HYDROGEN) FOR T1 TRUSS CHORD WELDS W/PREHEAT PER AWS D1.1-88.
5. ALL STRUCTURAL STEEL TO STEEL CONNECTIONS SHALL USE HIGH STRENGTH BOLTS CONFORMING TO ASTM A-325.
6. ALL OPEN WEB STEEL JOISTS SHALL BE FABRICATED AND ERECTED ACCORDING TO "STANDARD SPECIFICATIONS AND CODE OF STANDARD PRACTICE" OF THE STEEL JOIST INSTITUTE.
7. LONG SPAN TRUSSES
   A. FABRICATOR SHALL SUBMIT SHOP DRAWINGS DETAILING WELDS AND WELDING PROCEDURES, FABRICATION, SHIPPING AND ERECTION PROCEDURES AND SEQUENCE, FIELD SPLICE LOCATIONS AND SPLICE WELD DETAILS.
   B. FABRICATOR SHALL SUBMIT CERTIFIED MILL TEST REPORTS FOR STEEL USED IN PRIMARY TRUSSES.
   C. OWNER WILL ENGAGE AN INDEPENDENT TESTING AGENCY TO VISUALLY INSPECT ALL WELDS AND PERFORM RADIOGRAPHIC TESTING OF ALL SHOP & FIELD BUTT WELD SPLICES IN CHORD MEMBERS PER AWS D1.1 SECTION G-1 THRU 6.12 & ULTRASONIC TESTING OF SPECIFIED FILLET WELDS SHOWN ON TRUSS DRAWING.
8. METAL ROOF DECK SHALL BE 1-1/2" TYPE B (G90) GALVANIZED STEEL WITH GAUGE AS SHOWN IN SCHEDULE. (ACOUSTICAL PAINTED IN GYM)
9. METAL FLOOR DECK SHALL BE 22 GAUGE GALVANIZED (G90) STEEL COMPOSITE, TYPE 1-1/2" B.

G. MASONRY

1. ALL HOLLOW MASONRY UNITS SHALL CONFORM TO ASTM C-90 TYPE N-1. 10", 8" & 6" BLOCK WALLS IN THE LINK AREA SHALL BE HIGH STRENGTH BLOCK WITH A COMPRESSIVE STRENGTH (F'm) EQUAL TO 2700 PSI. (SEE SCHEDULE) PRISM TESTING PER UBC 2405(c) & 2406(b) SHALL BE USED TO ESTABLISH AND VARIFY STRENGTH VALUES.
2. ALL MASONRY WORK SHALL CONFORM TO CHAPTER 24 OF THE "UNIFORM BUILDING CODE".
3. MASONRY WALLS SHALL BE REINFORCED AS PER REINFORCING SCHEDULE WITH BAR SIZE & SPACING AS NOTED. IN ADDITION ADD:
   A. VERTICAL BARS SIZE AS SHOWN IN SCHEDULE IN CELLS ADJACENT TO ALL OPENINGS & AT CORNERS. ALL VERTICAL REINFORCEMENT SHALL BE DOWELED TO FOUNDATION.
   B. HORIZONTAL BARS SHALL BE PLACED IN 8" DEEP "H" BLOCK BOND BEAM UNITS AT 48" O.C. MAXIMUM AND AT FLOORS, ROOF AND TOP OF WALL. BOND BEAMS AT ROOF WILL SLOPE TO MATCH SLOPING ROOF. ALL VERTICAL MASONRY REINFORCING SHALL BE SECURED IN PLACE USING REBAR POSITIONERS SUCH AS AA 239 FURNISHED BY AA WIRE PRODUCTS COMPANY BEFORE GROUTING AT INTERVALS NOT EXCEEDING THE TOP AND BOTTOM OF GROUT POURS OR 200 BAR DIAMETERS WHICH EVER IS LESS. VERTICAL REINFORCING MUST BE WITHIN 1/2 INCH OF CENTER OF WALLS PER UBC 2404(e).
4. MASONRY VENEER SHALL BE ANCHORED USING TRIROD 9 GAUGE GALV. DURA-WALL WITH SIDE RODS SPACED SUCH THAT TWO RODS LIE IN THE FACE SHELL MOTOR JOINTS OF THE BLOCK AND ONE ROD IN THE BRICK JOINT. SPACE AT 16" ON CENTER VERTICALLY.
5. ALL BLOCK CELLS CONTAINING REINFORCING, BOLTS, OR ANCHORS SHALL BE GROUTED SOLID.
6. PROVIDE REINFORCING BARS SIZE AS NOTED FOR PARTICULAR WALL IN SCHEDULE, IN GROUTED SPACE, ON ALL SIDES AND ADJACENT TO EVERY OPENING WHICH EXCEEDS 24 IN. IN EITHER DIRECTION. BARS SHALL EXTEND 24 IN. BEYOND THE CORNERS OF THE OPENING. ALL WALL CORNERS AND ENDS SHALL HAVE VERTICAL REINFORCING IN GROUTED CELL.
7. GROUT SHALL ATTAIN THE MINIMUM COMPRESSIVE STRENGTH SHOWN IN SCHEDULE AT 28 DAYS AND SHALL BE PLACED WITH SUFFICIENT WATER FOR POURING WITHOUT SEGREGATION. DO NOT USE MORTAR FOR GROUT. GROUT SHALL BE COMPOSED OF ONE PART PORTLAND CEMENT AND TWO TO THREE PARTS SAND. TWO PARTS PEA GRAVEL MAY BE ADDED IN MASONRY CELLS 4" OR MORE IN EITHER DIRECTION. USE OF ONE-TENTH PART HYDRATED LIME OR LIME PUTTY IS OPTIONAL. ALL MEASUREMENTS ARE BY VOLUME. MECHANICALLY VIBRATE ALL GROUT PER UBC 2404 (f) 2.
8. MORTAR SHALL BE TYPE S AND OBTAIN A MINIMUM COMPRESSIVE STRENGTH OF 1800 PSI AT 28 DAYS. MORTAR SHALL BE PROPORTIONED ACCORDING TO TABLE 24-A OF THE UNIFORM BUILDING CODE.
9. OWNER SHALL ENGAGE AN INDEPENDENT TESTING AGENCY TO PROVIDE PRISM TESTING AND SPECIAL INSPECTION PER UBC REQUIREMENTS FOR THE MASONRY WORK DEFINED IN THE MASONRY SCHEDULE.

0000TVS18
Weber State College, Physical Education Facility - RW 84-058
Structural Details & Notes - 26725

REGISTERED PROFESSIONAL ENGINEER — O. KENT RICH — State of Utah

NOTE: THIS SHEET IS COMPRISED OF DRAWINGS AND DETAILS FROM THE ORIGINAL 1990 BUILDING CONSTRUCTION CONFORMED SET & HAS BEEN INCLUDED FOR INFORMATIONAL PURPOSES ONLY. CONDITIONS SHOWN ON THIS SHEET HAVE NOT BEEN VERIFIED WITH EXISTING CONSTRUCTED CONDITIONS.

jra JONES / RICHARDS & ASSOCIATES
ARCHITECTURE (801) 394-3033
PLANNING 533 - 26TH STREET
CONSTRUCTION MANAGEMENT OGDEN, UTAH

REVISED: AS BUILTS 6-90

PROJECT NUMBER: 8403
DATE: 6-21-88
DRAWN BY: S.D.K.

PROJECT: PHYSICAL EDUCATION FACILITY, WEBER STATE COLLEGE

SHEET TITLE: STRUCTURAL DETAILS AND NOTES

SHEET NO. S-18

GENERAL NOTES

1 FOR SITE UTILITIES SEE SHEETS SP-1 AND E-2.
2 PROTECT ALL EXIST. SITE IMPROVEMENTS TO REMAIN.
3 IN EXCAVATING HILLSIDE DO NOT DAMAGE OR UNDERCUT EXISTING FOOTINGS UNLESS NOTED OTHERWISE.
4 REMOVE ALL MISC. CONC, ASPHALT, ETC. REQUIRED BY REGRADING OR NEW CONSTRUCTION.
5 PROVIDE TEMPORARY SITE DEWATERING DURING CONSTRUCTION. SEE SOILS REPORT.
6 CONTRACT LIMIT LINE DEMARKS THE MAXIMUM EXTENT OF THE CONTRACT EXCEPT FOR SITE UTILITY EXTENSIONS. (SEE SHEET SP-1)
7 SEE LANDSCAPE DRAWINGS FOR ALT. #1.

KEYED NOTES

1 SAW CUT AND REMOVE EXIST. CONC. WALK. PROVIDE NEW WALK (OR LANDSCAPING) AS SHOWN.
2 EXTEND NEW 10" CONC. WALK TO MEET EXISTING WALK TO THE EAST.
3 AT OWNERS OPTION, EXIST. SOD TO BE REMOVED BY COLLEGE. CONTRACTOR TO STRIP AND STOCKPILE TOPSOIL PRIOR TO GRADING. REGRADE AS SHOWN. PROVIDE 4" MIN. TOPSOIL OVER ALL LANDSCAPED AREAS. SEE LANDSCAPING SHEET L-1. REMOVE SOD IF OWNER ELECTS NOT TO.
4 TEMPORARY ENCLOSURE FENCE.
5 REGRADE EXIST. GRAVEL PARKING LOT AND HILLSIDE. PROVIDE 6" MIN. IMPORTED TOPSOIL AS PART OF FINAL GRADING.
6 REMOVE EXIST. LIGHT POLE. SEE SHEET E-2.
7 NOT USED.
8 GRADE HILLSIDE WEST AND SOUTH OF STAIR TOWER TO CREATE A UNIFORMLY SLOPING AMPHITHEATER.
9 PROVIDE NEW CURB AND GUTTER AT EAST EDGE OF EXIST. ROADWAY. MATCH FLOWLINE TO FLOWLINE OF EXIST. CURB AND GUTTER. PROVIDE 6" GRAVEL BASE AND 3" ASPHALT PATCH FROM NEW CURB AND GUTTER TO EXIST. ASPHALT. SAW CUT EXIST. ASPHALT PAVING AND REMOVE WHERE REQUIRED FOR INSTALLATION OF NEW CURB AND GUTTER. REGRADE BEHIND CURB TO ALLOW FOR INSTALLATION OF SOD OR CONC. WALK AS SHOWN.
10 NEW 4" CONC. WALK. SEE 6/SD-2. PLACE EXP. JOINTS AT 15'-0" O.C. MAX., CONTRACTION JOINTS AT 5'-0" O.C.
11 GUARD POSTS. SEE 8/SD-2.
12 REMOVE EXIST. CONC. CURB WALL AND PAVING. EXTEND SOUTH CURB WALL WEST TO MEET NEW CONC. WALK. MATCH EXIST. CURB WALL CONSTRUCTION.
13 EXACT BUILDING ALIGNMENT TO BE COORDINATED WITH INTERIOR OF EXIST. BUILDING. SEE SHEET A-3 FOR ALIGNMENT LOCATION.
14 REMOVE EXIST. WINDOW WELL AND STAIRS.
15 NEW 6" THICK CONC. WALK OVER COMPACTED BASE. EXP. JOINTS AT 15'-0" O.C. MAX. AND CONTRACTION JOINTS AT 5'-0" O.C.
16 PATCH ASPHALT AT ROADWAY WHERE NEW UTILITY LINES CROSS. SEE SHEET SP-1.
17 SAW CUT AND REMOVE EAST CONC. WALK AND CURB AND GUTTER. PROVIDE NEW CONC. DRIVE APPROACH. SEE 11/SD-2. EXIST. CATCH BASIN TO REMAIN. POUR NEW DRIVE APPROACH AROUND IT. (OR AT CONTRACTORS OPTION REMOVE AND REPLACE CATCH BASIN).
18 PROVIDE NEW TRAFFIC GUARDRAIL BEGINNING AT WEST END OF EXIST. GUARDRAIL AND EXTENDING APPROX. 216' S.W. GUARDRAIL TO MATCH EXIST. SEE 13/SD-2
19 9'-0" X 2'-0" CONC. AREAWAY SEE 14/SD-2
20 DUMPSTER ENCLOSURE SEE 15/SD-2.
21 REMOVE EXIST TREE.
22 REMOVE EXIST. 24" Ø CMP.
23 8' LONG BENCH SEE 7/SD-3. SET ON A 2'-6" X 10' X 0'-4" CONC. PAD CENTERED BETWEEN PIERS.
24 REMOVE EXIST. ASPHALT AT TUNNEL ENTRY.
25 CREATE DRAINAGE SWALE AT TOP OF HILL TO CHANNEL SURFACE WATER TO CONCRETE WATER WAY AT RETAINING WALL.
26 NEW FIRE HYDRANT, SEE SHEET SP-1.
27 EXISTING SANITARY SEWER MANHOLE.
28 NEW SANITARY SEWER MANHOLE, SEE SHEET SP-1.
29 EXISTING STORM DRAIN MANHOLE.
30 NEW STORM DRAIN MANHOLE, SEE SHEET SP-1 & SP-2.
31 EXISTING STORM DRAIN CLEANOUT BOX.
32 NEW STORM DRAIN BOX, SEE SHEET SP-1 & SP-2.
33 NEW GROUND MOUNTED BUILDING SIGN. SEE 11/SD-3.
34 AS PART OF ALT. #4 PROVIDE NEW CURB & GUTTER (SEE 10/SD-3) ALONG WEST SIDE OF EXIST. ROADWAY NORTH TO STAIRWAY AS SHOWN. PATCH/EXTEND EXIST. ASPHALT TO NEW GUTTER. SET CURB & GUTTER GRADES TO MATCH EXIST. ROADWAY.
35 REMOVE EXIST. CONC. WATERWAY.

EXISTING GYMNASIUM
MAIN FIN. FL. ELEV. = 4733.77

ALT. #3 CONTRACT LIMIT LINE

FOR ALT. #3 SEE SHEET SD-4

EXISTING PARKING TO REMAIN

NEW C & G. ALT. #3

EXIST. C & G.

EXIST. WALK TO REMAIN

NEW ENTRY STRUCTURE

NEW ROOF STRUCTURE

REMOVE EXIST. CONC. RAMP.

R=46'

BM: 4731.56
TOP CORNER OF EXIST. CONC. WALL

NEW WALK

FOR ENLARGED PLAZA PLAN SEE SHEET A-5

PATCH ASPHALT PAVING AT NEW CONST. (TYP.)

APPROX. EDGE OF EXIST. ASPHALT

CONTRACT LIMIT LINE

REVISE GRADING PART OF BASE CONTRACT

FOR CONTINUATION OF NEW C & G. SEE ALT. #3 SHEET SD-4

APPROX. END OF EXIST. TRAFFIC GUARD RAIL

APPROX. EDGE OF EXIST. ASPHALT PAVING

4100 SOUTH

ALT. #4 CONTRACT LIMIT LINE

PLAZA (LINK BLDG.)

NEW STAIRS SEE B/SD-2

EXIST. TREE TO REMAIN

NEW CONC. WALK

EXIST. CONC. WALK & STAIR SYSTEM TO REMAIN

CONTRACT LIMIT LINE

REMOVE & RELOCATE EXIST. 25 FT. HIGH CHAIN LINK BACKSTOP

NEW PHYSICAL EDUCATION FACILITY
FIN. FL. ELEV. = 4707.6 (100'-0")

FOR ENLARGED PLAN OF THIS AREA SEE A/SD-2

RELOCATED BACKSTOP

REMOVE & RELOCATE EXIST. 25FT. HIGH CHAIN LINK BACKSTOP

NEW CONC. WALK

ROOF LINE

GRID LINE

700'-0" TO GRID 2 (FACE OF EXIST. BLDG.)

R.W. PLANTING SEE SHEET L1

EXP. JT. (TYP.)

TEMP. ENCLOSURE FENCE. SEE SPEC.

CONTRACTOR STAGING AREA

PROVIDE NEW CONC. C & G. PATCH ASPHALT ROADWAY INTO NEW C. & G.

NEW 4" THICK CONCRETE WALK PER C.D.

ACCESS GATE

NEW CONC. C & G.

EXIST. CONC. C & G.

EXIST. CONC. WALK TO REMAIN

EXIST. C & G. TO REMAIN

CONTRACT LIMIT LINE

EXISTING STREET

NEW RETAINING WALL SEE C & D/SD-2

153'± FROM GRID LINE "1"

520'± FROM GRID LINE "A"

FIFE GUARDRAIL @ TOP OF WALL SEE C & D/SD-2 PROVIDE SHORING AS REQ'D

CONC. WATERWAY SEE 1/SD-2

CONTRACT LIMIT LINE

PROVIDE NEW CONC. WALK SEE DETAIL 6/SD-2

RELOCATED BACKSTOP

NEW CONC. C & G. ALT. #4

SEE CIVIL FOR MODIFICATION TO ACCESS ROAD

ALT. #4 CONTRACT LIMIT LINE

FOR ALT. #4 SEE SHEET SD-4

EXIST. C & G. NEW C & G. ALT. #4

REVISED GRADING BEYOND CONTRACT LIMIT LINE BY ALT. #4

EXISTING PARKING

SITE PLAN

A SD-1 SITE PLAN 1" = 30'-0"

NORTH

RECORD DOCUMENTS JUN 1 1990

THESE DOCUMENTS HAVE BEEN REVISED TO RECORD INFORMATION SUBMITTED BY THE CONTRACTOR. WHILE THEY ARE ASSUMED TO BE RELIABLE THE ARCHITECT DOES NOT GUARANTEE THEIR ACCURACY.

NOTE: THIS SHEET IS COMPRISED OF DRAWINGS AND DETAILS FROM THE ORIGINAL 1990 BUILDING CONSTRUCTION CONFORMED SET & HAS BEEN INCLUDED FOR INFORMATIONAL PURPOSES ONLY. CONDITIONS SHOWN ON THIS SHEET HAVE NOT BEEN VERIFIED WITH EXISTING CONSTRUCTED CONDITIONS.

STATE OF UTAH REGISTERED LICENSED ARCHITECTS NO. 107

JONES / RICHARDS & ASSOCIATES
ARCHITECTURE CONSTRUCTION MANAGEMENT PLANNING
(801) 364-3333 OGDEN, UTAH 823 - 28TH STREET

REVISED: 4 BULLETS 6-90

PROJECT NUMBER: 8403 DATE: 6-21-88 DRAWN BY: SCOTT CHECKED BY: JWP

PROJECT: PHYSICAL EDUCATION FACILITY
WEBER STATE COLLEGE

SHEET TITLE: SITE PLAN

SHEET NO. SD-1

0000TVSD1
Weber State College: Physical Education Facility - RW-84-059
Site Plan - 26975

11/SD-2 DRIVE APPROACH
1/8" = 1'-0"

7/SD-2 TRANSITION DETAIL
NO SCALE

3/SD-2 CATCH BASIN
1/2" = 1'-0"

NOTES:
1. PROVIDE 3/4" "V" GROOVE CONTROL JT. @ 8" FROM TOP OF WALL HORIZ. AND @ 10'-0" O.C. VERTICALLY.
2. SPECIAL CONC. FINISH ON EXPOSED SURFACES. (SEE SPEC.)
3. PROVIDE 1 1/2" DIA. PVC PIPE WEEP HOLES @ 10'-0" O.C. W/ GALV. WIRE SCREEN & WASHED GRAVEL BACKING WHERE WALL HT. > 1'-6".

HT.	T	W	B	R-1	R-2	R-3	R-4	R-5
TO 1'-6"	8"	2'-8"	7"	#4 @ 18"	#4 @ 18"	#4 @ 10"	4 #4	#4 @ 18"
TO 3'-0"	• 8"	3'-5"	9	#4 @ 18"	#4 @ 18"	#4 @ 12"	4 #4	#4 @ 18"
TO 4'-0"	8"	4'-6"	16"	#4 @ 18"	#4 @ 18"	#4 @ 12"	5 #4	#4 @ 18"
TO 6'-0"	8"	6'-3"	26"	#4 @ 13"	#4 @ 13"	#4 @ 12"	5 #5	#4 @ 13"

• UNLESS NOTED OTHERWISE

1/SD-2 RETAINING WALL
3/4" = 1'-0"

12/SD-2 DRIVE SECTION
3/8" = 1'-0"

8/SD-2 GUARD POST
1/2" = 1'-0"

4/SD-2 CONC. WALL CONTROL JT.
3" = 1'-0"

13/SD-2 TRAFFIC GUARD RAIL
3/4" = 1'-0"

9/SD-2 CONC. WALK DETAIL
3/4" = 1'-0"

5/SD-2 RAILING DETAIL
N.T.S.

NOTES
1. PROVIDE MTL. HDRL. @ TOP OF WALL AT S.E. CORNER OF SITE. SEE C & D/SD-2 SEE 5/SD2 FOR RAIL DETAIL.
2. SPECIAL CONC. FINISH ON EXPOSED SURFACES (SEE SPEC.)
3. WHERE HT VARIES USE A CONSTANT WALL THICKNESS DETERMINED BY MAX HT.
4. PROVIDE 1-1/2" Ø PVC PIPE WEEP HOLES @ 10'-0" O.C. W/ GALV WIRE SCREEN & GRAVEL BACKING WHERE HT. > 1'-6".
5. PROVIDE CONTROL JT. @ 10'-0" O.C. VERT. & 24" & 36" (12" & 20" @ N.W. WALL) FROM TOP OF WALL HORZ. SEE ELEV. SEE 4/SD2 FOR JOINT DETAIL.
6. PROVIDE EXP JTS @ 30'-0" MAX. SPACING.
7. EXTEND HORIZ. REINFORCING AROUND CORNERS OR ADD CORNER BARS & LAP 18" EACH WAY.
8. EVERY OTHER VERTICAL BAR MAY BE DISCONTINUED @ MID HT. ABOVE FOOTING FOR OVER 6'-0" STRUCT. HT. WALLS.
9. 1/3 OF VERTICAL BARS MAY BE DISCONTINUED @ .2H + 30 BAR DIA. AND 1/3 @ .4H + 30 BAR DIA. ABOVE FOOTING. MAX SPACING OF VERT. BARS 18" (MAX) FOR 11'-0" THRU 14'-0" HIGH WALLS. (H = STRUCT. HT. + 1'-6")

STRUCT. HT.	T	W	B	R-1	R-2	R-3	R-4	R-5
TO 1'-6"	8"•	2'-0"	5"	#4 @ 18"	#4 @ 18"	#4 @ 10"	4 #4	#4 @ 18"
TO 3'-0"	• 8"	2'-8"	5"	#4 @ 18"	#4 @ 18"	#4 @ 12"	4 #4	#4 @ 18"
TO 4'-0"	8"	3'-3"	5"	#4 @ 18"	#4 @ 18"	#4 @ 12"	4 #4	#4 @ 18"
TO 6'-0"	8"	4'-2"	12"	#4 @ 14"	#4 @ 14"	#4 @ 12"	4 #4	#4 @ 18"
TO 8'-0"	12"	5'-2"	12"	#4 @ 11"	#4 @ 11"	#5 @ 12"	5 #4	#4 @ 18"
TO 10'-0"	12"	5'-9"	16"	#5 @ 12"	#5 @ 12"	#5 @ 12"	5 #4	#4 @ 18"
TO 12'-0"	14"	7'-10"	20"	#6 @ 9"	#5 @ 9"	#6 @ 12"	6 #6	#4 @ 9"

• UNLESS NOTED OTHERWISE

2/SD2 RETAINING WALL
3/4" = 1'-0"

14/SD-2 CONC. AREA WAY DETAIL
1" = 1'-0"

10/SD-2 EXTERIOR STAIR DETAIL
3/4" = 1'-0"

15/SD-2 DUMPSTER ENCLOSURE DETAIL
1/4" = 1'-0"

NOTE: 4" GRAVEL FILL UNDER ALL CURBS, WALKS AND DRIVES.

6/SD-2 TYP. CONC. WALK
NO SCALE

16/SD-2 WALL SECTION
1/2" = 1'-0"

D/SD-2 WEST ELEV. - RETAINING WALL (NORTH REV.)
1/8" = 1'-0"

C/SD-2 N.W. ELEV. - RETAINING WALL
1/8" = 1'-0"

KEYED NOTES
1. REMOVE SPLAYED CONC. WALL AND FTG.
2. NEW 6" TH. CONC. WALK. SEE 6/SD-2 (SIM.) EXTEND NORTHEAST TO TIE TO EXISTING WALK.
3. NEW CONCRETE RETAINING WALL.
4. REMOVE EXIST. CONC. WALK ALONG ENTIRE WEST SIDE OF EXIST. BLDG. PROVIDE NEW WALK AS SHOWN. SAW CUT EXIST. CONC. OR REMOVE AT NEAREST JOINT.
5. REMOVE EXIST. CONC. STAIR, WALK AND LANDINGS.
6. REMOVE EXIST. ASPHALT WALK.
7. REMOVE EXIST. ASPHALT APRON IN FRONT OF TUNNEL. PROVIDE 6" CONC. APRON AND WALK AS SHOWN.
8. REMOVE EXIST. LIGHT AND POLE. SEE ELEC.
9. 9' X 2' CONC. AREA WAY WITH GRATING. SEE 14/SD-2.
10. GUARD POST SEE 8/SD-2.

A/SD-2 PARTIAL ENLARGED SITE PLAN
1" = 20'

B/SD-2 STAIR SECTION
1/8" = 1'-0"

0000TVSD2
Weber State College; Physical Education Facility - RW-84-058
Site Details - 26676

RECORD DOCUMENTS JUN 21 1990
THESE DOCUMENTS HAVE BEEN REVISED TO RECORD [illegible] SUBMITTED BY THE CONTRACTOR [illegible] TO BE RELIABLE THE ARCHITECT DOES NOT GUARANTEE THEIR ACCURACY.

NOTE: THIS SHEET IS COMPRISED OF DRAWINGS AND DETAILS FROM THE ORIGINAL 1990 BUILDING CONSTRUCTION CONFORMED SET & HAS BEEN INCLUDED FOR INFORMATIONAL PURPOSES ONLY. CONDITIONS SHOWN ON THIS SHEET HAVE NOT BEEN VERIFIED WITH EXISTING CONSTRUCTED CONDITIONS.

BRETT J. RICHARDS No. 1107 LICENSED ARCHITECT

jra JONES / RICHARDS & ASSOCIATES
ARCHITECTURE (801) 394-3033
PLANNING 533 - 26TH STREET
CONSTRUCTION MANAGEMENT OGDEN, UTAH

REVISED: AS BUILTS 6-90
PROJECT NUMBER: [illegible]
DATE: [illegible]
DRAWN BY: K. SEKO
PROJECT: PHYSICAL EDUCATION FACILITY WEBER STATE COLLEGE
SHEET TITLE: SITE DETAILS
SHEET NO. SD-2

FOR PLAN VIEW SEE 13/SD-3
8" x 2" x 1/4" STL. TUBE
SEE X-2 FOR BASE DETAIL (TYP) OR ADDENDUM
NOTE: ADJUST LENGTH OF VERT. MEMBERS TO COMPENSATE FOR 2 1/2 % DECK SLOPE. SHADE STRUCTURE TO BE LEVEL.
F SHADE STRUCTURE (SIDE ELEV.) 1/4" = 1'-0" (TYP. OF 3)
E SHADE STRUCTURE (FRONT ELEV.) 1/4" = 1'-0" (TYP. OF 3)
2x4 R.W. @ 3" O.C.
8"x8"x3/16" STL. TUBE
TOP OF STL. 138'-4"
8"x2"x1/4" CONT. STL. TUBE
20'-0" (TYP. OF 2 BAYS) NORTH UNIT
19'-0" ± (TYP. OF 2 BAYS) SOUTH UNIT (FIELD VERIFY)
FTG. CONDITIONS VARY SEE C/SD-3
D SIDEWALK ENTRY STRUCTURE (E-W ELEV.) 1/4" = 1'-0" (TYP. OF 2)
MITER CUT, WELD, FILL & GRIND SMOOTH ALL JOINTS (TYP.)
8"x8" STL. TUBE
TYP. @ NORTH UNIT
24"x24"x2'-8" CONC. FTG. SLOPE TOP SURFACE 1/2" TO OUTER EDGES. CHAMFER EDGES 3/4" (TYP. @ SOUTH UNIT)
C SIDEWALK ENTRY STRUCTURE (N-S ELEV.) 1/4" = 1'-0" (TYP. OF 2)
GRID LINE
TAPER CONC. SLAB @ 1/20 NET SLOPE MAX. UNTIL SLAB = 4" THICKNESS
T.O.M. ELEV. 124'-8"
MASONRY WALL BELOW
B ENTRY STRUCTURE SECTION 1/4" = 1'-0"
8"x8" ϕ STL. TUBE
SCUPPER SEE 5/A-7
MITER CUT, WELD FILL & GRIND SMOOTH ALL JTS. (TYP.)
ELEV. 138'-4"
8" ϕ TUBE
FINISHED PLAZA
TOP OF MASONRY WALL ELEV. 124'-8"
A ENTRY STRUCTURE 1/4" = 1'-0"
NOTE: THIS SHEET IS COMPRISED OF DRAWINGS AND DETAILS FROM THE ORIGINAL 1990 BUILDING CONSTRUCTION CONFORMED SET & HAS BEEN INCLUDED FOR INFORMATIONAL PURPOSES ONLY. CONDITIONS SHOWN ON THIS SHEET HAVE NOT BEEN VERIFIED WITH EXISTING CONSTRUCTED CONDITIONS.
2x8 RW TOP, W/ EASED EDGES, MITER CORNERS, ATTACH W/ 2 3/4" #12 SCREWS @ 6" O.C. STAGGERED, COUNTERSINK.
PLANTER SIZE
2x4 RW TOP CONT. PL, MITER CORNERS
1x2 RW BATTEN
4x4 RW @ EA. CORNER
SEE PLAZA PLAN FOR SIZE OF PLANTER
2x4 RW VERT. SLATS @ 3 1/2" O.C., ATTACH W/(2) 2 3/4" LAG SCREWS T.&B.
4x4 RW BOT. PL, MITER CORNERS
10 MIL. POLY CONT WRAP LAP EDGES 6" MIN. & GLUE
6 PLANTER DETAIL 1 1/2" = 1'-0"
SHAPE 2x6
FLASHING
B.U.R.
LINE OF ROOFING @ SCUPPER SEE 5/A-7
RIGID TAPERED INSUL.
PREFINISHED MTL. GRAVEL STOP
MTL. DECK
∠ 2"x2" LEDGER CONT. BETWEEN C
8" STEEL CHANNEL
138'-4"
12"x2"x3/16" STL. TUBE MITER CORNER, WELD & GRIND SMOOTH
HAT CHANNELS @ 16" O.C.
3/4" T&G R.W. (FIRE TREATED)
5 CANOPY EDGE DETAIL 1 1/2" = 1'-0"
2x4 RW @ 3" O.C.
END ATTACHMENT PL @ LAST RW
8" x 2" STL. TUBE
MITER CORNER, WELD & GRIND SMOOTH (TYP.)
4 SHADE STRUCTURE DETAIL 1 1/2" = 1'-0"
2x4 RW. SPACER
2x4 RW. @ 3" O.C., NAIL TO SPACER W/(2) 16 d GALV. NAILS
1/4"x3" x CONT. STL. PL W/ 1 1/2" #12 SCREWS @ 6" O.C., COUNTERSINK. WELD PL TO TUBE W/ 1/4" FILLET WELD, TOP & BOT.
8"x2" STL. TUBE
3 SHADE STRUCTURE DETAIL 1 1/2" = 1'-0"
8"x8" ϕ TUBE COL.
CONC. BASE
3/4" CHAMFER
CUT PAVER PEDESTAL
CONC. PAVER
(2) #4 BARS
WELD #4 x18" BARS EA. SIDE OF COL.
12"x12"x3/8" STL. PL WELDED TO COL.
CONC. CURB WALL WHERE OCCURS
SEE X-2 & DWG ADD-2 FOR REVISED BASE DETAILS ADD #1-2-14
2 BASE DETAIL 3/4" = 1'-0"
1 BASE DETAIL 3/4" = 1'-0"
PAN JOINT
#4 ϕ BARS 6" O.C.
PLAN
TOP OF CURB
LIP OF GUTTER
PL OF GUTTER
BASE
FRONT ELEVATION
3"-1" MINUS GRAVEL
#4 ϕ BARS @ 6" O.C.
SECTION A-A
PAN JOINT EVERY 10'-0" FEET
EXPANSION JOINT EVERY 40'-0" FEET
REBAR EVERY 20'-0" FEET
1/2" EXPANSION JOINT
EXPANSION JOINT DETAIL
10 CURB & GUTTER DETAILS 3/4" = 1'-0"
RUBBISH CAN
14" RADIUS (OUTSIDE)
EXPOSED AGG. FINISH
SMOOTH FINISH
20 GAL. RUBBISH CAN, 20 GA. GALV. OR HEAVIER.
4-1" ϕ DRAIN HOLES
SECTION
9 RUBBISH CONTAINER DETAIL 1" = 1'-0"
9" RADIUS
20 GA. GALV. BOWL
WASHED FINE WHITE SAND
(4) 1/2" ϕ HOLES IN BOT. OF PAN. LINE PAN WITH FILTER FABRIC
1'-0" ϕ FLAT PORTION
8 ASH CAN DETAIL 1" = 1'-0"
CAST ALUM. SUPPORTS 12" IN FROM ENDS & 2'-0" O.C. MATCH SIZE & STYLE OF EXIST. CAMPUS BENCH SUPPORTS
(2) #4 LENGTHWISE & #4 @ 12" O.C. CROSSWISE
POUR 2'-0" x 8'-0" (6'-0" @ 6' BENCH) CONC. BASE AT EACH BENCH. SHIM LEGS 2" MIN. ABOVE INSUL. TO LEVEL BENCH.
CONC. PAVERS
CONC. DECK
8"x8"x1/2" STL. BOT. PL AT EA. LEG
2"x2" OAK SLATS (SEE DETAIL ABOVE)
CAST ALUMINUM SUPPORTS (SEE NOTE ON SECTION) (3 ON 6', 4 ON 8')
SECTION (AT PLAZA)
FOR PLAZA PEDESTAL SEE SECTION
ELEVATION
FOR AT GRADE BENCHES EXTEND SUPPORT 12" BELOW GRADE
DRILL SUPPORT FOR (2) #4 RODS x 0'-8"
FOR AT GRADE BENCHES PROVIDE 18" ϕ x 18" DEEP FTG.
1/8" R TOP EDGES & ENDS. DRILL & ATTACH THRU SUPPORT WITH 1/2" x 4" G.I. RHWS CTSK 2/ BOARD @ EACH SUPPORT.
TYPICAL WOOD SLAT DETAIL FULL SIZE DETAIL
SEE PLAN FOR BENCH LENGTHS
7 BENCH DETAIL 1" = 1'-0"
GUARDRAIL, SEE 5/SD-2
TOP OF WEST WALL 126'-9" (TOP OF DIAGONAL WALL VARIES SEE ELEV.)
3/4" CHAMFER (TYP.)
#4 BAR @ 16" O.C. B.W.
NEW COMPACTED FILL
#4 DOWELS @ 16" O.C., DRILL & EPOXY, GROUT 8" INTO EXIST. CONC. WALL
6" CONC. WALL BUILT OVER FACE OF EXIST. WALL
EXIST. CONC. WALL
3/8" ϕ POWER ACTIVATED STUD, DRIVEN INTO EXIST. CONC. WALL @ 24" O.C. B.W., STUD TO EXTEND 1" MIN. INTO NEW CONC. & 1 1/2" MIN. INTO EXIST.
BEAR NEW WALL ON EXIST. FTG.
14 TUNNEL WALL SECTION 3/4" = 1'-0"
8"x2"x1/4" STL. TUBE
8"x8"x3/16" STL. TUBE
2"x4" R.W. @ 3" O.C.
13 SHADE STRUCTURE PLAN VIEW 1/8" = 1'-0"
LIGHT POLE
3/4" CHAMFER
ANCHOR BOLTS BY POLE MFG.
#3 TIES
SOIL
FLASH SIDES OF BASE
DRAIN BD.
CONC. DECK
(4) #4 DOWELS
POUR MEMBRANE CONTINUOUSLY UNDER POLE BASE
12 LIGHT POLE BASE DETAIL 3/4" = 1'-0"
DBL 2x4 W/ FILLER
1/2" ϕ THRU BOLT
METAL SIGN
GRND. LINE
CONC.
11 SIGN DETAIL (TYP. OF 2) 3/8" = 1'-0"
NOTES:
-METAL SIGN = 14 GA. STEEL 2'-0" H x 4'-0" W
-ALL 2x4'S & 4x4'S TO BE REDWOOD PAINT TO MATCH BENCH COLOR
-ANCHOR SIGNS TO WOOD MEMBERS WITH 1/4" GALV. BOLTS & WASHERS. PAINT BOLT HEADS & WASHERS TO MATCH SIGN.
-SIGN COLORS
- BACKGROUND = PURPLE PAINT
- LETTERING = WHITE PAINT
- PAINT REAR OF SIGN SAME COLOR AS FACE BACKGROUND
-LETTERING STYLE = HELVETICA MEDIUM
-ALL LETTERS TO BE UPPERCASE
- FIRST LETTER OF EACH WORD = 4" H.
- OTHER LETTERS = 3" H.
-COORDINATE SIGN LOCATION WITH ARCHITECT
00001VSD3
Weber State College; Physical Education Facility - RW.84-058
Site Details - 26677
RECORD DOCUMENTS JUL 2 1990
THESE DOCUMENTS HAVE BEEN REVISED TO RECORD INFORMATION SUBMITTED BY THE CONTRACTOR. WHILE THEY ARE ASSUMED TO BE RELIABLE THE ARCHITECT DOES NOT GUARANTEE THEIR ACCURACY.
BRETT J. RICHARDS No. 1107 LICENSED ARCHITECT
JONES / RICHARDS & ASSOCIATES
ARCHITECTURE (801) 394-3033
PLANNING 533 - 26TH STREET
CONSTRUCTION MANAGEMENT OGDEN, UTAH
REVISED: AS BUILT 7-90
PROJECT NUMBER:
DATE: 8-21-88
DRAWN BY: R. BERTOLDI
PROJECT: PHYSICAL EDUCATION FACILITY WEBER STATE COLLEGE
SHEET TITLE: SITE DETAILS
SHEET NO. SD-3

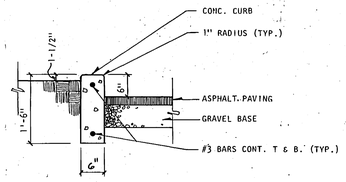

1 SD-4 **CURB WALL DETAIL**
3/4" = 1'-0"

NOTE:
POST SIGN 9" X12" MIN. 3/16" ANODIZED ALUM. WITH BLUE BAKED ENAMEL BACKGROUND. SIGN SHALL HAVE HANDICAPPED LOGO. SIGN SHALL READ "HANDICAPPED PARKING ONLY."

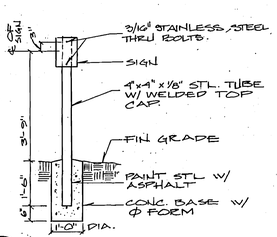

2 SD-4 **HANDICAPPED PARKING SIGN**
½" = 1'-0"

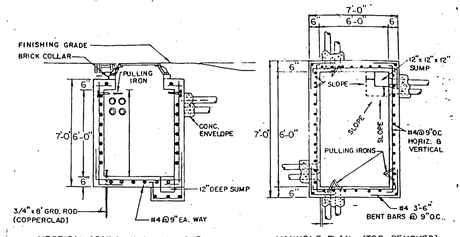

VERTICAL SECTION THRU MANHOLE

MANHOLE PLAN (TOP REMOVED)

STRUCTURAL NOTES
(for manholes and handholes)

1. ALL REINFORCEMENT BARS FOR MANHOLES & HANDHOLES SHALL BE # 4.
2. TOP SLAB REINFORCEMENT CONSISTS OF BOTTOM BARS PLACED AS SHOWN. SHORT SPAN BARS SHALL BE ON THE BOTTOM LAYER.
3. BEND & PLACE ALL REINFORCEMENT SO THAT IT SHALL BE 2" CLEAR OF ALL EXTERIOR SURFACES, 1-1/2" CLEAR OF ALL INTERIOR AND FLOOR SURFACES AND 1" CLEAR OF BOTTOM SURFACES OF TOP SLAB.
4. STRUCTURES SHALL BE OF REINFORCED CONCRETE. CONCRETE SHALL BE 4,000 P.S.I. AT 28 DAYS UNLESS OTHERWISE SPECIFIED.

ELECTRICAL NOTES

1. MANHOLE SIZES SHALL BE INCREASED MINIMUM TO 8'-0" WIDE 12'-0" LONG AND 7'-6" DEEP WHERE PERFORMED ELBOWS ARE USED.

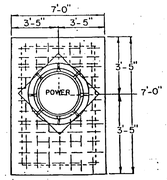

TOP OF MANHOLE

3 SD-4 **POWER MANHOLE DETAILS**
NTS.

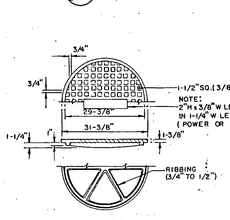

COVER

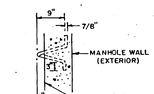

PULLING IRON

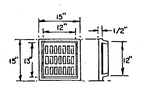

SUMP FRAME & COVER

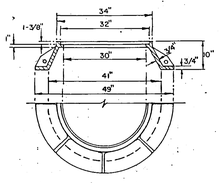

FRAME

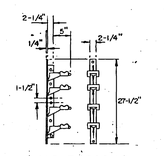

CABLE RACK

NOTE: FASTEN TO ALL WALLS OF MANHOLE BY MEANS OF 2-1/2" x 1/2" BOLTS & EXPANSION SHIELDS.

4 SD-4 **MANHOLE HARDWARE DETAILS**
NTS.

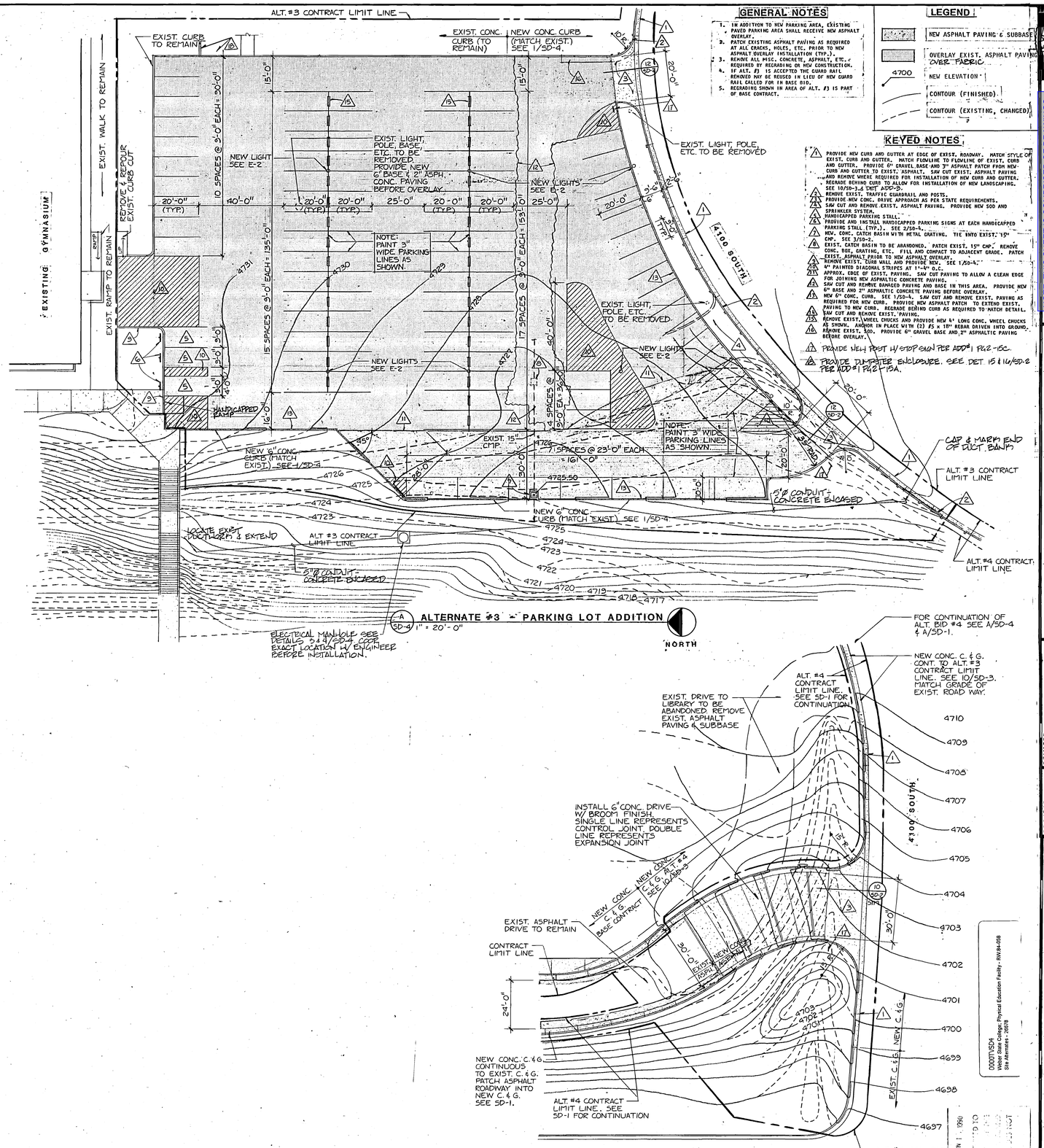

A SD-4 **ALTERNATE #3 - PARKING LOT ADDITION**
1" = 20'-0"

NORTH

B SD-4 **ALTERNATE #4 - NEW ROADWAY APPROACH**
1" = 20'-0"

NORTH

NOTE: THIS SHEET IS COMPRISED OF DRAWINGS AND DETAILS FROM THE ORIGINAL 1990 BUILDING CONSTRUCTION FOR INFORMATIONAL PURPOSES ONLY. CONDITIONS SHOWN ON THIS SHEET HAVE NOT BEEN VERIFIED WITH EXISTING CONSTRUCTED CONDITIONS.

BRENT J. JONES No. 7107 REGISTERED PROFESSIONAL ENGINEER STATE OF UTAH

jra JONES / RICHARDS & ASSOCIATES
ARCHITECTURE (801) 394-3023
74 MANNING 532 - 26TH STREET
CONSTRUCTION MANAGEMENT 621 E. 12TH

REVISED: As Builts 6-90

PROJECT NUMBER: 8403 DATE: 6-21-88 DRAWN BY: K. SECO

PROJECT: PHYSICAL EDUCATION FACILITY
WEBER STATE COLLEGE

SHEET TITLE: SITE ALTERNATES

DOOOTVSD4
Weber State College, Physical Education Facility - RW-84-058
Site Alternates - 20016

JUN 1, 1990

SHEET NO. SD-4

KEYED NOTES

1. MAKE A HOT TAP CONNECTION TO THE EXISTING WATER LINE, SEE DETAIL 9/SP-4.
2. INCREASE FROM 6" TO 8".
3. THRUST BLOCK, TYPICAL. SEE DETAILS 10, 11 AND 12 ON SP-4.
4. CAP OR PLUG EXISTING SERVICE LINE TO BE ABANDONED.
5. EXISTING UTILITY TO BE REMOVED.
6. EDGE OF ROOF OVERHANG, TYPICAL.
7. FOR CONTINUATION OF PIPING, SEE SHEET P-3.
8. FOR CONTINUATION OF PIPING, SEE SHEET P-1.
9. FOR CONTINUATION OF PIPING, SEE SHEET P-2.
10. CAP EXISTING 6" PVC SUB DRAIN LINE AIR TIGHT.
11. EXISTING MONITORING WELL TO BE REMOVED.
12. PLUG ABANDONED LINES IN MANHOLE.
13. FIRE HYDRANT, TYPICAL. SEE DETAIL 14/SP-4.
14. MAKE NEW CONNECTION TO EXISTING UTILITY.
15. NEW VALVE WITH C.I. BOX AND COVER TO FINISHED GRADE, TYPICAL.
16. REPAIR DISTURBED AREAS TO MATCH EXISTING GRADE AND REPLACE IMPROVEMENTS TO MATCH EXISTING UNLESS NOTED OTHERWISE.
17. VACUUM SUMP POT. SEE DETAIL 18/SP-4.
18. REPLACE STORM DRAIN UNDER BUILDING WITH SAME SIZE DUCTILE IRON PIPE FIELD VERIFY SIZE.
19. ONE 550 GALLON DOUBLE WALL FRP DIESEL STORAGE TANK. SEE DETAILS FOR INSTALLATION. EXTEND 2" SUPPLY AND RETURN LINE TO DAY TANK. FOR DAY TANK SEE DIVISION 16. SEE DETAIL 13/SP-4 AND DETAILS 2, 3 AND 6 ON SHEET SP-5 FOR PUMP CONNECTIONS, LEAK DETECTOR CONNECTION, MANWAY FITTINGS, PUMP CONNECTIONS ETC.
20. SEE SHEET M-4 FOR CONTINUATION OF PIPES IN THE BUILDING.
21. NEW CHILLED WATER SUPPLY AND RETURN PIPING IN EXISTING TUNNEL. PROVIDE AND ADD ALL UNISTRUT SUPPORTS AND PIPE ROLLERS AS NECESSARY TO THE EXISTING PIPE RACK.
22. CONNECT NEW CHILLED WATER LINES TO EXISTING LINES, SEE LARGE SCALE PLAN, SHEET SP-2.
23. CAP FOR CONNECTION TO IRRIGATION SYSTEM. SEE SHEET L-3.
24. EXISTING PINE VALLEY WATER LINES SERVING EXISTING PLAYING FIELD IRRIGATION SYSTEM TO BE ABANDONED U.N.O. SEE SHEET L-3.
25. PIPING TO BE ABANDONED IN PLACE. PLUG OR CAP ALL ENDS WATERTIGHT TO PREVENT SUBSIDENCE.
26. CONSTRUCT NEW MANHOLE ON EXISTING UTILITY LINE.
27. EXISTING MANHOLE OR MINOR STRUCTURE TO REMAIN.
28. EXISTING MANHOLE OR MINOR STRUCTURE TO BE REMOVED.
29. EXISTING VACUUM SUMP POS TO BE REMOVED.
30. ~~ADJUST EXISTING~~ PROVIDE NEW MANHOLE TO NEW FINISHED GRADE. USE MINIMUM OF 1'-0" OF GRADE RINGS; OTHERWISE INSTALL NEW SECTIONS ON MANHOLE.
31. OBSERVATION WELL. SEE DETAIL 4/SP-5.
32. RISE FUEL OIL VENT AGAINST WALL. SEE DETAIL 7/SP-5.
33. FOR CONTINUATION OF PIPING SEE SHEET E-11. SLOPE PIPING AT 1% BACK TO TANK.
34. RAISE OR LOWER COVERS, LIDS, COLLARS, GRADE RINGS, ETC. AS REQUIRED TO ACCOMMODATE NEW FINISHED GRADE, TYPICAL.

0000TVSP1
Weber State College, Physical Education Facility - RW 84-058
Site Utility Plan - 26726

GENERAL NOTES SP-1

1. ALL UTILITIES, LOCATIONS, INVERTS, ELEVATIONS ETC. TAKEN FROM PLANS PREPARED BY OTHERS. THIS CONTRACTOR SHALL VERIFY ALL LOCATIONS, ELEVATIONS AND CROSSINGS WITHIN THE ZONE AND DEPTH OF CONSTRUCTION. THE ENGINEERS ASSUMES NO RESPONSIBILITY OR LIABILITY FOR THE ACCURACY OF THE INFORMATION SUPPLIED FROM OTHERS.
2. THE SURFACE IMPROVEMENTS AT FINISHED GRADE OF ALL UTILITY CONSTRUCTION OUTSIDE THE LIMITS OF NEW CONSTRUCTION SHALL BE RESTORED, BY THIS CONTRACTOR TO MATCH THE EXISTING IN QUALITY, COLOR, TYPE, STYLE, THICKNESS, ETC. WHERE NEW SURFACE IMPROVEMENTS ARE SHOWN ON OTHER DRAWINGS THE EXCAVATION SHALL BE RESTORED TO FINISHED GRADE IN ACCORDANCE WITH THE SPECIFICATIONS.

REGISTERED PROFESSIONAL ENGINEER No. 7122 KIM P. HARRIS STATE OF UTAH

NOTE: THIS SHEET IS COMPRISED OF DRAWINGS AND DETAILS FROM THE ORIGINAL 1990 BUILDING CONSTRUCTION CONFORMED SET & HAS BEEN INCLUDED FOR INFORMATIONAL PURPOSES ONLY. CONDITIONS SHOWN ON THIS SHEET HAVE NOT BEEN VERIFIED WITH EXISTING CONSTRUCTED CONDITIONS.

jra JONES/ RICHARDS & ASSOCIATES
ARCHITECTURE (801)394-3033
PLANNING 533 26TH STREET
CONSTRUCTION MANAGEMENT OGDEN, UTAH

REVISED: AS BUILTS 6-90

PROJECT NUMBER: 8403
DATE: [illegible]
DRAWN BY:

PROJECT: PHYSICAL EDUCATION FACILITY
WEBER STATE COLLEGE

SHEET TITLE: SITE UTILITIES PLAN

SHEET NO. SP-1

PARTIAL SITE PLAN

SCALE 1" = ~~1'-0"~~ 30'-0"

KEYED NOTES

1. THRUST BLOCK, TYPICAL. SEE DETAILS 10, 11 AND 12 ON SHEET SP-4.
2. CAP OR PLUG EXISTING UTILITY LINE TO BE ABANDONED.
3. EXISTING UTILITY LINE TO BE REMOVED EXACT LOCATION IS UNKNOWN. CONTRACTOR TO FIELD VERIFY AND PERFORM WORK.
4. EXISTING UTILITY LINE TO BE REMOVED.
5. NEW RETAINING WALL, SEE ARCHITECTURAL.
6. INSTALL NEW S.D. BOX ON EXISTING UTILITY LINE. SOLID COVER TO BE BURIED BELOW FINISHED GRADE.
7. EXISTING MANHOLE OR STRUCTURE TO BE REMOVED.
8. CONSTRUCT NEW MANHOLE OR STRUCTURE ON EXISTING UTILITY LINE.
9. EXISTING MANHOLE OR STRUCTURE TO REMAIN.

0000TVSP2
Weber State College, Physical Education Facility - RW 84-058
Partial Site Plan - 26727

GENERAL NOTES SP-2

1. ALL UTILITIES, LOCATIONS, INVERTS, ELEVATIONS ETC. WERE TAKEN FROM PLANS PREPARED BY OTHERS. THIS CONTRACTOR SHALL VERIFY ALL LOCATIONS, ELEVATIONS, AND CROSSINGS WITHIN THE ZONE AND DEPTH OF CONSTRUCTION. THE ENGINEERS ASSUME NO RESPONSIBILITY OR LIABILITY FOR THE ACCURACY OF THE INFORMATION SUPPLIED FROM OTHERS.
2. THE SURFACE IMPROVEMENTS AT FINISHED GRADE OF ALL UTILITY CONTRUCTION OUTSIDE THE LIMITS OF NEW CONSTRUCTION SHALL BE RESTORED, BY THIS CONTRACTOR TO MATCH THE EXISTING IN QUALITY, COLOR, TYPE, STYLE, THICKNESS, ETC., WHERE NEW SURFACE IMPROVEMENTS ARE SHOWN ON OTHER DRAWINGS THE EXCAVATION SHALL BE RESTORED TO FINISHED GRADE IN ACCORDANCE WITH THE SPECIFICATIONS.
3. STORM DRAIN LINES SHOWN ON THIS DRAWING AS EXISTING BUT NOT FOUND SHALL BE REMOVED. IN GENERAL THESE LINES FALL WITHIN THE MASS EXCAVATION OF THE SITE. IN GENRAL S.D. PIPING MAY BE ABANDONED IN PLACE WITH A PLUG WHEN THERE IS 3 FEET OF LOUVER OVER THE TOP OF THE LINE.

RECORD DOCUMENTS JUL 5 1990

THESE DOCUMENTS HAVE BEEN REVISED TO RECORD INFORMATION SUBMITTED BY THE CONTRACTOR, WHILE THEY ARE ASSUMED TO BE RELIABLE THE ARCHITECT DOES NOT GUARANTEE THEIR ACCURACY.

REGISTERED PROFESSIONAL ENGINEER No. 7122 KIM P. HARRIS STATE OF UTAH

NOTE: THIS SHEET IS COMPRISED OF DRAWINGS AND DETAILS FROM THE ORIGINAL 1990 BUILDING CONSTRUCTION CONFORMED SET & HAS BEEN INCLUDED FOR INFORMATIONAL PURPOSES ONLY. CONDITIONS SHOWN ON THIS SHEET HAVE NOT BEEN VERIFIED WITH EXISTING CONSTRUCTED CONDITIONS.

jra JONES/ RICHARDS & ASSOCIATES
ARCHITECTURE PLANNING CONSTRUCTION MANAGEMENT
(801)394-3033 533 26TH STREET OGDEN, UTAH

REVISED: AS BUILTS 6-90

PROJECT NUMBER: 8403

DATE:

DRAWN BY:

PROJECT: PHYSICAL EDUCATION FACILITY
WEBER STATE COLLEGE

SHEET TITLE: PARTIAL SITE PLAN

SHEET NO. SP-2

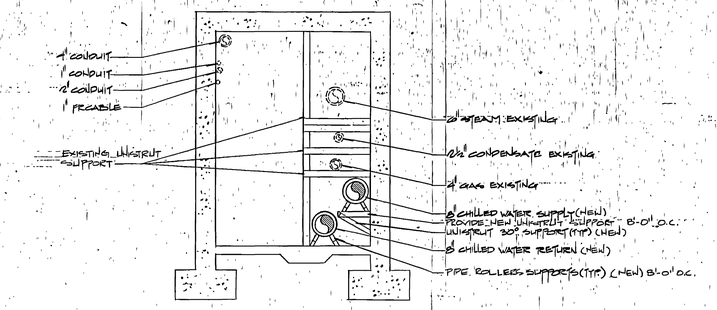

SECTION (C / SP-3)
SCALE 1/2" = 1'-0"

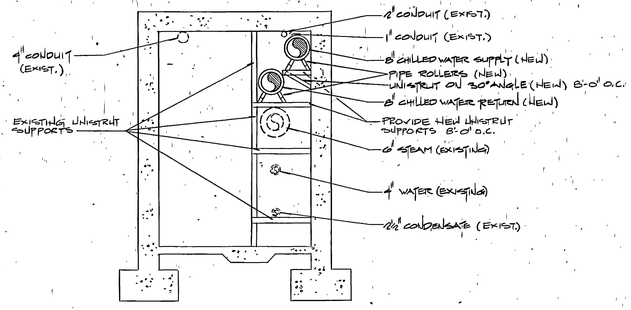

SECTION (B / SP-3)
SCALE 1/2" = 1'-0"

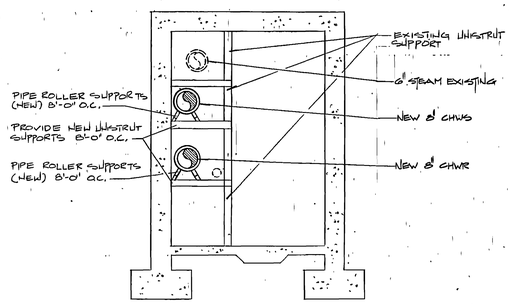

SECTION (A / SP-3)
SCALE 1/2" = 1'-0"

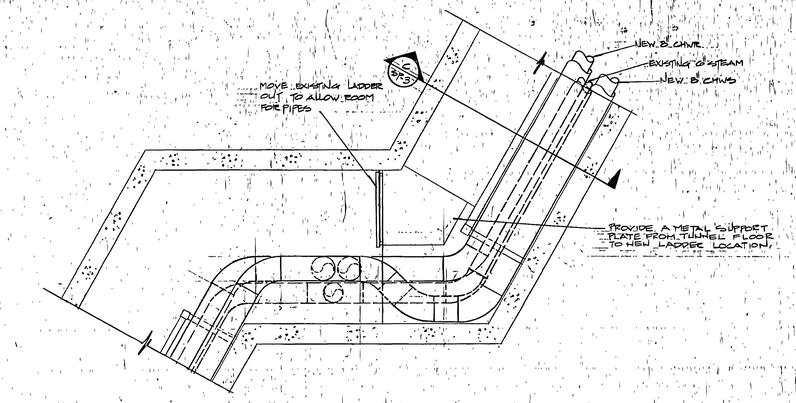

TUNNEL PLAN VIEW #3 (3 / SP-3)
SCALE 1/2" = 1'-0"

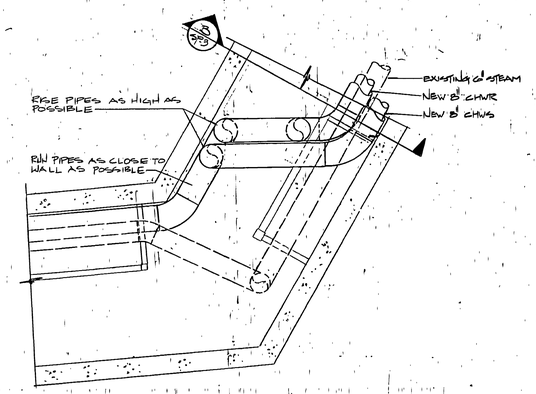

TUNNEL PLAN VIEW #2 (2 / SP-3)
SCALE 1/2" = 1'-0"

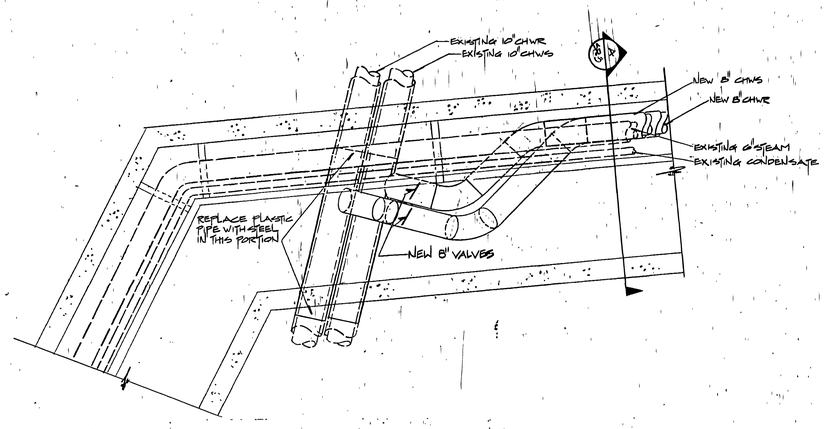

TUNNEL PLAN VIEW #1 (1 / SP-3)
SCALE 1/2" = 1'-0"

0000TVSP3
Weber State College, Physcal Education Facelty - RW 84-058
Enlarged Tunnel Plans & Section - 26728

RECORD DOCUMENTS JUL 3 1990

THESE DOCUMENTS HAVE BEEN REVISED TO RECORD INFORMATION SUBMITTED BY THE CONTRACTOR, WHILE THEY ARE ASSUMED TO BE RELIABLE THE ARCHITECT DOES NOT GUARANTEE THEIR ACCURACY.

REGISTERED PROFESSIONAL ENGINEER — No. 7125 — JOHN P. HARRIS — STATE OF UTAH

NOTE: THIS SHEET IS COMPRISED OF DRAWINGS AND DETAILS FROM THE ORIGINAL 1990 BUILDING CONSTRUCTION CONFORMED SET & HAS BEEN INCLUDED FOR INFORMATIONAL PURPOSES ONLY. CONDITIONS SHOWN ON THIS SHEET HAVE NOT BEEN VERIFIED WITH EXISTING CONSTRUCTED CONDITIONS.

jra JONES/ RICHARDS & ASSOCIATES
ARCHITECTURE (801)394-3033
PLANNING
CONSTRUCTION MANAGEMENT
533 26TH STREET OGDEN, UTAH

REVISED: AS BUILT 8-90

PROJECT NUMBER: 3403
DATE:
DRAWN BY:

PROJECT: PHYSICAL EDUCATION FACILITY
WEBER STATE COLLEGE

SHEET TITLE: ENLARGED TUNNEL PLANS & SECTION

SHEET NO. SP-3

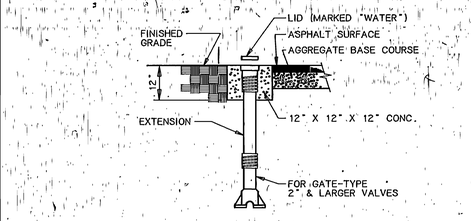

CAST IRON VALVE BOX DETAIL
NO SCALE — 16 SP-4

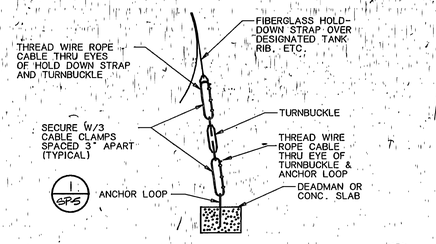

TURNBUCKLE DETAIL
NO SCALE — 13 SP-4

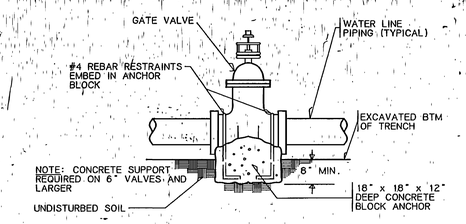

VALVE SUPPORT DETAIL
NO SCALE — 9 SP-4

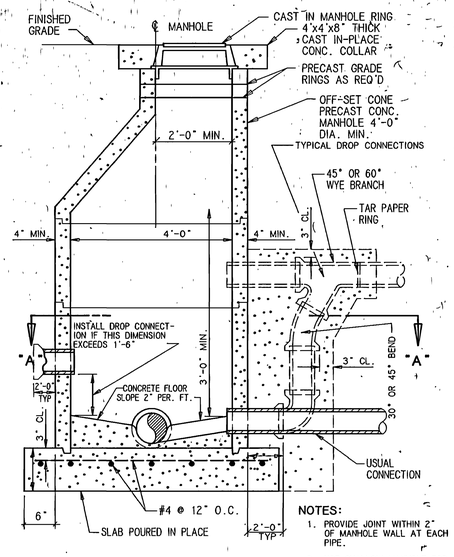

NOTES:
1. PROVIDE JOINT WITHIN 2" OF MANHOLE WALL AT EACH PIPE.
2. USE SHALLOW MANHOLE FOR DEPTHS 5'-0" OR LESS

SEWER MANHOLE SECTION
NO SCALE — 10 SP-4

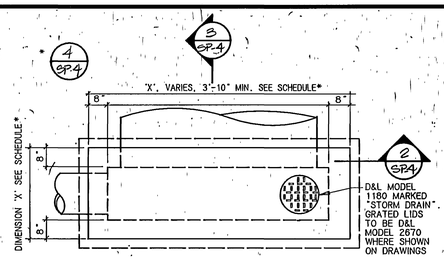

CLEANOUT BOX
NO SCALE — STORM DRAIN BOX TYPE 7 — 1 SP-4

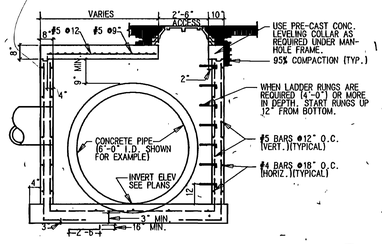

CLEANOUT BOX SECTION
NO SCALE — STORM DRAIN BOX TYPE 7 — 2 SP-4

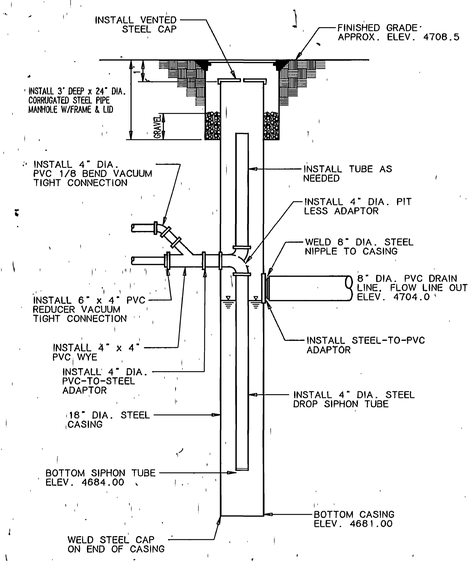

VACUUM SUMP POT DETAIL
NO SCALE — 18 SP-4

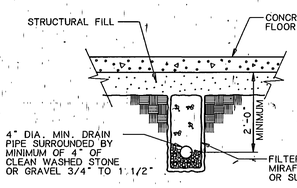

SUBDRAIN DETAIL
NO SCALE — 17 SP-4

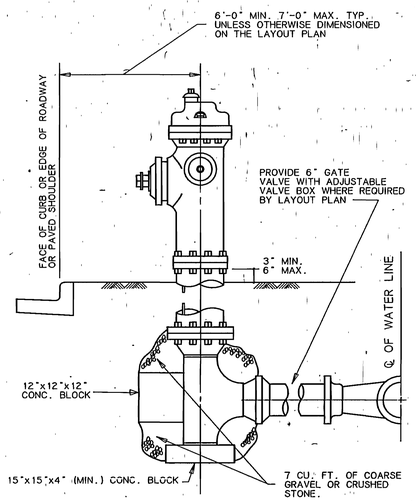

TYPICAL FIRE HYDRANT SETTING

DRY BARREL FIRE HYDRANT DETAIL
NO SCALE — 14 SP-4

BEARING AREAS EACH DIRECTION OF THRUST IN SQUARE FEET				
PIPE SIZE	TEES & DEADEND	90° ELBOW	45° ELBOW CROSSES IN DIRECTION OF FL.	22 1/2° ELBOW
6"	4.0	5.5	3.0	2.0
8"	7.0	9.5	5.0	3.0
10"	9.5	13.5	7.0	4.0
12"	13.5	19.0	10.0	5.0
14"	18.0	23.5	14.0	7.0
16"	23.0	33.0	18.0	9.0

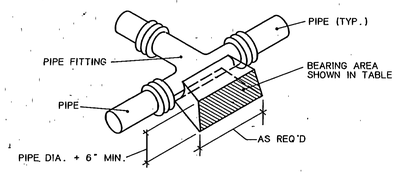

CONCRETE THRUST BLOCK DETAIL
NO SCALE — 10 SP-4

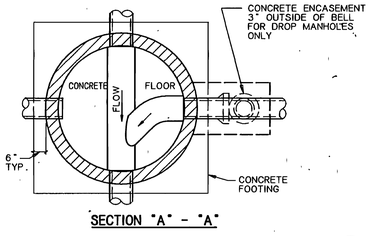

SECTION "A" - "A"

STANDARD SEWER MANHOLE
NO SCALE — 7 SP-4

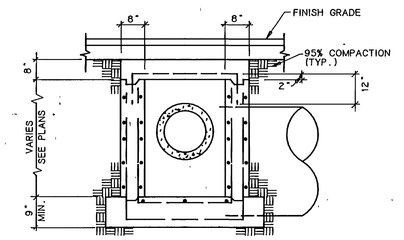

SECTION THRU CLEANOUT BOX
NO SCALE — STORM DRAIN BOX TYPE 7 — 3 SP-4

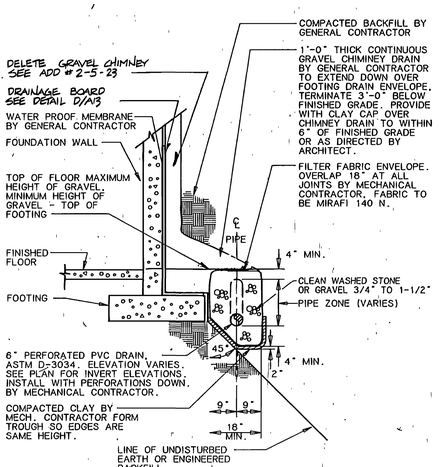

FOOTING DRAIN DETAIL
NO SCALE — 15 SP-4

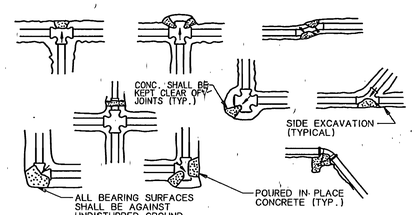

LOCATION OF THRUST BLOCKS
NO SCALE — 11 SP-4

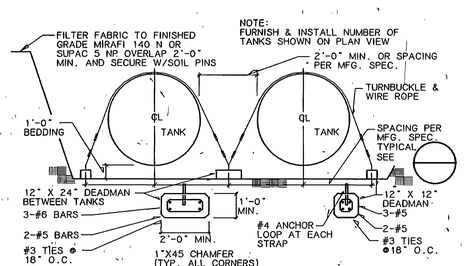

TANK SECTION & ANCHOR DETAIL
NO SCALE — 12 SP-4

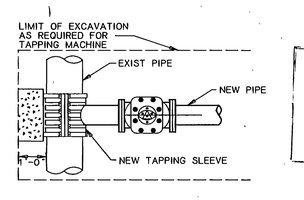

PLAN

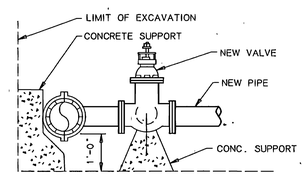

ELEVATION

TAPPING SLEEVE & VALVE INSTALLATION DETAIL
NO SCALE — 8 SP-4

RECORD DOCUMENTS
JUL '93
THE FOLLOWING DOCUMENTS HAVE BEEN REVISED TO
TO THE BEST OF THE APPARENT DOES NOT GUARANTEE THEIR ACCURACY.

PIPE SIZE	DIMENSION (X) MINIMUM
12" - 18"	3'-10"
21"	3'-10"
24"	3'-10"
27"	4'-2"
30"	4'-6"
33"	4'-9"
36"	5'-0"
42"	5'-7"
48"	6'-3"
54"	6'-9"
60"	7'-5"
66"	7'-11"
72"	8'-6"

CLEANOUT BOX SCHEDULE OF DIMENSIONS
NO SCALE — STORM DRAIN BOX TYPE 7 — 4 SP-4

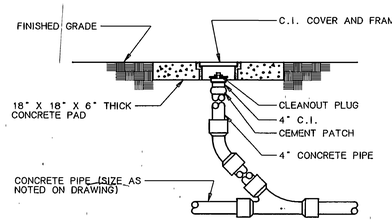

OUTSIDE CLEANOUT DETAIL (C.O.T.G.)
NO SCALE — 5 SP-4

NOTE: THIS SHEET IS COMPRISED OF DRAWINGS AND DETAILS FROM THE ORIGINAL 1990 BUILDING CONSTRUCTION CONFORMED SET & HAS BEEN INCLUDED FOR INFORMATIONAL PURPOSES ONLY. CONDITIONS SHOWN ON THIS SHEET HAVE NOT BEEN VERIFIED WITH EXISTING CONSTRUCTED CONDITIONS.

jra JONES/ RICHARDS & ASSOCIATES
CONSTRUCTION MANAGEMENT
PLANNING 533 26TH STREET OGDEN, UTAH
ARCHITECTURE (801)394-3033

REVISED: AS Built 6-90

PROJECT NUMBER: 9403
DATE: 2-1-89
DRAWN BY:

PROJECT: PHYSICAL EDUCATION FACILITY
WEBER STATE COLLEGE
SHEET TITLE: SITE UTILITIES DETAILS

SHEET NO. SP-4

SITE UTILITIES & PLUMBING LEGEND AND ABBREVIATIONS

DHW	DHW	DOMESTIC HOT WATER
DCW	DCW	DOMESTIC HARD COLD WATER
W	W	WASTE PIPING (ABOVE GRADE)
W	W	WASTE PIPING (BELOW GRADE)
V	V	VENT PIPING
VTR	VTR	VENT THRU ROOF
RD	RD	ROOF DRAIN
RDO	RDO	ROOF DRAIN OVERFLOW
FCO	FCO	FLOOR CLEANOUT
WCO	WCO	WALL CLEANOUT
		SHUTOFF VALVE
FH	FH	FIRE HYDRANT
CB	CB	CATCH BASIN
COTG	COTG	CLEANOUT TO GRADE
MH	MH	MANHOLE
SD	SD	STORM DRAIN PIPING
W	W	WATER MAIN PIPING
F	F	FIRE WATER PIPING
ESS	ESS	EXISTING SANITARY SEWER
SS	SS	SANITARY SEWER
ESD	ESD	EXISTING STORM DRAIN
EFD	EFD	EXISTING FOOTING DRAIN
		WET FIRE SPRINKLER RISER
FD	FD	FOOTING DRAIN (BELOW GRADE)
FD	FD	FOOTING DRAIN (BELOW FLOOR)
EPVW	EPVW	EXISTING PINEVIEW WATER
PVW	PVW	PINEVIEW WATER
EOCW	EOCW	EXISTING OGDEN CITY WATER
OCW	OCW	OGDEN CITY WATER
EAC	EAC	EXISTING AUTOMATION CABLE

EF 1 — EQUIPMENT IDENTIFICATION

1 — KEYED NOTE IDENTIFICATION

P-1 — PLUMBING FIXTURES

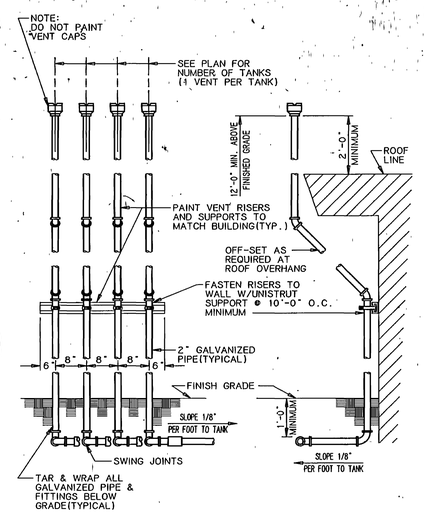

NOTE: MODIFY TO SUIT FIELD CONDITIONS

VENT ATTACHED TO BUILDING DETAIL (7 SP-5)
NO SCALE

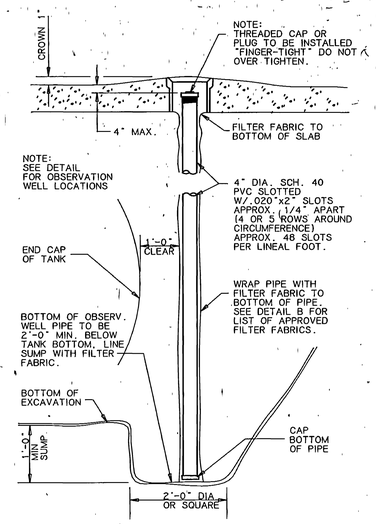

OBSERVATION WELL DETAIL (4 SP-5)
NO SCALE

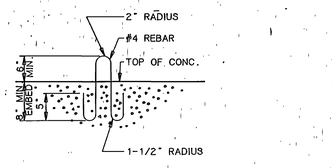

ANCHOR LOOP DETAIL (1 SP-5)
NO SCALE

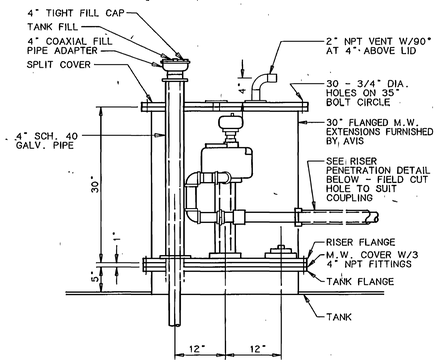

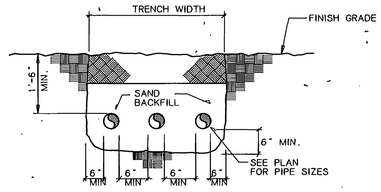

TYPICAL PIPE TRENCH (5 SP-5)
NO SCALE

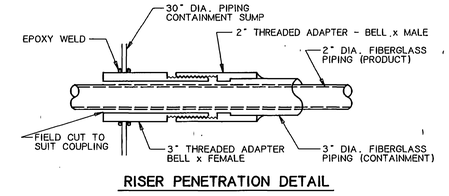

RISER PENETRATION DETAIL

30" MANWAY CONNECTION DETAIL (2 SP-5)
NO SCALE

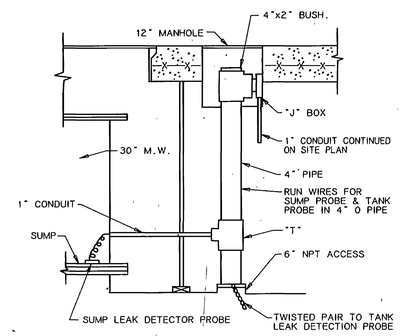

NOTE:
INSTALL DRAG WIRE IN ANNULAR RING BEFORE BURYING TANK. REFER TO INSTALLATION SPECS.

LEAK DETECTION SYSTEM (10 SP-5)
NO SCALE

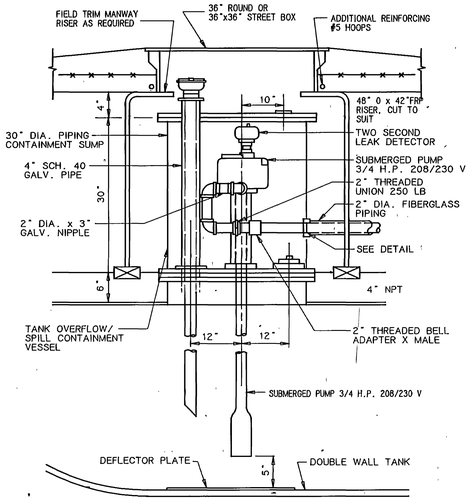

PUMP CONNECTIONS (3 SP-5)
NO SCALE

RECORD DOCUMENTS JUL 1990
THESE PLANS HAVE BEEN REVISED TO REFLECT CONSTRUCTION AS BUILT BY THE CONTRACTOR. WHILE THESE ARE ASSUMED TO BE REASONABLE, THE ARCHITECT DOES NOT GUARANTEE THEIR ACCURACY.

0000TVSPS
Weber State College, Physical Education Facility - RW 84-058
Site Utilities Details & Legend - 26730

NOTE: THIS SHEET IS COMPRISED OF DRAWINGS AND DETAILS FROM THE ORIGINAL 1990 BUILDING CONSTRUCTION CONFORMED SET & HAS BEEN INCLUDED FOR INFORMATIONAL PURPOSES ONLY. CONDITIONS SHOWN ON THIS SHEET HAVE NOT BEEN VERIFIED WITH EXISTING CONSTRUCTED CONDITIONS.

jra JONES/ RICHARDS & ASSOCIATES
ARCHITECTURE (801)394-3033
PLANNING 533 26TH STREET
CONSTRUCTION MANAGEMENT OGDEN, UTAH

REVISED: AS BUILT 6-90

PROJECT NUMBER: 8403
DATE: 9-21-89
DRAWN BY:

PROJECT: PHYSICAL EDUCATION FACILITY
WEBER STATE COLLEGE

SHEET TITLE: SITE UTILITIES DETAILS AND LEGEND

SHEET NO. SP-5

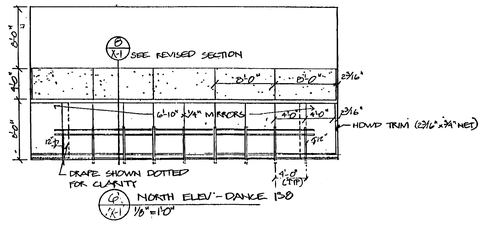

D / X-1 SEE REVISED SECTION

C2 / X-1 NORTH ELEV'- DANCE 130
1/8" = 1'-0"

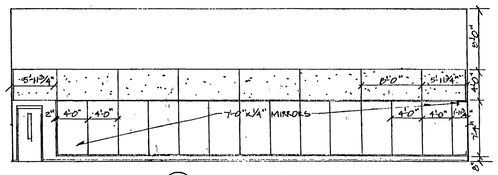

7 / X-1 WEST ELEV- DANCE 130
1/8" = 1'-0"

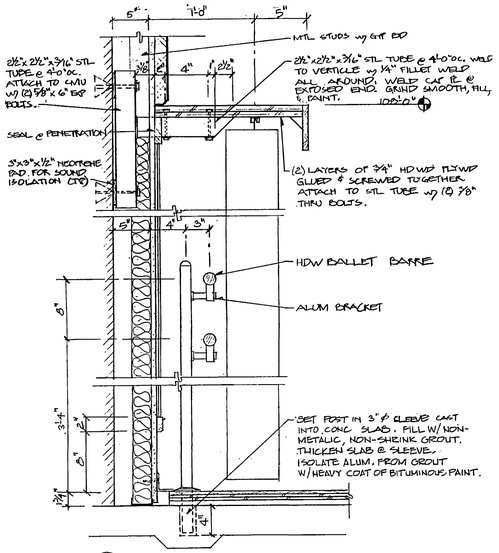

B / X-1 SECTION AT BALLET BARRE
1 1/2" = 1'-0"

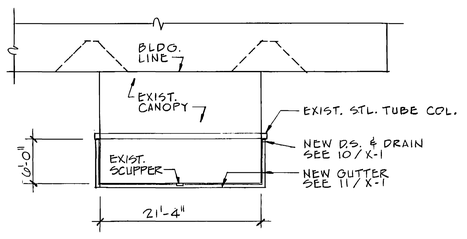

9 / X-1 PARTIAL ENTRY PLAN
1/8" = 1'-0"

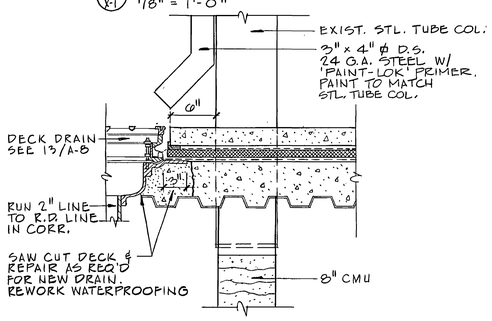

10 / X-1 DOWNSPOUT & DRAIN DETAIL
1 1/2" = 1'-0"

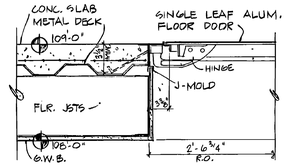

1 / X-1 FLOOR DOOR DETAIL
1 1/2" = 1'-0"

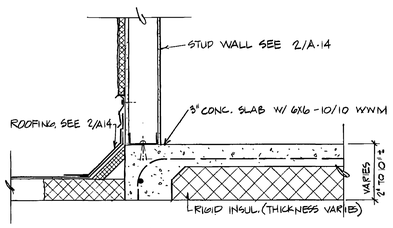

2A / X-1 SLAB DETAIL A-14
1 1/2" = 1'-0"

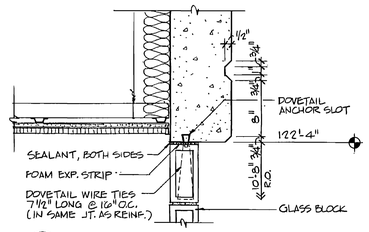

2 / X-1 HEAD A-23
1 1/2" = 1'-0"

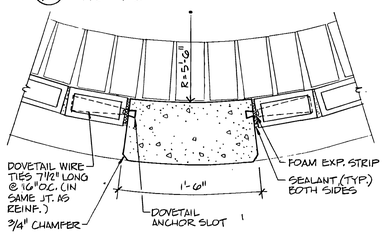

4 / X-1 JAMB A-23
1 1/2" = 1'-0"

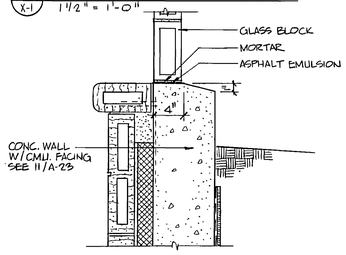

5 / X-1 SILL A-23
1 1/2" = 1'-0"

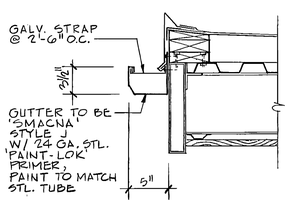

11 / X-1 GUTTER DETAIL
1 1/2" = 1'-0"

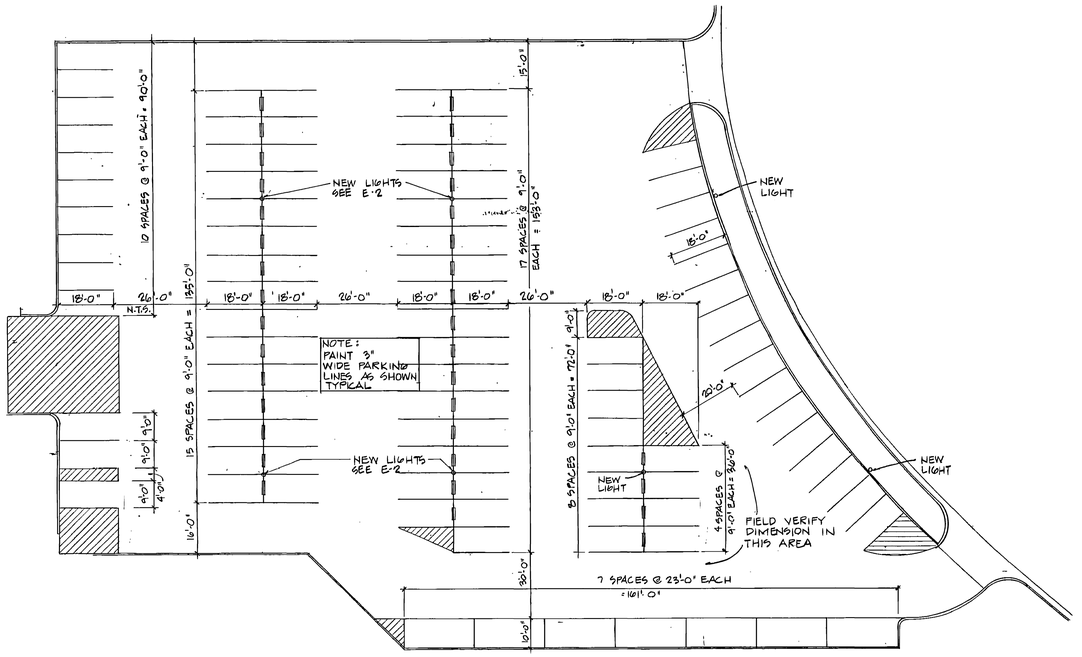

A / X-1 REVISED PARKING STRIPING PLAN
1" = 20'-0"
NORTH

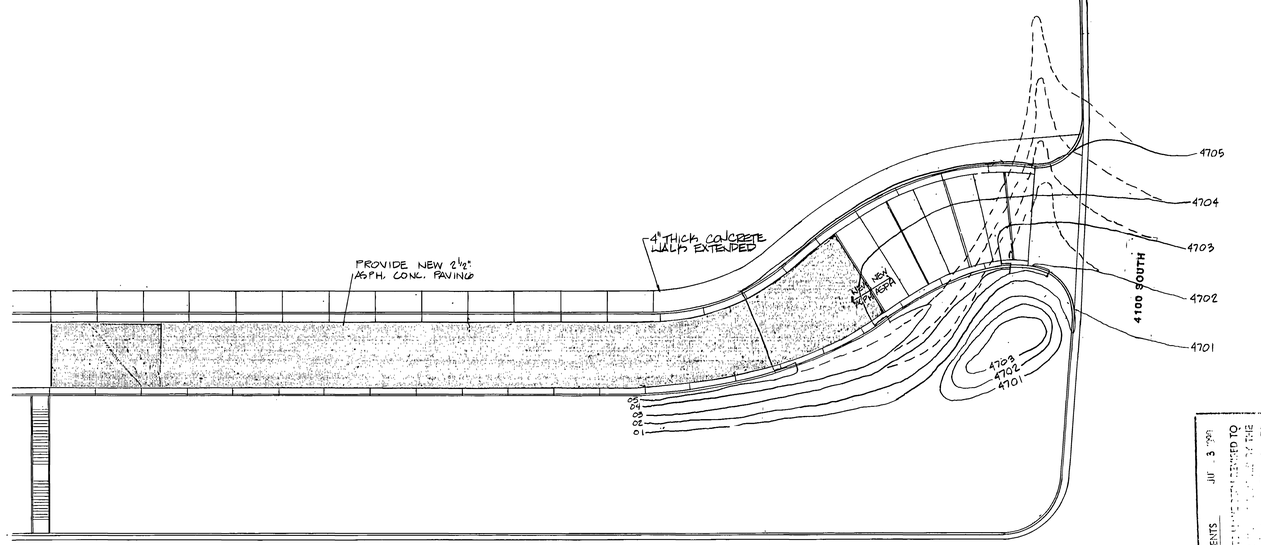

B / X-1 REVISED ROADWAY APPROACH
1" = 20'-0"
NORTH

RECORD DOCUMENTS JUL 3 '90

0000TVX1
Weber State College; Physical Education Facility - RW 84-058
Modification#1 - 26777

NOTE: THIS SHEET IS COMPRISED OF DRAWINGS AND DETAILS FROM THE ORIGINAL 1990 BUILDING CONSTRUCTION CONFORMED SET & HAS BEEN INCLUDED FOR INFORMATIONAL PURPOSES ONLY. CONDITIONS SHOWN ON THIS SHEET HAVE NOT BEEN VERIFIED WITH EXISTING CONSTRUCTED CONDITIONS.

jra JONES / RICHARDS & ASSOCIATES
ARCHITECTURE (801) 364-3333
PLANNING 533 - 26TH STREET
CONSTRUCTION MANAGEMENT OGDEN, UTAH

REVISED: AS BUILTS 6-90
PROJECT NUMBER: 8403
DATE: 9/29/89
DRAWN BY: K.LEPESTICH

PROJECT: PHYSICAL EDUCATION FACILITY
WEBER STATE COLLEGE
SHEET TITLE: MODIFICATIONS

SHEET NO. X-1

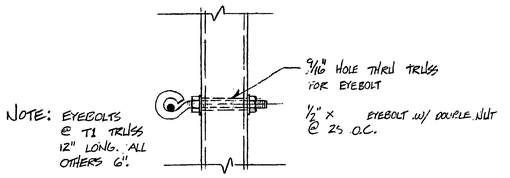

3 X-2 EYEBOLT/CABLE CONNECTION DETAIL

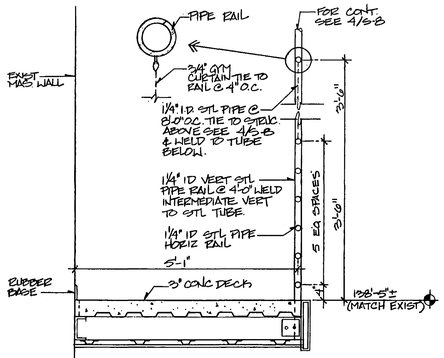

2 X-2 DETAIL 3/4" = 1'-0" 10/A6

RECORD DOCUMENTS JUL 1990

THESE DOCUMENTS HAVE BEEN REVISED TO RECORD INFORMATION SUBMITTED BY THE CONTRACTOR. WHILE THEY ARE ASSUMED TO BE RELIABLE THE ARCHITECT DOES NOT GUARANTEE THEIR ACCURACY.

JONES/RICHARDS & ASSOCIATES
533 ... OGDEN, UTAH
AUG 29 1988

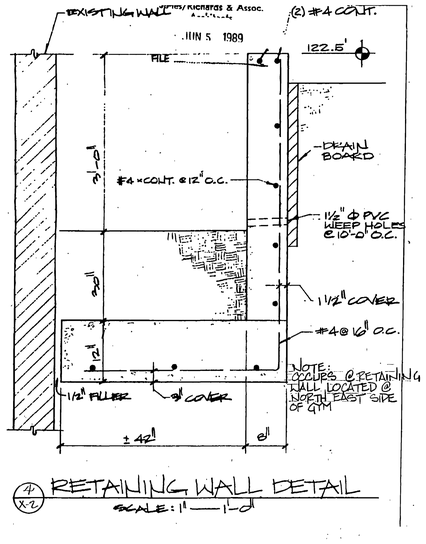

4 X-2 RETAINING WALL DETAIL
SCALE: 1" — 1'-0"

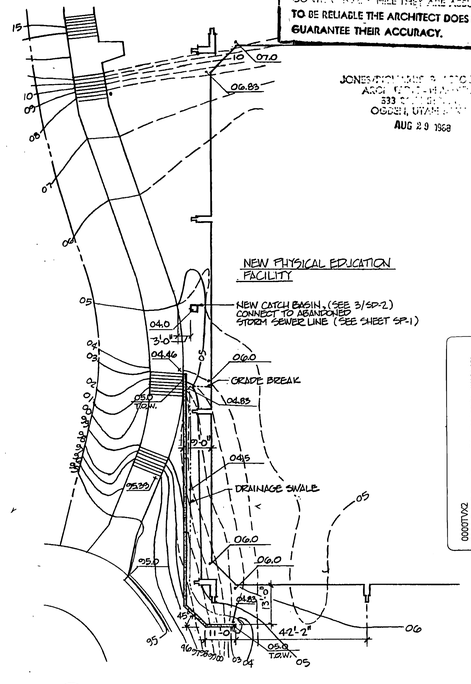

1 X-1 PARTIAL ENLARGED SITE PLAN

0000TVX2
Weber State College, Physical Education Facility - RW 84-058
Modifications - 28773

NOTE: THIS SHEET IS COMPRISED OF DRAWINGS AND DETAILS FROM THE ORIGINAL 1990 BUILDING CONSTRUCTION CONFORMED SET & HAS BEEN INCLUDED FOR INFORMATIONAL PURPOSES ONLY. CONDITIONS SHOWN ON THIS SHEET HAVE NOT BEEN VERIFIED WITH EXISTING CONSTRUCTED CONDITIONS.

jra JONES / RICHARDS & ASSOCIATES
ARCHITECTURE (801) 394-3033
PLANNING 533 - 28TH STREET
CONSTRUCTION MANAGEMENT OGDEN, UTAH

REVISED: AS BUILTS 6-90
PROJECT NUMBER: 8403
DATE: 7/8/90
DRAWN BY: S. DEATON

PROJECT: PHYSICAL EDUCATION FACILITY
WEBER STATE COLLEGE
SHEET TITLE: MODIFICATIONS

SHEET NO. X-2