State of Utah

GARY R. HERBERT
Governor

GREGORY S. BELL
Lt. Governor

Department of Administrative Services
KIMBERLY K. HOOD
Executive Director

Division of Facilities Construction and Management
DAVID G. BUXTON
Director

ADDENDUM NO. 2

Date: October 16, 2012

To: Contractors

From: Bianca Shama/Matthias Mueller

Reference: Student Activity Center Addition to the Stromberg Athletic Complex
Weber State University – Ogden, Utah
DFCM Project No. 12031810

Subject: **Addendum No. 2**

Pages	Addendum Cover Sheet	1	page
	Architect's Addendum 2	75	pages
	Total	76	pages

Note: This Addendum shall be included as part of the Contract Documents. Items in this Addendum apply to all drawings and specification sections whether referenced or not involving the portion of the work added, deleted, modified, or otherwise addressed in the Addendum. Acknowledge receipt of this Addendum in the space provided on the Bid Form. Failure to do so may subject the Bidder to Disqualification.

While we contend that SB220 should only be potentially applicable to a contract issued after the effective date of said bill, this is to clarify that for purposes of this contract, regardless of the execution or effective dates of this contract, the status of Utah Law and remedies available to the State of Utah and DFCM, as it relates to any matter referred to or affected by said SB220, shall be the Utah law in effect at the time of the issuance of this Addendum.

2.1 SCHEDULE CHANGES: There are no Project Schedule changes.

2.2 GENERAL ITEMS:

2.2.1 See attached Architect's Addendum 2 dated October 15, 2012.

2.2.2 See photos of existing conditions which are posted separately.

Addendum 002

project:	WSU Stromberg Student Activity Center	**project no:**	12475
date:	2012-10-15	**no. pages:**	75
owner:	DFCM		
contractor:			
bid date:	2012-11-01	**bid time:**	12:00 pm

This Addendum shall be considered part of the Contract Documents and Project Manual for the above mentioned project as though it had been issued at the same time and shall be incorporated integrally therewith. Where provisions of the following supplementary data differ from those of the original Contract Documents and Project Manual, the Addendum shall govern and take precedence.

General:

Item	Description
2.1	Existing conditions photographs will be posted to the DFCM project web site for reference.
2.2	Civil Addendum items are attached.
2.3	Structural Addendum items are attached.
2.4	Mechanical Addendum items are attached.

Drawings:

Item	Drawing No	Description
2.1	ADS101	Portion of existing concrete sidewalk to be demolished at the base of the new site stair as shown on the Civil Demo Plans. See revised attached sheet.
2.2	A113.1	Revised dimension at Grid F/1 and Grid F/2. See revised attached sheet.
2.3	A113.4	Add ceiling Type A to lobby. See revised attached sheet for scope.
2.4	A122.2	Storage 209A - demolish existing framed walls. Add a guard rail between the existing upper level and the Storage 209A addition. See revised attached sheet for location.
2.5	A133.4	Added ceiling at stair tower and lobby. See revised attached sheet.
2.6	A510	Note added on Detail B5. See revised attached sheet.
2.7	A511	Detail added: C5/A511. See revised attached sheet.
2.8	A521	Revised all details. See revised attached sheet.

2.9	A531	Details added or revised: C5, C6, A1, A3, A4 and A5/A531. See revised attached sheet.
2.10	A570	Revised Millwork Details: D2, D3, D5, E6 and B5/A570. See revised attached sheet.
2.11	A571	Revised Countertop Detail C2/A571. See revised attached sheet.
2.12	A572	Revised Bench Detail D4/A572. See revised attached sheet.
2.13	A580	Revised detail call out at C4/A580. Detail call out to read: E5/A580 in lieu of E5/A540.
2.14	A600	Dimension change to A5/A600. See revised attached sheet.
2.15	A601	Revise the Hollow Metal Door Frame Type 8 to be a 4" head where installed in masonry walls.
2.16	A610	Dimension change to A6/A600. See revised attached sheet.

Specifications:

Item	Spec No	Description
2.1	07 7200	**ROOF ACCESSORIES** Paragraph 2.A.2 - ***add*** the following as an available manufacturer: e. Elmdor; www.elmdorstoneman.com
2.2	08 3100	**ACCESS DOORS AND FRAMES** Paragraph 2.1.A.1 - ***add*** the following as an available manufacturer: e. Elmdor; www.elmdorstoneman.com
2.3	10 5129	**SOLID PHENOLIC LOCKERS** Paragraph 2.1.A - ***add*** the following as available manufacturers: 4. PSiSC Columbia Lockers; www.psisc.com 5. Summit Lockers; www.summitlockers.com
2.4	10 2600	**WALL/CORNER GUARDS** Paragraph 2.1.A.2 - ***add*** the following as an available manufacturer: e. Pawling Corporation; www,pawling.com

End of Addendum 002

CONSULTING ENGINEERS
AND LAND SURVEYORS

GREAT BASIN ENGINEERING - NORTH
P.O. Box 150048 • Ogden, Utah 84415
(801) 394-4515 • (801) 521-0222 • Fax (801) 392-7544

Stromberg Activity Center

Stromberg Addition

Addendum 2 Narrative

DATE OF ISSUE: 10-12-12

ARCHITECT PROJECT # 12475

DFCE PROJECT # 12031810

DESCRIPTION:

Changes to Drawings:

1. CD101:
    1. Added "Note to Contractor"
        1. General Contractor to GPS locate all exposed existing or new utilities before they are buried, and coordinate these locations with WSU.
    2. Corrected note to remove and relocated light pole near new stairs north of access road.
    3. Added note to "Re-grade to new sidewalk elevation" on the south side of the new side walk south of the entrance to the parking lot.

2. CS101
    1. Added one additional parking stall between second story support columns just east of ADA Stalls.
    2. Revised concrete walkway / pad at northeast corner of parking lot, relocated curb and gutter location and added bike racks.
    3. Changed thickened edge walk to "Spill Curb and Gutter" and standard sidewalk along west side of new building addition.
    4. Removed short retaining wall on the south side of the new side walk south of the new addition.

3. CG101
    1. Adjusted grades and slopes in main parking lot area to show new curb and gutter, maintain slopes for handicap parking stalls of less than 2.0% and 2.0% cross slopes on side walks.
    2. Added top of wall elevations at west entrance to western most addition.
    3. Added note along the south side of the new sidewalk south of the new addition to "Match existing landscape grades" about 5 feet south of new sidewalk.

4. CU101:
    1. Increased waterline size from 8" to 10", and changed connections to existing water line from "hot-tap" to a standard connection to be made with water line shut down and drained.
    2. On Irrigation line clarified size and type of pipe " 8" Class 200 PVC Irrigation Line"
    3. Show existing Irrigation line along south edge of existing building with note to "Relocate Cross connection & isolation valve"
    4. Added flow-line elevations to sanitary sewer and roof drain connections at south end of new addition.

ADDENDUM #02

Project: WSU Student Activity Center-Stromberg Addition **Project No.:** 12606
Location: Ogden, Utah **Date:** 12 October 2012
Addendum by: Jeremy Achter, S.E.

Sheet S001
-Basis of Design information in the structural notes has been updated.

Sheet S002
-The footing schedule has been revised.

Sheet S112
-The footing and foundation plan for the bridge has been revised to clarify helical pier design loads and footing requirements.

Sheet S113
-Footing elevations have been revised based on final grading plans and mechanical piping coordination.
-Additional details have been provided at the north stair.
-Footing and foundation notes have been revised.

Sheet S122
-A detail cut has been revised at the east end of the bridge.
-A piece of rebar has been added to the bridge.

Sheet S123
-Floor framing note 5 has been revised.
-Floor framing note 14 is new.
-Rebar has been added to the floor plans as required for collection of seismic forces.
-Headed stud callouts have been added to the cantilevered beams.
-The steel beam on gridline 4 between EC and E has been revised.
-Detail callout D3/S409 has been added at 2.5 and C.5.
-Elevator support columns and the applicable detail have been added.
-The detail E4/S402 callout on gridline 5 has been revised to indicate that the bent plate occurs along the full length of gridline 5.
-A floor beam has been added at EB and 5.

Sheet SF131
-Track floor deck support members have been added and clarified at the corners.

Sheet S132
- Track floor deck support members have been added and clarified at the corners.

Sheet S133
-A blank detail cut has been deleted.

Sheet S141
-A note has been added referring to S141.1 for roof upgrades.

Sheet S141.1
-A detail cut has been added along gridline EF.

Sheet S142
- A note has been added referring to S142.1 for roof upgrades.

Sheet S142.1
- A detail cut has been added along gridline EB.

Sheet S143
-Wind net wind uplift design force has been revised in the framing notes.
-Note 16 has been added.
-Add loads have been added at joist cantilever and for some mechanical equipment.
-A detail cut has been added at gridline B.
-The L5x3x3/8 collector angle at E-4 has been clarified.
-The design load for the joist at 4 between F and G has been clarified.

Sheet S143.1
-An HSS callout has been added for the chord strut in A/S143.1.
-Joist cantilever design loads have been provided in B/S143.1.
-A redundant detail cut along gridline 1 has been removed from B/S143.1.

Sheet S202
-Detail A4/S202 has been revised.
-A weld has been added to detail D5/S202.

Sheet S203
-Weld requirements have been clarified at details A1 and A3.

Sheet S205
-Detail callouts and a general clarification have been added to A/S205.

Sheet S401
-Detail B4 has been revised to clarify anchor bolt requirements.
-Detail C5 has been revised to show the sump pit.
-Detail D2 is a new detail.
-Detail E1 has been revised.
-Detail E3 has been revised.
-Detail E4 is a new detail.

Sheet S402
-Floor reinforcing has been deleted from details B5, C3, C4, C5, and D4 since the floor is generally unreinforced U.N.O.

Sheet S403
-Base plate and anchor bolt requirements have been added to details D2, E1, and E3.
-Detail B3 has been revised.
-Details B1, B5, and D3 have been revised to indicate a rolled edge angel as required.

Sheet S404

-Detail E2 has been revised.

Sheet S406

-Anchor bolt and base plate requirements have been added to details A1, A2, and A3.
-Detail E1/S406 is a new detail.

Sheet S407

-A dimension has been added to details A2 and C1.
-D2 is a new detail.

Sheet S408

-Weld requirements have been added to details B2 and B3.
-Detail C3 has been revised.
-Details B4 and B5 are new details.

Sheet S409

-Detail A2/S409 has been revised.

Filing:(x) project file () other
WSU Student Activity Center-Stromberg Addition_Struct_ADD02_101212

COLVIN ENGINEERING ASSOCIATES

MECHANICAL ADDENDUM NO. 2

WSU Stromberg Student Activity Center

CEA PROJECT NO. 2012-033.00

October 12, 2012

All contractors submitting proposals for this project shall be governed by the following addendum, changes, and explanations to the bidding documents. Bids shall be submitted in accordance with the following:

Item No.	Add, Delete or Clarify	Specification Section or Drawing No.	Reference / Description:
1.	Clarify	M121.1D	• Show existing piping to existing air handler. • Update keyed note #8.
2.	Clarify	M101	• Clarify equipment/duct visibility to show connections near Grid 4.
3.	Clarify / Delete	M104	• Removed duct showing on roof. Duct is on floor below.
4.	Clarify / Add	M123.1	• Clarify diffuser call outs. • Clarify VAV tag CFM. • Clarify Keyed Note #6. • Clarify Duct sizes. • Clarify Fire / Smoke Damper sizes in mechanical shaft. • Add transfer duct to Fitness Studio A. • Add Keyed Note #8. • Update duct and diffuser configuration in Control-100.
5.	Clarify/Delete	M143.1	• Add Keyed Note #1. • Delete hatching on view 2. • Delete RD and OD.
6.	Clarify	M125.1	• Clarify piping to existing air handler. • Modify pipe size on HWS and HWR piping. • Clarify pump tag on P-1.
7.	Clarify/Add/ Delete	M401	• Add Keyed Note #4 and #5. • Add shut-off valves in heating water piping. • Clarify pipe sizes. • Clarify pipe routing. • Delete VFD 2.
8.	Clarify/Delete	P123.1	• Clarify Keyed Note #1. • Delete thermostat symbol. • Delete Roof drain and Overflow drain piping above stairs. • Adjust Roof drain and Overflow drain pipe. • Show ACC-2 with condensate pipe in Comm 201.
9.	Clarify	P111.1	• Clarify WH tag.
10.	Clarify	P112.1	• Clarify WH tag.

Item No.	Add, Delete or Clarify	Specification Section or Drawing No.	Reference / Description:
11.	Clarify/Add/ Delete	P113.1	• Updated Keyed note #5. • Clarify water meter location in corridor. • Adjust condensate pipe layout in Elev Equip 102A. • Add pipe call-outs and sizes. • Adjust overflow drain pipe drop location. • Update Sanitary Sewer Invert Elevation
12.	Clarify	M127.1	• Clarify CH and HW pipe layouts.
13.	Clarify/Add/ Delete	M113.1	• Add Keyed Note #4 and #5. • Delete two duct mounted RA grilles. • Add 6 ceiling mounted SA linear diffusers in Lobby 102 and delete duct mounted diffusers. • Adjust diffuser locations with associated ductwork. • Reconfigure duct layout to miss elevator shaft. • Clarify VAV box tag CFM. • Add transfer air duct size N across Conf 101B.
14.	Clarify	M117.1	• Clarify HW pipe size. • Clarify VAV tag CFM.
15.	Clarify/Add/ Delete	P401	• Add FD to second floor waste and vent isometric. • Add condensate pipe to AHU-1 on enlarged mechanical room plumbing plan. • Add Keyed note #2 and #3. • Delete DF-1 from second floor waste and vent isometric. • Delete VFD-2. • Adjust FD location and pipe sizes.
16.	Add	P501	• Add master mixing valve detail and mixing valve detail.
17.	Clarify	M601	• Clarify VAV reheat box schedule. • Update Air Device Schedule devices 1 thru 9.
18.	Add	M121.1	• Add Keyed note #4.
19.	Add	M126.1	• Add Keyed note #1.
20.	Clarify/Add	M202	• Clarify Pump tag for P-1. • Add Pipe size tag.

PRODUCT SUBSTITUTIONS / PRIOR APPROVALS

Item No.	Specification Section	Product Type	Alternate Manufacturers
1	230900	Control Dampers	Greenheck
2	230900	Control Valves	Danfoss
3	232113	Flow Control Valves	Danfoss, Hays
4	233400	Centrifugal Fans	Greenheck
5	235700	Electric Radiant Ceiling Panels	Q-Mark, Heatrex

The above named alternate equipment manufacturers stand approved in name only. Approval here in no way relieves the supplier from complying with all other engineering, weight spatial, and quality requirements of equipment indicated in the contract documents. Contractors using products from the above named alternate manufacturers shall refer to Specification Section 15010 for detailed contractor responsibilities related to the use of alternate brands not used as the Basis of Design.

END OF ADDENDUM NO. 2

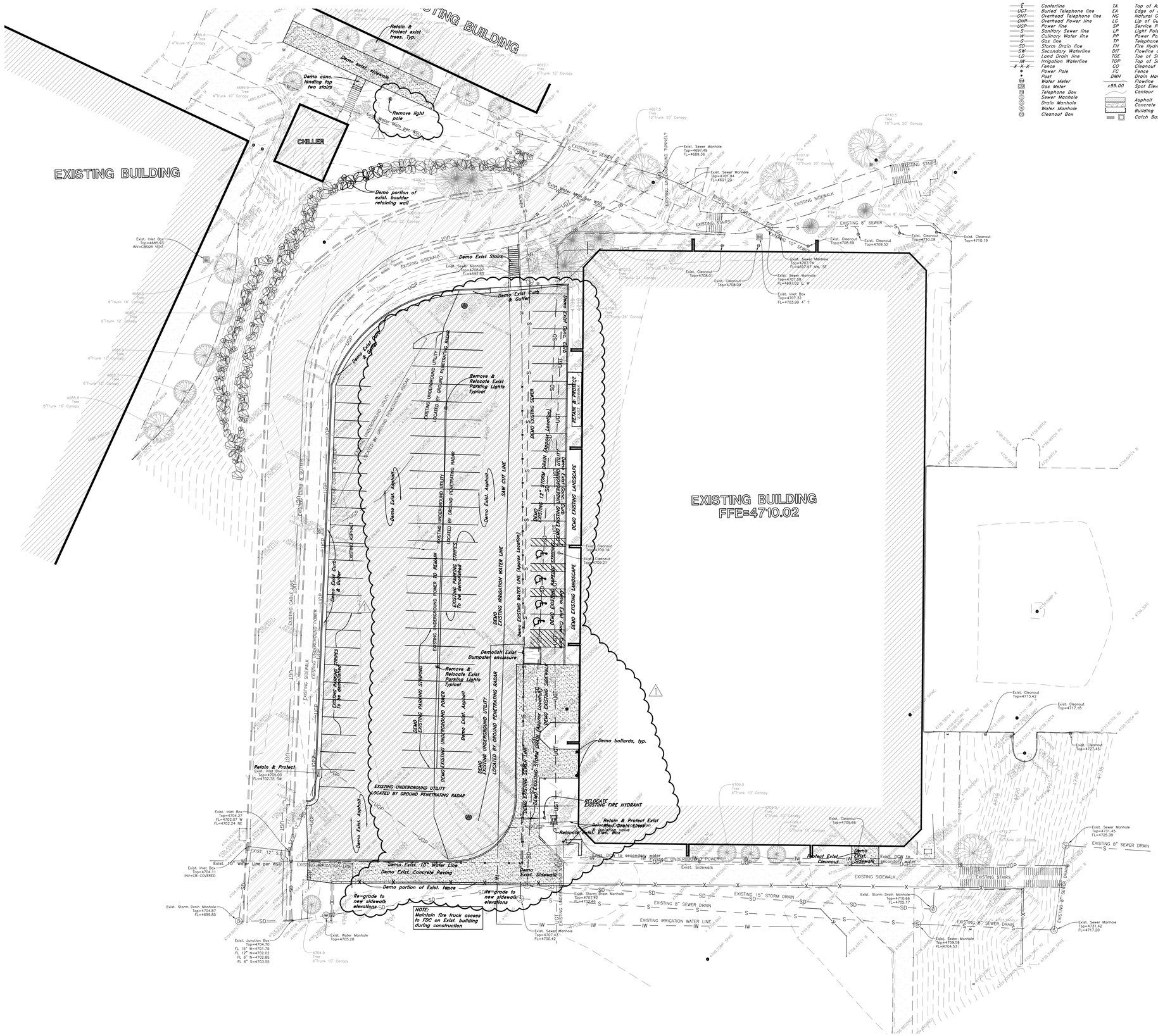

LEGEND

℄	Centerline	TA	Top of Asphalt	C.M.P.	Corrugated Metal Pipe
UGT	Buried Telephone line	EA	Edge of Asphalt	R.C.P.	Reinforced Concrete Pipe
OHT	Overhead Telephone line	NG	Natural Ground	CONC	Edge of Concrete
OHP	Overhead Power line	LG	Lip of Gutter	RWALL	Retaining Wall
UGP	Power line	SP	Service Pole	SMH	Sewer Manhole
S	Sanitary Sewer line	LP	Light Pole	WV	Water Valve
W	Culinary Water line	PP	Power Pole	CB	Catch Basin
C	Gas line	TP	Telephone Pole	DV	Diversion Box
SD	Storm Drain line	FH	Fire Hydrant	TC	Top of Curb
SW	Secondary Waterline	DIT	Flowline of Ditch	SW	Sidewalk
LD	Land Drain line	TOE	Toe of Slope	GAS	Gas line Marker
IW	Irrigation Waterline	TOP	Top of Slope	GUY	Guy Wire
X X X	Fence	CO	Cleanout	BLDG	Building Corner
	Power Pole	FC	Fence	NG	Natural Ground
	Post	DMH	Drain Manhole		Fire Hydrant
	Water Meter		Flowline		Water Valve
	Gas Meter	x99.00	Spot Elevation		Light Pole
	Telephone Box		Contour		Power Pole w/guy
	Sewer Manhole		Asphalt		Deciduous Tree
	Drain Manhole		Concrete		Coniferous Tree
	Water Manhole		Building		
	Cleanout Box		Catch Basin		

GREAT BASIN ENGINEERING
5746 South 1475 East Suite 200
Ogden, Utah 84403 Main (801)394-4515
S.L.C (801)521-0222 Fax 801-392-7544
www.greatbasinengineering.com

Scale: 1" = 20'

20 0 10 20 25 30 35 40

Graphic Scale

VCBO ARCHITECTURE
ARCHITECTURE
VALENTINER
CRANE
BRUNJES
ONYON

VCBO ARCHITECTURE
524 SOUTH 600 EAST
SALT LAKE CITY, UT 84102
Phone: (801) 575-8800
Fax: (801) 531-9850
www: www.vcbo.com

DFCM CODE COMPLIANCE STAMP

NOTE TO CONTRACTOR:
1. General Contractor to GPS locate all exposed existing or new utilities before they are buried, and coordinate these locations with WSU.

General Demolition Notes:
1. Demolition and site clearing for this contract are to include all areas shown within demolition limits or by note.
2. Refer to site improvement plans for more details on limits of removal.
3. Demolish existing buildings and clear from site. (Including removal of all footings and foundations.)
4. All curbs, gutters, walks, slabs, walls, fences, flatwork, asphalt, waterlines and meters, gas lines, sewer lines, light poles, buried cables, storm drain piping and structures to be cleared from site unless otherwise shown.
5. All utilities, sewer, water, gas, telephone and electrical services to be disconnected and capped According to city, county and utility company requirements, unless otherwise shown.
6. Basements and other excavated areas to be backfilled with clean granular material compacted to 95% of maximum lab density as determined by ASTM D 1557-78. (Test results to be given to owner)
7. Clear and grub trees, shrubs, and vegetation within construction limits, disposal to be off-site Except where noted otherwise.
8. DO NOT interrupt any services or disrupt the operation of any businesses shown outside the demolition limits.
9. If ASBESTOS is found in existing structures, the Asbestos must be removed in a legal manner by a contractor licensed to handle asbestos materials. (Not a part of contract)
10. Remove debris, rubbish, and other materials resulting from the demolition and site clearing operations from the site and dispose of in a legal manner.
11. The location and/or elevation of existing utilities as shown on these plans is based on records of the various utility companies and, where possible, measurements taken in the field. The information is not to be relied upon as being exact or complete. Contractor shall contact authorities having jurisdiction for field locations. Contractor shall be responsible for protection of in place and relocated utilities during construction.
12. Stockpiles shall be graded to maintain slopes not greater than 3 horizontal to 1 vertical. Provide erosion control as needed to prevent sediment transport to adjacent drainage ways.
13. Contractor shall be responsible for disposal of all waste material. Disposal shall be at an approved site for such material. Burning onsite is not permitted.
14. Contractor shall verify with city any street removal, curb cuts, and any restoration required for utility line removal.
15. Install traffic warning devices as needed in accordance with local standards.
16. Contractor shall obtain all permits necessary for demolition from City, County, State or Federal Agencies as required.

CAUTION NOTICE TO CONTRACTOR
The contractor is specifically cautioned that the location and/or elevation of existing utilities as shown on these plans are based on records of the various utility companies and, where possible, measurements taken in the field. The information is not to be relied on as being exact or complete. The contractor must call the appropriate utility company at least 48 hours before any excavation to request exact field location of utilities. It shall be the responsibility of the contractor to relocate all existing utilities which conflict with the propose improvements shown on the plans.

PRIVATE ENGINEER'S NOTICE TO CONTRACTORS
The Contractor agrees that he shall assume sole and complete responsibility for job site conditions during the course of construction of this project, including safety of all persons and property; that this requirement shall apply continuously and not be limited to normal working hours; and that the contractor shall defend, indemnify, and hold the owner and the engineer harmless from any and all liability, real or alleged, in connection with the performance of work on this project, excepting for liability arising from the sole negligence of the owner or the engineer.

ALL CONSTRUCTION TO CONFORM TO CITY STANDARDS AND SPECIFICATIONS IN RIGHT OF WAY

Student Activity Center
Stromberg Addition - BID SET
Weber State University
3750 Harrison Blvd. Ogden, UT 84408

Rev #	Date	Description
1	10.12.2012	Addendum 2

Job #	12475
Date	10.03.2012
Owner #	DFCM PROJECT
Ins. #	#12031810

DEMOLITION PLAN

CD101

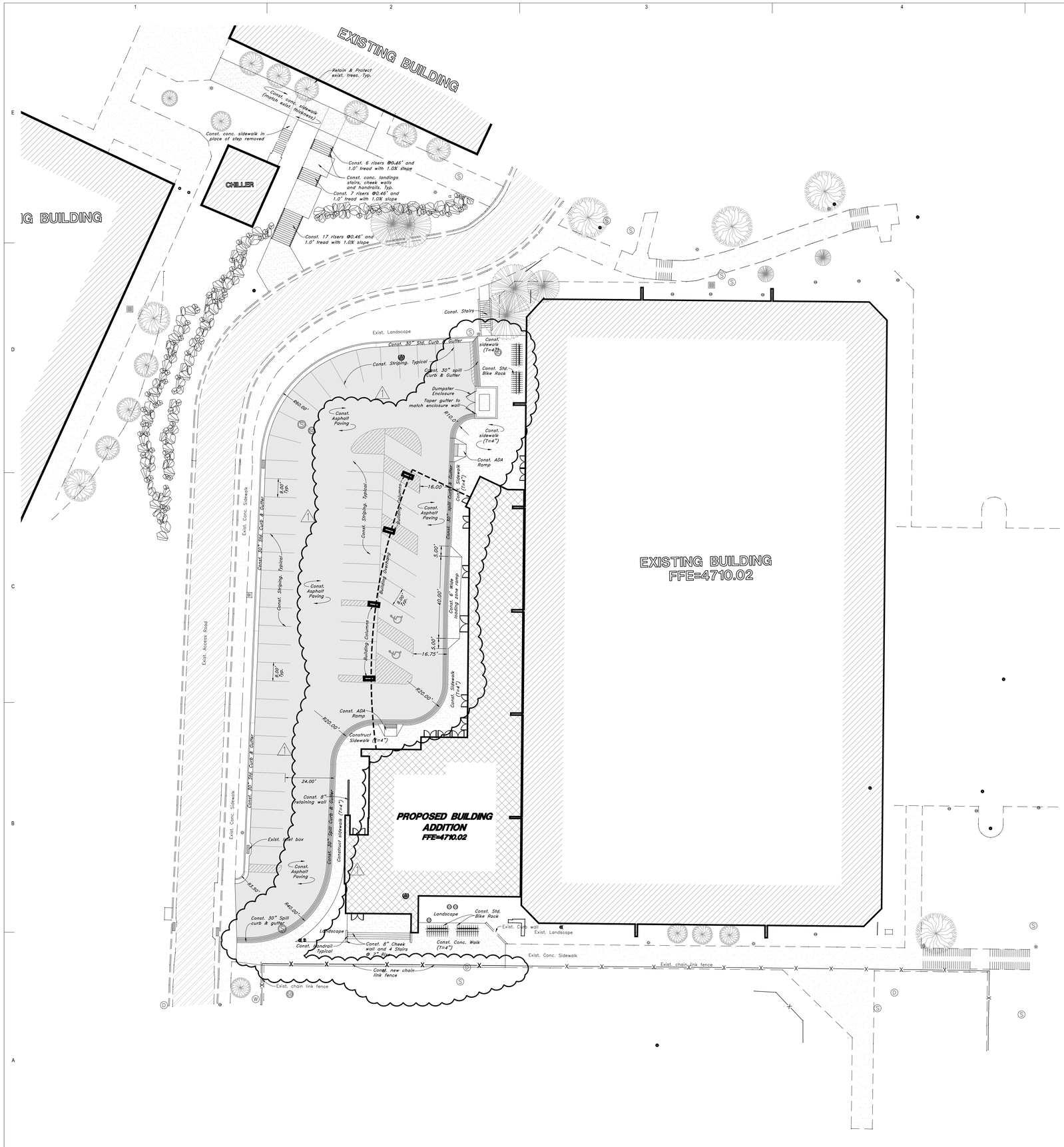

LEGEND

℄	Centerline	TA	Top of Asphalt	C.M.P.	Corrugated Metal Pipe
UGT	Buried Telephone line	EA	Edge of Asphalt	R.C.P.	Reinforced Concrete Pipe
OHT	Overhead Telephone line	NG	Natural Ground	CONC	Edge of Concrete
OHP	Overhead Power line	LG	Lip of Gutter	RWALL	Retaining Wall
UGP	Power line	SP	Service Pole	SMH	Sewer Manhole
S	Sanitary Sewer line	LP	Light Pole	WV	Water Valve
W	Culinary Water line	PP	Power Pole	CB	Catch Basin
G	Gas line	TP	Telephone Pole	DV	Diversion Box
SD	Storm Drain line	FH	Fire Hydrant	TC	Top of Curb
SW	Secondary Waterline	DIT	Flowline of Ditch	SW	Sidewalk
LD	Land Drain line	TOE	Toe of Slope	GAS	Gas line Marker
IW	Irrigation Waterline	TOP	Top of Slope	GUY	Guy Wire
X X X	Fence	CO	Cleanout	BLDG	Building Corner
•	Power Pole	FC	Fence	NG	Natural Ground
•	Post	DMH	Drain Manhole		Fire Hydrant
WM	Water Meter		Flowline		Water Valve
GM	Gas Meter	x99.00	Spot Elevation	LP	Light Pole
TB	Telephone Box		Contour		Power Pole w/guy
SMH	Sewer Manhole		Asphalt		Deciduous Tree
DMH	Drain Manhole		Concrete		Coniferous Tree
WMH	Water Manhole		Building		
CO	Cleanout Box		Catch Basin		

GREAT BASIN ENGINEERING INC
5746 South 1475 East Suite 200
Ogden, Utah 84403 Main (801)394-4515
S.L.C (801)521-0222 Fax 801-392-7544
www.greatbasinengineering.com

Scale: 1" = 20'

20 0 10 20 25 30 35 40

Graphic Scale

VCBO
ARCHITECTURE
VALENTINER
CRANE
BRUNJES
ONYON

VCBO ARCHITECTURE
524 SOUTH 600 EAST
SALT LAKE CITY, UT 84102
Phone: (801) 575-8800
Fax: (801) 531-9850
www: www.vcbo.com

DFCM CODE COMPLIANCE STAMP

NOTE TO CONTRACTOR:
1. General Contractor to GPS locate all exposed existing or new utilities before they are buried, and coordinate these locations with WSU.

General Site Notes:
1. Stalls designated as handicap will require a painted handicap symbol and sign. (See Details)
2. Fire lane markings and signs to be installed as directed by the Fire Marshall.
3. Aisle markings, directional arrows and stop bars will be painted at each driveway as shown on the plans.
4. See Horizontal Control plan for coordinates, radiuses and detailed dimensions of site improvements.
5. Building sidewalks, ramps, and bollards are building contractor responsible items. See architectural plans.
6. All dimensions are to back of curb unless otherwise noted.

PRIVATE ENGINEER'S NOTICE TO CONTRACTORS

The Contractor agrees that he shall assume sole and complete responsibility for job site conditions during the course of construction of this project, including safety of all persons and property; that this requirement shall apply continuously and not be limited to normal working hours; and that the contractor shall defend, indemnify, and hold the owner and the engineer harmless from any and all liability, real or alleged, in connection with the performance of work on this project, excepting for liability arising from the sole negligence of the owner or the engineer.

ALL CONSTRUCTION TO CONFORM TO CITY STANDARDS AND SPECIFICATIONS IN RIGHT OF WAY

Student Activity Center
Stromberg Addition - BID SET
Weber State University
3750 Harrison Blvd. Ogden, UT 84408

Rev #	Date	Description
1	10.12.2012	Addendum 1

Job # 12475
Date 10.03.2012
Owner # DFCM PROJECT
Ins. # #12031810

SITE, GRADING & DRAINAGE PLAN

CS101

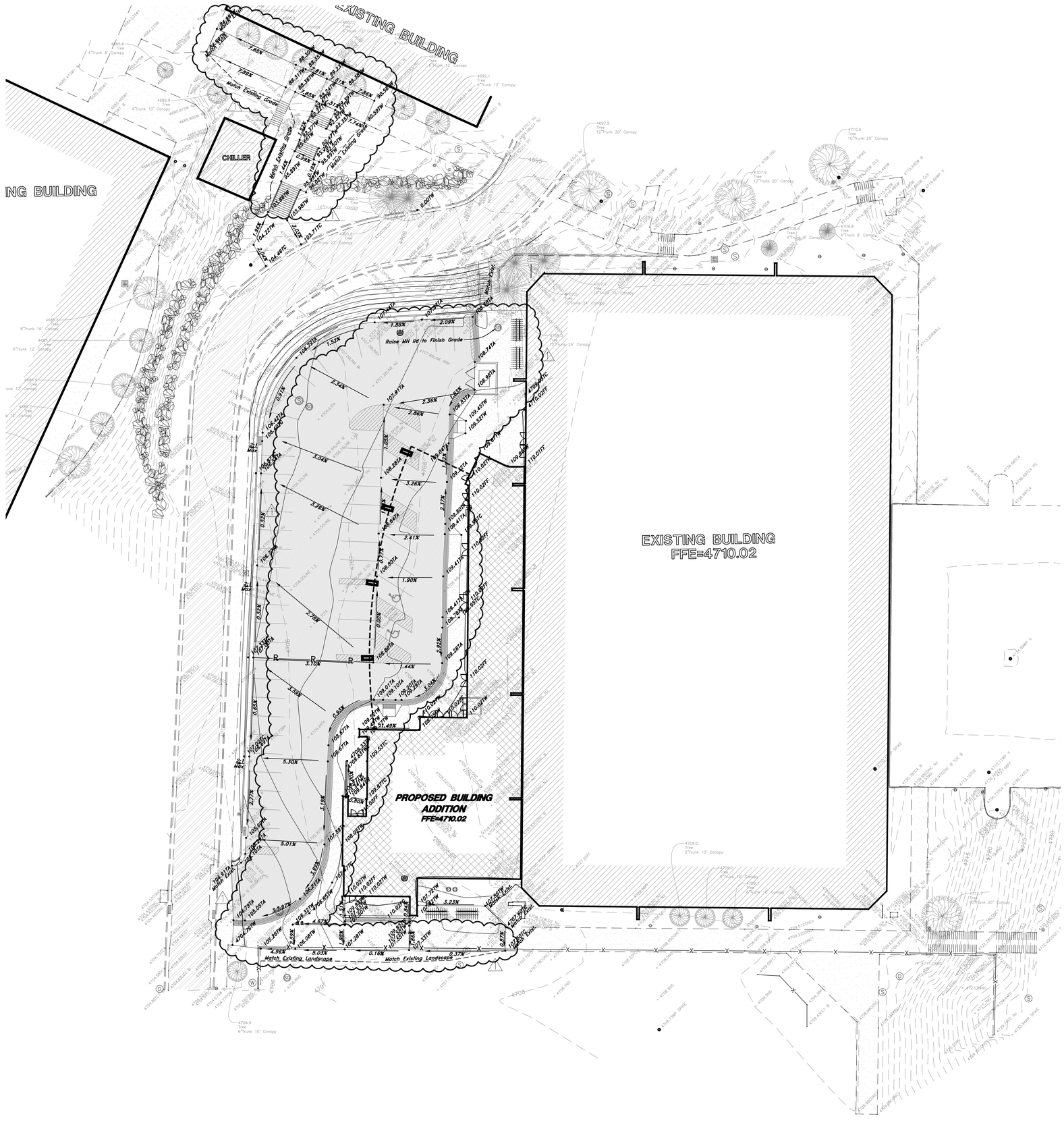

LEGEND

℄	Centerline	TA	Top of Asphalt	C.M.P.	Corrugated Metal Pipe
UGT	Buried Telephone line	EA	Edge of Asphalt	R.C.P.	Reinforced Concrete Pipe
OHT	Overhead Telephone line	NG	Natural Ground	CONC	Edge of Concrete
OHP	Overhead Power line	LG	Lip of Gutter	RWALL	Retaining Wall
UGP	Power line	SP	Service Pole	SMH	Sewer Manhole
S	Sanitary Sewer line	LP	Light Pole	WV	Water Valve
W	Culinary Water line	PP	Power Pole	CB	Catch Basin
G	Gas line	TP	Telephone Pole	DV	Diversion Box
SD	Storm Drain line	FH	Fire Hydrant	TC	Top of Curb
SW	Secondary Waterline	DIT	Flowline of Ditch	SW	Sidewalk
LD	Land Drain line	TOE	Toe of Slope	GAS	Gas line Marker
IW	Irrigation Waterline	TOP	Top of Slope	GUY	Guy Wire
X X X	Fence	CO	Cleanout	BLDG	Building Corner
	Power Pole	FC	Fence	NG	Natural Ground
	Post	DMH	Drain Manhole		Fire Hydrant
	Water Meter		Flowline		Water Valve
	Gas Meter	x99.00	Spot Elevation		Light Pole
	Telephone Box		Contour		Power Pole w/guy
	Sewer Manhole		Asphalt		Deciduous Tree
	Drain Manhole		Concrete		Coniferous Tree
	Water Manhole		Building		
	Cleanout Box		Catch Basin		

GREAT BASIN ENGINEERING
5746 South 1475 East Suite 200
Ogden, Utah 84403 Main (801)394-4515
S.L.C (801)521-0222 FAX 801-392-7544
WWW.GREATBASINENGINEERING.COM

Scale: 1" = 20'

20 0 10 20 25 30 35 40

Graphic Scale

VCBO
ARCHITECTURE
VALENTINER
CRANE
BRUNJES
ONYON

VCBO ARCHITECTURE
524 SOUTH 600 EAST
SALT LAKE CITY, UT 84102
Phone: (801) 575-8800
Fax: (801) 531-9850
WWW: www.vcbo.com

DFCM CODE COMPLIANCE STAMP

NOTE TO CONTRACTOR:
1. General Contractor to GPS locate all exposed existing or new utilities before they are buried, and coordinate these locations with WSU.

General Site Notes:
1. Stalls designated as handicap will require a painted handicap symbol and sign. (See Details)
2. Fire lane markings and signs to be installed as directed by the Fire Marshall.
3. Aisle markings, directional arrows and stop bars will be painted at each driveway as shown on the plans.
4. See Horizontal Control plan for coordinates, radiuses and detailed dimensions of site improvements.
5. Building sidewalks, ramps, and bollards are building contractor responsible items. See architectural plans.
6. All dimensions are to back of curb unless otherwise noted.

PRIVATE ENGINEER'S NOTICE TO CONTRACTORS
The Contractor agrees that he shall assume sole and complete responsibility for job site conditions during the course of construction of this project, including safety of all persons and property; that this requirement shall apply continuously and not be limited to normal working hours; and that the contractor shall defend, indemnify, and hold the owner and the engineer harmless from any and all liability, real or alleged, in connection with the performance of work on this project, excepting for liability arising from the sole negligence of the owner or the engineer.

ALL CONSTRUCTION TO CONFORM TO CITY STANDARDS AND SPECIFICATIONS IN RIGHT OF WAY

Student Activity Center
Stromberg Addition - BID SET
Weber State University
3750 Harrison Blvd. Ogden, UT 84408

Rev #	Date	Description
1	10.12.2012	Addendum 2

Job # 12475
Date 10.03.2012
Owner # DFCM PROJECT
Ins. # #12031810

GRADING & DRAINAGE PLAN

CG101

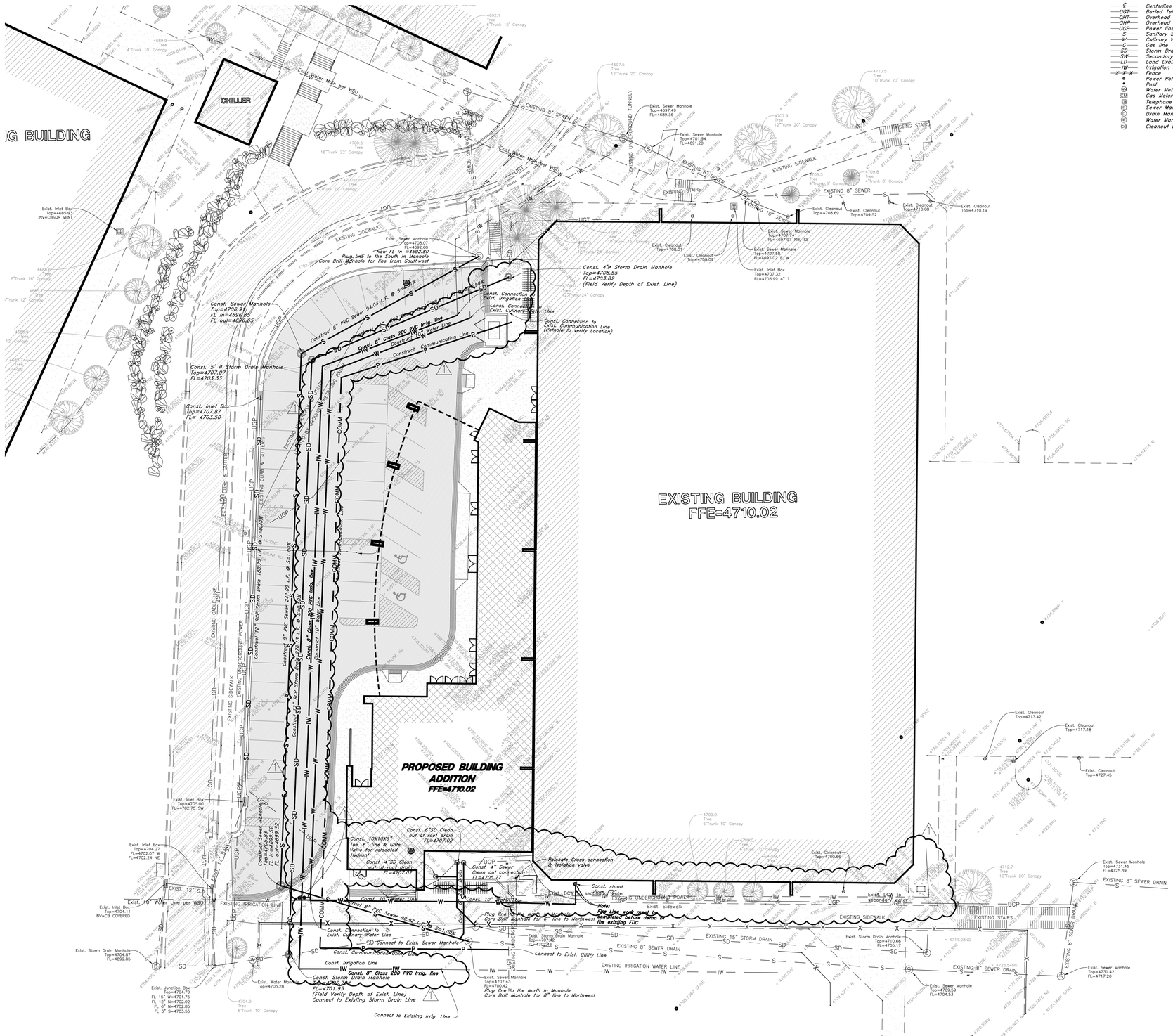

LEGEND

—℄—	Centerline	TA	Top of Asphalt	C.M.P.	Corrugated Metal Pipe
—UGT—	Buried Telephone line	EA	Edge of Asphalt	R.C.P.	Reinforced Concrete Pipe
—OHT—	Overhead Telephone line	NG	Natural Ground	CONC	Edge of Concrete
—OHP—	Overhead Power line	LG	Lip of Gutter	RWALL	Retaining Wall
—UGP—	Power line	SP	Service Pole	SMH	Sewer Manhole
—S—	Sanitary Sewer line	LP	Light Pole	WV	Water Valve
—W—	Culinary Water line	PP	Power Pole	CB	Catch Basin
—G—	Gas line	TP	Telephone Pole	DV	Diversion Box
—SD—	Storm Drain line	FH	Fire Hydrant	TC	Top of Curb
—SW—	Secondary Waterline	DIT	Flowline of Ditch	SW	Sidewalk
—LD—	Land Drain line	TOE	Toe of Slope	GAS	Gas line Marker
—IW—	Irrigation Waterline	TOP	Top of Slope	GUY	Guy Wire
—x—x—	Fence	CO	Cleanout	BLDG	Building Corner
	Power Pole	FC	Fence	NG	Natural Ground
	Post	DMH	Drain Manhole		Fire Hydrant
	Water Meter		Flowline		Water Valve
	Gas Meter	x99.00	Spot Elevation		Light Pole
	Telephone Box		Contour		Power Pole w/guy
	Sewer Manhole		Asphalt		Deciduous Tree
	Drain Manhole		Concrete		Coniferous Tree
	Water Manhole		Building		
	Cleanout Box		Catch Basin		

GREAT BASIN ENGINEERING
5746 South 1475 East - Suite 200
Ogden, Utah 84403 Main (801)394-4515
S.L.C.(801)521-0222 FAX 801-392-7544
WWW.GREATBASINENGINEERING.COM

Scale: 1" = 20'

20 0 10 20 25 30 35 40

Graphic Scale

VCBO ARCHITECTURE
VALENTINER
CRANE
BRUNJES
ONYON

VCBO ARCHITECTURE
524 SOUTH 600 EAST
SALT LAKE CITY, UT 84102
Phone: (801) 575-8800
Fax: (801) 531-9850
WWW: www.vcbo.com

DFCM CODE COMPLIANCE STAMP

NOTE TO CONTRACTOR:
1. General Contractor to GPS locate all exposed existing or new utilities before they are buried, and coordinate these locations with WSU.

General Utility Notes:
1. Coordinate all utility connections to building with plumbing plans and building contractor.
2. Verify depth and location of all existing utilities prior to constructing any new utility lines. Contact GBE immediately if conflicts or discrepancies are found to any connections being made.
3. All catch basin and inlet box grates are to be bicycle proof.
4. All inlet boxes located in curb and gutter are to be placed parallel to the curb and gutter and set under the frame and grate. Improperly placed boxes will be removed and replaced at no additional cost to the owner. Precast or cast in place boxes are acceptable.
5. Refer to the site electrical plan for details and locations of electrical lines, transformers and light poles.
6. Gas lines, telephone lines, and cable TV lines are not a part of these plans unless otherwise noted.
7. Water meters are to be installed per city standards and specifications. It will be the contractor's responsibility to install all items required.
8. Water lines, valves, fire hydrants, fittings etc. are to be constructed as shown. Contractor is responsible to construct any vertical adjustments necessary to clear sewer, storm drain or other utilities as necessary including valve boxes and hydrant spools to proper grade.
9. Field verify all existing and/or proposed Roof Drain/Roof Drain down spout connections to Storm Water System with Civil, Plumbing & Architectural plans. Notify Engineer of any discrepancies.

Utility Piping Materials:
All piping to be installed per manufacturers recommendations. Refer to project specifications for more detailed information regarding materials, installation, etc.

Culinary Service Laterals
1. 3/4" to 2" diameter pipe – copper tube ASTM B, Type K, Soft Temper
2. Over 2" diameter pipe – AWWA C-900 Class 150 pipe

Water Main Lines and Fire Lines
1. Pipe material as shown on utility plan view or to meet city standards.

Sanitary Sewer Lines
1. All sewer piping to be Polyvinyl Chloride (PVC) sewer pipe, ASTM D 3034, Type PSM, SDR 35

Storm Drain Lines
1. 10" pipes or smaller – Polyvinyl Chloride (PVC) sewer pipe, ASTM D3034, Type PSM, SDR 35
2. 12" to 21" pipes – Concrete Pipe, ASTM C14, Class III up to 13' of cover. For greater than 13' feet of cover, use reinforced concrete pipe and classes listed below.
3. 24" pipes or larger – Reinforced Concrete Pipe, ASTM C76, Class III up to 13' of cover, Class IV for 13' to 21' of cover, Class V for 21' to 32' of cover, and Special Design for cover greater than 32 feet.

CAUTION NOTICE TO CONTRACTOR
The contractor is specifically cautioned that the location and/or elevation of existing utilities as shown on these plans are based on records of the various utility companies and, where possible, measurements taken in the field. The information is not to be relied on as being exact or complete. The contractor must call the appropriate utility company at least 48 hours before any excavation to request exact field location of utilities. It shall be the responsibility of the contractor to relocate all existing utilities which conflict with the propose improvements shown on the plans.

PRIVATE ENGINEER'S NOTICE TO CONTRACTORS
The Contractor agrees that he shall assume sole and complete responsibility for job site conditions during the course of construction of this project, including safety of all persons and property; that this requirement shall apply continuously and not be limited to normal working hours; and that the contractor shall defend, indemnify, and hold the owner and the engineer harmless from any and all liability, real or alleged, in connection with the performance of work on this project, excepting for liability arising from the sole negligence of the owner or the engineer.

ALL CONSTRUCTION TO CONFORM TO CITY STANDARDS AND SPECIFICATIONS IN RIGHT OF WAY

Student Activity Center
Stromberg Addition - BID SET
Weber State University
3750 Harrison Blvd. Ogden, UT 84408

Rev #	Date	Description
1	10.12.2012	Addendum 2

Job # 12475
Date 10.03.2012
Owner # DFCM PROJECT
Ins. # #12031810

UTILITY PLAN

CU101

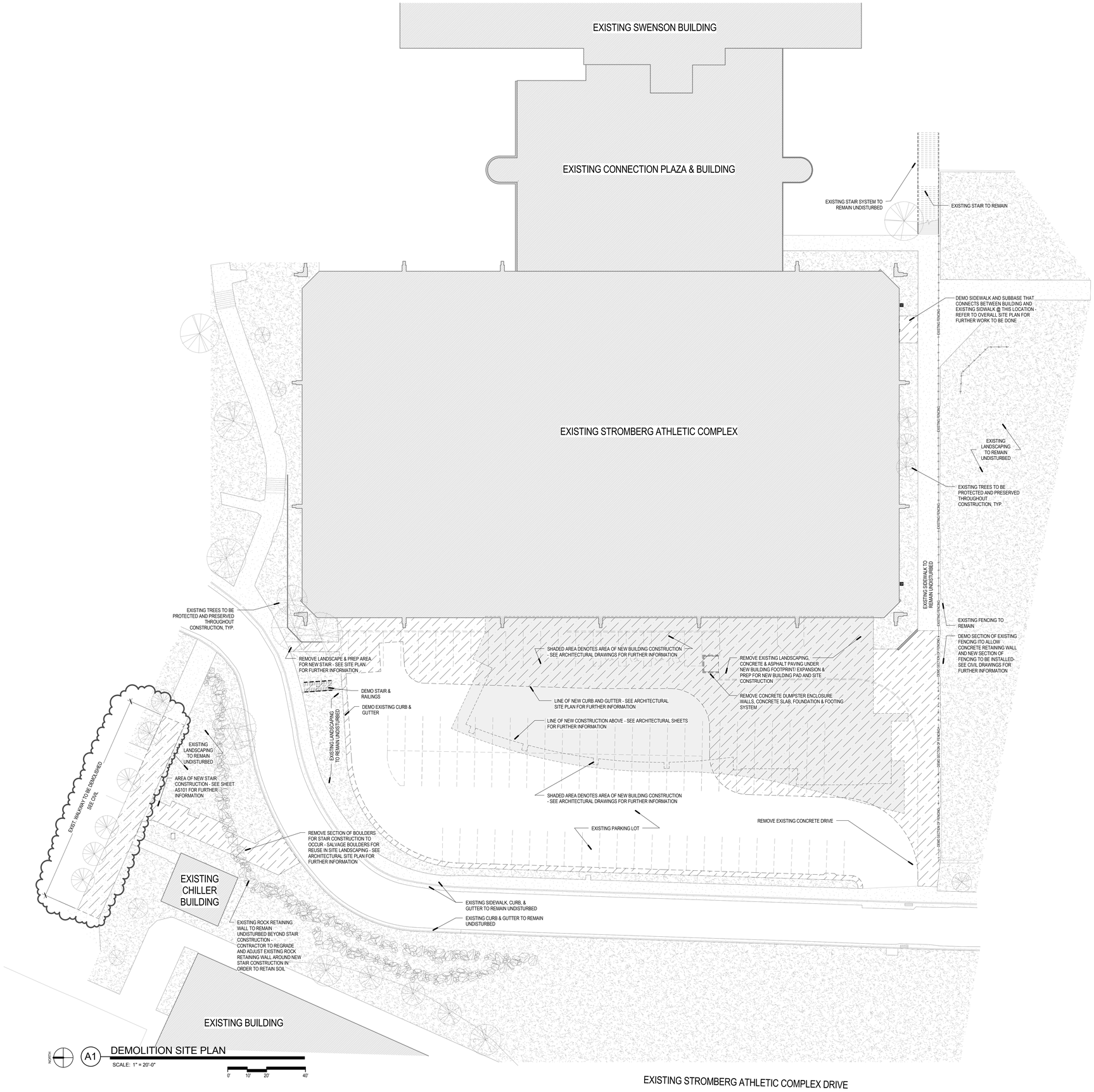

A1 DEMOLITION SITE PLAN

SCALE: 1" = 20'-0"

GENERAL DEMOLITION NOTES

1. THE CONTRACTOR MUST FIELD VERIFY ALL DIMENSIONS AND CONDITIONS INCLUDING EXISTING UTILITIES PRIOR TO BIDDING AS THE LOCATIONS SHOWN IN THE DOCUMENTS ARE APPROXIMATED. ALL VARIANCES NOT SHOWN IN THE DRAWINGS SHALL BE BROUGHT TO THE ATTENTION OF THE ARCHITECT PRIOR TO BID.
2. CONTRACTOR TO COORDINATE WITH ELECTRICAL AND MECHANICAL PLANS FOR LOCATIONS OF ALL EXISTING AND NEW EQUIPMENT, SYSTEMS, AND DEVICES.
3. AS SOME DEMOLITION WORK WILL BE SPECIFIC TO DIVISION 22, 23, 26, THE CONTRACTOR SHALL CROSS REFERENCE WITH ELECTRICAL AND MECHANICAL PLANS FOR ADDITIONAL DEMOLITION WHICH IS REQUIRED, BUT NOT REFLECTED ON ARCHITECTURAL DRAWINGS.
4. CONTRACTOR SHALL TAKE ALL PRECAUTIONS NECESSARY TO PROTECT THE EXISTING STRUCTURE, FINISHES, AND SITE ELEMENTS NOT CALLED FOR DEMOLITION DURING REMODEL OF WALLS, FLOORING MATERIAL, CASEWORK, DOORS, WINDOWS, CEILINGS, AND SITE.
5. CONTRACTOR MUST COORDINATE WORK HOURS WITH OWNER OR PROJECT REPRESENTATIVE PRIOR TO COMMENCEMENT OF WORK. APPROVAL OF PROPOSED SCHEDULE IS REQUIRED PRIOR TO COMMENCING ANY WORK. CONSTRUCTION RELATED ACTIVITIES SHALL NOT OBSTRUCT THE PROCESS OF DAY TO DAY WORK ON SITE UNLESS SPECIFICALLY APPROVED IN ADVANCE BY THE PROJECT REPRESENTATIVE. AFTER HOURS OR WEEKEND WORK SHALL BE EMPLOYED TO AVOID ADVERSE IMPACTS TO TENANT EMPLOYEES.
6. ALL EXISTING INTERIOR FINISHES, MATERIALS, STRUCTURE, SYSTEMS, LANDSCAPING, AND SITE FEATURES, ETC., NOT IDENTIFIED FOR DEMOLITION THAT ARE DAMAGED DURING THE PROCESS OF CONSTRUCTION SHALL BE RESTORED TO THEIR ORIGINAL CONDITION OR REPLACED TO MATCH AT THE CONTRACTORS EXPENSE.
7. ALL EXISTING FIRE RATINGS, AND ASSOCIATED FIRE PROTECTION SYSTEMS (I.E. FIRE SPRINKLERS AND FIRE ALARM SYSTEMS) ARE TO BE MAINTAINED THROUGHOUT CONSTRUCTION IN OCCUPIED SPACES. ANY INTERRUPTION TO THESE SYSTEMS SHALL BE COORDINATED WITH THE OWNER AND FIRE MARSHALS OFFICE. CONTRACTOR IS RESPONSIBLE FOR ANY FIRE WATCH REQUIREMENTS ASSOCIATED WITH INTERRUPTIONS TO THESE EXISTING SYSTEMS.
8. THE MAINTENANCE OF ADEQUATE FIRE EGRESS FOR OCCUPANTS IN THE EXISTING BUILDING SHALL BE COORDINATED WITH THE OWNER AND FIRE MARSHALS OFFICE. CONTRACTOR SHALL PROVIDE ALL NECESSARY TEMPORARY WALLS OR ENCLOSURES, EMERGENCY LIGHTS, ETC., FOR THE DURATION OF THE CONSTRUCTION.
9. CONTRACTOR SHALL REMOVE AND DISPOSE OF ALL FLOORING, WALLS, & CEILING SYSTEMS AS SHOWN ON THE DRAWINGS.
10. CONTRACTOR TO MAINTAIN EXISTING FIRE RATED ELEMENTS IN BUILDING - REPAIR IF DAMAGED.
11. CONTRACTOR TO MAINTAIN ACCESS TO STAIRS DURING CONSTRUCTION. TYP.
12. ALL ADJACENT SURFACES DAMAGED DUE TO WORK UNDER THIS CONTRACT SHALL BE PATCHED & FINISHED TO MATCH EXISTING ADJACENT SURFACES.
13. CONTRACTOR TO PROVIDE DUSTPROOF ENCLOSURES AT PERIMETER OF AREAS OF CONSTRUCTION & DEMOLITION FOR PROTECTION OF ADJACENT SPACES.
14. PATCH & LEVEL EXISTING CONCRETE SLABS AS REQUIRED FOR NEW FINISHES WITH FLOOR LEVELING COMPOUND AS APPROVED BY ARCHITECT.
15. THE GENERAL CONTRACTOR SHALL BRING TO THE ATTENTION OF THE ARCHITECT FOR IMMEDIATE RESOLUTION, ANY CODE VIOLATIONS, INCORRECT CONSTRUCTIONS OR SAFETY PROBLEMS THAT ARE EXISTING FIELD CONDITIONS.
16. THE GENERAL CONTRACTOR IS RESPONSIBLE TO COORDINATE SCOPE IN REMODEL AND NEW CONSTRUCTION AS INDICATED ON ALL ARCHITECTURAL, STRUCTURAL, ELECTRICAL AND MECHANICAL SHEETS AND COORDINATE AND PROVIDE DEMOLITION AS NEEDED. WORK AS DESCRIBED FOR REMODEL OR ADDITION THAT IS IN CONFLICT WITH EXISTING CONDITION IS TO BE BROUGHT TO THE ATTENTION OF THE ARCHITECT PRIOR TO DEMOLITION.

SITE DEMOLITION LEGEND

- DASHED LINES DENOTES ITEM(S) TO BE DEMOLISHED
- SHADED AREA DENOTES EXTENTS OF HARDSCAPE AND LANDSCAPE DEMOLITION
- AREA TO REMAIN UNDISTURBED DURING CONSTRUCTION PHASE
- AREA OF NEW CONSTRUCTION AND NEW CONSTRUCTION ABOVE

VCBO
ARCHITECTURE
VALENTINER
CRANE
BRUNJES
ONYON

VCBO ARCHITECTURE
524 SOUTH 600 EAST
SALT LAKE CITY, UT 84102
Phone: (801) 575-8800
Fax: (801) 531-9850
WWW: www.vcbo.com

DFCM CODE COMPLIANCE STAMP

Student Activity Center
Stromberg Addition - BID SET
Weber State University
3750 Harrison Blvd. Ogden, UT 84408

Rev #	Date	Description
1	10.12.2012	ADD #2

Job # 12475
CAD File
Drawn Author Checked Checker
Date 10.03.2012
Owner # DFCM #12031810

DEMOLITION SITE PLAN

ADS101

10/12/2012 2:26:10 PM

KEYED NOTES

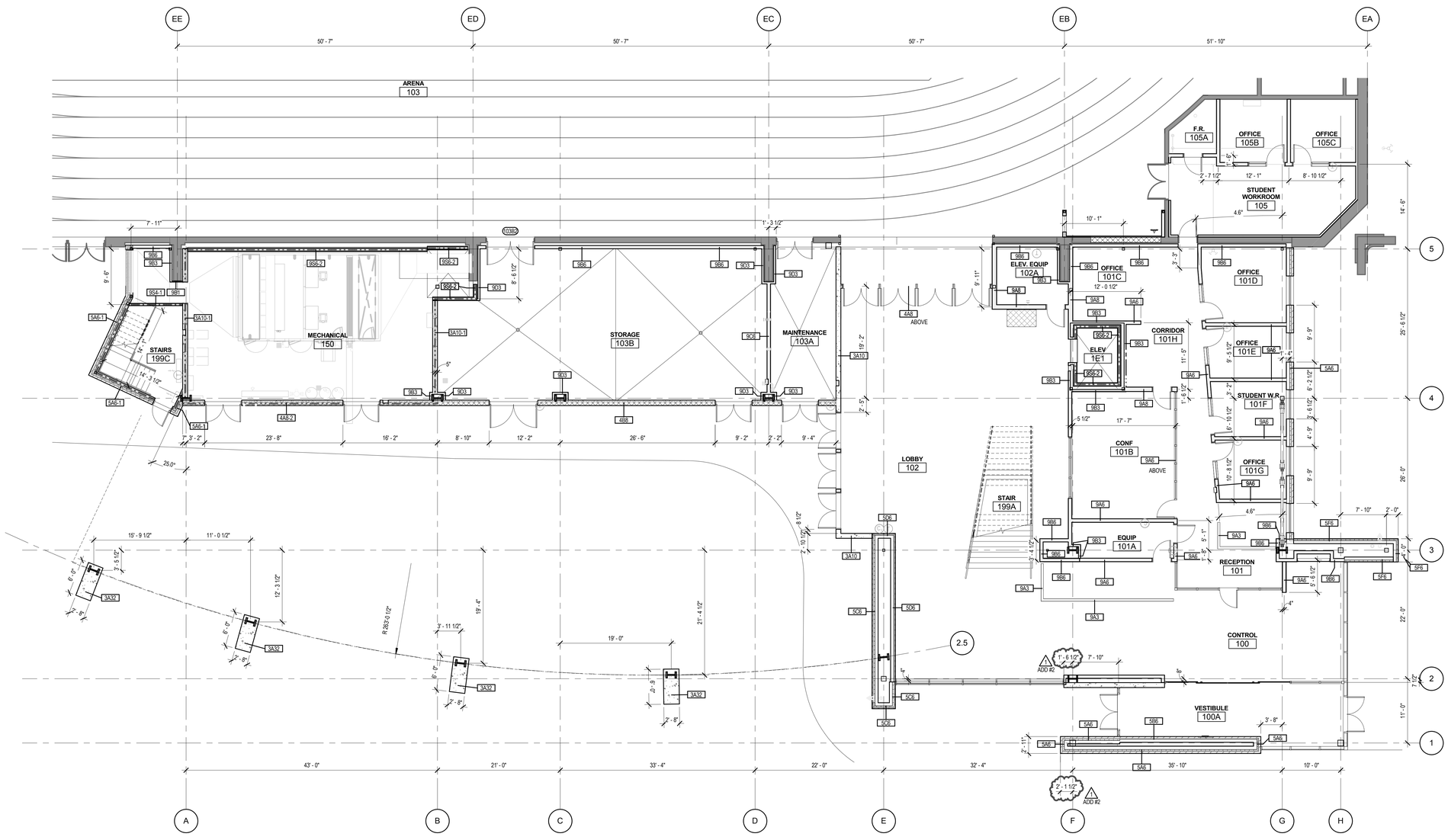

1 LEVEL 01 AREA C - DIMENSION PLAN

SCALE: 1/8" = 1'-0"

PARTITION TYPE SYMBOL DEFINITION

SYMBOL DEFINITION

BASIC PARTITION TYPE AND ADDITIONAL PARTITION COMPONENTS, IF ANY, ARE INDICATED IN THE FLOOR PLANS BY THE FOLLOWING SYMBOL

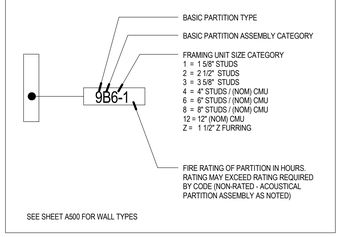

SEE SHEET A500 FOR WALL TYPES

DIMENSION PLAN NOTES

1) ALL DIMENSIONS ARE TO CENTER OF STUD WALL OR FACE OF CONCRETE, MASONRY OR ROUGH OPENING UNLESS NOTED OTHERWISE. WHERE THE END OF A WALL IS INDICATED THE DIMENSION IS TO THE FINISH SURFACE OF THE WALL END.

2) DIMENSIONS ARE TO FACE-OF-FINISH WHEN MARKED CLR (CLEAR DIMENSION)

3) WHERE A.D.A. 5'-0" ACCESIBILITY DIMENSION IS REQUIRED, IT IS FACE-OF-FINISH CLEAR DIMENSION.

4) U.N.O., WHERE WALLS ARE SHOWN OVER GRIDLINES, CENTER STUD TRACK ON GRIDLINE.

5) WHERE POSSIBLE AND U.N.O. DOOR LOCATIONS ON OPPOSITE SIDES OF HALLWAYS AND COMMON SPACES ARE TO ALIGN DIMENSIONALLY.

6) U.N.O. ALIGN FACE OF FINISH WHERE VARYING WALL TYPES ARE SHOWN ADJACENT TO EACH OTHER IN A ROW.

7) WHERE KEYED ON FLOOR PLANS, REFER TO ENLARGED FLOOR PLAN DRAWINGS AND DETAIL DRAWINGS FOR DIMENSIONS.

8) UNLESS DIMENSIONED OTHERWISE, THE DIMENSION FROM THE BUCK OF A DOOR FRAME IS TO BE 4" TO THE WALL CORNER.

9) PROVIDE GLASS MAT GYPSUM BOARD AT ALL TILE AREAS.

10) EXCEPT WHERE DIRECTED TO PLACE ITEMS OF WORK AT THE APPROXIMATE LOCATION SHOWN, DO NOT SCALE DRAWINGS FOR DIMENSIONAL INFORMATION. ALL ELEMENTS OF THE DRAWINGS MAY NOT BE DRAWN TO EXACT SCALE. ALL DIMENSIONS REQUIRED ARE SHOWN OR MAY BE DERIVED FROM THOSE SHOWN ON THE FLOOR PLANS, DETAIL PLANS, ELEVATIONS, SECTIONS, DETAILS, SCHEDULES AND SPECIFICATIONS. IF DIMENSIONS ARE NOT PRESENT, THE ARCHITECT IS TO BE NOTIFIED SO THAT A CLARIFICATION CAN BE ISSUED

KEY PLAN

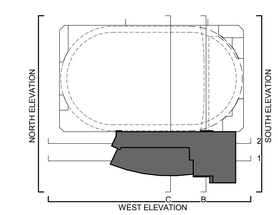

VCBO
ARCHITECTURE
VALENTINER
CRANE
BRUNJES
ONYON

VCBO ARCHITECTURE
524 SOUTH 600 EAST
SALT LAKE CITY, UT 84102
Phone: (801) 575-8800
Fax: (801) 531-9850
WWW: www.vcbo.com

DFCM CODE COMPLIANCE STAMP

Student Activity Center
Stromberg Addition - BID SET
Weber State University
3750 Harrison Blvd. Ogden, UT 84408

Rev #	Date	Description
1	10.12.2012	ADD #2

Job # 12475
CAD File
Drawn Author Checked Checker
Date 10.03.2012
Owner # DFCM #12031810

LEVEL 01 AREA C - DIMENSION PLAN

A113.1

10/12/2012 3:25:57 PM

KEYED NOTES

309 REINFORCED CONCRETE WALL
503 STEEL DECK PAINTED WHERE EXPOSED

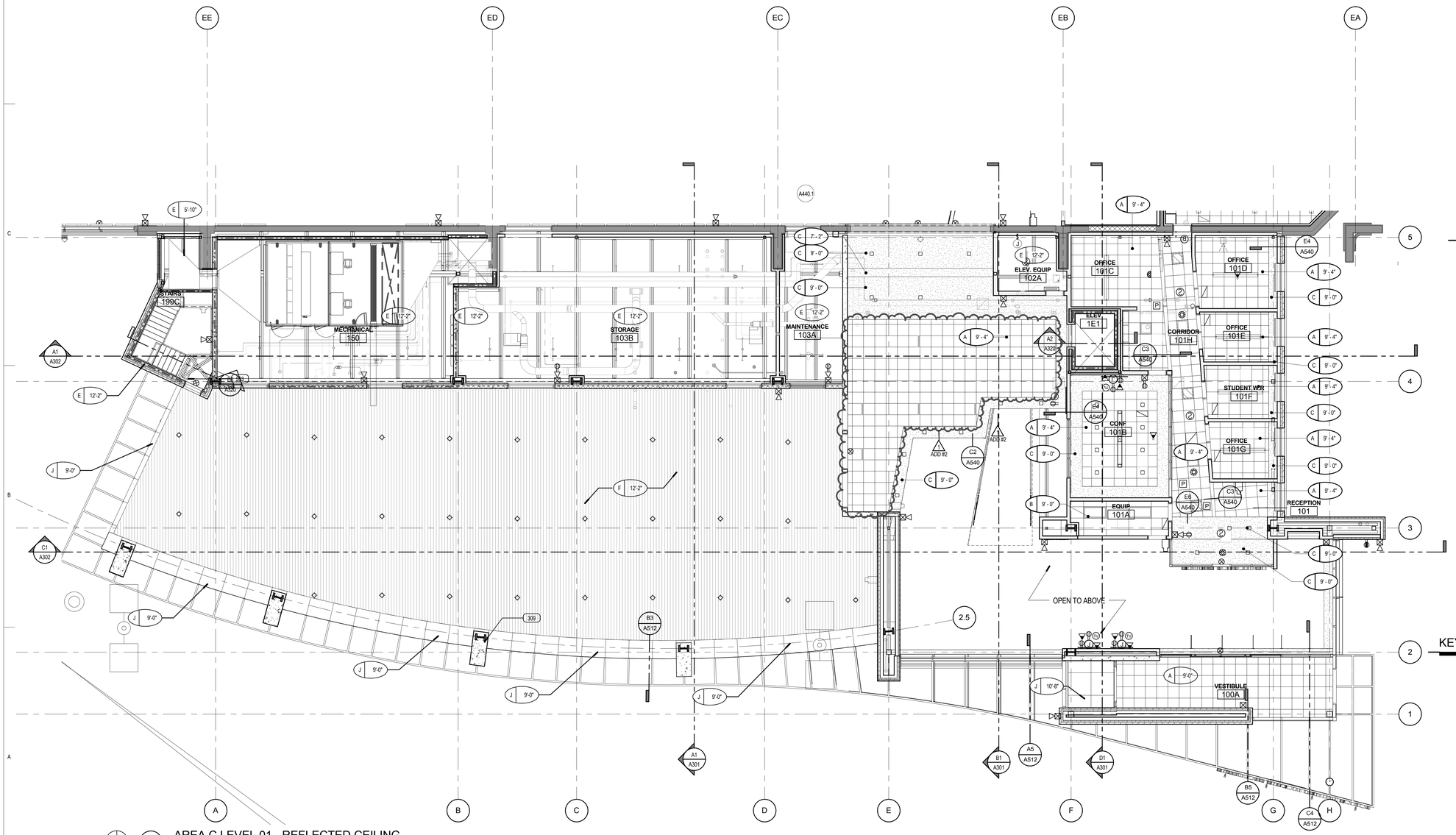

1 AREA C LEVEL 01 - REFLECTED CEILING

SCALE: 1/8" = 1'-0"

CEILING LEGEND

A-	SUSPENDED 2' X 2' ACOUSTICAL LAY-IN TILE CEILING
B-	SUSPENDED 2' X 4' ACOUSTICAL LAY-IN TILE CEILING
C-	SUSPENDED 5/8" GYP. BD. CEILING SYSTEM - (1 LAYER) PAINTED. APPLY EPOXY PAINT IN WET AREAS.
D-	SUSPENDED 2' X 2' METAL SCULPTURAL LAY-IN TILE CEILING.
E-	OPEN TO STRUCTURE ABOVE, PAINTED.
F-	METAL SOFFIT SYSTEM
G-	2 HOUR FIRE-RATED CEILING ASSEMBLY. (2) LAYERS TYPE-X GYP. BOARD.
J-	COMPOSITE METAL PANEL
X-	EXISTING CEILING SYSTEM, TO REMAIN

CEILING SYMBOLS

ELECTRICAL

- 2'X4' FLUORESCENT FIXTURE
- 2'X2' FLUORESCENT FIXTURE
- 1'X4' FLUORESCENT FIXTURE
- FLUORESCENT STRIP FIXTURE
- RECESSED DOWN LIGHT
- WALL WASH
- 1'X4' FLUORESCENT FIXTURE
- EXIT SIGN, SINGLE-SIDED
- EXIT SIGN, DOUBLE-SIDED
- FIRE ALARM
- SPEAKER
- SMOKE DETECTOR
- WIRELESS INTERNET

MECHANICAL

- SUPPLY GRILLE
- RETURN GRILLE
- EXHAUST GRILLE
- LINEAR DIFFUSER
- SPRINKLER HEAD - CEILING MOUNT
- SPRINKLER HEAD - WALL MOUNT

GENERAL CEILING NOTES

1. REFER TO DETAIL C6/A530 FOR TYPICAL CEILING SUSPENSION & SEISMIC BRACING
2. REFER TO DETAIL A6/A530 FOR TYPICAL SUSPENDED GYP. BOARD CEILINGS
3. ALL UNIDENTIFIED CEILING TYPES ON THE PLANS SHALL BE TYPE " A" AT 9'-4" A.F.F.
4. GRID SUSPENSION SYSTEMS SHALL BE CENTERED WITHIN AREAS INDICATED, UNLESS NOTED OTHERWISE
5. PAINT ALL EXPOSED STRUCTURE, MECHANICAL, DUCTS, ELECTRICAL WORK, PIPING, ETC. ALL VISIBLE ELEMENTS TO BE PAINTED AT TYPE "E" & TYPE "A" (ABOVE CEILING CLOUDS WHERE VISABLE)
6. REFER TO ARCHITECTURAL DRAWINGS FOR LOCATION OF MECHANICAL GRILLES, AND TO MECHANICAL DRAWINGS FOR QUANTITIES AND TYPES
7. REFER TO ARCHITECTURAL DRAWINGS FOR LOCATIONS OF LIGHT FIXTURES AND TO ELECTRICAL DRAWINGS FOR QUANTITY AND TYPES
8. MECHANICAL AND ELECTRICAL CONTRACTORS TO COORDINATE WORK WITH SPRINKLER CONTRACTOR TO AVOID CONFLICTS IN FIELD
9. ALL CEILING HEIGHTS ARE ELEVATION ABOVE TOP OF CONCRETE FLOOR SLAB
10. ALL TYPE C CEILINGS IN RESTROOMS, LOCKER ROOMS, SHOWERS, AND WET AREAS TO BE EPOXY PAINTED

KEY PLAN

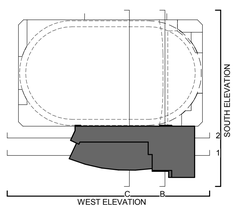

VCBO ARCHITECTURE
VALENTINER
CRANE
BRUNJES
ONYON

VCBO ARCHITECTURE
524 SOUTH 600 EAST
SALT LAKE CITY, UT 84102
Phone: (801) 575-8800
Fax: (801) 531-9850
WWW: www.vcbo.com

DFCM CODE COMPLIANCE STAMP

Student Activity Center
Stromberg Addition - BID SET
Weber State University
3750 Harrison Blvd. Ogden, UT 84408

Rev #	Date	Description
1	10.12.2012	ADD #2

Job # 12475
CAD File
Drawn Author Checked Checker
Date 10.03.2012
Owner # DFCM #12031810

LEVEL 01 AREA C - REFLECTED CEILING PLAN

A113.4

10/12/2012 2:24:27 PM

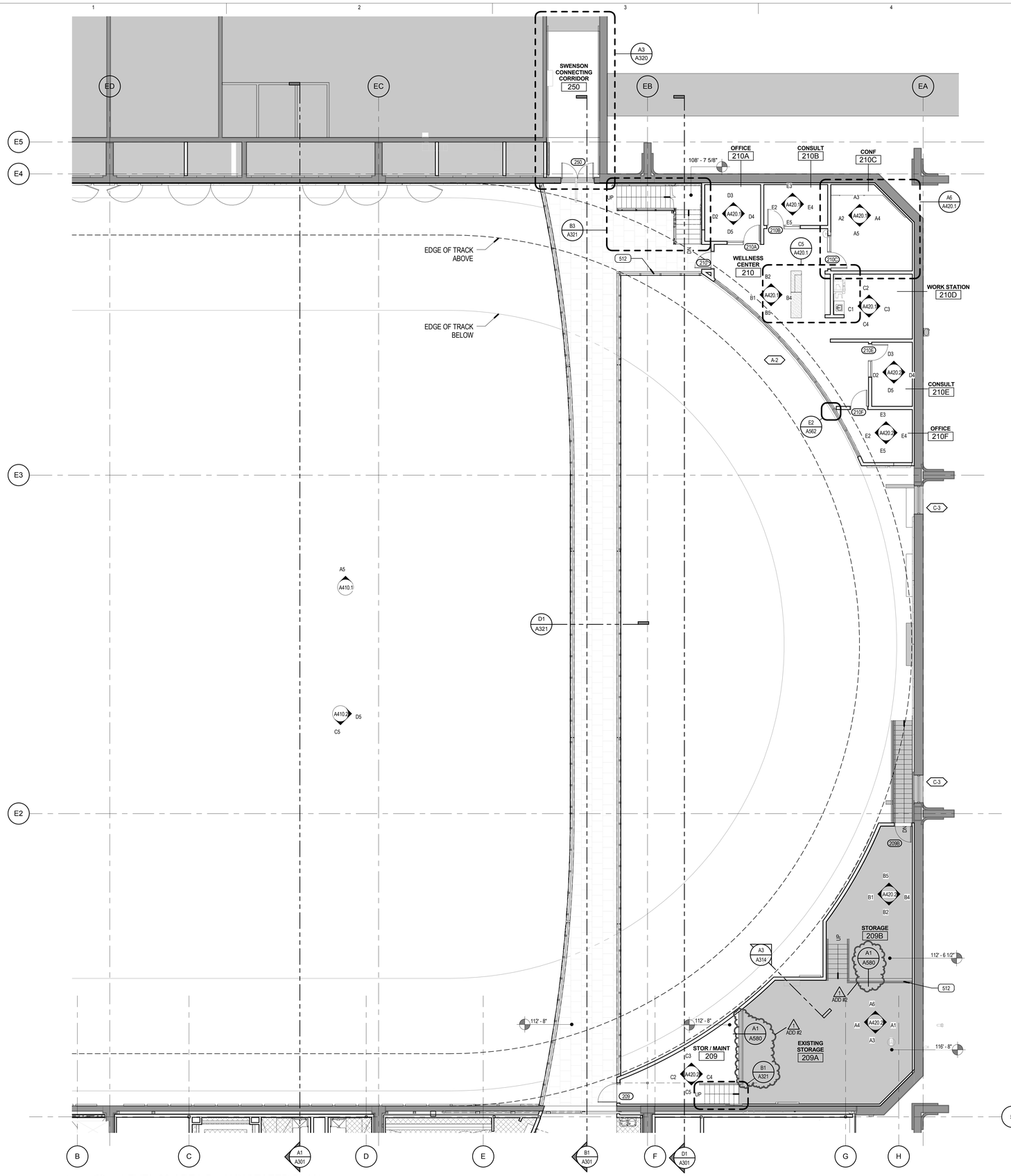

A1 LEVEL 02 AREA B - ANNOTATED PLAN

SCALE: 1/8" = 1'-0"

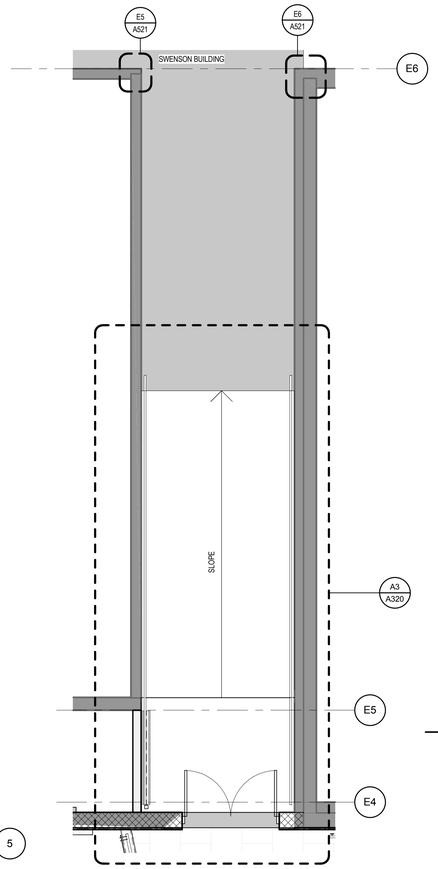

A5 ENLARGED RAMP ANNOTATION PLAN

SCALE: 1/4" = 1'-0"

ANNOTATED FLOOR PLAN NOTES

SYMBOLOGY	
D003F	DOOR NUMBER (SEE SHEET A600.0 FOR DOOR SCHEDULE)
C12	WINDOW NUMBER (SEE SHEETS A610.0, A611.0, A620.0 FOR WINDOW TYPES)
	EXISTING AREA/ ITEM TO REMAIN

1. WHERE FLOOR DRAINS ARE INSTALLED, THE FLOOR IS TO SLOPE TO THE DRAIN. THE MAXIMUM SLOPE IS NOT OT EXCEED 2% WHILE THE MINIMUM SLOPE IS NOT TO BE LESS THAN 1%.
2. WHERE CONCRETE PADS ARE CALLED TO BE CONSTRUCTED UNDER EQUIPMENT, THE SLAB IS TO BE 8" THICK, U.N.O., AND IS TO HAVE #4 BARS AT 18" O.C. EACH WAY. COORDINATE DIMENSIONS OF PAD WITH ACTUAL EQUIPMENT SPEC.
3. SEE TYPICAL FLOORING TRANSITION DETAILS SHEET A590.
4. THE CONTRACTOR IS TO ENSURE THAT BETWEEN ANY FINISH FLOOR ELEVAITON TO 34" A.F.F. ALL GUARDRAILS ARE TO BE CONSTRUCTED AND INSTALLED SO THAT A 4" SPHERE WILL NOT PASS BETWEEN ANY TOW ADJACENT GUARDRAIL COMPONENTS OR BETWEEN THE EDGE OF A GUARDRAIL AND ALL ADJACENT BUILDING ELEMENTS SUCH AS A WALL OR FLOOR. AND 8" DIAMETER SHPERE IS NOT TO PASS BETWEEN THE ABOVE MENTIONED COMPONENTS AND ELEMENTS FROM AN ELEVATION 34" A.F.F. AND HIGHER.
5. SEE TYPICAL FIRE EXTINGUISER CABINET INSTALLATION DETAILS.

KEYED NOTES

512 1-1/2" STEEL PIPE GUARDRAIL PAINTED TYP.

KEY PLAN

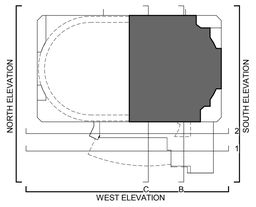

VCBO
ARCHITECTURE
VALENTINER
CRANE
BRUNJES
ONYON

VCBO ARCHITECTURE
524 SOUTH 600 EAST
SALT LAKE CITY, UT 84102
Phone: (801) 575-8800
Fax: (801) 531-9850
WWW: www.vcbo.com

DFCM CODE COMPLIANCE STAMP

Student Activity Center

Stromberg Addition - BID SET

Weber State University
3750 Harrison Blvd. Ogden, UT 84408

Rev #	Date	Description
1	10.12.2012	ADD #2

Job # 12475
CAD File
Drawn Author Checked Checker
Date 10.03.2012
Owner # DFCM #12031810

LEVEL 02 AREA B - ANNOTATED PLAN

A122.2

10/12/2012 2:24:38 PM

KEYED NOTES

507 STEEL COLUMN PAINTED WHERE EXPOSED
518 STEEL LADDER

CEILING LEGEND

	A-	SUSPENDED 2' X 2' ACOUSTICAL LAY-IN TILE CEILING
	B-	SUSPENDED 2' X 4' ACOUSTICAL LAY-IN TILE CEILING
	C-	SUSPENDED 5/8" GYP. BD. CEILING SYSTEM - (1 LAYER) PAINTED. APPLY EPOXY PAINT IN WET AREAS.
	D-	SUSPENDED 2' X 2' METAL SCULPTURAL LAY-IN TILE CEILING.
	E-	OPEN TO STRUCTURE ABOVE, PAINTED.
	F-	METAL SOFFIT SYSTEM
	G-	2 HOUR FIRE-RATED CEILING ASSEMBLY. (2) LAYERS TYPE-X GYP. BOARD.
	J-	COMPOSITE METAL PANEL
	X-	EXISTING CEILING SYSTEM, TO REMAIN

CEILING SYMBOLS

ELECTRICAL

	2'X4' FLUORESCENT FIXTURE
	2'X2' FLUORESCENT FIXTURE
	1'X4' FLUORESCENT FIXTURE
	FLUORESCENT STRIP FIXTURE
	RECESSED DOWN LIGHT
	WALL WASH
	1'X4' FLUORESCENT FIXTURE
	EXIT SIGN, SINGLE-SIDED
	EXIT SIGN, DOUBLE-SIDED
F	FIRE ALARM
S	SPEAKER
P	SMOKE DETECTOR
W	WIRELESS INTERNET

MECHANICAL

	SUPPLY GRILLE
	RETURN GRILLE
	EXHAUST GRILLE
	LINEAR DIFFUSER
	SPRINKLER HEAD - CEILING MOUNT
	SPRINKLER HEAD - WALL MOUNT

GENERAL CEILING NOTES

1. REFER TO DETAIL C6/A530 FOR TYPICAL CEILING SUSPENSION & SEISMIC BRACING
2. REFER TO DETAIL A6/A530 FOR TYPICAL SUSPENDED GYP. BOARD CEILINGS
3. ALL UNIDENTIFIED CEILING TYPES ON THE PLANS SHALL BE TYPE " A" AT 9'-4" A.F.F.
4. GRID SUSPENSION SYSTEMS SHALL BE CENTERED WITHIN AREAS INDICATED, UNLESS NOTED OTHERWISE
5. PAINT ALL EXPOSED STRUCTURE, MECHANICAL, DUCTS, ELECTRICAL WORK, PIPING, ETC. ALL VISIBLE ELEMENTS TO BE PAINTED AT TYPE "E" & TYPE "A" (ABOVE CEILING CLOUDS WHERE VISABLE)
6. REFER TO ARCHITECTURAL DRAWINGS FOR LOCATION OF MECHANICAL GRILLES, AND TO MECHANICAL DRAWINGS FOR QUANTITIES AND TYPES
7. REFER TO ARCHITECTURAL DRAWINGS FOR LOCATIONS OF LIGHT FIXTURES AND TO ELECTRICAL DRAWINGS FOR QUANTITY AND TYPES
8. MECHANICAL AND ELECTRICAL CONTRACTORS TO COORDINATE WORK WITH SPRINKLER CONTRACTOR TO AVOID CONFLICTS IN FIELD
9. ALL CEILING HEIGHTS ARE ELEVATION ABOVE TOP OF CONCRETE FLOOR SLAB
10. ALL TYPE C CEILINGS IN RESTROOMS, LOCKER ROOMS, SHOWERS, AND WET AREAS TO BE EPOXY PAINTED

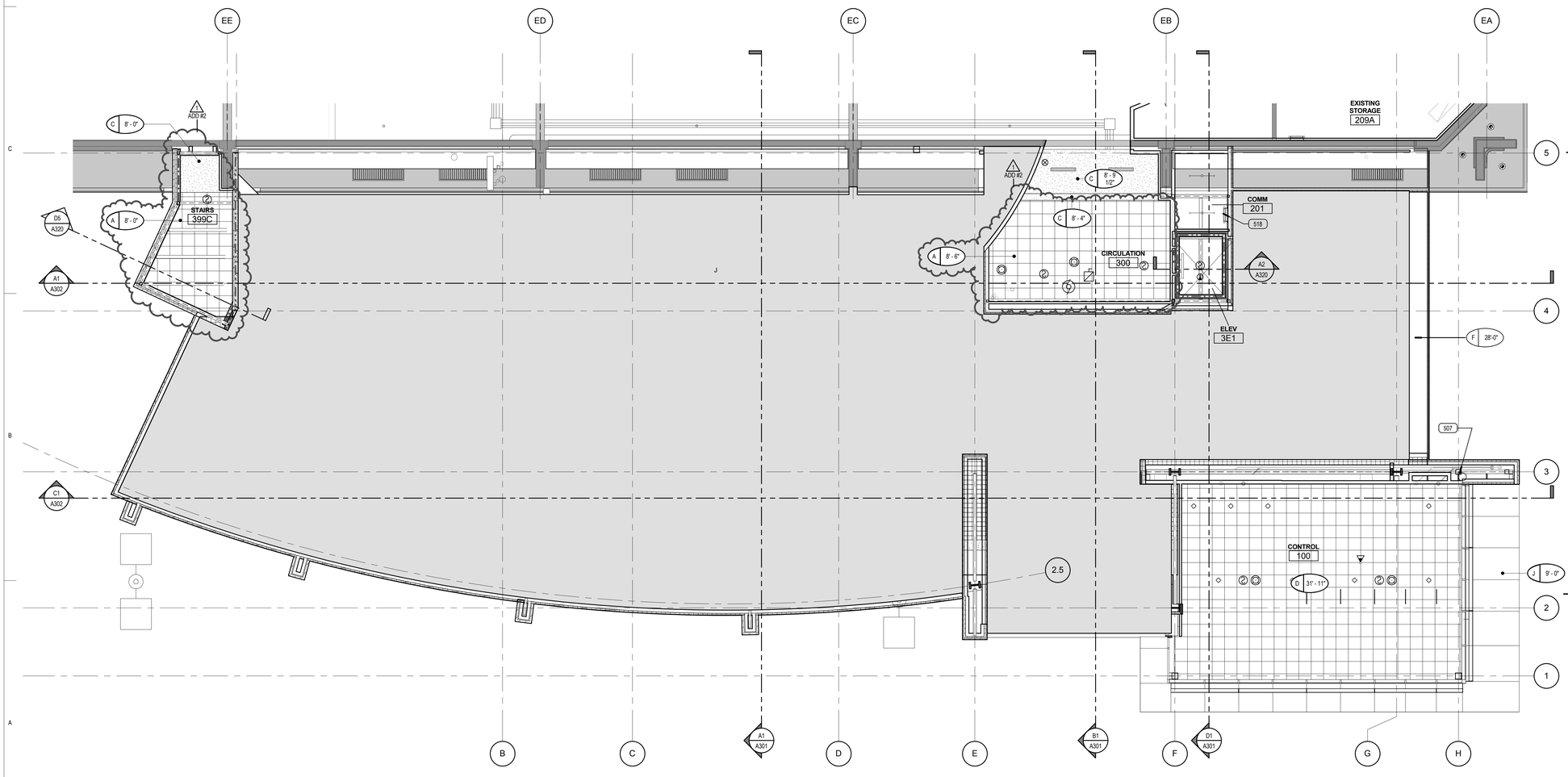

A1 LEVEL 03 AREA C - REFLECTED CEILING PLAN

SCALE: 1/8" = 1'-0"

0' 4' 8' 16' 24'

KEY PLAN

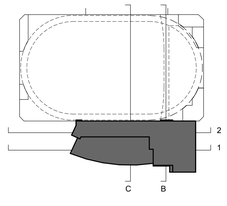

VCBO ARCHITECTURE
VALENTINER
CRANE
BRUNJES
ONYON

VCBO ARCHITECTURE
524 SOUTH 600 EAST
SALT LAKE CITY, UT 84102
Phone: (801) 575-8800
Fax: (801) 531-9850
WWW: www.vcbo.com

LICENSED ARCHITECT
No. 139372
BRENT R. TIPPETS
10-2-12
STATE OF UTAH

DFCM CODE COMPLIANCE STAMP

Student Activity Center
Stromberg Addition - BID SET
Weber State University
3750 Harrison Blvd. Ogden, UT 84408

Rev #	Date	Description
1	10.12.2012	ADD #2

Job # 12475
CAD File
Drawn Author Checked Checker
Date 10.03.2012
Owner # DFCM #12031810

LEVEL 03 AREA C - REFLECTED CEILING PLAN

A133.4

10/12/2012 2:24:44 PM

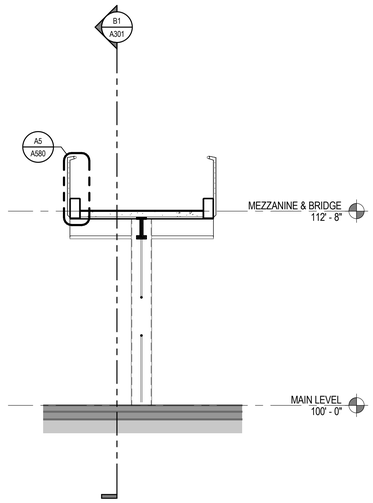

D1 BRIDGE SECTION
SCALE: 1/4" = 1'-0"

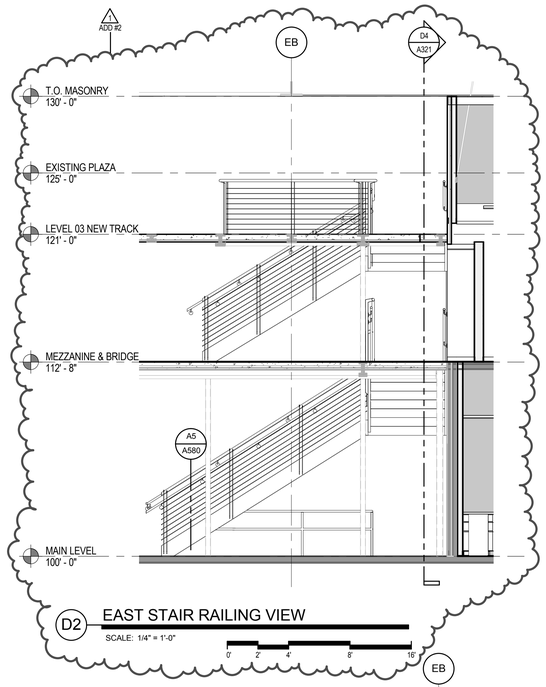

D2 EAST STAIR RAILING VIEW
SCALE: 1/4" = 1'-0"

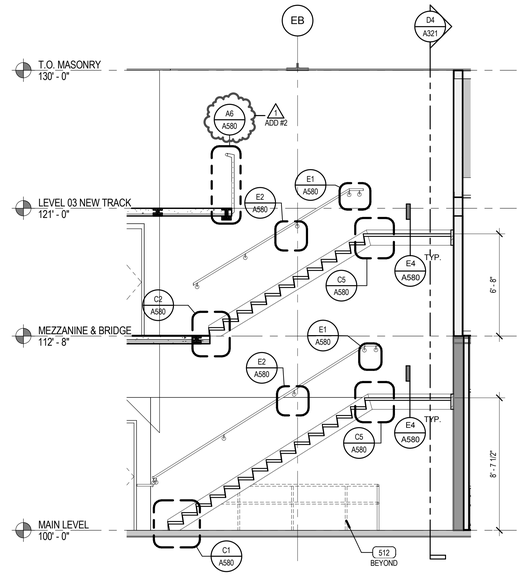

D3 EAST STAIR SECTION 1
SCALE: 1/4" = 1'-0"

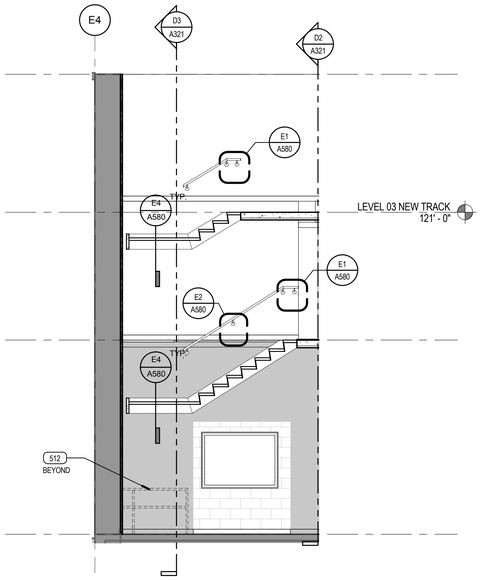

D4 EAST STAIR SECTION 2
SCALE: 1/4" = 1'-0"

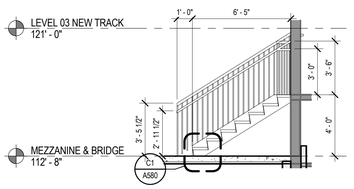

C1 STORAGE STAIR 1 SECTION
SCALE: 1/4" = 1'-0"

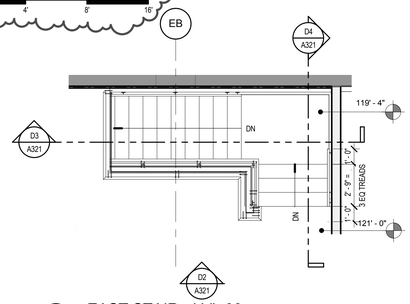

C3 EAST STAIR - LVL 03
SCALE: 1/4" = 1'-0"

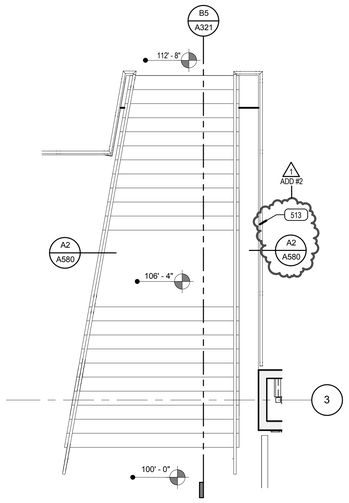

B4 ENLARGED GRAND STAIR PLAN
SCALE: 1/4" = 1'-0"

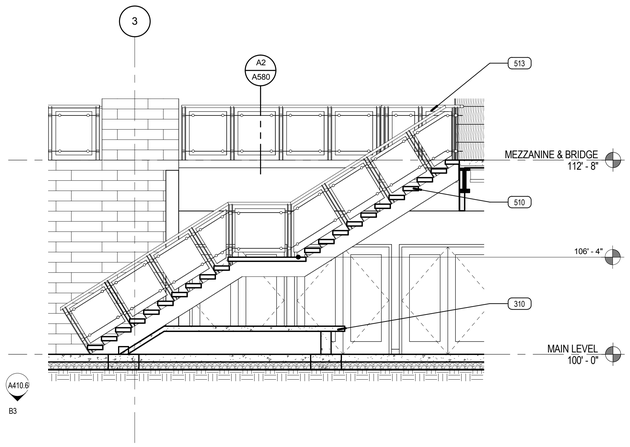

B5 GRAND STAIR SECTION
SCALE: 1/4" = 1'-0"

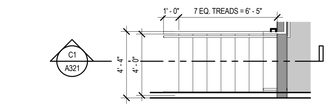

B1 STORAGE STAIR 1
SCALE: 1/4" = 1'-0"

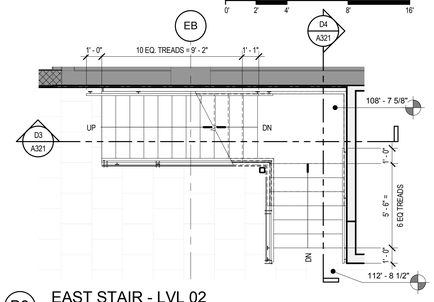

B3 EAST STAIR - LVL 02
SCALE: 1/4" = 1'-0"

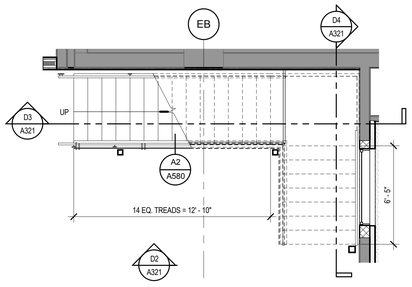

A3 EAST STAIR - LVL 01
SCALE: 1/4" = 1'-0"

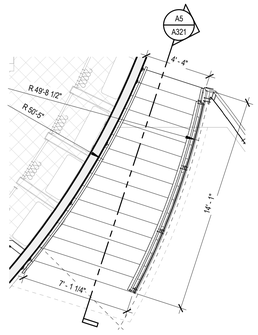

A4 ENLARGED PLAN - STAIR 2
SCALE: 1/4" = 1'-0"

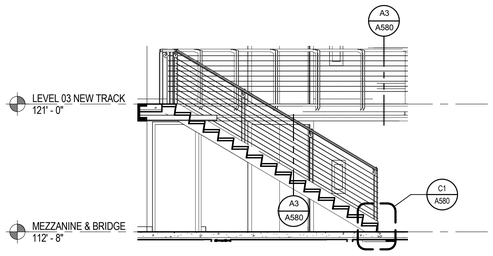

A5 STAIR 2 SECTION
SCALE: 1/4" = 1'-0"

VCBO
ARCHITECTURE
VALENTINER
CRANE
BRUNJES
ONYON

VCBO ARCHITECTURE
524 SOUTH 600 EAST
SALT LAKE CITY, UT 84102
Phone: (801) 575-8800
Fax: (801) 531-9850
WWW: www.vcbo.com

DFCM CODE COMPLIANCE STAMP

Student Activity Center
Stromberg Addition - BID SET
Weber State University
3750 Harrison Blvd. Ogden, UT 84408

Rev #	Date	Description
1	10.12.2012	ADD #2

Job # 12475
CAD File
Drawn Author Checked Checker
Date 10.03.2012
Owner # DFCM #12031810

STAIR PLANS, SECTIONS AND DETAILS

A321

10/12/2012 2:24:58 PM

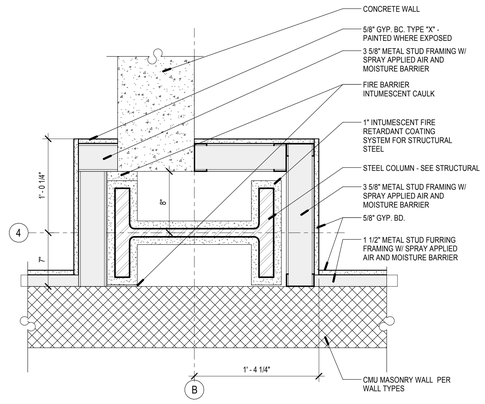

E3 COLUMN B4

SCALE: 1 1/2" = 1'-0"

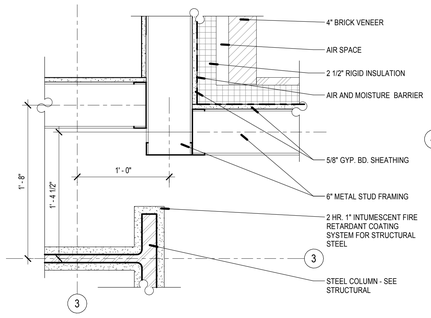

E5 BRICK VENEER TO METAL

SCALE: 1 1/2" = 1'-0"

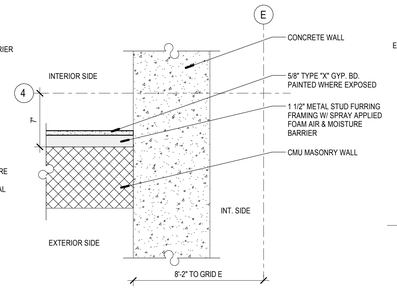

E6 MASONRY WALL TO CONC.

SCALE: 1 1/2" = 1'-0"

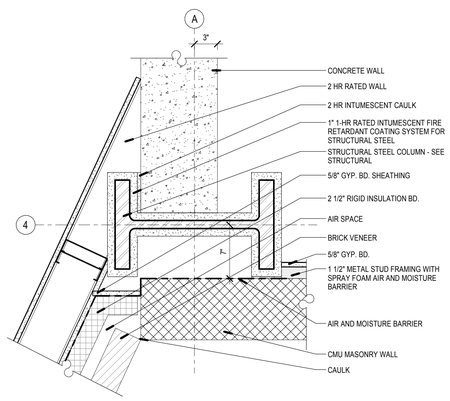

C2 RATED WALL AT COLUMN A4

SCALE: 1 1/2" = 1'-0"

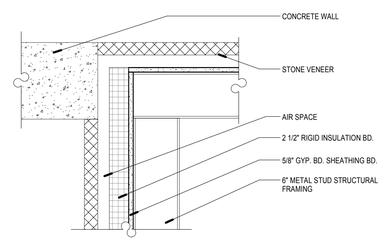

C3 CONC. WALL TO STONE VENEER

SCALE: 1 1/2" = 1'-0"

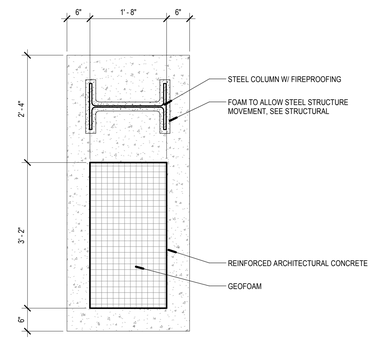

C5 CONCRETE COLUMN @ PARKING

SCALE: 3/4" = 1'-0"

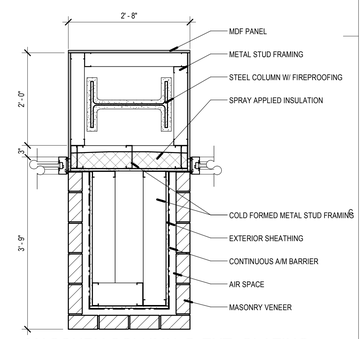

C6 MASONRY COLUMN @ EXT. GLAZING

SCALE: 3/4" = 1'-0"

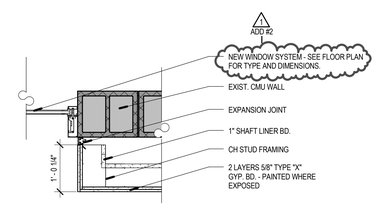

B5 EXPANSION JOINT DET.

SCALE: 3/4" = 1'-0"

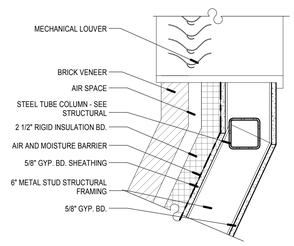

A2 LOUVER DETAIL

SCALE: 1 1/2" = 1'-0"

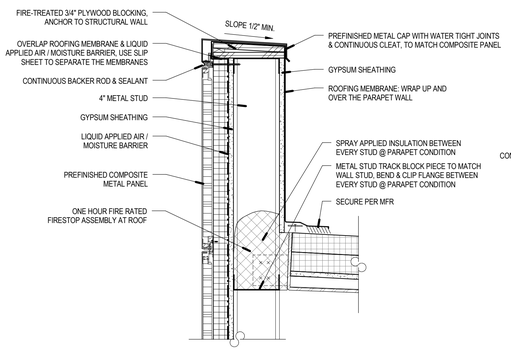

A3 PARAPET COMPOSITE METAL

SCALE: 1 1/2" = 1'-0"

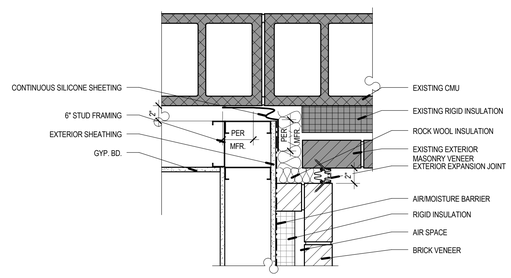

A5 EXPANSION JOINT @ MASONRY WALL

SCALE: 1 1/2" = 1'-0"

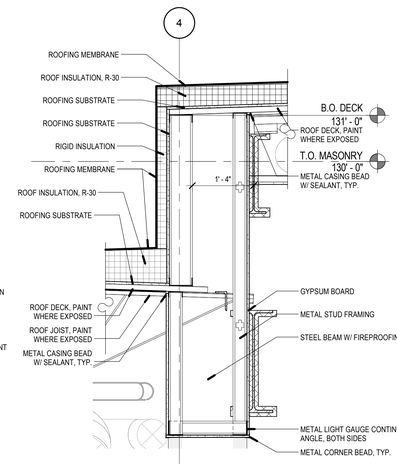

A6 ROOF POP UP @ GRID 4

SCALE: 3/4" = 1'-0"

VCBO

ARCHITECTURE
VALENTINER
CRANE
BRUNJES
ONYON

VCBO ARCHITECTURE
524 SOUTH 600 EAST
SALT LAKE CITY, UT 84102
Phone: (801) 575-8800
Fax: (801) 531-9850
WWW: www.vcbo.com

DFCM CODE COMPLIANCE STAMP

Student Activity Center

Stromberg Addition - BID SET

Weber State University
3750 Harrison Blvd. Ogden, UT 84408

Rev #	Date	Description
1	10.12.2012	ADD #2

Job # 12475
CAD File
Drawn Author Checked Checker
Date 10.03.2012
Owner # DFCM #12031810

EXTERIOR ENVELOPE DETAILS

A510

10/12/2012 2:25:03 PM

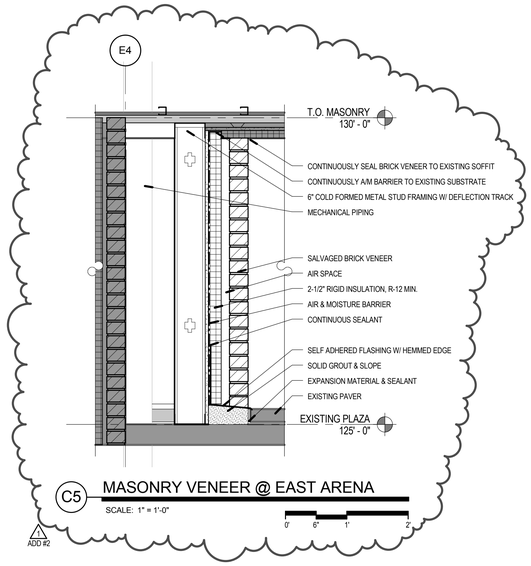

C5 MASONRY VENEER @ EAST ARENA

SCALE: 1" = 1'-0"

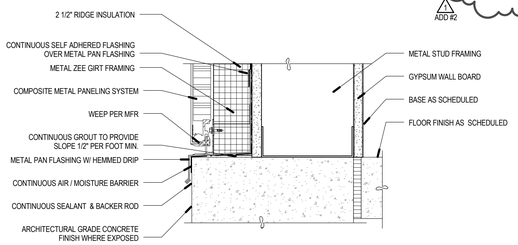

B4 METAL PANEL @ BASE DETAIL

SCALE: 3" = 1'-0"

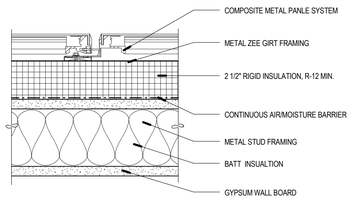

B5 VERTICAL JOINT DETAIL

SCALE: 3" = 1'-0"

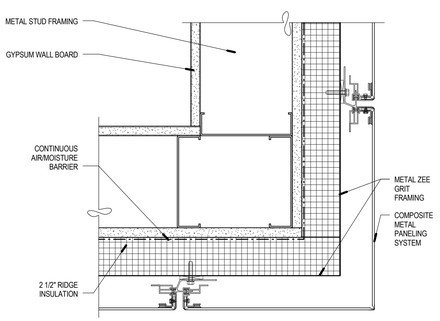

A4 ALPOLIC PANEL DETAIL

SCALE: 3" = 1'-0"

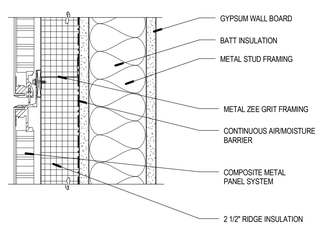

A5 HORIZONTAL JOINT DETAIL

SCALE: 3" = 1'-0"

VCBO

ARCHITECTURE
VALENTINER
CRANE
BRUNJES
ONYON

LICENSED ARCHITECT
No. 153972
BRENT R. TIPPETS
10-2-12
STATE OF UTAH

VCBO ARCHITECTURE
524 SOUTH 600 EAST
SALT LAKE CITY, UT 84102
Phone: (801) 575-8800
Fax: (801) 531-9850
WWW: www.vcbo.com

DFCM CODE COMPLIANCE STAMP

Student Activity Center

Stromberg Addition - BID SET

Weber State University
3750 Harrison Blvd. Ogden, UT 84408

Rev #	Date	Description
1	10.12.2012	ADD #2

Job # 12475
CAD File
Drawn Author Checked Checker
Date 10.03.2012
Owner # DFCM #12031810

EXTERIOR ENVELOPE DETAILS

A511

10/12/2012 2:25:07 PM

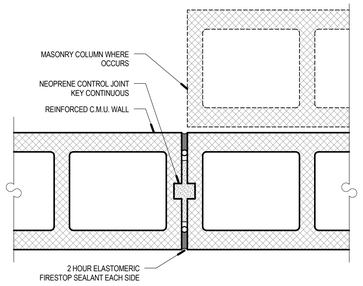

E3 2 HOUR CONTROL JOINT, TYP.

SCALE: 3" = 1'-0"

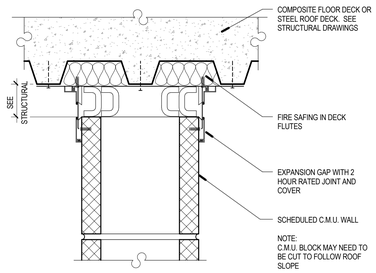

E4 TYPICAL EXPANSION C.M.U. WALL HEAD DETAIL

SCALE: 3" = 1'-0"

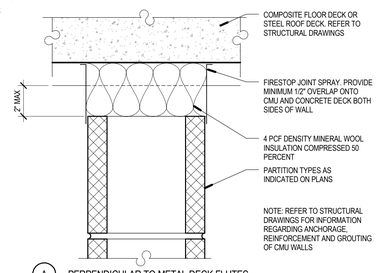

A PERPENDICULAR TO METAL DECK FLUTES

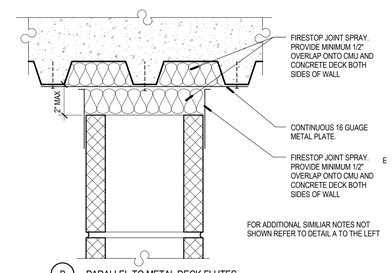

B PARALLEL TO METAL DECK FLUTES

E5 RATED MASONRY HEAD DETAILS

SCALE: 3" = 1'-0"

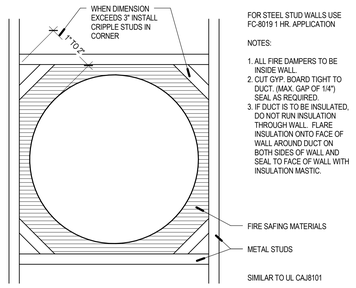

FOR STEEL STUD WALLS USE FC-8019 1 HR. APPLICATION

NOTES:

1. ALL FIRE DAMPERS TO BE INSIDE WALL.
2. CUT GYP. BOARD TIGHT TO DUCT. (MAX. GAP OF 1/4") SEAL AS REQUIRED.
3. IF DUCT IS TO BE INSULATED, DO NOT RUN INSULATION THROUGH WALL. FLARE INSULATION ONTO FACE OF WALL AROUND DUCT ON BOTH SIDES OF WALL AND SEAL TO FACE OF WALL WITH INSULATION MASTIC.

SIMILAR TO UL CAJ8101

D2 TYP. DUCT OPENING IN RATED WALL

SCALE: NOT TO SCALE

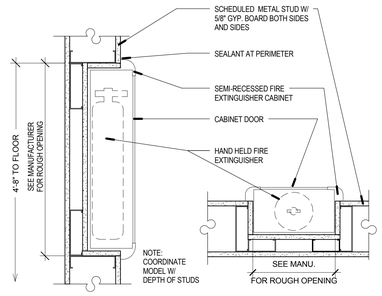

D3 FIRE EXTINGUISHER CABINET DETAIL

SCALE: 1 1/2" = 1'-0"

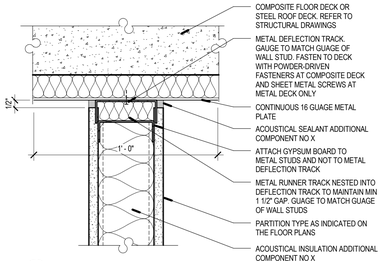

A PERPENDICULAR TO METAL DECK FLUTES

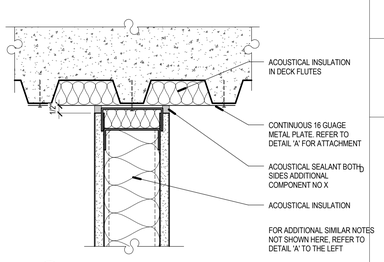

B PARALLEL TO METAL DECK FLUTES

D5 NON-RATED ACOUSTICAL PARTITION HEAD DETAILS

SCALE: 3" = 1'-0"

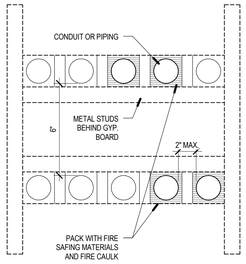

NOTES:

1. CUT GYP. BOARD TIGHT TO DUCT. (MAX. GAP OF 1/4") SEAL AS REQUIRED.
2. THROUGH CONCRETE WALLS USE W-J-1116.
3. THROUGH GYP. BOARD WALL USE W-L-1018.

SIMILAR TO UL CAJ8101

C2 CONDUIT PENETRATION DETAIL

SCALE: 3" = 1'-0"

PROVIDE BACKING PLATES AS INDICATED ON THE DRAWINGS OR WHERE NOT INDICATED, ACCORDING TO THE FOLLOWING SCHEDULE. REFER TO DETAILS ELSEWHERE IN THE SET OF DRAWINGS FOR THE SUPPORT OF WALL MOUNTED ITEMS IN EXCESS OF 200 POUNDS

TYPE 'A' BACKING PLATE

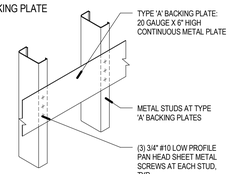

TYPE 'A' BACKING PLATES:

- AT DOOR STOPS AND BUMPER RAILS
- AT TOILET ACCESSORIES, MIRRORS, COAT HOOKS, ETC.
- AT ALL UPPER WALL HUNG CABINETS
- AT ALL BASE CABINETS
- AT ALL FULL HEIGHT CABINETS
- AT WALL MOUNTED ADJUSTABLE SHELVING
- AT ALL WALL MOUNTED HANDRAILS

TYPE 'B' BACKING PLATE

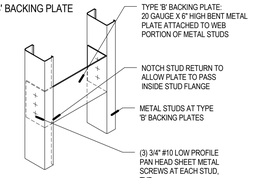

TYPE 'B' BACKING PLATES:

TYPE 'B' BACKING PLATE SHALL SUPPORT THE SAME ITEMS AS TYPE 'A' BACKING PLATE BUT USE WHERE APPEARANCE IS THE MAIN CONCERN SUCH AS LOBBIES AND OTHER HIGH DESIGN AREAS.

C3 TYPICAL BACKING PLATE SCHEDULE

SCALE: NOT TO SCALE

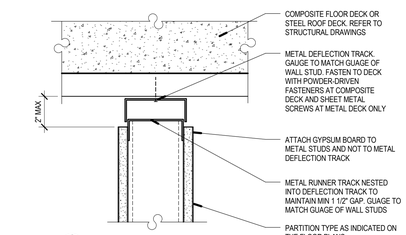

A PERPENDICULAR TO METAL DECK FLUTES

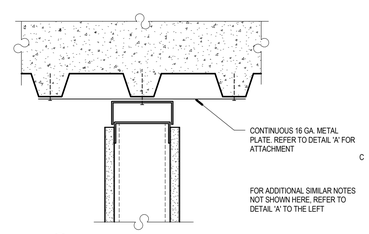

B PARALLEL TO METAL DECK FLUTES

C5 NON-RATED PARTITION HEAD DETAILS

SCALE: 3" = 1'-0"

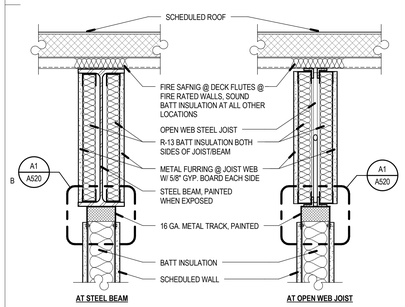

B1 SLIP JOINT AT BEAM / JOIST

SCALE: 1 1/2" = 1'-0"

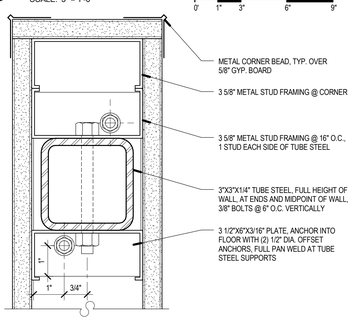

B2 LOW WALL REINFORCEMENT

SCALE: 6" = 1'-0"

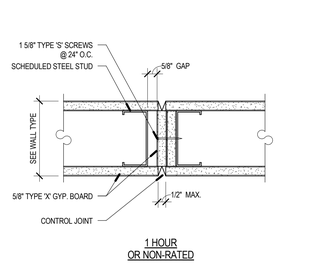

B3 TYPICAL STUD FRAMED CONTROL JOINT

SCALE: 3" = 1'-0"

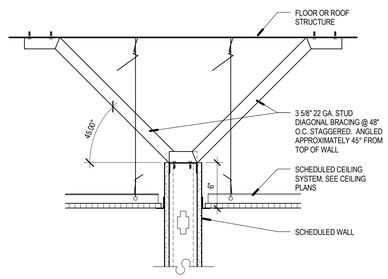

B4 TYP. WALL BRACING DETAIL

SCALE: 1 1/2" = 1'-0"

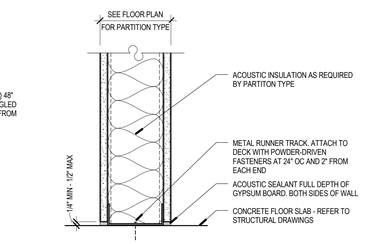

B5 TYPICAL NON-RATED PARTITION BASE DETAIL

SCALE: 3" = 1'-0"

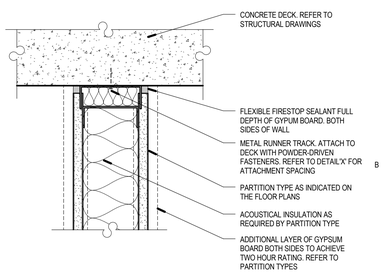

B6 TYPICAL FIRE-RATED PARTITION HEAD DETAIL

SCALE: 3" = 1'-0"

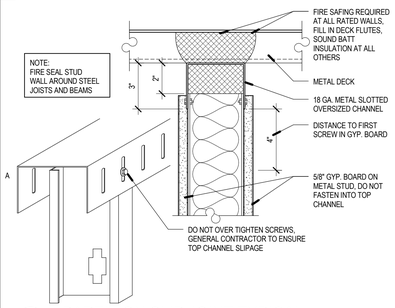

A1 PARTITION SLIP JOINT TYPICAL

SCALE: 3" = 1'-0"

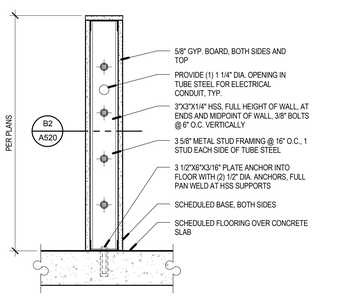

A2 LOW WALL SECTION

SCALE: 1 1/2" = 1'-0"

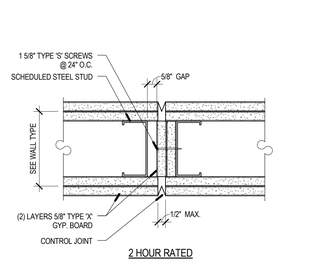

A3 2 HOUR TYPICAL STUD FRAMED CONTROL JOINT

SCALE: 3" = 1'-0"

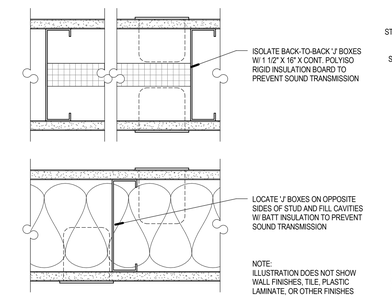

A4 TYPICAL ELECTRICAL DEVICE DETAIL

SCALE: 3" = 1'-0"

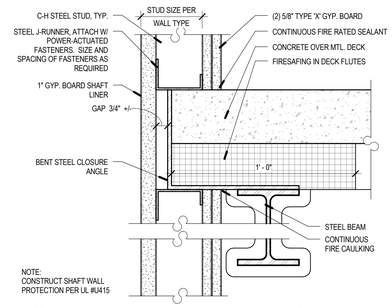

A5 TYPICAL SHAFT WALL HEAD/BASE

SCALE: 3" = 1'-0"

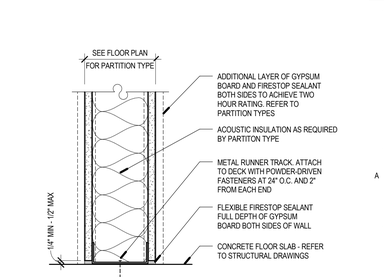

A6 TYPICAL FIRE-RATED PARTITION BASE DETAIL

SCALE: 3" = 1'-0"

VCBO ARCHITECTURE
VALENTINER CRANE BRUNJES ONYON

VCBO ARCHITECTURE
524 SOUTH 600 EAST
SALT LAKE CITY, UTAH 84102
Phone: (801) 575-8800
Fax: (801) 531-9850
WWW: www.vcbo.com

Student Activity Center

Weber State University
DFCM #12031810
3750 Harrison Blvd. Ogden, UT 84408
Stromberg Addition - BID SET

Rev #	Date	Description

Job # 12475
CAD File
Drawn Author Checked Checker
Date 10.03.2012
Owner # DFCM #12031810
Ins. #

TYPICAL INTERIOR FRAMING DETAILS

A520

10/12/2012 2:25:12 PM

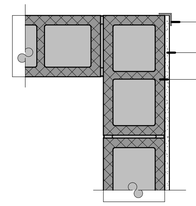

E5 EXIST. CMU WALL CORNER AT GRID E6

SCALE: 1 1/2" = 1'-0"

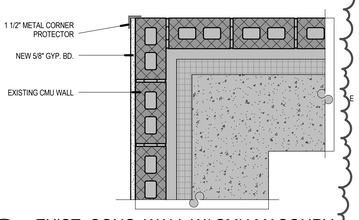

E6 EXIST. CONC. WALL W/ CMU MASONRY

SCALE: 1 1/2" = 1'-0"

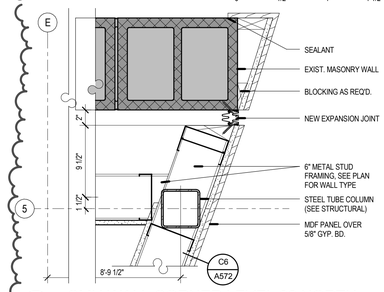

D5 CMU WALL CORNER LEVEL 02 NORTH

SCALE: 1 1/2" = 1'-0"

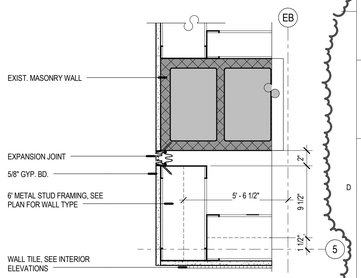

D6 CMU WALL CORNER LEVEL 02 SOUTH

SCALE: 1 1/2" = 1'-0"

ADD #2

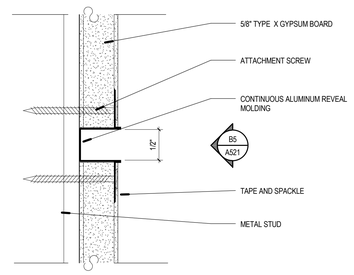

C5 GYP. BOARD REVEAL DETAIL

SCALE: 12" = 1'-0"

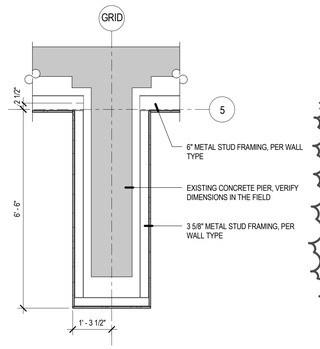

C6 EXISTING CONCRETE PIER DETAIL

SCALE: 1/2" = 1'-0"

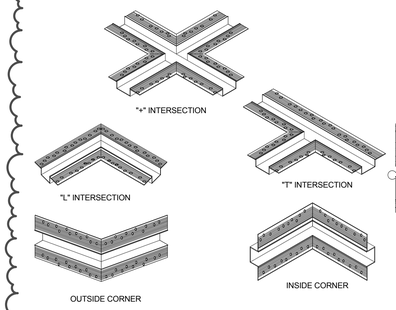

B5 REVEAL END CAP DETAIL

SCALE: 3" = 1'-0"

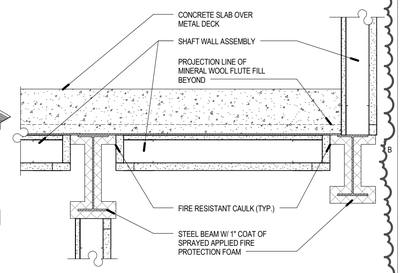

B6 SHAFT ASSEMBLY AT STAIR

SCALE: 1 1/2" = 1'-0"

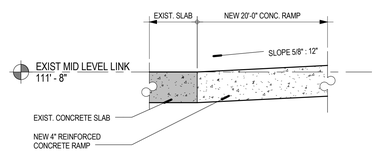

A5 RAMP BASE DETAIL

SCALE: 1 1/2" = 1'-0"

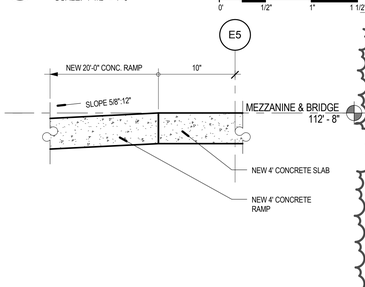

A6 RAMP TOP DETAIL

SCALE: 1 1/2" = 1'-0"

VCBO
ARCHITECTURE
VALENTINER
CRANE
BRUNJES
ONYON

VCBO ARCHITECTURE
524 SOUTH 600 EAST
SALT LAKE CITY, UT 84102
Phone: (801) 575-8800
Fax: (801) 531-9850
WWW: www.vcbo.com

LICENSED ARCHITECT
No. 153972
BRENT R. TIPPETS
10-2-12
STATE OF UTAH

DFCM CODE COMPLIANCE STAMP

Student Activity Center

Stromberg Addition - BID SET

Weber State University
3750 Harrison Blvd. Ogden, UT 84408

Rev #	Date	Description
1	10.12.2012	ADD #2

Job # 12475
CAD File
Drawn Author Checked Checker
Date 10.03.2012
Owner # DFCM #12031810

INTERIOR DETAILS

A521

10/12/2012 2:25:17 PM

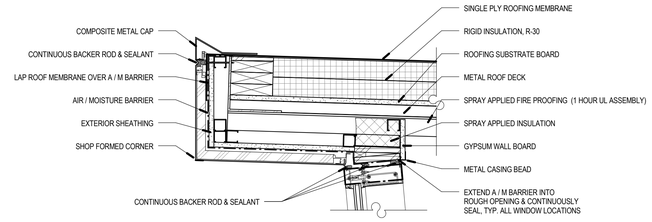

E3 GRAVEL STOP @ CURTAIN WALL
SCALE: 1 1/2" = 1'-0"

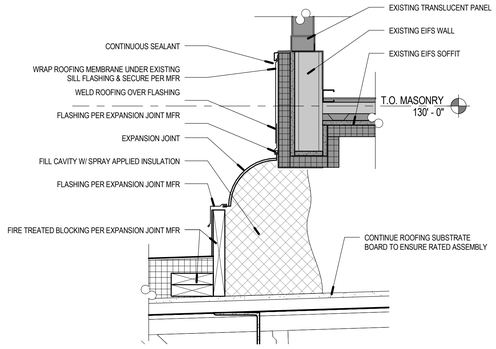

C2 EXPANSION JOINT ROOF @ EXST SOFFIT
SCALE: 1 1/2" = 1'-0"

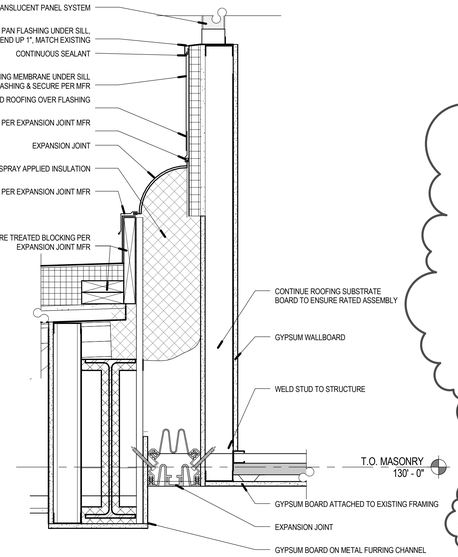

C3 EXPANSION JOINT ROOF @ TRANSLUCENT PANEL
SCALE: 1 1/2" = 1'-0"

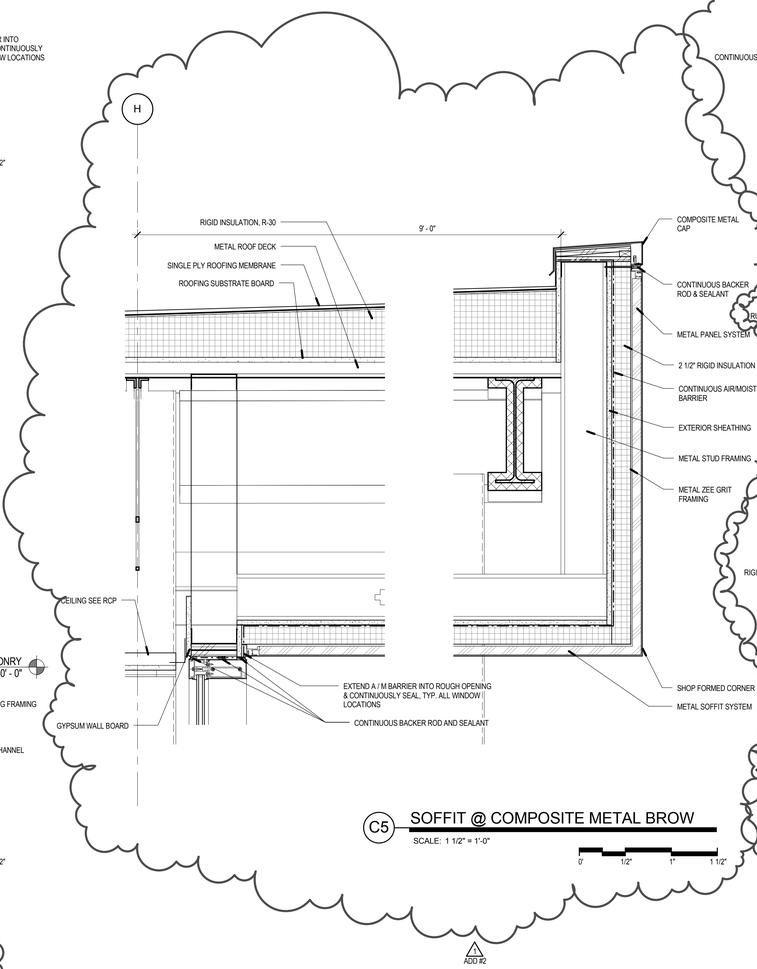

C5 SOFFIT @ COMPOSITE METAL BROW
SCALE: 1 1/2" = 1'-0"
ADD #2

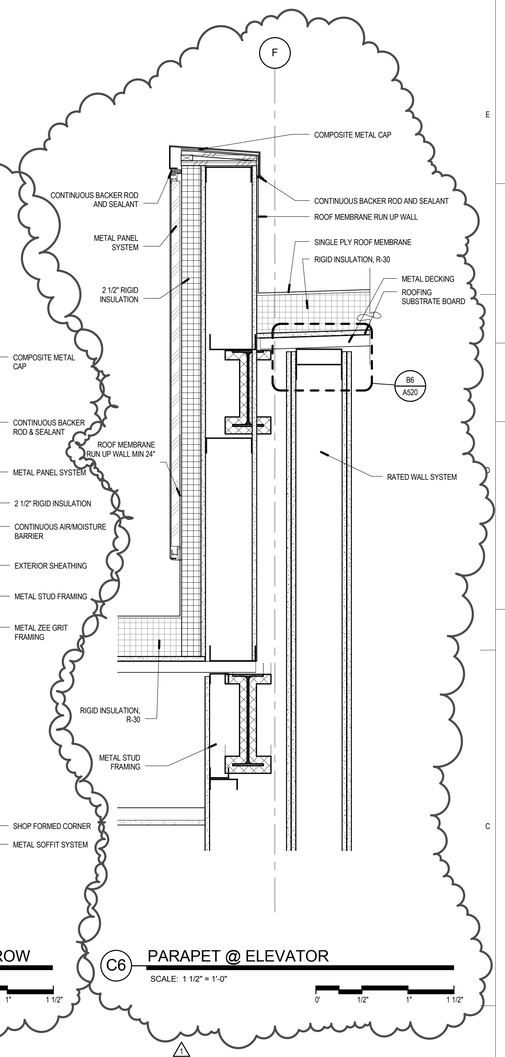

C6 PARAPET @ ELEVATOR
SCALE: 1 1/2" = 1'-0"
ADD #2

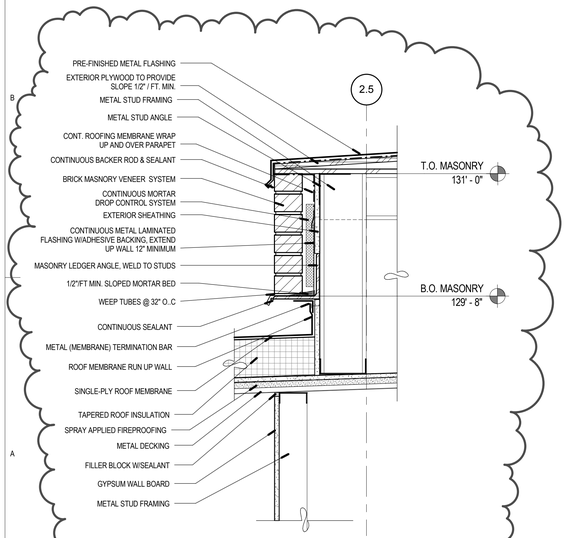

A1 MASONRY LEDGER @ ROOF
SCALE: 1 1/2" = 1'-0"
ADD #2

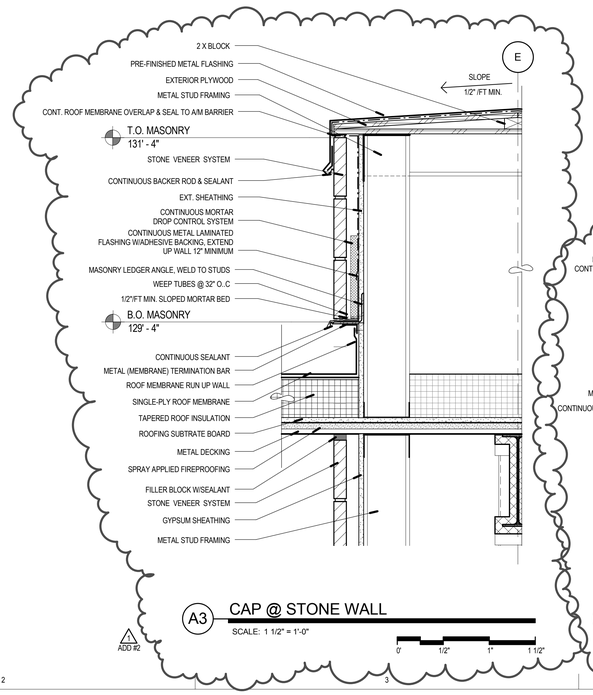

A3 CAP @ STONE WALL
SCALE: 1 1/2" = 1'-0"
ADD #2

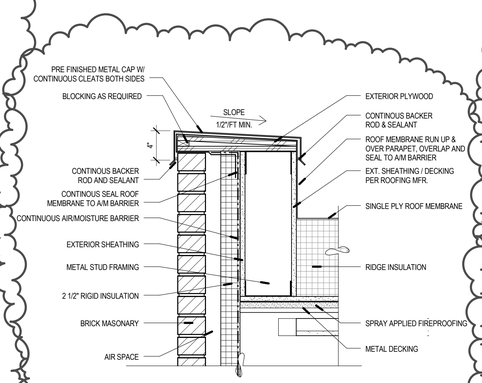

A4 GRAVEL STOP @ NORTH STAIR
SCALE: 1 1/2" = 1'-0"
ADD #2

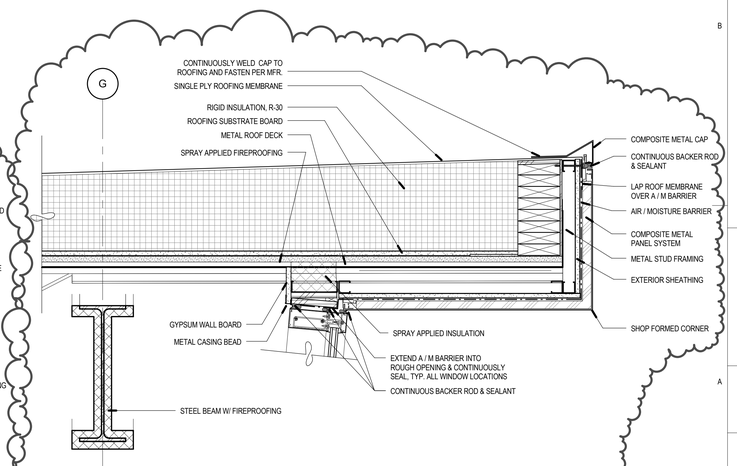

A6 GRAVEL STOP @ SOUTH CURTAIN WALL CANT
SCALE: 1 1/2" = 1'-0"
ADD #2

10/12/2012 2:25:25 PM

VCBO
ARCHITECTURE
VALENTINER
CRANE
BRUNJES
ONYON

VCBO ARCHITECTURE
524 SOUTH 600 EAST
SALT LAKE CITY, UT 84102
Phone: (801) 575-8800
Fax: (801) 531-9850
WWW: www.vcbo.com

DFCM CODE COMPLIANCE STAMP

Student Activity Center
Stromberg Addition - BID SET
Weber State University
3750 Harrison Blvd. Ogden, UT 84408

Rev #	Date	Description
1	10.12.2012	ADD #2

Job # 12475
CAD File
Drawn Author Checked Checker
Date 10.03.2012
Owner # DFCM #12031810

ROOF DETAILS

A531

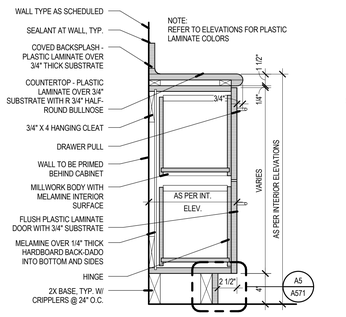

E1 BASE FILE CABINET SECTION

SCALE: 1 1/2" = 1'-0"

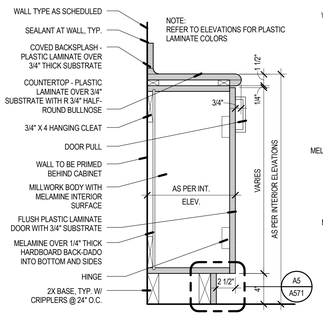

E2 BASE CABINET SECTION 12 INCH

SCALE: 1 1/2" = 1'-0"

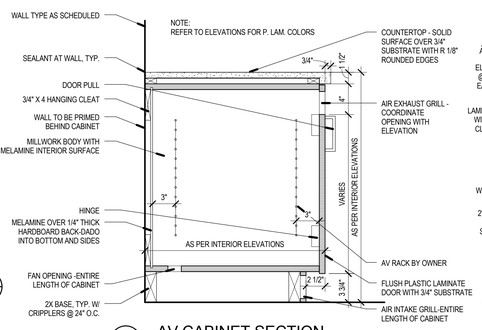

E3 AV CABINET SECTION

SCALE: 1 1/2" = 1'-0"

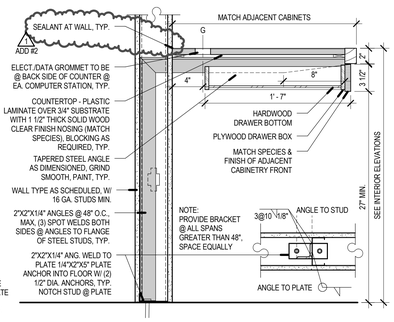

E4 DESK WITH PENCIL DRAWER

SCALE: 1 1/2" = 1'-0"

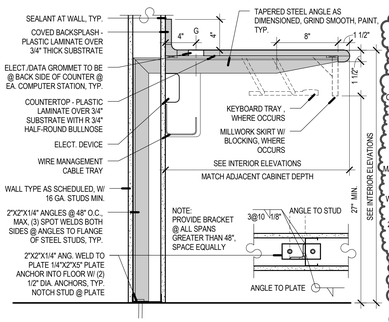

E5 WALL HUNG COUNTERTOP

SCALE: 1 1/2" = 1'-0"

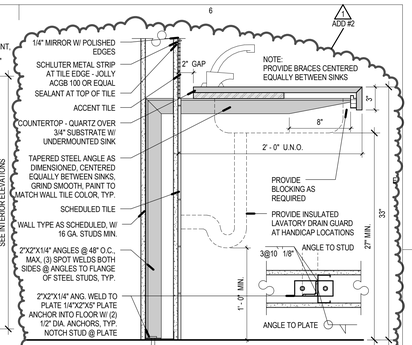

E6 WALL MOUNTED COUNTERTOP

SCALE: 1 1/2" = 1'-0"

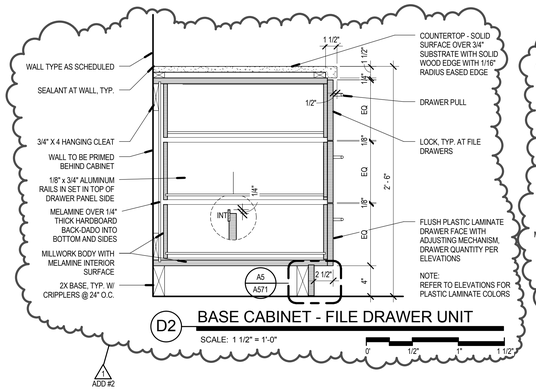

D2 BASE CABINET - FILE DRAWER UNIT

SCALE: 1 1/2" = 1'-0"

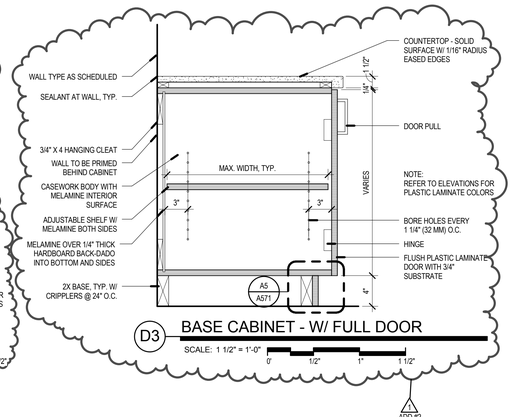

D3 BASE CABINET - W/ FULL DOOR

SCALE: 1 1/2" = 1'-0"

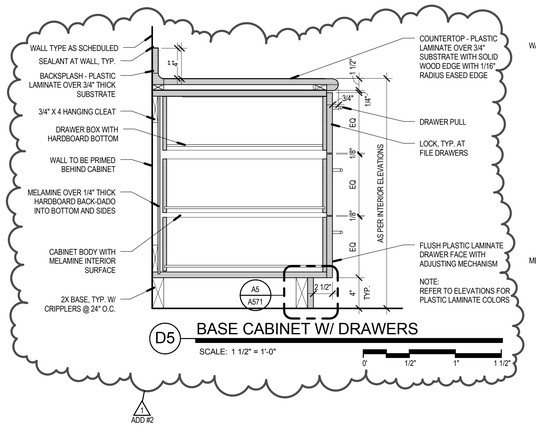

D5 BASE CABINET W/ DRAWERS

SCALE: 1 1/2" = 1'-0"

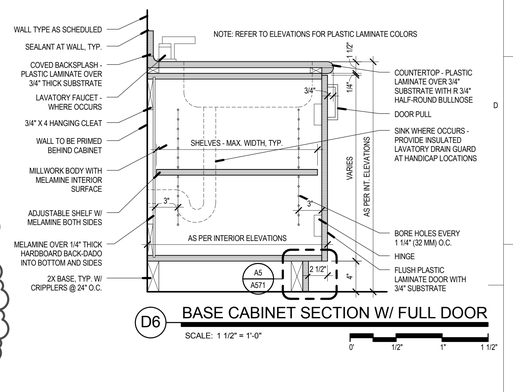

D6 BASE CABINET SECTION W/ FULL DOOR

SCALE: 1 1/2" = 1'-0"

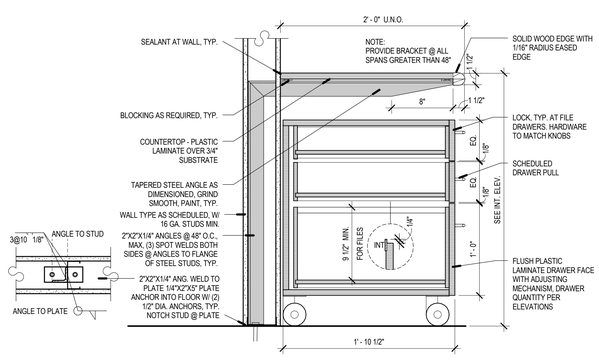

B2 COUNTERTOP - MOBILE DRAWERS

SCALE: 1 1/2" = 1'-0"

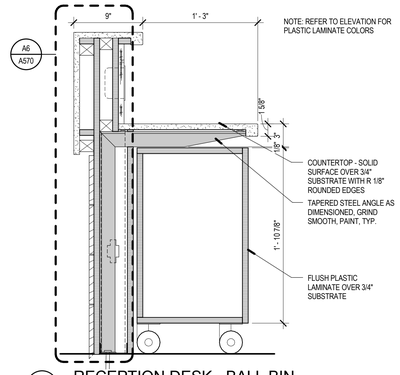

B3 RECEPTION DESK - BALL BIN

SCALE: 1 1/2" = 1'-0"

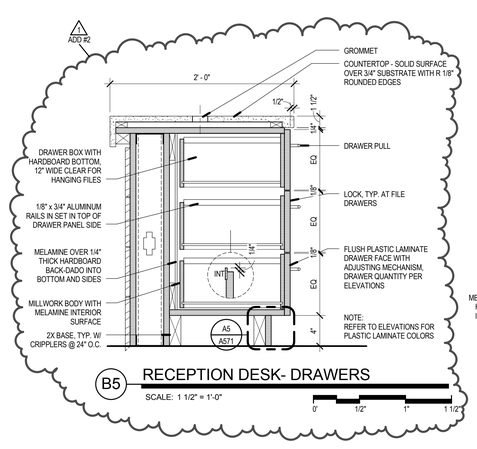

B5 RECEPTION DESK- DRAWERS

SCALE: 1 1/2" = 1'-0"

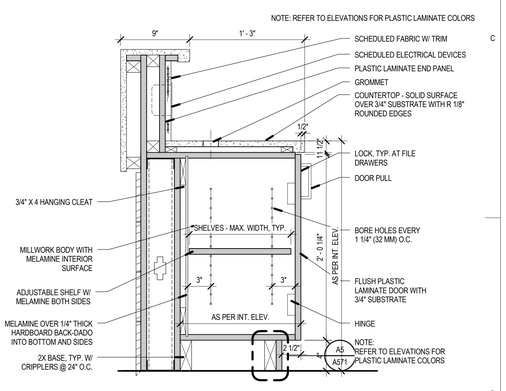

B6 RECEPTION DESK DOORS

SCALE: 1 1/2" = 1'-0"

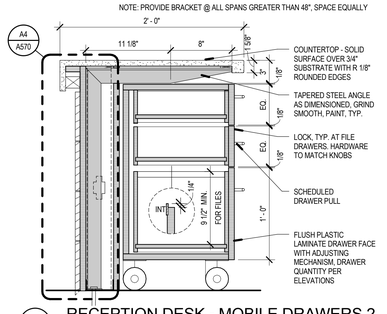

A2 RECEPTION DESK - MOBILE DRAWERS 2

SCALE: 1 1/2" = 1'-0"

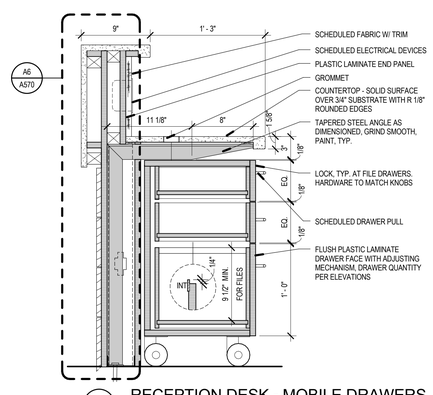

A3 RECEPTION DESK - MOBILE DRAWERS

SCALE: 1 1/2" = 1'-0"

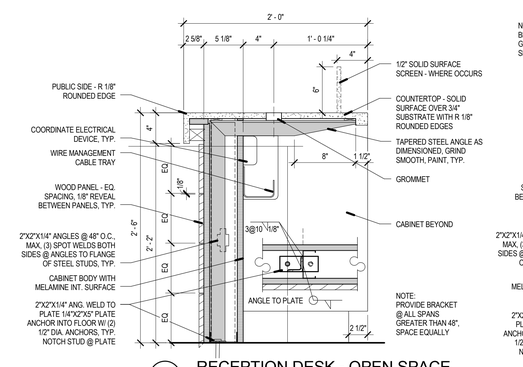

A4 RECEPTION DESK - OPEN SPACE

SCALE: 1 1/2" = 1'-0"

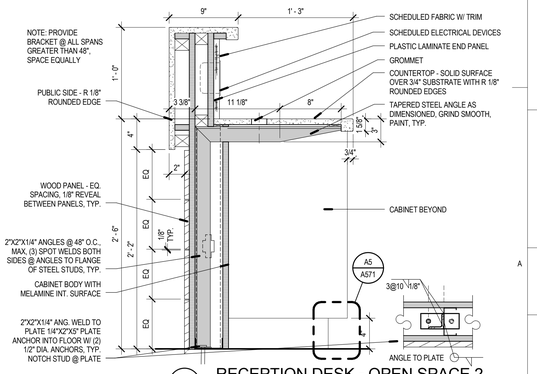

A6 RECEPTION DESK - OPEN SPACE 2

SCALE: 1 1/2" = 1'-0"

VCBO ARCHITECTURE
VALENTINER
CRANE
BRUNJES
ONYON

VCBO ARCHITECTURE
524 SOUTH 600 EAST
SALT LAKE CITY, UT 84102
Phone: (801) 575-8800
Fax: (801) 531-9850
www: www.vcbo.com

DFCM CODE COMPLIANCE STAMP

Student Activity Center

Stromberg Addition - BID SET

Weber State University
3750 Harrison Blvd. Ogden, UT 84408

Rev #	Date	Description
1	10.12.2012	ADD #2

Job # 12475
CAD File
Drawn Author Checked Checker
Date 10.03.2012
Owner # DFCM #12031810

TYPICAL CASEWORK DETAILS

A570

10/12/2012 2:25:41 PM

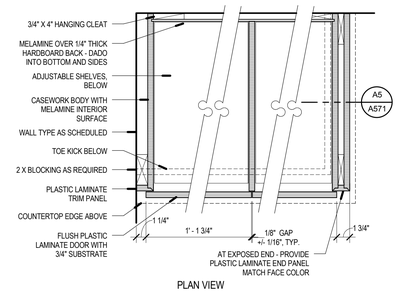

E2 BASE CABINET PLAN DETAIL

SCALE: 1 1/2" = 1'-0"

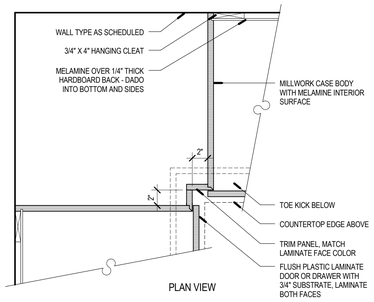

E3 BASE CORNER DETAIL

SCALE: 1 1/2" = 1'-0"

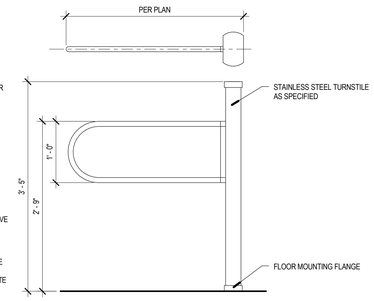

E4 SWING GATE DETAIL

SCALE: 1" = 1'-0"

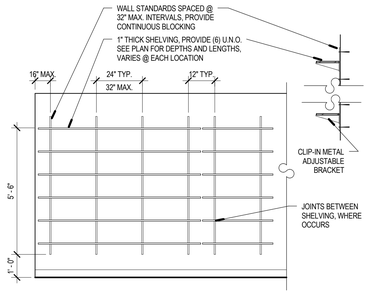

E5 FULL HEIGHT ADJ. SHELVES

SCALE: 3/8" = 1'-0"

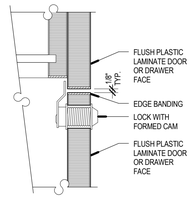

E6 LOCK DETAIL

SCALE: 6" = 1'-0"

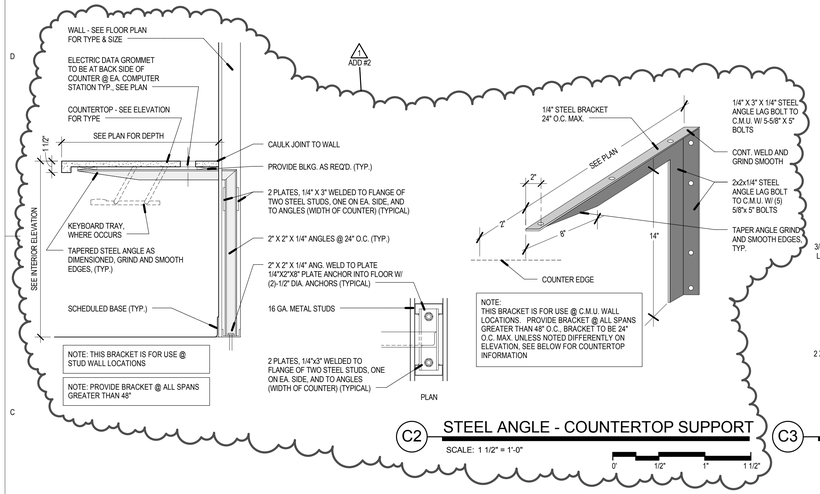

C2 STEEL ANGLE - COUNTERTOP SUPPORT

SCALE: 1 1/2" = 1'-0"

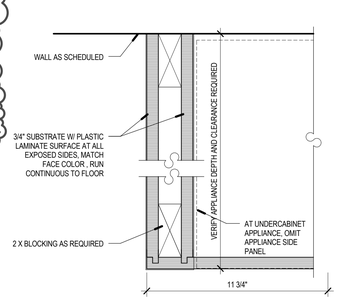

C3 CABINET END PANEL, PLAN VIEW

SCALE: 3" = 1'-0"

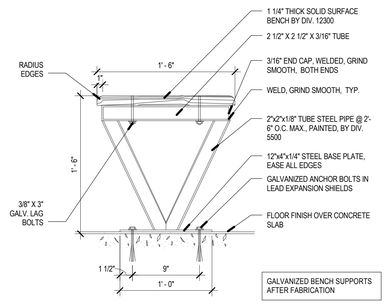

C4 VESTIBULE BENCH

SCALE: 1 1/2" = 1'-0"

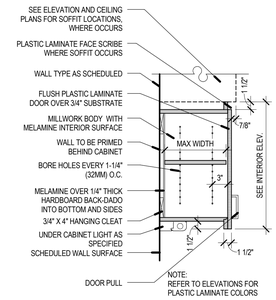

C5 UPPER FULL DOOR SECTION

SCALE: 1" = 1'-0"

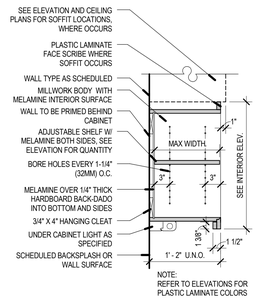

C6 UPPER OPEN CABINET SECTION

SCALE: 1" = 1'-0"

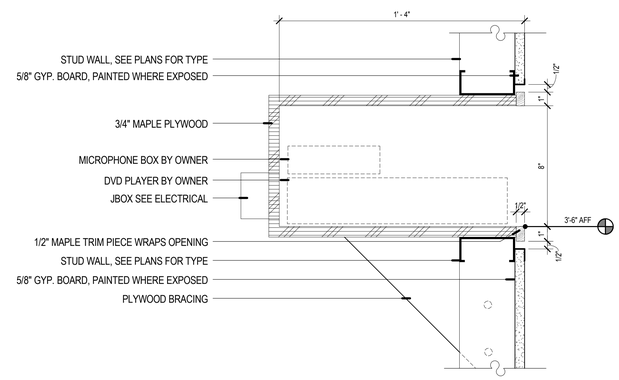

B4 DVD MOUNTING DETAIL

SCALE: 3" = 1'-0"

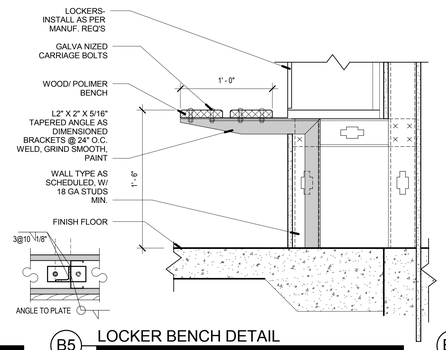

B5 LOCKER BENCH DETAIL

SCALE: 1 1/2" = 1'-0"

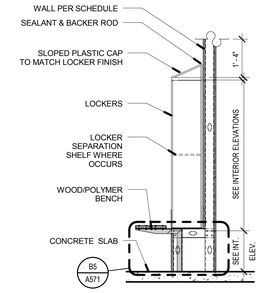

B6 LOCKER SECTION

SCALE: 1/2" = 1'-0"

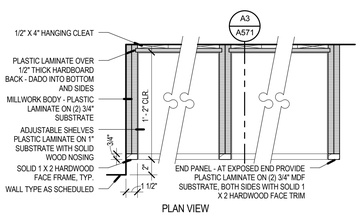

A2 BOOKSHELF / CUBBY PLAN DETAILS

SCALE: 1 1/2" = 1'-0"

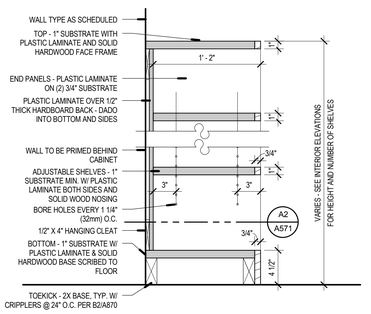

A3 BOOKSHELF/ CUBBY SECTION DETAIL

SCALE: 1 1/2" = 1'-0"

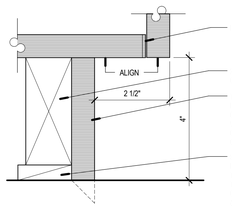

A5 TOE KICK DETAIL

SCALE: 6" = 1'-0"

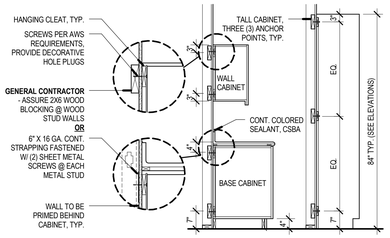

A6 TYPICAL MILLWORK ANCHOR DETAILS

SCALE: 1/2" = 1'-0"

VCBO

ARCHITECTURE
VALENTINER
CRANE
BRUNJES
ONYON

VCBO ARCHITECTURE
524 SOUTH 600 EAST
SALT LAKE CITY, UT 84102
Phone: (801) 575-8800
Fax: (801) 531-9850
WWW: www.vcbo.com

DFCM CODE COMPLIANCE STAMP

Student Activity Center

Stromberg Addition - BID SET

Weber State University
3750 Harrison Blvd. Ogden, UT 84408

Rev #	Date	Description
1	10.12.2012	ADD #2

Job # 12475
CAD File
Drawn Author Checked Checker
Date 10.03.2012
Owner # DFCM #12031810

CASEWORK DETAILS

A571

10/12/2012 2:25:46 PM

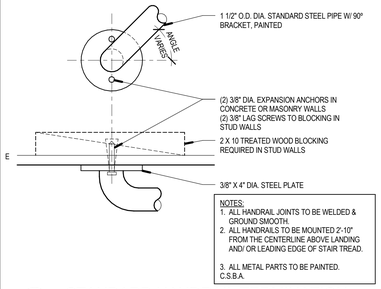

NOTES:
1. ALL HANDRAIL JOINTS TO BE WELDED & GROUND SMOOTH.
2. ALL HANDRAILS TO BE MOUNTED 2'-10" FROM THE CENTERLINE ABOVE LANDING AND/ OR LEADING EDGE OF STAIR TREAD.
3. ALL METAL PARTS TO BE PAINTED. C.S.B.A.

E1 STANDARD HANDRAIL TERMINATION
SCALE: 3" = 1'-0"

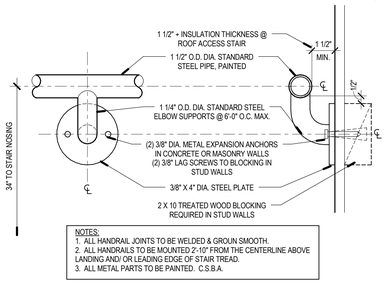

NOTES:
1. ALL HANDRAIL JOINTS TO BE WELDED & GROUN SMOOTH.
2. ALL HANDRAILS TO BE MOUNTED 2'-10" FROM THE CENTERLINE ABOVE LANDING AND/ OR LEADING EDGE OF STAIR TREAD.
3. ALL METAL PARTS TO BE PAINTED. C.S.B.A.

E2 STANDARD MID-RAIL DETAIL
SCALE: 3" = 1'-0"

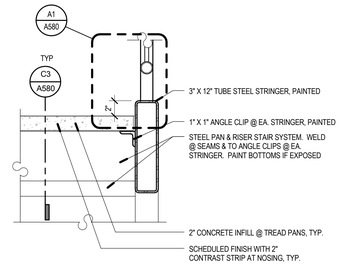

E3 TYPICAL STRINGER DETAIL
SCALE: 1 1/2" = 1'-0"

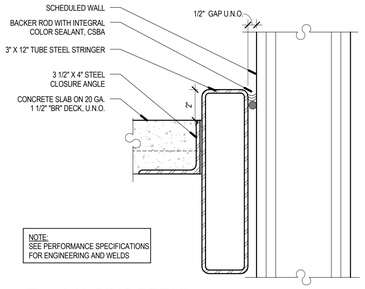

NOTE:
SEE PERFORMANCE SPECIFICATIONS FOR ENGINEERING AND WELDS

E4 LANDING DETAIL
SCALE: 3" = 1'-0"

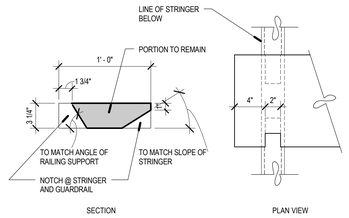

E5 GRAND STAIR TREAD DETAIL
SCALE: 1 1/2" = 1'-0"

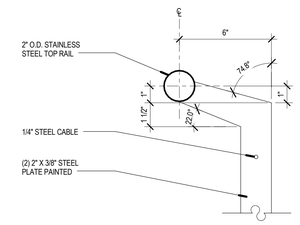

E6 TOP HANDRAIL DETAIL
SCALE: 3" = 1'-0"

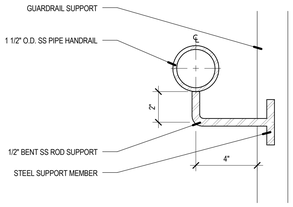

D1 TYPICAL HANDRAIL DETAIL
SCALE: 3" = 1'-0"

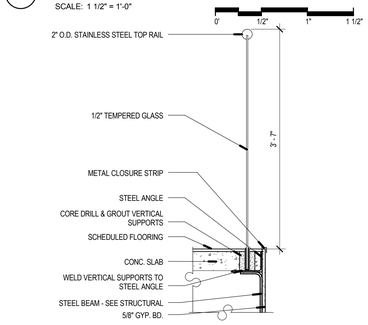

D3 GLASS GUARDRAIL
SCALE: 1" = 1'-0"

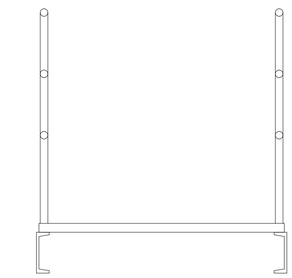

D5 CATWALK SECTION
SCALE: 1" = 1'-0"

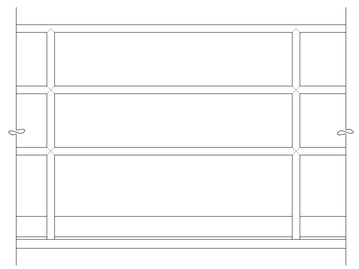

D6 CATWALK GAURDRAIL
SCALE: 1" = 1'-0"

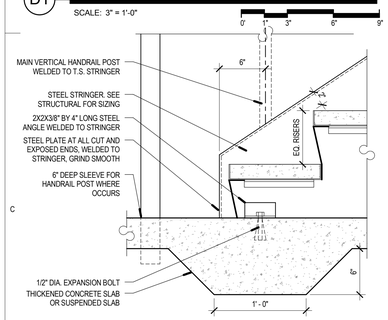

C1 TYPICAL STAIR @ BASE
SCALE: 1 1/2" = 1'-0"

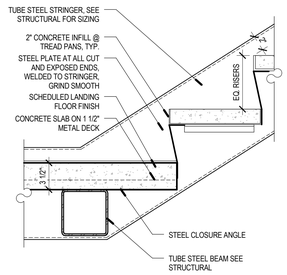

C2 TYPICAL STAIR LANDING 2
SCALE: 1 1/2" = 1'-0"

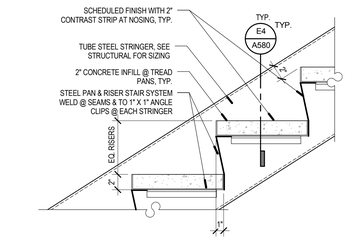

C3 TYPICAL STAIR TREAD
SCALE: 1 1/2" = 1'-0"

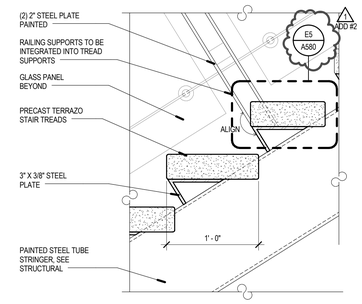

C4 TREAD DETAIL
SCALE: 1 1/2" = 1'-0"

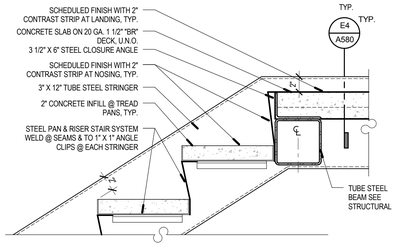

C5 TYPICAL STAIR LANDING
SCALE: 1 1/2" = 1'-0"

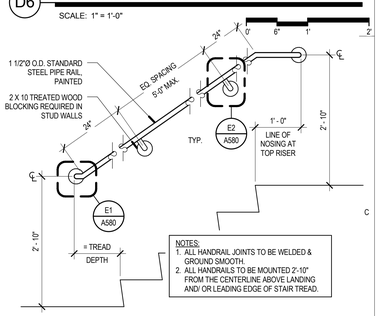

C6 TYPICAL HANDRAIL ELEVATION
SCALE: 3/4" = 1'-0"

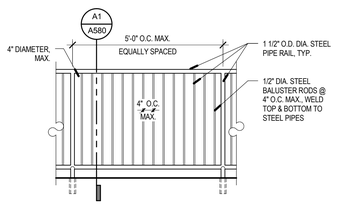

B1 TYPICAL SITE GUARDRAIL ELEVATION
SCALE: 1/2" = 1'-0"

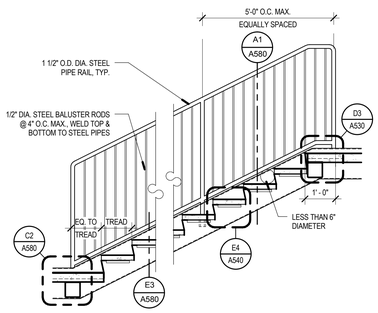

B2 TYPICAL STAIR RAIL ELEVATION
SCALE: 1/2" = 1'-0"

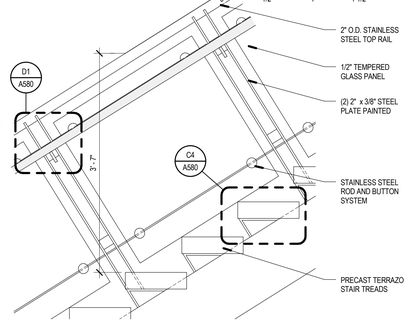

B3 GLASS RAILING @ GRAND STAIR
SCALE: 1" = 1'-0"

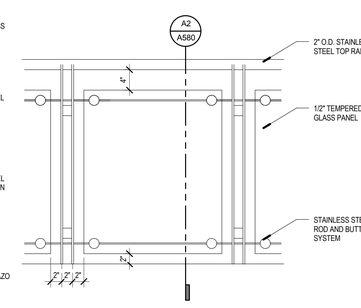

B4 RAILING @ LOBBY ELEVATION
SCALE: 1" = 1'-0"

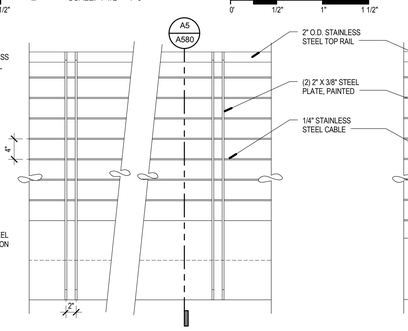

B5 RAILING @ BRIDGE ELEVATION
SCALE: 1" = 1'-0"

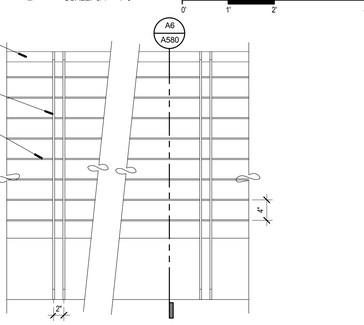

B6 RAILING @ TRACK ELEVATION
SCALE: 1" = 1'-0"

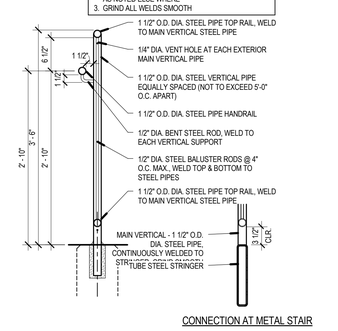

CONNECTION AT METAL STAIR

A1 TYPICAL GUARDRAIL SECTION
SCALE: 1" = 1'-0"

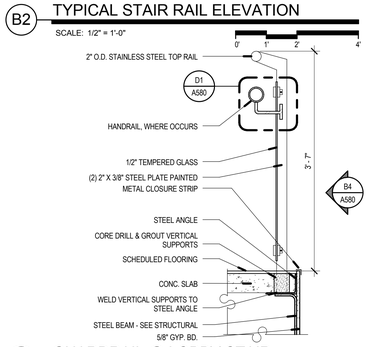

A2 GUARDRAIL @ LOBBY STAIR
SCALE: 1" = 1'-0"

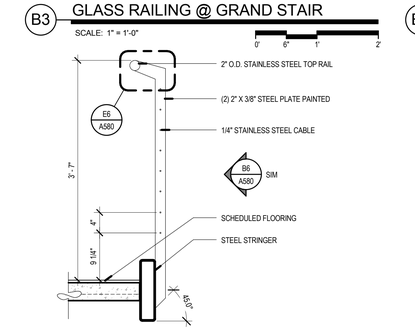

A3 RAILING @ STAIR
SCALE: 1" = 1'-0"

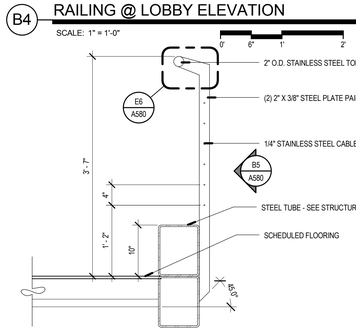

A4 RAILING @ BRIDGE 2
SCALE: 1" = 1'-0"

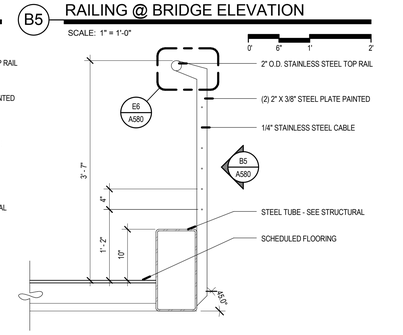

A5 RAILING @ BRIDGE
SCALE: 1" = 1'-0"

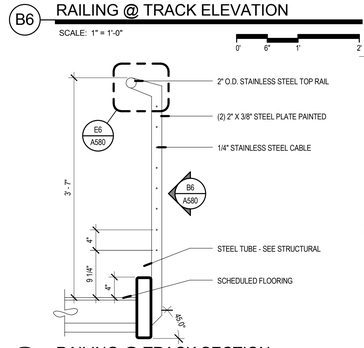

A6 RAILING @ TRACK SECTION
SCALE: 1" = 1'-0"

VCBO
ARCHITECTURE
VALENTINER
CRANE
BRUNJES
ONYON

REGISTERED ARCHITECT
BRENT R. TIPPETS
10-2-12
STATE OF UTAH

VCBO ARCHITECTURE
524 SOUTH 600 EAST
SALT LAKE CITY, UT 84102
Phone: (801) 575-8800
Fax: (801) 531-9850
WWW: www.vcbo.com

DFCM CODE COMPLIANCE STAMP

Student Activity Center
Stromberg Addition - BID SET
Weber State University
3750 Harrison Blvd. Ogden, UT 84408

Rev #	Date	Description
1	10.12.2012	ADD #2

Job # 12475
CAD File
Drawn Author Checked Checker
Date 10.03.2012
Owner # DFCM #12031810

RAILING DETAILS

A580

10/12/2012 2:25:53 PM

DOOR AND FRAME SCHEDULE

DOOR NUMBER	DOOR NEW/EXISTING	DOOR SIZE WIDTH	DOOR SIZE HEIGHT	DOOR SIZE THICK	DOOR ELEV. TYPE	DOOR MATERIAL	DOOR FACING/FINISH	FRAME NEW/EXISTING	FRAME ELEV. TYPE	FRAME MATERIAL	FRAME FINISH/FACING	HARDWARE GROUP	LABEL (MIN.)	NOTES	DOOR NUMBER
	N	72"	96"	1 3/4"	J	Default		N		AL					
3E1	N	48"	84"		-			N		BY MFR.			120		3E1
3E1 A	N	48"	84"		-			N		BY MFR.			120		3E1 A
100	N	255"	96"		M			N	3	AL	ANODIZED			AUTOMATIC MALL DUAL SLIDER	100
100A	N	72"	96"	1 3/4"	J	AL	ANODIZED	N	2	AL	ANODIZED	1.0		NORTH ENTRY	100A
101	N	36"	84"	1 3/4"	D	AL	ANODIZED	N	4	AL	ANODIZED	9.0		RECEPTION	101
101A	N	36"	84"	1 3/4"	A	H.M.	PAINT	N	8	H.M.	PAINT	15.0		EQUIP	101A
101AB	N	36"	84"	1 3/4"	A	H.M.	PAINT	N	8	H.M.	PAINT	15.0		EQUIP	101AB
101B	N	36"	84"	1 3/4"	C	WD	S.C.W.P.	N	5	AL	ANODIZED	22.0		CONF	101B
101B1	N	36"	84"	1 3/4"	C	WD	S.C.W.P.	N	8	H.M.	PAINT	23.0		CONF	101B1
101D	N	36"	84"	1 3/4"	C	WD	S.C.W.P.	N	9	HM	PAINT	19.0		OFFICE	101D
101E	N	36"	84"	1 3/4"	C	WD	S.C.W.P.	N	9	HM	PAINT	19.0		OFFICE	101E
101F	N	36"	84"	1 3/4"	C	WD	S.C.W.P.	N	9	HM	PAINT	19.0		OFFICE	101F
101G	N	36"	84"	1 3/4"	C	WD	S.C.W.P.	N	9	HM	PAINT	19.0		STUDENT OFFICE	101G
102A	N	36"	80"	1 3/4"	C	WD	S.C.W.P.	N		H.M.		17.0			102A
102B	N	72"	84"	1 3/4"		H.M.	PAINT	N	11	H.M.	PAINT	8.0		LOBBY	102B
102C	N	72"	84"	1 3/4"		H.M.	PAINT	N	11	H.M.	PAINT	8.0		LOBBY	102C
102D	N	72"	84"	1 3/4"		H.M.	PAINT	N	11	H.M.	PAINT	8.0		LOBBY	102D
102E	N	72"	84"	1 3/4"		H.M.	PAINT	N	11	H.M.	PAINT	8.0		LOBBY	102E
102F	N	72"	84"	1 3/4"	E	H.M.	PAINT	N	8	H.M.	PAINT	4.0		LOBBY ENTRY	102F
102G	N	72"	84"	1 3/4"	E	H.M.	PAINT	N	8	H.M.	PAINT	3.0		LOBBY ENTRY	102G
102H	N	72"	84"	1 3/4"	E	H.M.	PAINT	N	8	H.M.	PAINT	3.0		LOBBY ENTRY	102H
103A	N	72"	84"	1 3/4"		H.M.	PAINT	N	8	09 - GRAY LITE	PAINT			MAINTENANCE EXT.	103A
103A1	N	72"	84"	1 3/4"		H.M.	PAINT	N	8	09 - GRAY LITE	PAINT			STORAGE INT.	103A1
103B	N	72"	84"	1 3/4"	E	H.M.	PAINT	N	8	H.M.	PAINT	7.0		STORAGE EXT.	103B
103B1	N	96"	84"	1 3/4"	E	H.M.	PAINT	N	8	H.M.	PAINT	7.0		STORAGE EXT.	103B1
103B2	N	96"	84"	1 3/4"	E	H.M.	PAINT	N	8	H.M.	PAINT	12.0		STORAGE INT.	103B2
103P	N	36"	84"	1 3/4"	A	H.M.	PAINT	N	8	H.M.	PAINT	17.0		STOR	103P
105A	N	36"	84"	1 3/4"	A	H.M.	PAINT	N	8	H.M.	PAINT	15.0		F.R.	105A
105B	N	36"	84"	1 3/4"	C	H.M.	PAINT	N	9	HM	PAINT	19.0		OFFICE	105B
105C	N	36"	84"	1 3/4"	C	H.M.	PAINT	N	10	HM	PAINT	19.0		OFFICE	105C
109	N	36"	84"	1 3/4"	C	H.M.	PAINT	N	9	HM	PAINT	20.0		CLUB	109
150	N	72"	84"	1 3/4"	F	H.M.	PAINT	N	8	H.M.	PAINT	6.0	120	MECH.	150
150A	N	72"	84"	1 3/4"	F	H.M.	PAINT	N	8	H.M.	PAINT	6.0	120	MECH.	150A
199C	N	36"	84"	1 3/4"	B	H.M.	PAINT	N	8	H.M.	PAINT	5.0	120	STAIR EXT.	199C
199D	N	48"	84"		-			N	8	BY MFR.	BY MFR	25.0	120	ELEVATOR	199D
199E	N	48"	84"		-			N	8	BY MFR.	BY MFR	25.0	120	ELEVATOR	199E
200CX	N	20"	84"	1 3/4"	A	H.M.	PAINT	N	8	H.M.	PAINT	14.0		PLUMBING	200CX
201	N	36"	84"	1 3/4"	A	H.M.	PAINT	N	8	H.M.	PAINT	17.0		COMM	201
202	N	36"	84"	1 3/4"	D	AL		N	7	AL	ANODIZED	9.0		FITNESS 202	202
202A	N	36"	84"	1 3/4"	A	WD		N	8	H.M.	PAINT	14.0		FIT. STOR.	202A
202B	N	36"	84"	1 3/4"	A	WD		N	8	H.M.	PAINT	14.0		FIT. STOR.	202B
202C	N	36"	84"	1 3/4"	D	AL		N	7	AL	ANODIZED	9.0		FITNESS 202	202C
203A	N	36"	84"	1 3/4"	A	WD		N	8	H.M.	PAINT	7.0		FIT. STOR.	203A
203B	N	36 1/4"	84"	1 3/4"	D	AL		N	6	AL	ANODIZED	9.0		FITNESS 203	203B
203C	N	36"	84"	1 3/4"	D	AL		N	6	AL	ANODIZED	9.0		FITNESS 203	203C
206	N	36"	84"	1 3/4"	A	WD	PAINT	N	8	H.M.	PAINT	24.0		MEN'S	206
207	N	36"	84"	1 3/4"	A	WD	PAINT	N	8	H.M.	PAINT	24.0		WOMEN'S	207
208	N	36"	84"	1 3/4"	A	H.M.	PAINT	N	8	H.M.	PAINT	14.0		JAN	208
209	N	42"	84"	1 3/4"	A	H.M.	PAINT	N	8	PAINT	PAINT	16.0		STORAGE	209
209B	N	36"	84"	1 3/4"	A	H.M.		N		H.M.					209B
210	N	36"	84"	1 3/4"	C	WD	PAINT	N	10	H.M.	PAINT	20.0		WELLNESS ENTRY	210
210A	N	36"	84"	1 3/4"	C	WD	PAINT	N	10	HM	PAINT	19.0		OFFICE	210A
210B	N	36"	84"	1 3/4"	C2	WD	PAINT	N	10	HM	PAINT	19.0		OFFICE	210B
210C	N	36"	84"	1 3/4"	C	WD	PAINT	N	10	HM	PAINT	22.0		CONF	210C
210E	N	36"	84"	1 3/4"	C2	WD	PAINT	N	10	HM	PAINT	19.0		OFFICE	210E
210F	N	36"	84"	1 3/4"	C	WD	PAINT	N	10	H.M.	PAINT	19.0		OFFICE	210F
211	N	48"	84"		-			N	-	BY MFR.	BY MFR	25.0	120	ELEVATOR	211
250	N	72"	84"	1 3/4"	F	<By Category>		N		H.M.			120		250
299C	N	36"	84"	1 3/4"	B	H.M.	PAINT	N	8	H.M.	PAINT	11.0	120	STAIR	299C
399C	N	36"	84"	1 3/4"	B	H.M.	PAINT	N	8	H.M.	PAINT	11.0	120	STAIR	399C

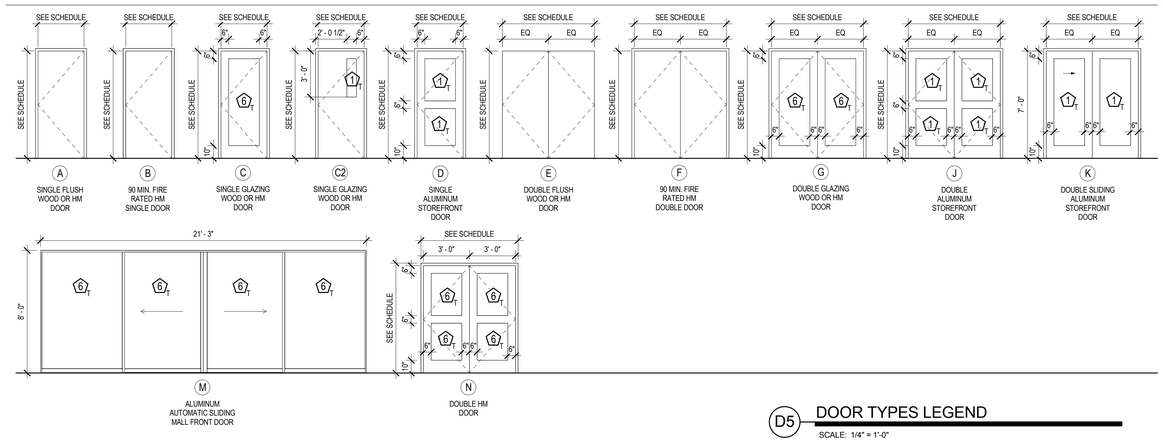

GLAZING TYPE LEGEND

MARK	DESCRIPTION
1	1" INSULATED , LOW-E SOLAR BAN 60
2	1" INSULATED, SPANDREL GLASS (MEDIUM COLOR)
3	1" INSULATED, SPANDREL GLASS (MEDIUM DARK COLOR)
4	1/2" FLOAT GLASS
5	1" INSULATED, LAMINATED GLASS (SKYLIGHTS)
6	1" INSULATED (INTERIOR)
7	FLOAT GLASS TEMPERED W/ TWO TONED ACID ETCHED GRAPHIC, ARCHITECT TO PROVIDE DIGITAL FILE FOR SPECIFIC DOORS
8	1/4" ACID ETCHED FLOAT GLASS
9	3/8" GLASS WITH BEVEL EDGE AT SIDES
10	1" INSULATED , LOW-E SOLAR BAN 60 - ACID ETCHED FLOAT GLASS
#T	'T' INDICATES TEMPERED GLASS

NOTE:
WINDOW TYPE QUANTITIES PROVIDED FOR CONVENIENCE. THE CONTRACTOR IS RESPONSIBLE TO VERIFY THE QUANTITIES OF EACH WINDOW TYPE.

D5 DOOR TYPES LEGEND

SCALE: 1/4" = 1'-0"

0' 2' 4' 8' 16'

DOOR & FRAME NOTES

1) MATERIAL ABBREVIATIONS:
   SCWD - SOLID CORE WOOD DOOR
   AL - ALUMINUM
   HM - HOLLOW METAL
   PT - PAINTED
   ST - STAINED
   CL - CLEAR ANODIZED
   F - FABRIC

2) ALL HOLLOW METAL DOOR AND WINDOW FRAMES ARE TO HAVE A SINGLE RABBET PROFILE EXCEPT AT DOOR 116A.

3) SEE SPECIFICATION FOR HARDWARE GROUP DEFINITION

4) ALL HOLLOW METAL FRAMES OPENING TO THE EXTERIOR ARE TO BE 14 GAUGE AND GALVANIZED

5) ALL HOLLOW METAL DOORS OPENING TO THE EXTERIOR ARE TO BE 14 GAUGE, INSULATED AND GALVANIZED

6) OVERALL ALUMINUM FRAME DIMENSIONS ARE GIVEN FOR REFERENCE. REFER TO DETAILS FOR JAMB AND SILL CONDITIONS. OVERALL DIMENSIONS ARE TO BE FIELD VERIFIED PRIOR TO FABRICATION.

7) PROVIDE TEMPERED GLAZING AS REQUIRED BY IBC 2009.

8) DOOR THRESHOLDS ARE NOT TO BE INSTALLED UNTIL DOOR HAS BEED CLOSED TO CONSTRUCTION ACCESS.

9) WHERE A DOOR IS SHOWN ON THE FLOORS PLANS BUT IS NOT NUMBERED AND/OR DOES NOT APPEAR IN THE DOOR SCHEDULE, THE FOLLOWING DOOR, FRAME AND HARDWARE ARE TO BE B/D FOR THIS OPENING: WD DOOR TYPE E, HM FRAME TYPE 1, HARDWARE TYPE 01.

10) CONTRACTOR TO PROVIDE FLOOR STOPS AT LOCATIONS DOOR WILL SWING INTO A GLASS RAIL OR GLASS IN STOREFRONTS.

11) EXTERIOR STOREFRONT SYSTEM TO HAVE THERMAL SPRAYED INSULATION APPLIED INSIDE THE FRAME PERIMETER.

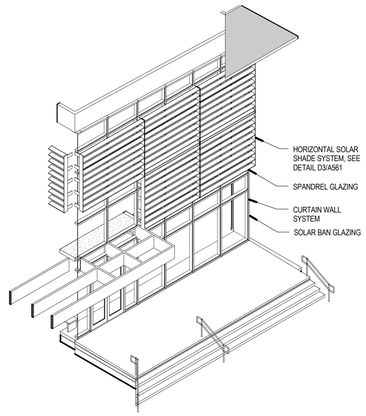

C4 SOLAR SHADE AT FRAME TYPE 1

SCALE:

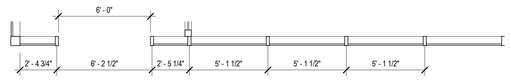

DOOR FRAME TYPE 'I' PLAN

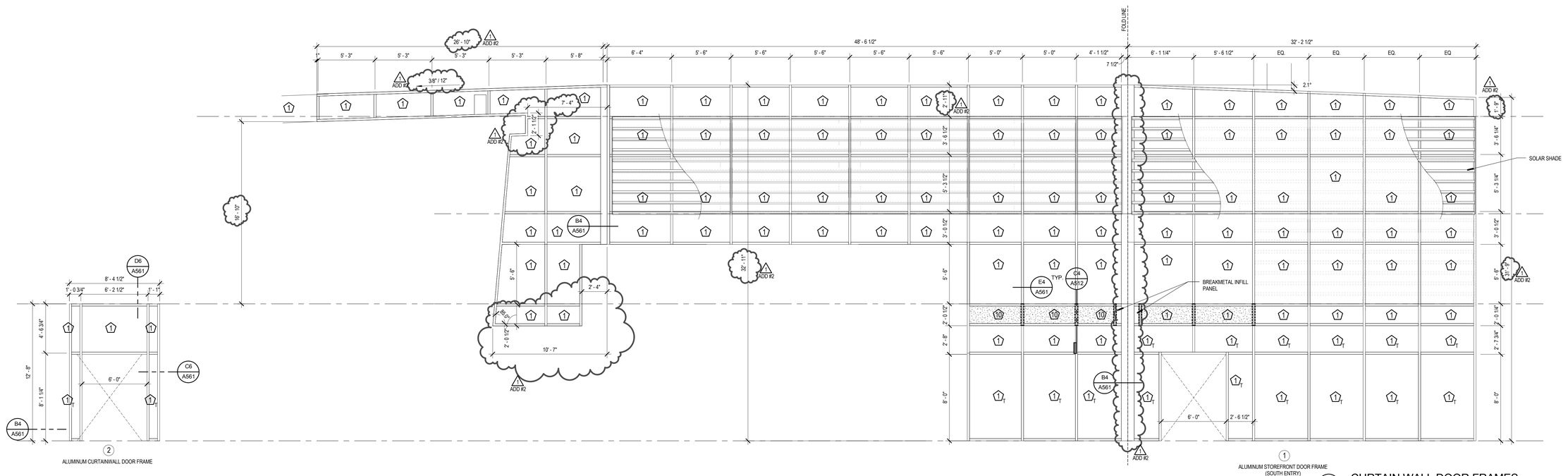

A5 CURTAIN WALL DOOR FRAMES

SCALE: 1/4" = 1'-0"

0' 2' 4' 8' 16'

VCBO
ARCHITECTURE
VALENTINER
CRANE
BRUNJES
ONYON

VCBO ARCHITECTURE
524 SOUTH 600 EAST
SALT LAKE CITY, UT 84102
Phone: (801) 575-8800
Fax: (801) 531-9850
WWW: www.vcbo.com

DFCM CODE COMPLIANCE STAMP

Student Activity Center

Stromberg Addition - BID SET

Weber State University
3750 Harrison Blvd. Ogden, UT 84408

Rev #	Date	Description
1	10.12.2012	ADD #2

Job # 12475
CAD File
Drawn Author Checked Checker
Date 10.03.2012
Owner # DFCM #12031810

DOOR SCHEDULE

A600

10/12/2012 2:25:55 PM

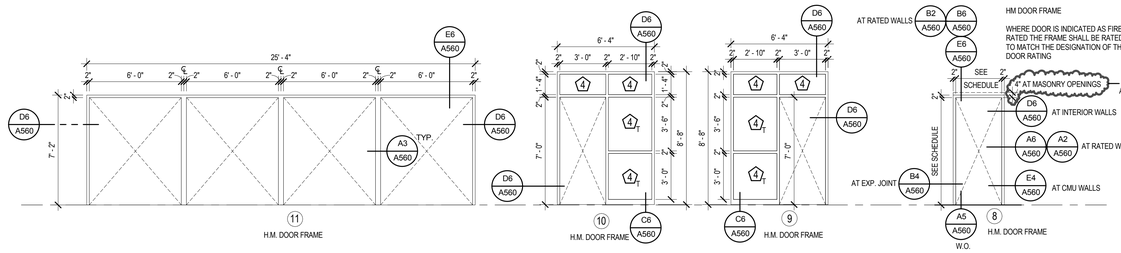

A6 H.M. DOOR FRAMES

SCALE: 1/4" = 1'-0"

0' 2' 4' 8' 16'

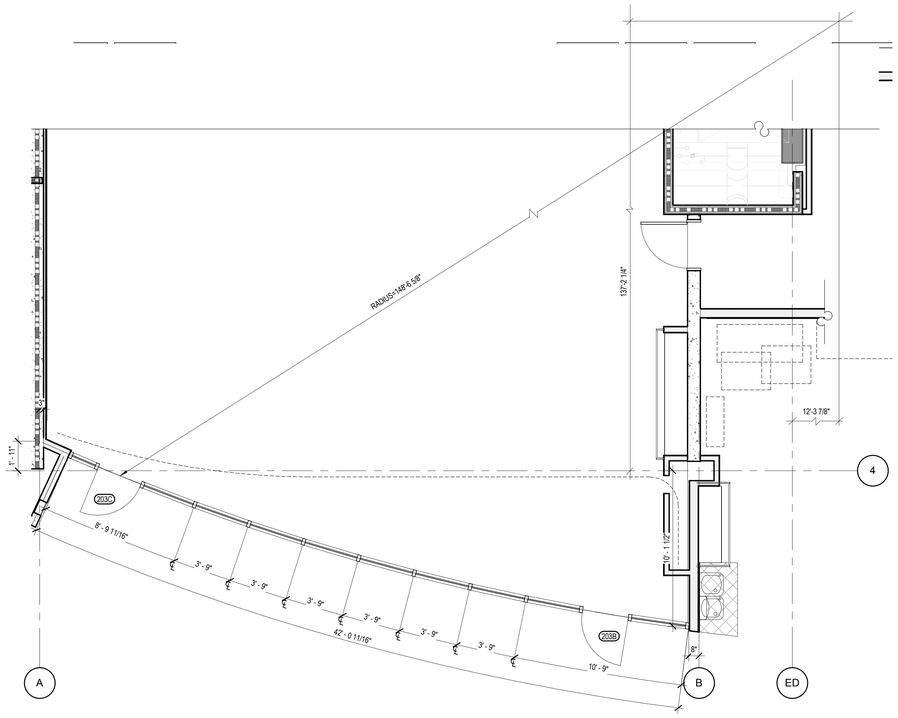

C5 DOOR FRAME TYPE 6 PLAN

SCALE: 1/4" = 1'-0"

0' 2' 4' 8' 16'

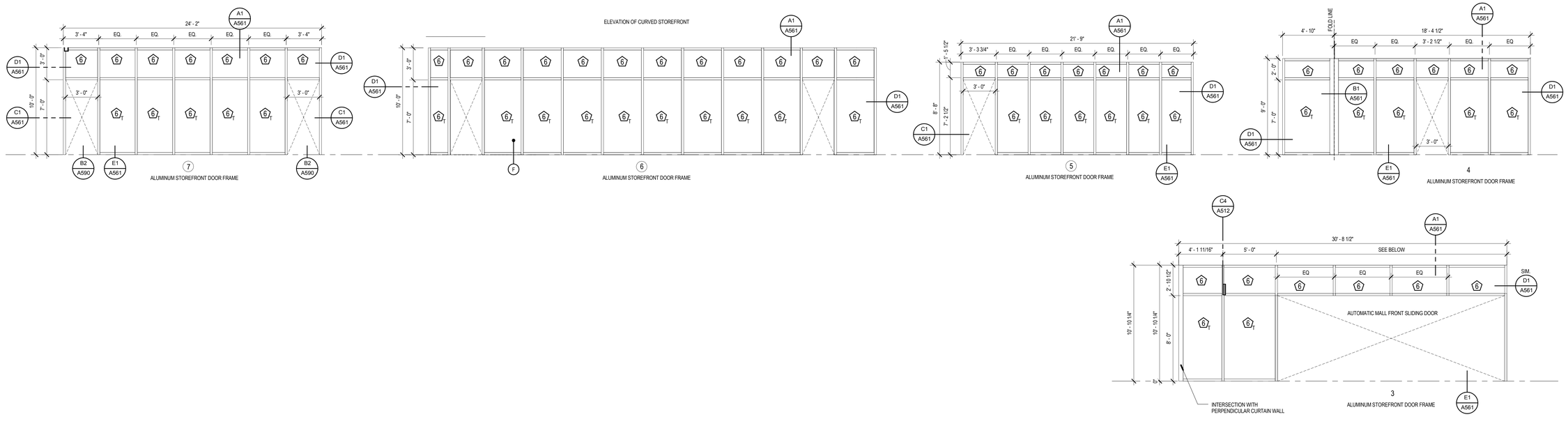

B6 ALUMN. STOREFRONT DOOR FRAMES

SCALE: 1/4" = 1'-0"

0' 2' 4' 8' 16'

GLAZING TYPE LEGEND

MARK	DESCRIPTION
1	1" INSULATED , LOW-E SOLAR BAN 60
2	1" INSULATED, SPANDREL GLASS (MEDIUM COLOR)
3	1" INSULATED, SPANDREL GLASS (MEDIUM DARK COLOR)
4	1/2" FLOAT GLASS
5	1" INSULATED, LAMINATED GLASS (SKYLIGHTS)
6	1" INSULATED (INTERIOR)
7	FLOAT GLASS TEMPERED W/ TWO TONED ACID ETCHED GRAPHIC, ARCHITECT TO PROVIDE DIGITAL FILE FOR SPECIFIC DOORS
8	1/4" ACID ETCHED FLOAT GLASS
9	3/8" GLASS WITH BEVEL EDGE AT SIDES
10	1" INSULATED , LOW-E SOLAR BAN 60 - ACID ETCHED FLOAT GLASS
#T	'T' INDICATES TEMPERED GLASS

NOTE:
WINDOW TYPE QUANTITIES PROVIDED FOR CONVENIENCE, THE CONTRACTOR IS RESPONSIBLE TO VERIFY THE QUANTITIES OF EACH WINDOW TYPE.

DOOR & FRAME NOTES

1) MATERIAL ABBREVIATIONS:
   SCWD - SOLID CORE WOOD DOOR
   AL - ALUMINUM
   HM - HOLLOW METAL
   PT - PAINTED
   ST - STAINED
   CL - CLEAR ANODIZED
   F - FABRIC

2) ALL HOLLOW METAL DOOR AND WINDOW FRAMES ARE TO HAVE A SINGLE RABBET PROFILE EXCEPT AT DOOR 116A.

3) SEE SPECIFICATION FOR HARDWARE GROUP DEFINITION

4) ALL HOLLOW METAL FRAMES OPENING TO THE EXTERIOR ARE TO BE 14 GAUGE AND GALVANIZED

5) ALL HOLLOW METAL DOORS OPENING TO THE EXTERIOR ARE TO BE 14 GAUGE, INSULATED AND GALVANIZED

6) OVERALL ALUMINUM FRAME DIMENSIONS ARE GIVEN FOR REFERENCE, REFER TO DETAILS FOR JAMB AND SILL CONDITIONS. OVERALL DIMENSIONS ARE TO BE FIELD VERIFIED PRIOR TO FABRICATION.

7) PROVIDE TEMPERED GLAZING AS REQUIRED BY IBC 2009.

8) DOOR THRESHOLDS ARE NOT TO BE INSTALLED UNTIL DOOR HAS BEED CLOSED TO CONSTRUCTION ACCESS.

9) WHERE A DOOR IS SHOWN ON THE FLOORS PLANS BUT IS NOT NUMBERED AND/OR DOES NOT APPEAR IN THE DOOR SCHEDULE, THE FOLLOWING DOOR, FRAME AND HARDWARE ARE TO BE BID FOR THIS OPENING: WD DOOR TYPE E, HM FRAME TYPE 1, HARDWARE TYPE 01.

10) CONTRACTOR TO PROVIDE FLOOR STOPS AT LOCATIONS DOOR WILL SWING INTO A GLASS RAIL OR GLASS IN STOREFRONTS.

11) EXTERIOR STOREFRONT SYSTEM TO HAVE THERMAL SPRAYED INSULATION APPLIED INSIDE THE FRAME PERIMETER.

VCBO
ARCHITECTURE
VALENTINER
CRANE
BRUNJES
ONYON

VCBO ARCHITECTURE
524 SOUTH 600 EAST
SALT LAKE CITY, UT 84102
Phone: (801) 575-8800
Fax: (801) 531-9850
WWW: www.vcbo.com

DFCM CODE COMPLIANCE STAMP

Student Activity Center
Stromberg Addition - BID SET
Weber State University
3750 Harrison Blvd. Ogden, UT 84408

Rev #	Date	Description
1	10.12.2012	ADD #2

Job # 12475
CAD File
Drawn Author Checked Checker
Date 10.03.2012
Owner # DFCM #12031810

DOOR TYPES

A601

10/12/2012 2:26:03 PM

GLAZING TYPE LEGEND

MARK	DESCRIPTION
1	1" INSULATED , LOW-E SOLAR BAN 60
2	1" INSULATED, SPANDREL GLASS (MEDIUM COLOR)
3	1" INSULATED, SPANDREL GLASS (MEDIUM DARK COLOR)
4	1/2" FLOAT GLASS
5	1" INSULATED, LAMINATED GLASS (SKYLIGHTS)
6	1" INSULATED (INTERIOR)
7	FLOAT GLASS TEMPERED W/ TWO TONED ACID ETCHED GRAPHIC, ARCHITECT TO PROVIDE DIGITAL FILE FOR SPECIFIC DOORS
8	1/4" ACID ETCHED FLOAT GLASS
9	3/8" GLASS WITH BEVEL EDGE AT SIDES
10	1" INSULATED , LOW-E SOLAR BAN 60 - ACID ETCHED FLOAT GLASS
#T	'T' INDICATES TEMPERED GLASS

NOTE:
WINDOW TYPE QUANTITIES PROVIDED FOR CONVENIENCE, THE CONTRACTOR IS RESPONSIBLE TO VERIFY THE QUANTITIES OF EACH WINDOW TYPE.

WINDOW TYPE LEGEND

FRAME
A - ALUMINUM STOREFRONT
B - BUTT GLAZED FRAMELESS (INTERIOR)
C - CURTAIN WALL
H - HOLLOW METAL
W - WOOD

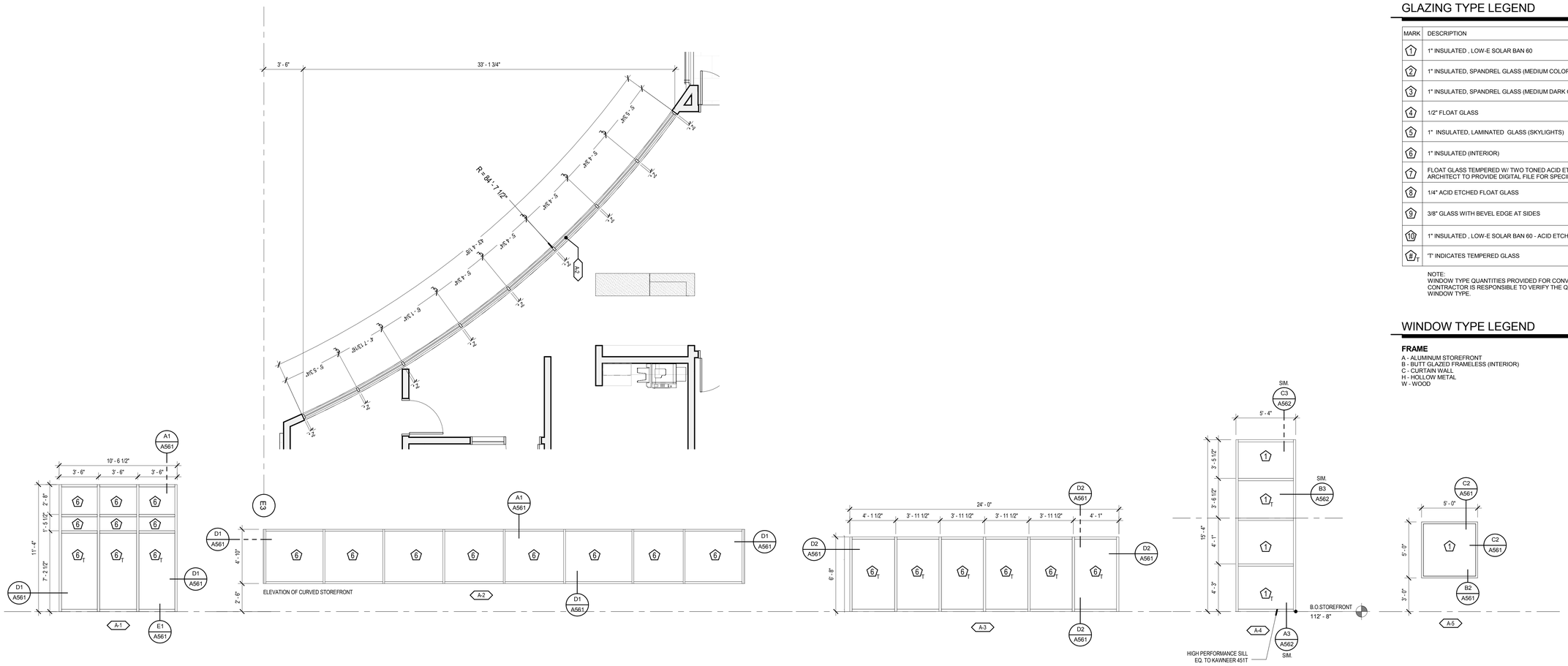

C6 EXTERIOR/INTERIOR ALUMINUM STOREFRONT
SCALE: 1/4" = 1'-0"

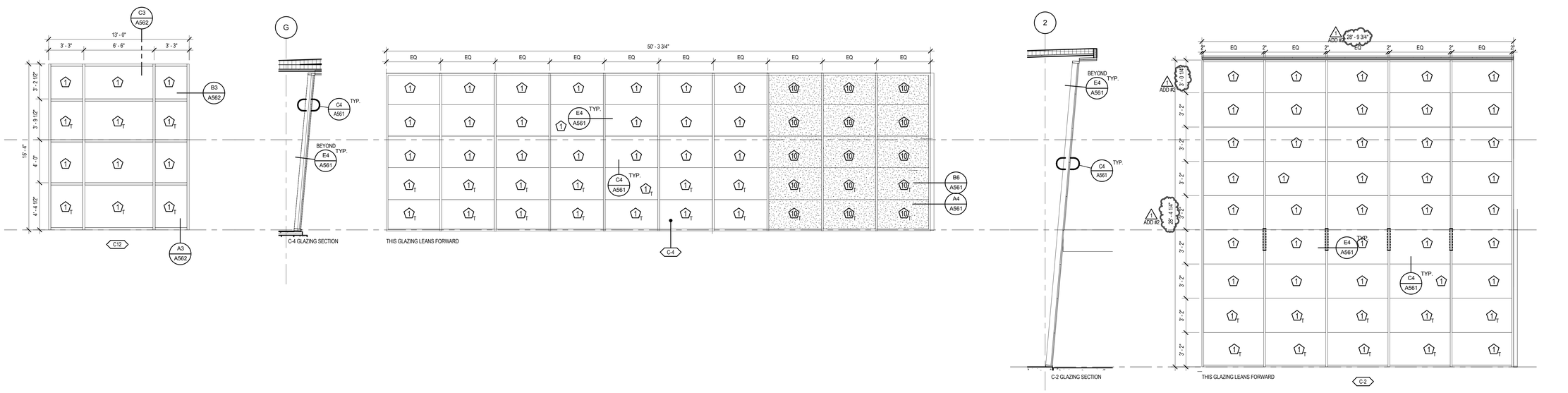

A6 ALUMINUM CURTAIN WALLS
SCALE: 1/4" = 1'-0"

VCBO
ARCHITECTURE
VALENTINER
CRANE
BRUNJES
ONYON

VCBO ARCHITECTURE
524 SOUTH 600 EAST
SALT LAKE CITY, UT 84102
Phone: (801) 575-8800
Fax: (801) 531-9850
WWW: www.vcbo.com

DFCM CODE COMPLIANCE STAMP

Student Activity Center
Stromberg Addition - BID SET
Weber State University
3750 Harrison Blvd. Ogden, UT 84408

Rev #	Date	Description
1	10.12.2012	ADD #2

Job # 12475
CAD File
Drawn Author Checked Checker
Date 10.03.2012
Owner # DFCM #12031810

WINDOW TYPES

A610

10/12/2012 2:26:05 PM

STRUCTURAL NOTES

A. GENERAL

1. THE STRUCTURAL NOTES ARE INTENDED TO COMPLEMENT THE PROJECT SPECIFICATIONS WHICH ARE PART OF THE CONSTRUCTION DOCUMENTS. SPECIFIC NOTES AND DETAILS ON THE DRAWINGS SHALL GOVERN OVER THE STRUCTURAL NOTES AND TYPICAL DETAILS.
2. THESE DRAWINGS (AND, WHERE APPLICABLE, ACCOMPANYING WRITTEN SPECIFICATIONS) ARE THE ONLY CONTRACT DOCUMENTS PROVIDED BY ARW ENGINEERS FOR THE PROJECT REPRESENTED HEREIN. NOTHING IN ANY DIGITAL MODEL OR DIGITAL FILE RELATED TO THIS PROJECT SHALL BE TAKEN TO SUPERSEDE ANY INFORMATION SHOWN IN THESE DRAWINGS (INCLUDING, BUT NOT LIMITED TO, DIMENSIONS, SIZES, ETC).
3. THE ARCHITECTURAL DRAWINGS ARE THE PRIME CONTRACT DRAWINGS. THE STRUCTURAL DRAWINGS ARE SUPPLEMENTARY TO AND MUST BE USED IN CONJUNCTION WITH THE ARCHITECTURAL DRAWINGS AND OTHER CONSULTANTS DRAWINGS. ALL OMISSIONS OR CONFLICTS BETWEEN THE VARIOUS ELEMENTS OF THE WORKING DRAWINGS AND/OR SPECIFICATIONS SHALL BE BROUGHT TO THE ATTENTION OF THE ARCHITECT AND STRUCTURAL ENGINEER BEFORE PROCEEDING WITH ANY WORK INVOLVED. IN CASE OF CONFLICT, FOLLOW THE MOST STRINGENT REQUIREMENT AS DIRECTED BY THE ARCHITECT AT NO ADDITIONAL COST TO THE OWNER.
4. SEE SPECIFICATIONS FOR REQUIRED SUBMITTALS. SUBMITTALS SHALL BE MADE IN A TIMELY MANNER AS INDICATED IN SPECIFICATIONS. REVIEW OF SUBMITTALS BY ARW ENGINEERS IS FOR GENERAL COMPLIANCE ONLY AND IS NOT INTENDED AS APPROVAL. CONTRACTOR IS RESPONSIBLE FOR VERIFYING ALL SIZES, DIMENSIONS, AND ELEVATIONS ON SUBMITTALS AS RELATED TO DESIGN DOCUMENTS. PREPARATION OF SHOP DRAWINGS FOR STRUCTURAL ELEMENTS WILL REQUIRE INFORMATION (I.E. DIMENSIONS, ETC.) FOUND IN THE ARCHITECTURAL, STRUCTURAL, AND OTHER CONSULTANTS DRAWINGS.
5. THE CONTRACTOR SHALL VERIFY ALL CONDITIONS AND DIMENSIONS AT THE SITE. IF ACTUAL CONDITIONS DIFFER FROM THOSE SHOWN ON CONTRACT DOCUMENTS, CONTRACTOR SHALL NOTIFY ARCHITECT PRIOR TO FABRICATION OR CONSTRUCTION OF ANY AFFECTED ELEMENTS.
6. THE CONTRACTOR SHALL COORDINATE AND VERIFY ALL LOCATIONS AND SIZES OF MECHANICAL EQUIPMENT OR OTHER EQUIPMENT BEFORE FABRICATING AND ERECTING STRUCTURAL ELEMENTS. SIZES AND LOCATIONS THAT DIFFER FROM THOSE SHOWN ON THE CONTRACT DOCUMENTS SHALL BE REPORTED TO THE ARCHITECT.
7. THE CONTRACTOR SHALL SUBMIT A WRITTEN REQUEST TO THE ARCHITECT FOR ARCHITECT AND/OR ENGINEER APPROVAL BEFORE PROCEEDING WITH ANY CHANGES, MODIFICATIONS, OR SUBSTITUTIONS.
8. OBSERVATION VISITS TO THE SITE BY ARW ENGINEERS FIELD REPRESENTATIVES SHALL NEITHER BE CONSTRUED AS INSPECTION NOR APPROVAL OF CONSTRUCTION.
9. DURING AND AFTER CONSTRUCTION, BUILDER AND/OR OWNER SHALL KEEP LOADS ON STRUCTURE WITHIN THE LIMITS OF DESIGN LOADS AS NOTED IN THESE DOCUMENTS.
10. TYPICAL OR SIMILAR DETAILS AND SECTIONS SHALL APPLY WHERE SPECIFIC DETAILS ARE NOT SHOWN. TYPICAL OR SIMILAR DETAILS REFER TO THE CONDITION ADDRESSED AND ARE NOT NECESSARILY DETAILS LABELED "TYPICAL" OR "SIMILAR" IN THE PLANS AND DOCUMENTS.
11. DRAWINGS AND DETAILS HAVE BEEN PREPARED WITH THE INTENT TO VISUALLY REPRESENT INFORMATION PROVIDED IN SCALED FORM; HOWEVER CONTRACTOR/SUPPLIERS SHOULD NOT SCALE PLANS OR DETAILS FOR DIMENSIONAL INFORMATION.
12. THE CONTRACTOR SHALL PROVIDE ADEQUATE TEMPORARY SHORING AND BRACING FOR ALL STRUCTURAL ELEMENTS UNTIL THE ENTIRE STRUCTURAL SYSTEM IS COMPLETED. DESIGN OF ALL SHORING AND BRACING IS BY OTHERS AT NO ADDITIONAL COST TO THE OWNER.
13. ENGINEER SHALL NOT BE RESPONSIBLE FOR ACTIVITIES UNDER CONTROL OF THE CONTRACTOR SUCH AS CONSTRUCTION SITE SAFETY, MEANS, METHODS AND SEQUENCING OF CONSTRUCTION. ENGINEER SHALL NOT BE RESPONSIBLE FOR FABRICATION, ERECTION AND CONSTRUCTION REQUIREMENTS AS PRESCRIBED BY OSHA OR OTHER REGULATORY AGENCIES REGARDLESS OF INDICATIONS IN THESE DOCUMENTS.
14. NOTICE OF COPYRIGHT: THESE STRUCTURAL DRAWINGS ARE HEREBY COPYRIGHTED BY ARW ENGINEERS, ALL RIGHTS RESERVED. THESE DOCUMENTS DEFINE A STRUCTURE AND ARE INSTRUMENTS OF SERVICE, FOR ONE USE ONLY. REPRODUCTION AND DISTRIBUTION OF THESE DRAWINGS IS ONLY ALLOWED AS REQUIRED FOR REGULATORY AGENCIES AND FOR CONVEYANCE OF INFORMATION TO PARTIES INVOLVED IN THE CONSTRUCTION OF THIS PROJECT. THESE DOCUMENTS SHALL NOT BE REPRODUCED OR COPIED, IN PART OR WHOLE BY ANY PARTY FOR USE IN PREPARATION OF SHOP DRAWINGS OR OTHER SUBMITTALS.

B. STATEMENT OF SPECIAL INSPECTIONS AND SPECIAL INSPECTIONS

1. THE DESIGNATED SEISMIC/WIND SYSTEMS AND SEISMIC/WIND-FORCE-RESISTING SYSTEMS THAT ARE SUBJECT TO SPECIAL INSPECTIONS IN ACCORDANCE WITH IBC SECTION 1705.1 ARE IDENTIFIED ON THESE DOCUMENTS WITH A CIRCLE "L". ALL OTHER ITEMS REQUIRING SPECIAL INSPECTION ARE IDENTIFIED IN THE SPECIAL INSPECTION SCHEDULE ON THE ARCHITECTURAL DRAWINGS.
2. SPECIAL INSPECTIONS AND TESTING ARE TO BE PROVIDED AS REQUIRED BY IBC SECTIONS 1704 THROUGH 1708 AND OTHER APPLICABLE SECTIONS OF THE IBC. THE TYPE AND FREQUENCY OF TESTING AND SPECIAL INSPECTIONS SHALL BE AS NOTED IN THE SPECIAL INSPECTION SCHEDULE, JOB SPECIFICATIONS, AND ACCORDANCE WITH IBC SECTION 110 AND CHAPTER 17. CONTRACTOR SHALL COORDINATE AND COOPERATE WITH REQUIRED INSPECTIONS.
3. ALL TESTING AND SPECIAL INSPECTION SHALL BE PROVIDED BY A QUALIFIED INDEPENDENT SPECIAL INSPECTION AGENCY IN ACCORDANCE WITH IBC 1704 AND AS OUTLINED IN THE JOB SPECIFICATIONS. REPORTS OF FINDINGS OR DISCREPANCIES SHALL BE NOTED AND FORWARDED TO THE CONTRACTOR, ARCHITECT, ENGINEERS, AND BUILDING OFFICIAL IN A TIMELY MANNER.
4. STRUCTURAL OBSERVATION VISITS SHALL BE PERFORMED BY A REPRESENTATIVE FROM ARW ENGINEERS IN ACCORDANCE WITH THE CONTRACT AS NEEDED TO OBSERVE THE CONSTRUCTION OF CRITICAL BUILDING ELEMENTS (I.E. FOOTINGS, BRACED FRAMES, MOMENT FRAMES, DRAG STRUTS AND THEIR CONNECTIONS, COLLECTORS, AND ROOF AND FLOOR DIAPHRAGMS). STRUCTURAL OBSERVATION REPORTS FOR EACH VISIT SHALL BE SENT DIRECTLY TO THE ARCHITECT FOR DISTRIBUTION TO THE CONTRACTOR AND BUILDING OFFICIAL. STRUCTURAL OBSERVATION VISITS SHALL NEITHER BE CONSTRUED AS SPECIAL INSPECTION NOR APPROVAL OF COMPLETED CONSTRUCTION.
5. IN ACCORDANCE WITH IBC 1709, THE CONTRACTOR SHALL SUBMIT A WRITTEN CONTRACTOR'S STATEMENT OF RESPONSIBILITY TO THE BUILDING OFFICIAL AND OWNER. THE STATEMENT SHALL BE SUBMITTED PRIOR TO THE CONSTRUCTION OF ANY SEISMIC/WIND-FORCE-RESISTING SYSTEM, DESIGNATED SEISMIC/WIND SYSTEM, OR COMPONENT IDENTIFIED IN THESE DOCUMENTS WITH A CIRCLE "L".

C. BASIS OF DESIGN

1. GOVERNING BUILDING CODE: INTERNATIONAL BUILDING CODE (IBC) 2009
   OCCUPANCY CATEGORY: III
2. SUSPENDED FLOOR LOADS
   a. LIVE LOAD = 100 PSF (@ ADDITION AND BRIDGE)
      60 PSF (@ RUNNING TRACK)
   b. DEAD LOAD = 79.5 PSF + FRAMING (@ ADDITION)
      37.1 PSF (@ RUNNING TRACK)
      50 PSF (@ BRIDGE)
3. ROOF LOADS
   a. FLAT-ROOF SNOW LOAD, Pf: 35 PSF
      1) GROUND SNOW LOAD, Pg: 45.2 PSF
      2) SNOW EXPOSURE FACTOR, Ce: 1.0
      3) SNOW LOAD IMPORTANCE FACTOR, Is: 1.1
      4) THERMAL FACTOR, Ct: 1.0
   b. DEAD LOAD = 14.2 PSF + FRAMING (@ ADDITION)

(Revision 1)

4. WIND DESIGN
   a. BASIC WIND SPEED (3 SECOND GUST): 90 MPH
   b. WIND IMPORTANCE FACTOR, IW: 1.15
   c. WIND EXPOSURE: C
   d. COMPONENT AND CLADDING DESIGN WIND PRESSURE SHALL BE AS REQUIRED PER ASCE 7-05.
5. SEISMIC DESIGN:
   a. SEISMIC IMPORTANCE FACTOR, IE: 1.25
   b. SITE CLASS: D
   c. MAPPED SPECTRAL RESPONSE ACCELERATIONS: SS = 1.39 , S1 = 0.58
   d. SPECTRAL RESPONSE COEFFICIENTS: SDS = 0.93 , SD1 = 0.58
   e. SEISMIC DESIGN CATEGORY: D
   f. BASIC SEISMIC-FORCE-RESISTING SYSTEM: SPECIAL STEEL MOMENT FRAMES(N-S), SPECIAL REINFORCED CONCRETE SHEAR WALLS AND BRACED FRAMES(E-W).
   g. DESIGN BASE SHEAR: V = Cs x W
   h. RESPONSE MODIFICATION FACTOR, R: 8 (N-S), 6 (E-W)
   i. ANALYSIS PROCEDURE: MODAL RESPONSE SPECTRUM ANALYSIS

D. FOUNDATION

1. DESIGN SOIL PRESSURE: 4500 PSF (WITH RAMMED AGGREGATE PIERS)
2. SOILS REPORT BY: GSH GEOTECHNICAL, INC.
   REPORT #: 0068-015-12
   DATED: MAY 21, 2012
3. SOIL PREPARATION UNDER FOOTINGS AND SLABS-ON-GRADE SHALL BE IN ACCORDANCE WITH THE SOILS REPORT.
4. TOP OF FOOTING ELEVATIONS SHOWN ON THE FOOTING AND FOUNDATION PLAN ARE BASED ON PRELIMINARY GRADING INFORMATION AND MUST BE VERIFIED PRIOR TO CONSTRUCTION. STEPS WHERE SHOWN ARE AT APPROXIMATE LOCATIONS. ALL EXTERIOR FOOTINGS MUST BEAR A MINIMUM OF 30 INCHES BELOW LOWEST ADJACENT FINAL GRADE.
5. ALL WALLS (EXCEPT CANTILEVERED RETAINING WALLS) SHALL BE ADEQUATELY BRACED AGAINST LATERAL MOVEMENT PRIOR TO BACKFILLING. DESIGN AND ERECTION OF BRACING/SHORING IS THE RESPONSIBILITY OF THE GENERAL CONTRACTOR. BRACING SHALL REMAIN IN PLACE UNTIL SUPPORTING STRUCTURAL ELEMENTS ARE IN PLACE AND HAVE ATTAINED FULL STRENGTH.
6. UNLESS NOTED OTHERWISE, ALL FOOTINGS AT COLUMNS TO BE CENTERED BELOW COLUMNS.
7. UNLESS NOTED OTHERWISE, ALL FOOTINGS SHALL HAVE VERTICAL FACES FORMED WITH STANDARD FORMING MATERIALS (WOOD, METAL, ETC.). WITH PRIOR APPROVAL OF ARCHITECT AND ENGINEER, CONCRETE FOR FOOTINGS CAN BE PLACED IN EXCAVATED "SOIL" FORMS PROVIDED THAT THE DIMENSIONS ARE INCREASED 3" ON EACH SIDE.

E. CONCRETE

1. ALL CONCRETE MIX DESIGNS SHALL COMPLY WITH THE PROJECT SPECIFICATIONS AND THE REQUIREMENTS LISTED BELOW:
   a. FOOTINGS, GRADE BEAMS:
      1) 28 DAY COMPRESSIVE STRENGTH: 3000 PSI
      2) MAXIMUM W/C RATIO: 0.50
      3) MAXIMUM AGGREGATE SIZE: 1"
   b. FOUNDATION WALLS:
      4) 28 DAY COMPRESSIVE STRENGTH: 4500 PSI
      5) MAXIMUM W/C RATIO: 0.50
      6) MAXIMUM AGGREGATE SIZE: 1"
      7) AIR CONTENT:4.5%
   c. RETAINING WALLS, EXTERIOR SLABS (DOCKS, SHEAR WALLS, ETC.):
      1) 28 DAY COMPRESSIVE STRENGTH: 4500 PSI
      2) MAXIMUM W/C RATIO: 0.45
      3) MAXIMUM AGGREGATE SIZE: 1"
      4) AIR CONTENT:6%
   d. INTERIOR SLABS ON GRADE:
      1) 28 DAY COMPRESSIVE STRENGTH: 3000 PSI
   e. INTERIOR SUSPENDED SLABS:
      1) 28 DAY COMPRESSIVE STRENGTH: 3000 PSI
2. WATER USED IN MIXING CONCRETE SHALL CONFORM TO ASTM C1602.
3. NO PIPES, DUCTS, SLEEVES, ETC. SHALL BE PLACED IN STRUCTURAL CONCRETE UNLESS SPECIFICALLY DETAILED OR APPROVED BY THE STRUCTURAL ENGINEER. NO ALUMINUM PRODUCTS SHALL BE EMBEDDED IN CONCRETE. PENETRATIONS THRU STRUCTURAL CONCRETE ELEMENTS MUST BE APPROVED BY THE ENGINEER AND SHALL BE BUILT INTO THE ELEMENT PRIOR TO CONCRETE PLACEMENT.
4. REFER TO ARCHITECTURAL DRAWINGS FOR MOLDS, GROOVES, ORNAMENTS, ETC. TO BE CAST IN TO CONCRETE, AND FOR EXTENT AND LOCATION OF DEPRESSIONS, CURBS, RAMPS, ETC.
5. UNLESS NOTED OTHERWISE, MINIMUM REINFORCING IN ALL CONCRETE FOUNDATION WALLS SHALL BE AS FOLLOWS:

THICKNESS	TOP & BOTTOM BARS	VERTICAL	HORIZONTAL
8"	(2) #5	#4 AT 18"O.C.	#4 AT 12"O.C.
14"	(2) #5	#4 AT 18"O.C. EA FACE	#4 AT 14"O.C. EA FACE
34-3/4"	(4) #5	#6 AT 16"O.C. EA FACE	#7 AT 12"O.C. EA FACE W/ #3 CROSS TIES @ 16"O.C. HORIZ. AND 12"O.C. VERT.

6. UNLESS NOTED OTHERWISE, CONCRETE SLABS ON EARTH SHALL BE REINFORCED AS FOLLOWS:
   4" THICK - UNREINFORCED
7. UNLESS NOTED OTHERWISE, FOR OPENINGS LARGER THAN 12" IN ANY DIRECTION IN CONCRETE WALLS ADD (2) #5 BARS ALL SIDES IN ADDITION TO REGULAR WALL REINFORCING AND EXTEND 24" EACH WAY BEYOND OPENING. WHERE 24" IS NOT AVAILABLE, EXTEND BARS AS FAR AS POSSIBLE AND TERMINATE WITH A STANDARD HOOK.
8. CONSTRUCTION JOINTS NOT SHOWN ON THE PLANS SHALL BE MADE AND LOCATED SO AS TO NOT IMPAIR THE STRENGTH OF THE STRUCTURE AND AS APPROVED BY THE STRUCTURAL ENGINEER. PROVIDE 2 X 4 (SHAPED) KEYWAY IN ALL VERTICAL AND HORIZONTAL JOINTS UNLESS NOTED OR DETAILED OTHERWISE. ALL STEEL REINFORCING SHALL BE CONTINUOUS THROUGH COLD JOINTS UNLESS NOTED OTHERWISE. SEE TYPICAL DETAILS FOR COLD/CONSTRUCTION JOINTS FOR SLABS ON GRADE.

F. ANCHOR BOLTS/EMBEDDED BOLTS

1. ALL ANCHOR BOLTS SHALL HAVE ASTM A-563 HEAVY HEX NUT AND ASTM F-436 WASHERS AT STANDARD OR OVERSIZED HOLES PER AISC SPECIFICATION TABLE J3.3. WHERE HOLE SIZES DO NOT COMPLY WITH THE LIMITATIONS FOR OVERSIZED HOLES THE STRUCTURAL ENGINEER SHALL BE NOTIFIED TO DETERMINE STEEL PLATE WASHER REQUIREMENTS. ANCHOR BOLTS SHALL COMPLY WITH THE FOLLOWING:
   a. AT BRACED FRAMES & MOMENT RESISTING FRAMES - ASTM F1554 GRADE 105 HEADED BOLTS. (ASTM A449 THREADED ROD MAY BE USED WITH DOUBLE NUT AND WASHER.)
   b. AT ALL OTHER ANCHOR BOLTS (UNLESS NOTED OTHERWISE) - ASTM F1554 GRADE 36 HEADED BOLTS. (ASTM A36 THREADED ROD MAY BE USED WITH DOUBLE NUT AND WASHER.)
2. EMBEDDED BOLTS IN MASONRY SHALL BE (UNLESS NOTED OTHERWISE) ASTM A-307 GRADE HEADED BOLTS.
3. SEE TYPICAL ANCHOR BOLT DETAIL FOR DEFINITIONS OF EMBEDMENT LENGTH, ETC.
4. FURNISH TEMPLATES AND OTHER DEVICES AS NECESSARY FOR PRESETTING ALL BOLTS PRIOR TO PLACING CONCRETE AND/OR GROUT.
5. IF THREADED RODS ARE USED AS PERMITTED ABOVE, THEY SHALL BE CLEAR OF SOIL AND DIRT.
6. WHERE REQUIRED FOR ERECTION, HOLES LARGER THAN OVERSIZED MAY BE PERMITTED WITH THE USE OF STEEL PLATE WASHERS AT THE DISCRETION OF THE STRUCTURAL ENGINEER.

G. EPOXY/MECHANICAL ANCHORS

1. UNLESS NOTED OTHERWISE, ALL EPOXY ANCHORS INTO CONCRETE SHALL BE HILTI HIT-RE 500-SD OR SIMPSON SET XP EPOXY. INSTALL ANCHORS IN ACCORDANCE WITH A CURRENT ICC REPORT.
2. UNLESS NOTED OTHERWISE, ALL EPOXY ANCHORS INTO MASONRY SHALL BE HILTI HIT-HY150 EPOXY OR SIMPSON SET EPOXY. INSTALL ANCHORS IN ACCORDANCE WITH A CURRENT ICC REPORT.
3. UNLESS NOTED OTHERWISE, ALL EXPANSION OR WEDGE ANCHORS INTO CONCRETE SHALL BE HILTI KWIK BOLT TZ, POWERS WEDGE BOLT, OR SIMPSON STRONG-BOLT OR APPROVED EQUAL. INSTALL ANCHORS IN ACCORDANCE WITH A CURRENT ICC REPORT.
4. UNLESS NOTED OTHER WISE, ALL EXPANSION OR WEDGE ANCHORS INTO MASONRY SHALL BE HILTI SLEEVE ANCHORS OR RAMSET/RED HEAD DYNABOLT SLEEVE ANCHORS. INSTALL ANCHORS IN ACCORDANCE WITH CURRENT ICC REPORT.
5. ALL MASONRY CELLS IN WHICH ANCHORS ARE INSTALLED SHALL BE SOLID GROUTED.
6. THE TESTING LABORATORY WILL PERFORM VISUAL INSPECTION OF ANCHORS AND DOWELS AS SPECIFIED IN THE SPECIAL INSPECTION SCHEDULE. TENSION TESTING CAN BE REQUIRED AT THE DIRECTION OF THE STRUCTURAL ENGINEER OF RECORD OR THE SPECIAL INSPECTOR.
7. IF REINFORCEMENT IS ENCOUNTERED DURING DRILLING, ABANDON THAT HOLE AND SHIFT THE ANCHOR LOCATION TO AVOID THE REINFORCEMENT. PROVIDE A MINIMUM SPACE OF (2) ANCHOR HOLE DIAMETERS OR 1 INCH, WHICH EVER IS LARGER, OF SOUND CONCRETE/MASONRY BETWEEN THE ANCHOR AND THE ABANDONED HOLE. FILL THE ABANDONED HOLE WITH NON-SHRINK GROUT. AT CONTRACTORS OPTION, LOCATE EXISTING REINFORCMENT PRIOR TO DRILLING/CORING. IF THE ANCHOR OR DOWEL CANNOT BE SHIFTED AS NOTED ABOVE, THE ENGINEER WILL DETERMINE A NEW LOCATION.
8. LOCATE REINFORCEMENT AND CONFIRM FINAL ANCHOR LOCATIONS PRIOR TO FABRICATING PLATES, MEMBERS, OR OTHER STEEL ASSEMBLIES ATTACHED WITH MECHANICAL ANCHORS

H. SUSPENDED CONCRETE SLABS / SLABS ON METAL DECK

1. UNLESS NOTED OTHERWISE, ALL CONCRETE SLABS ON METAL DECK SHALL BE 6-1/2" TOTAL THICKNESS NORMAL WEIGHT CONCRETE WITH A WEIGHT LESS THAN 145 POUNDS PER CUBIC FOOT, REINFORCED WITH FIBERMESH. REINFORCING STEEL SHALL BE CHAIRED TO 1" TOP COVER AT ALL BEAM LOCATIONS. WHERE THE SLAB CONSTRUCTION IS USED TO OBTAIN A UL FIRE RATING, THE PROPOSED FIBER MESH SHALL HAVE UL ACCEPTANCE AS AN APPROVED ALTERNATIVE TO WELDED WIRE FABRIC.
2. AROUND OPENINGS IN SUSPENDED CONCRETE SLABS, ADD REINFORCING BARS EQUIVALENT TO BARS CUT BY OPENING WITH HALF ON EACH SIDE OF OPENING. BARS PARALLEL TO PRINCIPAL REINFORCING SHALL RUN FULL LENGTH OF SPAN. BARS PARALLEL TO TEMPERATURE REINFORCING SHALL RUN 24" BEYOND OPENING.
3. ALL OPENINGS GREATER THAN 6" IN ANY DIRECTION IN CONCRETE FLOOR SLABS ON METAL DECK SHALL BE FRAMED ON 4 SIDES WITH STEEL ANGLES OR BENT PLATES (SEE TYPICAL DETAIL) UNLESS NOTED OTHERWISE.
4. EVERY EFFORT SHALL BE MADE TO PROVIDE A LEVEL FINISHED FLOOR WHILE MAINTAINING THE MINIMUM INDICATED SLAB THICKNESS.
5. CONTROL JOINTS IN SUSPENDED CONCRETE SLABS AND CONCRETE SLABS ON DECK SHALL NOT BE USED UNLESS SPECIFICALLY APPROVED AND DETAILED BY THE ENGINEER.
6. SEE TYPICAL DETAILS WHEN SLABS ARE MADE COMPOSITE WITH STEEL BEAMS.
7. CONDUIT IS NOT ALLOWED IN CONCRETE SLABS ON METAL DECK IF THE FLOOR SLAB CONSTRUCTION IS USED TO OBTAIN A FIRE RATING.
8. CONTRACTOR SHALL PROVIDE ALL TEMPORARY SHORING, BRACING, AND GUYING AS REQUIRED DURING ERECTION AND PLACEMENT OF SUSPENDED CONCRETE SLABS ON METAL DECK.

I. REINFORCING STEEL

1. REINFORCING BAR STRENGTH REQUIREMENTS:
   a. ALL REINFORCING BARS EXCEPT AS INDICATED IN NOTE b, SHALL CONFORM TO ASTM STANDARD A-615 GRADE 60 AND ALL WELDED WIRE FABRIC SHALL CONFORM TO ASTM STANDARD A-185 AND SHALL BE SUPPLIED IN FLAT SHEETS. ADEQUATELY TIE AND SUPPORT ALL REINFORCING STEEL AS SPECIFIED BY ACI 117, TO MAINTAIN EXACT REQUIRED POSITION.
   b. ALL REINFORCING BARS FOR SPECIAL REINFORCED CONCRETE SHEARWALLS AS INDICATED IN THE LATERAL FORCE RESISTING ELEMENT KEY PLAN SHALL CONFORM TO ASTM A706 GR. 60. ASTM GR. 60 IS PERMITTED IF THE ACTUAL YIELD STRENGTH BASED ON MILL TESTS DOES NOT EXCEED THE ACTUAL Fy BY MORE THAN 18,000 PSI AND THE RATIO OF THE ACTUAL TENSILE STRENGTH TO THE ACTUAL YIELD STRENGTH IS NOT LESS THAN 1.25. MILL TESTS REPORTS SHALL BE SUBMITTED TO THE ENGINEER FOR REVIEW.
2. HEADED SHEAR STUD ASSEMBLIES SHALL CONFORM TO ASTM A1044.
3. STEEL DISCONTINUOUS FIBER REINFORCEMENT SHALL BE DEFORMED AND CONFORM TO ASTM A820 AND SHALL HAVE A LENGTH TO DIAMETER RATIO NOT SMALLER THAN 50 AND NOT GREATER THAN 100.
4. HEADED DEFORMED BARS SHALL CONFORM TO ASTM A970. OBSTRUCTIONS OR INTERRUPTIONS OF THE BAR DEFORMATIONS, IF ANY, SHALL NOT EXTEND MORE THAN 2 BAR DIAMETERS FROM THE BEARING FACE OF THE HEAD.
5. ALL FIELD BENT DOWELS SHALL BE GRADE 40 WITH SPACING INDICATED REDUCED BY 1/3.
6. UNLESS NOTED OTHERWISE, REINFORCEMENT SHALL HAVE THE FOLLOWING CONCRETE COVERAGE:
   a. CAST AGAINST AND PERMANENTLY EXPOSED TO EARTH ..... 3"
   b. EXPOSED TO EARTH OR WEATHER:
      1) #6 & LARGER ..... 2"
      2) #5 & SMALLER .....1-1/2"
   c. NOT EXPOSED TO WEATHER OR EARTH:
      1) SLABS, WALLS, JOISTS, #11 & SMALLER ..... 3/4"
      2) BEAMS, COLUMNS: MAIN REINFORCING OR TIES ..... 1-1/2"
   d. SLAB ON GRADE:
      1) PLACE REINFORCING AT CENTER OF SLAB UNLESS INDICATED OTHERWISE.
7. EXCEPT WHERE NOTED ON PLANS OR DETAILS CONTINUOUS REINFORCEMENT SHALL BE SPLICED AT POINTS OF MINIMUM STRESS BY LAPPING PER THE REBAR LAP SCHEDULE.
8. REINFORCING STEEL MAY BE SPLICED WITH MECHANICAL COUPLERS THAT HAVE A TENSION CAPACITY OF AT LEAST 125% OF THE STRENGTH OF THE BAR. MECHANICAL COUPLERS SHALL BE A POSITIVE CONNECTING TYPE COUPLER, AND SHALL BE INSTALLED IN ACCORDANCE WITH AN APPROVED ICC RESEARCH REPORT. WHERE THESE ARE USED, SPLICES ON ADJACENT BARS SHALL BE STAGGERED AT LEAST 24 INCHES ALONG THE LENGTH OF THE BARS.
9. ALL VERTICAL REINFORCING IN STRUCTURAL ELEMENTS ABOVE SHALL BE SPLICED WITH MATCHING DOWELS EMBEDDED WITHIN THE FOOTINGS OR STRUCTURE BELOW. SPLICE LENGTHS SHALL COMPLY WITH REBAR LAP SCHEDULE. DOWELS INTO FOOTINGS SHALL TERMINATE WITH A STANDARD HOOK, AND SHALL EXTEND TO WITHIN 4" OF THE BOTTOM OF THE FOOTING, BUT NEED NOT EXTEND MORE THAN 20" INTO FOOTING. FOR MASONRY CONSTRUCTION SEE STRUCTURAL NOTE M.6.A.
10. DO NOT WELD REINFORCING EXCEPT AS NOTED ON PLANS, WHERE REINFORCING IS WELDED, USE ASTM A-706 REINFORCING.
11. REINFORCING BARS, TIES, AND TENDONS SHALL BE SUPPORTED BY NYLON CONES, PLASTIC-COATED TIE-WIRES, OR PLASTIC-COATED CHAIRS. REINFORCING IN FOOTINGS IS PERMITTED TO BE SUPPORTED ON CONCRETE DOBIES.
12. UNLESS NOTED OTHERWISE, HOOKS, STIRRUPS, TIES, AND OTHER BENDS IN REINFORCING STEEL SHALL MEET THE STANDARDS SET FORTH IN ACI 318/318R-08. UNLESS OTHERWISE PERMITTED BY THE ENGINEER, ALL REINFORCEMENT SHALL BE BENT COLD. REINFORCEMENT PARTIALLY EMBEDDED IN CONCRETE SHALL NOT BE FIELD BENT, EXCEPT AS SHOWN ON THESE DRAWINGS OR OTHERWISE PERMITTED BY THE ENGINEER.
13. UNLESS SPECIFICALLY NOTED AND/OR DETAILED IN THE STRUCTURAL DRAWINGS CONDUIT SHALL NOT BE IN CONTACT WITH REINFORCING STEEL.

J. STRUCTURAL STEEL

1. STRUCTURAL STEEL SHALL BE FABRICATED AND ERECTED IN ACCORDANCE WITH THE LATEST EDITION OF THE FOLLOWING:
   a. ANSI/AISC 360-05 "SPECIFICATION FOR STRUCTURAL STEEL BUILDINGS", WITH "COMMENTARY" AND "SUPPLEMENTS" AS REQUIRED BY BUILDING CODE.
   b. AISC 303-05 "CODE OF STANDARD PRACTICE FOR STEEL BUILDINGS AND BRIDGES" EXCLUDING THE FOLLOWING SECTIONS: 4.4, 4.4.1, AND 4.4.2.
   c. AISI "SPECIFICATIONS FOR THE DESIGN OF COLD-FORMED STEEL STRUCTURAL MEMBERS".
   d. AISC "SPECIFICATION FOR STRUCTURAL JOINTS USING ASTM A325 OR A490 BOLTS".
   e. AWS D1.1 AND 1.3, "STRUCTURAL WELDING CODE" (EXCEPT SPECIFIC ITEMS DO NOT APPLY IF THEY CONFLICT WITH AISC).
   f. ANSI/AISC 341-05 "SEISMIC PROVISIONS FOR STRUCTURAL STEEL BUILDINGS".
2. STRUCTURAL STEEL SHALL COMPLY WITH THE FOLLOWING:
   a. WIDE FLANGE SHAPES - ASTM A992
   b. OTHER SHAPES AND PLATES - ASTM A-36 (UNO) - PLATES ≥ 1-1/2" - ASTM A572-50
   c. TUBES (TS) AND HOLLOW STRUCTURAL SECTIONS (HSS) - ASTM A-500, GRADE B (SQUARE AND RECTANGULAR SHAPES FY = 46 KSI AND ROUND SHAPES FY = 42 KSI)
   d. PIPE COLUMNS - ASTM A-53, GRADE B TYPE E OR S
   e. STAINLESS STEEL SHAPES, PLATES, AND FASTENERS - ASTM 304
   f. DEFORMED BAR ANCHORS (DBA) - ASTM A-496, WELDED IN ACCORDANCE WITH AWS D1.1
   g. HEADED STUD ANCHORS (HSA) - ASTM A-108, GRADE 1015 STEEL AND WELDED IN ACCORDANCE WITH AWS D1.1 FOR TYPE "B". USE 3/4" DIAMETER STUDS, UNLESS NOTED OTHERWISE.
   h. THREADED ROD - ASTM A-449.
3. CONNECTIONS SHALL COMPLY WITH THE STRUCTURAL DRAWINGS UNLESS WRITTEN APPROVAL TO CHANGE IS GIVEN BY THE STRUCTURAL ENGINEER.
4. ALL SHOP FABRICATIONS SHALL BE PERFORMED BY AN APPROVED FABRICATOR IN ACCORDANCE WITH SECTIONS 1702 AND 1704 OF THE IBC OR WITH SHOP INSPECTION BY AN INDEPENDENT AGENCY IN ACCORDANCE WITH SECTION 1704.2 OF THE IBC.
5. WELDING
   a. ALL WELDING AND CUTTING SHALL BE PERFORMED BY AWS CERTIFIED WELDERS IN ACCORDANCE WITH ANSI/AWS D1.1 (LATEST EDITION).
   b. USE E-70XX ELECTRODES UNLESS NOTED OTHERWISE. E-60XX MAY BE USED FOR WELDING STEEL DECKS.
   c. ALL INTERSECTING STEEL SHAPES WHICH ARE NOT CONNECTED WITH BOLTS SHALL BE WELDED TOGETHER WITH A FILLET WELD ALL AROUND UNLESS NOTED OTHERWISE. WHERE WELD SIZES ARE NOT SHOWN USE THE FOLLOWING:
      1) WHERE ALL CONNECTED PARTS ARE THICKER THAN 1/4", WELD IS 1/16" LESS THAN THE THICKNESS OF THE THINNEST PART.
      2) WHERE ANY OF THE CONNECTED PARTS IS LESS THAN 1/4" THICK, WELD IS SAME AS THICKNESS OF THE THINNEST PART.
   d. WELDING OF HSA'S AND DBA'S SHALL CONFORM TO THE MANUFACTURER'S SPECIFICATIONS.
   e. WHEREVER POSSIBLE, WELDS SHALL BE SHOP WELDS. SPECIAL CONSIDERATIONS, SUCH AS ITEMS WHICH MAY NEED ADJUSTMENT AT THE SITE, REQUIRE THAT SOME WELDS BE FIELD WELDS. WHERE QUESTIONS OR DISCREPANCIES OCCUR THE CONTRACTOR SHALL COORDINATE THE WORK BETWEEN THE SHOP FABRICATOR AND THE STEEL ERECTOR.
6. BOLTING
   a. UNLESS NOTED OTHERWISE, ALL STRUCTURAL STEEL TO STEEL CONNECTIONS SHALL USE HIGH STRENGTH BOLTS CONFORMING TO ASTM A-325.
   b. UNLESS NOTED OTHERWISE, ALL BOLTING IS CLASSIFIED AS NON-SLIP CRITICAL BEARING TYPE CONNECTIONS WITH THREADS INCLUDED IN SHEAR PLANE. TIGHTEN BOLTS TO A SNUG TIGHT CONDITION, WITH ALL PLIES OF THE JOINT IN FIRM CONTACT.
   c. AT OVERSIZED AND SLOTTED HOLES, WASHERS SHALL CONFORM TO ASTM F-436 AND COMPLETELY COVER THE HOLE.
   d. WHERE A STEEL BEAM TO BEAM CONNECTION IS NOT SHOWN, PROVIDE AN AISC STANDARD FRAMED CONNECTION SIZED FOR 1/2 OF THE TOTAL LOAD CAPACITY OF THE BEAM FOR THE SPAN AND STEEL SPECIFIED.
7. METAL DECKING
   a. UNLESS NOTED OTHERWISE, METAL ROOF DECK SHALL BE 22 GAUGE TYPE B PAINTED STEEL DECK. SEE ROOF DECK SCHEDULE FOR ATTACHMENTS.
   b. UNLESS NOTED OTHERWISE, METAL FLOOR DECK SHALL BE 20 GAUGE TYPE W2 COMPOSITE, PAINTED, UNVENTED STEEL DECK. UNLESS NOTED OTHERWISE, ATTACH TO SUPPORTING STRUCTURE WITH 3/4" DIAMETER WELDS AT 24" MAXIMUM SPACING. ATTACH SIDE SEAMS WITH BUTTON PUNCH OR SIDE SEAM SCREWS AT 12" MAXIMUM SPACING. AN HSA FIELD-WELDED THROUGH THE DECK MAY SUBSTITUTE FOR A PUDDLE WELD.
   c. ALL DECK SHALL BE CONTINUOUS OVER 3-SPANS. WHERE NOT POSSIBLE, THE DECK SUPPLIER/CONTRACTOR SHALL PROVIDE HEAVIER GAUGE DECK AS NEEDED TO PROVIDE THE EQUIVALENT PERFORMANCE OF THE SPECIFIED DECK WITH 3-SPAN CONTINUITY.
   d. SEE TYPICAL DETAILS FOR SUPPORT OF DECK AT OPENINGS.
   e. PROVIDE L2"x2"x3/16" FOR DECK SUPPORT AT LOCATIONS WHERE COLUMNS EXTEND THROUGH DECK.
   f. PAINTED STEEL DECK SHALL CONFORM TO ASTM A1008 AND GALVANIZED STEEL DECK SHALL CONFORM TO A653 GRADE G60.
   g. BUILDING ELEMENTS MAY BE SUPPORTED BY HANGING DIRECTLY FROM METAL DECKING, PROVIDED THAT THE TOTAL WEIGHT PER CONNECTION IS LESS THAN 50 LBS AND THAT THE ATTACHMENT TO THE DECKING IS DISTRIBUTED ACROSS AT LEAST TWO RIBS AND SPACED AT LEAST 6 FEET APART IN ANY DIRECTION.
8. ALL COLUMNS ADJACENT TO OR EMBEDDED IN MASONRY SHALL HAVE (2) 1/2" DIAMETER X 24" LONG DBA EXTENDING EACH WAY AT ALL WALL BOND BEAMS.
9. UNLESS NOTED OTHERWISE, WHERE STEEL BEAMS SUPPORT WOOD FRAMING OR WOOD SHEATHING, PROVIDE A CONTINUOUS DOUBLE 2x OR SINGLE 3x NAILER PLATE ON THE TOP OF THE BEAM THAT EXTENDS AT LEAST THE FULL WIDTH OF THE BEAM FLANGE. ATTACH NAILER PLATES TO WIDE-FLANGE BEAMS WITH 1/2" DIAMETER THRU BOLTS AT 24"O.C. - STAGGERED. COUNTER-SINK HEAD OF BOLTS INTO TOP OF NAILER PLATE TO PROVIDE A FLUSH BEARING SURFACE.
10. ALL COLUMNS ADJACENT TO OR EMBEDDED IN WOOD STUD WALLS SHALL HAVE (1) 1/2" DIAMETER X 3-1/2" THREADED STEEL ROD SHOP-WELDED TO THE FACE OF THE COLUMN AT 24"O.C. AND EXTENDING EACH WAY INTO THE ADJACENT STUD WALLS. ATTACH ADJACENT WOOD WALL STUDS TO STEEL COLUMN WITH STANDARD NUT AND WASHER AS REQUIRED.
11. PROVIDE FULL DEPTH WEB STIFFENER PLATES AT EACH SIDE OF STEEL BEAMS AT ALL BEARING (EXCEPT SECONDARY FRAMING) POINTS. STIFFENER PLATES SHALL BE THICKNESS SHOWN UNLESS NOTED OTHERWISE AND SHALL BE WELDED BOTH SIDES WITH FILLET WELDS ALL AROUND.

FLANGE WIDTH	STIFFENER THICKNESS	WELD THICKNESS
< 8 1/4"	1/4"	3/16"
8 1/4" < BF < 12 1/2"	3/8"	1/4"
12 1/2" < BF < 18"	1/2"	5/16"

12. FABRICATORS AND SUPPLIERS SHALL COORDINATE PAINT/FINISHES WITH REQUIREMENTS FOR DIRECT APPLIED INSULATION, FIREPROOFING, ETC. AS NOTED IN THE PROJECT SPECIFICATIONS.
13. WHEN DETERMINING THE FIRE RESISTANCE OF ASSEMBLIES, USE THE FOLLOWING: STEEL ROOF MEMBERS ARE CONSIDERED UN-RESTRAINED AND STEEL FLOOR FRAMING MEMBERS ARE CONSIDERED RESTRAINED.
14. UNLESS NOTED OTHERWISE, ALL HORIZONTAL FRAMING MEMBERS SHALL BE ERECTED WITH THE NATURAL CROWN UP.

STRUCTURAL NOTES CONTINUED ON S002

LEGEND OF SYMBOLS AND ABBREVIATIONS

AB	=	ANCHOR BOLT
ABV	=	ABOVE
ARCH	=	ARCHITECT
BLW	=	BELOW
BN	=	BOUNDARY NAILING
CL	=	CENTER LINE
CMU	=	CONCRETE MASONRY UNIT
COL	=	COLUMN
CONC	=	CONCRETE
DBA	=	DEFORMED BAR ANCHOR
DBE	=	DECK BEARING ELEVATION
ELEV	=	ELEVATION
EN	=	EDGE NAILING
FDN	=	FOUNDATION
FTG	=	FOOTING
FFE	=	FINISHED FLOOR ELEVATION
HSA	=	HEADED STUD ANCHOR
JBE	=	JOIST BEARING ELEVATION
MIN	=	MINIMUM
MAX	=	MAXIMUM
MECH	=	MECHANICAL
MEZZ	=	MEZZANINE
OAE	=	OR APPROVED EQUAL
OPP	=	OPPOSITE
PAF	=	POWDER ACTUATED FASTENER
PL	=	PLATE
REINF	=	REINFORCING
REQ	=	REQUIRED
SIM	=	SIMILAR
TOF	=	TOP OF FOOTING
TOB	=	TOP OF BEAM ELEVATION
TOM	=	TOP OF MASONRY ELEVATION
TOC	=	TOP OF CONCRETE SLAB
TOG	=	TOP OF GIRDER ELEVATION
TOS	=	TOP OF STEEL ELEVATION
TYP	=	TYPICAL
UNO	=	UNLESS NOTED OTHERWISE
NS, FS	=	NEAR SIDE, FARSIDE

- FOOTING MARK / TOP OF FOOTING ELEV.
- SECTION MARK / SHEET NUMBER
- TOP OF FOUNDATION WALL OR COLUMN PIER ELEV.
- SHEAR WALL - SEE SCHEDULE / MIN. LENGTH OF SHEAR WALL
- S——S FOOTING STEP
- MASONRY WALL
- DEPRESS FDN./WALL AND POUR FLOOR SLAB OVER
- MASONRY BEAM
- CONCRETE BEAM
- WOOD BEAM
- ELEVATION
- HD POST "A": HD - SIMPSON HOLD DOWN SIZE POST - SIZE OF END POST CONNECTED TO HOLD DOWN; "A" - PLAN CONFIGURATION AT HOLD DOWN AT FOUNDATION
- —L— FRAMING ANGLE SEE TYPICAL DETAIL
- —C— FRAMING CHANNEL SEE TYPICAL DETAIL
- (L) ITEMS, DETAILS, & SYSTEMS WHICH ARE PART OF THE LATERAL FORCE RESISTING SYSTEM.
- MOMENT RESISTING CONNECTIONS - SEE DETAIL
- MOMENT RESISTING CANTILEVER CONNECTIONS - SEE DETAIL
- KB KICKER BRACE
- CONCRETE SLAB ON METAL DECK INDICATING THE SPAN DIRECTION OF THE DECK

Structural Sheet Index

SHEET NUMBER	SHEET NAME
S001	STRUCTURAL NOTES
S002	STRUCTURAL NOTES & SCHEDULES
S003	SCHEDULES
S110	OVERALL FOOTING AND FOUNDATION PLAN
S111	AREA A FOOTING AND FOUNDATION PLAN
S112	AREA B FOOTING AND FOUNDATION PLAN
S113	AREA C FOOTING AND FOUNDATION PLAN
S120	OVERALL SECOND FLOOR FRAMING PLAN
S122	AREA B SECOND FLOOR FRAMING PLAN
S123	AREA C SECOND FLOOR FRAMING PLAN
S130	OVERALL RUNNING TRACK AND MEZZANINE FRAMING PLAN
S131	AREA A RUNNING TRACK AND MEZZ. FRAMING PLAN
S132	AREA B RUNNING TRACK AND MEZZ. FRAMING PLAN
S133	AREA C FRAMING PLAN
S140	OVERALL ROOF FRAMING PLAN
S141	AREA A EXISTING ROOF TRACK SUPPORT PLAN
S141.1	AREA A EXISTING ROOF UPGRADE PLAN
S142	AREA B EXISTING ROOF TRACK SUPPORT PLAN
S142.1	AREA B EXISTING ROOF UPGRADE PLAN
S143	AREA C LOW ROOF FRAMING PLAN
S143.1	AREA C HIGH ROOF FRAMING PLAN
S201	BRACED FRAME ELEVATIONS
S202	BRIDGE DETAILS
S203	TRUSS UPGRADE ELEVATIONS
S204	MOMENT FRAME ELEVATIONS
S205	EXISTING WALL ELEVATIONS
S206	METAL STUD FRAMING ELEVATIONS
S401	TYPICAL DETAILS
S402	TYPICAL DETAILS
S403	DETAILS
S404	DETAILS
S405	DETAILS
S406	DETAILS
S407	DETAILS
S408	DETAILS
S409	METAL STUD FRAMING DETAILS
S901	SCHEMATIC REFERENCE

VCBO ARCHITECTURE
VALENTINER CRANE BRUNJES ONYON

PROFESSIONAL STRUCTURAL ENGINEER
Jeremy L. Achter
No. 353467
10.2.12
STATE OF UTAH

VCBO ARCHITECTURE
524 SOUTH 600 EAST
SALT LAKE CITY, UT 84102
Phone: (801) 575-8800
Fax: (801) 531-9850
WWW: www.vcbo.com

DFCM CODE COMPLIANCE STAMP

ARW ENGINEERS
structural consultants
1594 W. Park Cir. Ogden, Utah 84404
ph. 801.782.6008 fx. 801.782.4656

Student Activity Center
Stromberg Addition - BID SET
Weber State University
3750 Harrison Blvd. Ogden, UT 84408

Rev #	Date	Description
1	10/12/2012	ADD #2

Job # 12475
CAD File
Drawn BLP Checked JLA
Date 10.03.2012
Owner # DFCM #12031810

STRUCTURAL NOTES

S001

10/12/2012 2:49:39 PM

K. COLD-FORMED STEEL

1. LIGHT GAUGE STEEL FRAMING
   a. STEEL FRAMING SIZE DESIGNATORS USED IN THE DRAWINGS FOLLOW THE CONVENTION ESTABLISHED BY THE STEEL STUD MANUFACTURERS' ASSOCIATION (SSMA) AND THE NORTH AMERICAN STEEL FRAMING ALLIANCE (NASFA). FRAMING MEMBERS PROVIDED SHALL meet or exceed all SSMA and NASFA STANDARDS AND DESIGN PROPERTIES.
   b. ALL LOAD BEARING STUDS (AND/OR) JOIST FRAMING MEMBERS ALONG WITH ALL RUNNERS, BRIDGING, AND END-TRACKS SHALL BE OF THE DESIGNATION SHOWN ON THE PLANS. ALL OF THE ABOVE ELEMENTS SHALL BE FORMED FROM STEEL MEETING REQUIREMENTS OF ASTM A1011/A1011M-04. ALL COMPONENTS SHALL BE GALVANIZED. ALL COMPONENTS SHALL HAVE THE FOLLOWING YIELD STRESSES:

COMPONENT	BASE METAL THICKNESS	YIELD STRESS
STUDS, JOISTS & TRACKS	33 & 43 MILL	33,000 PSI
	54, 68 & 97 MILL	50,000 PSI
END CLOSURES & BRIDGING	33, 43, 54 & 68 MILL	33,000 PSI

   c. FOLLOW ALL MANUFACTURERS' RECOMMENDATIONS FOR THE USE OF THESE PRODUCTS.
   d. UNLESS NOTED OTHERWISE, ALL WELDED CONNECTIONS SHALL BE IN ACCORDANCE WITH AWS D1.3 AND THE STRUCTURAL DETAILS. ALL WELDS SHALL BE COMPLETED USING E60XX ELECTRODES.
2. CONNECTIONS, FASTENERS, AND ADHESIVE
   a. ALL SCREWS SHALL HAVE THE FOLLOWING MINIMUM PROPERTIES:

SCREW SIZE	SHANK DIAMETER
NO. 6	0.138"
NO. 8	0.164"
NO. 10	0.190"
NO. 12	0.216"

   b. UNLESS NOTED OTHERWISE, ALL FRAMING ANCHORS, SLIPS, HOLD DOWNS, STRAPS, ETC. TO BE PROVIDED BY THE STEEL NETWORK OR APPROVED EQUAL.
   c. UNLESS NOTED OTHERWISE, ALL EXTERIOR WALL BOTTOM TRACKS TO BE ANCHORED TO THE CONCRETE FOUNDATION WALL WITH HILTI KWIK HUS-EZ ¼"X2-1/2" EMBEDMENT ANCHOR BOLTS @ 16"O.C.
3. UNLESS NOTED OTHERWISE, ALL STEEL STUD WALLS SHALL BE CONTINUOUS BETWEEN TOP AND BOTTOM TRACKS WITH NO SPLICES.
4. UNLESS NOTED OTHERWISE, ALL STEEL STUD JOISTS AND BOX HEADER COMPONENTS SHALL BE CONTINUOUS WITH NO SPLICES BETWEEN BEARING SUPPORTS.
5. ALL TOP AND BOTTOM TRACKS OF STUD WALLS AND BOX HEADERS SHALL BE CONTINUOUS. WHERE LONG TRACKS ARE NOT AVAILABLE, TRACKS MAY BE WELDED TOGETHER PER NOTE 1D OF THESE NOTES, ON ALL SIDES OR TRACKS MAY BE SPLICED PER DETAIL x/xx.
6. SEE TYPICAL DETAIL FOR REINFORCEMENT OF KNOCK OUT HOLES AT BEARING AND POINT LOAD LOCATIONS ON STEEL JOISTS AND BOX HEADERS.
7. AT ALL OVERBUILD LOCATIONS, ROOF SHEATHING SHALL BE COMPLETE BELOW OVERBUILDS PRIOR TO OVERBUILD CONSTRUCTION.
8. UNLESS NOTED OTHERWISE, ALL WALLS SHALL BE 600S162-54 STUDS SPACED AT 16"O.C. W/ 600T125-54 TRACKS. ATTACH TRACK TO STUDS W/ (1) #8 TEK SCREWS EACH SIDE OF STUD.
9. ALL INTERIOR, NON-BEARING, STEEL STUD WALLS THAT EXTEND ABOVE THE CEILING BUT DO NOT ATTACH TO THE FLOOR OR ROOF DIAPHRAGM (ABOVE), SHALL HAVE DIAGONAL BRACES AT 45 DEGREES (+/-). SEE ARCHITECTURAL DETAILS.

L. OPEN WEB JOISTS AND GIRDERS

1. ALL OPEN WEB STEEL JOISTS AND GIRDERS SHALL BE FABRICATED AND ERECTED IN ACCORDANCE WITH THE LATEST EDITION OF "STANDARD SPECIFICATIONS AND CODE OF STANDARD PRACTICE" OF THE STEEL JOIST INSTITUTE.
2. (###/###) DENOTES APPLIED TOTAL AND LIVE UNIFORMLY DISTRIBUTED LOADS IN POUNDS PER LINEAR FOOT OF JOIST, RESPECTIVELY.
3. SEE JOIST LOAD PROFILES FOR SPECIALLY LOADED JOISTS.
4. CONCENTRATED POINT LOADS (NOT SPECIFICALLY SHOWN ON THE PLANS) OF LESS THAN 200 LBS FOR MECHANICAL UNITS, FIRE SPRINKLER MAINS, AND OTHER EQUIPMENT SUPPORTED FROM JOISTS SHALL BE SUPPORTED WITHIN 6" OF A CHORD PANEL POINT. SUPPORT BEYOND PANEL POINTS CAN BE PROVIDED BY ADDING (2) L2"x2"x1/4" DIAGONALS TO THE NEAREST OPPOSITE CHORD PANEL POINT. LOADS SHALL BE SPACED AT LEAST 6 FEET APART WITH NO MORE THAN 4 PER JOIST. SEE JOIST FABRICATOR FOR ADDITIONAL REQUIREMENTS.
5. ANY BRACING REQUIRED FOR MISCELLANEOUS ITEMS (I.E. DUCTWORK, PIPING, ETC.) MUST CONNECT TO THE TOP CHORD OF THE JOIST OR GIRDER. BRACING TO THE BOTTOM CHORD IS NOT ALLOWED UNLESS SPECIFICALLY DETAILED THAT WAY ON THE PLANS.
6. PROVIDE SPECIAL BEARING ENDS AS REQUIRED AT SLOPED BEARING CONDITIONS. CONTRACTOR SHALL COORDINATE WITH OTHER STRUCTURAL ELEMENTS.
7. ALL JOISTS SHALL BE CAMBERED PER SJI SPECIFICATIONS, UNLESS NOTED OTHERWISE.
8. FIELD MODIFICATIONS (INCLUDING HOLES IN THE CHORD OR WEB MEMBERS) SHALL NOT BE MADE TO ANY JOIST OR GIRDER WITHOUT PRIOR APPROVAL BY THE MANUFACTURER.
9. FABRICATORS AND SUPPLIERS SHALL COORDINATE PAINT/FINISHES WITH REQUIREMENTS FOR DIRECT APPLIED INSULATION, FIREPROOFING, ETC. AS NOTED IN THE PROJECT SPECIFICATIONS.
10. JOIST BRIDGING SHALL BE PROVIDED AS REQUIRED BY THE JOIST MANUFACTURER AND SJI STANDARDS. BRIDGING WHERE SHOWN ON THE STRUCTURAL DRAWINGS IS A SCHEMATIC REPRESENTATION ONLY. SEE JOIST MANUFACTURER FOR BRIDGING SIZE, CONNECTIONS, TYPE AND QUANTITY.
11. WHERE ADDED LOADS ARE SHOWN ON THE JOISTS BUT NOT SPECIFICALLY DIMENSIONED, THE JOIST DESIGNER SHALL PLACE THOSE LOADS ON THE JOIST AT A LOCATION THAT RESULTS IN THE HIGHEST STRESS IN THE MEMBERS. THE DESIGNER MAY ASSUME THAT THE LOAD OCCURS WITHIN 10 FEET OF A SCALED DIMENSION.
12. FABRICATOR MUST SUBMIT A CERTIFICATE OF COMPLIANCE TO THE BUILDING OFFICIAL PER IBC 2206.5 STATING THAT WORK WAS PERFORMED IN ACCORDANCE WITH APPROVED CONSTRUCTION DOCUMENTS AND WITH SJI SPECIFICATIONS.
13. UNLESS NOTED OTHERWISE, ROOF JOISTS AND GIRDERS SHALL BE DESIGNED FOR A NET WIND UPLIFT OF 22 PSF.
14. ALL ROOF JOISTS BEARING ON EXTERIOR BEAMS SHALL BE DESIGNED TO TRANSFER 3.75 KIPS (ULTIMATE) TOP CHORD AXIAL FORCE THROUGH THE BEARING SHOE.
15. ALL K-SERIES JOISTS SHALL BE FABRICATED WITH 5" JOIST BEARING SEATS.
16. COORDINATE BRIDGING DESIGN AND LAYOUT WITH THE MECHANICAL PLANS AS DUCTWORK MAY OCCUR IN THE PLANE OF AND PARALLEL TO JOISTS REQUIRING THAT STRAIGHT BRIDGING BE USED IN LIEU OF DIAGONAL BRIDGING.

M. MASONRY

1. ALL HOLLOW MASONRY UNITS SHALL CONFORM TO ASTM C-90.
   f'm (MINIMUM) 1,500 PSI
   MINIMUM UNIT STRENGTH 1,900 PSI (TESTED IN ACCORDANCE WITH ASTM C-140)
2. ALL GROUT (SITE MIXED OR PRE-MIXED) SHALL CONFORM TO ASTM C-476 OR SECTION 2.2A OF TMS 602-08/ACI 530.1-08/ASCE 6-08. GROUT SHALL BE PLACED WITH SUFFICIENT WATER FOR POURING WITHOUT SEGREGATION. DO NOT USE MORTAR FOR GROUT. MECHANICALLY VIBRATE ALL GROUT.
3. GROUT STOPS SHALL BE AN APPROVED PRODUCT DESIGNED AND MANUFACTURED FOR USE AS A GROUT STOP. GROUT STOP SUBMITTALS SHALL BE SUBMITTED TO THE ARCHITECT AND ENGINEER FOR REVIEW. OTHER GROUT STOP MATERIALS SUCH AS ASPHALT IMPREGNATED MATERIALS ARE NOT PERMITTED.
4. MORTAR SHALL BE TYPE S AND SHALL CONFORM TO ASTM C 270.
5. ALL MASONRY WORK SHALL CONFORM TO CHAPTER 21 OF THE IBC.
6. UNLESS NOTED OTHERWISE, MINIMUM REINFORCING IN ALL 8" MASONRY WALLS SHALL BE AS FOLLOWS:
   a. VERTICAL: # 5 BARS IN CELLS ADJACENT TO ALL OPENINGS. AT CORNERS AND AT A MAXIMUM SPACING OF 32" THROUGHOUT THE WALL. ALL VERTICAL REINFORCEMENT INCLUDING, BUT NOT LIMITED TO JAMBS, COLUMNS, AND WALL REINFORCING SHALL BE DOWELED INTO AND THROUGH THE FOUNDATION WALL AND INTO THE FOOTING BELOW UNLESS SPECIFICALLY DETAILED OTHERWISE.
   b. HORIZONTAL: (2) #4 BARS IN 8" DEEP "H" BLOCK BOND BEAM UNITS AT 48"O.C. AND AT FLOORS, ROOF AND TOP OF WALL. BOND BEAMS AT ROOF WILL SLOPE TO MATCH SLOPING ROOF.
7. ALL BLOCK CELLS CONTAINING REINFORCING, BOLTS, OR ANCHORS SHALL BE GROUTED SOLID.
8. PROVIDE (1) #5 (MINIMUM), IN GROUTED SPACE, ON ALL SIDES AND ADJACENT TO EVERY OPENING WHICH EXCEEDS 24" IN EITHER DIRECTION. HORIZONTAL BARS SHALL EXTEND 24" BEYOND THE CORNERS OF THE OPENING AND VERTICAL BARS SHALL EXTEND TO TOP OF WALL. VERTICAL REINFORCING SHALL BE PROVIDED AT ENDS, CORNERS AND EACH SIDE OF CONTROL JOINTS. SEE TYPICAL DETAILS FOR OPENINGS WHICH EXCEED 32" IN EITHER DIRECTION.
9. SOLID GROUTING OF MASONRY IS UNACCEPTABLE EXCEPT AS SPECIFICALLY NOTED ON PLANS AND SCHEDULES.
10. WHERE WALLS ARE NOT GROUTED SOLID, EACH GROUT POUR SHALL TERMINATE FLUSH WITH THE TOP OF THE UPPERMOST UNIT EXCEPT AT CELLS WITH VERTICAL REINFORCING WHERE GROUT SHALL BE 1-1/2" BELOW TOP OF UNIT TO PROVIDE CONSTRUCTION KEY. WHERE WALLS ARE GROUTED SOLID, EACH GROUT POUR SHALL TERMINATE 1-1/2" BELOW TOP OF UNIT.
11. GROUT POURS SHALL NOT EXCEED 5'-0" UNLESS HIGH LIFT GROUTING PROCEDURES ARE FOLLOWED.
12. THE USE OF HIGH LIFT GROUTING PROCEDURES REQUIRE THE APPROVAL OF THE ARCHITECT AND ENGINEER AND SHALL NOT EXCEED THE MAXIMUM HEIGHTS GIVEN IN TABLE 1.19.1 OF TMS 402-08/ACI 530-08/ASCE 5-08. GROUT DEMONSTRATION PANELS, AS PRESCRIBED BY THE ARCHITECT AND ENGINEER, SHALL BE REQUIRED WHERE REQUESTED GROUTING PROCEDURES DO NOT MEET THE LIMITS OF TABLE 1.19.1. ADDITIONALLY, ALL HIGH LIFT GROUTING SHALL INCLUDE INSPECTION PROCEDURES NEEDED TO VERIFY GROUT PLACEMENT DURING CONSTRUCTION.
13. ALL MASONRY BEAMS SHALL BE BUILT INTEGRAL WITH SUPPORT. NO TOOTHING OR DOWELING PERMITTED. UNITS WITH ONE END OPEN SHALL BE USED FOR ALL MASONRY BEAMS.
14. PROVIDE VERTICAL CONTROL JOINTS AT MAXIMUM SPACINGS NOTED BELOW UNLESS NOTED OTHERWISE IN THE SPECIFICATIONS AND/OR ON ARCHITECTURAL ELEVATIONS AND AT ALL CHANGES IN WALL ELEVATION AND MASONRY THICKNESS. CONTROL JOINTS SHALL NOT BE LOCATED DIRECTLY OVER OR CLOSER THAN 24" TO WALL OPENINGS (DOORS, WINDOWS, MECHANICAL OPENINGS, ETC.), OR WITHIN MASONRY JAMBS.
    REINFORCED MASONRY: 40 FT
    VENEER: 30 FT AND AT INTERFACE BETWEEN VENEER SUPPORTED BY FOUNDATIONS AND SUSPENDED STRUCTURAL ELEMENTS.
15. HORIZONTAL REINFORCEMENT SHALL TERMINATE AT EACH SIDE OF CONTROL JOINTS EXCEPT AT FLOOR AND ROOF LEVEL BOND BEAMS AND AT TOP OF PARAPET.
16. CONTROL JOINTS SHALL BE PROVIDED AT THE MASONRY SIDE OF EMBEDDED STEEL COLUMNS TO CONTROL CRACKING OF FACE SHELLS.
17. SUPPORT NON-BEARING, NON-STRUCTURAL WALLS AT TOP OF MASONRY AS PER TYPICAL DETAILS AT LOCATIONS WHERE INTERSECTING OR PERPENDICULAR WALLS ARE 12-0" OR MORE APART OR WHERE END OF WALL OCCURS 6'-0" OR MORE FROM INTERSECTING WALL.
18. EMBED CHANNELS AND PLATES TO BE PLACED SO AS TO CREATE FLUSH SURFACE WITH FACE OF MASONRY. FLANGES ON CHANNEL EMBEDS SHALL BE HORIZONTAL.
19. ALL VERTICAL REINFORCING SHALL BE SECURED IN PLACE PRIOR TO GROUTING USING WIRE POSITIONERS OR OTHER ACCEPTABLE DEVICES. REINFORCING SHALL BE SECURED AT BAR-SPLICE LOCATIONS AND AT A SPACING NOT MORE THAN 120 BAR DIAMETERS.
20. UNLESS NOTED OTHERWISE, MASONRY WALLS SHALL BE CONSTRUCTED UTILIZING COMMON RUNNING-BOND WITH FULLY MORTARED BED JOINTS AROUND GROUTED CELLS.
21. MASONRY VENEER SHALL BE ANCHORED AS FOLLOWS:
    MASONRY VENEER SHALL BE ANCHORED USING THE DUR-O-WAL VENEER ANCHOR ASSEMBLY SYSTEM, OR AN APPROVED EQUAL. REGARDLESS OF BACK-UP SYSTEM, PROVIDE A CONTINUOUS HORIZONTAL 9 GAUGE WIRE AT 16"O.C. IN VENEER MORTAR JOINTS FOR ANCHOR ATTACHMENT. POSITIVE ANCHORAGE TO THE WIRE SHALL BE PROVIDED TO SUPPORT NOT MORE THAN 2 SQUARE FEET OF WALL, WITH A HORIZONTAL SPACING NOT EXCEEDING 18".
    a. WOOD AND METAL STUDS; USE DUR-O-WAL D/A 213 HEAVY DUTY ANCHORS OR AN APPROVED EQUAL. THE DUR-O-WAL ASSEMBLY SHALL BE ATTACHED TO WOOD STUDS USING A # 12 X 2" WOOD SCREWS OR TO METAL STUDS USING #10 SCREWS.
22. ELECTRICAL CONDUIT SHALL NOT BE PLACED IN CELLS THAT CONTAIN REBAR. CONDUIT IS ALLOWED TO PASS THROUGH REINFORCED CELLS WHEN IT OCCURS PERPENDICULAR TO THE REBAR. CONDUIT SHALL NOT CONTACT REBAR AS IT PASSES. THERE SHALL BE 1" CLEAR BETWEEN CONDUIT AND REBAR.

N. HELICAL PIER FOUNDATIONS

1. HELICAL PIER FOUNDATIONS AND THEIR COMPONENTS SHALL BE CONSIDERED A "PILE FOUNDATION" AND SHALL BE SUBJECT TO CONTINUOUS SPECIAL INSPECTION AS REQUIRED BY THE SPECIAL INSPECTION SCHEDULE FOR PILE FOUNDATIONS AND PER IBC CHAPTER 17.
2. HELICAL PIER FOUNDATION SYSTEMS SHALL BE DESIGNED BY A LICENSED ENGINEER TO RESIST THE REQUIRED LOADS AS INDICATED ON THE PLANS AND SCHEDULES. SEE SPECIFICATIONS FOR ADDITIONAL INFORMATION CONCERNING REQUIREMENTS FOR DESIGN, TESTING, AND INSTALLATION OF HELICAL PIER FOUNDATIONS.
3. SHOP DRAWINGS AND CALCULATIONS PREPARED AND STAMPED BY A LICENSED ENGINEER SHALL BE SUBMITTED TO THE ARCHITECT AND ENGINEER FOR APPROVAL PRIOR TO FABRICATION AND INSTALLATION. AT A MINIMUM, SHOP DRAWINGS AND CALCULATIONS SHALL INCLUDE, BUT NOT BE LIMITED TO, PIER LAY-OUT, QUANTITIES, SHAFT AND HELIX SIZES, FOUNDATION CONNECTION REQUIREMENTS, TEST PIER REQUIREMENTS, APPLIED SAFETY FACTORS, ETC.
4. HELICAL PIER FOUNDATION SYSTEMS SHALL BE INSTALLED IN ACCORDANCE WITH AN ICC EVALUATION SERVICES INC. RESEARCH REPORT BY CERTIFIED HELICAL PIER INSTALLERS.
5. ALL STEEL COMPONENTS OF HELICAL PIER FOUNDATION SYSTEMS SHALL BE HOT-DIPPED GALVANIZED PER ASTM A153.
6. ALL HELICAL PIERS SHALL BE PLACED IN UNDISTURBED SOIL TO A MINIMUM DEPTH AS REQUIRED TO REACH THE SPECIFIED LOAD REQUIREMENTS NOTED ON THE PLANS, BUT NO LESS THAN 5 TIMES THE DIAMETER OF THE LARGEST HELIX BELOW THE UNDISTURBED SURFACE.
7. HELICAL PIER FOUNDATION SHALL BE DRIVEN INTO SOIL UNTIL THE REQUIRED TORQUE OR ULTIMATE LOAD RATING IS REACHED. TORQUE RESULTS AND HELICAL PIER DEPTHS SHALL BE RECORDED FOR EACH PIER AND SUBMITTED TO THE ENGINEER FOR REVIEW.
8. ALL PIERS SHALL BE PLACED SUCH THAT THE HELICES OF ADJACENT PIERS ARE NO CLOSER THAN 3 HELICE DIAMETERS APART (BASED ON THE LARGEST HELICE USED TO ATTAIN THE REQUIRED LOAD RATING) WHEN THE PIER HAS REACHED ITS FINAL DEPTH.
9. HELICAL PIER FOUNDATIONS USED TO RESIST CYCLICAL LOADING SHALL HAVE STEEL SHIMS INSTALLED IN THE COUPLING BOXES TO REMOVE SLACK AT COUPLERS.
10. THE NUMBER AND LOCATION OF HELICAL PIERS IS SHOWN SCHEMATICALLY ON THE PLANS. HELICAL PIER SUPPLIER IS RESPONSIBLE FOR DETERMINING THE ACTUAL NUMBER AND DEPTH OF PIERS REQUIRED TO RESIST THE LOADS SHOWN ON THE PLANS. LOADS SHOWN ARE BASED ON ALLOWABLE/DESIGN LEVEL FORCES.

O. DEFERRED SUBMITTALS

1. DEFERRED SUBMITTALS ARE COMPLETE PACKAGES TO BE SUBMITTED FOR REVIEW THAT INCLUDE DRAWINGS AND CALCULATIONS FOR ALL ELEMENTS AND CONNECTIONS OF ITEMS LISTED BELOW. DEFERRED SUBMITTALS SHALL BEAR THE STAMP AND SIGNATURE OF THE DESIGN PROFESSIONAL RESPONSIBLE FOR THE DESIGN.
2. DEFERRED SUBMITTAL COMPONENTS SHALL NOT BE INSTALLED UNTIL APPROVED BY THE BUILDING OFFICIAL.
3. DEFERRED SUBMITTALS SHALL INCLUDE, BUT ARE NOT LIMITED TO:
   a. OPEN WEB JOISTS & GIRDERS.
   b. HELICAL PIERS / MICRO PILES (TO INCLUDE DETAILS SHOWING ATTACHMENT OF PIER/PILES TO EXISTING FOUNDATIONS, NEW GRADE BEAMS, ETC.).
   c. BRB BRACES, GUSSET PLATES, AND CONNECTIONS. THESE DESIGNS SHALL BE BASED UPON QUALIFIED CYCLIC TESTS IN ACCORDANCE WITH SECTION 16.2(C) OF AISC 341-05.
   d. SEISMIC BRACING OF ALL ARCHITECTURAL, MECHANICAL, PLUMBING, AND ELECTRICAL ITEMS WHERE REQUIRED BY ASCE 7-05 AND THE PROJECT CONTRACT DOCUMENTS.
   e. STRUCTURAL STEEL STAIRS AND HANDRAILS.
   f. DISPLACEMENT RAMMED AGGREGATE PIERS.

CONCRETE WALL SCHEDULE (L)

MARK	THICK.	VERT. REINF. SIZE	VERT. REINF. SPACING	HORIZ. REINF. SIZE	HORIZ. REINF. SPACING	COMMENTS
CW-1	10"	#4 EA. FACE	10"	#4 EA. FACE	18"	
CW-1A	10"	#4 EA. FACE	10"	#4 EA. FACE	12"	
CW-2	10"	#4 EA. FACE	10"	#4 EA. FACE	16"	

NOTES:
1. CONCRETE WALL CALLOUTS ON PLAN ARE NOTED FOR LEVEL ABOVE CALLOUT.
2. SEE STRUCTURAL NOTES FOR ADDITIONAL INFORMATION.
3. PLACE (2) #5 ON ALL SIDES OF OPENINGS. EXTEND AT LEAST 24" BEYOND EDGE OF OPENING.
4. PLACE (2) #4 x 48" 45 DEGREE DIAGONAL BARS AT THE CORNERS OF ALL WALL OPENINGS.

ROOF DECK SCHEDULE (L)

AREA	DECK DEPTH	DECK TYPE	DECK GA.	ATTACHMENT SUPPORTS DIA. WELD	ATTACHMENT SUPPORTS PATTERN	ATTACHMENT SIDE SEAMS #12 TEK SCREWS	ATTACHMENT SIDE SEAMS TOP SEAM WELD	ATTACHMENT SIDE SEAMS PUNCH LOCK	ATTACHMENT SUPPORTS PARALLEL TO FLUTES DIA. WELD	ATTACHMENT SUPPORTS PARALLEL TO FLUTES SPA.	MIN. SHEAR CAPACITY	COMMENTS
A	1 1/2	B	20	3/4	36/7	---	---	24"	3/4"	24"	750 PLF	---
B	1 1/2	B	20	3/4	36/7	---	---	8"	3/4"	4"	1093 PLF	---
C	1 1/2	B	16	3/4	36/7	---	---	12"	3/4"	12"	1760 PLF	ACOUSTICAL DECK
D	1 1/2	B	18	3/4	36/7	---	---	24"	3/4"	12"	1373 PLF	
E	1 1/2	B	20	3/4	36/7	---	---	18"	3/4"	16"	940 PLF	

FASTENING PATTERNS

WELD PATTERN : 36/7

NOTES :
1. TOP SEAM WELDS SHALL BE 1-1/2" LONG AND SHALL BE ACCORDING TO SDI STANDARDS.
2. MIN. SHEAR CAPACITY IS THE CAPACITY REQUIRED FOR ALTERNATE SYSTEMS.
3. USE NESTABLE (OVERLAPPING) SIDE SEAMS AT SCREW ATTACHMENTS AND INTERLOCKING SIDE SEAMS AT WELDS.
4. N DECK END BUTT JOINTS OVER STEEL JOISTS SHALL USE 16 GA. x 6" CONTINUOUS SHEET BETWEEN DECK AND JOIST TOP CHORD ANGLES. DECK WELDS TO PENETRATE SHEET AND ENGAGE JOIST CHORD.
5. ALL DECK WITH A PROFILE DEPTH OF 2" OR LESS SHALL HAVE NESTED OR TELESCOPED END LAPS.
6. SUBMIT CURRENT ICC APPROVAL FOR ALL DECKS.
7. OTHER PNEUMATIC FASTENING SYSTEMS MUST MEET MIN. SHEAR CAPACITY SHOWN IN SCHEDULE. ALL ALTERNATE SYSTEMS SHALL BE SUBMITTED TO ENGINEER FOR REVIEW & APPROVAL.

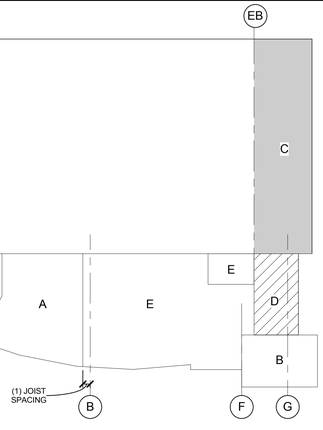

KEY PLAN

2009 IBC REBAR LAP SPLICE SCHEDULE

FOR MASONRY APPLICATIONS (ACI 530 - 08) (USING f'm = 1500 PSI)

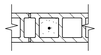

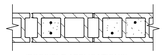

(POSSIBLE APPLICATIONS)

(1) BAR AT CL. OF WALL (VERTICAL OR HORIZONTAL) BAR SIZE NO.	DIA.	8" WALL	10" & 12" WALLS	BARS AT EACH FACE OF WALL (VERTICAL OR HORIZONTAL) BAR SIZE NO.	DIA.	8", 10" & 12" WALLS
2	0.250	12"	12"	2	0.250	12"
3	0.375	15"	15"	3	0.375	16"
4	0.500	20"	20"	4	0.500	29"
5	0.625	25"	25"	5	0.625	45"
6	0.750	43"	40"	6	0.750	54"
7	0.875	59"	46"	7	0.875	63"
8	1.000	MECH. COUPLER	MECH. COUPLER	8	1.000	MECH. COUPLER
9	1.128	MECH. COUPLER	MECH. COUPLER	9	1.128	MECH. COUPLER

NOTES:
1. MECHANICAL COUPLERS ARE REQUIRED FOR BARS IN MASONRY AS NOTED IN THE SCHEDULE.
2. MECHANICAL COUPLERS MAY BE USED IN LIEU OF LAP SPLICES SHOWN IN SCHEDULE.
3. SEE STRUCTURAL NOTES FOR MINIMUM COUPLER CAPACITIES.
4. EPOXY-COATED REBAR LAP SPLICES SHALL BE TAKEN AS 150% OF THE LENGTHS PROVIDED IN THIS SCHEDULE.

CONCRETE JAMB SCHEDULE (L)

MARK	VERTICAL REINF.	TIES	CONFIG.	COMMENTS
CJ-1	(4) #5	#3 TIES @ 8"o.c.	A	
CJ-2	(6) #6	#3 TIES @ 8"o.c.	B	
CJ-3	(12) #6	#3 TIES @ 8"o.c.	C	
CJ-4	(6) #4	#3 TIES @ 8"o.c.	D	

NOTES:
1. ALL VERTICAL REINFORCEMENT IS CONTINUOUS UP FULL HEIGHT OF WALL.
2. ALL VERTICAL REINFORCEMENT SHALL HAVE DOWELS CAST INTO FOOTING BELOW.
3. CONCRETE JAMB VERTICAL BARS SHALL HAVE SPLICE LENGTH PER 'BEAM TOP BARS' ACCORDING TO REBAR LAP SCHEDULE.

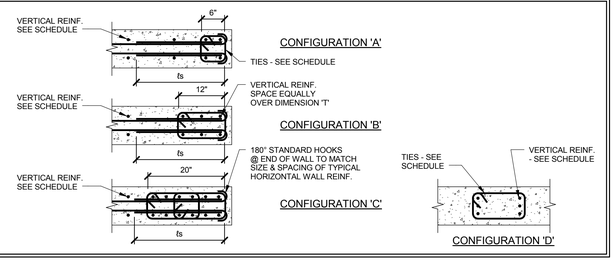

2009 IBC REBAR LAP SPLICE SCHEDULE (L)

FOR CONCRETE APPLICATIONS (ACI 318 - 08)

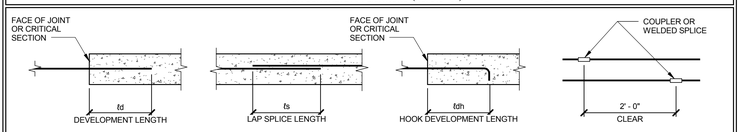

BAR LOCATION	CONCRETE TYPE	CONCRETE STRENGTH	#3 td	#3 ts	#3 tdh	#4 td	#4 ts	#4 tdh	#5 td	#5 ts	#5 tdh	#6 td	#6 ts	#6 tdh	#7 td	#7 ts	#7 tdh	#8 td	#8 ts	#8 tdh	#9 td	#9 tdh	#10 td	#10 tdh	#11 td	#11 tdh	#14 td	#14 tdh	#18 td	#18 tdh
			CONCRETE REINFORCING & SPLICE LENGTHS (IN) BAR SIZE																											
VERT. WALL BARS, FILL ON METAL DECK	NWC	3000 PSI	17	22	8	22	29	8	28	36	10	33	43	12	48	62	13	55	72	15	62	17	69	19	76	30	96	38	124	49
HORIZ. WALL BARS, FOOTING TOP BARS	NWC	3000 PSI	17	22	8	22	29	8	28	36	10	33	43	12	48	62	13	55	72	15	62	17	69	19	76	30	96	38	124	49
BEAM BOTTOM BARS, COLUMN BARS	NWC	3000 PSI	17	22	8	22	29	11	28	36	14	33	43	16	48	62	19	55	72	22	62	25	69	27	76	30	96	38	124	49
FOOTING BOTTOM BARS	NWC	3000 PSI	12	16	8	14	18	8	17	22	10	20	26	12	29	38	13	33	43	15	37	17	42	19	46	30				
BEAM TOP BARS	NWC	3000 PSI	22	29	8	29	38	11	36	47	14	43	56	16	63	82	19	72	94	22	81	25	90	27	98	30	125	38	161	49
SLAB ON GRADE	NWC	3000 PSI	12	16	8	14	18	8	17	22	10	20	26	12	32	42	13	42	55	15	53	17	69	19	76	30				

BAR LOCATION	CONCRETE TYPE	CONCRETE STRENGTH	#3 td	#3 ts	#3 tdh	#4 td	#4 ts	#4 tdh	#5 td	#5 ts	#5 tdh	#6 td	#6 ts	#6 tdh	#7 td	#7 ts	#7 tdh	#8 td	#8 ts	#8 tdh	#9 td	#9 tdh	#10 td	#10 tdh	#11 td	#11 tdh	#14 td	#14 tdh	#18 td	#18 tdh
			CONCRETE REINFORCING & SPLICE LENGTHS (IN) BAR SIZE																											
VERT. WALL BARS, FILL ON METAL DECK	NWC	4500 PSI	14	18	7	18	23	6	23	30	8	27	35	9	40	52	11	45	59	13	51	14	56	16	62	25	79	31	101	40
HORIZ. WALL BARS, FOOTING TOP BARS	NWC	4500 PSI	14	18	7	18	23	6	23	30	8	27	35	9	40	52	11	45	59	13	51	14	56	16	62	25	79	31	101	40
BEAM BOTTOM BARS, COLUMN BARS	NWC	4500 PSI	14	18	7	18	23	9	23	30	11	27	35	13	40	52	16	45	59	18	51	20	56	22	62	25	79	31	101	40
FOOTING BOTTOM BARS	NWC	4500 PSI	12	16	7	12	16	6	14	18	8	17	22	9	24	31	11	27	35	13	31	14	34	16	37	25				
BEAM TOP BARS	NWC	4500 PSI	18	23	7	24	31	9	30	39	11	35	46	13	51	66	16	59	77	18	66	20	73	22	80	25	102	31	131	40
SLAB ON GRADE	NWC	4500 PSI	12	16	7	12	16	6	14	18	8	17	22	9	27	35	11	34	44	13	44	14	56	16	62	25				

NOTES :
1. MECHANICAL COUPLERS MAY BE USED IN LIEU OF LAP SPLICES SHOWN. SEE STRUCTURAL NOTES FOR MINIMUM COUPLER CAPACITY. WHERE MECHANICAL COUPLERS ARE USED, STAGGER ADJACENT SPLICES A MINIMUM OF 24" AND ADJUSTED AB

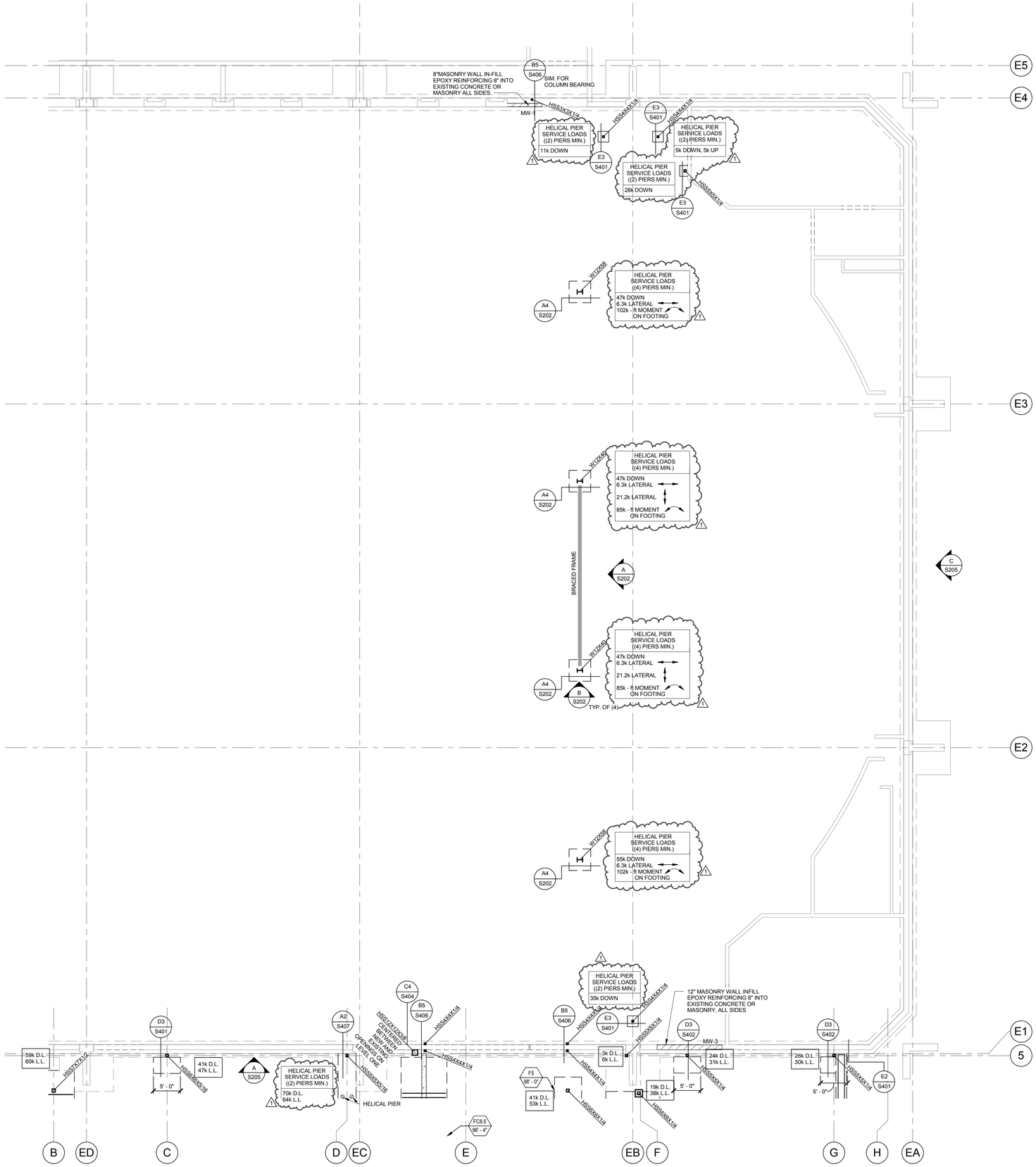

FOOTING AND FOUNDATION PLAN - AREA B

SCALE : 1/8" = 1'-0"

A S112

NORTH

NOTE:
SEE SHEET S113 FOR FOOTING AND FOUNDATION NOTES.

KEY PLAN

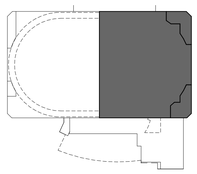

VCBO

ARCHITECTURE
VALENTINER
CRANE
BRUNJES
ONYON

PROFESSIONAL STRUCTURAL ENGINEER
Jeremy L. Achter
No. 353467
10.2.12
STATE OF UTAH

VCBO ARCHITECTURE
524 SOUTH 600 EAST
SALT LAKE CITY, UT 84102
Phone: (801) 575-8800
Fax: (801) 531-9850
WWW: www.vcbo.com

DFCM CODE COMPLIANCE STAMP

ARW ENGINEERS
structural consultants
1594 W. Pierr Dr. Ogden, Utah 84404
ph: 801.782.8008 fl. 801-782-4656

Student Activity Center
Stromberg Addition - BID SET
Weber State University
3750 Harrison Blvd. Ogden, UT 84408

Rev #	Date	Description
1	10/12/2012	ADD #2

Job # 12475
CAD File
Drawn BLP Checked JLA
Date 10.03.2012
Owner # DFCM #12031810

AREA B FOOTING AND FOUNDATION PLAN

S112

10/12/2012 2:49:43 PM

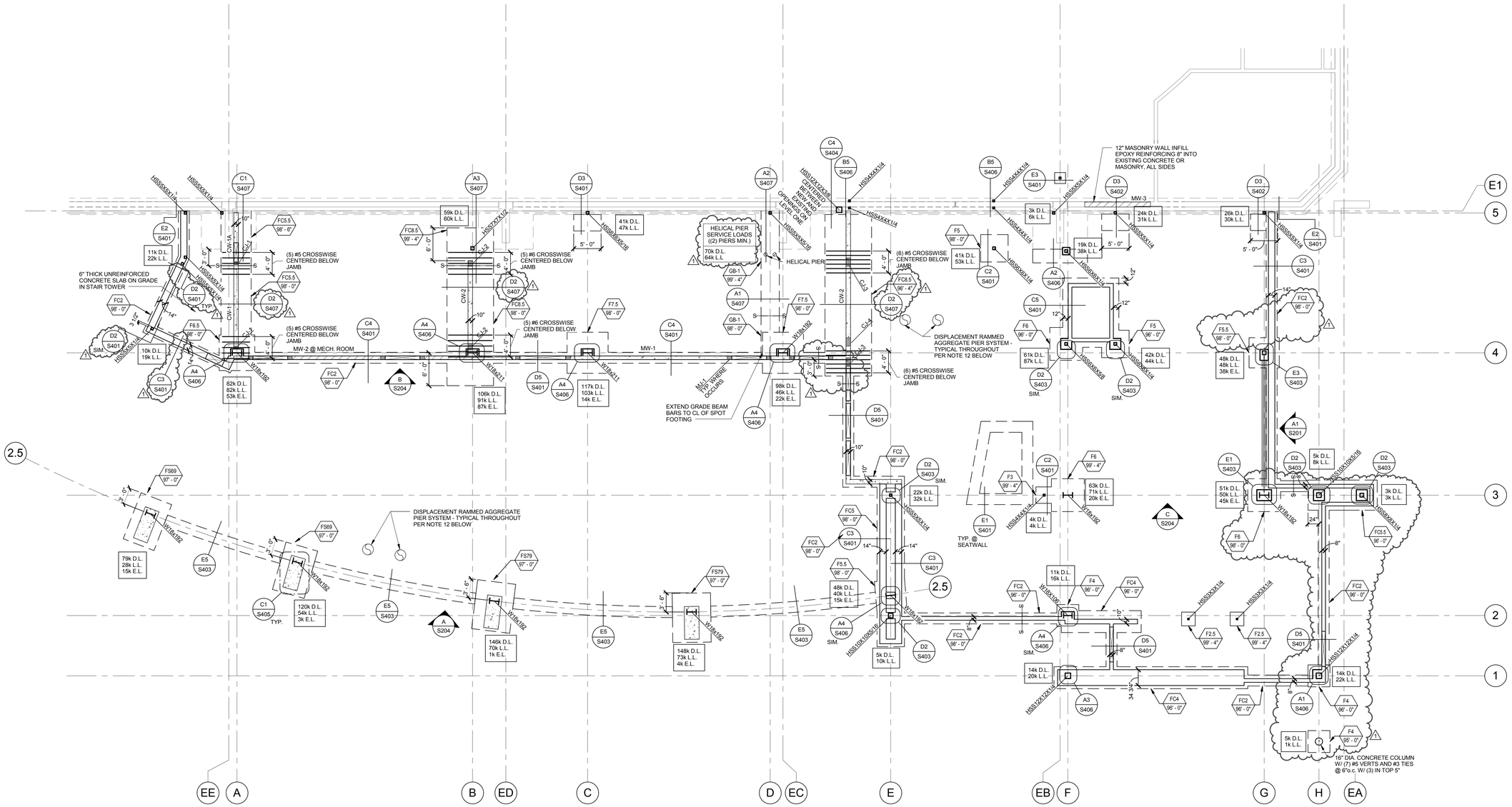

FOOTING AND FOUNDATION PLAN - AREA C

SCALE : 1/8" = 1'-0"

A S113

NORTH

FOOTING & FOUNDATION NOTES

1. SEE SHEET S001 FOR GENERAL STRUCTURAL NOTES.
2. ALL FOOTINGS SHALL BE PLACED ON SOIL WHICH HAS BEEN PREPARED PER THE SOILS REPORT FOR THE BEARING PRESSURE SHOWN IN THE STRUCTURAL NOTES.
3. ALL COLUMN FOOTINGS SHALL BE CENTERED BELOW COLUMNS U.N.O.
4. VERIFY ALL DIMENSIONS WITH DRAWINGS AND NOTIFY ENGINEER OF ANY DISCREPANCIES FOUND.
5. SEE SHEET S002 FOR FOOTING SCHEDULE.
6. PROVIDE DOWELS IN FOOTINGS / FOUNDATIONS TO MATCH VERTICAL WALL REINFORCING U.N.O.
7. SEE SHEET S401 FOR TYPICAL FOOTING AND FOUNDATION DETAILS.
8. ALL EXTERIOR WALL FOOTINGS TO BEAR A MINIMUM DIMENSION BELOW EXTERIOR GRADE AS NOTED IN GENERAL STRUCTURAL NOTES.
9. FOUNDATION WALLS ARE DESIGNED AND DETAILED FOR THE COMPLETED CONDITION. CONTRACTOR IS RESPONSIBLE FOR MEANS AND METHODS OF CONSTRUCTION. BACKFILLED WALLS SHALL BE ADEQUATELY BRACED DURING CONSTRUCTION AND BACKFILLING TO PRODUCE PLUMB AND TRUE FINISHED WALLS.
10. ALL ANCHORS, HOLD-DOWNS, ANCHOR BOLTS, DOWELS, EMBEDDED ITEMS, ETC. SHALL BE HELD IN PLACE PRIOR TO AND DURING CONCRETE AND/OR GROUT PLACEMENT.
11. COORDINATE ALL FOOTING DEPTHS (INTERIOR AND EXTERIOR) WITH DRAINS, CONDUITS, ETC. THAT MAY INTERFERE WITH FOORINGS.
12. DISPLACEMENT RAMMED AGGREGATE PIERS® ARE REQUIRED AT A UNIFORM AND CONSISTENT SPACING AND DEPTH WITHIN THE FOOTPRINT OF THE BUILDING ADDITION AND FOR 5'-10' OUTSIDE THE FOOTPRINT AND BELOW THE FRAMELINE ALONG GRID 2.5 AND 5'-10' ON EITHER SIDE. PIERS, PIER LAYOUT, PIER SPACING AND DEPTH SHALL BE DESIGNED AND CONSTRUCTED BY A LICENSED INSTALLER PER THE SOILS REPORT. MAXIMUM COLUMN SERVICE LOADS HAVE BEEN PROVIDED ON THIS SHEET FOR USE IN DESIGNING THE DISPLACEMENT RAMMED AGGREGATE PIER SYSTEM.

CONCRETE SLAB NOTES

1. SLAB ON GRADE SHALL BE 4" THICK CONCRETE U.N.O. SLAB SHALL BE UNDERLAIN BY FREE DRAINING MATERIAL AS PRESCRIBED IN THE SOILS REPORT.
2. SEE SHEET S401 FOR CONTROL AND CONSTRUCTION JOINT INFORMATION.

KEY PLAN

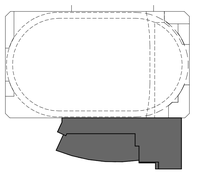

VCBO
ARCHITECTURE
VALENTINER
CRANE
BRUNJES
ONYON

PROFESSIONAL STRUCTURAL ENGINEER
Jeremy A. Achter
No. 353467
10.2.12
STATE OF UTAH

VCBO ARCHITECTURE
524 SOUTH 600 EAST
SALT LAKE CITY, UT 84102
Phone: (801) 575-8800
Fax: (801) 531-9850
WWW: www.vcbo.com

DFCM CODE COMPLIANCE STAMP

ARW ENGINEERS
structural consultants
1556 W. Park Dr. Ogden, Utah 84404
ph: 801.782.6008 fl. 801-782-6056

Student Activity Center

Stromberg Addition - BID SET

Weber State University
3750 Harrison Blvd. Ogden, UT 84408

Rev #	Date	Description
1	10/12/2012	ADD #2

Job # 12475
CAD File
Drawn BLP Checked JLA
Date 10.03.2012
Owner # DFCM #12031810

AREA C FOOTING AND FOUNDATION PLAN

S113

10/12/2012 2:49:44 PM

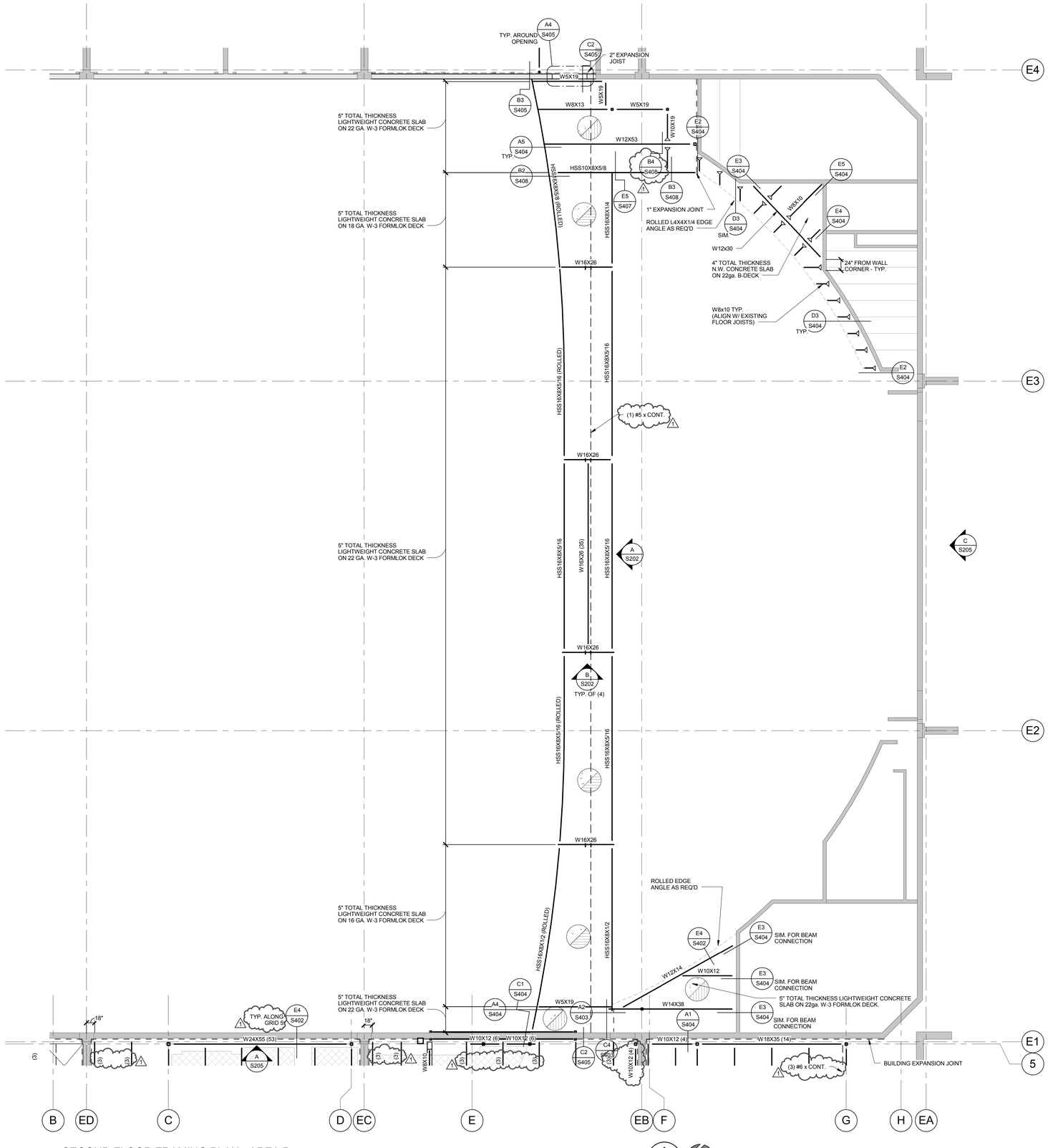

SECOND FLOOR FRAMING PLAN - AREA B

SCALE : 1/8" = 1'-0"

A S122

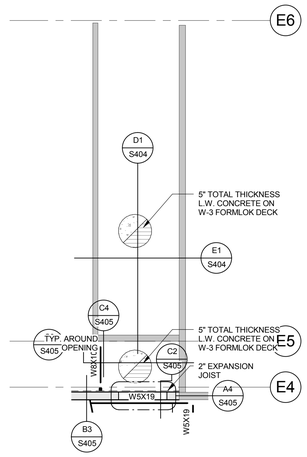

SECOND FLOOR FRAMING PLAN

SCALE : 1/8" = 1'-0"

B S122

NOTE:
SEE SHEET S123 FOR FLOOR FRAMING NOTES.

KEY PLAN

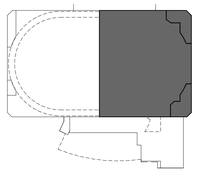

VCBO

ARCHITECTURE
VALENTINER
CRANE
BRUNJES
ONYON

PROFESSIONAL STRUCTURAL ENGINEER
Jeremy A. Achter
No. 353467
10.2.12
STATE OF UTAH

VCBO ARCHITECTURE
524 SOUTH 600 EAST
SALT LAKE CITY, UT 84102
Phone: (801) 575-8800
Fax: (801) 531-9850
WWW: www.vcbo.com

DFCM CODE COMPLIANCE STAMP

ARW ENGINEERS
structural consultants
1594 W. Pierr Dr. Ogden, Utah 84404
ph: 801.782.6008 fl. 801-782-6056

Student Activity Center
Stromberg Addition - BID SET
Weber State University
3750 Harrison Blvd. Ogden, UT 84408

Rev #	Date	Description
1	10/12/2012	ADD #2

Job # 12475
CAD File
Drawn BLP Checked JLA
Date 10.03.2012
Owner # DFCM #12031810

AREA B SECOND FLOOR FRAMING PLAN

S122

10/12/2012 2:49:48 PM

EXPANSION JOINT SIZE REQUIREMENTS		
LEVEL	CLEAR DIMENSION EAST - WEST	CLEAR DIMENSION NORTH - SOUTH
SECOND FLOOR	2"	2"
MEZZANINE	4 1/2"	3"
ROOF	7"	3"

NOTES:
1. TABULATED VALUES REPRESENT MINIMUM CLEAR DISTANCE BETWEEN NEW CONSTRUCTION AND EXISTING STRUCTURE.
2. COORDINATE ACTUAL DIMENSIONS WITH THE ARCHITECTURAL DRAWINGS.

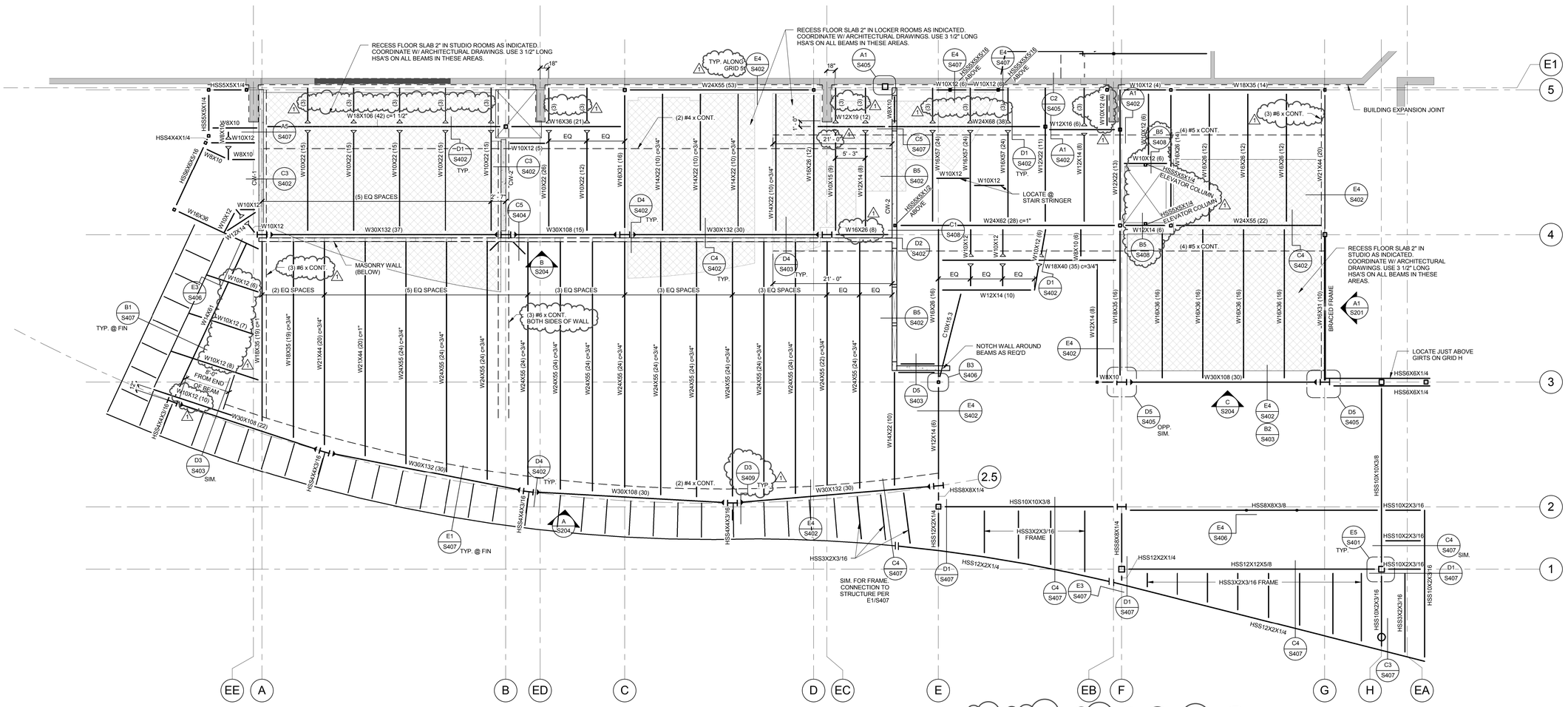

SECOND FLOOR FRAMING PLAN - AREA C

SCALE : 1/8" = 1'-0"

A S123

NORTH

FLOOR FRAMING NOTES:

1. SEE SHEET S001 FOR GENERAL STRUCTURAL NOTES.
2. ADDITION CONCRETE FLOOR SLABS TO BE 6-1/2" THICK ON 20 GAUGE "W2" FORMLOK UNVENTED DECK REINFORCED WITH FIBERMESH (U.N.O.). SLAB THICKNESS IS TOTAL FROM BOTTOM OF DECK TO TOP OF CONCRETE.
3. RUNNING TRACK SLAB TO BE 5" THICK LIGHT-WEIGHT CONCRETE ON 20 GA. "W3" FORMLOK VENTED DECK REINFORCED WITH FIBERMESH U.N.O.
4. BRIDGE SLAB TO BE 5" THICK LIGHT-WEIGHT CONCRETE ON 22 GA. "W3" FORMLOK VENTED DECK REINFORCED WITH FIBERMESH U.N.O.
5. ( ) DENOTES NUMBER OF 3/4" DIAMETER X 4-1/2" LONG HSA ALONG BEAM TOP FLANGE.
6. C=< > DENOTES AMOUNT OF CAMBER IN W BEAM AT MIDSPAN.
7. PROVIDE TYPICAL SLAB CLOSURE AT ALL OPENINGS AND SLAB EDGES AS PER DETAIL S402. TYPICAL UNLESS NOTED OTHERWISE.
8. SEE ARCHITECTURAL DRAWINGS FOR FINISHED FLOOR ELEVATIONS.
9. WHERE STEEL FLOOR DECK RUNS PERPENDICULAR TO BEAMS WITH HSA, HSA SHALL BE FIELD WELDED TO BEAMS THRU DECK MATERIAL.
10. WHERE STEEL FLOOR DECK RUNS PARALLEL TO BEAMS WITH HSA, A 2-1/2" X CONTINUOUS EXPOSED BEAM FLANGE SURFACE IS REQUIRED FOR CONCRETE COVER OF HSA.
11. DO NOT PROVIDE CONTROL JOINTS IN SUSPENDED CONCRETE SLABS EXCEPT WHERE SPECIFICALLY CALLED OUT.
12. CONSTRUCTION JOINTS IN SLABS ON DECK SHALL NOT BE CLOSER THAN 12" TO HSA.
13. AT NON-COMPOSITE BEAMS AND JOISTS AND WHERE HSA'S ARE SPACED AT MORE THAN 12" O.C., WELD DECK TO SUPPORT WITH 3/4" DIAMETER PUDDLE WELDS AT 12" O.C.
14. ALL MOMENT CONNECTED CANTILEVERS SHALL BE THE SAME SIZE AS THE BACK SPAN, U.N.O.

KEY PLAN

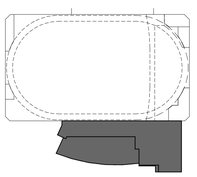

VCBO
ARCHITECTURE
VALENTINER
CRANE
BRUNJES
ONYON

PROFESSIONAL STRUCTURAL ENGINEER
Jeremy A. Achter
No. 353467
10.2.12
STATE OF UTAH

VCBO ARCHITECTURE
524 SOUTH 600 EAST
SALT LAKE CITY, UT 84102
Phone: (801) 575-8800
Fax: (801) 531-9850
www: www.vcbo.com

DFCM CODE COMPLIANCE STAMP

ARW ENGINEERS
structural consultants
1594 W. Pierr Dr. Ogden, Utah 84404
ph: 801.782.8008 fx: 801.782.4656

Student Activity Center
Stromberg Addition - BID SET
Weber State University
3750 Harrison Blvd. Ogden, UT 84408

Rev #	Date	Description
1	10/12/2012	ADD #2

Job # 12475
CAD File
Drawn BLP Checked JLA
Date 10.03.2012
Owner # DFCM #12031810

AREA C SECOND FLOOR FRAMING PLAN

S123

10/12/2012 2:49:51 PM

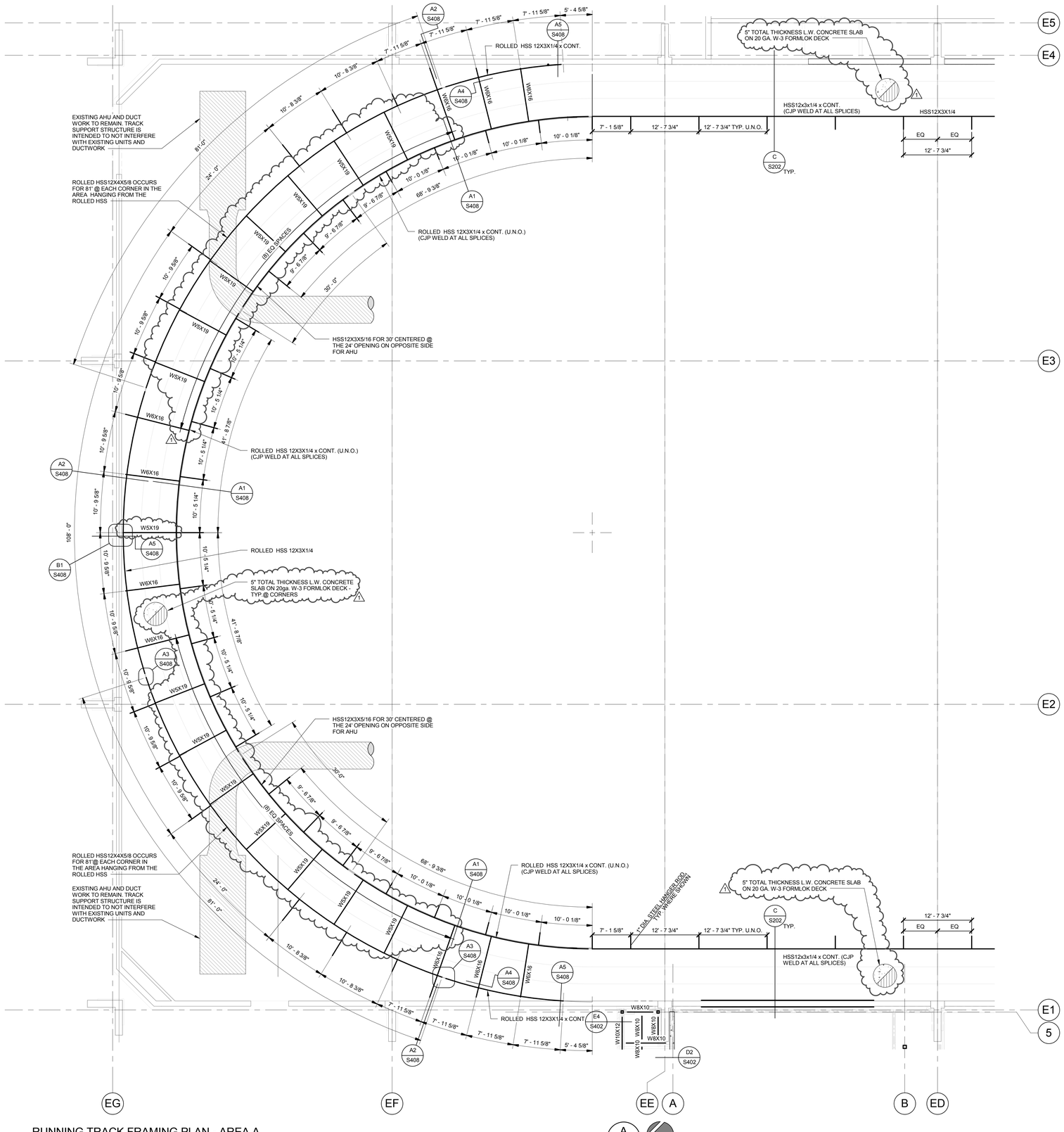

RUNNING TRACK FRAMING PLAN - AREA A

SCALE : 1/8" = 1'-0"

NOTE:
FLOOR FRAMING NOTES ON SHEET S123.

KEY PLAN

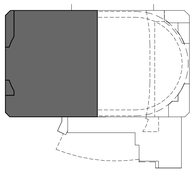

VCBO ARCHITECTURE
VALENTINER
CRANE
BRUNJES
ONYON

PROFESSIONAL STRUCTURAL ENGINEER
Jeremy A. Achter
No. 353467
10.2.12
STATE OF UTAH

VCBO ARCHITECTURE
524 SOUTH 600 EAST
SALT LAKE CITY, UT 84102
Phone: (801) 575-8800
Fax: (801) 531-9850
WWW: www.vcbo.com

DFCM CODE COMPLIANCE STAMP

ARW ENGINEERS
structural consultants
1594 W. Pierr Dr. Ogden, Utah 84404
ph: 801.782.8008 fl: 801-782-4656

Student Activity Center
Stromberg Addition - BID SET
Weber State University
3750 Harrison Blvd. Ogden, UT 84408

Rev #	Date	Description
1	10/12/2012	ADD #2

Job # 12475
CAD File
Drawn BLP Checked JLA
Date 10.03.2012
Owner # DFCM #12031810

AREA A RUNNING TRACK AND MEZZ. FRAMING PLAN

S131

10/12/2012 2:49:53 PM

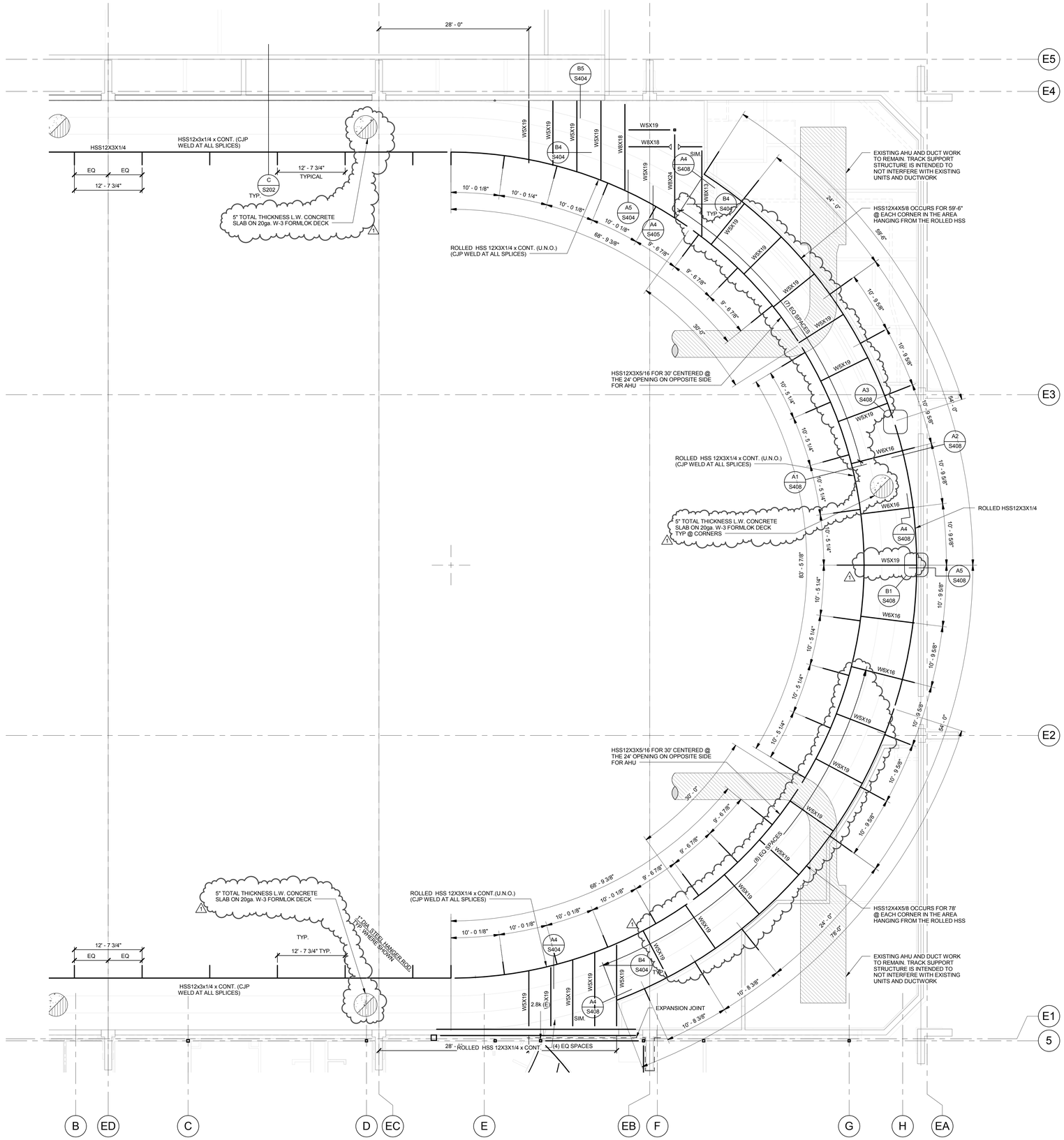

RUNNING TRACK FRAMING PLAN - AREA B

SCALE : 1/8" = 1'-0"

A S132

NORTH

NOTE:
FLOOR FRAMING NOTES ON SHEET S123.

KEY PLAN

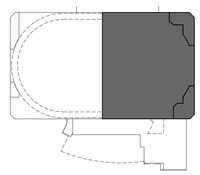

VCBO

ARCHITECTURE
VALENTINER
CRANE
BRUNJES
ONYON

PROFESSIONAL STRUCTURAL ENGINEER
Jeremy A. Achter
No. 353467
10.12.12
STATE OF UTAH

VCBO ARCHITECTURE
524 SOUTH 600 EAST
SALT LAKE CITY, UT 84102
Phone: (801) 575-8800
Fax: (801) 531-9850
WWW: www.vcbo.com

DFCM CODE COMPLIANCE STAMP

ARW ENGINEERS
structural consultants
1594 W. Pierr Dr. Ogden, Utah 84404
ph: 801.782.8008 fl: 801-782-4656

Student Activity Center
Stromberg Addition - BID SET
Weber State University
3750 Harrison Blvd. Ogden, UT 84408

Rev #	Date	Description
1	10/12/2012	ADD #2

Job # 12475
CAD File
Drawn BLP Checked JLA
Date 10.03.2012
Owner # DFCM #12031810

AREA B RUNNING TRACK AND MEZZ. FRAMING PLAN

S132

10/12/2012 2:49:55 PM

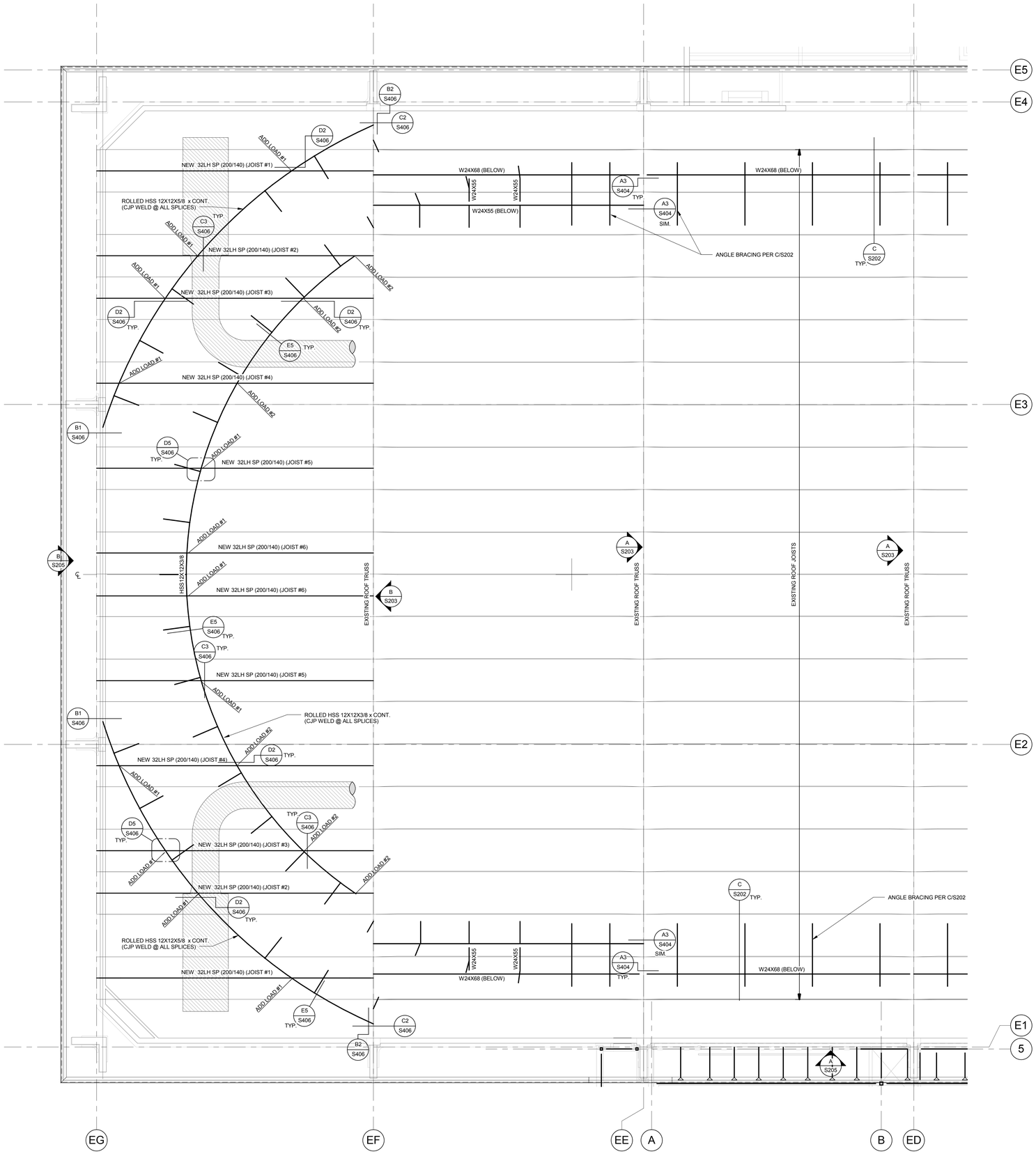

ROOF FRAMING PLAN - AREA A

SCALE : 1/8" = 1'-0"

A S141

NEW TRACK SUPPORT JOIST LOAD CHART

JOIST #	UNIFORM LOAD (TOTAL LOAD/SNOW LOAD)	ADD LOAD #1		ADD LOAD #2	
		D.L.	L.L.	D.L.	L.L.
1	200/140	9.2K	9.2K	N/A	N/A
2	200/140	4.0K	4.0K	4.75K	4.75K
3	200/140	7.0K	7.0K	7.0K	7.0K
4	200/140	3.5K	3.5K	6.0K	6.0K
5	200/140	7.5K	7.5K	N/A	N/A
6	200/140	4.6K	4.6K	N/A	N/A

NOTES:
1. COORDINATE LOCATION OF ADD LOADS #1 AND #2 WITH CONTRACTOR BASED ON ACTUAL FIELD CONDITIONS.
2. COORDINATE JOIST CAMBERS WITH EXISTING JOIST CAMBERS TO PROVIDE COMMON DECK BEARING ELEVATION.
3. REMOVE AND REPLACE EXISTING BRIDGING AND ADD NEW BRIDGING AS REQ'D FOR NEW JOISTS. BRIDGING DESIGN TO BE PROVIDED BY JOIST DESIGNER.
4. EXISTING ROOF DECK BETWEEN GRIDS EA AND EB AND BETWEEN EF AND EG SHALL BE REMOVED TO FACILITATE JOIST INSTALLATION.
5. NEW ROOF DECK SHALL BE PLACED BETWEEN GRIDS EA AND EB AND BETWEEN EF AND EG PER THE ROOF DECK SCHEDULE ON SHEET S002.
6. ALL EXISTING ROOF DECK BETWEEN GRIDS EB AND EF SHALL REMAIN IN-PLACE AND UNALTERED.

SEE SHEET S141.1 FOR ROOF UPGRADE REQUIREMENTS

KEY PLAN

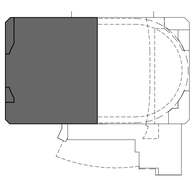

VCBO
ARCHITECTURE
VALENTINER
CRANE
BRUNJES
ONYON

PROFESSIONAL STRUCTURAL ENGINEER
Jeremy A. Achter
No. 353467
10.2.12
STATE OF UTAH

VCBO ARCHITECTURE
524 SOUTH 600 EAST
SALT LAKE CITY, UT 84102
Phone: (801) 575-8800
Fax: (801) 531-9850
WWW: www.vcbo.com

DFCM CODE COMPLIANCE STAMP

ARW ENGINEERS
structural consultants
1594 W. Pierr Dr. Ogden, Utah 84404
ph: 801.782.6008 fl: 801-782-6056

Student Activity Center
Stromberg Addition - BID SET
Weber State University
3750 Harrison Blvd. Ogden, UT 84408

Rev #	Date	Description

Job # 12475
CAD File
Drawn BLP Checked JLA
Date 10.03.2012
Owner # DFCM #12031810

AREA A EXISTING ROOF TRACK SUPPORT PLAN

S141

10/12/2012 2:49:55 PM

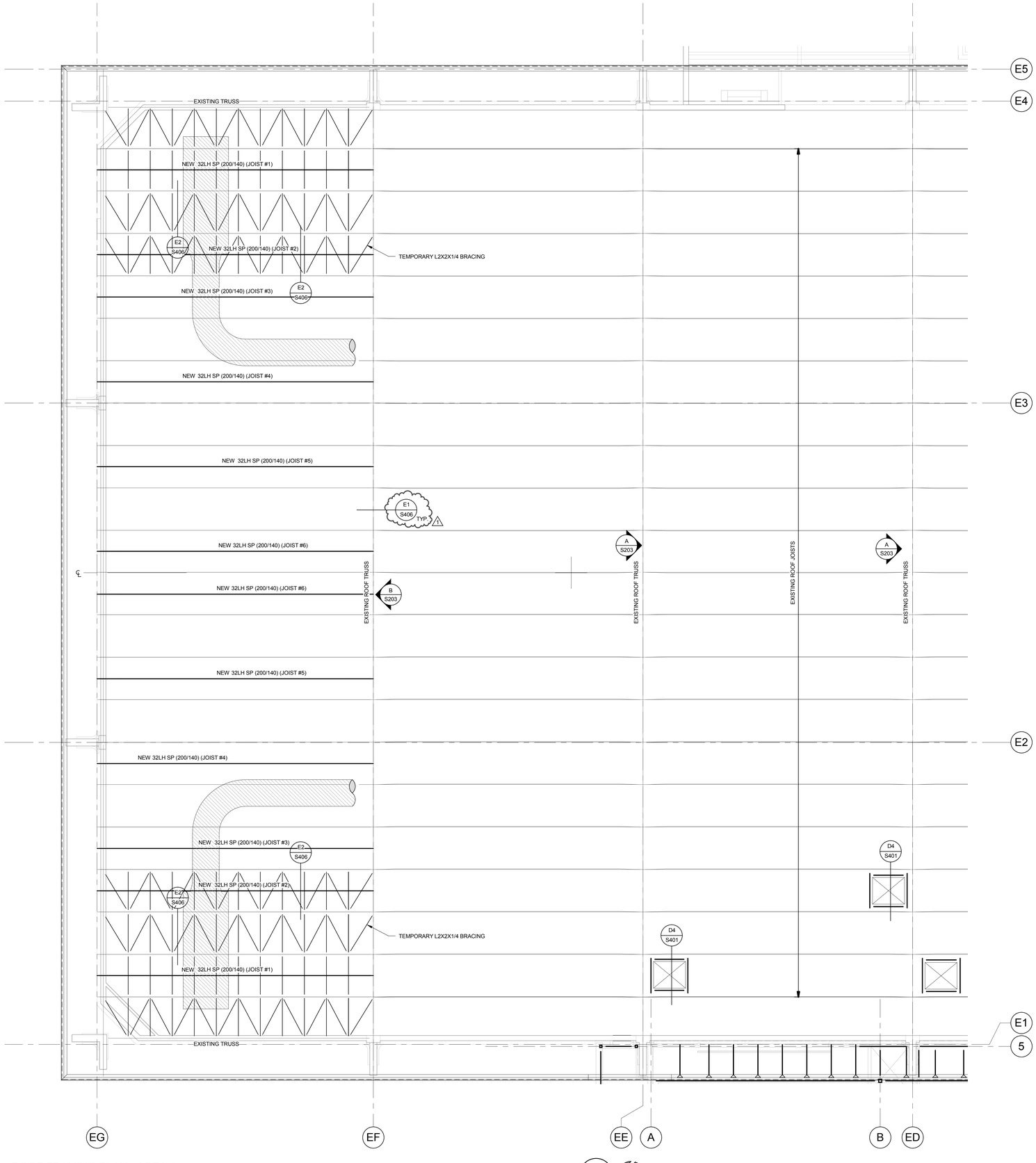

ROOF FRAMING PLAN - AREA A

SCALE : 1/8" = 1'-0"

A
S141.1

NORTH

ROOF UPGRADE CONSTRUCTION AND SEQUENCING NOTES:

1. PRIOR TO BEGINNING ANY STRUCTURAL DEMOLITION ON THE EXISTING ARENA ROOF THE CONTRACTOR SHALL SCHEDULE AND HOST (ON SITE) A PRE-CONSTRUCTION/PRE-DESIGN MEETING TO DISCUSS THE INTENT OF THIS SHEET AND THE CONTRACTORS PROPOSED SCHEDULE AND SEQUENCING.
2. TEMPORARY BRACING SHOWN ON THIS PLAN IS SCHEMATIC. BRACING IS INTENDED TO OCCUR AT PANEL POINTS. FIELD VERIFICATION OF ACTUAL PANEL POINT LAYOUT IS REQUIRED PRIOR TO FABRICATION.
3. ALL TEMPORARY JOIST BRACING SHALL BE INSTALLED PRIOR TO REMOVAL OF ROOF DECK.
4. ALL ROOF DECK BETWEEN GRIDLINES EA AND EB AND BETWEEN EF AND EG SHALL BE REPLACED IN ITS ENTIRETY. HOWEVER, IT MAY BE REMOVED AND REPLACED IN SECTIONS AS REQUIRED FOR CONSTRUCTION SEQUENCING.
5. AT ALL TIMES DURING CONSTRUCTION, JOISTS THAT SUPPORT THE EXISTING AIR HANDLER UNITS SHALL BE BRACED AT THEIR TOP CHORDS TO AT LEAST 2 ADJACENT JOISTS WITH NEW OR EXISTING DECKING OR WITH BRACES AS SHOWN ON THIS SHEET.
6. ALL ROOF UPGRADES SHALL BE COMPLETE PRIOR TO ANY TRACK ATTACHMENT TO THE ROOF.
7. ALL EXISTING JOIST BRIDGING THAT IS REMOVED OR ALTERED DURING CONSTRUCTION SHALL BE REPAIRED OR REPLACED TO THE INTEGRITY OF THE SYSTEM PRIOR TO DAMAGE OR REMOVAL.

KEY PLAN

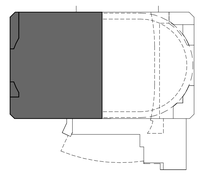

VCBO
ARCHITECTURE
VALENTINER
CRANE
BRUNJES
ONYON

PROFESSIONAL STRUCTURAL ENGINEER
Jeremy L. Achter
No. 353467
10-2-12
STATE OF UTAH

VCBO ARCHITECTURE
524 SOUTH 600 EAST
SALT LAKE CITY, UT 84102
Phone: (801) 575-8800
Fax: (801) 531-9850
WWW: www.vcbo.com

DFCM CODE COMPLIANCE STAMP

ARW ENGINEERS
structural consultants
1594 W. Pierpont Dr. Ogden, Utah 84404
ph: 801.782.8008 fx: 801-782-4656

Student Activity Center
Stromberg Addition - BID SET
Weber State University
3750 Harrison Blvd. Ogden, UT 84408

Rev #	Date	Description
1	10/12/2012	ADD #2

Job # 12475
CAD File
Drawn BLP Checked JLA
Date 10.03.2012
Owner # DFCM #12031810

AREA A EXISTING
ROOF UPGRADE PLAN

S141.1

10/12/2012 2:49:57 PM

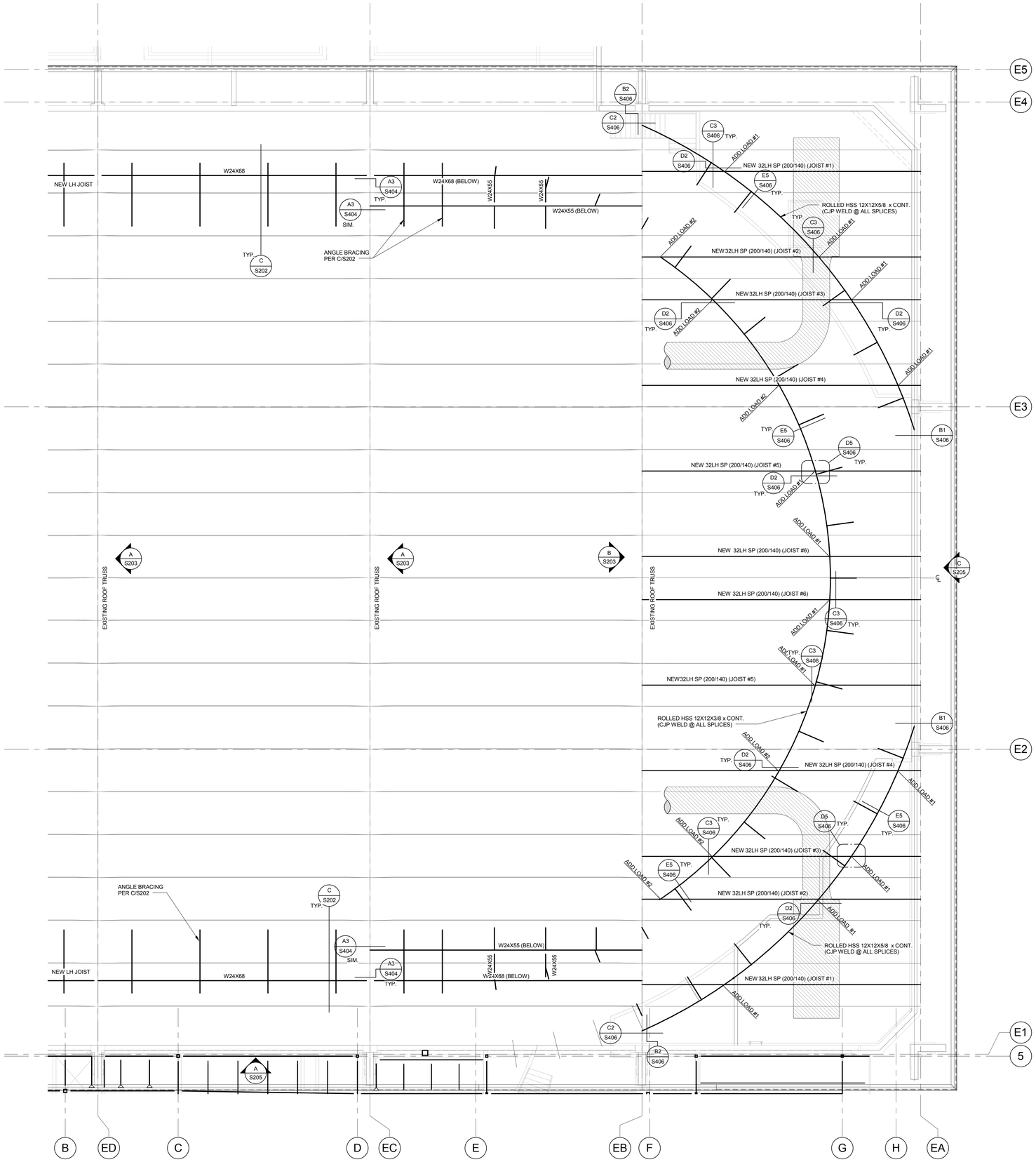

ROOF FRAMING PLAN - AREA B

SCALE : 1/8" = 1'-0"

A S142

NORTH

NEW TRACK SUPPORT JOIST LOAD CHART

JOIST #	UNIFORM LOAD (TOTAL LOAD/SNOW LOAD)	ADD LOAD #1		ADD LOAD #2	
		D.L.	L.L.	D.L.	L.L.
1	200/140	9.2K	9.2K	N/A	N/A
2	200/140	4.0K	4.0K	4.75K	4.75K
3	200/140	7.0K	7.0K	7.0K	7.0K
4	200/140	3.5K	3.5K	6.0K	6.0K
5	200/140	7.5K	7.5K	N/A	N/A
6	200/140	4.6K	4.6K	N/A	N/A

NOTES:

1. COORDINATE LOCATION OF ADD LOADS #1 AND #2 WITH CONTRACTOR BASED ON ACTUAL FIELD CONDITIONS.
2. COORDINATE JOIST CAMBERS WITH EXISTING JOIST CAMBERS TO PROVIDE COMMON DECK BEARING ELEVATION.
3. REMOVE AND REPLACE EXISTING BRIDGING AND ADD NEW BRIDGING AS REQ'D FOR NEW JOISTS. BRIDGING DESIGN TO BE PROVIDED BY JOIST DESIGNER.
4. EXISTING ROOF DECK BETWEEN GRIDS EA AND EB AND BETWEEN EF AND EG SHALL BE REMOVED TO FACILITATE JOIST INSTALLATION.
5. NEW ROOF DECK SHALL BE PLACED BETWEEN GRIDS EA AND EB AND BETWEEN EF AND EG PER THE ROOF DECK SCHEDULE ON SHEET S002.
6. ALL EXISTING ROOF DECK BETWEEN GRIDS EB AND EF SHALL REMAIN IN-PLACE AND UNALTERED.

SEE SHEET S142.1 FOR ROOF UPGRADE REQUIREMENTS

KEY PLAN

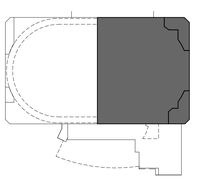

VCBO
ARCHITECTURE
VALENTINER
CRANE
BRUNJES
ONYON

PROFESSIONAL STRUCTURAL ENGINEER
Jeremy A. Achter
No. 353467
10.2.12
STATE OF UTAH

VCBO ARCHITECTURE
524 SOUTH 600 EAST
SALT LAKE CITY, UT 84102
Phone: (801) 575-8800
Fax: (801) 531-9850
WWW: www.vcbo.com

DFCM CODE COMPLIANCE STAMP

ARW ENGINEERS
structural consultants
1594 W. Pierr Dr. Ogden, Utah 84404
ph: 801.782.6008 fl. 801-782-6056

Student Activity Center

Stromberg Addition - BID SET

Weber State University
3750 Harrison Blvd. Ogden, UT 84408

Rev #	Date	Description

Job # 12475
CAD File
Drawn BLP Checked JLA
Date 10.03.2012
Owner # DFCM #12031810

AREA B EXISTING ROOF TRACK SUPPORT PLAN

S142

10/12/2012 2:49:57 PM

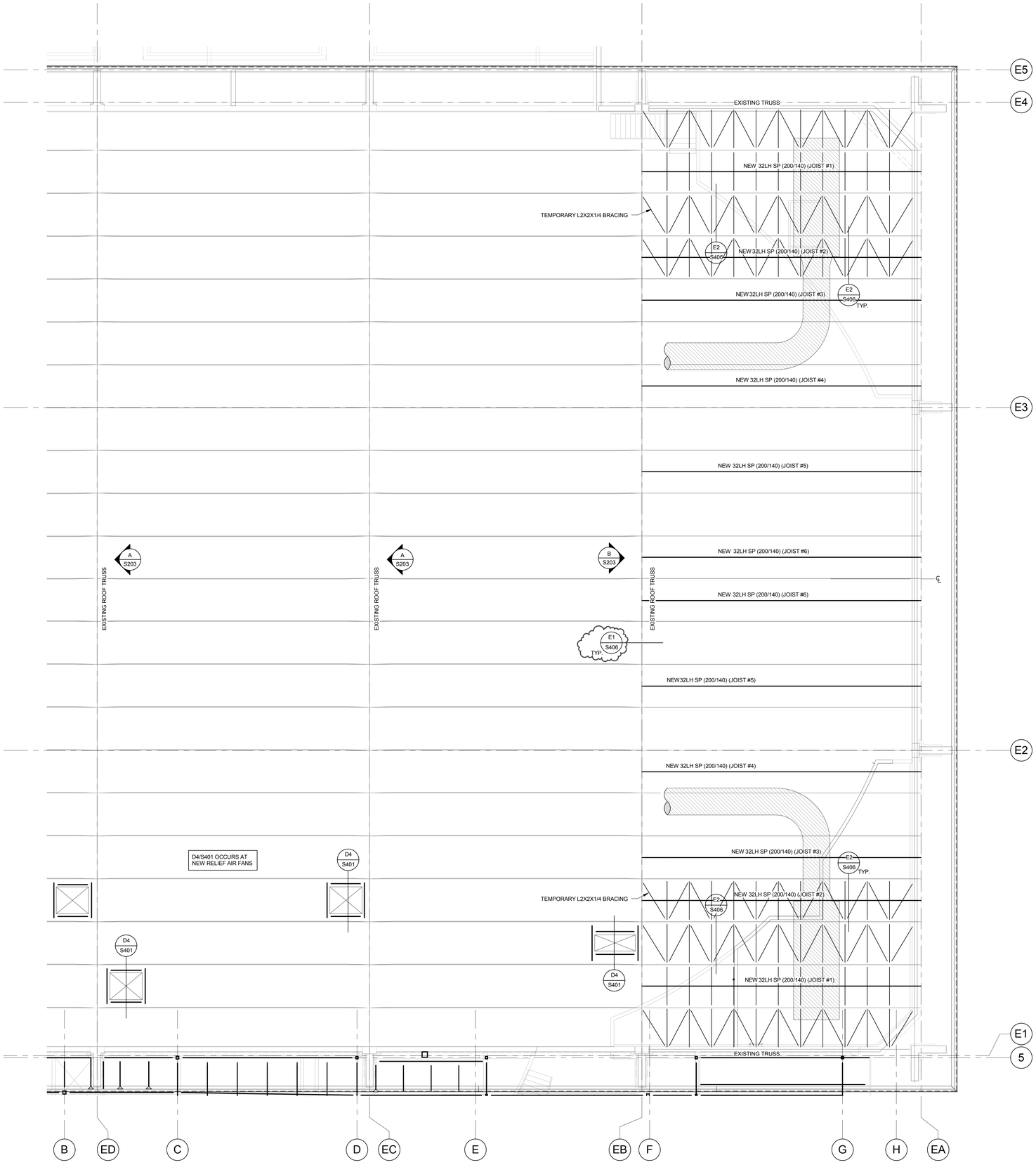

ROOF FRAMING PLAN - AREA B

SCALE : 1/8" = 1'-0"

A
S142.1

NORTH

ROOF UPGRADE CONSTRUCTION AND SEQUENCING NOTES:

1. PRIOR TO BEGINNING ANY STRUCTURAL DEMOLITION ON THE EXISTING ARENA ROOF THE CONTRACTOR SHALL SCHEDULE AND HOST (ON SITE) A PRE-CONSTRUCTION/PRE-DESIGN MEETING TO DISCUSS THE INTENT OF THIS SHEET AND THE CONTRACTORS PROPOSED SCHEDULE AND SEQUENCING.
2. TEMPORARY BRACING SHOWN ON THIS PLAN IS SCHEMATIC. BRACING IS INTENDED TO OCCUR AT PANEL POINTS. FIELD VERIFICATION OF ACTUAL PANEL POINT LAYOUT IS REQUIRED PRIOR TO FABRICATION.
3. ALL TEMPORARY JOIST BRACING SHALL BE INSTALLED PRIOR TO REMOVAL OF ROOF DECK.
4. ALL ROOF DECK BETWEEN GRIDLINES EA AND EB AND BETWEEN EF AND EG SHALL BE REPLACED IN ITS ENTIRETY. HOWEVER, IT MAY BE REMOVED AND REPLACED IN SECTIONS AS REQUIRED FOR CONSTRUCTION SEQUENCING.
5. AT ALL TIMES DURING CONSTRUCTION, JOISTS THAT SUPPORT THE EXISTING AIR HANDLER UNITS SHALL BE BRACED AT THEIR TOP CHORDS TO AT LEAST 2 ADJACENT JOISTS WITH NEW OR EXISTING DECKING OR WITH BRACES AS SHOWN ON THIS SHEET.
6. ALL ROOF UPGRADES SHALL BE COMPLETE PRIOR TO ANY TRACK ATTACHMENT TO THE ROOF.
7. ALL EXISTING JOIST BRIDGING THAT IS REMOVED OR ALTERED DURING CONSTRUCTION SHALL BE REPAIRED OR REPLACED TO THE INTEGRITY OF THE SYSTEM PRIOR TO DAMAGE OR REMOVAL.

KEY PLAN

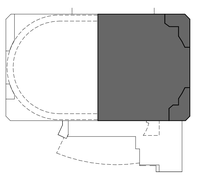

VCBO
ARCHITECTURE
VALENTINER
CRANE
BRUNJES
ONYON

PROFESSIONAL STRUCTURAL ENGINEER
Jeremy A. Achter
No. 353467
10.2.12
STATE OF UTAH

VCBO ARCHITECTURE
524 SOUTH 600 EAST
SALT LAKE CITY, UT 84102
Phone: (801) 575-8800
Fax: (801) 531-9850
WWW: www.vcbo.com

DFCM CODE COMPLIANCE STAMP

ARW ENGINEERS
structural consultants
1594 W. Pierr Dr. Ogden, Utah 84404
ph: 801.782.6008 fl. 801-782-6056

Student Activity Center
Stromberg Addition - BID SET
Weber State University
3750 Harrison Blvd. Ogden, UT 84408

Rev #	Date	Description
1	10/12/2012	ADD #2

Job # 12475
CAD File
Drawn BLP Checked JLA
Date 10.03.2012
Owner # DFCM #12031810

AREA B EXISTING
ROOF UPGRADE PLAN

S142.1

10/12/2012 2:49:59 PM

EXPANSION JOINT SIZE REQUIREMENTS		
LEVEL	CLEAR DIMENSION EAST - WEST	CLEAR DIMENSION NORTH - SOUTH
SECOND FLOOR	2"	2"
MEZZANINE	4 1/2"	3"
ROOF	7"	3"

NOTES:
1. TABULATED VALUES REPRESENT MINIMUM CLEAR DISTANCE BETWEEN NEW CONSTRUCTION AND EXISTING STRUCTURE.
2. COORDINATE ACTUAL DIMENSIONS WITH THE ARCHITECTURAL DRAWINGS.

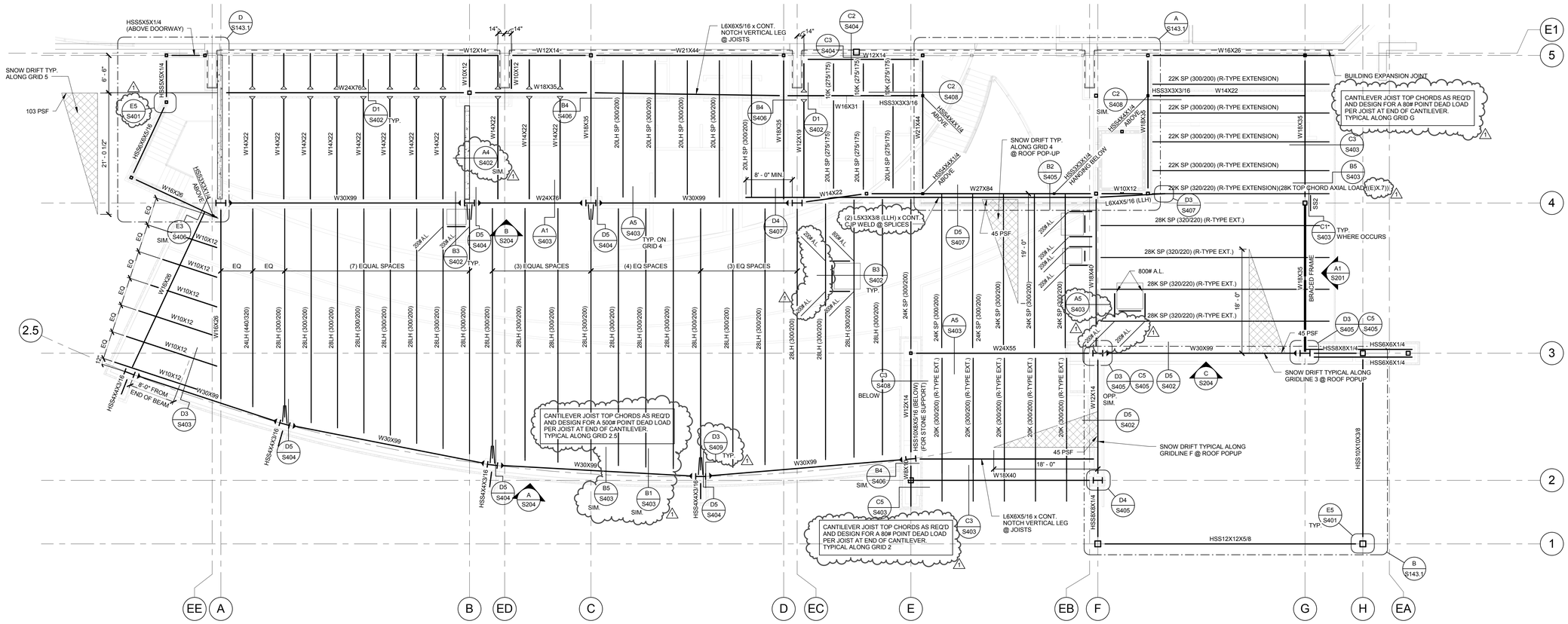

ROOF FRAMING PLAN - AREA C

SCALE : 1/8" = 1'-0"

A S143

NORTH

ROOF FRAMING NOTES

1. SEE SHEET S001 FOR GENERAL STRUCTURAL NOTES.
2. GENERAL CONTRACTOR SHALL VERIFY MECHANICAL EQUIPMENT WEIGHTS, DIMENSIONS, AND LOCATIONS W/ MECHANICAL AND REFRIGERATION CONTRACTORS PRIOR TO ORDERING/FABRICATING JOISTS.
3. (### / ###) DENOTES APPLIED TOTAL AND LIVE UNIFORMLY DISTRIBUTED LOADS IN POUNDS PER LINEAR FOOT OF JOIST, RESPECTIVELY.
4. JOISTS SUPPORTING MECHANICAL EQUIPMENT SHALL BE DESIGNED FOR ADDITIONAL LOADS INDICATED.
5. SNOW DRIFT LOADS INDICATED ON FRAMING PLANS SHALL BE APPLIED IN ADDITION TO UNIFORMLY DISTRIBUTED LOADS INDICATED PER NOTE 3.
6. PROVIDE ADDED HORIZONTAL AND VERTICAL JOISTS LOADS WHERE INDICATED ON PLAN OR DETAILS.
7. JOISTS AND GIRDERS SHALL BE DESIGNED FOR 22 PSF NET WIND UPLIFT.
8. SEE ROOF DECK SCHEDULE FOR REQUIRED DECK AND ATTACHMENTS.
9. SEE SHEET S402 FOR OPENINGS IN ROOF DECK. SEE MECHANICAL AND ARCHITECTURAL DRAWINGS FOR EXACT LOCATIONS.
10. CONTRACTOR SHALL ERECT AND MAINTAIN ADEQUATE TEMPORARY BRACING UNTIL ALL ROOF FRAMING AND DECK ATTACHMENTS ARE COMPLETE.
11. CONCENTRATED LOADS FROM EQUIPMENT, PIPING, ETC., SHALL NOT BE HUNG FROM JOISTS EXCEPT AT PANEL POINTS AND AS APPROVED BY THE ENGINEER.
12. JOIST BRIDGING DESIGN AND LOCATION BY JOIST MANUFACTURER.
13. ANY CONCENTRATED LOAD ON JOIST CHORDS (INCLUDING FRAMING ANGLES) NOT LOCATED WITHIN 6" OF A PANEL POINT REQUIRE (2) L 2" X 2" X 1/4" FROM THE POINT LOAD TO THE NEAREST OPPOSITE CHORD PANEL POINT (CONTRACTOR SUPPLIED AND INSTALLED).
14. ANY ROOF SUPPORTED PIPING 6" OR LARGER RUNNING PARALLEL TO JOIST SHALL BE SUPPORTED BY TWO OR MORE JOISTS.
15. USE OF STRAIGHT AND DIAGONAL BRIDGING SHALL BE COORDINATED WITH THE MECHANICAL DRAWINGS AS DUCTWORK MAY OCCUR BETWEEN JOISTS.
16. ALL MOMENT CONNECTED CANTILEVERS SHALL BE THE SAME SIZE AS THE BACK SPAN U.N.O.

KEY PLAN

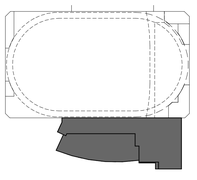

VCBO
ARCHITECTURE
VALENTINER
CRANE
BRUNJES
ONYON

PROFESSIONAL STRUCTURAL ENGINEER
Jeremy A. Achter
No. 353467
10.2.12
STATE OF UTAH

VCBO ARCHITECTURE
524 SOUTH 600 EAST
SALT LAKE CITY, UT 84102
Phone: (801) 575-8800
Fax: (801) 531-9850
WWW: www.vcbo.com

DFCM CODE COMPLIANCE STAMP

ARW ENGINEERS
structural consultants
15994 W. Park Dr. Ogden, Utah 84404
ph: 801.782.8008 fl: 801.782.4656

Student Activity Center
Stromberg Addition - BID SET
Weber State University
3750 Harrison Blvd. Ogden, UT 84408

Rev #	Date	Description
1	10/12/2012	ADD #2

Job # 12475
CAD File
Drawn BLP Checked JLA
Date 10.03.2012
Owner # DFCM #12031810

AREA C LOW ROOF FRAMING PLAN

S143

10/12/2012 2:50:01 PM

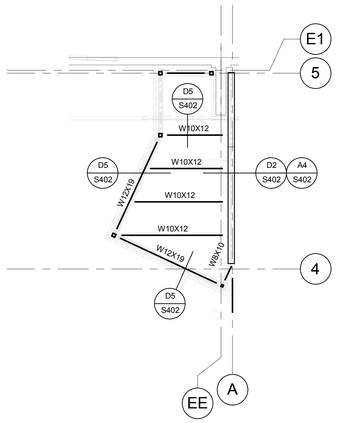

HIGH ROOF FRAMING PLAN - AREA C

SCALE : 1/8" = 1'-0"

D S143.1

NORTH

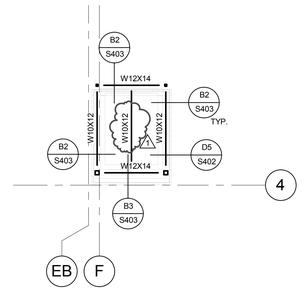

ELEVATOR ROOF FRAMING PLAN - AREA C

SCALE : 1/8" = 1'-0"

C S143.1

NORTH

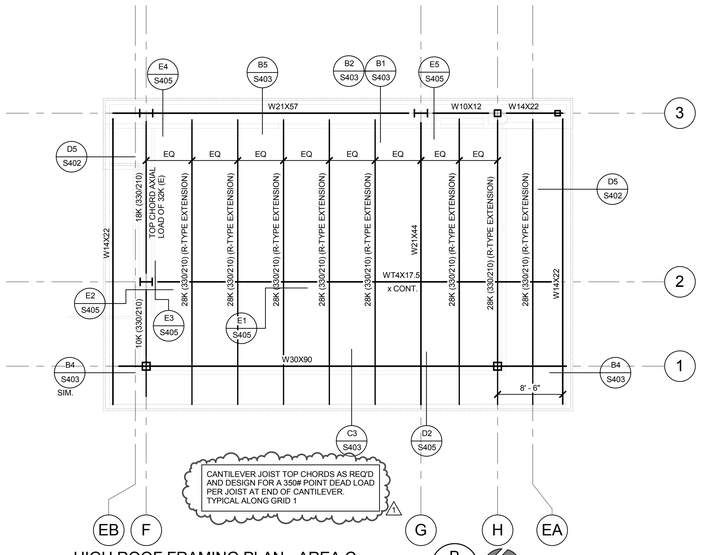

HIGH ROOF FRAMING PLAN - AREA C

SCALE : 1/8" = 1'-0"

B S143.1

NORTH

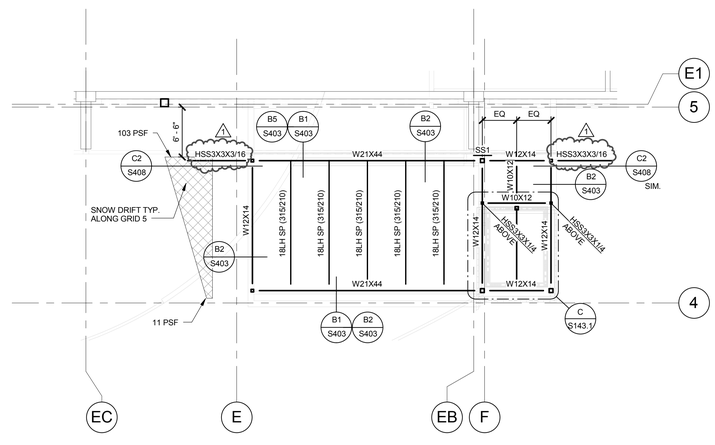

HIGH ROOF FRAMING PLAN - AREA C

SCALE : 1/8" = 1'-0"

A S143.1

NORTH

NOTE:
ROOF FRAMING NOTES
ON SHEET S143.

KEY PLAN

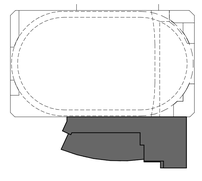

VCBO

ARCHITECTURE
VALENTINER
CRANE
BRUNJES
ONYON

PROFESSIONAL STRUCTURAL ENGINEER
Jeremy A. Achter
No. 353467
10.2.12
STATE OF UTAH

VCBO ARCHITECTURE
524 SOUTH 600 EAST
SALT LAKE CITY, UT 84102
Phone: (801) 575-8800
Fax: (801) 531-9850
WWW: www.vcbo.com

DFCM CODE COMPLIANCE STAMP

ARW ENGINEERS
structural consultants
1594 W. Pierr Dr. Ogden, Utah 84404
ph: 801.782.6008 fl: 801-782-4656

Student Activity Center

Stromberg Addition - BID SET

Weber State University
3750 Harrison Blvd. Ogden, UT 84408

Rev #	Date	Description
1	10/12/2012	ADD #2

Job # 12475
CAD File
Drawn BLP Checked JLA
Date 10.03.2012
Owner # DFCM #12031810

AREA C HIGH ROOF FRAMING PLAN

S143.1

10/12/2012 2:50:04 PM

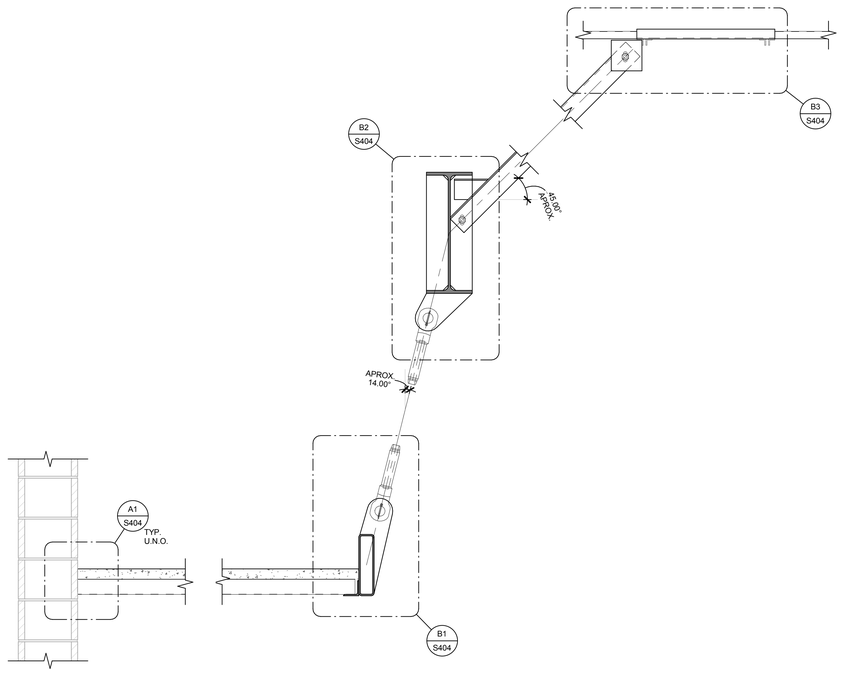

TYPICAL TRACK SECTION
SCALE : NONE
C
S202

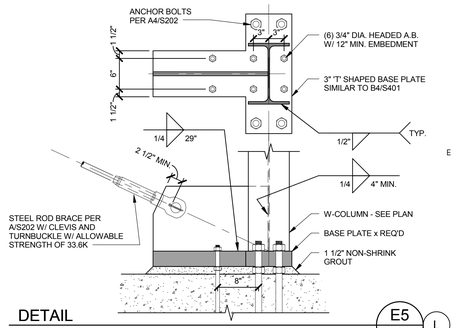

DETAIL
SCALE : NONE
E5
S202
L

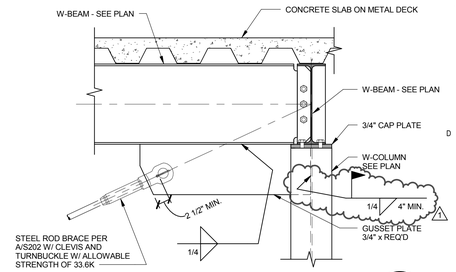

DETAIL
SCALE : NONE
D5
S202
L

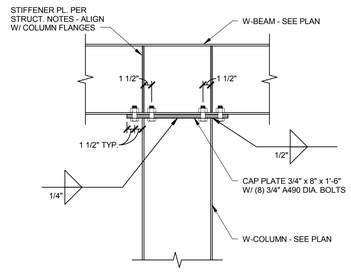

DETAIL
SCALE : NONE
C5
S202
L

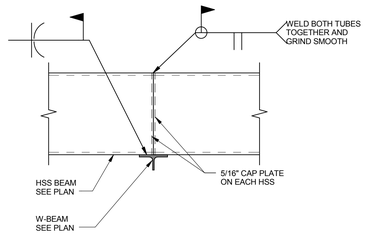

DETAIL
SCALE : NONE
B5
S202

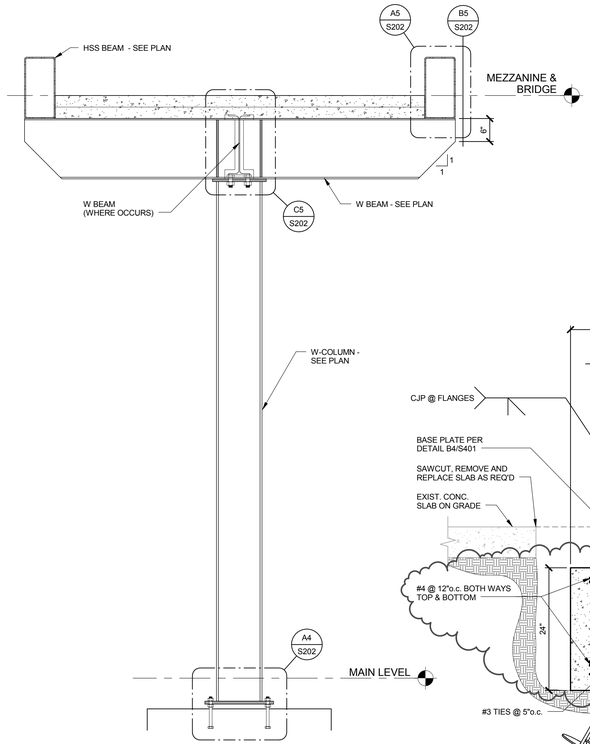

ELEVATION
SCALE : NONE
B
S202

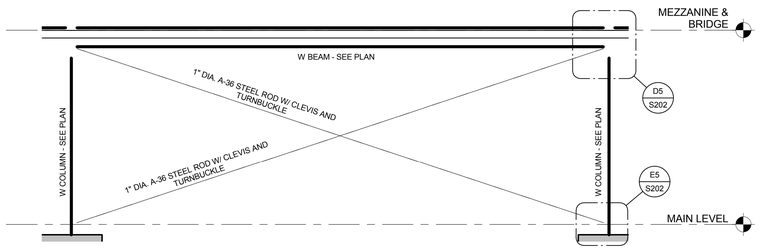

ELEVATION
SCALE : NONE
A
S202
L

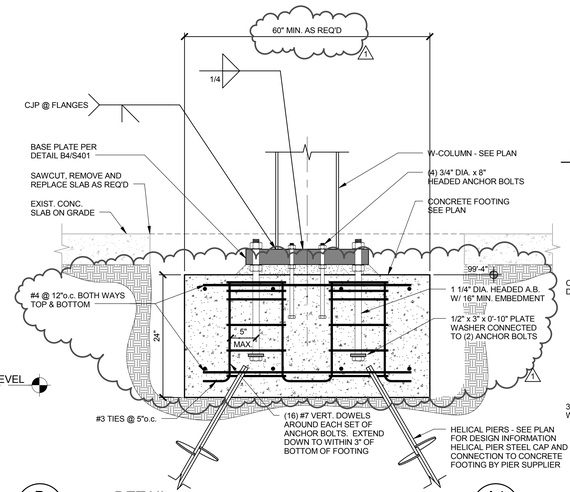

DETAIL
SCALE : NONE
A4
S202

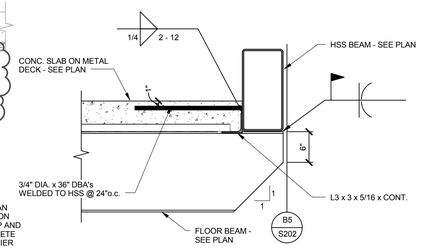

DETAIL
SCALE : NONE
A5
S202

VCBO
ARCHITECTURE
VALENTINER
CRANE
BRUNJES
ONYON

PROFESSIONAL STRUCTURAL ENGINEER
Jeremy A. Achter
No. 353467
10.2.12
STATE OF UTAH

VCBO ARCHITECTURE
524 SOUTH 600 EAST
SALT LAKE CITY, UT 84102
Phone: (801) 575-8800
Fax: (801) 531-9850
WWW: www.vcbo.com

DFCM CODE COMPLIANCE STAMP

ARW ENGINEERS
structural consultants
15984 W. Park Dr. Ogden, Utah 84404
ph: 801.782.6008 fl. 801-782-4656

Student Activity Center
Stromberg Addition - BID SET
Weber State University
3750 Harrison Blvd. Ogden, UT 84408

Rev #	Date	Description
1	10/12/2012	ADD #2

Job # 12475
CAD File
Drawn BLP Checked JLA
Date 10.03.2012
Owner # DFCM #12031810

BRIDGE DETAILS

S202

10/12/2012 2:50:08 PM

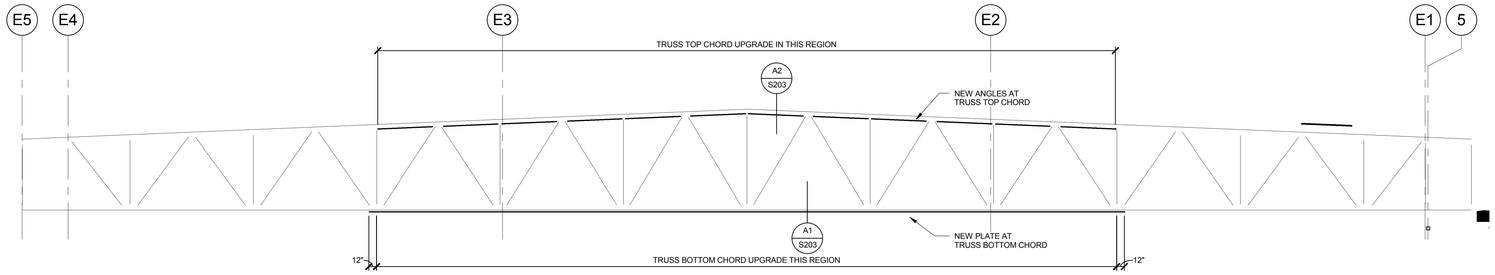

ELEVATION
SCALE : 1/8" = 1'-0"
A
S203

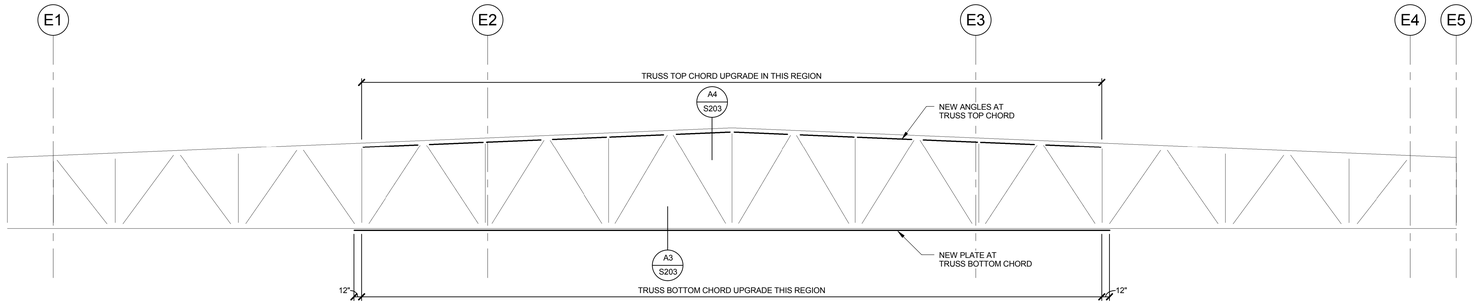

ELEVATION
SCALE : 1/8" = 1'-0"
B
S203

TRUSS UPGRADE NOTES

1. ALL PAINT SHALL BE REMOVED FROM STEEL SURFACES PRIOR TO WELDING.
2. TRUSS UPGRADES SHALL OCCUR WHEN THERE IS NO SNOW ON THE ROOF AND EXISTING BALLAST HAS BEEN REMOVED AND PRIOR TO ANY NEW TRACK SUPPORT CONSTRUCTION.

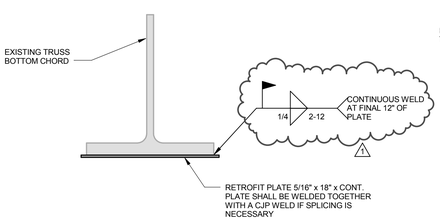

DETAIL
SCALE : NONE
A1
S203

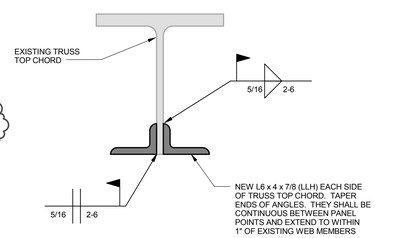

DETAIL
SCALE : NONE
A2
S203

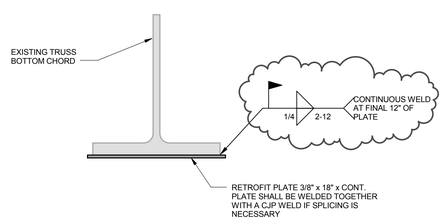

DETAIL
SCALE : NONE
A3
S203

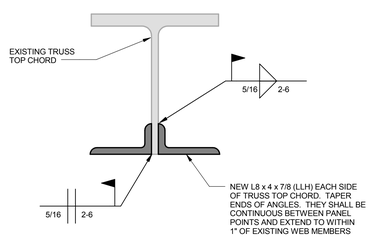

DETAIL
SCALE : NONE
A4
S203

VCBO
ARCHITECTURE
VALENTINER
CRANE
BRUNJES
ONYON

PROFESSIONAL STRUCTURAL ENGINEER
Jeremy L. Achter
No. 353467
10.2.12
STATE OF UTAH

VCBO ARCHITECTURE
524 SOUTH 600 EAST
SALT LAKE CITY, UT 84102
Phone: (801) 575-8800
Fax: (801) 531-9850
WWW: www.vcbo.com

DFCM CODE COMPLIANCE STAMP

ARW ENGINEERS
structural consultants
1594 W. Pierpont Dr. Ogden, Utah 84404
ph: 801.782.8008 fl. 801-782-4656

Student Activity Center
Stromberg Addition - BID SET
Weber State University
3750 Harrison Blvd. Ogden, UT 84408

Rev #	Date	Description
1	10/12/2012	ADD #2

Job # 12475
CAD File
Drawn BLP Checked JLA
Date 10.03.2012
Owner # DFCM #12031810

TRUSS UPGRADE ELEVATIONS

S203

10/12/2012 2:50:12 PM

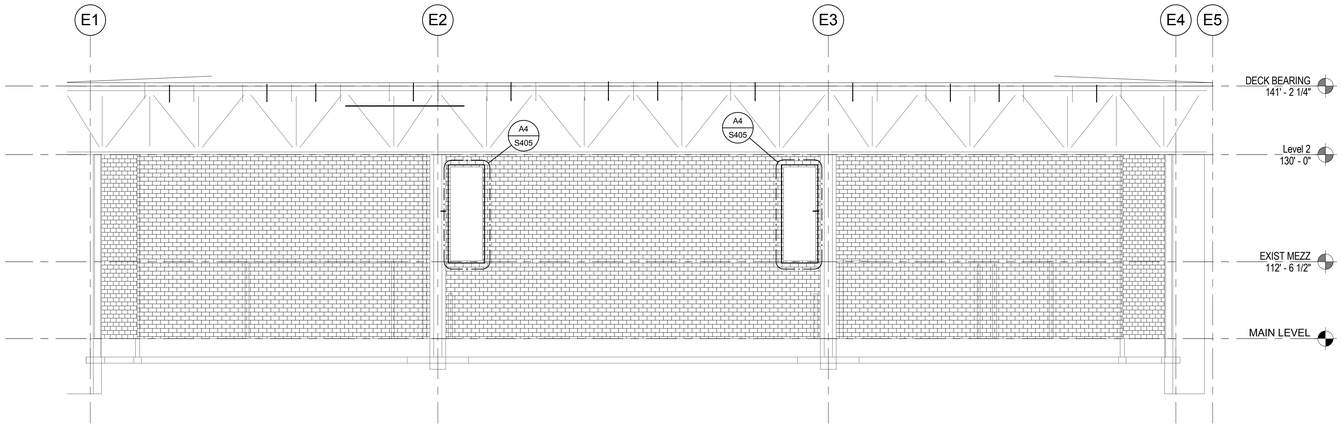

SOUTH ELEVATION WALL UPGRADE
SCALE : 1" = 10'-0"
C
S205

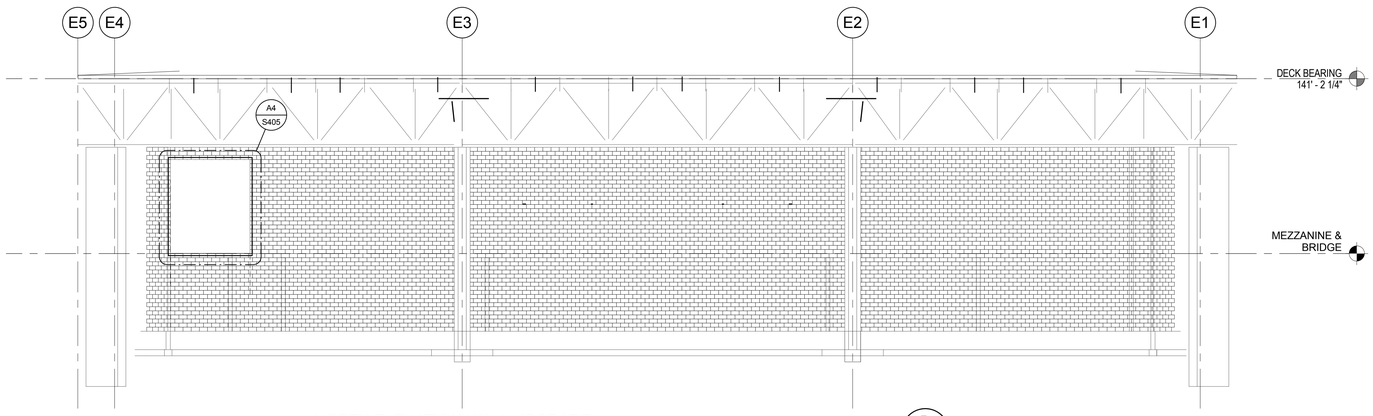

NORTH ELEVATION WALL UPGRADE
SCALE : 1" = 10'-0"
B
S205

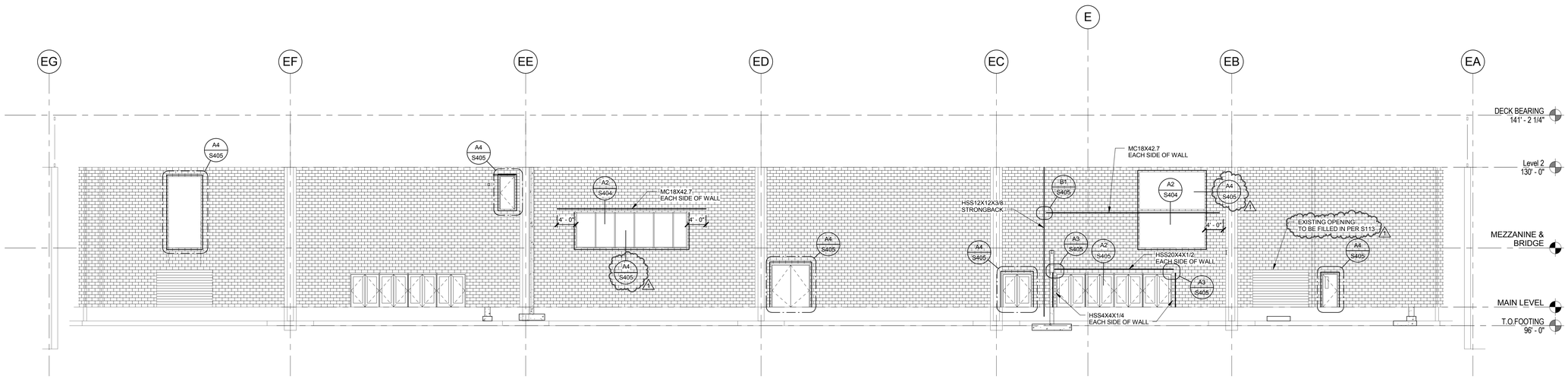

WEST ELEVATION WALL UPGRADE
SCALE : 1" = 10'-0"
A
S205

VCBO
ARCHITECTURE
VALENTINER
CRANE
BRUNJES
ONYON

PROFESSIONAL STRUCTURAL ENGINEER
Jeremy A. Achter
No. 353467
10.2.12
STATE OF UTAH

VCBO ARCHITECTURE
524 SOUTH 600 EAST
SALT LAKE CITY, UT 84102
Phone: (801) 575-8800
Fax: (801) 531-9850
WWW: www.vcbo.com

DFCM CODE COMPLIANCE STAMP

ARW ENGINEERS
structural consultants
1556 W. Park Dr. Ogden, Utah 84404
ph: 801.782.6008 fl. 801-782-4656

Student Activity Center
Stromberg Addition - BID SET
Weber State University
3750 Harrison Blvd. Ogden, UT 84408

Rev #	Date	Description
1	10/12/2012	ADD #2

Job # 12475
CAD File
Drawn BLP Checked JLA
Date 10.03.2012
Owner # DFCM #12031810

EXISTING WALL ELEVATIONS

S205

10/12/2012 2:50:13 PM

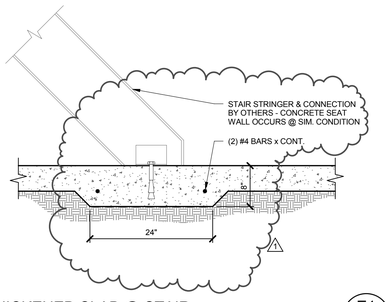

THICKENED SLAB @ STAIR — E1 / S401
SCALE : NONE

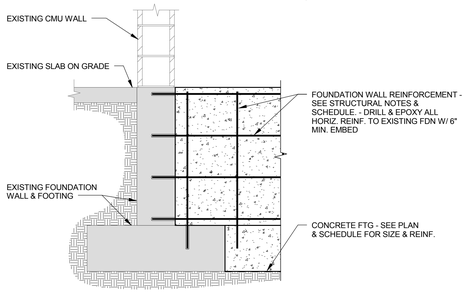

TYP. FOOTING & FOUNDATION INTO EXISTING FOOTING & FOUNDATION — E2 / S401
SCALE : NONE

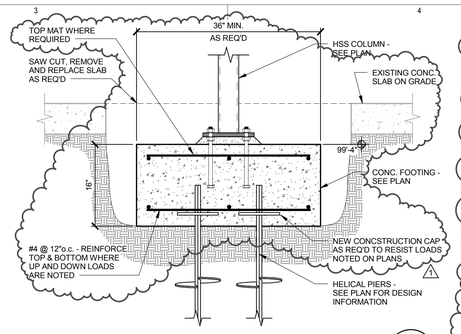

DETAIL — E3 / S401
SCALE : NONE

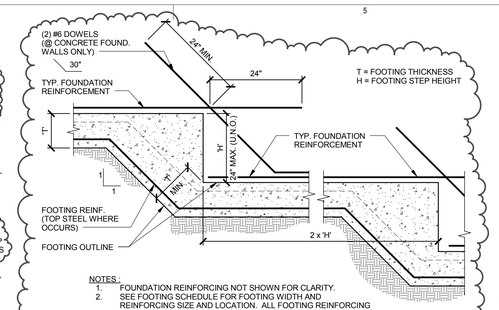

NOTES :
1. FOUNDATION REINFORCING NOT SHOWN FOR CLARITY.
2. SEE FOOTING SCHEDULE FOR FOOTING WIDTH AND REINFORCING SIZE AND LOCATION. ALL FOOTING REINFORCING REFERENCED IN THE SCHEDULE OR SHOWN IN THE DETAILS MUST RUN CONTINOUS THROUGH THE FOOTING STEP.

TYPICAL STEPPED FOOTING — E4 / S401
SCALE : NONE

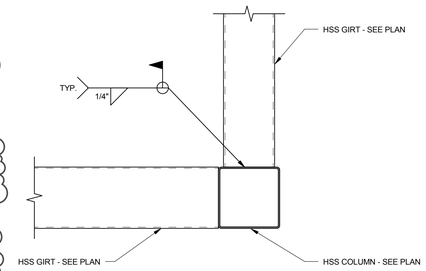

TYPICAL WIND GIRT CONNECTION — E5 / S401
SCALE : NONE

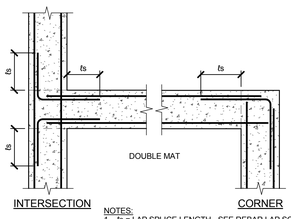

NOTES:
1. ts = LAP SPLICE LENGTH - SEE REBAR LAP SCHEDULE
2. VERTICAL BARS NOT SHOWN
3. DETAIL IS SIMILAR @ SINGLE CURTAIN OF REINF.
4. THIS DETAIL IS APPLICABLE AT ALL FOOTINGS AND FOUNDATION WALLS

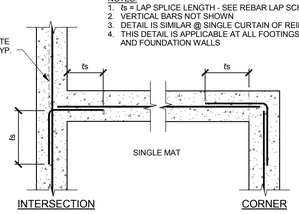

TYP REINF. @ INTERSECTIONS IN CONC. DETAIL — C1 / S401
SCALE : NONE

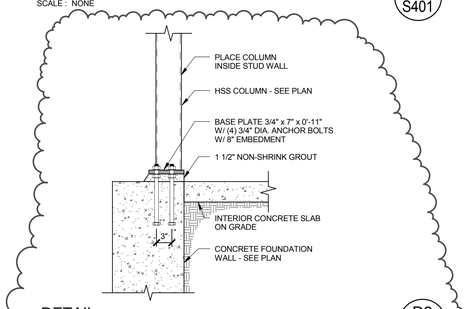

DETAIL — D2 / S401
SCALE : NONE

BASE PLATE SCHEDULE	
COLUMN SIZE	BASE PLATE SIZE
12" SQ.	PL 3/4" x 18" x 1'-6"
10" SQ.	PL 3/4" x 16" x 1'-4"
8" SQ, 10" DIA	PL 3/4" x 14" x 1'-2"
7" SQ	PL 3/4" x 13" x 1'-1"
6" SQ , 8" DIA	PL 3/4" x 12" x 1'-0"
5" SQ	PL 3/4" x 12" x 1'-0"
4" SQ	PL 5/8" x 10" x 0'-10"

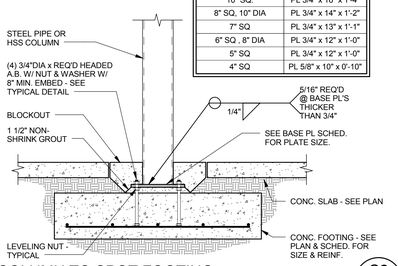

COLUMN TO SPOT FOOTING — C2 / S401
SCALE : NONE

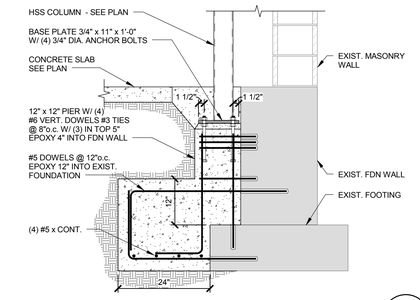

DETAIL — D3 / S401
SCALE : NONE

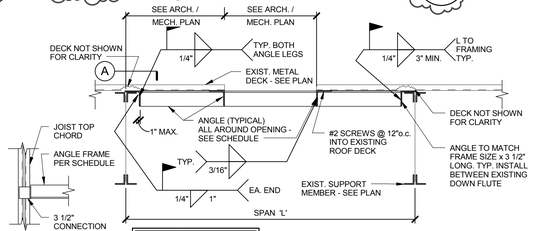

SPAN	ANGLE SIZE
L < 6'-0"	L 4 x 4 x 1/4
L < 8'-0"	L 4 x 4 x 3/8
L < 10'-0"	L 5 x 5 x 3/8

NOTES :
1. THIS DETAIL APPLIES TO ROOF OPENINGS LARGER THAN 18" IN EITHER DIRECTION. WHERE THERE IS NO OPENING IN ROOF, PLACE FRAME UNDER CURB.

TYP. FRAMING @ ROOF OPENINGS & ROOFTOP EQUIPMENT @ EXIST. ROOF — D4 / S401
SCALE : NONE

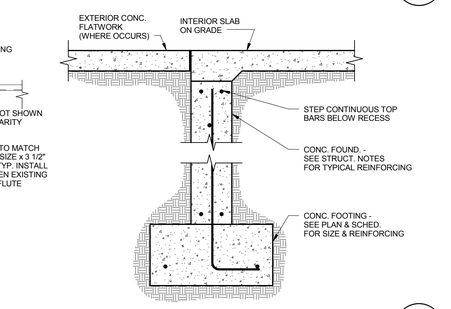

CONCRETE FDN @ OPENING DETAIL — D5 / S401
SCALE : NONE

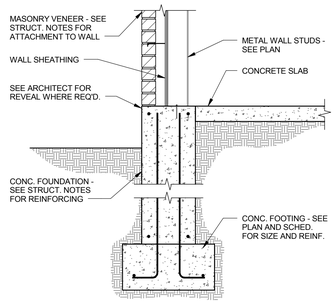

SECTION @ EXTERIOR WALL — C3 / S401
SCALE : NONE

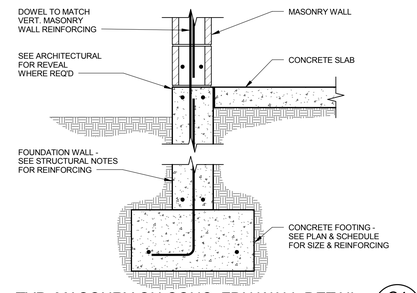

TYP. MASONRY ON CONC. FDN WALL DETAIL — C4 / S401
SCALE : NONE

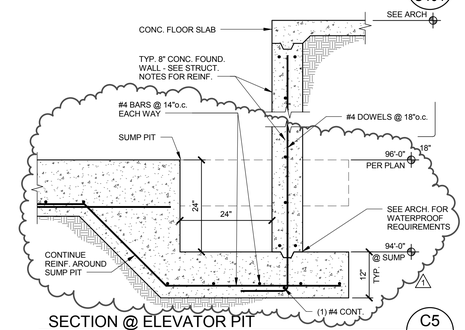

SECTION @ ELEVATOR PIT — C5 / S401
SCALE : NONE

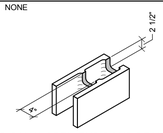

TYPICAL 8" OPEN-END BOND BEAM CMU
(FOR USE IN CMU LINTELS)

TYPICAL 8" OPEN-END CMU
(FOR USE IN ALL CMU LINTELS, U.N.O.)

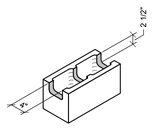

TYPICAL 8" BOND BEAM CMU ("H" BLOCK)
(FOR USE IN ALL BOND BEAMS, U.N.O.)

NOTES:
1. ALL 8" OPEN-END AND BOND-BEAM CMU UNITS SHALL MEET THE MINIMUM DIMENSIONS SHOWN.
2. STANDARD 8" CMU UNITS MAY BE CUT, CHIPPED, OR MODIFIED TO CREATE OPEN-END OR BOND BEAM UNITS, PROVIDED THE FINAL CONFIGURATION MEETS THE MINIMUM DIMENSION SHOWN.

TYPICAL CMU BLOCK — B1 / S401
SCALE : NONE

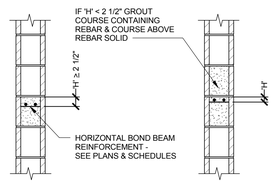

TYPICAL BOND BEAM GROUTING — ALTERNATE BOND BEAM GROUTING
WHEN 'H' ≤ 2 1/2"

TYP. BOND BEAM GROUTING — B2 / S401
SCALE : NONE

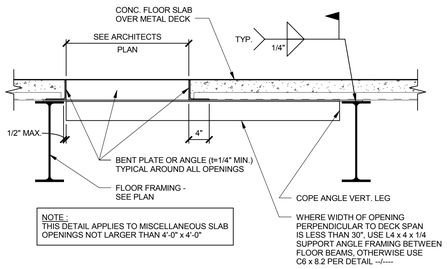

NOTE :
THIS DETAIL APPLIES TO MISCELLANEOUS SLAB OPENINGS NOT LARGER THAN 4'-0" x 4'-0"

TYP. FRAMING @ FLOOR OPENING — B3 / S401
SCALE : NONE

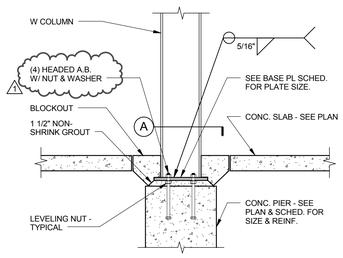

BASE PLATE SCHEDULE				
COLUMN SIZE	BASE PL. SIZE (Fy = 50 ksi)	DIMENSION 'A'	DIMENSION 'B'	A.B. SIZE
W18	1" x 13" x 1'-11"	3"	4"	1-1/2"
W12	3" x 12" x 2'-0"	3"	4"	1-3/8"

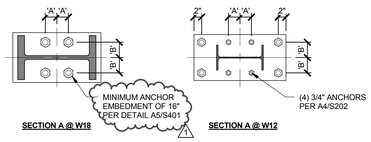

COLUMN TO SPOT FOOTING — B4 / S401
SCALE : NONE

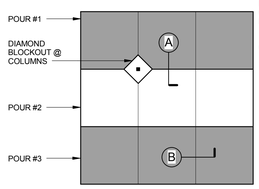

NOTES:
1. JOINTS SHALL OCCUR AT MAIN COLUMN/GRID LINES W/ 10'-0" MAX. SPACING BETWEEN JOINTS @ 4" SLABS; 12'-0" MAX. @ 5" SLABS, & 15'-0" MAX. @ 6" SLABS.
2. SEE PLAN FOR SLAB THICKNESS 'T' AND REINFORCING SIZE AND SPACING.

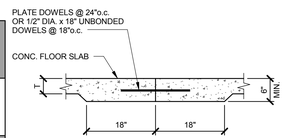

CONSTRUCTION JOINT (A)
SCALE : NONE

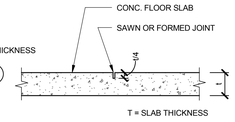

CONTROL JOINT (B)
SCALE : NONE

TYPICAL CONCRETE SLAB JOINTS — A1 / S401
SCALE : NONE

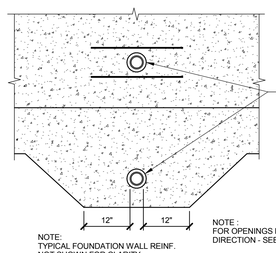

NOTE:
TYPICAL FOUNDATION WALL REINF. NOT SHOWN FOR CLARITY.

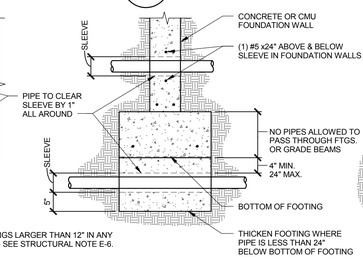

NOTE :
FOR OPENINGS LARGER THAN 12" IN ANY DIRECTION - SEE STRUCTURAL NOTE E-6.

NOTE :
1. DETAIL IS SIMILAR AT MASONRY FOUNDATION WALLS.
2. SEE TYPICAL DETAIL FOR MULTIPLE WALL PENETRATIONS.

PIPE CROSSING FOOTING / FOUNDATION WALL

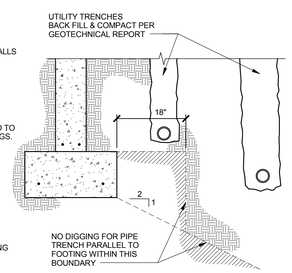

PIPE PARALLEL TO FOOTING

ALLOWABLE PIPING LOCATIONS @ FOOTING DETAIL — A3 / S401
SCALE : NONE

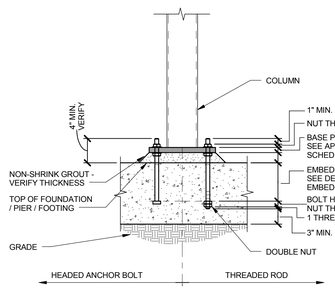

TYPICAL ANCHOR BOLT EMBEDMENT DETAIL — A5 / S401
SCALE : NONE

VCBO
ARCHITECTURE
VALENTINER
CRANE
BRUNJES
ONYON

PROFESSIONAL STRUCTURAL ENGINEER
Jeremy A. Achter
No. 353467
10.2.12
STATE OF UTAH

VCBO ARCHITECTURE
524 SOUTH 600 EAST
SALT LAKE CITY, UT 84102
Phone: (801) 575-8800
Fax: (801) 531-9850
WWW: www.vcbo.com

DFCM CODE COMPLIANCE STAMP

ARW ENGINEERS
structural consultants
1594 W. Pierpont Dr. Ogden, Utah 84404
ph: 801.782.8008 fx: 801.782.4656

Student Activity Center
Stromberg Addition - BID SET
Weber State University
3750 Harrison Blvd. Ogden, UT 84408

Rev #	Date	Description
1	10/12/2012	ADD #2

Job # 12475
CAD File
Drawn BLP Checked JLA
Date 10.03.2012
Owner # DFCM #12031810

TYPICAL DETAILS

S401

10/12/2012 2:50:15 PM

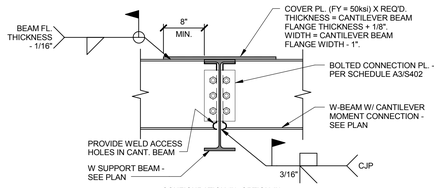

CONFIGURATION #1, OPTION #1

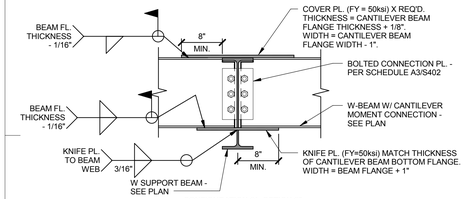

CONFIGURATION #1, OPTION #2

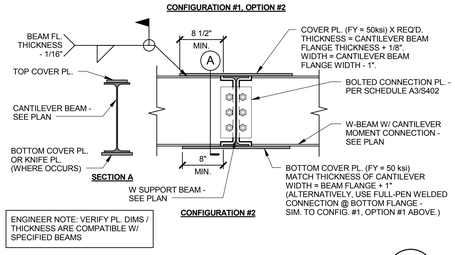

ENGINEER NOTE: VERIFY PL. DIMS / THICKNESS ARE COMPATIBLE W/ SPECIFIED BEAMS

DETAIL
SCALE : NONE
D1 / S402

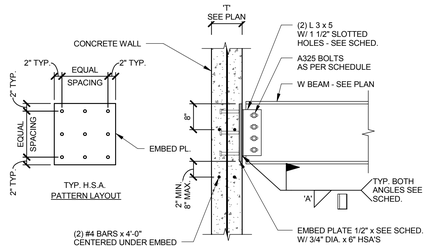

BEAM SIZE	ANGLE SIZE (EA. SIDE)	WELD 'A'	BOLTS	EMBED PLATE	# OF H.S.A.	H.S.A. PATTERN
W8x, C8x	3 x 5 x 1/4	3/16"	(2) 3/4"DIA	8" x 8"	4	
W10x	3 x 5 x 5/16	1/4"	(2) 3/4"DIA	12" x 1'-4"	6	
W14x	3 x 5 x 5/16	1/4"	(3) 3/4"DIA	15" x 1'-4"	9	
W24x	3 x 5 x 3/8	1/4"	(7) 7/8"DIA	15" x 2'-0"	12	

BEAM INTO CONCRETE
SCALE : NONE
D2 / S402

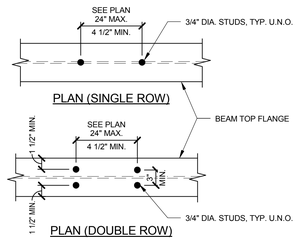

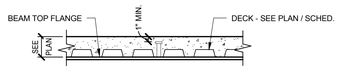

SECTION

NOTE:
1. SEE STRUCTURAL NOTES FOR ADDITIONAL SHEAR CONNECTION INFORMATION

TYP. SHEAR STUD CONNECTION DETAIL
SCALE : NONE
D3 / S402

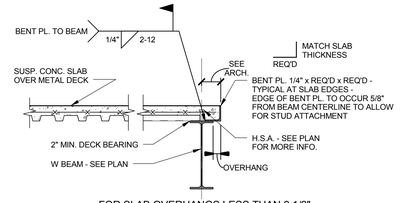

FOR SLAB OVERHANGS LESS THAN 2 1/2"

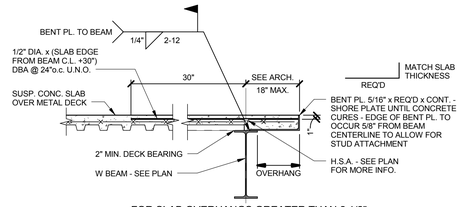

FOR SLAB OVERHANGS GREATER THAN 2 1/2"

DECK EDGE ON BEAM
SCALE : NONE
E4 / S402

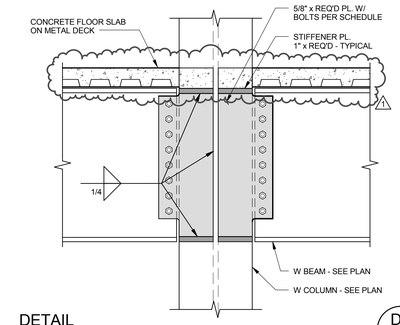

DETAIL
SCALE : NONE
D4 / S402

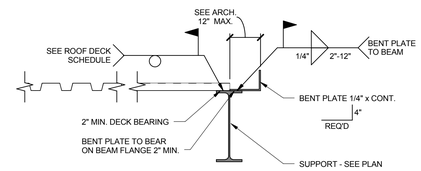

DECK EDGE ON BEAM
SCALE : NONE
D5 / S402

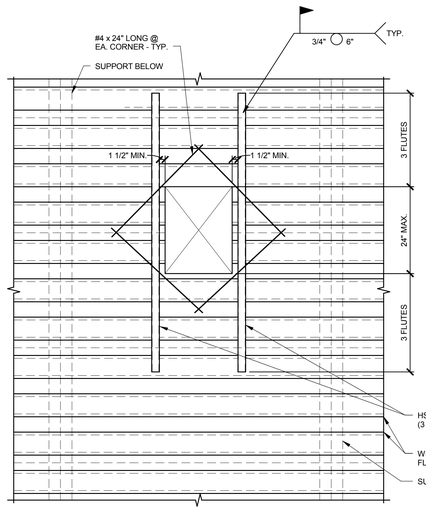

USE THIS DETAIL FOR LARGER HOLES, RECTANGULAR OR SQUARE.

PRIOR TO CONCRETE POUR, SMALL OPENINGS SHOULD BE BLOCKED OUT AND FLOOR DECK LEFT INTACT. HOLES LESS THAN 6" IN DIAMETER AND CUTTING OF NO MORE THAN (1) WEB NEED NO REINFORCING. AFTER THE CONCRETE HAS CURED, THE BLOCKOUT CAN BE REMOVED AND THE FLOOR DECK IN THE AREA OF THE HOLE REMOVED.

NOTES:
1. IF THE OPENING OR GROUP OF OPENINGS OCCURS IN ONE DECKING UNIT THE OPENING OR OPENING GROUP MAY BE CUT PRIOR TO POURING OF CONCRETE.
2. IF, AS SHOWN, THE OPENING OR OPENING GROUP CUTS THROUGH THE TWO DECKING UNITS, THE DECKING SHALL NOT BE CUT UNTIL THE CONCRETE HAS BEEN PLACED AND CURED.
3. WHEN THE MAXIMUM DIMENSION OF AN OPENING OR OPENING GROUP EXCEEDS 24", PROVIDE W8 x 10 HEADER BEAMS BELOW THE DECK AT ALL SIDES. SEE DETAIL-/---.

TYP. REINFORCEMENT @ OPENINGS IN SUSPENDED CONCRETE SLAB
SCALE : NONE
B1 / S402

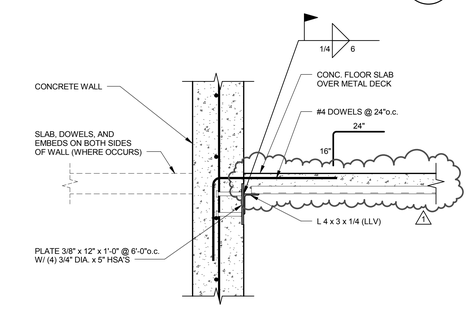

CONCRETE DECK INTO CONCRETE WALL
SCALE : NONE
C3 / S402

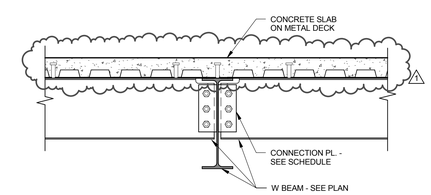

BEAMS INTO GIRDER
SCALE : NONE
C4 / S402

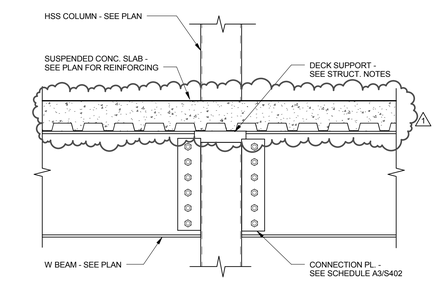

BEAM INTO COLUMN
SCALE : NONE
C5 / S402

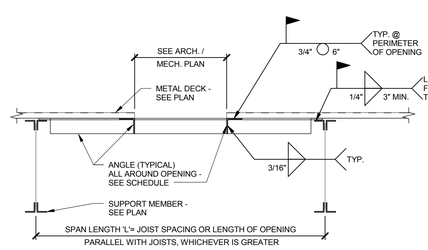

SPAN	ANGLE SIZE
L < 6'-0"	L 4 x 4 x 1/4
L < 8'-0"	L 4 x 4 x 3/8
L < 10'-0"	L 5 x 5 x 3/8

NOTES :
1. THIS DETAIL APPLIES TO ROOF OPENINGS LARGER THAN 18" IN EITHER DIRECTION. WHERE THERE IS NO OPENING IN ROOF, PLACE FRAME UNDER CURB.
2. MECHANICAL CURB ATTACHMENT TO STRUCTURE IS BY OTHERS.
3. THIS DETAIL OCCURS UNDER THE CURB AND AROUND THE OPENING. WHERE NO OPENING OCCURS, FRAME OCCURS BELOW CURB ONLY.

TYP. FRAMING @ ROOF OPN'GS & ROOFTOP EQUIPMENT DETAIL
SCALE : NONE
B3 / S402

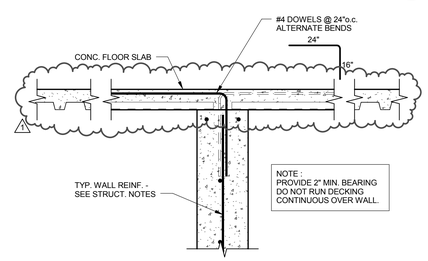

DECK ACROSS CONCRETE
SCALE : NONE
B5 / S402

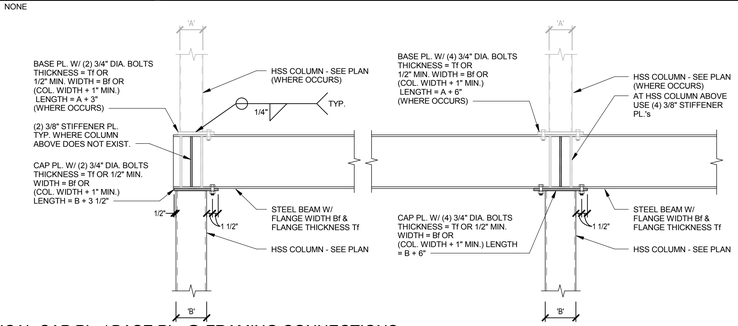

TYPICAL CAP PL. / BASE PL. @ FRAMING CONNECTIONS
SCALE : NONE
A1 / S402

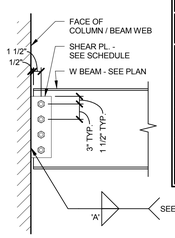

CONNECTION SCHEDULE					
BEAM DEPTH	SHEAR PLATE	BOLTS No.	BOLTS SIZE	WELD 'A'	COMMENTS
W8 x, W10 x	PL. 1/4" x 4"	2	3/4" DIA.	3/16"	
W12 x	PL. 5/16" x 4"	3	3/4" DIA.	1/4"	
W14 x	PL. 5/16" x 4"	3	3/4" DIA.	1/4"	
W16 x	PL. 5/16" x 4"	4	3/4" DIA.	1/4"	
W18 x	PL. 3/8" x 4"	5	7/8" DIA.	1/4"	
W21 x	PL. 5/16" x 4"	6	3/4" DIA.	1/4"	
W24 x	PL. 5/16" x 4"	7	3/4" DIA.	1/4"	
W27 x	PL. 1/2" x 4"	8	7/8" DIA.	5/16"	
W30 x	PL. 1/2" x 4"	9	7/8" DIA.	5/16"	

TYPICAL BEAM CONNECTIONS DETAIL
SCALE : NONE
A3 / S402

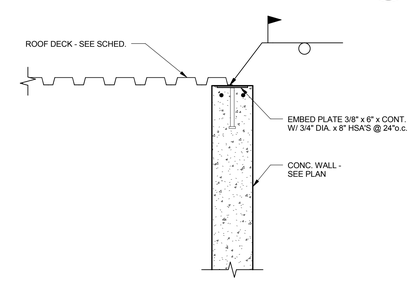

DETAIL
SCALE : NONE
A4 / S402

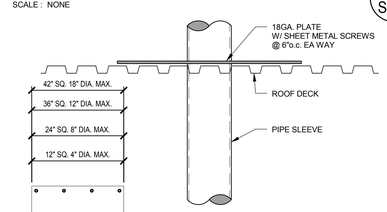

PLAN

NOTES:
1. USE DETAIL FOR THE FOLLOWING CONDITIONS:
   - NO ADDED LOAD NOTED ON PLANS
   - (1) TO (3) DECK FLUTES ARE PENETRATED
2. FOR OPENINGS GREATER THAN THREE FLUTES (18"), SEE TYPICAL DETAIL FOR ADDITIONAL FRAMING.

TYP. FRAMING @ SMALL ROOF OPENINGS DETAIL
SCALE : NONE
A5 / S402

VCBO
ARCHITECTURE
VALENTINER CRANE BRUNJES ONYON

PROFESSIONAL STRUCTURAL ENGINEER
Jeremy L. Achter
No. 353467
10-2-12
STATE OF UTAH

VCBO ARCHITECTURE
524 SOUTH 600 EAST
SALT LAKE CITY, UT 84102
Phone: (801) 575-8800
Fax: (801) 531-9850
WWW: www.vcbo.com

DFCM CODE COMPLIANCE STAMP

ARW ENGINEERS
structural consultants
15984 W. Park Dr. Ogden, Utah 84404
ph: 801.782.6008 fl. 801-782-6056

Student Activity Center
Stromberg Addition - BID SET
Weber State University
3750 Harrison Blvd. Ogden, UT 84408

Rev #	Date	Description
1	10/12/2012	ADD #2

Job # 12475
CAD File
Drawn BLP Checked JLA
Date 10.03.2012
Owner # DFCM #12031810

TYPICAL DETAILS

S402

10/12/2012 2:50:17 PM

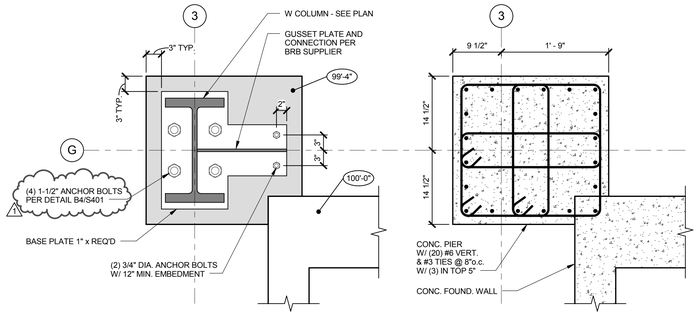

DETAIL
SCALE : NONE
E1 S403

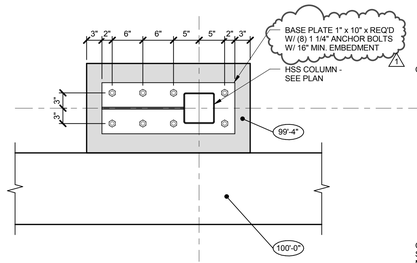

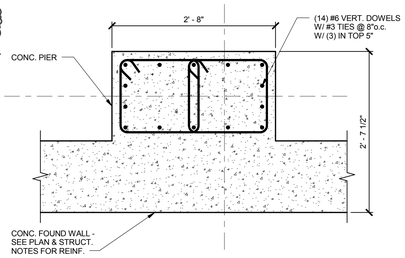

DETAIL
SCALE : NONE
E3 S403

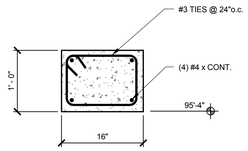

NOTE: #4 CONT. REBAR SHALL RUN CONTINUOUS THROUGH SPOT FOOTINGS

DETAIL
SCALE : NONE
E5 S403

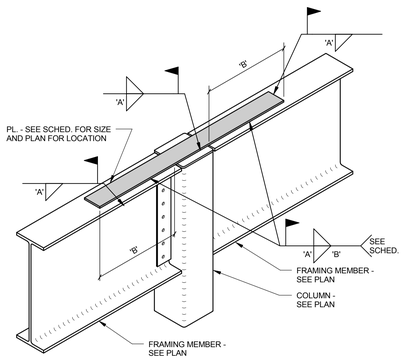

SEISMIC STRAP SCHEDULE			
MARK	STRAP SIZE	WELD SIZE 'A'	WELD LENGTH 'B'
SS1	PL. 1/4" x 4" x REQ'D	1/4"	6"
SS2	PL. 5/8" x 5" x REQ'D	1/4"	8"

SEISMIC STRAP SCHEDULE
SCALE : NONE
C1 S403

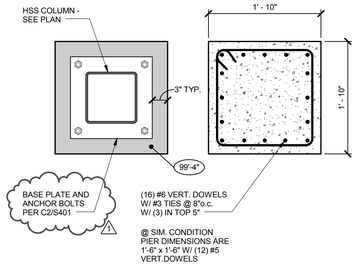

DETAIL
SCALE : NONE
D2 S403

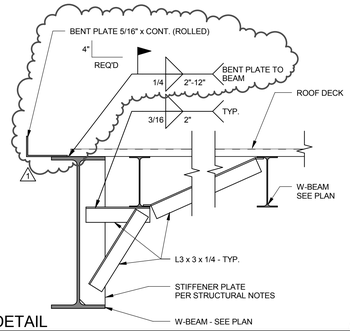

DETAIL
SCALE : NONE
D3 S403

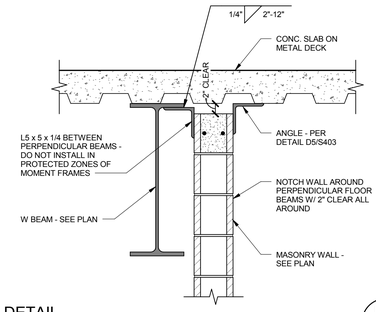

DETAIL
SCALE : NONE
D4 S403

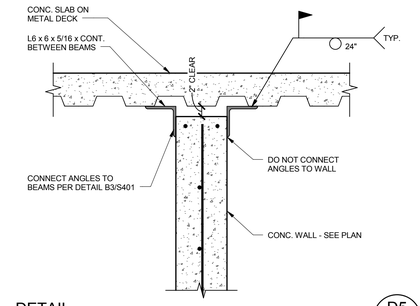

DETAIL
SCALE : NONE
D5 S403

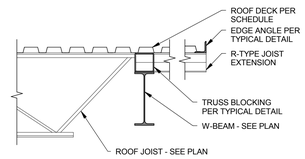

DETAIL
SCALE : NONE
C3 S403

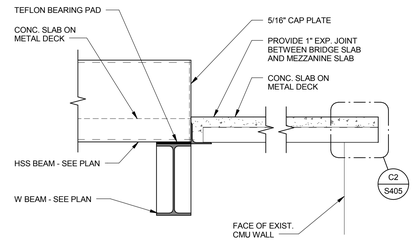

DETAIL
SCALE : NONE
C4 S403

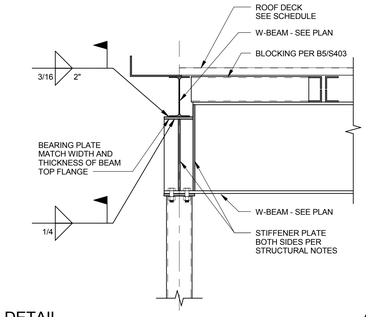

DETAIL
SCALE : NONE
C5 S403

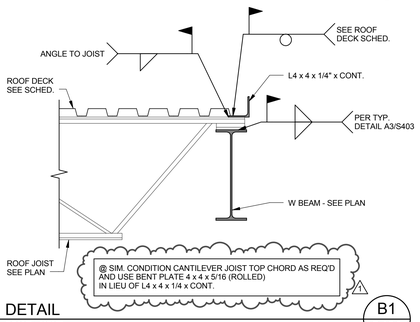

DETAIL
SCALE : NONE
B1 S403

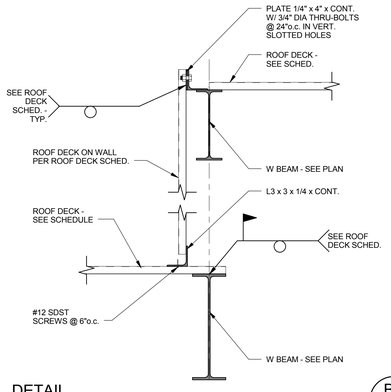

DETAIL
SCALE : NONE
B2 S403

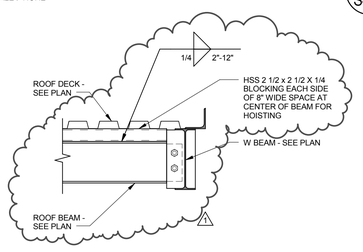

DETAIL
SCALE : NONE
B3 S403

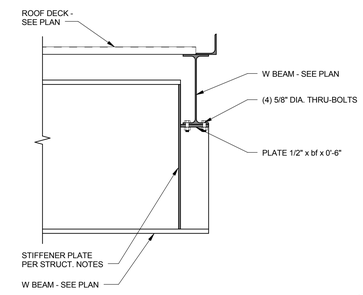

DETAIL
SCALE : NONE
B4 S403

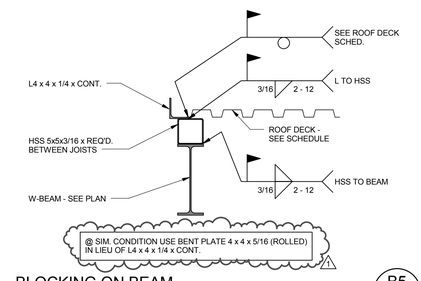

BLOCKING ON BEAM
SCALE : NONE
B5 S403

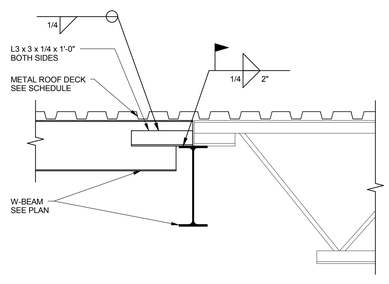

DETAIL
SCALE : NONE
A1 S403

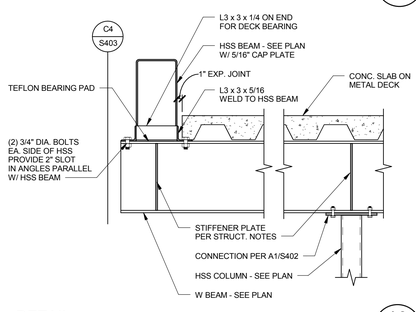

DETAIL
SCALE : NONE
A2 S403

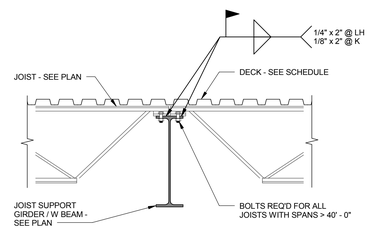

JOISTS ON BEAM
SCALE : NONE
A3 S403

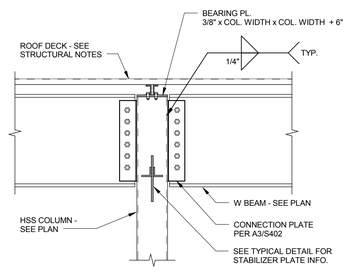

BEAMS & JOISTS INTO HSS COLUMN
SCALE : NONE
A4 S403

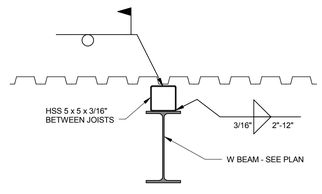

DETAIL
SCALE : NONE
A5 S403

VCBO
ARCHITECTURE
VALENTINER
CRANE
BRUNJES
ONYON

PROFESSIONAL STRUCTURAL ENGINEER
Jeremy A. Achter
No. 353467
10.2.12
STATE OF UTAH

VCBO ARCHITECTURE
524 SOUTH 600 EAST
SALT LAKE CITY, UT 84102
Phone: (801) 575-8800
Fax: (801) 531-9850
WWW: www.vcbo.com

DFCM CODE COMPLIANCE STAMP

ARW ENGINEERS
structural consultants
15984 W. Park Dr. Ogden, Utah 84404
ph: 801.782.6008 fl: 801-782-6056

Student Activity Center
Stromberg Addition - BID SET
Weber State University
3750 Harrison Blvd. Ogden, UT 84408

Rev #	Date	Description
1	10/12/2012	ADD #2

Job # 12475
CAD File
Drawn BLP Checked JLA
Date 10.03.2012
Owner # DFCM #12031810

DETAILS

S403

10/12/2012 2:50:20 PM

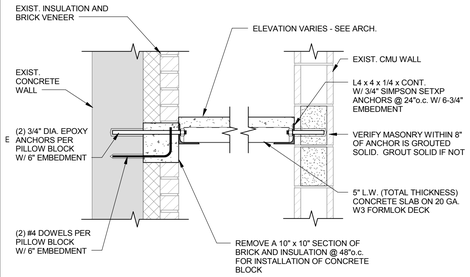

DETAIL E1 S404
SCALE : NONE

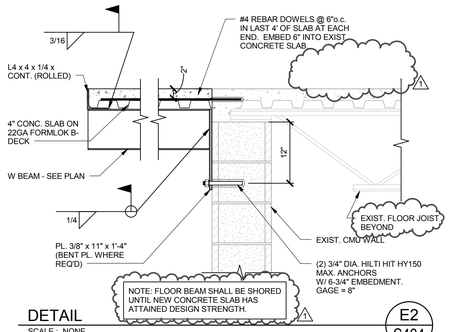

DETAIL E2 S404
SCALE : NONE

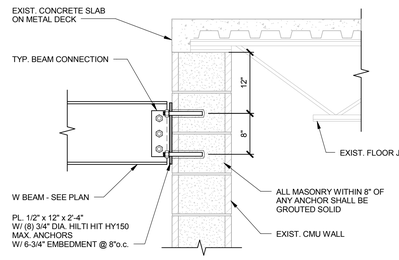

DETAIL E3 S404
SCALE : NONE

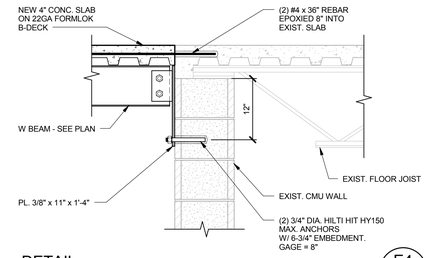

DETAIL E4 S404
SCALE : NONE

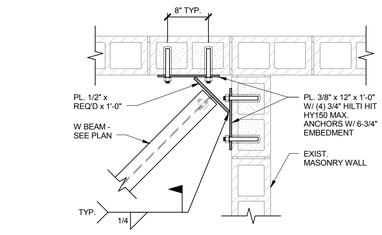

DETAIL E5 S404
SCALE : NONE

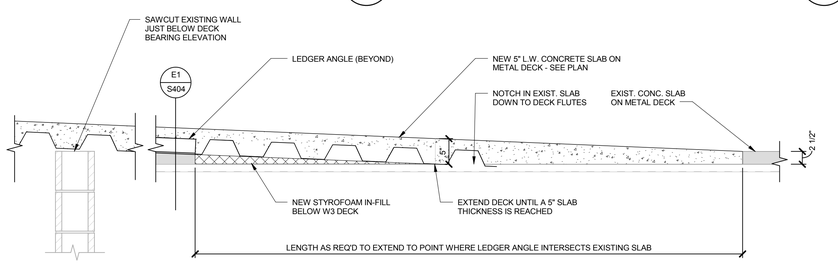

DETAIL D1 S404
SCALE : NONE

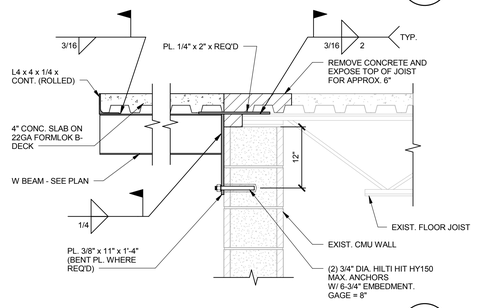

DETAIL D3 S404
SCALE : NONE

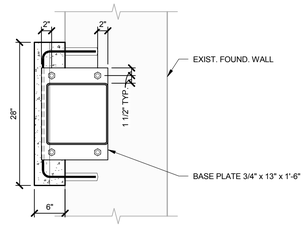

SECTION 'A'

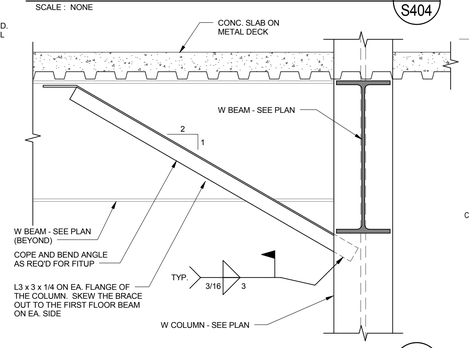

DETAIL D5 S404
SCALE : NONE

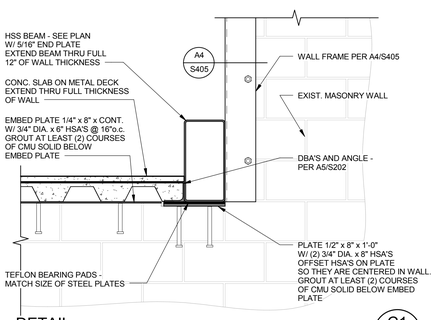

DETAIL C1 S404
SCALE : NONE

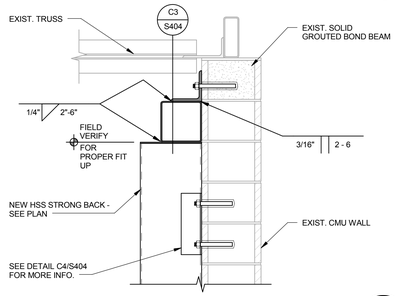

DETAIL C2 S404
SCALE : NONE

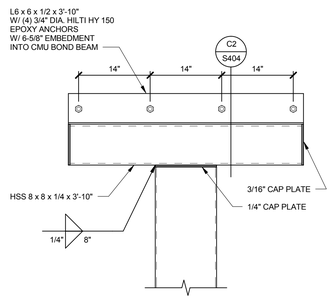

DETAIL C3 S404
SCALE : NONE

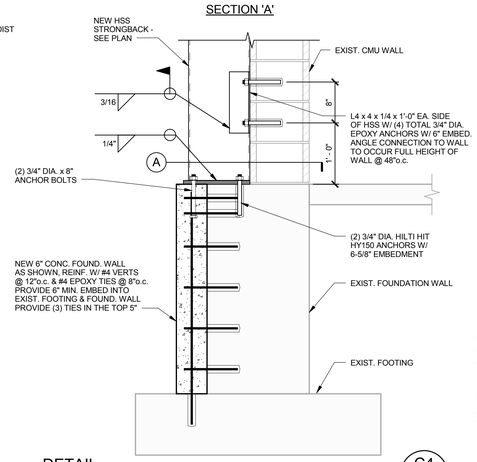

DETAIL C4 S404
SCALE : NONE

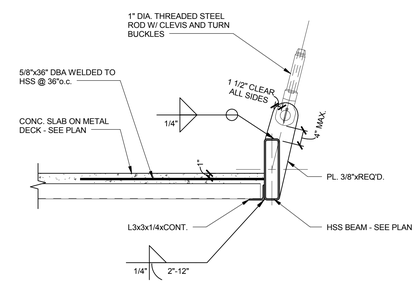

DETAIL B1 S404
SCALE : NONE

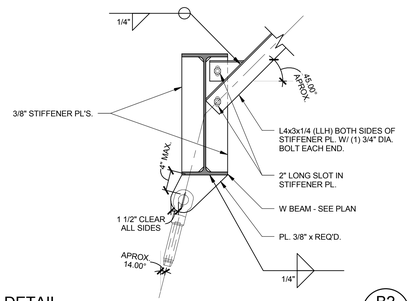

DETAIL B2 S404
SCALE : NONE

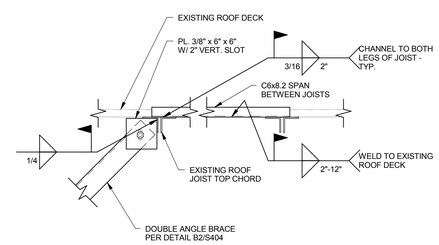

DETAIL B3 S404
SCALE : NONE

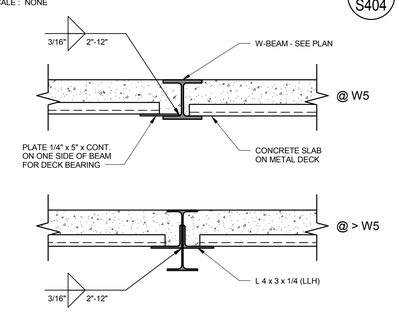

DETAIL B4 S404
SCALE : NONE

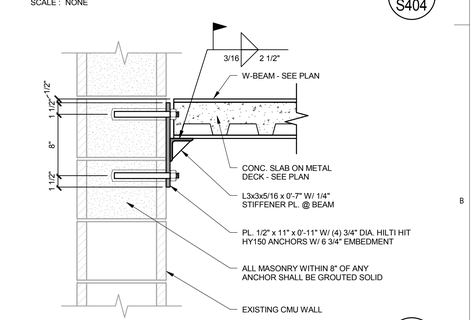

DETAIL B5 S404
SCALE : NONE

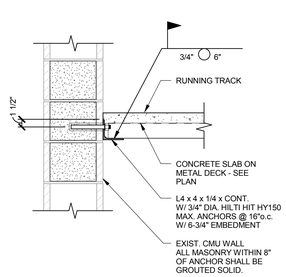

DETAIL A1 S404
SCALE : NONE

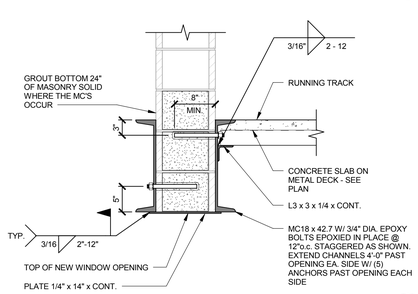

DETAIL A2 S404
SCALE : NONE

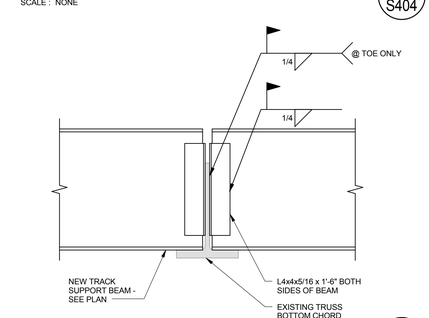

DETAIL A3 S404
SCALE : NONE

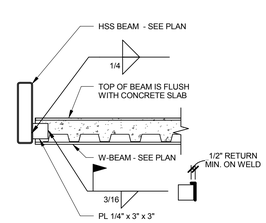

DETAIL A4 S404
SCALE : NONE

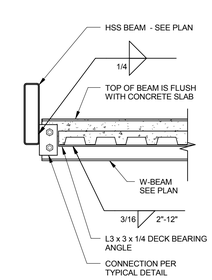

DETAIL A5 S404
SCALE : NONE

VCBO
ARCHITECTURE
VALENTINER
CRANE
BRUNJES
ONYON

PROFESSIONAL STRUCTURAL ENGINEER
Jeremy A. Achter
No. 353467
10.2.12
STATE OF UTAH

VCBO ARCHITECTURE
524 SOUTH 600 EAST
SALT LAKE CITY, UT 84102
Phone: (801) 575-8800
Fax: (801) 531-9850
WWW: www.vcbo.com

DFCM CODE COMPLIANCE STAMP

ARW ENGINEERS
structural consultants
15594 W. Park Dr. Ogden, Utah 84404
ph: 801.782.6008 fl: 801.782.6056

Student Activity Center
Stromberg Addition - BID SET
Weber State University
3750 Harrison Blvd. Ogden, UT 84408

Rev #	Date	Description
1	10/12/2012	ADD #2

Job # 12475
CAD File
Drawn BLP Checked JLA
Date 10.03.2012
Owner # DFCM #12031810

DETAILS

S404

10/12/2012 2:50:21 PM

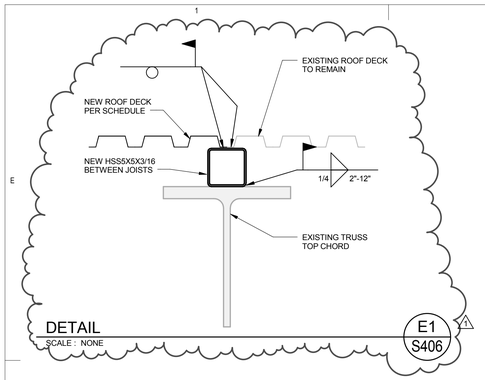

DETAIL E1/S406
SCALE : NONE

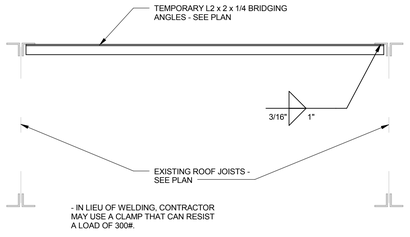

DETAIL E2/S406
SCALE : NONE

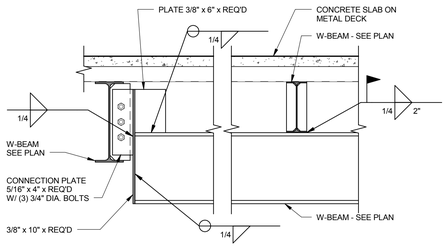

DETAIL E3/S406
SCALE : NONE

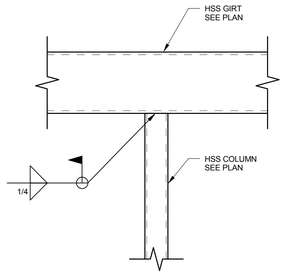

DETAIL E4/S406
SCALE : NONE

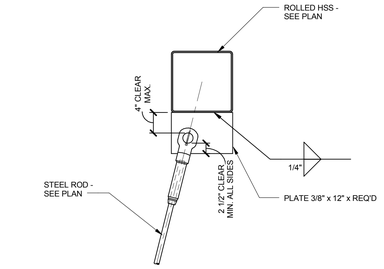

TYPICAL TRACK CORNER HANGER DETAIL E5/S406
SCALE : NONE

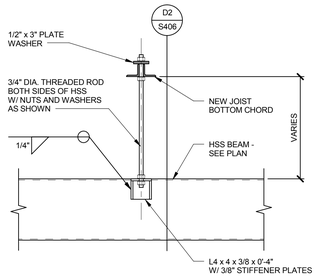

TYPICAL ROLLED HSS CONNECTION DETAIL D1/S406
SCALE : NONE

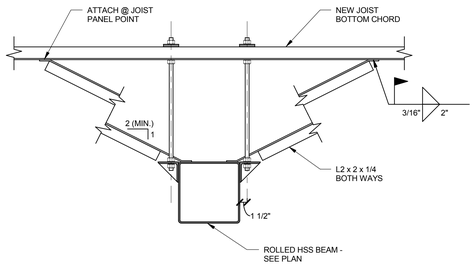

TYPICAL ROLLED HSS CONNECTION DETAIL D2/S406
SCALE : NONE

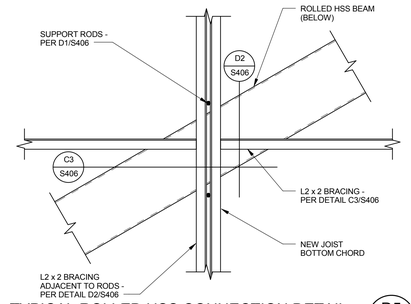

TYPICAL ROLLED HSS CONNECTION DETAIL D5/S406
SCALE : NONE

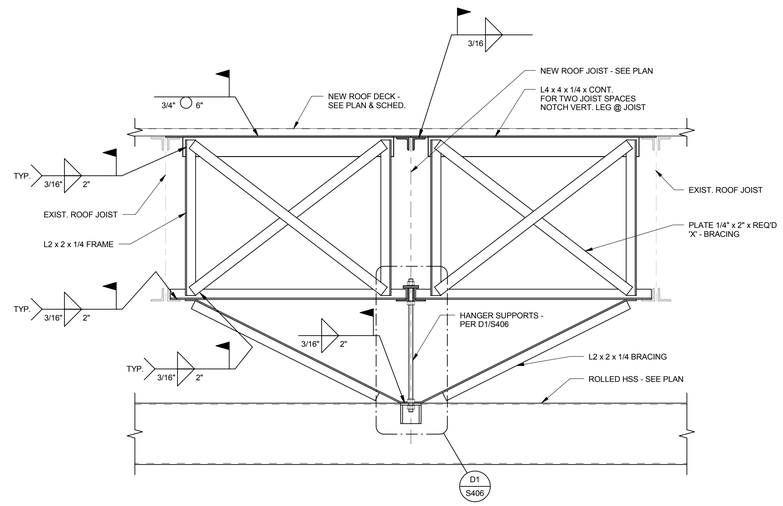

TYPICAL ROLLED HSS CONNECTION DETAIL C3/S406
SCALE : NONE

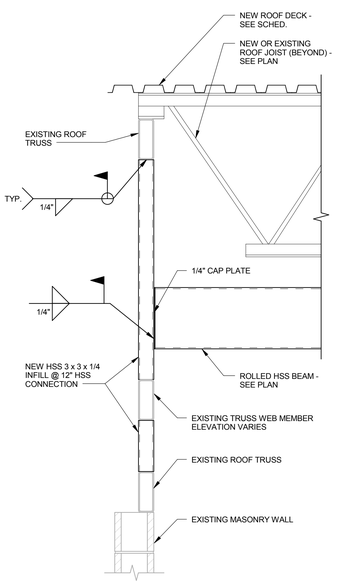

DETAIL B1/S406
SCALE : NONE

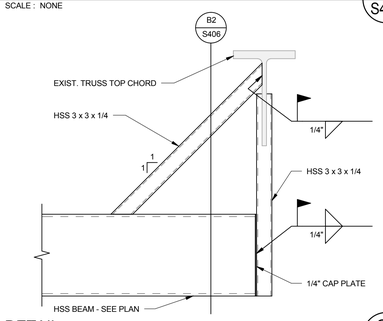

DETAIL C2/S406
SCALE : NONE

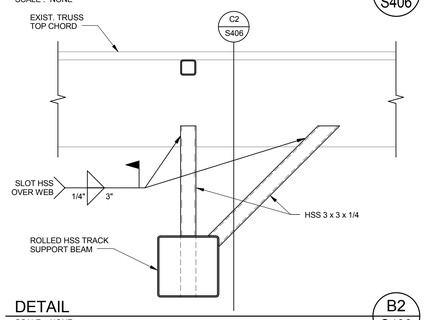

DETAIL B2/S406
SCALE : NONE

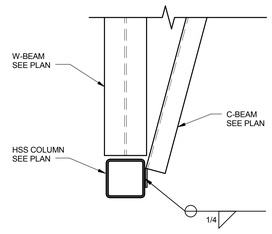

DETAIL B3/S406
SCALE : NONE

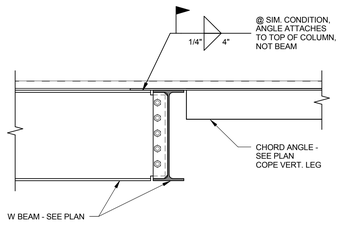

DETAIL B4/S406
SCALE : NONE

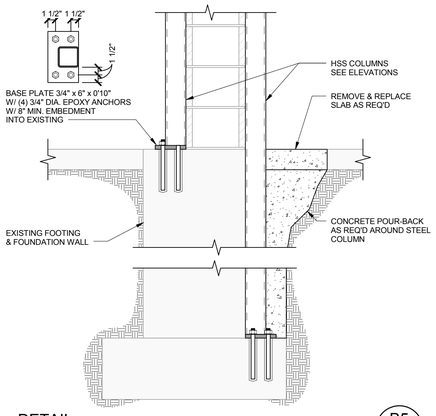

DETAIL B5/S406
SCALE : NONE

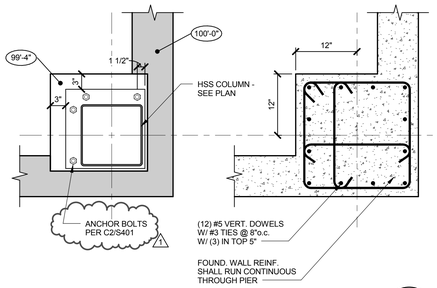

DETAIL A1/S406
SCALE : NONE

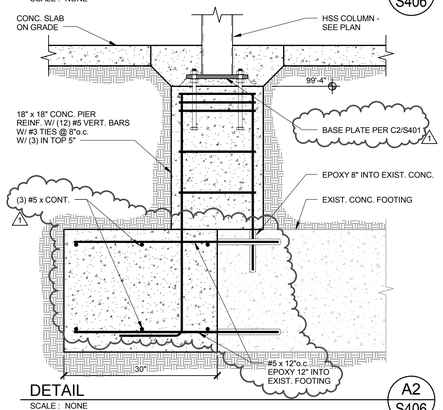

DETAIL A2/S406
SCALE : NONE

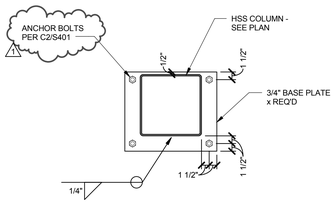

DETAIL A3/S406
SCALE : NONE

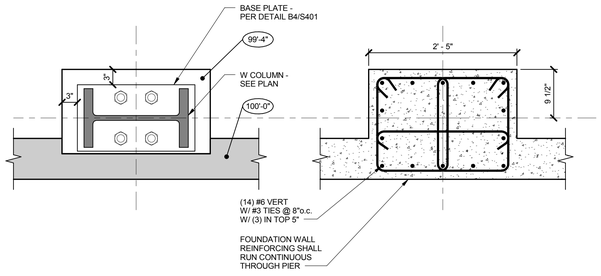

DETAIL A4/S406
SCALE : NONE

VCBO
ARCHITECTURE
VALENTINER
CRANE
BRUNJES
ONYON

PROFESSIONAL STRUCTURAL ENGINEER
Jeremy A. Achter
No. 353467
10.2.12
STATE OF UTAH

VCBO ARCHITECTURE
524 SOUTH 600 EAST
SALT LAKE CITY, UT 84102
Phone: (801) 575-8800
Fax: (801) 531-9850
WWW: www.vcbo.com

DFCM CODE COMPLIANCE STAMP

ARW ENGINEERS
structural consultants
1556 W. Park Dr. Ogden, Utah 84404
ph: 801.782.6008 fl. 801-782-6056

Student Activity Center
Stromberg Addition - BID SET
Weber State University
3750 Harrison Blvd. Ogden, UT 84408

Rev #	Date	Description
1	10/12/2012	ADD #2

Job # 12475
CAD File
Drawn BLP Checked JLA
Date 10.03.2012
Owner # DFCM #12031810

DETAILS

S406

10/12/2012 2:50:23 PM

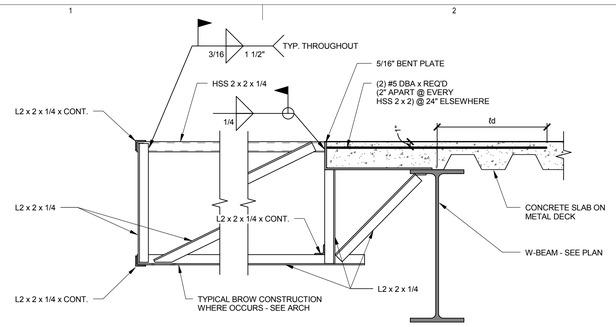

DETAIL
SCALE : NONE
E1 / S407

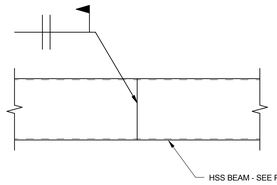

DETAIL
SCALE : NONE
E3 / S407

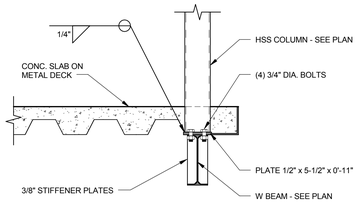

DETAIL
SCALE : NONE
E4 / S407

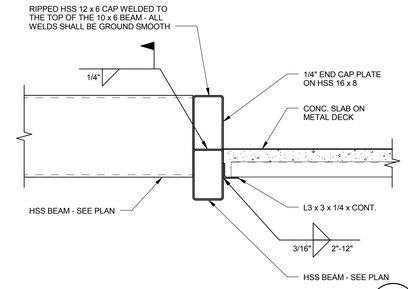

DETAIL
SCALE : NONE
E5 / S407

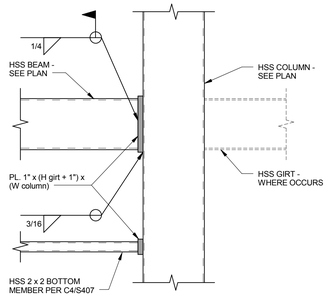

DETAIL
SCALE : NONE
D1 / S407

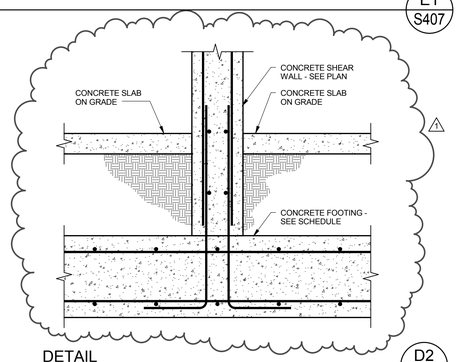

DETAIL
SCALE : NONE
D2 / S407

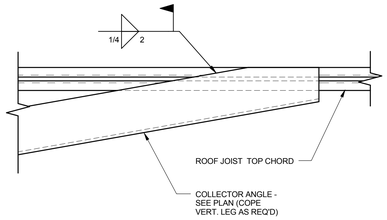

DETAIL
SCALE : NONE
D3 / S407

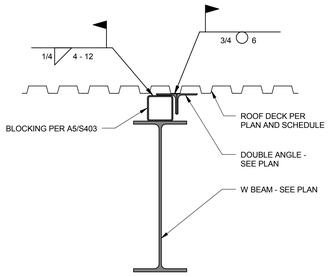

DETAIL
SCALE : NONE
D4 / S407

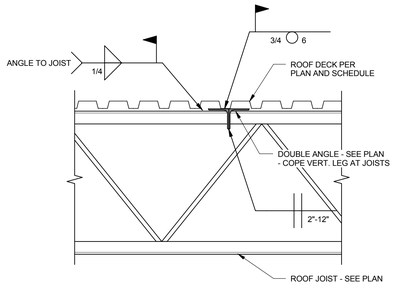

DETAIL
SCALE : NONE
D5 / S407

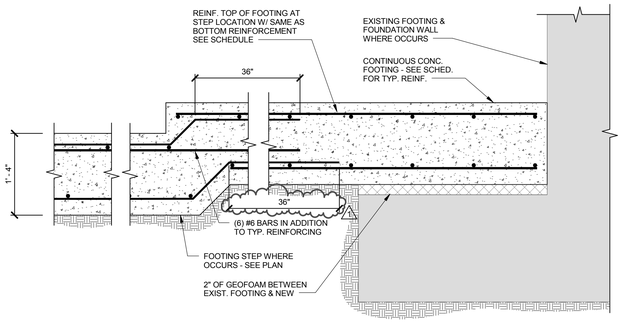

DETAIL
SCALE : NONE
C1 / S407

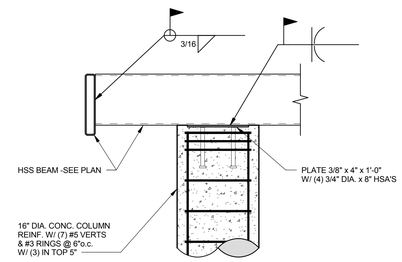

DETAIL
SCALE : NONE
C3 / S407

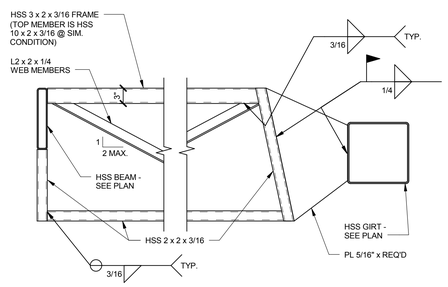

DETAIL
SCALE : NONE
C4 / S407

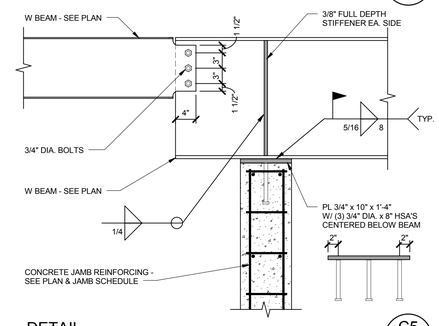

DETAIL
SCALE : NONE
C5 / S407

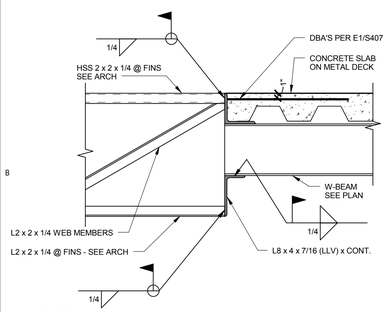

DETAIL
SCALE : NONE
B1 / S407

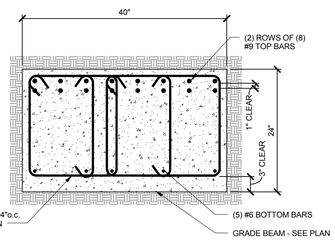

DETAIL
SCALE : NONE
A1 / S407

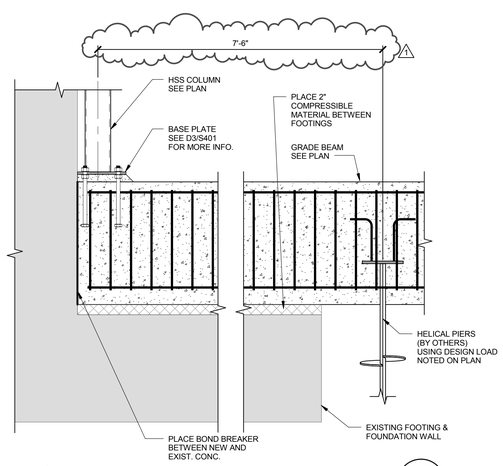

DETAIL
SCALE : NONE
A2 / S407

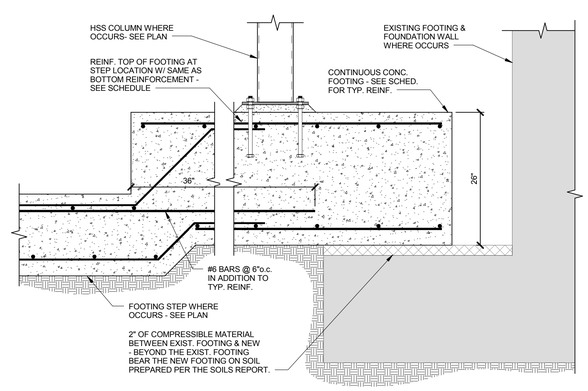

DETAIL
SCALE : NONE
A3 / S407

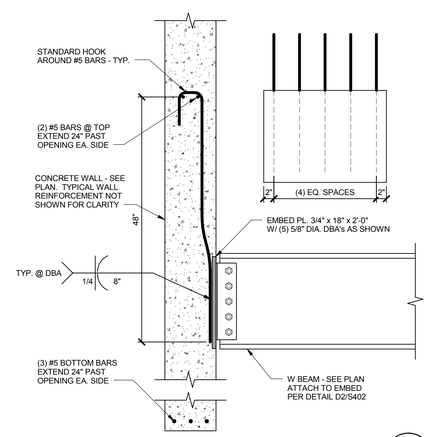

DETAIL
SCALE : NONE
A5 / S407

10/12/2012 2:50:25 PM

VCBO
ARCHITECTURE
VALENTINER
CRANE
BRUNJES
ONYON

PROFESSIONAL STRUCTURAL ENGINEER
Jeremy L. Achter
No. 353467
10.12.12
STATE OF UTAH

VCBO ARCHITECTURE
524 SOUTH 600 EAST
SALT LAKE CITY, UT 84102
Phone: (801) 575-8800
Fax: (801) 531-9850
WWW: www.vcbo.com

DFCM CODE COMPLIANCE STAMP

ARW ENGINEERS
structural consultants
1594 W. Pierpont Dr. Ogden, Utah 84404
ph: 801.782.8008 fx: 801.782.4656

Student Activity Center
Stromberg Addition - BID SET
Weber State University
3750 Harrison Blvd. Ogden, UT 84408

Rev #	Date	Description
1	10/12/2012	ADD #2

Job # 12475
CAD File
Drawn BLP Checked JLA
Date 10.03.2012
Owner # DFCM #12031810

DETAILS

S407

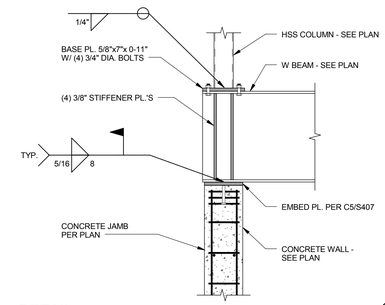

DETAIL C1/S408
SCALE : NONE

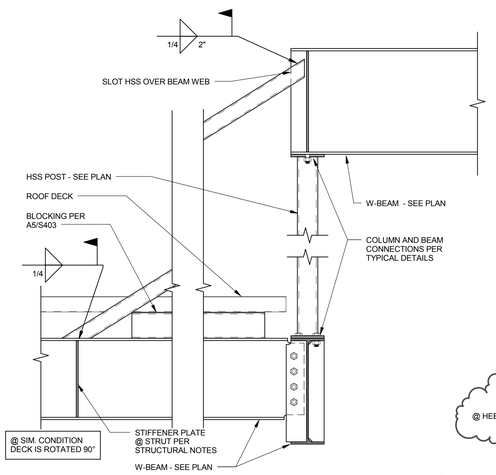

DETAIL C2/S408
SCALE : NONE

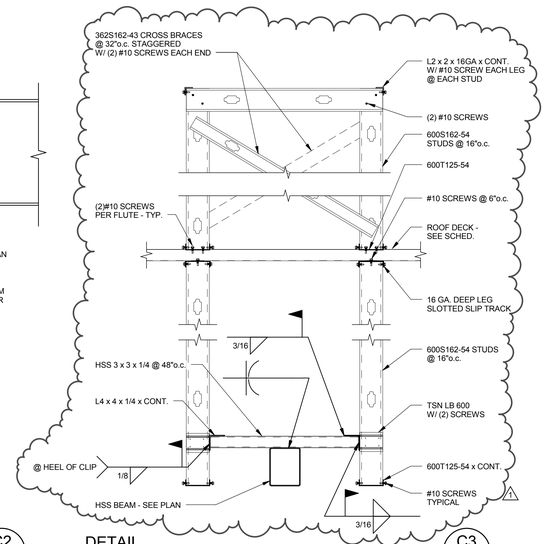

DETAIL C3/S408
SCALE : NONE

TYPICAL ELEVATOR COLUMN @
SUSPENDED SLAB

SCALE : NONE

B5/S408

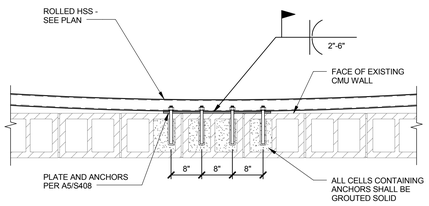

DETAIL B1/S408
SCALE : NONE

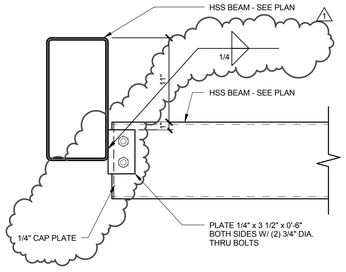

DETAIL B2/S408
SCALE : NONE

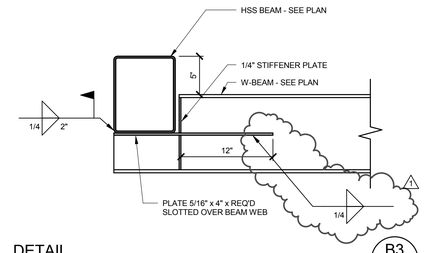

DETAIL B3/S408
SCALE : NONE

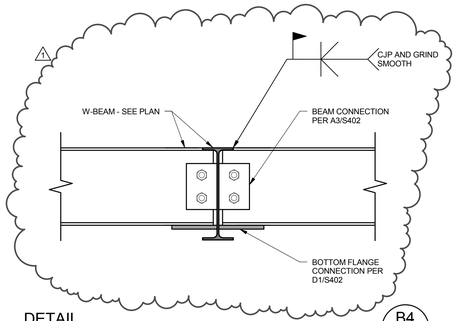

DETAIL B4/S408
SCALE : NONE

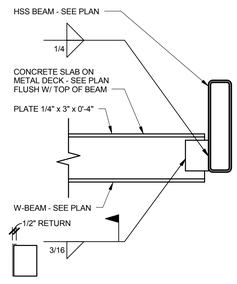

DETAIL A1/S408
SCALE : NONE

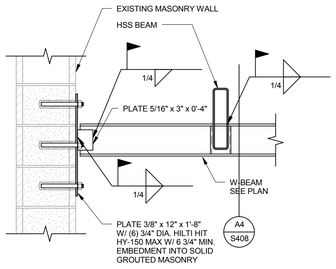

DETAIL A2/S408
SCALE : NONE

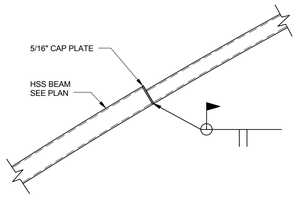

DETAIL A3/S408
SCALE : NONE

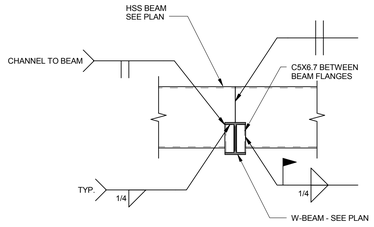

DETAIL A4/S408
SCALE : NONE

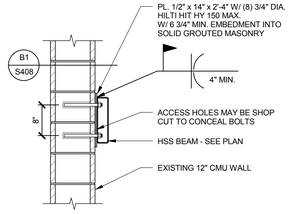

DETAIL A5/S408
SCALE : NONE

VCBO
ARCHITECTURE
VALENTINER
CRANE
BRUNJES
ONYON

PROFESSIONAL STRUCTURAL ENGINEER
Jeremy A. Achter
No. 353467
10.2.12
STATE OF UTAH

VCBO ARCHITECTURE
524 SOUTH 600 EAST
SALT LAKE CITY, UT 84102
Phone: (801) 575-8800
Fax: (801) 531-9850
WWW: www.vcbo.com

DFCM CODE COMPLIANCE STAMP

ARW ENGINEERS
structural consultants
15984 W. Park Dr. Ogden, Utah 84404
ph: 801.782.6008 fl: 801-782-4656

Student Activity Center
Stromberg Addition - BID SET
Weber State University
3750 Harrison Blvd. Ogden, UT 84408

Rev #	Date	Description
1	10/12/2012	ADD #2

Job # 12475
CAD File
Drawn BLP Checked JLA
Date 10.03.2012
Owner # DFCM #12031810

DETAILS

S408

10/12/2012 2:50:26 PM

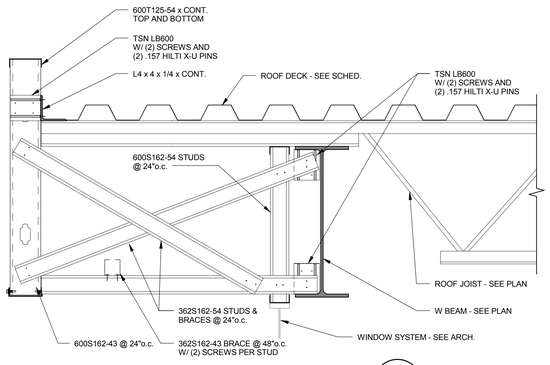

DETAIL
SCALE : NONE
D1 / S409

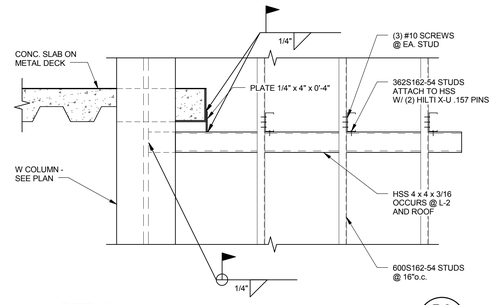

DETAIL
SCALE : NONE
D3 / S409

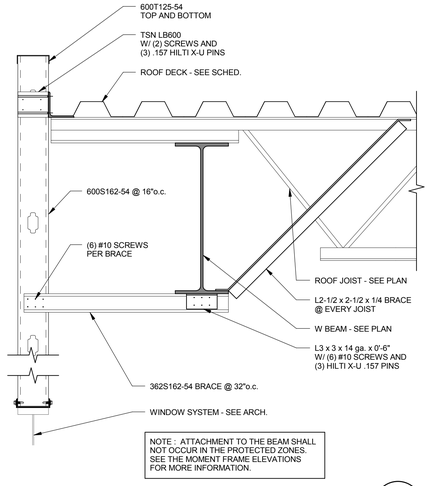

NOTE : ATTACHMENT TO THE BEAM SHALL NOT OCCUR IN THE PROTECTED ZONES. SEE THE MOMENT FRAME ELEVATIONS FOR MORE INFORMATION.

DETAIL
SCALE : NONE
D4 / S409

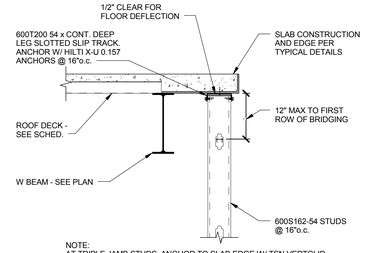

NOTE:
AT TRIPLE JAMB STUDS, ANCHOR TO SLAB EDGE W/ TSN VERTCLIP SL600 W/ (2) SCREWS @ 2 OF 3 STUDS. ATTACH TO BENT PL W/ (2) HILTI X-U 0.157 ANCHORS.

DETAIL
SCALE : NONE
D5 / S409

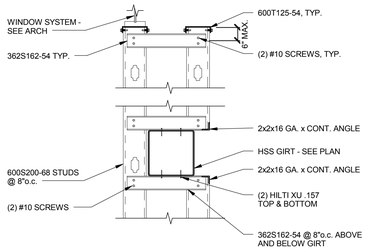

DETAIL
SCALE : NONE
C1 / S409

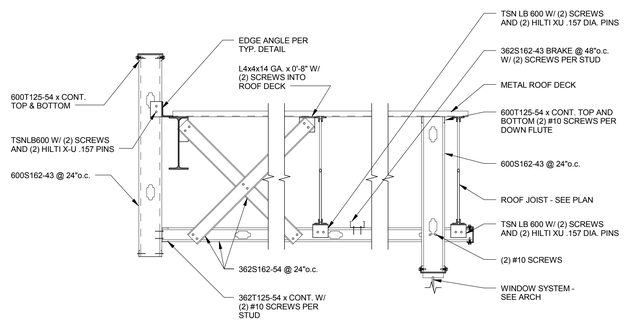

DETAIL
SCALE : NONE
C2 / S409

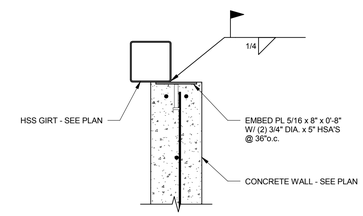

DETAIL
SCALE : NONE
C4 / S409

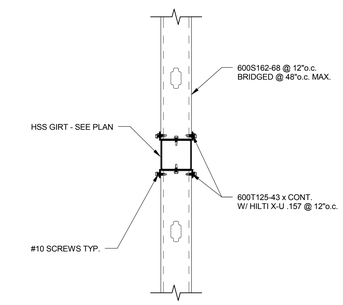

DETAIL
SCALE : NONE
C5 / S409

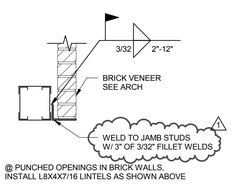

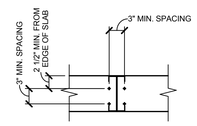

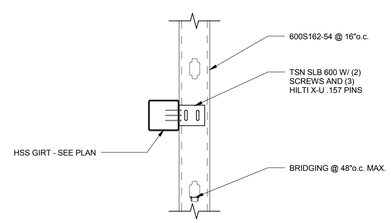

DETAIL
SCALE : NONE
B5 / S409

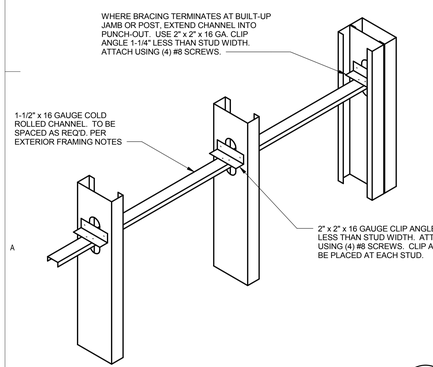

TYP. LATERAL BRACING / BRIDGING
SCALE : NONE
A1 / S409

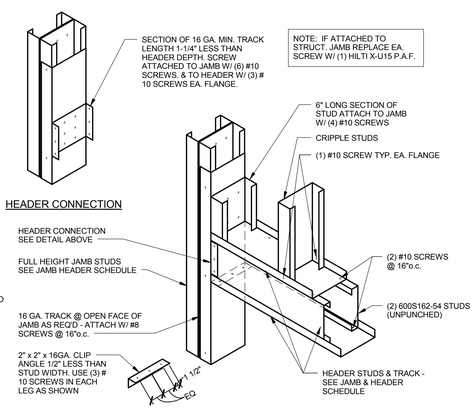

NOTE: IF ATTACHED TO STRUCT. JAMB REPLACE EA. SCREW W/ (1) HILTI X-U15 P.A.F.

TYP. BOX HEADER CONNECTION
SCALE : NONE
A2 / S409

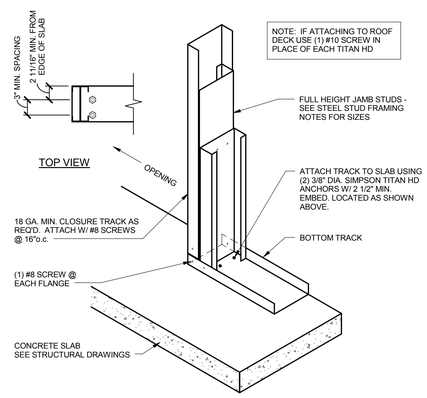

NOTE: IF ATTACHING TO ROOF DECK USE (1) #10 SCREW IN PLACE OF EACH TITAN HD

DOOR JAMB ANCHORAGE
SCALE : NONE
A3 / S409

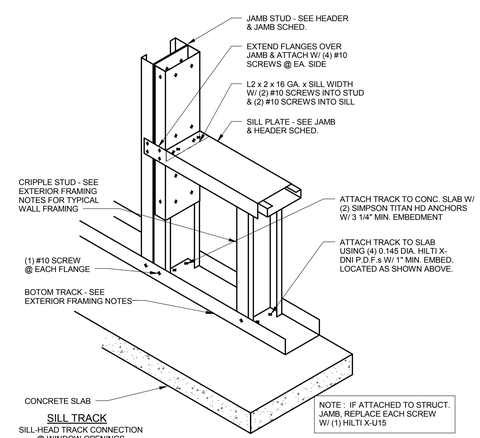

NOTE : IF ATTACHED TO STRUCT. JAMB, REPLACE EACH SCREW W/ (1) HILTI X-U15

SILL TRACK CONNECTION @ WINDOW OPENINGS
SCALE : NONE
A4 / S409

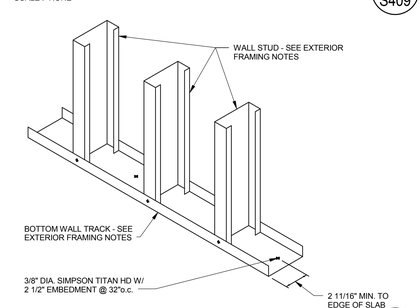

DETAIL
SCALE : NONE
A5 / S409

VCBO
ARCHITECTURE
VALENTINER
CRANE
BRUNJES
ONYON

PROFESSIONAL STRUCTURAL ENGINEER
Jeremy A. Achter
No. 353467
10.2.12
STATE OF UTAH

VCBO ARCHITECTURE
524 SOUTH 600 EAST
SALT LAKE CITY, UT 84102
Phone: (801) 575-8800
Fax: (801) 531-9850
WWW: www.vcbo.com

DFCM CODE COMPLIANCE STAMP

ARW ENGINEERS
structural consultants
1556 W. Park Dr. Ogden, Utah 84404
ph: 801.782.6008 fl. 801-782-6056

Student Activity Center
Stromberg Addition - BID SET
Weber State University
3750 Harrison Blvd. Ogden, UT 84408

Rev #	Date	Description
1	10/12/2012	ADD #2

Job # 12475
CAD File
Drawn BLP Checked JLA
Date 10.03.2012
Owner # DFCM #12031810

METAL STUD FRAMING DETAILS

S409

10/12/2012 2:50:28 PM

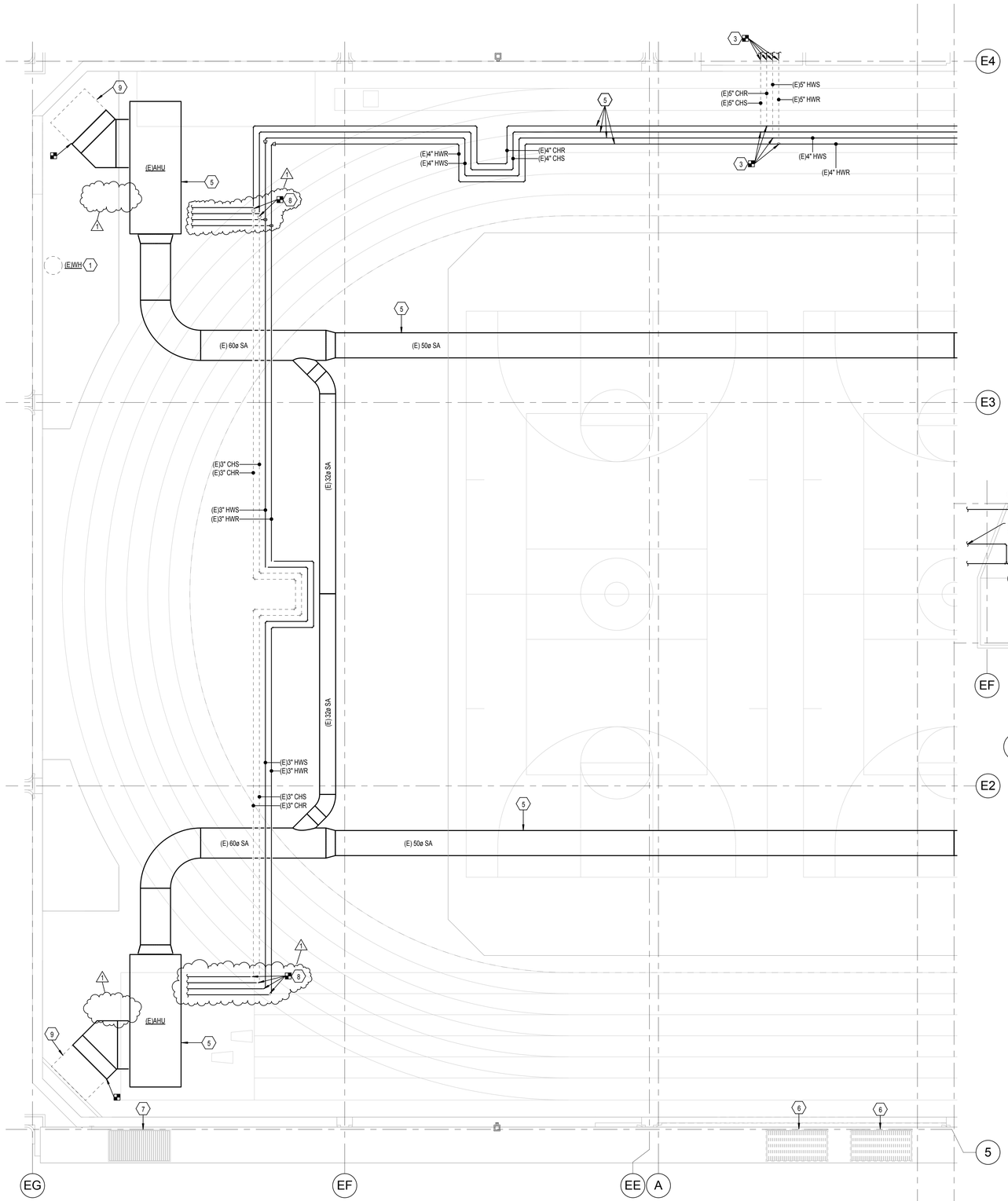

SECOND FLOOR AREA A MECHANICAL & PLUMBING DEMOLITION PLAN

1 SCALE: 1/8" = 1'-0"

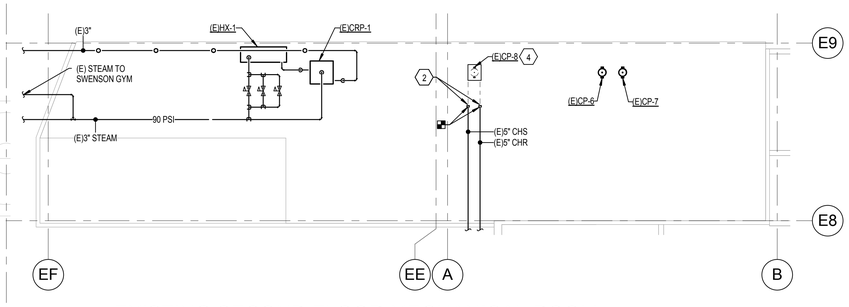

EXISTING SECOND FLOOR MECHANICAL ROOM DEMOLITION PLAN

2 SCALE: 1/8" = 1'-0"

KEYED NOTES

1. REMOVE EXISTING WATER HEATER ABOVE EXISTING SPACE. CAP MAINS.
2. DISCONNECT CHILLED WATER PIPE AS SHOWN.
3. DISCONNECT EXISTING CHILLED SUPPLY AND RETURN, AND HOT SUPPLY AND RETURN PIPING. SEE SHEET M125.1 FOR NEW PIPE.
4. DEMOLISH EXISTING CHILLED WATER PUMP AND REPLACE WITH NEW. COORDINATE PUMP DEMOLITION DURING NON-COOLING DAYS AS TO NOT INTERRUPT SERVICE.
5. EXISTING AIR HANDLER TO REMAIN AS IS.
6. DEMOLISH EXISTING LOUVER AS SHOWN. PATCH AND REPAIR OPENING AS NECESSARY TO MATCH EXISTING FACADE.
7. EXISTING LOUVER TO REMAIN.
8. DEMOLISH EXISTING PIPING AS SHOWN AND CAP FOR FUTURE CONNECTION.
9. REMOVE EXISTING RETURN GRILLE AND DUCT AS SHOWN.

GENERAL NOTES

A. ALL EXISTING SHOWN DARK AND SOLID TO REMAIN. ALL ITEMS SHOWN LIGHT AND DASHED TO BE REMOVED.

VCBO ARCHITECTURE
VALENTINER CRANE BRUNJES ONYON

VCBO ARCHITECTURE
524 SOUTH 600 EAST
SALT LAKE CITY, UT 84102
Phone: (801) 575-8800
Fax: (801) 531-9850
WWW: www.vcbo.com

DFCM CODE COMPLIANCE STAMP

Student Activity Center

Stromberg Addition - BID SET

Weber State University
3750 Harrison Blvd. Ogden, UT 84408

Rev #	Date	Description
1	10.12.2012	Addendum 2

Stephen G. Corbett
Reg. No. 187524
10/09/2012
Professional Engineer
State of Utah

Colvin Engineering Associates, Inc.
244 West 300 North Suite 200
Salt Lake City, Utah 84103
Phone: (801) 322-2400 / Fax: (801) 322-2416

Job # 2012-033.00
CAD File
Drawn TCF Checked BRC
Date 10.03.2012
Owner # DFCM #12031810

SECOND FLOOR AREA A & MECHANICAL ROOM MECHANICAL DEMOLITION PLAN

M121.1D

Copyright (C) 2012 by Colvin Engineering Associates, Inc. Salt Lake City, Utah. All rights reserved. Unauthorized copying and/or use is illegal and subject to prosecution.

10/15/2012 7:10:14 AM

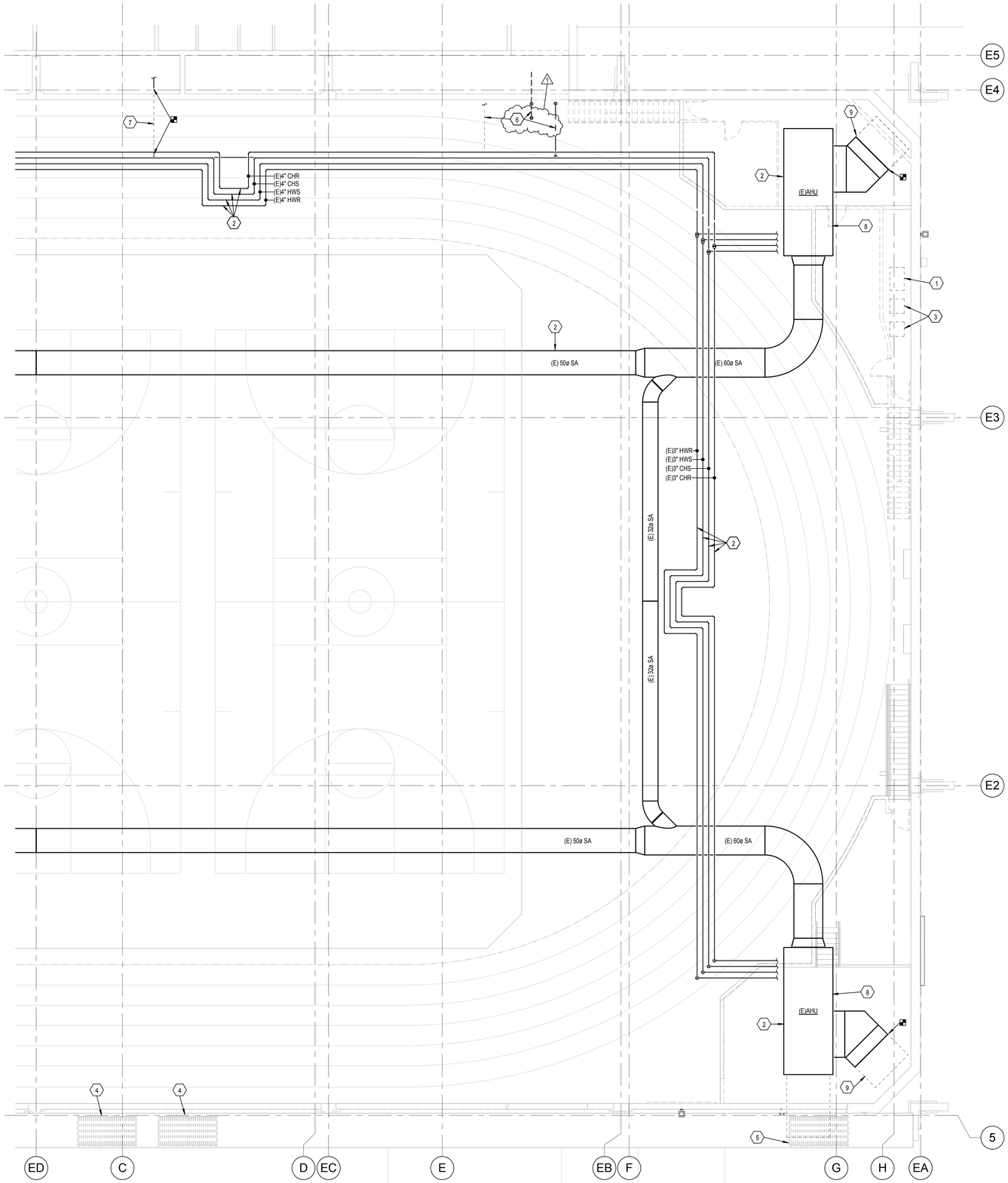

SECOND FLOOR AREA B MECHANICAL & PLUMBING DEMOLITION PLAN

1 SCALE: 1/8" = 1'-0"

6' 0' 4' 8' 12' 16'

KEYED NOTES

1. REMOVE EXISTING WATER HEATER ABOVE EXISTING SPACE. CAP MAINS.
2. EXISTING AIR HANDLER TO REMAIN AS IS.
3. SEE ELECTRICAL PLANS.
4. DEMOLISH EXISTING LOUVER AS SHOWN. PATCH AND REPAIR OPENING AS NECESSARY TO MATCH EXISTING FACADE.
5. DEMOLISH EXISTING LOUVER AND ASSOCIATED DUCTWORK.
6. REMOVE AND RELOCATE EXISTING VENT AND DOMESTIC PIPE IN CONFLICT WITH NEW TRACK. RELOCATE AS REQUIRED ON SITE TO MAINTAIN SERVICE.
7. DISCONNECT EXISTING DOMESTIC COLD WATER. ROUTE NEW PIPE, SAME SIZE, IN NEW FURRED AREA WITH HYDRONIC PIPE.
8. PROVIDE NEW CONTROLS TO REPLACE EXISTING, SERVING AIR HANDLER.
9. REMOVE EXISTING RETURN GRILLE AND DUCT AS SHOWN.

GENERAL NOTES

A. ALL EXISTING SHOWN DARK AND SOLID TO REMAIN, ALL ITEMS SHOWN LIGHT AND DASHED TO BE REMOVED.

VCBO
ARCHITECTURE
VALENTINER
CRANE
BRUNJES
ONYON

VCBO ARCHITECTURE
524 SOUTH 600 EAST
SALT LAKE CITY, UT 84102
Phone: (801) 575-8800
Fax: (801) 531-9850
WWW: www.vcbo.com

DFCM CODE COMPLIANCE STAMP

Student Activity Center
Stromberg Addition - BID SET
Weber State University
3750 Harrison Blvd. Ogden, UT 84408

Rev #	Date	Description
1	10.12.2012	Addendum 2

Stephen G. Crozier
Licensed Professional Engineer
No. 167524
10/3/2012
Signature Date
State of Utah

Colvin Engineering Associates, Inc.
244 West 300 North Suite 200
Salt Lake City, Utah 84103
Phone: (801) 322-2400 / Fax: (801) 322-2416

Job # 2012-033.00
CAD File
Drawn TCF Checked BRC
Date 10.03.2012
Owner # DFCM #12031810

SECOND FLOOR AREA B MECHANICAL & PLUMBING DEMOLITION PLAN

M122.1D

Copyright (C) 2012 by Colvin Engineering Associates, Inc. Salt Lake City, Utah. All rights reserved. Unauthorized copying and/or use is illegal and subject to prosecution.

10/15/2012 7:10:19 AM

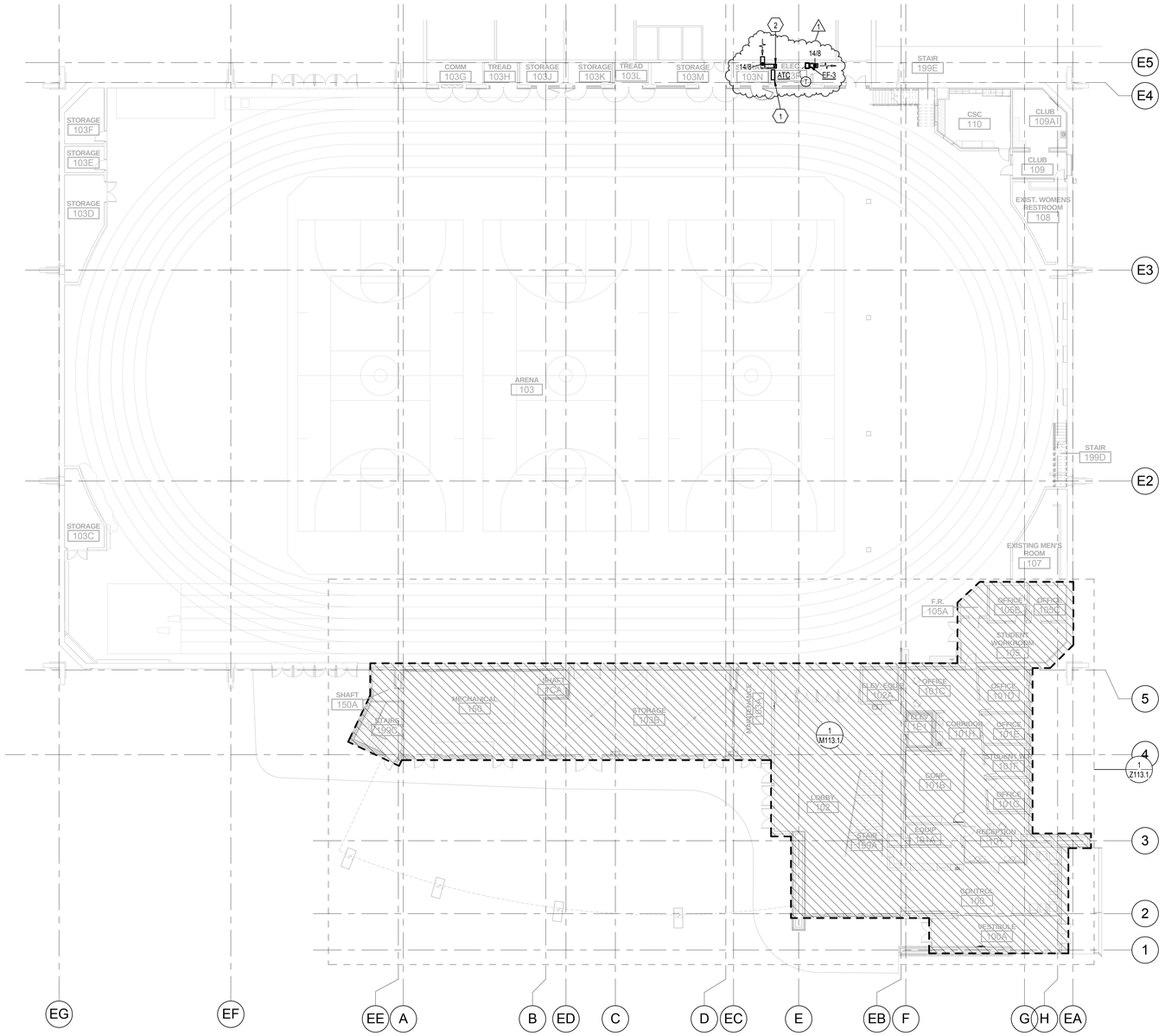

1 FIRST FLOOR OVERALL MECHANICAL PLAN

SCALE: 1/16" = 1'-0"

12' 0' 8' 16' 24' 32'

KEYED NOTES

1 NEW LOCATION OF RELOCATED ATC PANEL AND CONTROLS.

2 DROP DUCT DOWN AND OPEN AT 6" A.F.F.

GENERAL NOTES

A. NO DUCT OR PIPE TO RUN OVER ELECTRICAL PANEL.

B. FIRE/SMOKE DAMPER MOTORS AND MOTORIZED DAMPERS TO BE MOUNTED TO SIDE OF NEAREST CEILING ACCESS HATCH OR OPEN CEILING AREA. PROVIDE 24" X 24" DUCT ACCESS AS REQUIRED. TYPICAL.

C. COORDINATE DUCTWORK AND EQUIPMENT WITH ALL TRADES.

D. ROUTE 3/4" CONDENSATE DRAINS FOR ALL REQUIRED MECHANICAL EQUIPMENT TO NEAREST FLOOR DRAIN OR SERVICE SINK.

E. BUILDING EXPANSION JOINT AT GRID 5. PROVIDE FLEXIBLE CONNECTION TO MEET REQUIREMENTS.

F. PROVIDE A WATER TIGHT PAN THAT IS 2" DEEP AND 6" LARGER THAN ANY PLUMBING, MECHANICAL PIPING, OR MECHANICAL EQUIPMENT INSTALLED OVER ANY ELECTRICAL EQUIPMENT OR GEAR THAT IS UNAVOIDABLE.

G. DIFFUSERS ALONG GLASS TO BLOW TOWARD GLASS.

VCBO ARCHITECTURE
VALENTINER CRANE BRUNJES ONYON

VCBO ARCHITECTURE
524 SOUTH 600 EAST
SALT LAKE CITY, UT 84102
Phone: (801) 575-8800
Fax: (801) 531-9850
WWW: www.vcbo.com

DFCM CODE COMPLIANCE STAMP

Student Activity Center
Stromberg Addition - BID SET
Weber State University
3750 Harrison Blvd. Ogden, UT 84408

Rev #	Date	Description
1	10.12.2012	Addendum 2

Stephen G. Colvin
BRIAN R. CLAYSON
167524
10/3/2012
REGISTERED PROFESSIONAL ENGINEER
State of Utah

Colvin Engineering Associates, Inc.
244 West 300 North Suite 200
Salt Lake City, Utah 84103
Phone: (801) 322-2400 / Fax: (801) 322-2416

Job # 2012-033.00
CAD File
Drawn TCF Checked BRC
Date 10.03.2012
Owner # DFCM #12031810

FIRST FLOOR OVERALL MECHANICAL PLAN

M101

Copyright (C) 2012 by Colvin Engineering Associates, Inc. Salt Lake City, Utah. All rights reserved. Unauthorized copying and/or use is illegal and subject to prosecution.

10/15/2012 7:09:49 AM

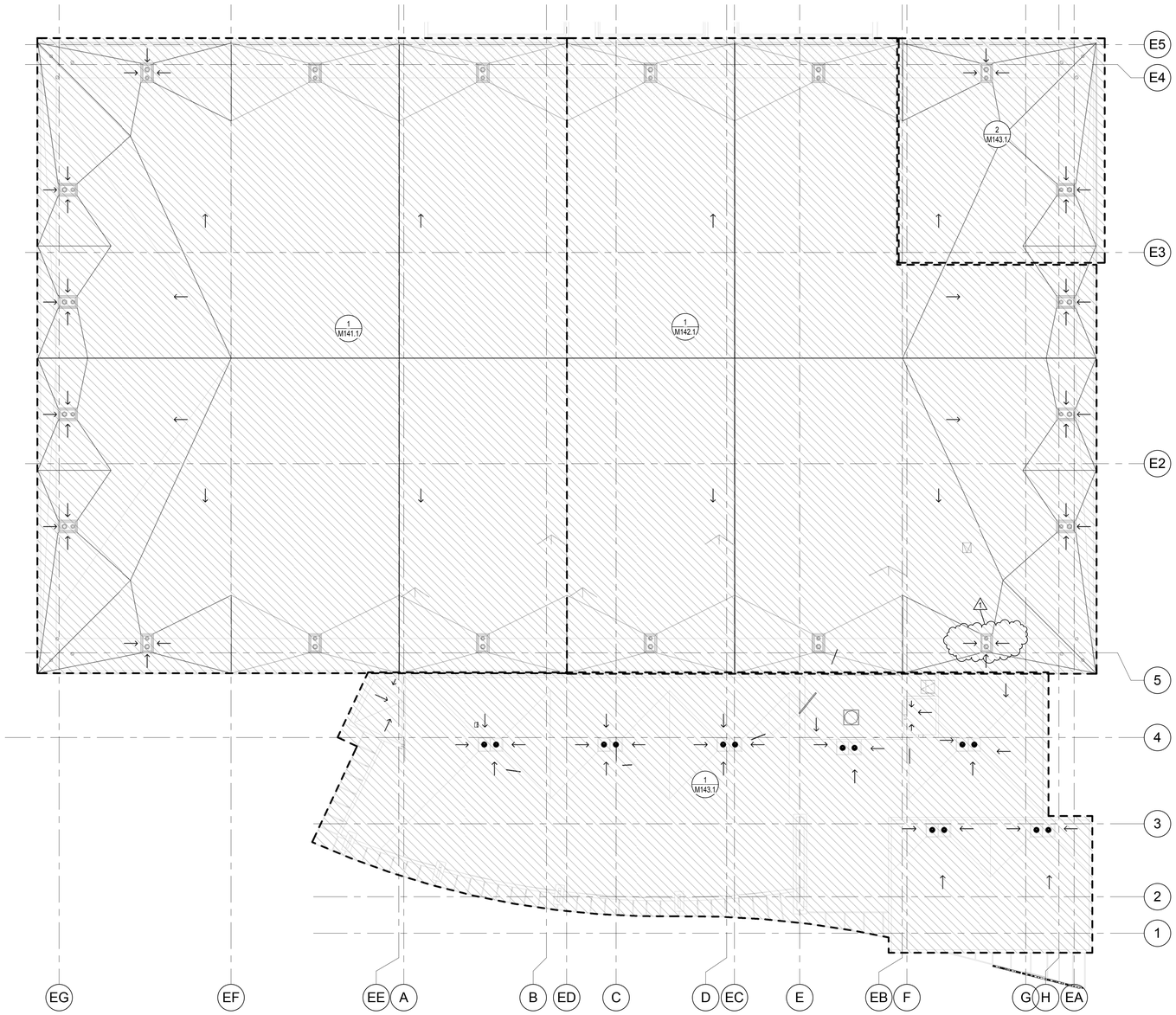

1 ROOF OVERALL MECHANICAL AND PLUMBING PLAN

SCALE: 1/16" = 1'-0"

12' 0' 8' 16' 24' 32'

GENERAL NOTES

A. NO DUCT OR PIPE TO RUN OVER ELECTRICAL PANEL.

B. FIRE/SMOKE DAMPER MOTORS AND MOTORIZED DAMPERS TO BE MOUNTED TO SIDE OF NEAREST CEILING ACCESS HATCH OR OPEN CEILING AREA. PROVIDE 24" X 24" DUCT ACCESS AS REQUIRED. TYPICAL.

C. COORDINATE DUCTWORK AND EQUIPMENT WITH ALL TRADES.

D. ROUTE 3/4" CONDENSATE DRAINS FOR ALL REQUIRED MECHANICAL EQUIPMENT TO NEAREST FLOOR DRAIN OR SERVICE SINK.

E. BUILDING EXPANSION JOINT AT GRID 5. PROVIDE FLEXIBLE CONNECTION TO MEET REQUIREMENTS.

F. PROVIDE A WATER TIGHT PAN THAT IS 2" DEEP AND 6" LARGER THAN ANY PLUMBING, MECHANICAL PIPING, OR MECHANICAL EQUIPMENT INSTALLED OVER ANY ELECTRICAL EQUIPMENT OR GEAR THAT IS UNAVOIDABLE.

G. DIFFUSERS ALONG GLASS TO BLOW TOWARD GLASS.

VCBO
ARCHITECTURE
VALENTINER
CRANE
BRUNJES
ONYON

VCBO ARCHITECTURE
524 SOUTH 600 EAST
SALT LAKE CITY, UT 84102
Phone: (801) 575-8800
Fax: (801) 531-9850
WWW: www.vcbo.com

DFCM CODE COMPLIANCE STAMP

Student Activity Center
Stromberg Addition - BID SET
Weber State University
3750 Harrison Blvd. Ogden, UT 84408

Rev #	Date	Description
1	10.12.2012	Addendum 2

Stephen G. Conner
T.C.
187524
10/3/2012
Registered Professional Engineer
State of Utah

Colvin Engineering Associates, Inc.
244 West 300 North Suite 200
Salt Lake City, Utah 84103
Phone: (801) 322-2400 / Fax: (801) 322-2416

Job # 2012-033.00
CAD File
Drawn TCF Checked BRC
Date 10.03.2012
Owner # DFCM #12031810

ROOF OVERALL MECHANICAL AND PLUMBING PLAN

M104

Copyright (C) 2012 by Colvin Engineering Associates, Inc. Salt Lake City, Utah. All rights reserved. Unauthorized copying and/or use is illegal and subject to prosecution.

10/15/2012 7:09:59 AM

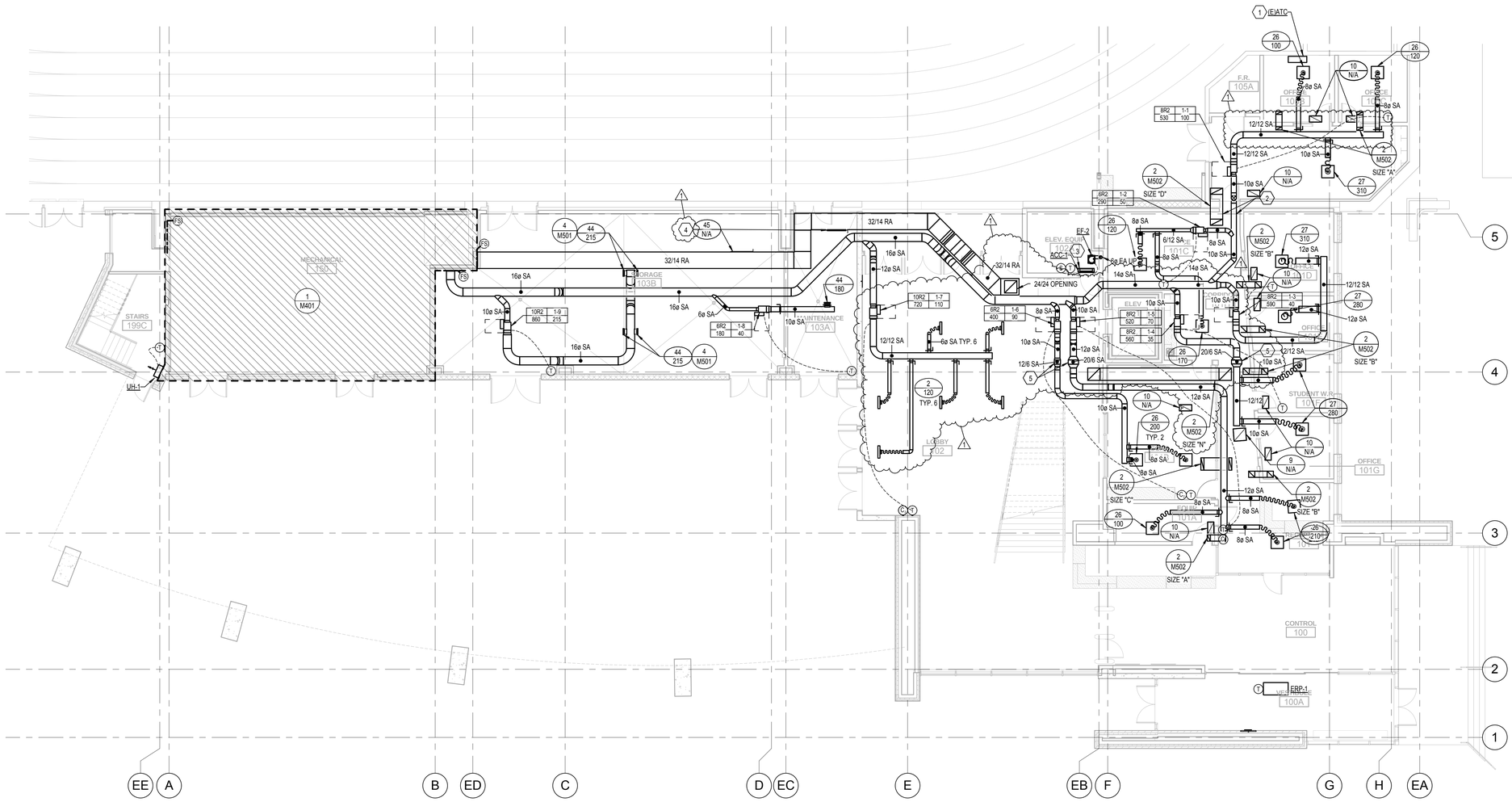

1 FIRST FLOOR AREA C MECHANICAL PLAN

SCALE: 1/8" = 1'-0"

KEYED NOTES

1. RELOCATE EXISTING ATC PANEL AND ALL CONTROLS TO SECOND FLOOR EXISTING STORAGE ROOM 209A. SEE SHEET M123.1.
2. PROVIDE EXPANSION JOINT AT THIS LOCATION.
3. KEEP UNIT FROM ABOVE ANY ELEVATOR EQUIPMENT. ROUTE CONDENSATE TO TAILPIECE OF S-1 IN CORRIDOR 101H.
4. PROVIDE DIFFUSER / GRILL WITH OPPOSED BLADE DAMPER IN FACE FOR BALANCING.
5. DUCT SLICE BELOW BEAM. DUCT SLICE ONLY TO BE UNLINED.

GENERAL NOTES

A. NO DUCT OR PIPE TO RUN OVER ELECTRICAL PANEL.

B. FIRE/SMOKE DAMPER MOTORS AND MOTORIZED DAMPERS TO BE MOUNTED TO SIDE OF NEAREST CEILING ACCESS HATCH OR OPEN CEILING AREA. PROVIDE 24" X 24" DUCT ACCESS AS REQUIRED. TYPICAL.

C. COORDINATE DUCTWORK AND EQUIPMENT WITH ALL TRADES.

D. ROUTE 3/4" CONDENSATE DRAINS FOR ALL REQUIRED MECHANICAL EQUIPMENT TO NEAREST FLOOR DRAIN OR SERVICE SINK.

E. BUILDING EXPANSION JOINT AT GRID 5. PROVIDE FLEXIBLE CONNECTION TO MEET REQUIREMENTS.

F. PROVIDE A WATER TIGHT PAN THAT IS 2" DEEP AND 6" LARGER THAN ANY PLUMBING, MECHANICAL PIPING, OR MECHANICAL EQUIPMENT INSTALLED OVER ANY ELECTRICAL EQUIPMENT OR GEAR THAT IS UNAVOIDABLE.

G. DIFFUSERS ALONG GLASS TO BLOW TOWARD GLASS.

VCBO
ARCHITECTURE
VALENTINER
CRANE
BRUNJES
ONYON

VCBO ARCHITECTURE
524 SOUTH 600 EAST
SALT LAKE CITY, UT 84102
Phone: (801) 575-8800
Fax: (801) 531-9850
WWW: www.vcbo.com

DFCM CODE COMPLIANCE STAMP

Student Activity Center
Stromberg Addition - BID SET
Weber State University
3750 Harrison Blvd. Ogden, UT 84408

Rev #	Date	Description
1	10.12.2012	Addendum 2

Stephen G. Colvin
Registered Professional Engineer
167524
10/3/2012
Utah
State of Utah

Colvin Engineering Associates, Inc.
244 West 300 North Suite 200
Salt Lake City, Utah 84103
Phone: (801) 322-2400 / Fax: (801) 322-2416

Job # 2012-033.00
CAD File
Drawn TCF Checked BRC
Date 10.03.2012
Owner # DFCM #12031810

FIRST FLOOR AREA C
MECHANICAL PLAN

M113.1

Copyright (C) 2012 by Colvin Engineering Associates, Inc. Salt Lake City, Utah. All rights reserved. Unauthorized copying and/or use is illegal and subject to prosecution.

10/15/2012 7:10:06 AM

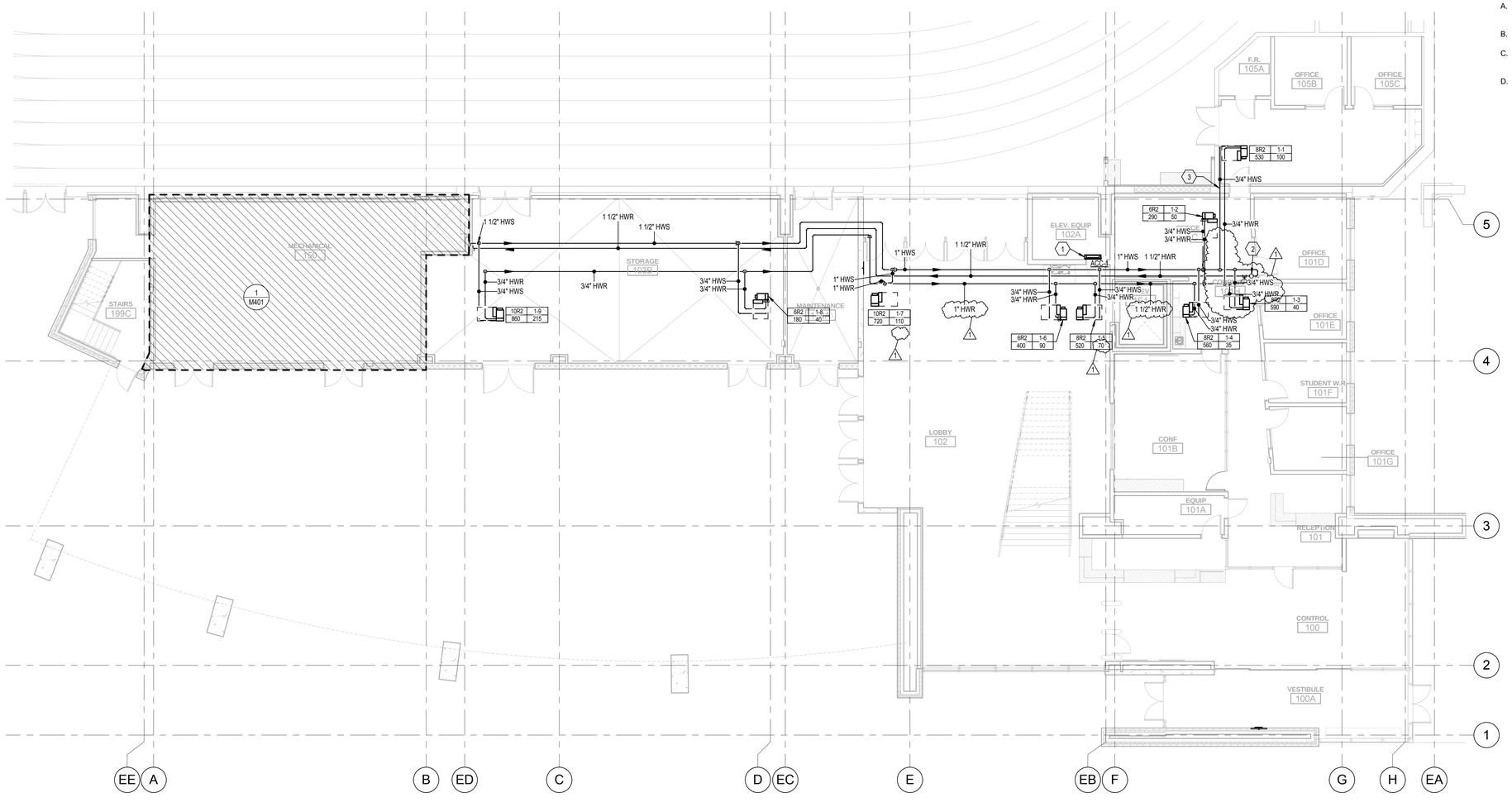

1 FIRST FLOOR AREA C MECHANICAL PIPING PLAN

SCALE: 1/8" = 1'-0"

6' 0' 4' 8' 12' 16'

KEYED NOTES

1. REFER TO DETAIL 1/ M503 FOR REFRIGERANT PIPING SCHEMATIC. CONTRACTOR TO COORDINATE PIPING WITH DETAIL AND MANUFACTURERS REQUIREMENTS.
2. OPEN VALVE SLIGHTLY TO ALLOW 2 GPM TO MAINTAIN FLOW.
3. PROVIDE EXPANSION JOINT AT THIS LOCATION.

GENERAL NOTES

A. CONTRACTOR TO COORDINATE HEATING WATER SUPPLY AND RETURN PIPE ROUTING WITH ALL OTHER TRADES.

B. SEE REQUIRED DETAIL OF PIPE SLEEVE FOR INSULATED PIPE THRU WALL ON 11/ P501.

C. CONTRACTOR TO COORDINATE THE ELEVATOR EQUIPMENT AND ELECTRICAL ROOM AREAS TO NOT CONTAIN ANY PIPE ROUTING ABOVE.

D. BUILDING EXPANSION JOINT AT GRID 5. PROVIDE FLEXIBLE CONNECTION TO MEET REQUIREMENTS.

VCBO
ARCHITECTURE
VALENTINER
CRANE
BRUNJES
ONYON

VCBO ARCHITECTURE
524 SOUTH 600 EAST
SALT LAKE CITY, UT 84102
Phone: (801) 575-8800
Fax: (801) 531-9850
WWW: www.vcbo.com

DFCM CODE COMPLIANCE STAMP

Student Activity Center

Stromberg Addition - BID SET

Weber State University
3750 Harrison Blvd. Ogden, UT 84408

Rev #	Date	Description
1	10.12.2012	Addendum 2

Copyright (C) 2012 by Colvin Engineering Associates, Inc. Salt Lake City, Utah. All rights reserved. Unauthorized copying and/or use is illegal and subject to prosecution.

Stephen G. Colvin
167524
10/3/2012
Registered Professional Engineer
State of Utah

Colvin Engineering Associates, Inc.
244 West 300 North Suite 200
Salt Lake City, Utah 84103
Phone: (801) 322-2400 / Fax: (801) 322-2416

Job # 2012-033.00
CAD File
Drawn TCF Checked BRC
Date 10.03.2012
Owner # DFCM #12031810

FIRST FLOOR AREA C MECHANICAL PIPING PLAN

M117.1

10/15/2012 7:10:10 AM

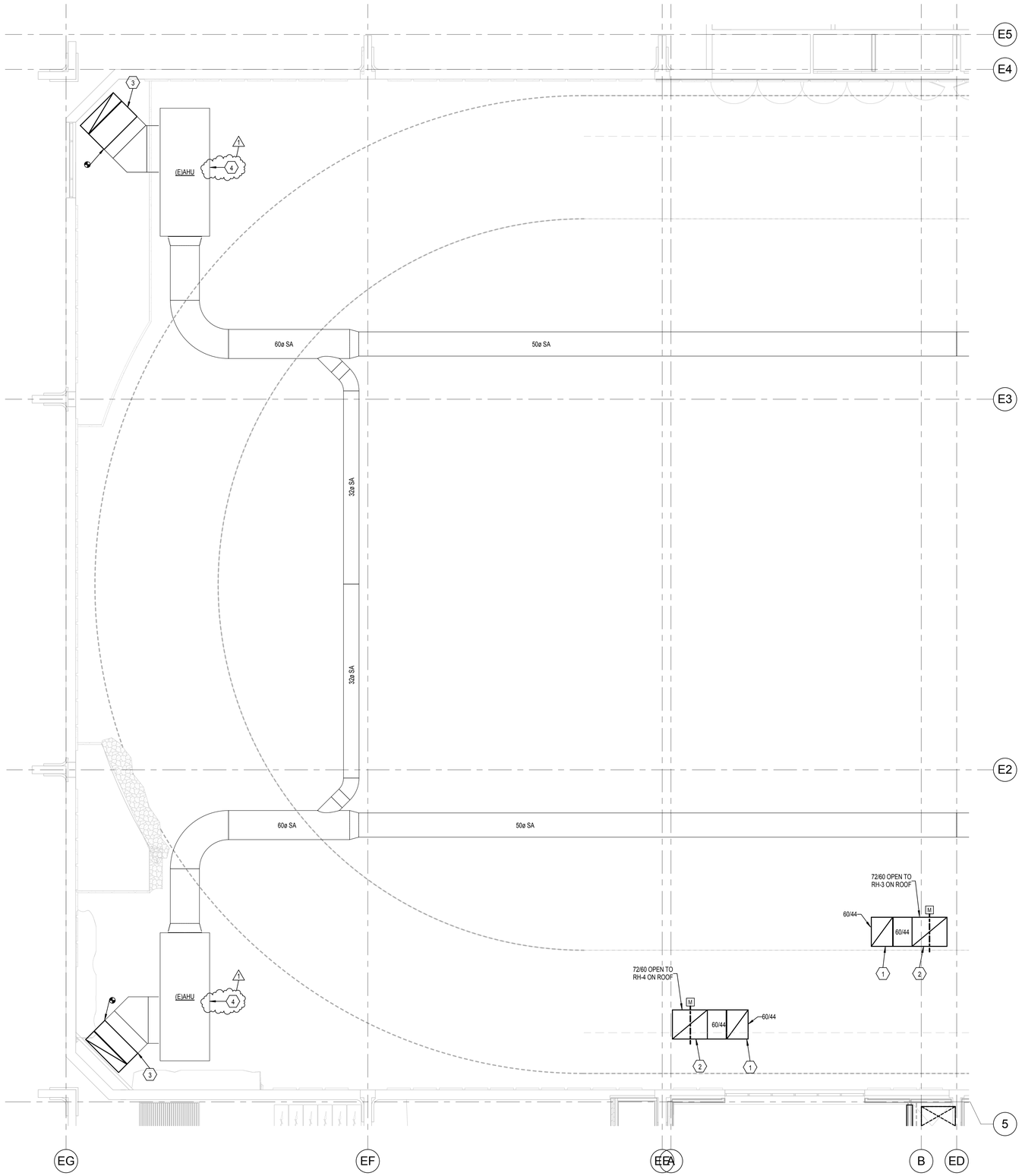

1 SECOND FLOOR AREA A MECHANICAL PLAN

SCALE: 1/8" = 1'-0"

KEYED NOTES

1. PROVIDE BIRDSCREEN AT OPENING FOR DUCT SIZE LISTED.
2. RELIEF HOODS. PROVIDE WITH ATC DAMPER AND BACKDRAFT DAMPER. EXTEND DUCT FROM HOOD TO THE ATC AND BACKDRAFT DAMPERS. SEAL DUCT WHERE THE STRUCTURAL MEMBERS PASS THROUGH. RELIEF DAMPER SHALL BE INTERLOCKED TO AH-1, AH-2, AH-3, OR AH-4.
3. CONNECT NEW LINED ELBOW SAME SIZE AS EXISTING DUCT AND OPEN TOP TOWARD ROOF DECK.
4. NEW UPGRADE TO EXISTING CONTROLS SERVING EXISTING AIR HANDLER TO MATCH NEW CONTROLS IN NEW ADDITION.

GENERAL NOTES

A. NO DUCT OR PIPE TO RUN OVER ELECTRICAL PANEL.
B. FIRE/SMOKE DAMPER MOTORS AND MOTORIZED DAMPERS TO BE MOUNTED TO SIDE OF NEAREST CEILING ACCESS HATCH OR OPEN CEILING AREA. PROVIDE 24" X 24" DUCT ACCESS AS REQUIRED. TYPICAL.
C. COORDINATE DUCTWORK AND EQUIPMENT WITH ALL TRADES.
D. ROUTE 3/4" CONDENSATE DRAINS FOR ALL REQUIRED MECHANICAL EQUIPMENT TO NEAREST FLOOR DRAIN OR SERVICE SINK.
E. BUILDING EXPANSION JOINT AT GRID 5. PROVIDE FLEXIBLE CONNECTION TO MEET REQUIREMENTS.
F. PROVIDE A WATER TIGHT PAN THAT IS 2" DEEP AND 6" LARGER THAN ANY PLUMBING, MECHANICAL PIPING, OR MECHANICAL EQUIPMENT INSTALLED OVER ANY ELECTRICAL EQUIPMENT OR GEAR THAT IS UNAVOIDABLE.
G. DIFFUSERS ALONG GLASS TO BLOW TOWARD GLASS.

VCBO
ARCHITECTURE
VALENTINER
CRANE
BRUNJES
ONYON

VCBO ARCHITECTURE
524 SOUTH 600 EAST
SALT LAKE CITY, UT 84102
Phone: (801) 575-8800
Fax: (801) 531-9850
WWW: www.vcbo.com

DFCM CODE COMPLIANCE STAMP

Student Activity Center
Stromberg Addition - BID SET
Weber State University
3750 Harrison Blvd. Ogden, UT 84408

Rev #	Date	Description
1	10.12.2012	Addendum 2

Seaman G. Colvin
Reg. No. 167524
10/3/2012
Professional Engineer
State of Utah

Colvin Engineering Associates, Inc.
244 West 300 North Suite 200
Salt Lake City, Utah 84103
Phone: (801) 322-2400 | Fax: (801) 322-2416

Job # 2012-033.00
CAD File
Drawn TCF Checked BRC
Date 10.03.2012
Owner # DFCM #12031810

SECOND FLOOR AREA
A MECHANICAL PLAN

M121.1

Copyright (C) 2012 by Colvin Engineering Associates, Inc. Salt Lake City, Utah. All rights reserved. Unauthorized copying and/or use is illegal and subject to prosecution.

10/15/2012 7:10:12 AM

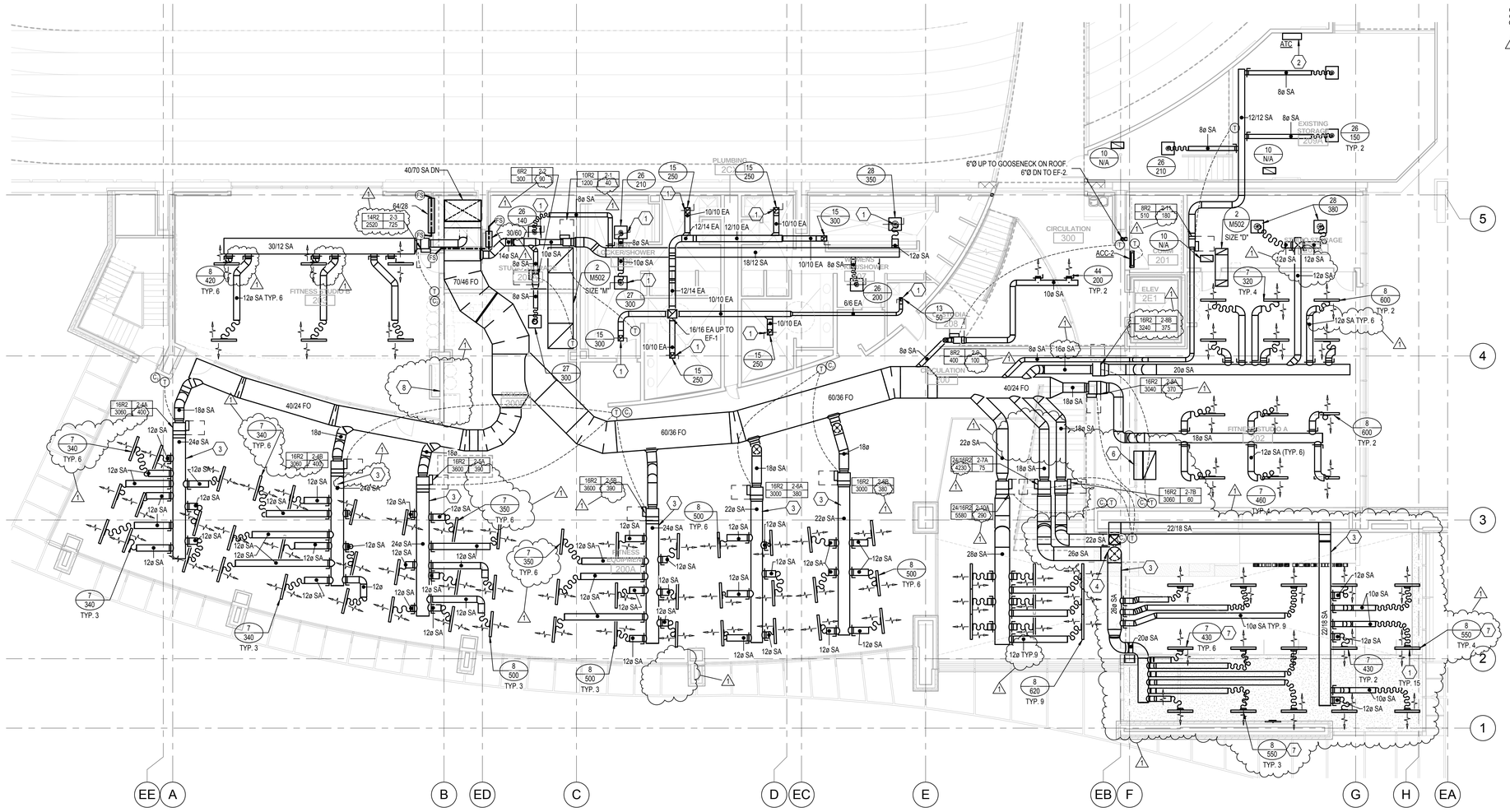

1 SECOND FLOOR AREA C MECHANICAL PLAN

SCALE: 1/8" = 1'-0"

KEYED NOTES

1. PROVIDE DIFFUSER / GRILL WITH OPPOSED BLADE DAMPER IN FACE FOR BALANCING.
2. NEW LOCATION OF RELOCATED ATC PANEL AND CONTROLS.
3. DUCT TO RUN UP IN BETWEEN TRUSS SPACE.
4. CONTRACTOR TO COORDINATE DUCT RISE WITH ARCHITECURALLY PROVIDED FURRED SPACE TO MAINTAIN DUCTWORK CONCEALED ABOVE CEILING.
5. PROVIDE EXPANSION JOINT AT THIS LOCATION.
6. TRANSFER DUCT TO PENETRATE THOUGH WALL WITH 50/24 OPENING NO GRILLE REQUIRED.
7. DIFFUSER FINISH IN THIS AREA TO BE SATIN ALUMINUM TO MATCH ARCHITECTURAL CEILING, SUBMIT SAMPLE OF COLOR TO ARCHITECT FOR REVIEW.
8. PROVIDE 100/24 OPENING IN WALL ABOVE CEILING IN THIS LOCATION.

GENERAL NOTES

A. NO DUCT OR PIPE TO RUN OVER ELECTRICAL PANEL.

B. FIRE/SMOKE DAMPER MOTORS AND MOTORIZED DAMPERS TO BE MOUNTED TO SIDE OF NEAREST CEILING ACCESS HATCH OR OPEN CEILING AREA. PROVIDE 24" X 24" DUCT ACCESS AS REQUIRED. TYPICAL.

C. COORDINATE DUCTWORK AND EQUIPMENT WITH ALL TRADES.

D. ROUTE 3/4" CONDENSATE DRAINS FOR ALL REQUIRED MECHANICAL EQUIPMENT TO NEAREST FLOOR DRAIN OR SERVICE SINK.

E. BUILDING EXPANSION JOINT AT GRID 5. PROVIDE FLEXIBLE CONNECTION TO MEET REQUIREMENTS.

F. PROVIDE A WATER TIGHT PAN THAT IS 2" DEEP AND 6" LARGER THAN ANY PLUMBING, MECHANICAL PIPING, OR MECHANICAL EQUIPMENT INSTALLED OVER ANY ELECTRICAL EQUIPMENT OR GEAR THAT IS UNAVOIDABLE.

G. DIFFUSERS ALONG GLASS TO BLOW TOWARD GLASS.

VCBO
ARCHITECTURE
VALENTINER
CRANE
BRUNJES
ONYON

VCBO ARCHITECTURE
524 SOUTH 600 EAST
SALT LAKE CITY, UT 84102
Phone: (801) 575-8800
Fax: (801) 531-9850
WWW: www.vcbo.com

DFCM CODE COMPLIANCE STAMP

Student Activity Center

Stromberg Addition - BID SET

Weber State University
3750 Harrison Blvd. Ogden, UT 84408

Rev #	Date	Description
1	10.12.2012	Addendum 2

Seal: Brian R. Cornish, Registered Professional Engineer, State of Utah, 167524, 10/3/2012

Colvin Engineering Associates, Inc.
244 West 300 North Suite 200
Salt Lake City, Utah 84103
Phone: (801) 322-2400 / Fax: (801) 322-2416

Job # 2012-033.00
CAD File
Drawn TCF Checked BRC
Date 10.03.2012
Owner # DFCM #12031810

SECOND FLOOR AREA C MECHANICAL PLAN

M123.1

Copyright (C) 2012 by Colvin Engineering Associates, Inc. Salt Lake City, Utah. All rights reserved. Unauthorized copying and/or use is illegal and subject to prosecution.

10/15/2012 7:10:32 AM

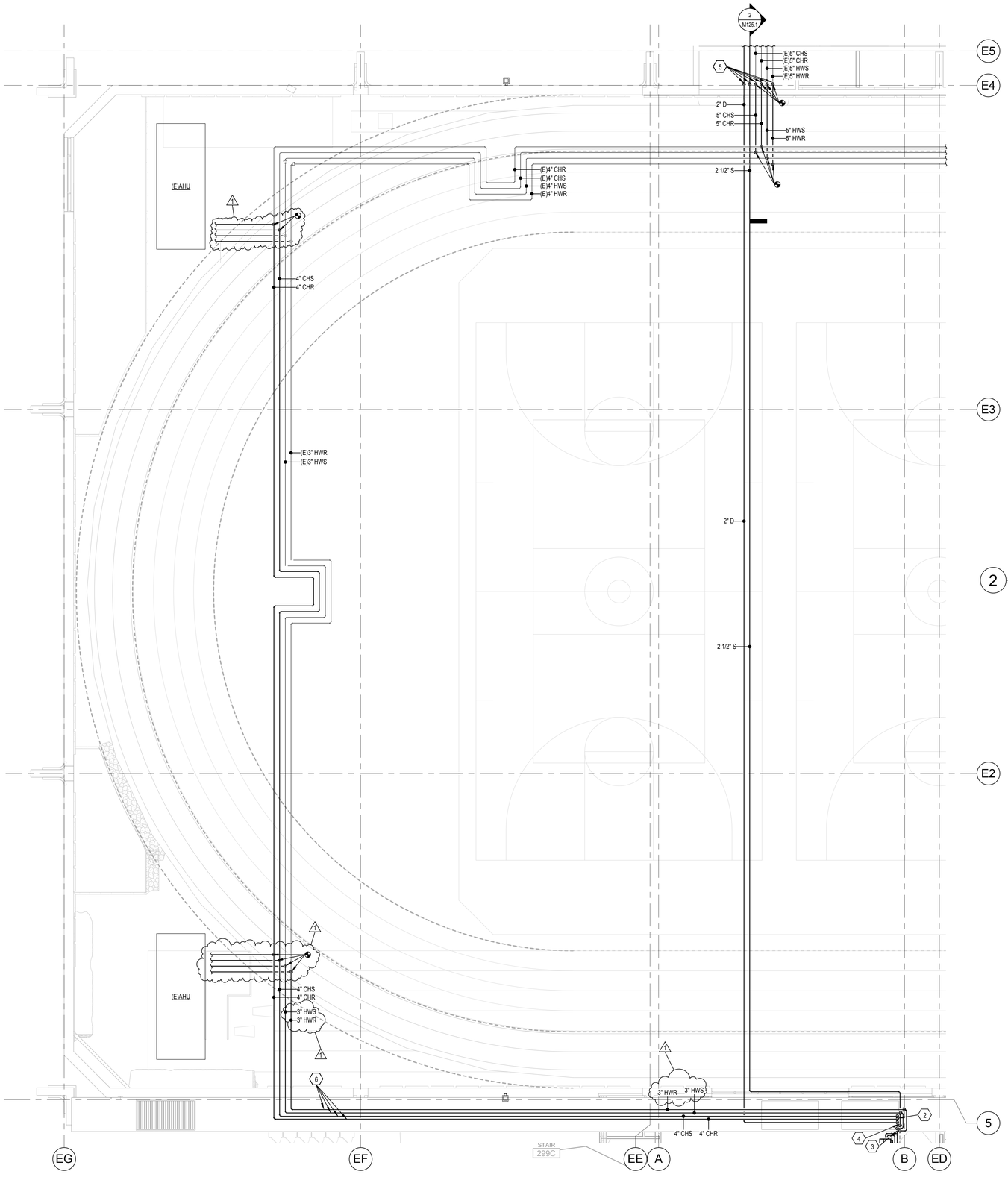

1 SECOND FLOOR AREA A MECHANICAL PIPING PLAN

SCALE: 1/8" = 1'-0"

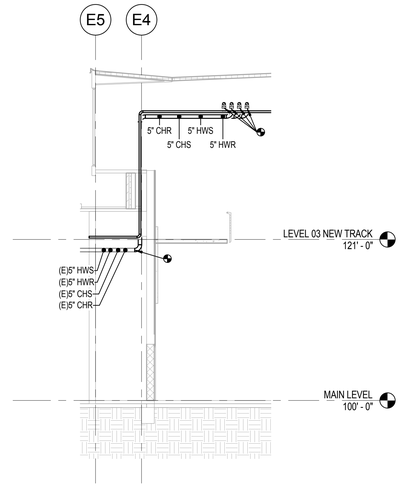

2 TRACK AREA MECHANICAL PIPING SECTION VIEW

SCALE: 1/8" = 1'-0"

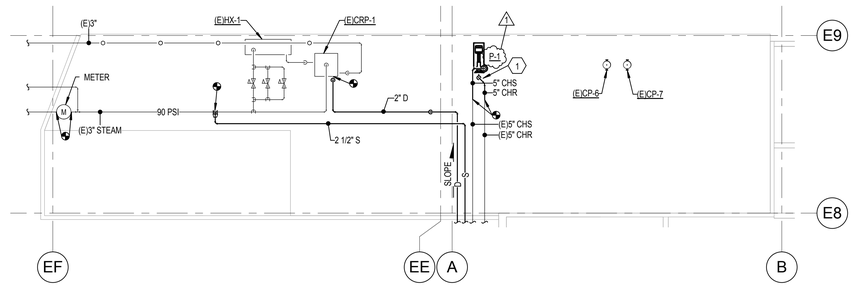

3 SECOND FLOOR MECHANICAL ROOM PLAN

SCALE: 1/8" = 1'-0"

KEYED NOTES

1. PROVIDE NEW 5" CHILLED WATER SUPPLY AND CHILLED WATER RETURN PIPING TO AND FROM P-3. REFER TO DETAIL 2/ M503 FOR PUMP PIPING DETAIL.
2. CHILLED WATER SUPPLY AND CHILLED WATER RETURN TO ROUTE DOWN SHAFT. COORDINATE WITH ALL TRADES PRIOR TO INSTALL.
3. HEATING WATER SUPPLY AND HEATING WATER RETURN TO ROUTE DOWN SHAFT. COORDINATE WITH ALL TRADES PRIOR TO INSTALL.
4. STEAM AND CONDENSATE TO DROP IN SHAFT AS SHOWN. COORDINATE WITH ALL TRADES PRIOR TO INSTALL.
5. RISE PIPE IN NEW FURRED SPACE. FURRED SPACE OPEN TO WARM AREA BELOW.
6. KEEP WALKWAY CLEAR

GENERAL NOTES

A. CONTRACTOR TO COORDINATE HEATING WATER SUPPLY AND RETURN PIPE ROUTING WITH ALL OTHER TRADES.

B. SEE REQUIRED DETAIL OF PIPE SLEEVE FOR INSULATED PIPE THRU WALL ON 11/ P501.

C. CONTRACTOR TO COORDINATE THE ELEVATOR EQUIPMENT AND ELECTRICAL ROOM AREAS TO NOT CONTAIN ANY PIPE ROUTING ABOVE.

D. BUILDING EXPANSION JOINT AT GRID 5. PROVIDE FLEXIBLE CONNECTION TO MEET REQUIREMENTS.

VCBO
ARCHITECTURE
VALENTINER
CRANE
BRUNJES
ONYON

VCBO ARCHITECTURE
524 SOUTH 600 EAST
SALT LAKE CITY, UT 84102
Phone: (801) 575-8800
Fax: (801) 531-9850
WWW: www.vcbo.com

DFCM CODE COMPLIANCE STAMP

Student Activity Center

Stromberg Addition - BID SET

Weber State University
3750 Harrison Blvd. Ogden, UT 84408

Rev #	Date	Description
1	10.12.2012	Addendum 2

STEPHEN G. COLVIN
STATE OF UTAH
NO. 187524
10/3/2012
REGISTERED PROFESSIONAL ENGINEER

Colvin Engineering Associates, Inc.
244 West 300 North Suite 200
Salt Lake City, Utah 84103
Phone: (801) 322-2400 / Fax: (801) 322-2416

Job # 2012-033.00
CAD File
Drawn TCF Checked BRC
Date 10.03.2012
Owner # DFCM #12031810

SECOND FLOOR AREA A MECHANICAL PIPING PLAN

M125.1

Copyright (C) 2012 by Colvin Engineering Associates, Inc. Salt Lake City, Utah. All rights reserved. Unauthorized copying and/or use is illegal and subject to prosecution.

10/15/2012 7:10:36 AM

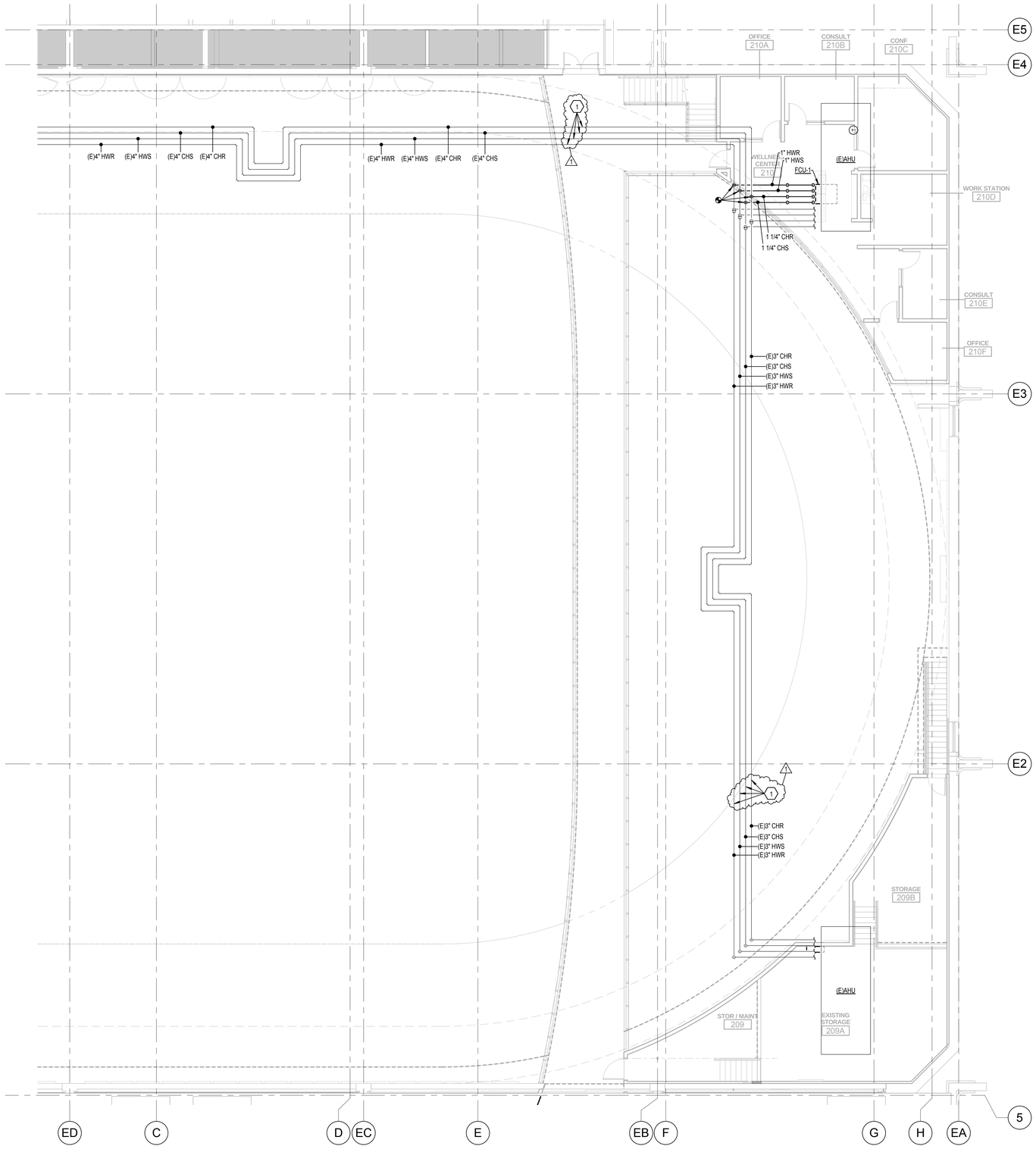

1 SECOND FLOOR AREA B MECHANICAL PIPING PLAN

SCALE: 1/8" = 1'-0"

6' 0' 4' 8' 12' 16'

KEYED NOTES

1 KEEP WALKWAY CLEAR

GENERAL NOTES

A. CONTRACTOR TO COORDINATE HEATING WATER SUPPLY AND RETURN PIPE ROUTING WITH ALL OTHER TRADES.

B. SEE REQUIRED DETAIL OF PIPE SLEEVE FOR INSULATED PIPE THRU WALL ON 11/ P501.

C. CONTRACTOR TO COORDINATE THE ELEVATOR EQUIPMENT AND ELECTRICAL ROOM AREAS TO NOT CONTAIN ANY PIPE ROUTING ABOVE.

D. BUILDING EXPANSION JOINT AT GRID 5. PROVIDE FLEXIBLE CONNECTION TO MEET REQUIREMENTS.

VCBO
ARCHITECTURE
VALENTINER
CRANE
BRUNJES
ONYON

VCBO ARCHITECTURE
524 SOUTH 600 EAST
SALT LAKE CITY, UT 84102
Phone: (801) 575-8800
Fax: (801) 531-9850
WWW: www.vcbo.com

DFCM CODE COMPLIANCE STAMP

Student Activity Center
Stromberg Addition - BID SET
Weber State University
3750 Harrison Blvd. Ogden, UT 84408

Rev #	Date	Description
1	10.12.2012	Addendum 2

Seal: Brent R. Cornish, State of Utah, Licensed Professional Engineer, 187524, 10/3/2012

Colvin Engineering Associates, Inc.
244 West 300 North Suite 200
Salt Lake City, Utah 84103
Phone: (801) 322-2400 / Fax: (801) 322-2416

Job # 2012-033.00
CAD File
Drawn TCF Checked BRC
Date 10.03.2012
Owner # DFCM #12031810

SECOND FLOOR AREA B MECHANICAL PIPING PLAN

M126.1

Copyright (C) 2012 by Colvin Engineering Associates, Inc. Salt Lake City, Utah. All rights reserved. Unauthorized copying and/or use is illegal and subject to prosecution.

10/15/2012 7:10:38 AM

KEYED NOTES

1. REFER TO DETAIL 1/ M503 FOR REFRIGERANT PIPING SCHEMATIC. CONTRACTOR TO COORDINATE PIPING WITH DETAIL AND MANUFACTURERS REQUIREMENTS.
2. OPEN VALVE SLIGHTLY TO ALLOW 2 GPM TO MAINTAIN FLOW.

GENERAL NOTES

A. CONTRACTOR TO COORDINATE HEATING WATER SUPPLY AND RETURN PIPE ROUTING WITH ALL OTHER TRADES.
B. SEE REQUIRED DETAIL OF PIPE SLEEVE FOR INSULATED PIPE THRU WALL ON 11/ P501.
C. CONTRACTOR TO COORDINATE THE ELEVATOR EQUIPMENT AND ELECTRICAL ROOM AREAS TO NOT CONTAIN ANY PIPE ROUTING ABOVE.
D. BUILDING EXPANSION JOINT AT GRID 5. PROVIDE FLEXIBLE CONNECTION TO MEET REQUIREMENTS.

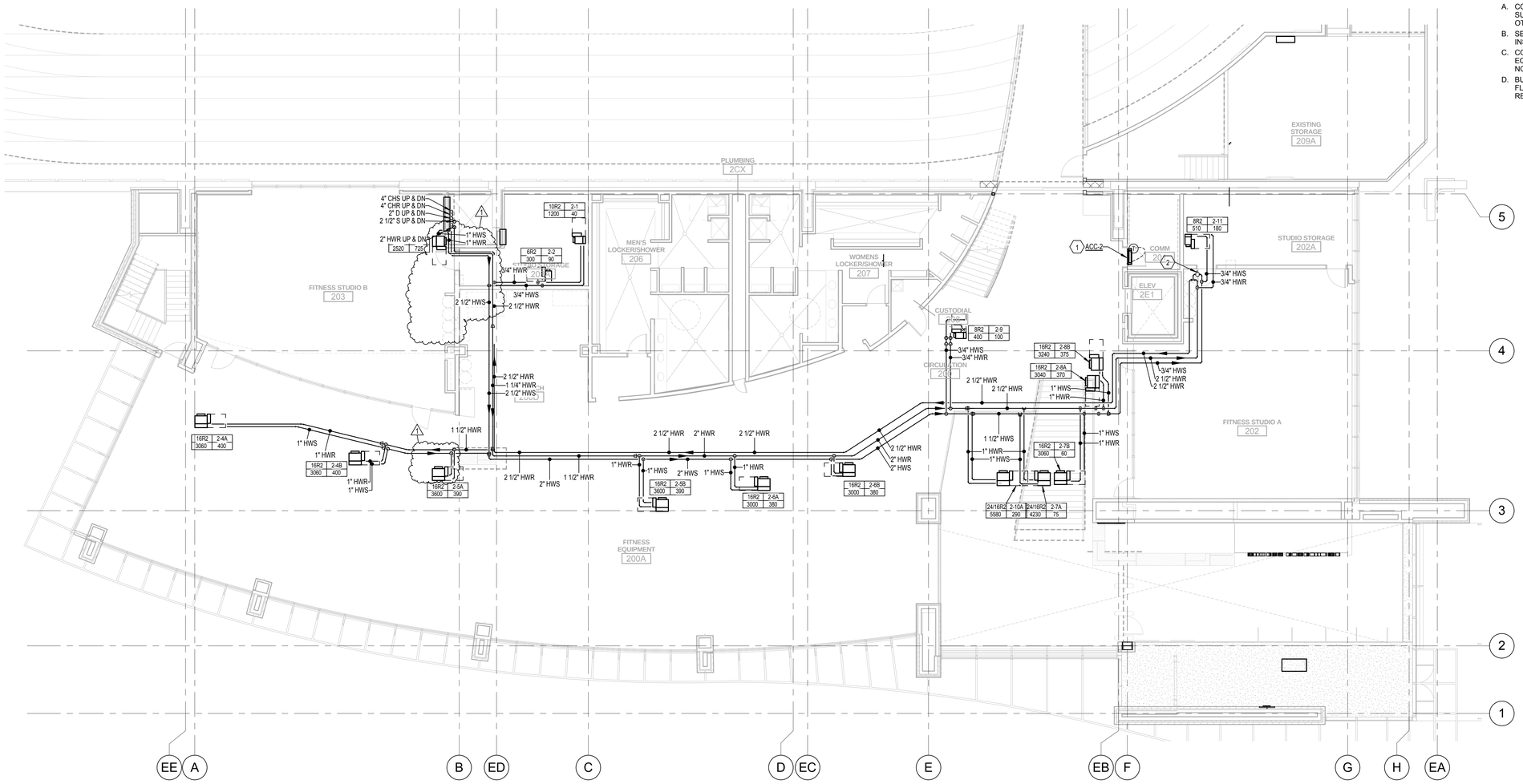

1 SECOND FLOOR AREA C MECHANICAL PIPING PLAN
SCALE: 1/8" = 1'-0"

VCBO ARCHITECTURE
VALENTINER CRANE BRUNJES ONYON

VCBO ARCHITECTURE
524 SOUTH 600 EAST
SALT LAKE CITY, UT 84102
Phone: (801) 575-8800
Fax: (801) 531-9850
WWW: www.vcbo.com

DFCM CODE COMPLIANCE STAMP

Student Activity Center
Stromberg Addition - BID SET
Weber State University
3750 Harrison Blvd. Ogden, UT 84408

Rev #	Date	Description
1	10.12.2012	Addendum 2

Stephen C. Corbett
TCF
187524
10/3/2012
Registered Professional Engineer
State of Utah

Colvin Engineering Associates, Inc.
244 West 300 North Suite 200
Salt Lake City, Utah 84103
Phone: (801) 322-2400 | Fax: (801) 322-2416

Job # 2012-033.00
CAD File
Drawn TCF Checked BRC
Date 10.03.2012
Owner # DFCM #12031810

SECOND FLOOR AREA C MECHANICAL PIPING PLAN

M127.1

Copyright (C) 2012 by Colvin Engineering Associates, Inc. Salt Lake City, Utah. All rights reserved. Unauthorized copying and/or use is illegal and subject to prosecution.

10/15/2012 7:10:44 AM

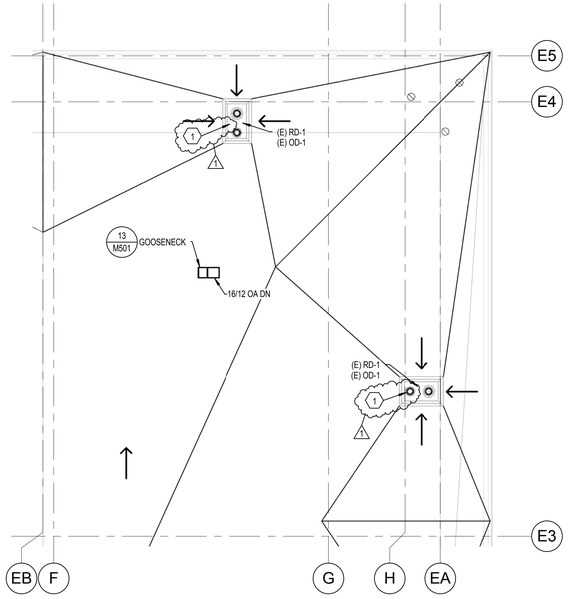

2 ROOF S.E. CORNER MECHANICAL AND PLUMBING PLAN

SCALE: 1/8" = 1'-0"

KEYED NOTES

1. DEMO EXISTING ROOF/OVERFLOW DRAIN AND PROVIDE NEW ROOF/OVERFLOW DRAIN AND CONNECT TO EXISTING PIPING

GENERAL NOTES

A. NO DUCT OR PIPE TO RUN OVER ELECTRICAL PANEL.

B. FIRE/SMOKE DAMPER MOTORS AND MOTORIZED DAMPERS TO BE MOUNTED TO SIDE OF NEAREST CEILING ACCESS HATCH OR OPEN CEILING AREA. PROVIDE 24" X 24" DUCT ACCESS AS REQUIRED. TYPICAL.

C. COORDINATE DUCTWORK AND EQUIPMENT WITH ALL TRADES.

D. ROUTE 3/4" CONDENSATE DRAINS FOR ALL REQUIRED MECHANICAL EQUIPMENT TO NEAREST FLOOR DRAIN OR SERVICE SINK.

E. BUILDING EXPANSION JOINT AT GRID 5. PROVIDE FLEXIBLE CONNECTION TO MEET REQUIREMENTS.

F. PROVIDE A WATER TIGHT PAN THAT IS 2" DEEP AND 6" LARGER THAN ANY PLUMBING, MECHANICAL PIPING, OR MECHANICAL EQUIPMENT INSTALLED OVER ANY ELECTRICAL EQUIPMENT OR GEAR THAT IS UNAVOIDABLE.

G. DIFFUSERS ALONG GLASS TO BLOW TOWARD GLASS.

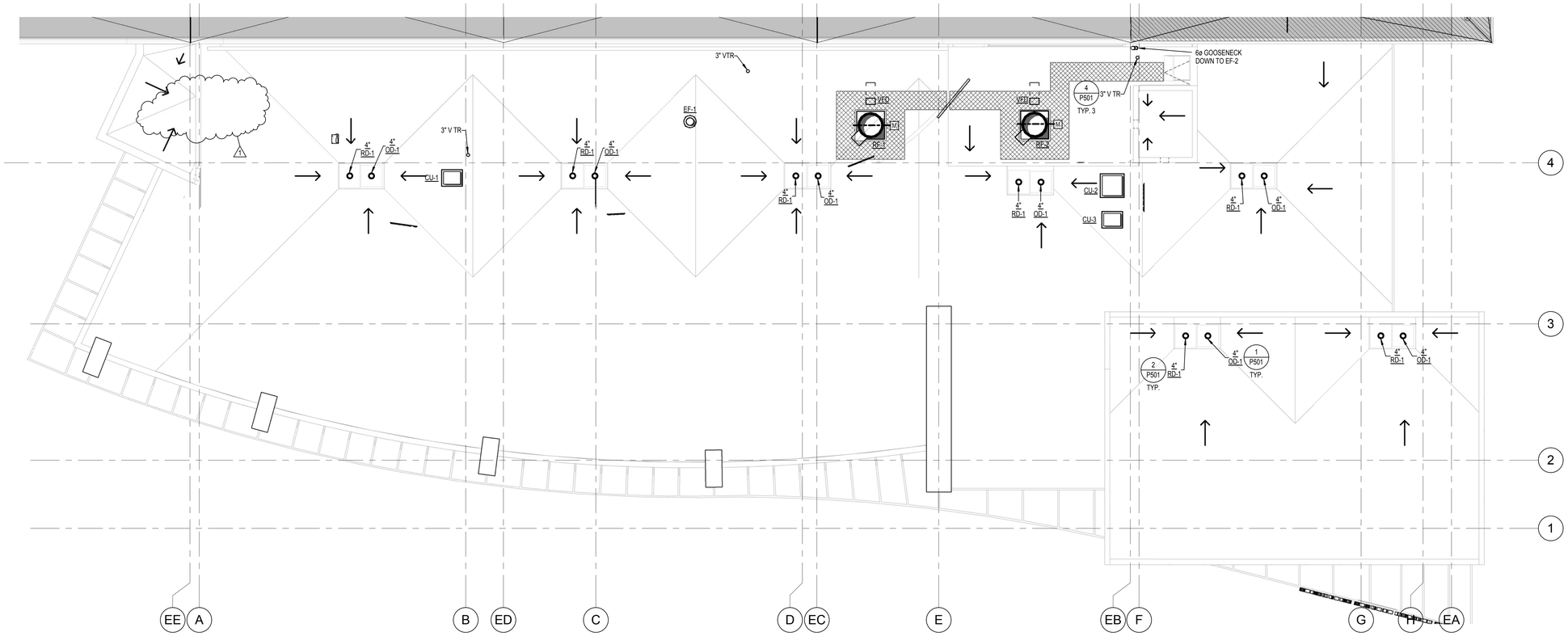

1 ROOF AREA C MECHANICAL AND PLUMBING PLAN

SCALE: 1/8" = 1'-0"

VCBO
ARCHITECTURE
VALENTINER
CRANE
BRUNJES
ONYON

VCBO ARCHITECTURE
524 SOUTH 600 EAST
SALT LAKE CITY, UT 84102
Phone: (801) 575-8800
Fax: (801) 531-9850
WWW: www.vcbo.com

DFCM CODE COMPLIANCE STAMP

Student Activity Center
Stromberg Addition - BID SET
Weber State University
3750 Harrison Blvd. Ogden, UT 84408

Rev #	Date	Description
1	10.12.2012	Addendum 2

Job # 2012-033.00
CAD File
Drawn TCF Checked BRC
Date 10.03.2012
Owner # DFCM #12031810

ROOF AREA C MECHANICAL AND PLUMBING ROOF PLAN

M143.1

Stephen G. Colvin
Reg. No. 187524
10/3/2012
State of Utah

Colvin Engineering Associates, Inc.
244 West 300 North Suite 200
Salt Lake City, Utah 84103
Phone: (801) 322-2400 / Fax: (801) 322-2416

Copyright (C) 2012 by Colvin Engineering Associates, Inc. Salt Lake City, Utah. All rights reserved. Unauthorized copying and/or use is illegal and subject to prosecution.

10/15/2012 7:10:53 AM

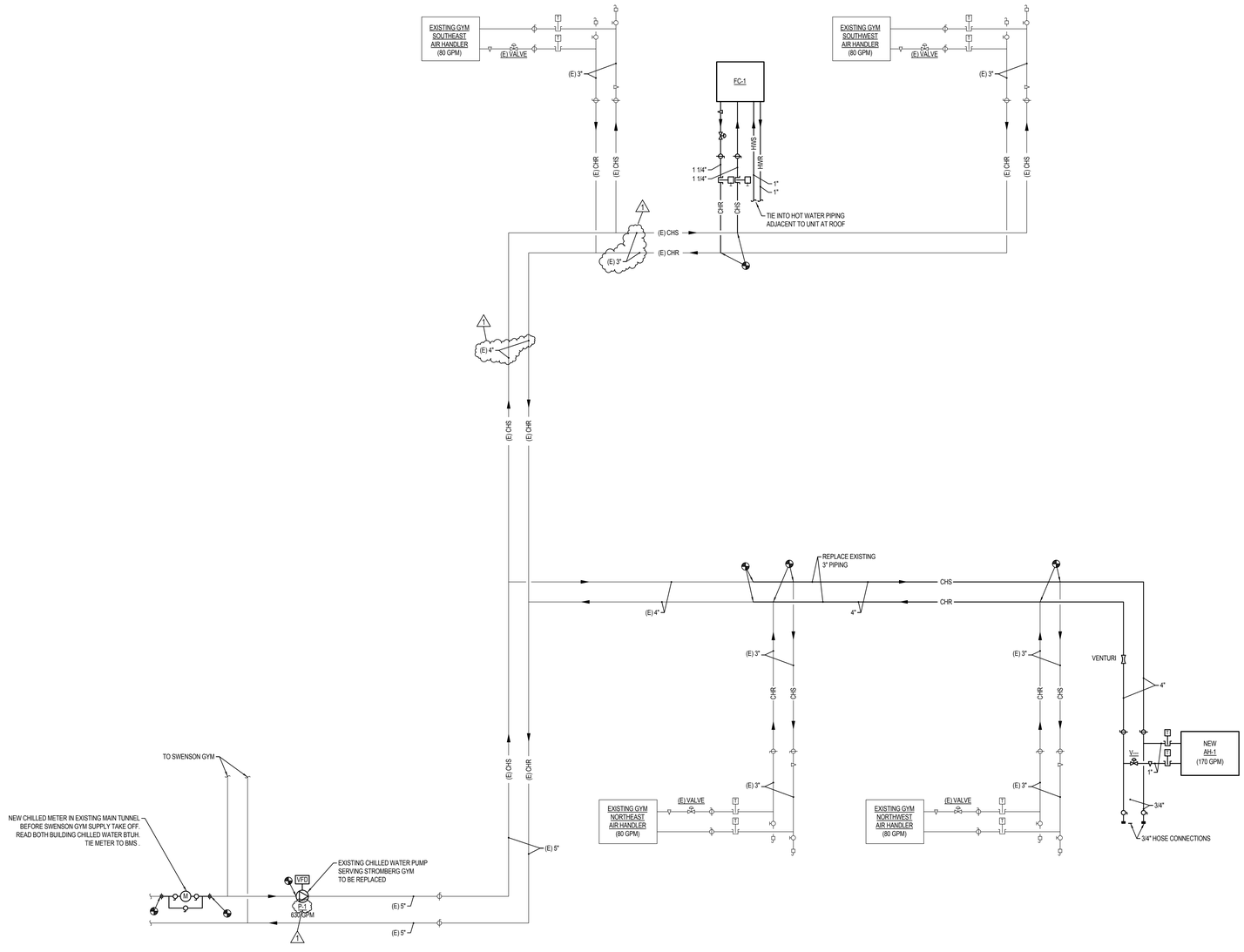

1 CHILLED WATER SCHEMATIC

SCALE: NONE

Copyright (C) 2012 by Colvin Engineering Associates, Inc. Salt Lake City, Utah. All rights reserved. Unauthorized copying and/or use is illegal and subject to prosecution.

10/15/2012 7:10:53 AM

VCBO ARCHITECTURE
VALENTINER
CRANE
BRUNJES
ONYON

VCBO ARCHITECTURE
524 SOUTH 600 EAST
SALT LAKE CITY, UT 84102
Phone: (801) 575-8800
Fax: (801) 531-9850
WWW: www.vcbo.com

DFCM CODE COMPLIANCE STAMP

Student Activity Center

Stromberg Addition - BID SET

Weber State University
3750 Harrison Blvd. Ogden, UT 84408

Rev #	Date	Description
1	10.12.2012	Addendum 2

Seaburn G. Colvin
Reg. No. 167524
10/3/2012
Professional Engineer
State of Utah

Colvin Engineering Associates, Inc.
244 West 300 North Suite 200
Salt Lake City, Utah 84103
Phone: (801) 322-2400 / Fax: (801) 322-2416

Job # 2012-033.00
CAD File
Drawn TCF Checked BRC
Date 10.03.2012
Owner # DFCM #12031810

SCHEMATICS

M202

KEYED NOTES

1. AREA SHOWN IS FOR ELECTRICAL EQUIPMENT. MAINTAIN ALL MECHANICAL DUCTWORK, PIPING, PLUMBING, ETC. CLEAR OF AREA.
2. AIR COMPRESSOR FOR DRY SIDE PREACTION FIRE PROTECTION SYSTEM DESIGNED BY FIRE SPRINKLER CONTRACTOR. COORDINATE SPACE AND ELECTRICAL REQUIREMENTS WITH ARCHITECT AND ELECTRICAL RESPECTIVELY.
3. LIFTING POINTS REQUIRED.
4. COORDINATE PIPES THROUGH WALL SLEEVES.

GENERAL NOTES

A. NO DUCT OR PIPE TO RUN OVER ELECTRICAL PANEL.
B. FIRE/SMOKE DAMPER MOTORS AND MOTORIZED DAMPERS TO BE MOUNTED TO SIDE OF NEAREST CEILING ACCESS HATCH OR OPEN CEILING AREA. PROVIDE 24" X 24" DUCT ACCESS AS REQUIRED. TYPICAL.
C. COORDINATE DUCTWORK AND EQUIPMENT WITH ALL TRADES.
D. ROUTE 3/4" CONDENSATE DRAINS FOR ALL REQUIRED MECHANICAL EQUIPMENT TO NEAREST FLOOR DRAIN OR SERVICE SINK.
E. BUILDING EXPANSION JOINT AT GRID 5. PROVIDE FLEXIBLE CONNECTION TO MEET REQUIREMENTS.
F. PROVIDE A WATER TIGHT PAN THAT IS 2" DEEP AND 6" LARGER THAN ANY PLUMBING, MECHANICAL PIPING, OR MECHANICAL EQUIPMENT INSTALLED OVER ANY ELECTRICAL EQUIPMENT OR GEAR THAT IS UNAVOIDABLE.
G. DIFFUSERS ALONG GLASS TO BLOW TOWARD GLASS.

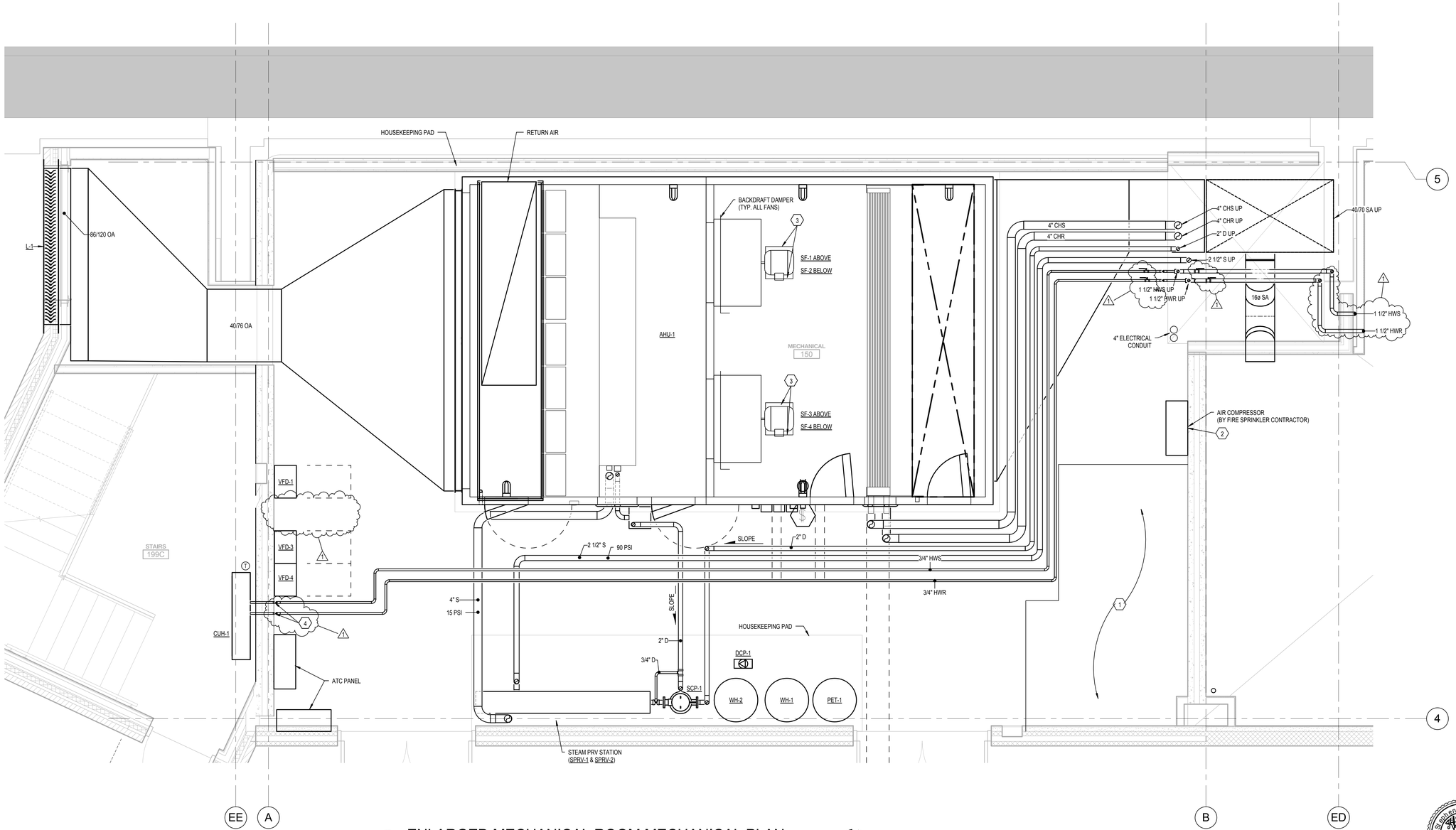

1 ENLARGED MECHANICAL ROOM MECHANICAL PLAN
SCALE: 1/2" = 1'-0"

VCBO ARCHITECTURE
VALENTINER CRANE BRUNJES ONYON

VCBO ARCHITECTURE
524 SOUTH 600 EAST
SALT LAKE CITY, UT 84102
Phone: (801) 575-8800
Fax: (801) 531-9850
WWW: www.vcbo.com

DFCM CODE COMPLIANCE STAMP

Student Activity Center
Stromberg Addition - BID SET
Weber State University
3750 Harrison Blvd. Ogden, UT 84408

Rev #	Date	Description
1	10.12.2012	Addendum 2

Stephen G. Colvin, P.E. 187524 10/3/2012 Registered Professional Engineer State of Utah

Colvin Engineering Associates, Inc.
244 West 300 North Suite 200
Salt Lake City, Utah 84103
Phone: (801) 322-2400 / Fax: (801) 322-2416

Job # 2012-033.00
CAD File
Drawn TCF Checked BRC
Date 10.03.2012
Owner # DFCM #12031810

ENLARGED MECHANICAL PLANS

M401

Copyright (C) 2012 by Colvin Engineering Associates, Inc. Salt Lake City, Utah. All rights reserved. Unauthorized copying and/or use is illegal and subject to prosecution.

10/15/2012 7:10:58 AM

Copyright (C) 2012 by Colvin Engineering Associates, Inc. Salt Lake City, Utah. All rights reserved. Unauthorized copying and/or use is illegal and subject to prosecution.

10/15/2012 7:10:59 AM

VARIABLE FREQUENCY DRIVE SCHEDULE (VFD)

PLAN CODE	SERVICE	H.P.	VOLTAGE & PHASE	REMARKS
VFD-1	P-1	30	460/3	- -
VFD-2	~~DCP-1~~	~~0.4~~ OMIT	~~460/3~~	- -
VFD-3	SF-1,2,3,4	15	460/3	- -
VFD-4	RF-1	10	460/3	- -
VFD-5	RF-2	10	460/3	- -

(1) VFD SPECIFIED AND INSTALLED BY DIVISION 23000. WIRED BY ELECTRICAL DIVISION.

SPLIT SYSTEM SCHEDULE - AIR COOLED CONDENSING UNIT (AC)

AREA SERVED	ARI COOLING CAP (BTUH)	INDOOR UNIT PLAN CODE	TYPE	ELECTRICAL VOLTAGE	PHASE	MCA	FLA	DIMENSIONS (IN) H	W	D	WEIGHT (LBS)	MANUFACTURER MODEL	OUTDOOR UNIT PLAN CODE	REFRIGERANT	ELECTRICAL VOLTAGE	PHASE	MCA	MOCP	DIMENSIONS (IN) H	W	D	WEIGHT (LBS)	MANUFACTURER MODEL	REMARKS *
ELEV EQUIP ROOM	18,000	ACC-1	HIGH WALL MOUNTED	208/230	1	1.0	0.33	12	36	10	35	CITY MULTI PKFY-P18NKMU-E	CU-1	R410A	208/230	1	13	20	24	32	14	110	CITY MULTI PUHY-P18TGMU-A	(1)(2)(3)(4)(5)(6)(7)(8)
COMM ROOM	18,000	ACC-2	HIGH WALL MOUNTED	208/230	1	1.0	0.33	12	36	10	35	CITY MULTI PKFY-P18NKMU-E	CU-2	R410A	208/230	1	13	20	24	32	14	110	CITY MULTI PUHY-P18TGMU-A	(1)(2)(3)(4)(5)(7)(8)

(1) RATING AT 95° F DB AND 75° F WB ENTERING EVAPORATOR.
(2) ROUTE REFRIGERANT LINES FROM CONDENSING UNIT TO SPLIT SYSTEM FAN COILS AS REQUIRED. ROUTE AND SIZE REFRIGERANT LINES PER MANUFACTURERS REQUIREMENTS.
(3) HANG UNIT FROM STRUCTURE WITH ALL THREAD ROD AND SPRING VIBRATION ISOLATION.
(4) MOUNT OUTDOOR UNIT ON ROOF CURB.
(5) PROVIDE WITH LOW AMBIENT KIT DOWN TO 0°F.
(6) UNIT ON EMERGENCY POWER.
(7) PROVIDE DISCONNECT WITH THE UNITS.
(8) WITH DIGITAL THERMOSTAT SET AT 80ºF

RELIEF FAN SCHEDULE (1)(2)(3)(4)(5)

PLAN CODE	TYPE	CFM @ ELEV.	ESP (S.L.)	FAN RPM	MOTOR B.H.P.	H.P.	EFFICIENY %	VOLTAGE & PHASE	MOTOR CONTROL	LENGTH (IN.)	WIDTH (IN.)	HEIGHT (□ IN.)	OPENING SIZE (IN)	OPERATING WT. (LBS.)	MANUFACTURER/ MODEL
RF-1	MIXED FLOW UPBLAST	24,000	1.0	1220	8.45	10	PREMIUM	460/3	VFD	N/A	82	91	43" ø	1500	COOK 300QMXU
RF-2	MIXED FLOW UPBLAST	24,000	1.0	1220	8.45	10	PREMIUM	460/3	VFD	N/A	82	91	43" ø	1500	COOK 300QMXU

(1) PROVIDE WITH FACTORY MOUNTED VFD WITH NEMA 4X ENCLOSURE. SEE SPECIFICATIONS.
(2) PROVIDE WITH 14" INTERNALLY INSULATED AND SEISMICALLY ISOLATED ROOF CURB.
(3) HEIGHT DOES NOT INCLUDE 14" ROOF CURB.
(4) INTERLOCK WITH ASSOCIATED MOTORIZED DAMPER.
(5) PROVIDE WITH OUTLET BACKDRAFT DAMPER.

VAV REHEAT BOXES

PLAN CODE — BOX NO.; MAX COOLING CFM — MIN. COOLING CFM

PLAN CODE	INLET SIZE	MAX (PRIMARY CFM)	MIN OPER PD (IN.WG)	MIN (PRIMARY CFM)	REHEAT (CFM)	EAT °F	LAT °F	EWT °F	LWT °F	FLUID FLOW (GPM)	COIL CAPACITY (MBH)	MBH TO SPACE AT 15F TD	FLUID PD (FT.WG)	ROWS	MAX DISCHARGE NC	MAX RADIATED NC
6R1	6	450	0.3	60	200	55	88	180	151	0.4	6	3	0.1	1	<20	20
6R2	6	450	0.4	60	450	55	88	180	137	0.7	14	6	0.1	2	<20	20
8R1	8	800	0.2	120	400	55	88	180	165	1.8	12	6	2.0	1	<20	24
8R2	8	800	0.4	120	800	55	88	180	141	1.3	25	11	0.3	2	<20	22
10R1	10	1350	0.3	200	550	55	88	180	165	2.4	17	8	0.6	1	<20	<20
10R2	10	1350	0.5	200	1350	55	88	180	141	2.2	42	19	1.1	2	<20	<20
12R1	12	2100	0.3	275	800	55	88	180	165	3.5	25	11	1.6	1	21	21
12R2	12	2100	0.7	275	2100	55	88	180	143	3.7	66	29	3.7	2	<20	<20
14R1	14	3000	0.3	400	1200	55	88	180	164	4.8	37	17	4.2	1	23	28
14R2	14	3000	0.6	400	3000	55	88	180	143	5.1	94	41	4.3	2	<20	25
16R1	16	4000	0.4	525	1400	55	88	180	161	4.8	44	19	4.5	1	24	30
16R2	16	3800	0.7	525	3400	55	88	180	138	5.1	106	47	4.6	2	<20	26
24/16R1	24x16	8000	0.5	1050	2000	55	87	180	148	4.0	61	28	4.5	1	35	36
24/16R2	24x16	6000	0.7	1050	4200	55	88	180	120	4.4	131	58	4.5	2	29	30

FOOTNOTES:
A - CHECK SUBMITTAL DRAWINGS FOR EXACT DIMENSIONS.
B - AIRFLOW UNITS ARE CUBIC FEET PER MINUTE, WATER FLOW UNITS ARE US GALONS PER MINUTE, ALL TEMPERATURES IN DEGREES FAHRENHEIT, HEAD LOSS IN FEET OF WATER, AIR PRESSURE DROP IN INCHES OF WATER GAUGE.

STEAM PRESSURE RELIEF VALVE

PLAN CODE	SERVICE	SIZE (IN) INLET	OUTLET	PRESSURE SIZE (PSIG) INLET	ORIFICE TYPE	CAPACITY (LBS./HR.)	MANUFACTURER & MODEL No.	REMARKS
SSV-1	HEATING HW HX	6"	3"	15	H	1,400	SPIRAX SARCO SV74VTH75	PROVIDE WITH DRIP PAN ELBOW

STEAM PILOT OPERATED PRV SCHEDULE

PLAN CODE	AREA SERVED	PRESSURE (PSIG) UPSTREAM	DOWNSTREAM	CAPACITY (LBS./HR.)	SIZE INLET / OUTLET (IN.)	MANUFACTURER & MODEL No.	REMARKS
SPRV-1	ND-1	90	15	930	2" / 3"	SPIRAX SARCO 25P	WITH ACOUSTIC AND INSULATION BLANKET
SPRV-2	ND-2	90	15	470	1-1/2" / 2"	SPIRAX SARCO 25P	WITH ACOUSTIC AND INSULATION BLANKET

STEAM SYSTEM NOISE DIFFUSER SCHEDULE

PLAN CODE	SERVICE	SIZE (IN) INLET	OUTLET	MAX LENGTH	MANUFACTURER & MODEL No.	MIN. NOISE REDUCTION (DBA)	REMARKS
ND-1	SPRV-1	3	6	17	SPIRAX SARCO D6	15	-
ND-2	SPRV-2	2	4	14	SPIRAX SARCO D4	15	-

(1) NOISE DIFFUSERS ONLY AS REQUIRED TO MAINTAIN NOISE LEVEL BELOW 80 dBA AT 5' FROM PRV.

CONTROL DAMPER (CD)

PLAN CODE	SCHEMATIC SHEET	SERVICE	SIZE AIR FLOW (CFM)	DIMENSION W x H (IN)	ACTION	NOTES
CD-1	MH-A401	AHU-1 OUTSIDE AIR	25,000	48 X 56	OPPOSED BLADE	SET FOR MINIMUM OSA
CD-2	MH-A401	AHU-1 OUTSIDE AIR	25,000	48 X 56	OPPOSED BLADE	SET FOR MINIMUM OSA
CD-3	MH-A401	AHU-1 RETURN AIR	25,000	48 X 60	OPPOSED BLADE	-
CD-4	MH-A401	AHU-1 RETURN AIR	25,000	48 X 60	OPPOSED BLADE	-
CD-5	MH-A401	RF-1	25,000	60 X 60	OPPOSED BLADE	-
CD-6	MH-A401	RF-2	25,000	60 X 60	OPPOSED BLADE	-

AIR DEVICE SCHEDULE (3)

PLAN CODE — GRILLE CFM

PLAN CODE	TYPE & DUTY	FACE SIZE	NECK SIZE	CEILING TYPE (2)	MAX CFM	MAX TP (IN WC)	NC LEVEL MAX	MIN THROW (FT) (T50)	4-WAY MIN THROW (T50)	2-WAY MIN THROW (T50)	MANUFACTURER & MODEL NO	REMARKS
1	LINEAR-SUPPLY	24"L	6"ø	MATCH CEILING	80	0.08	32	12	-	-	TITUS TBD-30	1 @ 1" SLOT PROVIDE WITH PLENUM BOX
2	LINEAR-SUPPLY	24"L	8"ø	MATCH CEILING	160	0.09	33	13	-	-	TITUS TBD-30	2 @ 1" SLOT PROVIDE WITH PLENUM BOX
3	LINEAR-SUPPLY	24"L	8"ø	MATCH CEILING	240	0.10	34	14	-	-	TITUS TBD-30	3 @ 1" SLOT PROVIDE WITH PLENUM BOX
4	LINEAR-SUPPLY	24"L	10"ø	MATCH CEILING	320	0.11	35	15	-	-	TITUS TBD-30	4 @ 1" SLOT PROVIDE WITH PLENUM BOX
5	LINEAR-SUPPLY	48"L	8"ø	MATCH CEILING	160	0.08	32	12	-	-	TITUS TBD-30	1 @ 1" SLOT PROVIDE WITH PLENUM BOX
6	LINEAR-SUPPLY	48"L	10"ø	MATCH CEILING	320	0.09	33	13	-	-	TITUS TBD-30	2 @ 1" SLOT PROVIDE WITH PLENUM BOX
7	LINEAR-SUPPLY	48"L	12"ø	MATCH CEILING	480	0.10	34	14	-	-	TITUS TBD-30	3 @ 1" SLOT PROVIDE WITH PLENUM BOX
8	LINEAR-SUPPLY	48"L	12"ø	MATCH CEILING	640	0.11	35	15	-	-	TITUS TBD-30	4 @ 1" SLOT PROVIDE WITH PLENUM BOX
9	PERFORATED RETURN	24" X 24"	22" X 22"	MATCH CEILING	1200	0.05	17	-	-	-	TITUS PAR	-
10	PERFORATED RETURN	24" X 12"	22"X 10"	MATCH CEILING	600	0.06	10	-	-	-	TITUS PAR	-
11	PERFORATED RETURN/EXHAUST	24" X 24"	22" X 22"	MATCH CEILING	1200	0.05	17	-	-	-	TITUS PAR	-
12	PERFORATED RETURN/EXHAUST	24" X 12"	22" X 10"	MATCH CEILING	600	0.06	10	-	-	-	TITUS PAR	-
13	PERFORATED EXHAUST GRILLE	8" X 8"	6" X 6"	MATCH CEILING	120	0.12	10	-	-	-	TITUS 8F	-
14	PERFORATED EXHAUST GRILLE	10" X 10"	8" X 8"	MATCH CEILING	225	0.12	12	-	-	-	TITUS 8F	-
15	PERFORATED EXHAUST GRILLE	12" X 12"	10" X 10"	MATCH CEILING	360	0.12	14	-	-	-	TITUS 8F	-
16	PERFORATED EXHAUST GRILLE	14" x 14"	12" X 12"	MATCH CEILING	550	0.12	16	-	-	-	TITUS 8F	-
17	PERFORATED EXHAUST GRILLE	16" X 16"	14" x 14"	MATCH CEILING	750	0.12	17	-	-	-	TITUS 8F	-
18	PERFORATED EXHAUST GRILLE	20" X 20"	18" X 18"	MATCH CEILING	1250	0.12	19	-	-	-	TITUS 8F	-
19	PERFORATED EXHAUST GRILLE	24" X 24"	22" X 22"	MATCH CEILING	1900	0.12	21	-	-	-	TITUS 8F	-
20	PERFORATED EXHAUST GRILLE	32" X 32"	30" X 30"	SURFACE	3600	0.12	24	-	-	-	TITUS 8F	-
21	RADIAL BLADE DIFFUSER	12"ø	8"ø	SURFACE	210	0.14	29	8 (1)	-	-	AIR DIFFUSION PRODUCTS DNR	-
22	RADIAL BLADE DIFFUSER	15"ø	10"ø	SURFACE	330	0.14	29	10 (1)	-	-	AIR DIFFUSION PRODUCTS DNR	-
23	RADIAL BLADE DIFFUSER	18"ø	12"ø	SURFACE	470	0.14	30	12 (1)	-	-	AIR DIFFUSION PRODUCTS DNR	-
24	RADIAL BLADE DIFFUSER	21"ø	14"ø	SURFACE	640	0.14	30	14 (1)	-	-	AIR DIFFUSION PRODUCTS DNR	-
25	RADIAL BLADE DIFFUSER	24"ø	16"ø	SURFACE	840	0.14	30	15 (1)	-		AIR DIFFUSION PRODUCTS DNR	-
26	RADIAL BLADE DIFFUSER	24" X 24"	8"ø	GRID	210	0.14	29	8 (1)	-	-	AIR DIFFUSION PRODUCTS DNR	-
27	RADIAL BLADE DIFFUSER	24" X 24"	10"ø	GRID	330	0.14	29	10 (1)	-	-	AIR DIFFUSION PRODUCTS DNR	-
28	RADIAL BLADE DIFFUSER	24" X 24"	12"ø	GRID	470	0.14	30	12 (1)	-	-	AIR DIFFUSION PRODUCTS DNR	-
29	RADIAL BLADE DIFFUSER	24" X 24"	14"ø	GRID	640	0.14	30	14 (1)	-	-	AIR DIFFUSION PRODUCTS DNR	-
30	RADIAL BLADE DIFFUSER	24" X 24"	16"ø	GRID	840	0.14	30	15 (1)	-	-	AIR DIFFUSION PRODUCTS DNR	-
31	ADJUSTABLE LOUVERED	24" X 24"	6"ø	MATCH CEILING	170	0.13	25	ADJUSTABLE	11	18	TITUS TDCA	18" x 18" CORE
32	ADJUSTABLE LOUVERED	24" X 24"	8"ø	MATCH CEILING	310	0.13	27	ADJUSTABLE	14	24	TITUS TDCA	18" x 18" CORE
33	ADJUSTABLE LOUVERED	24" X 24"	10"ø	MATCH CEILING	440	0.13	28	ADJUSTABLE	17	26	TITUS TDCA	18" x 18" CORE
34	ADJUSTABLE LOUVERED	24" X 24"	12"ø	MATCH CEILING	600	0.14	28	ADJUSTABLE	21	33	TITUS TDCA	18" x 18" CORE
35	ADJUSTABLE LOUVERED	24" X 24"	14"ø	MATCH CEILING	800	0.13	29	ADJUSTABLE	24	39	TITUS TDCA	18" x 18" CORE
36	ADJUSTABLE LOUVERED	24" X 24"	16"ø	MATCH CEILING	950	0.11	29	ADJUSTABLE	26	41	TITUS TDCA	18" x 18" CORE
37	BAR FLOOR DIFFUSER	2 1/2"	2 1/2" x L	-	80/FT	0.10	31	-	-	-	TITUS CT-480	-
38	BAR FLOOR DIFFUSER	4"	4" x L	-	150/FT	0.10	34	-	-	-	TITUS CT-480	-
39	BAR FLOOR DIFFUSER	6"	6" x L	-	230/FT	0.09	35	-	-	-	TITUS CT-480	-
40	BAR FLOOR DIFFUSER	8"	8" x L	-	300/FT	0.08	34	-	-	-	TITUS CT-480	-
41	THERMALLY CONTROLLED DIFFUSER	24" X 24"	8"ø	GRID	260	0.15	35	-	-	-	THERMAFUSER	2-WAY CORNER
44	SUPPLY REGISTER	12" X 8"	10" X 6"	DUCT	270	0.12	29	30	-	-	KRUEGER DMGDR	0º DEFLECTION
45	RETURN REGISTER	20" X 12"	18" X 10"	DUCT	660	0.1	20	-	-	-	TITUS 355ZRL	0º DEFLECTION

(1) RECOMMENDED MINIMUM DISTANCE BETWEEN DIFFUSERS IN 9' CEILING.
(2) VERIFY FRAME TYPE OF ALL AIR DEVICES WITH ARCHITECTURAL REFLECTED CEILING PLAN BEFORE ORDERING.
(3) COORDINATE AND VERIFY FINISH COLOR OF ALL GRILLES AND REGISTERS WITH ARCHITECT PRIOR TO ORDERING.

(1) PROVIDE CO2 SENSOR IN RETURN AIR DUCT BEFORE OUTSIDE AIR CONNECTION TO CONTROL MINIMUM RETURN AIR DAMPER. CONNECTION TO CONTROL MINIMUM RETURN AIR DAMPER.
(2) 5/8" TUBE, .035" TUBE THICKNESS.
(3) PROVIDE MERV 8 PRE AND MERV 13 FINAL FILTERS
(4) HEIGHT DOES NOT INCLUDE ROOF CURB.
(5) FUSED DISCONNECT.
(6) PROVIDE SMOKE DETECTOR IN THE RETURN AIR DUCT BEFORE OUTSIDE AIR DUCT CONNECTION AT UNIT TO SHUT UNIT DOWN UPON SMOKE DETECTION.
(7) SINGLE POINT POWER CONNECTION.
(8) PROVIDE SEISMIC BRACE SPRING VIBRATION ISOLATORS ON ALL FANS.
(9) VFD PROVIDED BY AIR HANDLER MANUFACTURER. WIRED AND INSTALLED.
(10) PROVIDE FLOW MONITORING STATION AND CO2 SENSOR IN OUTSIDE AIR CONNECTION.
(11) EVAPORATIVE MEDIA TO HAVE 6' RALL MAXIMUM SECTIONS WITH INDIVIDUAL SUPPORT RACKS.
(11) ALL DOORS TO OPEN AGAINST AIR PRESSURE
(12) BACKDRAFT DAMPERS TO BE PROVIDED FOR ALL FANS.
(13) LIFTING POINTS REQUIRED.

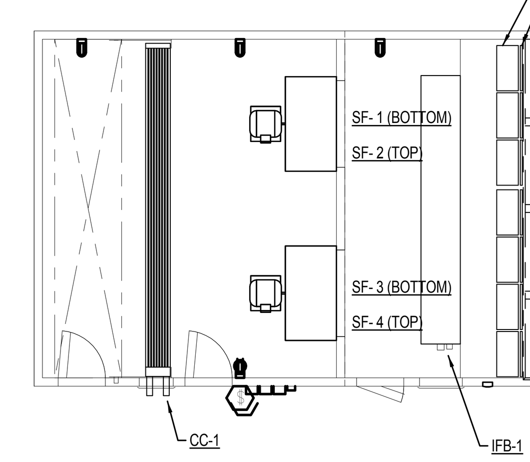

AHU-1

COIL SCHEDULE (C)

PLAN CODE	SERVICE	AIR SIDE MINIMUM CAPACITY (MBH)	EAT (DBT / WBT)	LAT (DBT / WBT)	MAX. APD (IN WC)	FLUID SIDE FLUID	EFT/LFT (F)	FLOW RATE / STEAM CONSUMPTION	MAXIMUM FPD (FT)	FIN THICKNESS (IN.)	NOMINAL CONFIGURATION ROWS	FPI	NO. COILS
IFB-1	STEAM	1400	65 / -	95 / -	0.20	STEAM @ 15 PSI	67 / 76.8	1480 LBS/HR	-	-	1	9	1 @ 132.38"X81"
CC-1	CHILLED WATER	1300	77 / 60	51 / 50	0.51	WATER	46 / 61	170 GPM	25	.008	8	11	3 @ 33"X162"

AIR HANDLER (AHU)

PLAN CODE	CFM	MIN. OSA (CFM)	ESP (IN WC)	MAXIMUM DIMENSIONS LENGTH (IN)	HEIGHT (IN)	WIDTH (IN)	WEIGHT (LBS)	NOTES
AHU-1	51,540	7050	2.5	293	123	181	25,000	PROVIDE FACE AND BYPASS DAMPERS FOR STEAM COIL

SUPPLY FAN SCHEDULE (SF)

PLAN CODE	FAN CONFIGURATION	FLOW (CFM)	TSP (IN WG)	SPEED (RPM)	ARRAY	CLASS	MOTOR BHP	SIZE (HP)	VOLTAGE/ PHASE	VOLUME CONTROL	MANUFACTURER & MODEL NO.	NOTES
SF-1	FAN WALL - ACFQ1	12,885	4.5	1750	2 ROWS X 2 FANS	III	12.2	15	460/3	VFD WITH AUTO TRANSFER BACK-UP VFD	HAAKON	-
SF-2	FAN WALL - ACFQ1	12,885	4.5	1750	2 ROWS X 2 FANS	III	12.2	15	460/3	VFD WITH AUTO TRANSFER BACK-UP VFD	HAAKON	-
SF-3	FAN WALL - ACFQ1	12,885	4.5	1750	2 ROWS X 2 FANS	III	12.2	15	460/3	VFD WITH AUTO TRANSFER BACK-UP VFD	HAAKON	-
SF-4	FAN WALL - ACFQ1	12,885	4.5	1750	2 ROWS X 2 FANS	III	12.2	15	460/3	VFD WITH AUTO TRANSFER BACK-UP VFD	HAAKON	-

FAN NOISE PERFORMANCE DATA (SF-1 THROUGH SF-4)

OCTAVE BAND	1	2	3	4	5	6	7	8
HZ	63	125	250	500	1000	2000	4000	8000
SOUND POWER INLET	76	79	93	84	79	79	79	73
SOUND POWER OUTLET	84	84	88	55	76	73	73	68

FILTER BANK (FB)

PLAN CODE	MERV	MAX. CLEAN PD (IN WC)	DESIGN PD (IN WC)	INDIVIDUAL FILTER DIMENSIONS LENGTH (IN)	HEIGHT (IN)	DEPTH (IN)	QUANTITY (EA)
FB-1	8	0.2	0.50	24	24	2	28 24W X 24H
FB-2	13	0.30	0.50	24	12	12	7 24W X 12H

VCBO ARCHITECTURE
VALENTINER CRANE BRUNJES ONYON

VCBO ARCHITECTURE
524 SOUTH 600 EAST
SALT LAKE CITY, UT 84102
Phone: (801) 575-8800
Fax: (801) 531-9850
WWW: www.vcbo.com

DFCM CODE COMPLIANCE STAMP

Student Activity Center
Stromberg Addition - BID SET
Weber State University
3750 Harrison Blvd. Ogden, UT 84408

Rev #	Date	Description
1	10.12.2012	Addendum 2

Stephen G. Connor, REGISTERED PROFESSIONAL ENGINEER, 187524, 10/3/2012, State of Utah

Colvin Engineering Associates, Inc.
244 West 300 North Suite 200
Salt Lake City, Utah 84103
Phone: (801) 322-2400 / Fax: (801) 322-2416

Job # 2012-033.00
CAD File
Drawn TCF Checked BRC
Date 10.03.2012
Owner # DFCM #12031810

MECHANICAL SCHEDULES

M601

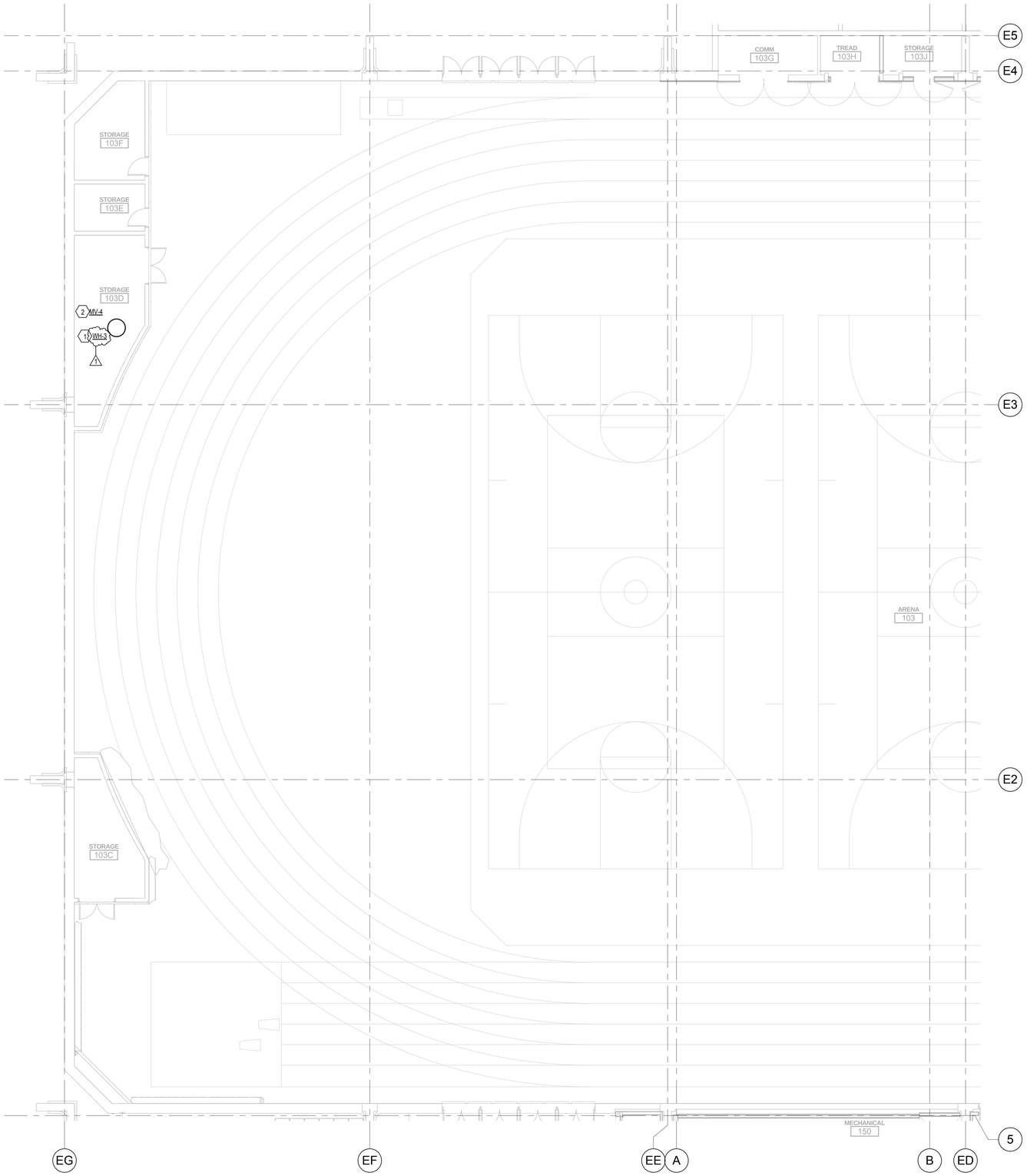

1 FIRST FLOOR AREA A PLUMBING PLAN

SCALE: 1/8" = 1'-0"

6' 0' 4' 8' 12' 16'

KEYED NOTES

1. PROVIDE NEW INSTANTANEOUS WATER HEATER AS SHOWN. COORDINATE LOCATION ON SITE WITH OWNER AND ARCHITECT.
2. PROVIDE NEW MIXING VALVE AS SHOWN. COORDINATE LOCATION ON SITE WITH OWNER AND ARCHITECT.

GENERAL NOTES

A. CONTRACTOR TO COORDINATE HEATING WATER SUPPLY AND RETURN PIPE ROUTING WITH ALL OTHER TRADES.

B. SEE REQUIRED DETAIL OF PIPE SLEEVE FOR INSULATED PIPE THRU WALL ON 11/ P501.

C. CONTRACTOR TO COORDINATE THE ELEVATOR EQUIPMENT AND ELECTRICAL ROOM AREAS TO NOT CONTAIN ANY PIPE ROUTING ABOVE.

D. BUILDING EXPANSION JOINT AT GRID 5. PROVIDE FLEXIBLE CONNECTION TO MEET REQUIREMENTS.

VCBO
ARCHITECTURE
VALENTINER
CRANE
BRUNJES
ONYON

VCBO ARCHITECTURE
524 SOUTH 600 EAST
SALT LAKE CITY, UT 84102
Phone: (801) 575-8800
Fax: (801) 531-9850
WWW: www.vcbo.com

DFCM CODE COMPLIANCE STAMP

Student Activity Center

Stromberg Addition - BID SET

Weber State University
3750 Harrison Blvd. Ogden, UT 84408

Rev #	Date	Description
1	10.12.2012	Addendum 2

Stephen G. Coffman
Reg. No. 167524
10/03/2012
Professional Engineer
State of Utah

Colvin Engineering Associates, Inc.
244 West 300 North Suite 200
Salt Lake City, Utah 84103
Phone: (801) 322-2400 / Fax: (801) 322-2416

Job # 2012-033.00
CAD File
Drawn TCF Checked BRC
Date 10.03.2012
Owner # DFCM #12031810

FIRST FLOOR AREA A PLUMBING PLAN

P111.1

Copyright (C) 2012 by Colvin Engineering Associates, Inc. Salt Lake City, Utah. All rights reserved. Unauthorized copying and/or use is illegal and subject to prosecution.

10/15/2012 7:11:00 AM

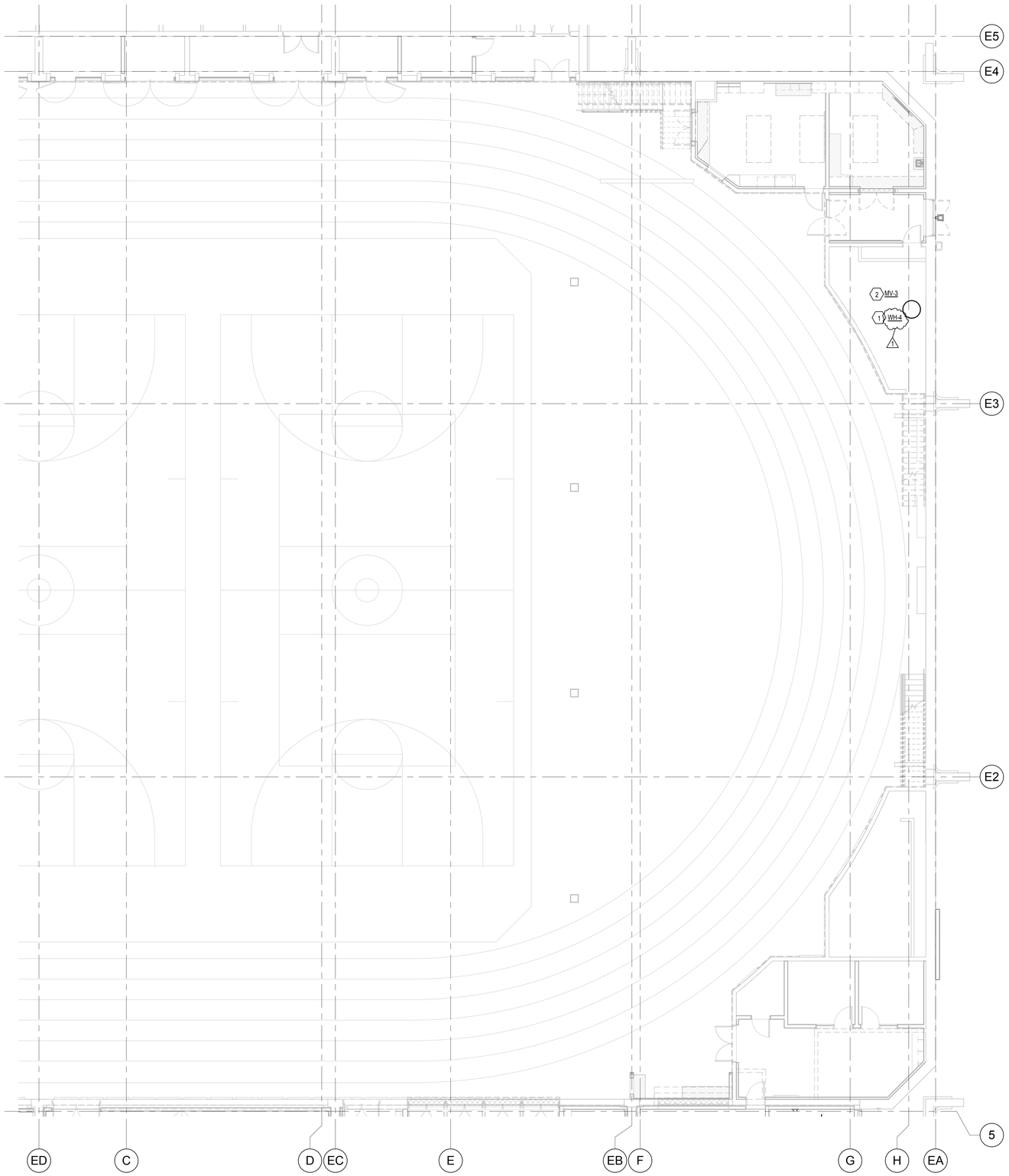

1 FIRST FLOOR AREA B PLUMBING PLAN

SCALE: 1/8" = 1'-0"

6' 0' 4' 8' 12' 16'

KEYED NOTES

1. PROVIDE NEW INSTANTANEOUS WATER HEATER AS SHOWN. COORDINATE LOCATION ON SITE WITH OWNER AND ARCHITECT.
2. PROVIDE NEW MIXING VALVE AS SHOWN. COORDINATE LOCATION ON SITE WITH OWNER AND ARCHITECT.

GENERAL NOTES

A. ALL WASTE, ROOF DRAINS AND OVERFLOW DRAINS TO BE RUN AT 1/8" PER FOOT SLOPE UNLESS NOTED OTHERWISE.

B. PROVIDE ACCESS DOORS TO ALL MIXING VALVES, TRAP PRIMERS, SHUTOFF VALVES, ETC.

C. COORDINATE PLUMBING PIPING ROUTING AND LOCATION WITH ALL TRADES.

D. BUILDING EXPANSION JOINT AT GRID 5. PROVIDE FLEXIBLE CONNECTION TO MEET REQUIREMENTS.

E. DO NOT INSTALL CLEANOUTS ABOVE URINALS OR WATER CLOSETS. COORDINATE ALL CLEANOUT LOCATIONS IN WALLS WITH ARCHITECT.

VCBO
ARCHITECTURE
VALENTINER
CRANE
BRUNJES
ONYON

VCBO ARCHITECTURE
524 SOUTH 600 EAST
SALT LAKE CITY, UT 84102
Phone: (801) 575-8800
Fax: (801) 531-9850
WWW: www.vcbo.com

DFCM CODE COMPLIANCE STAMP

Student Activity Center
Stromberg Addition - BID SET
Weber State University
3750 Harrison Blvd. Ogden, UT 84408

Rev #	Date	Description
1	10.12.2012	Addendum 2

Stephen G. Donohue
TCF
167524
10/3/2012
Registered Professional Engineer
State of Utah

Colvin Engineering Associates, Inc.
244 West 300 North Suite 200
Salt Lake City, Utah 84103
Phone: (801) 322-2400 / Fax: (801) 322-2416

Job # 2012-033.00
CAD File
Drawn TCF Checked BRC
Date 10.03.2012
Owner # DFCM #12031810

FIRST FLOOR AREA B PLUMBING PLAN

P112.1

Copyright (C) 2012 by Colvin Engineering Associates, Inc. Salt Lake City, Utah. All rights reserved. Unauthorized copying and/or use is illegal and subject to prosecution.

10/15/2012 7:11:02 AM

KEYED NOTES

1. DCW DROP DOWN TO BE ABOVE CEILING LEVEL. COORDINATE ON SITE EXACT LOCATION WITH ARCHITECT.
2. PIPE TO ROUTE OVER FOOTING. PROVIDE SLEEVE FOR PENETRATION COORDINATE LOCATION WITH STRUCTURAL PLANS.
3. CONNECT CONDENSATE DRAIN TO TAIL PIECE OF DRAIN TO DRINKING FOUNTAIN.
4. RUN 1/2" COLD WATER TO ICE MACHINE . PROVIDE BACKFLOW PREVENTER, SHUTOFF AND CONNECT AS REQUIRED.
5. CONTRACTOR TO COORDINATE 4" SS LINE TO ROUTE UNDER GRADE BEAM AT LOCATION SHOWN. PIPE INVERT AT 96-10".
6. CONTRACTOR TO PROVIDE A DOMESTIC COLD WATER FLOW METER AT THIS LOCATION.

GENERAL NOTES

A. ALL WASTE, ROOF DRAINS AND OVERFLOW DRAINS TO BE RUN AT 1/8" PER FOOT SLOPE UNLESS NOTED OTHERWISE.
B. PROVIDE ACCESS DOORS TO ALL MIXING VALVES, TRAP PRIMERS, SHUTOFF VALVES, ETC.
C. COORDINATE PLUMBING PIPING ROUTING AND LOCATION WITH ALL TRADES.
D. BUILDING EXPANSION JOINT AT GRID 5. PROVIDE FLEXIBLE CONNECTION TO MEET REQUIREMENTS.
E. DO NOT INSTALL CLEANOUTS ABOVE URINALS OR WATER CLOSETS. COORDINATE ALL CLEANOUT LOCATIONS IN WALLS WITH ARCHITECT.

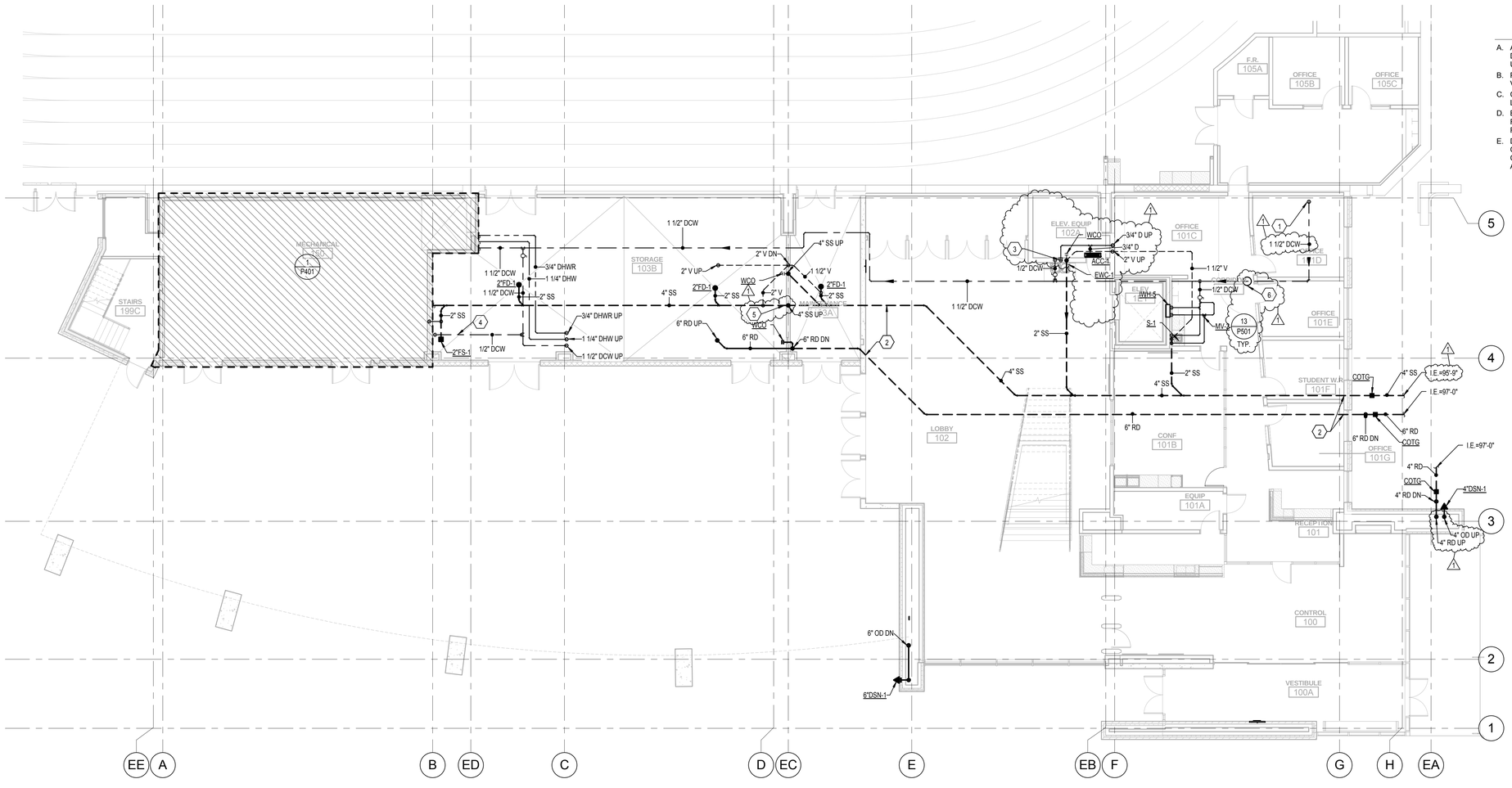

1 FIRST FLOOR AREA C PLUMBING PLAN
SCALE: 1/8" = 1'-0"

VCBO
ARCHITECTURE
VALENTINER
CRANE
BRUNJES
ONYON

VCBO ARCHITECTURE
524 SOUTH 600 EAST
SALT LAKE CITY, UT 84102
Phone: (801) 575-8800
Fax: (801) 531-9850
WWW: www.vcbo.com

DFCM CODE COMPLIANCE STAMP

Student Activity Center
Stromberg Addition - BID SET
Weber State University
3750 Harrison Blvd. Ogden, UT 84408

Rev #	Date	Description
1	10.12.2012	Addendum 2

Stephen G. Colvin
Registered Professional Engineer
167524
10/3/2012
State of Utah

Colvin Engineering Associates, Inc.
244 West 300 North Suite 200
Salt Lake City, Utah 84103
Phone: (801) 322-2400 / Fax: (801) 322-2416

Job # 2012-033.00
CAD File
Drawn TCF Checked BRC
Date 10.03.2012
Owner # DFCM #12031810

FIRST FLOOR AREA C PLUMBING PLAN

P113.1

Copyright (C) 2012 by Colvin Engineering Associates, Inc. Salt Lake City, Utah. All rights reserved. Unauthorized copying and/or use is illegal and subject to prosecution.

10/15/2012 7:11:05 AM

KEYED NOTES

1. TIE NEW PIPING INTO EXISTING PIPING AT UPPER LEVEL OF GYM.
2. ROOF AND OVERFLOW DRAIN PIPING TO BE STACKED IN LOCATION SHOWN.

GENERAL NOTES

A. ALL WASTE, ROOF DRAINS AND OVERFLOW DRAINS TO BE RUN AT 1/8" PER FOOT SLOPE UNLESS NOTED OTHERWISE.
B. PROVIDE ACCESS DOORS TO ALL MIXING VALVES, TRAP PRIMERS, SHUTOFF VALVES, ETC.
C. COORDINATE PLUMBING PIPING ROUTING AND LOCATION WITH ALL TRADES.
D. BUILDING EXPANSION JOINT AT GRID 5. PROVIDE FLEXIBLE CONNECTION TO MEET REQUIREMENTS.
E. DO NOT INSTALL CLEANOUTS ABOVE URINALS OR WATER CLOSETS. COORDINATE ALL CLEANOUT LOCATIONS IN WALLS WITH ARCHITECT.

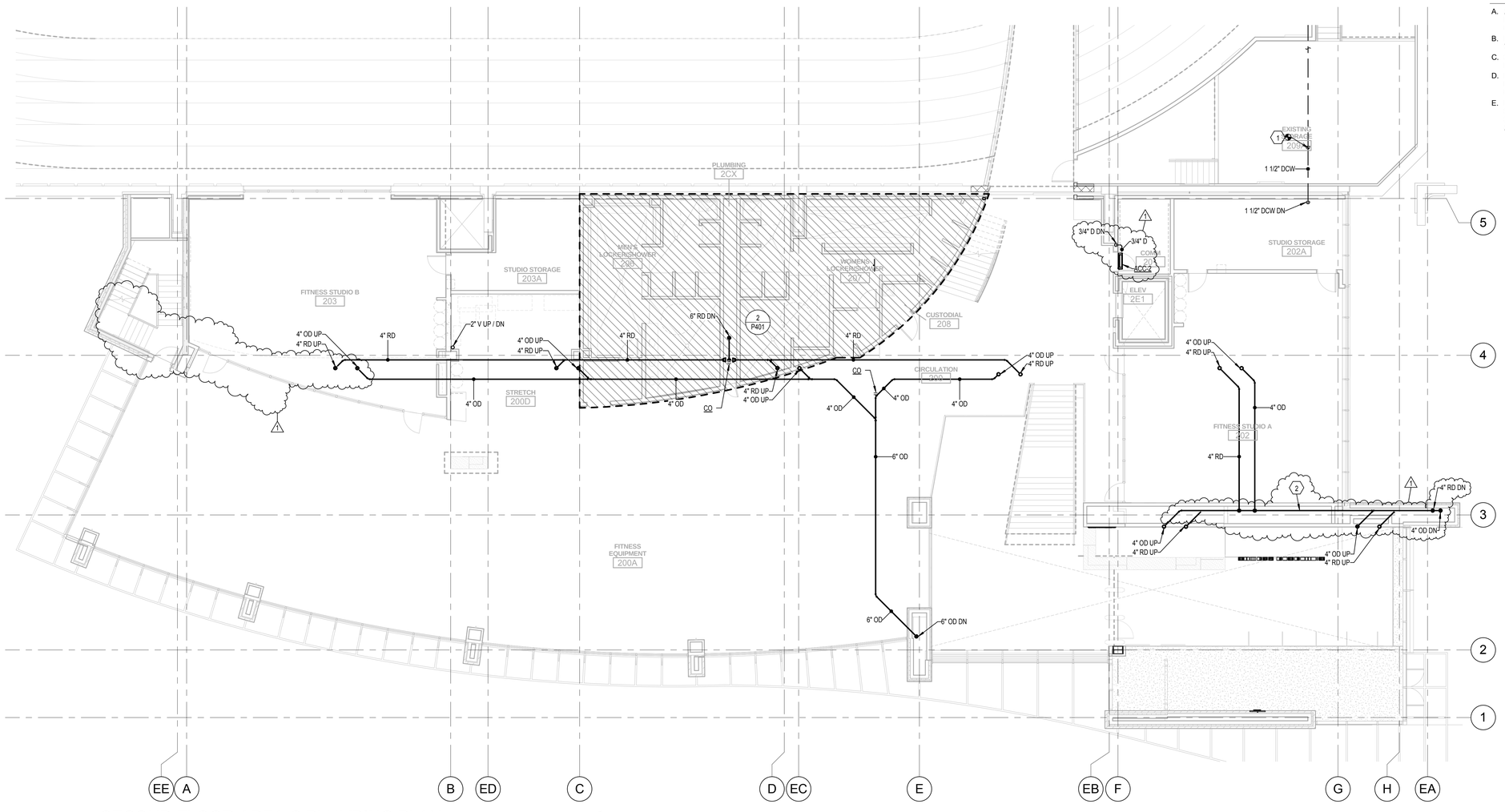

1 SECOND FLOOR AREA C PLUMBING PLAN
SCALE: 1/8" = 1'-0"

VCBO ARCHITECTURE
VALENTINER CRANE BRUNJES ONYON

VCBO ARCHITECTURE
524 SOUTH 600 EAST
SALT LAKE CITY, UT 84102
Phone: (801) 575-8800
Fax: (801) 531-9850
WWW: www.vcbo.com

DFCM CODE COMPLIANCE STAMP

Student Activity Center
Stromberg Addition - BID SET
Weber State University
3750 Harrison Blvd. Ogden, UT 84408

Rev #	Date	Description
1	10.12.2012	Addendum 2

Job # 2012-033.00
CAD File
Drawn TCF Checked BRC
Date 10.03.2012
Owner # DFCM #12031810

SECOND FLOOR AREA C PLUMBING PLAN

P123.1

Colvin Engineering Associates, Inc.
244 West 300 North Suite 200
Salt Lake City, Utah 84103
Phone: (801) 322-2400 / Fax: (801) 322-2416

Copyright (C) 2012 by Colvin Engineering Associates, Inc. Salt Lake City, Utah. All rights reserved. Unauthorized copying and/or use is illegal and subject to prosecution.

10/15/2012 7:11:11 AM

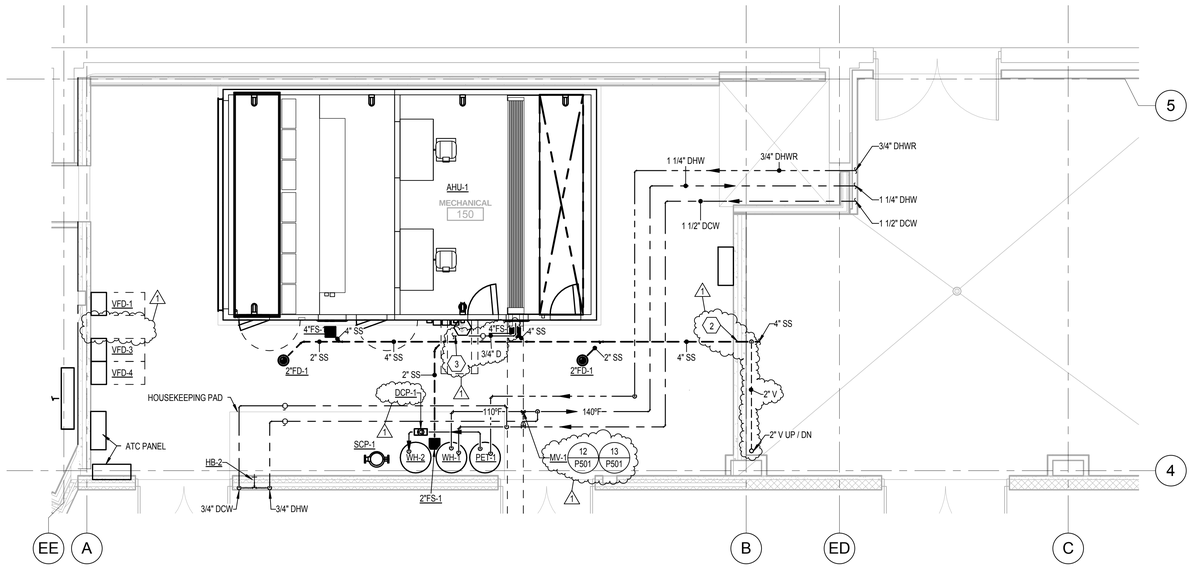

1 ENLARGED MECHANICAL ROOM PLUMBING PLAN

SCALE: 1/4" = 1'-0"

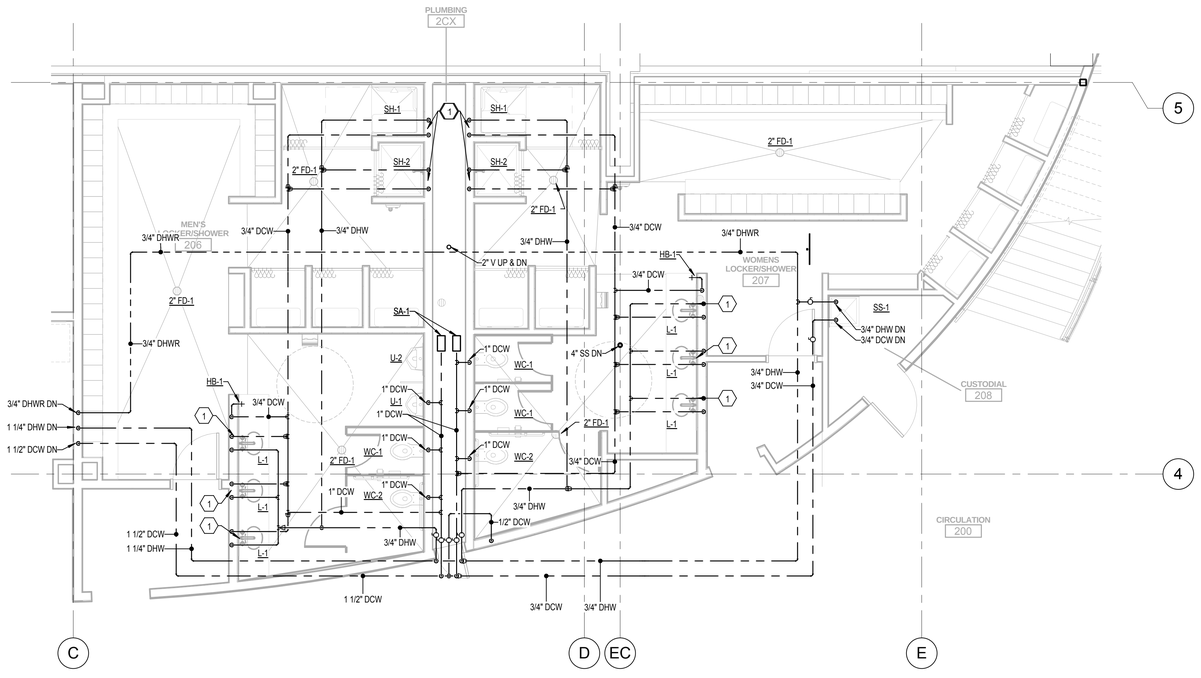

2 ENLARGED SECOND FLOOR MENS AND WOMENS LOCKER ROOMS PLUMBING PLAN

SCALE: 1/4" = 1'-0"

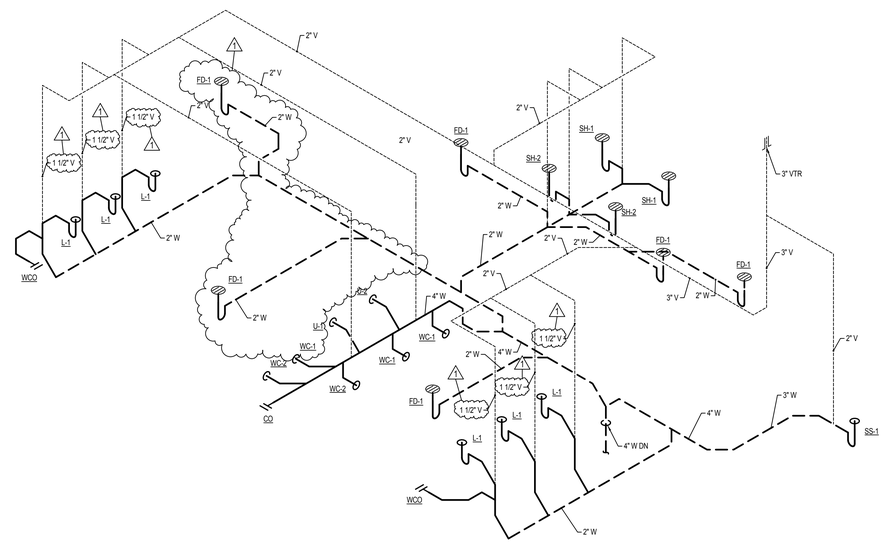

SECOND FLOOR WASTE AND VENT ISOMETRIC

SCALE: 1/4" = 1'-0"

KEYED NOTES

1. PROVIDE 1/2" DCW AND 1/2 DHW.
2. COORDINATE PIPE PENETRATION WITH SITE AT AN I.E.OF 98'-6".
3. 3/4" CONDENSATE. CONNECT TO NEAREST FLOOR DRAIN.

GENERAL NOTES

A. ALL WASTE, ROOF DRAINS AND OVERFLOW DRAINS TO BE RUN AT 1/8" PER FOOT SLOPE UNLESS NOTED OTHERWISE.
B. PROVIDE ACCESS DOORS TO ALL MIXING VALVES, TRAP PRIMERS, SHUTOFF VALVES, ETC.
C. COORDINATE PLUMBING PIPING ROUTING AND LOCATION WITH ALL TRADES.
D. BUILDING EXPANSION JOINT AT GRID 5. PROVIDE FLEXIBLE CONNECTION TO MEET REQUIREMENTS.
E. DO NOT INSTALL CLEANOUTS ABOVE URINALS OR WATER CLOSETS. COORDINATE ALL CLEANOUT LOCATIONS IN WALLS WITH ARCHITECT.

VCBO ARCHITECTURE
VALENTINER CRANE BRUNJES ONYON

VCBO ARCHITECTURE
524 SOUTH 600 EAST
SALT LAKE CITY, UT 84102
Phone: (801) 575-8800
Fax: (801) 531-9850
www: www.vcbo.com

DFCM CODE COMPLIANCE STAMP

Student Activity Center
Stromberg Addition - BID SET
Weber State University
3750 Harrison Blvd. Ogden, UT 84408

Rev #	Date	Description
1	10.12.2012	Addendum 2

Job # 2012-033.00
CAD File
Drawn TCF Checked BRC
Date 10.03.2012
Owner # DFCM #12031810

ENLARGED PLUMBING PLANS

P401

Colvin Engineering Associates, Inc.
244 West 300 North Suite 200
Salt Lake City, Utah 84103
Phone: (801) 322-2400 / Fax: (801) 322-2416

Copyright (C) 2012 by Colvin Engineering Associates, Inc. Salt Lake City, Utah. All rights reserved. Unauthorized copying and/or use is illegal and subject to prosecution.

10/15/2012 7:11:16 AM

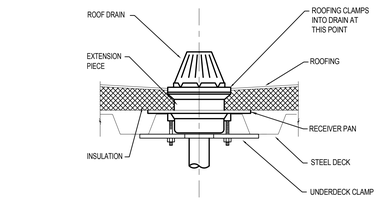

1 ROOF DRAIN DETAIL
NO SCALE

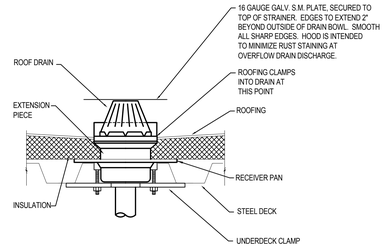

2 OVERFLOW ROOF DRAIN WITH HOOD DETAIL
NO SCALE

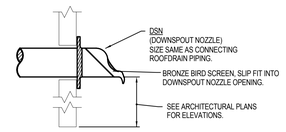

3 DOWNSPOUT NOZZLE DETAIL
NO SCALE

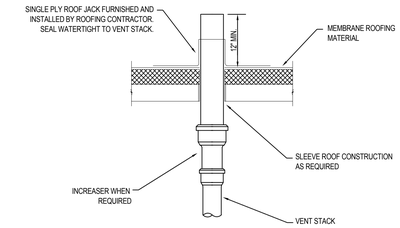

4 VENT THROUGH ROOF DETAIL
NO SCALE

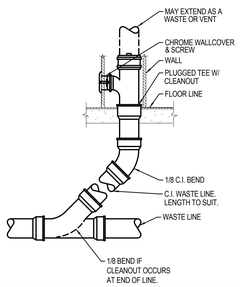

5 WALL CLEANOUT DETAIL
NO SCALE

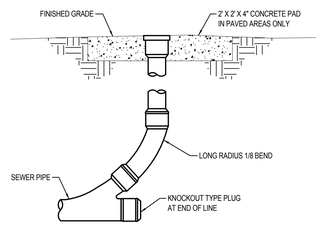

6 SURFACE CLEANOUT DETAIL
NO SCALE

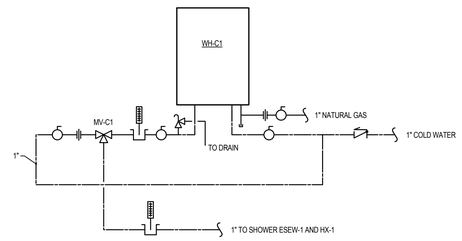

7 INSTANTANEOUS WATER HEATER DETAIL
NO SCALE

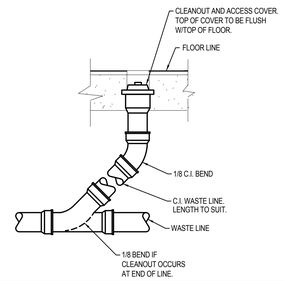

8 FLOOR CLEANOUT DETAIL
NO SCALE

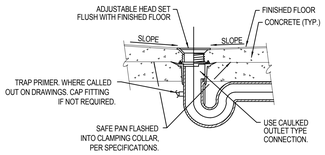

9 TYPICAL FLOOR DRAIN IN SUSPENDED SLAB DETAIL
NO SCALE

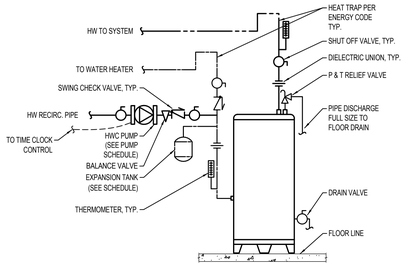

10 ELECTRIC WATER HEATER PIPING DETAIL
NO SCALE

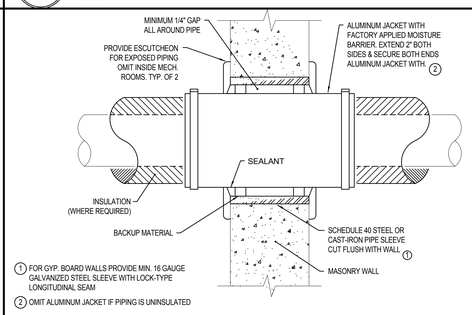

11 PIPE SLEEVE FOR INSULATED PIPE THROUGH WALL
NO SCALE

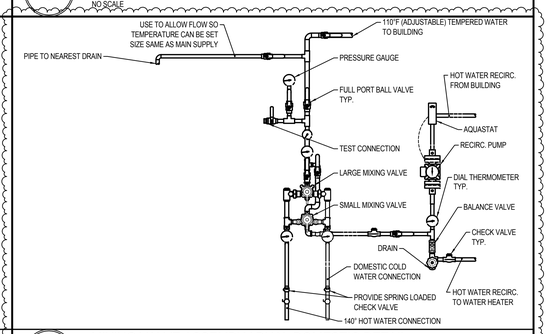

12 MIXING VALVE ASSEMBLY DUAL DOMESTIC DETAIL
NO SCALE

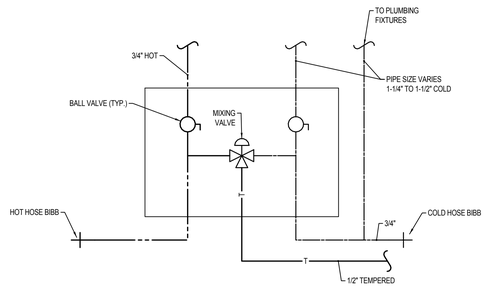

13 MIXING VALVE BOX DETAIL
NO SCALE

14
NO SCALE

16
NO SCALE

16
NO SCALE

Copyright (C) 2012 by Colvin Engineering Associates, Inc. Salt Lake City, Utah. All rights reserved. Unauthorized copying and/or use is illegal and subject to prosecution.

10/15/2012 7:11:16 AM

VCBO
ARCHITECTURE
VALENTINER
CRANE
BRUNJES
ONYON

VCBO ARCHITECTURE
524 SOUTH 600 EAST
SALT LAKE CITY, UT 84102
Phone: (801) 575-8800
Fax: (801) 531-9850
WWW: www.vcbo.com

DFCM CODE COMPLIANCE STAMP

Student Activity Center
Stromberg Addition - BID SET
Weber State University
3750 Harrison Blvd. Ogden, UT 84408

Rev #	Date	Description
1	10.12.2012	Addendum 2

STANLEY G. COLVIN
STATE OF UTAH
No. 187524
10/3/2012
REGISTERED PROFESSIONAL ENGINEER

Colvin Engineering Associates, Inc.
244 West 300 North Suite 200
Salt Lake City, Utah 84103
Phone: (801) 322-2400 / Fax: (801) 322-2416

Job # 2012-033.00
CAD File
Drawn TCF Checked BRC
Date 10.03.2012
Owner # DFCM #12031810

PLUMBING DETAILS

P501