# PHYSICAL EDUCATION FACILITY

## FOR

# WEBER STATE COLLEGE

3750 HARRISON BLVD. OGDEN, UTAH 84408

**DFCM PROJECT NO. RW: 84-058**

RECORD DOCUMENTS JUL 2 1990
THESE DOCUMENTS HAVE BEEN REVISED TO RECORD INFORMATION SUBMITTED BY THE CONTRACTOR, WHILE THEY ARE ASSUMED TO BE RELIABLE THE ARCHITECT DOES NOT GUARANTEE THEIR ACCURACY.


JONES/RICHARDS AND ASSOCIATES. . . . . . . . . . . . . . . ARCHITECTS
533 26TH STREET SUITE 101 OGDEN, UTAH 84401 PHONE (801) 394-3033

STATE OF UTAH BRETT J. RICHARDS NO. 1107 LICENSED ARCHITECT

ADAMSON ENGINEERING. . . . . . . . . . STRUCTURAL
1140 36TH STREET SUITE 204 OGDEN, UTAH 84403 PHONE (801) 621-8130

REGISTERED PROFESSIONAL ENGINEER O. KENT RICH 3660 State of Utah

DAVID C. RACKER & ASSOCIATES. . . . . LANDSCAPE
3120 SOUTH 950 EAST BOUNTIFUL, UTAH 84010 PHONE (801) 295-5335

VANBOERUM/FRANK ASSOCIATES. . . . . MECHANICAL
220 SOUTH 200 EAST SALT LAKE CITY, UTAH 84111 PHONE (801) 530-3148

REGISTERED PROFESSIONAL ENGINEER No. 7122 KIM P. HARRIS STATE OF UTAH

BOYD JARMAN. . . . . . . . . . . . . . PE CONSULTANT
1180 WEST 820 NORTH PROVO, UTAH 84601

BECHERER-NIELSON ASSOCIATES. . . . . ELECTRICAL
146 PIERPONT AVE. SALT LAKE CITY, 84101 PHONE (801) 532-2196

REGISTERED PROFESSIONAL ENGINEER ROBERT J. BECHERER No. 4222 STATE OF UTAH

ACOUSTICAL ENGINEERS INC.. . . . . . . . . ACOUSTICS
1864 So STATE #270 SALT LAKE CITY, UTAH 84115 PHONE (801) 467-4206


## ABBREVIATIONS

| | | | |
|---|---|---|---|
| @ | AT | HC | HOLLOW CORE |
| # | POUND OR NUMBER | HDWD | HARDWOOD |
| AB | ANCHOR BOLT | HDWR | HARDWARE |
| ACT | ACOUSTICAL TILE | HDRL | HANDRAIL |
| ADJ | ADJUSTABLE | HM | HOLLOW METAL |
| AFF | ABOVE FINISH FLOOR | | |
| ALUM | ALUMINUM | ID | INSIDE DIA |
| BD | BOARD | INCL | INCLUDE(D)(ING) |
| BLDG | BUILDING | INSUL | INSULATION |
| BM | BEAM | INT | INTERIOR |
| BOT | BOTTOM | | |
| BRG | BEARING | JT | JOINT |
| BRK | BRICK | | |
| BS | BOTH SIDES | MAS | MASONRY |
| BSMT | BASEMENT | MAX | MAXIMUM |
| BUR | BUILT-UP ROOFING | MECH | MECHANICAL |
| | | MEJC | MTL EXPANSION JT COVER |
| | | MTL | METAL |
| CAB | CABINET | MFR | MANUFACTURER |
| CJT | CONTROL JOINT | MIN | MINIMUM |
| ℄ | CENTER LINE | MO | MASONRY OPENING |
| CLG | CEILING | | |
| CMU | CONCRETE MASONRY UNITS | NIC | NOT IN CONTRACT |
| COL | COLUMN | NTS | NOT TO SCALE |
| CONC | CONCRETE | | |
| CONSTR | CONSTRUCTION | OC | ON CENTER |
| CONSTR JT | CONSTRUCTION JOINT | | |
| CONT | CONTINUOUS | PBD | PARTICLE BD |
| CONTR | CONTRACT(OR) | PL | PLATE |
| CORR | CORRIDOR | ℞ | PROPERTY LINE |
| CPT | CARPET | PLAS LAM | PLASTIC LAMINATE |
| CT | CERAMIC TILE | PLYWD | PLYWOOD |
| CTSK | COUNTERSINK | | |
| | | QT | QUARRY TILE |
| DET | DETAIL | | |
| DF | DRINKING FOUNTAIN | RB | RESILIENT BASE |
| Ø | DIAMETER | RD | ROOF DRAIN |
| DIM | DIMENSION | REINF | REINFORCE(D)(ING) |
| DN | DOWN | RFG | ROOFING |
| DR | DOOR | RM | ROOM |
| | | RO | ROUGH OPENING |
| | | RW | REDWOOD |
| EA | EACH | | |
| EB | EXPANSION BOLT | SC | SOLID CORE |
| EIFS | EXTERIOR INSUL & FINISH SYSTEM | SCH | SCHEDULE |
| ELEC | ELECTRICAL | SEC | SECTION |
| ELEV | ELEVATION | SIM | SIMILAR |
| EQ | EQUAL | SMS | SHEET METAL SCREW |
| EQUIP | EQUIPMENT | SPEC | SPECIFICATION |
| EWC | ELECTRIC WATER COOLER | SQ | SQUARE |
| EXIST | EXISTING | STL | STEEL |
| EXP JT | EXPANSION JOINT | SYN | SYNTHETIC |
| EXT | EXTERIOR | SYS | SYSTEM |
| FDN | FOUNDATION | T & B | TOP AND BOTTOM |
| FECB | FIRE EXTINGUISHER CAB | TEMP GL | TEMPERED GLASS |
| FIN | FINISH (ED) | TYP | TYPICAL |
| FL | FLOOR | | |
| FT | FOOT OR FEET | VCT | VINYL COMPOSITION TILE |
| FTG | FOOTING | | |
| FUR | FURRING | W/ | WITH |
| | | WD | WOOD |
| GA | GAUGE | WDW | WINDOW |
| GALV | GALVANIZED | W/O | WITHOUT |
| GC | GENERAL CONTRACTOR | WR-GL | WIRED GLASS |
| GL | GLASS | WSCT | WAINSCOT |
| GYP BD | GYPSUM WALLBOARD | WWF | WELDED WIRE FABRIC |

## MATERIAL SCHEDULE

- EARTH
- ROCK FILL
- SAND/MORTAR/PLASTER
- CONCRETE - CAST IN PLACE OR PRECAST
- BRICK
- CONCRETE BLOCK
- STONE
- METAL - OMIT INDICATION IN THIN MATERIAL
- METAL LATH
- WOOD, FRAMING THROUGH MEMBER, NUMBERS=NOM SIZE
- WOOD, FRAMING INTERRUPTED MEMBER
- PLYWOOD
- GLASS - OMIT INDICATION IN THIN MATERIAL
- ACOUSTICAL TILE OR BOARD
- GYPSUM BOARD DOUBLE LINES OMITTED AT SMALL SCALE
- INSULATION, BLANKET
- INSULATION, RIGID
- CERAMIC TILE SHOW PROFILE ONLY
- BITUMINOUS CONCRETE SHOW PROFILE ONLY
- WOOD STUD WALL
- METAL STUD WALL

## SYMBOL LEGEND

SECTION
A / A25 — SECTION IDENTIFICATION; SHEET WHERE SECTION IS DRAWN

DETAIL
9 / A13 — DETAIL IDENTIFICATION; SHEET WHERE DETAIL IS DRAWN

INTERIOR ELEVATIONS
1 2 A8 3 4 — SHEET WHERE DETAIL IS DRAWN; ELEVATION IDENTIFICATION

ROOM IDENTIFICATION
OFFICE — ROOM NAME
079 — ROOM NO

SPOT ELEVATIONS
725 (NEW)
716 (EXIST)

CONTRACT LIMIT LINE

NEW OR FINISHED CONTOURS

EXISTING CONTOURS TO BE CHANGED

5 — KEYED NOTES

DOOR SYMBOL
102 / A — ROOM ENTERED; DOOR IDENTIFICATION IN ROOM

WINDOW SYMBOL
W / 2 — WINDOW DESIGNATION; WINDOW NUMBER

WORK POINT, CONTROL POINT OR DATUM POINT

## APPROVALS

J. Robert Folsom — Prime Agency — 6/21/88 Date
Wayne J. Bingham — DFCM — 6/27/88 Date
Chalmers Gail Norris — 6-27-88

APPROVAL DOES NOT RELIEVE A/E OF DESIGN LIABILITY

**DFCM PRE-BID STAFF REVIEW**
**Division of Facilities Construction and Management**

| | | | | | |
|---|---|---|---|---|---|
| Architectural (staff) | 6/27/88 | HVAC | | 6/27 | Date |
| Arch Specs & Dwgs | 6/27/88 | Plumbing | | 6/27 | Date |
| Handicapped | 6/27/88 | Energy | | 6/27 | Date |
| Program / STRUCTURAL | Yes No 6/27/88 | Electrical | | 6/27/88 | Date |

OTHER AGENCIES — Fire Marshal — 6/23/88 Date

State Department of Health — Date — Agency — Date

REVIEW DOES NOT RELIEVE A/E OF DESIGN LIABILITY

THE GREAT SEAL OF THE STATE OF UTAH 1896

State of Utah—Department of Administrative Services
**DIVISION OF FACILITIES CONSTRUCTION AND MANAGEMENT**
4110 State Office Building/Salt Lake City Utah 84114/533 5561

## VICINITY MAP

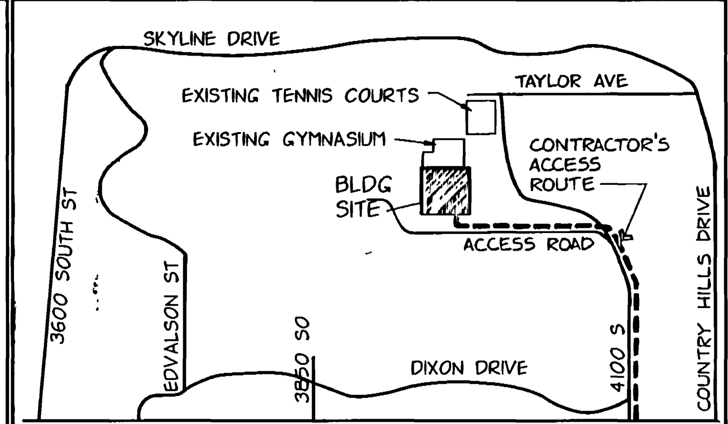


VICINITY MAP
NO SCALE

**DFCM DESIGN & CODE CRITERIA**
(For owners use only)

Seismic Zone II Gross Sq Feet 80,992
Occupancy(ies)¹ A2.1 and B2 Net Sq Feet 67,865 SF
Building Type(s)¹ II - 1 Hr. Ratio
Construction Budget
Miscellaneous

Architectural² 1985 UBC
Handicapped² 4th Revision Utah State Handicapped Code
HVAC² 1985 UMC
Plumbing² 1985 UPC
Energy² Utah Code for Energy Conservation 1983
Handicapped²
Electrical² 1987 NEC

¹Approved by State Fire Marshal
²Applicable Issue(s) of Codes & Supplements

## DRAWING INDEX


0 TITLE SHEET

ARCHITECTURAL
SD-1 SITE PLAN
SD-2 SITE DETAILS
SD-3 SITE DETAILS
SD-4 SITE ALTERNATES

A-1 MAIN LEVEL PLAN - NORTH
A-2 MAIN LEVEL PLAN - SOUTH
A-3 MAIN LEVEL PLAN - LINK
A-4 MID LEVEL PLAN - LINK
A-5 PLAZA LEVEL PLAN - LINK
A-6 BALCONY LEVEL PLAN AND DETAILS
A-7 ROOF PLAN AND DETAILS
A-8 PLAZA AND ROOF DETAILS
A-9 REFLECTED CEILING PLANS
A-10 EXTERIOR ELEVATIONS
A-11 EXTERIOR ELEVATIONS
A-12 BUILDING SECTIONS
A-13 WALL SECTIONS
A-14 WALL SECTIONS
A-15 STAIR SECTIONS AND DETAILS
A-16 ROOM FINISH SCHEDULE & DETAILS
A-17 ENLARGED PLANS AND INTERIOR ELEVATIONS
A-18 INTERIOR ELEVATIONS
A-19 INTERIOR ELEVATIONS
A-20 MILLWORK DETAILS
A-21 MILLWORK & MISC DETAILS
A-22 DOOR SCHEDULE & DETAILS
A-23 WINDOW SCHEDULE & DETAILS
A-24 FACIA DETAILS
A-25 MISC DETAILS

LANDSCAPE
L-1 PLANTING PLAN
L-2 PLAZA IRRIGATION & PLANTING
L-3 IRRIGATION PLAN
L-4 LANDSCAPE DETAILS

STRUCTURAL
S-1 MAIN LEVEL FOUNDATION PLAN
S-2 MAIN LEVEL FOUNDATION PLAN - LINK
S-3 INTERIOR ROOF FRAMING & DETAILS
S-4 FLOOR FRAMING PLAN - LINK
S-5 ROOF FRAMING PLAN - NORTH
S-6 ROOF FRAMING PLAN - SOUTH
S-7 ROOF FRAMING PLAN - LINK
S-8 ROOF FRAMING PLAN - NEW ENTRY
S-9 FOUNDATION SECTIONS & DETAILS
S-10 FOUNDATION SECTIONS & DETAILS
S-11 WALL ELEVATIONS & DETAILS
S-12 WALL ELEVATIONS
S-13 WALL ELEVATIONS & DETAILS
S-14 STRUCTURAL DETAILS
S-15 TRUSS DETAILS
S-16 TRUSSES
S-17 TRUSSES & DETAILS
S-18 STRUCTURAL DETAILS & NOTES

MECHANICAL
SP-1 SITE UTILITIES PLAN
SP-2 ENLARGED TUNNEL PLANS & SECTION
SP-3 SITE UTILITY DETAILS
SP-4 SITE UTILITY DETAILS
SP-5 SITE UTILITY DETAILS AND LEGEND

P-1 PLUMBING PLAN - MAIN LEVEL - NORTH
P-2 PLUMBING PLAN - MAIN LEVEL - SOUTH
P-3 PLUMBING PLAN - MAIN LEVEL - LINK
P-4 PLUMBING PLAN - MID LEVEL - LINK
P-5 PLUMBING PLAN - PLAZA LEVEL - LINK
P-6 PLUMBING PLANS, DETAILS AND SCHEDULES

M-0 MECHANICAL LEGENDS & ABBREVIATIONS
M-1 MECHANICAL PLAN - MAIN LEVEL - NORTH
M-2 MECHANICAL PLAN - MAIN LEVEL - SOUTH
M-3 MECHANICAL PLAN - MAIN LEVEL - LINK
M-4 MECHANICAL PLAN - MID LEVEL - LINK
M-5 MECHANICAL PLAN - PLAZA LEVEL - LINK
M-6 MECHANICAL ROOM & SECTIONS
M-7 PIPE SCHEMATIC
M-8 MECHANICAL EQUIPMENT SCHEDULES
M-9 MECHANICAL EQUIPMENT SCHEDULES
M-10 MECHANICAL DETAILS
M-11 SEISMIC DETAILS

ELECTRICAL
E-1 SCHEDULES & NOTES
E-2 SITE PLAN
E-3 LIGHTING PLAN MAIN LEVEL - NORTH
E-4 LIGHTING PLAN MAIN LEVEL - SOUTH
E-5 LIGHTING PLAN MAIN LEVEL - LINK
E-6 LIGHTING PLAN MID LEVEL - LINK
E-7 LIGHTING PLAN PLAZA LEVEL - LINK
E-8 POWER PLAN MAIN LEVEL - NORTH
E-9 POWER PLAN MAIN LEVEL - SOUTH
E-10 POWER PLAN MAIN LEVEL - LINK
E-11 POWER PLAN MID LEVEL - LINK
E-12 POWER PLAN PLAZA LEVEL
E-13 ELECTRICAL PLAN BALCONY LEVEL
E-14 ONE LINE DIAGRAM
E-15 DETAILS
E-16 PANEL SCHEDULES



0000TV0
Weber State College, Physical Education Facility - RW 84-058
Cover Sheet - 26674



jra JONES/ RICHARDS & ASSOCIATES
ARCHITECTURE (801)394-3033 PLANNING 533 26TH STREET CONSTRUCTION MANAGEMENT OGDEN, UTAH


REVISED: AS BUILT 7-90
PROJECT NUMBER: 8403
DATE: 8-21-88
DRAWN BY: S. DEATON
PROJECT: PHYSICAL EDUCATION FACILITY WEBER STATE COLLEGE
SHEET TITLE: TITLE SHEET
SHEET NO. 0

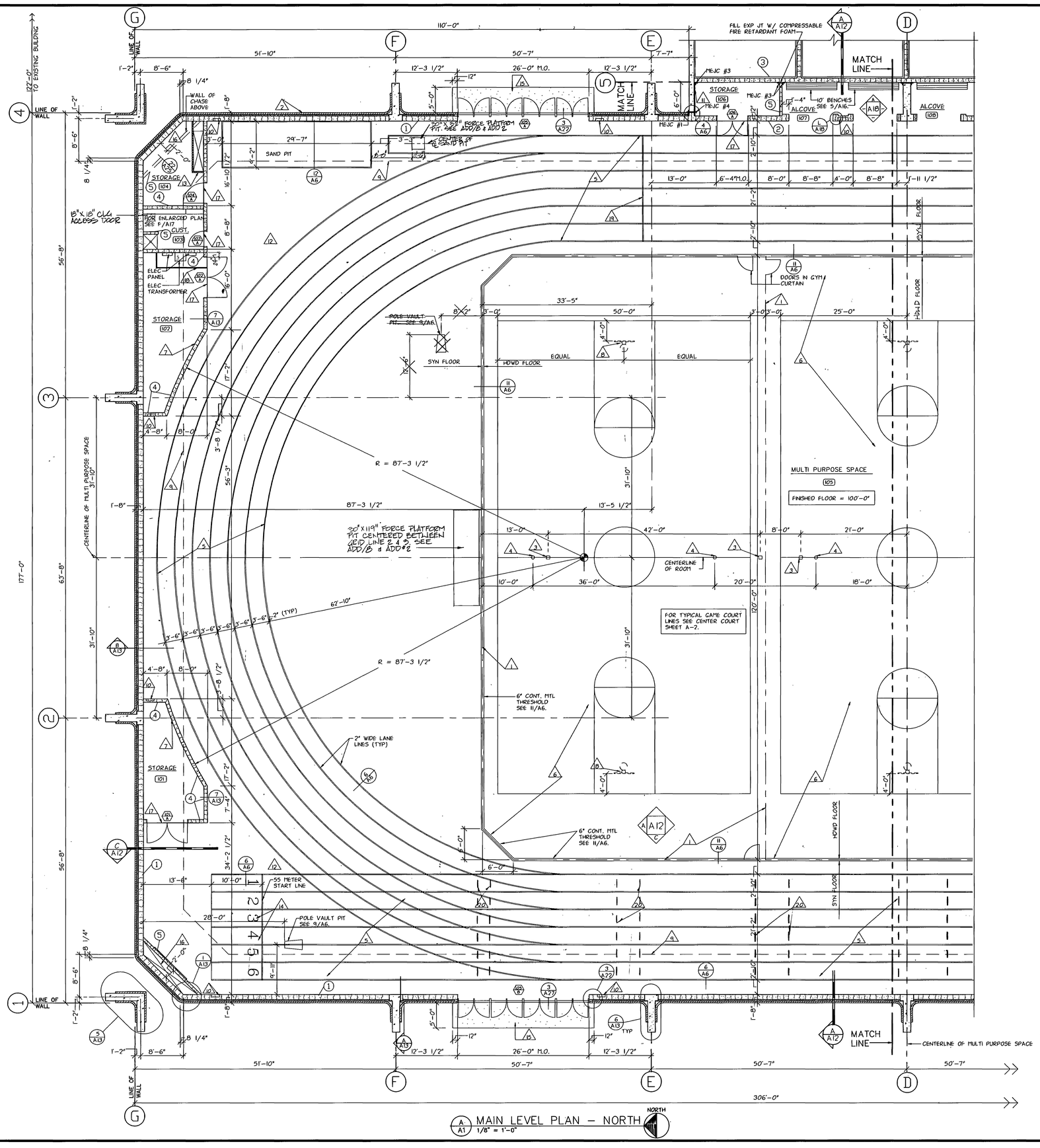


A/A1 MAIN LEVEL PLAN – NORTH
1/8" = 1'-0"

## GENERAL NOTES

1. FIELD VERIFY EXISTING DIMENSIONS.
2. DIMENSIONS ARE TO FACE OF MASONRY UNLESS NOTED OTHERWISE.
3. ALL 4", 6", 8" & 10" CMU TO BE SCORED @ 8" O.C. (UNLESS NOTED OTHERWISE) WHERE EXPOSED TO VIEW EXCEPT STORAGE, CUST. & MECHANICAL ROOMS. RAKE JOINTS OF SCORED CMU. IF CMU IS EXPOSED BOTH SIDES, BOTH SIDES ARE TO BE SCORED.
4. TAPER SYNTHETIC GYM SURFACE TO 1/4" THICK WHERE IT ABUTS CONCRETE OR TILE FLOOR SURFACES.

## KEYED NOTES

1. FOLD UP GYM CURTAIN. CENTER OVER EXPANSION JOINT COVER @ PERIMETER OF HARDWOOD FLOOR. SEE BUILDING SECTIONS SHEET A12.
2. PROVIDE WATERPROOFING, PROTECTION BOARD AND DRAIN BOARD ON EAST SIDE OF FOUNDATION WALL FROM PBR CORNER @ GRID LINE "5" TO NORTH-EAST CORNER OF BULDING. TIE DRAIN BD TO FOOTING DRAIN (6'± EAST) WITH 4" LAYER OF WASHED GRAVEL.
3. TENNIS NET POST INSERTS. SEE 13/A6.
4. VOLLYBALL POST INSERTS. SEE 13/A6.
5. THICKEN SYN FLOOR 5mm AT TRACK. SEE 6/A6.
6. RECESS CONCRETE FLOOR 2-1/4" AT HARDWOOD FLOOR AREA. SEE 11/A6. SLAB THICKNESS UNDER HARDWOOD TO BE 4". (5" UNDER SYNTHETIC FLOOR)
7. USE 8" LONG CMU IN LIEU OF 16" AT CURVED WALLS.
8. RETRACTABLE BASKETBALL BACKBOARDS. SEE 16 & 17/A25.
9. ACOUSTIC BAFFLE ABOVE. SEE ELEVATION SHEETS A12 AND A18.
10. FIRE EXTINGUISHER CABINET. SEE 12/A25.
11. 5/8" GYPSUM BOARD OVER 1 1/2" Z FURRING CHANNELS WITH 1 1/2" RIGID INSULATION. (ROOM 106)
12. FOR MECHANICAL EQUIPMENT PLATFORM ABOVE SEE TYP. ELEVATIONS ON SHEET A/12 & DETAIL 11/A25.
13. FURR AROUND DUCT WITH 2 1/2" METAL STUDS & 5/8" GYPSUM BOARD. (TYP VERTICAL & HORIZONTAL DUCTWORK).
14. PAINTED LANE NUMBERS, 24" HIGH (MIN). COORDINATE EXACT LOCATION WITH COLLEGE.
15. 4" THICK CONCRETE STOOP. THICKEN EDGES TO 12", DOWEL EDGE AT BUILDING TO FND WALL WITH #4 @ 18" O.C.
16. MASONRY JOINTS IN CHASES ARE TO BE FLUSH CUT. (TYP)
17. PROVIDE METAL THRESHOLD TRANSITION BETWEEN SYN GYM FLOOR AND CONCRETE FLOOR.
18. PAINT A 2" WIDE LINE ON FLOOR, 3'-0" IN FRONT OF ELECTRICAL PANELS.
19. 1500 METER START LINE, LOCATE 100 METERS FROM COMMON FINISH LINE.
20. HURDLE MARKS. COORDINATE LOCATION WITH COLLEGE.

D000TVA1
Weber State College Physical Education Facility - INV-84-058
Madsen Pace North - 76973

## WALL SYSTEM

(SEE GENERAL NOTE #3 & ROOM ELEVATIONS FOR SPECIAL CMU TYPES & INSTRUCTIONS).

1. 12" CMU, 3-1/2" RIGID INSULATION & FACE BRICK
2. 12" CMU
3. 10" CMU (SCORED 8" O.C. WHERE EXPOSED)
4. 8" CMU (SCORED 8" O.C. WHERE EXPOSED)
5. 6" CMU (SCORED 8" O.C. WHERE EXPOSED)
6. 12" CONCRETE
7. 10" CONCRETE WITH 2" RIGID INSULATION & 4" CMU VENEER (8" SCORED)
8. 8" CONCRETE WITH 2" RIGID INSULATION & 4" CMU VENEER (8" SCORED)

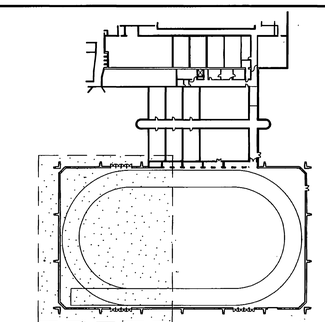

LOCATION PLAN
NO SCALE

RECORD DOCUMENTS
JUL 6 1990
THESE DOCUMENTS HAVE BEEN REVISED TO RECORD INFORMATION SUBMITTED BY THE CONTRACTOR, WHILE THEY ARE ASSUMED TO BE RELIABLE THE ARCHITECT DOES NOT GUARANTEE THEIR ACCURACY.

STATE OF UTAH
ROBERT J. RICHARDS
NO. 4107
LICENSED ARCHITECT


jra JONES/ RICHARDS & ASSOCIATES
ARCHITECTURE
(801)394-3033
PLANNING
CONSTRUCTION MANAGEMENT
533 26TH STREET
OGDEN, UTAH


REVISED:

PROJECT NUMBER: 8403
DATE: 6-21-88
DRAWN BY: S. DEATON

PROJECT: PHYSICAL EDUCATION FACILITY
WEBER STATE COLLEGE

SHEET TITLE: MAIN LEVEL PLAN – NORTH

SHEET NO. A-1

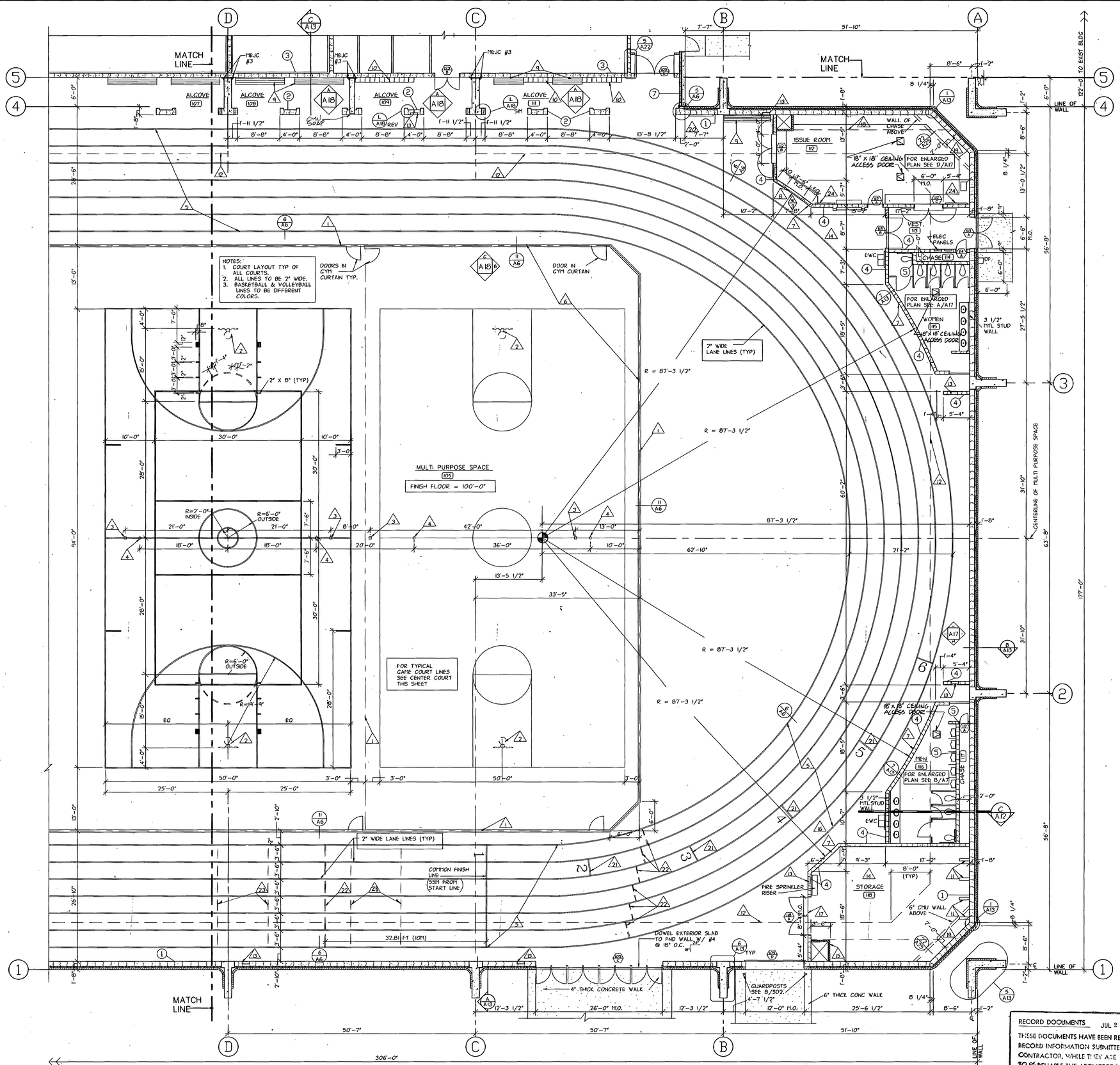


A/A2 MAIN LEVEL PLAN – SOUTH
1/8" = 1'-0"

RECORD DOCUMENTS JUL 2 1990
THESE DOCUMENTS HAVE BEEN REVISED TO RECORD INFORMATION SUBMITTED BY THE CONTRACTOR. WHILE THEY ARE ASSUMED TO BE RELIABLE THE ARCHITECT DOES NOT GUARANTEE THEIR ACCURACY.

## GENERAL NOTES

1. FIELD VERIFY EXISTING DIMENSIONS.
2. DIMENSIONS ARE TO FACE OF MASONRY UNLESS NOTED OTHERWISE.
3. ALL 4", 6", 8" & 10" CMU TO BE SCORED @ 8" O.C. (UNLESS NOTED OTHERWISE) WHERE EXPOSED TO VIEW, EXCEPT STORAGE, CUST. & MECHANICAL ROOMS. RAKE JOINTS OF SCORED CMU. IF CMU IS EXPOSED BOTH SIDES, BOTH SIDES ARE TO BE SCORED.
4. TAPER SYNTHETIC GYM SURFACE TO 1/4" THICK WHERE IT ABUTS CONCRETE OR TILE FLOOR SURFACES.

## KEYED NOTES

1. FOLD UP GYM CURTAIN. CENTER OVER EXPANSION JOINT COVER @ PERIMETER OF HDWD FLOOR. SEE BUILDING SECTIONS SHEET A12.
2. RETRACTABLE BASKETBALL BACKBOARD. SEE 16 & 17/A25.
3. TENNIS NET POST INSERTS. SEE 13/A6.
4. VOLLEYBALL POST INSERTS. SEE 13/A6.
5. THICKEN SYN FLOOR 5 mm @ TRACK, SEE 6/A6.
6. RECESS CONCRETE FLOOR 2 1/4" @ HARDWOOD FLOORING AREA. SEE 11/A6. SLAB THICKNESS UNDER HARDWOOD TO BE 4". (5" UNDER SYNTHETIC FLOOR.)
7. USE 8" LONG CMU IN LIEU OF 16" AT CURVED WALLS.
8. WINDOW, 4'-0" X 3'-8". SEE WINDOW SCHEDULE
9. HARDWOOD BENCHES, SEE 5/A16.
10. LOCKERS, SEE A/A18 & 3/A16.
11. METAL BRACKETS @ 4'-0" O.C. SEE 4/A16.
12. ACOUSTIC BAFFLE ABOVE. SEE ELEVATION SHEETS A12 & A18.
13. FIRE EXTINGUISHER CABINET. SEE 12/A25.
14. FOR MECHANICAL EQUIPMENT PLATFORM ABOVE SEE TYP ELEVATIONS ON SHEET A/12 AND DETAIL 11/A25.
15. FURR AROUND DUCT W/ 2 1/2" METAL STUDS AND 5/8" GYPSUM BD.
16. FOR ROOF ACCESS HATCH ABOVE SEE A/A7.
17. PROVIDE METAL THRESHOLD TRANSITION BETWEEN SYNTHETIC GYM FLOOR AND CONCRETE SLABS. (TYP)
18. METAL STUD AND GYPSUM BOARD SOFFIT AROUND MECHANICAL DUCT.
19. MASONRY JOINTS IN CHASES ARE TO BE FLUSH CUT.
20. BULLETIN BOARD – SEE SPEC.
21. 200 METER START LINES. STAGGER FOR UNIFORM 200 METER DISTANCE TO COMMON FINISH LINE.
22. DASHED RELAY EXCHANGE LINE 10 METER EITHER SIDE OF COMMON FINISH LINE.
23. HURDLE MARKS. COORDINATE LOCATION WITH COLLEGE.
24. TACK BOARD. SEE ENLARGED PLAN A17.

00007VA2
Weber State College, Physical Education Facility - NW84-058
Main Level Plan South - 26660

## WALL SYSTEM

(SEE GENERAL NOTE #3 & ROOM ELEVATIONS FOR SPECIAL CMU TYPES & INSTRUCTIONS.)

1. 12" CMU, 3-1/2" RIGID INSULATION & FACE BRICK
2. 12" CMU
3. 10" CMU (SCORED 8" O.C. WHERE EXPOSED)
4. 8" CMU (SCORED 8" O.C. WHERE EXPOSED)
5. 6" CMU (SCORED 8" O.C. WHERE EXPOSED)
6. 12" CONCRETE
7. 10" CONCRETE WITH 2" RIGID INSULATION & 4" CMU VENEER (8" SCORED)
8. 8" CONCRETE WITH 2" RIGID INSULATION & 4" CMU VENEER (8" SCORED)

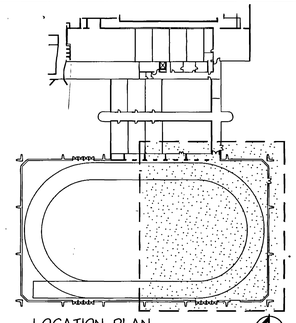

LOCATION PLAN
NO SCALE.

STATE OF UTAH
ROBERT A. RICHARDS
RA-1107
LICENSED ARCHITECT

jra JONES/ RICHARDS & ASSOCIATES
ARCHITECTURE (801)394-3033
PLANNING CONSTRUCTION MANAGEMENT
533 26TH STREET OGDEN, UTAH

REVISED: AS BUILT 7-90
PROJECT NUMBER: 8403
DATE: 6-21-88
DRAWN BY: S. DEATON

PROJECT: PHYSICAL EDUCATION FACILITY
WEBER STATE COLLEGE
SHEET TITLE: MAIN LEVEL PLAN – SOUTH

SHEET NO. A-2

RECORD DOCUMENTS JUN 1 1 1990

THESE DOCUMENTS HAVE BEEN REVISED TO RECORD INFORMATION SUBMITTED BY THE CONTRACTOR. THESE REVISIONS ARE ASSUMED TO BE RELIABLE. THE ARCHITECT DOES NOT GUARANTEE THEIR ACCURACY.

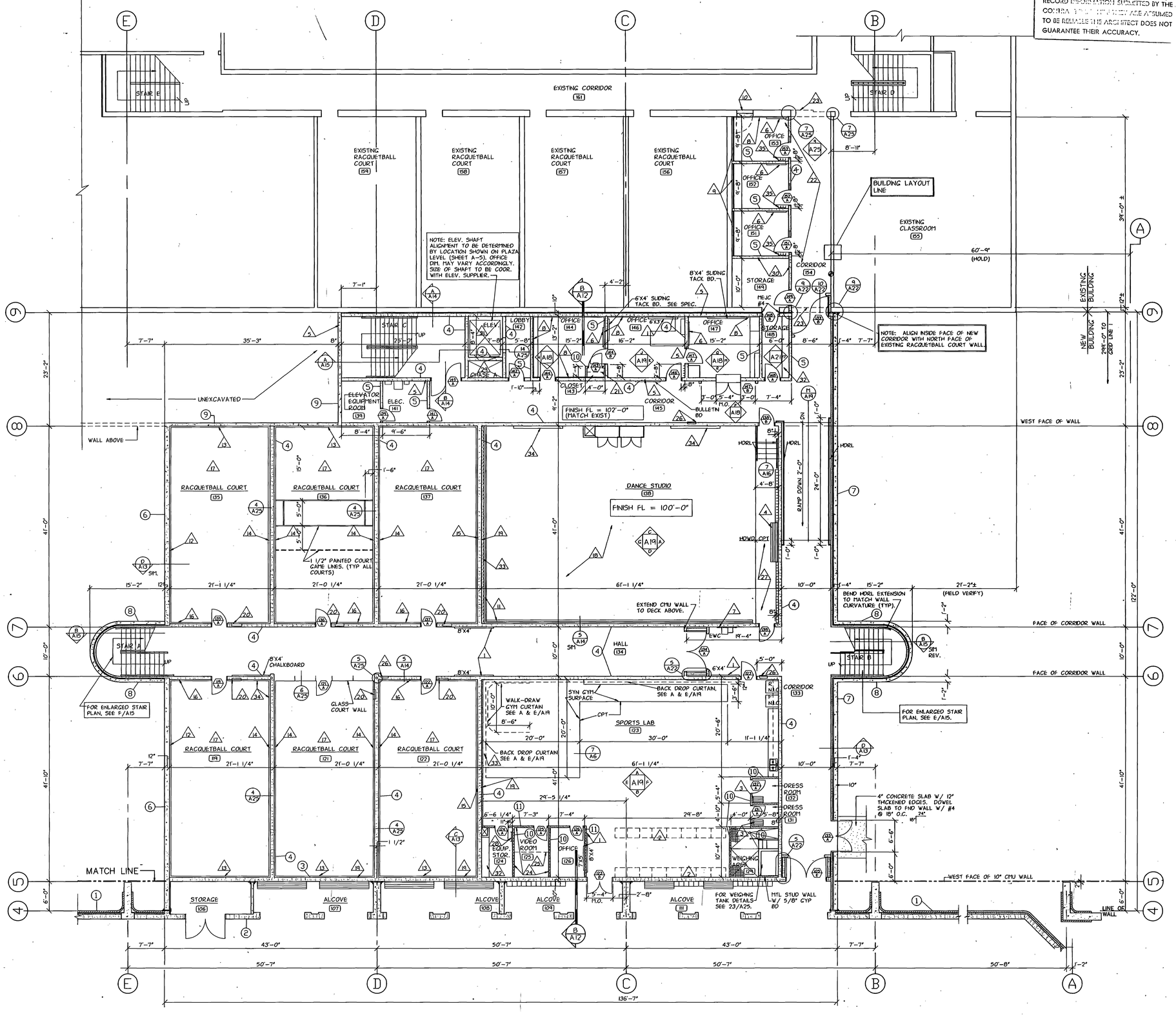


A/A3 MAIN LEVEL PLAN – LINK
1/8" = 1'-0"

## GENERAL NOTES

1. FIELD VERIFY EXISTING DIMENSIONS.
2. DIMENSIONS ARE TO FACE OF MASONRY UNLESS NOTED OTHERWISE.
3. ALL 4", 6", 8" & 10" CMU TO BE SCORED @ 8" O.C. (UNLESS NOTED OTHERWISE) WHERE EXPOSED TO VIEW EXCEPT STORAGE, CUST. & MECHANICAL ROOMS. RAKE JOINTS OF SCORED CMU. IF CMU IS EXPOSED BOTH SIDES, BOTH SIDES ARE TO BE SCORED.
4. EXTEND ALL CORRIDOR WALLS TO DECK ABOVE. AS A FIRE SEAL BETWEEN TOP OF WALL AND DECK. PROVIDE GROUT OR APPROVED FIRE RATED FOAM INSULATION.
5. IN CORRIDOR 133 AND HALL 134 PROVIDE SCORED CMU BASE ABOVE 4" RES. BASE. SEE 1/A4.

## KEYED NOTES

1. TACK BOARD – MOUNT TOP 7'-0" AFF.; SEE 8/A16.
2. STUDY CARRELS N.I.C.
3. 15" X 24" BENCH, SEE 5/A16.
4. 15" X 8'-0" BENCH, SEE 5/A16.
5. FIREWALL STENCILING ABOVE CEILING. SEE NOTE 29 SHT A-4.
6. COMBINATION MARKER & TACK BOARD. SEE 8/A16.
7. 4' WIDE X 9'-0" HIGH CERAMIC TILE BEHIND EWC.
8. FURR OUT WALL WITH HAT CHANNEL @ 16" O.C. AND PROVIDE 5/8" GYPSUM BOARD.
9. 2 1/2" METAL STUDS @ 16" O.C. 1" FROM EXISTING CONCRETE WALL. PROVIDE SOUND INSULATION AND 5/8" GYPSUM BOARD.
10. REMOVE EXISTING DOOR AND FRAME. INFILL OPENING WITH 8" CMU DOWELED TO EXISTING CONCRETE WALLS WITH #4 BARS @ 24" O.C.– PLASTER EAST SIDE TO MATCH EXIST CONCRETE. PAINT ENTIRE WEST SIDE OF CORRIDOR 161.
11. BALLET BARRE, MIRRORS AND CURTAIN. SEE ELEVATIONS, C & D/A19.
12. LAMINATED COURT PANEL SYSTEM OVER 2 1/2" 18 GA. METAL STUDS FURRING @ 16" O.C. WITH R-11 BATT INSULATION AND 6 MIL POLY VAPOR RETARDER. BLOCK @ 8'-0" O.C. BRACE BLOCKING BACK AT CONCRETE WALL.
13. LAMINATED COURT PANEL SYSTEM OVER 2 X 3 OR 2 X 4 TREATED WOOD FURRING LAID FLAT @ 12" O.C.. PROVIDE 6 MIL POLY VAPOR BELOW @ GRADE. SOLID BLOCK @ 8'-0" O.C.
14. LAMINATED COURT PANEL SYSTEM OVER 2 X 3 OR 2 X 4 TREATED WOOD FURRING LAID FLAT @ 16" O.C.. SOLID BLOCK @ 8'-0" O.C.
15. LAMINATED COURT PANEL SYSTEM OVER 1/2" 2 X 3 OR 2 X 4 TREATED WOOD FURRING LAID FLAT @ 16" O.C.. PROVIDE 1 1/2" FIBERGLASS SOUND INSUL BETWEEN FURRING. SOLID BLK @ 8'-0" O.C.
16. LAMINATED COURT PANEL SYSTEM OVER 1 X 4 TREATED WOOD FURRING @ 16" O.C.
17. DEPRESS SLAB 1 3/8" @ RACQUETBALL COURTS.
18. DEPRESS SLAB 1 3/4" @ DANCE STUDIO.
19. FILL NON GROUTED CORES OF CMU WALL WITH SAND.
20. RECESSED RACQUETBALL STORAGE BOX – SEE SPEC.
21. PROVIDE COAT ROD AND 3/4" HDWD PLYWOOD SHELF.
22. REMOVE EXISTING WOOD FLOORING IN EXISTING RACQUETBALL COURT. SAW CUT CONCRETE SLAB UNDER NEW CORRIDOR WALL AND INSTALL NEW CONCRETE FOOTING. POUR NEW CONCRETE TOPPING SLAB OVER ENTIRE COURT, FLUSH WITH EXISTING AND NEW SLABS.
23. SAW CUT AND REMOVE EXISTING CONCRETE WALL FOR NEW OPNG.
24. PROVIDE 3 1/2" SOUND BATTS IN WALLS AND CEILING OF ROOM 125.
25. DIVIDER CURTAIN WITH TRACK. 7'-8" HIGH X 7'-0" WIDE.
26. RECESSED FIRE EXTINGUISHER CABINET. SEE 12/A25.
27. LOOSE LAY CARPET OVER HDWD FLOOR. USE DOUBLE STICK TAPE AT EDGES AND PROVIDE CARPET BAR ALONG JUNCTION BETWEEN WOOD AND CARPET.
28. ACCESS LADDER TO MECHANICAL RM ABOVE. SEE 1/A16.
29. 1'-6" WIDE X 7'-0" HIGH LADDER FOR ELEV PIT. SEE 1/A16.
30. GROUT CORES OF WALL SOLID TO ACHIEVE A 2 HOUR FIRE RATING IN ROOM 149.
31. PLUMBNESS OF SHAFT WALL SHALL MEET REQUREMENTS OF ELEV SUPPLIER.
32. (5) 18" X 12'-5" X 1" (24" X 8'-0" X 1" IN RM 124) PART BD SHELVES W/ HDO & PLASTIC TEE EDGE. USE HEAVY DUTY STANDARDS & BRACKETS. SEE 17/A21 FOR ELEVATIONS.
33. FURR OUT CMU WALL W/ 2 1/2" MTL STUDS @ 24" O.C. W/ 2 1/2" SOUND INSUL. & (2) LAYERS OF 5/8" GYP BD. BRACE EA STUD AT 1/3 POINTS W/ SOUND ISOLATION MOUNT. SEE 11/A25
34. CHALK AND TACK BOARD.
35. 18" COAT RACK. SEE 13/A21.

## WALL SYSTEM

(SEE ROOM ELEVATIONS FOR SPECIAL CMU TYPES & INSTRUCTIONS).

1. 12" CMU, 3-1/2" RIGID INSULATION & FACE BRICK
2. 12" CMU
3. 10" CMU (SCORED 8" O.C. WHERE EXPOSED)
4. 8" CMU (SCORED 8" O.C. WHERE EXPOSED)
5. 6" CMU (SCORED 8" O.C. WHERE EXPOSED)
6. 12" CONCRETE
7. 10" CONCRETE WITH 2" RIGID INSULATION & 4" CMU VENEER (8" SCORED)
8. 8" CONCRETE WITH 2" RIGID INSULATION & 4" CMU VENEER (8" SCORED)
9. 8" CONCRETE
10. 3 5/8" MTL STUDS @ 16" O.C. W/ 5/8" GYP BD BOTH SIDES
11. 3 5/8" 20 GA STL STUDS @ 16" O.C. W/ 5/8" GYP BD BOTH SIDES

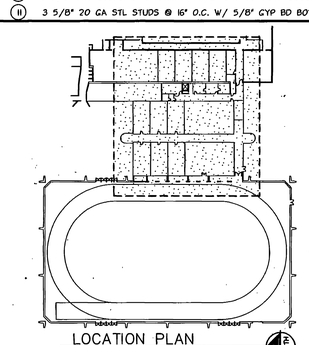

LOCATION PLAN
NO SCALE

STATE OF UTAH LICENSED ARCHITECT BRETT J. RICHARDS NO. 1107

00001VA3
Weber State College: Physical Education Facility - RW 84-058
Main Level Plan Link - 20001

jra JONES/ RICHARDS & ASSOCIATES
PLANNING
CONSTRUCTION MANAGEMENT
533 26TH STREET
OGDEN, UTAH
ARCHITECTURE
(801)394-3033

REVISED: 6-90
AS BUILTS

PROJECT NUMBER: 8403
DATE: 15-21-88
DRAWN BY: S. DEATON

PROJECT: PHYSICAL EDUCATION FACILITY
WEBER STATE COLLEGE

SHEET TITLE: MAIN LEVEL PLAN – LINK

SHEET NO. A-3

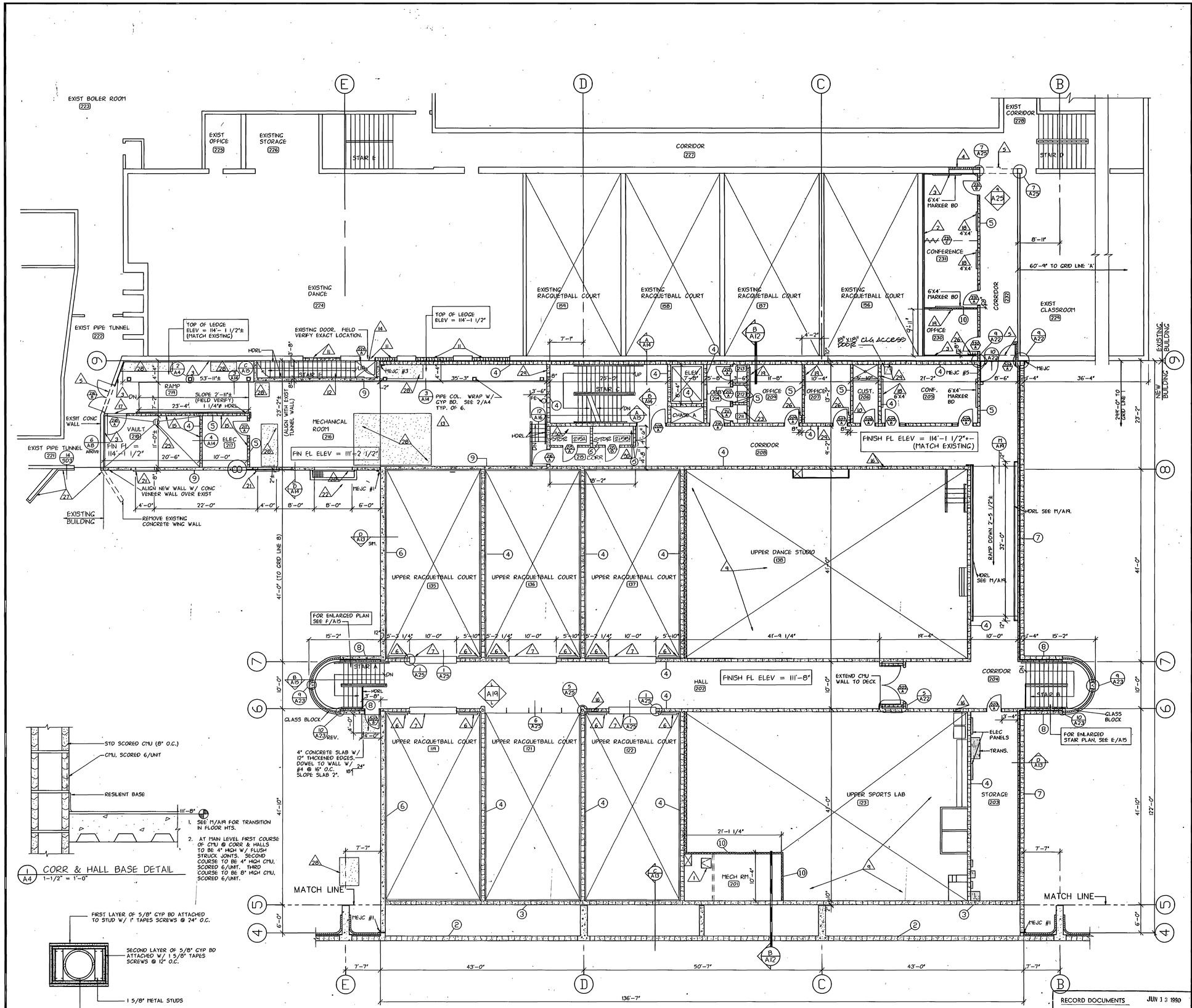


A/A4 MID LEVEL PLAN – LINK
1/8" = 1'-0"




1. SEE M/A19 FOR TRANSITION IN FLOOR HTS.
2. AT MAIN LEVEL FIRST COURSE OF CMU @ CORR & HALLS TO BE 4" HIGH W/ FLUSH STRUCK JOINTS. SECOND COURSE TO BE 4" HIGH CMU, SCORED 6/UNIT. THIRD COURSE TO BE 8" HIGH CMU, SCORED 6/UNIT.

1/A4 CORR & HALL BASE DETAIL
1-1/2" = 1'-0"

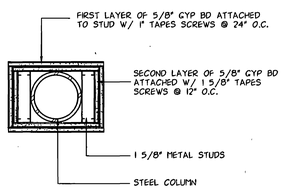


2/A4 COLUMN FIRE PROOFING
1-1/2" = 1'-0"

RECORD DOCUMENTS JUN 13 1990

THESE DOCUMENTS HAVE BEEN REVISED TO RECORD INFORMATION SUBMITTED BY THE CONTRACTOR, WHILE THEY ARE ASSUMED TO BE RELIABLE THE ARCHITECT DOES NOT GUARANTEE THEIR ACCURACY.

## GENERAL NOTES

1. FIELD VERIFY EXISTING DIMENSIONS.
2. DIMENSIONS ARE TO FACE OF MASONRY UNLESS NOTED OTHERWISE.
3. ALL 4", 6", 8" & 10" CMU TO BE SCORED @ 8" O.C. (UNLESS NOTED OTHERWISE) WHERE EXPOSED TO VIEW (EXCEPT STORAGE, CUST. & MECHANICAL ROOMS). RAKE JOINTS OF SCORED CMU. IF CMU IS EXPOSED BOTH SIDES, BOTH SIDES ARE TO BE SCORED.
4. EXTEND ALL CORRIDOR WALLS TO DECK ABOVE AS A FIRE SEAL BETWEEN TOP OF WALL AND DECK. PROVIDE GROUT OR APPROVED FIRE RATED FOAM INSULATION.
5. IN CORRIDOR 204 & HALL 202 PROVIDE SCORED CMU BASE ABOVE RES. BASE. SEE 1/A4.
6. PROVIDE 1 HOUR SPRAYED ON FIRE PROOFING OVER PLAZA MTL JOISTS AND DECK IN ROOMS 205, 208, 215, 216, 219 & EAST 10' OF CORRIDOR 204.

## KEYED NOTES

1. FLOOR ACCESS DOOR. SEE DETAIL 1/x-1
2. 2 1/2" METAL STUDS @ 16" O.C. 1" FROM EXISTING CONCRETE WALL. PROVIDE SOUND INSUL. & 5/8" GYPSUM BOARD.
3. FURR OUT WALL WITH 3/4" HAT CHANNEL @ 16" O.C. AND PROVIDE 5/8" GYPSUM BOARD.
4. INFILL EXISTING OPENING WITH 6" CMU DOWELED 6" INTO EXISTING WALLS WITH 18" X #4 @ @ 24" O.C. MAX. PLASTER EAST SIDE TO MATCH EXISTING CONCRETE, PAINT WEST SIDE OF CORRIDOR 227.
5. SAW CUT AND REMOVE EXISTING CONCRETE WALL FOR NEW OPENING.
6. 4' X 4' ACOUSTICAL PANEL TYPE 'B'. MOUNT @ 15' AFF.
7. TERMINATE LAMINATED COURT PANEL SYSTEM ON BACK WALL @ 12'-0" AFF. IN LIEU OF PANEL PROVIDE 3/8" GYPSUM BOARD LAMINATED OVER 1/2" GYPSUM BOARD APPLIED TO 1 X 4 FURRING @ 16" O.C.
8. NOT USED
9. FOR ACOUSTIC PANEL LOCATIONS SEE ROOM ELEVATIONS SHEET A19.
10. FOR ENLARGED PLAN SEE E/A17.
11. REMOVE EXISTING WINDOW, STOOL, DRAPERY & AC UNITS. INFILL OPENING W/ 8" CMU INTO EXIST CONCRETE WALL 6" W/ #4 X 18" @ 24" O.C. COVER INSIDE OF EXIST WALL & CMU INFILL (APPROX 30") W/ 5/8" GYPSUM BD ON METAL FURRING. PLASTER EXTERIOR OF CMU WHERE EXPOSED @ STARWELL. PATCH EXISTING PLASTER AS REQUIRED FOR FINISHED APPEARANCE.
12. REMOVE EXISTING CONCRETE STAIR AND SURROUNDING CONCRETE WALL & FOOTINGS. PROVIDE NEW STAIR AND WALL AS SHOWN. PATCH AND REPAIR FINISH PLASTER ON EXTERIOR OF EXISTING BASEMENT WALL AS REQUIRED FOR NEAT, FINISH APPEARANCE.
13. FOR EQUIPMENT PAD LOCATION SEE SHEET M6.
14. REMOVE EXISTING DOOR AND FRAME AND PROVIDE NEW.
15. EXTEND CMU WALLS TO DECK AND FIRE SEAL JOIST PENETRATIONS. HOLD CMU DOWN 1" TO ALLOW FOR JOIST DEFLECTION.
16. RECESSED FIRE EXTINGUISHER CABINET. SEE 12/A25.
17. PROVIDE A 4" HIGH X 6" WIDE CONCRETE CURB @ DOOR WAY. SET DOOR AND FRAME ABOVE CURB.
18. TACK BOARD – MOUNT 7'-0" AFF.
19. COMBINATION MARKER BOARD AND TACK BOARD, SEE 8/A16.
20. 9'-0" X 8'-0" WALL LOUVER, SEE 10/A25.
21. 4'-0" X 3'-0" WALL LOUVER, SEE 10/A25.
22. 9'-0" X 2'-0" CONCRETE AREA WAY, SEE 14/SD2.
23. (5) 24" X 3'-9" X 1" PART BOARD SHELVES. USE HEAVY DUTY STANDARDS AND BRACKETS, SEE 17/A21. (TYP OF RMS 211, 212 AND 213.)
24. NOT USED
25. SLOPE FLOOR 2" TO SUMP. SUMP TO BE 18"Ø X 24" DEEP PRECAST CONCRETE PIPE SECTION WITH 4" CONCRETE FLOOR. PIPE TO HAVE BELL END AND METAL GRATING COVER.
26. 18" COAT RACK, SEE 13/A21.
27. NEW 6" MIN THICK CONCRETE VENEER WALL W/ #4 @ 16" O.C. EW. TIE TO EXISTING WALL W/ 3/8"Ø POWER ACTIVATED STUD DRIVEN INTO EXISTING CONCRETE @ 2'-0" O.C. EW. STUD TO EXTEND 1" MIN INTO NEW CONCRETE AND 1 1/2" MIN INTO EXISTING.
28. 6" THICK CONCRETE EQUIPMENT PAD. COORDINATE EXACT SIZE AND LOCATION WITH MECHANICAL.
29. STENCILE THE FOLLOWING. NOTE AT 20' O.C. ON THIS WALL ABOVE THE CEILING: "FIREWALL – DO NOT PENETRATE". LETTERING TO BE 1 1/2" HIGH AND RED.
30. (5) 18"X8'-6" X 1" SHELVES W/ HEAVY DUTY STDS & BRACKETS. SEE 17/A21 & ADD #1 PG 2 #16 & ADD-1.

## WALL SYSTEM

(SEE ROOM ELEVATIONS FOR SPECIAL CMU TYPES & INSTRUCTIONS).

1. 12" CMU, 3-1/2" RIGID INSULATION & FACE BRICK
2. 12" CMU
3. 10" CMU (SCORED 8" O.C. WHERE EXPOSED)
4. 8" CMU (SCORED 8" O.C. WHERE EXPOSED)
5. 6" CMU (SCORED 8" O.C. WHERE EXPOSED)
6. 12" CONCRETE
7. 10" CONCRETE WITH 2" RIGID INSULATION & 4" CMU VENEER (8" SCORED)
8. 8" CONCRETE WITH 2" RIGID INSULATION & 4" CMU VENEER (8" SCORED)
9. 8" CONCRETE
10. 3 5/8" MTL STUDS @ 16" O.C. W/ 5/8" GYP BD BOTH SIDES W/ SOUND INSUL BATTS @ MECH ROOM 201
11. 3 5/8" 20 GA STL STUDS @ 16" O.C. W/ 5/8" GYP BD BOTH SIDES

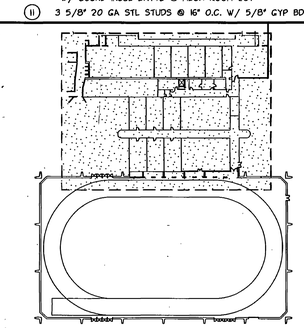

LOCATION PLAN
NO SCALE

STATE OF UTAH — BRETT L. RICHARDS — NO. 4107 — ARCHITECT

00001\A4
Weber State College, Physical Education Facility - RIV 84-058
Mid Level Plan Link - 29882

jra JONES/ RICHARDS & ASSOCIATES
ARCHITECTURE (801)394-3033
PLANNING 533 26TH STREET
CONSTRUCTION MANAGEMENT OGDEN, UTAH

REVISED: 03/19/88 ADDED NOTE
AS BUILTS 6-90

PROJECT NUMBER: 8403
DATE: 8-21-88
DRAWN BY: S. DEATON

PROJECT: PHYSICAL EDUCATION FACILITY
WEBER STATE COLLEGE

SHEET TITLE: MID LEVEL PLAN – LINK

SHEET NO. A-4

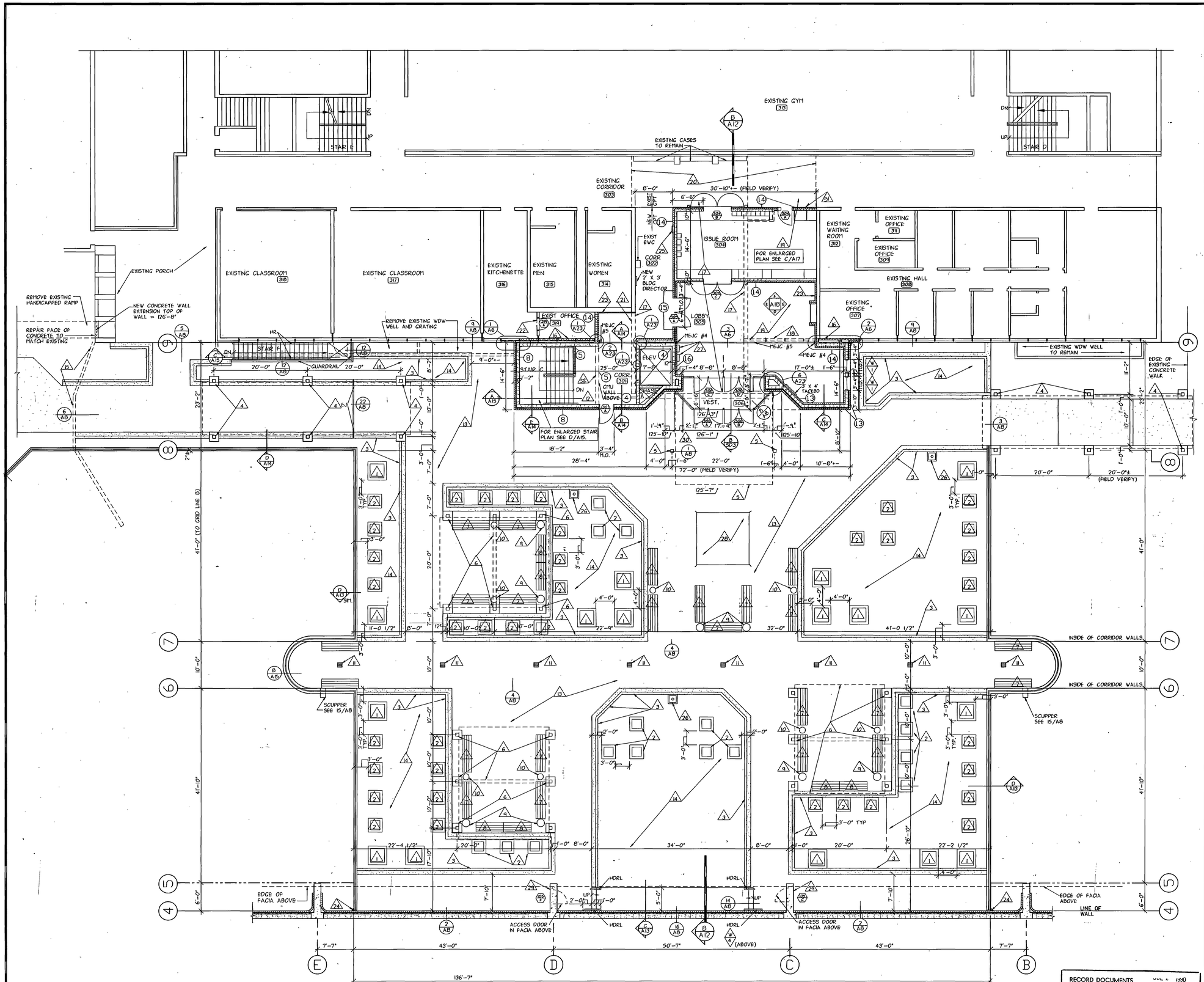


PLAZA LEVEL PLAN – LINK

1/8" = 1'-0"

## GENERAL NOTES

1. FIELD VERIFY ALL EXISTING DIMENSIONS.
2. DIMENSIONS ARE TO FACE OF MASONRY UNLESS NOTED OTHERWISE.
3. ALL 4", 6", 8" & 10" CMU TO BE SCORED @ 8" O.C. (UNLESS NOTED OTHERWISE) WHERE EXPOSED TO VIEW (EXCEPT STORAGE, CUST. & MECHANICAL ROOMS). RAKE JOINTS OF SCORED CMU. IF CMU IS EXPOSED BOTH SIDES, BOTH SIDES ARE TO BE SCORED.
4. FOR SLOPE ON PLAZA SEE SHEET A7.

## KEYED NOTES

1. 4' X 4' RW PLANTER BOX, SEE 6/SD3.
2. 3' X 3' RW PLANTER BOX, SEE 6/SD3.
3. CONCRETE CURB WALL, SEE 10/AB.
4. SIDEWALK ENTRY STRUCTURE, SEE C & D/SD3.
5. ENTRY STRUCTURE, SEE A & B/SD3.
6. SHADE STRUCTURE, SEE E & F/SD3.
7. 8' LONG WOOD BENCH, SEE 7/SD3.
8. 6' LONG WOOD BENCH, SEE 7/SD3.
9. CONCRETE RUBBISH CONTAINER, SEE 9/SD3.
10. CONCRETE ASH CAN, SEE 8/SD3.
11. PLAZA DECK DRAIN, SEE MECHANICAL & 13/AB.
12. FOR ENLARGED STAIR PLAN, SEE D/A15.
13. 24" X 24" CONCRETE PAVERS, SEE SPEC.
14. SOD OVER DIRT FILL, SEE L-2.
15. EXTEND EXISTING CONCRETE WALL OF PIPE TUNNEL UP. SEE 6/AB.
16. REMOVE EXISTING ALUM WINDOW & GLAZING. STRUCTURAL TUBES SHALL REMAIN EXCEPT AS NOTED. INFILL OPENING WITH 3 5/8" STL STUDS, 5/8" GYPSUM BOARD & BRICK AS SHOWN. SEE DETAILS.
17. REMOVE EXISTING LOBBY WALLS & CONCRETE ROOF SYSTEM. REMOVE ENTRY DOORS & CLEAR STORY WINDOWS ON PROJECTED PORTION OF EXISTING LOBBY THAT EXTENDS WEST OF GRID LINE 9. REMOVE FND, FOOTING & FLOOR SLAB. (SAW CUT SLAB) REMOVE ALL EXISTING FINISHES BULLETIN BOARDS, ETC TO ALLOW INSTALLATION OF NEW LOBBY & ISSUE ROOM. PATCH & CLEAN CONCRETE FLOOR AS REQUIRED WHERE WALLS ARE REMOVED.
18. REMOVE EXISTING WINDOW WALLS & TUBE COLUMNS.
19. REMOVE EXISTING CONCRETE T ROOF STRUCTURE ABOVE OLD ISSUE ROOM AND UNDER CORRIDOR 303 EAST TO GYM. PROVIDE NEW STRUCTURAL WALLS & ROOF SYSTEM AS SHOWN. PROTECT EXPOSED BUILDING FROM DAMAGE BY ELEMENTS.
20. PROVIDE NEW SUSP. GYPSUM BOARD & AC TILE CEILING SYSTEM TO MATCH EXISTING IN CORRIDOR 303.
21. AFTER WALL IS REMOVED, PROVIDE TEMP DUST TIGHT PARTITION FOR EXISTING OFFICE.
22. REMOVE EXISTING MASONRY WALL & PROVIDE NEW DOOR & FRAME. REMOVE FLOORING IN OFFICE 311 & REPLACE WITH NEW VINYL TILE.
23. APPLY FACE BRICK OVER EXISTING CMU.
24. EXTEND MEJC OVER TOP OF PARAPET & DOWN INSIDE EDGE TO DECK. SEAL TOP JOINT WITH FOAM JT FILLER & SEALANT.
25. RECESSED FIRE EXTINGUISHER CABINET. SEE 12/A25.
26. LIGHT POLE AND BASE. SEE ELECTRICAL FOR POLE AND 12/SD3 FOR BASE DETAIL.
27. TELEPHONE ENCLOSURES, SEE E/A18.
28. 8" THICK CONCRETE PAD W/ 3" CHAMFER AT TOP EDGES. PROVIDE W/ SPECIAL CONCRETE FINISH.
29. EXTEND EXPANSION JOINT AROUND PIER, SEE 17/AB.
30. THICKEN SLAB WEST OF ENTRY TO 8"± TO ALLOW FINISHED PLAZA PAVERS TO MATCH EXISTING FLOOR ELEVATION. TAPER SLAB TO ALLOW 3% FINISHED GRADE FOR FIRST 5' & 5% FOR NEXT 10'± UNTIL SLAB IS 4" THICK. TYP NORTH, SOUTH & WEST FROM ENTRY.
31. REMOVE EXIST BRICK & BLOCK. PROVIDE NEW CMU & FACE BRICK.
32. ELEV OF CMU WALL 126'-8" - SEE ADD #1 RFI 3-17

## WALL SYSTEM

(SEE GENERAL NOTE #3 & ROOM ELEVATIONS FOR SPECIAL CMU TYPES & INSTRUCTIONS.)

1. 12" CMU, 3-1/2" RIGID INSULATION & FACE BRICK
2. 12" CMU
3. 10" CMU (SCORED 8" O.C. WHERE EXPOSED)
4. 8" CMU (SCORED 8" O.C. WHERE EXPOSED)
5. 6" CMU (SCORED 8" O.C. WHERE EXPOSED)
6. 12" CONCRETE
7. 10" CONCRETE WITH 2" RIGID INSULATION & 4" CMU VENEER (8" SCORED)
8. 8" CONCRETE WITH 2" RIGID INSULATION & 4" CMU VENEER (8" SCORED)
9. 8" CONCRETE
10. 3 5/8" MTL STUDS @ 16" O.C. W/ 5/8" GYP BD BOTH SIDES
11. 3 5/8" 20 GA STL STUDS @ 16" O.C. W/ 5/8" GYP BD BOTH SIDES
12. 8" CMU W/ 2" RIGID INSUL & FACE BRICK
13. 8" CMU W/ 2" RIGID INSUL & FACE BRICK BOTH SIDES
14. 6" CMU & FACE BRICK
15. 2 WYTHES OF FACE BRICK W/ 2" GROUTED CORE (SEE E/A18.)
16. 8" CMU W/ FACE BRICK

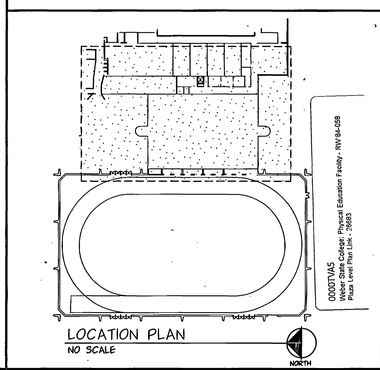


LOCATION PLAN

NO SCALE

NORTH

**RECORD DOCUMENTS** JUL 4 1990

THESE DOCUMENTS HAVE BEEN REVISED TO RECORD INFORMATION SUBMITTED BY THE CONTRACTOR, WHILE THEY ARE ASSUMED TO BE RELIABLE THE ARCHITECT DOES NOT GUARANTEE THEIR ACCURACY.

BRETT J. RICHARDS NO. 7107 LICENSED ARCHITECT

jra JONES/ RICHARDS & ASSOCIATES

ARCHITECTURE (801)394-3533

PLANNING 533 26TH STREET

CONSTRUCTION MANAGEMENT OGDEN, UTAH

REVISED: AS BUILTS 6-90

PROJECT NUMBER: 8403

DATE: 6-21-88

DRAWN BY: S. DEATON

PROJECT: PHYSICAL-EDUCATION FACILITY

WEBER STATE COLLEGE

SHEET TITLE: PLAZA LEVEL PLAN – LINK

SHEET NO. A-5

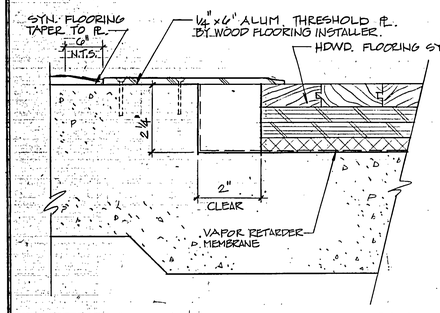


11 A-6 THRESHOLD DETAIL
1/2 SCALE

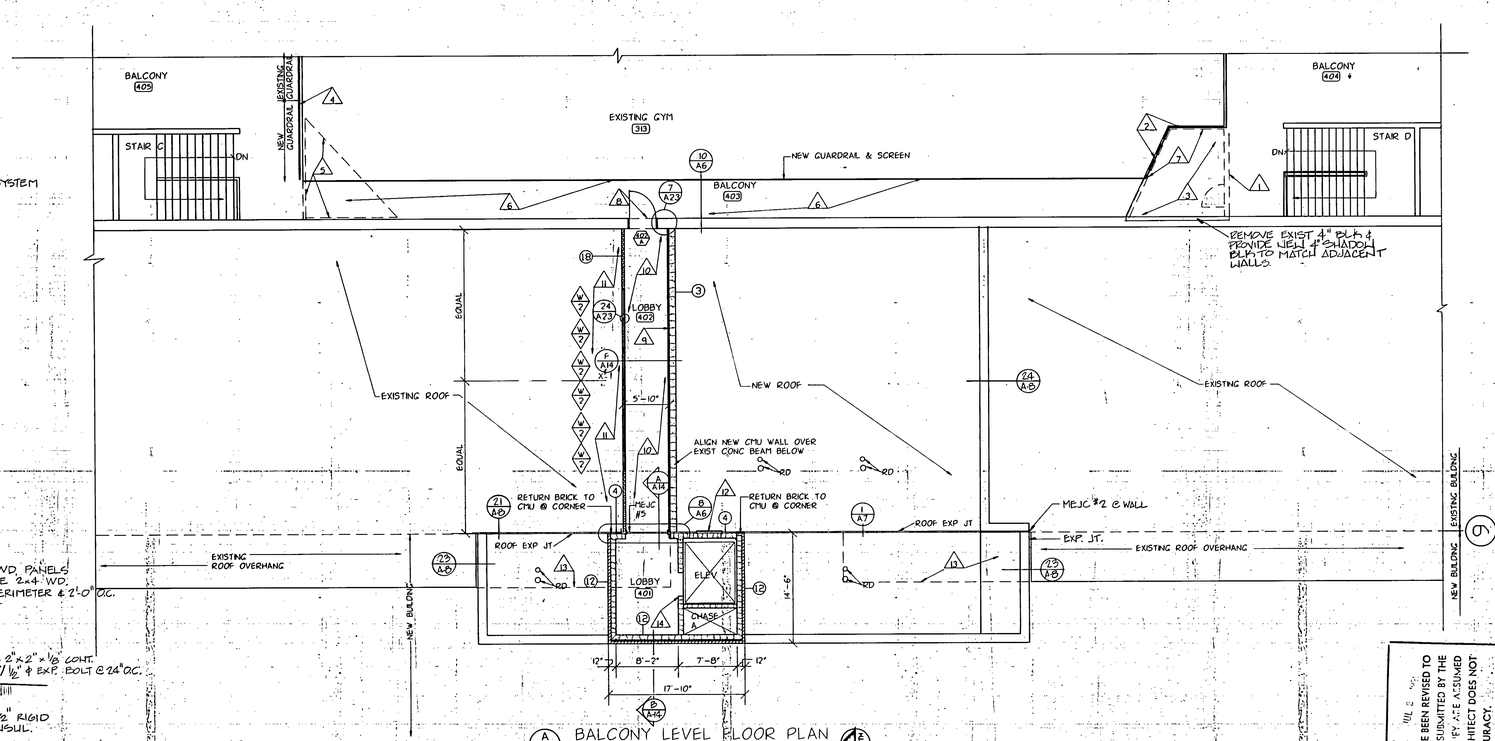


A A6 BALCONY LEVEL FLOOR PLAN
1/8" = 1'-0"

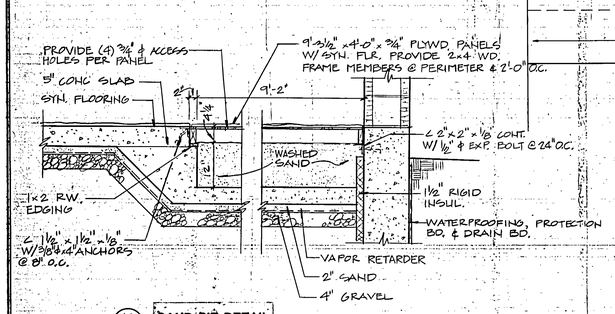


12 A-6 SAND PIT DETAIL
3/4" = 1'-0"

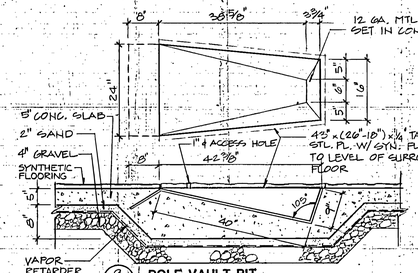


9 A-6 POLE VAULT PIT
3/4" = 1'-0"

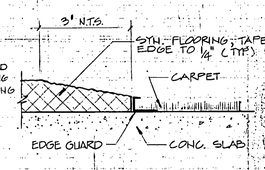


7 A-6 FLOOR EDGE
FULL SIZE

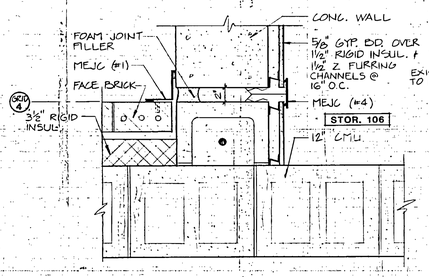


4 A-6 JOINT DETAIL - RM. 106
1½" = 1'-0"

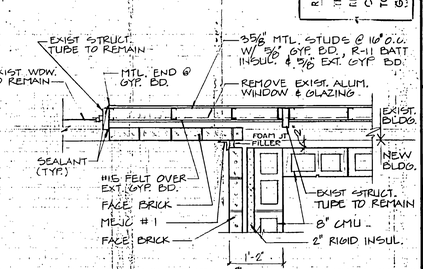


1 A-6 INFILL DETAIL - RM. 316
3/4" = 1'-0"

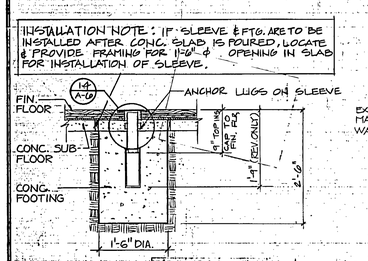


13 A-6 POST INSERT DETAIL
1" = 1'-0"

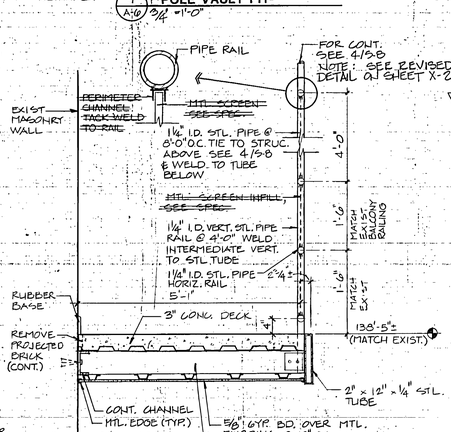


SEE SHEET S-8 FOR STRUCTURAL NOTES

10 A-6 BALCONY DETAIL - RM. 403
3/4" = 1'-0"

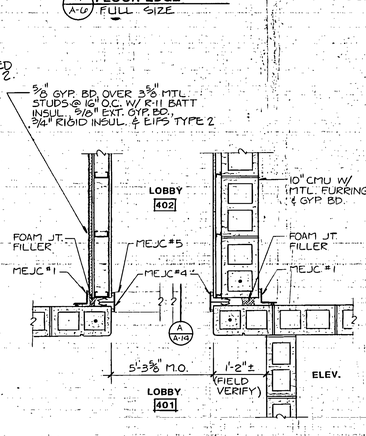


6 A-6 EXP. JT. DETAIL (BALCONY LEVEL)
3/4" = 1'-0"

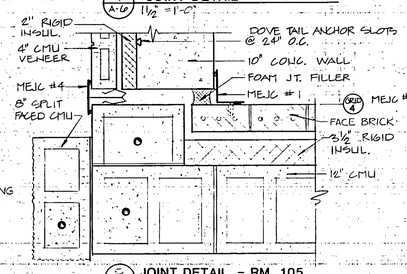


2 A-6 JOINT DETAIL - RM. 105
1½" = 1'-0"




2 A-6 INFILL DETAIL - RM. 307
3/4" = 1'-0"

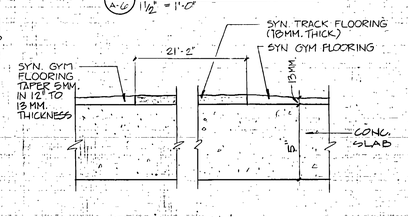


6 A-6 SLAB DETAIL - RM. 105
1/4 SCALE

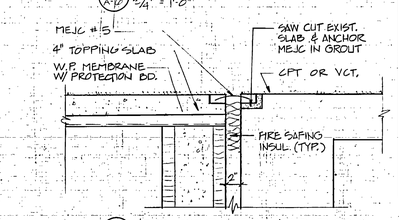


3 A-6 EXP. JOINT DETAIL (TYP. FLOOR)
1½" = 1'-0"

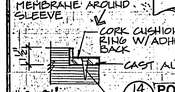


14 A-6 POST INSERT COVER DET.
3" = 1'-0"

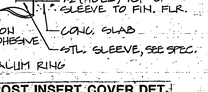


NOTE: WHEN INSTALLING SLEEVE INSERT POST & PLUMB W/ LEVEL

FINISHED FLR.

## GENERAL NOTES

1. FIELD VERIFY EXISTING DIMENSIONS.
2. DIMENSIONS ARE TO FACE OF MASONRY UNLESS NOTED OTHERWISE.
3. ALL 4", 6", 8" & 10" CMU TO BE SCORED @ 8" O.C. (UNLESS NOTED OTHERWISE) WHERE EXPOSED TO VIEW (EXCEPT STORAGE, CUST. & MECHANICAL ROOMS). RAKE JOINTS OF SCORED CMU. IF CMU IS EXPOSED BOTH SIDES, BOTH SIDES ARE TO BE SCORED.

## KEYED NOTES

1. REMOVE EXISTING MASONRY WALL INCLUDING DOOR & FRAME. CUT OFF ANY REBAR BELOW FLOOR SLAB. GRIND & PATCH CONCRETE FLOOR AS REQUIRED FOR FINISHED APPEARANCE.
2. REMOVE WOOD STUD WALL STRUCTURE INCLUDING WOOD CEILING JOISTS, WINDOWS & UPPER RAILING ETC.
3. EXISTING CONCRETE SLAB TO REMAIN. PATCH AREAS DAMAGED BY REMOVAL OF EXISTING STRUCTURE. PROVIDE A 4" X 3" X 1/4" EDGE ANGLE BOLTED TO SLAB W/ 3/8" EXPANSION BOLTS @ 4'-0" O.C.
4. EXTEND EXISTING GUARDRAIL WEST TO BALCONY 403. MATCH EXISTING CONSTRUCTION.
5. REMOVE EXISTING WOODEN STRUCTURE & SUPPORTING BEAMS.
6. NEW BALCONY ALONG WEST WALL OF EXISTING GYM 313. SEE 10/A6.
7. PROVIDE NEW GUARDRAIL & SCREEN AT EDGE OF EXISTING CONCRETE SLAB.—SEE-10/A6 FOR DETAIL.
8. SAW CUT OPENING IN EXISTING WALL & PROVIDE NEW DOOR & FRAME.
9. FURR INTERIOR OF CMU W/ 1 1/2" Z FURRING CHANNELS @ 16" O.C. & 5/8" GYPSUM BOARD. INSTALL 1-1/2" RIGID INSULATION WHERE WALL IS EXTERIOR.
10. CUT BACK EXISTING ROOFING AND REMOVE FOR NEW CONSTRUCTION. POUR NEW 2"± CONCRETE TOPPING SLAB OVER EXISTING DOUBLE TEE ROOF DECK AT LOBBY 402.
11. PATCH EXISTING ROOFING @ NEW WALL AND PROVIDE NEW CANT STRIP AND FLASHING AS SHOWN.
12. 3'-0" X 2'-0" LOUVER IN EAST FACE WITHIN 24" OF TOP OF WALL.
13. SAW CUT AND REMOVE CONCRETE DOUBLE TEE OVERHANG AT NEW CONSTRUCTION.
14. FIRE SEAL TOP OF SHAFT WALL WITH GROUT OR FIRE RATED FOAM INSULATION.

RECORD DOCUMENTS
THESE DOCUMENTS HAVE BEEN REVISED TO RECORD INFORMATION SUBMITTED BY THE CONTRACTOR. WHILE THEY ARE ASSUMED TO BE RELIABLE THE ARCHITECT DOES NOT GUARANTEE THEIR ACCURACY.

## WALL SYSTEM

(SEE ROOM ELEVATIONS FOR SPECIAL CMU TYPES & INSTRUCTIONS).

1. 12" CMU, 3-1/2" RIGID INSULATION & FACE BRICK
2. 12" CMU
3. 10" CMU (SCORED 8" O.C. WHERE EXPOSED)
4. 8" CMU (SCORED 8" O.C. WHERE EXPOSED)
5. 6" CMU (SCORED 8" O.C. WHERE EXPOSED)
6. 12" CONCRETE
7. 10" CONCRETE WITH 2" RIGID INSULATION & 4" CMU VENEER (8" SCORED)
8. 8" CONCRETE WITH 2" RIGID INSULATION & 4" CMU VENEER (8" SCORED)
9. 8" CONCRETE
10. 3 5/8" MTL STUDS @ 16" O.C. W/ 5/8" GYP. BD BOTH SIDES
11. 3 5/8" 20 GA STL STUDS @ 16" O.C. W/ 5/8" GYP BD BOTH SIDES
12. 8" CMU W/ 2" RIGID INSUL & FACE BRICK
13. 8" CMU W/. 2" RIGID INSUL & FACE BRICK BOTH SIDES
14. 6" CMU & FACE BRICK
15. 2 WYTHES OF FACE BRICK W/ 2" GROUTED CORE
16. 8" CMU W/ FACE BRICK
17. 6" CMU W/ 2" RIGID INSUL & FACE BRICK
18. 3 5/8" 20 GA STL STUDS @ 16" O.C. W/ 5/8" GYP BD INSIDE R-11 INSUL & CEMENT BD SHEATHING. OVERLAY SHEATHING W/ 3/4" RIGID INSUL & SIMULATED CAST STONE FINISH.

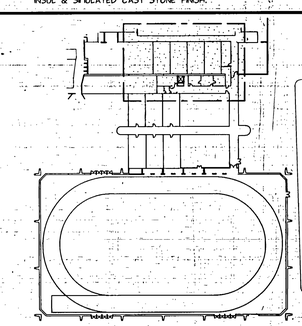

LOCATION PLAN
NO SCALE

STATE OF UTAH ROBERT J. RICHARDS NO. 1107 LICENSED ARCHITECT

JONES/ RICHARDS & ASSOCIATES
ARCHITECTURE (801)394-3033
PLANNING CONSTRUCTION MANAGEMENT
533 26TH. STREET OGDEN, UTAH

REVISED: AS BUILTS 6-10

PROJECT NUMBER: 8403
DATE: 8-27-08
DRAWN BY: S. DEATON

PROJECT: PHYSICAL EDUCATION FACILITY
WEBER STATE COLLEGE

SHEET TITLE: BALCONY LEVEL PLAN & DETAILS

00007LVL6
Weber State College, Physical Education Facility - RW-84-569
Building Level Plans & Details - 2008

SHEET NO. A-6

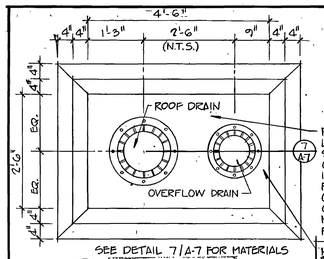


**G / A-7 ROOF DRAIN PLAN** 3/4" = 1'-0"

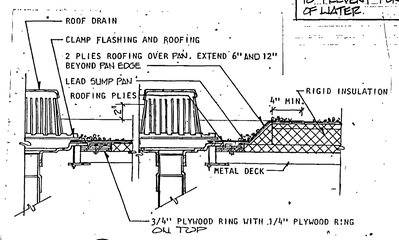


**7 / A-7 ROOF DRAIN DETAIL** 1 1/2" = 1'-0"

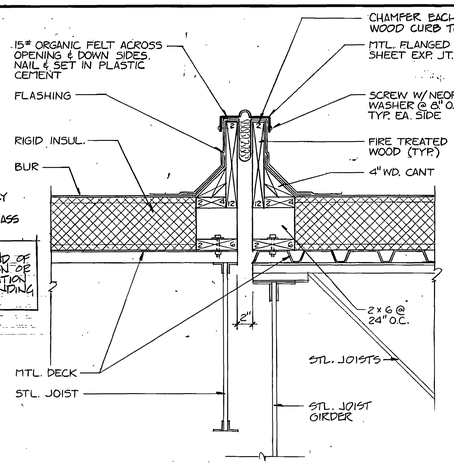


**1 / A-7 EXPANSION JT. DETAIL** 1 1/2" = 1'-0"

NOTE: BUILD UP LOW END OF SUMP W/ BITUMEN OR TAPERED INSULATION TO PREVENT PONDING OF WATER.

## ROOF INSULATION SYSTEMS

1. 1-1/2" PERLITE (BELOW VAPOR BARRIER) 1.6# POLYISOCYANURATE 1.9" PERLITE/POLYISO.
2. 1-1/2" EXTRUDED POLYSTYRENE
3. 1-1/2" PERLITE (BELOW VAPOR BARRIER) 1.8" POLYISO. 3-1/4" TO 3/4" TAPERED PERLITE.
4. 3" TO 1-1/2" TAPERED PERLITE
5. 1-1/2" PERLITE (BELOW VAPOR BARRIER) 1.8" POLYISO. 5-1/4" TO 3/4" TAPERED PERLITE.
6. 1-1/2" PERLITE (BELOW VAPOR BARRIER) 1.8" POLYISO. 3/4" PERLITE TAPERED PERLITE CRICKETS (1/4"/FT. MIN. SLOPE, 3/4" MIN. THICKNESS).
7. 1-1/2" PERLITE
8. 5" TO 1-1/2" TAPERED PERLITE.

## KEYED NOTES

1. ROOF DRAIN & ROOF OVERFLOW DRAIN SEE 6/A7.
2. CRICKET MADE OF MTL DECK SET ON COLD ROLLED MTL FRAMING. SEE 9610/A7
3. ENTRY STRUCTURE, SEE A & B/S03

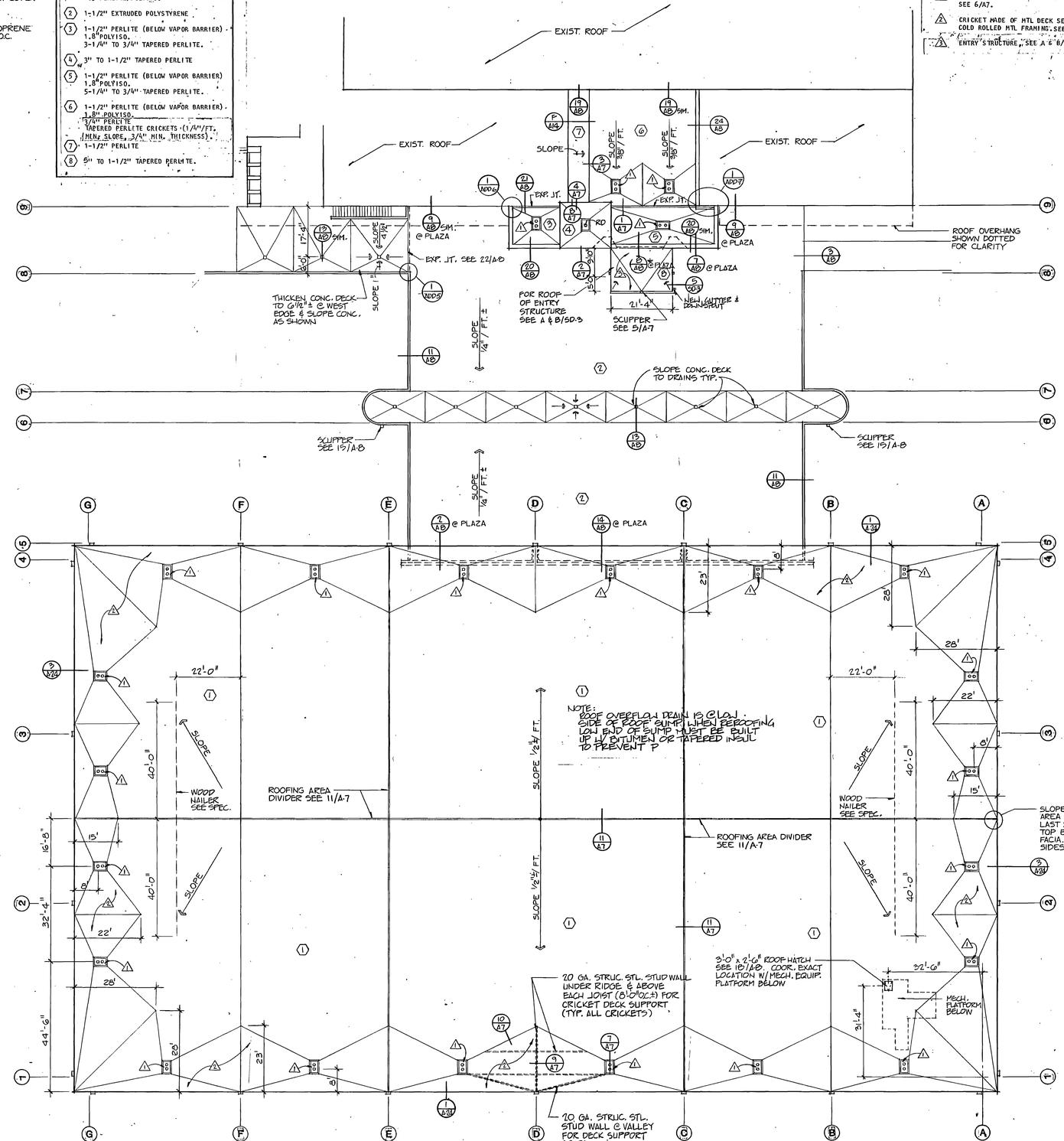


**A / A-7 ROOF PLAN** 1/16" = 1'-0"

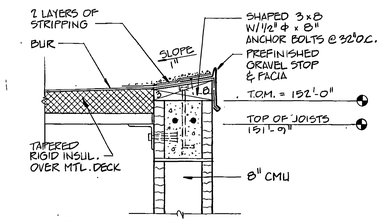


**8 / A-7 ROOF DETAIL AT ELEV. TOWER** 1 1/2" = 1'-0"

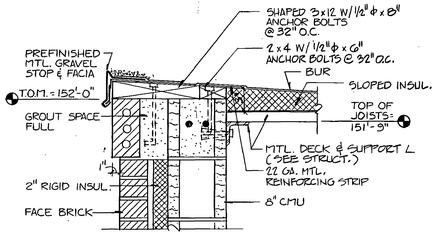


**2 / A-7 ROOF DETAIL AT ELEV. TOWER** 1 1/2" = 1'-0"

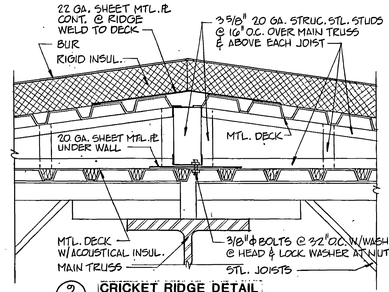


**9 / A-7 CRICKET RIDGE DETAIL** 1 1/2" = 1'-0"

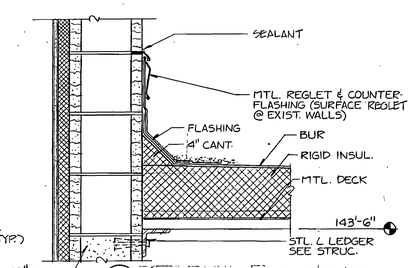


**3 / A-7 FLASHING DETAIL AT LOBBY 402** 1 1/2" = 1'-0"

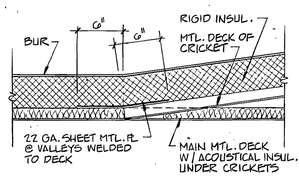


**10 / A-7 CRICKET VALLEY DETAIL** 1 1/2" = 1'-0"

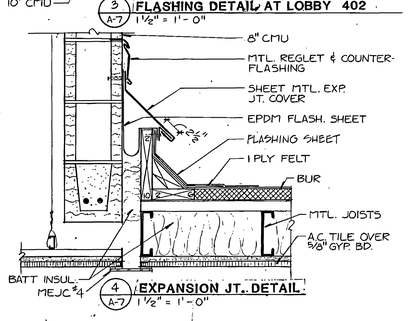


**4 / A-7 EXPANSION JT. DETAIL** 1 1/2" = 1'-0"

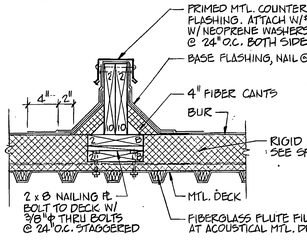


**11 / A-7 AREA DIVIDER DETAIL** 1 1/2" = 1'-0"

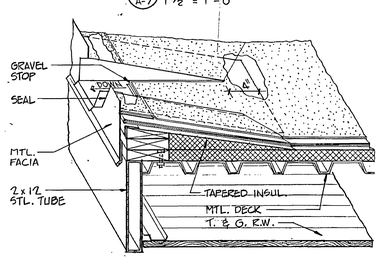


**5 / A-7 SCUPPER DETAIL AT ENTRY STRUCTURE** 1 1/2" = 1'-0"

RECORD DOCUMENTS JUN 2 5 1990

THESE DOCUMENTS HAVE BEEN REVISED TO RECORD INFORMATION SUBMITTED BY THE CONTRACTOR. WHILE THEY ARE ASSUMED TO BE RELIABLE THE ARCHITECT DOES NOT GUARANTEE THEIR ACCURACY.

00007\A07
Weber State College: Physical Education Facility - RW-84-059
Roof Plan & Details - 26585


BRETT L. RICHARDS NO. 1107 LICENSED ARCHITECT

jrq JONES / RICHARDS & ASSOCIATES
ARCHITECTURE (801) 394-3333
CONSTRUCTION MANAGEMENT OGDEN, UTAH
PLANNING 333 - 25TH STREET


REVISED: 6-90 AS BUILTS

PROJECT NUMBER: 8403 DATE: 8-27-83 DRAWN BY: K. SEKO

PROJECT: PHYSICAL EDUCATION FACILITY WEBER STATE COLLEGE

SHEET TITLE: ROOF PLAN & DETAILS

SHEET NO. A-7

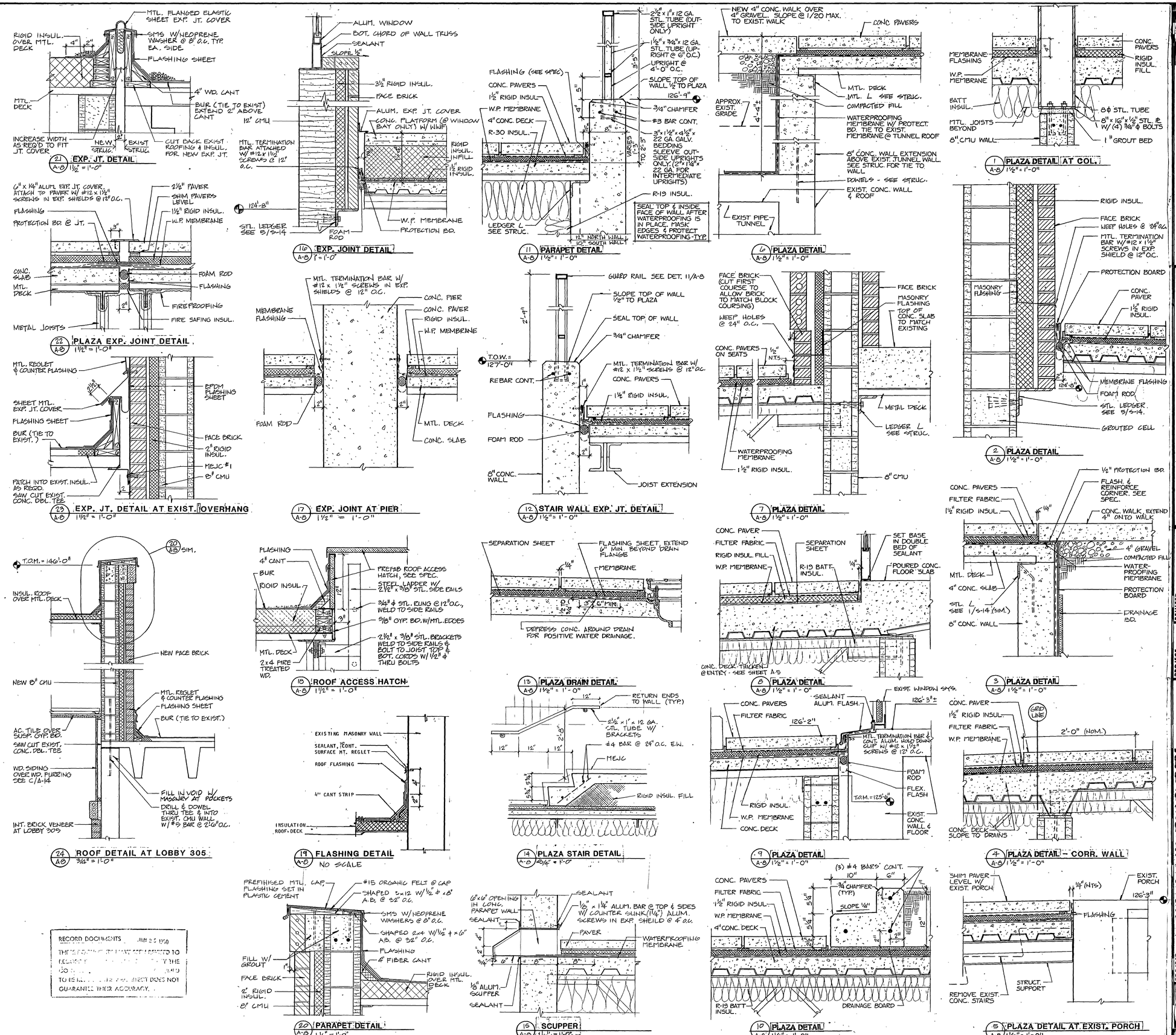


RECORD DOCUMENTS JUN 2 5 1990
THE [illegible] ATTACHED TO [illegible] BY THE [illegible] TO BE [illegible] DIRECT DOES NOT GUARANTEE THEIR ACCURACY.

BEST AVAILABLE COPY

NO. 4107

VOIDOTVAS
Western Washington College, Physical Education Facility - RV/84-059
Plaza & Roof Details - 2/20/90

jra JONES / RICHARDS & ASSOCIATES
ARCHITECTURE
PLANNING
CONSTRUCTION MANAGEMENT
500 - 12TH STREET
BELLINGHAM, WASHINGTON
98225

REVISED: AS BUILTS 6-90

PROJECT NUMBER: 8409
DATE: 2-21-83
DRAWN BY: K. SEKO

PROJECT: PHYSICAL EDUCATION FACILITY
WESTERN STATE COLLEGE

SHEET TITLE: PLAZA & ROOF DETAILS

SHEET NO. A-8

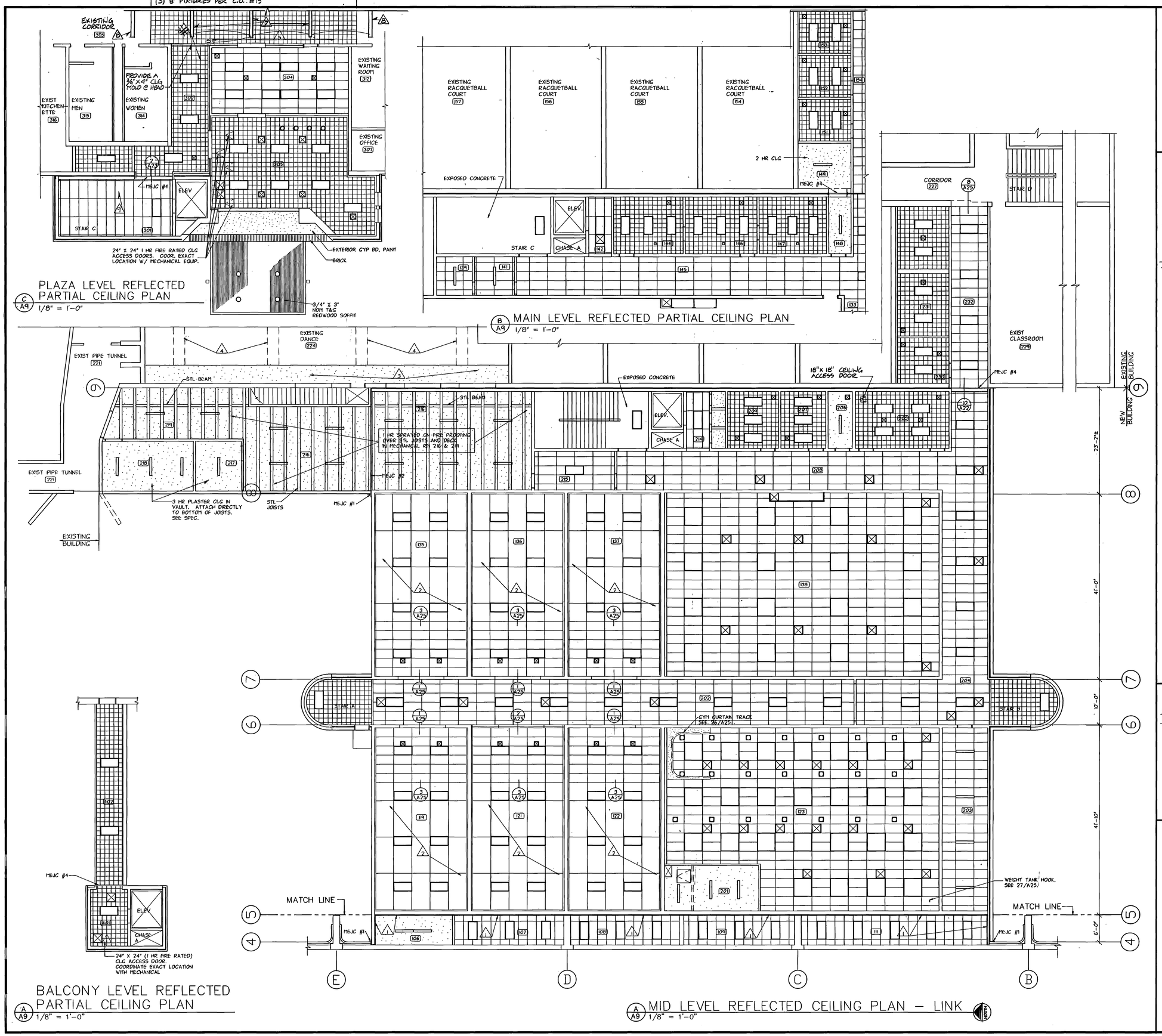


## GENERAL NOTES

1. REFLECTED CEILING PLANS FOR CORRIDORS 133, 134, 145, & 152 SIMILAR TO 202, 204, 208 & 232.
2. PROVIDE 1 HOUR SPRAYED ON FIRE PROOFING OVER PLAZA JOISTS AND DECK IN ROOMS 205, 208, 215, 216, 219 & THE EAST 10' OF CORRIDOR 204.

## KEYED NOTES

1. MEJC TYPE #3.
2. COURT PANEL CEILING, SEE SPECIFICATIONS.
3. PROVIDE NEW 2 1/2" METAL STUD & 5/8" GYPSUM BD FURRED CEILING SPACE FOR NEW DUCT WORK IN EXIST DANCE 224.
4. REMOVE AND REINSTALL EXIST TILE AND GYP BD CLG AS REQUIRED FOR INSTALLATION OF NEW DUCT WORK IN DANCE 224.
5. ~~ALIGN NEW TILE IN CORRIDOR 201 WITH EXISTING TILE REINSTALLED IN CORRIDOR 203.~~
5. INSTALL NEW CEILING TILE IN CORRIDOR 303 SO THAT THE NEW GRID LINES UP WITH THE OLD CLG GRID AND SO THAT THE ODD SIZE TILE WILL BE INSTALLED UNDER NEW LIGHT FIXTURE PER C.O. #15.
7. NEW LIGHT FIXTURE. LITHONIA BTCB240A-120
8. EXISTING LIGHT FIXTURE
9. ADD #1-3-17

RECORD DOCUMENTS JUN 26 1990
THESE DOCUMENTS HAVE BEEN REVISED TO RECORD [illegible] BY THE CO[illegible] ASSUMED TO BE [illegible] DOES NOT GUARANTEE THEIR ACCURACY.

## LEGEND

- 2X4 LAY-IN GRID OR AS NOTED
- SUSPENDED GYPSUM BOARD
- 12"X12" AC TILE OVER SUSPENDED GYPSUM BOARD
- LIGHT FIXTURES
- DIFFUSERS

LOCATION PLAN
NO SCALE.

D000TV49
Weber State College: Physical Education Facility - RW 84-058
Reflected Ceiling Plans - 26887

BRETT J. RICHARDS NO. 1107 LICENSED ARCHITECT

jra JONES/ RICHARDS & ASSOCIATES
ARCHITECTURE (801)394-3033
CONSTRUCTION MANAGEMENT
PLANNING
533 26TH STREET OGDEN, UTAH

REVISED: AS BUILT 6-90

PROJECT NUMBER: 8403
DATE: 8-21-88
DRAWN BY: S. DEATON

PROJECT: PHYSICAL EDUCATION FACILITY
WEBER STATE COLLEGE

SHEET TITLE: REFLECTED CEILING PLANS

SHEET NO. A-9

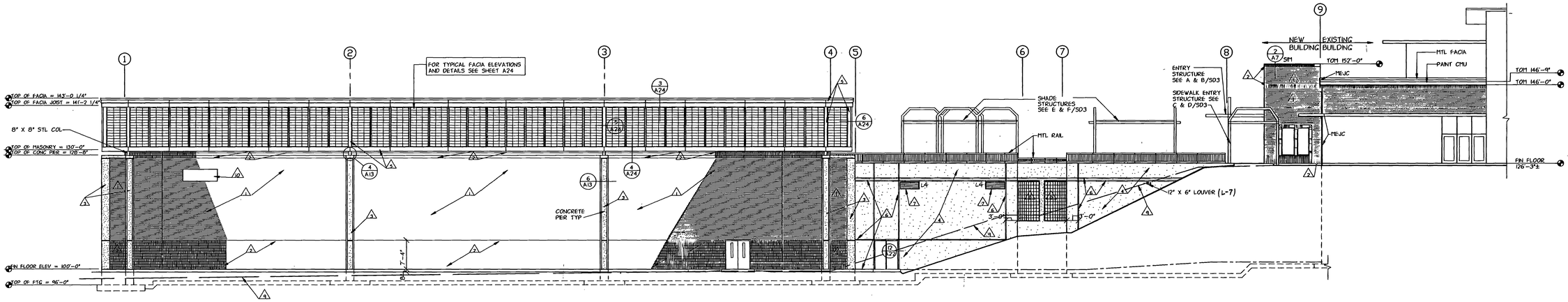


A SOUTH ELEVATION
A10 3/32" = 1'-0"

RECORD DOCUMENTS JUN. 1990
THESE DOCUMENTS HAVE BEEN PRINTED TO REPRODUCE ... THE CONTENT ... ASSUMED TO BE RELIABLE THE ARCHITECT DOES NOT GUARANTEE THEIR ACCURACY.

KEYED NOTES

1. FACE BRICK TYPE 'A'. RUNNING BOND.
2. FACE BRICK TYPE 'B'. SOLDIER COURSE.
3. CONCRETE PIER WITH SPECIAL CONCRETE FINISH, SEE SPEC.
4. EXPOSED ARCHITECTURAL CONCRETE WITH SPECIAL CONCRETE FINISH, SEE SPEC.
5. EFS TYPE 3 PREFABRICATED FACIA PANELS.
6. CONCRETE CONTROL JOINTS. SEE 4/SD2.
7. 2'-0" X 5'-0" LOUVERS. SEE 10/A25.
8. GLASS BLOCK
9. APPROX EXISTING GRADE.
10. BUILDING SIGN, SEE SPEC. COORDINATE EXACT MOUNTING LOCATION WITH COLLEGE.

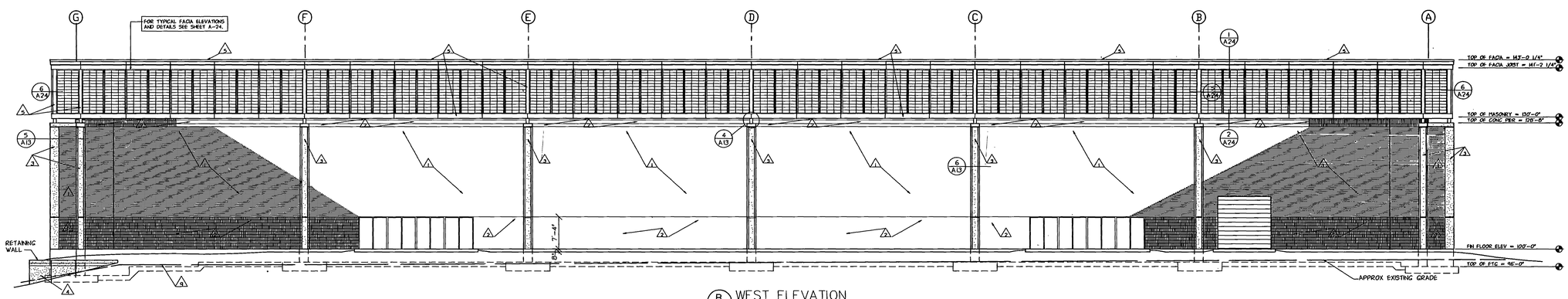


B WEST ELEVATION
A10 3/32" = 1'-0"

0000TVA10
Weber State College, Physical Education Facility - RW 84-058
Exterior Elevations - 26688

STATE OF UTAH
BRETT J. RICHARDS
NO. 1107
LICENSED

jra JONES/ RICHARDS & ASSOCIATES
ARCHITECTURE (801)394-3033
PLANNING 533 28TH STREET
CONSTRUCTION MANAGEMENT OGDEN, UTAH

REVISED: AS BUILTS 6-90

PROJECT NUMBER: 8304
DATE: 8-21-88
DRAWN BY: S. DEATON

PROJECT: PHYSICAL EDUCATION FACILITY
WEBER STATE COLLEGE

SHEET TITLE: EXTERIOR ELEVATIONS

SHEET NO. A-10

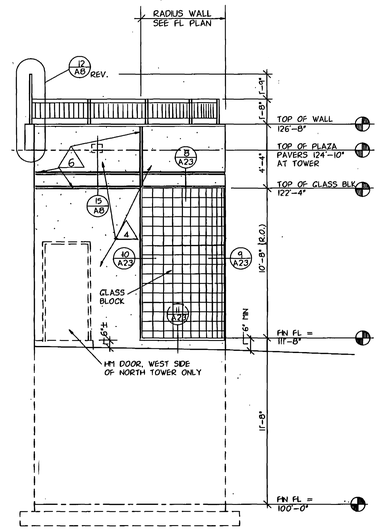


E A11 STAIR TOWER ELEV (OPPOSITE SIDE REV.)
1/4" = 1'-0"

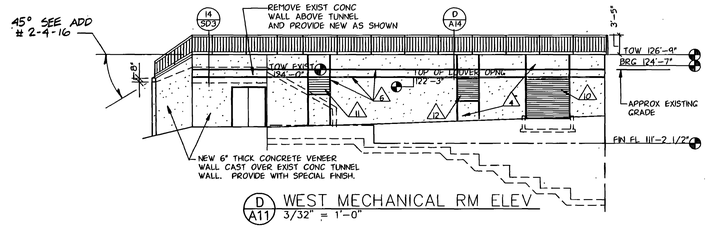


D A11 WEST MECHANICAL RM ELEV
3/32" = 1'-0"

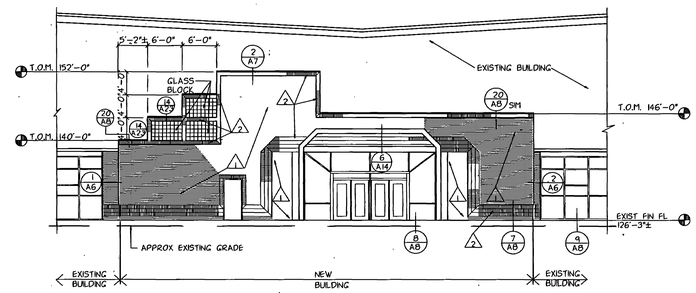


C A11 WEST ENTRY ELEVATION
3/32" = 1'-0"

KEYED NOTES

1. FACE BRICK TYPE 'A'. RUNNING BOND.
2. FACE BRICK TYPE 'B'. SOLDIER COURSE.
3. CONCRETE PIER WITH SPECIAL CONCRETE FINISH, SEE SPEC.
4. EXPOSED ARCHITECTURAL CONCRETE WITH SPECIAL CONCRETE FINISH, SEE SPEC.
5. EIFS TYPE 3 PREFABRICATED FACIA PANELS.
6. CONCRETE CONTROL JOINTS. SEE 4/SD2.
7. 1'-8" X 6'-0" LOUVERS. SEE 10/A25.
8. GLASS BLOCK.
9. EXTERIOR INSULATION AND FINISH SYSTEM TYPE 2.
10. 8'-0" X 9'-0" LOUVER, SEE 10/A25.
11. 4'-0" X 3'-0" LOUVER, SEE 10/A25.
12. 4'-0" X 4'-0" LOUVER, SEE 10/A25.
13. BUILDING SIGN, SE SPEC. COORDINATE EXACT MOUNTING LOCATION W/ COLLEGE.

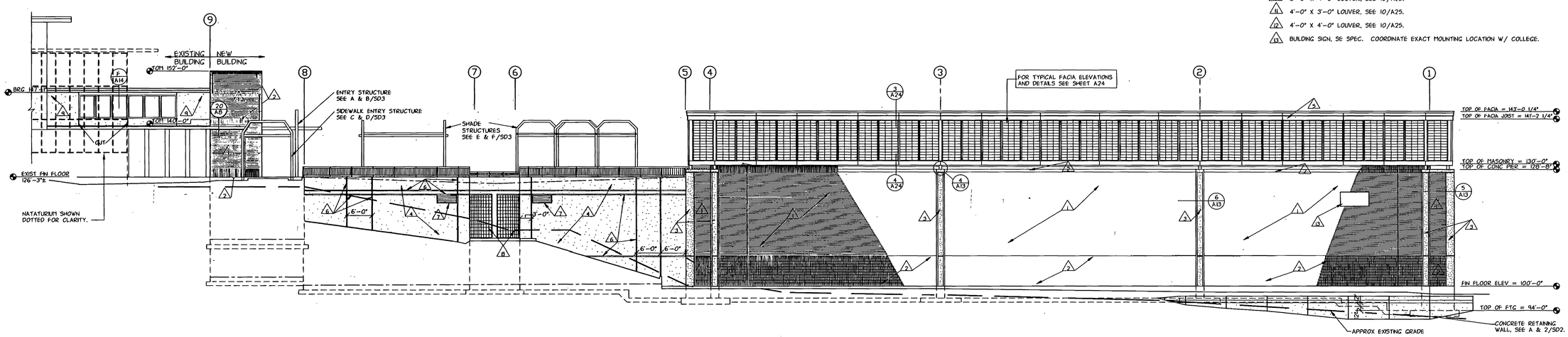


B A11 NORTH ELEVATION
3/32" = 1'-0"

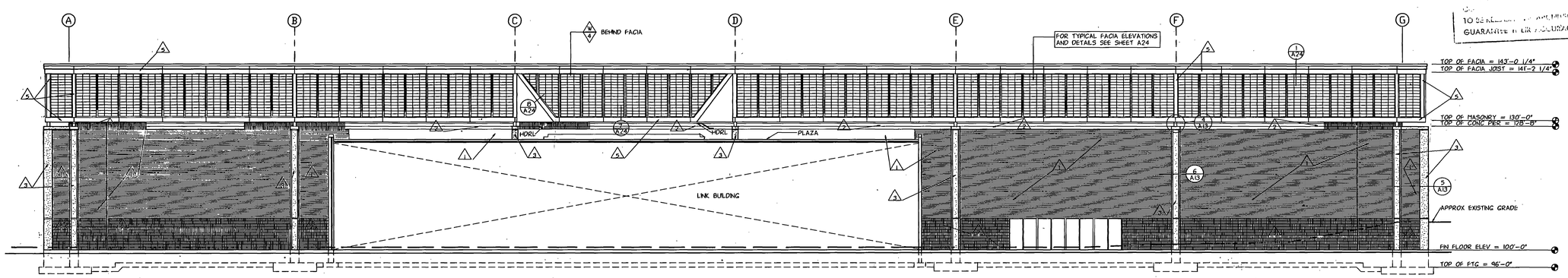


A A11 EAST ELEVATION
3/32" = 1'-0"

JUN 23 1998
TO BE RELIABLE, THE MIRROR DOES NOT GUARANTEE ITS ACCURACY.

0000TVA11
Weber State College, Physical Education Facility - RIV 94-058
Exterior Elevations - 26889

BRETT L. RICHARDS
NO. 1107
STATE OF UTAH
TECHNICAL EXPERT

jra JONES/ RICHARDS & ASSOCIATES
ARCHITECTURE (801)394-3033
PLANNING
533 26TH STREET
CONSTRUCTION MANAGEMENT
OGDEN, UTAH

REVISED: AS BUILTS 6-90

PROJECT NUMBER: 8403
DATE: 8-21-88
DRAWN BY: S. DEATON

PROJECT: PHYSICAL EDUCATION FACILITY
WEBER STATE COLLEGE

SHEET TITLE: EXTERIOR ELEVATIONS

SHEET NO. A-11

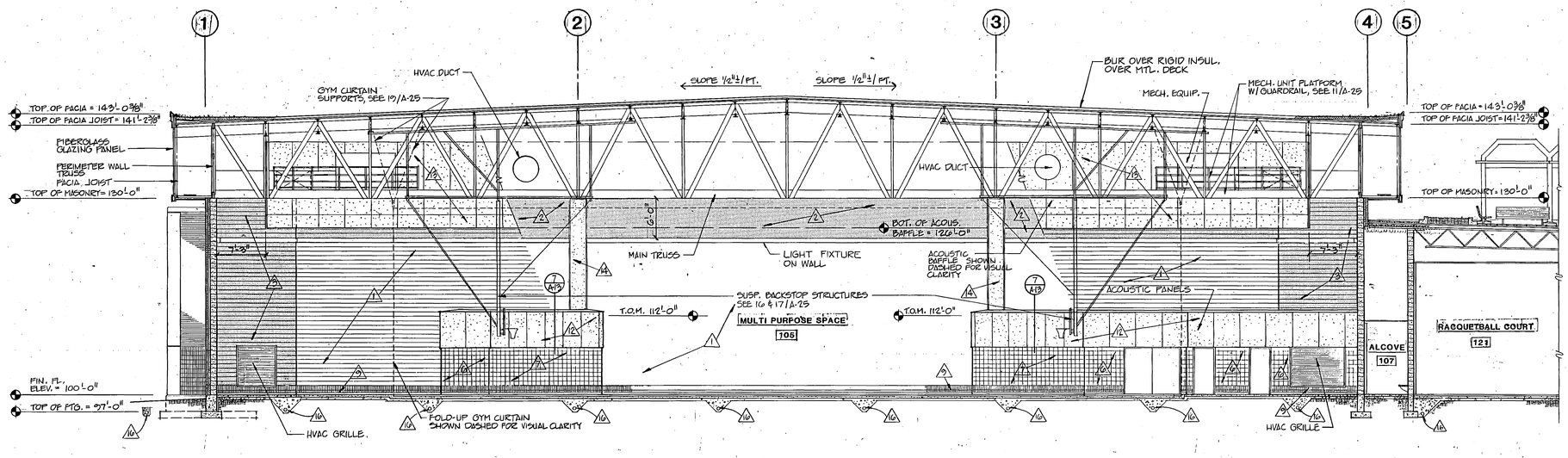


A A-12 **TRANSVERSE BUILDING SECTION**
1/8" = 1'-0"

## KEYED NOTES

1. 12"x8"x16" CMU, FLUSH CUT JTS.
2. 12"x8"x16" CMU, SPLIT FACED
3. 6"x8"x16" CMU, SPLIT FACED
4. 4"x8"x16" CMU, SCORED AT 8" O.C., RAKED JTS. (VENEER)
5. 6"x8"x16" CMU, SCORED AT 8" O.C. STACK BOND, RAKED JTS.
6. 8"x8"x16" CMU, SCORED AT 8" O.C., STACK BOND, RAKED JTS.
7. 8"x8"x8" CMU, STACK BOND, RAKED JTS., (AT RADIUS)
8. NOT USED
9. TYPICAL BASE TO CONSIST OF 1 COURSE 4" HIGH STD. CMU WITH FLUSH CUT JTS. 1 COURSE 4" HIGH AND 1 COURSE 8" HIGH CMU SCORED 6/UNIT WITH RAKED JOINTS.
10. NOT USED
11. NOT USED
12. ACOUSTIC PANELS (TYPE B)
13. ACOUSTIC BAFFLE, " EACH PANEL -4'X12'X 0'-2". PANELS TO BE CONTINUOUS AROUND MULTIPURPOSE SPACE(EXCEPT AT VIEW WINDOW). AT EAST AND WEST WALLS CENTER PANELS IN BAYS AND NOTCH END PANEL OF EACH BAY 7". SEE SPECIFICATIONS.
14. EXPOSED CONCRETE PIERS WITH SPECIAL CONCRETE FINISH (SANDBLAST) DO NOT PAINT. SEE SPEC. FOR SEALER.
15. REMOVE EXISTING STRUCTURE WEST OF GRID LINE 3. ALSO REMOVE EXISTING ROOF SYSTEM AT LOBBY 305, ISSUE ROOM 304 & CORRIDOR 303.
16. FOUNDATION DRAIN, SEE SHEETS P1, P2 & P3.

## GENERAL NOTES

1. SPLIT FACED CMU TO RECEIVE DIFFERENT COLOR PAINT THAN OTHER CMU.
2. MAIN TRUSSES TO RECEIVE DIFFERENT COLOR PAINT THAN STEEL JOISTS AND ROOF DECK.
3. ALL CMU BELOW GRADE (1 OR BOTH SIDES) SHALL BE NORMAL WEIGHT AND GROUTED SOLID.
4. PROVIDE WATERPROOFING MEMBRANE ON ALL WALLS OF ROOMS BELOW GRADE, ON EARTH SIDE.

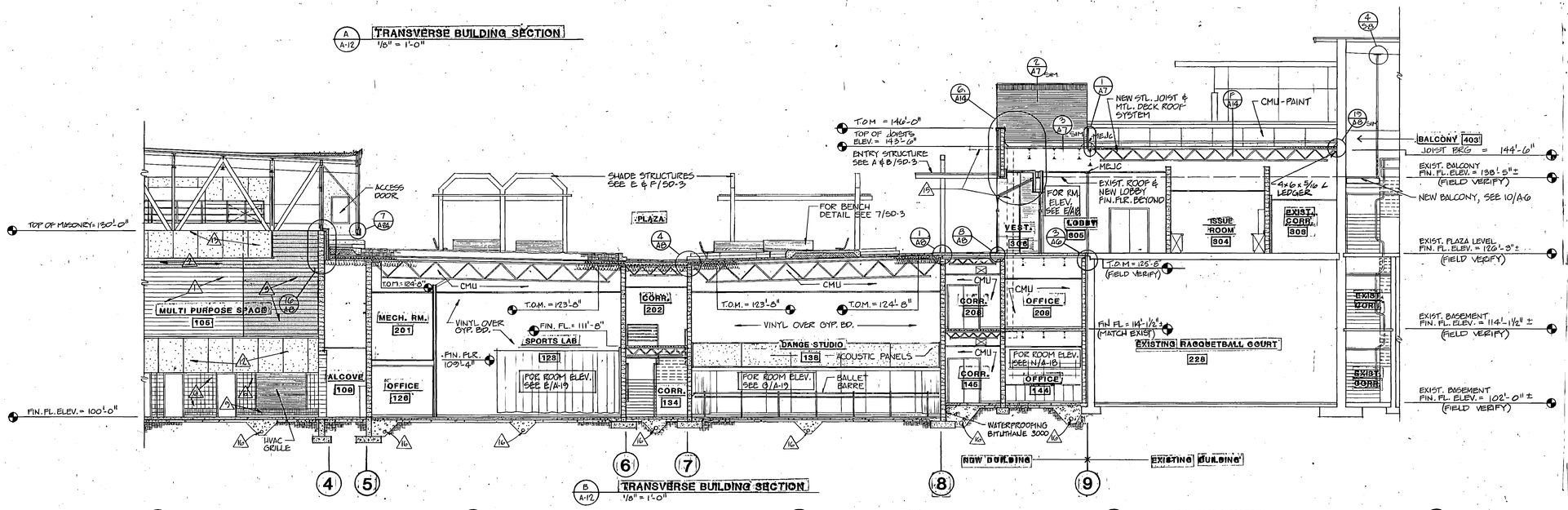


B A-12 **TRANSVERSE BUILDING SECTION**
1/8" = 1'-0"

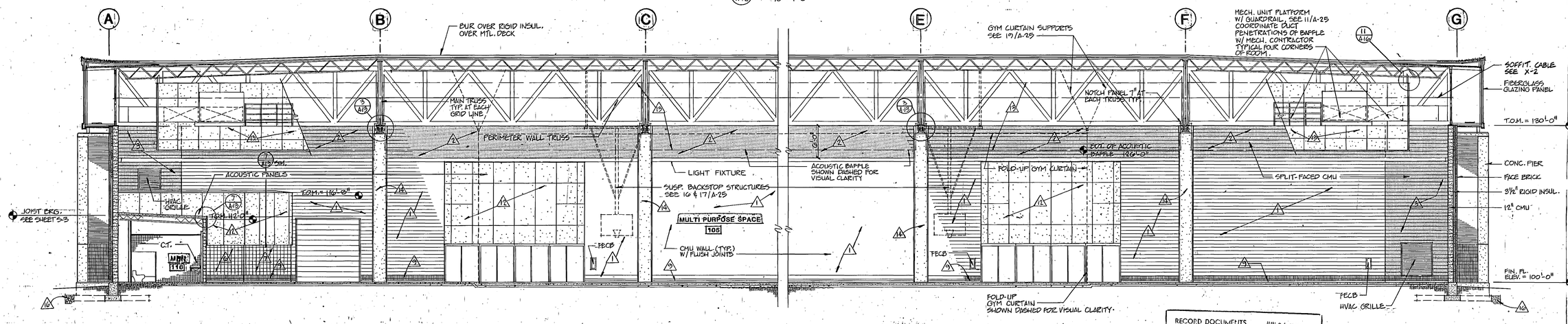


C A-12 **LONGITUDINAL BUILDING SECTION**
1/8" = 1'-0"

RECORD DOCUMENTS JUN 2 5 1990
THESE DOCUMENTS HAVE BEEN REVISED TO RECORD INFORMATION SUBMITTED BY THE CONTRACTOR. WHILE THEY ARE ASSUMED TO BE RELIABLE THE ARCHITECT DOES NOT GUARANTEE THEIR ACCURACY.

0000TVA12
Weber State College; Physical Education Facility - RW.84-058
Building Sections - 26690

BRETT J. RICHARDS 10143 UTAH

jra JONES / RICHARDS & ASSOCIATES
ARCHITECTURE INTERIORS
PLANNING 532 2ND STREET
CONSTRUCTION MANAGEMENT SPACE MGMT.

REVISED: AS BUILTS 6-90
PROJECT NUMBER: 8403
DATE: 6-21-88
DRAWN BY: FLUND

PROJECT: PHYSICAL EDUCATION FACILITY
WEBER STATE COLLEGE
SHEET TITLE: BUILDING SECTIONS

SHEET NO. A-12

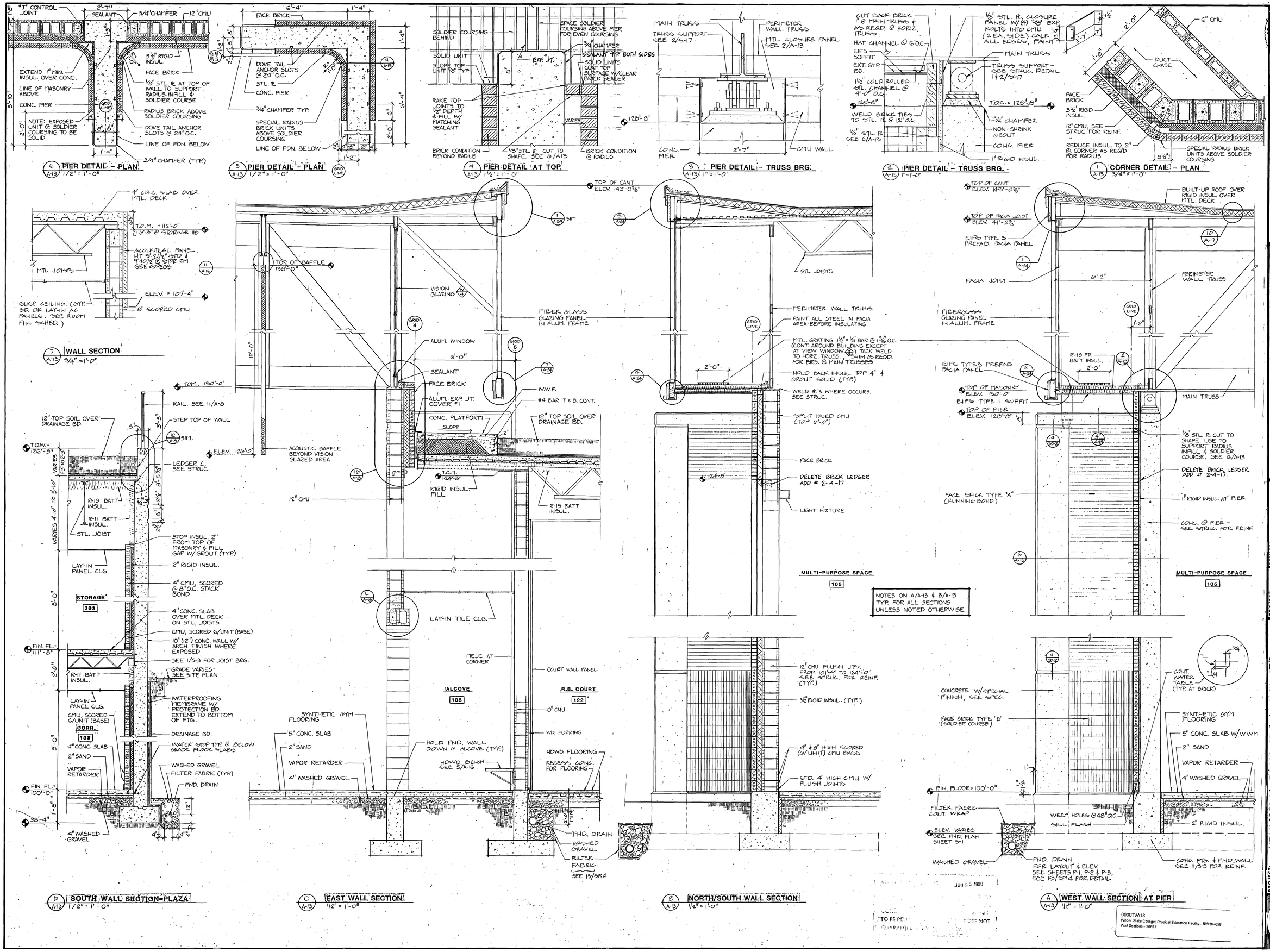


JUN 2 2 1990

TO BE DEL... DOES NOT

0000TVA13
Weber State College; Physical Education Facility - RW:84-058
Wall Sections - 26691

BRETT L. RICHARDS ARCHITECT ARCHITECT NO. 4107

jra JONES / RICHARDS & ASSOCIATES
ARCHITECTURE (801) 394-3033
PLANNING 533 - 26TH STREET
CONSTRUCTION MANAGEMENT OGDEN, UTAH

REVISED: AS BUILTS 6-90
PROJECT NUMBER: 8493
DATE: 9-21-88
DRAWN BY: R. BERTOLDI

PROJECT: PHYSICAL EDUCATION FACILITY
WEBER STATE COLLEGE
SHEET TITLE: WALL SECTIONS

SHEET NO. A-13

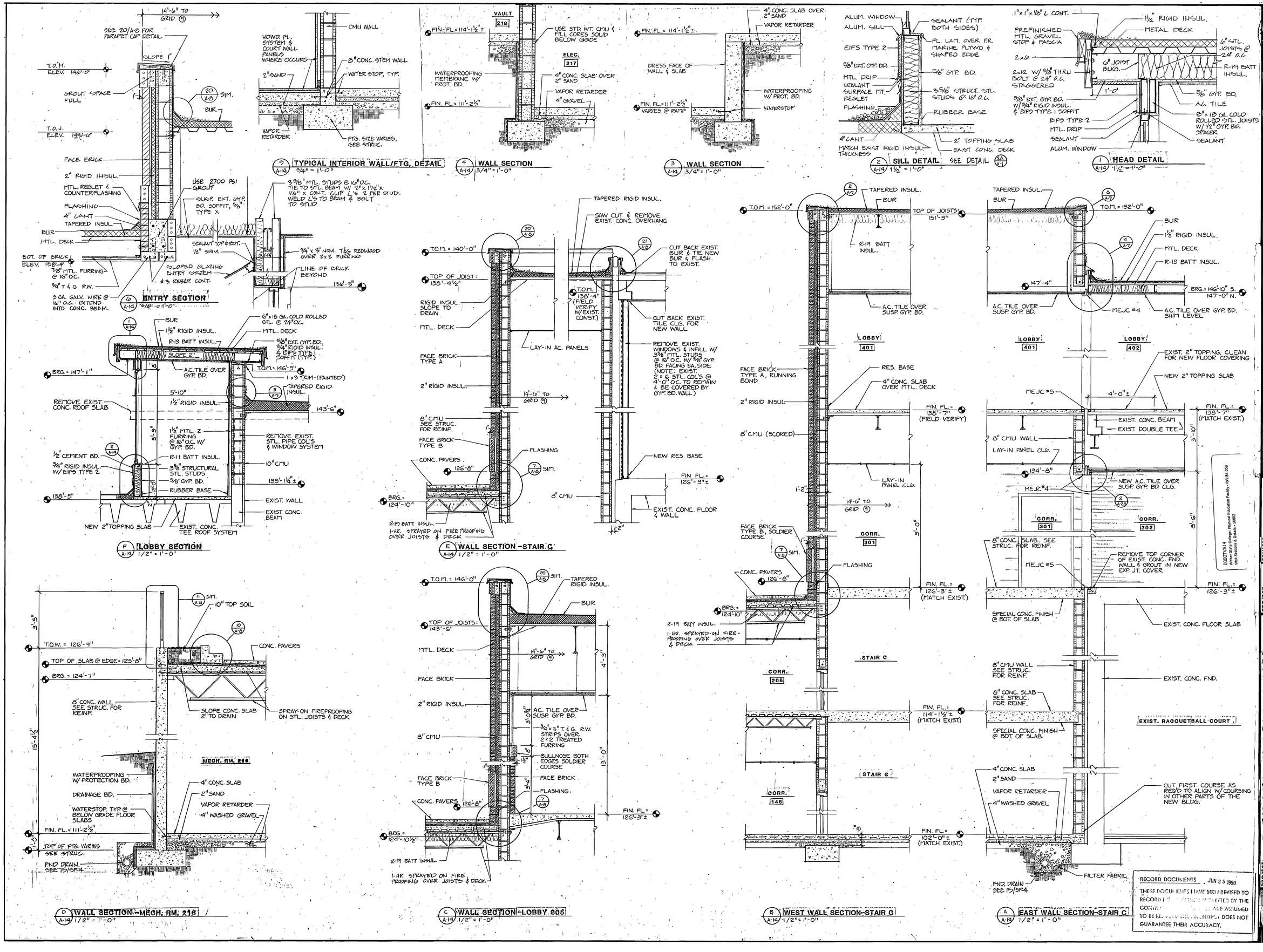


RECORD DOCUMENTS JUN 25 1990
THESE DOCUMENTS HAVE BEEN REVISED TO RECORD THE [illegible] SUBMITTED BY THE CONTR[illegible] ARE ASSUMED TO BE [illegible] ARCHITECT DOES NOT GUARANTEE THEIR ACCURACY.

PREP. J. SCHADES
NO. 110
STATE OF UTAH

jra JONES / RICHARDS & ASSOCIATES
ARCHITECTURE
ARCHITECTS
PLANNING
SALT LAKE CITY
CONSTRUCTION MANAGEMENT
BUILDING SERVICES

REVISED: 46 BULLETS 6-90
PROJECT NUMBER: 9470
DATE: 5-21-90
DRAWN BY: K. SE-CO

PROJECT: PHYSICAL EDUCATION FACILITY
WEBER STATE COLLEGE
SHEET TITLE: WALL SECTIONS & DETAILS

00001TVA14
Weber State College, Physical Education Facility - RNV 84-058
Wall Sections & Details - 90000

SHEET NO. A-14

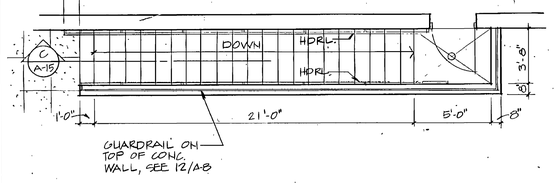


C/A-15 STAIR F PLAN
SCALE: 1/4" = 1'-0"

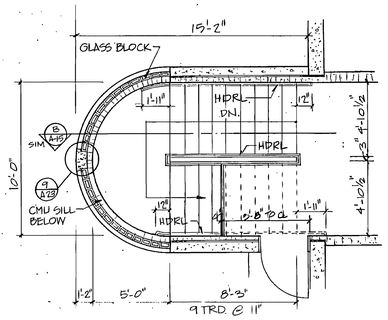


E/A-15 STAIR A PLAN
SCALE: 1/4" = 1'-0"

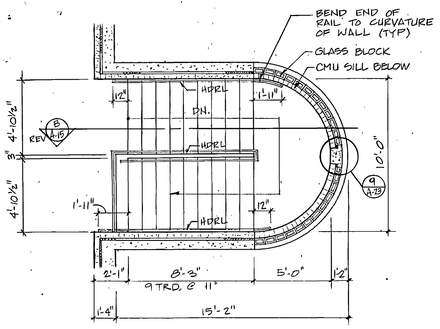


E/A-15 STAIR B PLAN
SCALE: 1/4" = 1'-0"

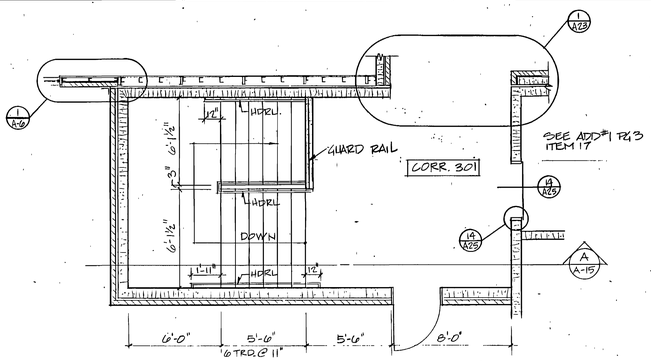


D/A-15 STAIR G PLAN
SCALE: 1/4" = 1'-0"

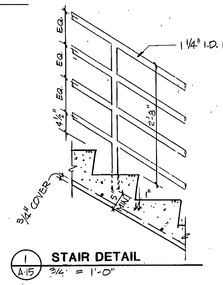


1/A-15 STAIR DETAIL
3/4" = 1'-0"

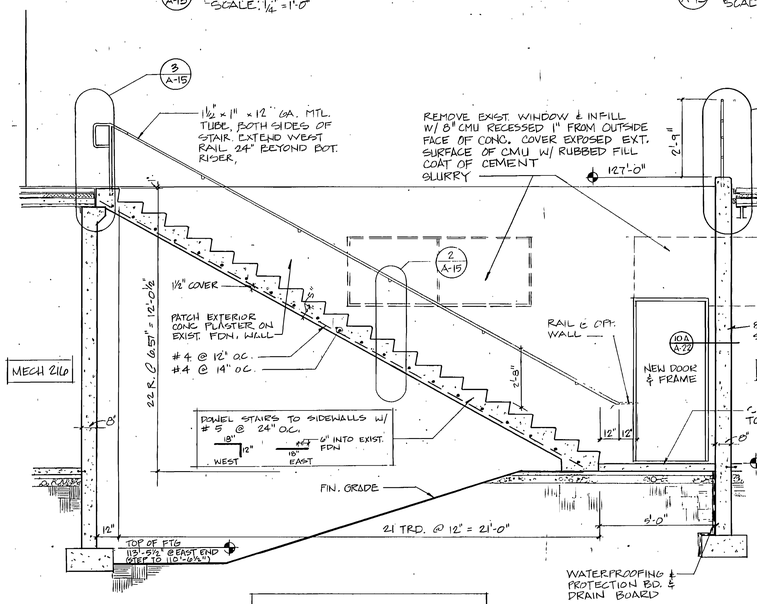


NOTE: REMOVE EXIST. CONC. STAIR, FDN. WALLS & LANDING.

C/A-15 STAIR F SECTION
SCALE: 3/8" = 1'-0"

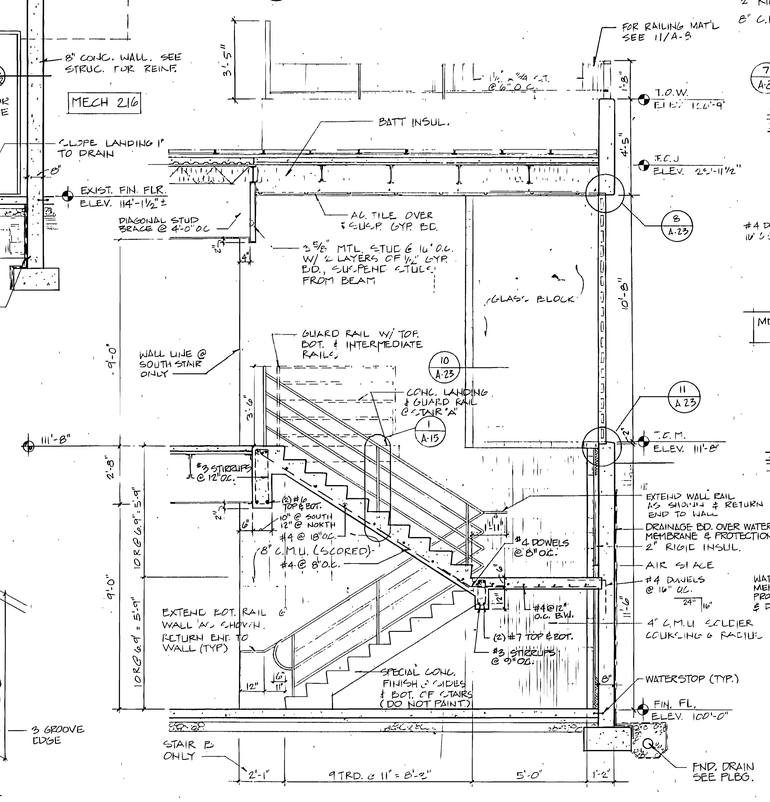


B/A-15 STAIR A & B SECTION
SCALE: 3/8" = 1'-0"

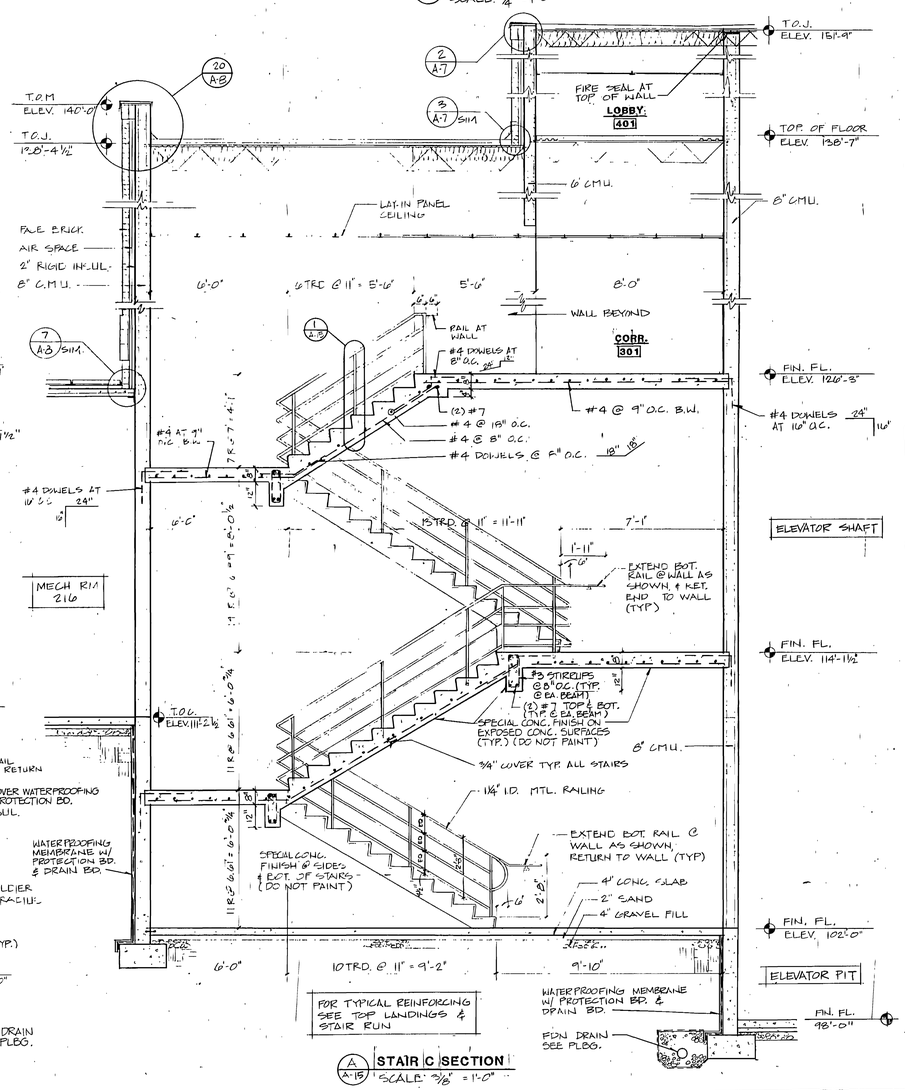


FOR TYPICAL REINFORCING SEE TOP LANDINGS & STAIR RUN

A/A-15 STAIR C SECTION
SCALE: 3/8" = 1'-0"

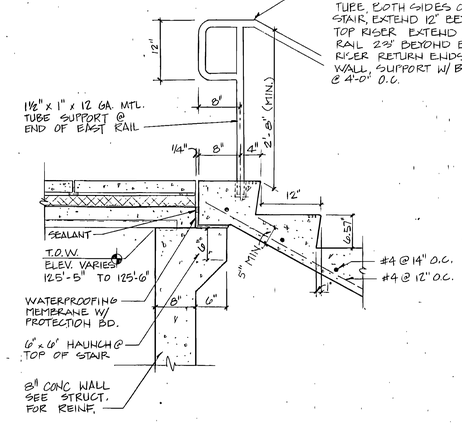


3/A-15 EXT. STAIR DETAIL
SCALE: 1" = 1'-0"

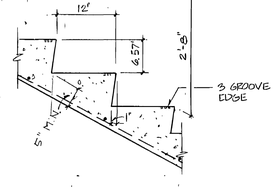


2/A-15 EXT. STAIR DETAIL
SCALE: 1" = 1'-0"

RECORD DOCUMENTS
THESE DOCUMENTS HAVE BEEN REVISED TO RECORD INFORMATION SUBMITTED BY THE CONTRACTOR. WHILE THEY ARE ASSUMED TO BE RELIABLE THE ARCHITECT DOES NOT GUARANTEE THEIR ACCURACY.

00007VA15
Weber State College; Physical Education Facility - RW 84-058
Stair Sections & Details - 26693

JONES / RICHARDS & ASSOCIATES
CONSTRUCTION MANAGEMENT
OGDEN, UTAH
PLANNING
533 - 26TH STREET
ARCHITECTURE
(801) 394-3033

REVISED:
PROJECT NUMBER: 8403
DATE: 6-21-88
DRAWN BY: R. BENTLEY

PROJECT: PHYSICAL EDUCATION FACILITY
WEBER STATE COLLEGE
SHEET TITLE: STAIR SECTIONS & DETAILS

SHEET NO. A-15

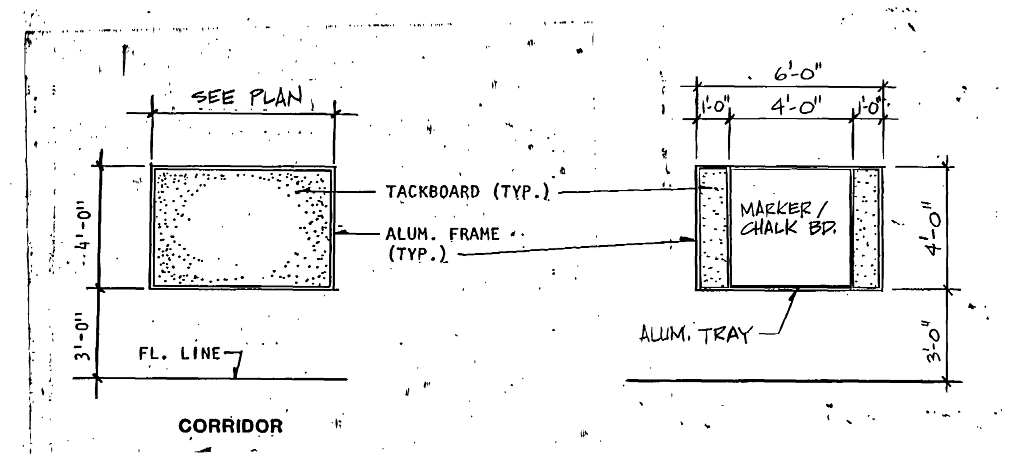


8 / A-16 **TACKBOARDS & MARKER/CHALK BOARDS**
1/4" = 1'-0"

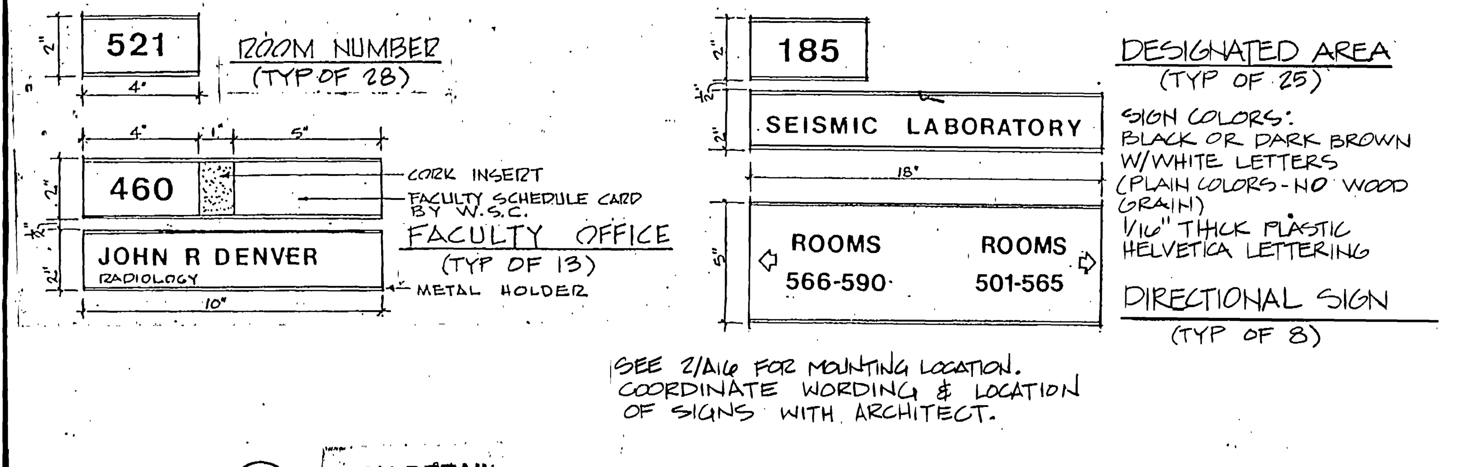


9 / A-16 **SIGN DETAIL**
NO SCALE

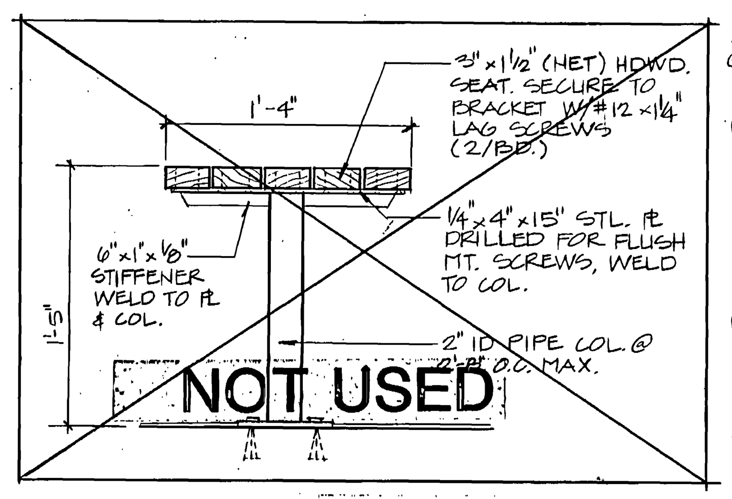


10 / A-16 **BENCH DETAIL**
1 1/2" = 1'-0"

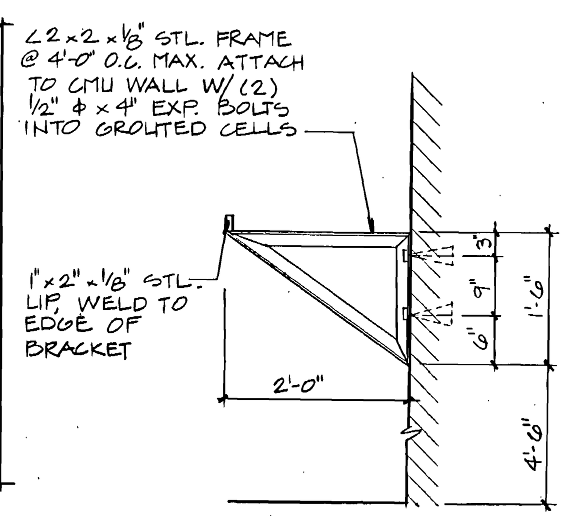


4 / A-16 **STORAGE BRACKET**
3/4" = 1'-0"

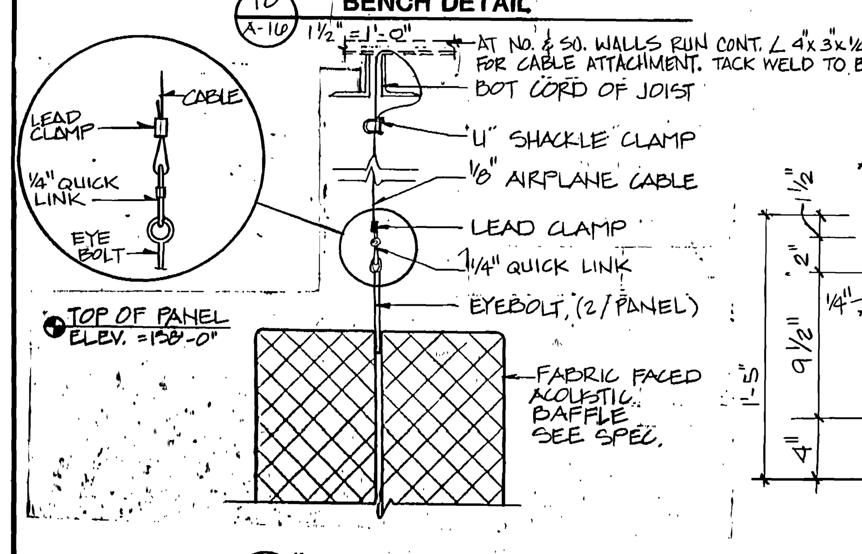


11 / A-16 **LIGHT & AC BAFFLE DETAIL**
3" = 1'-0"

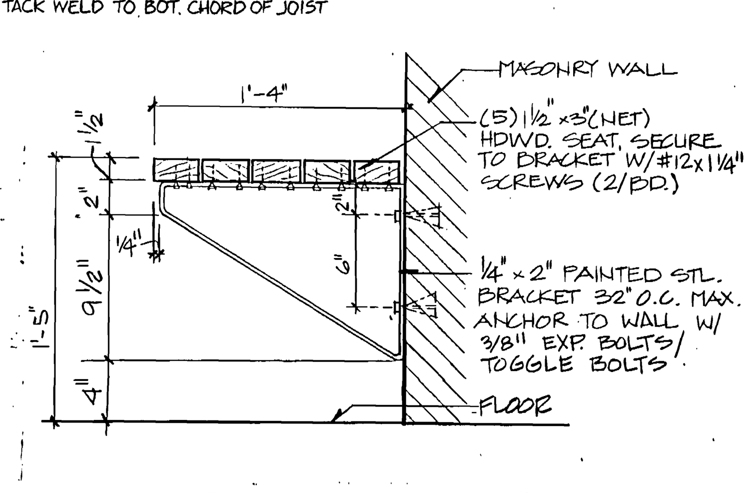


5 / A-16 **BENCH DETAIL**
1 1/2" = 1'-0"

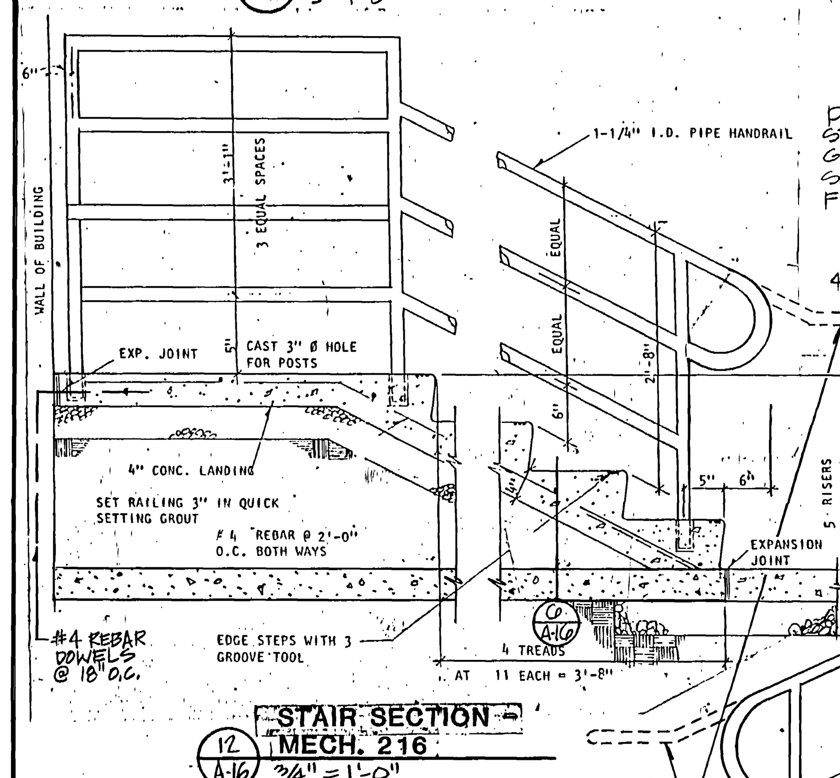


12 / A-16 **STAIR SECTION - MECH. 216**
3/4" = 1'-0"

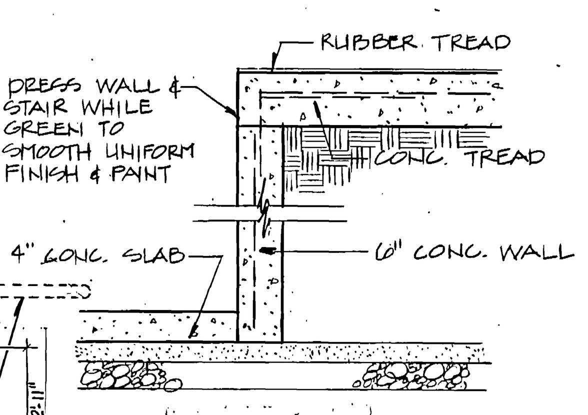


6 / A-16 **STAIR DETAIL**
3/4" = 1'-0"

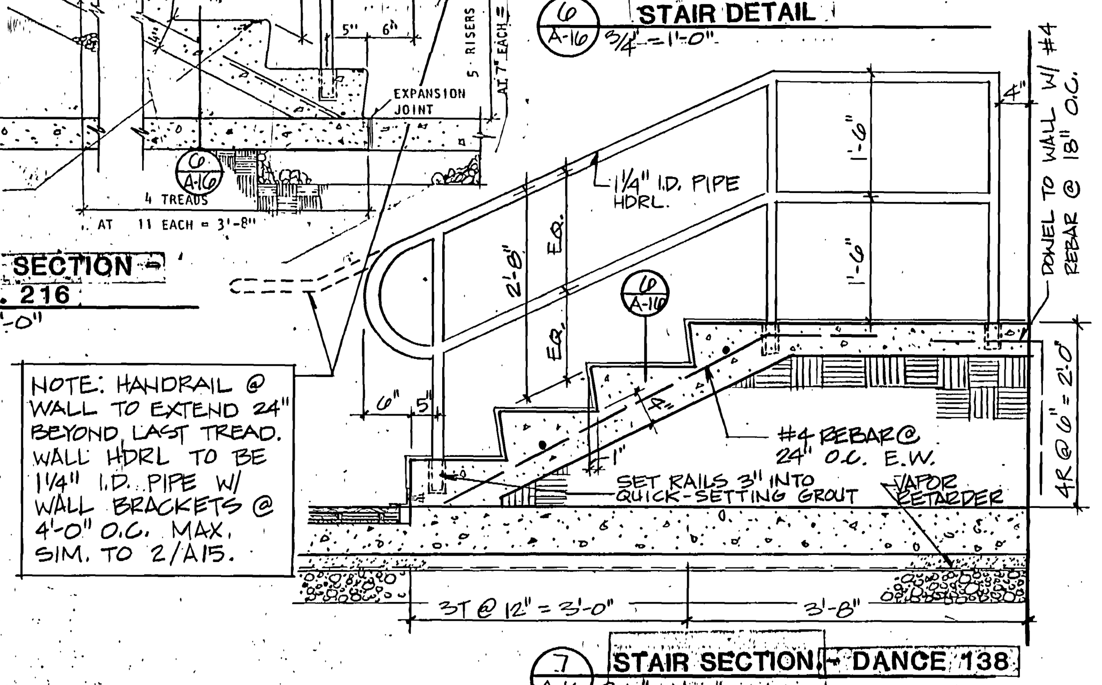


7 / A-16 **STAIR SECTION - DANCE 138**
3/4" = 1'-0"

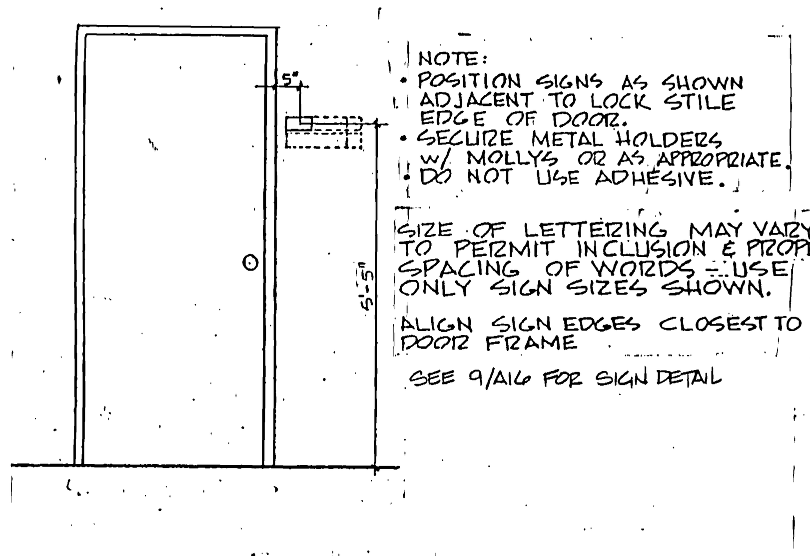


2 / A-16 **SIGN DETAIL**
1/2" = 1'-0"

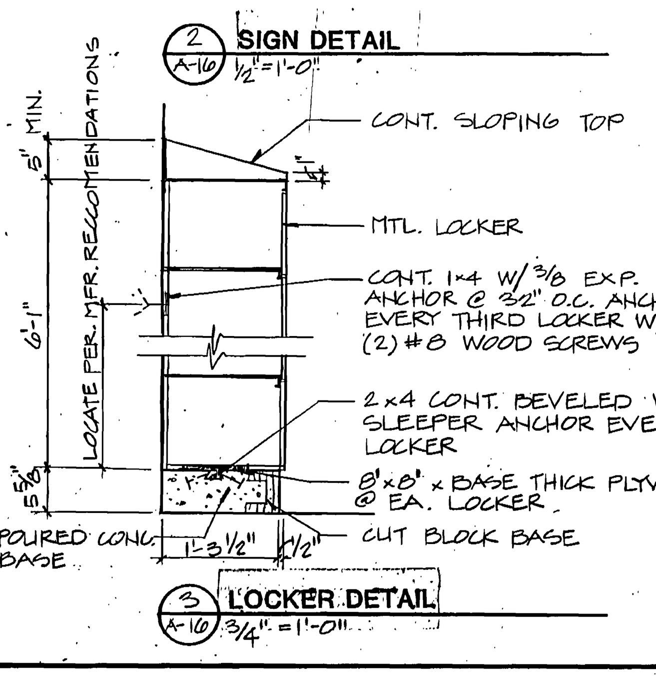


3 / A-16 **LOCKER DETAIL**
3/4" = 1'-0"

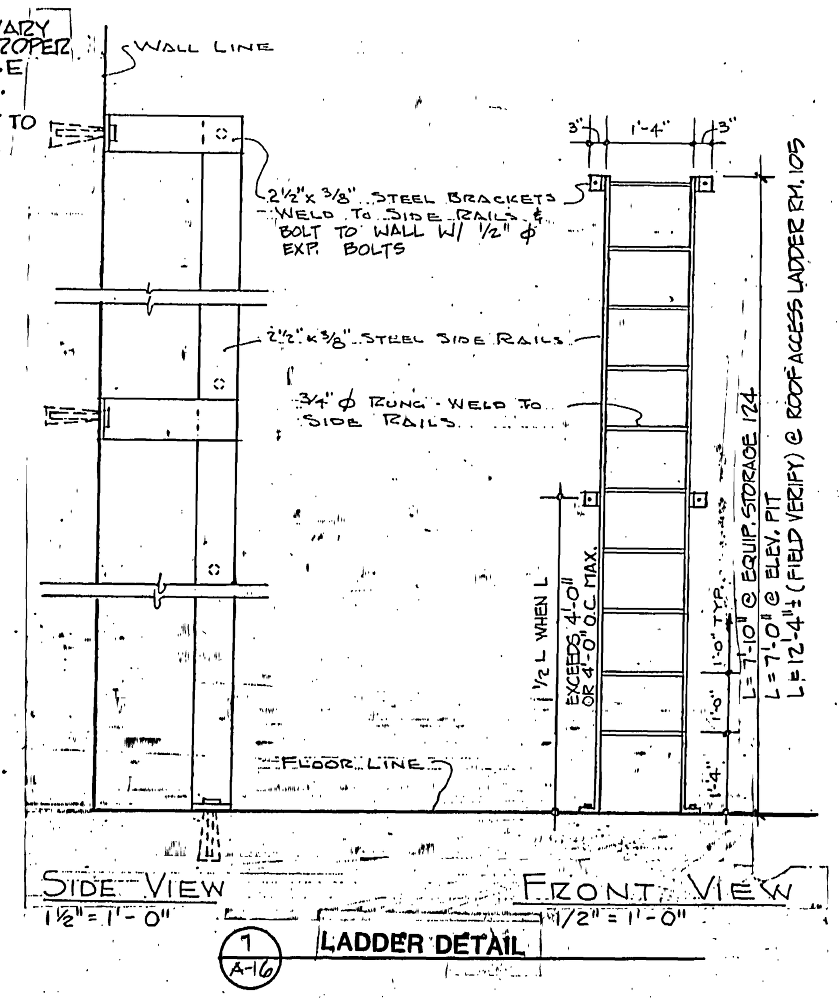


1 / A-16 **LADDER DETAIL**

# ROOM FINISH SCHEDULE CONT'D

**LEGEND**
FIN CODE (EG F1) = SEE CODE LEGEND BELOW
* = SEE REMARKS
--- = NO NEW FINISH
(#) = SEE NOTES BELOW
X = EXISTING

| RM # | ROOM NAME | FLOOR | BASE | WALLS MAT | WALLS FIN | CEILINGS MAT | CEILINGS FIN | CLG HT | SPECIAL | --- | REMARKS |
|---|---|---|---|---|---|---|---|---|---|---|---|
| 301 | CORRIDOR | FL1 | B1 | M1 | F1 | M6 | --- | 9'-0" | S1 | --- | --- |
| 302 | CORRIDOR | FL1 | --- | M4 | F5 | M3 | F3 | 8'-6"* | S1 | --- | MATCH EXISTING |
| 303 | EXIST CORRIDOR | X (4) | --- | M4 * | F5 * | X (4) | X (4) | X | S1 | --- | AT NEW WALL ONLY |
| 304 | ISSUE ROOM | FL1 | B1 | M1 | F1 | M7 | --- | 9'-0" | S1 | --- | --- |
| 305 | LOBBY | FL1 | --- | M4 * | F5 | M3 | F3 | 13'-0" | S1,2 | --- | W/ REWOOD INFILL, SEE SHT A18 |
| 306 | VESTIBULE | FL6 | --- | M4 * | F5 | --- | --- | VARIES | --- | --- | WHERE SHOWN |
| 307 | EXIST OFFICE | X (4) | B1 * | M2 * | F2 * | X (4) | --- | X | --- | --- | AT INFILL ONLY |
| 313 | EXIST GYM | X | X | X | X | M2 * | F1 * | 11'-3"+* | --- | --- | AT NEW BALCONY |
| 316 | EXIST KITCHENETTE | X (4) | B1 * | M2 * | F2 * | X (4) | --- | X | --- | --- | AT INFILL ONLY |
| 319 | EXIST OFFICE | X (4) | B1 | MX,X,1,2 | F1 | X (4) | --- | X | --- | --- | --- |
| – | --- | --- | --- | --- | --- | --- | --- | --- | --- | --- | --- |
| 401 | LOBBY A | FL3 | B1 | M1 | F1 | M3 | F3 | 8'-2" | --- | --- | --- |
| 402 | LOBBY B | FL3 | B1 | M2 | F1 | M3 | F3 | 8'-2" | --- | --- | --- |
| 403 | BALCONY | FL5 | --- | X | X | X | X | --- | S6 | --- | --- |
| – | --- | --- | --- | --- | --- | --- | --- | --- | --- | --- | --- |
| – | --- | --- | --- | --- | --- | --- | --- | --- | --- | --- | --- |
| – | --- | --- | --- | --- | --- | --- | --- | --- | --- | --- | --- |
| – | --- | --- | --- | --- | --- | --- | --- | --- | --- | --- | --- |

**ROOM FINISH CODE LEGEND**

NOTE: IF MORE THAN ONE FINISH CODE APPEARS IN A WALL BOX IT IS TO DESIGNATE THE LOCATION OF THE FINISH. EG. F1,2,1,3 — WEST WALL / SOUTH WALL / EAST WALL / NORTH WALL

**FLOOR**
- FL1 – CARPET
- FL2 – HDWD
- FL3 – VINYL COMP. TILE
- FL4 – CERAMIC TILE
- FL5 – CONC., SEALED
- FL6 – ENTRANCE MAT
- FL7 – SYN TRACK SURFACE
- FL8 – SYN – GYM SURFACE
- FL9 – RAISED PROFILE RUBBER TILE/TREAD

**BASE**
- B1 – 4" RES., STRAIGHT
- B2 – RES., COVED
- B3 – METAL ANGLE
- B4 – CERAMIC TILE
- B5 – RES STAIR SKIRTING & BASE

**WALL & CLG MAT.**
- M1 – CMU
- M2 – GYP BOARD
- M3 – SUSP. GYP BD
- M4 – BRICK
- M5 – CONCRETE
- M6 – LAY-IN AC. PANELS TYPE A.
- M7 – LAY-IN AC PANELS TYPE B.
- M8 – COURT PANEL SYSTEM
- M9 – NOT USED
- M10 – EXPOSED MTL DECK & JTS

**WALL & CLG FIN.**
- F1 – PAINT
- F2 – VINYL FABRIC
- F3 – ACOUSTIC TILE
- F4 – EPOXY PAINT
- F5 – SEAL
- F6 – CERAMIC TILE
- F7 – SPRAYED ON FIRE PROOFING

**SPECIALTIES**
- S1 – PAINT HM DOORS & FRAMES
- S2 – STAIN & VARNISH WD TRIM & MILLWORK
- S3 –
- S4 – PAINT MTL TRUSSES A CONTRASTING COLOR
- S5 – NOT USED
- S6 – PAINT METAL RAILS

**NOTES:**
1. COMBINATION OF STANDARD, SCORED & SPLIT FACED CMU. SEE ROOM ELEVATIONS A, B, C/A11 & A & B/A17.
2. SLOPE CEILING W/ RAMP (REDUCE CEILING HT. TO 8'-4" BY TOP OF RAMP @ CORRIDOR 204).
3. FURR CEILING AROUND NEW DUCTS ALONG WEST WALL. EXTEND FURRING & GYP BD APPROX 30" DOWN WEST WALL TO COVER WINDOWS. PAINT TO MATCH EXISTING WALL.
4. PROTECT OR REMOVE AND REPLACE EXISITNG FINISHES AT NEW CONSTRUCTION.
5. EXPOSED CONCRETE SHALL RECEIVE A SAND BLASTED FINISH (SPECIAL CONCRETE FINISH). DO NOT PAINT!
6. PROVIDE (2) 2" WIDE FEATURE STRIPS FULL LENGTH OF CORRIDOR. SEE ARCHITECT FOR EXACT LOCATION.
7. FOR CORRIDOR & HALL BASE DETAIL, SEE 1/A4.

## GENERAL NOTES

1. UNLESS SHOWN OTHERWISE ALL ROOMS WITH 4", 6", 8" OR 10" CMU FINISH (EXCEPT STORAGE & MECHANICAL ROOMS) SHALL UTILIZE 8" SCORED UNITS STACK BONDED WITH RAKED JOINTS. WHERE ROOMS SHARE A COMMON WALL USE UNITS SCORED BOTH SIDES.
2. PAINT ALL EXPOSED FERROUS METAL.
3. STAIN & VARNISH ALL EXPOSED WOOD UNLESS NOTED OTHERWISE.

RECORD DOCUMENTS [illegible]
THESE [illegible] REVISED TO [illegible] THE [illegible] TO [illegible] DOES NOT GUARA[illegible] ACCURACY.

# ROOM FINISH SCHEDULE

**LEGEND**
FIN CODE (EG F1) = SEE CODE LEGEND BELOW
* = SEE REMARKS
--- = NO NEW FINISH
(#) = SEE NOTES
X = EXISTING

| RM # | ROOM NAME | FLOOR | BASE | WALLS MAT | WALLS FIN | CEILINGS MAT | CEILINGS FIN | CLG HT | SPECIAL | --- | REMARKS |
|---|---|---|---|---|---|---|---|---|---|---|---|
| A | STAIR | FL9 | B5 | M1 | F1 | M3 | F3 | * | S6 | --- | SEE SECTION B/A15 |
| B | STAIR | FL9 | B5 | M1 | F1 | M3 | F3 | * | S6 | --- | SEE SECTION B/A15 |
| C | STAIR | FL9 | B5 | M1 | F1 | M6 | --- | * | S1,6 | --- | SEE SECTION B/A15 |
| – | --- | --- | --- | --- | --- | --- | --- | --- | --- | --- | --- |
| – | --- | --- | --- | --- | --- | --- | --- | --- | --- | --- | --- |
| 100 | NOT USED | --- | --- | --- | --- | --- | --- | --- | --- | --- | --- |
| 101 | STORAGE | FL5 | B2 | M1 | F1 | M3 | F1 | 10'-0" | S1 | --- | --- |
| 102 | STORAGE | FL5 | B2 | M1 | F1 | M3 | F1 | 10'-0" | S1 | --- | --- |
| 103 | CUST. | FL5 | B2 | M1 | F1 | M3 | F1 | 10'-0" | S1,2 | --- | Q.T. @ SERVICE SINL, SEE F/A17. |
| 104 | STORAGE | FL5 | B2 | M1 | F1 | M3 | F1 | 10'-0" | S1 | --- | --- |
| 105 | MULTI-PURPOSE SPACE | FL2,7,8 | --- | M1 (1) | F1,4(5)* | M10 | F1 | VARIES 41' TO 44'-8" | S1,4 | --- | EPOXY PAINT TO 7'-4" AFF. STD PAINT ABOVE. PAINT ALL EXPOSED METAL |
| 106 | STORAGE | FL5 | B2 | M1 | F1 | M3 | F1 | 10'-0" | S1 | --- | --- |
| 107 | ALCOVE | FL8 | --- | M1 | F1 | M6 | --- | 11'-0" | S2 | --- | --- |
| 108 | ALCOVE | FL8 | --- | M1 | F1 | M6 | --- | 11'-0" | S2 | --- | --- |
| 109 | ALCOVE | FL8 | --- | M1 | F1 | M6 | --- | 11'-0" | S1,2 | --- | --- |
| 110 | NOT USED | --- | --- | --- | --- | --- | --- | --- | --- | --- | --- |
| 111 | ALCOVE | FL8 | --- | M1 | F1 | M6 | --- | 11'-0" | S1,2 | --- | |
| 112 | ISSUE ROOM | FL3 | B2 | M1 | F1 | M3 | F1 | 10'-0" | S1 | --- | --- |
| 113 | VESTIBULE | FL6 | B2 | M1 | F1 | M6 | --- | 10'-0" | S1 | --- | --- |
| 114 | CHASE | FL5 | --- | M1 | --- | M10 | --- | 12'-0"± | S1 | --- | --- |
| 115 | WOMEN | FL4 | B4 | M1 | F1&6 * | M3 | F1 | 9'-0" | --- | --- | SEE ENLARGED PLAN SHEET A17 |
| 116 | MEN | FL4 | B4 | M1 | F1&6 * | M3 | F1 | 9'-0" | S1 | --- | SEE ENLARGED PLAN SHEET A17 |
| 117 | CHASE | FL5 | --- | M1 | --- | M10 | --- | 12'-0"± | S1 | --- | --- |
| 118 | STORAGE | FL5 | B2 | M1 | F1 | M3 | F1 | 15'-0" | S1 | --- | --- |
| 119 | RACQUETBALL COURT | FL2 | --- | M8 | --- | M8,7 * | --- | 20'-0" | --- | --- | SEE REFLECTED CEILING PLAN |
| 120 | NOT USED | --- | --- | --- | --- | --- | --- | --- | --- | --- | --- |
| 121 | RACQUETBALL COURT | FL2 | --- | M8 | --- | M8,7 * | --- | 20'-0" | --- | --- | SEE REFLECTED CEILING PLAN |
| 122 | RACQUETBALL COURT | FL2 | --- | M8 | --- | M8,7 * | --- | 20'-0" | --- | --- | SEE REFLECTED CEILING PLAN |
| 123 | SPORTS LAB | FL1,8* | B1 | M1&2 * | F1&F2* | M7 | --- | 20'-0" | S1 | --- | SEE FLOOR PLAN & ELEVATIONS |
| 124 | EQUIP STORAGE | FL3 | B2 | M1,2,2,1 | F1 | M2 | F1 | 8'-0" | S1 | --- | --- |
| 125 | VIDEO ROOM | FL1 | B1 | M2,2,2,1 | F1 | M2 | F3 | 8'-0" | S1 | --- | --- |
| 126 | OFFICE | FL1 | B1 | M2,2,2,1 | F1 | M2 | F3 | 8'-0" | S1 | --- | --- |
| 127 | NOT USED | --- | --- | --- | --- | --- | --- | --- | --- | --- | --- |
| 128 | NOT USED | --- | --- | --- | --- | --- | --- | --- | --- | --- | --- |
| 129 | WEIGHING AREA | FL4 | B4 | M,2,1,1 | F,2,1,1 | --- | --- | --- | --- | --- | --- |
| 130 | NOT USED | --- | --- | --- | --- | --- | --- | --- | --- | --- | --- |
| 131 | DRESS ROOM | FL1 | B1 | M2,2,1,2* | F1 | --- | --- | ---* | --- | --- | 8' HIGH PARTITION W/ NO CLG |
| 132 | DRESS ROOM | FL1 | B1 | M2,2,1,2* | F1 | --- | --- | ---* | --- | --- | 8' HIGH PARTITION W/ NO CLG |
| 133 | CORRIDOR | FL3(6) | B2(7) | M1 | F1 | M6 | --- | 9'-0"(2) | S1,6 | --- | --- |
| 134 | HALL | FL3(6) | B2(7) | M1 | F1 | M6 | --- | 9'-0" | S1,2 | --- | --- |
| 135 | RACQUETBALL COURT | FL2 | --- | M8 | --- | M8,7 * | --- | 20'-0" | --- | --- | SEE REFLECTED CEILING PLAN |
| 136 | RACQUETBALL COURT | FL2 | --- | M8 | --- | M8,7 * | --- | 20'-0" | --- | --- | SEE REFLECTED CEILING PLAN |
| 137 | RACQUETBALL COURT | FL2 | --- | M8 | --- | M8,7 * | --- | 20'-0" | --- | --- | SEE REFLECTED CEILING PLAN |
| 138 | DANCE STUDIO | FL2 | B3 | M2,1,1,1* | F2,1,1,1* | M7 | --- | 20'-0" | S1,2 | --- | DRESS CONC STAIR WALLS AND PAINT SEE INTERIOR ELEV SHEET A19. |
| 139 | ELEVATOR EQUIP RM | FL5 | B2 | M1 | F1 | M7 | --- | 9'-0" | S1 | --- | --- |
| 140 | NOT USED | --- | --- | --- | --- | --- | --- | --- | --- | --- | --- |
| 141 | ELECTRICAL | FL5 | B2 | M1 | F1 | M7 | --- | 9'-0" | S1 | --- | --- |
| 142 | LOBBY | FL3 | B2 | M1 | F1 | M6 | --- | 9'-0" | S1 | --- | --- |
| 143 | CLOSET | FL1 | B1 | M2 | F1 | M3 | F1 | 9'-0" | S1 | --- | --- |
| 144 | OFFICE | FL1 | B1 | M2 | F2 | M3 | F3 | 9'-0" | S1,2 | --- | --- |
| 145 | CORRIDOR | FL3(6) | B2 | M1 | F1 | M6 | --- | 9'-0" | S1 | --- | --- |
| 146 | OFFICE | FL1 | B1 | M1,2,1,1 | F1,2,1,1 | M3 | F3 | 9'-0" | S1,2 | --- | --- |
| 147 | OFFICE | FL1 | B1 | M1,2,1,1 | F1,2,1,1 | M3 | F3 | 9'-0" | S1,2 | --- | --- |
| 148 | STORAGE | FL3 | B2 | M1 | F1 | M3 | F1 | 9'-0" | S1 | --- | --- |
| 149 | STORAGE | FL3 | B2 | M5,1,1,5 | F1 | M3 | F1 | 9'-0" | S1 | --- | |
| 150 | NOT USED | --- | --- | --- | --- | --- | --- | --- | --- | --- | --- |
| 151 | OFFICE | FL1 | B1 | M2,2,1,1 | F1 | M3 | F3 | 8'-6" | S1 | --- | ALT #3 |
| 152 | OFFICE | FL1 | B1 | M2,2,1,2 | F1 | M3 | F3 | 8'-6" | S1 | --- | ALT #3 |
| 153 | OFFICE | FL1 | B1 | M2,2,1,2 | F1 | M3 | F3 | 8'-6" | S1 | --- | ALT #3 |
| 154 | CORRIDOR | FL3(6) | B2 | M1,-,5,1 | F1 | M6 | --- | 8'-6"* | S1 | --- | MATCH EXISTING |
| 161 | CORRIDOR | X | X | X | X * | X | X | X | X | X | PATCH EXIST FINISHES @ CORR CONNECTION PAINT WEST WALL |
| – | --- | --- | --- | --- | --- | --- | --- | --- | --- | --- | --- |
| – | --- | --- | --- | --- | --- | --- | --- | --- | --- | --- | --- |
| – | --- | --- | --- | --- | --- | --- | --- | --- | --- | --- | --- |
| 200 | NOT USED | --- | --- | --- | --- | --- | --- | --- | --- | --- | --- |
| 201 | MECHANICAL | FL5 | B2 | M1,2,2,1 | F1 | M7 | --- | 9'-0" | S1 | --- | --- |
| 202 | HALL | FL3 | B2(7) | M1 * | F1 | M6 | --- | 9'-6" | S1,2 | --- | VINYL OVER GYP BD @ COURT OPNG'S SEE 1/A19. |
| 203 | STORAGE | FL5 | B2 | M1 | F1 | M7 | --- | 8'-0" | S1 | --- | --- |
| 204 | CORRIDOR | FL3(6) | B2(7) | M1 | F1 | M6 | --- | 9'-0"(2) | S1,6 | --- | --- |
| 205 | CONFERENCE RM | FL1 | B1 | M1 | F1 | M3 | F3 | 9'-0" | S1 | --- | --- |
| 206 | CUST | FL5 | B2 | M1 | F1 * | M3 | F1 | 9'-0" | S1,2 | --- | Q.T. @ SERVICE SINK, SEE E/A17. |
| 207 | OFFICE | FL1 | B1 | M1 | F1 | M3 | F3 | 8'-4" | S1 | --- | --- |
| 208 | CORRIDOR | FL3(6) | B2 | M1 | F1 | M6 | --- | 8'-4" | S1 | --- | --- |
| 209 | OFFICE | FL1 | B1 | M1 | F1 | M3 | F3 | 8'-4" | S1 | --- | --- |
| 210 | NOT USED | --- | --- | --- | --- | --- | --- | --- | --- | --- | --- |
| 211 | STORAGE | FL3 | B2 | M1 | F1 | M3 | F1 | 8'-0" | S1 | --- | --- |
| 212 | STORAGE | FL3 | B2 | M1 | F1 | M3 | F1 | 8'-0" | S1 | --- | --- |
| 213 | STORAGE | FL3 | B2 | M1 | F1 | M3 | F1 | 8'-0" | S1 | --- | --- |
| 214 | LOBBY | FL3 | B2 | M1 | F1 | M6 | --- | 9'-0" | S1 | --- | --- |
| 215 | CORRIDOR | FL3 | B2 | M1 | F1 | M6 | --- | 8'-4" | S1 | --- | --- |
| 216 | MECHANICAL | FL5 | --- | M1 | F1 | M10 | F7 | --- | S1 | --- | --- |
| 217 | ELECTRICAL | FL5 | --- | M1 | F1 | M3 | F1 | 11'-0" | S1 | --- | --- |
| 218 | VAULT | FL5 | --- | M1 | F1 | M3 | F1 | 8'-0" | S1 | --- | --- |
| 219 | RAMP | FL5 | --- | M1 | F1 | M10 | F7 | --- | S1 | --- | --- |
| 220 | NOT USED | --- | --- | --- | --- | --- | --- | --- | --- | --- | --- |
| 221 | EXIST PIPE TUNNEL | X | X | X | X | X | X | X | X | --- | --- |
| 222 | EXIST PIPE TUNNEL | X | X | X | X | X | X | X | S1 | --- | --- |
| 224 | EXIST DANCE | X | X | X (3) | X (3) | X (3) | X *(3) | X | X | --- | PATCH EXISTING ACT AS REQ'D FOR NEW DUCT WORK |
| 227 | EXIST CORRIDOR | X | X | X | X * | X | X | X | X | --- | PAINT EXIST FINISHES @ CORR CONNECTION PAINT WEST WALL |
| 230 | OFFICE | FL1 | B1 | M2,2,1,2 | F1 | M3 | F3 | 9'-0" | S1 | --- | ALT #3 |
| 231 | CONFERENCE | FL1 | B1 | M2,2,1,2 | F1 | M3 | F3 | 9'-0" | S1 | --- | ALT #3 |
| 232 | CORRIDOR | FL3(6) | B2 | M1,-,5,1 | F1 | M6 | --- | 8'-6"* | S1 | --- | MATCH EXISITNG |
| 215A | --- STORAGE | FL3 | B2 | M1 | F1 | M7 | --- | 8'-4" | S1 | --- | --- |
| 215B | --- STORAGE | FL3 | B2 | M1 | F1 | M7 | --- | 8'-4" | S1 | --- | --- |
| – | --- | --- | --- | --- | --- | --- | --- | --- | --- | --- | --- |

BRETT J. RICHARDS No. 1107 LICENSED ARCHITECT STATE OF UTAH

**jra** JONES / RICHARDS & ASSOCIATES
ARCHITECTURE (801) 394-3033 · PLANNING 533 - 26TH STREET · CONSTRUCTION MANAGEMENT OGDEN, UTAH

REVISED: AS BUILTS JUN 1990

PROJECT NUMBER: 8403
DATE: 8-21-88
DRAWN BY: R. BERTOLDI

PROJECT: PHYSICAL EDUCATION FACILITY — WEBER STATE COLLEGE

SHEET TITLE: ROOM FINISH SCHEDULE & DETAILS

SHEET NO. A-16

0000TVA16
Weber State College; Physical Education Facility - RW:84-058
Room Finish Schedules & Details - 26694

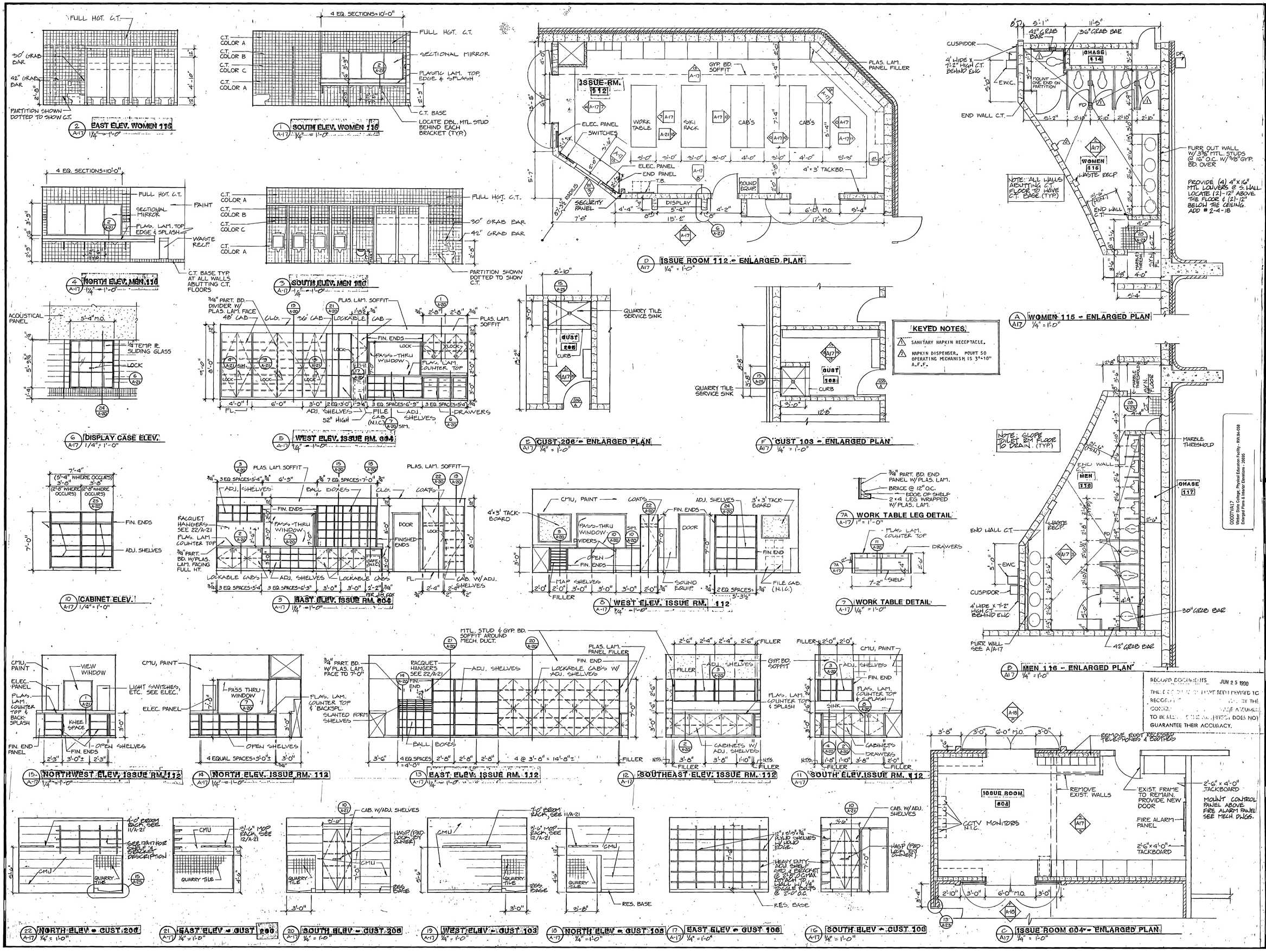


**KEYED NOTES**

1. SANITARY NAPKIN RECEPTACLE.
2. NAPKIN DISPENSER. MOUNT SO OPERATING MECHANISM IS 3'-10" A.F.F.

RECORD DOCUMENTS JUN 25 1990
THESE DOCUMENTS HAVE BEEN REVISED TO RECORD [illegible] BY THE CONTR[illegible] ASSUMED TO BE REL[illegible] DOES NOT GUARANTEE THEIR ACCURACY.

jra JONES / RICHARDS & ASSOCIATES
ARCHITECTURE (801) 394-3933
PLANNING 533 - 26TH STREET
CONSTRUCTION MANAGEMENT OGDEN, UTAH

REVISED: AS BUILTS 6-90
PROJECT NUMBER: 9465
DATE: 6-21-88
DRAWN BY: R. BERTOLDI

PROJECT: PHYSICAL EDUCATION FACILITY
WEBER STATE COLLEGE
SHEET TITLE: ENLARGED PLANS & INTERIOR ELEVATIONS

SHEET NO. A-17

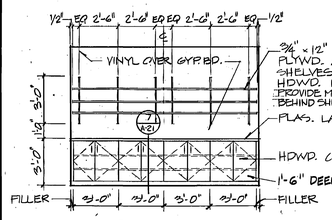


N A-18 NORTH ELEV. - OFFICE 144
1/4" = 1'-0"

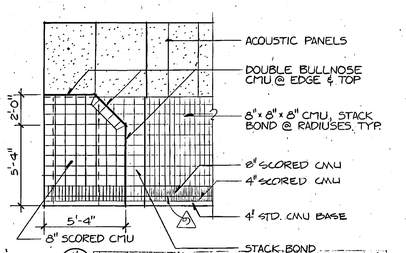


H A-18 INT. ELEV. (TOILET RM. SCREEN WALL)
1/4" = 1'-0"

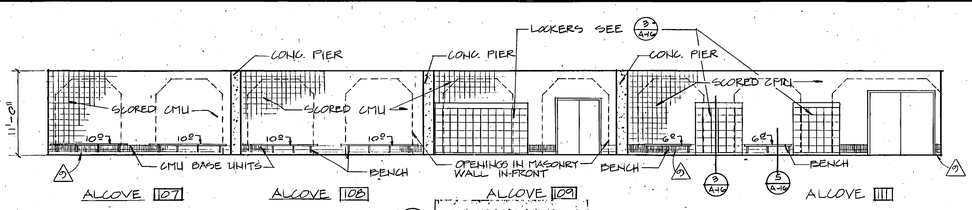


A A-18 ALCOVE ELEVATION
1/8" = 1'-0"

## KEYED NOTES

1. 12"x8"x16" CMU, FLUSH CUT JTS.
2. 12"x8"x16" CMU, SPLIT FACED
3. 6"x8"x16" CMU, SPLIT FACED
4. 4"x8"x16" CMU, SCORED AT 8" O.C., RAKED JTS. (VENEER)
5. 6"x8"x16" CMU, SCORED AT 8" O.C. STACK BOND, RAKED JTS.
6. 8"x8"x16" CMU, SCORED AT 8" O.C., STACK BOND, RAKED JTS.
7. 8"x8"x8" CMU, STACK BOND, RAKED JTS., (AT RADIUS)
8. NOT USED
9. TYPICAL BASE TO CONSIST OF 1 COURSE 4" HIGH STD. CMU WITH FLUSH CUT JTS. 1 COURSE 4" HIGH AND 1 COURSE 8" HIGH CMU SCORED 6/UNIT WITH RAKED JOINTS.
10. NOT USED
11. NOT USED
12. ACOUSTIC PANELS (TYPE B)
13. ACOUSTIC BAFFLE, EACH PANEL 4'-1"X12" X 0'-2". PANELS TO BE CONTINUOUS AROUND MULTIPURPOSE SPACE (EXCEPT AT VIEW WINDOW). AT EAST AND WEST WALLS CENTER PANELS IN BAYS AND NOTCH END PANEL OF EACH BAY 2". SEE SPECIFICATIONS.
14. EXPOSED CONCRETE PIERS WITH SPECIAL CONCRETE FINISH (SANDBLAST) DO NOT PAINT. SEE SPEC. FOR SEALER.

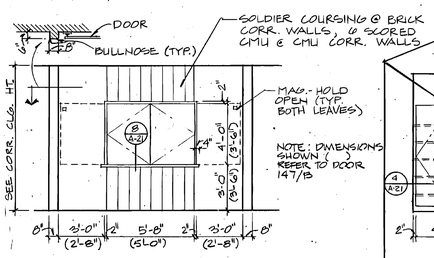


P A-18 COUNTER ELEV. at CORR. 145 & 303
1/4" = 1'-0"

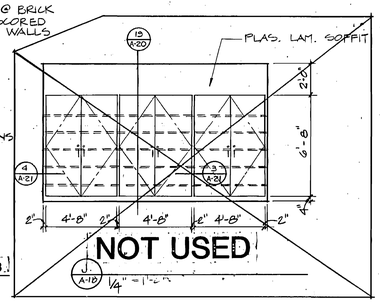


J A-18 1/4" = 1'-0"

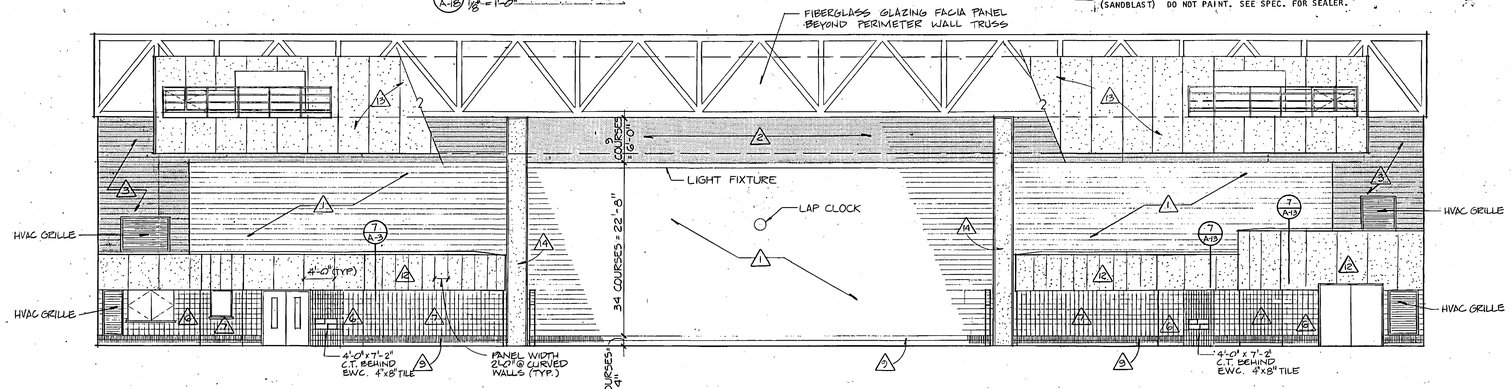


B A-18 SOUTH INT. ELEV.
1/8" = 1'-0"

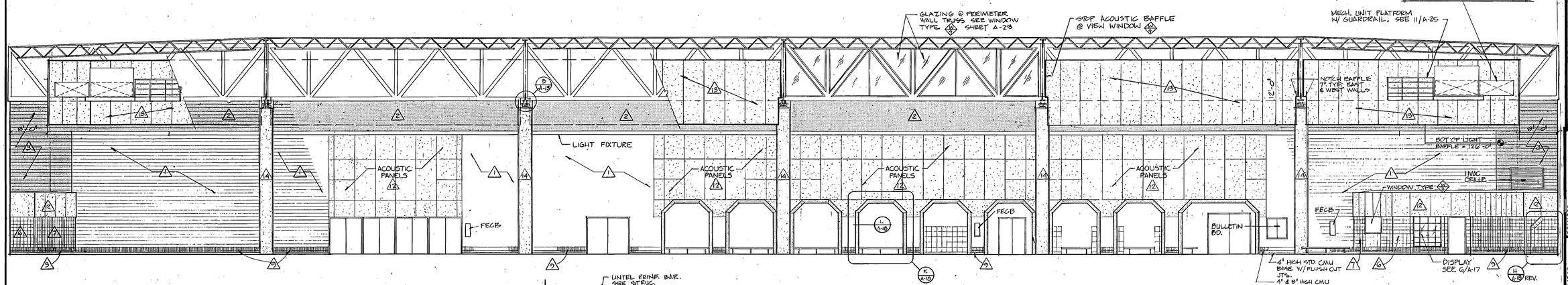


L A-18 EAST INT. ELEV.
1/8" = 1'-0"

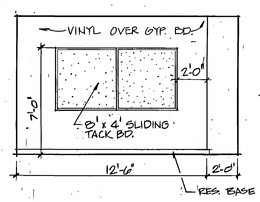


Q A-18 EAST ELEV. - OFFICE 147
1/4" = 1'-0"

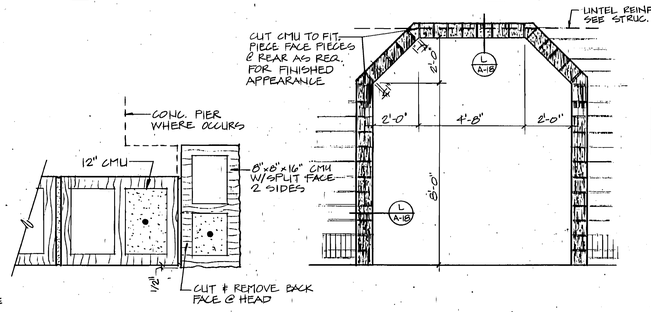


L A-18 JAMB/HEAD SIM. DETAIL
1 1/2" = 1'-0"

K A-18 ARCH ELEV.
3/8" = 1'-0"

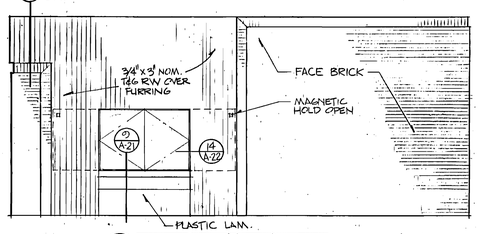


F A-18 EAST ELEV. - LOBBY 306
1/4" = 1'-0"

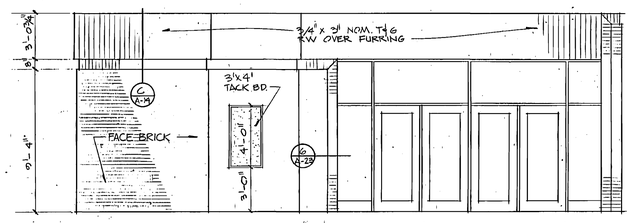


D A-18 WEST ELEV. - LOBBY 306
1/4" = 1'-0"

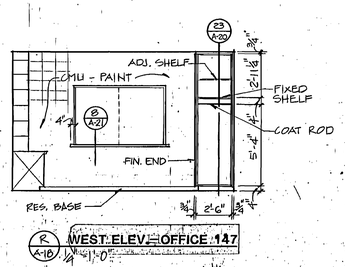


R A-18 WEST ELEV. - OFFICE 147
1/4" = 1'-0"

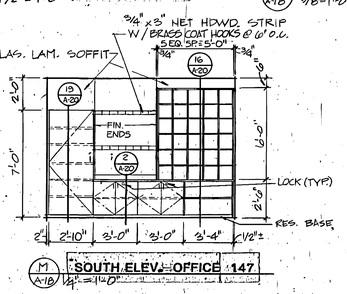


M A-18 SOUTH ELEV. - OFFICE 147
1/2" = 1'-0"

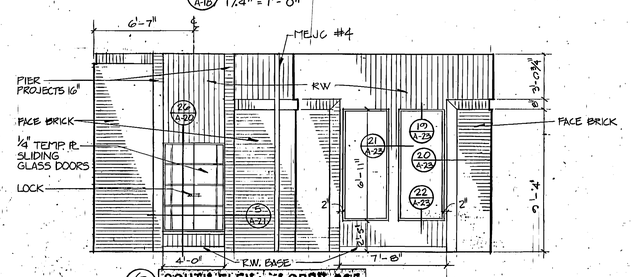


G A-18 SOUTH ELEV. - LOBBY 305
1/4" = 1'-0"

E A-18 NORTH ELEV. - LOBBY 305
1/4" = 1'-0"

RECORD DOCUMENTS JUN 25 1990
THESE DOCUMENTS HAVE BEEN REVISED TO RECORD INFORMATION SUBMITTED BY THE CONTRACTOR. THE REVISIONS ARE ASSUMED TO BE RELIABLE THE ARCHITECT DOES NOT GUARANTEE THEIR ACCURACY.

0000TV/A18
Weber State College, Physical Education Facility - RW-84-058
Interior Elevations - 20006

BRETT J. RICHARDS NO. 110
REGISTERED ARCHITECT

jra JONES / RICHARDS & ASSOCIATES
ARCHITECTURE (801) 394-3323
PLANNING 532 - 26TH STREET
CONSTRUCTION MANAGEMENT OGDEN, UTAH

REVISED: As Builts 6-90
PROJECT NUMBER: 8403
DATE: 6-21-88
DRAWN BY: K. SEELD

PROJECT: PHYSICAL EDUCATION FACILITY
WEBER STATE COLLEGE
SHEET TITLE: INTERIOR ELEVATIONS
SHEET NO. A-18

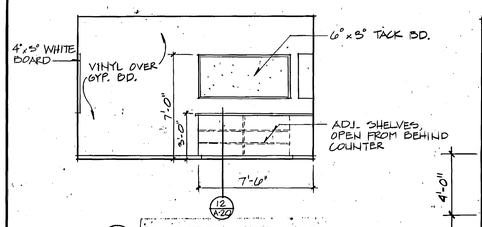


J A-19 EAST ELEV.-OFFICE 146
1/4" = 1'-0"

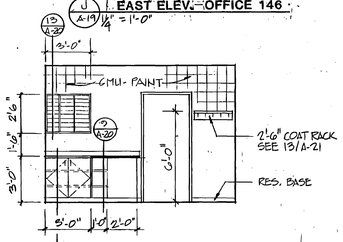


7 A-22 K A-19 SOUTH ELEV.-OFFICE 146
1/4" = 1'-0"

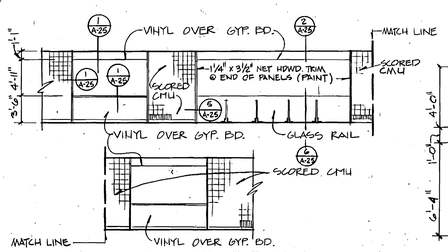


L A-19 COURT VIEW WINDOW ELEV.-HALL 202
1/8" = 1'-0"

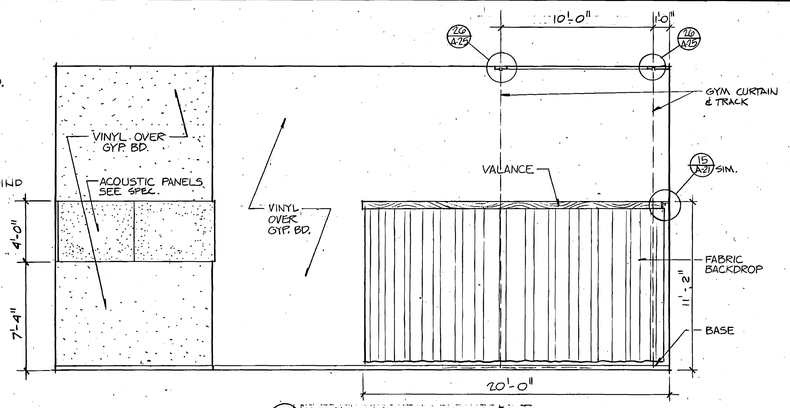


E A-19 NORTH ELEV.-SPORTS LAB 123
1/4" = 1'-0"

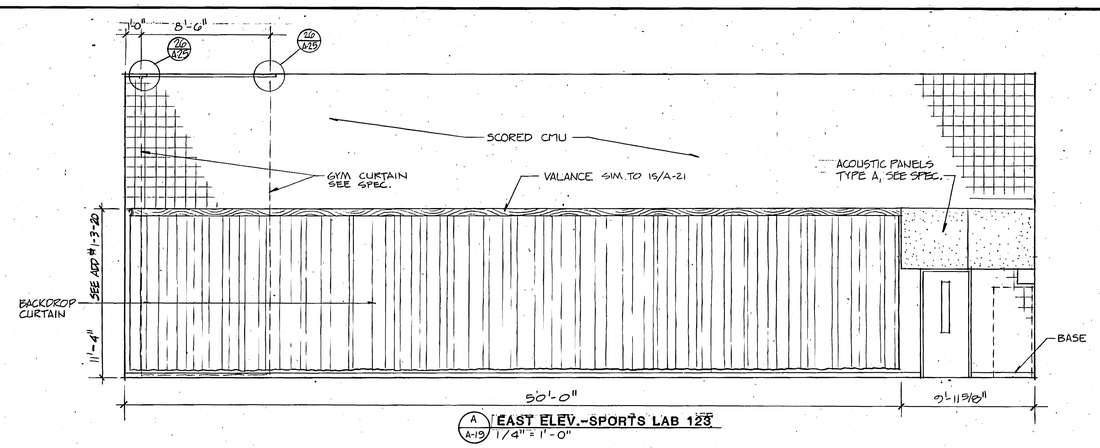


A A-19 EAST ELEV.-SPORTS LAB 123
1/4" = 1'-0"

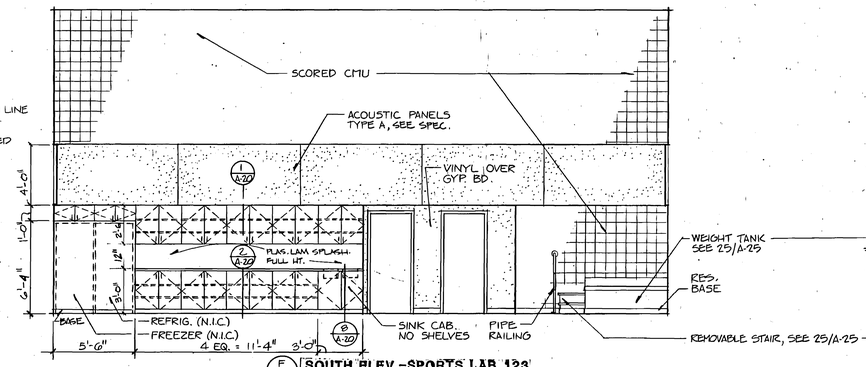


F A-19 SOUTH ELEV.-SPORTS LAB 123
1/4" = 1'-0"

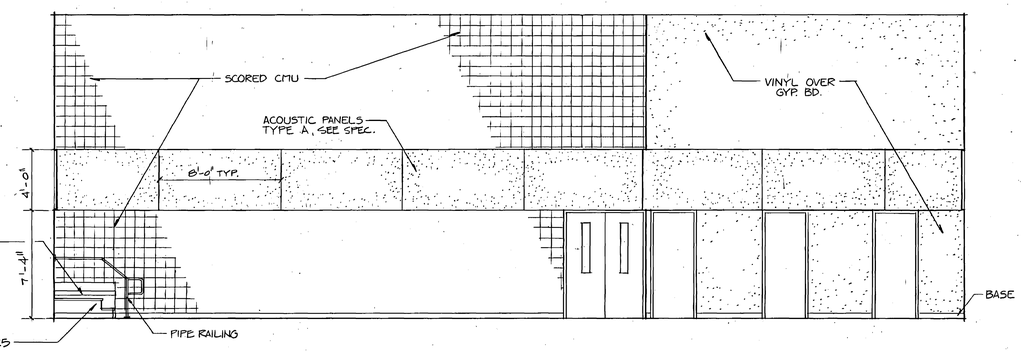


B A-19 WEST ELEV.-SPORTS LAB 123
1/4" = 1'-0"

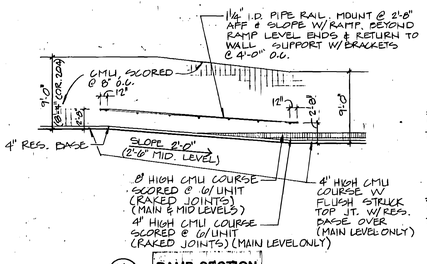


M A-19 RAMP SECTION
1/8" = 1'-0"

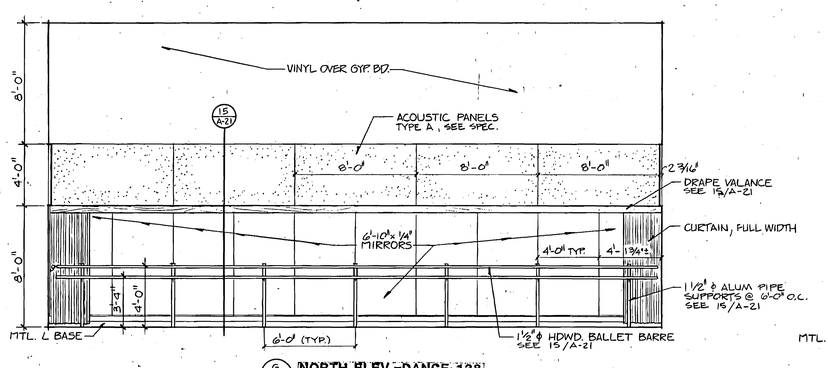


G A-19 NORTH ELEV.-DANCE 138
1/4" = 1'-0"

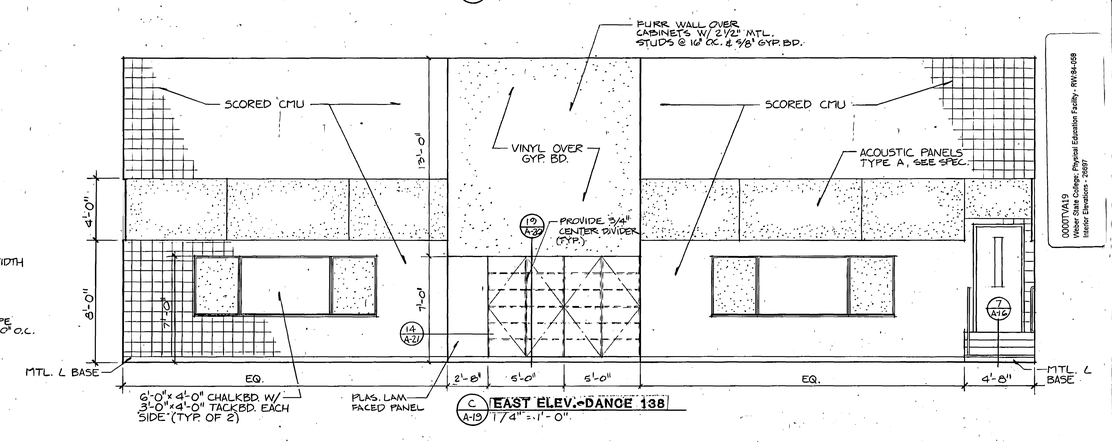


C A-19 EAST ELEV.-DANCE 138
1/4" = 1'-0"

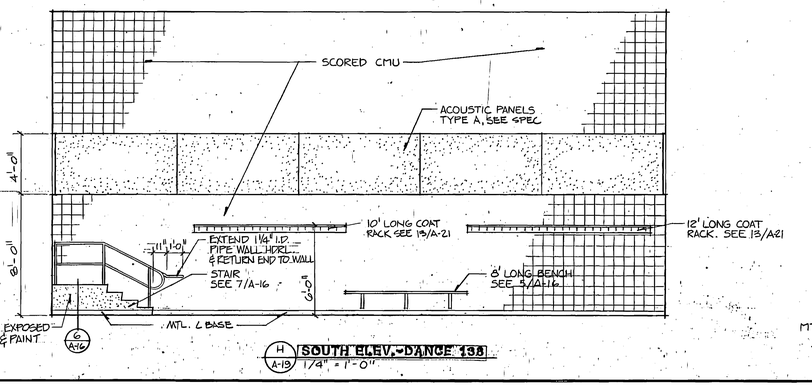


H A-19 SOUTH ELEV.-DANCE 138
1/4" = 1'-0"

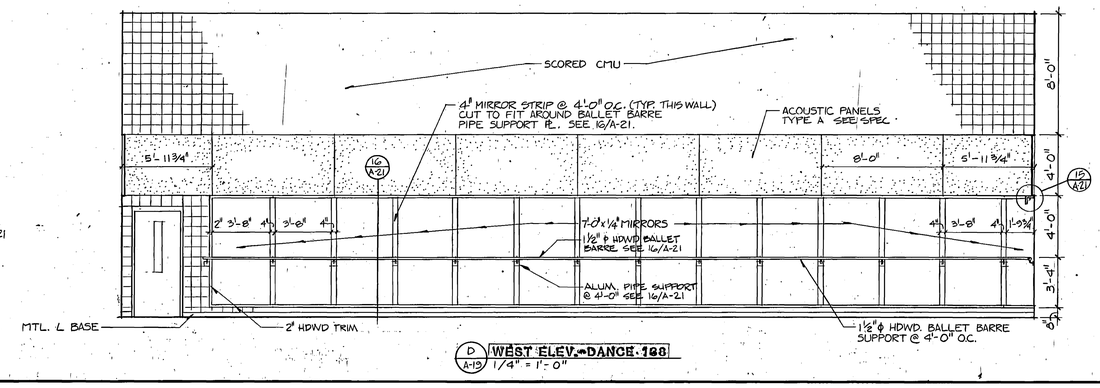


D A-19 WEST ELEV.-DANCE 138
1/4" = 1'-0"

RECORD DOCUMENTS JUN 25 1990

THESE DOCUMENTS HAVE BEEN REVISED TO RECORD INFORMATION SUBMITTED BY THE CONTRACTOR. THE DIMENSIONS ARE ASSUMED TO BE RELIABLE. THE ARCHITECT DOES NOT GUARANTEE THEIR ACCURACY.

STATE OF UTAH BRETT L. RICHARDS REGISTERED ARCHITECT NO. 1107

jra JONES / RICHARDS & ASSOCIATES
ARCHITECTURE (801) 394-3333
PLANNING 533 - 25TH STREET
CONSTRUCTION MANAGEMENT OGDEN, UTAH

REVISED: AS BUILTS JUN 1990

PROJECT NUMBER: 8493
DATE: 8-21-89
DRAWN BY: K. SEKO

00007VA19
Weber State College; Physical Education Facility - RW 94-058
Interior Elevations - 2/6/97

PROJECT: PHYSICAL EDUCATION FACILITY
WEBER STATE COLLEGE

SHEET TITLE: INTERIOR ELEVATIONS

SHEET NO. A-19

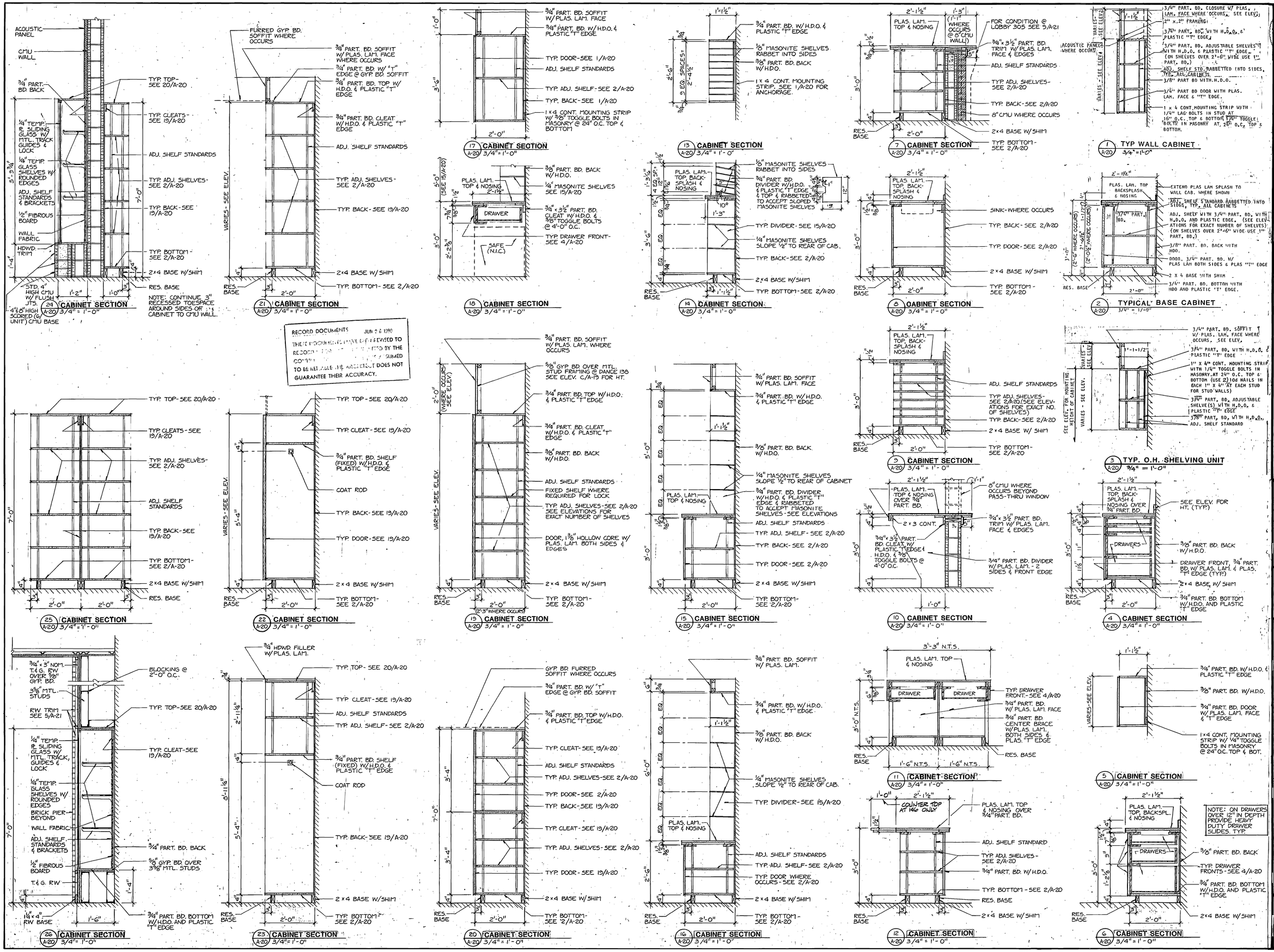


RECORD DOCUMENTS JUN 2 6 1990
THESE DOCUMENTS HAVE BEEN REVISED TO RECORD [illegible] MADE BY THE CONTRACTOR [illegible] ASSUMED TO BE RELIABLE. THE ARCHITECT DOES NOT GUARANTEE THEIR ACCURACY.

BRETT A. RICHARDS NO. 4107 REGISTERED ARCHITECT

00007V.2D
Weber State College, Physical Education Facility - RW 84-858
Millwork Details - 20998

jra JONES / RICHARDS & ASSOCIATES
ARCHITECTURE / INDUSTRIAL DESIGN
PLANNING / CONSTRUCTION MANAGEMENT
533 - 20TH STREET / OGDEN, UTAH

REVISED: 6 BULLETS 6-90
PROJECT NO.: 8403
DATE: 21-Feb
DRAWN BY: V. SEKO

PROJECT: PHYSICAL EDUCATION FACILITY
WEBER STATE COLLEGE
SHEET TITLE: MILLWORK DETAILS

SHEET NO. A-20

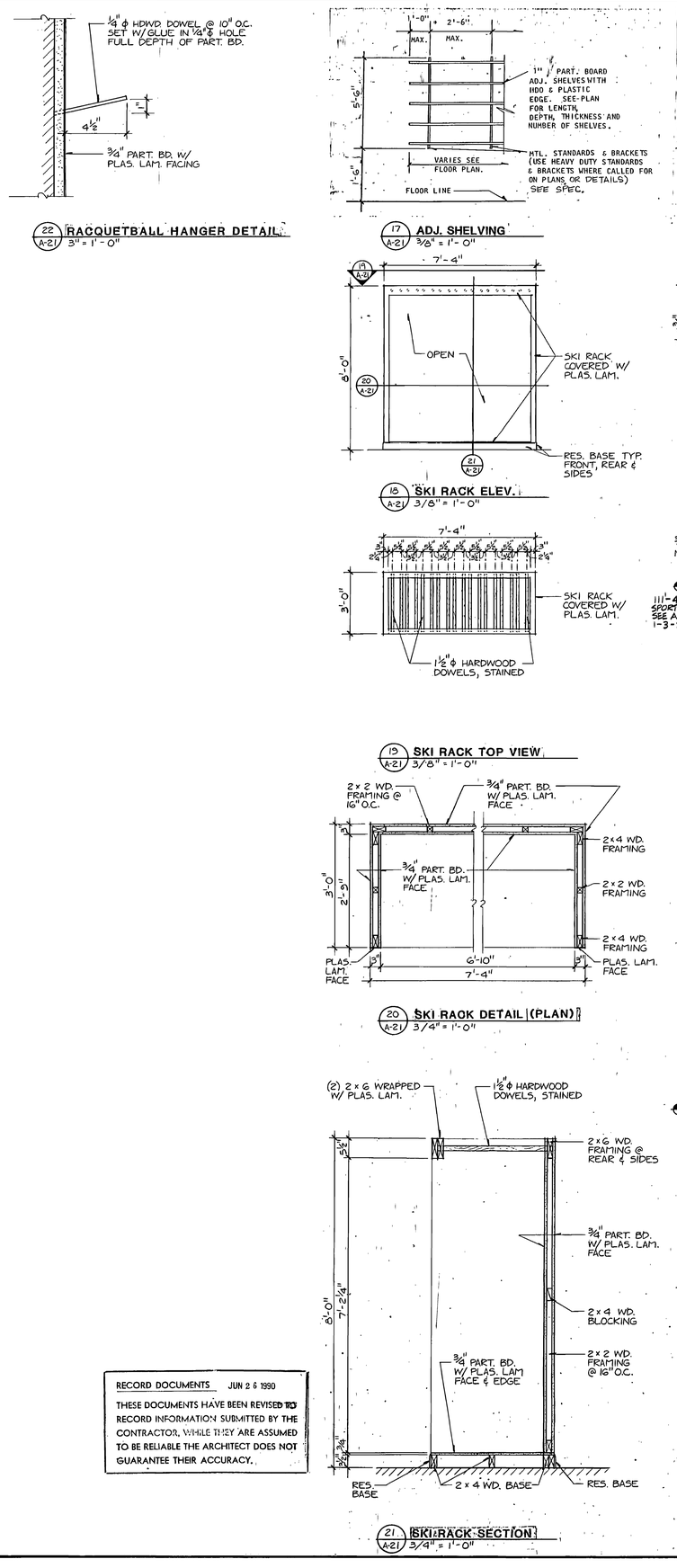


RECORD DOCUMENTS JUN 2 6 1990

THESE DOCUMENTS HAVE BEEN REVISED TO RECORD INFORMATION SUBMITTED BY THE CONTRACTOR. WHILE THEY ARE ASSUMED TO BE RELIABLE THE ARCHITECT DOES NOT GUARANTEE THEIR ACCURACY.

SEAL OF ARCHITECT
BRETT J. RICHARDS
No. 7107

DOCUMENT/A21
Weber State College Physical Education Facility - RW 86-058
Millwork & Misc. Details - 26959

JONES / RICHARDS & ASSOCIATES
ARCHITECTURE (801) 394-3933
PLANNING 533 - 26TH STREET
CONSTRUCTION MANAGEMENT OGDEN, UTAH

REVISED: AS BULLETS 6-90

PROJECT NUMBER: 8603
DATE: 5-21-90
DRAWN BY: K. SEKO

PROJECT: PHYSICAL EDUCATION FACILITY
WEBER STATE COLLEGE

SHEET TITLE: MILLWORK & MISC. DETAILS

SHEET NO. A-21

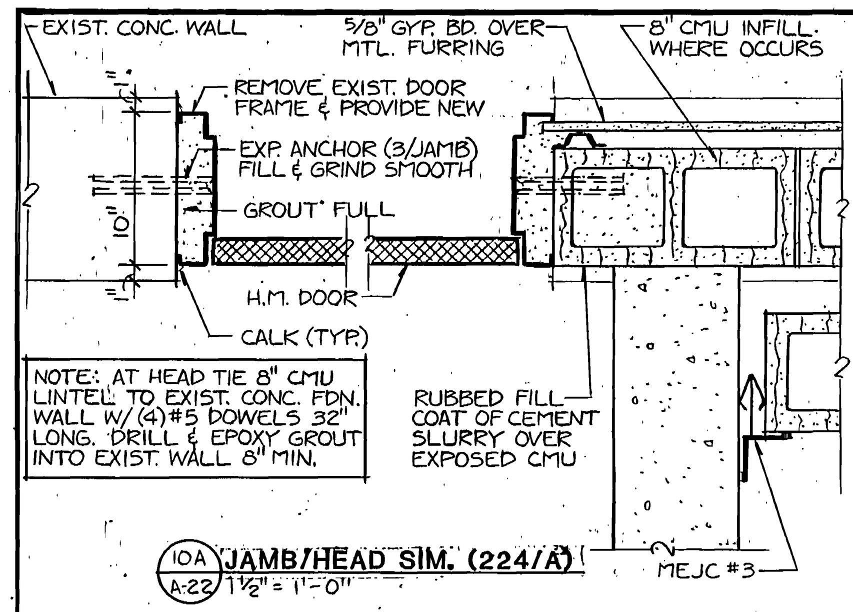


10A JAMB/HEAD SIM. (224/A) A-22 1 1/2" = 1'-0"

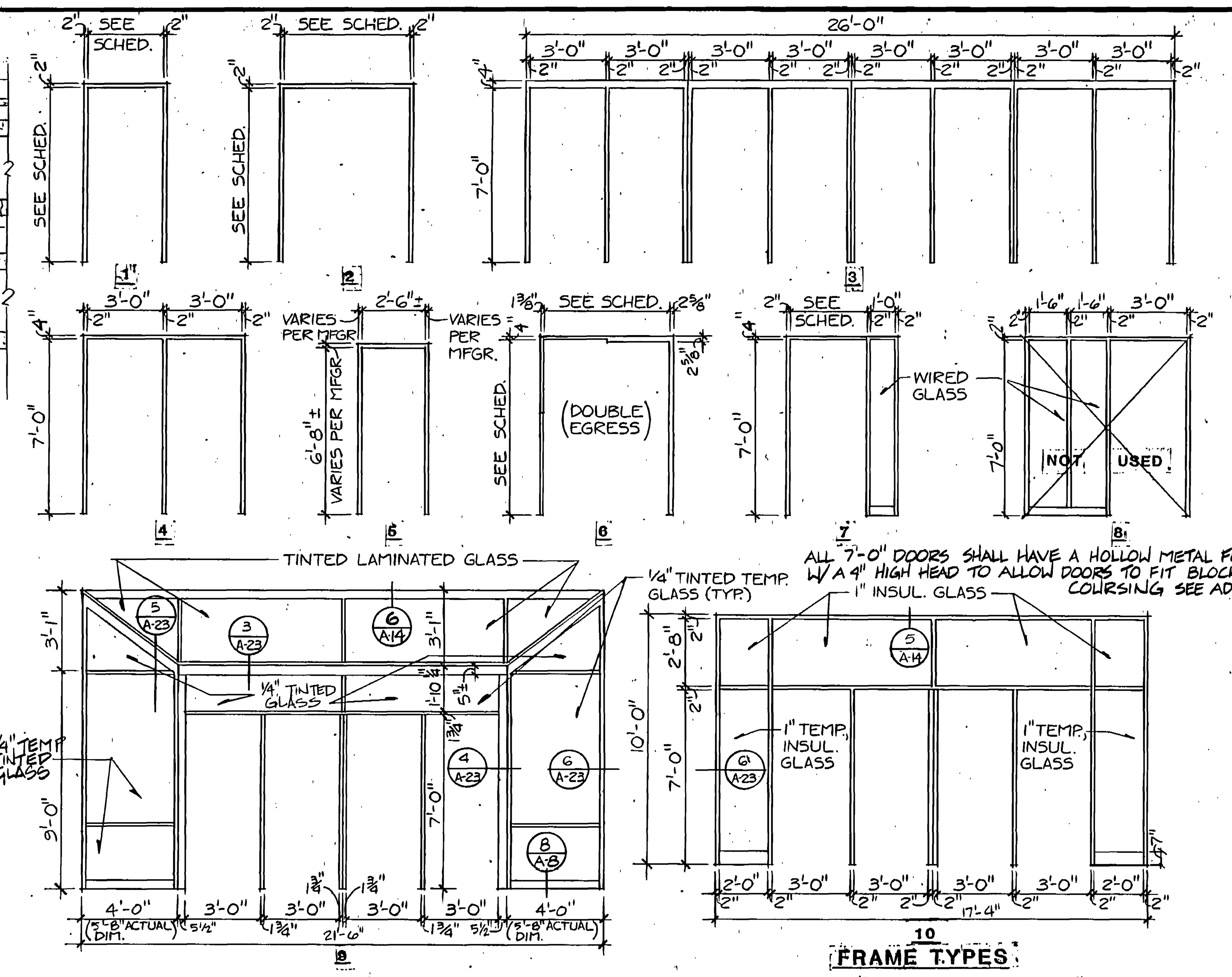


FRAME TYPES

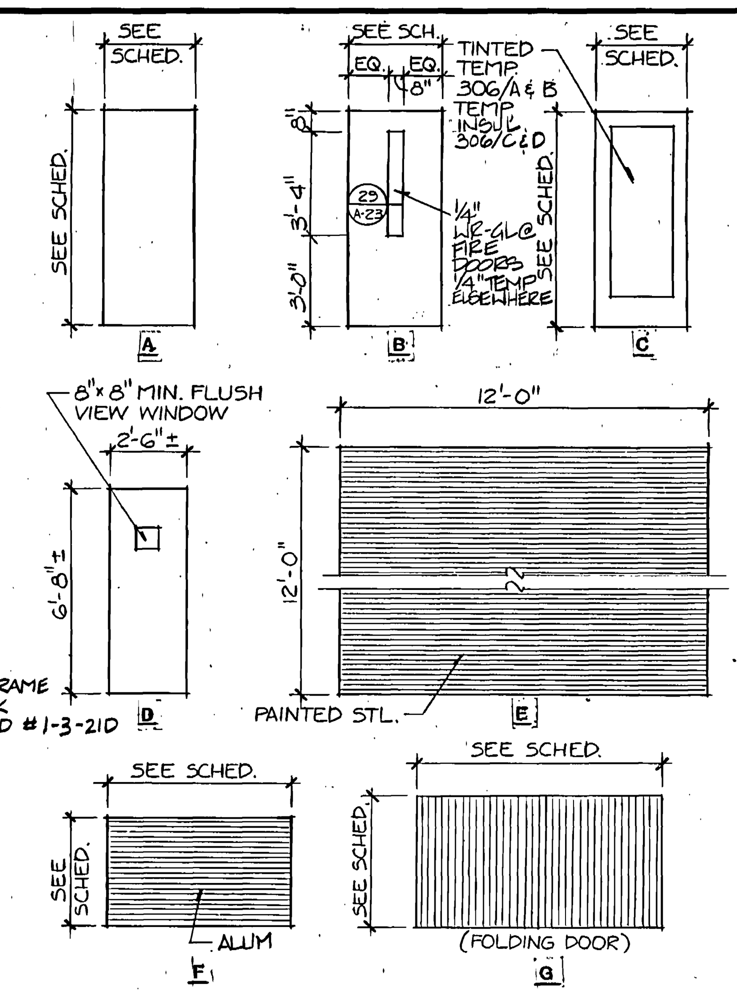


DOOR TYPES

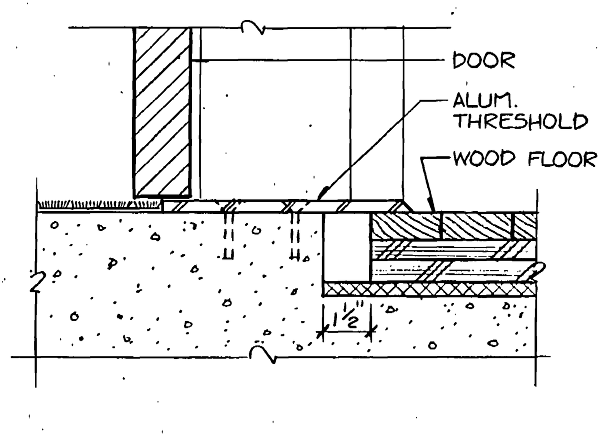


11 THRESHOLD A-22 N.T.S.

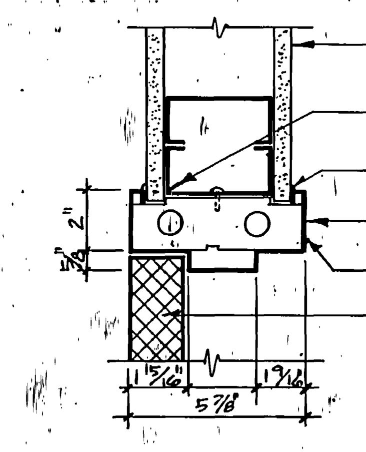


8 JAMB/HEAD (SIM) A-22 3"=1'-0"

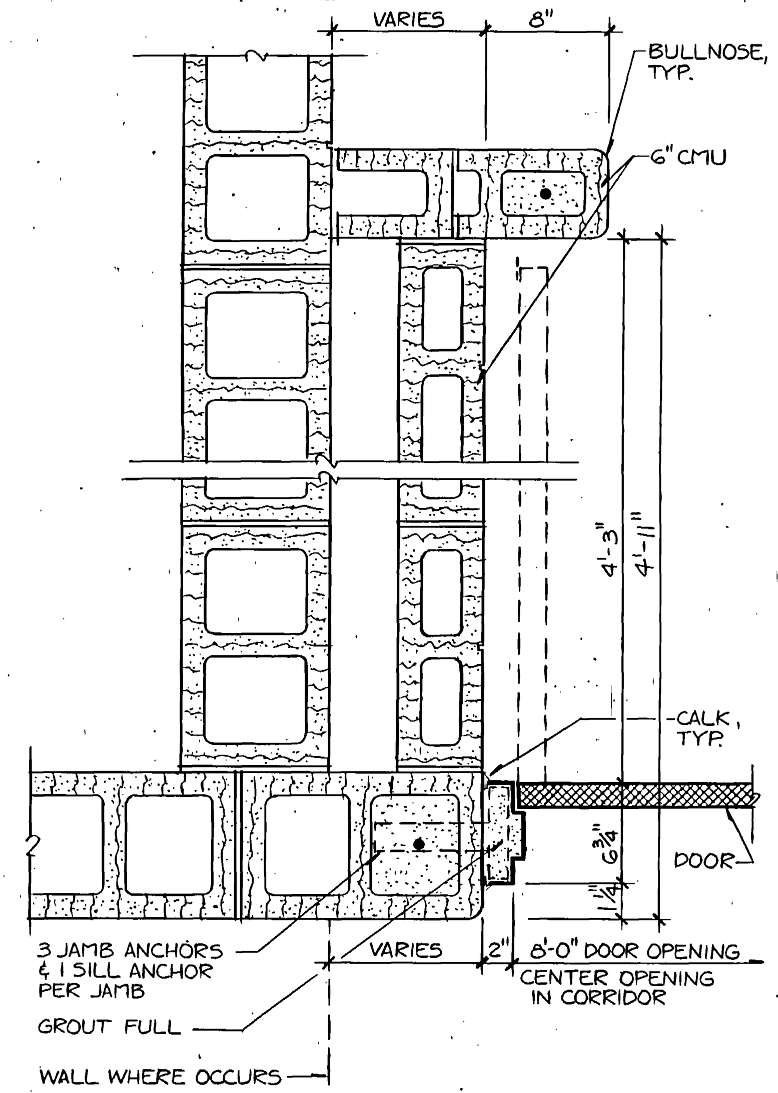


5 JAMB A-22 1 1/2" = 1'-0"

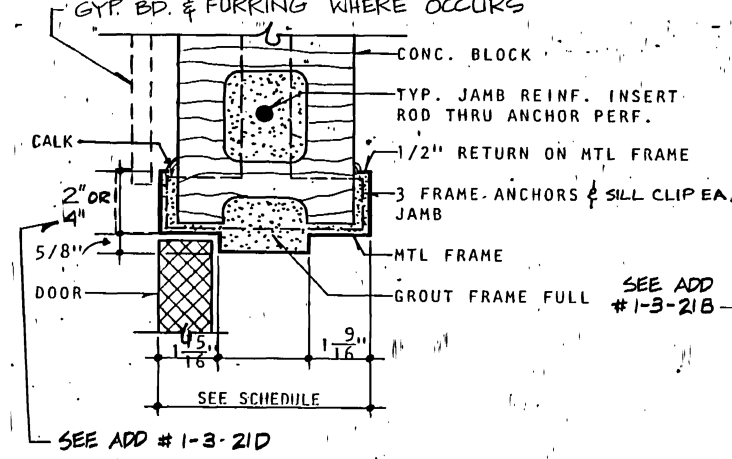


1 JAMB/HEAD SIM. A-22 3" = 1'-0"

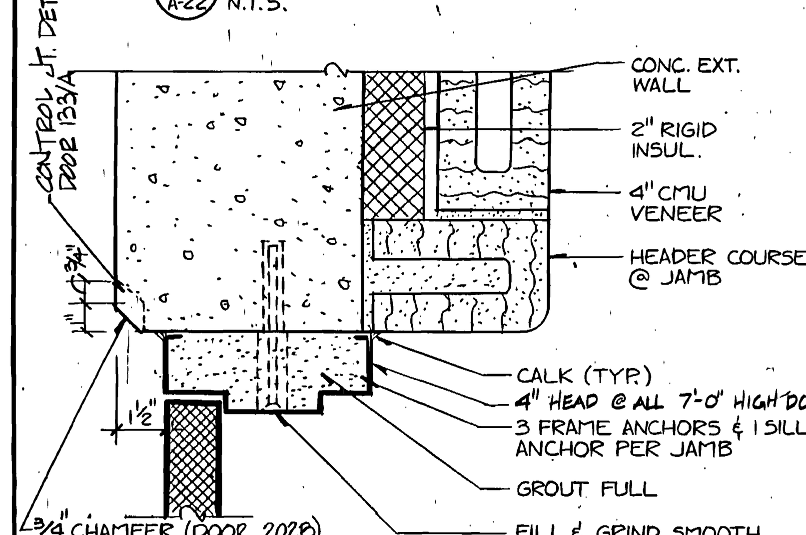


12 JAMB/HEAD (SIM.) A-22 3" = 1'-0"

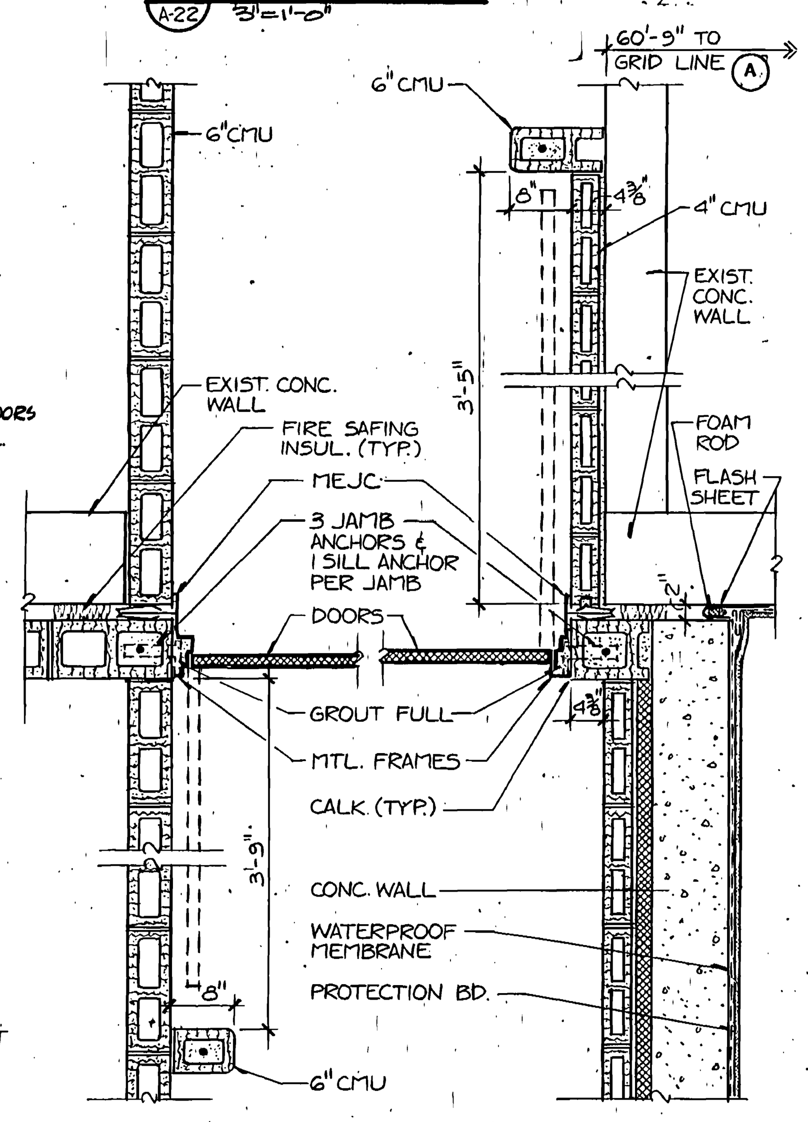


9 JAMB A-22 3/4" = 1'-0"

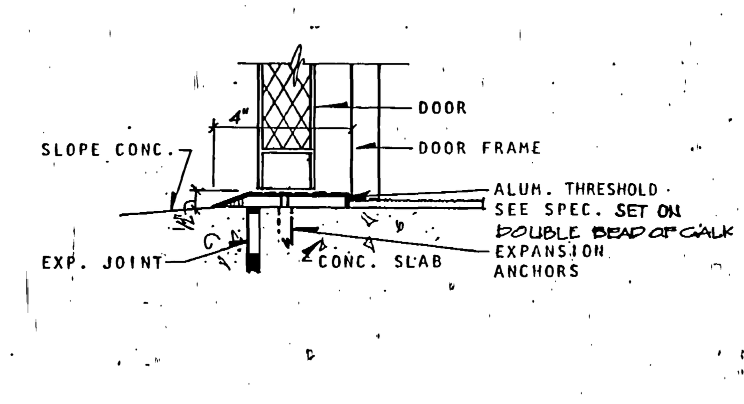


2 THRESHOLD DETAIL A-22 3" = 1'-0"

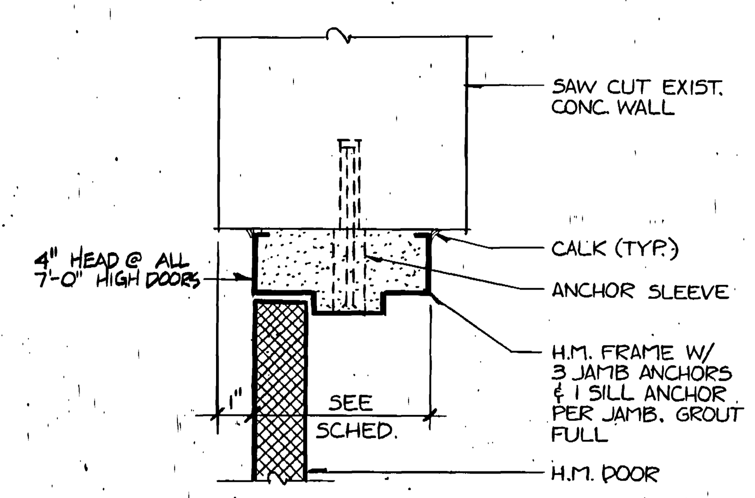


13 JAMB/HEAD (SIM.) A-22 3" = 1'-0"

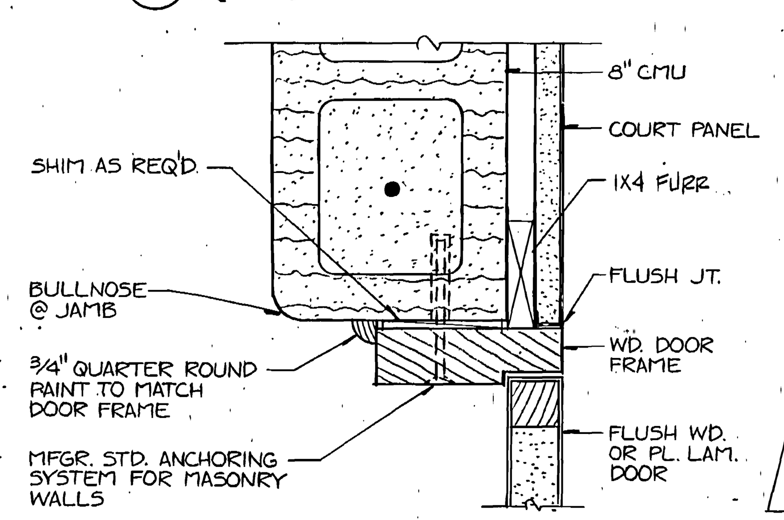


6 JAMB/HEAD (SIM.) A-22 3" = 1'-0"

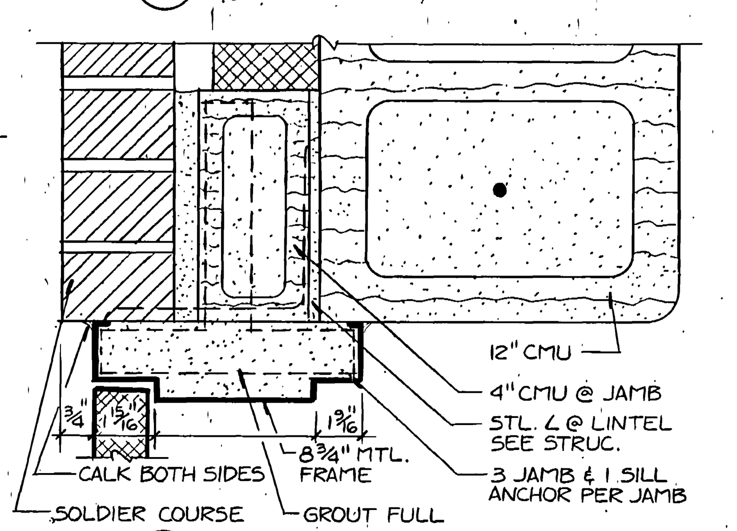


3 JAMB/HEAD (SIM.) A-22 3" = 1'-0"

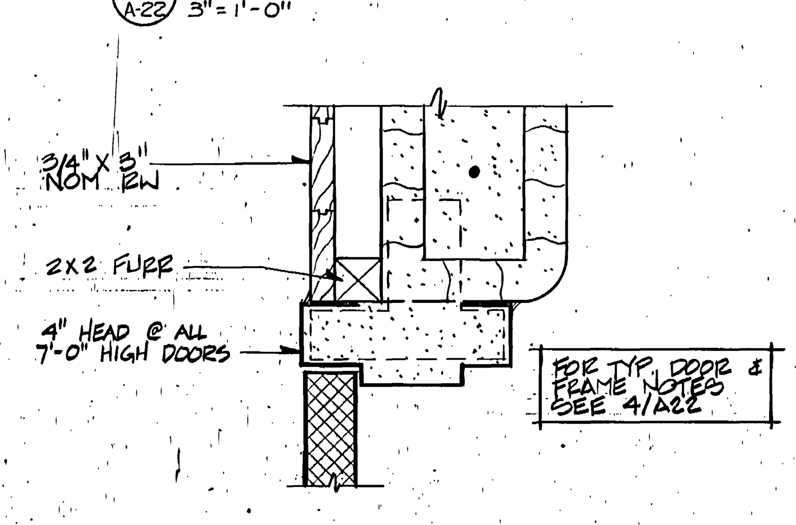


14 JAMB / HEAD (SIM) A-22 3" = 1'-0"

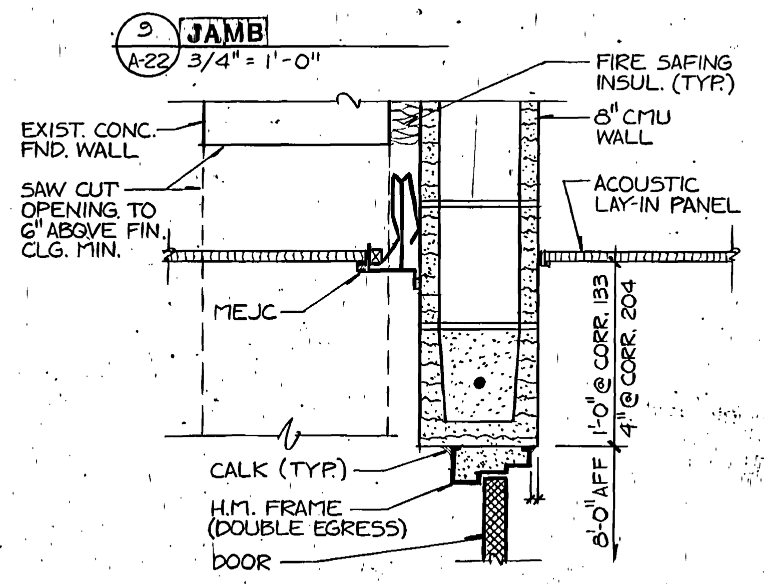


10 HEAD A-22 1 1/2" = 1'-0"

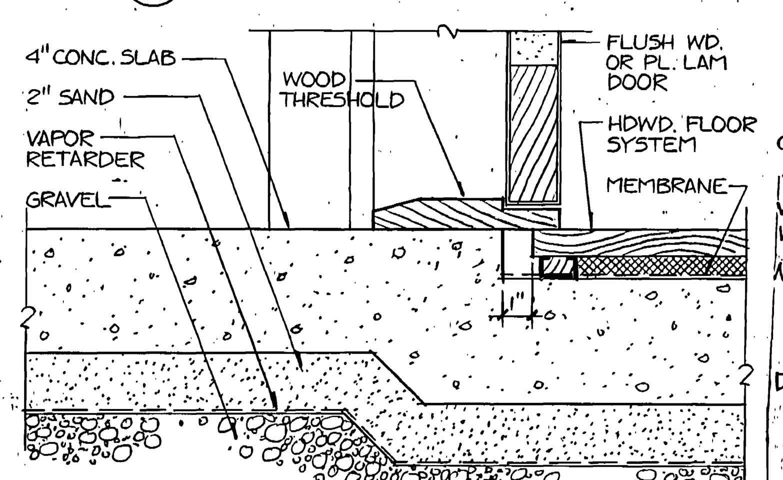


7 SILL DETAIL A-22 3" = 1'-0"

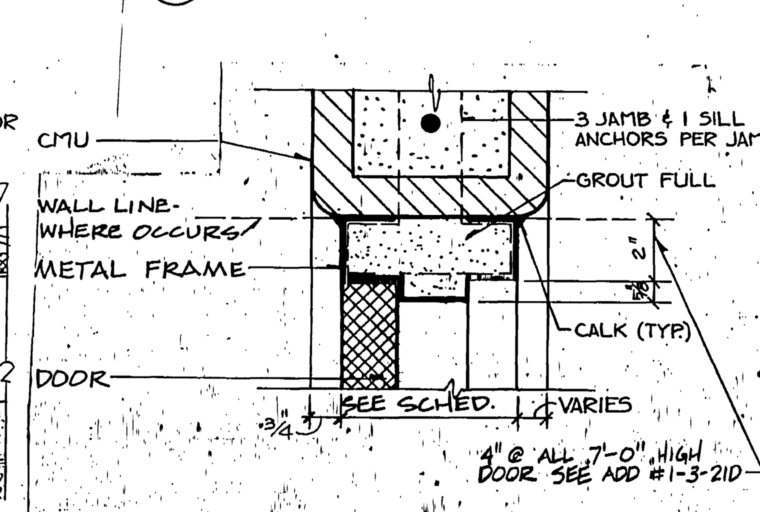


4 HEAD/JAMB (SIM) A-22 3" = 1'-0"

# DOOR SCHEDULE

| DOOR MARK | DOOR: WIDTH | DOOR: HEIGHT | DOOR: THICKNESS | DOOR: TYPE | DOOR: CONSTRUCTION | DOOR: FACING/FINISH | DOOR: GLASS | FIRE RATING | FRAME: WIDTH | FRAME: TYPE | FRAME: CONSTRUCTION | FRAME: SIDELITE | FRAME: TRANSOM | DETAILS: HEAD | DETAILS: JAMB | DETAILS: THRESHOLD | HARDWARE: GROUP | HARDWARE: LOCK FUNCTION | HARDWARE: KEY | | REMARKS |
|---|---|---|---|---|---|---|---|---|---|---|---|---|---|---|---|---|---|---|---|---|---|
| TYP. | 3'-0" | 7'-0" | 1-3/4" | A | S.C. | HDWD STAIN | 1/4" WIRED | 20 MIN. | 8-3/4" | 1 | H.M. | 1/4" WIRED | INSUL. GLASS | 1/A22 | 1/A22 | 2/A22 | | | | | |
| 101/A | PR 4'0" | # | # | # | H.M. | PAINT | – | 1 HR | # | 2 | # | – | – | # | # | # | 11 | F-07 | AB1 | | – |
| 102/A | PR 4'0" | # | # | # | H.M. | PAINT | – | 1 HR | # | 2 | # | – | – | # | # | # | 11 | F-07 | AB2 | | – |
| 103/A | # | # | # | # | H.M. | PAINT | – | – | # | # | # | – | – | # | # | # | ①12 | F-07 | AA2 | | – |
| 104/A | 4'-0" | # | # | # | H.M. | PAINT | – | 1 HR | # | 2 | # | – | – | # | # | # | 18 | F-07 | AB3 | | – |
| 105/A | # | # | # | # | H.M. | PAINT | – | – | # | 3 | # | – | – | 3/A22 | 3/A22 | # | 1 | – | – | | 4 PAIR DOORS PER SYMBOL |
| 105/B | # | # | # | # | H.M. | PAINT | – | – | # | 3 | # | – | – | 3/A22 | 3/A22 | # | 1 | – | – | | 4 PAIR DOORS PER SYMBOL |
| 105/C | # | # | # | # | H.M. | PAINT | – | – | # | 3 | # | – | – | 3/A22 | 3/A22 | # | 1 | – | – | | 4 PAIR DOORS PER SYMBOL |
| 105/D | 12'-0" | 12'-0" | N/A | E | STEEL | PAINT | – | – | N/A | N/A | N/A | – | – | 17/A23 | 18/A23 | – | 3 | N/A | BB2 | | – |
| 105/E | PR 4'0" | 7-10" | # | # | # | # | – | 1 HR | 6-3/4" | 2 | # | – | – | 4/A22 | 5/A22 | – | 15 | F-05 | AA3 | | – |
| 105/F | 2'-6" | 4'-0" | # | # | H.M. | PAINT | – | – | 7" | # | # | – | – | 12/A24 SIM | 11/A24 | 12/A24 | 21 | N/A | BB3 | | FACIA DOOR SEE SHEET A5 |
| 105/G | 2'-6" | 4'-0" | # | # | H.M. | PAINT | – | – | 7" | # | # | – | – | 12/A24 SIM | 11/A24 | 12/A24 | 21 | N/A | BB3 | | FACIA DOOR SEE SHEET A5 |
| 106/A | PR 3'0" | # | # | # | H.M. | PAINT | – | 1 HR | 6-3/4" | 2 | # | – | – | 4/A22 | 4/A22 | # | 11 | F-07 | AB4 | | – |
| 112/A | # | # | # | # | # | # | – | 1 HR | # | # | # | – | – | # | # | # | 13 | F-05 | AA4 | | – |
| 112/B | PR2'10" | 4'-0" | # | # | # | # | – | 1 HR | # | 2 | # | – | – | 4/A22 | 4/A22 | – | 17 | N/A | AA4 | | – |
| 112/C | PR2'10" | 4'-0" | # | # | # | # | – | 1 HR | # | 2 | # | – | – | 4/A22 | 4/A22 | – | 17 | N/A | AA4 | | – |
| 113/A | PR 3'0" | # | # | B | H.M. | PAINT | 1/4" TEMP | – | # | 4 | # | – | – | 3/A22 | 3/A22 | 2/A22 | 2 | N/A | BB1 | | – |
| 113/B | PR 3'0" | # | # | B | # | # | 1/4" TEMP | # | # | 4 | # | – | – | # | # | # SIM | 14 | N/A | – | | – |
| 114/A | 2'-0" | # | # | # | H.M. | PAINT | – | # | # | # | # | – | – | # | # | # | ①13 | F-07 | AA5 | | – |
| 117/A | 1'-8" | # | # | # | H.M. | PAINT | – | – | 6-3/4" | # | # | – | – | # | # | – | ①12 | F-07 | AA5 | | PROVIDE (2) 8"x18" METAL LOUVER ONE 8" FROM BOT & 8" FROM TOP |
| 118/A | PR 4'0" | 7'-10" | # | # | H.M. | PAINT | – | 1 HR | # | 2 | # | – | – | # | # | # | 11 | F-07 | AB5 | | – |
| 119/A* | 2'-6"± | 6'-8"± | 1-1/2"± | D | # | PLAS. LAM. | PLASTIC | – | 6"± | 5 | WD | – | – | 6/A22 | 6/A22 | 7/A22 | * | – | – | | PREFAB COURT DOOR, PROVIDE W/ COURT SYSYTEM |
| 121/A* | 2'-6"± | 6'-8"± | 1-1/2"± | – | TEMP GLASS | – | TEMP GLASS | – | N/A | – | TEMP GLASS | – | – | – | – | – | * | – | – | | PREFAB GLASS COURT DOOR, PROVIDE W/ COURT SYSTEM |
| 122/A* | 2'-6"± | 6'-8"± | 1-1/2"± | D | # | PLAS. LAM. | PLASTIC | – | 6"± | 5 | WD | – | – | 6/A22 | 6/A22 | 7/A22 | * | – | – | | PREFAB COURT DOOR, PROVIDE W/ COURT SYSTEM |
| 123/A | # | # | # | B | # | # | – | # | # | # | # | – | – | # | # | – | 23 | F-05 | AA6 | | – |
| 123/B | PR 2'6" | # | # | B | # | # | 1/4" TEMP | – | 6-3/4" | 2 | # | – | – | 4/A22 | 4/A22 | # | 20 | F-05 | AA6 | | – |
| 124/A | # | # | # | # | # | # | – | – | 5-7/8" | # | # | – | – | 8/A22 | 8/A22 | – | 12 | F-07 | AA6 | | – |
| 125/A | # | # | # | # | # | # | – | – | 5-7/8" | # | # | – | – | 8/A22 | 8/A22 | – | 12 | F-05 | AA6 | | – |
| 126/A | # | # | # | # | # | # | – | – | 5-7/8" | # | # | – | – | 8/A22 | 8/A22 | – | 12 | F-04 | AA6 | | – |
| 131/A | 2'-8" | 6'-8" | # | # | # | # | – | – | 5-7/8" | # | # | – | – | 8/A22 | 8/A22 | – | 12 | F-02 | – | | – |
| 132/A | 2'-8" | 6'-8" | # | # | # | # | – | – | 5-7/8" | # | # | – | – | 8/A22 | 8/A22 | – | 12 | F-02 | – | | – |
| 133/A | PR 3'0" | # | # | # | H.M. | PAINT | – | – | # | 4 | # | – | – | 12/A22 | 12/A22 | # SIM | 1 | – | – | | – |
| 133/B | PR 3'8" | 7'-10" | # | # | H.M. | PAINT | – | 1-1/2HR | 5-3/4" | 6 | # | – | – | 9/A22 | 10/A22 | – | 16 | – | – | | – |
| 134/A | PR 4'0" | 7'-10" | # | # | # | # | – | # | 6-3/4" | 2 | # | – | – | 4/A22 | 5/A22 | – | 15 | | AA7 | | – |
| 135/A* | 2'-6"± | 6'-8"± | 1-1/2"± | D | # | PLAS. LAM. | PLASTIC | – | 6" | 5 | WD | – | – | 6/A22 | 6/A22 | 7/A22 | * | – | – | | PREFAB COURT DOOR, PROVIDE W/ COURT SYSYTEM |
| 136/A* | 2'-6"± | 6'-8"± | 1-1/2"± | D | # | PLAS. LAM. | PLASTIC | – | 6" | 5 | WD | – | – | 6/A22 | 6/A22 | 7/A22 | * | – | – | | PREFAB COURT DOOR, PROVIDE W/ COURT-SYSTEM |
| 137/A* | 2'-6"± | 6'-8"± | 1-1/2"± | D | # | PLAS. LAM. | PLASTIC | – | 6" | 5 | WD | – | – | 6/A22 | 6/A22 | 7/A22 | * | – | – | | PREFAB COURT DOOR, PROVIDE W/ COURT SYSTEM |
| 138/A | # | # | # | B | # | # | # | # | # | # | # | – | – | # | # | 11/A22 | 23 | | AA8 | | – |
| 138/B | # | # | # | B | # | # | # | # | # | # | # | – | – | # | # | – | ①23 | | AA8 | | KNURLED KNOB ON CORR SIDE ONLY |
| 139/A | # | # | # | # | # | # | – | – | 6-3/4" | # | # | – | – | # | # | – | 12 | F-07 | CC1 | | – |
| 141/A | # | # | # | # | # | # | – | 1 HR | 6-3/4" | # | # | – | – | # | # | – | ①13 | F-07 | CC1 | | – |
| 142/A | # | # | # | # | # | # | – | 1-1/2HR | # | # | # | – | – | # | # | – | 13 | F-01 | – | | – |
| 143/A | 2'-6" | # | # | # | # | # | – | – | 5-7/8" | # | # | – | – | 8/A22 | 8/A22 | – | 12 | F-01 | – | | – |
| 144/A | # | # | # | # | # | # | – | 1-1/2HR | 10-1/4" | # | # | – | – | # SIM | # SIM | – | 13 | F-04 | AA8 | | – |
| 144/B | 2'-8" | # | # | # | # | # | – | – | 7-3/4" | # | # | – | – | # SIM | # SIM | – | 12 | F-04 | AA8 | | – |
| 145/A | PR 3'0" | # | # | # | H.M. | PAINT | – | 1-1/2HR | # | 6 | # | – | – | # SIM | # SIM | – | 19 | F-01 | – | | – |
| 146/A | # | # | # | # | # | # | – | 1-1/2HR | # | # | # | – | – | # | # | – | 13 | F-04 | AA9 | | – |
| 147/A | # | # | # | # | # | # | – | 1-1/2HR | # | # | # | – | – | # | # | – | 12 | F-04 | AA10 | | – |
| 147/B | PR2'6" | 3'-6" | # | # | # | # | – | – | # | 2 | # | – | – | # | # | – | 17 | N/A | AA10 | | – |
| 148/A | # | # | # | # | # | # | – | 1 HR | # | # | # | – | – | # | # | – | ①13 | F-07 | AA11 | | – |
| 148/B | # | # | # | # | # | # | – | 1-1/2HR | 5-3/4" | # | # | – | – | 30/A23 | 30/A23 | – | 13 | F-01 | – | | – |
| 149/A | # | # | # | # | # | # | – | 1 HR | 6-3/4" | # | # | – | – | # | # | – | ①13 | F-07 | AA11 | | – |
| 151/A | # | # | # | # | # | # | – | # | 6-3/4" | 7 | # | – | – | # | # | – | 13 | F-04 | AA12 | | – |
| 152/A | # | # | # | # | # | # | – | # | 6-3/4" | 7 | # | # | – | # | # | – | 13 | F-04 | AA13 | | – |
| 153/A | # | # | # | # | # | # | – | # | 6-3/4" | 7 | # | – | – | # | # | – | 13 | F-04 | AA14 | | – |
| 202/A | PR 4'0" | 7'-10" | # | # | # | # | – | # | 6-3/4" | 2 | # | – | – | 4/A22 | 5/A22 | – | 15 | F-05 | AA7 | | – |
| 202/B | # | # | # | # | H.M. | PAINT | – | – | 5-3/4" | # | # | – | – | 12/A22 | 12/A22 | # SIM | 1 | – | – | | – |
| 203/A | # | # | # | # | # | # | – | 1 HR | # | # | # | – | – | # | # | – | 13 | F-07 | AB6 | | – |
| 204/A | PR 3'8" | 7'-10" | # | # | H.M. | PAINT | – | 1-1/2HR | 5-3/4" | 6 | # | – | – | 9/A22 | 10/A22 | – | 16 | – | – | | – |
| 205/A | # | # | # | # | # | # | – | # | # | 7 | # | # | – | # | # | – | 13 | F-05 | AA15 | | – |
| 205/B | # | # | # | # | # | # | – | # | # | 7 | # | – | – | # | # | – | 13 | F-05 | AA15 | | – |
| 206/A | # | # | # | # | # | # | – | # | # | # | # | – | – | # | # | – | ①13 | F-07 | AA2 | | – |
| 207/A | # | # | # | # | # | # | – | # | # | 7 | # | # | – | # | # | – | 13 | F-05 | AA16 | | – |
| 208/A | PR 3'0" | # | # | # | H.M. | PAINT | – | 1-1/2 HR | # | 6 | # | – | – | # SIM | # SIM | – | 19 | F-01 | – | | – |
| 209/A | # | # | # | # | # | # | – | # | # | 7 | # | # | – | # | # | – | 13 | F-05 | AA17 | | – |
| 211/A | 2'-8" | # | # | # | # | # | – | – | 6-3/4" | # | # | – | – | # | # | – | 12 | F-07 | AB7 | | – |
| 212/A | 2'-8" | # | # | # | # | # | – | – | 6-3/4" | # | # | – | – | # | # | – | 12 | F-07 | AB8 | | – |
| 213/A | 2'-8" | # | # | # | # | # | – | – | 6-3/4" | # | # | – | – | # | # | – | 12 | F-07 | AB9 | | – |
| 214/A | # | # | # | # | # | # | – | # | # | # | # | – | – | # | # | – | ①13 | F-01 | – | | – |
| 215/A | # | # | # | # | # | # | – | 1 HR | 6-3/4" | # | # | – | – | # | # | – | ①13 | F-05 | AB10 | | – |
| 216/A | # | # | # | # | H.M. | PAINT | – | 1 HR | # | # | # | – | – | # | # | – | ①13 | F-07 | CC1 | | – |
| 216/B | PR 3'0" | # | # | # | H.M. | PAINT | – | 1-1/2HR | 5-3/4" | 2 | # | – | – | 13/A22 | 13/A22 | – | 11 | F-07 | CC1 | | – |
| 217/A | # | # | # | # | H.M. | PAINT | – | 1 HR | 6-3/4" | # | # | – | – | # | # | – | 12 | F-07 | CC1 | | – |
| 218/A | 4'-0" | # | # | # | H.M. | PAINT | – | 3 HR | 6-3/4" | # | # | – | – | # | # | – | 13 | F-07 | CC1 | | – |
| 224/A | # | # | # | # | H.M. | PAINT | – | 1-1/2HR | 10" | # | # | – | – | 10A/A22 | 10A/A22 | # | 2 | N/A | BB1 | | – |
| 230/A | # | # | # | # | # | # | – | # | 6-3/4" | 7 | # | – | – | # | # | – | 13 | F-05 | AA18 | | – |
| 231/A | # | # | # | # | # | # | – | # | 6-3/4" | 7 | # | – | – | # | # | – | 13 | F-05 | AA19 | | – |
| 231/B | # | # | # | # | # | # | – | # | 6-3/4" | 7 | # | # | – | # | # | – | 13 | F-05 | AA19 | | – |
| 231/C | 11'-2"± | 9'-0" | N/A | G | STEEL | VINYL | – | – | N/A | N/A | N/A | – | – | # | # | – | – | – | – | | FOLDING DOOR |
| 215/B | # | – | – | – | – | – | – | 1 HR | – | – | – | – | – | – | # | – | ①13 | F-05 | AB10 | | SEE ADD #1-3-21C |
| 301/A | # | # | # | # | H.M. | PAINT | – | – | # | # | # | – | – | 3/A22 SIM | 3/A22 SIM | # SIM | 1 | – | – | | – |
| 304/A | # | 6'-8" | # | # | # | # | – | 1 HR | # | # | # | – | – | * | – | – | 13 | F-05 | AA20 | | PROVIDE BOND BEAM AT DOOR HEAD |
| 304/B | PR2'10" | 4'-0" | # | # | # | # | – | 1 HR | # | 2 | # | – | – | 4/A22 SIM | 4/A22 SIM | – | 17 | N/A | AA20 | | – |
| 304/C | PR2'10" | 4'-0" | # | # | # | # | – | 1 HR | 6-3/4" | 2 | # | – | – | 14/A22 | 14/A22 | – | 17 | N/A | AA20 | | – |
| 305/A | PR3'0" | # | # | # | # | # | – | # | # | 4 | # | – | – | 12/A23 | 13/A23 | – | 22 | N/A | AA22 | | – |
| 306/A | PR 3'0" | # | # | C | ALUM | ANOD | 1/4" TINT TEMP | – | 4-1/2" | 9 | ALUM | TINTED TEMP | ② | – | 4/A23 | # | 3 | * | BB1 | | SEE ALUM ENTRY SPEC |
| 306/B | PR 3'0" | # | # | C | ALUM | ANOD | 1/4" TINT TEMP | – | 4-1/2" | 9 | ALUM | TINTED TEMP | ② | – | 4/A23 | # | 3 | * | BB1 | | SEE ALUM ENTRY SPEC |
| 306/C | PR 3'0" | # | # | C | ALUM | ANOD | 1/4" TEMP | – | 4-1/2" | 10 | ALUM | TEMP INSUL. | # | # | 6/A23 | # | * | * | – | | SEE ALUM ENTRY SPEO |
| 306/D | PR 3'0" | # | # | C | ALUM | ANOD | 1/4" TEMP | – | 4-1/2" | 10 | ALUM | TEMP INSUL. | # | # | 6/A23 | # | * | * | – | | SEE ALUM ENTRY SPEC |
| 319/A | 2'-8" | 6'-8" | # | # | # | # | – | – | 6-3/4" | # | # | – | – | # | # | – | 12 | F-04 | AA23 | | FIELD VERIFY EXIST WALL WID |
| 402/A | # | # | # | # | # | # | – | 1-1/2HR | # | # | # | – | – | 7/A23 | 7/A23 | – | 13 | F-05 | AA21 | | – |

LEGEND
- \# SEE TYPICAL
- X EXISTING
- – NONE
- N/A NOT APPLICABLE
- * SEE REMARKS

SEE ADD # 2-4-19 (117/A)
SEE ADD #1-3-21B (119/A, 121/A, 122/A)
SEE ADD #1-3-21B (135/A, 136/A, 137/A)

① PROVIDE KNURLED KNOB.
② SEE FRAME TYPE ELEVATION.

NOTES
1. FOR BORROWED LIGHT FRAME (WDW W/3) SEE WDW SCH SHEET A-23.
2. PROVIDE 4" LONG x 2" HIGH PLASTIC SIGN ON EACH 1 1/2 HR. FIRE DOOR WITH THE FOLLOWING WORDING: "FIRE DOOR - DO NOT REMOVE"

RECORD DOCUMENTS JUN 2 6 1990
THESE DOCUMENTS HAVE BEEN REVISED TO RECORD ... BY THE CONTR... ARE ASSUMED TO BE RELIABLE THE ARCHITECT DOES NOT GUARANTEE THEIR ACCURACY.

STATE OF UTAH — BRETT J. RICHARDS — No. 1107

0000T/A22
Weber State College; Physical Education Facility - RW:84-058
Door Schedules & Details - 28700

jra JONES / RICHARDS & ASSOCIATES
ARCHITECTURE (801) 394-3033
PLANNING 533 - 26TH STREET
CONSTRUCTION MANAGEMENT OGDEN, UTAH

REVISED: AS BUILTS 6-90

PROJECT NUMBER: 8403
DATE: 8•21•85
DRAWN BY: DEATON, SEKO

PROJECT: ...PHYSICAL EDUCATION FACILITY WEBER STATE COLLEGE

SHEET TITLE: DOOR SCHEDULE & DETAILS

SHEET NO. A-22

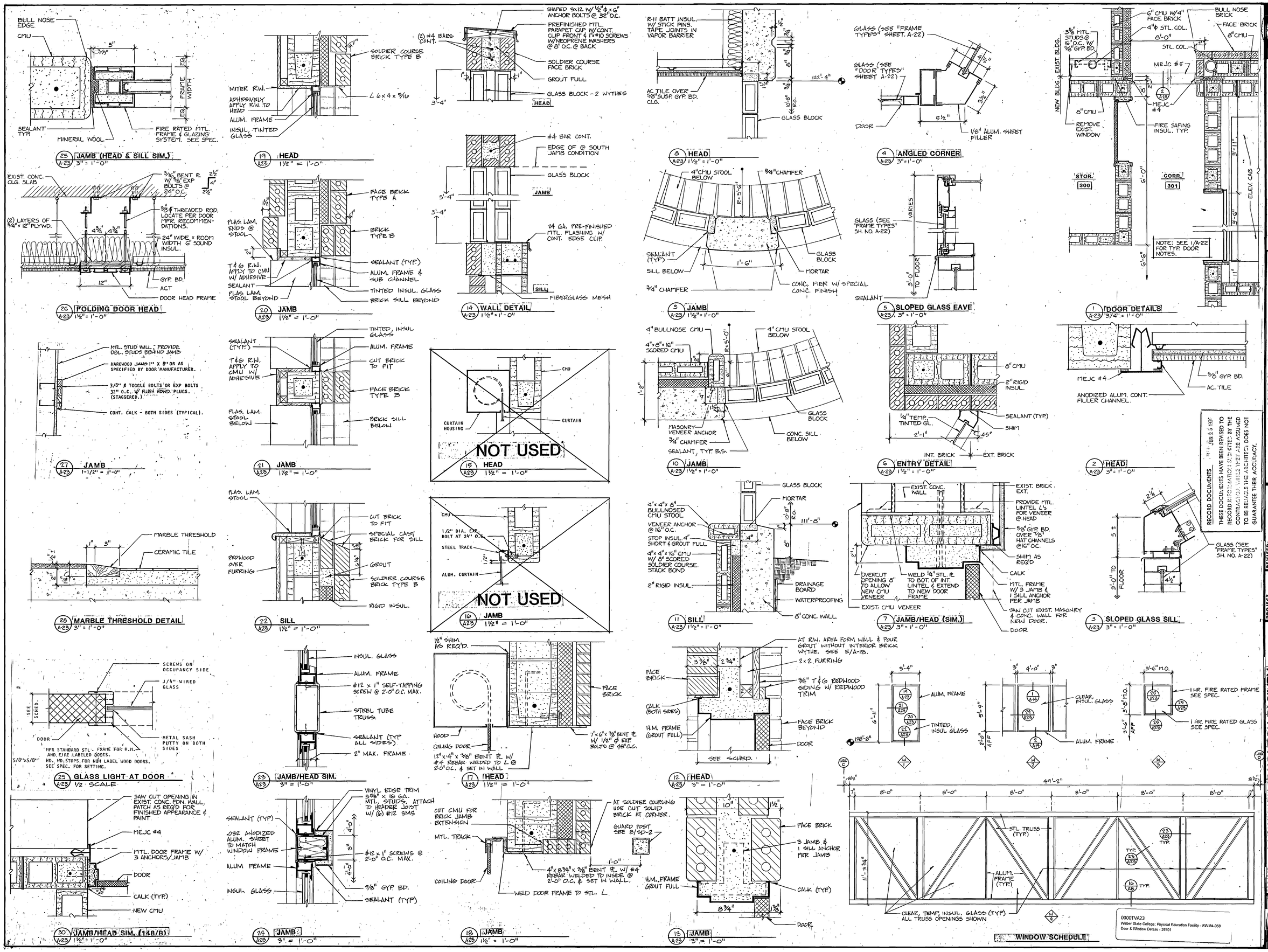


RECORD DOCUMENTS
THESE DOCUMENTS HAVE BEEN REVISED TO RECORD INFORMATION SUBMITTED BY THE CONTRACTOR WHICH THEY ARE ASSUMED TO BE RELIABLE THE ARCHITECT DOES NOT GUARANTEE THEIR ACCURACY.

jra JONES / RICHARDS & ASSOCIATES
ARCHITECTURE (801) 394-3033
PLANNING 533 - 28TH STREET
CONSTRUCTION MANAGEMENT OGDEN, UTAH

REVISED: AS BUILTS 6-90
PROJECT NUMBER: 8403
DATE: 6-21-88
DRAWN BY: K. SEKO, B. BOTT

PROJECT: PHYSICAL EDUCATION FACILITY
WEBER STATE COLLEGE
SHEET TITLE: DOOR & WINDOW DETAILS

SHEET NO. A-23

0000TVA23
Weber State College; Physical Education Facility - RW:84-058
Door & Window Details - 28701

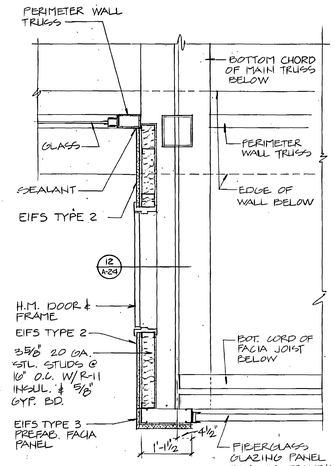


11 A-24 FACIA TERMINATION WALL DETAIL
3/4" = 1'-0"

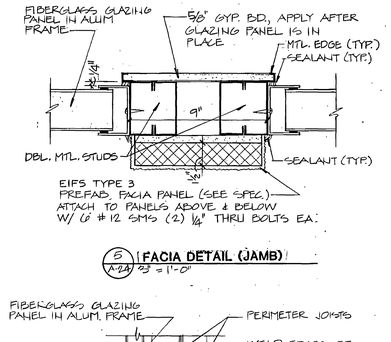


6 A-24 FACIA DETAIL (JAMB)
3" = 1'-0"

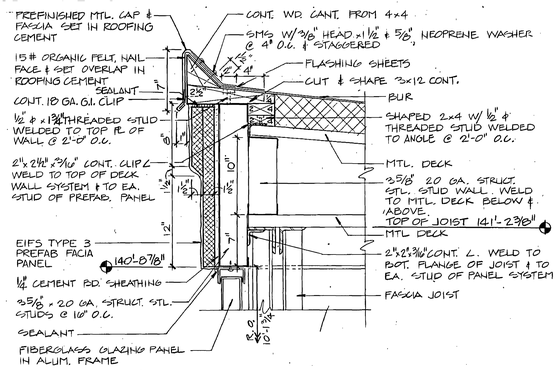


1 A-24 FACIA DETAIL (HEAD)
1 1/2" = 1'-0"

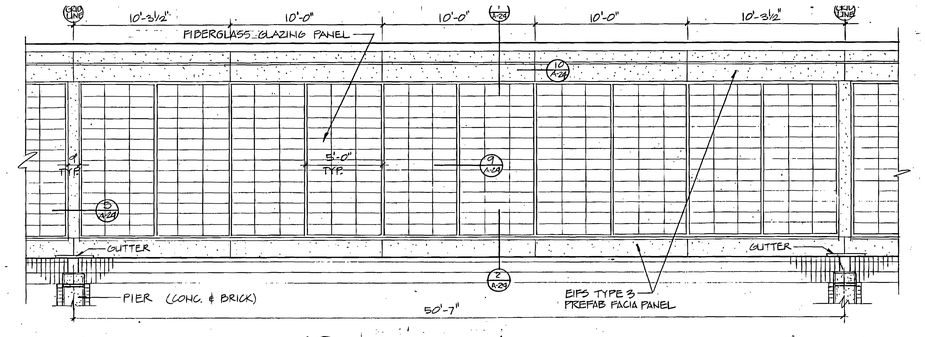


A A-24 STD. BAY: E-W SIDE
1/4" = 1'-0"

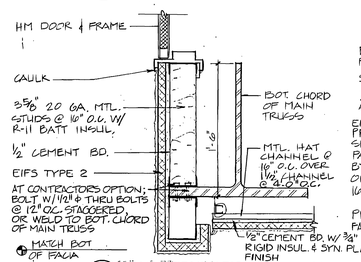


12 A-24 FACIA TERMINATION WALL DETAIL
1 1/2" = 1'-0"

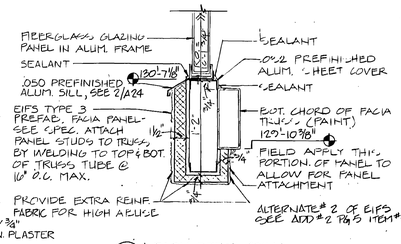


7 A-24 FACIA DETAIL (SILL)
1 1/2" = 1'-0"

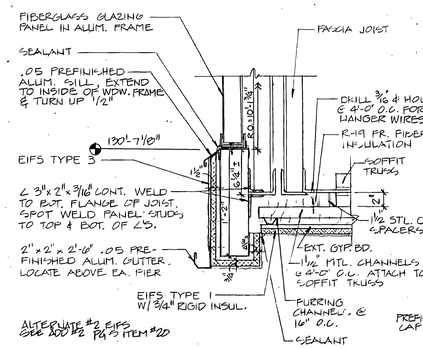


ALTERNATE #2 EIFS SEE ADD #2 P&S ITEM #20

2 A-24 FACIA DETAIL (SILL)
1 1/2" = 1'-0"

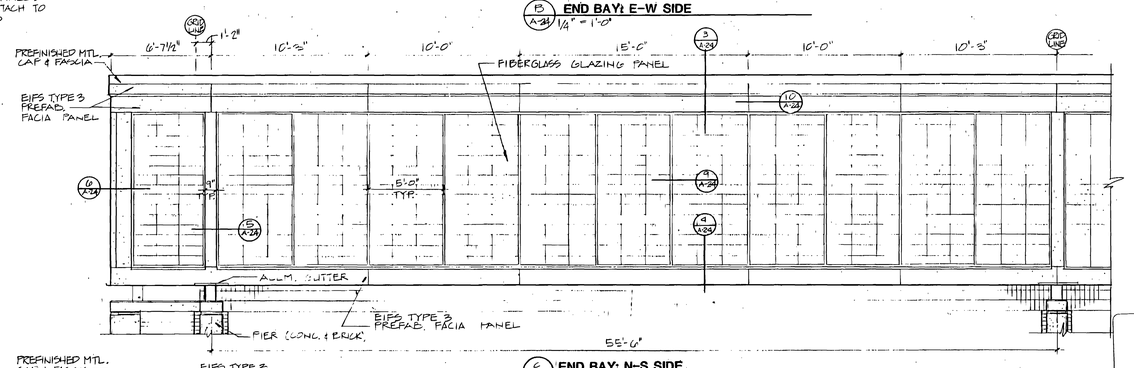


C A-24 END BAY: N-S SIDE
1/4" = 1'-0"

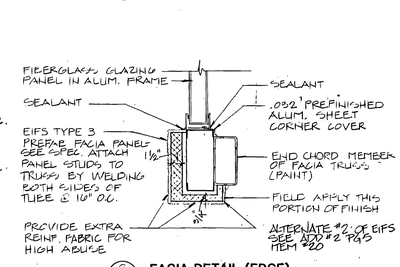


8 A-24 FACIA DETAIL (EDGE)
1 1/2" = 1'-0"

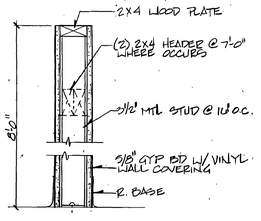


19 A-24 SIGHT SCREEN DETAIL
1 1/2" = 1'-0"

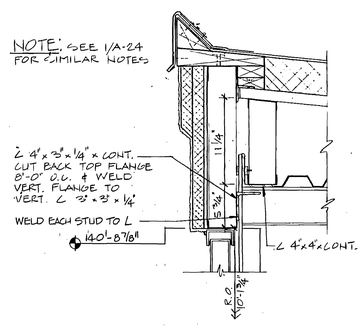


3 A-24 FACIA DETAIL HEAD
1 1/2" = 1'-0"

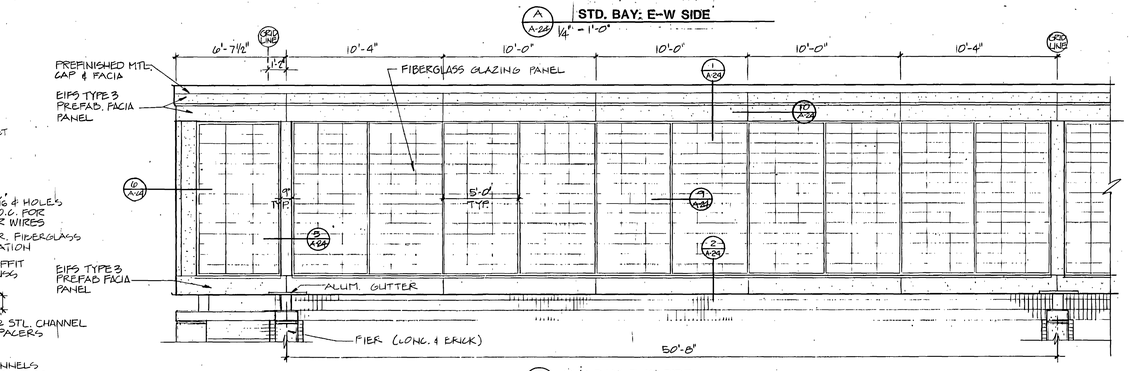


B A-24 END BAY: E-W SIDE
1/4" = 1'-0"

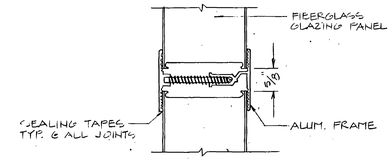


9 A-24 FACIA GLAZING JOINT
HALF SCALE

ALTERNATE #2 OF EIFS SEE ADD #2 P&S ITEM 20

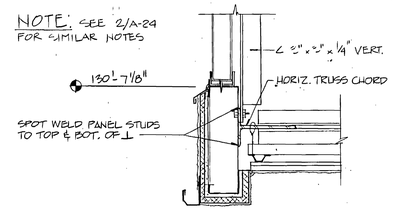


4 A-24 FACIA DETAIL (SILL)
1 1/2" = 1'-0"

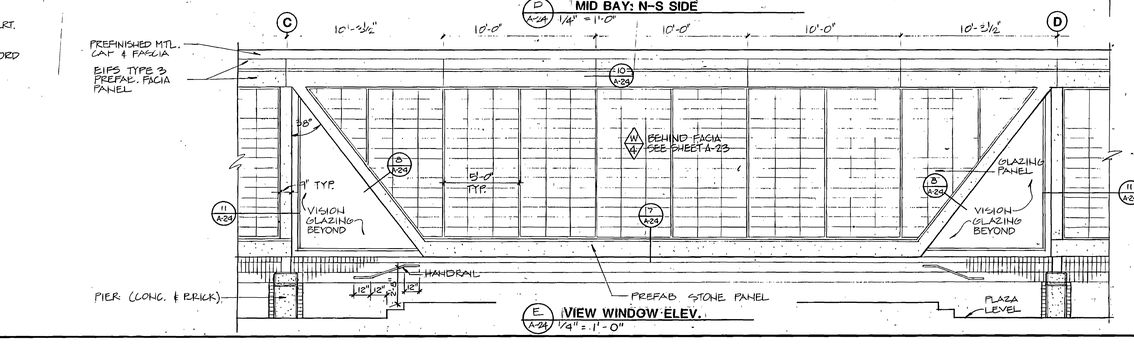


E A-24 VIEW WINDOW ELEV.
1/4" = 1'-0"

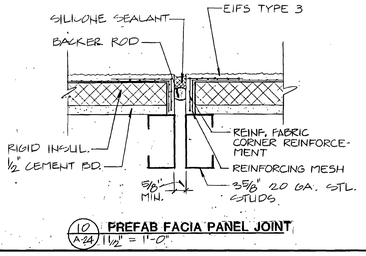


10 A-24 PREFAB FACIA PANEL JOINT
1 1/2" = 1'-0"

RECORD DOCUMENTS
THESE DOCUMENTS HAVE BEEN REVISED TO RECORD INFORMATION SUBMITTED BY THE CONTRACTOR, WHILE THEY ARE ASSUMED TO BE RELIABLE THE ARCHITECT DOES NOT GUARANTEE THEIR ACCURACY
JUL 2 1993

jrq JONES / RICHARDS & ASSOCIATES
ARCHITECTURE
PLANNING
533 - 25TH STREET
OGDEN, UTAH
CONSTRUCTION MANAGEMENT
(801) 394-5233

REVISED: AS BUILTS 6-92
PROJECT NUMBER: 8403
DATE: 6-21-88
DRAWN BY: K. BERTOLDI

GOOITV/A24
Weber State College, Physical Education Facility - RW 94-508
Facia Details - 20702

PROJECT: PHYSICAL EDUCATION FACILITY
WEBER STATE COLLEGE
SHEET TITLE: FACIA DETAILS

SHEET NO. A-24

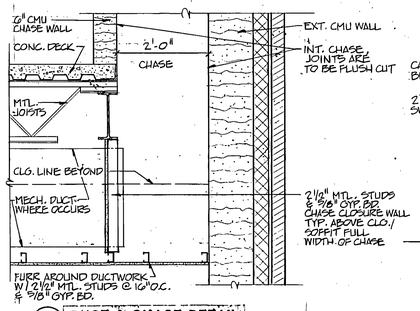


22/A-25 DUCT & CHASE DETAIL
3/4" = 1'-0"

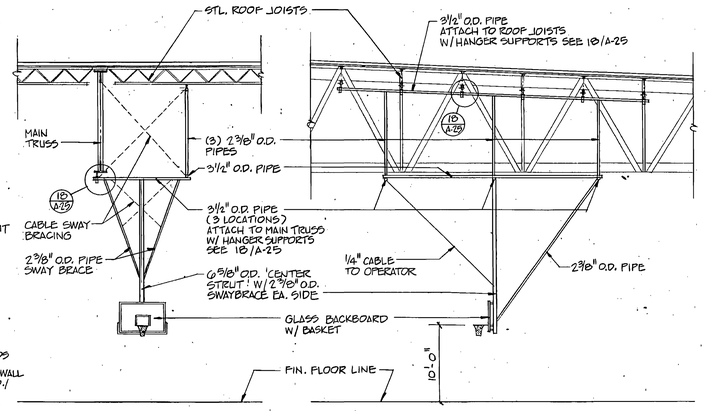


16/A-25 SIDE COURT BACKBOARD SUPERSTRUCTURE ELEVATIONS
1/8" = 1'-0"

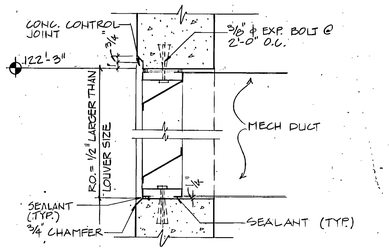


10/A-25 LOUVER HEAD & SILL DETAIL (JAMB SIM.)
1 1/2" = 1'-0"

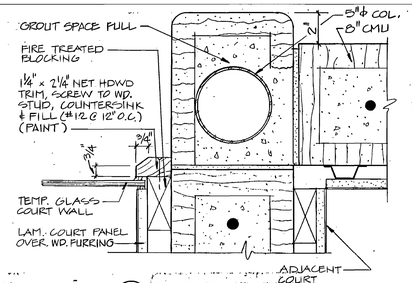


5/A-25 GLASS COURT DETAIL
3" = 1'-0"

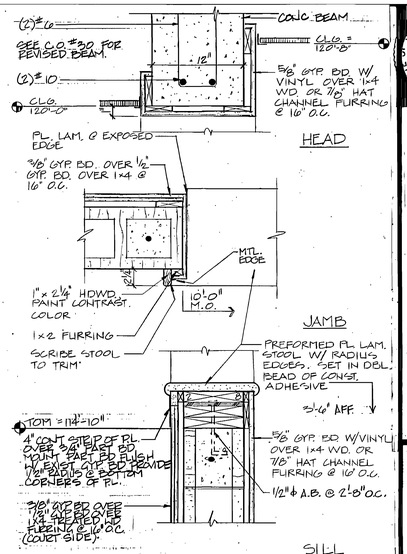


1/A-25 COURT VIEW WINDOW DETAILS
1 1/2" = 1'-0"

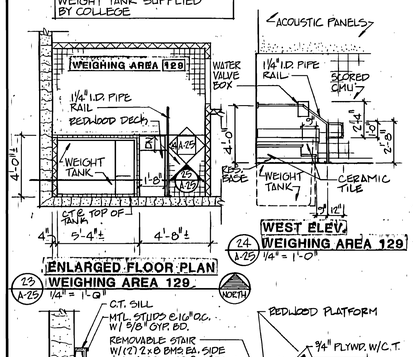


23/A-25 ENLARGED FLOOR PLAN WEIGHING AREA 129
1/4" = 1'-0"




WEST ELEV. WEIGHING AREA 129
24/A-25 1/4" = 1'-0"

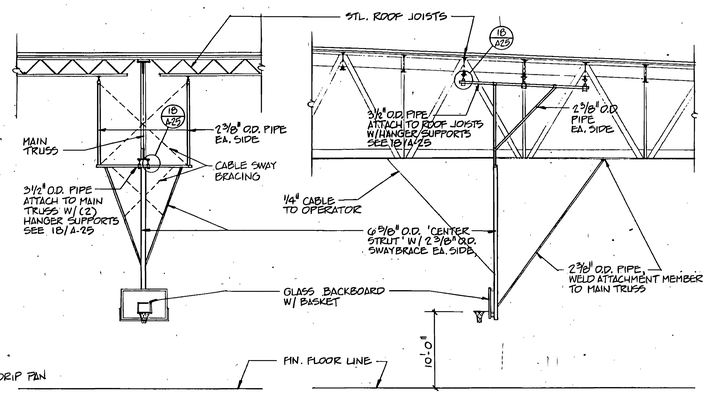


17/A-25 MAIN COURT BACKBOARD SUPERSTRUCTURE ELEVATIONS
1/8" = 1'-0"

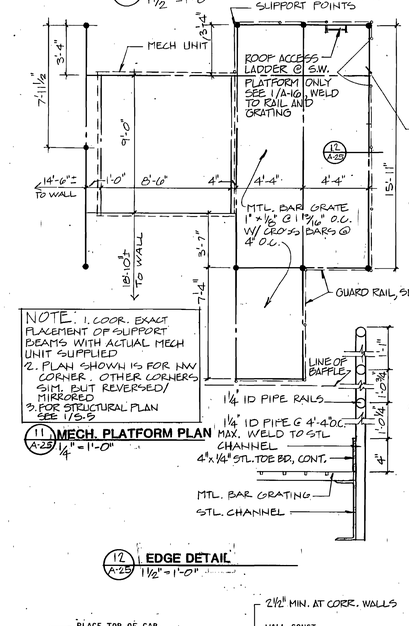


NOTE. 1. COOR. EXACT PLACEMENT OF SUPPORT BEAMS WITH ACTUAL MECH UNIT SUPPLIED
2. PLAN SHOWN IS FOR NW CORNER. OTHER CORNERS SIM. BUT REVERSED/ MIRRORED
3. FOR STRUCTURAL PLAN SEE 1/S-5

11/A-25 MECH. PLATFORM PLAN
1/4" = 1'-0"

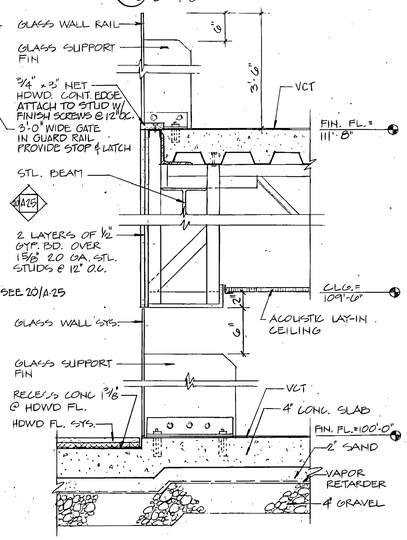


6/A-25 GLASS COURT DETAIL
1 1/2" = 1'-0"

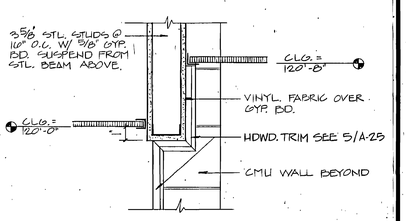


2/A-25 COURT CLG. DETAIL AT GLASS COURT
1 1/2" = 1'-0"

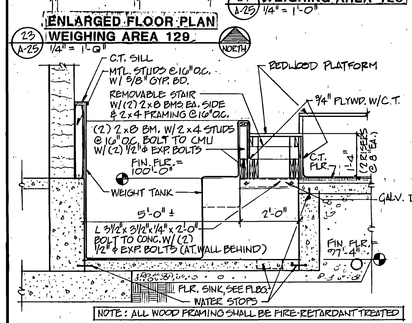


29/A-25 WEIGHT TANK SECTION
1/2" = 1'-0"

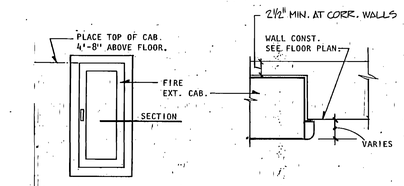


13/A-25 FIRE EXTINGUISHER CABINET
NO SCALE

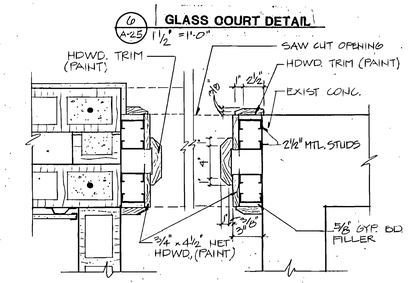


7/A-25 OPENING DETAIL AT CORR. 154 & 232
1 1/2" = 1'-0"

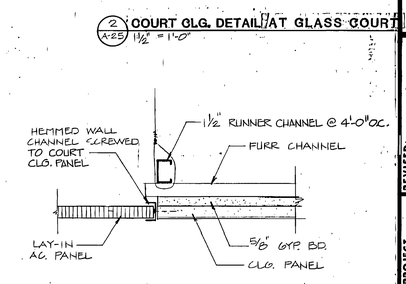


3/A-25 COURT CLG. DETAIL
3" = 1'-0"

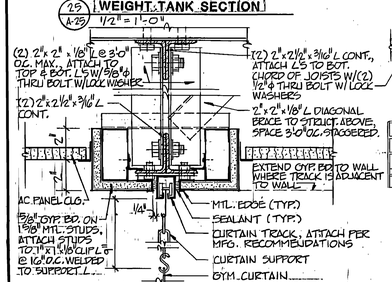


26/A-25 GYM CURTAIN TRACK DETAIL (SPORTS LAB 123)
3" = 1'-0"

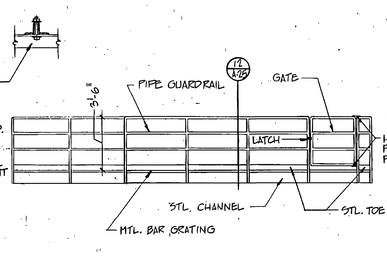


20/A-25 MECH. PLATFORM ELEVATION
1/4" = 1'-0"

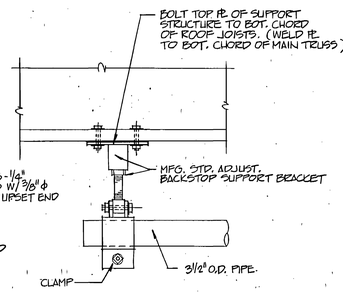


18/A-25 HANGER SUPPORT DETAIL
NO SCALE

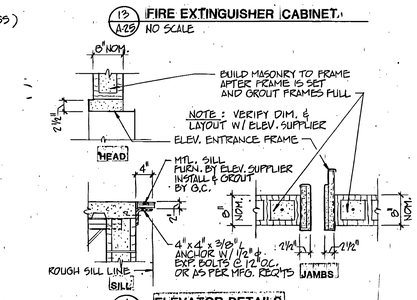


14/A-25 ELEVATOR DETAILS
NO SCALE

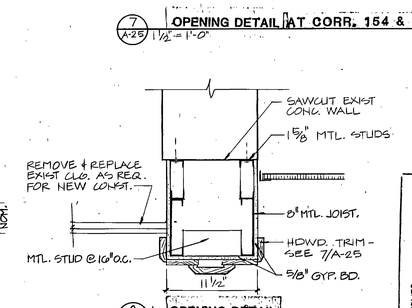


8/A-25 OPENING DETAIL
1 1/2" = 1'-0"

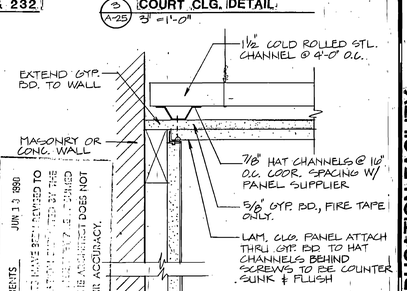


4/A-25 TYP. COURT DETAIL
3" = 1'-0"

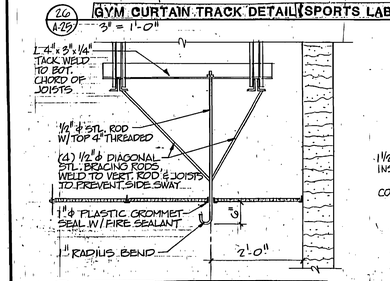


27/A-25 WEIGHT TANK CLG. HOOK DETAIL
3/4" = 1'-0"

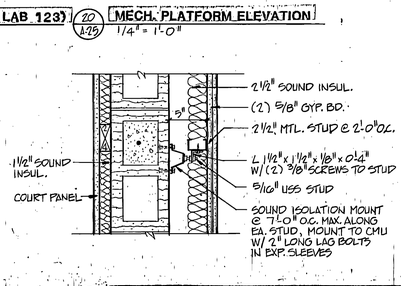


21/A-25 SOUND ISOLATION DETAIL (RM. 123 & 138)
1 1/2" = 1'-0"

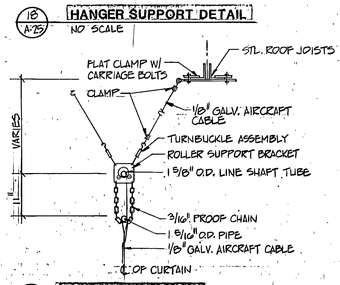


19/A-25 GYM CURTAIN DETAIL
NO SCALE

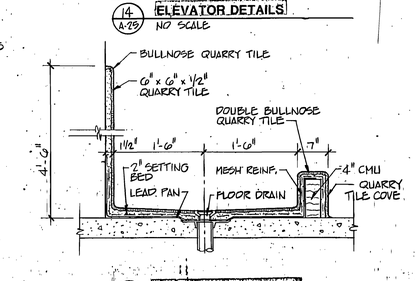


15/A-25 SERVICE SINK DETAIL
1" = 1'-0"

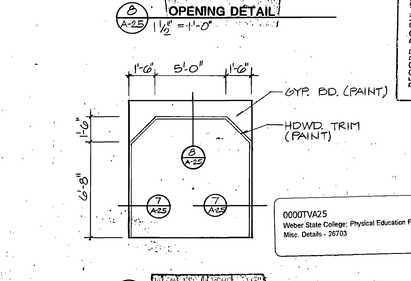


9/A-25 OPENING DETAIL AT CORR. 154 & 232
1 1/2" = 1'-0"

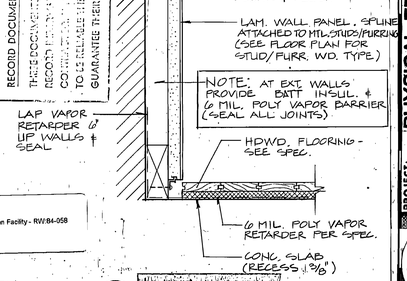


RECORD DOCUMENTS
JUN 13 1988
THESE DOCUMENTS HAVE BEEN ADVISED TO BE THE AS BUILT RECORD OF CONSTRUCTION. THE ARCHITECT DOES NOT GUARANTEE THEIR ACCURACY, TO BE RELIABLE THE ARCHITECT DOES NOT

4/A-25 TYP. COURT DETAIL
3" = 1'-0"

jra JONES / RICHARDS & ASSOCIATES
ARCHITECTURE (801) 394-3033
PLANNING 533 - 25TH STREET
CONSTRUCTION MANAGEMENT OGDEN, UTAH

PROJECT: PHYSICAL EDUCATION FACILITY
WEBER STATE COLLEGE
SHEET TITLE: MISC. DETAILS

PROJECT NUMBER: 8405
DATE: 8-21-88
DRAWN BY: R. BERGOLDI
REVISED: AS BUILTS 6-90

SHEET NO: A-25

## LIGHTING CONTACTOR SCHEDULE

| CONTACTOR CABINET | CONTACTOR NUMBER | NO. OF POLES | METHOD OF CONTROL | CONTROLLED CIRCUITS | CONTROLLED AREA | CONTACTOR LOCATION | SWITCH IDENTIFICATION |
|---|---|---|---|---|---|---|---|
| CC6 | C13 | 2 | 20A MECHANICALLY HELD CONTACTOR | H6-7 | COLUMN LIGHTS | GUTTER EXTENSION OF PANEL 'H6' | AC1 ◇4 |
| CC6 | C14 | 2 | | H6-9 | EXTERIOR LIGHTS | | AC2 |
| CC6 | C15 | 3 | | H6-11, 13 | STREET LIGHTS | | AC3 |
| CC6 | C16 | 3 | | H6-15, 17 | PARKING LOT LTS | | AC4 |
| CC6 | C17 | 2 | | H6-19 | YARD LIGHTS | | AC5 |
| CC6 | C18 | 2 | | H6-21 | PLAZA LIGHTS | | AC6 |
| CC5 | C19 | 2 | | SPARE | ART PIECE LTS | GUTTER EXTENSION OF PANEL 'H5' | AC7 |
| CC5 | C20 | 2 | | H5-11 | ENTRY-WAY LTS | | AC8 |
| CC5 | C21 | 2 | | H5-13 | WALK-THROUGH STRUCTURE LTS | | AC9 |
| CC5 | C22 | 2 | | SPARE | YARD LIGHTS | | AC5 |
| CC5 | C23 | 2 | | L5-25 | GARDEN LIGHTS | GUTTER EXTENSION OF PANEL 'L5' | AC10 |

CONTROL POWER - L5-24 - 120 VOLT COILS

## LIGHTING CONTACTOR SCHEDULE

| CONTACTOR CABINET | CONTACTOR NUMBER | NO. OF POLES | METHOD OF CONTROL | CONTROLLED CIRCUITS | CONTROLLED AREA | CONTACTOR LOCATION | SWITCH IDENTIFICATION |
|---|---|---|---|---|---|---|---|
| CC1 | C1 | 3 | 20A MECHANICALLY HELD CONTRACTOR | H1-1,3,5 | COURTS | GUTTER EXTENSION OF PANEL 'H1' | c |
| CC1 | C2 | 10 | | H1-2,4,6,8, 10,12,14, 16,18 | COURTS | | d |
| CC1 | C3 | 3 | | H1-7,9 | SOUTH END | | e |
| CC2 | C4 | 3 | | H2-1,3 | NORTH END | GUTTER EXTENSION OF PANEL 'H2' | f |
| CC1 | C5 | 4 | | H1-11,13,15,17 | EAST AND WEST TRACK | GUTTER EXTENSION OF PANEL 'H1' | g |
| CC1 | C6 | 6 | | H1-19,21,23,25 27 | SOUTH END | | h |
| CC2 | C7 | 10 | | H2-5,7,9, 2,4,6,29 | NORTH END | GUTTER EXTENSION OF PANEL 'H2' | i |
| CC1 | C8 | 3 | CONTROLLED BY SAME SWITCH | H1-20,22,24 | SOUTH END PERIMETER | GUTTER EXTENSION OF PANEL 'H1' | j |
| CC2 | C9 | 3 | | H2-8,10,12 | NORTH END PERIMETER | GUTTER EXTENSION OF PANEL 'H2' | j |
| CC3 | C10 | 3 CONTROL POWER LIE-B | | H1E-28 | PERIMETER EGRESS | GUTTER OF PANEL 'H1E' | b SWITCH BANK & TRANSFER SWITCH |
| CC4 | C11 | 3 | ELECTRICALLY HELD COIL 120 V A.C. | LIE-1,3,5 LIE-2,4,6 | EMERGENCY QUARTZ LAMPS | GUTTER OF PANEL PANEL 'LIE' | - |
| CC3 | C12 | 2 | | H1E-4 | NIGHT LIGHTS | GUTTER OF PANEL 'H1E' | a SWITCH BANK, 3-WAY & TRANSFER SWITCH |

CONTROL POWER - L1-28 - 120 VOLT COILS
LIE-B

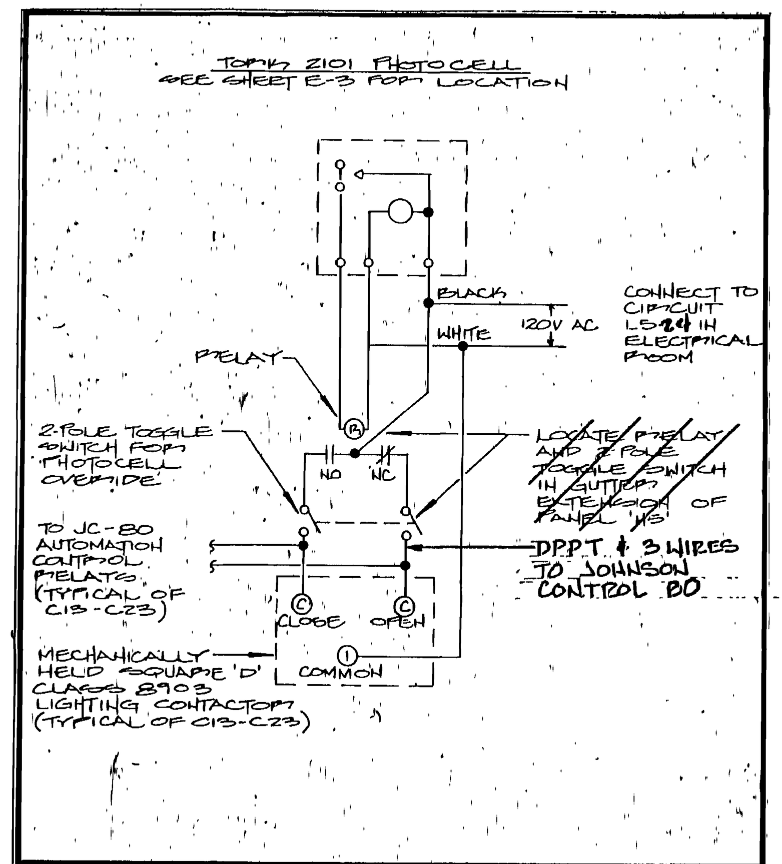


**DETAIL**
**PHOTOCELL-AUTOMATION CONTACTOR CONTROL** (1 / E-1)

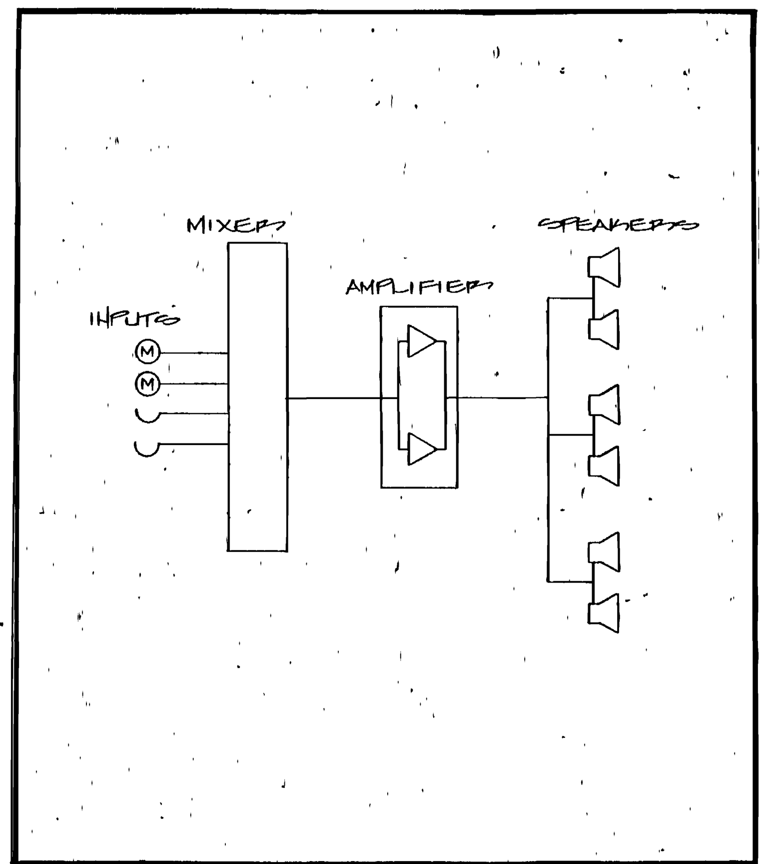


**DANCE STUDIO**
**SOUND SYSTEM RISER DIAGRAM** (2 / E-1)

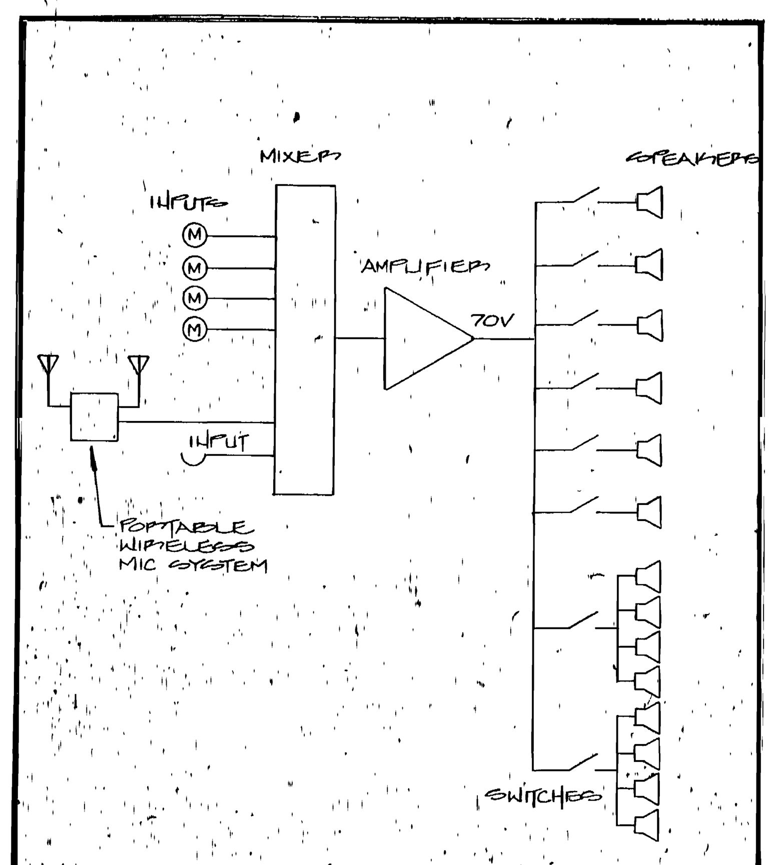


**RACQUETBALL**
**SOUND SYSTEM RISER DIAGRAM** (3 / E-1)

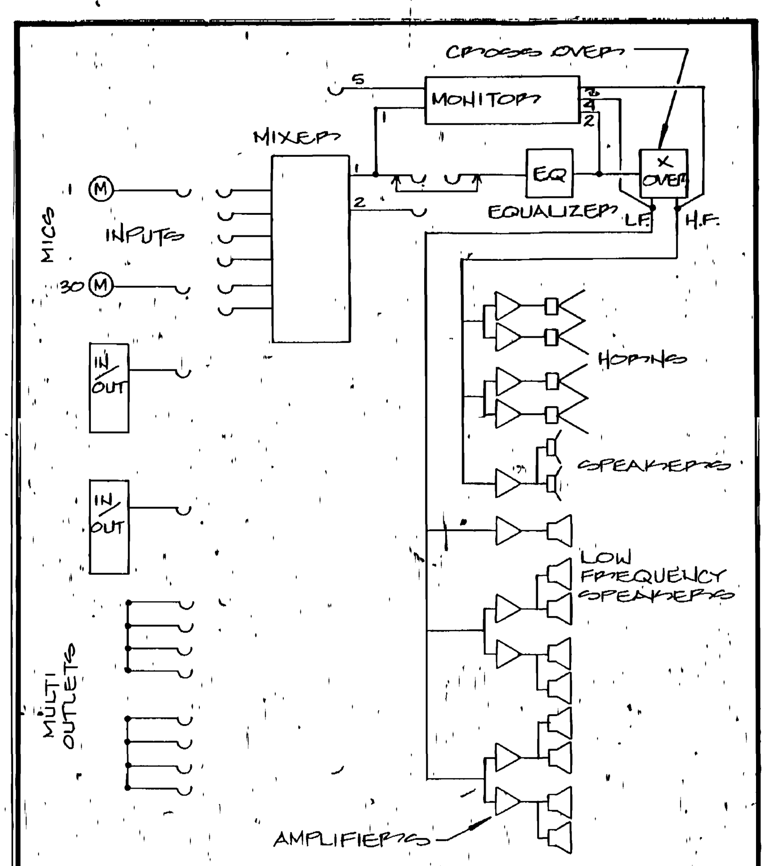


**MULTI-PURPOSE ROOM**
**SOUND SYSTEM RISER DIAGRAM** (4 / E-1)

## SOUND SYSTEM LEGEND

| | |
|---|---|
| Ⓜ | MICROPHONE |
| ▷ | AMPLIFIER |
| (speaker symbol) | SPEAKER |
| (horn symbol) | HORN |

## EQUIPMENT SCHEDULE

NOTES

1. MAGNETIC STARTER
2. MANUAL STARTER
3. DISCONNECT SWITCH
4. DIRECT CONNECTION

A. FURNISHED AND INSTALLED BY OTHERS
B. FURNISHED BY OTHERS, INSTALLED UNDER DIVISION 16
C. FURNISHED AND INSTALLED UNDER DIVISION 16

| UNIT # | FUNCTION | LOAD | VOLTS | PHASE | FULL LOAD AMPS | CONDUIT SIZE | WIRES NO. | WIRES SIZE | BKRS POLE | BKRS AMPS | NOTE # | REMARKS |
|---|---|---|---|---|---|---|---|---|---|---|---|---|
| BB-1 | BACKBOARD MOTOR | 3/4HP | 120 | 1 | 13 | 3/4 | 2 | | 1 | 30 | 2C | |
| NT-1 | NET MOTOR | 3/4HP | 120 | 1 | 13 | 3/4 | 2 | | 1 | 30 | 2C | |
| EV-1 | ELEVATOR | 25HP | 480 | 3 | 32 | 1 | 3 | 4 | 3 | 80 | 3C | |
| WH-1 | WATER HEATER | 3KW | 208 | 1 | 16 | 3/4 | 2 | 10 | 2 | 30 | 3C | |
| AH-1 | AIR HANDLER | 20HP | 480 | 3 | 27 | 1 | 3 | 6 | 3 | 60 | 1C | PROVIDE 6KVAR PFCC |
| AH-2 | AIR HANDLER | 20HP | 480 | 3 | 27 | 1 | 3 | 6 | 3 | 60 | 1C | PROVIDE 6KVAR PFCC |
| AH-3 | AIR HANDLER | 20HP | 480 | 3 | 27 | 1 | 3 | 6 | 3 | 60 | 1C | PROVIDE 6KVAR PFCC |
| AH-4 | AIR HANDLER | 20HP | 480 | 3 | 27 | 1 | 3 | 6 | 3 | 60 | 1C | PROVIDE 6KVAR PFCC |
| AH-5 | AIR HANDLER | 25HP | 480 | 3 | 34 | 1 | 3 | 4 | 3 | 70 | 1C | PROVIDE 7.5KVAR PFCC |
| EF-1 | EXHAUST FAN | 3/4HP | 480 | 3 | 1.4 | 3/4 | 3 | 12 | 3 | 20 | 1C | |
| EF-2 | EXHAUSUT FAN | 3/4HP | 480 | 3 | 1.4 | 3/4 | 3 | 12 | 3 | 20 | 1C | |
| EF-3 | EXHAUST FAN | 3/4HP | 480 | 3 | 1.4 | 3/4 | 3 | 12 | 3 | 20 | 1C | |
| EF-4 | EXHAUST FAN | 3/4HP | 480 | 3 | 1.4 | 3/4 | 3 | 12 | 3 | 20 | 1C | |
| EF-5 | EXHAUST FAN | 1/4HP | 120 | 1 | 5.8 | 3/4 | 1 | 12 | 1 | 20 | 2C | |
| EF-6 | EXHAUST FAN | 1/4HP | 120 | 1 | 5.8 | 3/4 | 1 | 12 | 1 | 20 | 2C | |
| FC-1 | FAN COIL | 1/3HP | 120 | 1 | 7.2 | 3/4 | 1 | 12 | 1 | 20 | 2C | |
| FC-2 | FAN COIL | 1/3HP | 120 | 1 | 7.2 | 3/4 | 1 | 12 | 1 | 20 | 2C | |
| FC-3 | FAN COIL | 1/4HP | 120 | 1 | 5.8 | 3/4 | 1 | 12 | 1 | 20 | 2C | |
| FC-4 | FAN COIL | 1/4HP | 120 | 1 | 5.8 | 3/4 | 1 | 12 | 1 | 20 | 2C | |
| CP-1 | PUMP | 3/4HP | 480 | 3 | 1.4 | 3/4 | 3 | 12 | 3 | 20 | 1C | |
| CP-2 | PUMP | 3/4HP | 480 | 3 | 1.4 | 3/4 | 3 | 12 | 3 | 20 | 1C | |
| CP-3 | PUMP | 3/4HP | 480 | 3 | 1.4 | 3/4 | 3 | 12 | 3 | 20 | 1C | |
| CP-4 | PUMP | 3/4HP | 480 | 3 | 1.4 | 3/4 | 3 | 12 | 3 | 20 | 1C | |
| CP-5 | PUMP | 3/4HP | 480 | 3 | 1.4 | 3/4 | 3 | 12 | 3 | 20 | 1C | |
| CP-6 | PUMP | 7½HP | 480 | 3 | 11 | 3/4 | 3 | 12 | 3 | 20 | 1C | PROVIDE 3KVAR PFCC |
| CP-7 | PUMP | 7½HP | 480 | 3 | 11 | 3/4 | 3 | 12 | 3 | 20 | 1C | PROVIDE 3KVAR PFCC |
| CP-8 | PUMP | 15HP | 480 | 3 | 21 | 3/4 | 3 | 8 | 3 | 40 | 1C | PROVIDE 5KVAR PFCC |
| CAU-1 | AIR COND. UNIT | 30.6A | 480 | 3 | 30.6 | 3/4 | 3 | 8 | 3 | 40 | 3C | |
| DC-1 | DRY COOLER | 3/4HP | 480 | 1 | 5.5 | 3/4 | 2 | 12 | 2 | 20 | 3C | |
| DTP-1 | DAY TANK PUMP | 1/3HP | 120 | 1 | 7.2 | 3/4 | 2 | 12 | 2 | 20 | 2C | |
| RTP-1 | REMOTE TNK. PUMP | 1/3HP | 120 | 1 | 3.2 | 3/4 | 2 | 12 | 2 | 20 | 1C | |
| AC-1 | AIR COMPRESSOR | 1 HP(2) | 480 | 3 | 3.6 | 3/4 | 3 | 12 | 3 | 20 | 1C | |
| AD-1 | AIR DRYER | 1/6HP | 120 | 1 | 4.4 | 3/4 | 2 | 12 | 2 | 20 | 2C | |
| EF-7 | EXHAUST FAN | 68W | 120 | 1 | .71A | 3/4 | 2 | 12 | 1 | 20 | 2C | |
| EF-8 | EXHAUST FAN | 135W | 120 | 1 | 1.92A | 3/4 | 2 | 12 | 1 | 20 | 2C | |
| EF-9 | EXHAUST FAN | 1/2HP | 120 | 1 | 9.8 | 3/4 | 2 | 12 | 1 | 20 | 2C | |
| EF-10 | EXHAUST FAN | 1/3HP | 120 | 1 | 7.2 | 3/4 | 2 | 12 | 1 | 20 | 2C | |
| CP-9 | PUMP | 1/20HP | 120 | 1 | 1.16 | 3/4 | 2 | 12 | 1 | 20 | 2C | |
| T-1 | TREAD MILL | 2HP | 208 | 3 | 7.82 | 3/4 | 3 | 12 | 3 | 20 | ◇6 | |
| T-2 | TREAD MILL | 1HP | 120 | 1 | 25 | 3/4 | 2 | 8 | 1 | 20 | ◇6 | |
| WTP-1 | WEIGHT TANK RM | 1½HP | 230 | 1 | 9.3/33 | 3/4" | 2 | 10 | 2 | 20 | 1C | PROVIDE TWO SPEED STARTER |
| WTH-1 | WEIGHT TANK HT | 11KW | 240 | 1 | 45 | 1" | 3 | 4 | 2 | 60 | 3C | |

## REFERENCE NOTES

◇1 FIXTURE SHALL PROVIDE INDIRECT LIGHT ONLY AND SHALL HAVE A BLANK BOTTOM.

◇2 DISTANCE FROM CEILING TO BOTTOM OF FIXTURE SHALL VARY FROM 9' - 0" TO 13' - 1 3/4". BOTTOM OF FIXTURE SHALL BE PARALLEL TO AND AT LEVEL OF BOTTOM OF TRUSS. MOUNT FROM CHANNEL IRON W/ AIRCRAFT CABLE.

◇3 NOT USED.

◇4 PROVIDE 3/4" CONDUIT WITH 8 #12 TW CU. FROM CONTACTOR TO AUTOMATION CONTROL PANEL LOCATED IN MECHANICAL ROOM. COIL OF CONTACTOR TO BE OPERATED BY AUTOMATION CONTACTOR INDICATED. AUTOMATION PANEL AND CONTACTORS IN AUTOMATION PANEL TO BE FURNISHED UNDER DIVISION 15. ALSO PROVIDE 3/4" CONDUIT WITH 5 #12 FROM CONTACTOR TO PHOTOCELL. SEE DETAIL 1/E-1.

◇5 WALL MOUNT AT 24' A.F.F. TO TOP OF FIXTURE.

◇6 PROVIDE SPECIAL PURPOSE OUTLET AS REQUIRED. VERIFY NEMA CONFIGURATION OF OUTLETS WITH COLLEGE.

◇7 VERIFY ALL REQUIREMENTS WITH COLLEGE.

## GENERAL NOTES

1. CONSULT ARCHITECTURAL REFLECTED CEILING PLANS FOR EXACT LOCATION AND QUANITY OF ALL LIGHTING FIXTURES.
2. VERIFY ALL EQUIPMENT DIMENSIONS AND LOCATIONS BEFORE BEGINNING ROUGH-IN. CONSULT ALL APPLICABLE CONTRACT DRAWINGS AND SHOP DRAWINGS TO INSURE NEC CODE CLEARENCES REQUIRED AROUND ALL ELECTRICAL EQUIPMENT.
3. CONTRACTOR SHALL VERIFY ALL ELECTRICAL LOADS (VOLTAGE, PHASE, CONNECTION REQUIREMENTS, ETC.) OF EQUIPMENT FURNISHED UNDER DIVISION 15 WITH APROVED MECHANICAL SHOP DRAWINGS BEFORE BEGINNING ROUGH-IN.
4. SEE SECTION 16510 OF THE SPECIFICATION FOR REQUIRED COORDINATION MEETINGS WITH MECHANICAL AND CEILING CONTRACTORS.
5. SEE APPLICABLE SHOP DRAWINGS FOR ROUGH-IN LOCATION OF ALL EQUIPMENT, WIRING DEVICES, ETC. WHERE APPLICABLE MOUNT ALL WIRING DEVICES ABOVE BACKSPLASH EXCEPT THOSE SERVING UNDER COUNTER EQUIPMENT.
6. SEE SPECIFICATION FOR ENERGY SAVING LAMP AND BALLAST REQUIREMENTS
7. FINISHES OF ALL LIGHT FIXTURES SHALL BE SELECTED BY ARCHITECT.
8. THE ELECTRICAL CONTRACTOR SHALL NOTIFY AND COOPERATE WITH THE MECHANICAL CONTRACTOR SUCH THAT NO PIPING, DUCTS, OR EQUIPMENT FOREIGN TO THE OPERATION OF THE ELECTRICAL EQUIPMENT SHALL BE PERMITTED TO BE INSTALLED IN, ENTER OR PASS THRU ELECTRICAL ROOMS OR SPACES; OR ABOVE OR BELOW ELECTRICAL EQUIPMENT IN OTHER AREAS.
9. ELECTRICAL BOXES SHALL NOT BE LOCATED IN MASONRY COLUMNS IN BRICK WALLS OR IN GROUTED CELLS ADJACENT TO OPENINGS. COORDINATE LOCATION OF BOXES WITH MASONRY CONTRACTOR.
10. ALL PENETRATIONS OF FIRE RATED FLOORS, WALLS AND CEILINGS SHALL BE SEALED WITH APPROVED MATERIAL TO MAINTAIN FIRE RATING OF SURFACE PENETRATED.
11. THE NEW ELECTRICAL EQUIPMENT AND APPARATUS SHALL BE COORDINATED AND CONNECTED INTO THE EXISTING SYSTEM AS REQUIRED. AUXILIARY SYSTEMS SHALL COMPLY, UNLESS OTHERWISE SPECIFIED.
12. THE EXISTING ELECTRICAL DEVICES, CONDUIT AND/OR EQUIPMENT THAT FOR ANY REASON OBSTRUCTS CONSTRUCTION SHALL BE RELOCATED.
13. WHEN INSTALLING EQUIPMENT IN THE EXISTING BUILDING, IT SHALL BE CONCEALED, EXCEPT WHERE APPROVAL FOR USE OF WIREMOLD IS RECEIVED FROM THE ARCHITECT.
14. ALL EXISTING ELECTRICAL EQUIPMENT IN PORTIONS OF THE BUILDING NOT BEING REMODELED SHALL BE LEFT IN WORKING CONDITIONS. RESTORE ANY CIRCUITS INTERRUPTED.
15. EXISTING RACEWAYS MAY BE USED WHERE POSSIBLE. CONTRACTOR SHALL INSURE INTEGRITY OF RE-USED RACEWAY. UNDERFLOOR RACEWAY SHALL NOT BE REUSED UNLESS ABSOLUTELY DRY.
16. ALL CIRCUITS, CONDUIT AND WIRE THAT ARE NOT USED IN THE REMODELING SHALL BE REMOVED BACK TO THE FIRST ACCESSIBLE JUNCTION BOX, WHERE IT SHALL BE TIED OFF, TAPED AND LABELED AS SPARE.
17. OBTAIN PERMISSION FROM THE COLLEGE BEFORE PENETRATING ANY CEILING, FLOOR, AND WALL SURFACES.
18. ANY AND ALL EQUIPMENT HAVING ELECTRICAL CONNECTIONS THAT REQUIRE DISCONNECTING AND RECONNECTION AT THE SAME OR ANOTHER LOCATION THROUGHOUT THE COURSE OF CONSTRUCTION SHALL BE INCLUDED AS PART OF THIS CONTRACT.
19. ALL ELECTRICAL EQUIPMENT REMOVED AND NOT RE-USED SHALL BE DISPOSED OF PROPERLY.

## LIGHT FIXTURE SCHEDULE

W/ AIRPLANE CABLE (4) PER LIGHT SEE ADD#2 PG-31A

SYLVANIA LAMPS ONLY FOR A1 & A2

| TYPE | MANUFACTURER | CATALOG NUMBER | MOUNTING | LAMPS |
|---|---|---|---|---|
| ◇2 A | SPI MCGRAW-EDISON | SDE-2601-277 | PENDENT @ 30' AFF | (2) MS400/C/HOR |
| B | DEVOE | RH-70-9 | RECESSED | (6) F40 RS/CW/WM |
| C | DAYBRITE | SG448-SRA20F-277 | RECESSED | (8) F40RS/WW/WM |
| D | PRESCOLITE | 1285-928 | RECESSED | (1) 150 R40 |
| F | DAYBRITE | SG242-SRS12D-277 | RECESSED | (2) F40RS/WW/WM |
| G | DAYBRITE | SG243-SRS12D-277 | RECESSED | (3) F40RS/WW/WM |
| H | DAYBRITE | SG244-SRS12D-277 | RECESSED | (4) F40RS/WW/WM |
| I | LITECONTROL | RD66N-1-4-RS-277 ADD#2 PG-31E | RECESSED | (1) F40RS/WW/WM |
| J | DAYBRITE | C240-277 | SURFACE | (2) F40RS/WW/WM |
| K | RAB | VXBRIOOP | WALL | (1) 100 A-19 |
| L | DAYBRITE | SF142-SRS12D-277 | RECESSED | (2) F40RS/WW/WM |
| M | LEVITON | 9875 | WALL | (1) 150 A19 |
| N | LITECONTROL | ADD#2 PG 31F W-AID-66N 28 RS/48RS | WALL +24' A.F.F. | (6) F40RS/CW/WM |
| X1 | LITHONIA | ES1G-277 | UNIVERSAL | INCLUDED |
| X2 | LITHONIA | ES2G-277 | UNIVERSAL | INCLUDED |
| O | LITECONTROL | ADD#2 PG-31E W-AID-66N-14RS/14RS | WALL | (2) F40RS/WW/WM |
| ◇2 A1 | SPI MCGRAW-EDISON | SDE-2601-277-QM-QM (IR) | PENDANT @ +30' AFF | (2) MS400/C/HOR (2) 150W QUARTZ |
| ◇2 A2 | SPI MCGRAW-EDISON | SDE-2601-277-QSO-QSO | PENDANT @ +30' AFF | (2) MS400/C/HOR (2) 150W QUARTZ |
| P | LITHONIA | LB440A-277 | SURFACE | (4) F40RS/WW/WM |
| ◇1 N1 | LITECONTROL | W-AID-66N-28RS | ◇5 | (2) F40RS/CW/WM |
| N2 | LITECONTROL | ADD#2 PG-31F W-AID-66N-14RS/24RS | ◇5 | (3) F40RS/CW/WM |
| Q | DAYBRITE | SF242-SRS12D-277 | RECESSED | (2) F40RS/WW/WM |
| R | DAYBRITE | SF244-SRS12D-277 | RECESSED | (4) F40RS/WW/WM |
| S | LITHONIA | SS10 | SURFACED | (2) 60/A19 |
| T | KURT VERSON | R7380-100MHS-277 | RECESSED | 1-M100/BU/BD |
| U | PRESCOLITE | HD10C03-277V | SURFACE | 1-H38AV-100/DX |
| V | STONCO | 5600E/LB100/4B W/DIOPE | GROUND | 1-300 PAR56/MFL |
| W | STERNER 2" TENSION W/STERNER DARK BRONZE | KT-S-15-R-1A-N-175M-277-C SSA-09-R-P-N-C ADD#2-G-31C | POLE | 1-H39KC-175/DX |
| X | BEGA | 2576M50 | STEEL TUBE | 1-H45/46DL-50/DX |
| Y | STERNER | KT-IWB-15-R-100M-277-C FINISH DARK BRONZE | WALL | 1-H38J4-100/DX |
| Z | PRESCOLITE | MBX75-HL85-277 | RECESSED | 1-H43AV-75/DX |
| AA | PRESCOLITE | 1059-732 | RECESSED | 1-300M/IF ADD#2 PG-31B |
| BB | SPAULDING W/SPAULDING | CVII-400—M-FG 30-SQA-614-ANDBZ | POLE | 1-H400/C/U |
| ◇4 N4 | LITECONTROL | ADD#2 PG-31F W-AID-66N-14 RS | WALL +24' A.F.F. | (1) F40RS/CW/WM |
| CC | LAM | FW-904-80/80-WE | WALL +6' A.F.F. | (4) F40RS/WW/WM PER 8' SECTIONS |
| DD | LAM | FW-904-56/56-WE | WALL +6' A.F.F. | (4) F40RS/WW/WM PER 8' SECTIONS |
| EE | SPAULDING W/SPAULDING | (2) CVII-400-M-FG-30-SQA-614-ANDBZ | POLE | (2) M400/4U |
| FF | Mc PHILBEN | 5BP44-3 | BOLLARD | 1-H43AV-75/DX |

GYM FIXTURES FED W/ RUBBER COVERED CORD FOR CABLE HUNG FIXTURES

RECORD DOCUMENTS JUN 25 1990

THESE DOCUMENTS HAVE BEEN REVISED TO RECORD INFORMATION SUBMITTED BY THE CONTRACTOR, WHILE THEY ARE ASSUMED TO BE RELIABLE THE ARCHITECT DOES NOT GUARANTEE THEIR ACCURACY.

## ELECTRICAL SYMBOL SCHEDULE

1. SEE FIXTURE SCHEDULE FOR TYPE, MOUNTING AND WATTAGE.
2. WIRED FROM ADJACENT OUTLET BOX.
3. REFER TO DRAWINGS FOR DIRECTIONAL ARROWS.
4. SUBSCRIPT KEYS SWITCH TO FIXTURES CONTROLLED.
5. NEMA TYPE 'ND' NON-FUSED UNLESS NOTED 'F' (FUSED). USE 'HD' 480 V.
6. SEE SPECS FOR SIZE AND/OR TYPE.
7. PROVIDE H.O.A. AND S.S. PUSHBOTTONS AS REQUIRED.
8. DOUBLE ARROWS DENOTE A DOUBLE FACE UNIT.
9. COORDINATE WITH SHOP DRAWINGS.

STANDARD MOUNTING HEIGHT UNLESS OTHERWISE NOTED ON PLANS

| SYMBOL | DESCRIPTION | MOUNTING HEIGHT | NOTES |
|---|---|---|---|
| | ONE CICUIT, TWO WIRE HOME RUN TO PANEL | | |
| | 2 CIRCUIT, 3 WIRE, COMMON NEUTRAL HOME RUN | | |
| | 3 CIRCUIT, 4 WIRE, COMMON NEUTRAL HOME RUN | | |
| | CONDUIT RUN CONCEALED IN WALL OR CEILING | | |
| | CONDUIT RUN CONCEALED IN FLOOR OR GROUND | | |
| | CONDUIT UP | | |
| | CONDUIT DOWN | | |
| | CEILING LIGHT OUTLET | CEILING | 1. |
| | WALL LIGHT OUTLET | AS NOTED | 1. |
| | RECESSED INCANDESCENT OR H.I.D. FIXTURE | CEILING | 1.2. |
| | FLUORESCENT LIGHT FIXTURE | AS NOTED | 1.2. |
| | FLUORESCENT EGRESS LIGHT FIXTURE | AS NOTED | UNSWITCHED |
| | INDIRECT HID FIXTURE (2-400W MH) | +30' AFF | |
| | INDIRECT HID FIXTURE (2-400W MH AND 2-150 QUARTZ) | +30' AFF | |
| | INDIRECT HID FIXTURE (2-400W MH, 2-150 QUARTZ, AND 1-QUARTZ AUX. LAMP RESTRIKE RELAY) | +30' AFF | |
| | CEILING MOUNTED EXIT LIGHT | CEILING | 1.3.8. |
| | WALL MOUNTED EXIT LIGHT | AS NOTED | 1.3.8. |
| $ | SINGLE POLE SWITCH | +4'-0" TO CENTER OF BOX | |
| $a | SINGLE POLE SWITCH | +4'-0" | 4. |
| $3 | THREE-WAY SWITCH | +4'-0" | |
| $4 | FOUR-WAY SWITCH | +4'-0" | |
| $K | KEY OPERATED SWITCH | +4'-0" | |
| $T | THERMAL OVERLOAD SWITCH WITH PILOT LIGHT | +4'-0" | SQ.D 2510 |
| | DUPLEX RECEPTACLE | +16" TO BOTTOM OF BOX | |
| A | DUPLEX RECEPTACLE | | 9. |
| WP | WEATHERPROOF RECEPTACLE | +24" | SIERRA WPD-8 |
| IG | ISOLATED GROUND RECEPTACLE | +16" | |
| GFI | GROUND FAULT INTERUPTER DUPLEX RECEPTACLE | | 9. |
| | FOURPLEX RECEPTACLE | | 9. |
| | FLOOR OUTLET WITH 20A DEVICE | FLOOR | SEE DETAIL 10/E15 |
| | SPECIAL PURPOSE OUTLET 'F' IN FLOOR | +24" OR AS NOTED | WITH CAP |
| | TELEVISION OUTLET | AS NOTED | 4" SQUARE J-BOX |
| | DATA OUTLET 'F' IN FLOOR | +16" OR AS NOTED | |
| | TELEPHONE OUTLET | +16" | |
| | JUNCTION BOX ('F' IN FLOOR) | AS NOTED | |
| | MOTOR OUTLET | TO SUIT EQUIP. | |
| Ⓟ | PHOTO-ELECTRIC CONTROL | AS NOTED | TORK 2000A |
| T | TIMED SWITCH | +5'-0" | |
| | PUSHBUTTON | +4'-6" | |
| | NON-FUSED DISCONNECT SWITCH | +5'-0" | SQ.D GEN. DUTY,5 |
| F | FUSED DISCONNECT SWITCH | +5'-0" | SQ.D GEN. DUTY,5 |
| | MAGNETIC STARTER / BREAKER COMBINATION | +5'-0" | SQ.D 8539,7 |
| | PANEL BOARD | TOP AT +5'-0" | |
| | MAIN DISTRIBUTION PANEL | | |
| | TELEPHONE TERMINAL BOARD | | |
| | CLOCK OUTLET | +7'-6" | 8. |
| F | FIRE ALARM MANUAL STATION | | |
| | CABLE TRAY | | |
| H | FIRE ALARM SIGNAL HORN | +7'-6" | |
| S | SMOKE DETECTOR | CEILING | |
| D | DUCT SMOKE DETECTOR | | MTD. IN DUCT |
| H | HEAT DETECTOR | CEILING | 6. |
| D | DOOR HOLDER | AS NOTED | |
| DS | SECURITY SYSTEM RECESSED MAGNETIC DOOR SWITCH | | 9. |
| | PUSHBUTTON | +4'-6" | |
| | SOUND SYSTEM SPEAKER OUTLET | +8'-0" OR AS NOTED | |
| M | MICROPHONE OUTLET | +16" | |
| M | MICROPHONE FLOOR OUTLET | FLOOR | |
| | SOUND EQUIPMENT CABINET | | CIRCUIT TO 120V |
| 2 M | MICROPHONE OUTLETS (2) | | |
| A | LIGHT FIXTURE (LETTER DESIGNATES TYPE) | | |
| EQ 34 | EQUIPMENT NUMBER | | |
| | CLOSED CIRCUIT T.V. CAMERA OUTLET | +20' | |
| | VARIABLE INTENSITY SWITCH | +4'-0" | |
| | BUSDUCT | | |
| FS | FLOW SWITCH | | |
| TS | TAMPER SWITCH | | |
| PFCC | POWER FACTOR CORRECTION CAPACITOR. | | |

## INDEX TO ELECTRICAL DRAWINGS


E-1 SCHEDULES, NOTES
E-2 SITE PLAN
E-3 LIGHTING PLAN MAIN LEVEL NORTH
E-4 LIGHTING PLAN MAIN LEVEL SOUTH
E-5 LIGHTING PLAN MAIN LEVEL LINK
E-6 LIGHTING PLAN MID LEVEL LINK
E-7 LIGHTING PLAN PLAZA LEVEL
E-8 POWER PLAN MAIN LEVEL NORTH
E-9 POWER PLAN MAIN LEVEL SOUTH
E-10 POWER PLAN MAIN LEVEL LINK
E-11 POWER PLAN MID LEVEL LINK
E-12 POWER PLAN PLAZA LEVEL
E-13 ELECTRICAL PLAN BALCONY LEVEL
E-14 ONE LINE DIAGRAM
E-15 DETAILS
E-16 PANEL SCHEDULES



0000TVE1
Weber State College, Physical Education Facility - RW 84-058
Schedules & Notes - 26749



REGISTERED PROFESSIONAL ENGINEER
ROBERT J. BECHERER
No. 4222
STATE OF UTAH

Becherer Nielson Associates
Consulting Engineers
146 Pierpont Avenue
Salt Lake City, Utah 84101
801 532-2196

JRA JONES/ RICHARDS & ASSOCIATES
ARCHITECTURE (801) 394-3033
PLANNING 533 26TH. STREET
CONSTRUCTION MANAGEMENT OGDEN, UTAH


REVISED: AS BUILTS 6-90

PROJECT NUMBER: 8403

DATE: 6-21-88

DRAWN BY: L. REMBER

PROJECT: PHYSICAL EDUCATION COMPLEX
WEBER STATE COLLEGE

SHEET TITLE: SCHEDULES & NOTES

SHEET NO. E-1

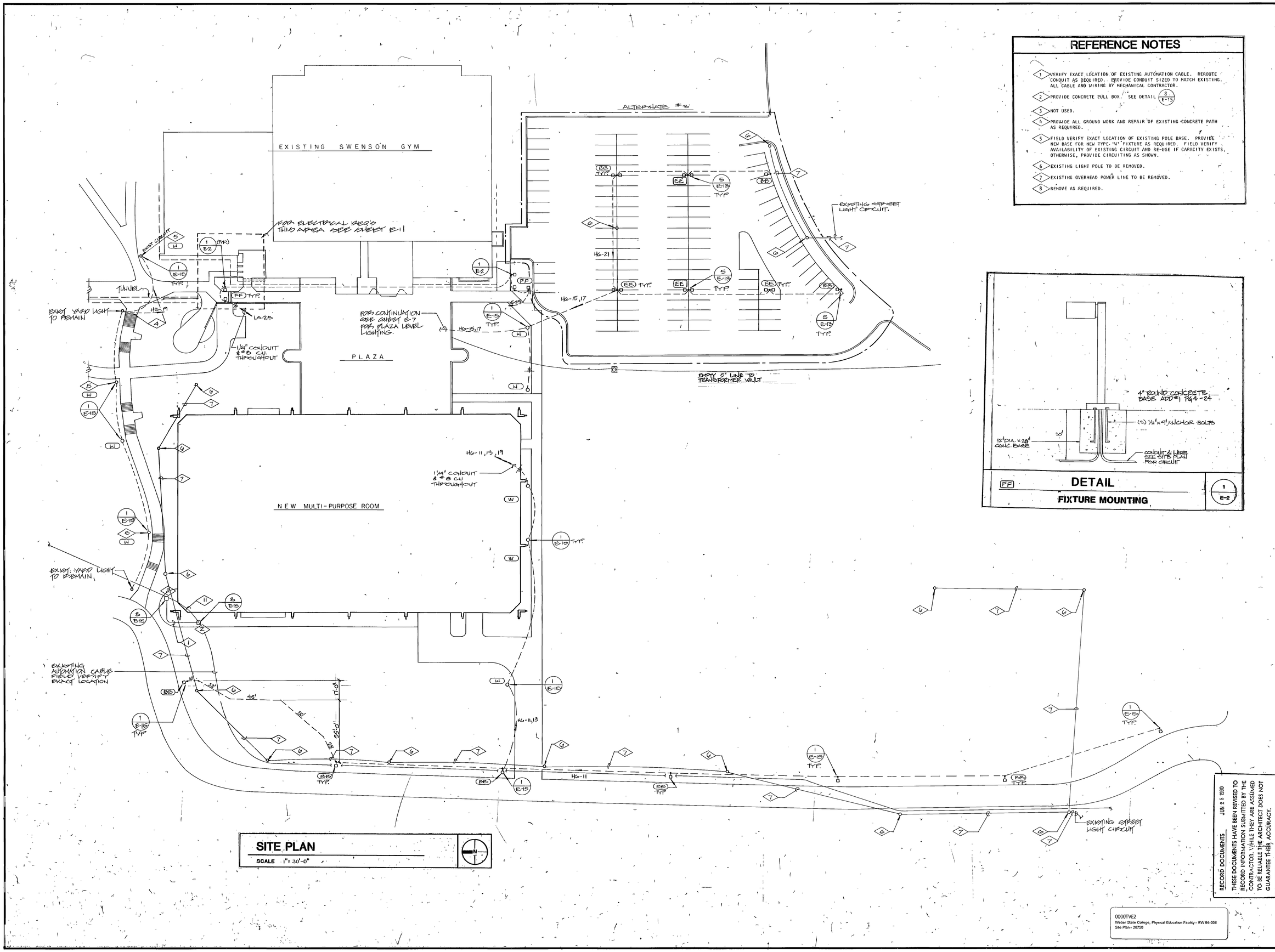


SITE PLAN
SCALE 1" = 30'-0"

## REFERENCE NOTES

1. VERIFY EXACT LOCATION OF EXISTING AUTOMATION CABLE. REROUTE CONDUIT AS REQUIRED. PROVIDE CONDUIT SIZED TO MATCH EXISTING. ALL CABLE AND WIRING BY MECHANICAL CONTRACTOR.
2. PROVIDE CONCRETE PULL BOX. SEE DETAIL 8/E-15
3. NOT USED.
4. PROVIDE ALL GROUND WORK AND REPAIR OF EXISTING CONCRETE PATH AS REQUIRED.
5. FIELD VERIFY EXACT LOCATION OF EXISTING POLE BASE. PROVIDE NEW BASE FOR NEW TYPE 'W' FIXTURE AS REQUIRED. FIELD VERIFY AVAILABILITY OF EXISTING CIRCUIT AND RE-USE IF CAPACITY EXISTS. OTHERWISE, PROVIDE CIRCUITING AS SHOWN.
6. EXISTING LIGHT POLE TO BE REMOVED.
7. EXISTING OVERHEAD POWER LINE TO BE REMOVED.
8. REMOVE AS REQUIRED.




FF DETAIL
FIXTURE MOUNTING
1 / E-2

RECORD DOCUMENTS JUN 25 1990
THESE DOCUMENTS HAVE BEEN REVISED TO RECORD INFORMATION SUBMITTED BY THE CONTRACTOR. WHILE THEY ARE ASSUMED TO BE RELIABLE THE ARCHITECT DOES NOT GUARANTEE THEIR ACCURACY.

0000TVE2
Weber State College, Physical Education Facility - RW 84-058
Site Plan - 26750


REGISTERED PROFESSIONAL ENGINEER ROBERT J. BECHERER No. 4222 STATE OF UTAH
Becheref Nielson Associates
Consulting Engineers
146 Pierpont Avenue
Salt Lake City, Utah 84101
801 532-2196



JONES/ RICHARDS & ASSOCIATES
ARCHITECTURE PLANNING CONSTRUCTION MANAGEMENT
(801) 394-5033 533 25TH STREET OGDEN, UTAH


REVISED: AS BUILTS 6-90
PROJECT NUMBER: 8403
DATE: 6-21-90
DRAWN BY: L. REMBER

PROJECT: PHYSICAL EDUCATION COMPLEX
WEBER STATE COLLEGE
SHEET TITLE: SITE PLAN

SHEET NO. E-2

## REFERENCE NOTES

1. CONNECT TO EMERGENCY QUARTZ LAMPS.
2. CONNECT FIXTURE TO CIRCUIT H1E-3
3. CONNECT ALL a NOTED FIXTURES TO CIRCUIT H1E-7, ALL b NOTED FIXTURES TO CIRCUITS H1E-1,5 AND ALL j NOTED FIXTURES TO CIRCUITS H2-8, 10, 12.
4. PROVIDE UNISTRUT CHANNEL AS REQUIRED TO SPAN BETWEEN JOISTS FOR MOUNTING OF INDIRECT METAL HALIDE FIXTURES.
5. DO NOT SCALE DRAWING. FOR EXACT LOCATION OF TYPE 'A1', 'A1', & 'A2' LIGHT FIXTURES, REFER TO DIMENSIONS AS SHOWN.
6. PROVIDE 3/4" CONDUIT WITH 3#12 TO GUTTER EXTENSION OF PANEL 'H5'. SEE DETAIL 1/E-1

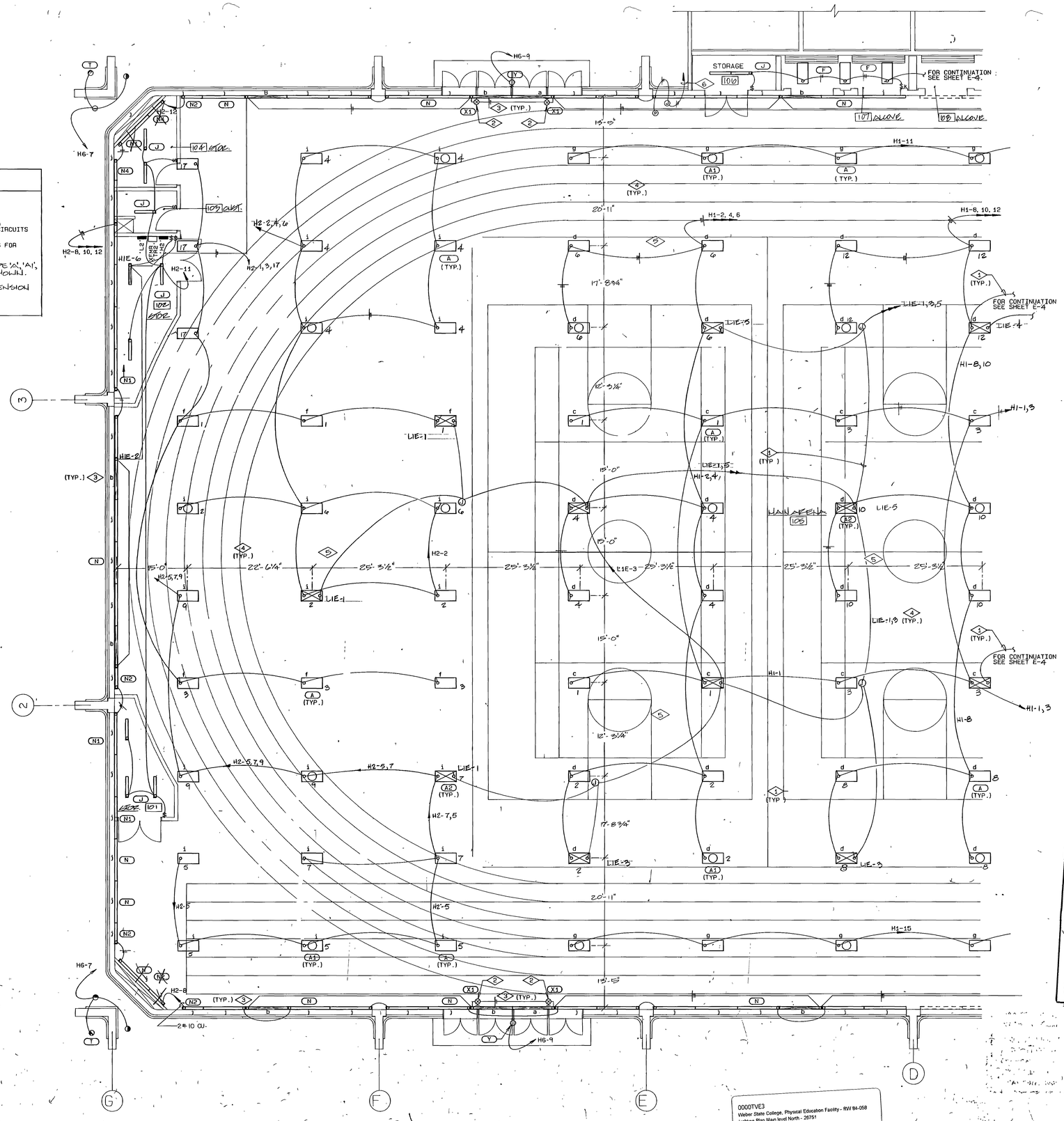


## LIGHTING PLAN

SCALE 1/8"=1'-0" MAIN LEVEL - NORTH

RECORD DOCUMENTS JUN 20 1990

THESE DOCUMENTS HAVE BEEN REVISED TO RECORD INFORMATION SUBMITTED BY THE CONTRACTOR, WHILE THEY ARE ASSUMED TO BE RELIABLE THE ARCHITECT DOES NOT GUARANTEE THEIR ACCURACY.

0000TVE3
Weber State College, Physical Education Facility - RW 84-058
Lighting Plan Main level North - 26751

REGISTERED PROFESSIONAL ENGINEER ROBERT J. BECHERER No. 4222 STATE OF UTAH


Becherer Nielson Associates
Consulting Engineers
146 Pierpont Avenue
Salt Lake City, Utah 84101
801 532 2195

jra JONES/ RICHARDS & ASSOCIATES
ARCHITECTURE (801) 394-3033
PLANNING 533 26TH STREET
CONSTRUCTION MANAGEMENT OGDEN, UTAH


REVISED: AS BUILT 6-90

PROJECT NUMBER: 8403

DATE: 9-21-88

DRAWN BY: L. REUBER

PROJECT: PHYSICAL EDUCATION COMPLEX
WEBER STATE COLLEGE

SHEET TITLE: LIGHTING PLAN
MAIN LEVEL - NORTH

SHEET NO. E-3

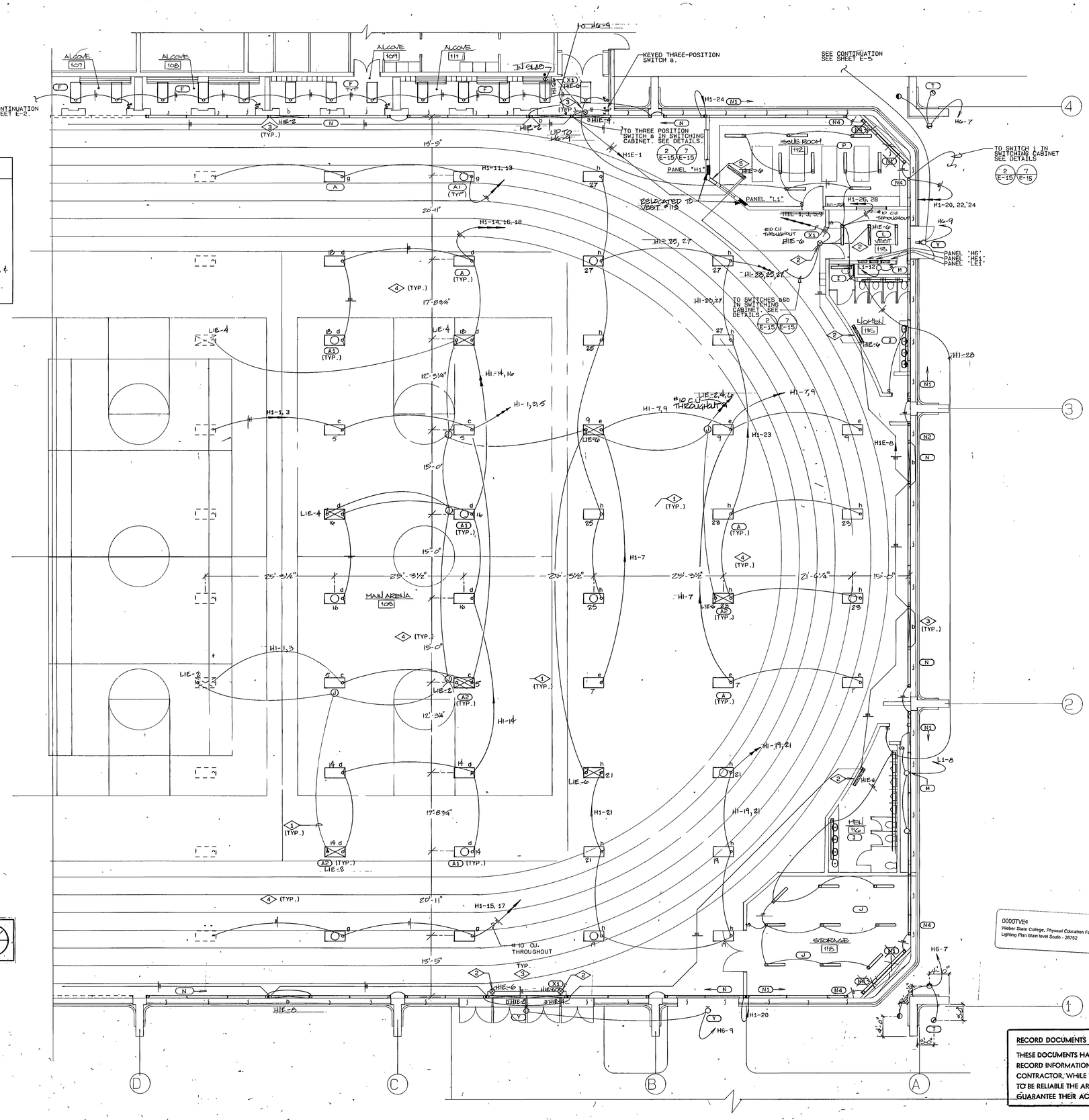


# REFERENCE NOTES

1. CONNECT TO EMERGENCY QUARTZ LAMPS.
2. CONNECT EMERGENCY FIXTURE TO CIRCUIT H1E-3.
3. CONNECT ALL a NOTED FIXTURES TO CIRCUIT H1E-9. ALL b NOTED FIXTURES TO CIRCUITS H1E-1,5 AND ALL j NOTED FIXTURES TO CIRCUITS H1-20, 22, 24.
4. PROVIDE UNISTRUT CHANNEL AS REQUIRED TO SPAN BETWEEN JOISTS FOR MOUNTING OF INDIRECT METAL HALIDE FIXTURES.
5. SWITCHING CABINET (INCLUDES CONTROLS FOR SWITCHING OF MAIN SPORTS AREA LIGHTS, MOTORIZED NETTING AND BACKBOARDS) SEE DETAIL 7/E-15 SWITCHING CABINET TO BE FLUSH MOUNTED.
6. DO NOT SCALE DRAWING FOR EXACT LOCATION OF TYPE 'A', 'A1', & 'A2' LIGHT FIXTURES REFER TO DIMENSIONS AS SHOWN.
7. CONNECT EMERGENCY CIRCUIT TO 2 INBOARD LAMPS IN FIXTURE. CONNECT TO CIRCUIT H1E-3.

## LIGHTING PLAN

SCALE 1/8"= 1'-0" MAIN LEVEL - SOUTH

0000TVE4
Weber State College, Physical Education Facility - RW 84-058
Lighting Plan Main level South - 26752

RECORD DOCUMENTS JUN 2 2 1990

THESE DOCUMENTS HAVE BEEN REVISED TO RECORD INFORMATION SUBMITTED BY THE CONTRACTOR, WHILE THEY ARE ASSUMED TO BE RELIABLE THE ARCHITECT DOES NOT GUARANTEE THEIR ACCURACY.

REGISTERED PROFESSIONAL ENGINEER ROBERT J. BECHERER 4004222 STATE OF UTAH


Becherer Nielson Associates
Consulting Engineers
146 Pierpont Avenue
Salt Lake City, Utah 84101
801 532 2193



JONES/ RICHARDS & ASSOCIATES
ARCHITECTURE (801) 394-3033
PLANNING CONSTRUCTION MANAGEMENT
533 25TH STREET OGDEN, UTAH


REVISED: AS BUILTS 6-90

PROJECT NUMBER: 8403
DATE: 9-21-88
DRAWN BY: L. REMBER

PROJECT: PHYSICAL EDUCATION COMPLEX
WEBER STATE COLLEGE

SHEET TITLE: LIGHTING PLAN
MAIN LEVEL - SOUTH

SHEET NO. E-4

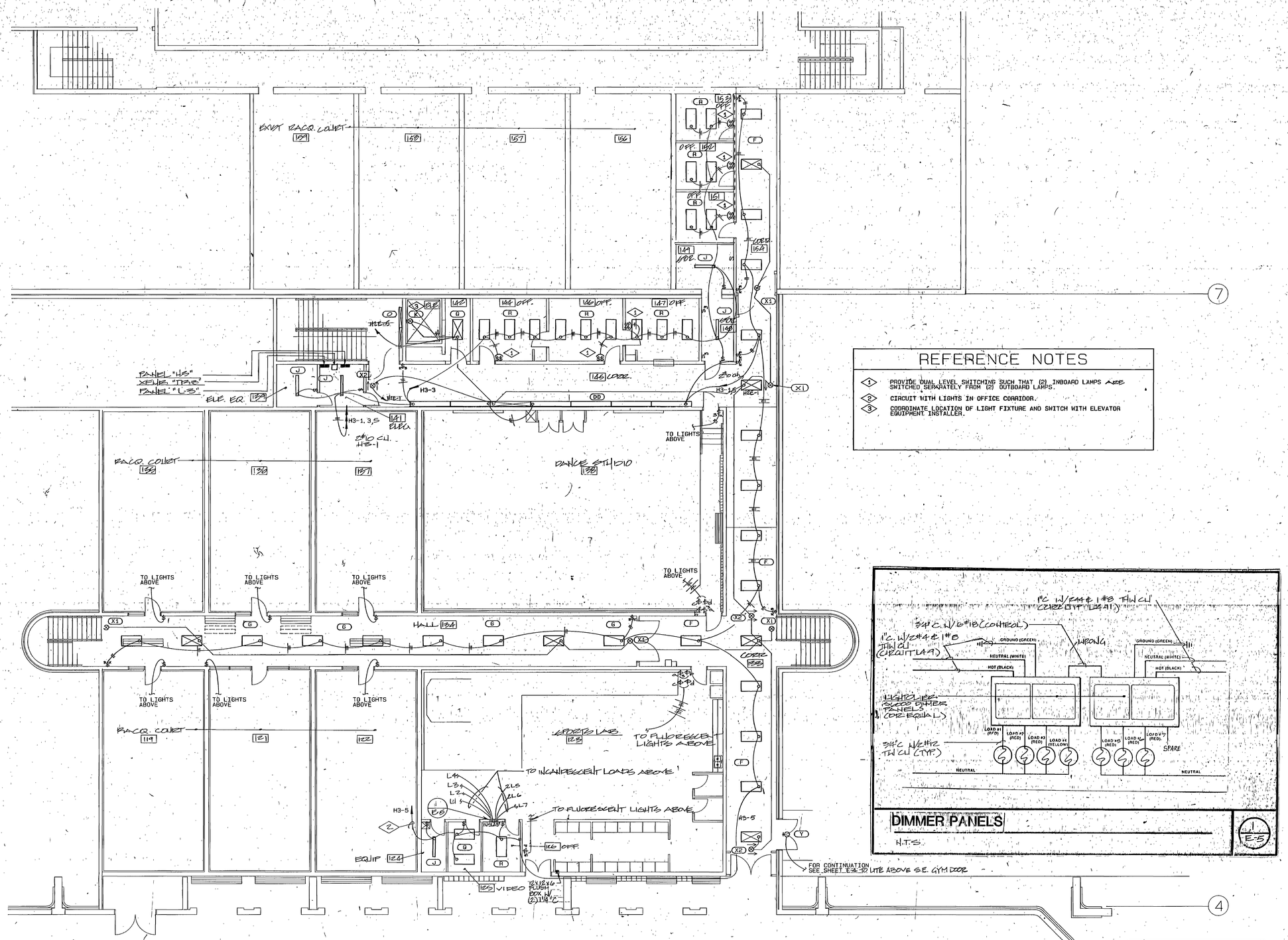


## REFERENCE NOTES

1. PROVIDE DUAL LEVEL SWITCHING SUCH THAT (2) INBOARD LAMPS ARE SWITCHED SEPARATELY FROM (2) OUTBOARD LAMPS.
2. CIRCUIT WITH LIGHTS IN OFFICE CORRIDOR.
3. COORDINATE LOCATION OF LIGHT FIXTURE AND SWITCH WITH ELEVATOR EQUIPMENT INSTALLER.

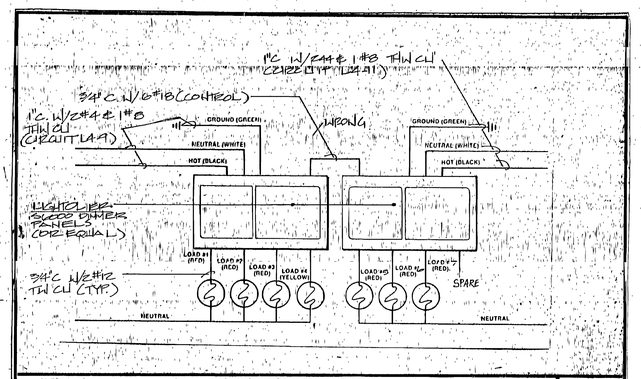


## DIMMER PANELS

N.T.S.

1 E-5

## LIGHTING PLAN

SCALE 1/0"=1'-0" | MAIN LEVEL - LINK

0000TVES
Weber State College, Physical Education Facility - RW 84-058
Lighting Plan Main level Link - 26753

RECORD DOCUMENTS JUN 29 1990

THESE DOCUMENTS HAVE BEEN REVISED TO RECORD INFORMATION SUBMITTED BY THE CONTRACTOR, WHILE THEY ARE ASSUMED TO BE RELIABLE THE ARCHITECT DOES NOT GUARANTEE THEIR ACCURACY.

REGISTERED PROFESSIONAL ENGINEER ROBERT J. BECHERER No. 222 STATE OF UTAH

Becherer Nielson Associates
Consulting Engineers
146 Pierpont Avenue
Salt Lake City, Utah 84101
801 532-2196

jra JONES/ RICHARDS & ASSOCIATES
ARCHITECTURE (801) 394-3033
PLANNING 533 26TH STREET
CONSTRUCTION MANAGEMENT OGDEN, UTAH

REVISED: AS BUILTS 6-90

PROJECT NUMBER: 8403
DATE: 6-21-88
DRAWN BY: L. REMBER

PROJECT: PHYSICAL EDUCATION COMPLEX
WEBER STATE COLLEGE

SHEET TITLE: LIGHTING PLAN
MAIN LEVEL - LINK

SHEET NO. E-5

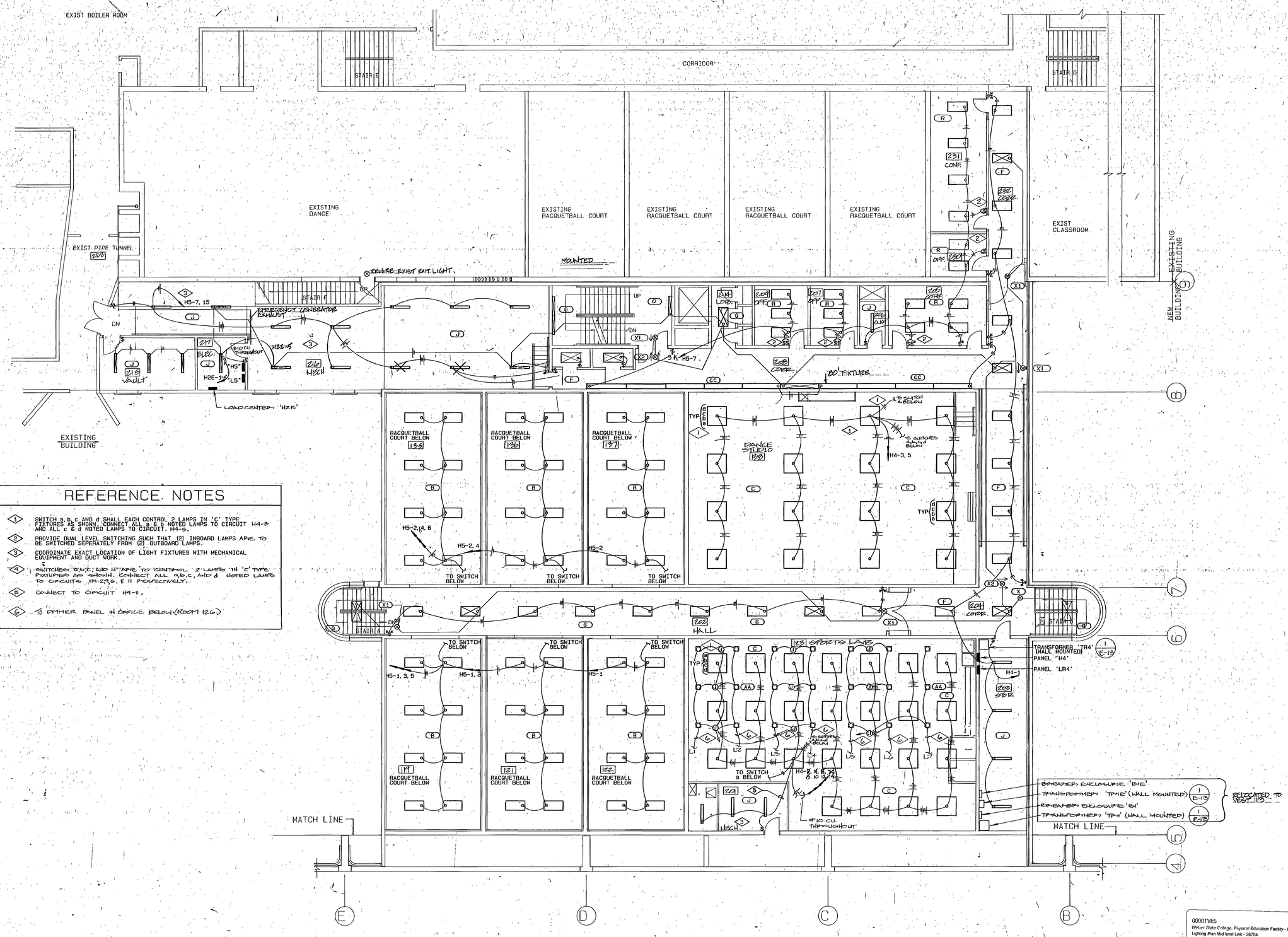


## REFERENCE NOTES

1. SWITCH a, b, c AND d SHALL EACH CONTROL 2 LAMPS IN 'C' TYPE FIXTURES AS SHOWN. CONNECT ALL a & b NOTED LAMPS TO CIRCUIT H4-3 AND ALL c & d NOTED LAMPS TO CIRCUIT H4-5.
2. PROVIDE DUAL LEVEL SWITCHING SUCH THAT (2) INBOARD LAMPS ARE TO BE SWITCHED SEPERATELY FROM (2) OUTBOARD LAMPS.
3. COORDINATE EXACT LOCATION OF LIGHT FIXTURES WITH MECHANICAL EQUIPMENT AND DUCT WORK.
4. SWITCHES a, b, c, AND d ARE TO CONTROL 2 LAMPS IN 'C' TYPE FIXTURES AS SHOWN. CONNECT ALL a, b, c, AND d NOTED LAMPS TO CIRCUITS H4-2, 4, & 11 RESPECTIVELY.
5. CONNECT TO CIRCUIT H4-11.
6. TO DIMMER PANEL IN OFFICE BELOW (ROOM 126)

## LIGHTING PLAN

SCALE 1/8" = 1'-0" | MID LEVEL - LINK

0000TVE6
Weber State College, Physical Education Facility - RW 84-058
Lighting Plan Mid level Link - 28754

RECORD DOCUMENTS JUN 2 9 1990

THESE DOCUMENTS HAVE BEEN REVISED TO RECORD INFORMATION SUBMITTED BY THE CONTRACTOR, WHILE THEY ARE ASSUMED TO BE RELIABLE THE ARCHITECT DOES NOT GUARANTEE THEIR ACCURACY.

REGISTERED PROFESSIONAL ENGINEER — STATE OF UTAH — RICHARD W. NORDHEM — No. 7222


Becherer Nielson Associates
Consulting Engineers
146 Pierpont Avenue
Salt Lake City, Utah 84101
801 532 2195

JONES/ RICHARDS & ASSOCIATES
ARCHITECTURE (801) 394-3033
PLANNING CONSTRUCTION MANAGEMENT
533 26TH STREET OGDEN, UTAH


REVISED: As Builts 6-90

PROJECT NUMBER: 84103
DATE: 5-21-89
DRAWN BY: L. REMBER

PROJECT: PHYSICAL EDUCATION COMPLEX
WEBER STATE COLLEGE

SHEET TITLE: LIGHTING PLAN
MID LEVEL - LINK

SHEET NO. E-6

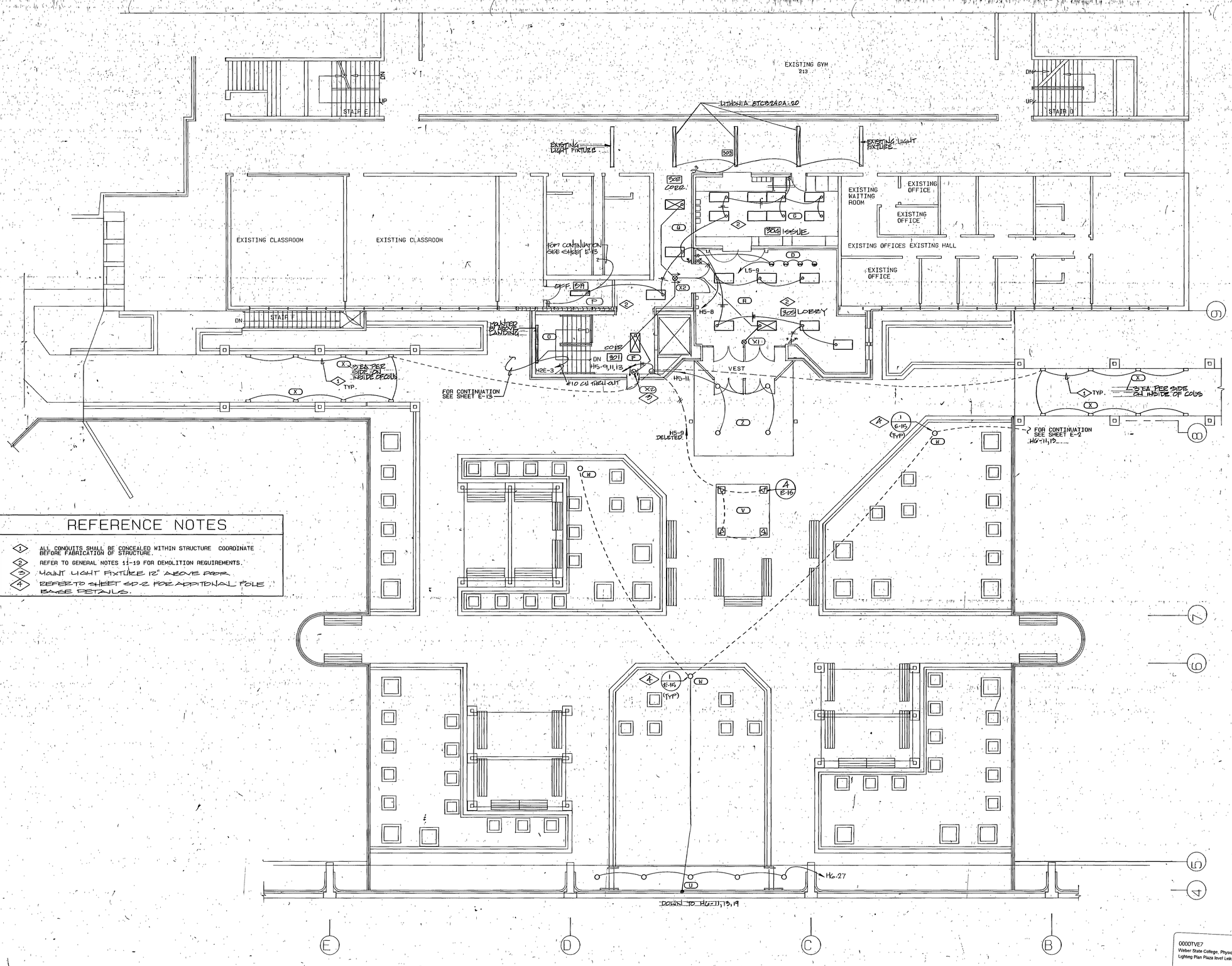


## REFERENCE NOTES

1. ALL CONDUITS SHALL BE CONCEALED WITHIN STRUCTURE COORDINATE BEFORE FABRICATION OF STRUCTURE.
2. REFER TO GENERAL NOTES 11-19 FOR DEMOLITION REQUIREMENTS.
3. MOUNT LIGHT FIXTURE 12" ABOVE DOOR.
4. REFER TO SHEET SD-2 FOR ADDITONAL POLE BASE DETAILS.

## LIGHTING PLAN

SCALE 1/0"= 1'-0" PLAZA LEVEL

0000TVE7
Weber State College, Physical Education Facility - RW 84-058
Lighting Plan Plaza level Link - 28755

RECORD DOCUMENTS JUN 2 9 1990

THESE DOCUMENTS HAVE BEEN REVISED TO RECORD INFORMATION SUBMITTED BY THE CONTRACTOR, WHILE THEY ARE ASSUMED TO BE RELIABLE THE ARCHITECT DOES NOT GUARANTEE THEIR ACCURACY.

REGISTERED PROFESSIONAL ENGINEER
DOBLE J. BECHERER
No. 4222
STATE OF UTAH

Becherer Nielson Associates
Consulting Engineers
146 Pierpont Avenue
Salt Lake City, Utah 84101
801 532-2196

jra JONES/ RICHARDS & ASSOCIATES
ARCHITECTURE (801) 394-3033
PLANNING 533 26TH STREET
CONSTRUCTION MANAGEMENT OGDEN, UTAH

REVISED: AS BUILTS 6-90

PROJECT NUMBER: 8403
DATE: 3-21-88
DRAWN BY: L. REMBER

PROJECT: PHYSICAL EDUCATION COMPLEX
WEBER STATE COLLEGE

SHEET TITLE: LIGHTING PLAN
PLAZA LEVEL - LINK

SHEET NO. E-7

## REFERENCE NOTES

1. PROVIDE 4" BOX FOR RECEPTACLE TO BE FURNISHED BY EQUIPMENT MANUFACTURER. VERIFY ALL REQUIREMENTS AND EXACT LOCATION OF BACKBOARD MOTOR WITH EQUIPMENT MANUFACTURER.
2. PROVIDE 4" SQ. BOX WITH 20A, 4 PRONG, TWIST-LOCK RECEPTACLE. VERIFY ALL REQUIREMENTS AND EXACT LOCATION OF NET MOTOR WITH EQUIPMENT MANUFACTURER.
3. MOUNT MAGNETIC STARTER/BREAKER COMBINATION SWITCH SUCH THAT TOP OF ENCLOSURE IS 6'-6" A.F.F..
4. MOUNT POWER FACTOR CORRECTION CAPACITORS ABOVE SWITCH.
5. ALL TELEPHONE CONDUITS IN MULTIPURPOSE AREA TO BE SENT TO TELEPHONE BOARD IN SOTRAGE ROOM 106.
6. EXTEND EMPTY 2" CONDUIT WITH PULL WIRE TO TELEPHONE BOARD IN ELECTRICAL ROOM 217.
7. PROVIDE FLOOR BOX WITH BLANK PUSH MOUNTED COVER PLATE EXTEND EMPTY 3/4" CONDUIT WITH PULL WIRE TO PANEL 'L2'.

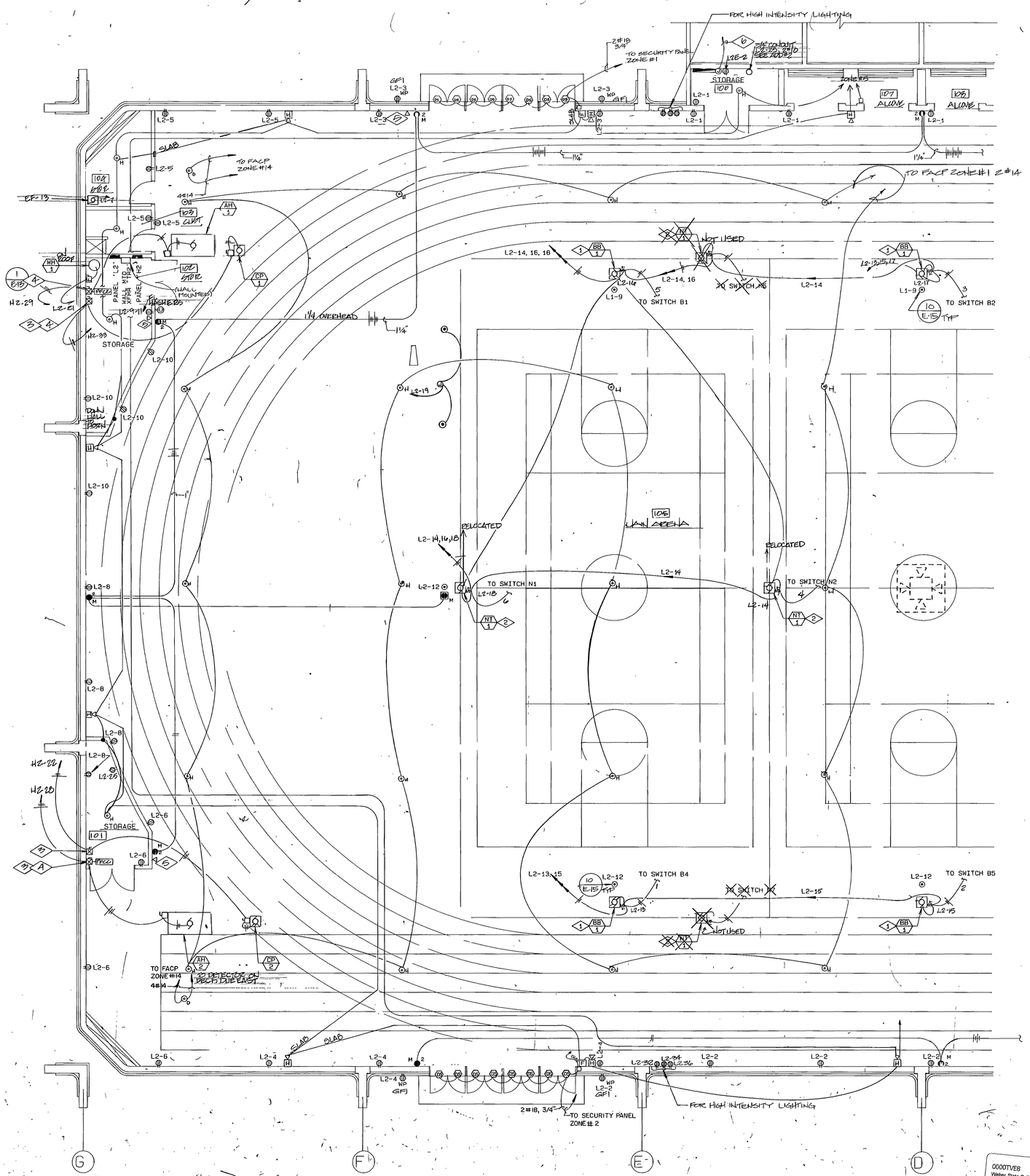


## POWER PLAN

SCALE 1/8"=1'-0"

MAIN LEVEL - NORTH

0000TVE8
Weber State College, Physical Education Facility - RW 84-058
Power Plan Main Level North - 26756

REGISTERED PROFESSIONAL ENGINEER
ROBERT J. BECHERER
No. 4222
STATE OF UTAH

Becherer Nielson Associates
Consulting Engineers
146 Pierpont Avenue
Salt Lake City, Utah 84101
801 532-2196

jra JONES/ RICHARDS & ASSOCIATES
ARCHITECTURE (801) 394-3033
PLANNING 533 26TH STREET
CONSTRUCTION MANAGEMENT OGDEN, UTAH

REVISED: AS BUILT 6-90

PROJECT NUMBER: 8403
DATE: 3-21-88
DRAWN BY: L. REMBER

PROJECT: PHYSICAL EDUCATION COMPLEX
WEBER STATE COLLEGE

SHEET TITLE: POWER PLAN
MAIN LEVEL-NORTH

SHEET NO. E-8

## REFERENCE NOTES

1. PROVIDE 4" SQ. BOX FOR RECEPTACLE TO BE FURNISHED BY EQUIPMENT MANUFACTURER. VERIFY ALL REQUIREMENTS AND EXACT LOCATION OF BACKBOARD MOTOR WITH EQUIPMENT MANUFACTURER.
2. PROVIDE 4" SQ. BOX WITH 20A, 4 PRONG, TWIST-LOCK RECEPTACLE. VERIFY ALL REQUIREMENTS AND EXACT LOCATION OF NET MOTOR WITH EQUIPMENT MANUFACTURER.
3. SWITCHING CABINET (INCLUDES CONTROLS FOR SWITCHING OF MAIN ARENA LIGHTS, MOTORIZED NETTING AND BACKBOARDS. TO BE FLUSH MOUNTED
4. PROVIDE EMPTY 3/4" CONDUIT WITH PULL WIRE TO DATA CABLE IN EXISTING PIPE TUNNEL.
5. PROVIDE DOOR HOLDERS FOR ISSUE WINDOW DOOR. PROVIDE ADDITIONAL CONTROL SUCH THAT DOOR HOLDERS CAN BE DEACTIVATED BY PUSHBOTTON AS WELL AS BY SIGNAL FROM SMOKE DETECTORS.
6. NOT USED.
7. PROVIDE TWO CONCENTRIC SQUARES OF 3" PIPE OR CHANNEL, 3' X 3' AND 16' X 16'. CENTER SMALLER SQUARE IN LARGER SQUARE ON SAME PLANE. REFER TO STRUCTURAL DRAWINGS FOR MOUNTING DETAIL. MOUNT SPEAKERS ON CABLE ATTACHED TO SQUARES.
8. PROVIDE 12" X 12" X 4" JUNCTION BOX MOUNTED AT +16" A.F.F. FOR SOUND CABINET INSTALLER.
9. MOUNT MAGNETIC STARTER/BREAKER COMBINATION SWITCH SUCH THAT TOP OF ENCLOSURE IS 6'-6" A.F.F.
10. MOUNT POWER FACTOR CORRECTION CAPACITORS ABOVE SWITCH.
11. PROVIDE HUBBELL 5252, 20A SURGE SUPPRESION RECEPTACLE (OR EQUAL) FOR FIRST RECEPTACLE IN CIRCUIT.
12. PROVIDE 1 #12 GREEN GROUND WIRE BACK TO PANEL FOR COMPUTER CIRCUITS.
13. ALL TELEPHONE CONDUITS TO BE SENT TO TELEPHONE BOARD IN STORAGE ROOM 106.

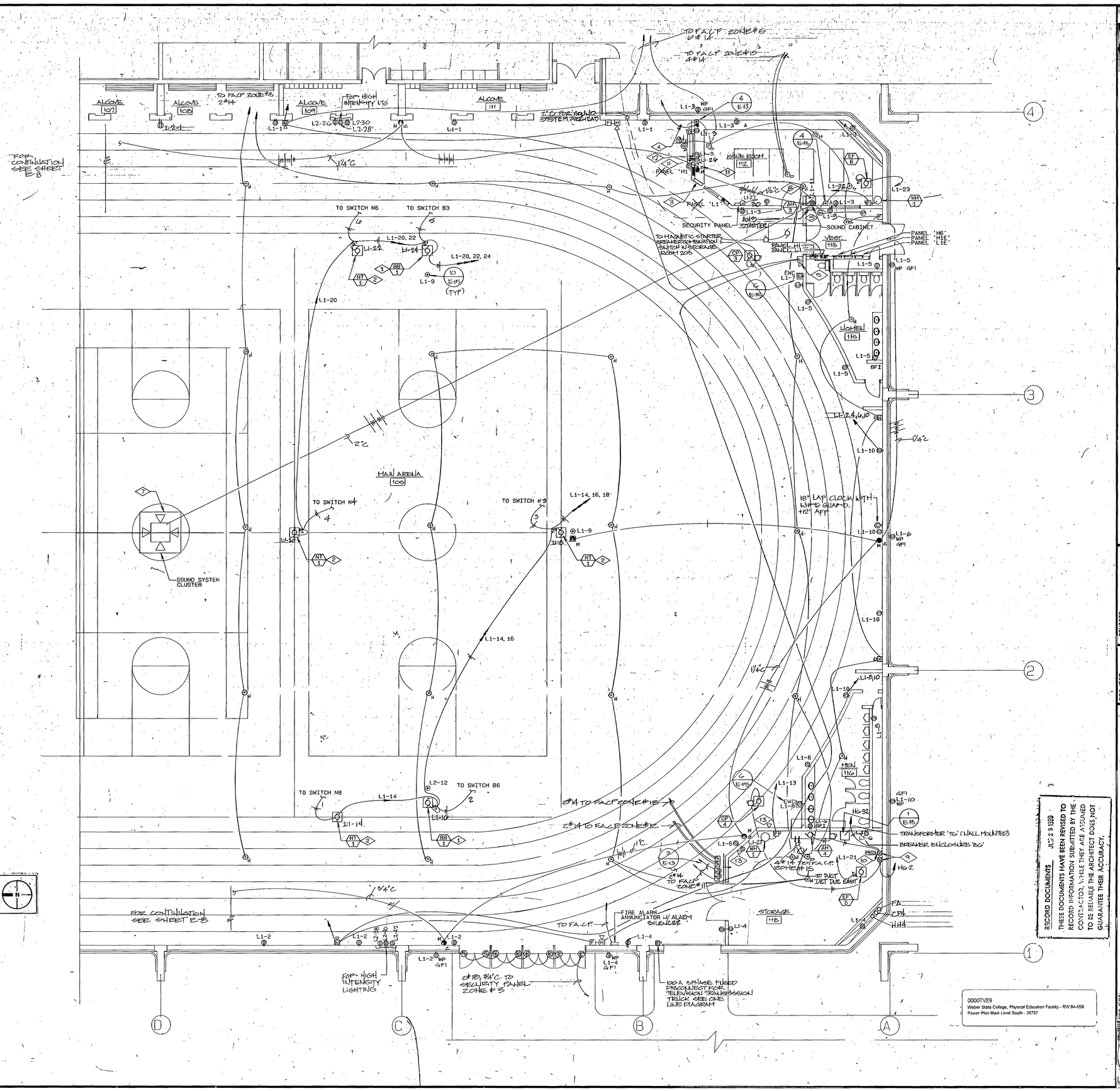


## POWER PLAN

SCALE 1/8" = 1'-0" MAIN LEVEL - SOUTH

REGISTERED PROFESSIONAL ENGINEER ROBERT L. BETHERS 155 STATE OF UTAH

RECORD DOCUMENTS AS OF 2 9 1990

THESE DOCUMENTS HAVE BEEN REVISED TO RECORD INFORMATION SUBMITTED BY THE CONTRACTOR, WHILE THEY ARE ASSUMED TO BE RELIABLE THE ARCHITECT DOES NOT GUARANTEE THEIR ACCURACY.

jra JONES/ RICHARDS & ASSOCIATES
ARCHITECTURE (801) 394-3039
PLANNING 533 26TH STREET
CONSTRUCTION MANAGEMENT OGDEN, UTAH

REVISED: AS BUILTS

PROJECT NUMBER: 8403

DATE: 2-21-83

DRAWN BY: L. REMBER

PROJECT: PHYSICAL EDUCATION COMPLEX
WEBER STATE COLLEGE

SHEET TITLE: POWER PLAN
MAIN LEVEL - SOUTH

SHEET NO. E-9

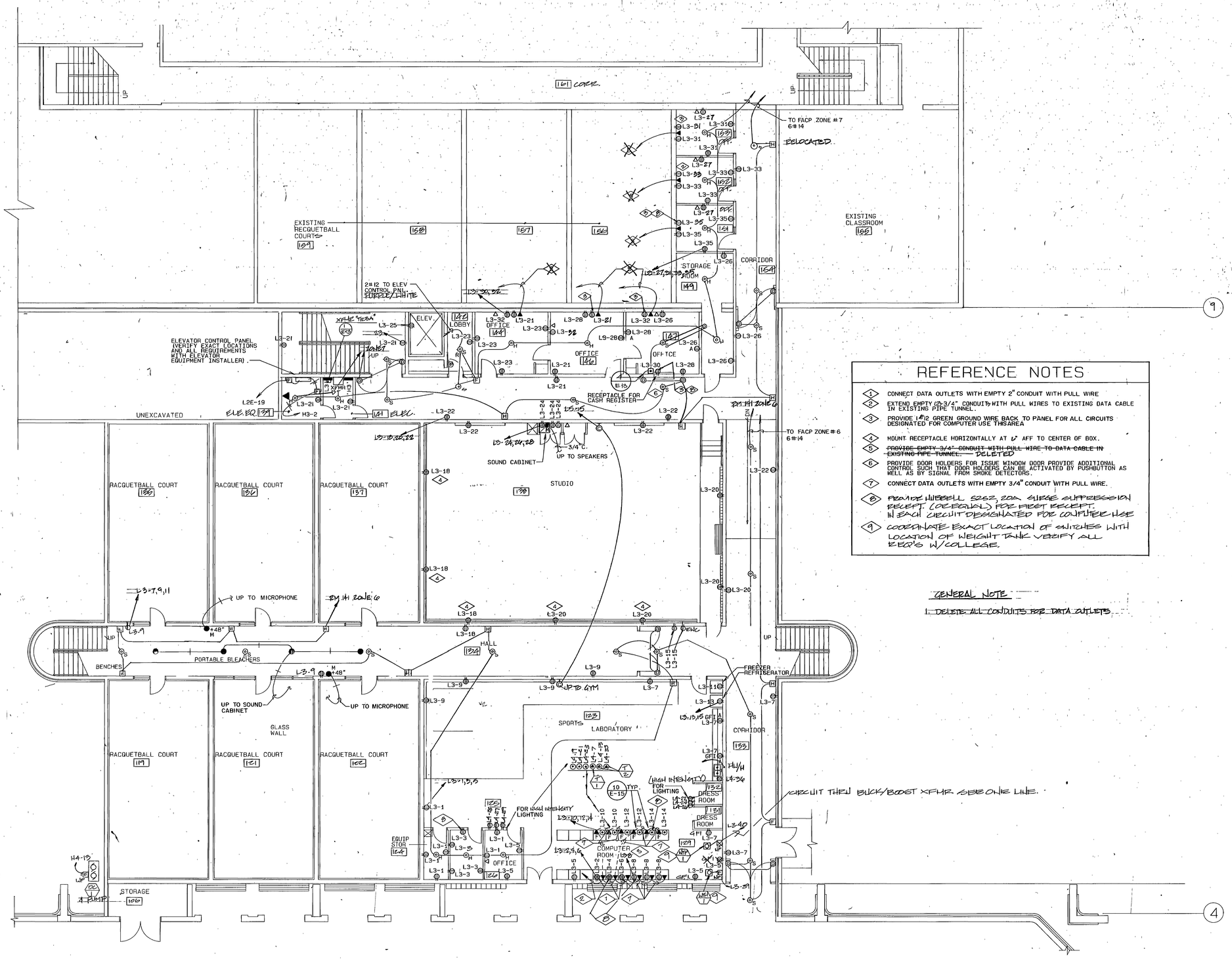


## REFERENCE NOTES

1. CONNECT DATA OUTLETS WITH EMPTY 2" CONDUIT WITH PULL WIRE
2. EXTEND EMPTY (2)-3/4" CONDUITS WITH PULL WIRES TO EXISTING DATA CABLE IN EXISTING PIPE TUNNEL.
3. PROVIDE 1#12 GREEN GROUND WIRE BACK TO PANEL FOR ALL CIRCUITS DESIGNATED FOR COMPUTER USE THIS AREA
4. MOUNT RECEPTACLE HORIZONTALLY AT 6" AFF TO CENTER OF BOX.
5. ~~PROVIDE EMPTY 3/4" CONDUIT WITH PULL WIRE TO DATA CABLE IN EXISTING PIPE TUNNEL.~~ DELETED
6. PROVIDE DOOR HOLDERS FOR ISSUE WINDOW DOOR PROVIDE ADDITIONAL CONTROL SUCH THAT DOOR HOLDERS CAN BE ACTIVATED BY PUSHBUTTON AS WELL AS BY SIGNAL FROM SMOKE DETECTORS.
7. CONNECT DATA OUTLETS WITH EMPTY 3/4" CONDUIT WITH PULL WIRE.
8. PROVIDE HUBBELL 5252, 20A SURGE SUPPRESSION RECEPT. (OR EQUAL) FOR FIRST RECEPT. IN EACH CIRCUIT DESIGNATED FOR COMPUTER USE
9. COORDINATE EXACT LOCATION OF SWITCHES WITH LOCATION OF WEIGHT TANK VERIFY ALL REQ'S W/COLLEGE.

GENERAL NOTE

1. DELETE ALL CONDUITS FOR DATA OUTLETS

**POWER PLAN**

SCALE 1/8"=1'-0" | MAIN LEVEL - LINK

0000TVE10
Weber State College, Physical Education Facility - RW 84-058
Power Plan Main Level Link - 26758

RECORD DOCUMENTS JUN 2 9 1990

THESE DOCUMENTS HAVE BEEN REVISED TO RECORD INFORMATION SUBMITTED BY THE CONTRACTOR, WHILE THEY ARE ASSUMED TO BE RELIABLE THE ARCHITECT DOES NOT GUARANTEE THEIR ACCURACY.

REGISTERED PROFESSIONAL ENGINEER ROBERT J. BECHERER No. 4222 STATE OF UTAH

Becherer Nielson Associates
Consulting Engineers
146 Pierpont Avenue
Salt Lake City, Utah 84101
801 532-2196

JONES/ RICHARDS & ASSOCIATES
ARCHITECTURE (801) 394-3033
PLANNING 533 26TH STREET
CONSTRUCTION MANAGEMENT OGDEN, UTAH

REVISED: AS BUILTS 6-90

PROJECT NUMBER: 8403
DATE: 6-21-88
DRAWN BY: L. REMBER

PROJECT: PHYSICAL EDUCATION COMPLEX
WEBER STATE COLLEGE

SHEET TITLE: POWER PLAN
MAIN LEVEL-LINK

SHEET NO. E-10

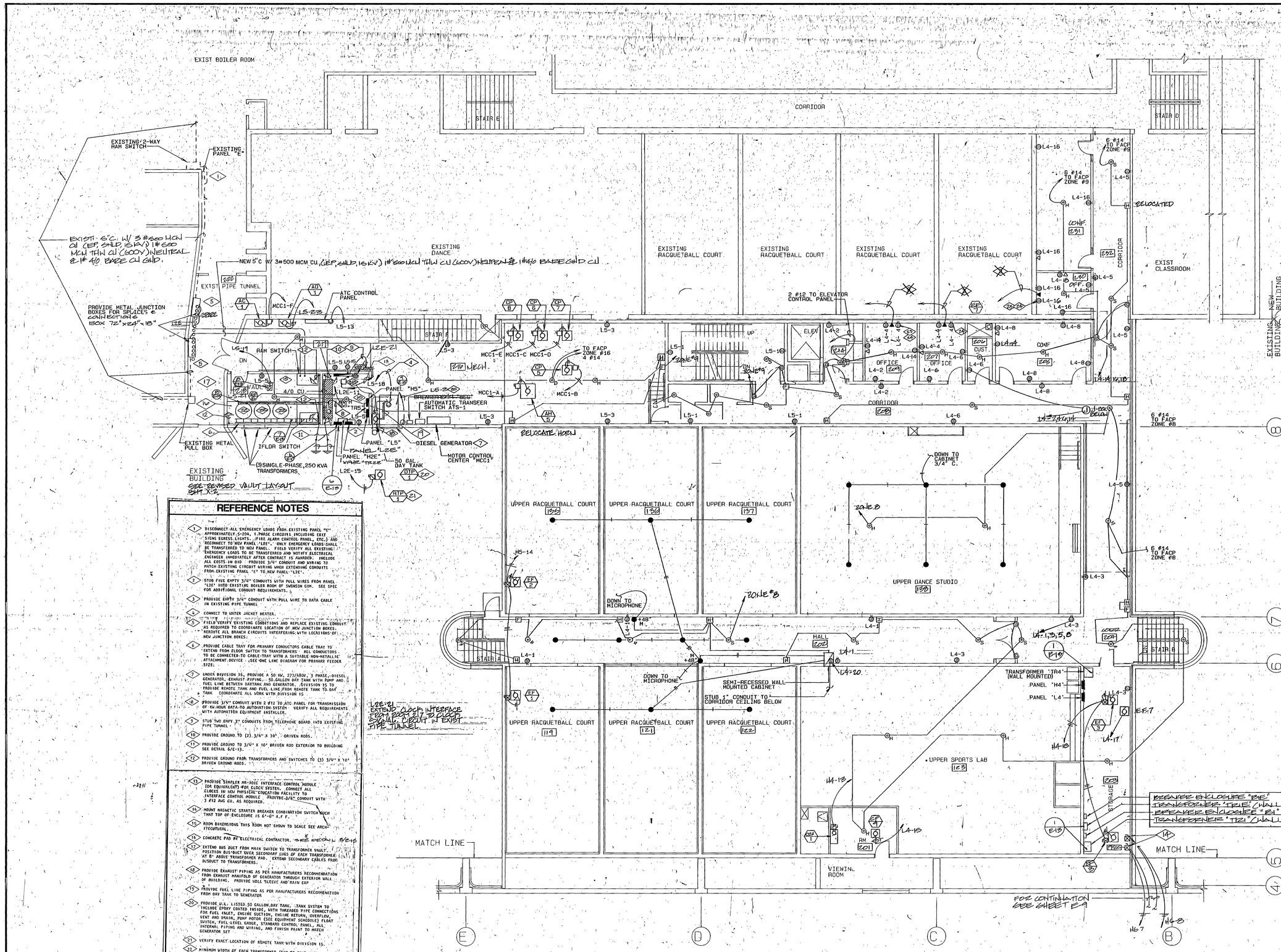


## REFERENCE NOTES

1. DISCONNECT ALL EMERGENCY LOADS FROM EXISTING PANEL "E" APPROXIMATELY 5-20A, 1-PHASE CIRCUITS INCLUDING EXIT SIGNS EGRESS LIGHTS, FIRE ALARM CONTROL PANEL, ETC.) AND RECONNECT TO NEW PANEL 'L2E'. ONLY EMERGENCY LOADS SHALL BE TRANSFERRED TO NEW PANEL. FIELD VERIFY ALL EXISTING EMERGENCY LOADS TO BE TRANSFERRED AND NOTIFY ELECTRICAL ENGINEER IMMEDIATELY AFTER CONTRACT IS AWARDED. INCLUDE ALL COSTS IN BID. PROVIDE 3/4" CONDUIT AND WIRING TO MATCH EXISTING CIRCUIT WIRING WHEN EXTENDING CONDUITS FROM EXISTING PANEL 'E' TO NEW PANEL 'L2E'.
2. STUB FIVE EMPTY 3/4" CONDUITS WITH PULL WIRES FROM PANEL 'L2E' INTO EXISTING BOILER ROOM OF SWENSON GYM. SEE SPEC FOR ADDITIONAL CONDUIT REQUIREMENTS.
3. PROVIDE EMPTY 3/4" CONDUIT WITH PULL WIRE TO DATA CABLE IN EXISTING PIPE TUNNEL
4. CONNECT TO WATER JACKET HEATER.
5. FIELD VERIFY EXISTING CONDITIONS AND REPLACE EXISTING CONDUIT AS REQUIRED TO COORDINATE LOCATION OF NEW JUNCTION BOXES. REROUTE ALL BRANCH CIRCUITS INTERFERING WITH LOCATIONS OF NEW JUNCTION BOXES.
6. PROVIDE CABLE TRAY FOR PRIMARY CONDUCTORS CABLE TRAY TO EXTEND FROM FLOOR SWITCH TO TRANSFORMERS. ALL CONDUCTORS TO BE CONNECTED TO CABLE-TRAY WITH A SUITABLE NON-METALLIC ATTACHMENT DEVICE. SEE ONE LINE DIAGRAM FOR PRIMARY FEEDER SIZE.
7. UNDER DIVISION 16, PROVIDE A 50 KW, 277/480V, 3 PHASE, DIESEL GENERATOR. EXHAUST PIPING. 50 GALLON DAY TANK WITH PUMP AND FUEL LINE BETWEEN DAYTANK AND GENERATOR. DIVISION 15 TO PROVIDE REMOTE TANK AND FUEL LINE FROM REMOTE TANK TO DAY TANK. COORDINATE ALL WORK WITH DIVISION 15.
8. PROVIDE 3/4" CONDUIT WITH 2 #12 TO ATC PANEL FOR TRANSMISSION OF KW HOUR DATA TO AUTOMATION SYSTEM. VERIFY ALL REQUIREMENTS WITH AUTOMATION EQUIPMENT INSTALLER.
9. STUB TWO EMPTY 3" CONDUITS FROM TELEPHONE BOARD INTO EXISTING PIPE TUNNEL.
10. PROVIDE GROUND TO (2) 3/4" X 10' DRIVEN RODS.
11. PROVIDE GROUND TO 3/4" X 10' DRIVEN ROD EXTERIOR TO BUILDING SEE DETAIL 6/E-13.
12. PROVIDE GROUND FROM TRANSFORMERS AND SWITCHES TO (3) 3/4" X 10' DRIVEN GROUND RODS.
13. PROVIDE SIMPLEX MR-101C INTERFACE CONTROL MODULE (OR EQUIVALENT) FOR CLOCK SYSTEM. CONNECT ALL CLOCKS IN NEW PHYSICAL EDUCATION FACILITY TO INTERFACE CONTROL MODULE. PROVIDE 3/4" CONDUIT WITH 3 #12 AWG CU. AS REQUIRED.
14. MOUNT MAGNETIC STARTER BREAKER COMBINATION SWITCH SUCH THAT TOP OF ENCLOSURE IS 6'-0" A.F.F.
15. ROOM DIMENSIONS THIS ROOM NOT SHOWN TO SCALE SEE ARCHITECTURAL.
16. CONCRETE PAD BY ELECTRICAL CONTRACTOR. SEE DETAIL 5/E-13
17. EXTEND BUS DUCT FROM MAIN SWITCH TO TRANSFORMER VAULT. POSITION BUS-DUCT OVER SECONDARY LUGS OF EACH TRANSFORMER AT 8' ABOVE TRANSFORMER PAD. EXTEND SECONDARY CABLES FROM BUSDUCT TO TRANSFORMERS.
18. PROVIDE EXHAUST PIPING AS PER MANUFACTURERS RECOMMENDATION FROM EXHAUST MANIFOLD OF GENERATOR THROUGH EXTERIOR WALL OF BUILDING. PROVIDE WELL SLEEVE AND RAIN CAP
19. PROVIDE FUEL LINE PIPING AS PER MANUFACTURERS RECOMMENDATION FROM DAY TANK TO GENERATOR
20. PROVIDE U.L. LISTED 50 GALLON DAY TANK. TANK SYSTEM TO INCLUDE EPOXY COATED INSIDE, WITH THREADED PIPE CONNECTIONS FOR FUEL INLET, ENGINE SUCTION, ENGINE RETURN, OVERFLOW, VENT AND DRAIN, PUMP MOTOR (SEE EQUIPMENT SCHEDULE) FLOAT SWITCH, FUEL LEVEL GAUGE, STANDARD CONTROL PANEL, ALL INTERNAL PIPING AND WIRING, AND FINISH PAINT TO MATCH GENERATOR SET
21. VERIFY EXACT LOCATION OF REMOTE TANK WITH DIVISION 15.
22. MINIMUM WIDTH OF EACH TRANSFORMER (FIN TO FIN) MUST BE 48" OR LESS.
23. PROVIDE HUBBELL 5266 20A SURGE SUPPRESSOR RECEPT (OR EQUAL) FOR ALL RECEPT IN EACH CIRCUIT DESIGNATED FOR COMPUTER USE
24. PROVIDE 1#12 GREEN GROUND WIRE BACK TO PANEL FOR COMPUTER CIRCUITS
25. CONNECT TO LEAK PROTECTOR. VERIFY EXACT LOCATION WITH MECHANICAL
26. MOUNT TRANSFORMER HIGH ON WALL THIS ROOM.

L2E-21 EXTEND CLOCK INTERFACE FROM PART 17 TO CLOCK SIGNAL CIRCUIT IN EXIST PIPE TUNNEL

GENERAL NOTES

1. DELETE ALL CONDUITS FOR DATA OUTLETS

POWER PLAN

SCALE 1/8" = 1'-0" | MID LEVEL - LINK

0000TVE11
Weber State College, Physical Education Facility - RW 84-058
Power Plan Mid Level Link - 26759

RECORD DOCUMENTS JUL 2 1990
THESE DOCUMENTS HAVE BEEN REVISED TO RECORD INFORMATION SUBMITTED BY THE CONTRACTOR. WHILE THEY ARE ASSUMED TO BE RELIABLE THE ARCHITECT DOES NOT GUARANTEE THEIR ACCURACY.

REGISTERED PROFESSIONAL ENGINEER ROBERT L. BECHERER No. 4222 STATE OF UTAH

Becherer Nielson Associates
Consulting Engineers
346 Pierpont Avenue
Salt Lake City, Utah 84101
801 532-2196

jra JONES/ RICHARDS & ASSOCIATES
ARCHITECTURE (801) 394-3033
PLANNING 533 25TH STREET
CONSTRUCTION MANAGEMENT OGDEN, UTAH

REVISED: AS BUILTS 6-90

PROJECT NUMBER: 8403
DATE: 5-21-89
DRAWN BY: L. REHBER

PROJECT: PHYSICAL EDUCATION COMPLEX
WEBER STATE COLLEGE

SHEET TITLE: POWER PLAN MID LEVEL-LINK

SHEET NO. E-11

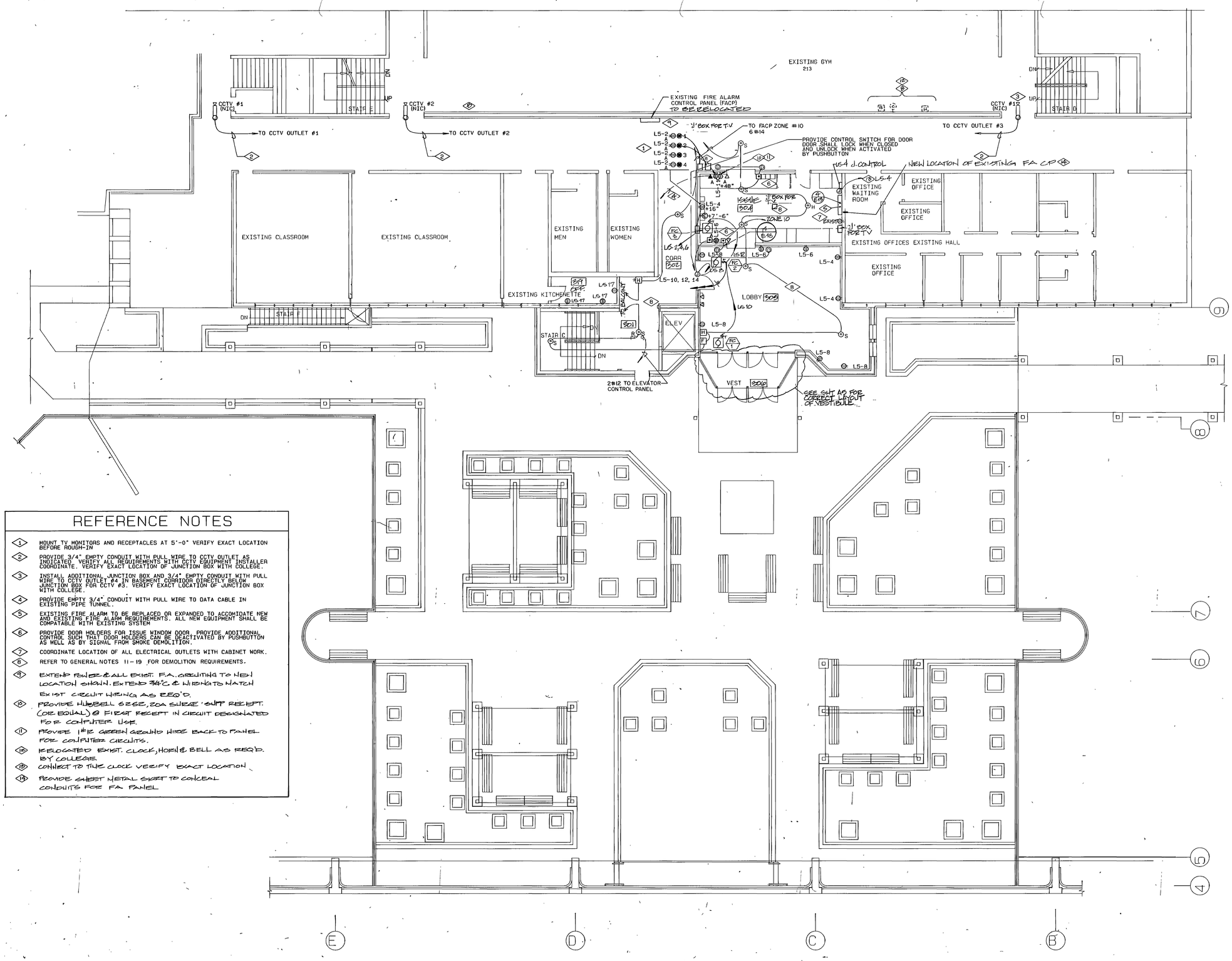


## REFERENCE NOTES

1. MOUNT TV MONITORS AND RECEPTACLES AT 5'-0" VERIFY EXACT LOCATION BEFORE ROUGH-IN
2. PROVIDE 3/4" EMPTY CONDUIT WITH PULL WIRE TO CCTV OUTLET AS INDICATED. VERIFY ALL REQUIREMENTS WITH CCTV EQUIPMENT INSTALLER COORDINATE. VERIFY EXACT LOCATION OF JUNCTION BOX WITH COLLEGE.
3. INSTALL ADDITIONAL JUNCTION BOX AND 3/4" EMPTY CONDUIT WITH PULL WIRE TO CCTV OUTLET #4 IN BASEMENT CORRIDOR DIRECTLY BELOW JUNCTION BOX FOR CCTV #3. VERIFY EXACT LOCATION OF JUNCTION BOX WITH COLLEGE.
4. PROVIDE EMPTY 3/4" CONDUIT WITH PULL WIRE TO DATA CABLE IN EXISTING PIPE TUNNEL.
5. EXISTING FIRE ALARM TO BE REPLACED OR EXPANDED TO ACCOMODATE NEW AND EXISTING FIRE ALARM REQUIREMENTS. ALL NEW EQUIPMENT SHALL BE COMPATABLE WITH EXISTING SYSTEM
6. PROVIDE DOOR HOLDERS FOR ISSUE WINDOW DOOR. PROVIDE ADDITIONAL CONTROL SUCH THAT DOOR HOLDERS CAN BE DEACTIVATED BY PUSHBUTTON AS WELL AS BY SIGNAL FROM SMOKE DEMOLITION.
7. COORDINATE LOCATION OF ALL ELECTRICAL OUTLETS WITH CABINET WORK.
8. REFER TO GENERAL NOTES 11-19 FOR DEMOLITION REQUIREMENTS.
9. EXTEND POWER & ALL EXIST. F.A. CIRCUITING TO NEW LOCATION SHOWN. EXTEND 3/4"C & WIRING TO MATCH EXIST CIRCUIT WIRING AS REQ'D.
10. PROVIDE HUBBELL 5252, 20A SIERRA SUPP RECEPT. (OR EQUAL) @ FIRST RECEPT IN CIRCUIT DESIGNATED FOR COMPUTER USE.
11. PROVIDE 1#12 GREEN GROUND WIRE BACK TO PANEL FOR COMPUTER CIRCUITS.
12. RELOCATED EXIST. CLOCK, HORN & BELL AS REQ'D. BY COLLEGE.
13. CONNECT TO TIME CLOCK VERIFY EXACT LOCATION
14. PROVIDE SHEET METAL SKIRT TO CONCEAL CONDUITS FOR FA PANEL

**POWER PLAN**
SCALE 1/8"=1'-0" PLAZA LEVEL

0000TVE12
Weber State College, Physical Education Facility - RW 84-058
Power Plan Plaza Level - 26760

RECORD DOCUMENTS JUN 15 1990
THESE DOCUMENTS HAVE BEEN REVISED TO RECORD INFORMATION SUBMITTED BY THE CONTRACTOR. WHILE THEY ARE ASSUMED TO BE RELIABLE THE ARCHITECT DOES NOT GUARANTEE THEIR ACCURACY.

REGISTERED PROFESSIONAL ENGINEER
ROBERT J. BECHERER
No. 4022
STATE OF UTAH

Becherer Nielson Associates
Consulting Engineers
146 Pierpont Avenue
Salt Lake City, Utah 84101
801 532-2196

JONES/ RICHARDS & ASSOCIATES
ARCHITECTURE (801) 394-3033
PLANNING 533 26TH STREET
CONSTRUCTION MANAGEMENT OGDEN, UTAH

REVISED: AS BUILTS 6-90

PROJECT NUMBER: 8403
DATE: 9-21-88
DRAWN BY: L. REHBER

PROJECT: PHYSICAL EDUCATION COMPLEX
WEBER STATE COLLEGE

SHEET TITLE: POWER PLAN
PLAZA LEVEL

SHEET NO. E-12

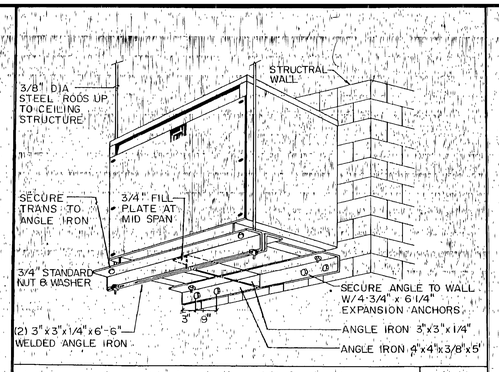


**DETAIL**
**TRANSFORMER MOUNTING**
1 / E-13

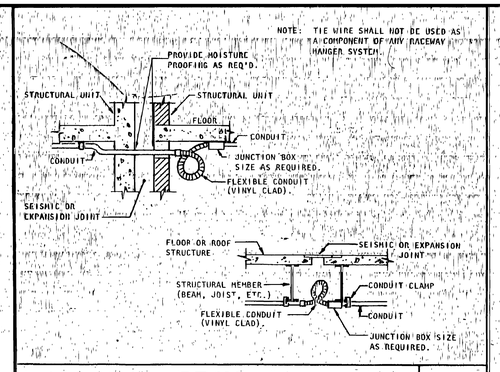


**DETAIL**
**CONDUIT CROSSING SEISMIC OR EXPANSION JOINT**
2 / E-13

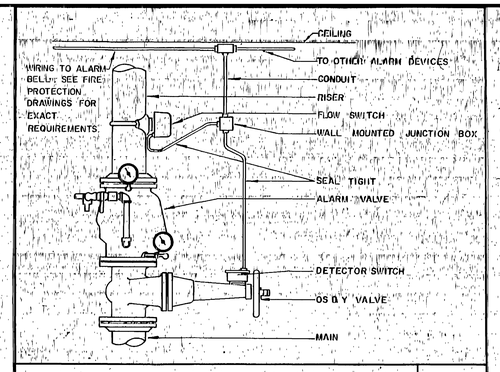


**FIRE SPRINKLER CONNECTION DETAIL**
3 / E-13

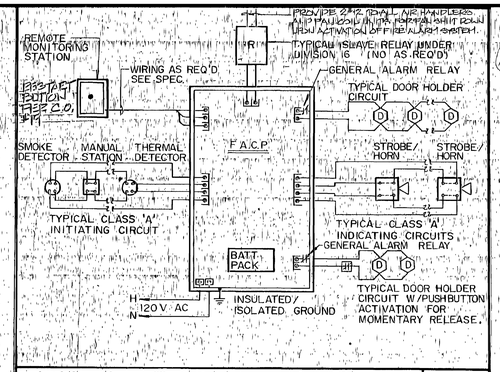


**TYPICAL FIRE ALARM DIAGRAM**
4 / E-13

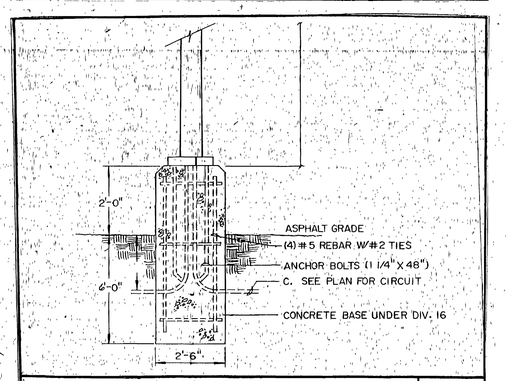


**DETAIL**
**POLE MOUNTING**
NO SCALE
6 / E-13

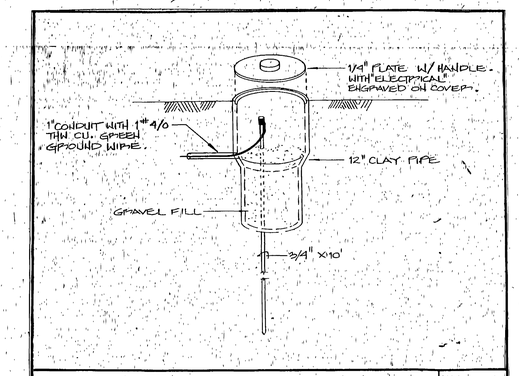


**DETAIL**
**GROUND ROD**
6 / E-13

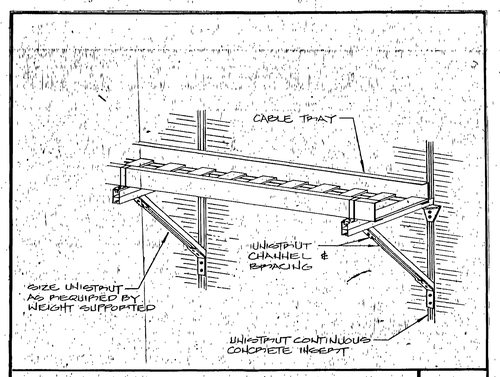


**DETAIL**
**CABLE TRAY MOUNTING**
7 / E-13

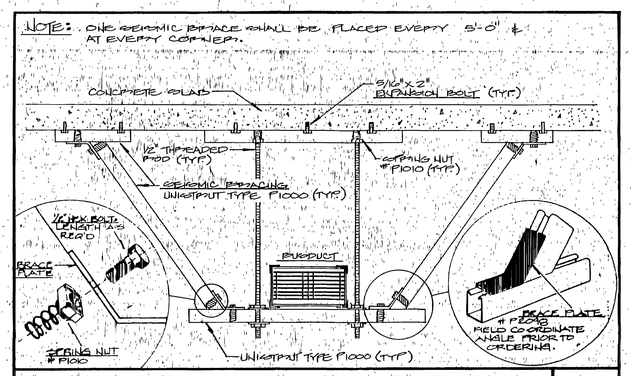


**DETAIL**
**BUSDUCT MOUNTING WITH SIESMIC BRACING**
8 / E-13

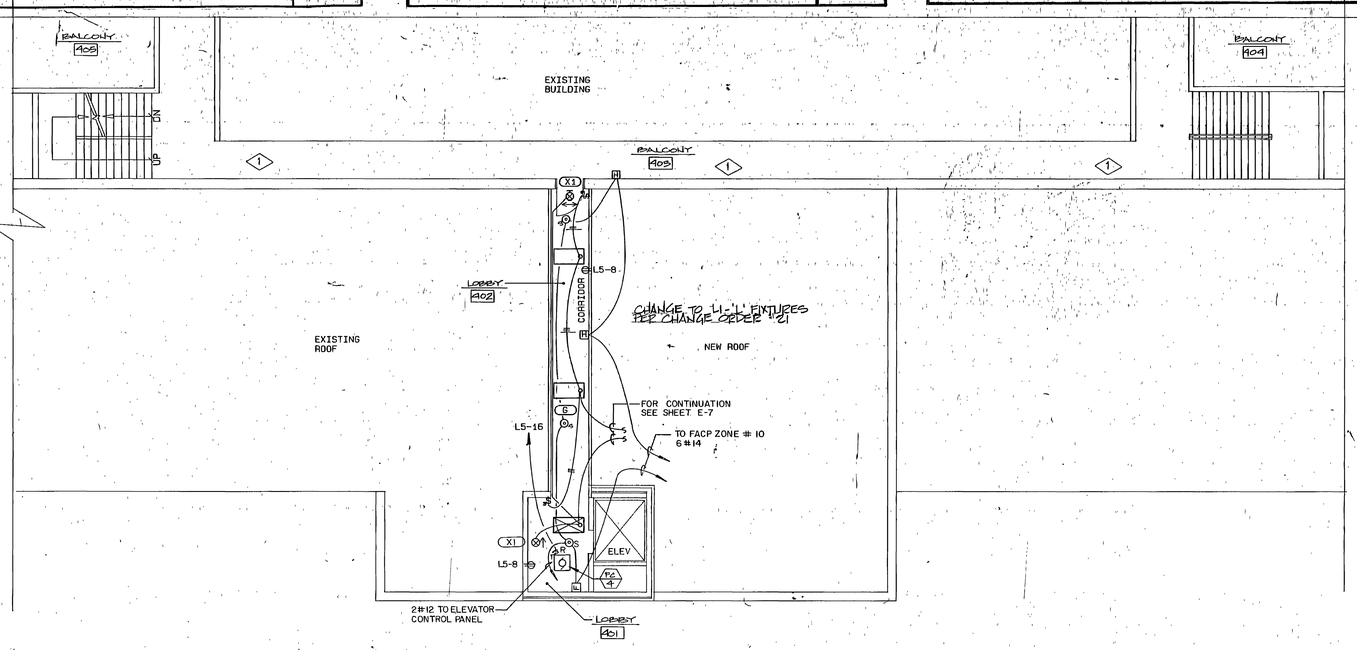


**ELECTRICAL PLAN**
SCALE 1/0"= 1'-0"
**BALCONY LEVEL**

## REFERENCE NOTES

1. REFER TO GENERAL NOTES 11-19 FOR DEMOLITION REQUIREMENTS THIS AREA.

0000TVE13
Weber State College, Physical Education Facility - RW 84-058
Electrical Plan Balcony Level - 26781

RECORD DOCUMENTS
JUL 2 1990
THESE DOCUMENTS HAVE BEEN REVISED TO RECORD INFORMATION SUBMITTED BY THE CONTRACTOR, WHILE THEY ARE ASSUMED TO BE RELIABLE THE ARCHITECT DOES NOT GUARANTEE THEIR ACCURACY.


ROBERT J. BECHERER
REGISTERED PROFESSIONAL ENGINEER
STATE OF UTAH

Becherer Nielson Associates
Consulting Engineers
146 Pierpont Avenue
Salt Lake City, Utah 84101
801 532-2196

JONES/ RICHARDS & ASSOCIATES
ARCHITECTURE (801) 394-3033
PLANNING 533 26TH STREET
CONSTRUCTION MANAGEMENT OGDEN, UTAH


REVISED: AS BUILTS 6-90
PROJECT NUMBER: 2403
DATE: 9-21-88
DRAWN BY: L. REIMER

PROJECT: PHYSICAL EDUCATION COMPLEX
WEBER STATE COLLEGE

SHEET TITLE: ELECTRICAL PLAN
BALCONY LEVEL

SHEET NO. E-13

| | |
|---|---|
| 7.5 KVAR (A) | 3 KVAR (D) |
| AH-5 25 HP 701-3P (A) | CP-7 7.5 HP 20A-3P (D) |
| CP-5 3/4 HP 20A-3P (B) | 5 KVAR (E) |
| 3 KVAR (C) | CP-8 15 HP 40A-3P (E) |
| CP-6 7.5 HP 20A-3P (C) | AC-1 1 HP 20A-3P (F) |
| MAIN LUGS ONLY | SPACE |

MCC1

## REFERENCE NOTES

1. SEE SHEET E-11 FOR DETAILED GROUNDING REQUIREMENTS.
2. PROVIDE GROUND FROM MOTOR CONTROL CENTER TO 3/4"x10' DRIVEN GROUND ROD.
3. PROVIDE GROUND FROM GROUNDING BUS IN ALL 277/480V PANELS TO NEUTRAL LUG ON TRANSFORMERS TO 3/4"x10' DRIVEN GROUND ROD.
4. PROVIDE GROUND FROM GENERATOR TO 3/4"x10' DRIVEN GROUND ROD.
5. PROVIDE GROUND FROM GROUNDING BUS IN 120/208V PANEL TO NEUTRAL LUG ON BUCK BOOST TRANSFORMER TO 3/4" x 10' DRIVEN GROUND ROD

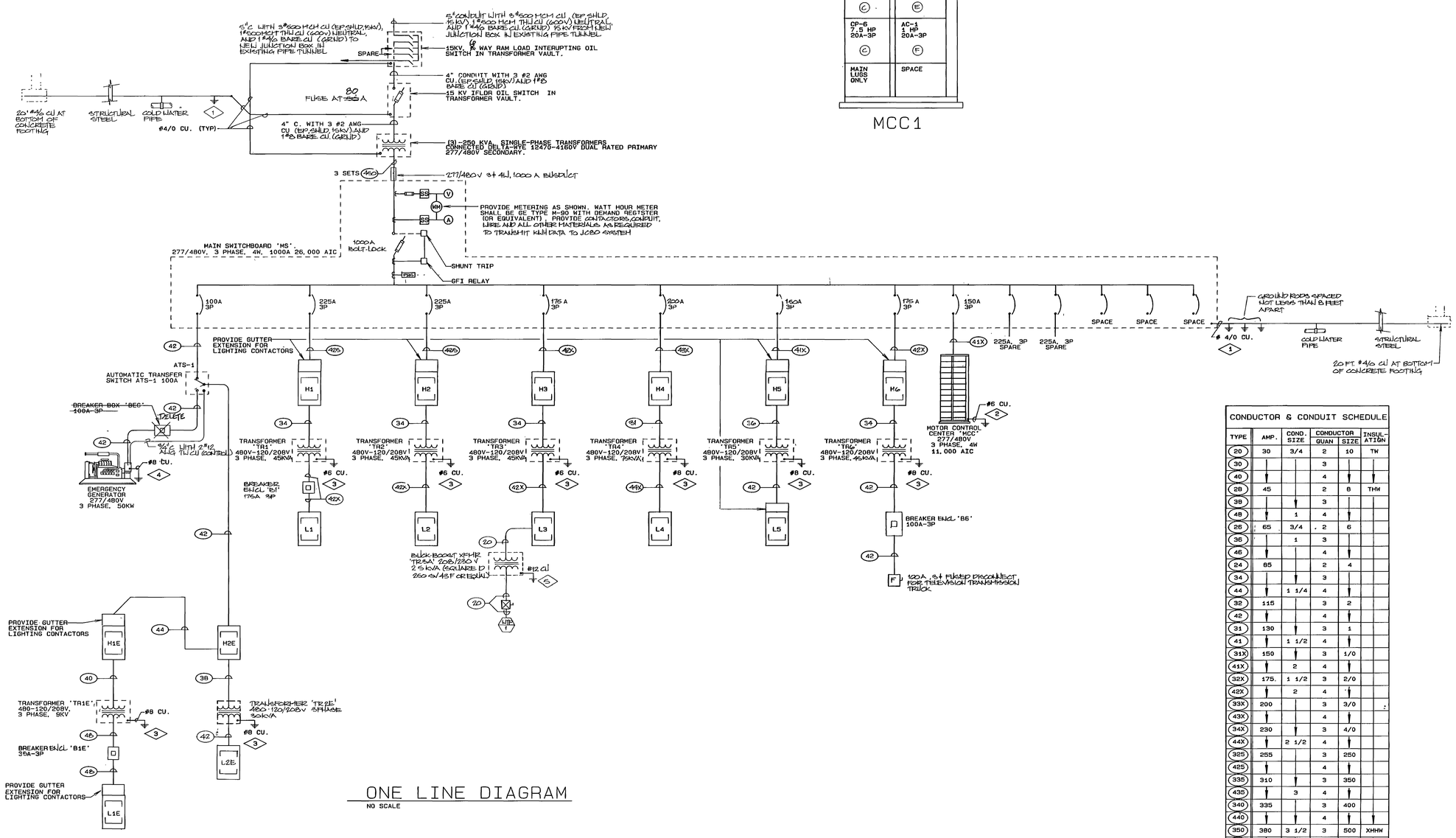


ONE LINE DIAGRAM

NO SCALE

## CONDUCTOR & CONDUIT SCHEDULE

| TYPE | AMP. | COND. SIZE | CONDUCTOR QUAN | CONDUCTOR SIZE | INSULATION |
|---|---|---|---|---|---|
| 20 | 30 | 3/4 | 2 | 10 | TW |
| 30 | ↓ | ↓ | 3 | ↓ | ↓ |
| 40 | ↓ | ↓ | 4 | ↓ | ↓ |
| 28 | 45 | ↓ | 2 | 8 | THW |
| 38 | ↓ | ↓ | 3 | ↓ | ↓ |
| 48 | ↓ | 1 | 4 | ↓ | ↓ |
| 26 | 65 | 3/4 | 2 | 6 | ↓ |
| 36 | ↓ | 1 | 3 | ↓ | ↓ |
| 46 | ↓ | ↓ | 4 | ↓ | ↓ |
| 24 | 85 | ↓ | 2 | 4 | ↓ |
| 34 | ↓ | ↓ | 3 | ↓ | ↓ |
| 44 | ↓ | 1 1/4 | 4 | ↓ | ↓ |
| 32 | 115 | ↓ | 3 | 2 | ↓ |
| 42 | ↓ | ↓ | 4 | ↓ | ↓ |
| 31 | 130 | ↓ | 3 | 1 | ↓ |
| 41 | ↓ | 1 1/2 | 4 | ↓ | ↓ |
| 31X | 150 | ↓ | 3 | 1/0 | ↓ |
| 41X | ↓ | 2 | 4 | ↓ | ↓ |
| 32X | 175. | 1 1/2 | 3 | 2/0 | ↓ |
| 42X | ↓ | 2 | 4 | ↓ | ↓ |
| 33X | 200 | ↓ | 3 | 3/0 | ↓ |
| 43X | ↓ | ↓ | 4 | ↓ | ↓ |
| 34X | 230 | ↓ | 3 | 4/0 | ↓ |
| 44X | ↓ | 2 1/2 | 4 | ↓ | ↓ |
| 325 | 255 | ↓ | 3 | 250 | ↓ |
| 425 | ↓ | ↓ | 4 | ↓ | ↓ |
| 335 | 310 | ↓ | 3 | 350 | ↓ |
| 435 | ↓ | 3 | 4 | ↓ | ↓ |
| 340 | 335 | ↓ | 3 | 400 | ↓ |
| 440 | ↓ | ↓ | 4 | ↓ | ↓ |
| 350 | 380 | 3 1/2 | 3 | 500 | XHHW |
| 450 | ↓ | ↓ | 4 | ↓ | ↓ |

0000TVE14
Weber State College, Physical Education Facility - RW 94-058
One-Line Diagram - 26762

RECORD DOCUMENTS JUL 2 1990
THESE DOCUMENTS HAVE BEEN REVISED TO RECORD INFORMATION SUBMITTED BY THE CONTRACTOR. WHILE THEY ARE ASSUMED TO BE RELIABLE THE ARCHITECT DOES NOT GUARANTEE THEIR ACCURACY.

REGISTERED PROFESSIONAL ENGINEER ROBERT J. BECHERER 154222 STATE OF UTAH


Becherer Nielson Associates
Consulting Engineers
146 Pierpont Avenue
Salt Lake City, Utah 84101
801 532-2196

JONES/ RICHARDS & ASSOCIATES
ARCHITECTURE (801) 394-3033
PLANNING
533 26TH STREET
CONSTRUCTION MANAGEMENT
OGDEN UTAH


REVISED: AS BUILTS 6-90

PROJECT NUMBER: 8403.
DATE: 6-21-88
DRAWN BY: L. REMBER

PROJECT: PHYSICAL EDUCATION COMPLEX
WEBER STATE COLLEGE

SHEET TITLE: ONE LINE DIAGRAM

SHEET NO. E-14

RECORD DOCUMENTS JUL 2 1990

THESE DOCUMENTS HAVE BEEN REVISED TO RECORD INFORMATION SUBMITTED BY THE CONTRACTOR. WHILE THEY ARE ASSUMED TO BE RELIABLE THE ARCHITECT DOES NOT GUARANTEE THEIR ACCURACY.

REGISTERED PROFESSIONAL ENGINEER NORBERT J. BECHERER NO. 122222 STATE OF UTAH

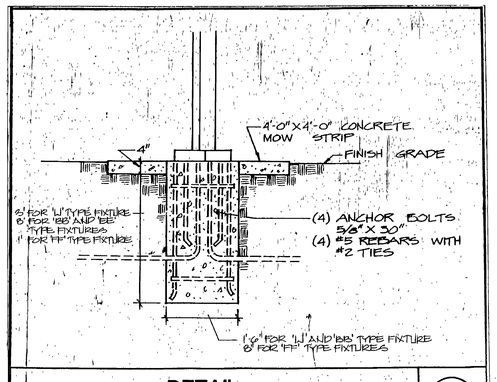


**DETAIL**
**POLE MOUNTING**
1 / E-15

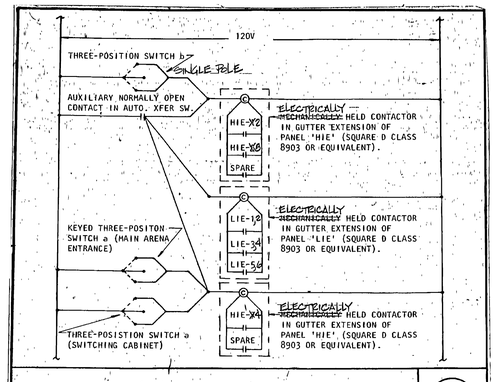


**EMERGENCY SYSTEM CONTACTOR AND RELAY DETAIL**
2 / E-15

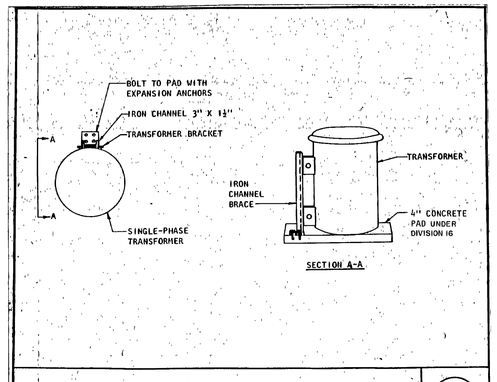


**TRANSFORMER BRACING DETAIL**
NOT TO SCALE
3 / E-15

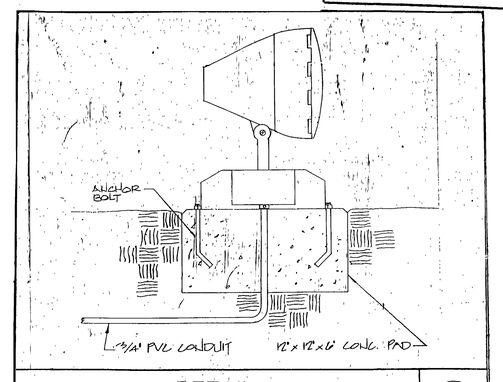


**DETAIL**
**FLOODLIGHT**
4 / E-15

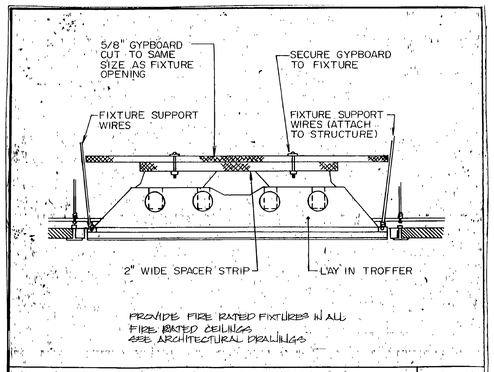


**DETAIL**
**FIRE RATED FIXTURE**
5 / E-15

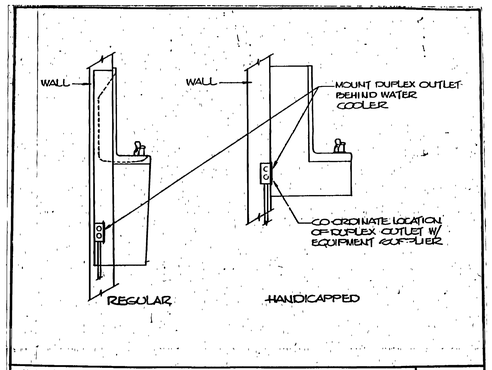


**DETAIL** NO SCALE
**ELECTRIC WATER COOLER (EWC)**
6 / E-15

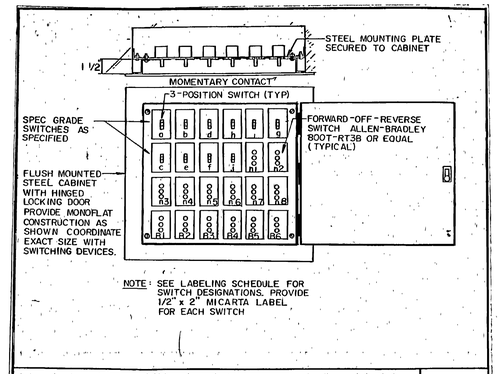


**DETAIL**
**SWITCH CABINET**
7 / E-15

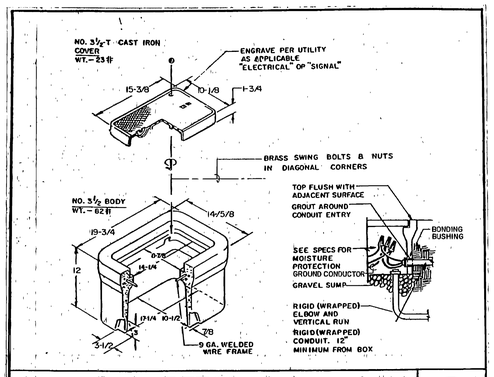


**DETAIL**
**CONCRETE J-BOX**
8 / E-15

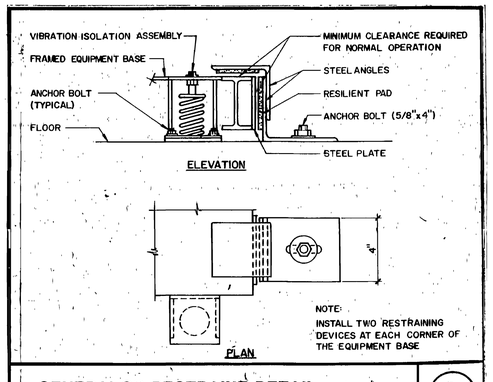


**GENERATOR RESTRAINT DETAIL**
9 / E-15

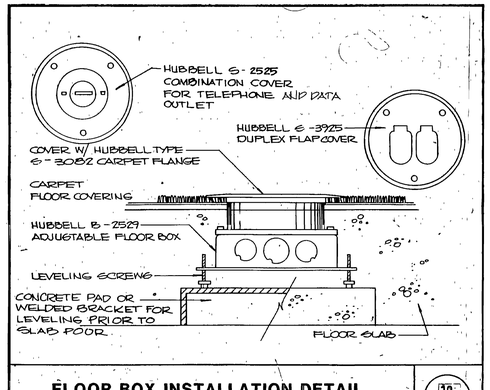


**FLOOR BOX INSTALLATION DETAIL**
**ABOVE GRADE SLAB**
10 / E-15

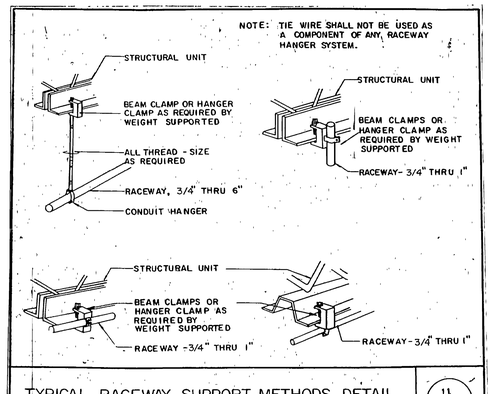


**TYPICAL RACEWAY SUPPORT METHODS DETAIL**
11 / E-15

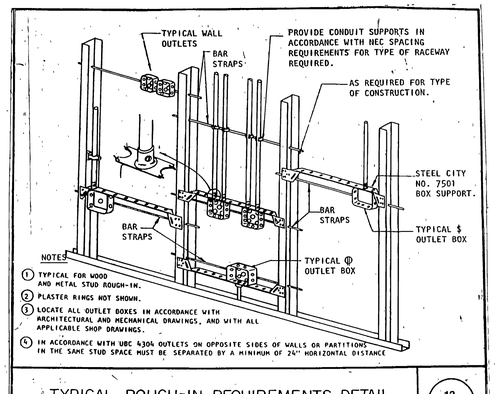


**TYPICAL ROUGH-IN REQUIREMENTS DETAIL**
12 / E-15

0000TVE15
Weber State College, Physical Education Facility - RW 84-058
Details - 20763


Becherer Nielson Associates
Consulting Engineers
146 Pierpont Avenue
Salt Lake City, Utah 84101
801 532-2196

JONES/ RICHARDS & ASSOCIATES
ARCHITECTURE (801) 394-3033
PLANNING CONSTRUCTION MANAGEMENT
533 26TH STREET OGDEN, UTAH


REVISED: AS BUILTS

PROJECT NUMBER: 8403.
DATE: 6-21-88
DRAWN BY: L. REMBER

PROJECT: PHYSICAL EDUCATION COMPLEX
WEBER STATE COLLEGE

SHEET TITLE: DETAILS

SHEET NO E-15

# PANELBOARD SCHEDULES

## PANELBOARD SCHEDULE — PANEL 'L1E'

TYPE NQOB 120/208 VOLTS 3 Ø 4 W
MOUNTING ■ FLUSH □ SURFACE — DIMENSIONS 20 W 5 3/4 D ___ H — LOCATION EQUIP. STOR. 100 AMP. MAINS ■ LUGS □ BREAKER

BRANCH BREAKERS

| ITEM | AMPS | POLE | WIRE SIZE | CIR NO | LEFT A | B | C | RIGHT A | B | C | CIR NO | AMPS | POLE | WIRE SIZE | ITEM |
|---|---|---|---|---|---|---|---|---|---|---|---|---|---|---|---|
| EMERG. QUARTZ LTS | 20 | 1 | 8 | 1 | 900 | | | 900 | | | 2 | 20 | 1 | 10 | EMERG. QUARTZ LTS. |
| | | | | 3 | | 900 | | | 900 | | 4 | | | | |
| | | | | 5 | | | 900 | | | 900 | 6 | | | | |
| ~~SPACE~~ SPARE | | | | 7 | | | | | | | 8 | | | | ~~SPARE~~ EM CONTROL |
| SPARE | | | | 9 | | | | | | | 10 | | | | |
| | | | | 11 | | | | | | | 12 | | | | |
| | | | | 13 | | | | | | | 14 | | | | SPACE |
| | | | | 15 | | | | | | | 16 | | | | |
| | | | | 17 | | | | | | | 18 | | | | |
| | | | | 19 | | | | | | | 20 | | | | MAIN BREAKER |

Totals: 900 / 900 / 900 / 900 / 900 / 900 — TOTAL 1800 / 1800 / 1800 — AMPS / PHASE 15 / 15 / 15
FEEDER: □ TOP □ BOTTOM — TOTAL CONNECTED LOAD 5400 VA
CONDUIT SIZE 3/4" WIRE SIZE 4 #[illegible] AWG THW CU — EQUIPMENT RATING 10,000 AMPS RMS SYM

## PANELBOARD SCHEDULE — PANEL 'L2E'

TYPE NQOD 120/208 VOLTS 3 Ø 4 W
MOUNTING □ FLUSH ■ SURFACE — DIMENSIONS 20 W 5 3/4 D ___ H — LOCATION ___ [illegible] AMP. MAINS □ LUGS ■ BREAKER

BRANCH BREAKERS

| ITEM | AMPS | POLE | WIRE SIZE | CIR NO | LEFT A | B | C | RIGHT A | B | C | CIR NO | AMPS | POLE | WIRE SIZE | ITEM |
|---|---|---|---|---|---|---|---|---|---|---|---|---|---|---|---|
| EXIST. EXIT SIGNS | 20 | 1 | | 1 | 425 | | | 1000 | | | 2 | 20 | 1 | | ~~SPARE~~ TEL BOARD |
| EXIST. EXIT SIGNS | | | | 3 | | 425 | | | 1000 | | 4 | | | | (SWENSON GYM |
| EXIST. EGRESS LTS | | | | 5 | | | 600 | | | 1000 | 6 | | | | EMERGENCY LIGHTS) |
| ~~EXIST. FACP~~ FIRE ALARM | | | | 7 | 500 | | | 1000 | | | 8 | | | | |
| ~~EXIST. FACP~~ FIRE ALARM | | | | 9 | | 500 | | | 1000 | | 10 | | | | |
| DTP-1 | | | 12 | 11 | | | 865 | | | 1000 | 12 | | | | |
| RTP-1 | 20 | 2 | 12 | 13 | 387 | | | 1000 | | | 14 | | | | |
| | | | - | 15 | | 387 | | | 1000 | | 16 | | | | |
| SPARE | | | - | 17 | | | 387 | | | 1000 | 18 | | | | |
| ELEV. CONT. PNL | 20 | | 12 | 19 | 500 | | | 1000 | | | 20 | | | | |
| TELEPHONE | | | 12 | 21 | | 500 | | | 1000 | | 22 | | | | |
| SPACE | | | | 23 | | | | | | 1000 | 24 | | | | |
| | | | | 25 | | | | 1000 | | | 26 | | | | |
| | | | | 27 | | | | | 1000 | | 28 | | | | |
| | | | | 29 | | | | | | 1000 | 30 | | | | |
| | | | | 31 | | | | | | | 32 | | | | SPARE |

Totals: 1810 / 1812 / 1850 / 5000 / 5000 / 5000 — TOTAL 6810 / 6812 / 6850 — AMPS / PHASE 57 / 57 / 57
FEEDER: □ TOP □ BOTTOM — TOTAL CONNECTED LOAD 20,470 VA
CONDUIT SIZE 1-1/4" WIRE SIZE 4 #[illegible] AWG THW CU — EQUIPMENT RATING 10,000 AMPS RMS SYM

## PANELBOARD SCHEDULE — PANEL 'H1E'

TYPE NEHB 277/480 VOLTS 3 Ø 4 W
MOUNTING ■ FLUSH □ SURFACE — DIMENSIONS 20 W 5 3/4 D ___ H — LOCATION EQUIP. STORAGE 100 AMP. MAINS ■ LUGS □ BREAKER

BRANCH BREAKERS

| ITEM | AMPS | POLE | WIRE SIZE | CIR NO | LEFT A | B | C | RIGHT A | B | C | CIR NO | AMPS | POLE | WIRE SIZE | ITEM |
|---|---|---|---|---|---|---|---|---|---|---|---|---|---|---|---|
| ~~LIGHTS~~ SPARE | 20 | 1 | 10 | 1 | 3300 | | | 1800 | | | 2 | 20 | 3 | 12 | ~~XFMR 'TR1E'~~ LIGHTS |
| ~~LIGHTS~~ SPARE | | | | 3 | | 650 | | | 1800 | | 4 | - | - | - | LIGHTS |
| LIGHTS | | | | 5 | | | 2100 | | | 1800 | 6 | - | - | - | LIGHTS |
| SPARE-TRIE | | | | 7 | | | | | | | 8 | 20 | 1 | | ~~SPACE~~ LIGHTS |
| LIGHTS | | | 12 | 9 | | 1200 | | | | | 10 | | | | SPACE |
| SPARE | | | | 11 | | | | | | | 12 | | | | |
| SPACE | | | | 13 | | | | | | | 14 | | | | |
| | | | | 15 | | | | | | | 16 | | | | |
| | | | | 17 | | | | | | | 18 | | | | |

Totals: 3300 / 1850 / 2100 / 1800 / 1800 / 1800 — TOTAL 5100 / 3650 / 3900 — AMPS / PHASE 18 / 13 / 14
FEEDER: □ TOP □ BOTTOM — TOTAL CONNECTED LOAD 12,650VA
CONDUIT SIZE 3/4" WIRE SIZE 4 #2 AWG THW CU — EQUIPMENT RATING 14,000 AMPS RMS SYM.

## PANELBOARD SCHEDULE — PANEL 'H2E'

TYPE NEHB 277/480 VOLTS 3 Ø 4 W
MOUNTING □ FLUSH ■ SURFACE — DIMENSIONS 20 W 5 3/4 D ___ H — LOCATION ELEC. RM. 100 AMP. MAINS ■ LUGS □ BREAKER

BRANCH BREAKERS

| ITEM | AMPS | POLE | WIRE SIZE | CIR NO | LEFT A | B | C | RIGHT A | B | C | CIR NO | AMPS | POLE | WIRE SIZE | ITEM |
|---|---|---|---|---|---|---|---|---|---|---|---|---|---|---|---|
| LIGHTS | 20 | 1 | 10 | 1 | 2350 | | | 6810 | | | 2 | 50 | 3 | 8 | ~~XFMR 'TR2E'~~ SPARE |
| | | | | 3 | | 750 | | | 6310 | | 4 | - | - | - | SPARE |
| | | | | 5 | | | 1800 | | | 6850 | 6 | - | - | - | SPARE |
| SPARE | PANEL HIE | | | 7 | | | | 5100 | | | 8 | 30 | 3 | 4 | ~~PANEL 'H1E'~~ TR2E |
| | | | | 9 | | | | | 3650 | | 10 | - | - | - | - |
| | | | | 11 | | | | | | 3900 | 12 | - | - | - | - |
| SPACE | | | | 13 | | | | | | | 14 | 20 | 1 | | SPACE |
| | | | | 15 | | | | | | | 16 | | | | |
| | | | | 17 | | | | | | | 18 | | | | |

Totals: 2350 / 750 / 1800 / 11410 / 9960 / 10750 — TOTAL 14160 / 10710 / 12550 — AMPS / PHASE 51 / 39 / 45
FEEDER: □ TOP □ BOTTOM — TOTAL CONNECTED LOAD 37420 VA
CONDUIT SIZE 1-1/4" WIRE SIZE 4 #[illegible] AWG THW CU — EQUIPMENT RATING 14,000 AMPS RMS SYM

## PANELBOARD SCHEDULE — PANEL 'L1'

TYPE NQOD 120/208 VOLTS 3 Ø 4 W
MOUNTING □ FLUSH ■ SURFACE — DIMENSIONS 20 W 5 3/4 D ___ H — LOCATION ISSUE ROOM 225 AMP. MAINS ■ LUGS □ BREAKER

BRANCH BREAKERS

| ITEM | AMPS | POLE | WIRE SIZE | CIR NO | LEFT A | B | C | RIGHT A | B | C | CIR NO | AMPS | POLE | WIRE SIZE | ITEM |
|---|---|---|---|---|---|---|---|---|---|---|---|---|---|---|---|
| RECEPTACLES-S.E. GYM | 20 | 1 | 12 | 1 | 1000 | | | 800 | | | 2 | 20 | 1 | 10 | RECEPTACLES-GYM |
| -ISSUE RM | | | | 3 | | 1200 | | | 1000 | | 4 | | | | -S.W. STOR |
| -VEST | | | | 5 | | | 1200 | | | 1000 | 6 | | | | -S.W. STOR |
| ~~EWC~~ EWC | | | | 7 | 800 | | | 1200 | | | 8 | | | | |
| RECEPTACLES-GYM FL | | | 10 | 9 | | 800 | | | 1000 | | 10 | | | | |
| SOUND CABINET | | | 12 | 11 | | | 1200 | | | 450 | 12 | | | 12 | LIGHT |
| ~~WH-1~~ SPARE | 30 | 2 | 10 | 13 | 1500 | | | 1560 | | | 14 | 30 | 1 | 8 | ~~NT-1~~ W CURTAIN WALL |
| " | - | - | - | 15 | | 1500 | | | 1560 | | 16 | - | - | - | BB-1 S.W. BB |
| ~~WH-1~~ " | 30 | 2 | 10 | 17 | | | 1500 | | | 1560 | 18 | - | - | - | NT-1 S CURTAIN WALL |
| - " | - | - | - | 19 | 1500 | | | 1560 | | | 20 | 30 | 1 | 10 | NT-1 S CENTRE CURTAIN WALL |
| EF-5 | 20 | 1 | 12 | 21 | | 700 | | | 1560 | | 22 | - | - | - | NT-1 E CURTAIN WALL |
| EF-6 | 20 | 1 | 12 | 23 | | | 700 | | | 1560 | 24 | - | - | - | BB-1 S E BB |
| ~~[illegible]~~ SPARE | 20 | 1 | 12 | 25 | 400 | | | 200 | | | 26 | 20 | 1 | 12 | RECEPTACLE - COMP |
| ~~SECURITY~~ W.WILT | | | 12 | 27 | | 500 | | | | | 28 | 20 | 1 | | ~~SPARE~~ SWITCH CAB |
| SPACE | | | | 29 | | | | | | | 30 | | | | SECURITY PANEL |
| | | | | 31 | | | | | | | 32 | | | | E W.H. |

Totals: 5200 / 4700 / 4600 / 5320 / 5120 / 4570 — TOTAL 10520 / 9820 / 9170 — AMPS / PHASE 88 / 82 / 76
FEEDER: □ TOP □ BOTTOM — TOTAL CONNECTED LOAD 29510 VA
CONDUIT SIZE 2" WIRE SIZE 4 #2/0 AWG THW CU — EQUIPMENT RATING 10,000 AMPS RMS SYM

## PANELBOARD SCHEDULE — PANEL 'H1'

TYPE NEHB 277/480 VOLTS 3 Ø 4 W
MOUNTING ■ FLUSH □ SURFACE — DIMENSIONS 20 W 5 3/4 D ___ H — LOCATION EQUIP. STORAGE 225 AMP. MAINS ■ LUGS □ BREAKER

BRANCH BREAKERS

| ITEM | AMPS | POLE | WIRE SIZE | CIR NO | LEFT A | B | C | RIGHT A | B | C | CIR NO | AMPS | POLE | WIRE SIZE | ITEM |
|---|---|---|---|---|---|---|---|---|---|---|---|---|---|---|---|
| LIGHTS | 20 | 1 | [illegible] | 1 | 3520 | | | 3520 | | | 2 | 20 | 1 | 10 | LIGHTS |
| | | | | 3 | | 3520 | | | 3520 | | 4 | | | | |
| | | | | 5 | | | 3520 | | | 3520 | 6 | | | | |
| | | | 12 | 7 | 2640 | | | 3520 | | | 8 | | | | |
| | | | | 9 | | 2640 | | | 3520 | | 10 | | | | |
| | | | | 11 | | | 2640 | | | 3520 | 12 | | | | |
| | | | | 13 | 2640 | | | 3520 | | | 14 | | | 12 | |
| | | | 10 | 15 | | 2640 | | | 3520 | | 16 | | | | |
| | | | 10 | 17 | | | 2640 | | | 3520 | 18 | | | | |
| | | | 12 | 19 | 2640 | | | 3300 | | | 20 | | | | |
| | | | | 21 | | 2640 | | | 3450 | | 22 | | | | |
| | | | | 23 | | | 3520 | | | 3000 | 24 | | | | |
| | | | | 25 | 2640 | | | 3000 | | | 26 | | | | ISSUE RM & WOMENS LIGHTS |
| | | | | 27 | | 3520 | | | 1900 | | 28 | | | | MENS & S W STOR LIGHTS |
| SPARE | | | | 29 | | | | | | | 30 | | | | SPARE |
| | | | | 31 | | | | | | | 32 | | | | |
| | | | | 33 | | | | | | | 34 | | | | |
| | | | | 35 | | | | | | | 36 | | | | |
| | | | | 37 | | | | 10520 | | | 38 | 70 | 3 | 4 | ~~XFMR 'TR1'~~ |
| | | | | 39 | | | | | 19820 | | 40 | - | - | - | - |
| TR1 | | | | 41 | | | | | | 9170 | 42 | - | - | - | - |

Totals: 14080 / 14960 / 12320 / 27380 / 24730 / 22730 — TOTAL 41460 / 39690 / 35050 — AMPS / PHASE 150 / 143 / 126
FEEDER: □ TOP □ BOTTOM — TOTAL CONNECTED LOAD 116,200 VA
CONDUIT SIZE 2-1/2" WIRE SIZE 4 #[illegible] THW CU — EQUIPMENT RATING 14,000 AMPS RMS SYM

## PANELBOARD SCHEDULE — PANEL 'L2'

TYPE NQOD 120/208 VOLTS 3 Ø 4 W
MOUNTING □ FLUSH ■ SURFACE — DIMENSIONS 20 W 5 3/4 D ___ H — LOCATION STORAGE ROOM 175 AMP. MAINS □ LUGS ■ BREAKER

BRANCH BREAKERS

| ITEM | AMPS | POLE | WIRE SIZE | CIR NO | LEFT A | B | C | RIGHT A | B | C | CIR NO | AMPS | POLE | WIRE SIZE | ITEM |
|---|---|---|---|---|---|---|---|---|---|---|---|---|---|---|---|
| RECEPTACLES | 20 | 1 | 12 | 1 | 800 | | | 800 | | | 2 | 20 | 1 | 10 | RECEPTACLES |
| | | | | 3 | | 800 | | | 800 | | 4 | | | | |
| | | | | 5 | | | 1000 | | | 800 | 6 | | | | |
| ~~SPARE~~ EF-13 | 20 | 1 | [illegible] | 7 | [illegible] | | | 800 | | | 8 | | | 12 | |
| ~~SPARE~~ FLOOR WASH | 20 | 1 | [illegible] | 9 | | [illegible] | | | 1000 | | 10 | | | 12 | |
| ~~BB-1~~ FLOOR WASHER | 30 | 1 | 8 | 11 | | | 1560 | | | 800 | 12 | | | 10 | GYM FL OUTLET |
| ~~H-1~~ N.W BB | | | | 13 | 1560 | | | 1560 | | | 14 | 30 | 1 | 10 | ~~BB-1~~ N.E. CURTAIN WALL |
| ~~BB-1~~ W BB | | | | 15 | | 1560 | | | 1560 | | 16 | | | | ~~H-1~~ NE. BB |
| ~~H-1~~ E BB | | | 10 | 17 | | | 1560 | | | 1560 | 18 | | | | ~~BB-1~~ N. CURTAIN WALL |
| ~~H-1~~ TRACK FLOOR OUTLET | | | 10 | 19 | 1560 | | | 1300 | | | 20 | 20 | 1 | 10 | ~~LIGHTING~~ NE. HIGH INTENSITY LIGHTS S.E. |
| WH-1 | 30 | 2 | 10 | 21 | | 1500 | | | 1300 | | 22 | | | | |
| - | - | - | - | 23 | | | 1500 | | | 1300 | 24 | | | | |
| SPARE | 20 | 1 | | 25 | | | | 1300 | | | 26 | | | | HIGH INTENSITY LIGHTING |
| | | | | 27 | | | | | 1300 | | 28 | | | | |
| JOHNSON CONTROL | | | | 29 | | | | | | 1300 | 30 | | | | |
| SPARE | | | | 31 | | | | 1300 | | | 32 | | | 8 | N W HIGH INTENSITY LIGHTS |
| | | | | 33 | | | | | 1300 | | 34 | | | | |
| | | | | 35 | | | | | | 1300 | 36 | | | | |
| | | | | 37 | | | | 1300 | | | 38 | | | | SW. HIGH INTENSITY LIGHTS |
| | | | | 39 | | | | | 1300 | | 40 | | | | |
| | | | | 41 | | | | | | 1300 | 42 | | | | |

Totals: 3920 / 3860 / 3620 / 8360 / 8560 / 8360 — TOTAL 12280 / 12420 / 11980 — AMPS / PHASE 102 / 104 / 100
FEEDER: □ TOP □ BOTTOM — TOTAL CONNECTED LOAD 36680 VA
CONDUIT SIZE 2" WIRE SIZE 4 #2/0 AWG THW CU — EQUIPMENT RATING 10,000 AMPS RMS SYM

## PANELBOARD SCHEDULE — PANEL 'H2'

TYPE NEHB 277/480 VOLTS 3 Ø 4 W
MOUNTING □ FLUSH ■ SURFACE — DIMENSIONS 20 W 5 3/4 D ___ H — LOCATION STORAGE 225 AMP. MAINS ■ LUGS □ BREAKER

BRANCH BREAKERS

| ITEM | AMPS | POLE | WIRE SIZE | CIR NO | LEFT A | B | C | RIGHT A | B | C | CIR NO | AMPS | POLE | WIRE SIZE | ITEM |
|---|---|---|---|---|---|---|---|---|---|---|---|---|---|---|---|
| LIGHTS | 20 | 1 | 12 | 1 | 2640 | | | 3520 | | | 2 | 20 | 1 | 10 | LIGHTS |
| | | | 12 | 3 | | 2640 | | | 2640 | | 4 | | | | |
| | | | 10 | 5 | | | 3520 | | | 3520 | 6 | | | | |
| | | | | 7 | 2640 | | | 3750 | | | 8 | | | | |
| | | | | 9 | | 2640 | | | 550 | | 10 | | | 12 | |
| SIDE RMS LIGHTS | | | 12 | 11 | | | 900 | | | 3900 | 12 | | | 12 | |
| ~~AH-2~~ SPARE | 60 | 3 | 6 | 13 | 7480 | | | 390 | | | 14 | 20 | 3 | 12 | CP-2 |
| - SPARE | - | - | - | 15 | | 7480 | | | 390 | | 16 | - | - | - | - |
| -GYM LIGHTS | - | - | - | 17 | | | 7480 | | | 390 | 18 | - | - | - | - |
| ~~AH-1~~ SPARE | 60 | 3 | 6 | 19 | 7480 | | | 390 | | | 20 | 20 | 3 | 12 | CP-1 |
| - | - | - | - | 21 | | 7480 | | | 390 | | 22 | - | - | - | - |
| - CP1 | - | #3 | - | 23 | | | 7480 | | | 390 | 24 | - | - | - | - |
| SPACE | 20 | 1 | | 25 | | | | 12280 | | | 26 | 70 | 3 | 4 | XFMR 'TR2' |
| SPACE | | | - | 27 | | | | | 12280 | | 28 | - | - | - | - |
| ~~LIGHTS~~ AH1 | 20 | #3 | 10 | 29 | | | 2640 | | | 12280 | 30 | - | - | - | - |
| SPACE | | | | 31 | | | | | | | 32 | 20 | 1 | | SPARE |
| | | | | 33 | | | | | | | 34 | | | | |
| | | | | 35 | | | | | | | 36 | | | | |
| | | | | 37 | | | | | | | 38 | | | | |
| | | | | 39 | | | | | | | 40 | | | | |
| TR2 | | | | 41 | | | | | | | 42 | | | | |

Totals: 20240 / 20240 / 22020 / 20330 / 19390 / 22180 — TOTAL 40570 / 39630 / 44200 — AMPS / PHASE 146 / 143 / 160
FEEDER: □ TOP □ BOTTOM — TOTAL CONNECTED LOAD 111,800 VA
CONDUIT SIZE 2-1/2" WIRE SIZE 4 #[illegible] THW CU — EQUIPMENT RATING 14,000 AMPS RMS SYM

## PANELBOARD SCHEDULE — PANEL 'L3'

TYPE NQOD 120/208 VOLTS 3 Ø 4 W
MOUNTING □ FLUSH ■ SURFACE — DIMENSIONS 20 W 5 3/4 D ___ H — LOCATION STORAGE ROOM 150 AMP. MAINS □ LUGS ■ BREAKER

BRANCH BREAKERS

| ITEM | AMPS | POLE | WIRE SIZE | CIR NO | LEFT A | B | C | RIGHT A | B | C | CIR NO | AMPS | POLE | WIRE SIZE | ITEM |
|---|---|---|---|---|---|---|---|---|---|---|---|---|---|---|---|
| RECEPTACLES | 20 | 1 | 12 | 1 | 1000 | | | 600 | | | 2 | 20 | 1 | 12 | RECEPTACLES COMP |
| | | | | 3 | | 1000 | | | 600 | | 4 | | | | |
| | | | | 5 | | | 1000 | | | 600 | 6 | | | | |
| | | | | 7 | 1200 | | | 900 | | | 8 | | | | |
| | | | | 9 | | 1200 | | | 600 | | 10 | | | | |
| FREEZER | | | | 11 | | | 1500 | | | 600 | 12 | | | | |
| REFRIGERATOR | | | | 13 | 1500 | | | 600 | | | 14 | | | | |
| EWC | | | | 15 | | 1200 | | | [illegible] | | 16 | | | | ~~SPARE~~ |
| ~~[illegible]~~ SPARE | 20 | 2 | 10 | 17 | | | 1570 | | | 1000 | 18 | | | 12 | RECEPTACLES |
| RECEPTACLE HEIGHT TANKS | - | - | - | 19 | 1570 | | | 1000 | | | 20 | | | | |
| RECEPTACLES | 20 | 1 | 12 | 21 | | 1000 | | | 1000 | | 22 | | | | |
| | | | | 23 | | | 800 | | | 600 | 24 | | | | |
| | | | | 25 | 800 | | | 1000 | | | 26 | | | | |
| REC-COMP. | | | | 27 | | 600 | | | 1000 | | 28 | | | | |
| SPARE | | | | 29 | | | [illegible] | | | 300 | 30 | | | | CASH REGISTER |
| RECEPTACLE | | | | 31 | 800 | | | 600 | | | 32 | | | | RECEPTACLES COMP |
| | | | | 33 | | 1000 | | | | | 34 | | | | ~~SPARE~~ WATER HEATER |
| | | | | 35 | | | 800 | | | | 36 | | 2 | | RM 206 |
| SPARE | | | | 37 | [illegible] | | | | | | 38 | | | | |
| [illegible] JTP-1 | 60 | 2 | 6 | 39 | | 5500 | | | | | 40 | | | | |
| | | | - | 41 | | | 5500 | | | | 42 | | | | |

Totals: 6370 / 11500 / 10670 / 4700 / 3200 / 3100 — TOTAL 11070 / 14700 / 11700 — AMPS / PHASE 92 / 123 / 98
FEEDER: □ TOP □ BOTTOM — TOTAL CONNECTED LOAD 37470 VA
CONDUIT SIZE 2" WIRE SIZE 4 #2/0 AWG THW CU — EQUIPMENT RATING 10,000 AMPS RMS SYM

## PANELBOARD SCHEDULE — PANEL H3

TYPE NEHB 277/480 VOLTS 3 Ø 4 W
MOUNTING □ FLUSH ■ SURFACE — DIMENSIONS 20 W 5 3/4 D ___ H — LOCATION STORAGE RM. 225 AMP. MAINS ■ LUGS □ BREAKER

BRANCH BREAKERS

| ITEM | AMPS | POLE | WIRE SIZE | CIR NO | LEFT A | B | C | RIGHT A | B | C | CIR NO | AMPS | POLE | WIRE SIZE | ITEM |
|---|---|---|---|---|---|---|---|---|---|---|---|---|---|---|---|
| ~~LIGHTS - HALL~~ | 20 | 1 | 10 | 1 | 2350 | | | 8870 | | | 2 | 80 | 3 | 4 | ~~ELEVATOR~~ NOT |
| ~~LIGHTS - OFFICE~~ ELEVATOR | | | 12 | 3 | | 3200 | | | 8870 | | 4 | - | - | - | - USEABLE |
| ~~LIGHTS - LAB~~ | | | 12 | 5 | | | 2100 | | | 8870 | 6 | - | - | - | - |
| SPACE | | | | 7 | | | | 11670 | | | 8 | 70 | 3 | 4 | XFMR 'TR3' |
| NOT USEABLE | | | | 9 | | | | | 14700 | | 10 | - | - | - | - |
| | | | | 11 | | | | | | 11760 | 12 | - | - | - | - |
| | | | | 13 | | | | | | | 14 | 20 | 1 | | ~~SPARE~~ LIGHTS-HALL |
| | | | | 15 | | | | | | | 16 | | | | LIGHTS-OFFICE |
| | | | | 17 | | | | | | | 18 | | | | LIGHTS-LAB |
| | | | | 19 | | | | | | | 20 | | | | SPARE |
| | | | | 21 | | | | | | | 22 | | | | |
| | | | | 23 | | | | | | | 24 | | | | |

Totals: 2350 / 3200 / 2100 / 19940 / 23570 / 20570 — TOTAL 22290 / 26770 / 22670 — AMPS / PHASE 80 / 97 / 82
FEEDER: □ TOP □ BOTTOM — TOTAL CONNECTED LOAD 71780 VA
CONDUIT SIZE [illegible]2" WIRE SIZE 4 #[illegible] AWG THW CU — EQUIPMENT RATING 14,000 AMPS RMS SYM

## PANELBOARD SCHEDULE — PANEL 'L4'

TYPE NQOD 120/208 VOLTS 3 Ø 4 W
MOUNTING □ FLUSH ■ SURFACE — DIMENSIONS 20 W 5 3/4 D ___ H — LOCATION STORAGE ROOM 225 AMP. MAINS □ LUGS ■ BREAKER

BRANCH BREAKERS

| ITEM | AMPS | POLE | WIRE SIZE | CIR NO | LEFT A | B | C | RIGHT A | B | C | CIR NO | AMPS | POLE | WIRE SIZE | ITEM |
|---|---|---|---|---|---|---|---|---|---|---|---|---|---|---|---|
| RECEPTACLES HALL | 20 | 1 | 12 | 1 | 800 | | | 800 | | | 2 | 20 | 1 | 12 | RECEPTACLES |
| HALL | | | | 3 | | 800 | | | 1000 | | 4 | | | | |
| HALL | | | | 5 | | | 1000 | | | 1000 | 6 | | | | |
| LT-2 [illegible] | | | 8 | 7 | 5000 | | | 1000 | | | 8 | | | | |
| DINNER PNL A | 70 | | 4 | 9 | | 6000 | | | [illegible] | | 10 | | | | SPARE |
| DINNER PNL B | 70 | | 4 | 11 | | | 6000 | | | [illegible] | 12 | | | | SPARE |
| T-2 | 20 | | 8 | 13 | 5000 | | | 400 | | | 14 | 20 | 1 | 12 | RECEP. COMP. |
| ~~EF-9~~ SPARE | | | 12 | 15 | | 140 | | | 1200 | | 16 | 20 | 1 | 10 | RECEPTACLES |
| EF-7 | | | 12 | 17 | | | 70 | | | 200 | 18 | | | 12 | RECEPT. COMP |
| LIGHTING | | | 12 | 19 | 1300 | | | 500 | | | 20 | | | 12 | SOUND LAB |
| | | | | 21 | | 1300 | | | | | 22 | | | | ~~SPARE~~ HIGH |
| | | | | 23 | | | 1300 | | | | 24 | | | | INT LIGHTS |
| HIGH INT. LIGHTS | | | | 25 | 1300 | | | | | | 26 | | | | |
| " | | | | 27 | | 1300 | | | | | 28 | | | | |
| " | | | | 29 | | | 1300 | | | | 30 | | | | JOHNSON CONTROL |
| | | | | 31 | 1300 | | | | | | 32 | | | | ~~SPARE~~ SPARE |
| T-1 TREAD MILL | | | | 33 | | 1300 | | | | | 34 | 60 | 2 | 6 | SPORTS LAB W.H. |
| | | | | 35 | | | 1300 | | | | 36 | | | | SPORTS LAB PNL |
| T-1 | 20 | 3 | 12 | 37 | 940 | | | | | | 38 | | | | |
| | - | - | - | 39 | | 940 | | | | | 40 | | | | |
| | - | - | - | 41 | | | 940 | | | | 42 | | | | |

Totals: 11640 / 11780 / 11910 / 2700 / 2200 / 1200 — TOTAL 14340 / 13980 / 13110 — AMPS / PHASE 124 / 117 / 109
FEEDER: □ TOP □ BOTTOM — TOTAL CONNECTED LOAD 41,430 VA
CONDUIT SIZE 2-1/2" WIRE SIZE 4 #2 AWG THW CU — EQUIPMENT RATING 10,000 AMPS RMS SYM

## PANELBOARD SCHEDULE — PANEL H4

TYPE NEHB 277/480 VOLTS 3 Ø 4 W
MOUNTING □ FLUSH ■ SURFACE — DIMENSIONS 20 W 5 3/4 D ___ H — LOCATION ELEC. RM. 225 AMP. MAINS ■ LUGS □ BREAKER

BRANCH BREAKERS

| ITEM | AMPS | POLE | WIRE SIZE | CIR NO | LEFT A | B | C | RIGHT A | B | C | CIR NO | AMPS | POLE | WIRE SIZE | ITEM |
|---|---|---|---|---|---|---|---|---|---|---|---|---|---|---|---|
| LIGHTS - HALL | 20 | 1 | 12 | 1 | 2350 | | | 3200 | | | 2 | 20 | 1 | 10 | LIGHTS ~~LAB~~ |
| LIGHTS - DANCE | | | | 3 | | 3200 | | | 3500 | | 4 | | 3 | | TR4 |
| LIGHTS - DANCE | | | | 5 | | | 3200 | | | 2500 | 6 | | | | |
| ~~DC-1~~ SPARE | 20 | 2 | 12 | 7 | 1320 | | | 775 | | | 8 | 20 | 3 | 12 | ~~EF-3, EF-4~~ SPORTS LIGHTS |
| - SPARE | - | - | - | 9 | | 1320 | | | 775 | | 10 | - | - | - | -LIGHTS |
| LIGHTS - LAB | 20 | 1 | | 11 | | | 2800 | | | 775 | 12 | - | - | - | -LIGHTS |
| ~~[illegible]~~ DRY COOLER | 40 | 3 | 8 | 13 | 8480 | | | [illegible] | | | 14 | | | | ~~SPARE~~ LIGHTS |
| | - | - | - | 15 | | 8480 | | | | | 16 | | | | |
| | - | - | - | 17 | | | 8480 | | | | 18 | | 3 | | EF 3 & 4 |
| ~~XFMR "TR4"~~ | [illegible] | 3 | 1 | 19 | 14340 | | | | | | 20 | | | | |
| SPORTS LAB AC. | | 8 | - | 21 | | 13980 | | | | | 22 | | | | |
| [illegible] | | | - | 23 | | | 13110 | | | | 24 | | | | |
| SPARE | 20 | 1 | | 25 | | | | | | | 26 | | | | |

Totals: 26490 / 26985 / 27390 / 3975 / 4275 / 3275 — TOTAL 30465 / 31265 / 30665 — AMPS / PHASE 110 / 115 / 111
FEEDER: □ TOP □ BOTTOM — TOTAL CONNECTED LOAD 92,585 VA
CONDUIT SIZE [illegible] WIRE SIZE 4 #[illegible] AWG THW CU — EQUIPMENT RATING 14,000 AMPS RMS SYM

## PANELBOARD SCHEDULE — PANEL 'L5'

TYPE NQOD 120/208 VOLTS 3 Ø 4 W
MOUNTING □ FLUSH □ SURFACE — DIMENSIONS 20 W 5 3/4 D ___ H — LOCATION ELECT RM. 100 AMP. MAINS □ LUGS ■ BREAKER

BRANCH BREAKERS

| ITEM | AMPS | POLE | WIRE SIZE | CIR NO | LEFT A | B | C | RIGHT A | B | C | CIR NO | AMPS | POLE | WIRE SIZE | ITEM |
|---|---|---|---|---|---|---|---|---|---|---|---|---|---|---|---|
| RECEPTACLES | 20 | 1 | 12 | 1 | 800 | | | 800 | | | 2 | 20 | 1 | 12 | RECEPTACLES TV |
| | | | | 3 | | 800 | | | 800 | | 4 | | | | RECEPTACLES |
| | | | | 5 | | | 600 | | | 800 | 6 | | | | |
| ~~SPACE~~ LEAK DETECTOR | - | - | | 7 | [illegible] | | | 1200 | | | 8 | | | | |
| LIGHT | | | 12 | 9 | | 850 | | | 865 | | 10 | | | | FC-1 |
| RECEP.- COMP. | | | 10 | 11 | | | 400 | | | 700 | 12 | | | | FC-3 |
| [illegible] ATC | 20 | 1 | 12 | 13 | 500 | | | 865 | | | 14 | | | | FC-2 |
| CLOCKS | 20 | 1 | 12 | 15 | | 500 | | | 700 | | 16 | | | | FC-4 |
| RECEPT | | | 12 | 17 | | | 600 | | | 3000 | 18 | 30 | 1 | 10 | WATER JACK. HTR. |
| EF-#8 | | | | 19 | 1175 | | | | | | 20 | 20 | | | ~~SPARE~~ EF 10 |
| EF-#9 | | | | 21 | | 185 | | | | | 22 | | | | EF 11 |
| AD-1 | | | | 23 | | | 530 | | | | 24 | | | | PHOTO CELL POWER |
| GARDEN LTS | | | 8 | 25 | 410 | | | | | | 26 | | | | SPARE |
| SPARE | | | | 27 | | | | | | | 28 | | | | |
| | | | | 29 | | | | | | | 30 | | | | |
| | | | | 31 | | | | | | | 32 | | | | SPACE |

Totals: 2885 / 2335 / 2150 / 2865 / 2365 / 4500 — TOTAL 5750 / 4700 / 6650 — AMPS / PHASE 48 / 39 / 55
FEEDER: ■ TOP □ BOTTOM — TOTAL CONNECTED LOAD 17,080 VA
CONDUIT SIZE 1-1/4" WIRE SIZE 4 #2 AWG THW CU — EQUIPMENT RATING 10,000 AMPS RMS SYM

## PANELBOARD SCHEDULE — PANEL 'H5'

TYPE NEHB 277/480 VOLTS 3 Ø 4 W
MOUNTING □ FLUSH ■ SURFACE — DIMENSIONS 20 W 5 3/4 D ___ H — LOCATION ELEC. RM. 225 AMP MAINS ■ LUGS □ BREAKER

BRANCH BREAKERS

| ITEM | AMPS | POLE | WIRE SIZE | CIR NO | LEFT A | B | C | RIGHT A | B | C | CIR NO | AMPS | POLE | WIRE SIZE | ITEM |
|---|---|---|---|---|---|---|---|---|---|---|---|---|---|---|---|
| RACQUETBALL LTS | 20 | 1 | 12 | 1 | 2400 | | | 2400 | | | 2 | 20 | 1 | 12 | RAQUETBALL LIGHTS |
| | | | | 3 | | 2400 | | | 2400 | | 4 | | | | |
| | | | | 5 | | | 2400 | | | 2500 | 6 | | | | |
| LIGHTS - [illegible] OFF. | | | | 7 | 3500 | | | 3200 | | | 8 | | | | LIGHTS - ~~GYM~~ PLAZA |
| ~~LIGHTS~~ - SPARE | | | | 9 | | 310 | | | | | 10 | | | | SPARE |
| LIGHTS - VEST | | | | 11 | | | 330 | | | | 12 | | | | SPARE |
| LIGHTS - ARCHES | | | | 13 | 880 | | | 775 | | | 14 | 20 | 3 | 12 | EF-1, EF-2 |
| LIGHTS - HALL | 20 | 1 | | 15 | | 2600 | | | 775 | | 16 | - | - | - | - |
| SPARE | | | | 17 | | | | | | 775 | 18 | - | - | - | - |
| ~~YARD~~ SPARE | | | 10 | 19 | | | | 5760 | | | 20 | 50 | 3 | 6 | ~~XFMR 'TR5'~~ |
| SPACE | | | | 21 | | | | | 4700 | | 22 | - | - | - | -EF 1 & 2 |
| XFMR TR5 | | | | 23 | | | | | | 6630 | 24 | - | - | - | - |
| | | | | 25 | | | | | | | 26 | 20 | 1 | | SPARE |
| | | | | 27 | | | | | | | 28 | | | | |
| | | | | 29 | | | | | | | 30 | | | | |

Totals: 7740 / 5310 / 2730 / 12125 / 7875 / 9935 — TOTAL 19865 / 13185 / 12638 — AMPS / PHASE 72 / 48 / 46
FEEDER: □ TOP □ BOTTOM — TOTAL CONNECTED LOAD 45,688 VA
CONDUIT SIZE [illegible] WIRE SIZE 4 #[illegible] AWG THW CU — EQUIPMENT RATING 15,000 AMPS RMS SYM

## PANELBOARD SCHEDULE — PANEL H6

TYPE NEHB 277/480 VOLTS 3 Ø 4 W
MOUNTING ■ FLUSH □ SURFACE — DIMENSIONS 20 W 5 3/4 D ___ H — LOCATION VESTIBULE 225 AMP MAINS ■ LUGS □ BREAKER

BRANCH BREAKERS

| ITEM | AMPS | POLE | WIRE SIZE | CIR NO | LEFT A | B | C | RIGHT A | B | C | CIR NO | AMPS | POLE | WIRE SIZE | ITEM |
|---|---|---|---|---|---|---|---|---|---|---|---|---|---|---|---|
| ~~AH-4~~ CP3 | 60 | 3 | 6 | 1 | 7480 | | | 390 | | | 2 | 20 | 3 | 12 | CP-4 |
| - | - | - | - | 3 | | 7480 | | | 390 | | 4 | - | - | - | - |
| - | - | - | - | 5 | | | 7480 | | | 390 | 6 | - | - | - | - |
| ~~AH-3~~ LIGHTS | 60 | 3 | 6 | 7 | 7480 | | | 390 | | | 8 | 20 | 3 | 12 | CP-3 |
| - LIGHTS | - | - | - | 9 | | 7480 | | | 390 | | 10 | - | - | - | - |
| STREET LIGHTS | - | - | - | 11 | | | 7480 | | | 390 | 12 | - | - | - | - |
| LIGHTS-STREET | 20 | 1 | 10 | 13 | 1320 | | | 12000 | | | 14 | 70 | 3 | 4 | TRANSFORMER TR6 |
| PARKING LOT | | | 10 | 15 | | 1155 | | | 12000 | | 16 | - | - | - | |
| PARKING LOT | | | 8 | 17 | | | 1760 | | | 12000 | 18 | - | - | - | |
| SIDEWALK | | | 8 | 19 | 1320 | | | | | | 20 | 20 | 1 | | SPARE |
| PLAZA OB LIGHTS | | | 8 | 21 | | 2200 | | | | | 22 | | | | |
| | | | 8 | 23 | | | 3080 | | | | 24 | | | | |
| | | | 8 | 25 | 1540 | | | | | | 26 | | | | |
| | | | 12 | 27 | | 550 | | | | | 28 | | | | |
| SPARE | | | | 29 | | | | | | | 30 | | | | |
| AH3 | | | | 31 | | | | | | | 32 | | | | |

Totals: 19140 / 18865 / 19800 / 12780 / 12780 / 12780 — TOTAL 31920 / 31645 / 32580 — AMPS / PHASE 115 / 114 / 118
FEEDER: □ TOP □ BOTTOM — TOTAL CONNECTED LOAD 96,145 VA
CONDUIT SIZE 2" WIRE SIZE 4 #2/0 AWG THW CU. — EQUIPMENT RATING 14,000 AMPS RMS SYM

0000TVE16
Weber State College, Physical Education Facility - RW 84-058
Panel Schedules - 26764

RECORD DOCUMENTS JUL 2 1990
THESE DOCUMENTS HAVE BEEN REVISED TO RECORD INFORMATION SUBMITTED BY THE CONTRACTOR, WHILE THEY ARE ASSUMED TO BE RELIABLE THE ARCHITECT DOES NOT GUARANTEE THEIR ACCURACY.

REGISTERED PROFESSIONAL ENGINEER — ROBERT BECHERER No. 4222 — STATE OF UTAH

Becherer Nielson Associates
Consulting Engineers
146 Pierpont Avenue
Salt Lake City, Utah 84101
801 532-2196

JRA JONES/ RICHARDS & ASSOCIATES
ARCHITECTURE (801) 394-3033
PLANNING 533 26TH STREET
CONSTRUCTION MANAGEMENT OGDEN, UTAH

REVISED: AS BUILTS 6-90
PROJECT NUMBER: 8403
DATE: 6-21-88
DRAWN BY: L. REMBER
PROJECT: PHYSICAL EDUCATION COMPLEX — WEBER STATE COLLEGE
SHEET TITLE: PANEL SCHEDULES
SHEET NO. E-6

## GENERAL LANDSCAPE NOTES:

1. TOP SOIL UNDER THE EXISTING SOD AREAS MAY BE STOCK PILED FOR REUSE ON THIS PROJECT. IT IS ANTICIPATED THAT GENERAL CONSTRUCTION TRAFFIC WILL DESTROY ALL EXISTING TURF AREAS IN THE EXISTING PLAY FIELDS. THOSE AREAS ARE TO BE RESTORED TO A FRIABLE STATE OF REPAIR PRIOR TO RE-SEEDING. PROTECT THOSE AREAS FROM TOXIC SPILLS OF ANY KIND THAT WOULD BE DETRIMENTAL TO THE REESTABLISHMENT OF HEALTHY LAWNS. PROVIDE ADDITIONAL TOP SOIL AS NEEDED TO HAVE TOPSOIL 12" DEEP ON ROOF GARDEN AND IN SHRUB BEDS AND 4" DEEP IN OTHER GRASS AREAS. THE IMPORTED TOP SOIL SHALL CONSIST OF NATURAL SANDY LOAM OF UNIFORM QUALITY, FREE FROM SUBSOIL, HARD CLODS, STIFF CLAY HARD-PAN, SOD, DEBRIS, OR OTHER UNDESIRABLE MATERIAL. SOIL SHALL BE FREE OF PLANTS, ROOTS, OR SEEDS THAT WOULD BE TOXIC OR HARMFUL TO GROWTH AND OBTAINED FROM NATURALLY DRAINED SOURCES, AND SHALL CONTAIN AT LEAST 4% ORGANIC MATTER DETERMINED BY LOSS ON IGNITION OF MOISTURE-FREE SAMPLE DRIED IN ACCORDANCE WITH CURRENT METHODS OF THE ASSOCIATION OF OFFICIAL AGRICULTURAL CHEMISTS. ACIDITY RANGE SHALL BE PH 5.5 TO PH 7.7 INCLUSIVE.

2. SODDED AREAS SHALL BE ALL NEW FRESH CUT KENTUCKY BLUE GRASS SOD PLACED ON A MINIMUM OF FOUR INCHES OF RICH LOAMY TOPSOIL. LAY SOD TO FORM A SOLID MASS WITH TIGHTLY FITTED JOINTS. BUTT ENDS AND SIDES TOGETHER; DO NOT OVERLAP. STAGGER STRIPS TO OFFSET JOINTS. TOP DRESS BY WORKING SIFTED SOIL INTO MINOR CRACKS BETWEEN PIECES OF SOD; REMOVE EXCESS SOD TO PREVENT SMOTHERING ADJACENT GRASS. TAMP OR ROLL LIGHTLY TO COMPLETE THE OPERATION. LAWN AREAS TO RECEIVE SOD SHALL BE PREPARED IDENTICALLY TO AREAS TO RECEIVE SEED.

3. THE SLOPES TO BE PLANTED IN EUONYMUS GROUND COVER ARE TO BE PREPARED BY ROTO-TILLING ONE LARGE BALE OF PEAT MOSS PER 200 S.F. OF SURFACE AREA INTO THE TOP FIVE INCHES OF NATURAL EARTH. WHEN PLANTING THE EUONYMUS EACH PLANT SHALL BE BACK FILLED WITH A MIX OF 1 PART PEAT MOSS AND 1 PART RICH IMPORTED TOP SOIL.

4. ALL NEWLY EXCAVATED AREAS SUBJECT TO EROSION AND EXISTING TURF AREAS SHALL BE PROTECTED DURING ALL PHASES OF THE LANDSCAPE OPERATION AND ANY DAMAGES OCCURRING SHALL BE REPAIRED AT THE CONTRACTORS EXPENSE.

5. PROVIDE SHREDDED BARK MULCH TOP DRESSING TWO INCHES DEEP IN ALL SHRUB BEDS AND PLANTING AREAS. TOP DRESS PLANTER BOXES WITH 1" DEEP BARK MULCH UNDER AND AROUND THE CENTRAL SHRUB AND/OR GROUNDCOVER MASS.

6. PROVIDE UNDERGROUND EXTENSIONS FOR ALL DOWN SPOUTS AND GUARANTEE POSITIVE DRAINAGE FOR ALL SURFACE AREAS. SLOPE GROUND AWAY FROM THE BUILDING AT A MINIMUM SLOPE OF 3%. ALL NEWLY EXCAVATED AREAS SUBJECT TO EROSION SHALL BE PROTECTED DURING ALL PHASES OF THE LANDSCAPE OPERATION AND ANY DAMAGES OCCURRING SHALL BE REPAIRED AT THE CONTRACTORS EXPENSE.

7. NO SHRUBS OR TREES ARE TO BE PLANTED IN THERE ORIGINAL SHIPPING CONTAINERS. IF THE TREES ARE NOT PLANTED WITHIN 36 HOURS AFTER THEY ARE REMOVED FROM THE TRUCK THEY ARE TO BE HEELED IN AND WATERED DOWN FREQUENTLY AND SUFFICIENTLY FOR PROPER PROTECTION UNTIL PLANTED.

8. THE CONTRACTOR SHALL FORMALLY NOTIFY THE LANDSCAPE ARCHITECT IN WRITING 48 HOURS PRIOR TO THE ACTUAL TREE PLANTING TO ENABLE EFFECTIVE MONITORING OF THE TREE HANDLING AND PLANTING PROCEDURES DURING THE INITIAL INSTALLATION OF THE TREES. TREES PLANTED INITIALLY WITHOUT THE LANDSCAPE ARCHITECT PRESENT WILL BE OUTRIGHT REJECTED.

9. THE 2X6 REDWOOD LAWN EDGE SHALL BE CONSTRUCTED OF CONSTRUCTION HEART REDWOOD STAKED WITH 1x2x16" STAKES 3'o/c FASTENED WITH 2 EA. 8d HOT DIPPED GALVANIZED NAILS. CUT TOP OF STAKES OFF 1" BELOW TOP OF EDGING MATERIAL. PLACE EVERY TIME SHRUB/GROUNDCOVER BEDS COME ADJACENT TO GRASS AREAS. 4x6 REDWOOD HEADER AGAINST BUILDING WALLS AND LAWNS SHALL BE INSTALLED IN LIKE FASHION.

10. PROVIDE ADEQUATE DRAINAGE IN ALL TREE AND SHRUB PLANTER POCKETS AND PITS. SURFACE WATER STANDING LONGER THAN 24 HOURS WILL CONSTITUTE PRIMA FACIE EVIDENCE THAT PROPER DRAINAGE HAS NOT BEEN PROVIDED AND THE CONTRACTOR WILL BE INSTRUCTED TO MAKE THE NECESSARY CORRECTIONS.

11. THESE PLANS WERE PREPARED BY THE LANDSCAPE ARCHITECT BASED ON OVERLAY DRAWINGS PROVIDED BY THE ARCHITECT. THE CONTRACTOR SHALL REFER TO THE ARCHITECTS SITE PLAN FOR GRADING REQUIREMENTS. COORDINATE PROBLEMS OR DISCREPANCIES IN HORIZONTAL AND VERTICAL DISTANCES WITH BOTH THE OWNER AND THE LANDSCAPE ARCHITECT PRIOR TO ANY CONSTRUCTION ON THOSE CONFLICTING AREAS.

12. THE CONTRACTOR SHALL MAKE PROVISIONS FOR ADEQUATE DRAINAGE OF ROOF TOP PLANTER BOXES. TOP SOIL SHALL BE PLACED TO WITHIN 3" OF THE TOP OF THE PLANTERS AND TOP DRESSED WITH 2" OF SHREDDED BARK MULCH. SEE ARCHITECTURAL DETAILS OF PLANTER BOXES FOR COORDINATION OF THE SPRINKLER LINES TO EACH SHRUB. SOD SHALL SURROUND THE ENTIRE BASE OF EACH PLANTER BOX EXCEPT THOSE PLACED DIRECTLY NEXT TO A CURB. THE OWNER SHALL MAINTAIN THE GRASS AREAS BETWEEN THE PLANTERS USING SMALL MOWERS AND LINE WEED TRIMMER.

ALL AREAS TO BE LANDSCAPED WHICH HAVE NOT PREVIOUSLY BEEN CLEARED & PREPARED BY OTHERS SHALL BE CLEARED & PREPARED BY THE LANDSCAPE CONTRACTOR. SEE ARCH. SITE PLAN, COORD. W/ GENERAL.

## PLANT MASTER SCHEDULE

FILE - PROJECT:USC

| KEY | BOTANICAL NAME | COMMON NAME | SIZE | NOTE |
|---|---|---|---|---|
| TREES | | | | |
| x | A tree to be preserved | Prune as needed | - | - |
| A | Picea pungens | Colorado Spruce | 8'H. | B&B |
| B | Pinus nigra | Austrian Pine | 8'H. | B&B |
| C | Prunus bliriana | Bliriana Flowering Plum | 5"Cal. | B&B |
| D | Malus ioensis 'Plena' | Bechtel Improved Crab | 3"Cal. | B&B |
| E | Tilia tomentosa | Silver Linden | 3"Cal. | B&B |
| F | Sophora japonica | Japanese Pagoda Tree | 3"Cal. | B&B |
| G | Zelkova serrata | Chinese Zelkova | 3"Cal. | B&B |
| H | | MARSHALL ASH (SEEDLESS) | 3"CAL. | B&B |
| SHRUBS | | | | |
| 1 | Chaenomeles speciosa 'Simonii' | Early Simoni Quince | 5 Gal. | |
| 2 | Cornus stolonifera 'Redosier' | Red twig dogwood | 5 GAL. | |
| 3 | Cotoneaster congesta | Pyrenees Cotoneaster | 5 Gal. | |
| 4 | Euonymus alatus 'Compacta' | Dwarf Winged Euonymus | 5 Gal. | |
| 5 | Juniperus sabina 'Broadmoor'18" | Broadmoor Juniper | 5 Gal. | |
| 6 | Magnolia stellata | Star Magnolia | 7 Gal. | |
| 7 | Pieris x 'Forest Flame' | Forest Flame Pieris | 5 Gal. | |
| 8 | Prunus glandulosa | Double Flowering Almond | 5 Gal. | |
| 9 | Cotoneaster acutifolia | Peking Cotoneaster | 5 Gal. | |
| 10 | Miscanthus sinensis 'Gracillimus' | Maiden Grass | 5 Gal. | |
| 11 | Hibiscus syriacus 'Ardens' | Blue Rose of Sharon | 5 Gal. | |
| 12 | Weigelia florida 'Vanicek' | Vanicek Cardinal Shrub | 5 Gal. | |
| VINES AND GROUND COVER | | | | |
| ww | Cerastium tomentosum | Snow in Summer | 6" Pot | 12"o/c |
| xx | Vinca minor | Dwarf Periwinkle | f-8/12 | 12"o/c |
| yy | Euonymus fortunei 'Colorata' | Purple Leaf Wint. Creep. | 1 Gal. | 24"o/c |
| zz | Hypericum calycinum | St. John's Wort | F 8/4 | 12"o/c |

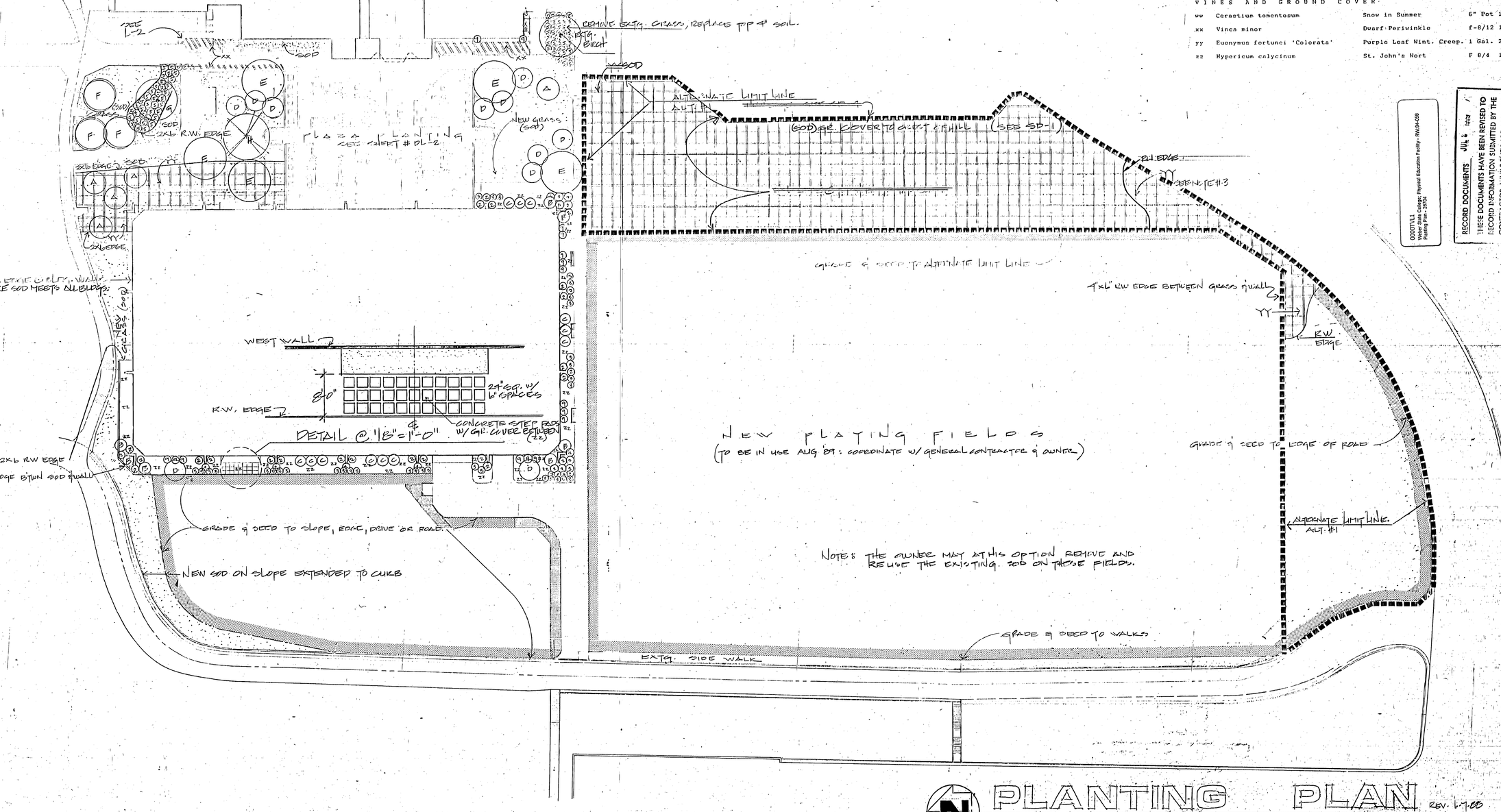


# PLANTING PLAN

SCALE: 1" = 30'-0"

REV. 6-7-88

GOODFELLOW
Weber State College Physical Education Facility - RW-84-509
Planting Plan - 20704

RECORD DOCUMENTS JUL 6 1992
THESE DOCUMENTS HAVE BEEN REVISED TO RECORD INFORMATION SUBMITTED BY THE CONTRACTOR. WHILE THEY ARE ASSUMED TO BE RELIABLE THE ARCHITECT DOES NOT GUARANTEE THEIR ACCURACY.

David G. Racker & Associates
Landscape Architecture
Land Planning

JONES / RICHARDS & ASSOCIATES

REVISIONS: AS BUILTS 6-92

PROJECT: PHYSICAL EDUCATION FACILITY
WEBER STATE COLLEGE

SHEET TITLE: PLANTING PLAN

SHEET NO.

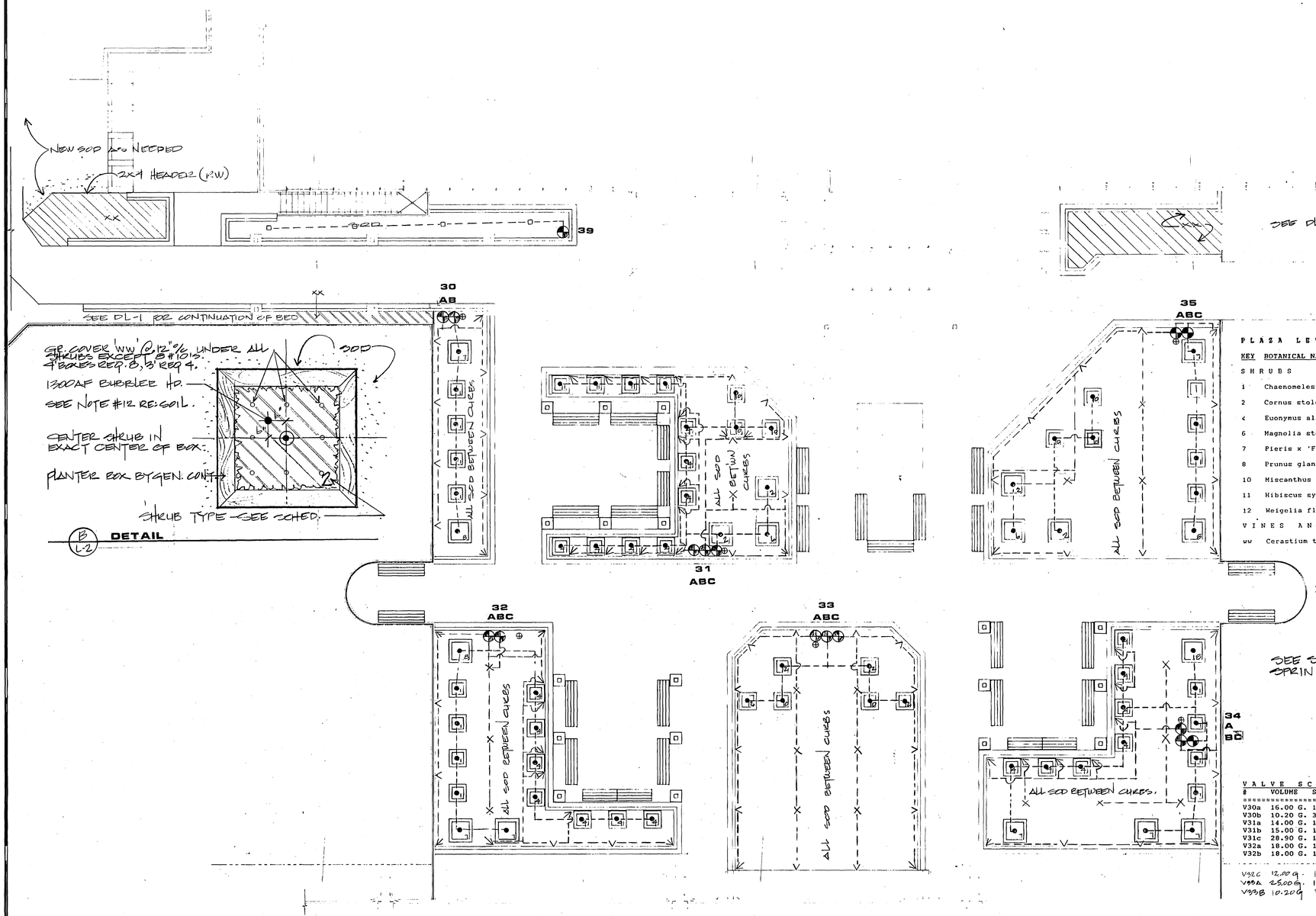


XX = VINCA MINOR - SEE SHT. L-1

SEE SHT. P-4 FOR CONTINUATION OF 1 1/4" SPRINKLER LINES IN BUILDING.

**PLAZA LEVEL PLANT SCHEDULE**

| KEY | BOTANICAL NAME | COMMON NAME | SIZE | NOTE |
|---|---|---|---|---|
| SHRUBS | | | | |
| 1 | Chaenomeles speciosa 'Simonii' | Early Simoni Quince | 5 Gal. | |
| 2 | Cornus stolonifera 'Redosier' | Red twig dogwood | 5 GAL. | |
| < | Euonymus alatus 'Compacta' | Dwarf Winged Euonymus | 5 Gal. | |
| 6 | Magnolia stellata | Star Magnolia | 7 Gal. | |
| 7 | Pieris x 'Forest Flame' | Forest Flame Pieris | 5 Gal. | |
| 8 | Prunus glandulosa | Double Flowering Almond | 5 Gal. | |
| 10 | Miscanthus sinensis 'Gracillimus' | Maiden Grass | 5 Gal. | |
| 11 | Hibiscus syriacus 'Ardens' | Blue Rose of Sharon | 5 Gal. | |
| 12 | Weigelia florida 'Vanicek' | Vanicek Cardinal Shrub | 5 Gal. | |
| VINES AND GROUND COVER | | | | |
| ww | Cerastium tomentosum | Snow in Summer | 6" Pot 12"o/c | |

**VALVE SCHEDULE / CIRCUITS (ROOF GARDEN PLAZA)**

| # | VOLUME | SIZE | BODY/RISER | # | VOLUME | SIZE | BODY/RISER |
|---|---|---|---|---|---|---|---|
| V30a | 16.00 G. | 1" | | V33c | 25.00 G. | 1 1/4" | |
| V30b | 10.20 G. | 3/4" | | V34a | 19.00 G. | 1" | |
| V31a | 14.00 G. | 1" | | V34b | 19.00 G. | 1" | |
| V31b | 15.00 G. | 1" | | V34c | 25.50 G. | 1 1/4" | |
| V31c | 28.90 G. | 1 1/4" | | V35a | 15.00 G. | 1" | |
| V32a | 18.00 G. | 1" | | V35b | 20.40 G. | 1" | |
| V32b | 18.00 G. | 1" | | V35c | 16.00 G. | 1" | |
| V32C | 12.00 G. | 1" | | V39. | 5.20 G | 3/4" | |
| V33A | 25.00 G. | 1 1/4" | | | | | |
| V33B | 10.20 G | 3/4" | | | | | |

# PLAZA PLAN

N A L-2 SCALE: 1/8" = 1'-0"

REV. 6/7/88

RECORD DOCUMENTS JUL 8 1990

THESE DOCUMENTS HAVE BEEN REVISED TO RECORD INFORMATION SUBMITTED BY THE CONTRACTOR, WHILE THEY ARE ASSUMED TO BE RELIABLE THE ARCHITECT DOES NOT GUARANTEE THEIR ACCURACY.

0000TVL2
Weber State College, Physical Education Facility - RW 84-058
Plaza Irrigation & Planting - 26705

David C. Racker & Associates
Landscape Architecture
Land Planning

jra JONES / RICHARDS & ASSOCIATES
ARCHITECTURE (801) 394-3033
PLANNING 533 - 26TH STREET
CONSTRUCTION MANAGEMENT OGDEN, UTAH

REVISED: AS BUILTS 6-90

PROJECT NUMBER: 8403

DATE: 6-21-88

DRAWN BY: DCR

PROJECT: PHYSICAL EDUCATION FACILITY
WEBER STATE COLLEGE

SHEET TITLE: PLAZA IRRIGATION & PLANTING

SHEET NO. L-2

NOTICE TO CONTRACTOR: Sizing of pipe servicing the impact heads is provided as a convenience only. All sizing is to be verified against actual pressure availability at the time of installation. Sizing of spray head lines shall be provided by the irrigation contractor by means of shop drawings and shall be submitted to the Architect before beginning the work. Sizing shall be based on sizes listed in the pipe sizing chart on this plan. 1" minimum lines shall be used and circuits shall be looped when feasible as shown.

PIPE SIZING CHART @ 5.0 fps

| FLOW IN GPM | CLASS 200 PIPE | FLOW IN GPM | SCHEDULE 40 PIPE |
|---|---|---|---|
| UP TO 15.0 | 1" | UP TO 13.0 | 1" |
| UP TO 22.5 | 1 1/4" | UP TO 23.0 | 1 1/4" |
| UP TO 32.5 | 1 1/2" | UP TO 33.5 | 1 1/2" |
| UP TO 55.0 | 2" | UP TO 53.0 | 2" |
| UP TO 75.0 | 2 1/2" | UP TO 73.0 | 2 1/2" |
| UP TO 120.0 | 3" | UP TO 115.0 | 3" |

IRRIGATION MATERIALS SCHEDULE

POC 2 POINTS OF CONNECTION TO EXISTING 3" WSC WATER MAIN. (PINEVIEW WATER) INCLUDE 3" SPEERS FILTER AT EACH CONNECTION WITH MANUAL FLUSH VALVES.

ENDS OF PINEVIEW LINES TO BE CAPPED.

L3 L2 GEE OR McDONALD BRASS GLOBE VALVES FOR MANUAL CONTROL OF CIRCUITS.

WILKENS #600 PRESSURE REDUCTION VALVE ON EACH SPRAY HEAD CIRCUIT.

EXISTING GALVANIZED MAIN LINES.

PROPOSED NEW 3" PVC SCHEDULE 40 MAIN LINES.

PROPOSED NEW PVC SCHEDULE 40 LATERAL LINES. 1" MINIMUM SIZE AS NOTED.

GATE VALVES SERVING AS CIRCUIT ISOLATION VALVES. (OR AT MANIFOLDS)

RAINBIRD RC51 HEAD W/ 1/4" x3/16" NOZ. 62'R. 20.7 GPM @ 60 PSI FULL CR.

RAINBIRD RC47 HEAD W/ 9/32" NOZ. 57'R. 17.6 GPM @ 60 PSI PART CR.

RAINBIRD CST-MPR BRASS NOZ. 7x36' 1.30 GPM @ 30 PSI ON 2800A BRASS HEAD.

RAINBIRD Q-MPR BRASS NOZ. 14'R. 1.00 GPM @ 30 PSI ON 2800A BRASS HEAD.

RAINBIRD H-MPR BRASS NOZ. 14'R. 2.00 GPM @ 30 PSI ON 2800A BRASS HEAD.

RAINBIRD F-MPR BRASS NOZ. 14'R. 4.00 GPM @ 30 PSI ON 2800A BRASS HEAD.

RAINBIRD Q-MPR 2400 NOZ. 14'R. 1.00 GPM @ 30 PSI ON GALVANIZED RISER.

RAINBIRD H-MPR 2400 NOZ. 14'R. 2.00 GPM @ 30 PSI ON GALVANIZED RISER.

RAINBIRD F-MPR 2400 NOZ. 14'R. 4.00 GPM @ 30 PSI ON GALVANIZED RISER.

RAINBIRD 1300AF ADJ. FULL CR. BUBBLER 1.70 GPM @ 30 PSI ON GALV RISER.

RAINBIRD 5RC/NP 1" ONE PIECE QUICK COUPLE VALVE FOR WINTERIZATION.

GENERAL IRRIGATION SYSTEM NOTES:

The contractor shall provide a shop drawing showing the proposed sizing of all pipe used in the circuiting of lateral lines servicing the small spray heads.

1. ENSURE POSITIVE GRAVITY DRAINAGE OF THE SYSTEM BY PROVIDING MARKED MANUAL DRAIN VALVES AND SUMPS AT ALL LOW POINTS AND AT THE ENDS OF ALL LATERAL LINES WHICH ARE SLOPING DOWN HILL FROM THE VALVES. PROVIDE 1" FORD BALL GATE DRAIN VALVE OR EQUAL WITH GAS COCK TO DRAIN ALL MAIN LINES AT EACH LOW POINT.

2. INSTALL ALL HEADS ON RISER ASSEMBLIES AS DETAILED. WRAP ALL THREADED PRESSURE CONNECTIONS WITH TEFLON TAPE. SET HEADS PLACED IN GRASS ADJACENT TO PAVING OR CURBS 1/4" BELOW THE LIP OF THE CURB, WALK, DRIVE, OR BUILDING BY USING ADJUSTMENT SCREW IN EACH NOZZLE AS NEEDED.

3. MARK VALVE MANIFOLD LOCATIONS WITH PAINT ON CURB OR WALK TO MATCH CAMPUS STANDARD. PROVIDE AN ISOLATION VALVE SEPARATING MANIFOLD FROM MAIN LINE. HOUSE MANUAL VALVES IN 2" PVC SLEEVES WITH LOCKING CAPS AS DETAILED. PROVIDE 12' DEEP GRAVEL SUMPS UNDER EACH VALVE.

4. REMOVE HEADS, VALVES, AND OTHER FIXTURES FROM THE EXISTING SYSTEM WITHIN THE CONTRACT LIMIT LINES AND RETURN TO CAMPUS GROUNDS DEPARTMENT FOR RESTOCKING AND STORAGE. OLD PIPE ENCOUNTERED DURING CONSTRUCTION SHALL BE REMOVED FROM THE SITE.

5. LATERAL LINES SERVING IMPACT HEADS SHALL BE A MINIMUM OF 18" DEEP AND THOSE SERVING SPRAY HEADS SHALL BE A MINIMUM OF 6" DEEP. MAIN PRESSURE LINES SHALL BE 24" DEEP MINIMUM. ALL 3" MAIN LINES SHALL HAVE THRUST BLOCKS AT ALL VERTICAL AND HORIZONTAL CHANGES IN DIRECTION.

6. THE WATER SOURCE FOR THIS PROJECT IS PINEVIEW IRRIGATION WATER FROM AN EXISTING MAIN LINE AS SHOWN. (ALSO SEE INSET ON PLAN SHOWING EXISTING CONDITIONS.) AN EXISTING STOP/WASTE CONNECTION SERVES THE MAIN THE LOCATION OF WHICH IS TO BE COORDINATED THROUGH THE GROUNDS DEPARTMENT OF THE COLLEGE. A BACKFLOW PREVENTION DEVICE WILL NOT BE NECESSARY ON THIS SYSTEM.

7. DAMAGE TO SOD OR OTHER PLANT MATERIALS CAUSED BY SETTLING SHALL BE BACK CHARGED TO THE IRRIGATION INSTALLER. WATER DOWN AND COMPACT TRENCHES COMPLETELY.

8. PROVIDE OWNER WITH COMPLETE HANDS ON INSTRUCTION FOR THE OPERATION OF THE VALVES, DRAINS, AND WINTER SERVICING OF THE SYSTEM. ASTERISKS (*) ON PLAN DESIGNATE PROPOSED QUICK COUPLER VALVES FOR WINTERIZATION OF THE SYSTEM PER CAMPUS STANDARDS. DRAIN LOCATIONS AND ARE TO BE FIELD VERIFIED FOR ACTUAL SLOPE CONDITIONS OF PIPE. PROVIDE AS BUILT DRAWINGS TO THE OWNER AND LANDSCAPE ARCHITECT SHOWING ALL CHANGES AND DEVIATIONS TO THE DRAWN PLAN WHEN INSTALLED.

9. COORDINATE ALL ASPECTS OF THIS PLAN WITH THE IRRIGATION DETAILS AND SPECIFICATIONS PROVIDED AS A PORTION OF THESE DOCUMENTS. CAMPUS STANDARDS REQUIRE ALL SWING JOINT RISERS AND STATIONARY RISERS AND FITTINGS TO BE OF GALVANIZED STEEL. NO LINES SHALL BE SMALLER THAN 1" PIPE. LINES ARE SHOWN IN WALKS ARE FOR CLARITY ONLY. LOCATE THE LINES PARALLEL TO THE WALKS.

10. THIS SYSTEM IS BASED ON CAMPUS PLANNING DEPARTMENT DATA OF 85 PSI STATIC PRESSURE FLUCTUATING TO 120 PSI. THIS SYSTEM IS DESIGNED FOR 30 PSI OPERATING PRESSURE AT EACH SPRAY HEAD AND 60 PSI AT EACH IMPACT HEAD. PERFORM FRICTION LOSS CALCULATIONS BASED ON THE ACTUAL PSI AVAILABLE AT THE SITE AND ADJUST PIPE SIZING AS PRESSURE REQUIRES.

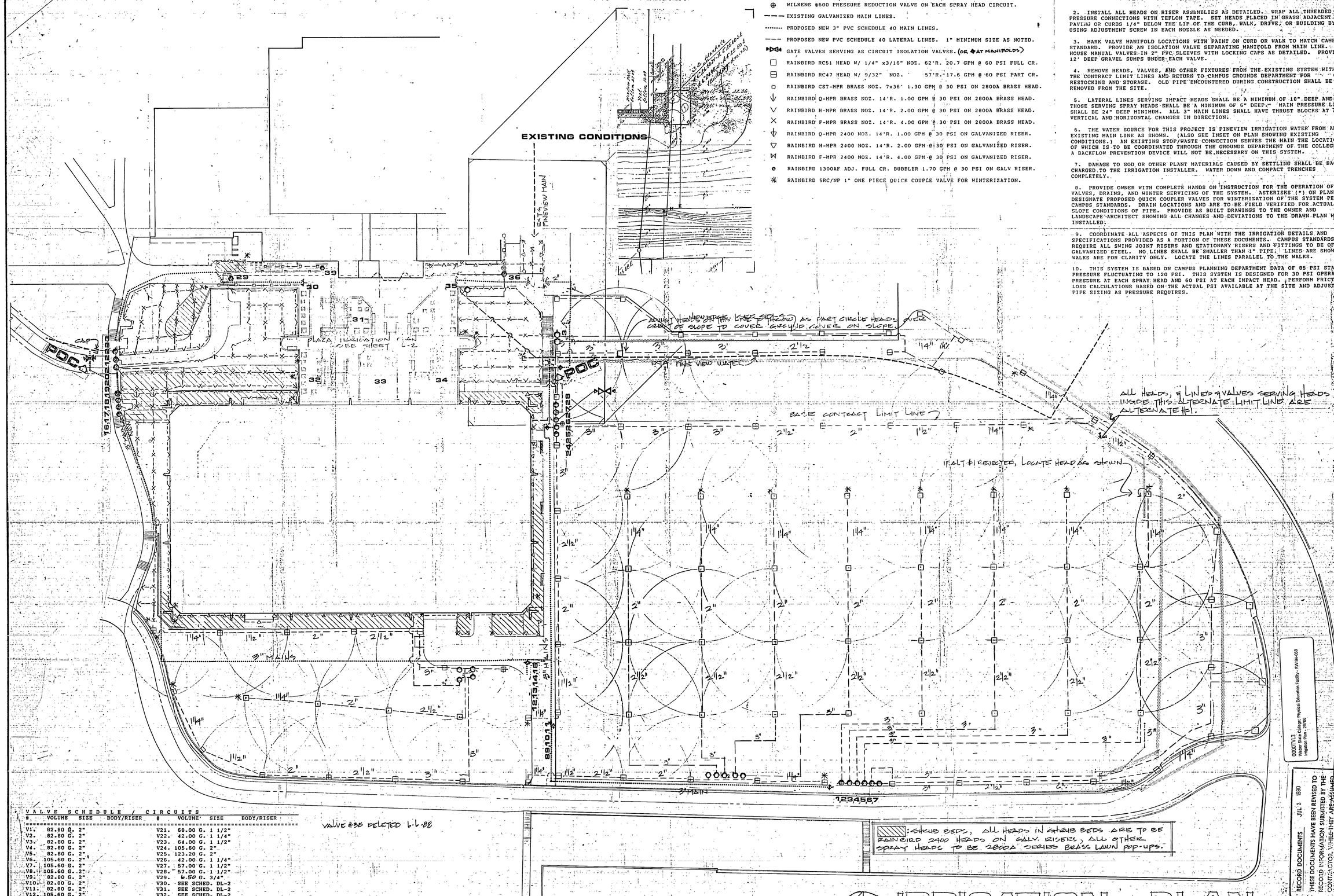


VALVE SCHEDULE / CIRCUITS

| # | VOLUME | SIZE | BODY/RISER | # | VOLUME | SIZE | BODY/RISER |
|---|---|---|---|---|---|---|---|
| V1. | 82.80 G. | 2" | | V21. | 68.00 G. | 1 1/2" | |
| V2. | 82.80 G. | 2" | | V22. | 42.00 G. | 1 1/4" | |
| V3. | 82.80 G. | 2" | | V23. | 64.00 G. | 1 1/2" | |
| V4. | 82.80 G. | 2" | | V24. | 105.60 G. | 2" | |
| V5. | 82.80 G. | 2" | | V25. | 123.20 G. | 2" | |
| V6. | 105.60 G. | 2" | | V26. | 42.00 G. | 1 1/4" | |
| V7. | 105.60 G. | 2" | | V27. | 57.00 G. | 1 1/2" | |
| V8. | 105.60 G. | 2" | | V28. | 57.00 G. | 1 1/2" | |
| V9. | 82.80 G. | 2" | | V29. | 6.50 G. | 3/4" | |
| V10. | 82.80 G. | 2" | | V30. | SEE SCHED. | DL-2 | |
| V11. | 82.80 G. | 2" | | V31. | SEE SCHED. | DL-2 | |
| V12. | 105.60 G. | 2" | | V32. | SEE SCHED. | DL-2 | |
| V13. | 82.80 G. | 2" | | V33. | SEE SCHED. | DL-2 | |
| V14. | 43.00 G. | 1 1/4" | | V34. | SEE SCHED. | DL-2 | |
| V15. | 123.20 G. | 2" | | V35. | SEE SCHED. | DL-2 | |
| V16. | 58.00 G. | 1 1/2" | | V36. | 32.00 G. | 1 1/4" | |
| V17. | 26.00 G. | 1" | | V37. | 123.20 G. | 2" | |
| V18. | 36.00 G. | 1 1/4" | | V38. | ~~[illegible]~~ | | |
| V19. | 27.00 G. | 1" | | V39. | SEE SCHED. | DL-2 | |
| V20. | 45.00 G. | 1 1/4" | | V40. | N/A | | |

VALVE #38 DELETED 6.6.88

# IRRIGATION PLAN

SCALE: 1"=30'-0"

REV: 6/1/88

RECORD DOCUMENTS JUL 3 1990

THESE DOCUMENTS HAVE BEEN REVISED TO RECORD INFORMATION SUBMITTED BY THE CONTRACTOR, WHILE THEY ARE ASSUMED TO BE RELIABLE THE ARCHITECT DOES NOT GUARANTEE THEIR ACCURACY.

PROJECT: PHYSICAL EDUCATION FACILITY
WEBER STATE COLLEGE

SHEET TITLE: IRRIGATION PLAN

SHEET NO. L-3

PROJECT NUMBER: 8403

DATE: 6-13-88

DRAWN BY: DCR

REVISED: AS BUILTS 6-90

JONES / RICHARDS & ASSOCIATES
ARCHITECTURE PLANNING CONSTRUCTION MANAGEMENT
(801) 394-3033 533 - 25TH STREET OGDEN, UTAH

David C. Racker & Associates
Landscape Architecture Land Planning

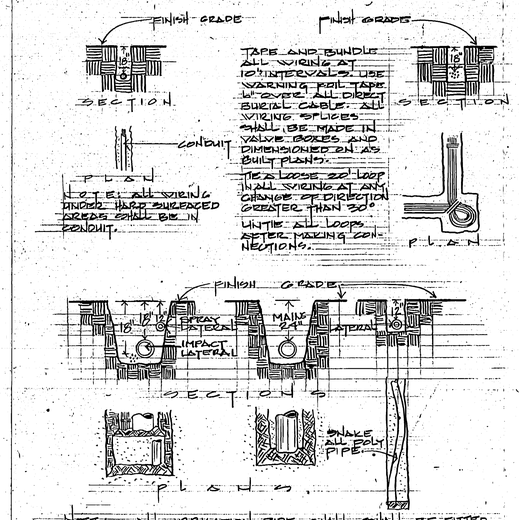


TAPE AND BUNDLE ALL WIRING AT 10' INTERVALS. USE WARNING FOIL TAPE 6" OVER ALL DIRECT BURIAL CABLE. ALL WIRING SPLICES SHALL BE MADE IN VALVE BOXES AND DIMENSIONED ON AS BUILT PLANS.

PROVIDE LOOSE 20' LOOP IN ALL WIRING AT ANY CHANGE OF DIRECTION GREATER THAN 30°

WRITE ALL LOOPS AFTER MAKING CONNECTIONS.

NOTE: ALL WIRING UNDER HARD SURFACED AREAS SHALL BE IN CONDUIT.

NOTE: ALL IRRIGATION PIPE SHALL SHALL BE FITTED AND INSTALLED IN ACCORDANCE WITH MFG. RECOMENDATIONS.

## TRENCHING

THIS DETAIL APPLYS TO ALL EVER-GREEN TREES 6' TALL & TALLER & ALL DECIDUOUS TREES 2" ϕ CAL. OR GREATER. CONIFERS LESS THAN 6' SHALL BE SINGLE GUYED STAKED ON 'UPWIND' SIDE OF TREE.

APPLY ANTI-DESICCANT SPRAY.

TREE TO BE PLANTED TO A DEPTH ESTABLISHING THE SAME RELATIONSHIP TO FINISH GRADE AS BEFORE TRANSPLANTING.

3 GUYS REQUIRED EQ. SPACED.

PROVIDE 18"R. GRASS FREE WATERWELL SURROUNDING TREE TRUNKS.

6" GALVANIZED TURNBUCKLES.

FABRIC-BEARING RUBBER HOSE ON #12 GA. WIRE, 3 REQUIRED @ 12" TO 24" ϕ.

2"x2" x 3' STAKES, POINTED ON ONE END, DRIVEN FREE OF BALL TO A DEPTH OF 24".

3" TO 4' DEEP DONUT SHAPE SAUCER

2" DEEP SHREDDED BARK MULCH.

REMOVE BURLAP FROM TOP 1/3 OF BALL OR CUT & REMOVE NON-BIODEGRADEABLE CONTAINERS.

SCARIFY SIDES OF HOLE IF AUGERED.

PLANTING BACKFILL MIX TO CONSIST OF 1/3 NATIVE SOIL FROM ORIGINAL HOLE, 1/3 SAND, & 1/3 HUMUS I.E. PEAT OR SOIL-AID. MIX THOROUGHLY & PLACE 6" ALL AROUND.

## TREE GUYING

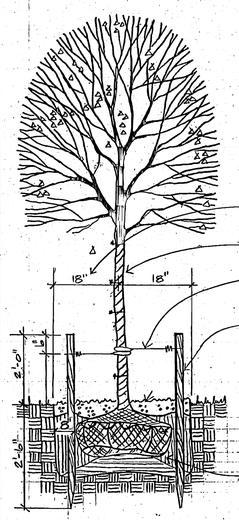


APPLY ANTI-DESICCANT SPRAY.

THIN BRANCHES BY 1/3, PAINT CUTS OVER 1/2" ϕ.

TREES W/CUT LEADERS WILL BE REJECTED.

PROVIDE 18"R. GRASS FREE WATERWELL SURROUNDING TREE TRUNKS.

WRAP ALL DECID. TREES OVER 2" CAL.

FABRIC-BEARING RUBBER HOSE ON #12 GA. WIRE, SET @ 1'-6" ABOVE FINISH GRADE.

2"x2" x 4' STAKES, POINTED ON ONE END, DRIVEN FREE OF BALL TO A DEPTH OF 30".

3" TO 4' DEEP DONUT SHAPE SAUCER.

2" DEEP SHREDDED BARK MULCH.

REMOVE BURLAP FROM TOP 1/3 OF BALL OR CUT & REMOVE NON-BIODEGRADEABLE CONTAINERS.

SCARIFY SIDES OF HOLE IF AUGERED.

PLANTING BACKFILL MIX TO CONSIST OF 1/3 NATIVE SOIL FROM ORIGINAL HOLE, 1/3 SAND, & 1/3 HUMUS I.E. PEAT OR SOIL-AID. MIX THOROUGHLY & PLACE 6" ALL AROUND.

WIRE BASKETS TO BE REMOVED BEFORE INSTALLATION

## TREE STAKING

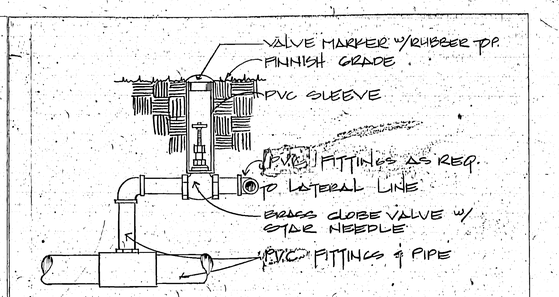


## MANUAL CONTROL VALVES

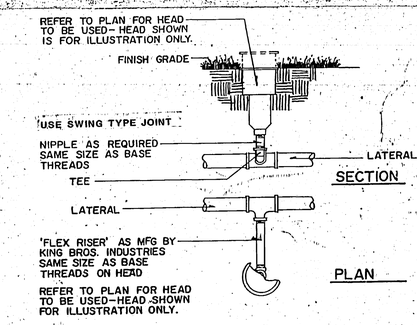


## HEAD INSTALLATION
NOT TO SCALE

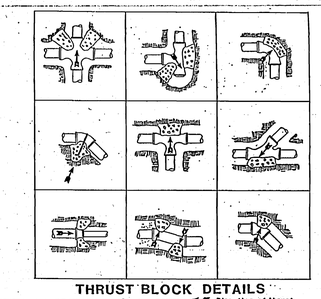

THRUST BLOCK DETAILS
Direction of thrust

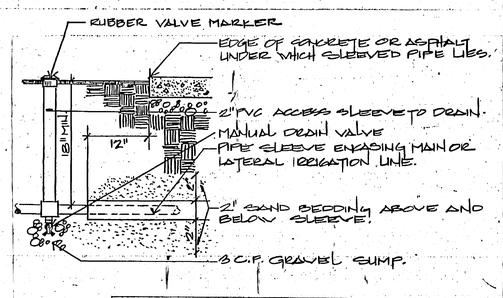


## PIPE SLEEVES

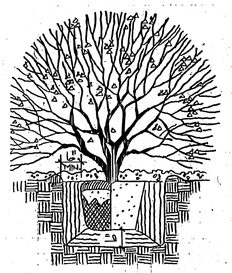

PROVIDE WATER SAUCER @ LIP OF EACH HOLE.

2" DEEP SHREDDED BARK MULCH.

SCARIFY SIDES OF HOLE IF AUGERED.

CUT AND LAY BACK BURLAP FROM TOP 1/3 OF BALL OR REMOVE FROM METAL CONTAINER, OR IF BARE ROOT STOCK SPREAD ROOTS IN THEIR NORMAL POSITION.

PLANTING MIX TO CONSIST OF 1/3 NATIVE SOIL FROM ORIGINAL HOLE, 1/3 SAND, & 1/3 HUMUS I.E. PEAT OR SOIL-AID. MIX THOROUGHLY & PLACE 6" ALL AROUND.

ON LEGGY SHRUBS WHERE GROUND COVER IS USED, PLANT GROUND COVER UP TO TRUNK.

## SHRUB PLANTING

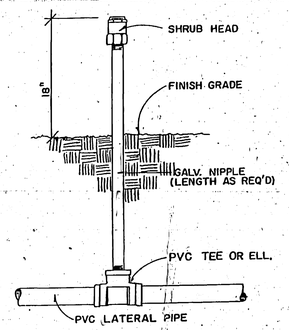


## SHRUB HEAD DETAIL
NOT TO SCALE

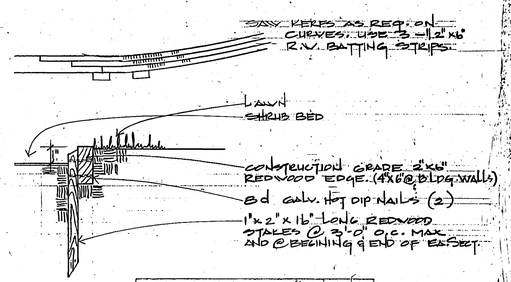


## LAWN EDGING

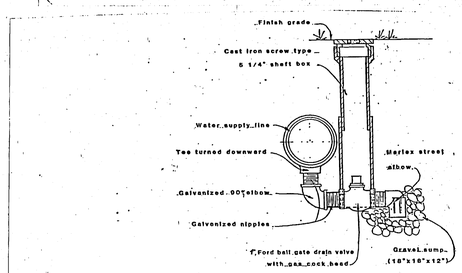


MANUAL DRAIN VALVE DETAIL

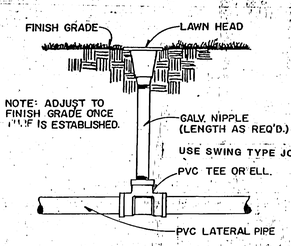


## TYPICAL POP-UP DETAIL
NOT TO SCALE

RECORD DOCUMENTS JUL 3 1990

THESE DOCUMENTS HAVE BEEN REVISED TO RECORD INFORMATION SUBMITTED BY THE CONTRACTOR. WHILE THEY ARE ASSUMED TO BE RELIABLE THE ARCHITECT DOES NOT GUARANTEE THEIR ACCURACY.

# DETAILS

REV. 6/7/88

NOT TO SCALE

0000TV.L4
Weber State College Physical Education Facility - 90V-84-059
Landscape Details - 07/90

David C. Racker & Associates
Landscape Architecture
Land Planning

jra JONES / RICHARDS & ASSOCIATES
ARCHITECTURE (801) 394-3333
PLANNING 323 - 25TH STREET
CONSTRUCTION MANAGEMENT OGDEN, UTAH

REVISED: AS BUILT 7-90

PROJECT NUMBER: 8403
DATE: 5-3-88
DRAWN BY: DCR

PROJECT: PHYSICAL EDUCATION FACILITY
WEBER STATE COLLEGE

SHEET TITLE: LANDSCAPE DETAILS

SHEET NO. L-4

# MECHANICAL LEGEND AND ABBREVIATIONS

- POSITIVE PRESSURE DUCT - RISE
- POSITIVE PRESSURE DUCT - DROP
- NEGATIVE PRESSURE DUCT - RISE
- NEGATIVE PRESSURE DUCT - DROP
- ROUND DUCT - RISE
- ROUND DUCT - DROP
- RECTANGULAR DUCT
- ROUND DUCT
- UNDER FLOOR DUCT
- MEDIUM OR HIGH PRESSURE FLEX CONNECTION TO TERMINAL UNIT
- UP — INCLINED DUCT RISE
- DN — INCLINED DUCT DROP
- MANUAL DAMPER
- FIRE DAMPER W/ ACCESS DOOR
- ATC DAMPER
- FLEXIBLE DUCT
- FLEXIBLE CONNECTION
- SUPPLY DIFFUSER
- EXHAUST AIR REGISTER
- TURNING VANES
- FRESH AIR LOUVER
- RELIEF AIR OR EXHAUST AIR LOUVER
- RECTANGULAR TO RECTANGULAR TRANSITION
- ROUND TO ROUND TRANSITION
- RECTANGULAR TO ROUND TRANSITION
- G — NATURAL GAS
- ARROW INDICATES DIRECTION OF FLOW IN PIPE LEADER INDICATES DOWNWARD SLOPE
- PIPE INTO PLANE
- PIPE OUT OF PLANE
- PIPE DIRECTION CHANGE
- PIPE BRANCH - OUT OF PLANE
- PIPE BRANCH - IN TO PLANE
- PIPE BRANCH - IN PLANE

- 90 ELBOW
- 45 ELBOW
- RISER TURNED UP
- RISER TURNED DOWN
- LR ELBOW
- SIDE OUT DOWN ELBOW
- SIDE UP OUT ELBOW
- BASE ELBOW
- DOUBLE ELBOW
- REDUCED ELBOW
- SWEEP TEE
- STRAIGHT TEE
- TEE UP
- TEE DOWN
- SIDE OUT UP
- SIDE OUT DOWN
- STRAIGHT TEE
- CONCENTRIC REDUCER
- ECCENTRIC REDUCER
- LATERAL STRAINER
- LATERAL STRAINER W/ BLOW-OFF VALVE
- GATE VALVE
- ATC VALVE - 2 WAY
- ATC VALVE - 3 WAY
- GLOBE VALVE
- HOSE GATE VALVE
- HOSE GLOBE VALVE
- ANGLE GLOBE VALVE
- ANGLE GLOBE VALVE DOWN
- ANGLE GATE VALVE
- ANGLE GATE VALVE DOWN
- PRESSURE REDUCING, SELF CONTAINED VALVE
- PRESSURE REDUCING, EXTERNAL PRESSURE VALVE
- BALL VALVE (2" AND SMALLER)
- BUTTERFLY VALVE (2-1/2" AND LARGER)
- CHECK VALVE
- 90 CHECK VALVE
- COCK VALVE
- SAFETY VALVE
- QUICK OPENING VALVE
- EXPANSION JOINT
- FLOAT VALVE
- MOTOR OPER. GATE VALVE
- MOTOR OPER. GLOBE VALVE
- RELIEF VALVE
- DIAPHRAGM

- PE — PNEUMATIC-ELECTRIC CONTROL VALVE
- S — SOLINOID VALVE
- ALIGNMENT GUIDE
- ANCHOR
- PRESSURE GAUGE W/COCK
- PS — PRESSURE SWITCH
- FLANGE
- UNION
- GPM — LB/HR — FLOW METER-ORIFICE
- AIR VENT-AUTO
- H — AIR VENT-MANUAL
- AIR SEPERATOR
- REDUCE FLANGE
- FLOW SWITCH
- SLEEVE
- 0 - 100 F — THERMOMETER 0-100° F
- 30 - 240 F — THERMOMETER 30-240° F
- T — THERMOSTAT
- T — IN — NIGHT THERMOSTAT
- STEAM TRAP
- SD — DUCT SMOKE DETECTOR
- H — DUCT HUMIDIFIER
- SHUT OFF COCK FOR USE W/ PRESSURE GUAGE
- PUMP
- REDUCER
- EXPANSION LOOP
- FLEXIBLE CONNECTION
- GPM — P.D. — FLOW METER
- LOW PRESSURE RETURN
- HPS — HIGH PRESSURE STEAM
- LPS — LOW PRESSURE STEAM
- HPR — HIGH PRESSURE STEAM RETURN
- P — PUMP DISCHARGE
- MU — MAKEUP WATER
- V — AIR RELIEF LINE(VENT)
- CH — CHILLED WATER SUPPLY
- CHR — CHILLED WATER RETURN
- HWS — HEATING HOT WATER SUPPLY
- HWR — HEATING HOT WATER RETURN
- GPM — FLOW CONTROL VALVE
- CIRCUIT SETTER BALANCING VALVE

- A / M4.1 — SECTION TAG - TOP FIGURE IS SECTION NO. BOTTOM FIGURE IS SHEET NO.
- 1 / M4.1 — DETAIL/DIAGRAM TAG - TOP FIGURE IS D/D NO. BOTTOM FIGURE IS SHEET NO.
- EF-1 — EQUIPMENT IDENTIFICATION
- 1 — KEYED NOTE IDENTIFICATION
- P-1 — PLUMBING FIXTURES

QCOOTVWO
Weber State College, Physical Education Facility - RW 84-058
Mechanical Legends & Abbreviations - 28137

RECORD DOCUMENTS JUL 3 1990
THESE DOCUMENTS HAVE BEEN REVISED TO RECORD INFORMATION SUBMITTED BY THE CONTRACTOR. WHILE THEY ARE ASSUMED TO BE RELIABLE THE ARCHITECT DOES NOT GUARANTEE THEIR ACCURACY.

REGISTERED PROFESSIONAL ENGINEER No. 7122 KIM P. HARRIS STATE OF UTAH

VAN BOERUM & FRANK ASSOCIATES INC.
CIVIL & MECHANICAL CONSULTING ENGINEERS
SALT LAKE CITY, UTAH

jra JONES/ RICHARDS & ASSOCIATES
ARCHITECTURE (801)394-3033
PLANNING 533 26TH STREET
CONSTRUCTION MANAGEMENT OGDEN, UTAH

REVISED: AS BUILT 6-90
PROJECT NUMBER: 8403
DATE: 6-21-88
DRAWN BY:

PROJECT: PHYSICAL EDUCATION FACILITY
WEBER STATE COLLEGE

SHEET TITLE: MECHANICAL LEGENDS & ABBREVIATIONS

SHEET NO. M-0

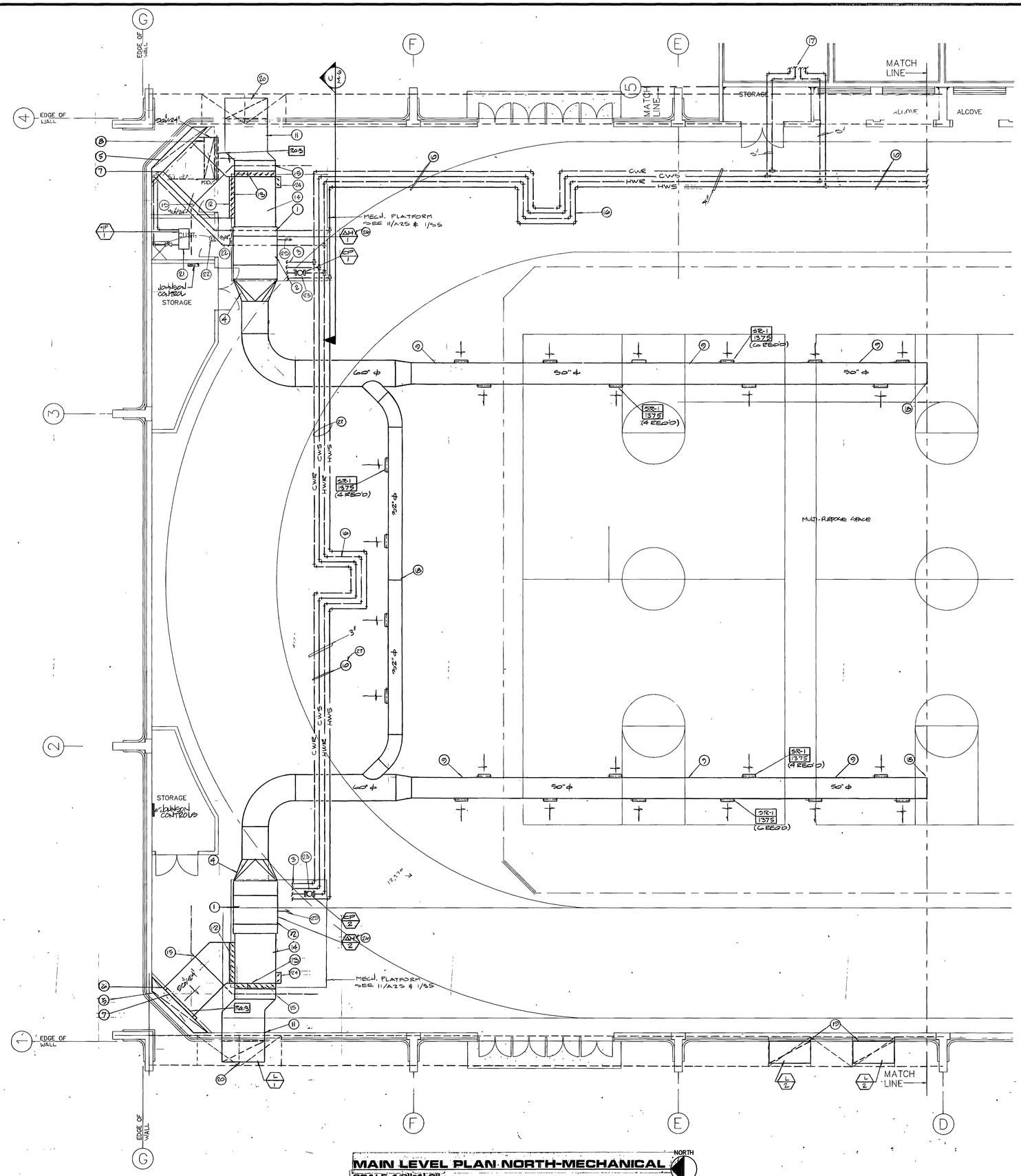


MAIN LEVEL PLAN NORTH-MECHANICAL

SCALE 1/8"=1'-0"

NORTH

## KEYED NOTES

1. SEE TYPICAL SECTION C/M-6 FOR MOUNTAIN HEIGHT OF AIR HANDLER.
2. MOUNT AIR HANDLER ON ELEVATED PLATFORM PROVIDED BY THE GENERAL CONTRACTOR.
3. EXTEND HOT AND CHILLED WATER PIPING TO AIR HANDLER COILS. SEE PIPING SCHEMATIC FOR ALL VALVES AND COIL PIPING REQUIRED.
4. RECTANGULAR TO ROUND TRANSITION.
5. PROVIDE A SHEET METAL COVER ON TOP OF THE MECHANICAL CHASE, TYPICAL.
6. CONNECT 96"/24" RETURN AIR DUCT TO RETURN AIR SHAFT. SEAL AIR TIGHT, AND EXTEND TO AIR-HANDLER.
7. MOUNT RETURN AIR GRILLE IN FACE OF THE RETURN AIR SHAFT AT FLOOR LEVEL.
8. RISE 96"/24" DUCT FROM THE RETURN AIR GRILLE AT FLOOR AND RUN AT CEILING OF THE STORAGE ROOM. CONNECT DUCT TO RETURN AIR SHAFT, AND SEAL AIR TIGHT.
9. RUN ALL ROUND SPIRAL SUPPLY AIR DUCT THROUGH THE OPEN WEBBS OF JOISTS, TYPICAL.
10. RUN ALL HOT WATER AND CHILLED WATER PIPING AS HIGH AS POSSIBLE, THRU TRUSSES.
11. EXTEND 96"/24" DUCT THROUGH THE OPEN WEBBS OF THE JOIST TO THE FRESH AIR LOUVER IN SOFFIT.
12. 96"/24" RETURN AIR DAMPER WITH PARALLEL BLADES TO DIRECT THE AIR FLOW AS SHOWN.
13. PROVIDE A 24"/24" MINIMUM FRESH AIR DAMPER AND A 72" X 24" FRESH AIR DAMPER WITH PARALLEL BLADES TO DIRECT THE AIR FLOW AS SHOWN.
14. PROVIDE A MIXED AIR PLENUM AT INLET OF AIR HANDLER, THE SAME SIZE AS THE INLET TO FAN.
15. 96"/24" DUCT SHALL PENETRATE THE ACOUSTICAL BARRIER PERPENDICULAR TO THE BARRIER. SEE THE ARCHITECTURAL DRAWINGS FOR EXACT LOCATION.
16. PROVIDE AN EXPANSION LOOP IN HOT WATER AND CHILLED WATER PIPES.
17. SEE SHEET M-3 FOR CONTINUATION OF PIPING.
18. CONNECT SUPPLY AIR DUCTS TOGETHER WITH A DIVIDER BETWEEN THEM TO PREVENT AIR FROM CROSSING OVER INTO THE OTHER DUCTS.
19. 96" X 48" RELIEF AIR LOUVER, L-2, PROVIDED WITH ATC DAMPER AND BACKDRAFT DAMPER. EXTEND DUCT FROM LOUVER THROUGH CROSS MEMBERS OF THE HORIZONTAL TRUSS TO THE ATC & BACKDRAFT DAMPER. SEAL DUCT WHERE THE STRUCTURAL MEMBERS PASS THROUGH. ONE RELIEF DAMPER SHALL BE INTERLOCKED TO AH-1 AND THE OTHER TO AH-2.
20. DROP 96" X 48" DUCT FROM BOTTOM OF THE 96" X 24" DUCT TO FA INTAKE LOUVER L-1. RUN DUCT THROUGH CROSS MEMBERS AND VERTICAL MEMBERS OF THE HORIZONTAL TRUSS. SEAL DUCT WHERE THE STRUCTURAL MEMBERS PASS THROUGH.
21. DROP HWS AND HWR LINES TO RADIANT HEATING PANELS. MOUNT PANELS IN CEILING OF ROOM, COORDINATE PANEL LOCATION WITH LIGHTING.
22. THERMOSTAT FOR RADIANT HEATING PANELS.
23. ALL VALVES, PUMPS, AND DAMPER OPERATORS ETC. SHALL BE MOUNTED ABOVE PLATFORM IN ORDER TO BE SERVICED FROM THE PLATFORM, TYPICAL.
24. 20"/24" AUXILLARY RETURN AIR DAMPER, SEE SPECIFICATIONS FOR SEQUENCE OF OPERATION.
25. EXTEND DRAIN LINE FROM COOLING COIL PAN TO NEAREST FLOOR DRAIN.
26. PROVIDE NIGHT THERMOSTAT FOR EACH AIR HANDLER SEE ADD#2 P26 #29.
27. PROVIDE UNISTRUT SUPPORT BETWEEN THE JOISTS TO SUPPORT ALL PIPING WHEN THE PIPES ARE RUNNING PARALLEL TO THE JOISTS FROM WHICH THE PIPES ARE SUPPORTED. SEE ADD#2 P26 #30

RECORD DOCUMENTS JUN 20 1990
THESE DOCUMENTS HAVE BEEN REVISED TO RECORD INFORMATION SUBMITTED BY THE CONTRACTOR. WHILE THEY ARE ASSUMED TO BE RELIABLE THE ARCHITECT DOES NOT GUARANTEE THEIR ACCURACY.

00007VM1
Weber State College, Physical Education Facility - RW 84-058
Mechanical Plan Main Level North - 26738

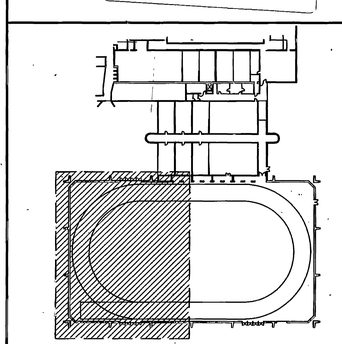

LOCATION PLAN
NO SCALE

REGISTERED PROFESSIONAL ENGINEER No. 7122 KIM P. HARRIS STATE OF UTAH

VAN BOERUM & FRANK ASSOCIATES INC.
CIVIL & MECHANICAL CONSULTING ENGINEERS
SALT LAKE CITY, UTAH

JONES/ RICHARDS & ASSOCIATES
PLANNING
533 26TH STREET
ARCHITECTURE
(801)394-3033
CONSTRUCTION MANAGEMENT
OGDEN, UTAH

REVISED: AS BUILTS 6-90

PROJECT NUMBER: 8403
DATE: 8-21-88
DRAWN BY:

PROJECT: PHYSICAL EDUCATION FACILITY
WEBER STATE COLLEGE

SHEET TITLE: MECHANICAL PLAN-MAIN LEVEL-NORTH

SHEET NO. M-1

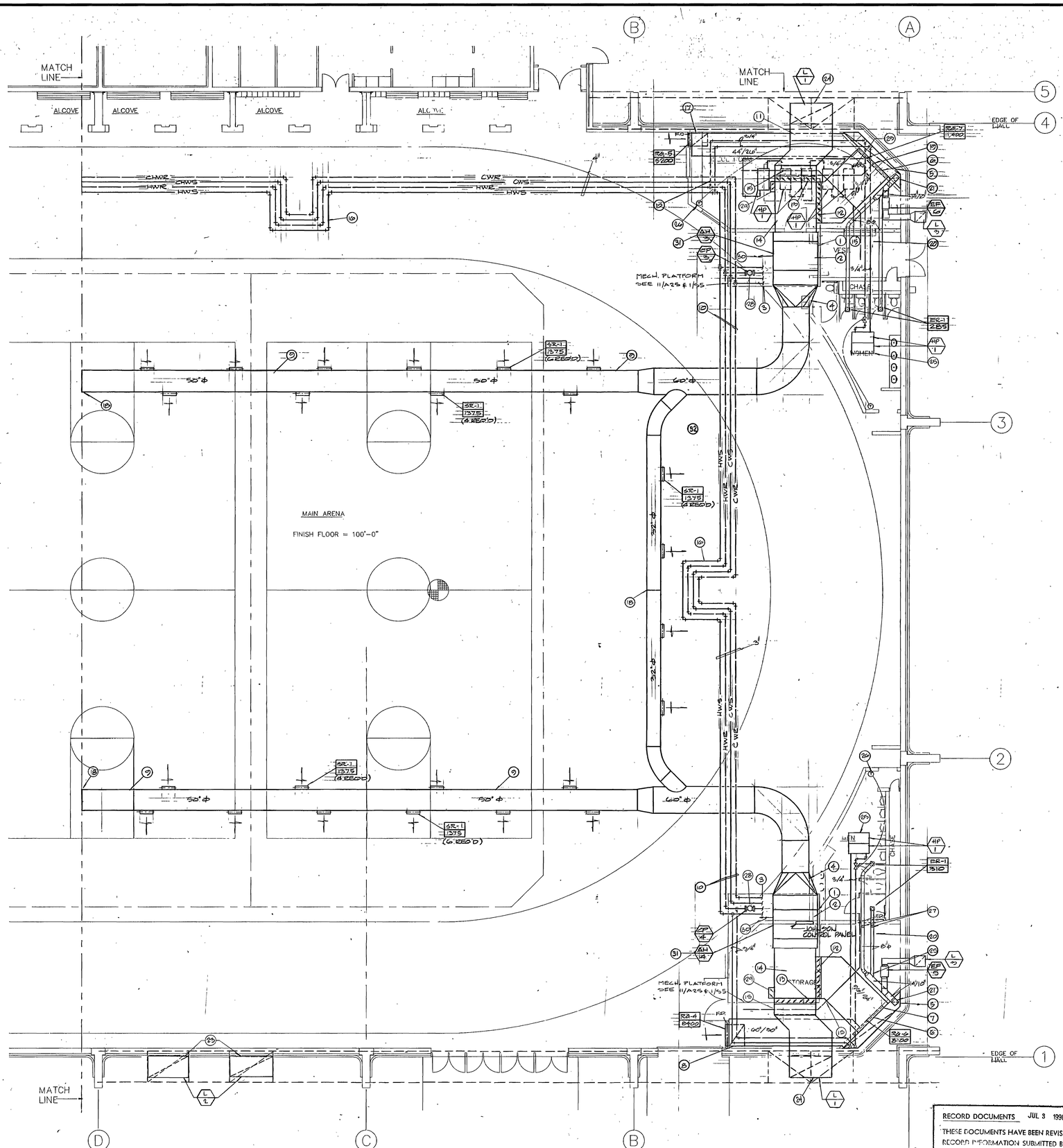


MAIN LEVEL PLAN SOUTH-MECHANICAL

SCALE 1/8"=1'-0"

RECORD DOCUMENTS JUL 3 1990

THESE DOCUMENTS HAVE BEEN REVISED TO RECORD INFORMATION SUBMITTED BY THE CONTRACTOR. WHILE THEY ARE ASSUMED TO BE RELIABLE THE ARCHITECT DOES NOT GUARANTEE THEIR ACCURACY.

## KEYED NOTES

1. SEE TYPICAL SECTION C/M-6 FOR MOUNTING HEIGHT OF AIR HANDLER.
2. MOUNT AIR HANDLER ON ELEVATED PLATFORM PROVIDED BY THE GENERAL CONTRACTOR.
3. EXTEND HOT AND CHILLED WATER PIPING TO AIR HANDLER COILS. SEE PIPING SCHEMATIC FOR ALL VALVES AND COIL PIPING REQUIRED.
4. RECTANGULAR TO ROUND TRANSITION.
5. PROVIDE A SHEET METAL COVER ON TOP OF THE MECHANICAL CHASE, TYPICAL.
6. CONNECT 96"/24" RETURN AIR DUCT TO RETURN AIR SHAFT. SEAL AIR TIGHT, AND EXTEND TO AIR-HANDLER.
7. MOUNT RETURN AIR GRILLE IN FACE OF THE RETURN AIR SHAFT ABOVE THE CEILING OF THE STORAGE ROOM.
8. RISE 48"/36" DUCT FROM THE RETURN AIR GRILLE AT FLOOR. CONNECT TO THE 60"/30" DUCT AND RUN AT CEILING OF THE STORAGE ROOM. CONNECT DUCT TO RETURN AIR SHAFT, AND SEAL AIR TIGHT.
9. RUN ALL ROUND SPIRAL SUPPLY AIR DUCT THROUGH THE OPEN WEBBS OF JOISTS, TYPICAL.
10. RUN ALL HOT WATER AND CHILLED WATER PIPING AS HIGH AS POSSIBLE.
11. EXTEND 36"/36" DUCT THROUGH THE OPEN WEBBS OF THE JOISY TO THE FRESH AIR LOUVER IN SOFFIT.
12. 96"/24" RETURN AIR DAMPER WITH PARALLEL BLADES TO DIRECT THE AIR FLOW AS SHOWN.
13. PROVIDE A 24"/24" MINIMUM FRESH AIR DAMPER AND A 72"/24" FRESH AIR DAMPER WITH PARALLEL BLADES TO DIRECT THE AIR FLOW AS SHOWN.
14. PROVIDE A MIXED AIR PLENUM AT INLET OF AIR HANDLER, THE SAME SIZE AS THE INLET TO FAN.
15. 96"/24" DUCT SHALL PENETRATE THE ACOUSTICAL BARRIER PERPENDICULAR TO THE BARRIER. SEE THE ARCHITECTURAL DRAWINGS FOR EXACT LOCATION.
16. PROVIDE AN EXPANSION LOOP IN HOT WATER AND CHILLED WATER PIPES.
17. RISE 30"/36" DUCT FROM THE RETURN AIR GRILLE AT FLOOR. CONNECT TO THE 44"/26" DUCT AND RUN AT CEILING OF THE ISSUE ROOM. CONNECT DUCT TO THE RETURN AIR SHAFT AND SEAL AIR TIGHT.
18. CONNECT SUPPLY AIR DUCTS TOGETHER WITH A DIVIDER BETWEEN THEM TO PREVENT AIR FROM CROSSING OVER INTO THE OTHER DUCT.
19. MOUNT RETURN AIR GRILLE IN FACE OF THE RETURN AIR SHAFT ABOVE THE CEILING OF THE ISSUE ROOM.
20. RUN EXHAUST DUCTWORK BETWEEN JOISTS SUPPORTING THE CEILING OVER THE STORAGE AND TOILET ROOMS.
21. RISE EXHAUST DUCT IN THE RETURN AIR SHAFT, AND OFFSET BELOW ROOF STRUCTURE AS SHOWN.
22. RISE DUCT THROUGH ROOF TO EXHAUST FAN ON ROOF.
23. 96" X 48" RELIEF AIR LOUVER L-2, PROVIDED WITH ATC DAMPER AND BACKDRAFT DAMPER. EXTEND DUCT FROM LOUVER THROUGH CROSS MEMBERS OF THE HORIZONTAL TRUSS TO THE ATC AND BACKDRAFT DAMPERS. SEAL DUCT WHERE THE STRUCTURAL MEMBERS PASS THROUGH. ONE RELIEF DAMPER SHALL BE INTERLOCKED TO AH-3 AND THE OTHER TO AH-4.
24. DROP 96" X 48" DUCT FROM BOTTOM OF THE 96" X 24" DUCT TO F.A. INTAKE LOUVER, C-1. RUN DUCT THROUGH CROSS MEMBERS AND VERTICAL MEMBERS OF THE HORIZIONTAL TRUSS. SEAL DUCT WHERE THE STRUCTURAL MEMBERS PASS THROUGH.
25. DROP HWS AND HWR LINES TO RADIANT HEATING PANELS. MOUNT PANELS IN CEILING OF ROOM. COORDINATE PANEL LOCATIONS WITH LIGHTING.
26. THERMOSTAT FOR RADIANT HEATING PANELS.
27. RISE DUCTS TO CEILING OF THE STORAGE ROOM.
28. ALL VALVES, PUMPS, AND DAMPER OPERATORS ETC. SHALL BE MOUNTED ABOVE PLATFORM IN ORDER TO BE SERVICED FROM THE PLATFORM, TYPICAL.
29. 20"/24" AUXILLARY RETURN AIR DAMPER, SEE SPECIFICATIONS FOR SEQUENCE OF OPERATION.
30. EXTEND DRAIN LINE FROM COOLING COIL PAN TO NEAREST FLOOR DRAIN.
31. PROVIDE NIGHT THERMOSTAT FOR EACH AIR HANDLER UNIT. SEE ADDENDUM # 2-6-29.
32. PROVIDE A UNISTRUT SUPPORT BETWEEN THE JOISTS TO SUPPORT ALL PIPING WHEN THE PIPES ARE RUNNING PARALLEL TO THE JOISTS FROM WHICH THE PIPES ARE SUPPORTED. ADD # 2-6-30

0000TVM2
Weber State College, Physical Educaton Facility - RW 84-058
Mechanical Plan Main Level South - 26739

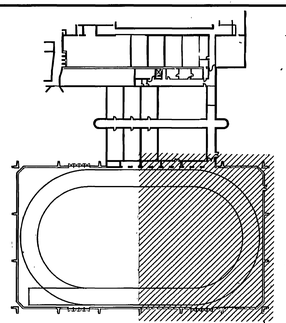

LOCATION PLAN
NO SCALE

NORTH

REGISTERED PROFESSIONAL ENGINEER No. 7122 JAMES HARRIS STATE OF UTAH

VAN BOERUM & FRANK ASSOCIATES INC.
CIVIL & MECHANICAL CONSULTING ENGINEERS
SALT LAKE CITY, UTAH

jra JONES/ RICHARDS & ASSOCIATES
PLANNING CONSTRUCTION MANAGEMENT
533 26TH STREET OGDEN, UTAH
ARCHITECTURE (801)394-3033

REVISED: AS BUILT 6-90

PROJECT NUMBER: 8403
DATE: 6-21-88
DRAWN BY:

PROJECT: PHYSICAL EDUCATION FACILITY
WEBER STATE COLLEGE

SHEET TITLE: MECHANICAL PLAN-MAIN LEVEL-SOUTH

SHEET NO. M-2

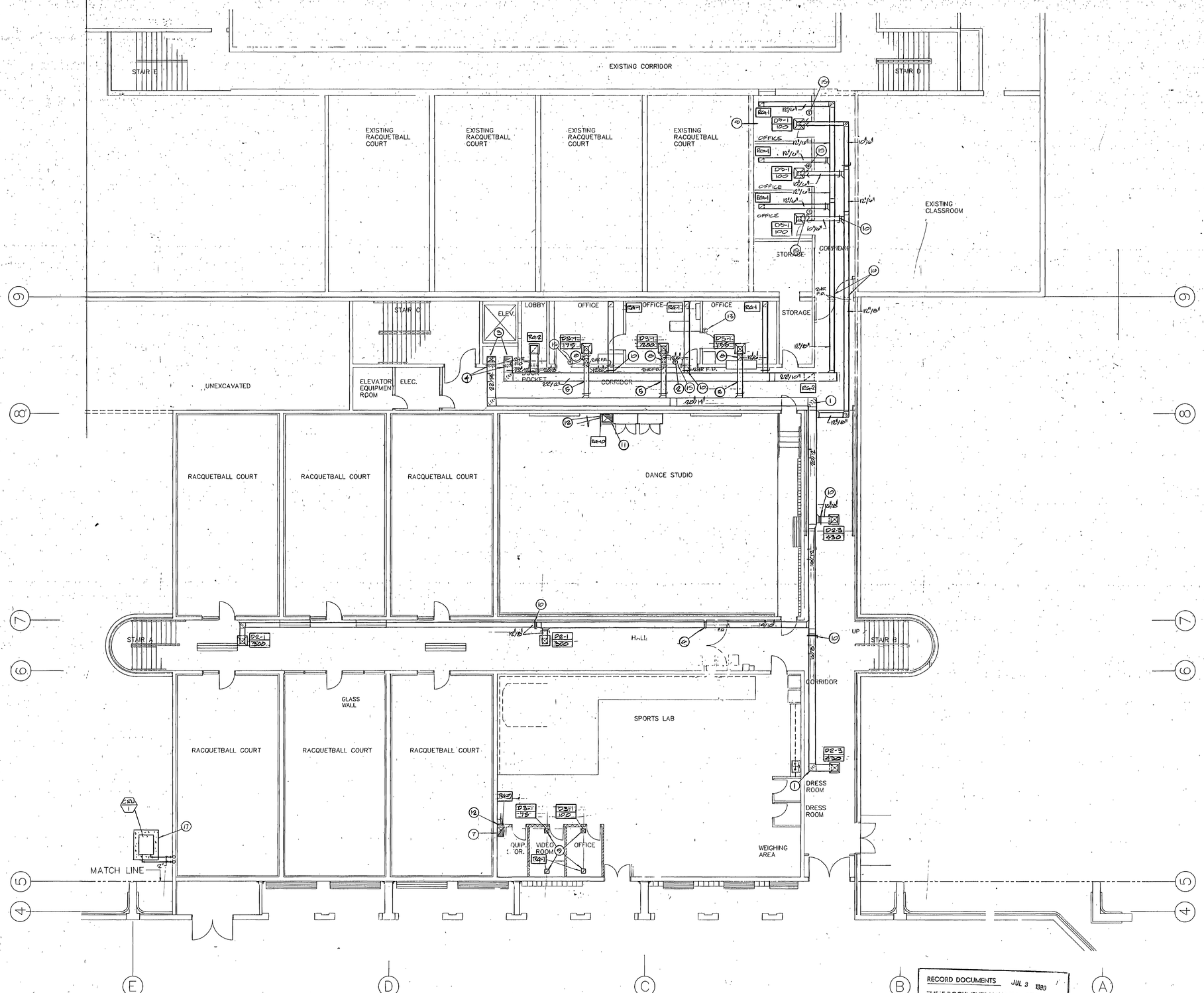


## MAIN LEVEL PLAN LINK-MECHANICAL

SCALE 1/8"=1'-0"

RECORD DOCUMENTS JUL 3 1990

THESE DOCUMENTS HAVE BEEN REVISED TO RECORD INFORMATION SUBMITTED BY THE CONTRACTOR. WHILE THEY ARE ASSUMED TO BE RELIABLE THE ARCHITECT DOES NOT GUARANTEE THEIR ACCURACY.

## KEYED NOTES

1. TURNING VANES, TYPICAL.
2. THERMOSTAT, TYPICAL.
3. RISE DUCTS TO FLOOR ABOVE, SEE SHEET M-4 FOR CONTINUATION.
4. 2 HOUR FIRE DAMPER WITH ACCESS DOOR.
5. RUN DUCT BETWEEN TRUSSES.
6. 1 HOUR FIRE DAMPER, WITH ACCESS DOOR.
7. RISE 18" X 24" R.A. DUCT TO LEVEL ABOVE. SEE SHEET M-4.
8. DROP DUCT BELOW TRUSS.
9. SEE SHEET M-4, FOR DUCTWORK TO DIFFUSERS AND RETURN AIR GRILLES.
10. RISE 18" X 24" DUCT, SEE SHEET M-4 FOR CONTINUATION.
11. RISE 24" X 24" DUCT, SEE SHEET M-4 FOR CONTINUATION.
12. MOUNT RETURN AIR GRILLE AT THE FLOOR.
13. MAIN THERMOSTAT TO CONTROL AIR HANDLER ZONE DAMPERS.
14. MANUAL VOLUME DAMPER, TYPICAL.
15. OFFICE ZONE THERMOSTAT TO CONTROL ATC DAMPER IN THE BRANCH DUCT SERVING THAT OFFICE ONLY.
16. PROVIDE FLEXIBLE DUCT CONNECTION AT BUILDING EXPANSION JOINT.
17. MOUNT DRY COOLER ON A 6" CONCRETE PAD BY GC, FOR THE COMPUTER ROOM AIR-CONDITIONING UNIT ON GRADE OUTSIDE. GLYCOL SUPPLY AND RETURN LINES SHALL RISE IN WALL TO CEILING SPACE ABOVE, SHEET M-4 FOR CONTINUATION.
18. PROVIDE NIGHT THERMOSTAT FOR AIR HANDLERS ADD #2 6-6-89

0000TVM3
Weber State College, Physical Education Facility - RW 84-058
Mechanical Plan Main Level - 28740

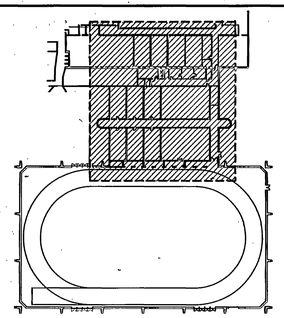

LOCATION PLAN
NO SCALE

REGISTERED PROFESSIONAL ENGINEER No. 7122 KIM P. HARRIS STATE OF UTAH

VAN BOERUM & FRANK ASSOCIATES INC.
CIVIL & MECHANICAL CONSULTING ENGINEERS
SALT LAKE CITY, UTAH

jra JONES/ RICHARDS & ASSOCIATES
ARCHITECTURE (801)394-3033
PLANNING 533 26TH STREET
CONSTRUCTION MANAGEMENT OGDEN, UTAH

REVISED: AS BUILT 6-90

PROJECT NUMBER: 8403
DATE: 6-21-88
DRAWN BY:

PROJECT: PHYSICAL EDUCATION FACILITY
WEBER STATE COLLEGE

SHEET TITLE: MECHANICAL PLAN - MAIN LEVEL - LINK

SHEET NO. M-3

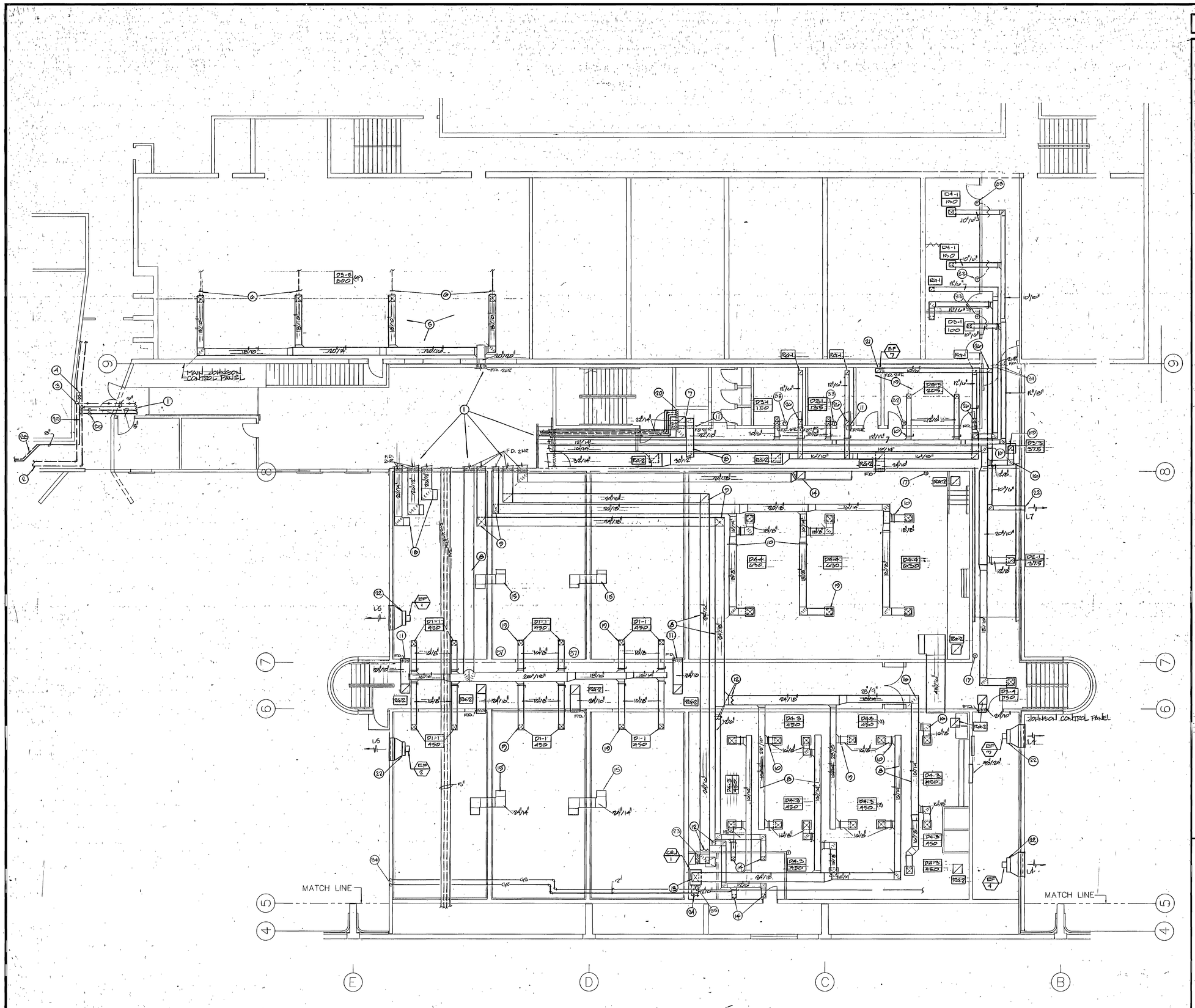


## MID LEVEL PLAN - MECHANICAL

SCALE 1/8"=1'-0"

## KEYED NOTES

1. FOR CONTINUATION OF DUCTS AND PIPING, SEE MECHANICAL ROOM PLAN SHEET M-6, FIRE DAMPER ALL DUCT PENETRATIONS WITH 2 HR F.D., TYPICAL.
2. FOR CONTINUATION OF EXISTING STEAM AND CONDENSATE AND THE NEW CHILLED WATER LINES IN THE EXISTING TUNNEL, SEE SITE PLAN.
3. CONNECT NEW STEAM AND CONDENSATE LINE TO EXISTING LINES.
4. CAP AND VALVE 5" CHILLED WATER SUPPLY AND RETURN LINES FOR FUTURE EXTENSION TO THE EXISTING GYMNASIUM.
5. EXTEND NEW DUCTWORK INTO THE EXISTING DANCE ROOM IN FURRED DOWN CEILING. RISE BRANCH DUCTS AND EXTEND DUCTWORK BETWEEN EXISTING STRUCTURE. DROP THE NEW CEILING DIFFUSERS IN THE SAME LOCATION AS THE EXISTING DIFFUSERS.
6. DISCONNECT THE EXISTING DIFFUSERS AND REMOVE. CAP THE EXISTING DUCTWORK ABOVE THE CEILING.
7. DROP SUPPLY AND RETURN DUCTS TO FLOOR BELOW IN MECHANICAL SHAFT, SEE SHEET M-3 FOR CONTINUATION.
8. RUN DUCT BETWEEN JOISTS.
9. RISE DUCTS INTO JOIST SPACE, TYPICAL.
10. MANUAL VOLUME DAMPER, TYPICAL.
11. FIRE DAMPER WITH 2 HR F.D. AND ACCESS DOOR, TYPICAL.
12. ATC DAMPER.
13. DROP DUCT TO CR4/1 UNIT BELOW.
14. DROP DUCT TO LEVEL BELOW, SEE SHEET M-3.
15. PROVIDE A TRANSFER DUCT WITH SOUND BOOT THROUGH WALL.
16. TURNING VANES, TYPICAL.
17. THERMOSTAT, TYPICAL.
18. PROVIDE SOUND BOOT ON END OF RETURN AIR DUCTS.
19. FOR FINAL DIFFUSER, AND RETURN AIR GRILLE LOCATIONS SEE ARCHITECTURAL REFLECTED CEILING PLANS, TYPICAL.
20. RISE PIPES IN MECHANICAL SHAFT TO FLOOR ABOVE, SEE SHEET M-5.
21. CEILING MOUNTED EXHAUST FAN.
22. RELIEF AIR FANS, EXHAUST AIR THROUGH RELIEF AIR LOUVERS, SEE ARCHITECTURAL DRAWINGS FOR ELEVATIONS AND LOCATIONS OF EXTERIOR LOUVERS.
23. PROVIDE A 24" X 24" OPENING INTO THE R.A. DUCT WITH AN ATC DAMPER. DAMPER SHALL BE OPEN ONLY WHEN CRU/1 IS OPERATIONAL.
24. EXTEND DRAIN LINE FROM COOLING COIL PAN TO NEAREST FLOOR DRAIN.
25. PROVIDE OPENING IN WALL ABOVE CEILING.
26. DROP DUCT AND RUN BELOW TRUSSES.
27. SEE ARCHITECTURAL DRAWINGS FOR ELEVATION AND LOCATION OF EXTERIOR LOUVER.
28. EXTEND NEW CHILLED WATER PIPES FROM EXISTING PIPE RACK ACROSS TUNNEL, ON THE FLOOR OF THE TUNNEL. RUN ONE PIPE ABOVE THE OTHER.
29. RUN NEW CHILLED WATER PIPING BELOW THE EXISTING STEAM AND CONDENSATE PIPING AS CLOSE TO THE EXISTING WALL AS POSSIBLE.
30. EXTEND BRANCH LINES FROM THE NEW CHILLED WATER PIPING AT THE FLOOR. RISE TO THE CEILING AND CONTINUE AS SHOWN.
31. PROVIDE FLEXIBLE DUCT CONNECTION AT BUILDING EXPANSION JOINT.
32. MATCH THERMOSTAT TO CONTROL AIR-HANDLER ZONE DAMPERS.
33. OFFICE ZONE THERMOSTAT TO CONTROL ATC DAMPER IN THE BRANCH DUCT SERVING THAT OFFICE ONLY.
34. DROP GLYCOL SUPPLY AND RETURN LINES IN WALL. SEE SHEET M-3 FOR CONTINUATION.
35. DROP GLYCOL LINES TO AIR CONDITIONING UNIT.
36. PROVIDE A NIGHT THERMOSTATE FOR AIR HANDLER. SEE ADDM PAL-29.
37. MODIFY DUCT @ CONC. BEAM.

0000TVM4
Weber State College, Physical Education Facility - RW 84-058
Mechanical Plan Mid Level link - 26741

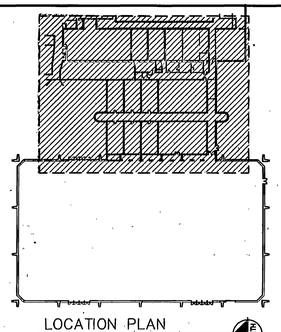

LOCATION PLAN
NO SCALE


VAN BOERUM & FRANK ASSOCIATES INC.
CIVIL & MECHANICAL CONSULTING ENGINEERS
SALT LAKE CITY, UTAH

jra JONES/ RICHARDS & ASSOCIATES
ARCHITECTURE (801)394-3033
PLANNING CONSTRUCTION MANAGEMENT
533 26TH STREET OGDEN, UTAH


REVISED: AS BUILTS 6-90

PROJECT NUMBER: 8403
DATE: 2-21-88
DRAWN BY:

PROJECT: PHYSICAL EDUCATION FACILITY
WEBER STATE COLLEGE

SHEET TITLE: MECHANICAL PLAN - MID LEVEL - LINK

SHEET NO. M-4

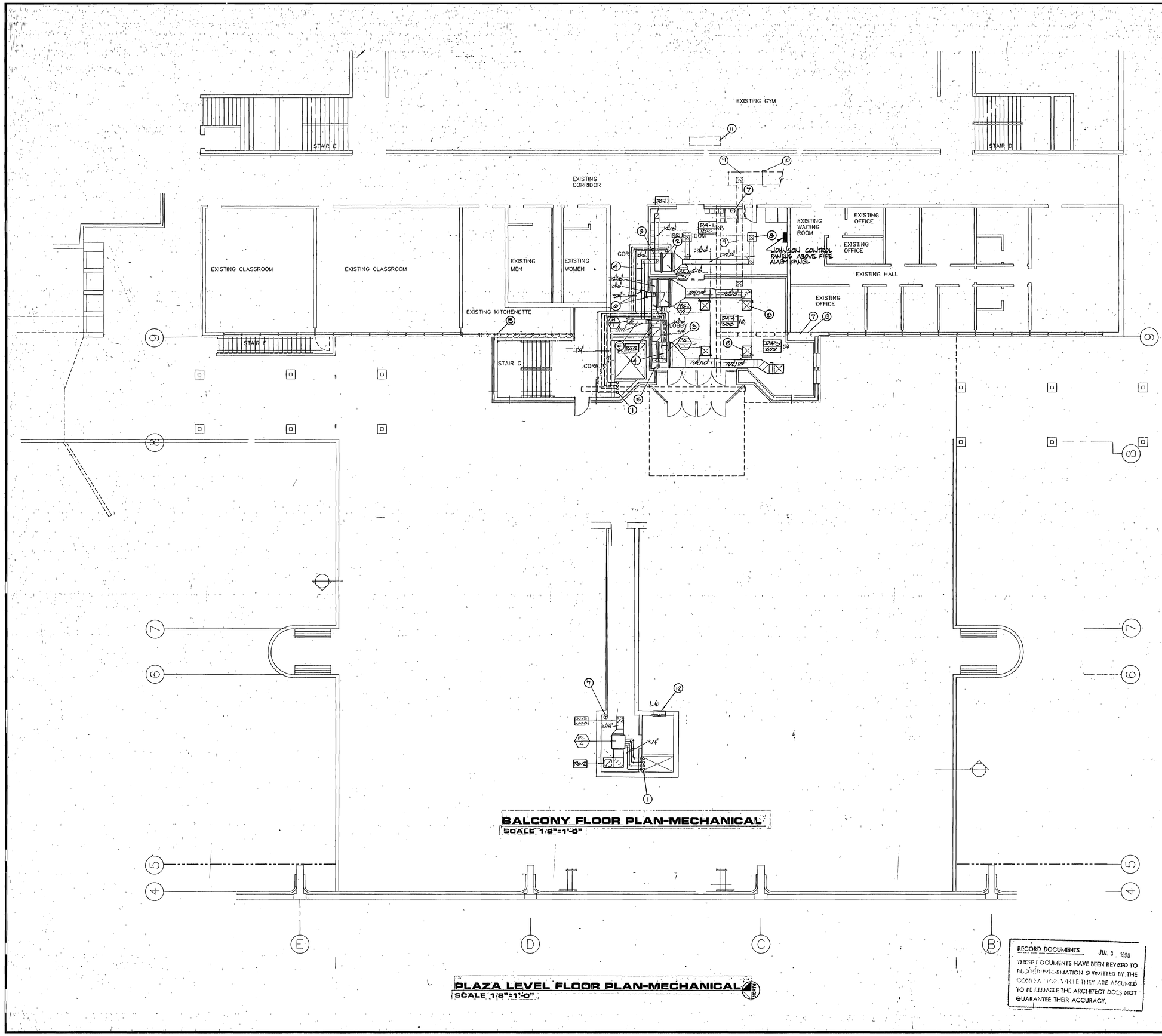


BALCONY FLOOR PLAN-MECHANICAL
SCALE 1/8"=1'-0"

PLAZA LEVEL FLOOR PLAN-MECHANICAL
SCALE 1/8"=1'-0"

## KEYED NOTES

1. RISE HOT AND CHILLED WATER PIPING FROM BELOW, SEE SHEET M-4.
2. FLEXIBLE CONNECTION, TYPICAL.
3. FOR FAN COIL PIPING, SEE PIPING SCHEMATIC SHEET M-7, TYPICAL.
4. MINIMUM FRESH AIR FROM INTAKE HOODS EXTEND TO INLET OF EACH FAN COIL WITH MANUAL VOLUME DAMPER. BALANCE TO 15% OUTSIDE AIR ON EACH FAN COIL UNIT.
5. PROVIDE A PLENUM ON INLET TO FAN COIL UNIT.
6. MANUAL VOLUME DAMPER, TYPICAL.
7. THERMOSTAT, TYPICAL.
8. FOR FINAL DIFFUSER AND RETURN AIR GRILLE LOCATIONS, SEE ARCHITECTURAL REFLECTED CEILING PLANS, TYPICAL.
9. REMOVE AND ABANDON EXISTING DUCTWORK AND DIFFUSER.
10. CAP EXISTING DUCT.
11. REMOVE AND ABANDON EXISTING FAN COIL UNIT IN THE GYMNASIUM. CAP EXISTING PIPING TO THE FAN COIL UNIT.
12. 36" X 24" OPENING IN ELEVATOR SHAFT WITH NORMALLY CLOSED FIRE DAMPER.
13. REMOVE AND REPLACE EXISTING FAN COIL UNITS IN REQ'D OFFICES.

0000TVM5
Weber State College, Physical Education Facility - RW 84-058
Mechanical Plan Plaza Level link - 26742

RECORD DOCUMENTS JUL 3 1990
THESE DOCUMENTS HAVE BEEN REVISED TO RECORD INFORMATION SUBMITTED BY THE CONTRACTOR. WHILE THEY ARE ASSUMED TO BE RELIABLE THE ARCHITECT DOES NOT GUARANTEE THEIR ACCURACY.

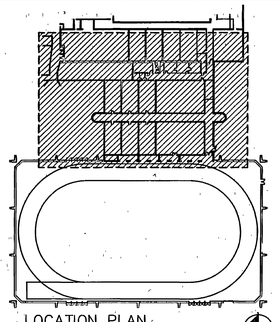

LOCATION PLAN
NO SCALE

REGISTERED PROFESSIONAL ENGINEER No. 7122 KIM P. HARRIS STATE OF UTAH

VAN BOERUM & FRANK ASSOCIATES INC.
CIVIL & MECHANICAL CONSULTING ENGINEERS
SALT LAKE CITY, UTAH

jra JONES/ RICHARDS & ASSOCIATES
ARCHITECTURE (801)394-3033
PLANNING 533 26TH STREET
CONSTRUCTION MANAGEMENT OGDEN, UTAH

REVISED: AS BUILTS 6-90

PROJECT NUMBER: 8403
DATE: 8-21-88
DRAWN BY:

PROJECT: PHYSICAL EDUCATION FACILITY
WEBER STATE COLLEGE

SHEET TITLE: MECHANICAL PLAN - PLAZA LEVEL - LINK

SHEET NO. M-5

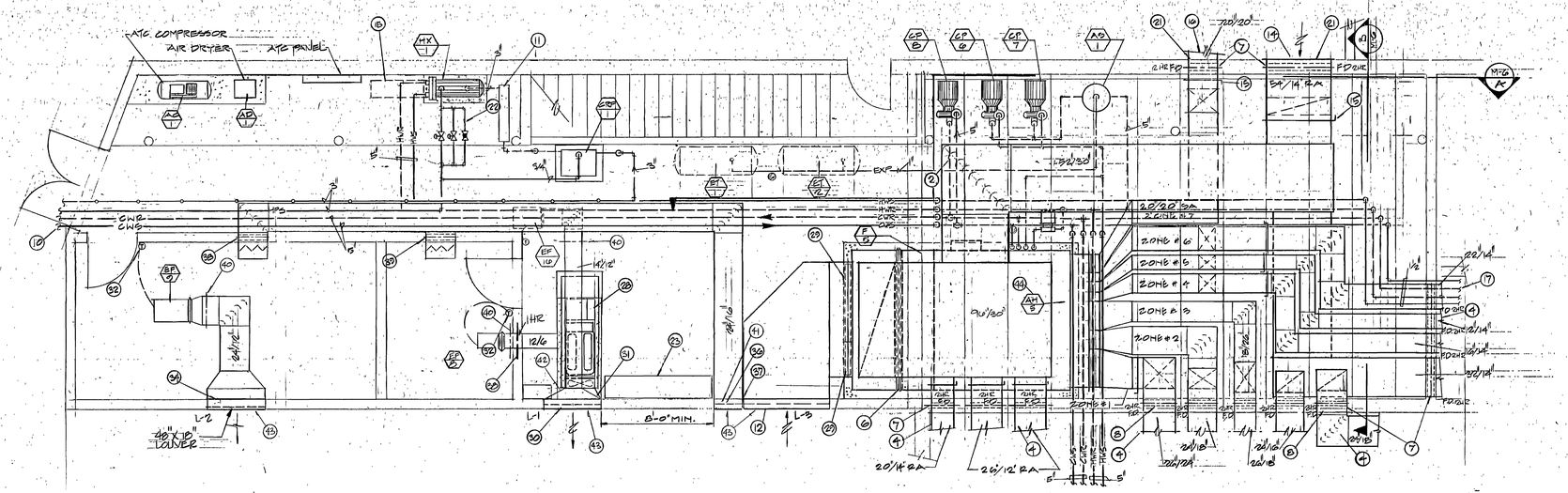


## MECHANICAL ROOM PLAN
SCALE 1/4"=1'-0"

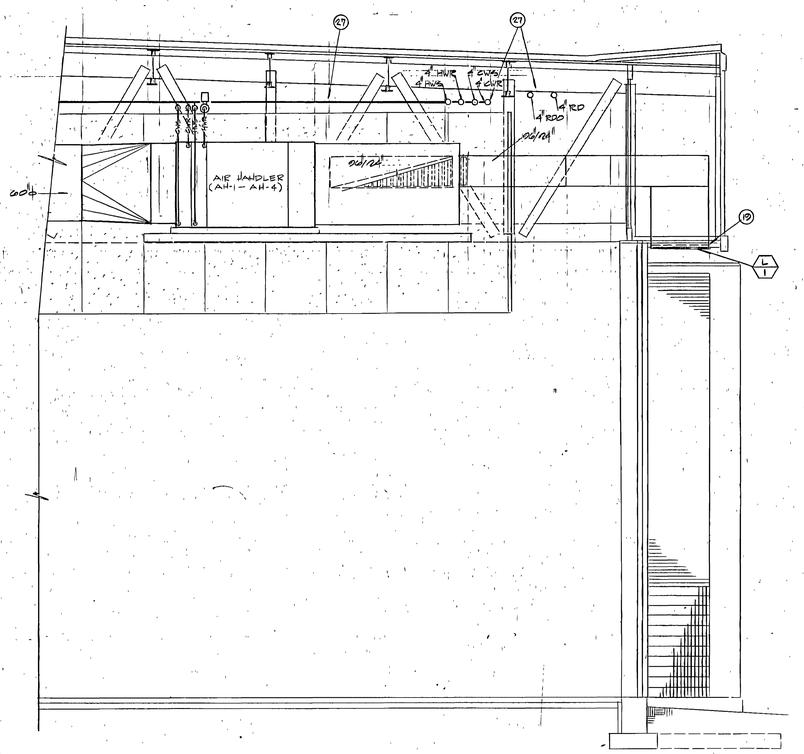


## SECTION (TYP. OF AH-1 - AH-4) C
SCALE 1/4"=1'-0"

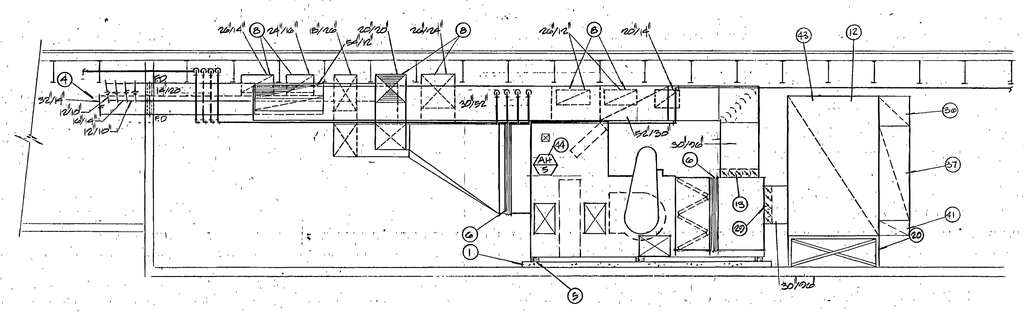

## SECTION A M-6
SCALE 1/4"=1'-0"

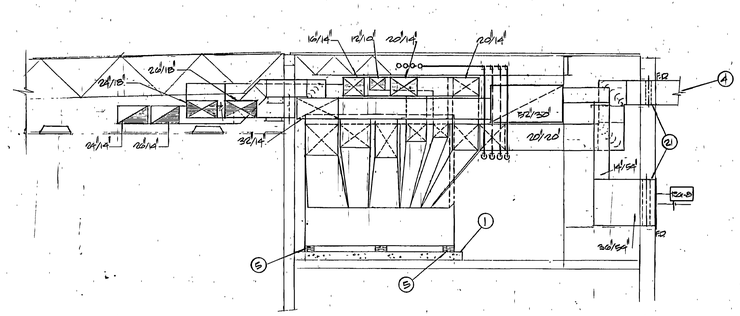

## SECTION B M-6
SCALE 1/4"=1'-0"

RECORD DOCUMENTS JUL 2 1990

THESE DOCUMENTS HAVE BEEN REVISED TO RECORD INFORMATION SUBMITTED BY THE CONTRACTOR. WHILE THEY ARE ASSUMED TO BE RELIABLE THE ARCHITECT DOES NOT GUARANTEE THEIR ACCURACY.

## KEYED NOTES

1. 6" HIGH CONCRETE PAD BY GENERAL CONTRACTOR, TYPICAL.
2. TURNING VANES, TYPICAL.
3. COLD WATER MANIFOLD, SEE PLUMBING PLANS FOR DETAIL.
4. FOR CONTINUATION OF DUCTS, SEE SHEET M-4.
5. VIBRATION ISOLATORS, TYPICAL.
6. FLEXIBLE CONNECTION, TYPICAL.
7. PROVIDE 2-HOUR FIRE DAMPER AT ALL DUCT PENETRATIONS OF MECHANICAL ROOM WALL, WITH ACCESS DOOR TO DAMPER, TYPICAL.
8. EXTEND ALL DUCTWORK THROUGH MECHANICAL ROOM WALL BETWEEN STRUCTURAL JOISTS AND BETWEEN THE HORIZONTAL BOND BEAMS. SEE STRUCTURAL DRAWINGS FOR COORDINATION OF EXACT DUCT LOCATIONS.
9. FOR CONTINUATION OF COLD WATER LINE, SEE PLUMBING PLANS.
10. FOR CONTINUATION OF THE CHILLED WATER PIPING AND THE STEAM PIPING, SEE SHEET M-4.
11. 6" DIAMETER PIPE, AS RECEIVER FOR CONDENSATE.
12. 96" X 108" O.A. LOUVER BY GENERAL CONTRACTOR.
13. 30" X 95" R.A. DAMPER. DAMPERS SHALL HAVE PARALLEL BLADES TO DIRECT THE AIR FLOW AS SHOWN.
14. PROVIDE RETURN AIR GRILLE NEAR FLOOR IN EXISTING WALL OF THE EXISTING DANCE ROOM.
15. MANUAL BALANCING DAMPERS.
16. FOR CONTINUATION OF DUCTWORK, SEE SHEET M-5.
17. FOR CONTINUATION OF PIPING, SEE SHEET M-4.
18. TUBE PULL SPACE.
19. DROP 48" X 96" DUCT FROM THE BOTTOM OF THE 24" X 96" DUCT TO THE F.A. LOUVER L-1. RUN DUCT THROUGH CROSS MEMBERS AND THE VERTICAL MEMBERS OF THE HORIZONTAL TRUSSES. SEAL DUCT WHERE THE STRUCTURAL MEMBERS PASS THROUGH.
20. PROVIDE ANGLE IRON SUPPORT FOR F.A. PLENUM.
21. SAW CUT OPENING IN EXISTING CONCRETE WALL FOR NEW DUCTWORK.
22. SEE PIPING SCHEMATIC FOR PIPING AND VALVING OF THE HEAT EXCHANGER.
23. MCC PANELS. SEE ELECTRICAL DRAWINGS.
24. MOUNT AIR HANDLER ON PLATFORM BY GENERAL CONTRACTOR.
25. RECTANGULAR TO ROUND TRANSITION.
26. AIR HANDLER. SEE SHEETS M-1 AND M-2 FOR LOCATION.
27. ALL PIPING SHALL BE RUN AS HIGH AS POSSIBLE, ABOVE ACOUSTICAL PARTITION.
28. EMERGENCY GENERATOR BY DIVISION 16000. SEE ELECTRICAL PLANS.
29. PROVIDE A 30" X 30" MINIMUM O.A. DAMPER AND A 30" X 66" OUTSIDE AIR DAMPER WITH PARALLEL BLADES TO DIRECT THE AIR FLOW AS SHOWN.
30. 48" X 48" EXHAUST LOUVER BY GENERAL CONTRACTOR.
31. PROVIDE A SHEET METAL CONNECTION FROM THE EMERGENCY GENERATOR TO 48" X 36" AREA OF THE EXHAUST LOUVER WITH A BACKDRAFT DAMPER AT THE LOUVER FACE.
32. THERMOSTAT SHALL OPERATE EXHAUST FAN AND ATC DAMPER.
33. 48" X 12" EXHAUST LOUVER BY GENERAL CONTRACTOR.
34. CONNECT 24"/12" TO 36" OF THE EXHAUST LOUVER.
35. PROVIDE BACKDRAFT DAMPER AT DISCHARGE OF EXHAUST FAN.
36. CONNECT 24"/16" DUCT TO 24" X 24" PORTION OF THE O.A. LOUVER.
37. PROVIDE A 24" X 72" ATC DAMPER BELOW THE 24" X 16" DUCT AT LOUVER. DAMPER SHALL BE INTERLOCKED TO THE EMERGENCY GENERATOR TO OPEN WHEN IT IS OPERATIONAL.
38. FIRE DAMPER DUCT PENETRATION WITH A 3 HR. FIRE DAMPER.
39. 2 H.R. FIRE DAMPER.
40. PROVIDE BACKDRAFT DAMPER AT DISCHARGE OF EXHAUST FAN.
41. PROVIDE A 24" X 12" ATC DAMPER BELOW THE 24" X 72" EMERGENCY GENERATOR DAMPER, INTERLOCKED TO EF-10.
42. TRANSITION 14"/12" DUCT TO 48"/12" PORTION OF THE EXHAUST LOUVER.
43. SEE ARCHITECTURAL BUILDING ELEVATIONS FOR EXACT LOCATION OF ALL EXTERIOR LOUVERS.
44. PROVIDE A NIGHT THERMOSTATE FOR AIR HANDLER. SEE ADD #2 PAG. ITEM #29

0000TVM6
Weber State College_Physical Education Facility - RW 84-058
Mechanical Room & Sections - 26743


VAN BOERUM & FRANK ASSOCIATES INC.
CIVIL & MECHANICAL CONSULTING ENGINEERS
SALT LAKE CITY, UTAH

jra JONES/ RICHARDS & ASSOCIATES
PLANNING
533 26TH STREET
ARCHITECTURE
(801)394-3033
CONSTRUCTION MANAGEMENT
OGDEN, UTAH


REVISED: AS BUILTS 6-90

PROJECT NUMBER: 8403
DATE: 8-21-89
DRAWN BY:

PROJECT: PHYSICAL EDUCATION FACILITY
WEBER STATE COLLEGE

SHEET TITLE: MECHANICAL ROOM & SECTIONS

SHEET NO. M-6

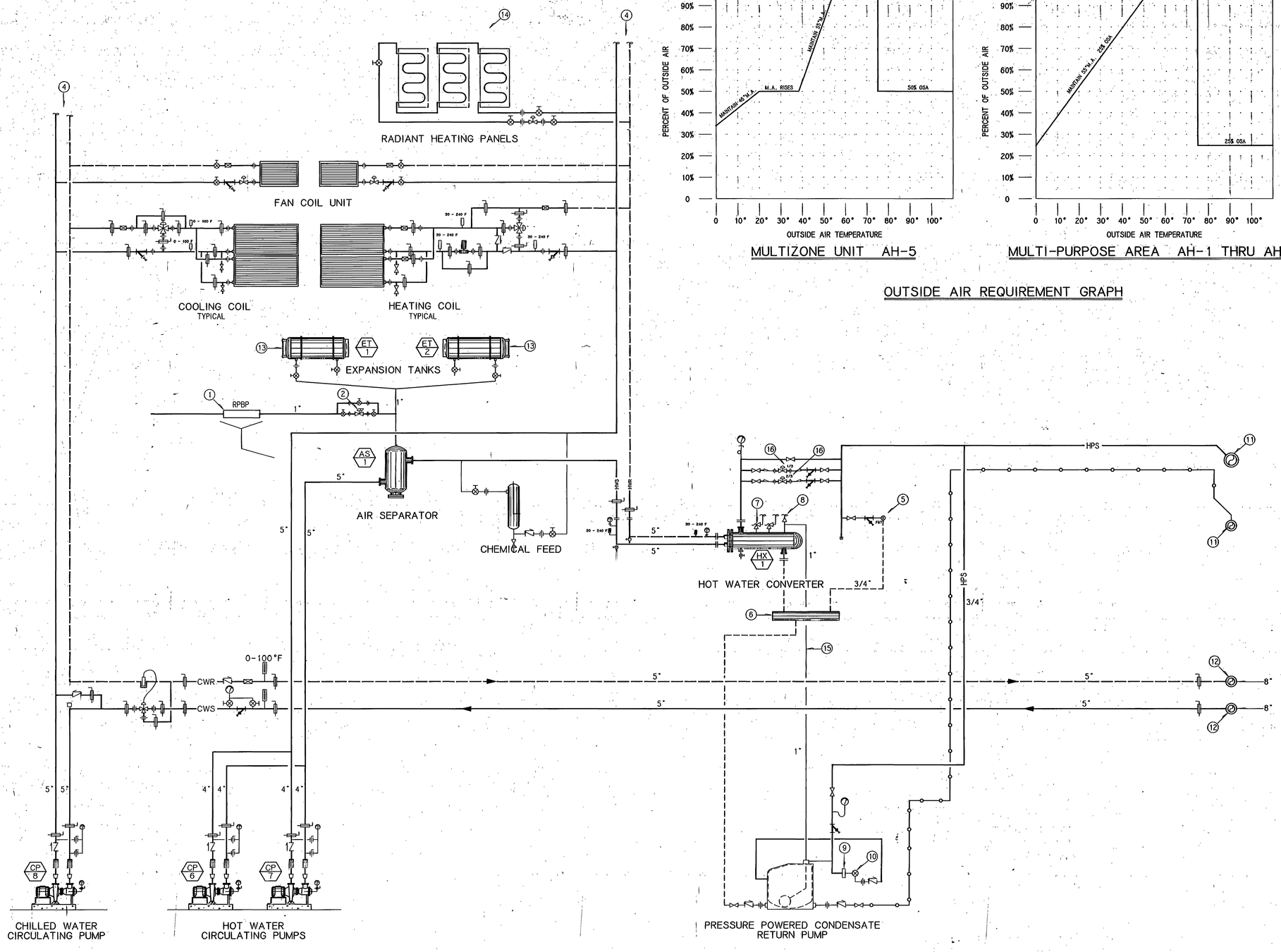


## PIPING SCHEMATIC

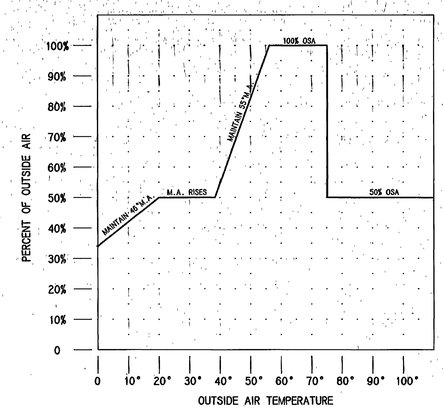


MULTIZONE UNIT AH-5

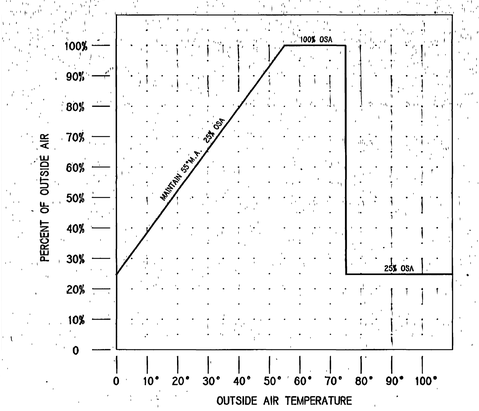


MULTI-PURPOSE AREA AH-1 THRU AH-4

OUTSIDE AIR REQUIREMENT GRAPH

## KEYED NOTES

1. MAKE-UP WATER FROM COLD WATER MANIFOLD, THROUGH REDUCED PRESSURE BACKFLOW PREVENTER. PROVIDE DRAIN WITH FUNNEL BELOW RPBP. EXTEND TO NEAREST FLOOR DRAIN.
2. MAKE-UP WATER CONTROL VALVE.
3. MANUAL AIR VENT AT ALL HIGH POINTS OF THE SYSTEM, TYPICAL.
4. PIPING TO CONTINUE TO ADDITIONAL COILS AND RADIANT PANELS.
5. F & T TRAP, 500 LBS/HR CAPACITY AT 1/2 PSI PRESSURE DIFFERENTIAL.
6. 4'- 0" x 6" DIA PIPE SHALL BE USED AS A RECEIVER TANK.
7. PRESSURE RELIEF VALVES, PIPE DISCHARGE TO OUTSIDE THROUGH EXTERIOR WALL WITH TURNED DOWN ELL.
8. BALANCED PRESSURE THERMOSTATIC AIR VENT, PIPE DISCHARGE TO OUTSIDE THROUGH EXTERIOR WALL W/TURNED DOWN ELL.
9. STEAM TRAP LOSS DETECTOR.
10. THERMODYNAMIC TRAP.
11. CONNECT TO EXISTING STEAM AND CONDENSATE LINES. SEE SHEET M-3 FOR LOCATION OF EXISTING LINES.
12. EXTEND NEW CHILLED WATER PIPES FROM THE NEW 8" CHILLED WATER MAINS. SEE SHEET M-3 FOR LOCATION OF THE MAIN CHILLED WATER LINES.
13. SIGHT GLASS, TYPICAL.
14. SEE PLANS FOR NUMBER OF PANELS FOR EACH ROOM.
15. EQUALIZING LINE.
16. 1/3 AND 2/3 STEAM TEMPERATURE CONTROL VALVES.

0000TVM7
Weber State College, Physical Education Facility - RW 84-058
Piping Schematic - 26744

RECORD DOCUMENTS JUL 3 1990
THESE DOCUMENTS HAVE BEEN REVISED TO INCLUDE INFORMATION SUBMITTED BY THE CONTRACTOR. VERIFICATION SHOULD BE BETWEEN THE ARCHITECT DOES NOT GUARANTEE THEIR ACCURACY.

REGISTERED PROFESSIONAL ENGINEER No. 7122 KIM P. HARRIS STATE OF UTAH

jra JONES/ RICHARDS & ASSOCIATES
ARCHITECTURE (801)394-3033
PLANNING 533 25TH STREET
CONSTRUCTION MANAGEMENT OGDEN, UTAH

REVISED: AS BUILT 7-90
PROJECT NUMBER: 8403
DATE: 5-21-89
DRAWN BY:

PROJECT: PHYSICAL EDUCATION FACILITY
WEBER STATE COLLEGE
SHEET TITLE: PIPING SCHEMATIC
SHEET NO. M-7

## SUPPLY FAN SCHEDULE

| FAN TAG | MFR. CATALOG NO. | SERVICE | FAN CAPACITY | | | | | | MOTOR | | | |
|---|---|---|---|---|---|---|---|---|---|---|---|---|
| | | | CFM | OV FPM | RPM | SP -"WG | BHP | WHEEL NO-SIZE | HP | RPM | VOLT | Ø |
| SF-1 | PACE A-30 AF | AH-1 | 16,500 | 1800 | 1020 | 3.0 | 11.2 | 30 | 20 | 1750 | 480 | 3 |
| SF-2 | PACE A-30 AF | AH-2 | 16,500 | 1800 | 1020 | 3.0 | 11.2 | 30 | 20 | 1750 | 480 | 3 |
| SF-3 | PACE A-30 AF | AH-3 | 16,500 | 1800 | 1020 | 3.0 | 11.2 | 30 | 20 | 1750 | 480 | 3 |
| SF-4 | PACE A-30 AF | AH-4 | 16,500 | 1800 | 1020 | 3.0 | 11.2 | 30 | 20 | 1750 | 480 | 3 |
| SF-5 | TRANE 41G FC | AH-5 | 21,000 | 500 | 1165 | 3.5 | 17.0 | 41 | 25 | 1750 | 480 | 3 |
| | | | | | | | | | | | | |
| | | | | | | | | | | | | |

SC-06

## EXHAUST FAN SCHEDULE

| FAN TAG | MFR. CATALOG NO. | SERVICE | FAN CAPACITY | | | | | | MOTOR | | | |
|---|---|---|---|---|---|---|---|---|---|---|---|---|
| | | | CFM | OV FPM | RPM | SP "WC | BHP | WHEEL NO-SIZE | HP | RPM | VOLT | Ø |
| EF-1 | PENN FB 244 | RELIEF AIR | 5000 | NA | 990 | 0.375 | .75 | 24" | 3/4 | 1750 | 480 | 3 |
| EF-2 | PENN FB 244 | RELIEF AIR | 5000 | NA | 990 | 0.375 | .75 | 24" | 3/4 | 1750 | 480 | 3 |
| EF-3 | PENN FB 244 | RELIEF AIR | 5000 | NA | 990 | 0.375 | .75 | 24" | 3/4 | 1750 | 480 | 3 |
| EF-4 | PENN FB 244 | RELIEF AIR | 5000 | NA | 990 | 0.375 | .75 | 24" | 3/4 | 1750 | 480 | 3 |
| EF-5 | COOK 120 C2B | MENS T.R. | 620 | -- | 1200 | 0.5 | .11 | 12" | 1/4 | 1750 | 120 | 1 |
| EF-6 | COOK 120 C2B | WOMENS T.R. | 570 | -- | 1200 | 0.5 | .11 | 12" | 1/4 | 1750 | 120 | 1 |
| EF-7 | PENN Z-7 | JANITORS CLOSET | 145 | -- | 1550 | 0.375 | -- | -- | 68 WATTS | 1750 | 120 | 1 |
| EF-8 | PENN Z-9 | ELECTRICAL ROOM | 250 | -- | 1550 | 0.25 | -- | -- | 185 WATTS | 1750 | 120 | 1 |
| EF-9 | PENN SX 125B | TRANSFORMER VAULT | 1500 | -- | 1200 | 0.25 | .25 | 13.25" | 1/2 | 1750 | 120 | 1 |
| EF-10 | PENN SX 105B | MECHANICAL ROOM | 1000 | | 1200 | 0.25 | .15 | 12" | 1/3 | 1750 | 120 | 1 |

SC-07

## AIR HANDLER SCHEDULE

| SYMBOL | MFR. CATALOG NO. | SERVICE | SUPPLY FAN(S) | RETURN FAN(S) | COILS | FILTERS |
|---|---|---|---|---|---|---|
| AH-1 | PACE A-30 | MAIN ARENA | SF-1 | -- | CC-1, HC-1 | F-1 |
| AH-2 | PACE A-30 | MAIN ARENA | SF-2 | -- | CC-2, HC-2 | F-2 |
| AH-3 | PACE A-30 | MAIN ARENA | SF-3 | -- | CC-3, HC-3 | F-3 |
| AH-4 | PACE A-30 | MAIN ARENA | SF-4 | -- | CC-4, HC-4 | F-4 |
| AH-5 | TRANE 41G | COURTS & DANCE STUD. | SF-5 | -- | CC-5, HC-5 | F-5 |
| | | | | | | |
| | | | | | | |

SC-08

## EXPANSION TANK SCHEDULE

| SYMBOL | MFR. CATALOG NO. | SERVICE | TYPE | CAPACITY GALL. | DIMENSIONS | TANK FITTING | REMARKS |
|---|---|---|---|---|---|---|---|
| ET-1 | B&G 220 | HOT WATER | HORIZONTAL | 220 | 30" DIA X 72" L | ATFL | W/SIGHT GLASS |
| ET-2 | B&G 220 | HOT WATER | HORIZONTAL | 220 | 30" DIA X 77" L | ATFL | W/SIGHT GLASS |
| | | | | | | | |
| | | | | | | | |

SC-21

## CEILING RADIANT HEAT PANEL SCHEDULE

| SYMBOL | MANUFACTURER / CATALOG NO. | GPM | WATER IN/OUT | MAX P.D. (FT) | BTU/SQ FT |
|---|---|---|---|---|---|
| HP-1 | AIRTEX 48"x 24" | .16 / PANEL | 180/160 | .30 | 142 |
| | | | | | |
| | | | | | |

SC-22

## AIR SEPARATOR SCHEDULE

| SYMBOL | MFR. CAT. NO. | CAP. GPM. | OPTIONS | REMARKS |
|---|---|---|---|---|
| AS-1 | B&G R-5 | 320 | -- | SERVES HOT WATER |
| | | | | |
| | | | | |

SC-24

## FILTER SCHEDULE

| SYMBOL | TYPE | CFM | SIZE | ARRANGMENT | MAX. S.P. DROP | |
|---|---|---|---|---|---|---|
| | | | | | INITIAL | FINAL |
| F-1 | FARR 30/30 2" DEEP | 16,500 | (12) 20 X 25 (4) 20 X 20 | VEE-BANK | .12 | .9 |
| F-2 | FARR 30/30 2" DEEP | 16,500 | (12) 20 X 25 (4) 20 X 20 | VEE-BANK | .12 | .9 |
| F-3 | FARR 30/30 2" DEEP | 16,500 | (12) 20 X 25 (4) 20 X 20 | VEE-BANK | .12 | .9 |
| F-4 | FARR 30/30 2" DEEP | 16,500 | (12) 20 X 25 (4) 20 X 20 | VEE-BANK | .12 | .9 |
| F-5 | FARR 30/30 2" DEEP | 21,000 | (20) 20 X 25 | VEE-BANK | .12 | .9 |
| | | | | | | |
| | | | | | | |

SC-41

## DIFFUSER SCHEDULE

| SYMBOL | MANUFACTURER | SIZE | THROW | MODEL | REMARKS |
|---|---|---|---|---|---|
| D1-1 | KRUEGER | 12 X 12 | 1-WAY | S | FRAME 23 |
| D2-1 | KRUEGER | 12 X 12 | 2-WAY | SH | FRAME 23 |
| D2-3 | KRUEGER | 15 X 15 | 2-WAY | SH | FRAME 23 |
| D3-1 | KRUEGER | 6 X 6 | 3-WAY | SH | FRAME 22 |
| D3-2 | KRUEGER | 9 X 9 | 3-WAY | SH | FRAME 23 |
| D3-3 | KRUEGER | 12 X 12 | 3-WAY | SH | FRAME 23 |
| D3-4 | KRUEGER | 18 X 18 | 3-WAY | SH | FRAME 23 |
| D3-5 | KRUEGER | 18 X 18 | 3-WAY | SH | FRAME 22 |
| D4-1 | KRUEGER | 9 X 9 | 4-WAY | SH | FRAME 23 |
| D4-2 | KRUEGER | 12 X 12 | 4-WAY | SH | FRAME 23 |
| D4-3 | KRUEGER | 15 X 15 | 4-WAY | SH | FRAME 23 |
| D4-4 | KRUEGER | 18 X 18 | 4-WAY | SH | FRAME 23 |
| D4-5 | KRUEGER | 9 X 9 | 4-WAY | SH | FRAME 22 |
| SR-1 | KRUEGER | 10 X 30 | 1-WAY | DPL | DRUM LOUVER |

SC-02

## REGISTER AND GRILLE SCHEDULE

| SYMBOL | MANUFACTURER | SIZE (IN) | MODEL | LOCATION | REMARKS |
|---|---|---|---|---|---|
| RG-1 | KRUEGER | 12 X 12 | 1190 | CEILING | SURFACE MOUNTED FRAME 22 |
| RG-2 | KRUEGER | 24 X 24 | 1190 | CEILING | LAY-IN FRAME 23 |
| RG-3 | KRUEGER | 96 X 68 | S480H | SIDEWALL | HEAVY DUTY |
| RG-4 | KRUEGER | 48 X 68 | S480H | SIDEWALL | HEAVY DUTY |
| RG-5 | KRUEGER | 30 X 68 | S480H | SIDEWALL | HEAVY DUTY |
| RG-6 | KRUEGER | 72 X 48 | S480H | SIDEWALL | HEAVY DUTY |
| RG-7 | KRUEGER | 96 X 48 | S480H | SIDEWALL | HEAVY DUTY |
| RG-8 | KRUEGER | 54 X 30 | S480H | SIDEWALL | HEAVY DUTY |
| RG-9 | KRUEGER | 18"X72" | S480H | SIDEWALL | HEAVY DUTY |
| RG-10 | KRUEGER | 24"X72" | S480H | SIDEWALL | HEAVY DUTY |
| ER-1 | KRUEGER | 12"X12" | 490 | CEILING | FRAME 22 W/OBD |

## PUMP SCHEDULE

| PUMP TAG | MFR. CATALOG NO. | SERVICE | CAPACITY | | EFF. % | BHP | MOTOR | | | |
|---|---|---|---|---|---|---|---|---|---|---|
| | | | GPM | HEAD FT WATER | | | HP | RPM | VOLT | Ø |
| CP-1 | B&G SERIES 60 2AA | AH-1 HW COIL | 65 | 20 | 57 | .65 | 3/4 | 1750 | 480 | 3 |
| CP-2 | B&G SERIES 60 2AA | HA-2 HW COIL | 65 | 20 | 57 | .65 | 3/4 | 1750 | 480 | 3 |
| CP-3 | B&G SERIES 60 2AA | AH-3 HW COIL | 65 | 20 | 57 | .65 | 3/4 | 1750 | 480 | 3 |
| CP-4 | B&G SERIES 60 2AA | AH-4 HW COIL | 65 | 20 | 57 | .65 | 3/4 | 1750 | 480 | 3 |
| CP-5 | B&G SERIES 60 2AA | AH-5 HW COIL | 55 | 20 | 57 | .50 | 3/4 | 1750 | 480 | 3 |
| CP-6 | B&G 1531 2BC | HOT WATER | 160 | 80 | 70 | 4.8 | 7-1/2 | 1750 | 480 | 3 |
| CP-7 | B&G 1531 2BC | HOT WATER | 160 | 80 | 70 | 4.8 | 7-1/2 | 1750 | 480 | 3 |
| CP-8 | B&G 1531 5E | CHILLED WATER | 450 | 75 | 75 | 12.0 | 15 | 1750 | 480 | 3 |
| | | | | | | | | | | |
| | | | | | | | | | | |
| | | | | | | | | | | |

SC-04

## COIL SCHEDULE

| SYMBOL | SYSTEM SERVED | SERVICE | MBH | SIZE W" X H" PER COLL. | AREA SQ FT | FACE VELOCITY FPM | ROWS/FPI | TOTAL GPM | WATER TEMP °F | | AIR TEMP °F | | AIR P.D. W.S. | WATER P.D. FT. |
|---|---|---|---|---|---|---|---|---|---|---|---|---|---|---|
| | | | | | | | | | EWT | LWT | EDB/EWB | LDB/LWB | | |
| CC-1 | AH-1 | CHILLED WATER | 452 | 92 X 54 | 34.5 | 478 | 8/8 | 80 | 50 | 61.5 | 83/63 | 54/52 | .80 | 5.0 |
| HC-1 | AH-1 | HOT WATER | 652 | 92 X 54 | 34.5 | 478 | 2/7 | 65 | 180 | 160 | 54 | 97 | .18 | 2.7 |
| CC-2 | AH-2 | CHILLED WATER | 452 | 92 X 54 | 34.5 | 478 | 8/8 | 80 | 50 | 61.5 | 83/63 | 54/52 | .80 | 5.0 |
| HC-2 | AH-2 | HOT WATER | 652 | 92 X 54 | 34.5 | 478 | 2/7 | 65 | 180 | 160 | 54 | 97 | .18 | 2.7 |
| CC-3 | AH-3 | CHILLED WATER | 452 | 92 X 54 | 34.5 | 478 | 8/8 | 80 | 50 | 61.5 | 83/63 | 54/52 | .80 | 5.0 |
| HC-3 | AH-3 | HOT WATER | 652 | 92 X 54 | 34.5 | 478 | 2/7 | 65 | 180 | 160 | 54 | 97 | .18 | 2.7 |
| CC-4 | AH-4 | CHILLED WATER | 452 | 92 X 54 | 34.5 | 478 | 8/8 | 80 | 50 | 61.5 | 83/63 | 54/52 | .80 | 5.0 |
| HC-4 | AH-4 | HOT WATER | 652 | 92 X 54 | 34.5 | 478 | 2/7 | 65 | 180 | 160 | 54 | 97 | .18 | 2.7 |
| CC-5 | AH-5 | CHILLED WATER | 620 | 108 X 54 | 40.5 | 518 | 8/8 | 110 | 50 | 61.5 | 87/63 | 55/52 | .55 | 9.8 |
| HC-5 | AH-5 | HOT WATER | 567 | 99 X 30 | 20.6 | 582 | 2/7 | 55 | 180 | 160 | 46 | 97 | .18 | 4.9 |
| | | | | | | | | | | | | | | |
| | | | | | | | | | | | | | | |

SC-05

## DOMESTIC HOT WATER HEATER SCHEDULE

| SYMBOL | MANUFACTURERS CATALOG NUMBER | SERVICE | CAPACITY GALLONS | FUEL TYPE | INPUT CAPACITY | POWER VOLTS/Ø | RECOVERY RATE GPH | WATER TEMP IN/OUT | STACK SIZE IN. ϕ | TANK SIZE |
|---|---|---|---|---|---|---|---|---|---|---|
| WH-1 | A.O. SMITH DSE-20 | TOILET ROOMS | 20 | ELEC | 3KW | 208/1PH | 12 | 40/140 | -- | 27 X 20 |
| WH-2 | A.O. SMITH DSE-5 | SERVICE SINKS | 5 | ELEC | 3KW | 208/1PH | 12 | 40/140 | -- | 16 X 20 |
| | | | | | | | | | | |
| | | | | | | | | | | |

SC-13

0000TVM8
Weber State College, Physical Education Facility - RW 84-658
Mechanical Equipment Schedules - 26745

DOCUMENTS ... BE THEIR ACCURACY.

REGISTERED PROFESSIONAL ENGINEER No. 7122 KIM P. HARRIS STATE OF UTAH

VAN BOERUM & FRANK ASSOCIATES INC.
CIVIL & MECHANICAL CONSULTING ENGINEERS
SALT LAKE CITY, UTAH

jra JONES/ RICHARDS & ASSOCIATES
PLANNING 533 26TH STREET
ARCHITECTURE CONSTRUCTION MANAGEMENT
(801)394-3033 OGDEN, UTAH

REVISED: AS BUILT 7-90

PROJECT NUMBER: 8403 DATE: 6-21-88 DRAWN BY:

PROJECT: PHYSICAL EDUCATION FACILITY
WEBER STATE COLLEGE

SHEET TITLE: MECHANICAL EQUIPMENT SCHEDULES

SHEET NO. M-8

# COMPUTER ROOM AIR CONDITIONING UNIT SCHEDULE

| SYMBOL | MANUFACTURERS CATALOG NO. | CAPACITY (MBH) | | INDOOR DESIGN TEMPERATURES | | | FANS | | | | COMPRESSOR | | EVAPORATOR | | REHEAT | | HUMIDIFIER | | FILTERS | | | GLYCOL | | ELECTRICAL | | | | | | REMOTE DRY COOLER | | | | | PUMP | | |
|---|---|---|---|---|---|---|---|---|---|---|---|---|---|---|---|---|---|---|---|---|---|---|---|---|---|---|---|---|---|---|---|---|---|---|---|---|---|
| | | TOTAL | SEN. | °F db. | °F wb. | % RH | CFM | EXT. SP. | HP | No. | No. | HP | FACE AREA | ROWS | KW | STAGE | LBS/HR | KW | EFF | DEPTH | FACE AREA (SQ. FT.) | GPM | MAX. P.D. | FLA | WSA | OPD | VOLTS | Ø | HZ | FLA | MCA | Ø | HZ | VOLTS | FLA | Ø | HZ |
| CRU-1 | LIEBERT CF/CU 60G | 57 | 53 | 72 | 60 | 50 | 2800 | .3 | 1-1/2 | 1 | 1 | -- | 6.94 | 4 | 15 | 2 | 11.0 | 4.8 | 40% | 2 | 15.75 | 20 | 15 | 30.6 | 37.6 | 40 | 480 | 3 | 60 | 5.5 | 3/4 | 1 | 60 | 480 | -- | 1 | 3/4 |
| | | | | | | | | | | | | | | | | | | | | | | | | | | | | | | | | | | | | | |
| | | | | | | | | | | | | | | | | | | | | | | | | | | | | | | | | | | | | | |

SC-65

# SHELL & TUBE HEAT EXCHANGER SCHEDULE

| SYMBOL | MFR. CATALOG NO. | SERVICE | PASSES | MBH | HEATING SURFACE (FT.²) | FOULING FACTOR | HEATING SIDE | | | | | SECONDARY SIDE | | | | |
|---|---|---|---|---|---|---|---|---|---|---|---|---|---|---|---|---|
| | | | | | | | ENT STEAM PRESS. PSI | LVG | P.D. (PSI) | LOCATION | GPM | EWT (°F) | LWT (°F) | P.D. (PSI) | LOCATION | GPM |
| HX-1 | B&G SU 14-3-2 | HOT WATER | 2 | 3200 | 86 | .0005 | 90 | COND | -- | SHELL | NA | 160 | 180 | 1.0 | TUBES | 320 |
| | | | | | | | | | | | | | | | | |
| | | | | | | | | | | | | | | | | |

SC-58

# CONDENSATE RETURN PUMP SCHEDULE

| PUMP TAG | MFR. CATALOG NO. | SERVICE | CAPACITY | | TYPE | STORAGE CAPACITY | BHP | MOTOR | | | |
|---|---|---|---|---|---|---|---|---|---|---|---|
| | | | #/HR | HEAD FT WATER | | | | HP | RPM | VOLT | Ø |
| CRP-1 | SPIRAX/SARCO 2" X 2" PPC | HX-1 | 3500 | -- | NON-ELECTRIC | NA | NA | NA | NA | NA | NA |
| | | | | | | | | | | | |
| | | | | | | | | | | | |

SC-51

# FAN COIL SCHEDULE

| UNIT NO. | MANUFACTURER & MODEL | AREA SERVED | CFM | MBH | | GPM/P.D.(FT) | | E.A.T. DB/WB | | EWT/LWT | | MOTOR | | |
|---|---|---|---|---|---|---|---|---|---|---|---|---|---|---|
| | | | | COOLING SENSIBLE | HEATING | COOLING | HEATING | COOLING | HEATING | COOLING | HEATING | H.P. | RPM | VOLT/Ø |
| FC-1 | TRANE C34DL12 | LOBBY | 1200 | 22.9 | 25 | 3.9/2.5 | 2.5/3.5 | 80/63 | 70 | 50/62 | 180/160 | 1/3 | 1750 | 120/1 |
| FC-2 | TRANE D34DL12 | LOBBY | 1200 | 22.9 | 25 | 3.9/2.5 | 2.5/3.5 | 80/63 | 70 | 50/62 | 180/160 | 1/3 | 1750 | 120/1 |
| FC-3 | TRANE C34DL08 | ISSUE ROOM | 400 | 10.2 | 10.0 | 2.9/6.1 | 1.0/1.0 | 80/63 | 70 | 50/62 | 180/160 | 1/4 | 1750 | 120/1 |
| FC-4 | TRANE C34A108 | CORRIDOR | 600 | 9.0 | 15.0 | 2.6/8.2 | 1.5/3.0 | 75/63 | 70 | 50/62 | 180/160 | 1/4 | 1750 | 120/1 |
| | | | | | | | | | | | | | | |
| | | | | | | | | | | | | | | |

# LOUVER SCHEDULE

| SYMBOL | MANUFACTURER | SIZE (IN) | MODEL | LOCATION | REMARKS |
|---|---|---|---|---|---|
| L-1 | AIROLITE | 96"x 48" | AC 505 | SOFFIT | FA INTAKE |
| L-2 | AIROLITE | 96"x 48" | AC 505 | SOFFIT | RELIEF AIR |
| L-3 | AIROLITE | 18"x 18" | AC 505 | SOFFIT | EXHAUST AIR |
| | | | | | |
| | | | | | |

SC-48

# HOOD SCHEDULE

| SYMBOL | MODEL & MFR | SERVICE | HEIGHT | CFM | MAX APD | THROAT SIZE | REMARKS |
|---|---|---|---|---|---|---|---|
| H-1 | PENN AIRETTE | FA INTAKE | NA | NA | NA | 12"x 12" | SEE DETAIL 2/M-10 |
| | | | | | | | |
| | | | | | | | |

SC-23

# AIR COMPRESSOR

| PLAN SYMBOL | MANUFACTURER AND MODEL NUMBER | CAPACITY (SCFM) | PRESSURE (PSIG) | MOTOR HP | ELECTRICAL VOLTS/PHASE | TYPE | RECEIVER (CU. FT) | SEAL WATER (GPM) | CHILLED WATER GPM | ACCESSORIES |
|---|---|---|---|---|---|---|---|---|---|---|
| AC-1 | BY ATC CONTRACTOR | -- | -- | (2)1 | 480/3/60 | -- | -- | -- | -- | -- |
| | | | | | | | | | | |
| | | | | | | | | | | |

SC-28

# AIR DRYER SCHEDULE

| PLAN SYMBOL | MANUFACTURER AND MODEL NUMBER | SCFM @ 100°F INLET TEMP 100 PSI & 35°F DEWPOINT | REFRIGERATION COMPRESSOR H.P. | ELECTRICAL VOLTS / PHASE | HEAT REJECTED 100°F AMB (BTU) | MAXIMUM PRESS DROP (PSI) | REMARKS |
|---|---|---|---|---|---|---|---|
| AD-1 | BY ATC CONTRACTOR | | 1/6 | 120/1/60 | -- | -- | -- |
| | | | | | | | |
| | | | | | | | |

SC-30

RECORD DOCUMENTS JUL 2 1990

THESE DOCUMENTS HAVE BEEN REVISED TO INCLUDE INFORMATION SUPPLIED BY THE CONTRACTOR. THE ARCHITECT HAS ATTEMPTED TO RELIABLE THE ACCURACY OF THE INFO NOT GUARANTEE THEIR ACCURACY.

0000TVM9
Weber State College, Physical Education Facility - RW 84-058
Mechanical Equipment Schedules - 26746

REGISTERED PROFESSIONAL ENGINEER No. 7122 KIM P. HARRIS STATE OF UTAH

VAN BOERUM & FRANK ASSOCIATES INC.
CIVIL & MECHANICAL CONSULTING ENGINEERS
SALT LAKE CITY, UTAH

jra JONES/ RICHARDS & ASSOCIATES
ARCHITECTURE (801)394-3033
PLANNING 533 25TH STREET
CONSTRUCTION MANAGEMENT OGDEN, UTAH

REVISED:

PROJECT NUMBER: 8403
DATE: 6-21-88
DRAWN BY:

PROJECT: PHYSICAL EDUCATION FACILITY
WEBER STATE COLLEGE

SHEET TITLE: MECHANICAL EQUIPMENT SCHEDULES

SHEET NO. M-9

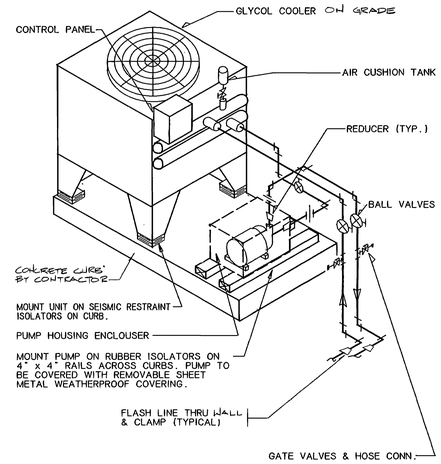


## GLYCOL DRY COOLER DETAIL (10 / M-10)
NO SCALE

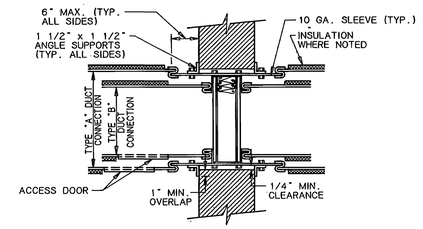


## WALL MOUNTED FIRE DAMPER DETAIL (6 / M-10)
NO SCALE

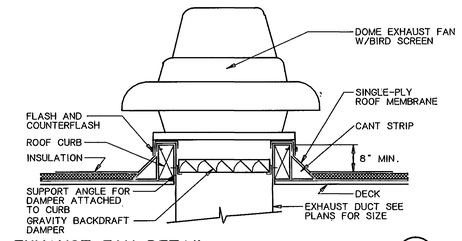


## EXHAUST FAN DETAIL (1 / M-10)
NO SCALE

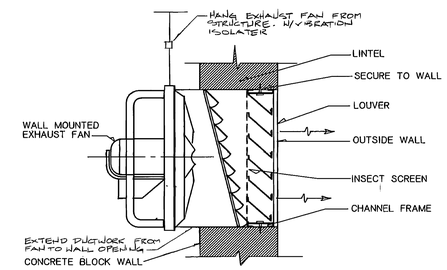


## WALL EXHAUST FAN DETAIL (7 / M-10)
NO SCALE

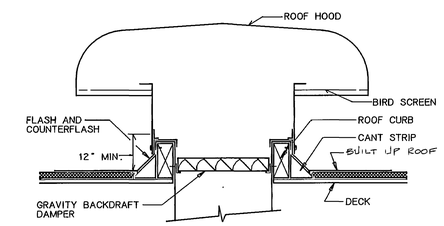


## ROOF HOOD DETAIL (2 / M-10)
NO SCALE

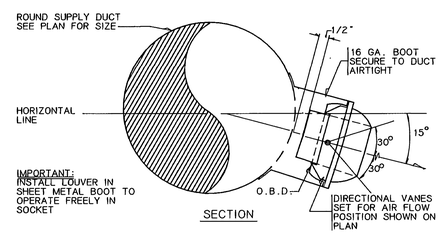


## DRUM LOUVER DETAIL (11 / M-10)
NO SCALE

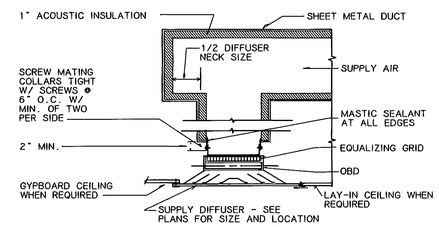


## TYPICAL CEILING DIFFUSER DETAIL (8 / M-10)
NO SCALE

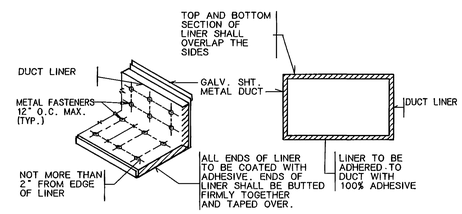


## DUCT LINER DETAIL (3 / M-10)
NO SCALE

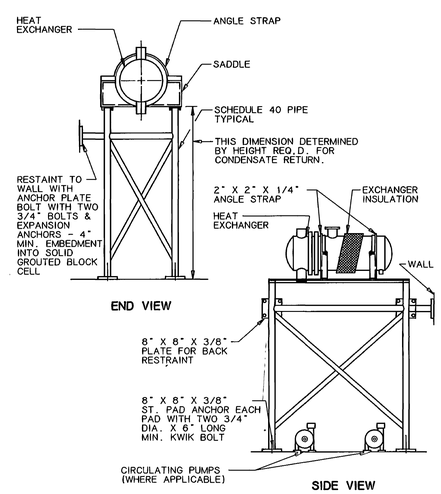


## STEAM HEAT EXCHANGER BASE DETAIL (12 / M-10)
NO SCALE

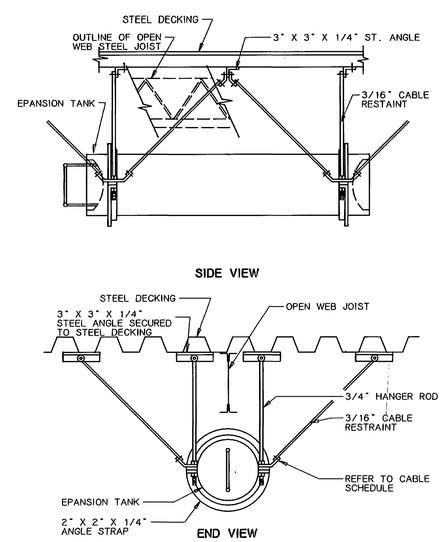


## EXPANSION TANK HANGER DETAIL (9 / M-10)
NO SCALE

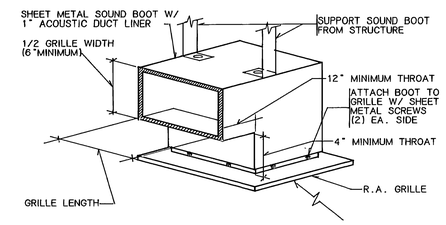


## R.A. GRILLE WITH SOUND BOOT (4 / M-10)
NO SCALE

0000TVM10
Weber State College, Physical Education Facility - RW 84-058
Mechanical Details - 26747

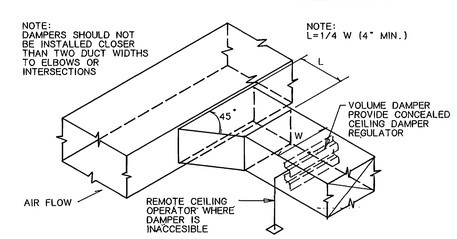


## BRANCH DUCT TAKE-OFF & DAMPER DETAIL (5 / M-10)
NO SCALE

RECORD DOCUMENTS JUL 3 1990
THIS DRAWING HAS BEEN REVISED TO REFLECT INFORMATION SUBMITTED BY THE CONTRACTOR, WHICH THE ARCHITECT HAS FOUND TO BE ACCEPTABLE. THE ARCHITECT DOES NOT GUARANTEE THEIR ACCURACY.

REGISTERED PROFESSIONAL ENGINEER No. 7122 KIM P. HARRIS STATE OF UTAH
VAN BOERUM & FRANK ASSOCIATES INC. CIVIL & MECHANICAL CONSULTING ENGINEERS SALT LAKE CITY, UTAH
jra JONES/ RICHARDS & ASSOCIATES
PLANNING 533 26TH STREET
ARCHITECTURE (801)394-3033
CONSTRUCTION MANAGEMENT OGDEN, UTAH

REVISED:

PROJECT NUMBER: 8403
DATE: 9-21-88
DRAWN BY:

PROJECT: PHYSICAL EDUCATION FACILITY
WEBER STATE COLLEGE
SHEET TITLE: MECHANICAL DETAILS

SHEET NO. M-10

## DUCT BRACING GENERAL NOTES

1 DETAILS SHOWN PROVIDE GENERAL GUIDELINES FOR A LATERAL BRACING SYSTEM. A TYPICAL VERTICAL SUPPORT SYSTEM MUST ALSO BE USED.

2 BRACE ALL RECTANGULAR DUCTS OF AREA 6 SQ. FT. AND LARGER. BRACE ALL ROUND DUCTS 28" IN DIAMETER AND LARGER.

3 CABLE RESTRAINTS AND BRACING NOT TO EXCEED 30'-0" CENTERS AND SHALL BE PROVIDED AT EACH TURN, AT THE END OF EACH DUCT RUN, AND ON EACH SIDE OF FLEXIBLE CONNECTIONS. BRACE POINTS SHALL NOT EXCEED 15'-0" FROM FLEXIBLE CONNECTION.

4 WHEN COMBINING DUCT GROUPS ON COMMON BRACING SYSTEMS, USE WEIGHTS AND DIMENSIONS FROM BRACING SCHEDULE.

5 ALL HOLES IN ANGLES ARE TO BE 1/16 INCH OVERSIZED. PLACE STANDARD CUT WASHERS BETWEEN SHEET METAL ANGLES AND NUT.

6 DUCTS NOT BRACED SHALL BE INSTALLED WITH A 6" MIN. CLEARANCE TO VERTICAL CEILING HANGER WIRES.

7 REHEAT BOXES AND OTHER ITEMS WHICH ATTACH TO THE DUCT SYSTEM SHALL BE BRACED INDEPENDENTLY OF THE DUCTS.

8 ALL SHEET METAL FOR BRACING TO BE FY = 33 KSI MINIMUM. GAUGE FOR SHEET METAL BRACING SHALL BE AS FOLLOWS:

16 GA = (0.0598 INCH)
14 GA = (0.0747 INCH)
12 GA = (0.1046 INCH)

9 MINIMUM DISTANCE FROM EDGE OF ANGLE TO BOLTS SHALL BE AS FOLLOWS:

| BOLT DIAMETER | DISTANCE FROM EDGE |
|---|---|
| 1/4" TO 1/2" | 1" |
| 5/8" | 1 1/8" |
| 3/4" | 1 1/4" |
| 7/8" | 1 1/2" |

10 DO NOT FASTEN RESTRAINT SYSTEM TO TWO DISSIMILAR PARTS OF A BUILDING THAT MAY RESPOND IN A DIFFERENT MODE DURING AN EARTHQUAKE. FOR EXAMPLE, A WALL AND A ROOF.

11 ALTERNATE EVERY OTHER CABLE RESTRAINT IN OPPOSITE DIRECTION (SHOWN DOTTED).

## DUCT CABLE BRACING SCHEDULE

| DUCT SIZE (MAX.) | *WT/ LIN FT (MAX) | BOLT SIZE | HORIZONTAL ANGLE | VERTICAL ANGLE | CABLE DIA.** | CABLE DES. *** | ANCHOR CONN. TYPE |
|---|---|---|---|---|---|---|---|
| 12" | 5# | 3/8" | 2 X 2 X 16 GA | 2 X 2 X 12 GA | 1/8" | 7x19 GALV | I |
| 18" | 8# | 3/8" | 2 X 2 X 16 GA | 2-1/2 X 2-1/2 X 12 GA | 1/8" | 7x19 GALV | I |
| 24" | 10# | 3/8" | 2 X 2 X 16 GA | 2-1/2 X 2-1/2 X 12 GA | 1/8" | 7x19 GALV | I |
| 30" | 13# | 3/8" | 2 X 2 X 16 GA | 2-1/2 X 2-1/2 X 12 GA | 1/8" | 7x19 GALV | I |
| 42" | 20# | 3/8" | 2-1/2 X 2-1/2 X 16 GA | 4 X 4 X 12 GA | 3/16" | 7x19 GALV | II |
| 54" | 27# | 3/8" | 2-1/2 X 2-1/2 X 16 GA | 4 X 4 X 12 GA | 3/16" | 7x19 GALV | II |
| 60" | 36# | 3/8" | 3 X 3 X 16 GA | 4 X 4 X 12 GA | 3/16" | 7x19 GALV | II |
| 84" | 53# | 3/8" | 4 X 4 X 14 GA | 4 X 4 X 1/4 | 1/4" | 7x19 GALV | III |
| 96" | 80# | 1/2" | 4 X 4 X 12 GA | 5 X 3 X 1/4 | 5/16" | 7x19 GALV | IV |

* MAXIMUM WEIGHT OF DUCTS OR COMBINATIONS OF DUCTS PER LINEAR FOOT. THE DUCTS MAXIMUM DIMENSION SHALL GOVERN WHAT BRACING IS REQUIRED. FOR ANCHOR CONNECTIONS SEE SCHEDULE. SEE DUCT BRACING DETAILS.

** TWO CABLES REQUIRED AT EACH RESTRAINT POINT, EACH CABLE TO BE INSTALLED 45° TO HORIZONTAL AND 45° TO LONGITUDINAL DIRECTION OF DUCT.

*** CABLE SYSTEMS TO BE EQUAL TO AMBER BOOTH C/W THIMBLES, CLAMPS AND GROMMETS.

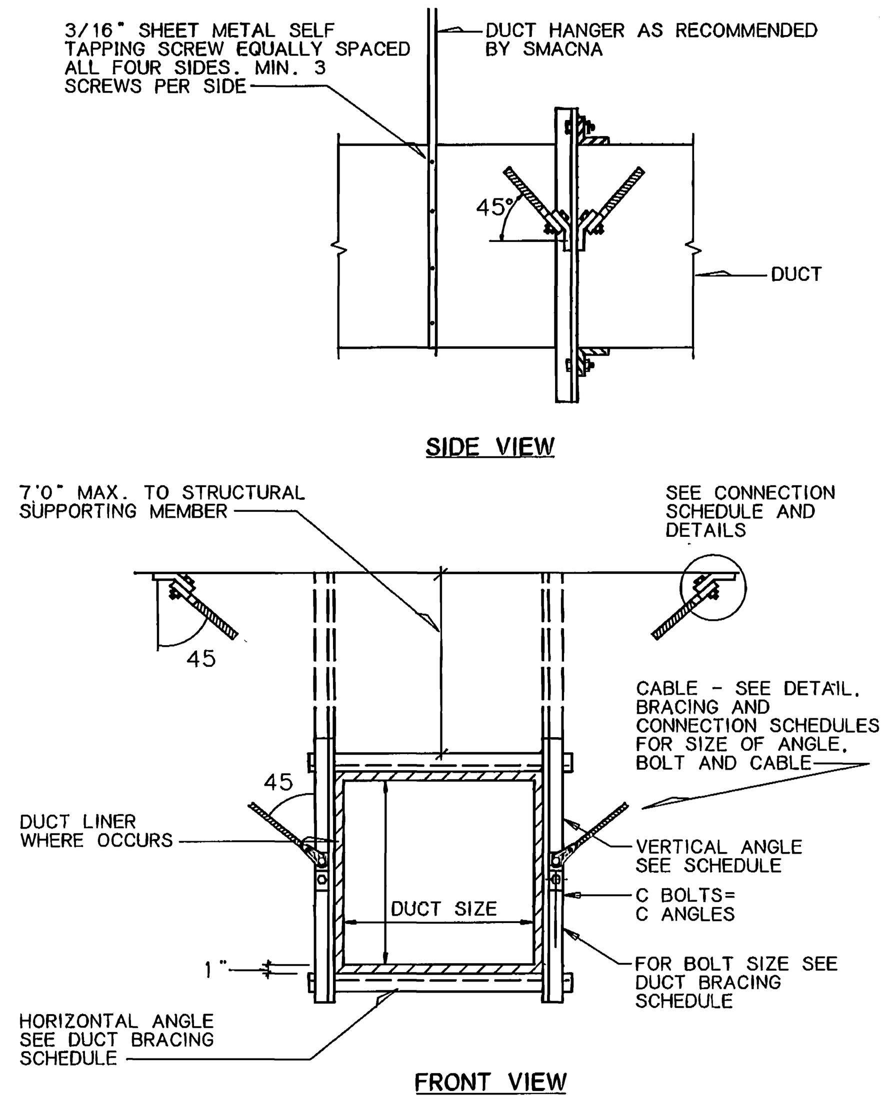


CABLE BRACING FOR RECTANGULAR DUCTS (5 / M-11)
NO SCALE

## SCHEDULE FOR TYPICAL CONNECTIONS TO STRUCTURAL SUPPORTING MEMBERS

| TYPE | MAX. LOAD CAPACITY POUNDS | PHILLIP'S REDHEAD ANCHORS TO CONC. LT. WT. | PHILLIP'S REDHEAD ANCHORS TO CONC. HARD ROCK | CONC. CAST-IN PLACE INSERT | BOLT OF STL.BM. CLAMP |
|---|---|---|---|---|---|
| I<br>II | 500<br>1000 | 3/8"<br>3/8" | 3/8"<br>3/8" | 3/8"<br>1/2" | 3/8"<br>3/8" |
| III<br>IV | 1500<br>2000 | 3/8"<br>1/2" | 3/8"<br>1/2" | 1/2"<br>5/8" | 3/8"<br>1/2" |
| V<br>VI | 3000<br>4000 | 2-1/2"<br>2-5/8" | 2-1/2"<br>2-5/8" | 2-1/2"<br>2-5/8" | 5/8"<br>5/8" |

| TYPE | SPREADER SIZE | BOLT THRU WOOD | SPAN-CRETE ROD | ANGLE TO SUPPORTING STRUCTURAL MEMBER | ROD SIZE FOR PIPES |
|---|---|---|---|---|---|
| I<br>II | C4X5.4<br>C5X6.7 | 1/2"<br>3/4" | 3/8"<br>3/8" | 3X2X1/4"X0'-3" LLH<br>3-1/2X2-1/2X5/16X0'-3" LLH | 1/2"<br>1/2" |
| III<br>IV | C6X8.5<br>C8X11.5 | ***<br>*** | 1/2"<br>1/2" | 3-1/2X2-1/2X7/16X0'-4" LLH<br>5X3X1/2X0'-4" LLH | 5/8"<br>3/4" |
| V<br>VI | C9X13.4<br>C10X15.3 | *** | | 2-3-1/2X2-1/2X7/16X0'-4"<br>2-5X3X1/2X0'-4" | 7/8" *<br>7/8" ** |

NOTES:

1 FOR SLABS LESS THAN 5" THICK ONLY, THIN SLAB INSERTS MAY BE USED.

*2 FOR USE W/CONC. CAST-IN PLACE INSERTS OR PHILLIPS REDHEAD IN HARD ROCK ONLY

**3 FOR USE WITH CONC. CAST-IN PLACE INSERTS ONLY.

***4 WHERE TYPE III CONNECTIONS ARE REQUIRED FOR WOOD SYSTEMS, TYPE II CONNECTIONS SHALL BE USED WITH REDUCED RESTRAINT SPACING TO 20 FT. O.C. WHERE TYPE IV CONNECTIONS ARE REQUIRED FOR WOOD SYSTEMS, TYPE II CONNECTIONS SHALL BE USED WITH REDUCED RESTRAINT SPACING TO 15 FT. O.C. WHERE TYPE V CONNECTIONS ARE REQUIRED FOR WOOD SYSTEMS, TYPE II CONNECTIONS SHALL BE USED WITH REDUCED RESTRAINT SPACING TO 10 FT. O.C.

5 THE MECHANICAL CONTRACTOR SHALL SUBMIT SHOP DRAWINGS TO THE STRUCTURAL ENGINEER AND THEN TO THE MECHANICAL ENGINEER, SHOWING CONNECTION TYPE AND LOCATION OF ALL RESTRAINT CONNECTIONS TO THE STRUCTURE.

6 FOR ESSENTIAL FACILITIES WHERE CONCRETE ANCHOR BOLTS OF THE "REDHEAD" EXPANSION TYPE ARE LOADED IN PULL OUT, 50 PERCENT OF THE BOLTS (ALTERNATE BOLTS IN ANY GROUP ARRANGEMENT) SHALL BE PROOF TESTED TO TWICE THE ALLOWABLE LOAD. IF THERE ARE FAILURES, THE IMMEDIATELY ADJACENT BOLTS MUST THEN ALSO BE TESTED.

& "HILTI" AND "RAMSET" ANCHORS ARE EQUAL SUBSTITUTES FOR "REDHEAD".

## EQUIPMENT ANCHORAGE TO CONCRETE FLOOR SCHEDULE

| EQUIPMENT WEIGHT PER ANCHOR BOLT | MINIMUM ANCHOR DIAMETER (INCHES) | MINIMUM DEPTH OF EMBEDMENT (INCHES) | ICBO ALLOWABLE SHEAR PER BOLT (LBF) | ICBO ALLOWABLE TENSION PER BOLT (LBF) |
|---|---|---|---|---|
| UP TO 150# | 1/4" | 1-1/2" | 380 | 215 |
| 300# | 3/8" | 2-1/2" | 860 | 355 |
| 600# | 1/2" | 3" | 1710 | 665 |
| 900# | 5/8" | 4-1/2" | 2500 | 855 |
| 1300# | 3/4" | 6" | 3050 | 1585 |
| 2000# | 1" | 6" | 6280 | 2020 |

1 THE SIZES AND EMBEDMENT ARE FOR ANCHORS INSTALLED IN STONE AGGREGATE CONCRETE HAVING A FC = 2000 PSI ULTIMATE COMPRESSIVE STRENGTH AT THE TIME OF INSTALLATION. ALL BOLTS ARE TO BE INSTALLED PER MANUFACTURER INSTRUCTIONS AND TO BE INSTALLED NO CLOSER THAN 12 DIAMETERS ON CENTER AND WITH A MINIMUM EDGE DISTANCE OF 6 DIAMETERS.
2 EACH EQUIPMENT SUPPORT LEG WILL BE ANCHORED AND ALL EQUIPMENT WILL BE ANCHORED AT ALL CORNERS. A MINIMUM OF TWO ANCHORS WILL BE REQUIRED FOR ALL EQUIPMENT.
3 SIZES REFER TO "HILTI" KWIK-BOLT. EQUAL SUBSTITUTES ARE "REDHEAD" AND "RAMSET", PROVIDING THAT THE ICBO VALUES ARE EQUAL OR GREATER.
4 EQUIPMENT WEIGHT PER ANCHOR IS THE TOTAL OPERATING OF EQUIPMENT PLUS BASES AND SUPPORTS DIVIDED BY THE NUMBER OF ANCHORS.
5 ANCHORAGE IS TO PREVENT HORIZONTAL MOVEMENT. IF EQUIPMENT GEOMETRY IS SUCH THAT THE VERTICAL DISTANCE FROM SUPPORT LEG TO CENTER OF GRAVITY IS GREATER THAN FOUR TIMES THE SHORTEST DISTANCE FROM A SUPPORT LEG TO THE CENTER OF GRAVITY, ADDITIONAL ANCHORAGE AND RESTRAINTS WILL BE REQUIRED TO PREVENT OVERTURNING.

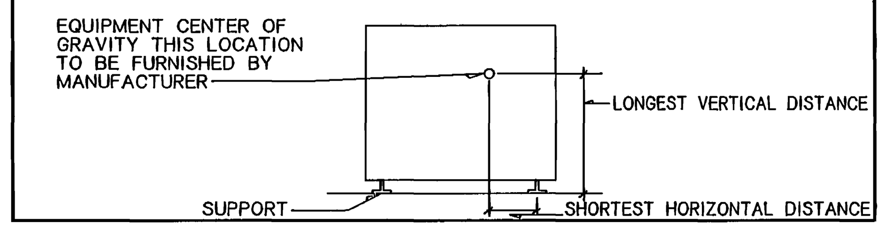


## PIPE BRACING GENERAL NOTES

1 DETAILS SHOWN PROVIDE GENERAL GUIDELINES FOR A LATERAL BRACING SYSTEM. A TYPICAL VERTICAL SUPPORT SYSTEM MUST ALSO BE USED.
2 BRACE ALL PIPES 1-1/2" I.D. AND LARGER.
3 CABLE RESTRAINTS AND BRACING NOT TO EXCEED 30'-0" CENTERS AND SHALL BE PROVIDED AT ALL CHANGES IN DIRECTION OF PIPE. ALL DROPS TO EQUIPMENT, AND ON EACH SIDE OF FLEXIBLE CONNECTIONS. BRACE POINTS SHALL NOT EXCEED 15'-0" FROM FLEXIBLE CONNECTION.
4 ALL HOLES IN ANGLES ARE TO BE 1/16 INCH OVERSIZED. PLACE STANDARD CUT WASHERS BETWEEN SHEET METAL ANGLES AND NUT.
5 EQUIPMENT WHICH ATTACHES TO THE PIPING SYSTEM SHALL BE BRACED INDEPENDENTLY OF THE PIPES.
6 ALL SHEET METAL FOR BRACING TO BE FY=33 KSI MINIMUM. GAUGE FOR SHEET METAL BRACING SHALL BE AS FOLLOWS:

16 GA = (0.0598 INCH)
14 GA = (0.0747 INCH)
12 GA = (0.1046 INCH)

7 MINIMUM DISTANCE FROM EDGE OF ANGLE TO BOLTS SHALL BE AS FOLLOWS:

| BOLT DIAMETER | DISTANCE FROM EDGE |
|---|---|
| 1/4" TO 1/2" | 1" |
| 5/8" | 1 1/8" |
| 3/4" | 1 1/4" |
| 7/8" | 1 1/2" |

8 DO NOT FASTEN RESTRAINT SYSTEM TO TWO DISSIMILAR PARTS OF A BUILDING THAT MAY RESPOND IN A DIFFERENT MODE DURING AN EARTHQUAKE. FOR EXAMPLE, A WALL AND A ROOF.
9 PROVIDE LARGE ENOUGH PIPE SLEEVES THROUGH WALLS OR FLOORS TO ALLOW FOR ANTICIPATED DIFFERENTIAL MOVEMENTS.
10 DO NOT FASTEN ONE RIGID PIPING SYSTEM TO TWO DISSIMILAR PARTS OF A BUILDING THAT MAY RESPOND IN A DIFFERENT MODE DURING AN EARTHQUAKE. FOR EXAMPLE, A WALL AND A ROOF.
11 BRACING DETAILS, SCHEDULE AND NOTES ARE TO BE USED WITH THE FOLLOWING TYPES OF PIPE: STEEL PIPE SCHEDULE 40 AND 80, COPPER PIPE TYPE K,L,M (ONLY SILVER SOLDERED BRAZED JOINTS TO BE USED WITH COPPER PIPE).
12 FOR GAS PIPING, THE BRACING DETAILS, SCHEDULES AND NOTES MAY BE USED EXCEPT THAT RESTRAINTS SHALL BE INSTALLED AT EVERY 20'-0" O.C. ALSO ALL PIPE 1 INCH AND LARGER SHALL BE BRACED.
13 WASTE, VENT AND ROOF DRAINAGE PIPING SYSTEMS ARE EXCLUDED FROM THE RESTRAINT GUIDELINES.
14 ALTERNATE EVERY OTHER CABLE RESTRAINT IN OPPOSITE DIRECTION (SHOWN DOTTED).

## PIPE CABLE BRACING SCHEDULE

| PIPE SIZE | HANGER ROD SIZE | MAX. ROD LENGTH | HANGER TYPE | BOLTS TO CABLE | *CABLE SIZE | **CABLE TYPE | ANCHOR CONN. TYPE |
|---|---|---|---|---|---|---|---|
| 1-1/2" | 1/2" | 25" | CLEVIS | 3/8" | 1/8" | 7X19 GALV | I |
| 2" | 1/2" | 25" | CLEVIS | 3/8" | 1/8" | 7X19 GALV | I |
| 2-1/2" | 5/8" | 31" | CLEVIS | 3/8" | 1/8" | 7X19 GALV | I |
| 3" | 5/8" | 31" | CLEVIS | 3/8" | 3/16" | 7X19 GALV | II |
| 3-1/2" | 5/8" | 31" | CLEVIS | 3/8" | 3/16" | 7X19 GALV | II |
| 4" | 3/4" | 37" | CLEVIS | 3/8" | 3/16" | 7X19 GALV | II |
| 5" | 3/4" | 37" | CLEVIS | 1/2" | 1/4" | 7X19 GALV | III |
| 6" | 3/4" | 37" | CLEVIS | 5/8" | 1/4" | 7X19 GALV | IV |
| 8" | 7/8" | 43" | CLEVIS | 5/8" | 5/16" | 7X19 GALV | V |
| 10" | 7/8" | 43" | CLEVIS | 3/4" | 3/8" | 7X19 GALV | VI |

FOR ANCHOR CONNECTIONS SEE SCHEDULE.

SEE PIPE BRACING DETAILS.

*TWO CABLES REQUIRED AT EACH RESTRAINT POINT. EACH CABLE TO BE INSTALLED 45° TO HORIZONTAL AND 45° TO LONGITUDINAL DIRECTION OF PIPE.

**CABLE SYSTEMS TO BE EQUAL TO AMBER BOOTH C/W CLAMPS THIMBLES AND GROMMETS.

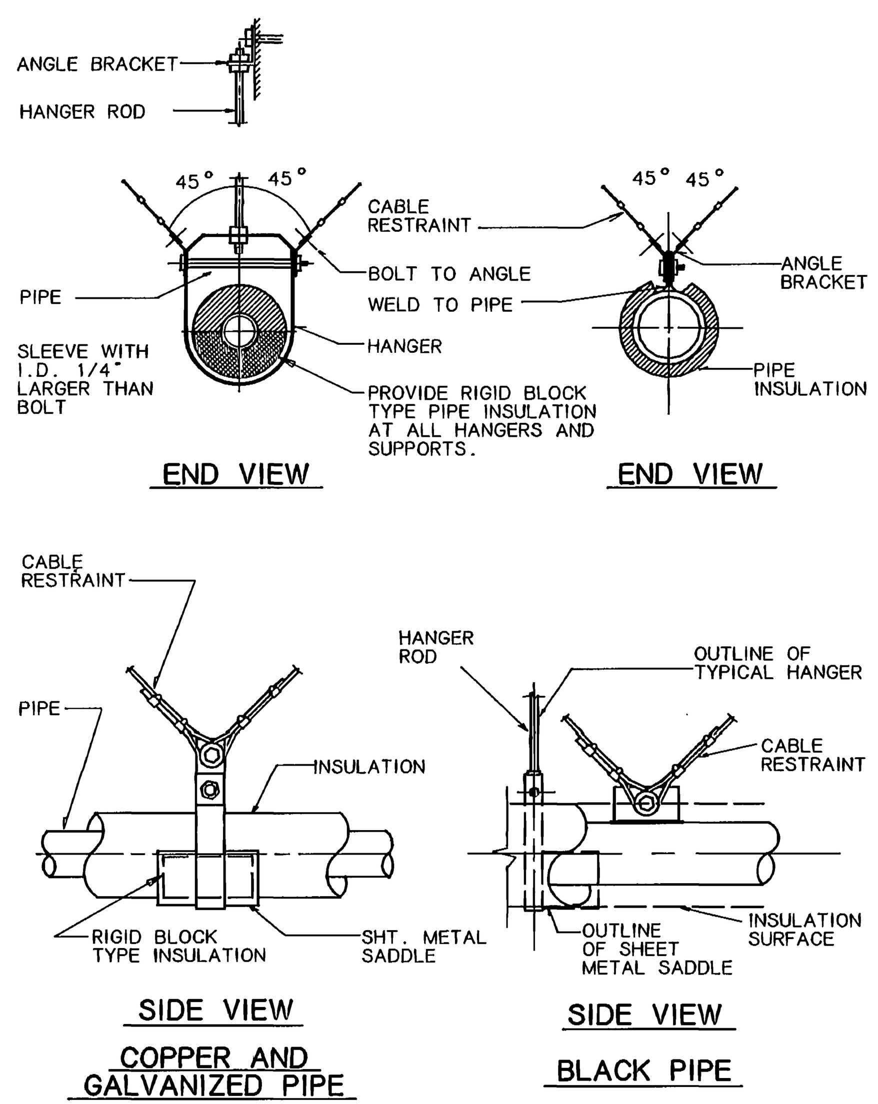


PIPING RESTRAINT DETAIL (6 / M-11)
NO SCALE

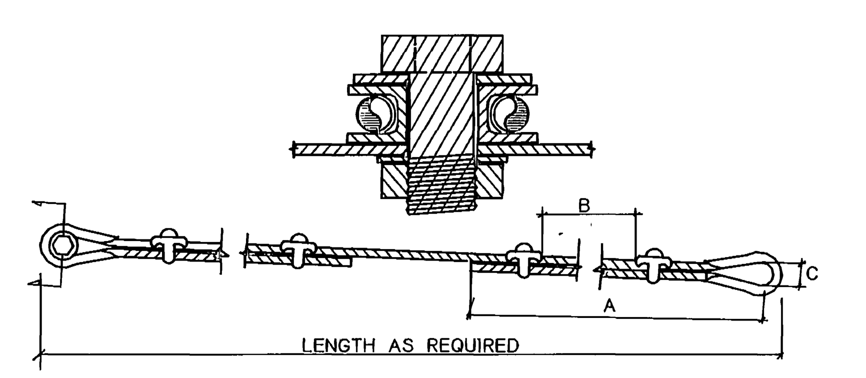


NOTES:

1. CABLES, THIMBLES, CLIPS, GROMMETS & FLAT WASHERS ARE TO BE FURNISHED BY RESTRAINT MANUFACTURER. ALL OTHER HARDWARE TO BE PROVIDED BY CONTRACTOR.
2. ENTIRE SYSTEM TO BE EQUAL TO AMBER BOOTH.
3. CABLE CLIPS MUST BE ORIENTED AS SHOWN WITH SHORT END OF CABLE ON THE CURVED PART OF THE CLIP.

### CABLE SCHEDULE

| CABLE DIA. | CABLE DESIGN | A | B | C | BOLT SIZE | ALLOWABLE LOAD (lbf) | BREAKING STRENGTH (lbf) |
|---|---|---|---|---|---|---|---|
| 1/8" | 7X19 GALV. | 5-1/4" | 1-5/8" | 5/8" | 3/8" | 660 | 2000 |
| 3/16" | 7X19 GALV. | 5-3/4" | 1-7/8" | 5/8" | 3/8" | 1400 | 4200 |
| 1/4" | 7X19 GALV. | 6-3/4" | 2-3/8" | 11/16" | 3/8" | 2330 | 7000 |
| 5/16" | 7X19 GALV. | 7-3/8" | 2-5/8" | 13/16" | 5/8" | 3260 | 9800 |
| 3/8" | 7X19 GALV. | 8-7/8" | 3-1/4" | 1" | 5/8" | 4800 | 14400 |
| 7/16" | 6X19 IWRC | 17" | 3-5/8" | 1" | 5/8" | 5920 | 17800 |
| 1/2" | 6X19 IWRC | 18" | 3-7/8" | 1-1/8" | 3/4" | 7660 | 23000 |

CABLE RESTRAINT DETAIL (3 / M-11)
NO SCALE

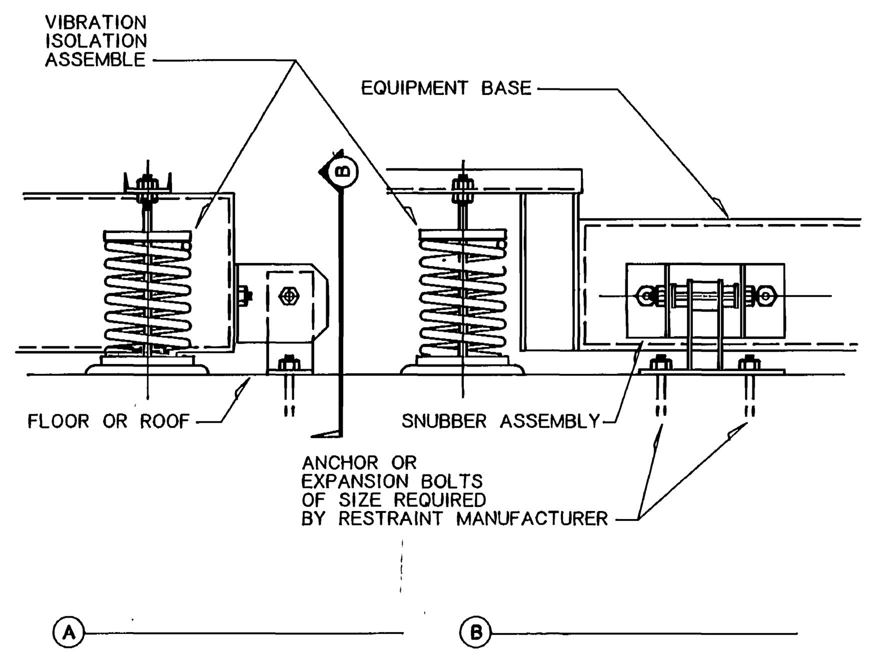


NOTES:

1. SNUBBERS SHALL BE DESIGNED TO WITHSTAND 1.0 g AND VERTICAL LOADS.
2. SNUBBERS SHALL BE SERIES Z-1011 AS MANUFACTURED BY MASON INDUSTRIES, INC. OR APPROVED EQUAL.
3. INSTALL 4 ALL-DIRECTIONAL SNUBBERS THAT ARE DOUBLE ACTING AND LOCATED AS CLOSE TO THE VIBRATION ISOLATORS AS POSSIBLE.
4. SNUBBERS SHALL CONSIST OF INTERLOCKING STEEL MEMBERS RESTRAINED BY 3/4" MIN. REMOVABLE NEOPRENE COMPOUNDED TO BRIDGE BEARING SPECIFICATIONS.
5. SNUBBERS SHALL BE MANUFACTURED WITH AN AIR GAP BETWEEN STEEL AND NEOPRENE OF NOT LESS THAN 1/8" NOR MORE THAN 1/4".

SNUBBER RESTRAINT DETAIL (1 / M-11)
NO SCALE


0000TVM11
Weber State College, Physical Education Facility - RW 84-058
Seismic Details - 28748


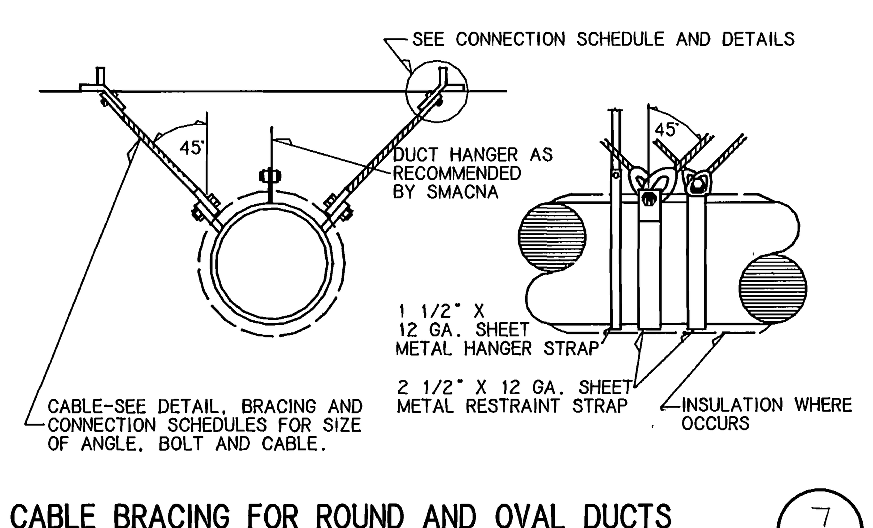


CABLE BRACING FOR ROUND AND OVAL DUCTS (7 / M-11)
NO SCALE


... DOCUMENTS JUL 3 1990


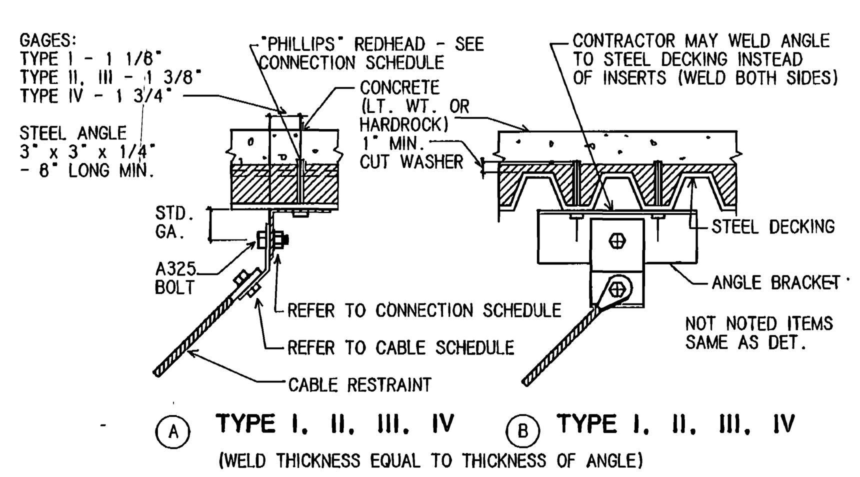


RESTRAINT CONNECTIONS TO STEEL (4 / M-11)
NO SCALE

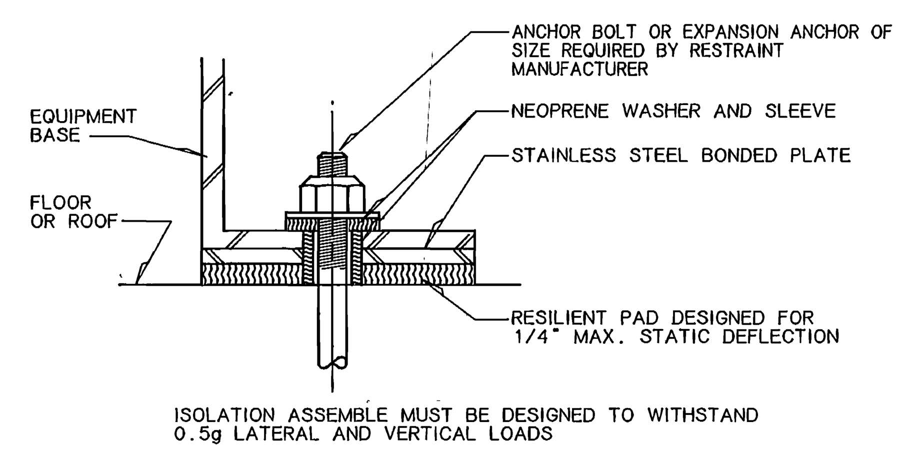


RESILIENT PAD ISOLATOR RESTRAINT DETAIL (2 / M-11)
NO SCALE


REGISTERED PROFESSIONAL ENGINEER, STATE OF UTAH — No. 7122 KIM P. HARRIS
VAN BOERUM & FRANK ASSOCIATES INC.
CIVIL & MECHANICAL CONSULTING ENGINEERS
SALT LAKE CITY, UTAH
jra JONES/ RICHARDS & ASSOCIATES
ARCHITECTURE (801)394-3033
PLANNING 533 26TH STREET
CONSTRUCTION MANAGEMENT OGDEN, UTAH


REVISED:
PROJECT NUMBER: 8403
DATE: 6-21-88
DRAWN BY:
PROJECT: PHYSICAL EDUCATION FACILITY
WEBER STATE COLLEGE
SHEET TITLE: SEISMIC DETAILS
SHEET NO. M-11

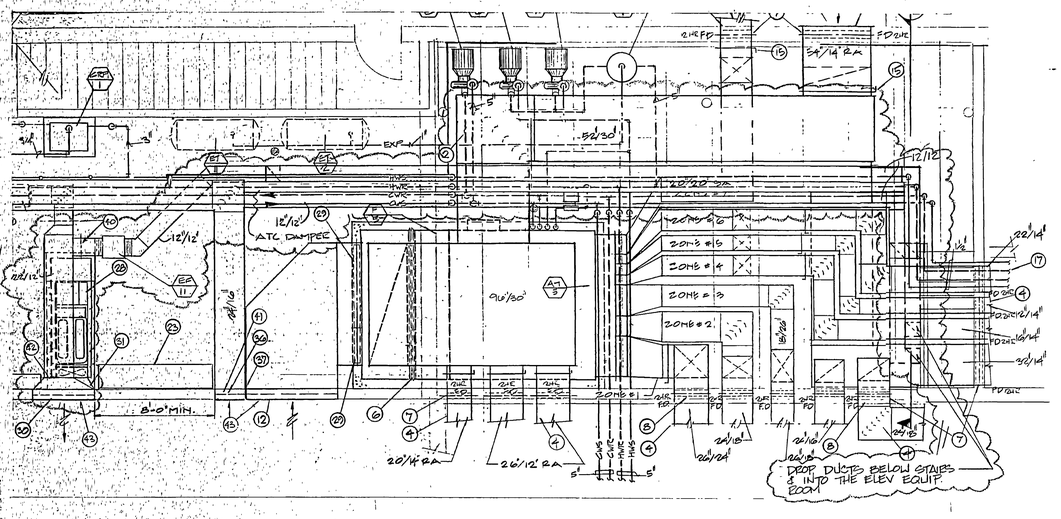


**REVISED MECHANICAL ROOM PLAN SHEET M-6**

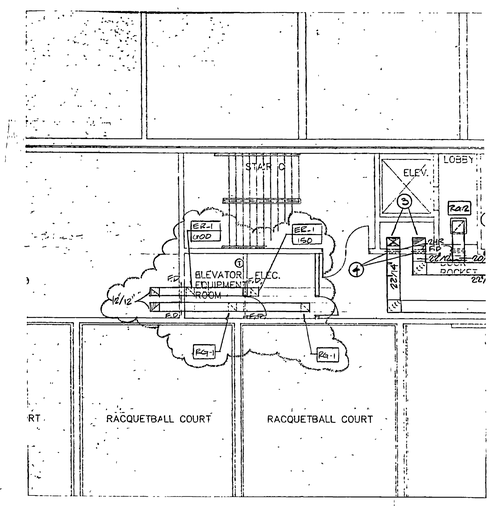


**REVISED MAIN LEVEL PLAN**
**LINK-MECHANICAL SHEET M-3**

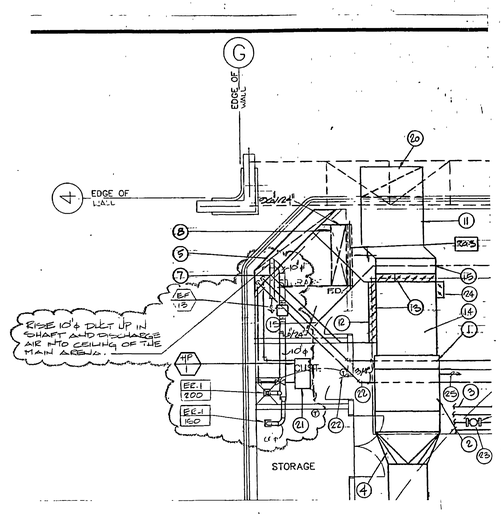


**REVISED MAIN LEVEL PLAN**
**NORTH-MECHANICAL SHEET M-1**

## EXHAUST FAN SCHEDULE

| FAN TAG | MFR. CATALOG NO. | SERVICE | FAN CAPACITY | | | | | | MOTOR | | | |
|---|---|---|---|---|---|---|---|---|---|---|---|---|
| | | | CFM | OV FPM | RPM | SP "WC | BHP | WHEEL NO-SIZE | HP | RPM | VOLT | Ø |
| EF-5 | COOK 120 SQI-B | MENS T.R. | 770 | -- | 1250 | 0.50 | .12 | 12" | 1/4 | 1750 | 120 | 1 |
| EF-11 | COOK 120 SQI-B | ELEV. EQUIP. | 750 | -- | 1350 | 0.75 | .20 | 12" | 1/3 | 1750 | 120 | 1 |
| EF-12 | PENN Z10 | STORAGE 203 | 375 | -- | -- | 0.25 | -- | -- | 239 WATTS | 1050 | 120 | 1 |
| EF-13 | COOK 90 SQI-B | STOR 102 & CUST 103 | 350 | -- | 1165 | 0.375 | .05 | 9" | 1/4 | 1750 | 120 | 1 |

3C-07

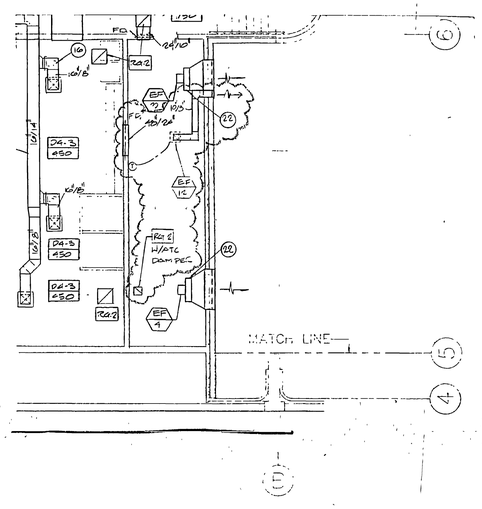


**REVISED MID LEVEL PLAN**
**MECHANICAL SHEET M-4**

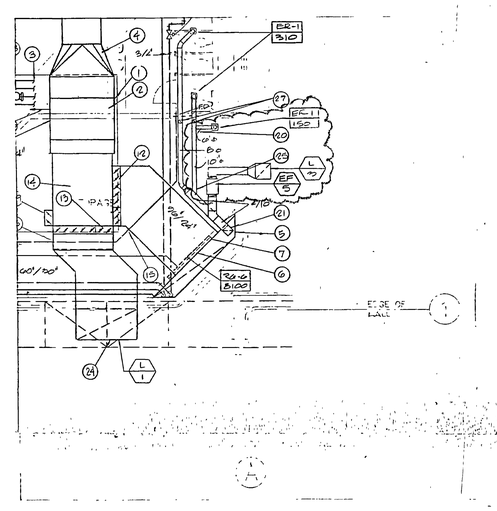


**REVISED MAIN LEVEL PLAN**
**SOUTH-MECHANICAL SHEET M-2**

0000TVMX1
Weber State College, Physical Education Facility - R/W 84-058
Mechanical Modifications - 28774

RECORD DOCUMENTS JUN 21 1989
THESE DOCUMENTS HAVE BEEN REVISED TO RECORD INFORMATION SUBMITTED BY THE CONTRACTOR. WHILE THEY ARE ASSUMED TO BE RELIABLE THE ARCHITECT DOES NOT GUARANTEE THEIR ACCURACY.

jra JONES/ RICHARDS & ASSOCIATES
ARCHITECTURE PLANNING CONSTRUCTION MANAGEMENT
(801)394-3033 533 26TH STREET OGDEN, UTAH

REVISED: AS BUILTS 6-90
PROJECT NUMBER: 8714
DATE: 12/15/88
DRAWN BY:

PROJECT: PHYSICAL EDUCATION FACILITY
WEBER STATE COLLEGE
SHEET TITLE: MECHANICAL MODIFICATIONS

SHEET NO. X-1 M

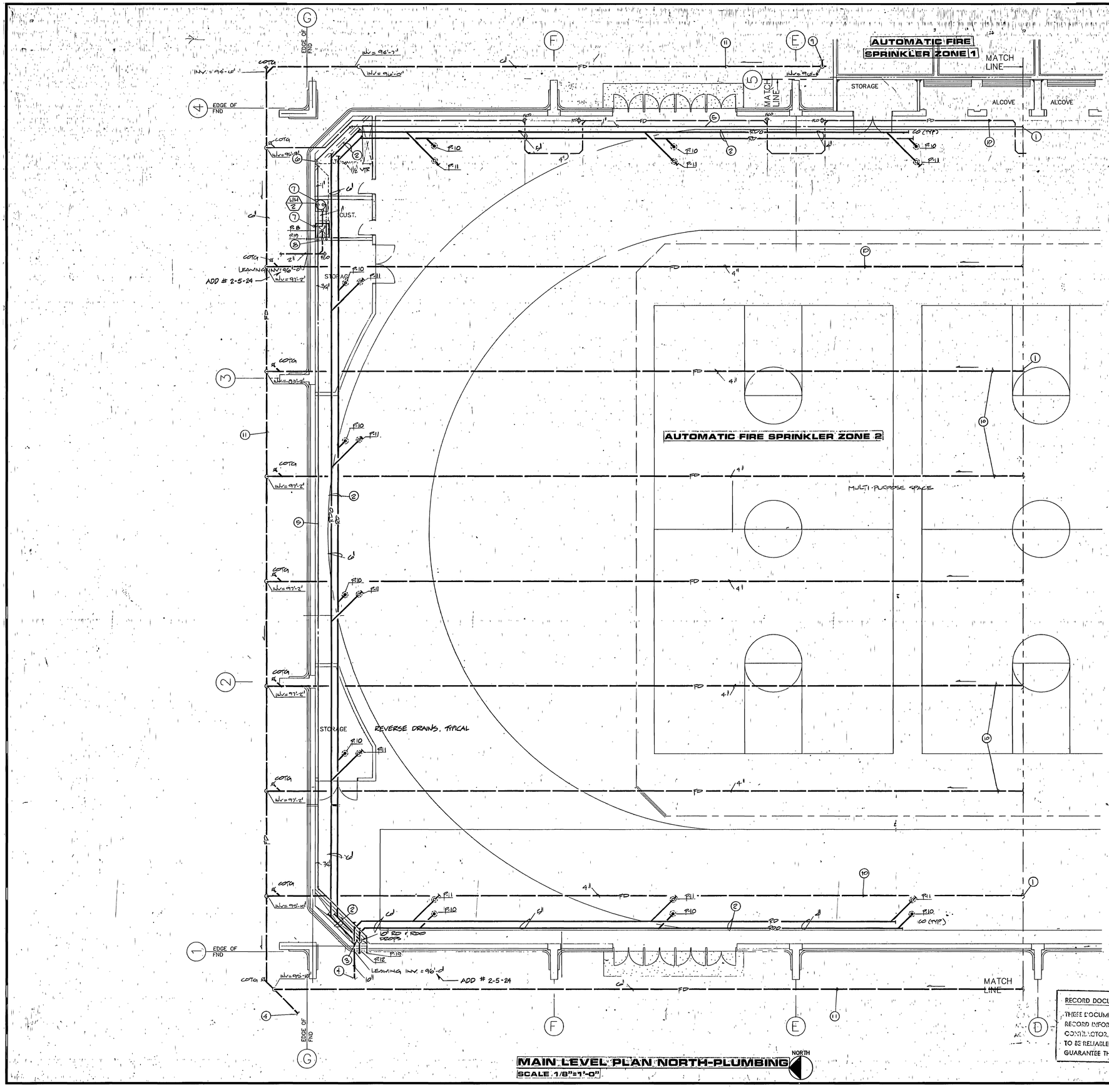


MAIN LEVEL PLAN NORTH-PLUMBING

SCALE 1/8"=1'-0"

NORTH

## KEYED NOTES

1. FOR CONTINUATION OF PIPING, REFER TO SHEET P-2.
2. RUN ROOF DRAIN PIPING AS HIGH AS POSSIBLE IN STRUCTURE. SUPPORT ROOF DRAIN PIPING TO STRUCTURE. ROOF DRAIN SLOPE TO BE 1/8" PER FOOT. COORDINATE WITH OTHER TRADES TO AVOID CONFLICT.
3. DROP ROOF DRAIN PIPING IN CORNER OF CHASE. CONTINUE ROOF DRAIN PIPING BELOW GRADE, ROOF DRAIN OVERFLOW TO 18" ABOVE FINISHED GRADE.
4. FOR CONTINUATION OF ROOF DRAIN PIPING, REFER TO SITE UTILITIES PLAN. SP-1
5. RUN DOMESTIC WATER PIPE IN STRUCTURE.
6. DROP DOMESTIC WATER PIPING IN CORNER OF CHASE. RISE VENT LINE UP TO ROOF, CONTINUE AS SHOWN.
7. WATER HEATER TO BE MOUNTED ON ROOF OF CUSTODIAL ROOM. SECURE TO ROOF STRUCTURE AND EXTERIOR WALL. PROVIDE DRAIN PAN UNDER WATER HEATER WITH 1" COPPER DRAIN TUBE. RUN DRAIN TUBE IN CEILING SPACE AND DROP IN WALL TO SPILL INTO SERVICE SINK.
8. DROP WATER PIPING IN WALL TO SERVE SERVICE SINK.
9. FOR CONTINUATION, SEE SHEET P-3.
10. SUB FLOOR DRAIN, TYPICAL. SEE DETAIL 1/7/SP-4.
11. FOOTING DRAIN, TYPICAL. PLACE NEXT TO SPREAD FOOTINGS. SEE DETAIL 15/SP-4.

0000TVP1
Weber State College, Physical Education Facility - RW 94-058
Plumbing Plan Main Level North - 26731

RECORD DOCUMENTS JUL 3 1990
THESE DOCUMENTS HAVE BEEN REVISED TO RECORD INFORMATION SUBMITTED BY THE CONTRACTOR. WHILE THEY ARE ASSUMED TO BE RELIABLE THE ARCHITECT DOES NOT GUARANTEE THEIR ACCURACY.

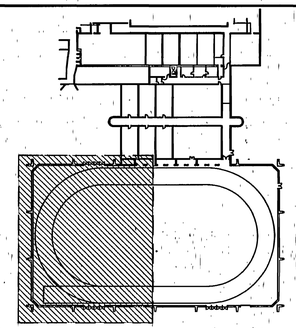

LOCATION PLAN
NO SCALE

REGISTERED PROFESSIONAL ENGINEER No. 7122 KIM P. HARRIS STATE OF UTAH

VAN BOERUM & FRANK ASSOCIATES INC.
CIVIL & MECHANICAL CONSULTING ENGINEERS
5471 S. 1900 E. SUITE 1 SALT LAKE CITY, UTAH

jrq JONES/ RICHARDS & ASSOCIATES
ARCHITECTURE (801)394-3033
PLANNING CONSTRUCTION MANAGEMENT
533 26TH STREET OGDEN, UTAH

REVISED: AS BUILT 7-90

PROJECT NUMBER: 9403
DATE:
DRAWN BY:

PROJECT: PHYSICAL EDUCATION FACILITY
WEBER STATE COLLEGE

SHEET TITLE: PLUMBING PLAN - MAIN LEVEL - NORTH

SHEET NO. P-1

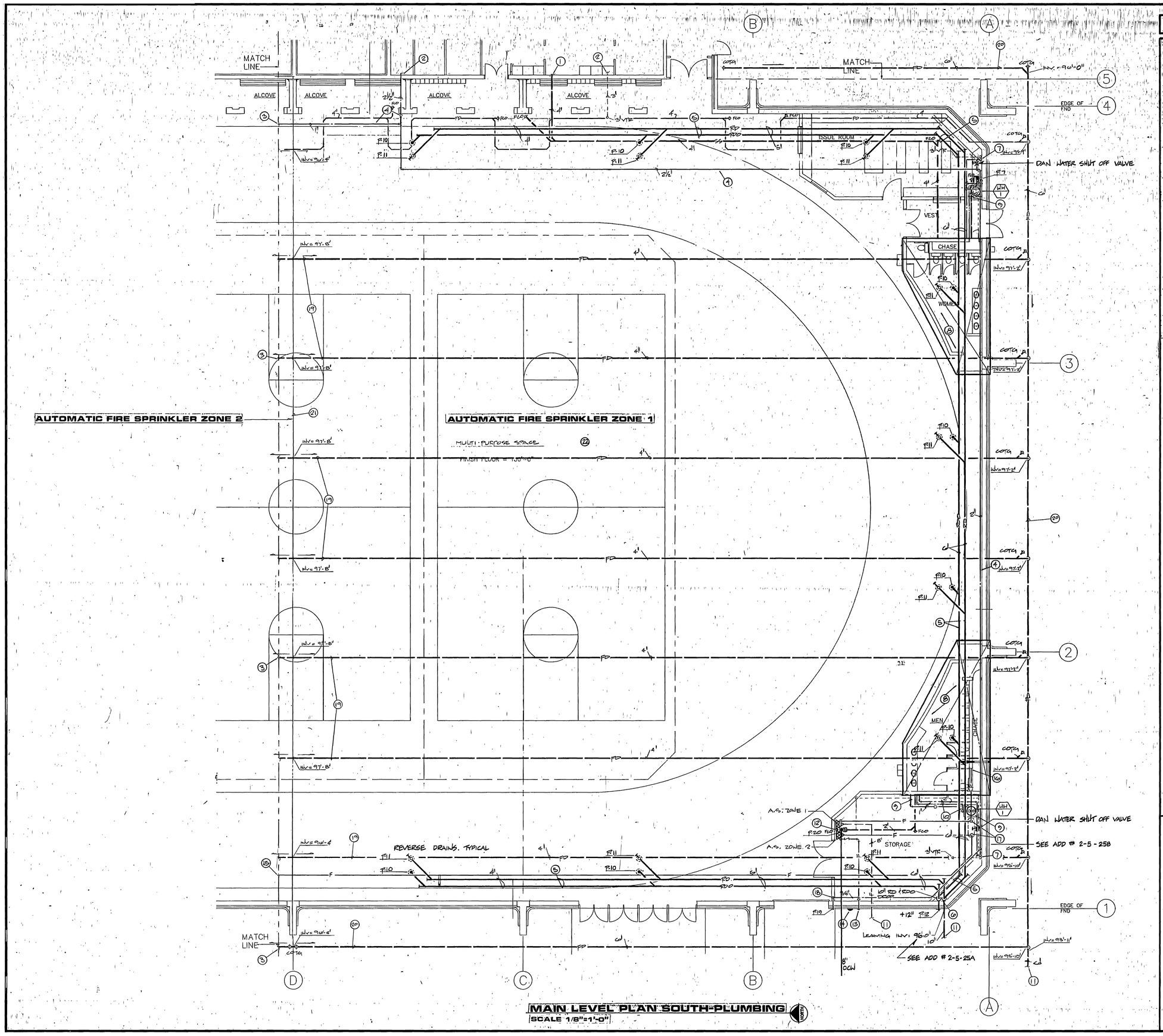


MAIN LEVEL PLAN SOUTH-PLUMBING
SCALE 1/8"=1'-0"

## KEYED NOTES

1. FOR CONTINUATION OF PIPING, REFER TO SHEET P-3.
2. FOR CONTINUATION OF PIPING, REFER TO SHEET P-4.
3. FOR CONTINUATION OF PIPING, REFER TO SHEET P-1.
4. RISE DOMESTIC WATER LINE UP INTO STRUCTURE OF MAIN ARENA. RUN PIPING IN STRUCTURE.
5. RUN ROOF DRAIN AS HIGH AS POSSIBLE IN STRUCTURE. ROOF DRAIN SLOPE TO BE 1/8" PER FOOT. COORDINATE WITH OTHER TRADES TO AVOID CONFLICT.
6. DROP ROOF DRAIN PIPING IN CORNER OF CHASE. CONTINUE ROOF DRAIN LINE TO BELOW GRADE. ROOF DRAIN OVERFLOW TO 18" ABOVE FINISHED GRADE.
7. DROP DOMESTIC COLD WATER LINE IN CORNER OF CHASE. RUN WATER LINE OVER TO TOILET ROOM IN CEILING SPACE. DROP IN WALL OF TOILET ROOM. RISE VENT LINE UP TO ROOF, CONTINUE AS SHOWN.
8. FOR PIPING IN THIS AREA, REFER TO ENLARGED PLANS ON SHEET P-6.
9. HOT WATER HEATER TO BE MOUNTED ON ROOF OF ISSUE AND STORAGE ROOM. SECURE TO ROOF STRUCTURE AND EXTERIOR WALL. PROVIDE DRAIN PAN UNDER WATER HEATER WITH 1" COPPER DRAIN TUBE. DROP DRAIN TUBE IN WALL, RUN UNDER COUNTER AND TIE INTO INLET SIDE OF P-TRAP OF SINK P-7 IN ISSUE ROOM AND LAVATORY P-5 OF MENS TOILET ROOM.
10. DROP DOMESTIC HOT WATER LINE AND DRAIN LINE THROUGH ROOF OF STORAGE ROOM. RUN IN CEILING SPACE. DROP IN WALL OF TOILET ROOM.
11. FOR CONTINUATION OF PIPING, REFER TO SITE UTILITIES PLAN.
12. FIRE SPRINKLER RISERS.
13. FIRE DEPARTMENT CONNECTION. MOUNT 24" ABOVE FINISHED GRADE.
14. WATER MOTOR GONG.
15. FIRE SPRINKLER PIPING SERVING FIRE SPRINKLER ZONE 2. SIZE AS PER HYDRAULIC CALCULATIONS.
16. FIRE SPRINKLER PIPING SERVING FIRE SPRINKLER ZONE 1. SIZE AS PER HYDRAULIC CALCULATIONS.
17. RUN FIRE SPRINKLER PIPE IN CEILING SPACE OF STORAGE ROOM. RISE FIRE SPRINKLER PIPING TO STRUCTURE. HOLD TIGHT TO WALL, RUN PIPING IN STRUCTURE.
18. DROP 3/4" WATER LINE FROM STRUCTURE TO SERVE HOSEE BIBB P-19.
19. UNDER SLAB DRAIN. SEE DETAIL 17/SP-4, TYPICAL.
20. FOOTING DRAIN SEE DETAIL 15/SP-4, TYPICAL. PLACE NEXT TO FOOTING AT SPREAD FOOTINGS.
21. LIMIT OF AUTOMATIC FIRE SPRINKLER ZONE, TYPICAL.
22. GYM FIRE SPRINKLER ORDINARY HAZARD

0000TVP2
Weber State College, Physical Education Facility - RW 84-056
Plumbing Plan Main Level South - 26732

RECORD DOCUMENTS
JUL 3 1990
THESE DOCUMENTS HAVE BEEN REVISED TO [illegible] TO BE [illegible] GUARANTEE THEIR ACCURACY.

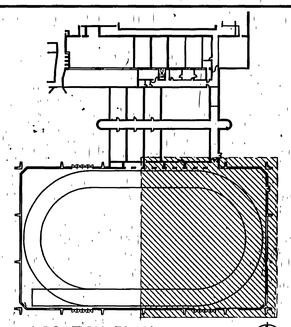

LOCATION PLAN
NO SCALE

REGISTERED PROFESSIONAL ENGINEER No. 7122 KIM P. HARRIS 9-10-90 STATE OF UTAH

VAN BOERUM & FRANK ASSOCIATES INC.
CIVIL & MECHANICAL CONSULTING ENGINEERS
SALT LAKE CITY, UTAH

jra JONES/ RICHARDS & ASSOCIATES
ARCHITECTURE (801)394-3033
PLANNING 533 26TH STREET
CONSTRUCTION MANAGEMENT OGDEN, UTAH

REVISED: AS BUILT 7-90
DATE:
DRAWN BY:
PROJECT NUMBER: 8403

PROJECT: PHYSICAL EDUCATION FACILITY
WEBER STATE COLLEGE
SHEET TITLE: PLUMBING PLAN - MAIN LEVEL - SOUTH

SHEET NO. P-2

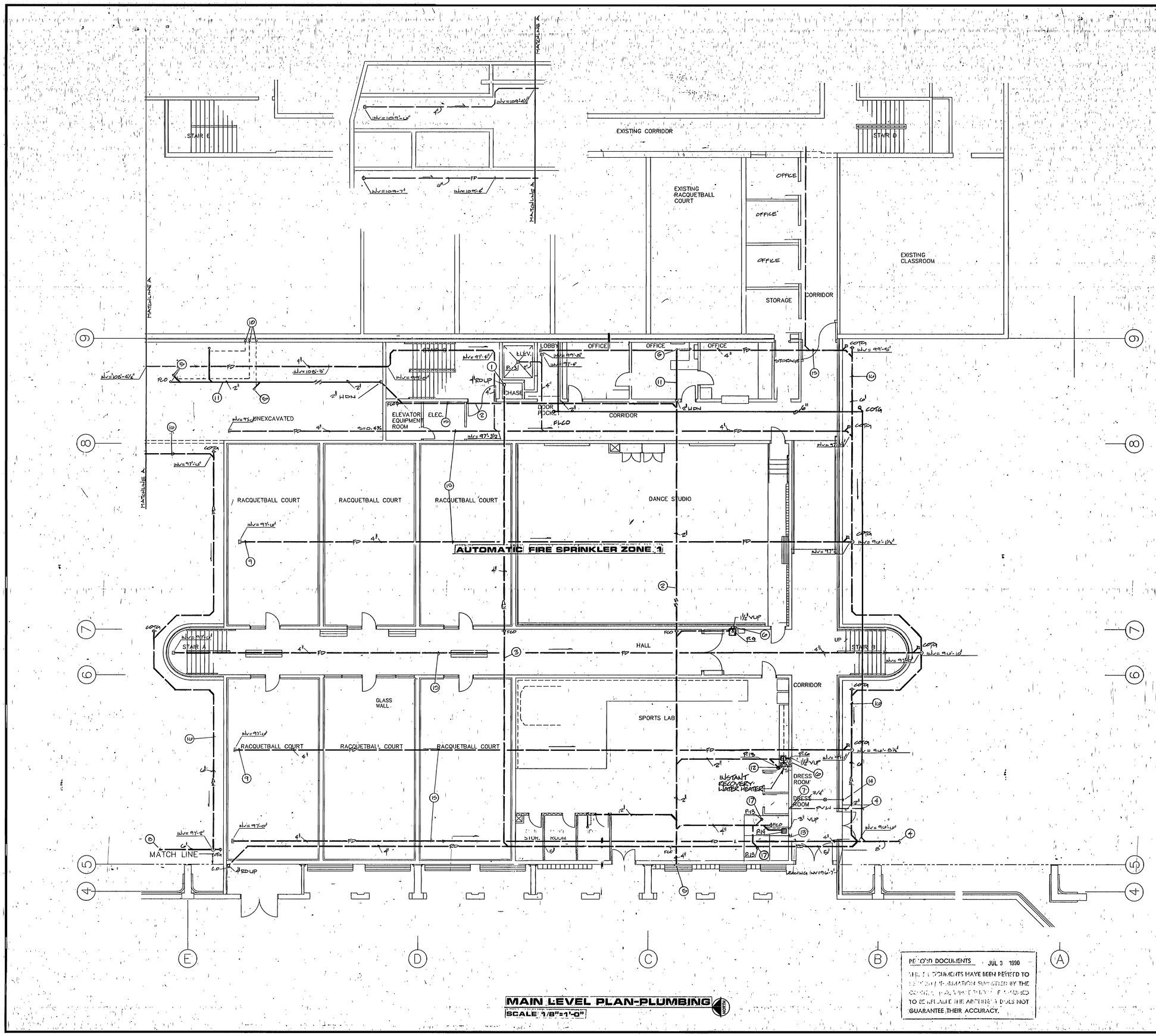


## MAIN LEVEL PLAN-PLUMBING

SCALE 1/8"=1'-0"

## KEYED NOTES

1. FOR CONTINUATION OF ROOF DRAIN PIPING, REFER TO SHEET P-4 AND P-5.
2. RUN WASTE PIPING BELOW GRADE.
3. RUN ROOF DRAIN PIPING BELOW GRADE.
4. FOR CONTINUATION OF PIPING, REFER TO SITE UTILITIES PLAN.
5. FOR CONTINUATION OF WASTE PIPING, REFER TO SHEET P-2.
6. WATER PIPING FROM FLOOR ABOVE TO SERVE PLUMBING FIXTURE AND POINT OF USE WATER HEATER. FOR CONTINUATION OF PIPING REFER TO SHEET P-4.
7. RISE PINEVIEW WATER TO LEVEL ABOVE. FOR CONTINUATION, REFER TO SHEET P-4. PINEVIEW WATER TO BE USED FOR IRRIGATION PURPOSES ONLY.
8. FOR CONTINUATION, SEE SHEET P-1.
9. CUP END OF FOOTING DRAIN LINE, TYPICAL.
10. VENT PIPING TO RISE UP WALL TO FLOOR ABOVE. FOR CONTINUATION OF PIPING REFER TO SHEET P-4.
11. WASTE PIPING SERVING PLUMBING FIXTURES FROM FLOOR ABOVE.
12. POINT OF USE WATER HEATER TO MOUNT INSIDE OF CABINET IN METAL DRAIN PAN. RUN DRAIN LINE FROM DRAIN PAN TO FLOOR DRAIN OUTSIDE OF CABINET.
13. 1-1/2" COLD WATER LINE FROM LEVEL ABOVE TO SERVE WEIGHT TANK. CONNECT TO WEIGHT TANK HEATER AS PER MANUFACTURER'S INSTRUCTIONS. FOR CONTINUATION OF LINE REFER TO SHEET P-4. SEE ADD # 2-5-26A
14. CONNECT AND EXTEND LINE TO EXTERIOR OF BUILDING AND TURN DOWN WITH GALVANIZED PIPE. VALVE TO BE NORMALLY CLOSED EXCEPT FOR WINTER SHUTDOWN.
15. UNDER SLAB DRAIN TYPICAL SEE DETAIL 17/SP-4.
16. FOOTING DRAIN, TYPICAL. PLACE NEXT TO FOOTING AT SPREAD FOOTINGS. SEE DETAIL 15/SP-4.
17. PROVIDE 1½" VENT LINE FROM FLOOR DRAINS. EXTEND THE VENT LINE BELOW THE FLOOR TO THE SOUTH WALL AND RISE TO THE LEVEL ABOVE AND CONNECT TO THE 3" VENT LINE IN THE CEILING OF THE SPORTS LABS. SEE ADD # 2-5-26B, ADD # 2-6-27B. SEE SHT. P-4 FOR 3" VENT.

RECORD DOCUMENTS JUL 3 1990

THESE DOCUMENTS HAVE BEEN REVISED TO [illegible] INFORMATION SUPPLIED BY THE [illegible] TO BE ACCURATE. THE ARCHITECT DOES NOT GUARANTEE THEIR ACCURACY.

00000TVP3
Weber State College, Physical Education Facility - RW 84-058
Plumbing Plan Main Level Link - 26733

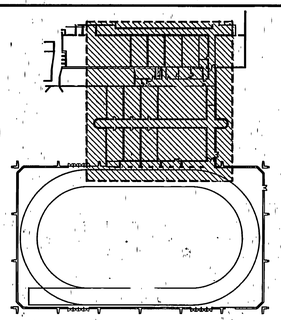

LOCATION PLAN
NO SCALE

VAN BOERUM & FRANK ASSOCIATES INC.
CIVIL & MECHANICAL CONSULTING ENGINEERS
SALT LAKE CITY, UTAH

jra JONES/ RICHARDS & ASSOCIATES
ARCHITECTURE (801)394-3033
PLANNING 533 26TH STREET
CONSTRUCTION MANAGEMENT OGDEN, UTAH

REVISED:
PROJECT NUMBER: 9403
DATE:
DRAWN BY:

PROJECT: PHYSICAL EDUCATION FACILITY
WEBER STATE COLLEGE

SHEET TITLE: PLUMBING PLAN - MAIN LEVEL

SHEET NO. P-3

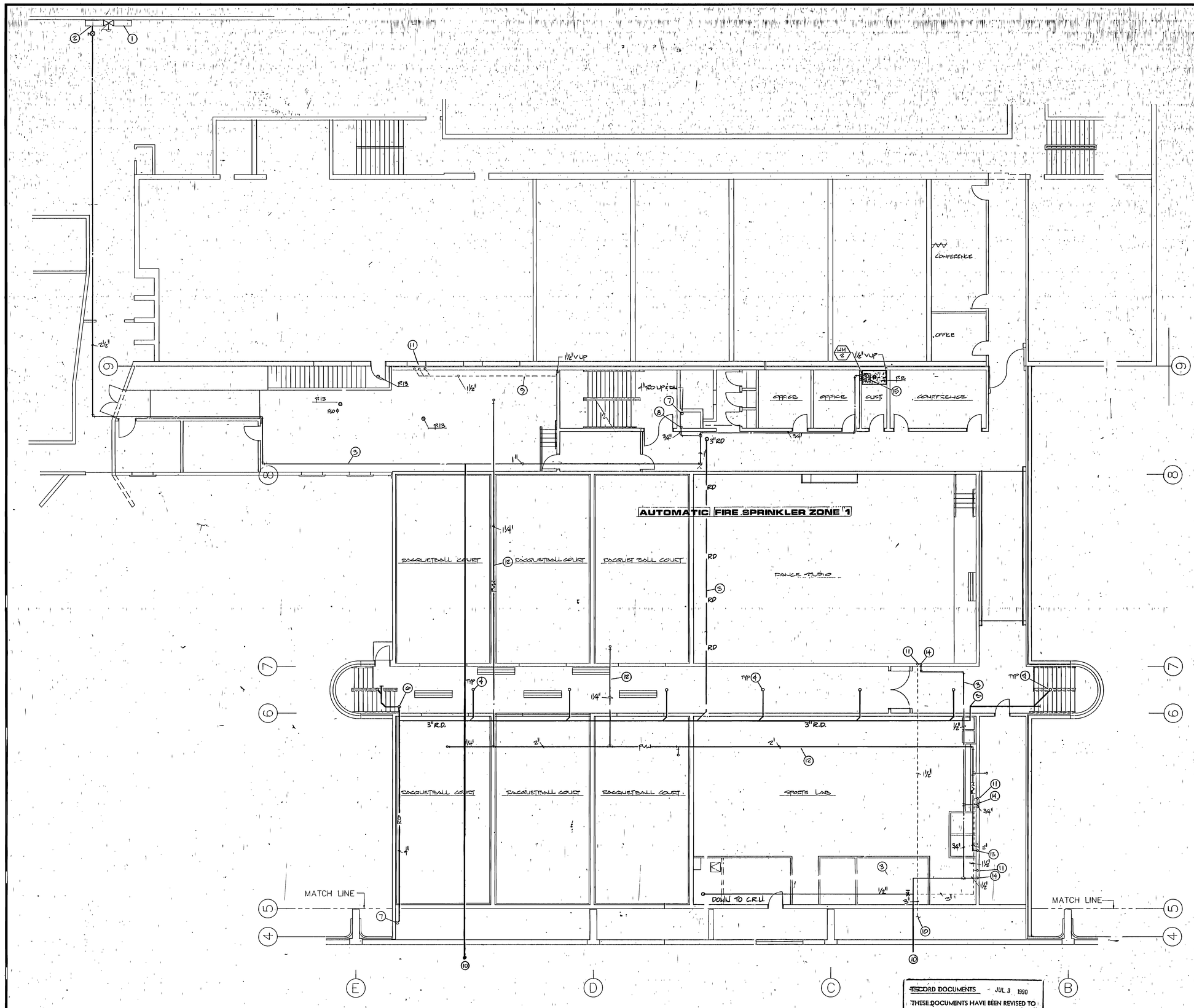


## MID LEVEL PLAN-PLUMBING

SCALE 1/8"=1'0"

NORTH

RECORD DOCUMENTS JUL 3 1990

THESE DOCUMENTS HAVE BEEN REVISED TO RECORD INFORMATION SUBMITTED BY THE CONTRACTOR, WHILE THEY ARE ASSUMED TO BE RELIABLE THE ARCHITECT DOES NOT GUARANTEE THEIR ACCURACY.

## KEYED NOTES

1. EXISTING PRV MANIFOLD IN EXISTING BUILDING.
2. CONNECT DOMESTIC COLD WATER LINE TO EXISTING PRV MANIFOLD. PROVIDE SHUT-OFF VALVE AT CONNECTION.
3. RUN DOMESTIC COLD WATER LINE IN STRUCTURE. COORDINATE WITH OTHER TRADES TO AVOID CONFLICT.
4. ROOF DRAIN DROPS FROM LEVEL ABOVE. FOR CONTINUATION, REFER TO SHEET P-5.
5. RUN ROOF DRAIN PIPE IN STRUCTURE. SLOPE TO BE 1/8" PER FOOT. COORDINATE PIPING WITH OTHER TRADE TO AVOID CONFLICT.
6. DROP ROOF DRAIN PIPE TO BELOW STRUCTURAL BOND BEAM. CONTINUE AS SHOWN.
7. DROP ROOF DRAIN TO LEVEL BELOW. FOR CONTINUATION OF PIPING, REFER TO SHEET P-3.
8. RISE DOMESTIC COLD WATER TO RISE TO LEVEL ABOVE. FOR CONTINUATION OF PIPING, REFER TO P-4.
9. VENT LINE TO BE RUN AS HIGH AS POSSIBLE IN STRUCTURE. RISE UP WALL, CONTINUE AS SHOWN ON SHEET P-5.
10. FOR CONTINUATION OF PIPING, REFER TO SHEET P-2.
11. VENT LINE RISING IN WALL FROM LEVEL BELOW. CONTINUE AS SHOWN.
12. PINEVIEW WATER LINE TO RUN IN STRUCTURE. RISE UP FOR SPRINKLERS. REFER TO SHEET P-5 FOR CONTINUATION. PINEVIEW WATER TO BE USED FOR IRRIGATION PURPOSES ONLY.
13. PINEVIEW WATER LINE TO RISE FROM BELOW. REFER TO SHEET P-3 FOR CONTINUATION. PINEVIEW WATER TO BE USED FOR IRRIGATION PURPOSES ONLY.
14. DROP WATER LINE IN WALL TO SERVE FIXTURES ON LEVEL BELOW. FOR CONTINUATION OF LINE REFER TO SHEET P-3.
15. POINT OF USE WATER HEATER TO BE SUPPORTED IN METAL FRAME AND SECURED TO WALL 6'-0" A.F.F. REFER TO DETAIL SHEET P-6.

0000TVP4
Weber State College, Physical Education Facility - RW 84-058
Plumbing Plan Mid Level Link - 26734

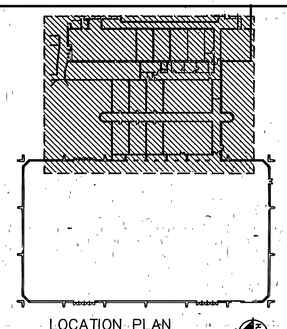

LOCATION PLAN
NO SCALE

NORTH


VAN BOERUM & FRANK ASSOCIATES INC.
CIVIL & MECHANICAL ENGINEERS
BUILDING SYSTEMS CONSULTANTS
SALT LAKE CITY, UTAH

jra JONES/ RICHARDS & ASSOCIATES
PLANNING
533 28TH STREET
ARCHITECTURE
(801)394-3033
CONSTRUCTION MANAGEMENT
OGDEN, UTAH


REVISED:

PROJECT NUMBER: 8403

DATE:

DRAWN BY:

PROJECT: PHYSICAL EDUCATION FACILITY
WEBER STATE COLLEGE

SHEET TITLE: PLUMBING PLAN - MID LEVEL

SHEET NO. P-4

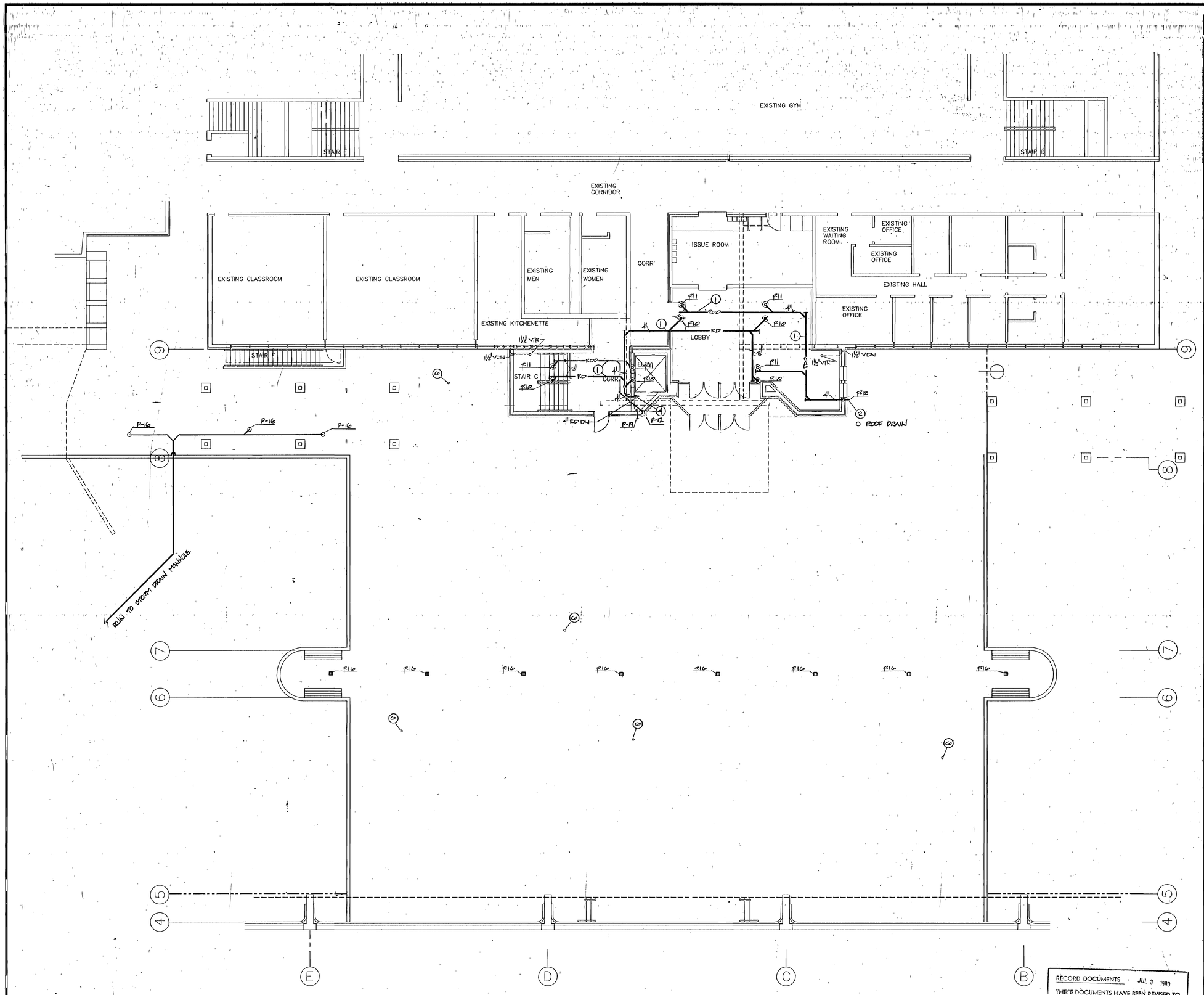


## KEYED NOTES

1. ROOF DRAIN AND ROOF DRAIN OVERFLOW PIPING TO BE RUN AT 1/8" PER FOOT SLOPE. RUN PIPING TIGHT INTO STRUCTURE. COORDINATE WITH MECHANICAL DUCTWORK TO AVOID ANY CONFLICT.
2. DROP ROOF DRAIN OVERFLOW IN WALL TO 18" ABOVE FINISHED CONCRETE SLAB.
3. VENT PIPING FROM FLOOR BELOW. FOR CONTINUATION REFER TO SHEET P-4.
4. ROOF DRAIN LINE TO DROP IN CHASE AND COMESTIC COLD WATER LINE TO RISE IN CHASE. FOR CONTINUATION OF THESE LINES, REFER TO SHEET P-4.
5. WASTE DROP FROM FIXTURE ON LEVEL ABOVE.
6. STUB UP AND CAP 1-1/4" SECONDARY WATER LINE FOR SPRINKLERS. REFER TO SHEET L-2 FOR EXACT LOCATION OF SPRINKLERS.

0000TVP5
Weber State College, Physical Education Facility - RW 84-058
Plumbing Plan Plaza Level Link - 26735

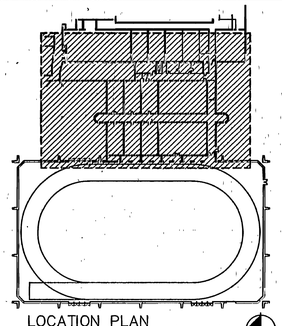

LOCATION PLAN
NO SCALE

NORTH

## PLAZA LEVEL PLAN-PLUMBING

SCALE 1/8"=1'-0"

RECORD DOCUMENTS JUL 3 1990
THESE DOCUMENTS HAVE BEEN REVISED TO RECORD INFORMATION SUBMITTED BY THE CONTRACTOR. WHILE THEY ARE ASSUMED TO BE RELIABLE THE ARCHITECT DOES NOT GUARANTEE THEIR ACCURACY.

REGISTERED PROFESSIONAL ENGINEER No. 7182 KENT P. HARRIS STATE OF UTAH

VAN BOERUM & FRANK ASSOCIATES INC.
CIVIL & MECHANICAL CONSULTING ENGINEERS
SALT LAKE CITY, UTAH

jra JONES/ RICHARDS & ASSOCIATES
PLANNING
533 26TH STREET
ARCHITECTURE
(801)394-3033

CONSTRUCTION MANAGEMENT
OGDEN, UTAH

REVISED: AS BUILT 6-90

PROJECT NUMBER: 3333
DATE:
DRAWN BY:

PROJECT: PHYSICAL EDUCATION FACILITY
WEBER STATE COLLEGE

SHEET TITLE: PLUMBING PLAN - PLAZA LEVEL

SHEET NO. P-5

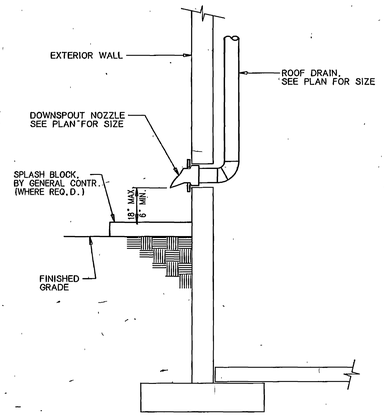


DOWNSPOUT NOZZLE DETAIL (3/P-6)
NO SCALE

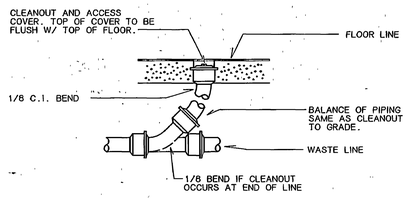


FLOOR CLEANOUT DETAIL (1/P-6)
NO SCALE

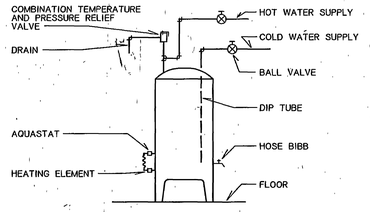


WATER HEATER DETAIL (2/P-6)
NO SCALE

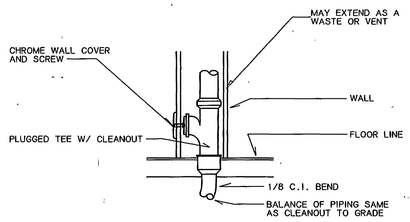


WALL CLEANOUT DETAIL (4/P-6)
NO SCALE

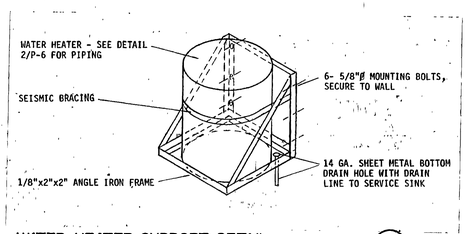


WATER HEATER SUPPORT DETAIL (5/P-6)
NO SCALE

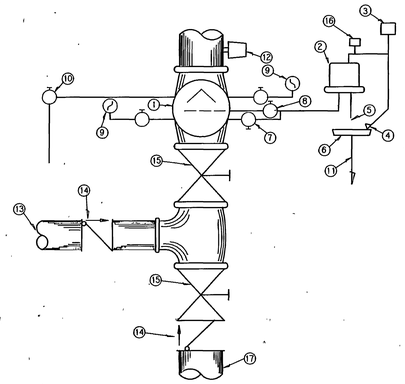

1. ALARM CHECK VALVE
2. RETARDING CHAMBER
3. LOCAL EQUIPMENT ALARM
4. RESTRICTED VENT
5. AUTOMATIC DRIP
6. DRIP CUP
7. ALARM TEST VALVE NORMALLY SHUT
8. ALARM SHUT OFF VALVE AND CHECK VALVE NORMALLY OPEN
9. WATER PRESSURE GUAGE
10. MAIN DRAIN VALVE
11. DRIP CUP DRAIN
12. FLOW SWITCH
13. CONNECT TO FIRE DEPARTMENT CONNECTION
14. CHECK VALVE
15. OS&Y INDICATING GATE VALVE W/TAMPER SWITCH
16. ALARM SWITCH
17. 6" FIRE LINE FROM MAIN RISER. FIRE LINE MAY REDUCE IN SIZE WITH APPR. HYD. CALC. FROM SUCCESSFUL SPRINKLER CONTRACTOR

MANIFOLD TYPE SPRINKLER ALARM VALVE DETAIL (6/P-6)
NO SCALE

## PLUMBING FIXTURE SCHEDULE

| SYMBOL | FIXTURE | CW | HW | W | V | REMARKS |
|---|---|---|---|---|---|---|
| P-1 | WATER CLOSET | 1-1/2" | | 4" | 3" | WALL HUNG |
| P-2 | WATER CLOSET | 1-1/2" | | 4" | 3" | HANDICAPPED |
| P-3 | URINAL | 3/4" | | 2" | 1-1/2" | WALL HUNG |
| P-4 | URINAL | 3/4" | | 2" | 1-1/2" | HANDICAPPED |
| P-5 | LAVATORY | 1/2" | 1/2" | 1-1/2" | 1-1/2" | COUNTERMOUNT |
| P-6 | SINK | 1/2" | 1/2" | 1-1/2" | 1-1/2" | DBL-COMP |
| P-7 | SINK | 1/2" | 1/2" | 1-1/2" | 1-1/2" | SINGLE-COMP |
| P-8 | SERVICE SINK | 3/4" | 3/4" | 2" | 1-1/2" | FAUCET AND FLOOR DRAIN |
| P-9 | DRINKING FOUNTAIN | 1/2" | | 2" | 1-1/2" | |
| P-10 | ROOF DRAIN | | | | | SEE PLAN FOR SIZE |
| P-11 | ROOF DRAIN OVERFLOW | | | | | SEE PLAN FOR SIZE |
| P-12 | DOWNSPOUT NOZZLE | | | | | ELEPHANT LIP STYLE SEE PLAN FOR SIZE |
| P-13 | FLOOR DRAIN | | | 2" | 1-1/2" | |
| P-14 | FLOOR SINK | | | 4" | 3" | 12" SQUARE |
| P-15 | HOSE BIBB | 1/2" | 1/2" | | | |
| P-16 | ROOF DRAIN | | | 2" | 1-1/2" | SEE PLAN FOR SIZE |
| P-17 | NOT USED | | | | | |
| P-18 | DRINKING FOUNTAIN | 1/2" | | 2" | 1-1/2" | HANDICAPPED |
| P-19 | WALL HYDRANT | 1/2" | | | | |
| ~~P-20~~ | ~~FLOOR SINK~~ OMIT PER ADDEND. PAG. 23 | | | ~~2"~~ | ~~1-1/2"~~ | ~~8-1/2" SQUARE~~ |

SC-43

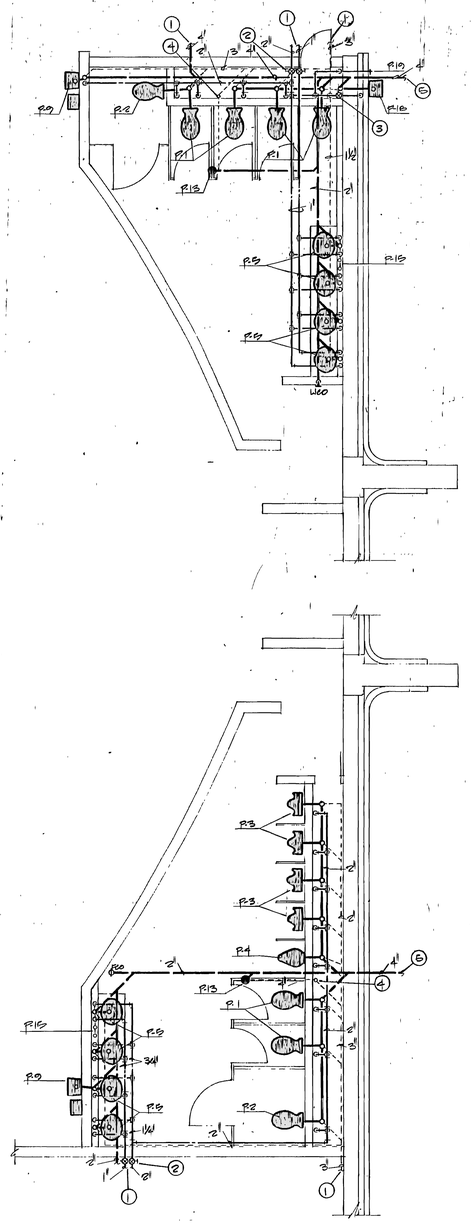

ENLARGED TOILET ROOM PLANS-PLUMBING
SCALE 1/8"=1'-0"

RECORD DOCUMENTS JUL 3 1990
THESE DOCUMENTS HAVE BEEN REVISED TO RECORD INFORMATION SUBMITTED BY THE CONTRACTOR, WHICH THEY ARE ASSUMED TO BE RELIABLE. THE ARCHITECT DOES NOT GUARANTEE THEIR ACCURACY.

## KEYED NOTES

1. FOR CONTINUATION OF PIPING, REFER TO SHEET P-2.
2. SHUT-OFF VALVES.
3. PROVIDE SHUT-OFF VALVE AND DRAIN ON WATER PIPE SERVING EXTERIOR DRINKING FOUNTAIN.
4. VENT LINE FROM FLOOR DRAIN TO RISE IN CHASE, CONTINUE AS SHOWN.
5. FOR CONTINUATION OF PIPING, REFER TO SITE UTILITY PLAN.

00007VP6
Weber State College, Physical Education Facelty - RW 84-058
Plumbing Plans, Details & Schedules - 28738

REGISTERED PROFESSIONAL ENGINEER No. 7122 KIM P. HARRIS STATE OF UTAH

VAN BOERUM & FRANK ASSOCIATES INC.
CIVIL & MECHANICAL CONSULTING ENGINEERS
SALT LAKE CITY, UTAH

jra JONES/ RICHARDS & ASSOCIATES
ARCHITECTURE (801)394-3033
PLANNING 533 26TH STREET
CONSTRUCTION MANAGEMENT OGDEN, UTAH

REVISED: AS BUILT 6-90

PROJECT NUMBER: 8403
DATE: 7-7-89
DRAWN BY:

PROJECT: PHYSICAL EDUCATION FACILITY
WEBER STATE COLLEGE

SHEET TITLE: PLUMBING PLANS, DETAILS AND SCHEDULES

SHEET NO. P-6

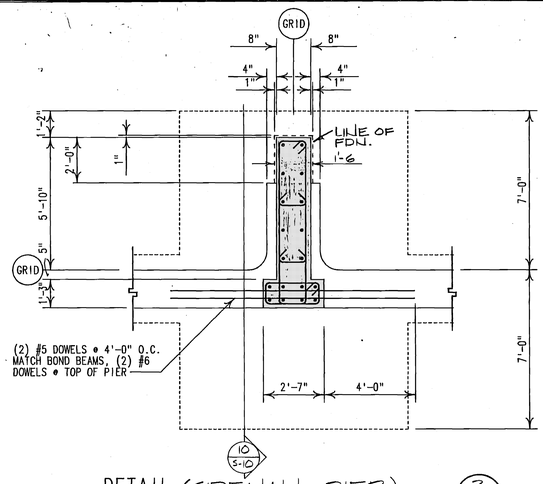


DETAIL (SIDEWALL PIER) 2/S-1
SCALE : 3/8" = 1'-0"

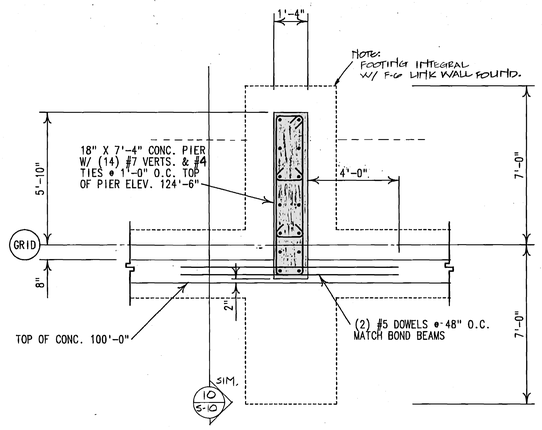


DETAIL (SPEC. PIER) 1/S-1
SCALE : 3/8" = 1'-0"

## FOOTING SCHEDULE

| MARK | WIDTH | LENGTH | THICK. | CROSSWISE REINFORCING | | | | LENGTHWISE REINFORCING | | | | REMARKS |
|---|---|---|---|---|---|---|---|---|---|---|---|---|
| | | | | NO. | SIZE | LENGTH | SPAC. | NO. | SIZE | LENGTH | SPAC. | |
| F-1 | 2'-0" | CONT. | 12" | — | #3 | 1'-6" | 48" | 2 | #4 | CONT. | 18" | |
| F-2 | 2'-6" | CONT. | 12" | — | #3 | 2'-0" | 48" | 2 | #4 | CONT. | 24" | |
| F-3 | 3'-0" | CONT. | 12" | — | #4 | 2'-6" | 24" | 2 | #5 | CONT. | 30" | |
| F-4 | 3'-6" | CONT. | 12" | — | #4 | 3'-0" | 24" | 3 | #5 | CONT. | 12" | |
| F-5 | 4'-0" | CONT. | 12" | — | #5 | 3'-6" | 12" | 3 | #5 | CONT. | 21" | |
| F-6 | 4'-6" | CONT. | 12" | — | #5 | 4'-0" | 10" | 3 | #5 | CONT. | 24" | |
| F-7 | 3'-0" | 3'-0" | 12" | 3 | #5 | 2'-6" | 15" | 3 | #5 | 2'-6" | 15" | |
| F-8 | 4'-0" | 4'-0" | 12" | 5 | #5 | 3'-6" | 10.5" | 5 | #5 | 3'-6" | 10.5" | |
| F-9 | 4'-6" | 4'-6" | 12" | 5 | #5 | 4'-0" | 12" | 5 | #5 | 4'-0" | 12" | |
| F-10 | 5'-0" | 5'-0" | 12" | 5 | #5 | 4'-6" | 13.5" | 5 | #5 | 4'-6" | 13.5" | |
| F-11 | 6'-0" | 6'-0" | 12" | 6 | #5 | 5'-6" | 13.2" | 6 | #5 | 5'-6" | 13.2" | |
| F-12 | 4'-0" | 9'-0" | 12" | 9 | #5 | 3'-6" | 12.75" | 4 | #5 | 8'-6" | 12.75" | |
| F-13 | 4'-0" | 14'-0" | 24" | 14 | #5 | 3'-6" | 12.5" | 6 | #5 | 13'-6" | 12.5" | |
| F-14 | 10'-0" | 14'-0" | 24" | 17 | #6 | 9'-6" | 10.1" | 12 | #8 | 13'-6" | 10.1" | |
| F-15 | 12'-0" | 12'-0" | 18" | 15 | #5 | 11'-6" | 10" | 15 | #5 | 11'-6" | 10" | |
| F-16 | 2'-0" | CONT | 12 | — | #3 | 1'-6' | 4'-0" | 2 | #5 | CONT | 18 | THK. SLAB 5/S-9 |

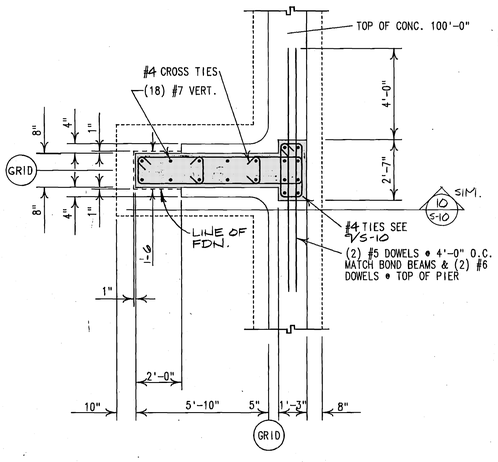


DETAIL (ENDWALL PIER) 3/S-1
SCALE : 3/8" = 1'-0"

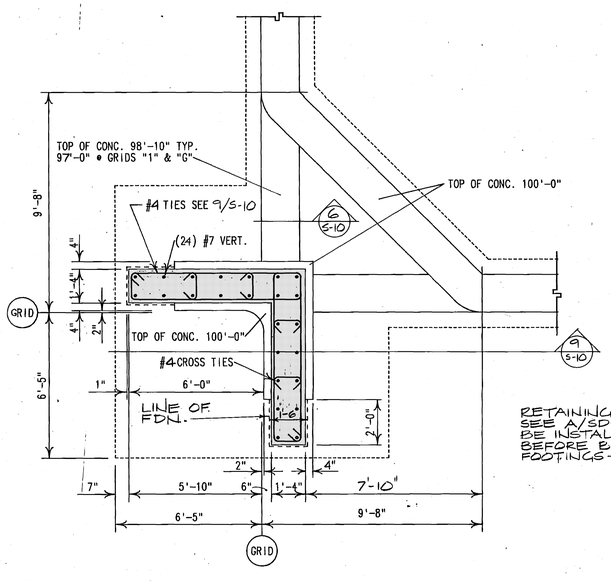


DETAIL (CORNER PIER) 4/S-1
SCALE : 3/8" = 1'-0"

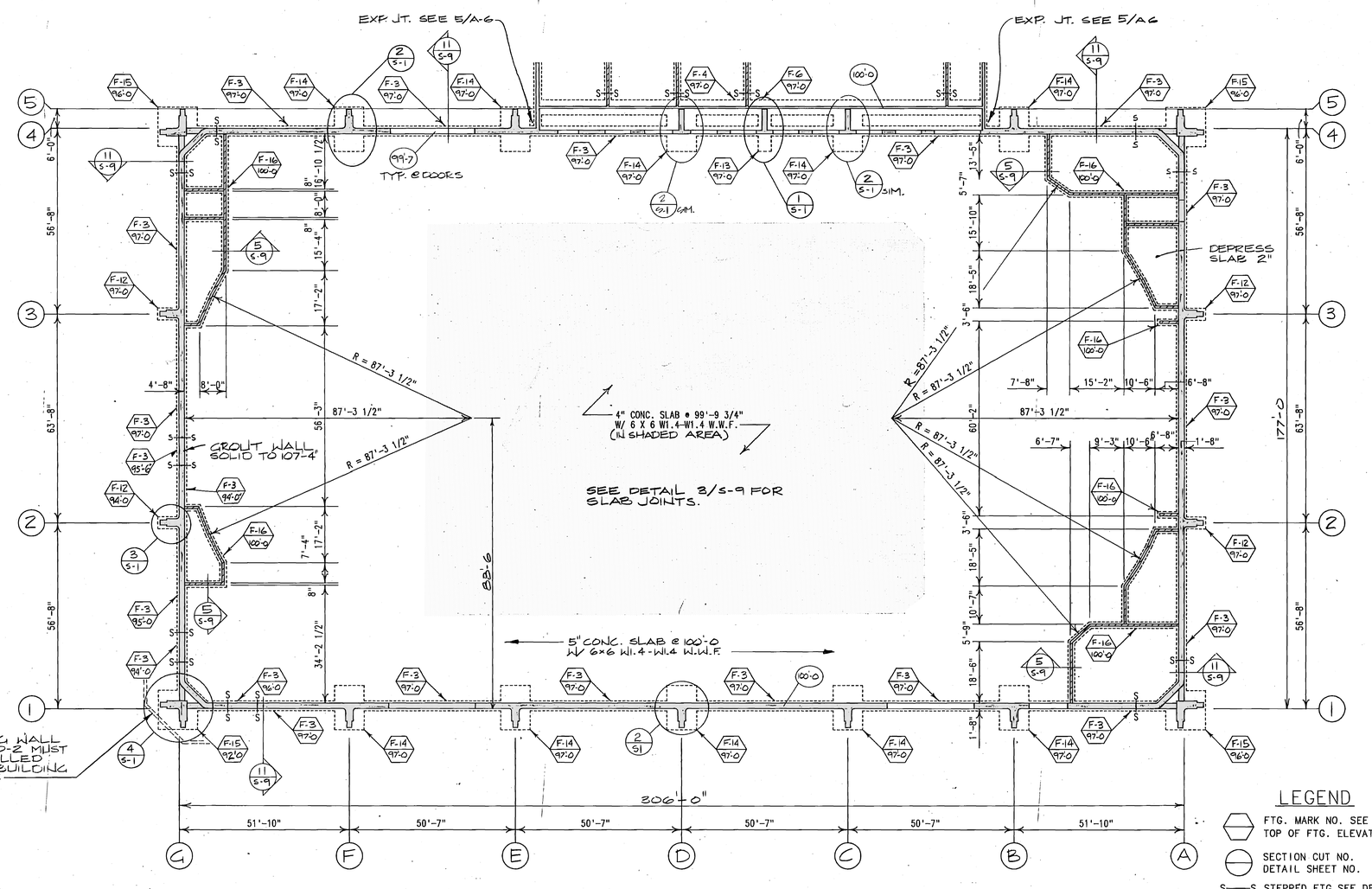


NOTE!
FOOTING ELEV. ARE APPROXIMATE FOOTINGS MUST EXTEND THROUGH ANY EXISTING FILL AND BEAR ON SUITABLE NATURAL SOILS OR ON COMPACTED STRUCTURAL FILL (SEE SOILS REPORT)

FOOTING & FOUNDATION LAYOUT
SCALE : 1/16" = 1'-0"

NORTH

RECORD DOCUMENTS JUN 1 8 1990
THE ENCLOSED DRAWINGS HAVE BEEN REVISED TO RECORD THE CHANGES SUBMITTED BY THE CONTRACTOR. THE INFORMATION IS ASSUMED TO BE RELIABLE BUT THE ARCHITECT DOES NOT GUARANTEE THEIR ACCURACY.

## LEGEND

- FTG. MARK NO. SEE SCHEDULE / TOP OF FTG. ELEVATION
- SECTION CUT NO. / DETAIL SHEET NO.
- S——S STEPPED FTG SEE DET. 6/S-9
- TOP OF FOUNDATION EL.
- H.S. HEADED STUD ANCHOR
- D.A. WELDABLE BAR ANCHOR

00007VS1
Weber State College; Physical Education Facility - RW:84-058
Main Level Foundation Plan - 26708


REGISTERED PROFESSIONAL ENGINEER O. KENT RICHARDS 3600 STATE OF UTAH

ADAMSON ENGINEERING
STRUCTURAL ENGINEERS
OGDEN UTAH
PHONE 621-8130

JONES / RICHARDS & ASSOCIATES
CONSTRUCTION MANAGEMENT
OGDEN, UTAH
PLANNING 533-2018 STREET
ARCHITECTURE (801) 394-3933


REVISED: AS-BUILTS 6-90
PROJECT NUMBER: 8403
DATE: 6-21-88
DRAWN BY: S.D.K.

PROJECT: PHYSICAL EDUCATION FACILITY
WEBER STATE COLLEGE
SHEET TITLE: MAIN LEVEL FOUNDATION PLAN

SHEET NO. S-1

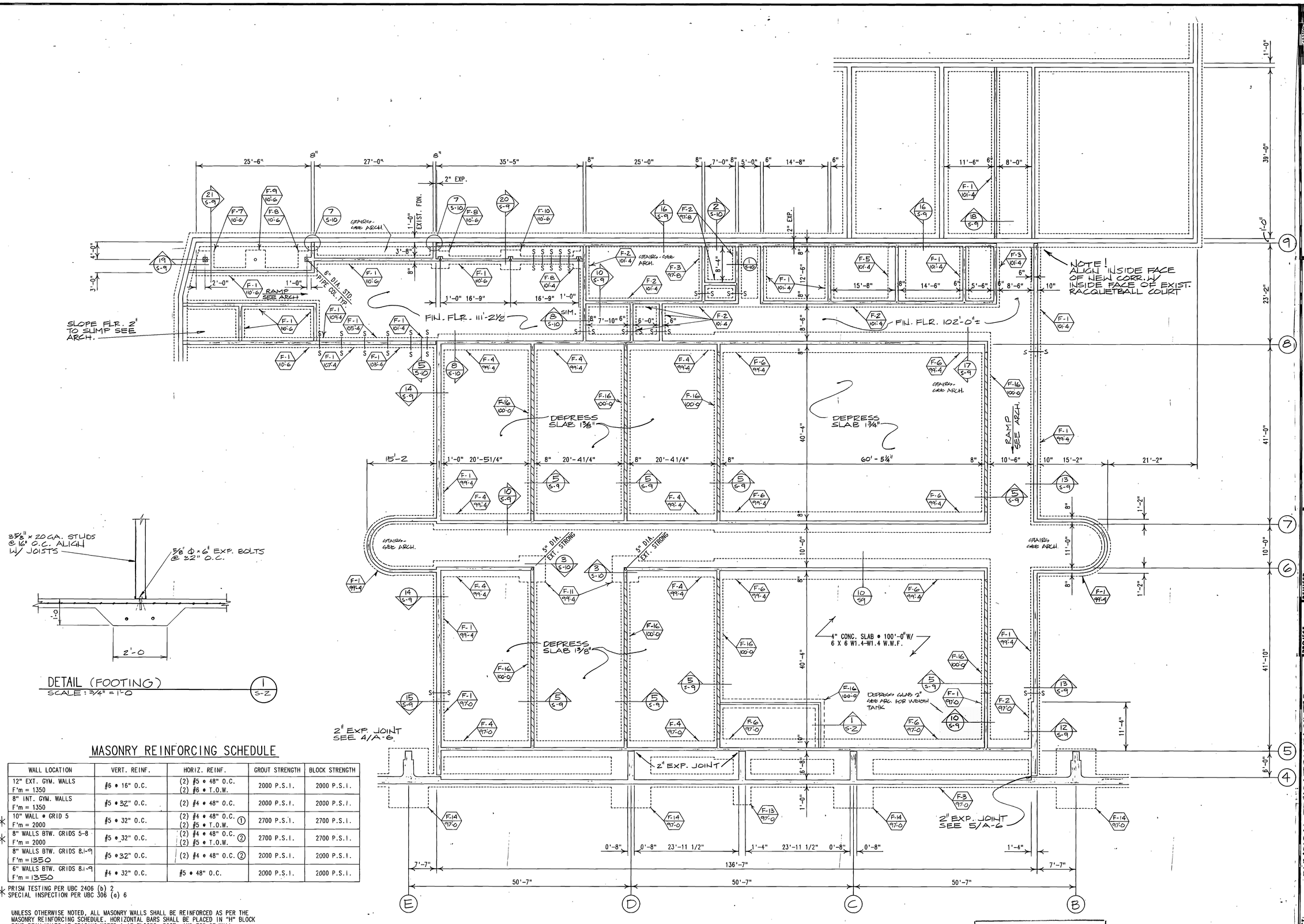





DETAIL (FOOTING) 1/S-2
SCALE: 3/4" = 1'-0

## MASONRY REINFORCING SCHEDULE

| WALL LOCATION | VERT. REINF. | HORIZ. REINF. | GROUT STRENGTH | BLOCK STRENGTH |
|---|---|---|---|---|
| 12" EXT. GYM. WALLS F'm = 1350 | #6 @ 16" O.C. | (2) #5 @ 48" O.C. (2) #6 @ T.O.W. | 2000 P.S.I. | 2000 P.S.I. |
| 8" INT. GYM. WALLS F'm = 1350 | #5 @ 32" O.C. | (2) #4 @ 48" O.C. | 2000 P.S.I. | 2000 P.S.I. |
| * 10" WALL @ GRID 5 F'm = 2000 | #5 @ 32" O.C. | (2) #4 @ 48" O.C. (2) #5 @ T.O.W. ① | 2700 P.S.I. | 2700 P.S.I. |
| * 8" WALLS BTW. GRIDS 5-8 F'm = 2000 | #5 @ 32" O.C. | (2) #4 @ 48" O.C. (2) #5 @ T.O.W. ② | 2700 P.S.I. | 2700 P.S.I. |
| 8" WALLS BTW. GRIDS 8.1-9 F'm = 1350 | #5 @ 32" O.C. | (2) #4 @ 48" O.C. ② | 2000 P.S.I. | 2000 P.S.I. |
| 6" WALLS BTW. GRIDS 8.1-9 F'm = 1350 | #4 @ 32" O.C. | #5 @ 48" O.C. | 2000 P.S.I. | 2000 P.S.I. |

* PRISM TESTING PER UBC 2406 (b) 2
SPECIAL INSPECTION PER UBC 306 (a) 6

UNLESS OTHERWISE NOTED, ALL MASONRY WALLS SHALL BE REINFORCED AS PER THE MASONRY REINFORCING SCHEDULE. HORIZONTAL BARS SHALL BE PLACED IN "H" BLOCK BOND BEAM UNITS AT SPACING NOTED & AT FLOORS, ROOF, AND TOP OF WALL.

① (2) #5 @ 40" O.C. FOR STACK BOND
② (2) #5 @ 48" O.C. FOR STACK BOND

LINK BUILDING FOOTING & FOUNDATION LAYOUT
SCALE : 1/8" = 1'-0"

NORTH

RECORD DOCUMENTS JUN 1 8 1990
THESE DOCUMENTS HAVE BEEN REVISED TO RECORD [illegible] SUBMITTED BY THE CONTRACTOR [illegible] ARE ASSUMED TO BE RELIABLE THE ARCHITECT DOES NOT GUARANTEE THEIR ACCURACY.

0000TVS2
Weber State College; Physical Education Facility - RW:84-058
Main Level Foundation Plan Link - 26709


ADAMSON ENGINEERING
STRUCTURAL ENGINEERS
OGDEN UTAH
PHONE 621-8130
O. KENT RICH
REGISTERED PROFESSIONAL ENGINEER



jra JONES / RICHARDS & ASSOCIATES
ARCHITECTURE (801) 394-3033
PLANNING 533 - 28TH STREET
CONSTRUCTION MANAGEMENT OGDEN, UTAH


REVISED: AS BUILTS 6-90
PROJECT NUMBER: 8403
DATE: 6-21-88
DRAWN BY: S.D.K.

PROJECT: PHYSICAL EDUCATION FACILITY
WEBER STATE COLLEGE
SHEET TITLE: MAIN LEVEL FOUNDATION PLAN-LINK

SHEET NO. S-2

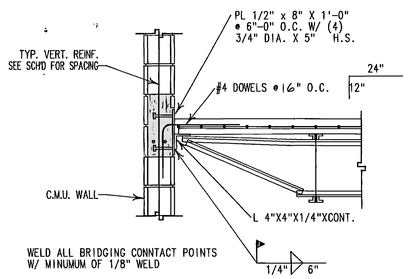


DETAIL (DECK TO WALL) 5 S-3
SCALE : 3/4" = 1'-0"

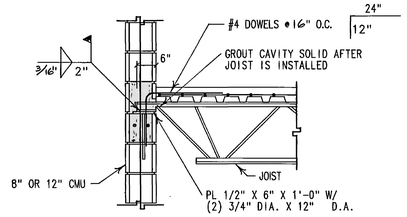


DETAIL (JOIST TO WALL) 4 S-3
SCALE : 3/4" = 1'-0"

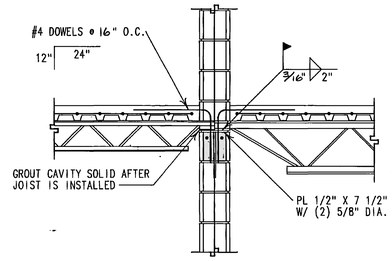


DETAIL (JOIST TO WALL) 3 S-3
SCALE : 3/4" = 1'-0"

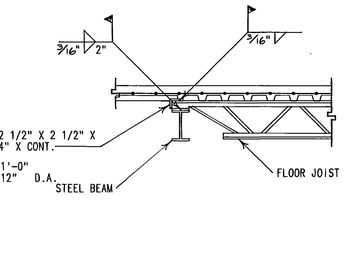


DETAIL (JOIST TO BEAM) 2 S-3
SCALE : 3/4" = 1'-0"

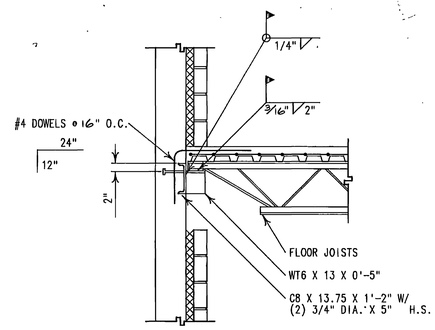


DETAIL (JOIST TO WALL) 1 S-3
SCALE : 3/4" = 1'-0"

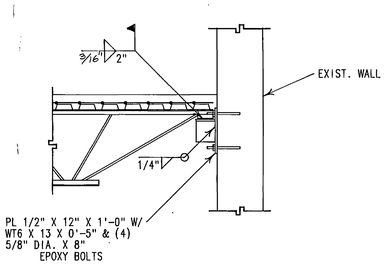


DETAIL (JOIST TO WALL) 6 S-3
SCALE : 3/4" = 1'-0"

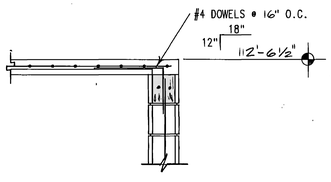


DETAIL (DECK TO WALL) 7 S-3
SCALE : 3/4" = 1'-0"

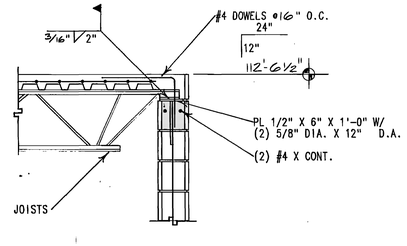


DETAIL (JOIST TO WALL) 8 S-3
SCALE : 3/4" = 1'-0"

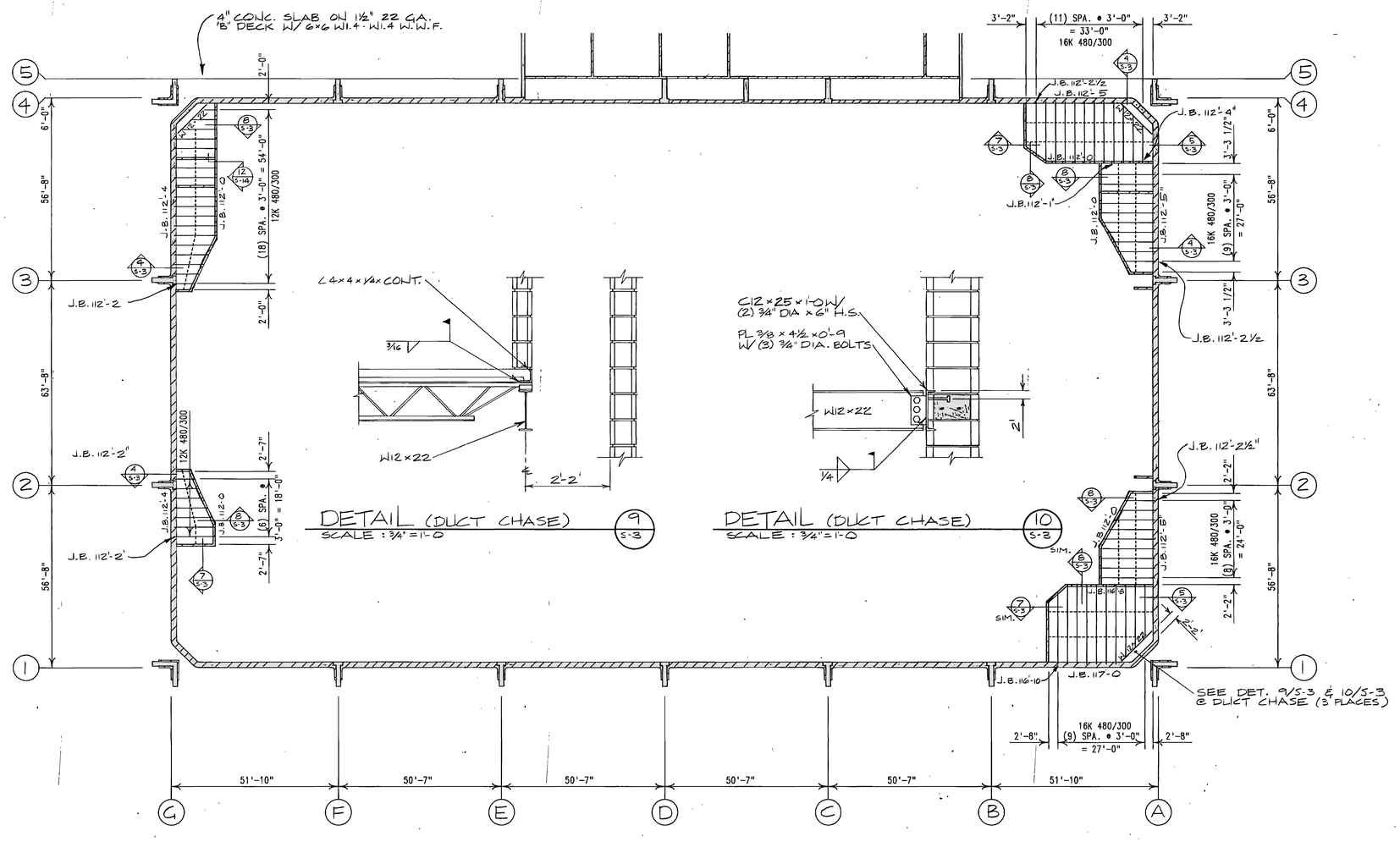





DETAIL (DUCT CHASE) 9 S-3
SCALE : 3/4" = 1'-0




DETAIL (DUCT CHASE) 10 S-3
SCALE : 3/4" = 1'-0

INTERIOR ROOF FRAMING LAYOUT
SCALE : 1/16" = 1'-0"

NORTH

RECORD DOCUMENTS JUN 1 8 2010
THESE DOCUMENTS HAVE BEEN REVISED TO RECORD INFORMATION SUBMITTED BY THE CONTRACTOR. UNLESS THEY ARE ASSUMED TO BE RELIABLE THE ARCHITECT DOES NOT GUARANTEE THEIR ACCURACY.

00001TVS3
Weber State College, Physical Education Facility - RW 84-058
Interior Roof Framing & Details - 26710

PROFESSIONAL ENGINEER — REGISTERED — R. KENT KIRKHAM — No. 3660 — STATE OF UTAH

ADAMSON ENGINEERING
STRUCTURAL ENGINEERS
OGDEN UTAH
PHONE 621-8130

jra JONES / RICHARDS & ASSOCIATES
ARCHITECTURE 801-394-3053
PLANNING 530 - 25TH STREET
CONSTRUCTION MANAGEMENT OGDEN, UTAH

REVISED: AS BUILTS 6-90
PROJECT NUMBER 8403
DATE: 6-27-88
DRAWN BY: S.D.K.

PROJECT: PHYSICAL EDUCATION FACILITY
WEBER STATE COLLEGE
SHEET TITLE: INTERIOR ROOF FRAMING & DETAILS

SHEET NO. S-3

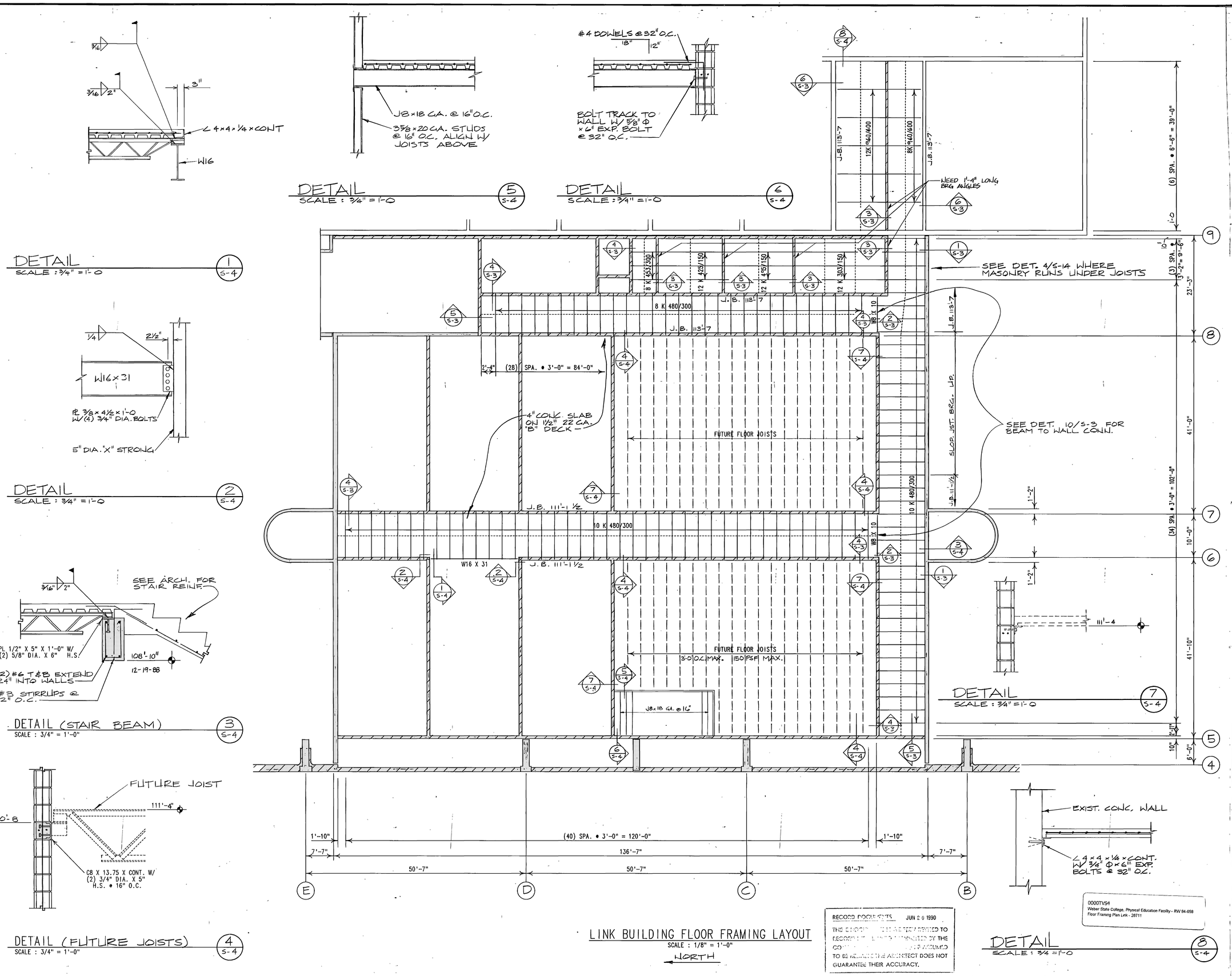


PROFESSIONAL ENGINEER — O. KENT ROBERTS — STATE OF UTAH

ADAMSBERG ENGINEERING
STRUCTURAL ENGINEERS
OGDEN UTAH
PHONE 621-8130

JONES / RICHARDS & ASSOCIATES
ARCHITECTURE 801/394-5313
PLANNING 533 - 25TH STREET
CONSTRUCTION MANAGEMENT OGDEN, UTAH

REVISED: AS BUILTS 6-90

PROJECT NUMBER: 8403
DATE: 9-21-88
DRAWN BY: S.D.K.

PROJECT: PHYSICAL EDUCATION FACILITY
WEBER STATE COLLEGE

SHEET TITLE: FLOOR FRAMING PLAN-LINK

SHEET NO. S-4

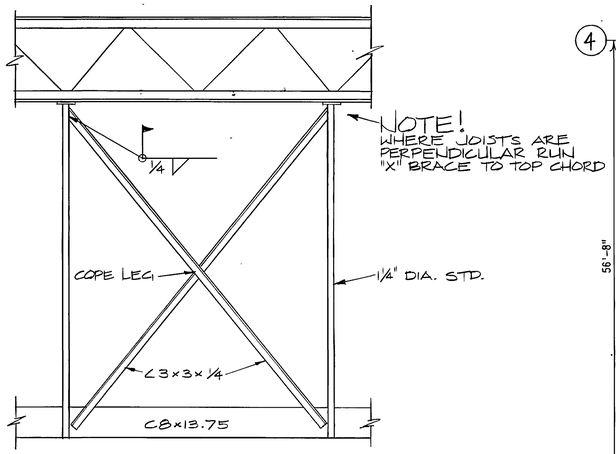


DETAIL 3/S-5
SCALE: 1/2" = 1'-0"

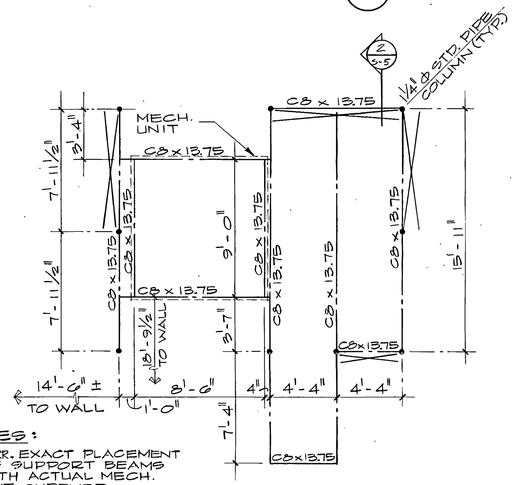


NOTES:

1 - CORR. EXACT PLACEMENT OF SUPPORT BEAMS WITH ACTUAL MECH. UNIT SUPPLIED.

2 - PLAN SHOWN IS FOR N.W. CORNER - OTHER CORNERS SIM. BUT REVERSED/MIRRORED.

MECHANICAL PLATFORM 1/S-5
SCALE: 1/4" = 1'-0"

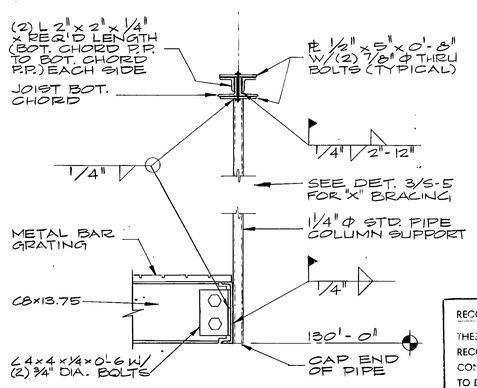


SUPPORT DETAIL 2/S-5
SCALE: 1 1/2" = 1'-0

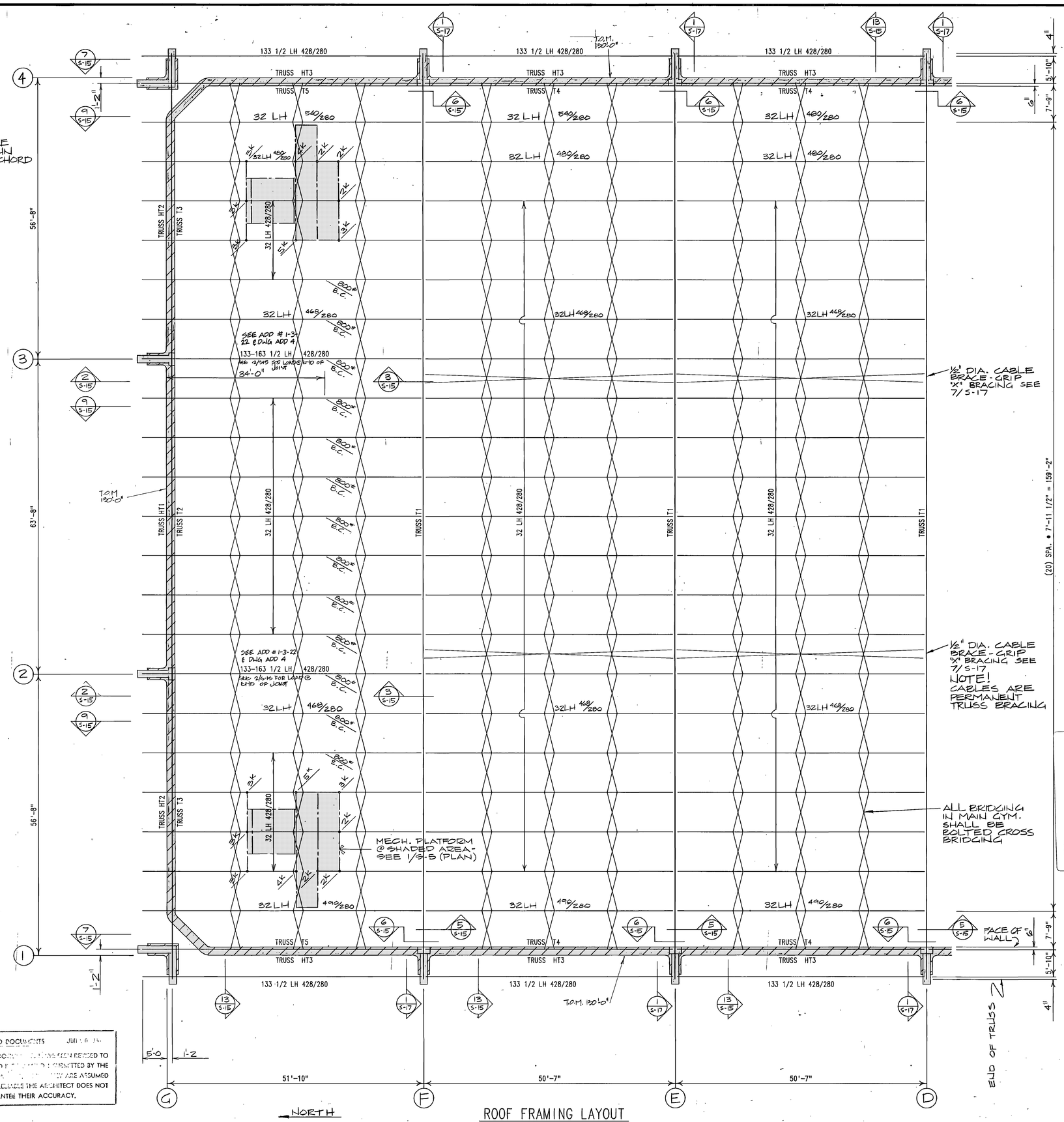


ROOF FRAMING LAYOUT
SCALE: 1/8" = 1'-0"

RECORD DOCUMENTS JUN 16 '16
THESE DOCUMENTS HAVE NOT BEEN REVISED TO RECORD INFORMATION SUBMITTED BY THE CONTRACTOR. THEY ARE ASSUMED TO BE REASONABLE THE ARCHITECT DOES NOT GUARANTEE THEIR ACCURACY.

DOCUMENTS
Weber State College: Physical Education Facility - RW 84-058
Roof Framing Plan North - 29712

O. KENT. ALLEN 3699 REGISTERED PROFESSIONAL ENGINEER STATE OF UTAH

ADAMSON ENGINEERING
STRUCTURAL ENGINEERS
OGDEN UTAH
PHONE 621-8130

jrq JONES / RICHARDS & ASSOCIATES
ARCHITECTURE / INTERIORS
PLANNING / CONSTRUCTION MANAGEMENT
533 - 26TH STREET / OGDEN, UTAH

REVISED: AS BUILTS 6-90

PROJECT NUMBER: 84-023
DATE: 6-21-84
DRAWN BY: S.D.K.

PROJECT: PHYSICAL EDUCATION FACILITY
WEBER STATE COLLEGE

SHEET TITLE: ROOF FRAMING PLAN - NORTH

SHEET NO. S-5

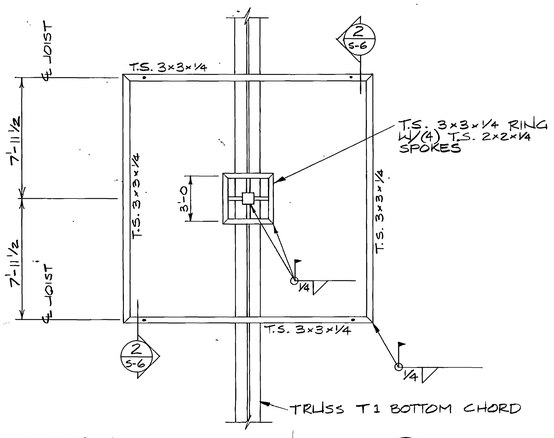


DETAIL
SCALE : ¼"=1'-0
(1 / S-6)

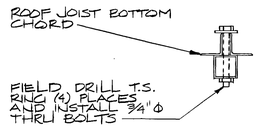


DETAIL
SCALE : ¾" = 1'-0
(2 / S-6)

NOTE!
SEE SHEET A-7 FOR CRICKET DETAILS & DRAINAGE LAYOUT USE 1½" 22 GA. "B" DECK ABOVE ALL CRICKETS

NOTE!
MAIN TRUSSES T1 HAVE THE CAPACITY TO SUPPORT AN ADDITIONAL LOAD OF 800# LOCATED AT ANY BOTTOM CHORD PANEL POINT (ONE LOAD PER TRUSS)

NOTE!
JOISTS MUST BE CAPABLE OF RESISTING A NET UPLIFT DUE TO WIND OF 51 #/FT. ADDITIONAL BRIDGING MAY BE REQ'D

## ROOF DECK SCHEDULE

| ROOF AREA | DECK GA. | SHEAR CAPACITY | ATTACHMENT • JOISTS | SIDE SEAM ATTACHMENT |
|---|---|---|---|---|
| BTW A–B<br>BTW G–F | 16 GA.<br>ACOUSTICAL | 1710 #/FT. | (7) 5/8" DIA. PUDDLE WELDS PER 36" SHEET | TOP SEAM WELDS • 12" O.C. |
| BTW B–C<br>BTW E–F | 18 GA.<br>ACOUSTICAL | 1140 #/FT. | (7) 5/8" DIA. PUDDLE WELDS PER 36" SHEET | TOP SEAM WELDS • 12" O.C. |
| BTW C–E | 20 GA.<br>ACOUSTICAL | 840 #/FT. | (7) 5/8" DIA. PUDDLE WELDS PER 36" SHEET | TOP SEAM WELDS • 24" O.C. |
| DECK ATTACHMENT ON LINES A & G SHALL BE 5/8" DIA. PUDDLE WELDS AT 12" O.C.<br>DECK ATTACHMENT ON LINES 1 & 4 SHALL BE (7) 5/8" DIA. PUDDLE WELDS PER 36".<br>SHEET W/ SHEAR TRANSFER ELEMENT | | | | |

ROOF DECK SUPPLIER SHALL SUBMIT ICBO REPORT TO SHOW THAT DECK SUPPLIED AND ATTACHMENTS PROPOSED WILL PROVIDE SHEAR VALUES SHOWN ABOVE.

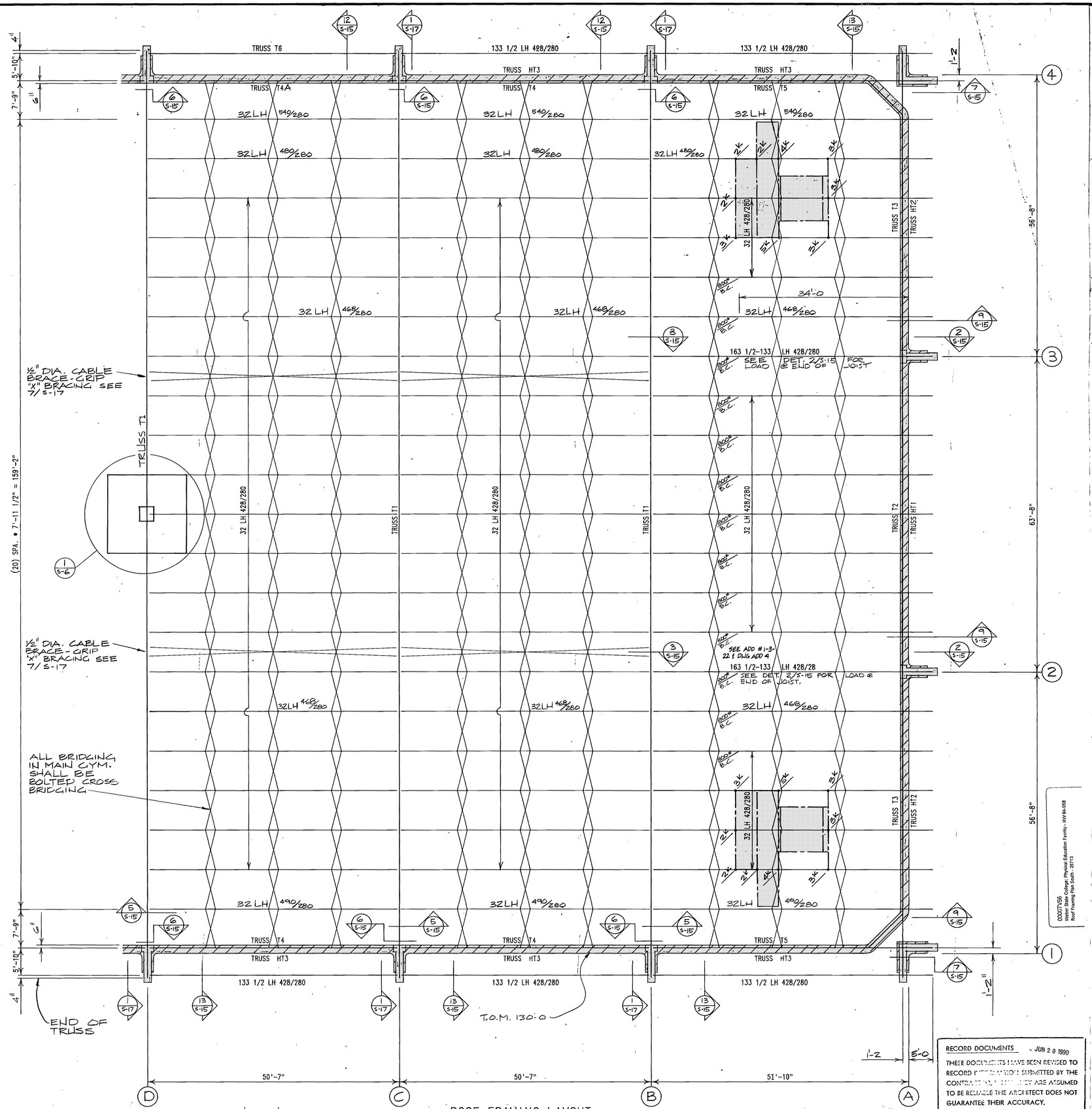


ROOF FRAMING LAYOUT
SCALE : 1/8" = 1'-0"

RECORD DOCUMENTS JUN 2 0 1990
THESE DOCUMENTS HAVE BEEN REVISED TO RECORD INFORMATION SUBMITTED BY THE CONTRACTOR. THEY ARE ASSUMED TO BE RELIABLE. THE ARCHITECT DOES NOT GUARANTEE THEIR ACCURACY.

D. KENT RICHARDS STATE OF UTAH REGISTERED PROFESSIONAL ENGINEER

ADAMSON ENGINEERING
STRUCTURAL ENGINEERS
OGDEN UTAH
PHONE 621-8130

jrq JONES / RICHARDS & ASSOCIATES
ARCHITECTURE (801) 394-3833
PLANNING 533-26TH STREET
CONSTRUCTION MANAGEMENT OGDEN, UTAH

REVISED: As BOLTS 6-90
PROJECT NUMBER: 9403
DATE: 8-23-88
DRAWN BY: S.D.K.

PROJECT: PHYSICAL EDUCATION FACILITY
WEBER STATE COLLEGE
SHEET TITLE: ROOF FRAMING PLAN - SOUTH

00007056
Weber State College: Physical Education Facility - RW-9A-058
Roof Framing Plan South - 26713

SHEET NO. S-6

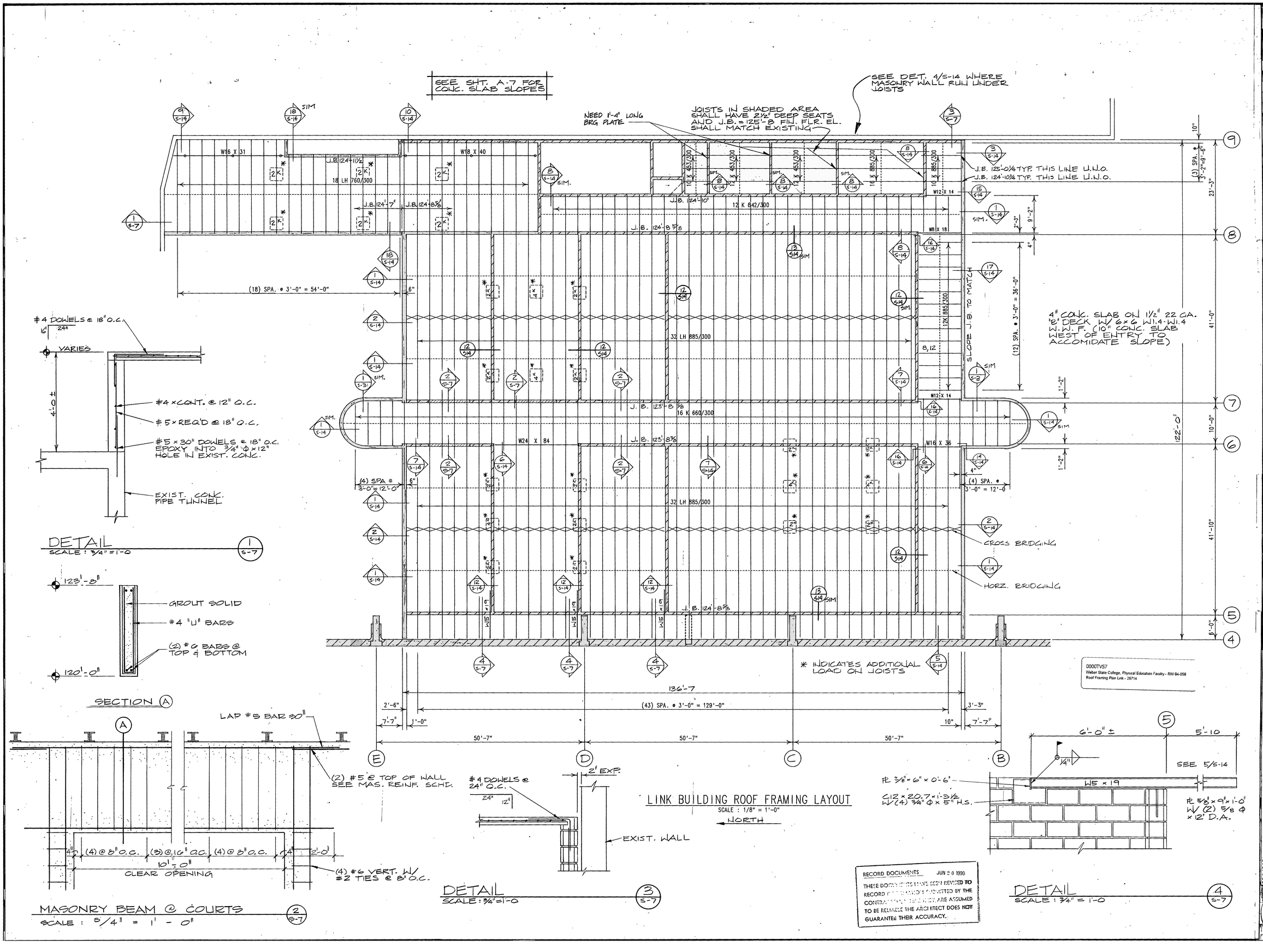


0000TVS7
Weber State College, Physical Education Facility - RW 84-058
Roof Framing Plan Link - 26714

RECORD DOCUMENTS JUN 20 1990
THESE DOCUMENTS HAVE BEEN REVISED TO RECORD [illegible] SUBMITTED BY THE CONTRA[illegible] ARE ASSUMED TO BE RELIABLE THE ARCHITECT DOES NOT GUARANTEE THEIR ACCURACY.

REGISTERED PROFESSIONAL ENGINEER
O. KENT RICH
3660
State of Utah

ADAMSON ENGINEERING
STRUCTURAL ENGINEERS
OGDEN UTAH
PHONE 621-8130

jra JONES / RICHARDS & ASSOCIATES
ARCHITECTURE (801) 394-3033
PLANNING 533 - 28TH STREET
CONSTRUCTION MANAGEMENT OGDEN, UTAH

REVISED: AS BUILTS 6-90
PROJECT NUMBER: 8403
DATE: 6-21-88
DRAWN BY: S.D.K.

PROJECT: PHYSICAL EDUCATION FACILITY
WEBER STATE COLLEGE
SHEET TITLE: ROOF FRAMING PLAN-LINK

SHEET NO. S-7

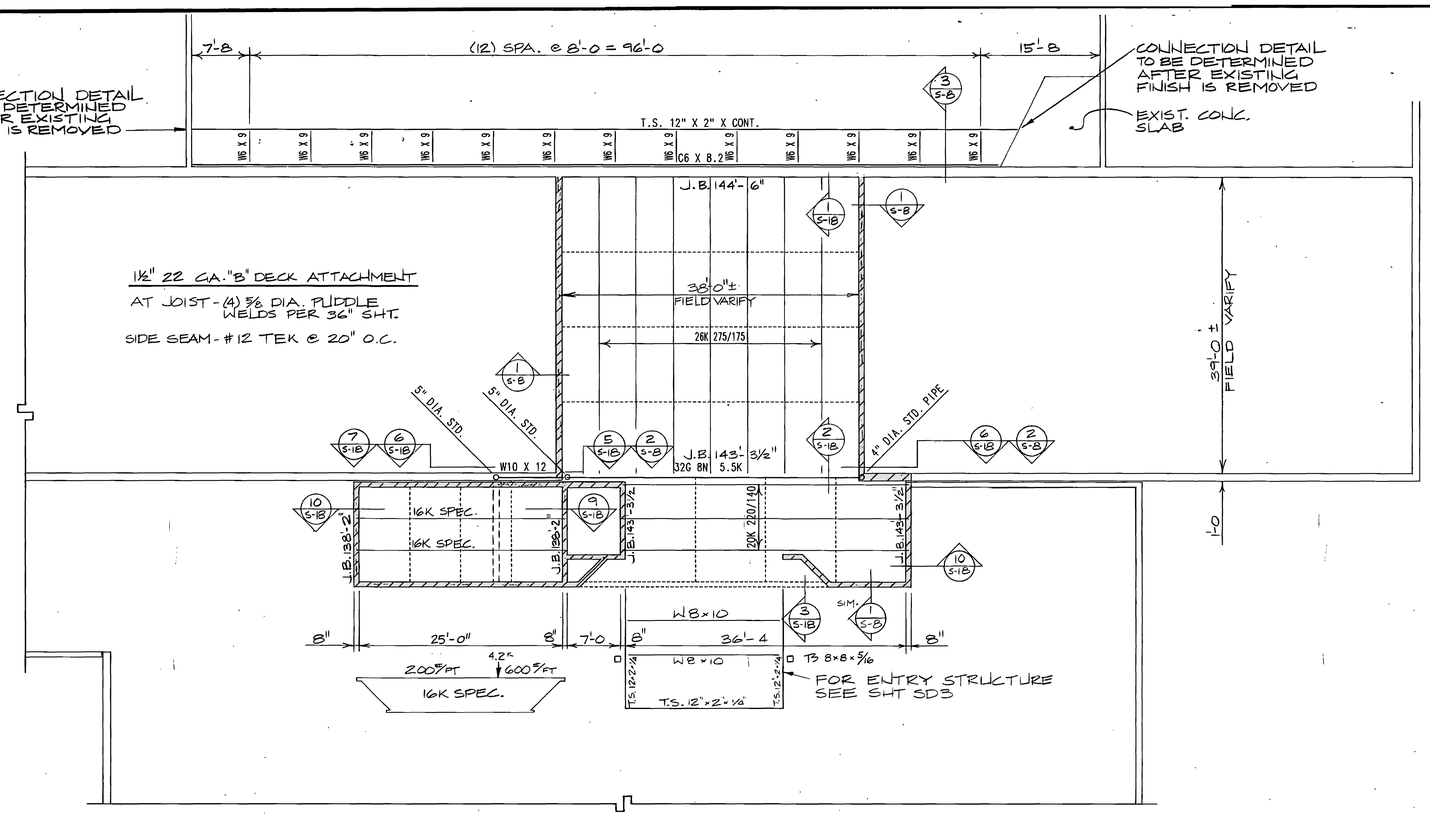


UPPER GYM. WALKWAY & ENTRY ROOF FRAMING

SCALE : 1/8" = 1'-0"

NORTH

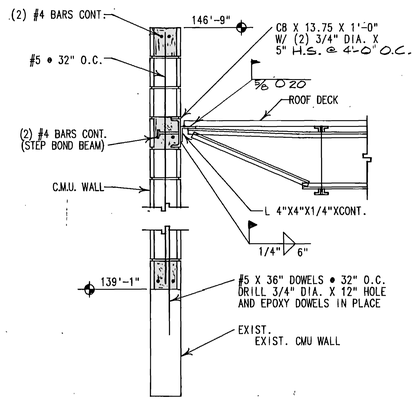


DETAIL 1/S-8

SCALE : 3/4" = 1'-0"

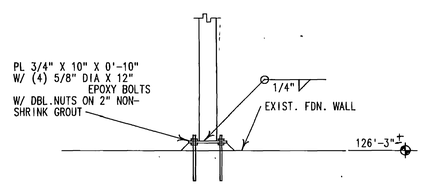


DETAIL 2/S-8

SCALE : 3/4" = 1'-0"

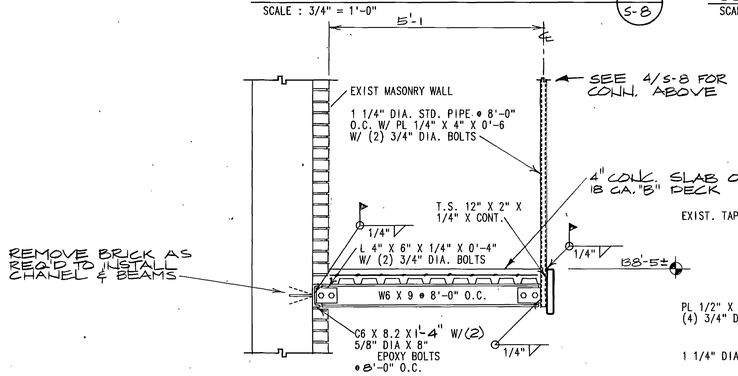


DETAIL 3/S-8

SCALE : 3/4" = 1'-0"

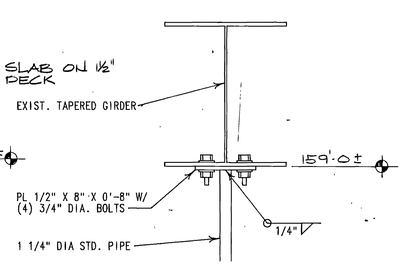


DETAIL 4/S-8

SCALE : 1 1/2" = 1'-0"

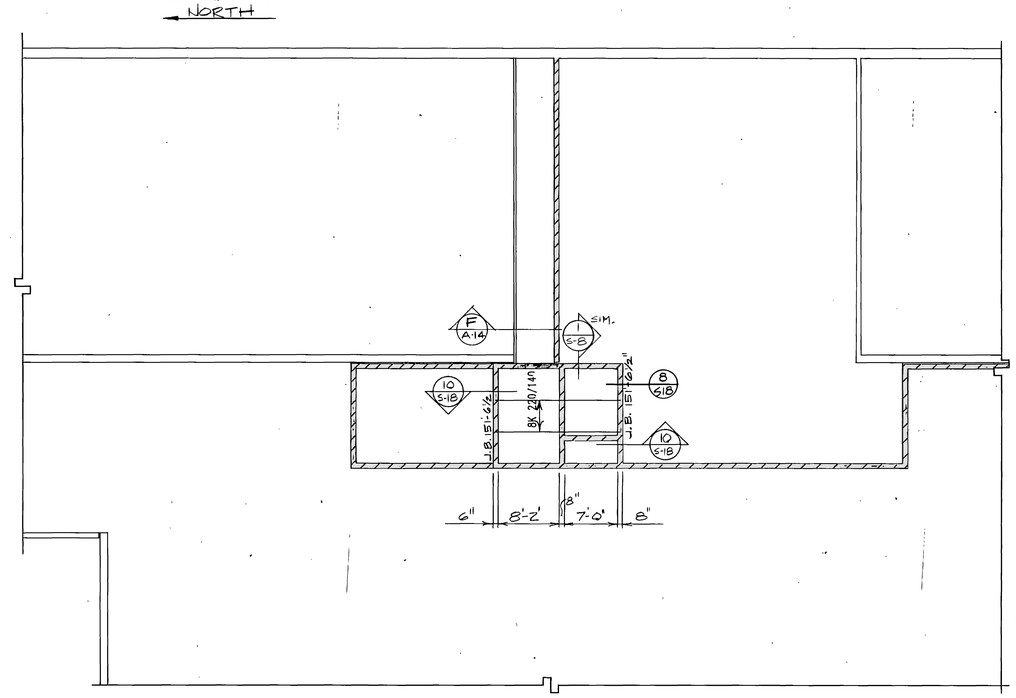


UPPER CORRIDOR ROOF FRAMING LAYOUT

SCALE : 1/8" = 1'-0"

NORTH

RECORD DOCUMENTS JUN 20 '94

THESE DOCUMENTS HAVE BEEN REVISED TO RECORD INFORMATION SUBMITTED BY THE CONTRACTOR. WHERE THEY ARE INDICATED TO BE RELIABLE THE ARCHITECT DOES NOT GUARANTEE THEIR ACCURACY.

00007NSS
Weber State College: Physical Education Facility - RV/Bk-059
Roof Framing Plan New Entry - 38115

REGISTERED PROFESSIONAL ENGINEER O. KENT RICHARDS 3660 STATE OF UTAH

ADAMSON ENGINEERING
STRUCTURAL ENGINEERS
OGDEN • UTAH
PHONE • 621-8130

jra JONES / RICHARDS & ASSOCIATES
ARCHITECTURE
801-394-5133
CONSTRUCTION MANAGEMENT
OGDEN, UTAH
PLANNING
532 24TH STREET

REVISED: AS BUILTS 6-90
PROJECT NUMBER: 8403
DATE: 9-21-93
DRAWN BY: S.D.K.

PROJECT: PHYSICAL EDUCATION FACILITY
WEBER STATE COLLEGE
SHEET TITLE: ROOF FRAMING PLAN-NEW ENTRY

SHEET NO. S-8

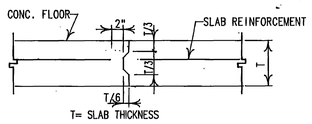


DETAIL (CONSTRUCTION JOINT) 1/S-9
SCALE : NONE

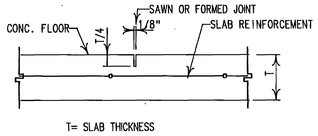


DETAIL (CONTROL JOINT) 2/S-9
SCALE : NONE

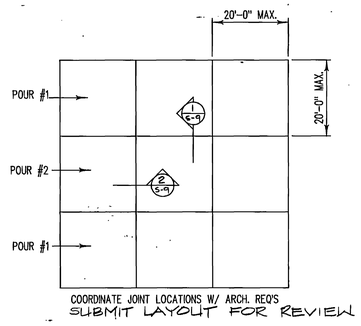


DETAIL (SLAB SEQUENCE) 3/S-9
SCALE : NONE

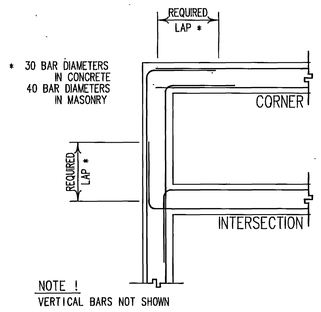


DETAIL (CORNER BARS) 4/S-9
SCALE : NONE

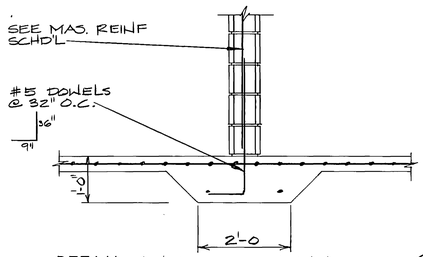


DETAIL (INTERIOR WALL) 5/S-9
SCALE : NONE

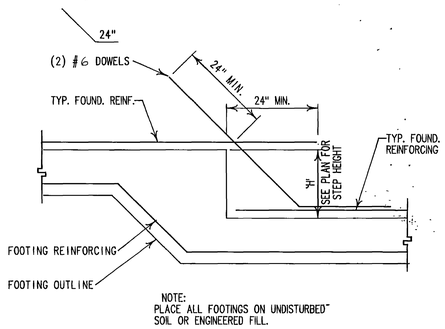


DETAIL (FOOTING STEP) 6/S-9
SCALE : 3/4" = 1'-0"

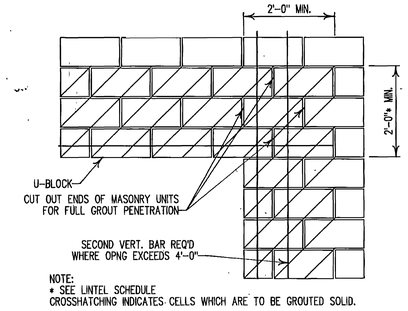


DETAIL (MASONRY LINTEL) 7/S-9
SCALE : 3/4" 1'-0"

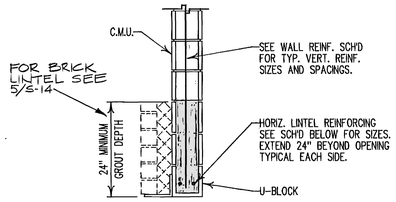


| CLEAR OPENING | C.M.U. REINF. |
|---|---|
| UP TO 7'-0" | (2) #4 BARS CONT. |
| 7'-1" TO 9'-0" | (2) #5 BARS CONT. |
| 9'-1" TO 12'-0" | (2) #6 BARS CONT. |
| 12'-1" TO 26'-0" | (2) #7 BARS CONT. |

DETAIL (LINTEL SCHEDULE) 8/S-9
SCALE : 3/4" = 1'-0"

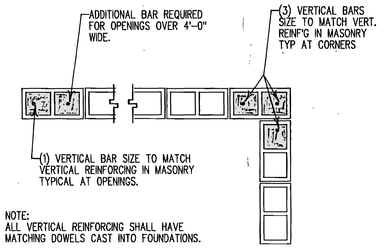


DETAIL (VERTICAL REINF.) 9/S-9
SCALE : 3/4" = 1'-0"

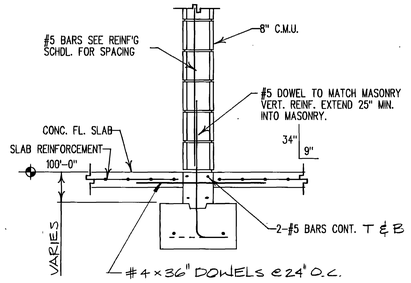


DETAIL (INTERIOR WALL) 10/S-9
SCALE : 3/4" = 1'-0"

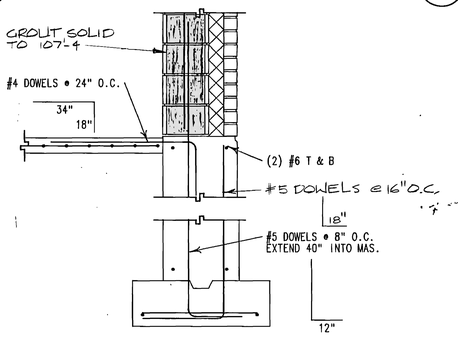


DETAIL (GYM. WALL 11/S-9
SCALE : 3/4" = 1'-0"

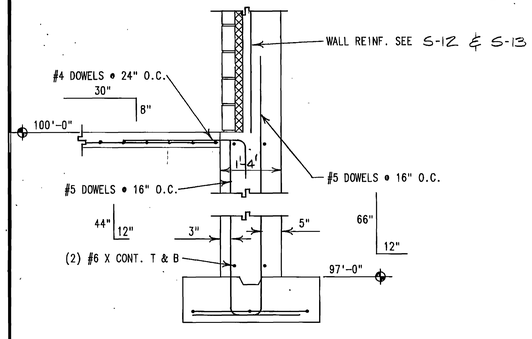


DETAIL (LINK SOUTH WALL) 12/S-9
SCALE : 3/4" = 1'-0"

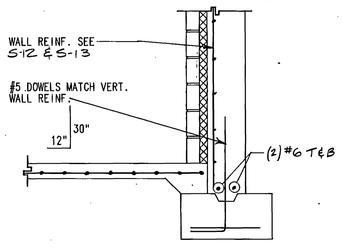


DETAIL (LINK SOUTH WALL) 13/S-9
SCALE : 3/4" = 1'-0"

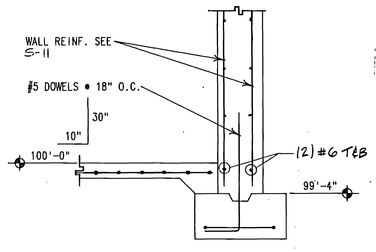


DETAIL (LINK NORTH WALL) 14/S-9
SCALE : 3/4" = 1'-0"

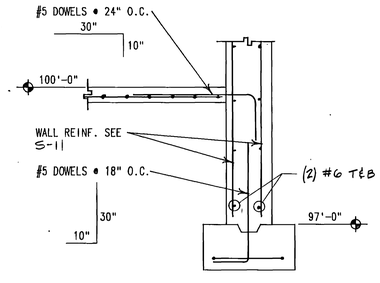


DETAIL (LINK NORTH WALL) 15/S-9
SCALE : 3/4" = 1'-0"

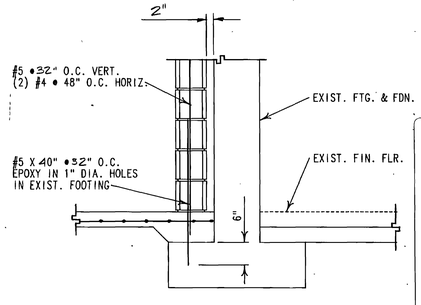


DETAIL (LINK EAST WALL) 16/S-9
SCALE : 3/4" = 1'-0"

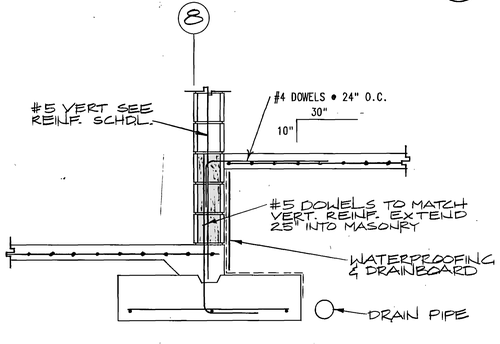


DETAIL 17/S-9
SCALE : 3/4" = 1'-0"

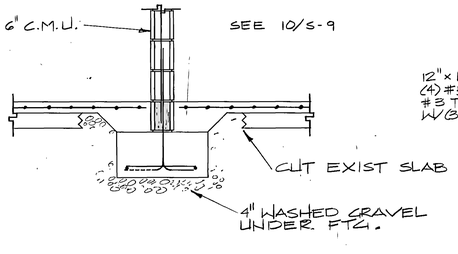


DETAIL (NEW WALL IN EXIST.) 18/S-9
SCALE : 3/4" = 1'-0"

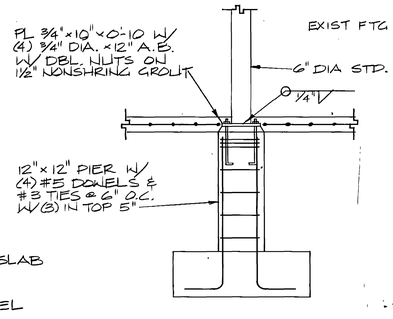


DETAIL (COL. TO PIER) 19/S-9
SCALE : 3/4" = 1'-0"

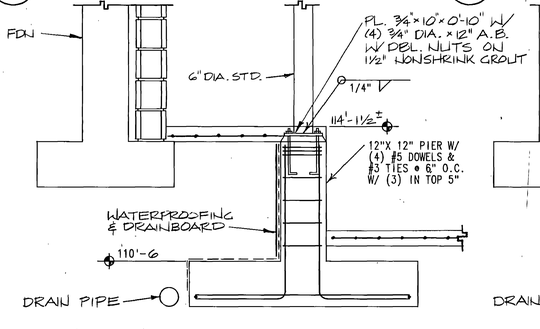


DETAIL (MECH. EAST WALL) 20/S-9
SCALE : 3/4" = 1'-0"

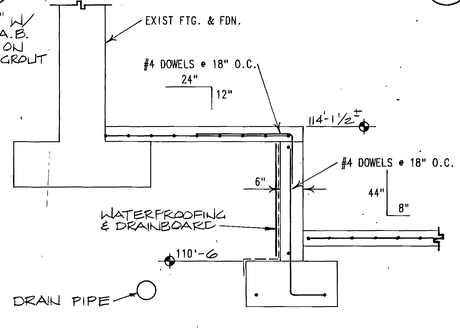


DETAIL (MECH. EAST WALL) 21/S-9
SCALE : 3/4" = 1'-0"

RECORD DRAWINGS JUN 20 1990
THESE DRAWINGS HAVE BEEN REVISED TO RECORD [illegible] SUBMITTED BY THE CONTRACTOR. THEY ARE ASSUMED TO BE REC[illegible] THE ARCHITECT DOES NOT GUARANTEE THEIR ACCURACY.

REGISTERED PROFESSIONAL ENGINEER O. KENT KIRKHAM 3669 STATE OF UTAH

ARAMBURU ENGINEERING
STRUCTURAL ENGINEERS
OGDEN UTAH
PHONE 621-8130

JONES / RICHARDS & ASSOCIATES
CONSTRUCTION MANAGEMENT
OGDEN UTAH
PLANNING 333 - 25TH STREET
ARCHITECTURE (801) 394-3333

REVISED: As Builts 6-90

PROJECT NUMBER: 8403
DATE: 9-21-88
DRAWN BY: S.D.K.

00071/S9
Weber State College, Physical Education Facility - RW-84-058
Foundation Sections & Details - 26116

PROJECT: PHYSICAL EDUCATION FACILITY
WEBER STATE COLLEGE
SHEET TITLE: FOUNDATION SECTIONS & DETAILS

SHEET NO. S-9

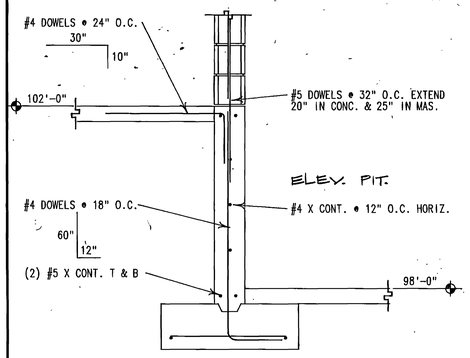


DETAIL (ELEV. PIT) 1 S-10
SCALE : 3/4" = 1'-0"

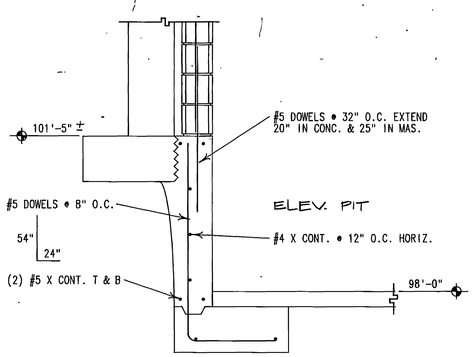


DETAIL (ELEV. PIT) 2 S-10
SCALE : 3/4" = 1'-0"

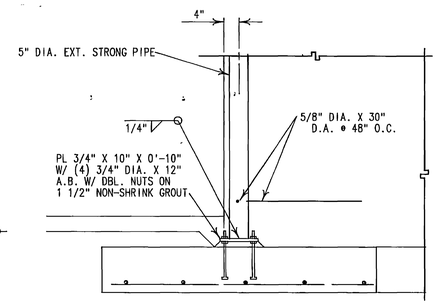


DETAIL (STL. COL. IN MASONRY) 3 S-10
SCALE : 3/4" = 1'-0"

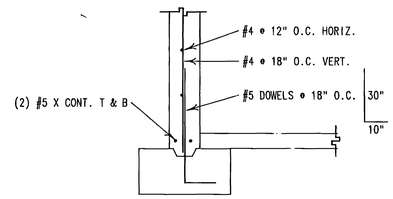


DETAIL 4 S-10
SCALE : 3/4" = 1'-0"

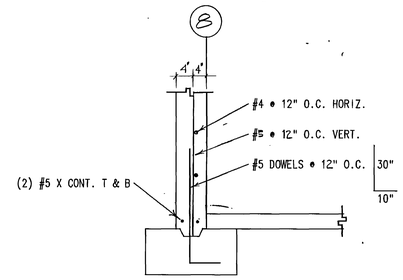


DETAIL (MECH. WEST WALL) 5 S-10
SCALE : 3/4" = 1'-0"

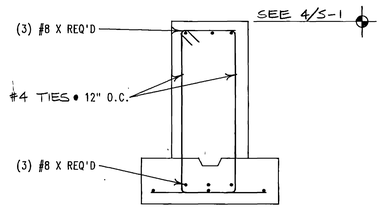


DETAIL (CORNER PIER GRADE BM) 6 S-10
SCALE : 3/4" = 1'-0"

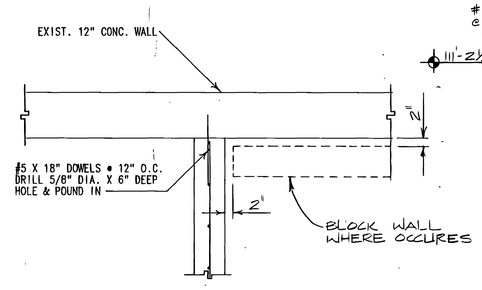


DETAIL (STAIRWELL TO EXIST.) 7 S-10
SCALE : 3/4" = 1'-0"

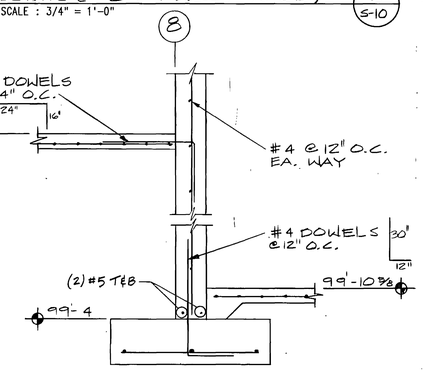


DETAIL (MECH. WEST WALL 8 S-10
SCALE : 3/4" = 1'-0"

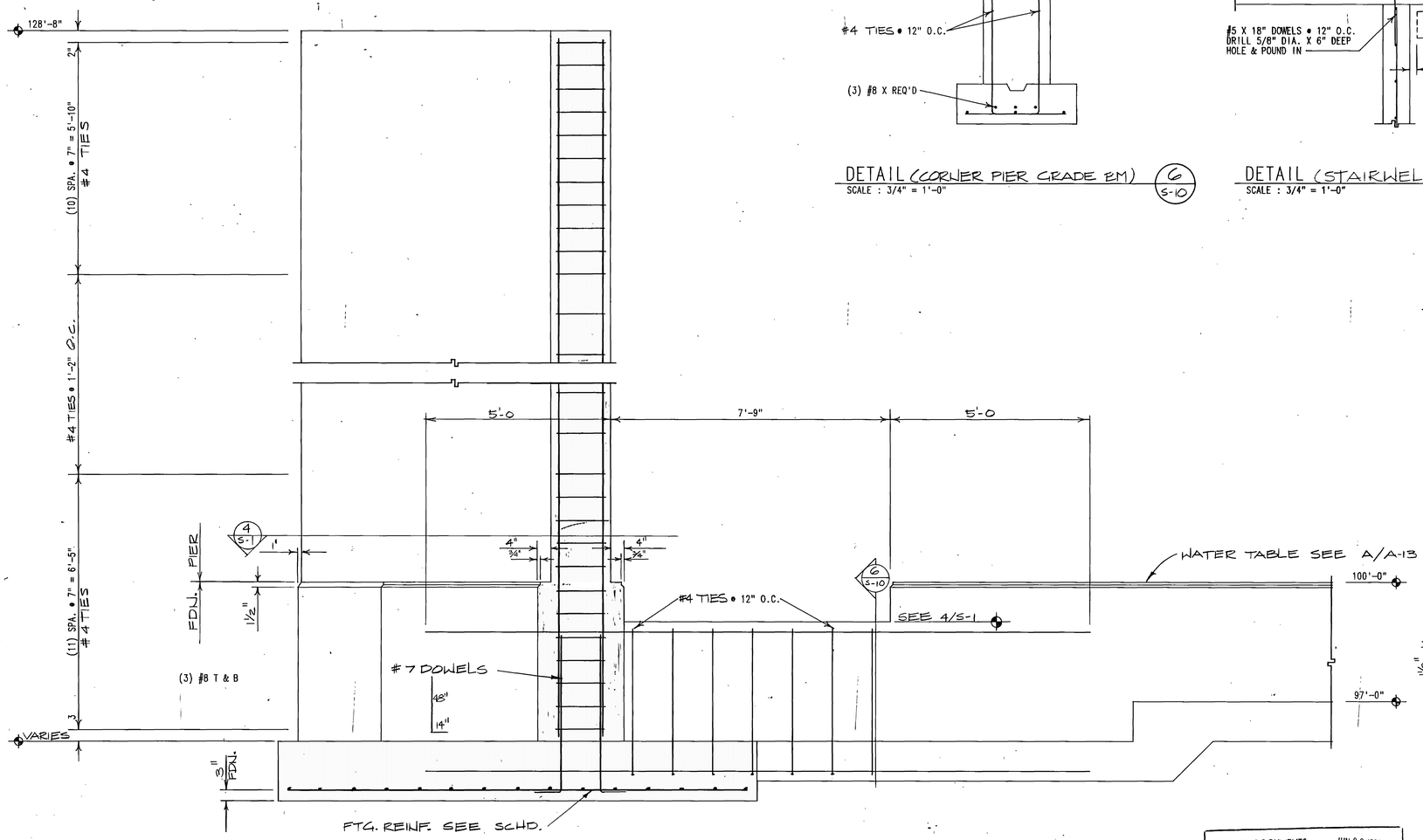


DETAIL (CORNER PIER) 9 S-10
SCALE : 3/4" = 1'-0"

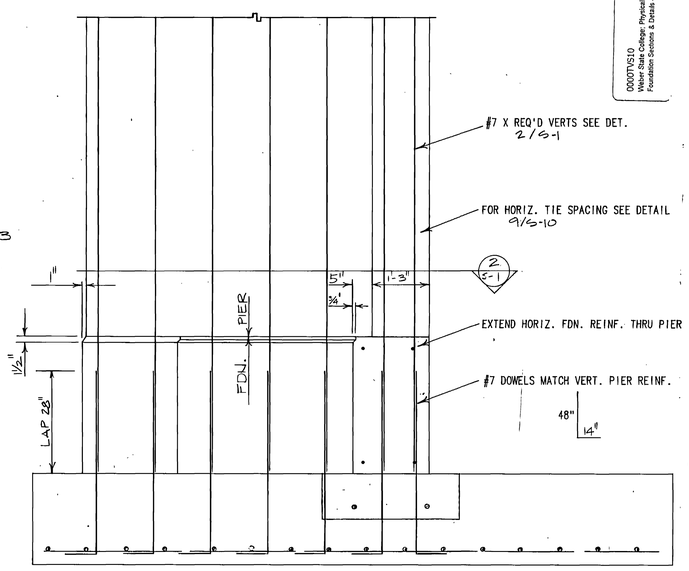


DETAIL (TYP. PIER) 10 S-10
SCALE : 3/4" = 1'-0"

RECORD DOCUMENTS JUN 20 1990
THESE DOCUMENTS HAVE BEEN REVISED TO RECORD INFORMATION SUBMITTED BY THE CONTRACTOR. WHERE THEY ARE ASSUMED TO BE RELIABLE THE ARCHITECT DOES NOT GUARANTEE THEIR ACCURACY.

0000TVS10
Weber State College: Physical Education Facility - RW 84-058
Foundation Sections & Details - 20717

O. KENT RICH, JR. REGISTERED PROFESSIONAL ENGINEER STATE OF UTAH

ABAMSON ENGINEERING
STRUCTURAL ENGINEERS
OGDEN UTAH
PHONE 621-8130

JONES / RICHARDS & ASSOCIATES
ARCHITECTURE (801) 394-3033
PLANNING 533 - 20TH STREET
CONSTRUCTION MANAGEMENT OGDEN, UTAH

REVISED: AS BUILTS 6-90
PROJECT NUMBER: 84.059
DATE: 6-21-88
DRAWN BY: S.D.K.

PROJECT: PHYSICAL EDUCATION FACILITY
- WEBER STATE COLLEGE -
SHEET TITLE: FOUNDATION SECTIONS & DETAILS

SHEET NO. S-10

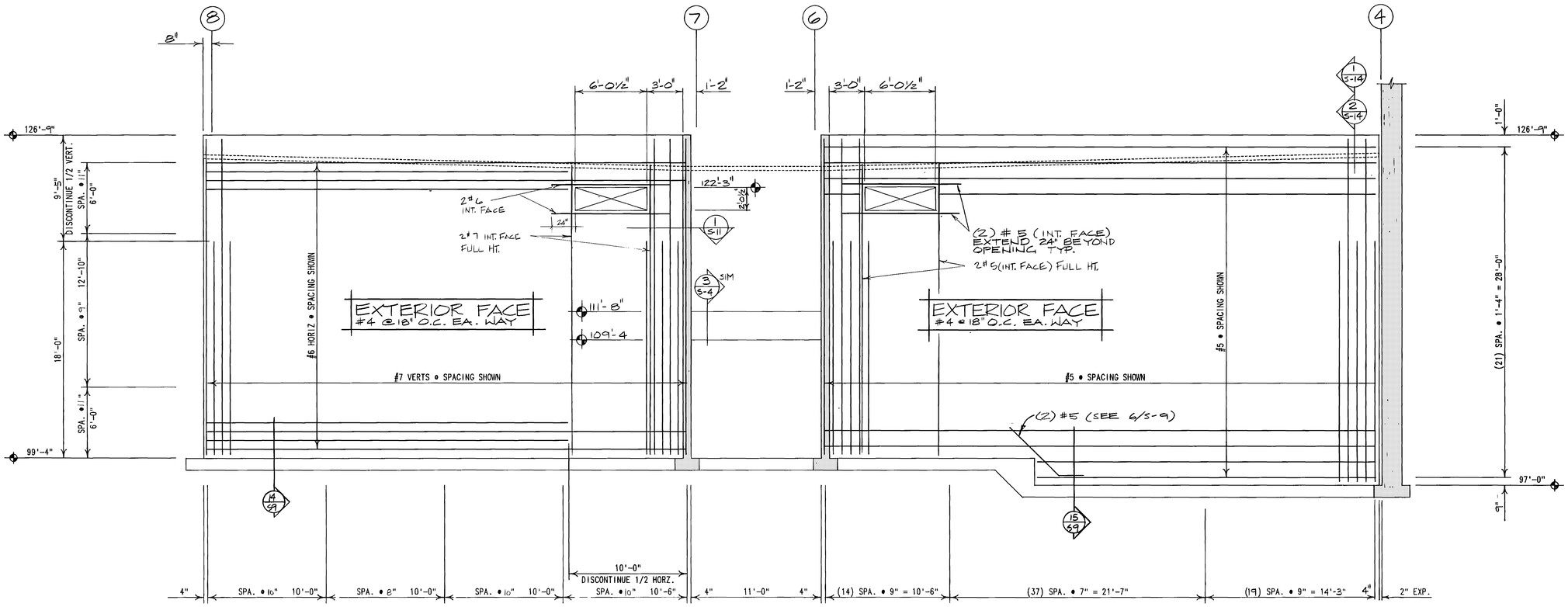


LINK BUILDING NORTH WALL REINFORCING (INTERIOR FACE)

SCALE : 1/4" = 1'-0"

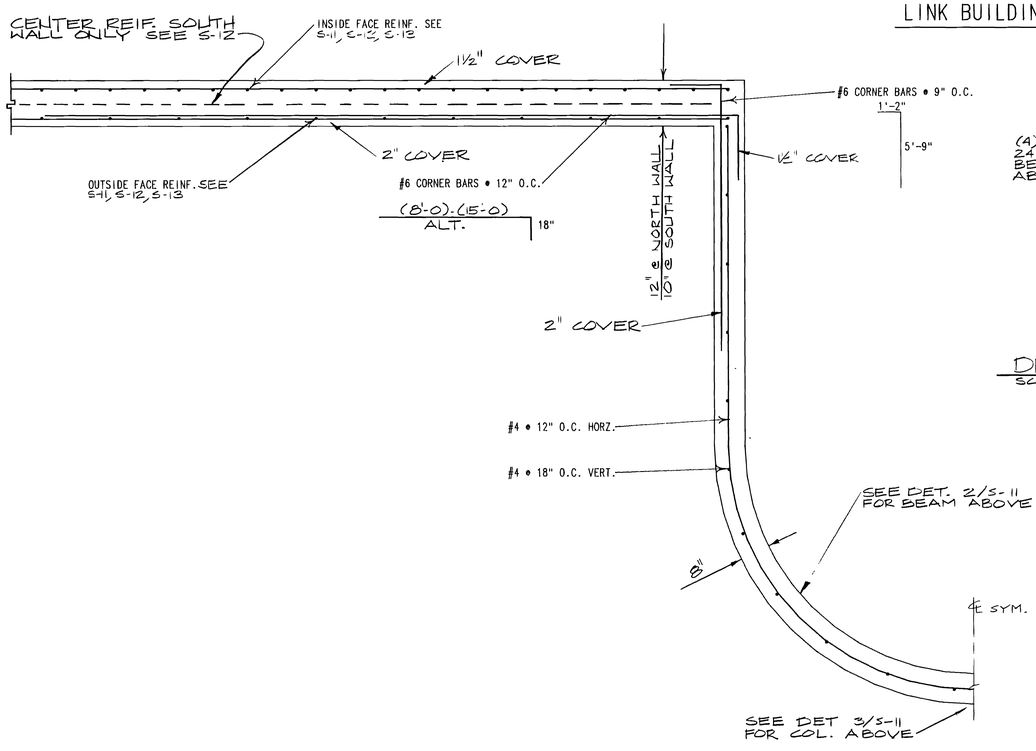


DETAIL (STAIRWELL REINF.) 1/S-11

SCALE : 3/4" = 1'-0"

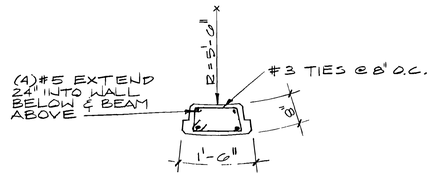


DETAIL (CONC. COL. @ STAIRWELL) 2/S-11

SCALE : 3/4" = 1'-0"

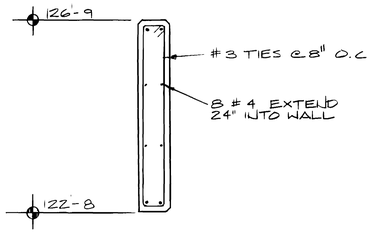


DETAIL (CONC BEAM @ STAIRWELL) 3/S-11

SCALE : 3/4" = 1'-0"

0000TVS11
Weber State College, Physical Education Facility - RW 84-058
Wall Elevations & Details - 26718

RECORD DOCUMENTS JUN 20 1990
THESE DOCUMENTS HAVE BEEN REVISED TO RECORD INFORMATION SUBMITTED BY THE CONTRACTOR, WHERE THEY ARE ASSUMED TO BE RELIABLE THE ARCHITECT DOES NOT GUARANTEE THEIR ACCURACY.

O. KENT RICH
No. 2-A
STATE OF UTAH
PROFESSIONAL STRUCTURAL ENGINEER

ADAMSON ENGINEERING
STRUCTURAL ENGINEERS
OGDEN UTAH
PHONE 621-8130

jrA JONES / RICHARDS & ASSOCIATES
ARCHITECTURE (801) 394-3333
PLANNING 533 - 26TH STREET
CONSTRUCTION MANAGEMENT OGDEN, UTAH

REVISED: As Builts 6-90
PROJECT NUMBER: 9409
DATE: 8-31-88
DRAWN BY: S.D.K.

PROJECT: PHYSICAL EDUCATION FACILITY
WEBER STATE COLLEGE
SHEET TITLE: WALL ELEVATIONS & DETAILS

SHEET NO. S-11

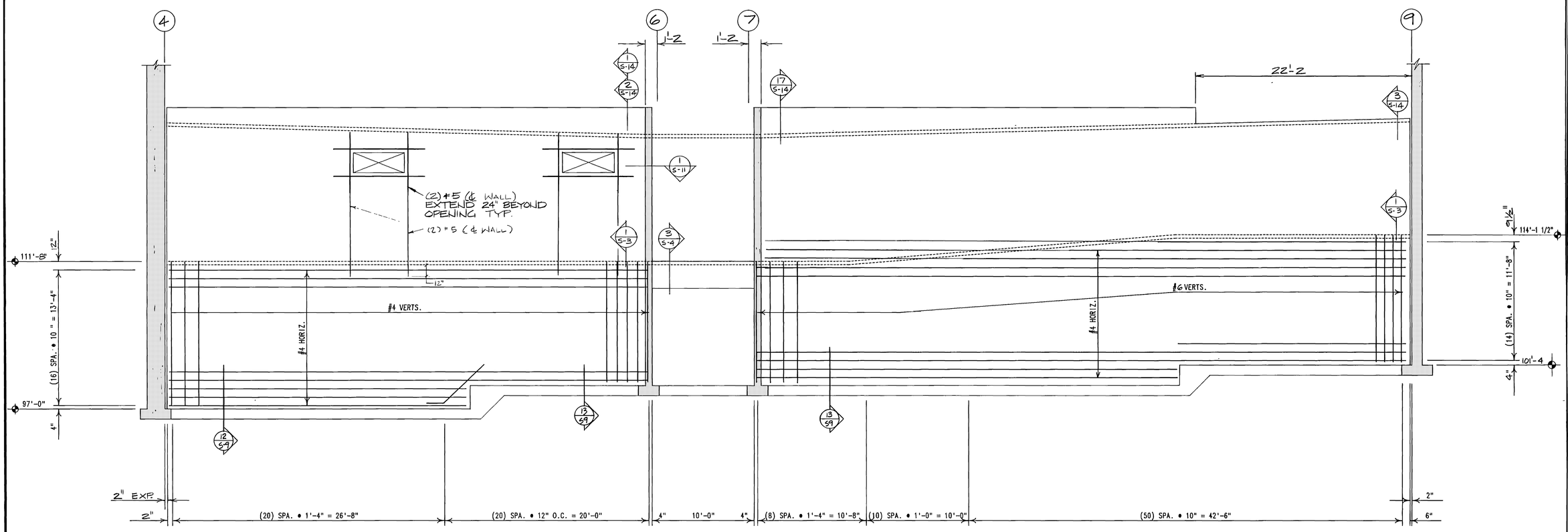


LINK BUILDING SOUTH WALL REINFORCING (INTERIOR FACE)

SCALE : 1/4" = 1'-0"

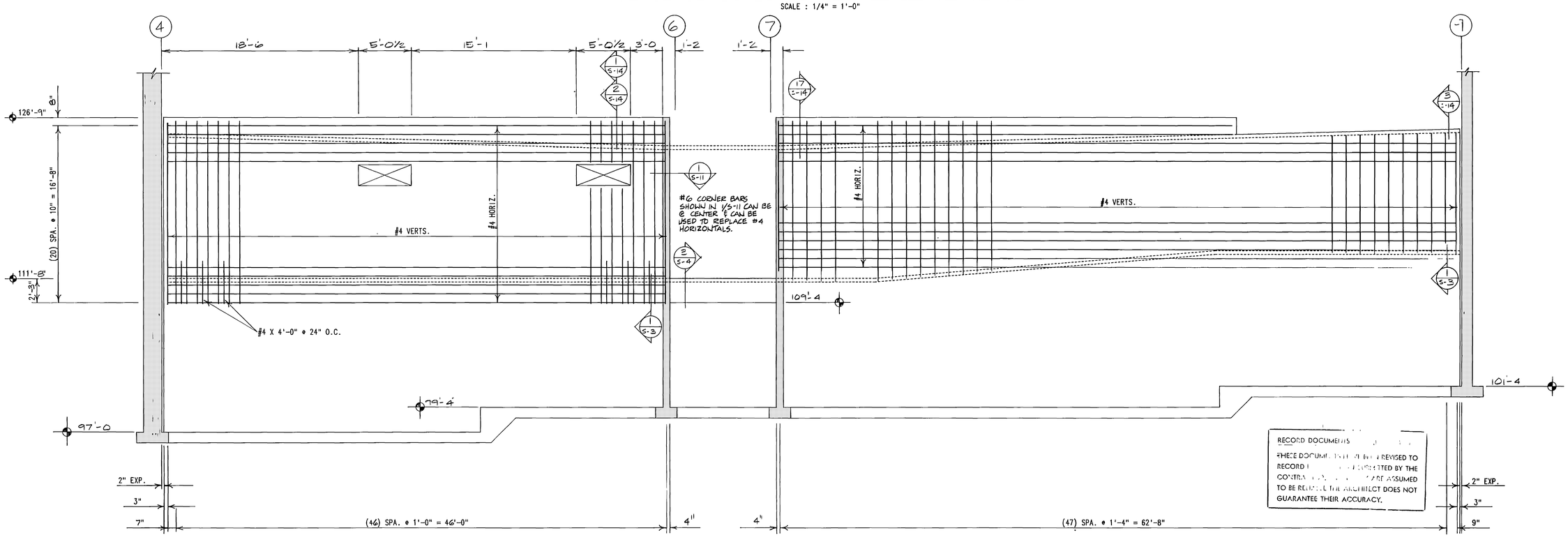


RECORD DOCUMENTS

THESE DOCUMENTS HAVE NOT BEEN REVISED TO RECORD INFORMATION SUBMITTED BY THE CONSTRUCTION MANAGER OR ASSUMED TO BE REQUIRED. THE ARCHITECT DOES NOT GUARANTEE THEIR ACCURACY.

LINK BUILDING SOUTH WALL REINFORCING (CENTER REINFORCING)

SCALE : 1/4" = 1'-0"

00007/S12
Weber State College, Physical Education Facility - RW 86-268
Wall Elevations - 28/19

REGISTERED PROFESSIONAL ENGINEER
O. KENT RICHARDS
No. 2334
STATE OF UTAH

ADAMSON ENGINEERING
STRUCTURAL ENGINEERS
OGDEN UTAH
PHONE 621-8130

jrq JONES / RICHARDS & ASSOCIATES
ARCHITECTURE (801) 394-3333
PLANNING 533-26TH STREET
CONSTRUCTION MANAGEMENT OGDEN, UTAH

REVISED: As Builts 6-90

PROJECT NUMBER: 8403

DATE: 6-21-28

DRAWN BY: S.D.K.

PROJECT: PHYSICAL EDUCATION FACILITY
WEBER STATE COLLEGE

SHEET TITLE: WALL ELEVATIONS

SHEET NO. S-12

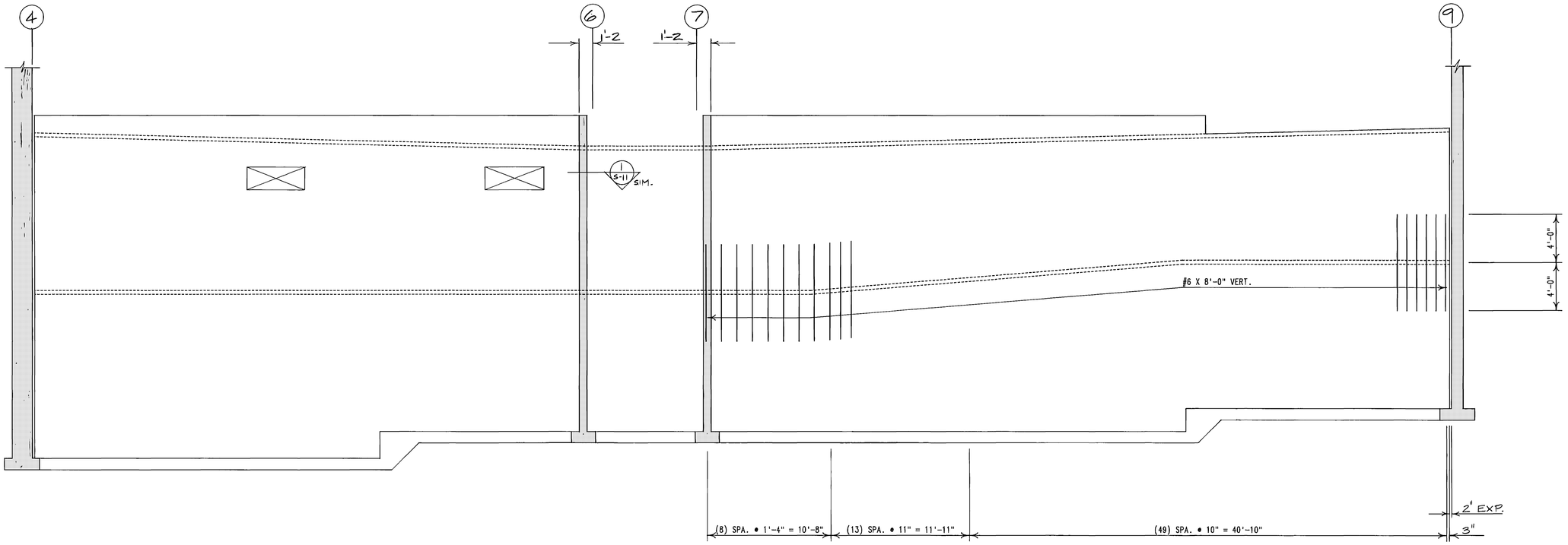


LINK BUILDING SOUTH WALL REINFORCING (EXTERIOR FACE)

SCALE : 1/4" = 1'-0"

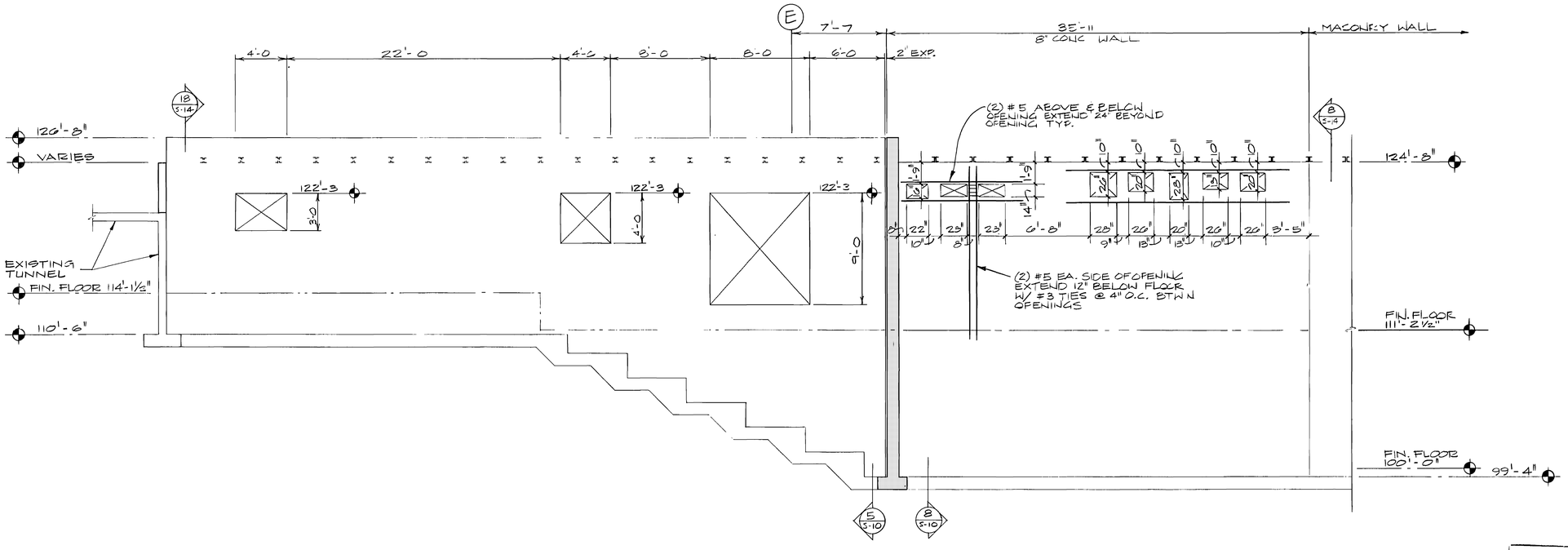


LINK BUILDING EAST WALL @ GRID 8

SCALE : 1/4" = 1'-0"

RECORD DOCUMENTS JUN 20 1999

THESE DOCUMENTS HAVE BEEN REVISED TO RECORD INFORMATION SUBMITTED BY THE CONTRACTOR. [illegible] ARE ASSUMED TO BE RELIABLE THE ARCHITECT DOES NOT GUARANTEE THEIR ACCURACY.

00001\S13
Weber State College, Physical Education Facility - RW 84-058
Wall Elevations & Details - 28720

REGISTERED PROFESSIONAL ENGINEER
O. KENT RICH.

ADAMSON ENGINEERING
STRUCTURAL ENGINEERS
OGDEN UTAH
PHONE 621-8130

jra JONES / RICHARDS & ASSOCIATES
ARCHITECTURE (801) 394-3033
PLANNING 533 - 26TH STREET
CONSTRUCTION MANAGEMENT OGDEN, UTAH

REVISED: As BUILTS 6-90

PROJECT NUMBER: 84C3

DATE: 6-21-88

DRAWN BY: S.D.K.

PROJECT: PHYSICAL EDUCATION FACILITY
WEBER STATE COLLEGE

SHEET TITLE: WALL ELEVATIONS & DETAILS

SHEET NO. S-13

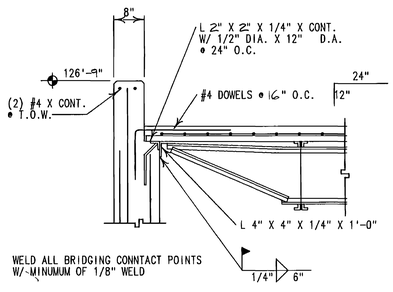


DETAIL (BRIDGING ANCHOR) 1 S-14
SCALE : 3/4" = 1'-0"

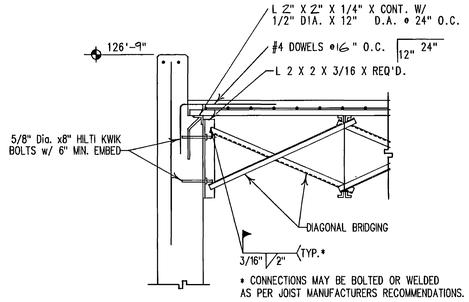


DETAIL (BRIDGING ANCHOR) 2 S-14
SCALE : 3/4" = 1'-0"

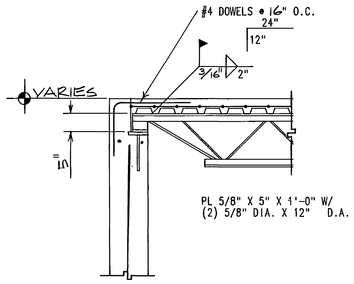


DETAIL (JOIST TO WALL) 3 S-14
SCALE : 3/4" = 1'-0"

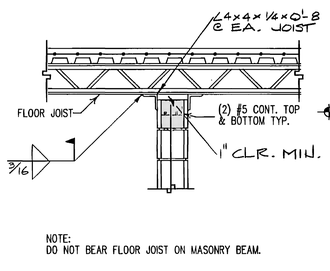


DETAIL (JOIST OVER WALL) 4 S-14
SCALE : 3/4" = 1'-0"

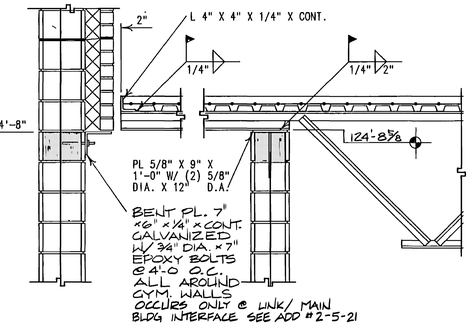


DETAIL (JOIST TO WALL) 5 S-14
SCALE : 3/4" = 1'-0"

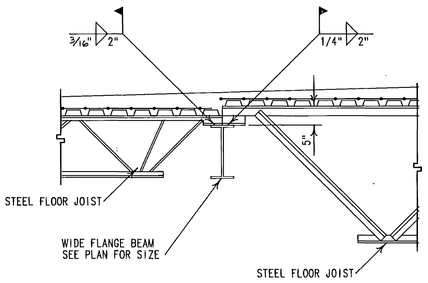


DETAIL (JOIST TO BEAM) 6 S-14
SCALE : 3/4" = 1'-0"

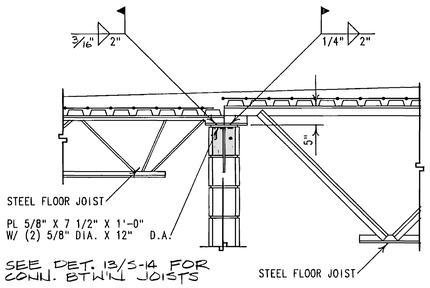


DETAIL (JOIST TO WALL) 7 S-14
SCALE : 3/4" = 1'-0"

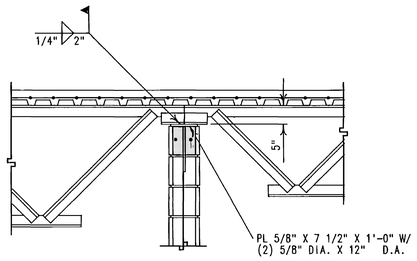


DETAIL (JOIST TO WALL) 8 S-14
SCALE : 3/4" = 1'-0"

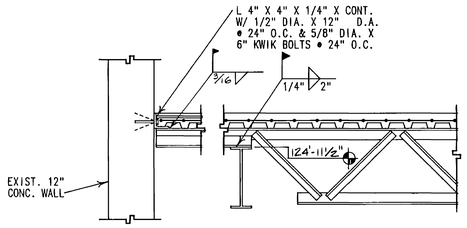


DETAIL (JOIST TO BEAM) 9 S-14
SCALE : 3/4" = 1'-0"

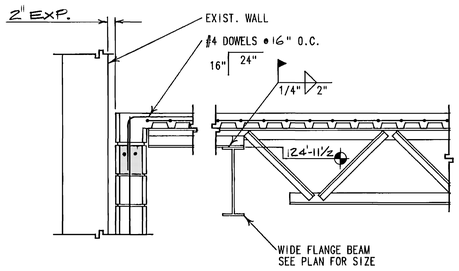


DETAIL (JOIST TO BEAM) 10 S-14
SCALE : 3/4" = 1'-0"

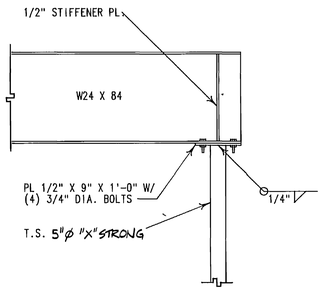


DETAIL (BEAM TO COL.) 11 S-14
SCALE : 3/4" = 1'-0"

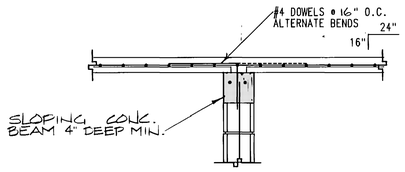


DETAIL (DECK TO WALL) 12 S-14
SCALE : 3/4" = 1'-0"

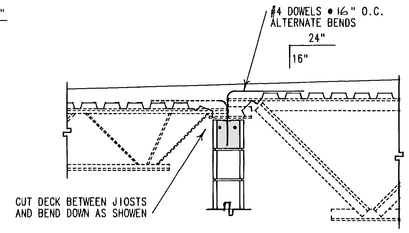


DETAIL (FLOOR SLAB TO WALL) 13 S-14
SCALE : 3/4" = 1'-0"

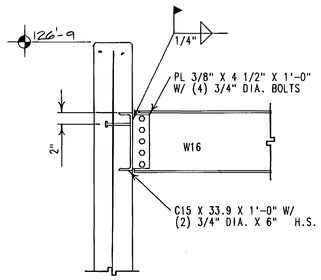


DETAIL (BEAM TO WALL) 14 S-14
SCALE : 3/4" = 1'-0"

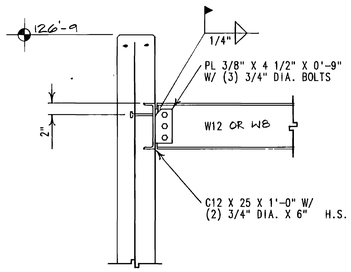


DETAIL (BEAM TO WALL) 15 S-14
SCALE : 3/4" = 1'-0"

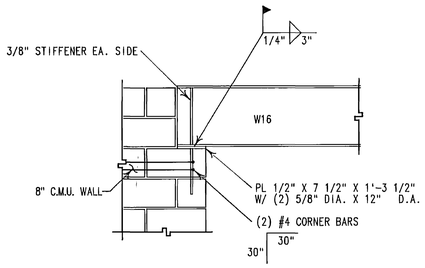


DETAIL (BEAM TO WALL) 16 S-14
SCALE : 3/4" = 1'-0"

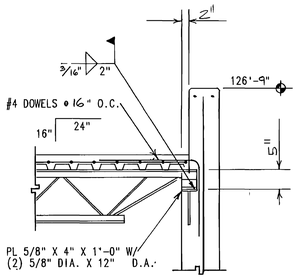


DETAIL (JOIST TO WALL) 17 S-14
SCALE : 3/4" = 1'-0"

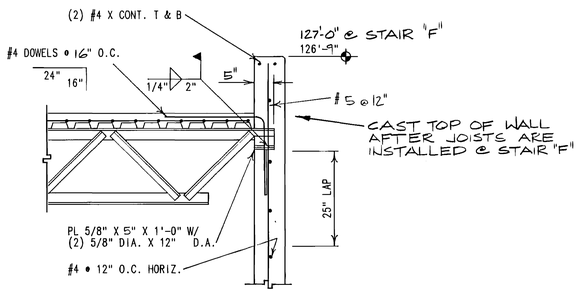


DETAIL (JOIST TO WALL) 18 S-14
SCALE : 3/4" = 1'-0"

00007/S14
Weber State College, Physcal Education Facility - RW 84-058
Structural Details - 29721

RECORD DOCUMENTS JUN [illegible]
THE [illegible] DOCUMENTS HAVE BEEN REVISED TO RECORD [illegible] INFORMATION SUBMITTED BY THE CONTRACTOR. [illegible] THEY ARE ASSUMED TO BE RELIABLE. THE ARCHITECT DOES NOT GUARANTEE THEIR ACCURACY.


ADAMSON ENGINEERING
STRUCTURAL ENGINEERS
OGDEN UTAH
PHONE 621-8130

jrA JONES / RICHARDS & ASSOCIATES
ARCHITECTURE PLANNING CONSTRUCTION MANAGEMENT
801/393-8123 533 - 25TH STREET OGDEN, UTAH


REVISED: AS BUILTS 6-30
PROJECT NUMBER: 8403.
DATE: 6-21-85
DRAWN BY: S.D.K.

PROJECT: PHYSICAL EDUCATION FACILITY
WEBER STATE COLLEGE
SHEET TITLE: STRUCTURAL DETAILS

SHEET NO. S-14

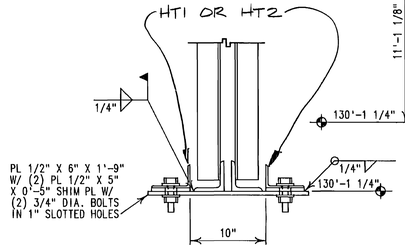


DETAIL (HORIZ. TRUSS TO JOIST) 1 S-15
SCALE : 1 1/2" = 1'-0"

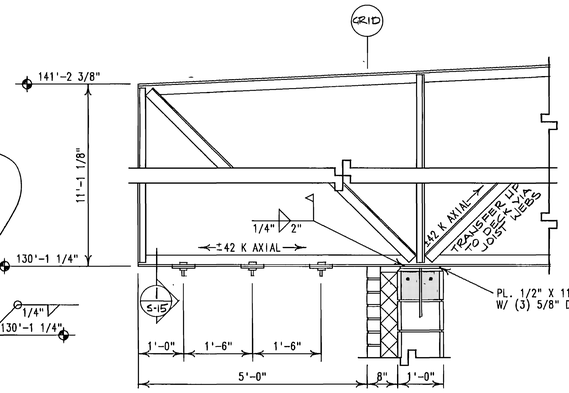


DETAIL (JOIST TO WALL 2 S-15
SCALE : 3/4" = 1'-0"

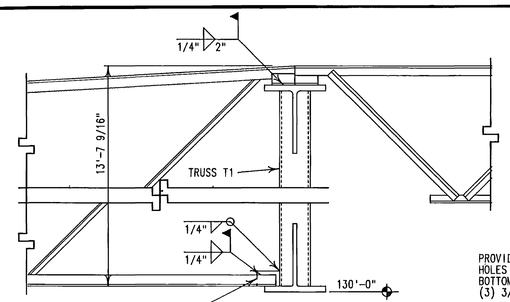


SEE ADD #1 - PG3 - ITEM #22 & DWG ADD-4

DETAIL (DEEP JOIST TO TRUSS) 3 S-15
SCALE : 3/4" = 1'-0"

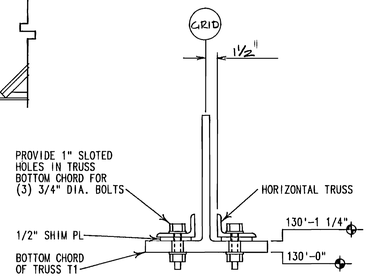


DETAIL (HORIZ. TRUSS TO MAIN TRUSS) 4 S-15
SCALE : 1 1/2" = 1'-0"

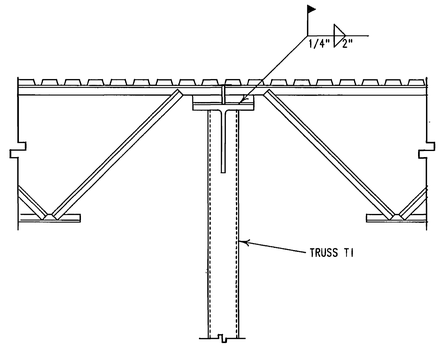


DETAIL (JOIST TO TRUSS) 5 S-15
SCALE : 3/4" = 1'-0"

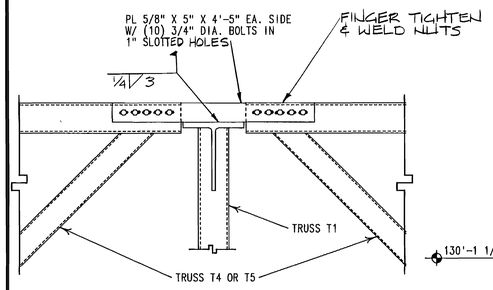


DETAIL (WALL TRUSS TO MAIN TRUSS) 6 S-15
SCALE : 3/4" = 1'-0"

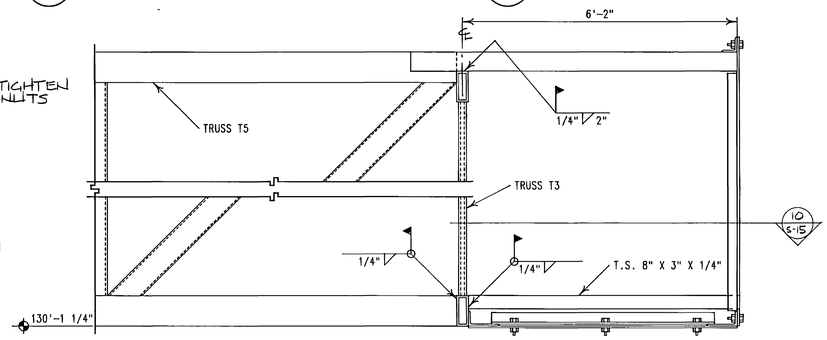


DETAIL (WALL TRUSS @ CORNER 7 S-15
SCALE : 3/4" = 1'-0"

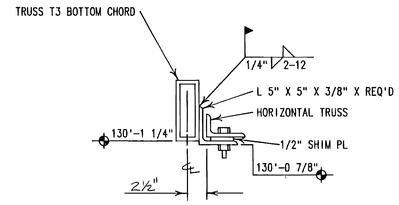


DETAIL A S-15

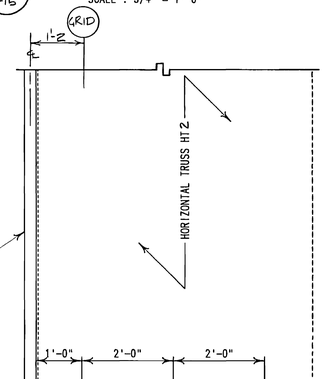


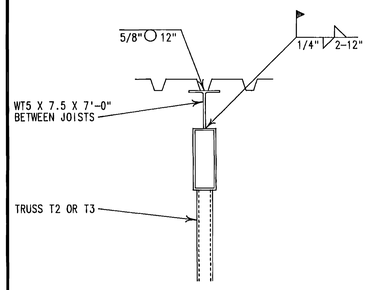


DETAIL (ROOF DECK TO WALL TRUSS) 8 S-15
SCALE : 1 1/2" = 1'-0"

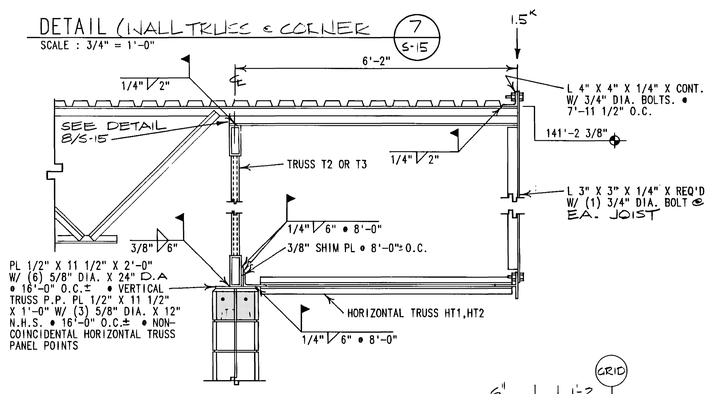


DETAIL (END WALL @ ROOF) 9 S-15
SCALE : 3/4" = 1'-0"

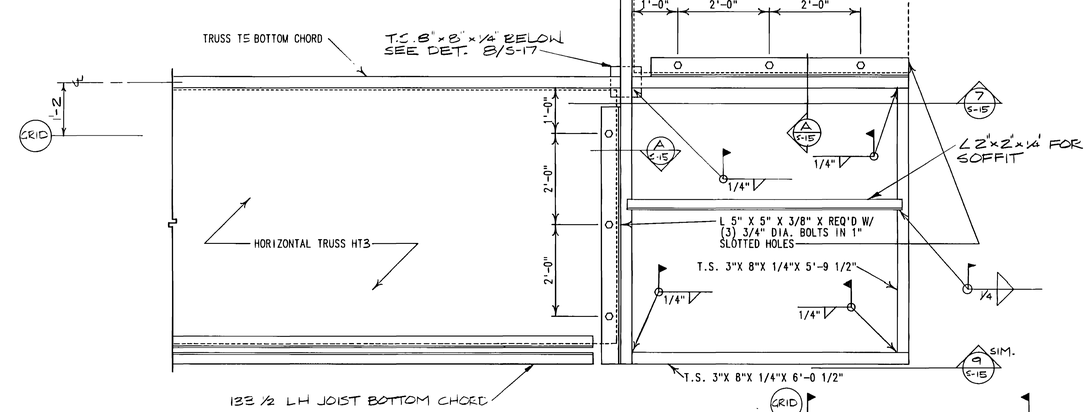


DETAIL (HORIZ. TRUSS @ CORNER) 10 S-15
SCALE : 3/4" = 1'-0"

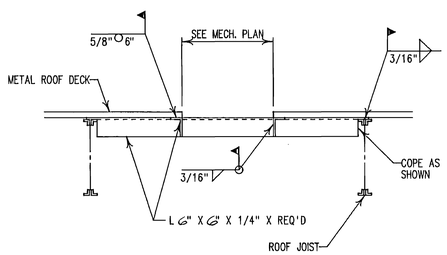


DETAIL (ROOF HATCH OPENING) 11 S-15
SCALE : 3/4" = 1'-0"

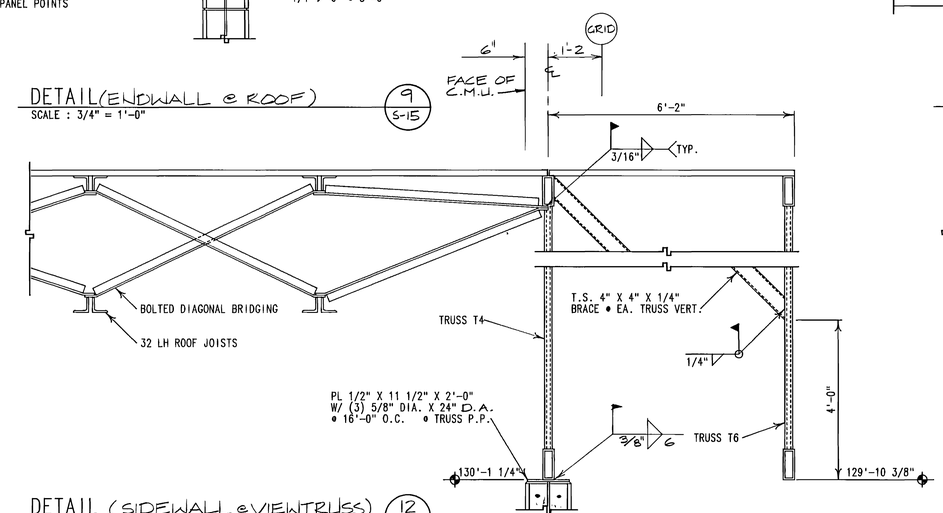


DETAIL (SIDEWALL @ VIEW TRUSS) 12 S-15
SCALE : 3/4" = 1'-0"

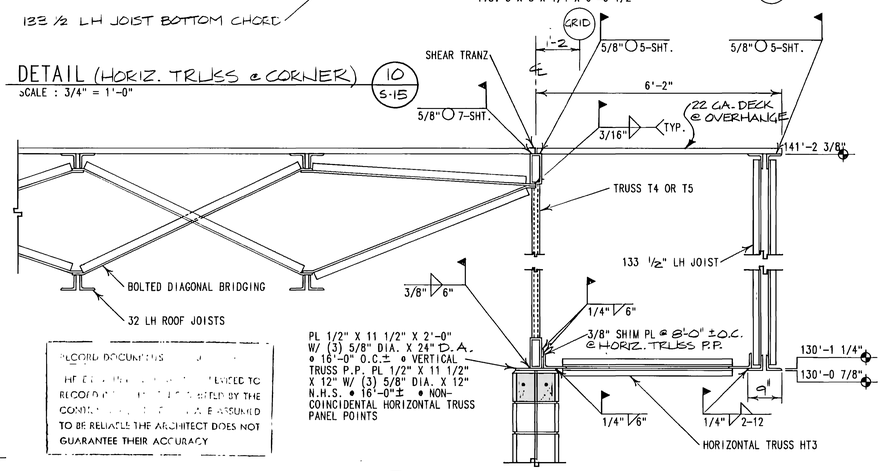


DETAIL (SIDEWALL @ ROOF) 13 S-15
SCALE : 3/4" = 1'-0"

RECORD DOCUMENTS
THE [illegible] REVISED TO RECORD [illegible] BY THE CONTR[illegible] BE ASSUMED TO BE RELIABLE. THE ARCHITECT DOES NOT GUARANTEE THEIR ACCURACY

0000TVS15
Weber State College, Physical Education Facility - RW 84-058
Truss Details - 26722

O. KENT RICH
STATE OF UTAH
PROFESSIONAL ENGINEER

ADAMSEN ENGINEERING
STRUCTURAL ENGINEERS
OGDEN UTAH
PHONE 621-8130

JONES / RICHARDS & ASSOCIATES
ARCHITECTURE (801) 394-3023
PLANNING 333-26TH STREET
CONSTRUCTION MANAGEMENT OGDEN, UTAH

REVISED: As Built 6-90
PROJECT NUMBER: 8403
DATE: 6-21-88
DRAWN BY: S.D.K.

PROJECT: PHYSICAL EDUCATION FACILITY
WEBER STATE COLLEGE
SHEET TITLE: TRUSS DETAILS

SHEET NO. S-15

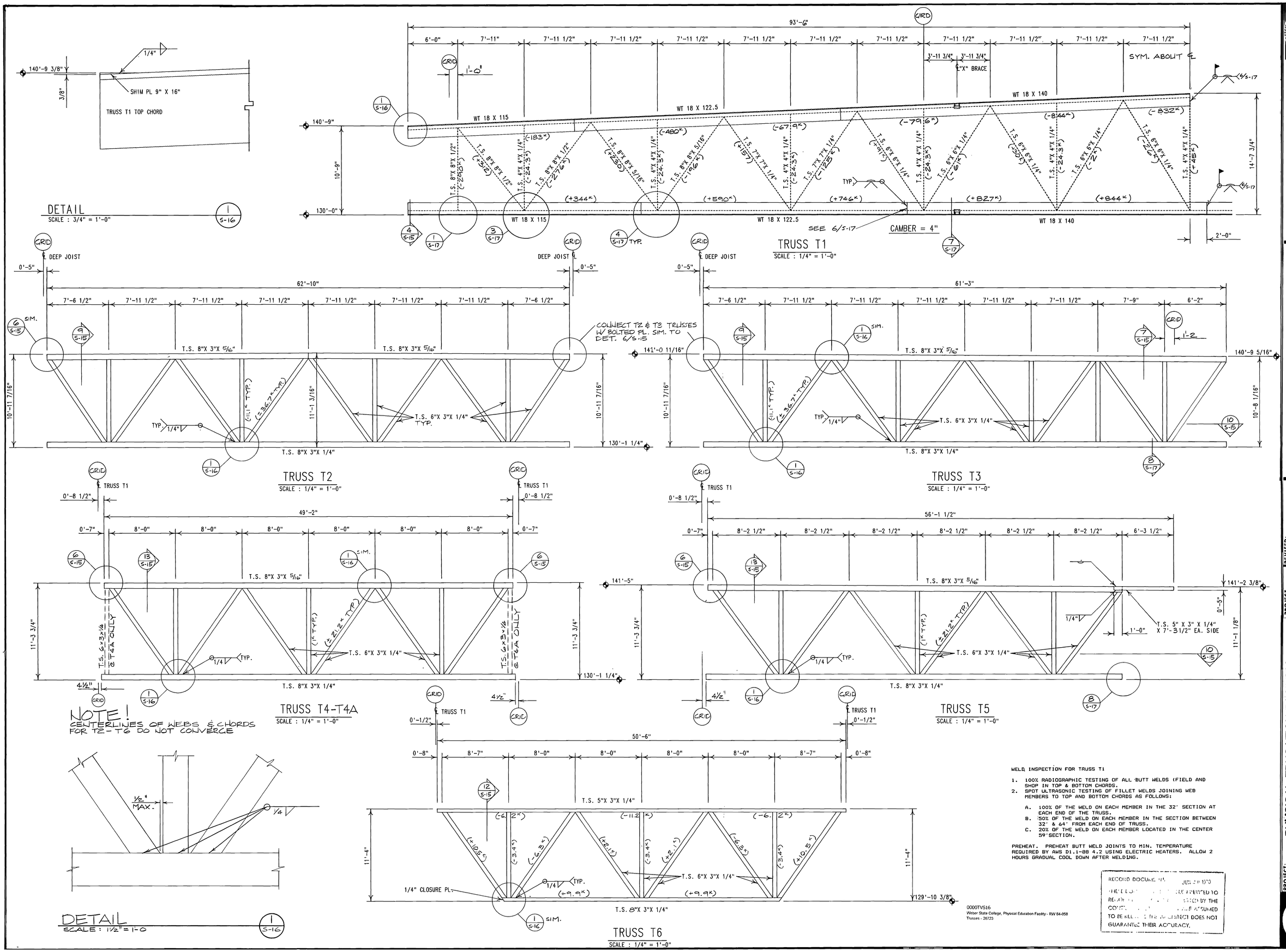


WELD INSPECTION FOR TRUSS T1

1. 100% RADIOGRAPHIC TESTING OF ALL BUTT WELDS (FIELD AND SHOP IN TOP & BOTTOM CHORDS.
2. SPOT ULTRASONIC TESTING OF FILLET WELDS JOINING WEB MEMBERS TO TOP AND BOTTOM CHORDS AS FOLLOWS:
   A. 100% OF THE WELD ON EACH MEMBER IN THE 32' SECTION AT EACH END OF THE TRUSS.
   B. 50% OF THE WELD ON EACH MEMBER IN THE SECTION BETWEEN 32' & 64' FROM EACH END OF TRUSS.
   C. 20% OF THE WELD ON EACH MEMBER LOCATED IN THE CENTER 59' SECTION.

PREHEAT. PREHEAT BUTT WELD JOINTS TO MIN. TEMPERATURE REQUIRED BY AWS D1.1-88 4.2 USING ELECTRIC HEATERS. ALLOW 2 HOURS GRADUAL COOL DOWN AFTER WELDING.

RECORD DOCUMENT JUN 20 1990
THIS DRAWING HAS BEEN REVIEWED TO RECORD THE [illegible] MADE BY THE CONTRACTOR [illegible] ARE ASSUMED TO BE [illegible] THE ARCHITECT DOES NOT GUARANTEE THEIR ACCURACY.

0000TVS16
Weber State College, Physical Education Facility - RW 84-058
Trusses - 26723


PROFESSIONAL ENGINEER O. KENT ROSS 3360 STATE OF UTAH
ADAMSEN ENGINEERING
STRUCTURAL ENGINEERS
OGDEN UTAH
PHONE 621-8130
jra JONES / RICHARDS & ASSOCIATES
ARCHITECTURE
1001 25TH ST.
PLANNING
533 25TH STREET
CONSTRUCTION MANAGEMENT
OGDEN, UTAH


REVISED: AS BUILTS 6-90
PROJECT NUMBER: 8405
DATE: 3-21-88
DRAWN BY: S.D.K.

PROJECT: PHYSICAL EDUCATION FACILITY
WEBER STATE COLLEGE
SHEET TITLE: TRUSSES

SHEET NO. S-16

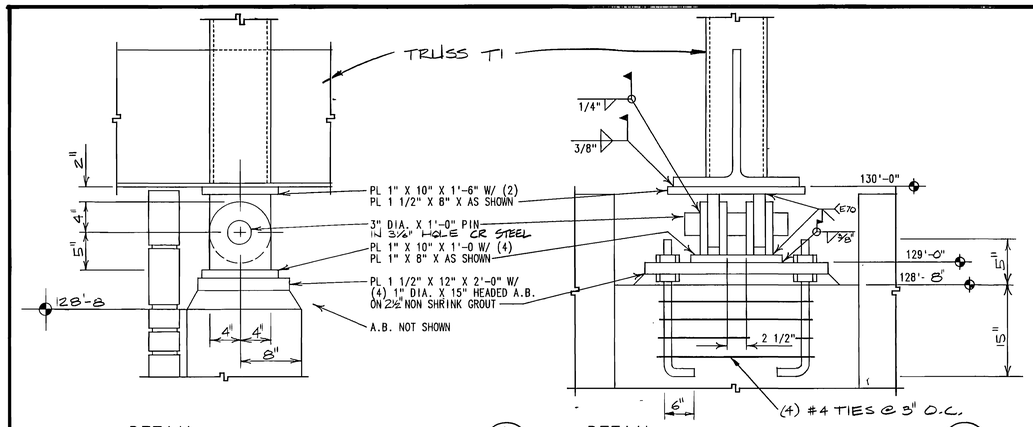


DETAIL 1/S-17
SCALE : 1 1/2" = 1'-0"

DETAIL 2/S-17
SCALE : 1 1/2" = 1'-0"

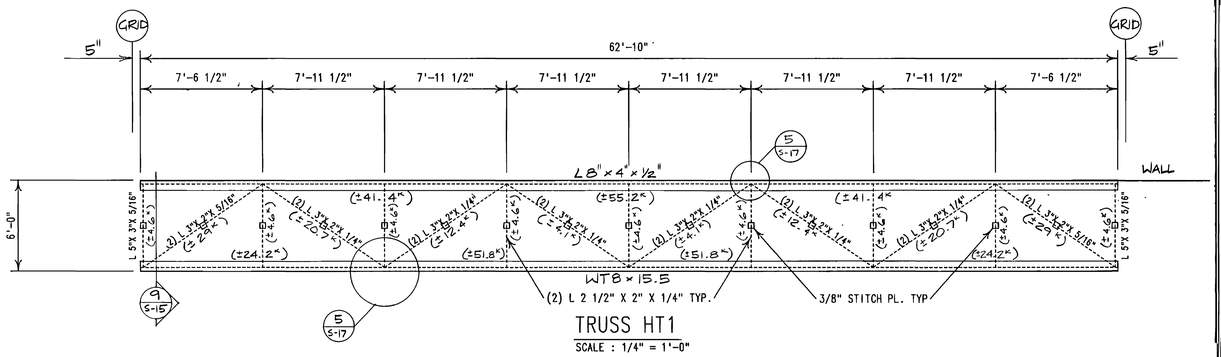


TRUSS HT1
SCALE : 1/4" = 1'-0"

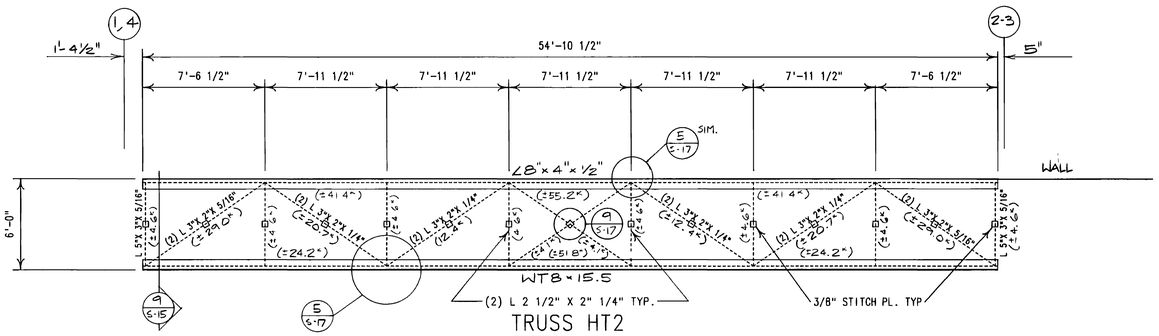


TRUSS HT2
SCALE : 1/4" = 1'-0"

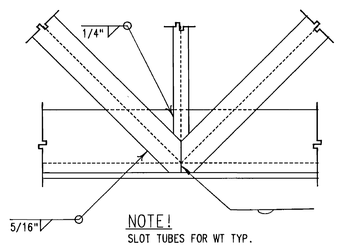


NOTE!
SLOT TUBES FOR WT TYP.

DETAIL (TRUSS T1 CONNECTION) 3/S-17
SCALE : 3/4" = 1'-0"

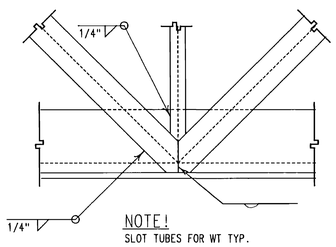


NOTE!
SLOT TUBES FOR WT TYP.

DETAIL (TRUSS T1 CONNECTION) 4/S-17
SCALE : 3/4" = 1'-0"

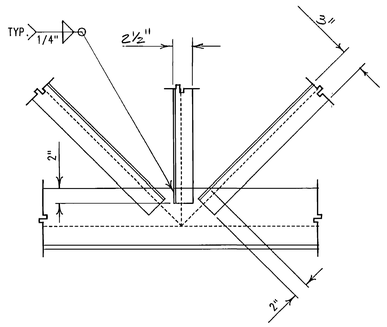


DETAIL (HT1, HT2, HT3 CONNECTION) 5/S-17
SCALE : 1 1/2" = 1'-0"

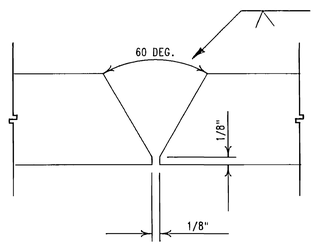


DETAIL (TRUSS T1 WELDED SPLICE) 6/S-17
SCALE : 1" = 1"

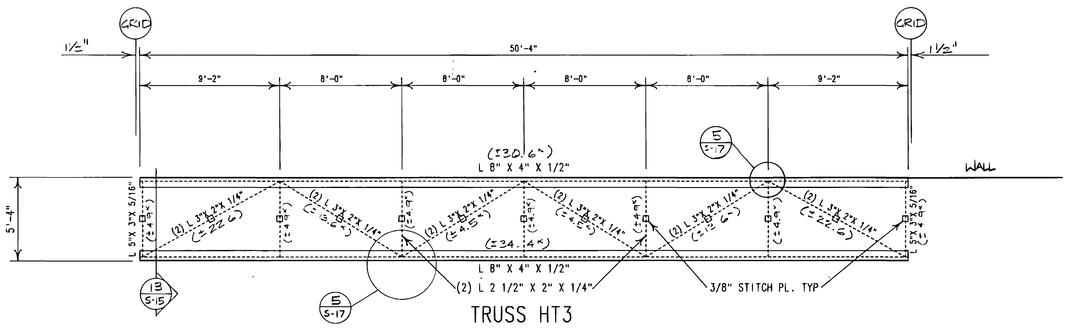


TRUSS HT3
SCALE : 1/4" = 1'-0"

NOTE!
DBL. ∠s LONG LEGS BACK TO BACK

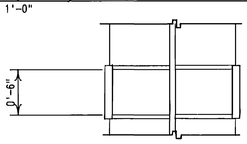


TOP VIEW

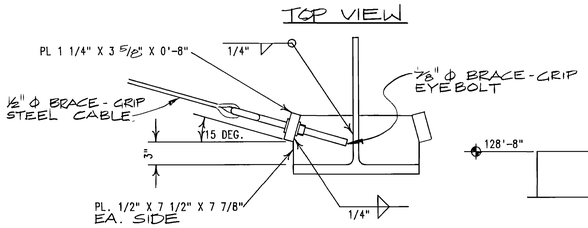


DETAIL (CABLE "X" BRACE CONN. 7/S-17
SCALE : 1 1/2" = 1'-0"

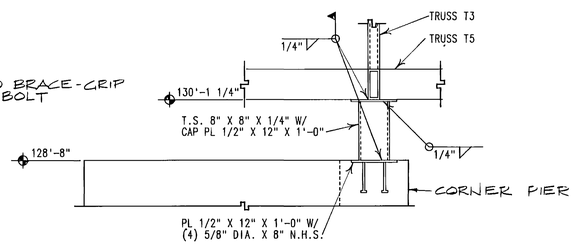


DETAIL (CORNER PIER COL. 8/S-17
SCALE : 3/4" = 1'-0"

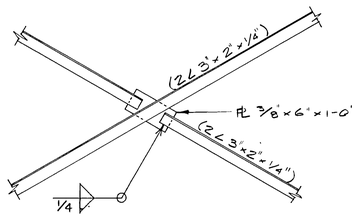


DETAIL 9/S-17
SCALE : 3/4" = 1'-0

NOT APPROVED FOR CONSTRUCTION
DATE
BY
CITY
TO ENGINEER
SIGNATURE: ENGINEER AS REQUIRED

CCCOTVS17
Weber State College, Physical Education Facility - RW 84-058
Trusses & Details - 29724

PROFESSIONAL ENGINEER
O. KENT
STATE OF UTAH
REGISTERED
ADAMSON ENGINEERING
STRUCTURAL ENGINEERS
OGDEN UTAH
PHONE 621-8130
jrq JONES / RICHARDS & ASSOCIATES
ARCHITECTURE CONSTRUCTION MANAGEMENT
OGDEN, UTAH
PLANNING
533 25TH STREET

REVISED: AS BUILTS 6-90
PROJECT NUMBER: 8403
DATE: 6-21-85
DRAWN BY: S.D.K.

PROJECT: PHYSICAL EDUCATION FACILITY
WEBER STATE COLLEGE

SHEET TITLE: TRUSSES & DETAILS

SHEET NO. S-17

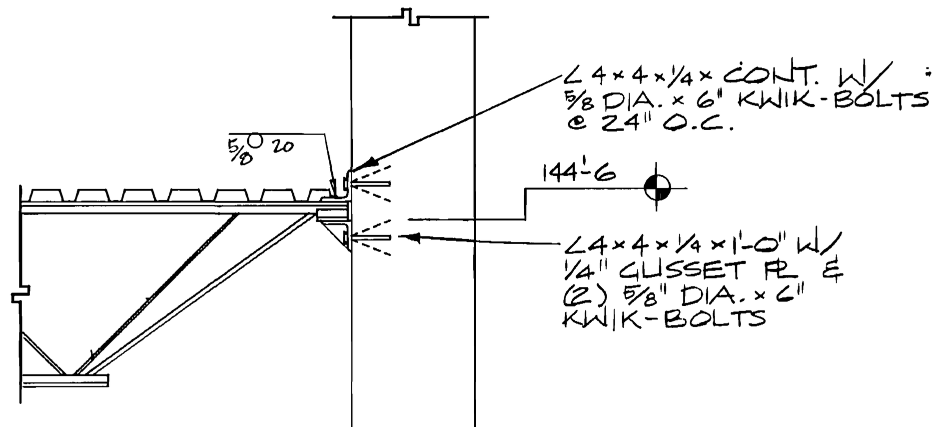


DETAIL 1/S-18
SCALE : 3/4" = 1'-0"

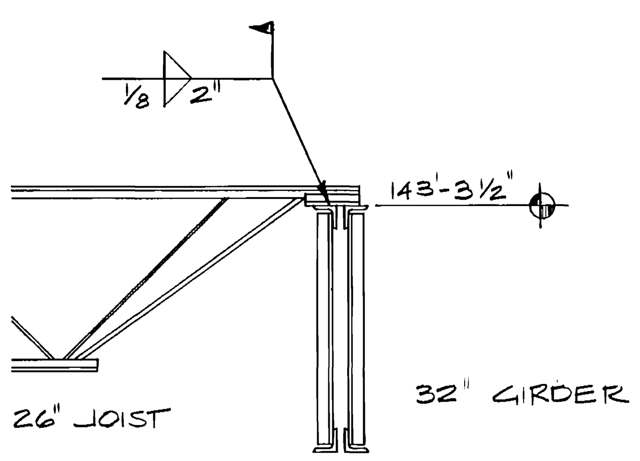


DETAIL 2/S-18
SCALE : 3/4" = 1'-0"

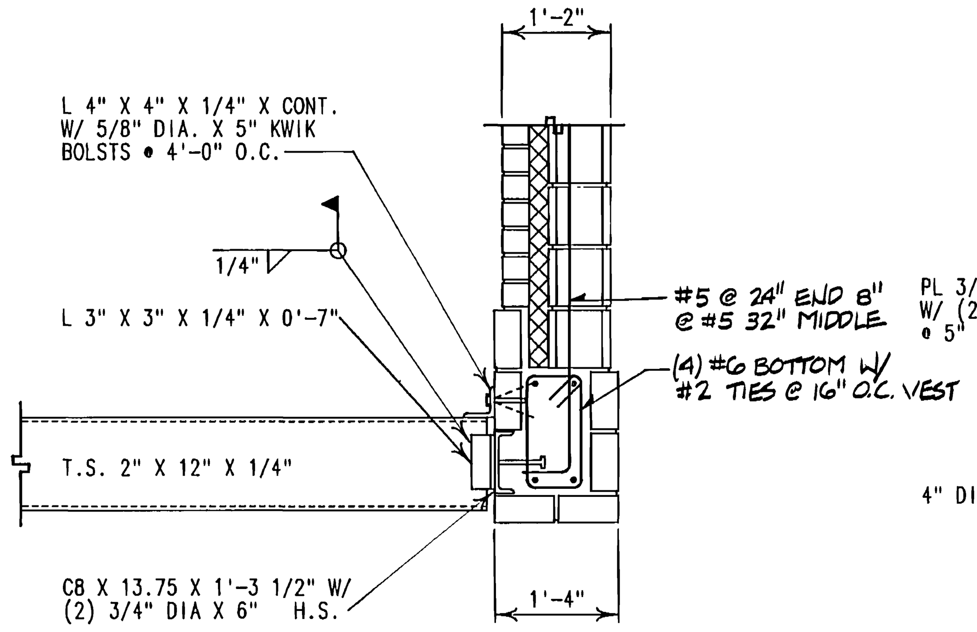


DETAIL 3/S-18
SCALE : 3/4" = 1'-0"

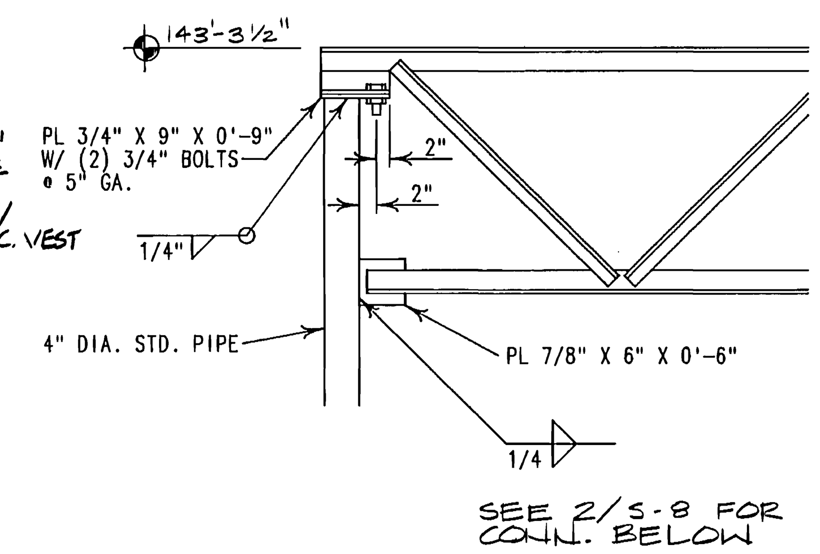


DETAIL 4/S-18
SCALE : 3/4" = 1'-0"

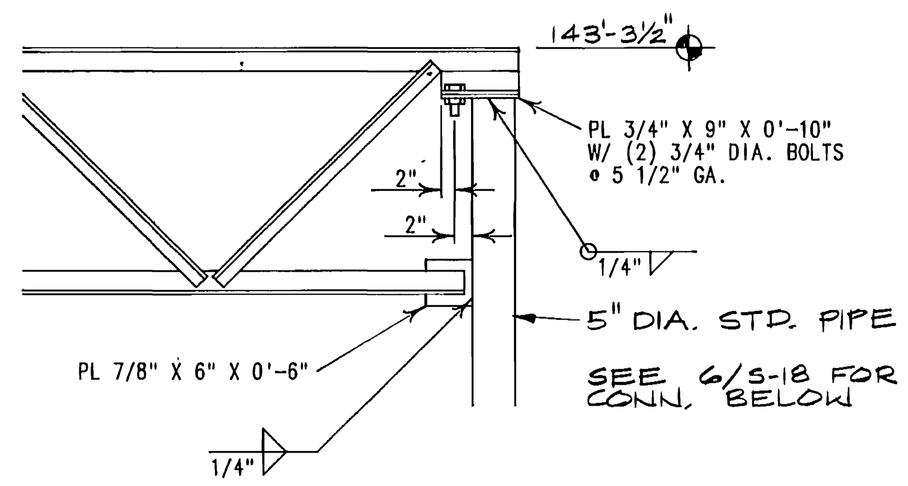


DETAIL 5/S-18
SCALE : 3/4" = 1'-0"

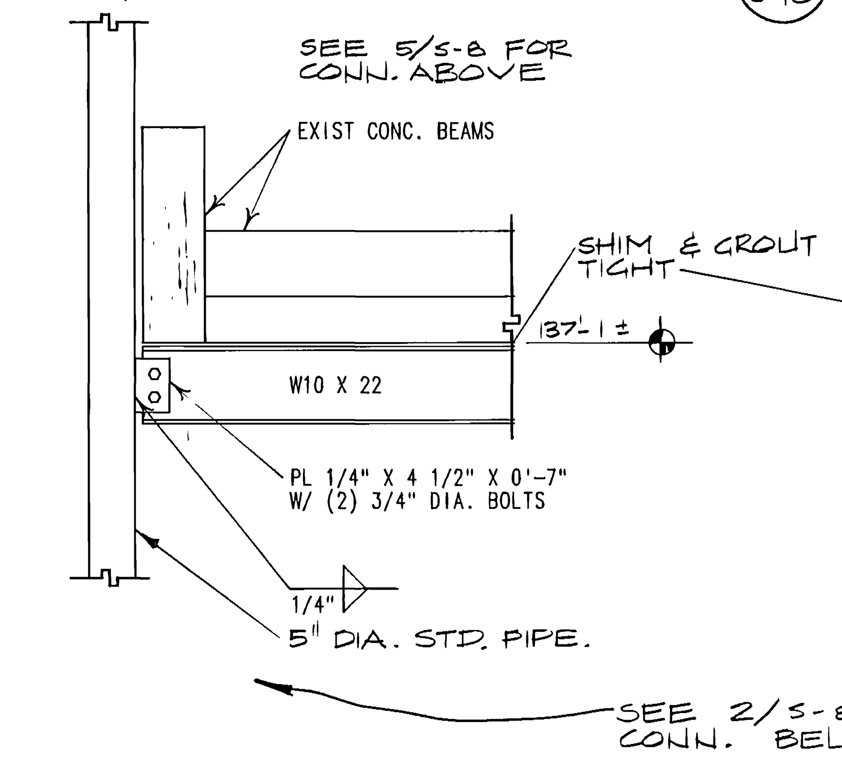


DETAIL 6/S-18
SCALE : 3/4" = 1'-0"

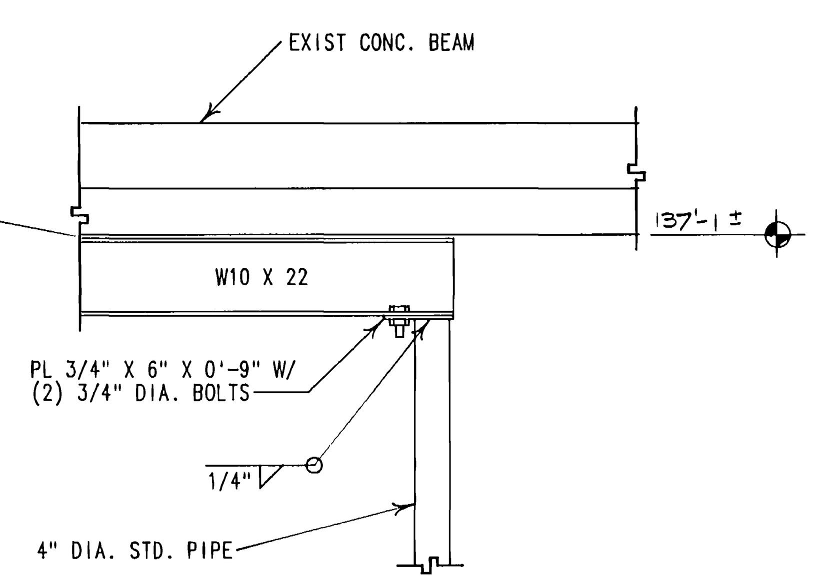


DETAIL 7/S-18
SCALE : 3/4" = 1'-0"

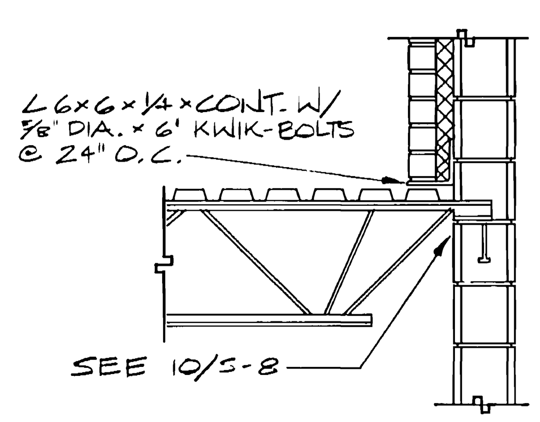


DETAIL 8/S-18
SCALE : 3/4" = 1'-0"

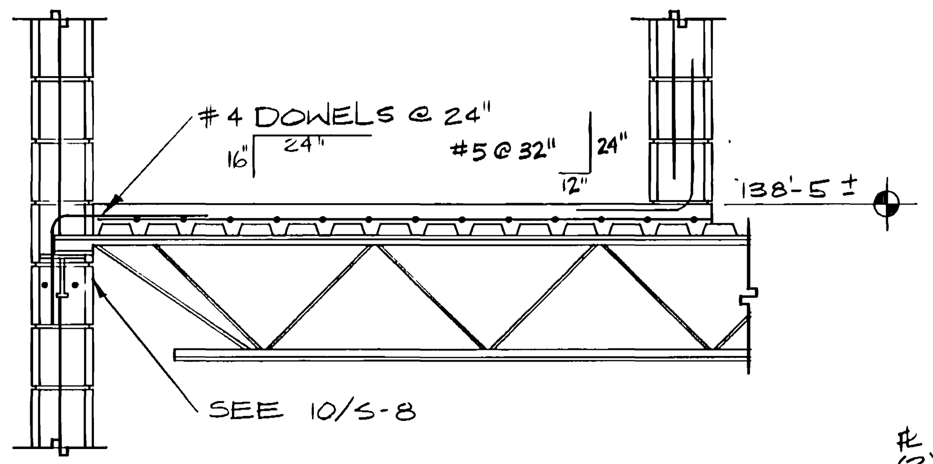


DETAIL 9/S-18
SCALE : 3/4" = 1'-0"

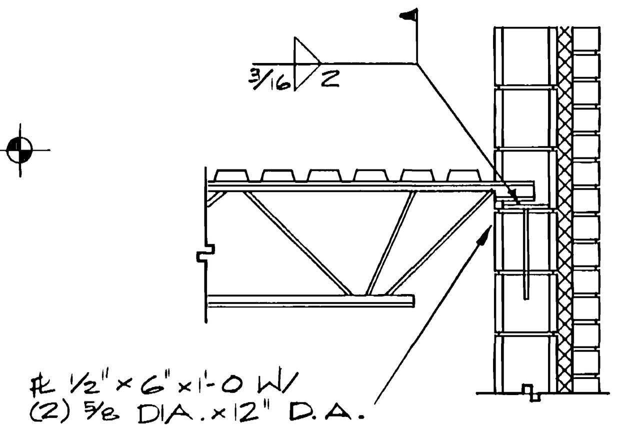


DETAIL 10/S-18
SCALE : 3/4" = 1'-0"

## STRUCTURAL NOTES

A. GENERAL

1. THE CONTRACTOR SHALL VERIFY ALL CONDITIONS AND DIMENSIONS AT THE SITE.
2. ALL OMISSIONS OR CONFLICTS BETWEEN THE VARIOUS ELEMENTS OF THE WORKING DRAWINGS AND/OR SPECIFICATIONS SHALL BE BROUGHT TO THE ATTENTION OF THE ARCHITECT AND/OR THE STRUCTURAL ENGINEER BEFORE PROCEEDING WITH ANY WORK INVOLVED.
3. DURING AND AFTER CONSTRUCTION, BUILDER AND/OR OWNER SHALL KEEP LOADS ON STRUCTURE WITHIN THE LIMITS OF DESIGN LOADS.
4. TYPICAL DETAILS AND SECTIONS SHALL APPLY WHERE SPECIFIC DETAILS ARE NOT SHOWN.

B. BASIS OF DESIGN

1. GOVERNING BUILDING CODE...UBC 1985
2. SEISMIC DESIGN:
   ZONE.......................III
   K............1.33 (BOX SYSTEM)
   I........................1.25
3. WIND DESIGN:
   BASIC WIND SPEED...........100 MPH
   EXPOSURE........................B
   I............................1.15
4. SNOW LOAD................30 PSF
   ICE LOAD..................5 PSF
   (25% OF SNOW & ICE INCLUDED IN SEISMIC DESIGN)
5. SUSPENDED FLOOR LIVE LOADS
   PLAZA.......................100 PSF
   PLAZA SUPERIMPOSED DEAD LOAD 110
   CORRIDORS...................100 PSF
   OFFICE AREAS.................50 PSF
   FUTURE FLOOR IN COURT AREA..100 PSF
   GYM STORAGE ROOMS...........100 PSF

C. FOUNDATION

1. SOIL CLASSIFICATION: SILTY SAND (Sm, Sp) PER DAMES & MOORE REPORT 4000-057-06, JUNE 25, 1984.
2. DESIGN SOIL PRESSURE: 3000 PSF.
3. ALL FOOTINGS SHALL BE PLACED ON THE UNDISTURBED NATURAL SOIL OR ON GRANULAR FILL MECHANICALLY COMPACTED TO NOT LESS THAN 95% OF MODIFIED PROCTOR DENSITY (ASTM D-1557) EXTENDING TO UNDISTURBED NATURAL SOIL.

D. CONCRETE

1. ALL CONCRETE SHALL HAVE A DESIGN 28-DAY COMPRESSIVE STRENGTH AS FOLLOWS:
   A. FOOTINGS, WALLS, PIERS & COLUMNS ....3000 PSI
   B. INTERIOR & EXTERIOR SLABS, WALKS, CURBS, RAMPS & GUTTERS..4000 PSI
2. NO PIPES, DUCTS, SLEEVES, ETC. SHALL BE PLACED IN STRUCTURAL CONCRETE UNLESS SPECIFICALLY DETAILED OR APPROVED BY STRUCTURAL ENGINEER. NO ALUMINUM PRODUCTS SHALL BE EMBEDDED IN CONCRETE.
3. ALL WALLS SHALL BE ADEQUATELY BRACED AGAINST LATERAL MOVEMENT PRIOR TO BACKFILLING, EXCEPT CANTILEVERED RETAINING WALLS.
4. UNLESS OTHERWISE NOTED, REINFORCE ALL CONCRETE FOUNDATION WALLS AS FOLLOWS:
   6" WALLS (2) #5 BARS, (1) TOP & (1) BOTTOM CONTINUOUS
   8" WALLS (4) #5 BARS, (2) TOP & (2) BOTTOM CONTINUOUS
   10" & 12" WALLS (4) #6 BARS, (2) TOP & (2) BOTTOM CONTINUOUS
5. UNLESS OTHERWISE NOTED, MAKE ALL CONCRETE SLABS ON EARTH AT LEAST 4" THICK AND REINFORCE WITH 6 X 6 – W1.4/W1.4 WELDED WIRE FABRIC. BEARING EARTH TO BE UNDISTURBED SOIL OR FILL COMPACTED TO 90% OF MODIFIED PROCTOR DENSITY (ASTM D-1557).
6. ALL OPENINGS GREATER THAN 6" IN ANY DIRECTION IN CONCRETE FLOOR SLAB ON METAL DECK SHALL BE FRAMED ON 4 SIDES WITH STEEL ANGLE 4"X3"X1/4".
7. AROUND OPENINGS IN CONCRETE WALLS ADD (2) #5 BARS ALL SIDES IN ADDITION TO REGULAR WALL REINFORCING AND EXTEND 24" EACH WAY BEYOND OPENING.
8. CONSTRUCTION JOINTS NOT SHOWN ON THE PLANS SHALL BE MADE AND LOCATED SO AS TO NOT IMPAIR THE STRENGTH OF THE STRUCTURE AND AS APPROVED BY THE STRUCTURAL ENGINEER. PROVIDE 2 X 4 (SHAPED) KEYWAY IN ALL VERTICAL AND HORIZONTAL JOINTS. ALL STEEL REINFORCING SHALL BE CONTINUOUS THROUGH COLD JOINTS UNLESS NOTED OTHERWISE.

E. REINFORCING STEEL

1. ALL REINFORCING BARS SHALL CONFORM TO ASTM STANDARD A-615 GRADE 60 AND ALL WELDED WIRE FABRIC SHALL CONFORM TO ASTM STANDARD A-185. ADEQUATELY TIE AND SUPPORT ALL REINFORCING STEEL AS SPECIFIED BY ACI 315, TO MAINTAIN EXACT REQUIRED POSITION. ALL FIELD BENT DOWELS SHALL BE GRADE 40.
2. REINFORCEMENT SHALL HAVE THE FOLLOWING CONCRETE COVERAGE:
   CAST AGAINST AND PERMANENTLY EXPOSED TO EARTH.......3"
   EXPOSED TO EARTH OR WEATHER
   #6 & LARGER..................................2"
   #5 & SMALLER.................................1-1/2"
   NOT EXPOSED TO WEATHER OR EARTH
   SLABS, WALLS, #11 & SMALLER.........3/4"
   BEAMS, COLUMNS: MAIN REINFORCING OR TIES..1-1/2"
   SLABS ON GRADE
   PLACE REINFORCING AT CENTER OF SLAB UNLESS INDICATED OTHERWISE.
3. EXCEPT WHERE NOTED, CONTINUOUS REINFORCEMENT SHALL BE SPLICED AT POINTS OF MINIMUM STRESS BY LAPPING 30 BAR DIAMETERS (18" MIN.) IN CONCRETE AND 40 BAR DIAMETERS IN MASONRY.

F. STRUCTURAL STEEL

1. STRUCTURAL STEEL SHALL BE FABRICATED AND ERECTED IN ACCORDANCE WITH THE LATEST EDITION OF THE FOLLOWING:
   A. AISC "SPECIFICATIONS FOR THE DESIGN, FABRICATION AND ERECTION OF STRUCTURAL STEEL FOR BUILDINGS", WITH "COMMENTARY".
   B. AISC "CODE OF STANDARD PRACTICE".
   C. AISC "SPECIFICATIONS FOR THE DESIGN OF COLD-FORMED STEEL STRUCTURAL MEMBERS"
2. STRUCTURAL STEEL SHALL CONFORM TO ASTM A-36.
3. COLD-FORMED STRUCTURAL STEEL TUBING SHALL CONFORM TO ASTM A-500, GRADE B.
4. ALL WELDING SHALL BE PERFORMED BY WELDERS CERTIFIED WITHIN THE LAST 12 MONTHS IN ACCORDANCE WITH AMERICAN WELDING SOCIETY AWS D1.1-88. EVIDENCE OF CERTIFICATION SHALL BE SUBMITTED TO ARCHITECT. USE E 70XX ELECTRODES EXCEPT E 7018 (LOW HYDROGEN) FOR T1 TRUSS CHORD WELDS W/PREHEAT PER AWS D1.1-88.
5. ALL STRUCTURAL STEEL TO STEEL CONNECTIONS SHALL USE HIGH STRENGTH BOLTS CONFORMING TO ASTM A-325.
6. ALL OPEN WEB STEEL JOISTS SHALL BE FABRICATED AND ERECTED ACCORDING TO "STANDARD SPECIFICATIONS AND CODE OF STANDARD PRACTICE" OF THE STEEL JOIST INSTITUTE.
7. LONG SPAN TRUSSES
   A. FABRICATOR SHALL SUBMIT SHOP DRAWINGS DETAILING WELDS AND WELDING PROCEDURES, FABRICATION, SHIPPING AND ERECTION PROCEDURES AND SEQUENCE, FIELD SPLICE LOCATIONS AND SPLICE WELD DETAILS.
   B. FABRICATOR SHALL SUBMIT CERTIFIED MILL TEST REPORTS FOR STEEL USED IN PRIMARY TRUSSES.
   C. OWNER WILL ENGAGE AN INDEPENDENT TESTING AGENCY TO VISUALLY INSPECT ALL WELDS AND PERFORM RADIOGRAPHIC TESTING OF ALL SHOP & FIELD BUTT WELD SPLICES IN CHORD MEMBERS PER AWS D1.1 SECTION G-1 THRU 6.12 & ULTRASONIC TESTING OF SPECIFIED FILLET WELDS SHOWN ON TRUSS DRAWING.
8. METAL ROOF DECK SHALL BE 1-1/2" TYPE B (G90) GALVANIZED STEEL WITH GAUGE AS SHOWN IN SCHEDULE. (ACOUSTICAL PAINTED IN GYM)
9. METAL FLOOR DECK SHALL BE 22 GAUGE GALVANIZED (G90) STEEL COMPOSITE, TYPE 1-1/2" B.

G. MASONRY

1. ALL HOLLOW MASONRY UNITS SHALL CONFORM TO ASTM C-90 TYPE N-1. 10", 8" & 6" BLOCK WALLS IN THE LINK AREA SHALL BE HIGH STRENGTH BLOCK WITH A COMPRESSIVE STRENGTH (F'm) EQUAL TO 2700 PSI. (SEE SCHEDULE) PRISM TESTING PER UBC 2405(c) & 2406(b) SHALL BE USED TO ESTABLISH AND VARIFY STRENGTH VALUES.
2. ALL MASONRY WORK SHALL CONFORM TO CHAPTER 24 OF THE "UNIFORM BUILDING CODE".
3. MASONRY WALLS SHALL BE REINFORCED AS PER REINFORCING SCHEDULE WITH BAR SIZE & SPACING AS NOTED. IN ADDITION ADD:
   A. VERTICAL BARS SIZE AS SHOWN IN SCHEDULE IN CELLS ADJACENT TO ALL OPENINGS & AT CORNERS. ALL VERTICAL REINFORCEMENT SHALL BE DOWELED TO FOUNDATION.
   B. HORIZONTAL BARS SHALL BE PLACED IN 8" DEEP "H" BLOCK BOND BEAM UNITS AT 48" O.C. MAXIMUM AND AT FLOORS, ROOF AND TOP OF WALL. BOND BEAMS AT ROOF WILL SLOPE TO MATCH SLOPING ROOF. ALL VERTICAL MASONRY REINFORCING SHALL BE SECURED IN PLACE USING REBAR POSITIONERS SUCH AS AA 239 FURNISHED BY AA WIRE PRODUCTS COMPANY BEFORE GROUTING AT INTERVALS NOT EXCEEDING THE TOP AND BOTTOM OF GROUT POURS OR 200 BAR DIAMETERS WHICH EVER IS LESS. VERTICAL REINFORCING MUST BE WITHIN 1/2 INCH OF CENTER OF WALLS PER UBC 2404(e).
4. MASONRY VENEER SHALL BE ANCHORED USING TRIROD 9 GAUGE GALV. DURA-WALL WITH SIDE RODS SPACED SUCH THAT TWO RODS LIE IN THE FACE SHELL MOTOR JOINTS OF THE BLOCK AND ONE ROD IN THE BRICK JOINT. SPACE AT 16" ON CENTER VERTICALLY.
5. ALL BLOCK CELLS CONTAINING REINFORCING, BOLTS, OR ANCHORS SHALL BE GROUTED SOLID.
6. PROVIDE REINFORCING BARS SIZE AS NOTED FOR PARTICULAR WALL IN SCHEDULE, IN GROUTED SPACE, ON ALL SIDES AND ADJACENT TO EVERY OPENING WHICH EXCEEDS 24 IN. IN EITHER DIRECTION. BARS SHALL EXTEND 24 IN. BEYOND THE CORNERS OF THE OPENING. ALL WALL CORNERS AND ENDS SHALL HAVE VERTICAL REINFORCING IN GROUTED CELL.
7. GROUT SHALL ATTAIN THE MINIMUM COMPRESSIVE STRENGTH SHOWN IN SCHEDULE AT 28 DAYS AND SHALL BE PLACED WITH SUFFICIENT WATER FOR POURING WITHOUT SEGREGATION. DO NOT USE MORTAR FOR GROUT. GROUT SHALL BE COMPOSED OF ONE PART PORTLAND CEMENT AND TWO TO THREE PARTS SAND. TWO PARTS PEA GRAVEL MAY BE ADDED IN MASONRY CELLS 4" OR MORE IN EITHER DIRECTION. USE OF ONE-TENTH PART HYDRATED LIME OR LIME PUTTY IS OPTIONAL. ALL MEASUREMENTS ARE BY VOLUME. MECHANICALLY VIBRATE ALL GROUT PER UBC 2404 (f) 2.
8. MORTAR SHALL BE TYPE S AND OBTAIN A MINIMUM COMPRESSIVE STRENGTH OF 1800 PSI AT 28 DAYS. MORTAR SHALL BE PROPORTIONED ACCORDING TO TABLE 24-A OF THE UNIFORM BUILDING CODE.
9. OWNER SHALL ENGAGE AN INDEPENDENT TESTING AGENCY TO PROVIDE PRISM TESTING AND SPECIAL INSPECTION PER UBC REQUIREMENTS FOR THE MASONRY WORK DEFINED IN THE MASONRY SCHEDULE.

0000TVS18
Weber State College, Physical Education Facility - RW 84-058
Structural Details & Notes - 26725


REGISTERED PROFESSIONAL ENGINEER — O. KENT RICH — State of Utah
ADAMSON ENGINEERING
STRUCTURAL ENGINEERS
OGDEN UTAH
PHONE 621-8130
JONES / RICHARDS & ASSOCIATES
jra
ARCHITECTURE (801) 394-3033
PLANNING 533 - 26TH STREET
CONSTRUCTION MANAGEMENT OGDEN, UTAH


REVISED: AS BUILTS 6-90

PROJECT NUMBER: 8403
DATE: 6-21-85
DRAWN BY: S.D.K.

PROJECT: PHYSICAL EDUCATION FACILITY, WEBER STATE COLLEGE

SHEET TITLE: STRUCTURAL DETAILS AND NOTES

SHEET NO. S-18

## GENERAL NOTES

1. FOR SITE UTILITIES SEE SHEETS SP-1 AND E-2.
2. PROTECT ALL EXIST. SITE IMPROVEMENTS TO REMAIN.
3. IN EXCAVATING HILLSIDE DO NOT DAMAGE OR UNDERCUT EXISTING FOOTINGS UNLESS NOTED OTHERWISE.
4. REMOVE ALL MISC.CONC, ASPHALT, ETC. REQUIRED BY REGRADING OR NEW CONSTRUCTION.
5. PROVIDE TEMPORARY SITE DEWATERING DURING CONSTRUCTION. SEE SOILS REPORT.
6. CONTRACT LIMIT LINE DEMARKS THE MAXIMUM EXTENT OF THE CONTRACT EXCEPT FOR SITE UTILITY EXTENSIONS. (SEE SHEET SP-1)
7. SEE LANDSCAPE DRAWINGS FOR ALT. #1.

## KEYED NOTES

1. SAW CUT AND REMOVE EXIST. CONC. WALK. PROVIDE NEW WALK (OR LANDSCAPING) AS SHOWN.
2. EXTEND NEW 10" CONC. WALK TO MEET EXISTING WALK TO THE EAST.
3. AT OWNERS OPTION, EXIST. SOD TO BE REMOVED BY COLLEGE. CONTRACTOR TO STRIP AND STOCKPILE TOPSOIL PRIOR TO GRADING. REGRADE AS SHOWN. PROVIDE 4" MIN.TOPSOIL OVER ALL LANDSCAPED AREAS. SEE LANDSCAPING SHEET L-1. REMOVE SOD IF OWNER ELECTS NOT TO.
4. TEMPORARY ENCLOSURE FENCE.
5. REGRADE EXIST. GRAVEL PARKING LOT AND HILLSIDE. PROVIDE 6" MIN. IMPORTED TOPSOIL AS PART OF FINAL GRADING.
6. REMOVE EXIST. LIGHT POLE. SEE SHEET E-2.
7. NOT USED.
8. GRADE HILLSIDE WEST AND SOUTH OF STAIR TOWER TO CREATE A UNIFORMLY SLOPING AMPHITHEATER.
9. PROVIDE NEW CURB AND GUTTER AT EAST EDGE OF EXIST. ROADWAY. MATCH FLOWLINE TO FLOWLINE OF EXIST. CURB AND GUTTER. PROVIDE 6" GRAVEL BASE AND 3" ASPHALT PATCH FROM NEW CURB AND GUTTER TO EXIST. ASPHALT. SAW CUT EXIST. ASPHALT PAVING AND REMOVE WHERE REQUIRED FOR INSTALLATION OF NEW CURB AND GUTTER. REGRADE BEHIND CURB TO ALLOW FOR INSTALLATION OF SOD OR CONC. WALK AS SHOWN.
10. NEW 4" CONC. WALK. SEE 6/SD-2. PLACE EXP. JOINTS AT 15'-0" O.C. MAX., CONTRACTION JOINTS AT 5'-0" O.C.
11. GUARD POSTS. SEE 8/SD-2.
12. REMOVE EXIST. CONC. CURB WALL AND PAVING. EXTEND SOUTH CURB WALL WEST TO MEET NEW CONC. WALK. MATCH EXIST. CURB WALL CONSTRUCTION.
13. EXACT BUILDING ALIGNMENT TO BE COORDINATED WITH INTERIOR OF EXIST. BUILDING. SEE SHEET A-3 FOR ALIGNMENT LOCATION.
14. REMOVE EXIST. WINDOW WELL AND STAIRS.
15. NEW 5" THICK CONC. WALK OVER COMPACTED BASE. EXP. JOINTS AT 15'-0" O.C. MAX. AND CONTRACTION JOINTS AT 5'-0" O.C.
16. PATCH ASPHALT AT ROADWAY WHERE NEW UTILITY LINES CROSS. SEE SHEET SP-1.
17. SAW CUT AND REMOVE EAST CONC. WALK AND CURB AND GUTTER. PROVIDE NEW CONC. DRIVE APPROACH. SEE 11/SD-2. EXIST. CATCH BASIN TO REMAIN. POUR NEW DRIVE APPROACH AROUND IT. (OR AT CONTRACTORS OPTION REMOVE AND REPLACE CATCH BASIN).
18. PROVIDE NEW TRAFFIC GUARDRAIL BEGINNING AT WEST END OF EXIST. GUARDRAIL AND EXTENDING APPROX. 216' S.W. GUARDRAIL TO MATCH EXIST. SEE 13/SD-2
19. 9'-0" X 21'-0" CONC. AREAWAY SEE 14/SD-2
20. DUMPSTER ENCLOSURE SEE 15/SD-2.
21. REMOVE EXIST TREE.
22. REMOVE EXIST. 24" Ø CMP.
23. 8' LONG BENCH SEE 7/SD-3. SET ON A 2'-6" X 10' X 0'-4" OR CONC. PAD CENTERED BETWEEN PIERS.
24. REMOVE EXIST. ASPHALT AT TUNNEL ENTRY.
25. CREATE DRAINAGE SWALE AT TOP OF HILL TO CHANNEL SURFACE WATER TO CONCRETE WATER WAY AT RETAINING WALL.
26. NEW FIRE HYDRANT, SEE SHEET SP-1.
27. EXISTING SANITARY SEWER MANHOLE.
28. NEW SANITARY SEWER MANHOLE, SEE SHEET SP-1.
29. EXISTING STORM DRAIN MANHOLE.
30. NEW STORM DRAIN MANHOLE, SEE SHEET SP-1 & SP-2.
31. EXISTING STORM DRAIN CLEANOUT BOX.
32. NEW STORM DRAIN BOX, SEE SHEET SP-1 & SP-2.
33. NEW GROUND MOUNTED BUILDING SIGN. SEE 11/SD-3.
34. AS PART OF ALT. #4 PROVIDE NEW CURB & GUTTER (SEE 10/SD-3) ALONG WEST SIDE OF EXIST. ROADWAY NORTH TO STAIRWAY AS SHOWN. PATCH/EXTEND EXIST. ASPHALT TO NEW GUTTER. SET CURB & GUTTER GRADES TO MATCH EXIST. ROADWAY.
35. REMOVE EXIST. CONC. WATERWAY.

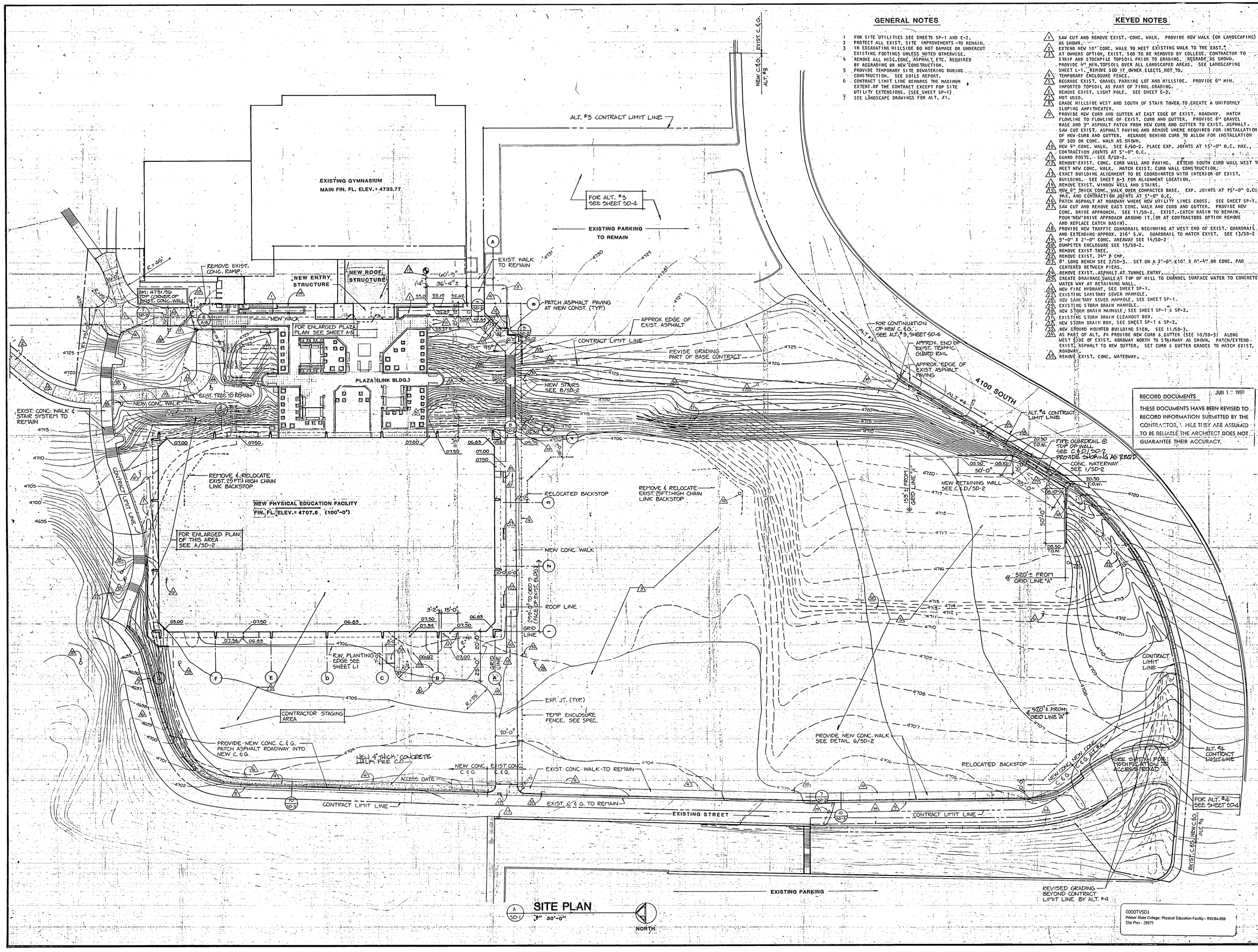


SITE PLAN
1" = 30'-0"

RECORD DOCUMENTS JUN 1 2 1990

THESE DOCUMENTS HAVE BEEN REVISED TO RECORD INFORMATION SUBMITTED BY THE CONTRACTOR. WHILE THEY ARE ASSUMED TO BE RELIABLE THE ARCHITECT DOES NOT GUARANTEE THEIR ACCURACY.

0000TVSD1
Weber State College; Physical Education Facility - RW/84-058
Site Plan - 26975

JONES / RICHARDS & ASSOCIATES
PLANNING 532 - 25TH STREET
CONSTRUCTION MANAGEMENT OGDEN, UTAH
ARCHITECTURE (801) 394-3333

REVISED: AS BUILTS 6-90
PROJECT NUMBER: 8403
DATE: 6-21-88
DRAWN BY: SCOTTON/CARDS/LUND

PROJECT: PHYSICAL EDUCATION FACILITY
WEBER STATE COLLEGE
SHEET TITLE: SITE PLAN

SHEET NO. SD-1

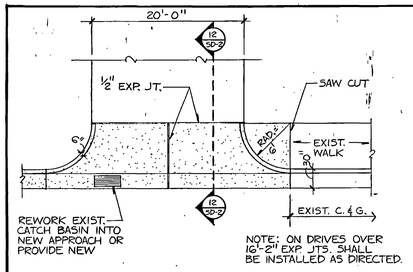


11 SD-2 DRIVE APPROACH
1/8" = 1'-0"

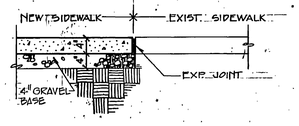


7 SD-2 TRANSITION DETAIL
NO SCALE

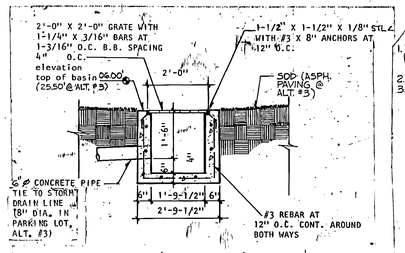


3 SD-2 CATCH BASIN
1/2" = 1'-0"

NOTES:
1. PROVIDE 3/4" "V" GROOVE CONTROL JT. @ 10' FRONT TOP OF WALL HORIZ. AND @ 10'-0" O.C. VERTICALLY.
2. SPECIAL CONC. FINISH ON EXPOSED SURFACES. (SEE SPEC.)
3. PROVIDE 1½" DIA. PVC PIPE WEEP HOLES @ 10'-0" O.C. W/ GALV. WIRE SCREEN & WASHED GRAVEL BACKING WHERE HT. > 1'-6"

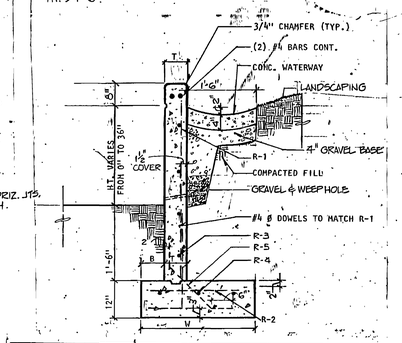


| HT. | T | W | B | R-1 | R-2 | R-3 | R-4 | R-5 |
|---|---|---|---|---|---|---|---|---|
| TO 1'-6" | 8" | 2'-8" | 7" | #4 @ 18" | #4 @ 18" | #4 @ 10" | 4 #4 | #4 @ 18" |
| TO 3'-0" | + 8" | 3'-3" | 9 | #4 @ 18" | #4 @ 18" | #4 @ 10" | 4 #4 | #4 @ 18" |
| TO 4'-0" | 8" | 4'-6" | 15" | #4 @ 18" | #4 @ 18" | #4 @ 12" | 5 #4 | #4 @ 18". |
| TO 6'-0" | 8" | 6'-3" | 26" | #4 @ 13" | #4 @ 13" | #4 @ 12" | 5 #5 | #4 @ 13" |

* UNLESS NOTED OTHERWISE

1 SD-2 RETAINING WALL
3/4" = 1'-0"

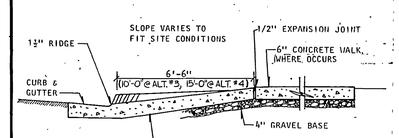


12 SD-2 DRIVE SECTION
3/8" = 1'-0"

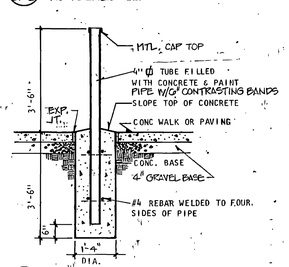


8 SD-2 GUARD POST
1/2" = 1'-0"

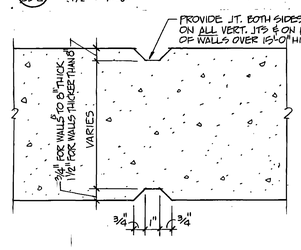


4 SD-2 CONC. WALL CONTROL JT.
3" = 1'-0"

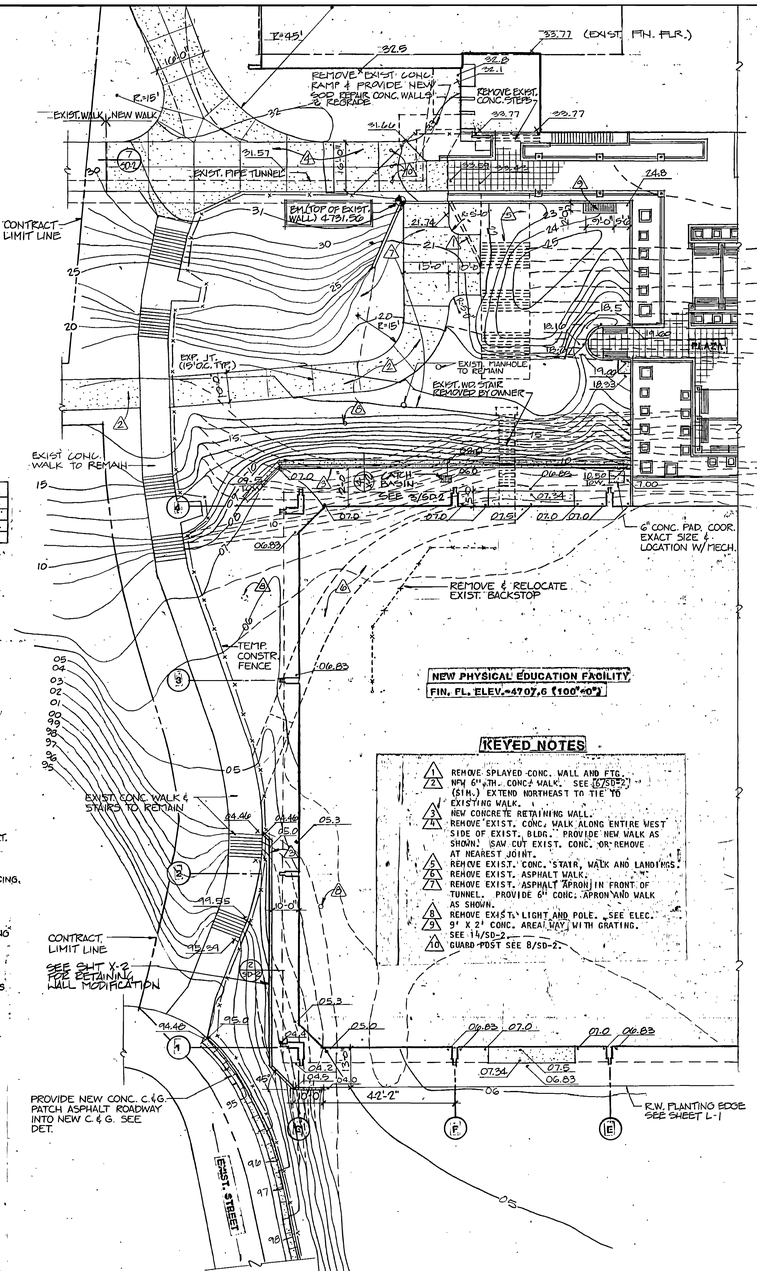


A SD-2 PARTIAL ENLARGED SITE PLAN
1" = 20'

NORTH

## KEYED NOTES

1. REMOVE SPLAYED CONC. WALL AND FTG.
2. NEW 6" TH. CONC. WALK. SEE 6/SD-2 (6TH.) EXTEND NORTHEAST TO TIE TO EXISTING WALK.
3. NEW CONCRETE RETAINING WALL.
4. REMOVE EXIST. CONC. WALK ALONG ENTIRE WEST SIDE OF EXIST. BLDG. PROVIDE NEW WALK AS SHOWN. SAW CUT EXIST. CONC. OR REMOVE AT NEAREST JOINT.
5. REMOVE EXIST. CONC. STAIR, WALK AND LANDINGS.
6. REMOVE EXIST. ASPHALT WALK.
7. REMOVE EXIST. ASPHALT APRON IN FRONT OF TUNNEL. PROVIDE 6" CONC. APRON AND WALK AS SHOWN.
8. REMOVE EXIST. LIGHT AND POLE. SEE ELEC.
9. 9' X 2' CONC. AREA WAY WITH GRATING. SEE 14/SD-2
10. GUARD POST SEE 8/SD-2.

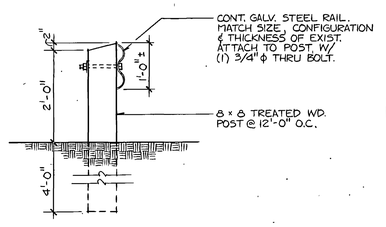


13 SD-2 TRAFFIC GUARD RAIL
3/4" = 1'-0"

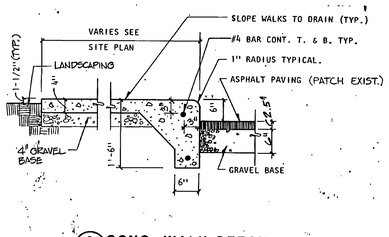


9 SD-2 CONC. WALK DETAIL
3/4" = 1'-0"

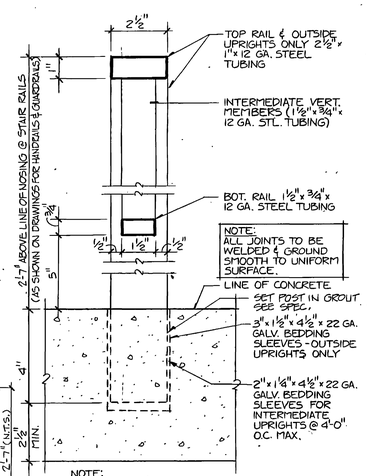


5 SD-2 RAILING DETAIL
N.T.S.

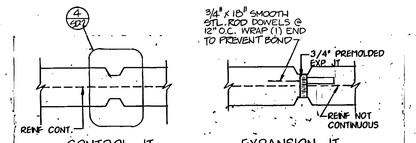


NOTES

1. PROVIDE MTL. HDRL. @ TOP OF WALL AT S.E. CORNER OF SITE. SEE C & D/SD-2 SEE 5/SD2 FOR RAIL DETAIL.
2. SPECIAL CONC. FINISH ON EXPOSED SURFACES (SEE SPEC.)
3. WHERE HT VARIES USE A CONSTANT WALL THICKNESS DETERMINED BY MAX HT.
4. PROVIDE 1-1/2" ϕ PVC PIPE WEEP HOLES @ 10'-0" O.C. W/ GALV WIRE SCREEN & GRAVEL BACKING WHERE HT. > 1'-6".
5. PROVIDE CONTROL JT. @ 10'-0" O.C. VERT. & 24" & 56" (12" & 20" @ N.W. WALL) FROM TOP OF WALL HORIZ. SEE ELEV. SEE 4/SD2 FOR JOINT DETAIL.
6. PROVIDE EXP JTS @ 30'-0" MAX. SPACING.
7. EXTEND HORIZ. REINFORCING AROUND CORNERS OR ADD CORNER BARS & LAP 15" EACH WAY.
8. EVERY OTHER VERTICAL BAR MAY BE DISCONTINUED @ MID HT. ABOVE FOOTING FOR OVER 6'-0" STRUCT. HT. WALLS.
9. 1/3 OF VERTICAL BARS MAY BE DISCONTINUED @ .2H + 30 BAR DIA. AND 1/3 @ .4H + 30 BAR DIA. ABOVE FOOTING. MAX SPACING OF VERT. BARS 18" (MAX) FOR 11'-0" THRU 14'-0" HIGH WALLS. (H = STRUCT. HT. + 1'-6")

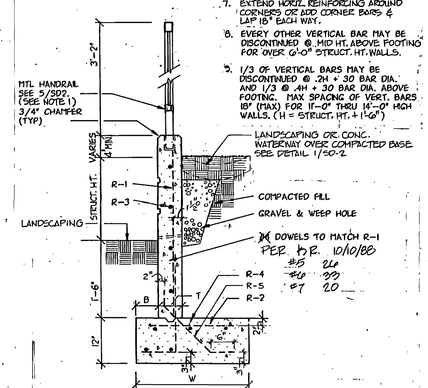


| STRUCT. HT. | T | W | B | R-1 | R-2 | R-3 | R-4 | R-5 |
|---|---|---|---|---|---|---|---|---|
| TO 1'-6" | 8"* | 2'-0" | 5" | #4 @ 18" | #4 @ 18" | #4 @ 10" | 4 #4 | #4 @ 18" |
| TO 3'-0" | + 8" | 2'-8" | 5" | #4 @ 18" | #4 @ 18" | #4 @ 12" | 4 #4 | #4 @ 18" |
| TO 4'-0" | 8" | 3'-3" | 5" | #4 @ 18" | #4 @ 18" | #4 @ 12" | 4 #4 | #4 @ 18" |
| TO 6'-0" | 8" | 4'-2" | 12" | #4 @ 14" | #4 @ 14" | #4 @ 12" | 4 #4 | #4 @ 18" |
| TO 8'-0" | 12" | 5'-2" | 12" | #4 @ 11" | #4 @ 11" | #5 @ 12" | 5 #4 | #4 @ 18" |
| TO 10'-0" | 12" | 5'-9" | 16" | #5 @ 12" | #5 @ 12" | #5 @ 12" | 5 #4 | #4 @ 18" |
| TO 12'-0" | 14" | 7'-10" | 20" | #6 @ 9" | #5 @ 9" | #6 @ 12" | 6 #6 | #4 @ 9" |

* UNLESS NOTED OTHERWISE

2 SD2 RETAINING WALL
3/4" = 1'-0"

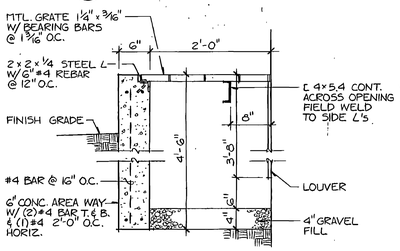


14 SD-2 CONC. AREA WAY DETAIL
1" = 1'-0"

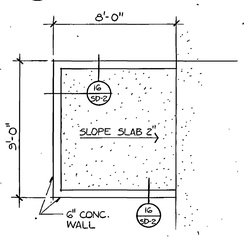


15 SD-2 DUMPSTER ENCLOSURE DETAIL
1/4" = 1'-0"

NOTE: 4" GRAVEL FILL UNDER ALL CURBS, WALKS AND DRIVES.

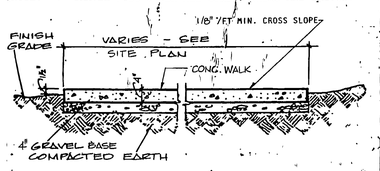


6 SD-2 TYP. CONC. WALK
NO SCALE

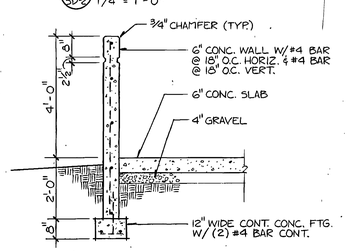


16 SD-2 WALL SECTION
1/2" = 1'-0"

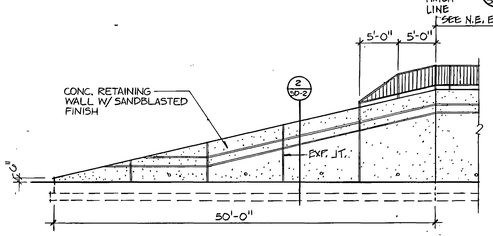


D SD-2 WEST ELEV. - RETAINING WALL (NORTH REV.)
1/8" = 1'-0"

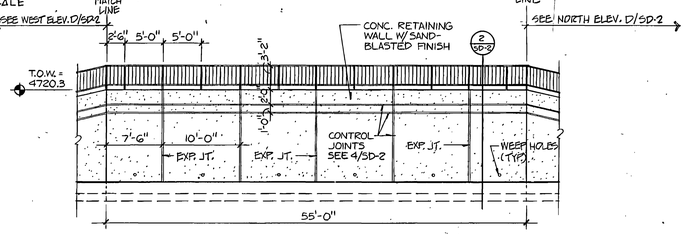


C SD-2 N.W. ELEV. - RETAINING WALL
1/8" = 1'-0"

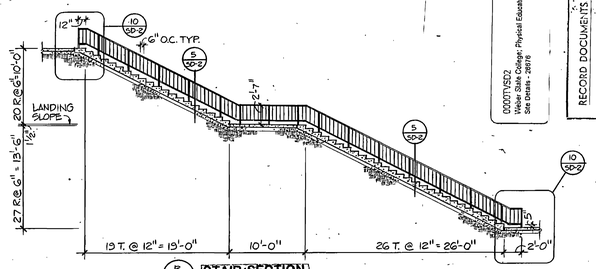


B SD-2 STAIR SECTION
1/8" = 1'-0"

RECORD DOCUMENTS
"THE ATTACHED DOCUMENTS WERE RECEIVED FROM THE OFFICE OF JIM & J. ... AND ARE PLACED ON THE RECORD. THE ATTACHED DOCUMENTS WERE PREPARED BY THE CONTRACTOR AND THE ARCHITECT DOES NOT TO BE RESPONSIBLE FOR THE ACCURACY OF THE DOCUMENTS AND DOES NOT GUARANTEE THEIR ACCURACY.

0000TVSD2
Weber State College: Physical Education Facility - RW-84-058
Site Details - 2/89/16

PROJECT: PHYSICAL EDUCATION FACILITY
WEBER STATE COLLEGE

SHEET TITLE: SITE DETAILS

SHEET NO. SD-2

REVISED: 6-20-89

PROJECT NUMBER: 2-2-89

DATE: 2-2-89

DRAWN BY: K. SEKO

jrq JONES / RICHARDS & ASSOCIATES
ARCHITECTURE (801) 394-3033
PLANNING 533 - 25TH STREET
CONSTRUCTION MANAGEMENT OGDEN, UTAH

SHEET 1 OF 2 SHEETS
SD-107

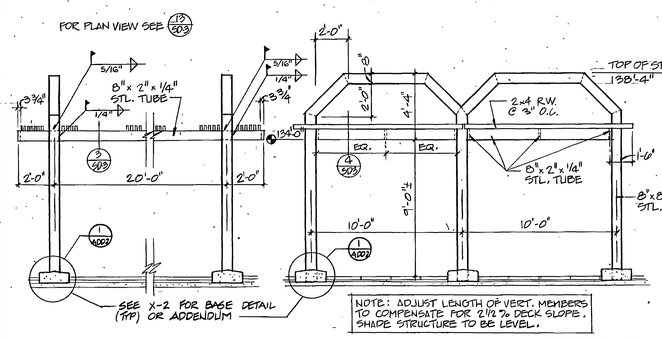


F SD-3 SHADE STRUCTURE (SIDE ELEV.) 1/4" = 1'-0" (TYP. OF 3)

E SD-3 SHADE STRUCTURE (FRONT ELEV.) 1/4" = 1'-0" (TYP. OF 3)

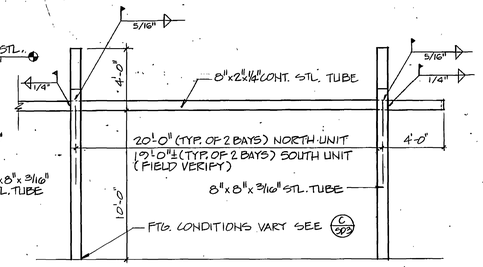


D SD-3 SIDEWALK ENTRY STRUCTURE (E-W ELEV.) 1/4" = 1'-0" (TYP. OF 2)

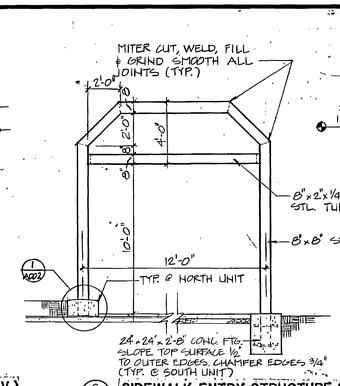


C SD-3 SIDEWALK ENTRY STRUCTURE (N-S ELEV.) 1/4" = 1'-0" (TYP. OF 2)

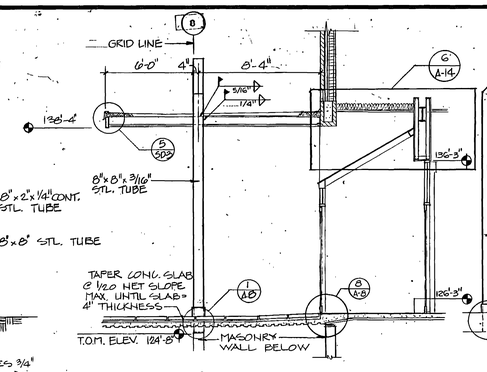


B SD-3 ENTRY STRUCTURE SECTION 1/4" = 1'-0"

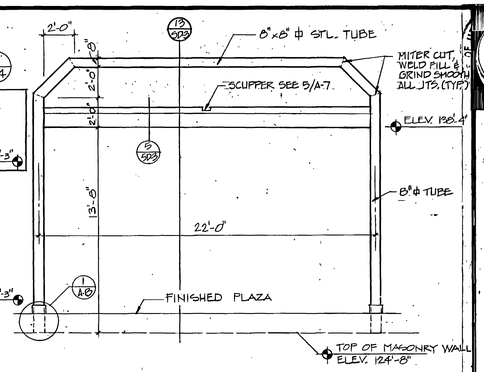


A SD-3 ENTRY STRUCTURE 1/4" = 1'-0"

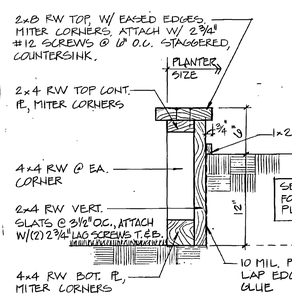


6 SD-3 PLANTER DETAIL 1 1/2" = 1'-0"

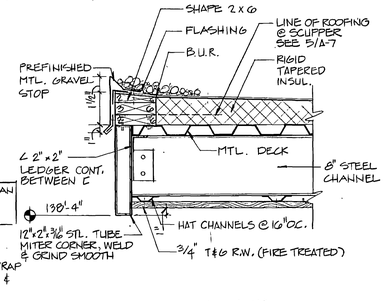


5 SD-3 CANOPY EDGE DETAIL 1 1/2" = 1'-0"

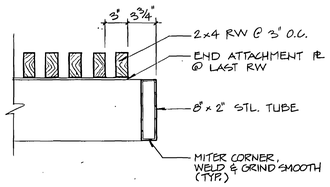


4 SD-3 SHADE STRUCTURE DETAIL

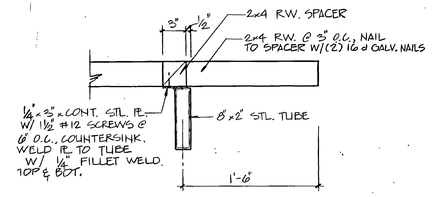


3 SD-3 SHADE STRUCTURE DETAIL

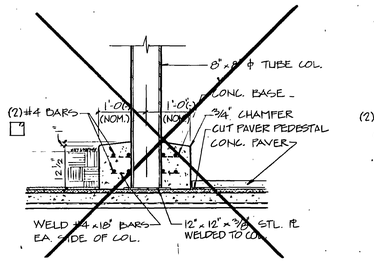


2 SD-3 BASE DETAIL 3/4" = 1'-0"

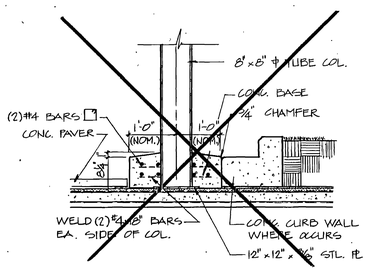


SEE X-2 & DWG ADD-2 FOR REVISED BASE DETAILS ADD #1-2-14

1 SD-3 BASE DETAIL 3/4" = 1'-0"

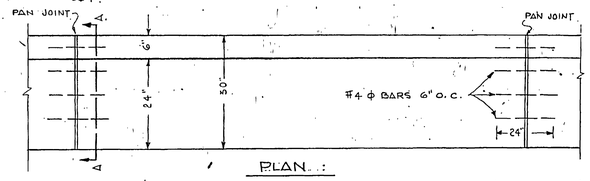


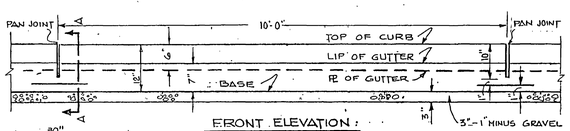


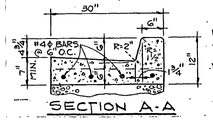


PAN JOINT EVERY 10'-0" FEET
EXPANSION JOINT EVERY 40'-0" FEET
REBAR EVERY 20'-0" FEET

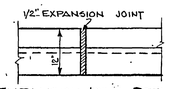


10 SD-3 CURB & GUTTER DETAILS 3/4" = 1'-0"

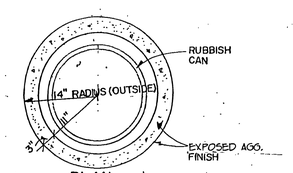


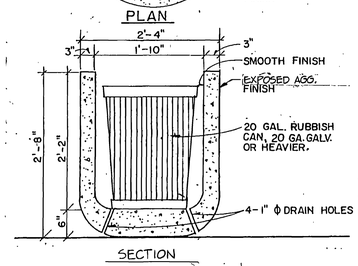


9 SD-3 RUBBISH CONTAINER DETAIL 1" = 1'-0"

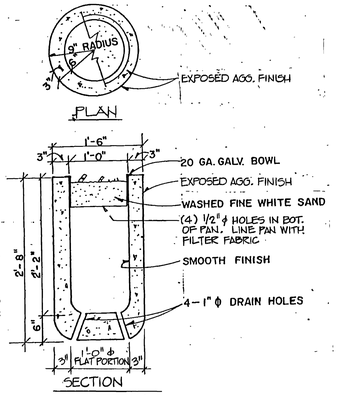


8 SD-3 ASH CAN DETAIL 1" = 1'-0"

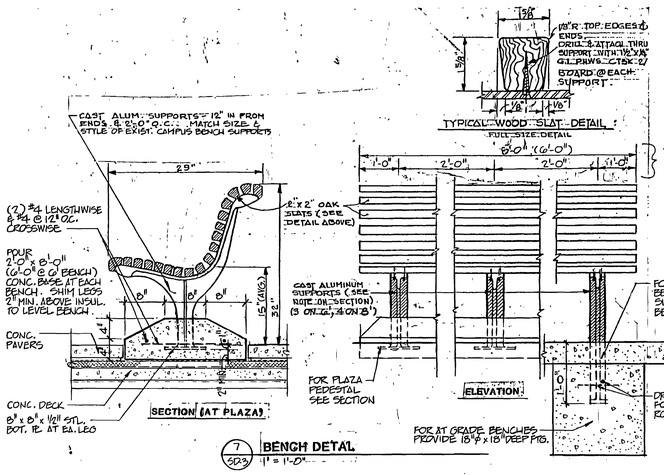


7 SD-3 BENCH DETAIL 1" = 1'-0"

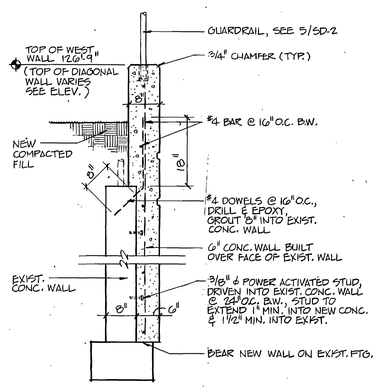


14 SD-3 TUNNEL WALL SECTION 3/4" = 1'-0"

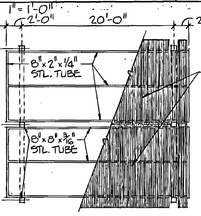


13 SD-3 SHADE STRUCTURE PLAN VIEW 3/8" = 1'-0"

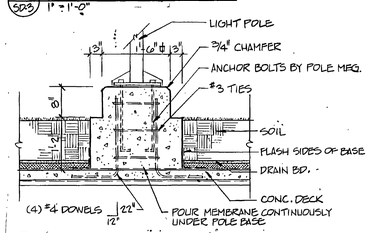


12 SD-3 LIGHT POLE BASE DETAIL 3/4" = 1'-0"

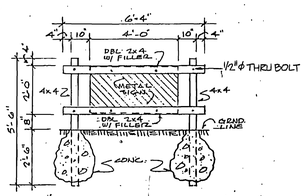


NOTES:
- METAL SIGN = 14 GA. STEEL 2'-0" H x 4'-0" W
- ALL 2x4's & 4x4's TO BE REDWOOD PAINT TO MATCH BENCH COLOR.
- ANCHOR SIGNS TO WOOD MEMBERS WITH 1/2" GALV. BOLTS & WASHERS. PAINT BOLT HEADS & WASHERS TO MATCH SIGN.
- SIGN COLORS
  - BACKGROUND = PURPLE PAINT
  - LETTERING = WHITE PAINT
  - PAINT REAR OF SIGN SAME COLOR AS FACE BACKGROUND
- LETTERING STYLE = HELVETICA MEDIUM
- ALL LETTERS TO BE UPPERCASE
  - FIRST LETTER OF EACH WORD = 4" H.
  - OTHER LETTERS = 3" H.
- COORDINATE SIGN LOCATION WITH ARCHITECT

11 SD-3 SIGN DETAIL (TYP. OF 2) 3/8" = 1'-0"

00001VSD3
Weber State College: Physical Education Facility - RW.84-058
Site Details - 26677

RECORD DOCUMENTS JUL 2 1990
THESE DOCUMENTS HAVE BEEN REVISED TO RECORD INFORMATION SUBMITTED BY THE CONTRACTOR. WHILE THEY ARE ASSUMED TO BE RELIABLE THE ARCHITECT DOES NOT GUARANTEE THEIR ACCURACY.

BRETT J. RICHARDS No. 4107 LICENSED ARCHITECT

jra JONES / RICHARDS & ASSOCIATES
ARCHITECTURE (801) 394-3033
CONSTRUCTION MANAGEMENT
PLANNING
OGDEN, UTAH
2321 - 26TH STREET

REVISED: AS BUILT 7-90
PROJECT NUMBER: 8529
DATE: 6-21-85
DRAWN BY: R. BEECTO, DI

PROJECT: PHYSICAL EDUCATION FACILITY
WEBER STATE COLLEGE
SHEET TITLE: SITE DETAILS
SHEET NO. SD-3

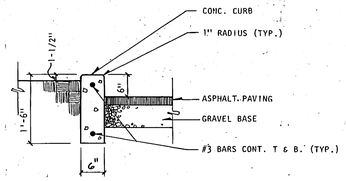


1 SD-4 **CURB WALL DETAIL**
3/4" = 1'-0"

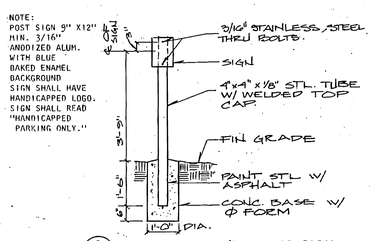


2 SD-4 **HANDICAPPED PARKING SIGN**
1/2" = 1'-0"

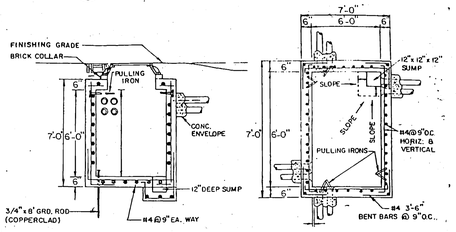


VERTICAL SECTION THRU MANHOLE

MANHOLE PLAN (TOP REMOVED)

STRUCTURAL NOTES
(for manholes and handholes)

1. ALL REINFORCEMENT BARS FOR MANHOLES & HANDHOLES SHALL BE # 4.
2. TOP SLAB REINFORCEMENT CONSISTS OF BOTTOM BARS PLACED AS SHOWN. SHORT SPAN BARS SHALL BE ON THE BOTTOM LAYER.
3. BEND & PLACE ALL REINFORCEMENT SO THAT IT SHALL BE 2" CLEAR OF ALL EXTERIOR SURFACES, 1 1/2" CLEAR OF ALL INTERIOR AND FLOOR SURFACES AND 1" CLEAR OF BOTTOM SURFACES OF TOP SLAB.
4. STRUCTURES SHALL BE OF REINFORCED CONCRETE. CONCRETE SHALL BE 4,000 P.S.I. AT 28 DAYS UNLESS OTHERWISE SPECIFIED.

ELECTRICAL NOTES

1. MANHOLE SIZES SHALL BE INCREASED MINIMUM TO 8'-0" WIDE 12'-0" LONG AND 7'-6" DEEP WHERE PERFORMED ELBOWS ARE USED.

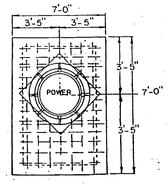


TOP OF MANHOLE

3 SD-4 **POWER MANHOLE DETAILS**
N.T.S.

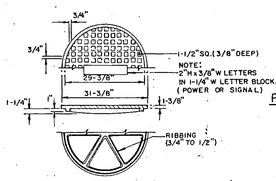


COVER

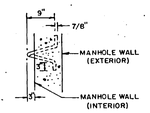


PULLING IRON

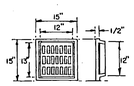


SUMP FRAME & COVER

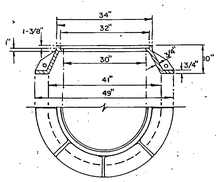


FRAME

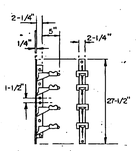


CABLE RACK

NOTE: FASTEN TO ALL WALLS OF MANHOLE BY MEANS OF 2-1/2" x 1/2" BOLTS & EXPANSION SHIELDS.

4 SD-4 **MANHOLE HARDWARE DETAILS**
N.T.S.

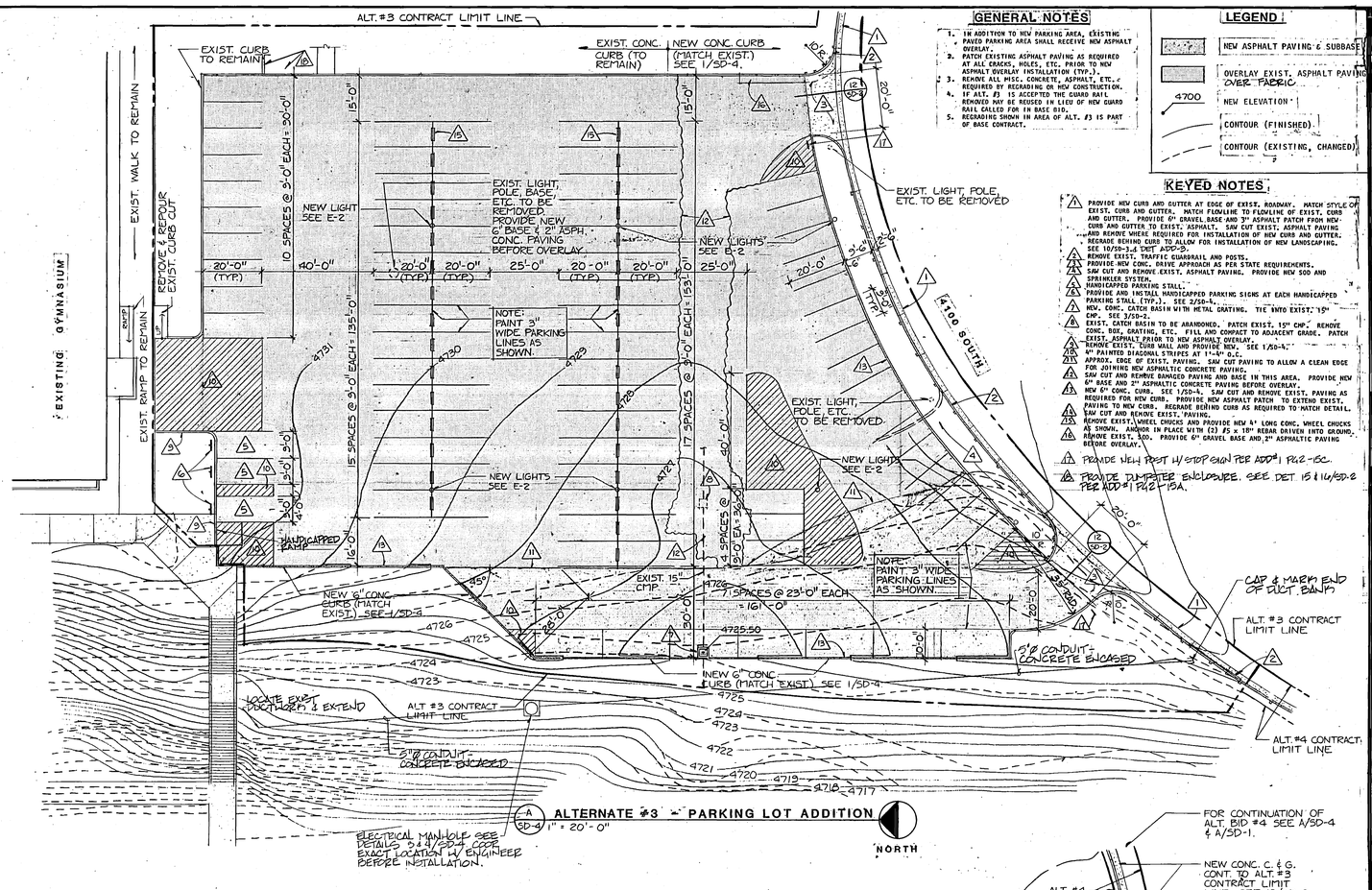


A SD-4 **ALTERNATE #3 - PARKING LOT ADDITION**
1" = 20'-0"

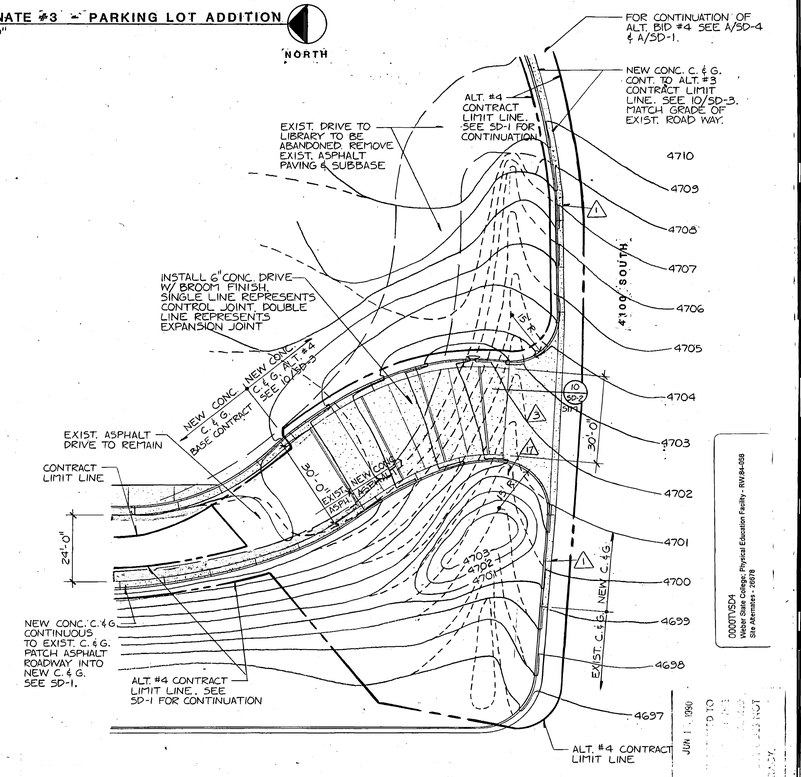


B SD-4 **ALTERNATE #4 - NEW ROADWAY APPROACH**
1" = 20'-0"

GENERAL NOTES

1. IN ADDITION TO NEW PARKING AREA, EXISTING PAVED PARKING AREA SHALL RECEIVE NEW ASPHALT OVERLAY.
2. PATCH EXISTING ASPHALT PAVING AS REQUIRED AT ALL CRACKS, HOLES, ETC. PRIOR TO NEW ASPHALT OVERLAY INSTALLATION (TYP.).
3. REMOVE ALL MISC. CONCRETE, ASPHALT, ETC., REQUIRED BY REGRADING OR NEW CONSTRUCTION.
4. IF ALT. #3 IS ACCEPTED THE GUARD RAIL REMOVED MAY BE REUSED IN LIEU OF NEW GUARD RAIL CALLED FOR IN BASE BID.
5. REGRADING SHOWN IN AREA OF ALT. #3 IS PART OF BASE CONTRACT.

LEGEND

- NEW ASPHALT PAVING & SUBBASE
- OVERLAY EXIST. ASPHALT PAVING OVER FABRIC
- 4700 NEW ELEVATION
- CONTOUR (FINISHED)
- CONTOUR (EXISTING, CHANGED)

KEYED NOTES

1. PROVIDE NEW CURB AND GUTTER AT EDGE OF EXIST. ROADWAY. MATCH STYLE OF EXIST. CURB AND GUTTER. MATCH FLOWLINE TO FLOWLINE OF EXIST. CURB AND GUTTER. PROVIDE 6" GRAVEL BASE AND 3" ASPHALT PATCH FROM NEW CURB AND GUTTER TO EXIST. ASPHALT. SAW CUT EXIST. ASPHALT PAVING AND REMOVE WHERE REQUIRED FOR INSTALLATION OF NEW CURB AND GUTTER. REGRADE BEHIND CURB TO ALLOW FOR INSTALLATION OF NEW LANDSCAPING. SEE 10/SD-3 & DET. ADD-3.
2. REMOVE EXIST. TRAFFIC GUARDRAIL AND POSTS.
3. PROVIDE NEW CONC. DRIVE APPROACH AS PER STATE REQUIREMENTS.
4. SAW CUT AND REMOVE EXIST. ASPHALT PAVING. PROVIDE NEW SOD AND SPRINKLER SYSTEM.
5. HANDICAPPED PARKING STALL.
6. PROVIDE AND INSTALL HANDICAPPED PARKING SIGNS AT EACH HANDICAPPED PARKING STALL (TYP.). SEE 2/SD-4.
7. NEW CONC. CATCH BASIN WITH METAL GRATING. TIE INTO EXIST. 15" CMP. SEE 3/SD-2.
8. EXIST. CATCH BASIN TO BE ABANDONED. PATCH EXIST. 15" CMP. REMOVE CONC. BOX, GRATING, ETC. FILL AND COMPACT TO ADJACENT GRADE. PATCH EXIST. ASPHALT PRIOR TO NEW ASPHALT OVERLAY.
9. REMOVE EXIST. CURB WALL AND PROVIDE NEW. SEE 1/SD-4.
10. 4" PAINTED DIAGONAL STRIPES AT 1'-6" O.C.
11. APPROX. EDGE OF EXIST. PAVING. SAW CUT PAVING TO ALLOW A CLEAN EDGE FOR JOINING NEW ASPHALTIC CONCRETE PAVING.
12. SAW CUT AND REMOVE BANKED PAVING AND BASE IN THIS AREA. PROVIDE NEW 6" BASE AND 2" ASPHALTIC CONCRETE PAVING BEFORE OVERLAY.
13. NEW 6" CONC. CURB. SEE 1/SD-4. SAW CUT AND REMOVE EXIST. PAVING AS REQUIRED FOR NEW CURB. PROVIDE NEW ASPHALT PATCH TO EXTEND EXIST. PAVING TO NEW CURB. REGRADE BEHIND CURB AS REQUIRED TO MATCH DETAIL.
14. SAW CUT AND REMOVE EXIST. PAVING.
15. REMOVE EXIST. WHEEL CHUCKS AND PROVIDE NEW 4" LONG CONC. WHEEL CHUCKS AS SHOWN. ANCHOR IN PLACE WITH (2) #5 x 18" REBAR DRIVEN INTO GROUND.
16. REMOVE EXIST. SOD. PROVIDE 6" GRAVEL BASE AND 2" ASPHALTIC PAVING BEFORE OVERLAY.
17. PROVIDE VEH. POST W/ STOP SIGN PER ADD#1 P42-15C.
18. PROVIDE DUMPSTER ENCLOSURE. SEE DET. 15 & 16/SD-2 PER ADD#1 P42-19A.


jra JONES / RICHARDS & ASSOCIATES
ARCHITECTURE (801) 394-3033
PLANNING 533 - 25TH STREET
CONSTRUCTION MANAGEMENT OGDEN, UTAH


REVISED: As Builts 6-90
PROJECT NUMBER: 8403
DATE: 6-21-88
DRAWN BY: K. SECO

PROJECT: PHYSICAL EDUCATION FACILITY WEBER STATE COLLEGE
SHEET TITLE: SITE ALTERNATES

D0001\SD4
Weber State College; Physical Education Facility - RW-84-058
Site Alternates - 20918

JUN 1 1990

SHEET NO. SD-4

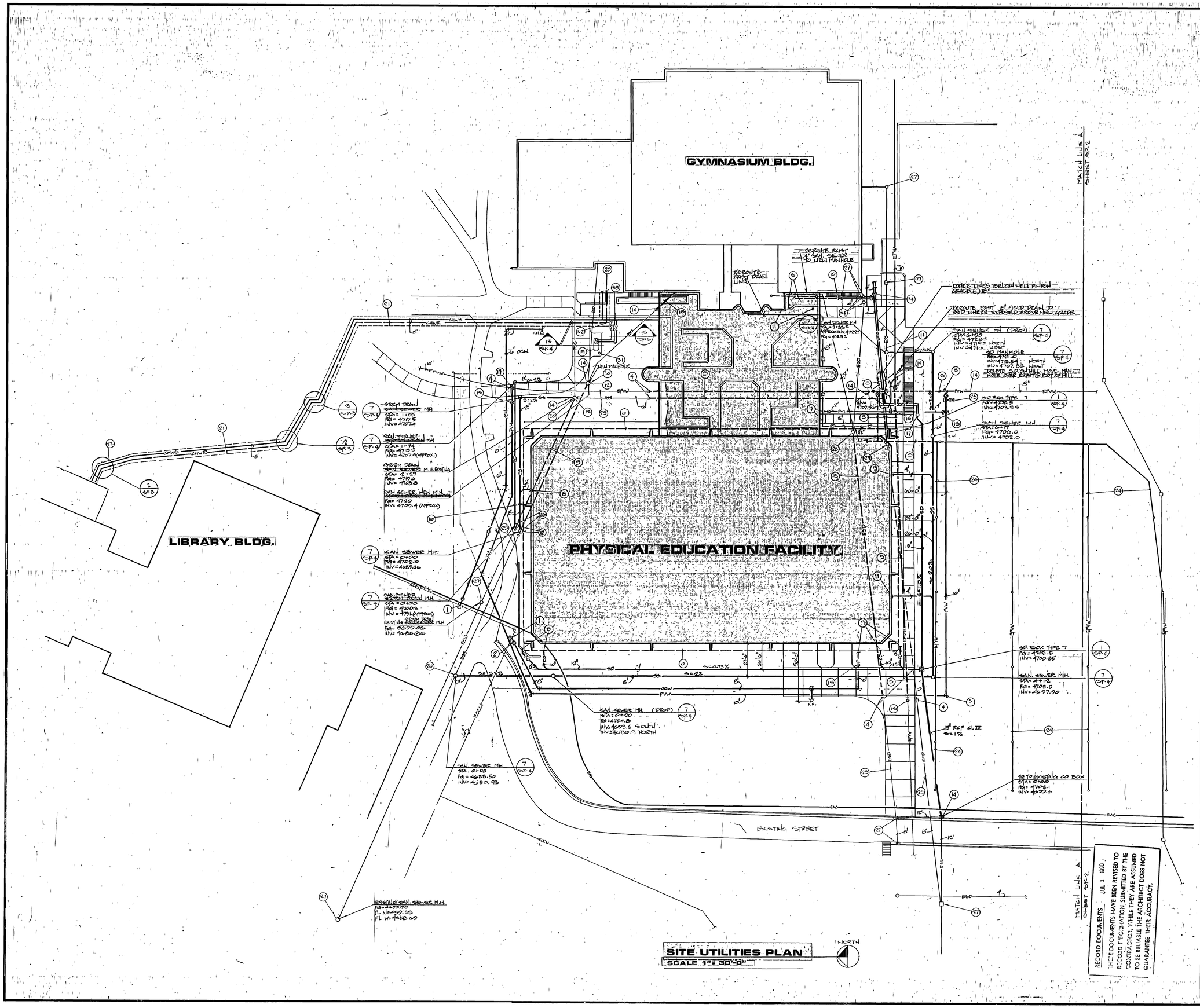


RECORD DOCUMENTS JUL 3 1990
THESE DOCUMENTS HAVE BEEN REVISED TO RECORD INFORMATION SUBMITTED BY THE CONTRACTOR. WHILE THEY ARE ASSUMED TO BE RELIABLE THE ARCHITECT DOES NOT GUARANTEE THEIR ACCURACY.

## KEYED NOTES

1. MAKE A HOT TAP CONNECTION TO THE EXISTING WATER LINE, SEE DETAIL 9/SP-4.
2. INCREASE FROM 6" TO 8".
3. THRUST BLOCK, TYPICAL. SEE DETAILS 10, 11 AND 12 ON SP-4.
4. CAP OR PLUG EXISTING SERVICE LINE TO BE ABANDONED.
5. EXISTING UTILITY TO BE REMOVED.
6. EDGE OF ROOF OVERHANG, TYPICAL.
7. FOR CONTINUATION OF PIPING, SEE SHEET P-3.
8. FOR CONTINUATION OF PIPING, SEE SHEET P-1.
9. FOR CONTINUATION OF PIPING, SEE SHEET P-2.
10. CAP EXISTING 6" PVC SUB DRAIN LINE AIR TIGHT.
11. EXISTING MONITORING WELL TO BE REMOVED.
12. PLUG ABANDONED LINES IN MANHOLE.
13. FIRE HYDRANT, TYPICAL. SEE DETAIL 11/SP-4.
14. MAKE NEW CONNECTION TO EXISTING UTILITY.
15. NEW VALVE WITH C.I. BOX AND COVER TO FINISHED GRADE, TYPICAL.
16. REPAIR DISTURBED AREAS TO MATCH EXISTING GRADE AND REPLACE IMPROVEMENTS TO MATCH EXISTING UNLESS NOTED OTHERWISE.
17. VACUUM SUMP POT. SEE DETAIL 18/SP-4.
18. REPLACE STORM DRAIN UNDER BUILDING WITH SAME SIZE DUCTILE IRON PIPE FIELD VERIFY SIZE.
19. ONE 550 GALLON DOUBLE WALL FRP DIESEL STORAGE TANK. SEE DETAILS FOR INSTALLATION. EXTEND 2" SUPPLY AND RETURN LINE TO DAY TANK. FOR DAY TANK SEE DIVISION 16. SEE DETAIL 13/SP-4 AND DETAILS 2, 3 AND 6 ON SHEET SP-5 FOR PUMP CONNECTIONS, LEAK DETECTOR CONNECTION, MANWAY FITTINGS, PUMP CONNECTIONS ETC.
20. SEE SHEET M-4 FOR CONTINUATION OF PIPES IN THE BUILDING.
21. NEW CHILLED WATER SUPPLY AND RETURN PIPING TO EXISTING TUNNEL. PROVIDE AND ADD ALL UNISTRUT SUPPORTS AND PIPE ROLLERS AS NECESSARY TO THE EXISTING PIPE RACK.
22. CONNECT NEW CHILLED WATER LINES TO EXISTING LINES, SEE LARGE SCALE PLAN, SHEET SP-2.
23. CAP FOR CONNECTION TO IRRIGATION SYSTEM. SEE SHEET L-3.
24. EXISTING PINE VALLEY WATER LINES SERVING EXISTING PLAYING FIELD IRRIGATION SYSTEM TO BE ABANDONED U.N.O. SEE SHEET L-3.
25. PIPING TO BE ABANDONED IN PLACE. PLUG OR CAP ALL ENDS WATERTIGHT TO PREVENT SUBSIDENCE.
26. CONSTRUCT NEW MANHOLE ON EXISTING UTILITY LINE.
27. EXISTING MANHOLE OR MINOR STRUCTURE TO REMAIN.
28. EXISTING MANHOLE OR MINOR STRUCTURE TO BE REMOVED.
29. EXISTING VACUUM SUMP POS TO BE REMOVED.
30. ~~PROVIDE NEW~~ ADJUST EXISTING MANHOLE TO NEW FINISHED GRADE. USE MINIMUM OF 1'-0" OF GRADE RINGS; OTHERWISE INSTALL NEW SECTIONS ON MANHOLE.
31. OBSERVATION WELL. SEE DETAIL 4/SP-5.
32. RISE FUEL OIL VENT AGAINST WALL. SEE DETAIL 7/SP-5.
33. FOR CONTINUATION OF PIPING SEE SHEET E-11. SLOPE PIPING AT 1% BACK TO TANK.
34. RAISE OR LOWER COVERS, LIDS, COLLARS, GRADE RINGS, ETC, AS REQUIRED TO ACCOMMODATE NEW FINISHED GRADE, TYPICAL.

0000TVSP1
Weber State College, Physical Education Facility - RIV 84-058
Site Utility Plan - 26726

GENERAL NOTES SP-1

1. ALL UTILITIES, LOCATIONS, INVERTS, ELEVATIONS ETC. TAKEN FROM PLANS PREPARED BY OTHERS. THIS CONTRACTOR SHALL VERIFY ALL LOCATIONS, ELEVATIONS AND CROSSINGS WITHIN THE ZONE AND DEPTH OF CONSTRUCTION. THE ENGINEERS ASSUMES NO RESPONSIBILITY OR LIABILITY FOR THE ACCURACY OF THE INFORMATION SUPPLIED FROM OTHERS.
2. THE SURFACE IMPROVEMENTS AT FINISHED GRADE OF ALL UTILITY CONSTRUCTION OUTSIDE THE LIMITS OF NEW CONSTRUCTION SHALL BE RESTORED, BY THIS CONTRACTOR TO MATCH THE EXISTING IN QUALITY, COLOR, TYPE, STYLE, THICKNESS, ETC. WHERE NEW SURFACE IMPROVEMENTS ARE SHOWN ON OTHER DRAWINGS THE EXCAVATION SHALL BE RESTORED TO FINISHED GRADE IN ACCORDANCE WITH THE SPECIFICATIONS.

REGISTERED PROFESSIONAL ENGINEER No. 7122 KIM P. HARRIS STATE OF UTAH

VAN BOERUM & FRANK ASSOCIATES INC.
CIVIL & MECHANICAL CONSULTING ENGINEERS
SALT LAKE CITY, UTAH

JONES/ RICHARDS & ASSOCIATES
PLANNING CONSTRUCTION MANAGEMENT
533 25TH STREET OGDEN, UTAH
jra ARCHITECTURE (801)394-3033

REVISED: AS BUILTS
PROJECT NUMBER: 8403
DATE:
DRAWN BY:

PROJECT: PHYSICAL EDUCATION FACILITY
WEBER STATE COLLEGE

SHEET TITLE: SITE UTILITIES PLAN

SHEET NO. SP-1

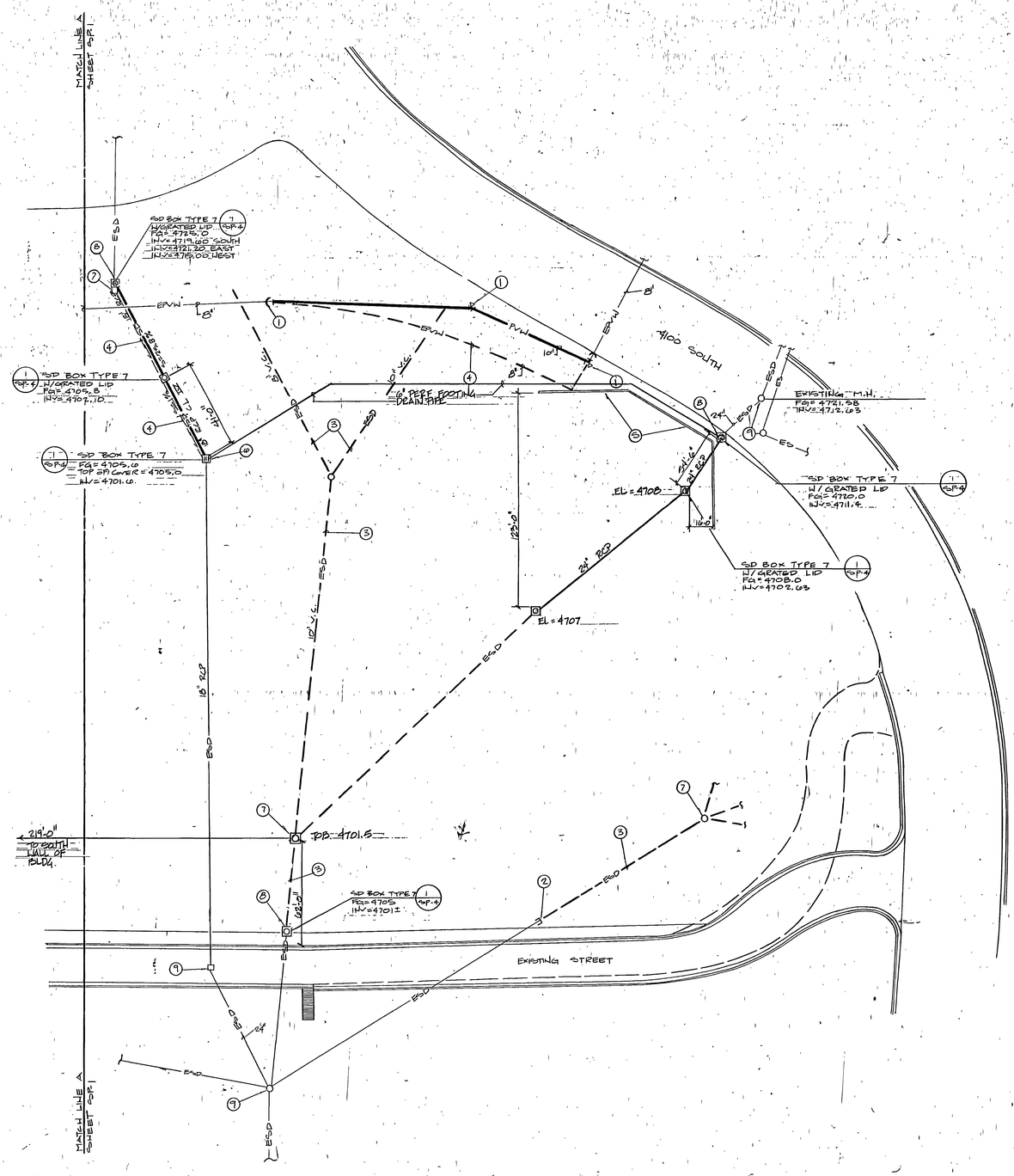


**PARTIAL SITE PLAN**
SCALE 1" = 1'-0"
30'-0"

## KEYED NOTES

1. THRUST BLOCK, TYPICAL. SEE DETAILS 10, 11 AND 12 ON SHEET SP-4.
2. CAP OR PLUG EXISTING UTILITY LINE TO BE ABANDONED.
3. EXISTING UTILITY LINE TO BE REMOVED EXACT LOCATION IS UNKNOWN. CONTRACTOR TO FIELD VERIFY AND PERFORM WORK.
4. EXISTING UTILITY LINE TO BE REMOVED.
5. NEW RETAINING WALL, SEE ARCHITECTURAL.
6. INSTALL NEW S.D. BOX ON EXISTING UTILITY LINE. SOLID COVER TO BE BURIED BELOW FINISHED GRADE.
7. EXISTING MANHOLE OR STRUCTURE TO BE REMOVED.
8. CONSTRUCT NEW MANHOLE OR STRUCTURE ON EXISTING UTILITY LINE.
9. EXISTING MANHOLE OR STRUCTURE TO REMAIN.

0000TVSP2
Weber State College, Physical Education Facility - RW 84-058
Partial Site Plan - 26727

GENERAL NOTES SP-2

1 ALL UTILITIES, LOCATIONS, INVERTS, ELEVATIONS ETC. WERE TAKEN FROM PLANS PREPARED BY OTHERS. THIS CONTRACTOR SHALL VERIFY ALL LOCATIONS, ELEVATIONS, AND CROSSINGS WITHIN THE ZONE AND DEPTH OF CONSTRUCTION. THE ENGINEERS ASSUME NO RESPONSIBILITY OR LIABILITY FOR THE ACCURACY OF THE INFORMATION SUPPLIED FROM OTHERS.

2 THE SURFACE IMPROVEMENTS AT FINISHED GRADE OF ALL UTILITY CONTRUCTION OUTSIDE THE LIMITS OF NEW CONSTRUCTION SHALL BE RESTORED, BY THIS CONTRACTOR TO MATCH THE EXISTING IN QUALITY, COLOR, TYPE, STYLE, THICKNESS, ETC., WHERE NEW SURFACE IMPROVEMENTS ARE SHOWN ON OTHER DRAWINGS THE EXCAVATION SHALL BE RESTORED TO FINISHED GRADE IN ACCORDANCE WITH THE SPECIFICATIONS.

3 STORM DRAIN LINES SHOWN ON THIS DRAWING AS EXISTING BUT NOT FOUND SHALL BE REMOVED. IN GENERAL THESE LINES FALL WITHIN THE MASS EXCAVATION OF THE SITE. IN GENRAL S.D. PIPING MAY BE ABANDONED IN PLACE WITH A PLUG WHEN THERE IS 3 FEET OF LOUVER OVER THE TOP OF THE LINE.

RECORD DOCUMENTS JUL 5 1990

THESE DOCUMENTS HAVE BEEN REVISED TO RECORD INFORMATION SUBMITTED BY THE CONTRACTOR, WHILE THEY ARE ASSUMED TO BE RELIABLE THE ARCHITECT DOES NOT GUARANTEE THEIR ACCURACY.

REGISTERED PROFESSIONAL ENGINEER No. 7122 KIM P. HARRIS STATE OF UTAH

VAN BOERUM & FRANK ASSOCIATES INC.
CIVIL & MECHANICAL CONSULTING ENGINEERS
SALT LAKE CITY, UTAH

jra JONES/ RICHARDS & ASSOCIATES
ARCHITECTURE (801)394-3033
PLANNING 533 26TH STREET
CONSTRUCTION MANAGEMENT OGDEN, UTAH

REVISED: AS BUILTS 6-90

PROJECT NUMBER: 8403
DATE:
DRAWN BY:

PROJECT: PHYSICAL EDUCATION FACILITY
WEBER STATE COLLEGE

SHEET TITLE: PARTIAL SITE PLAN

SHEET NO. SP-2

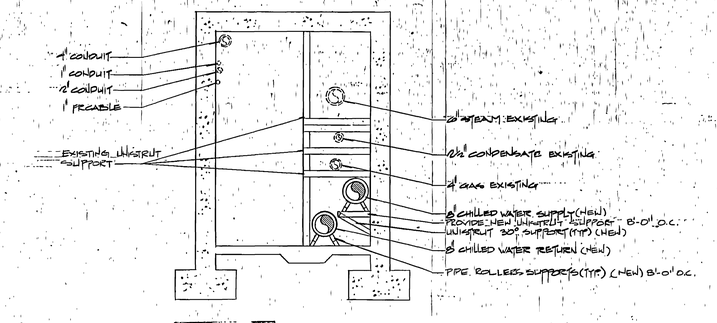


**SECTION** C SP.3
SCALE 1/2" = 1'-0"

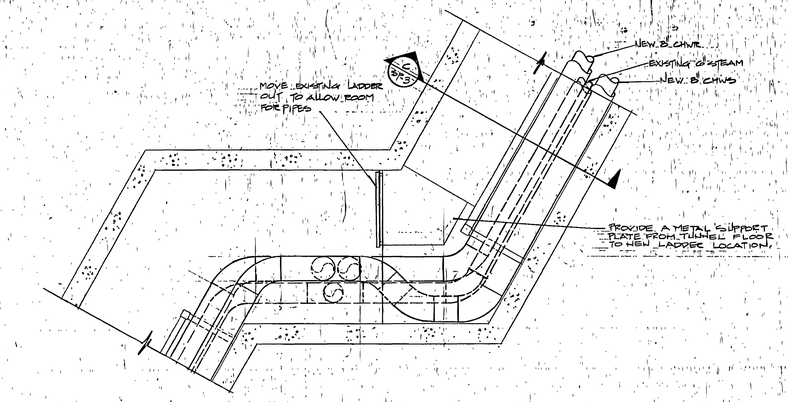


3 SP.3 **TUNNEL PLAN VIEW #3**
SCALE 1/2" = 1'-0"

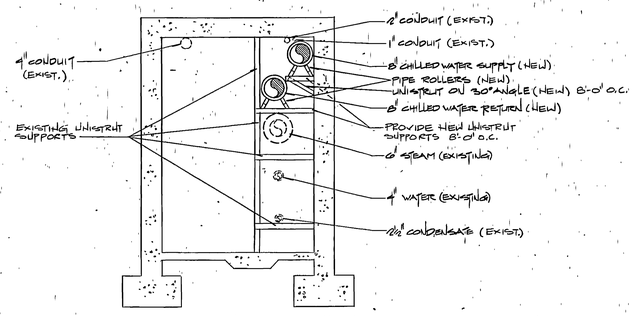


**SECTION** B SP.3
SCALE 1/2" = 1'-0"

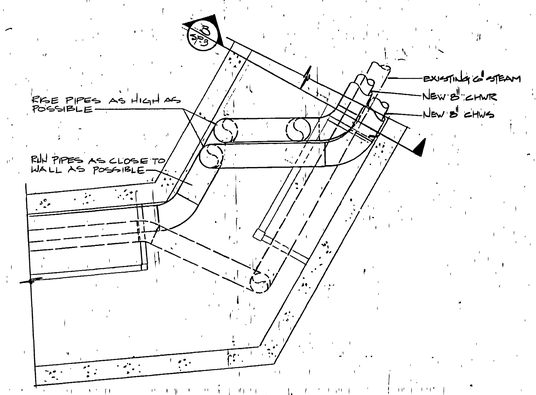


2 SP.3 **TUNNEL PLAN VIEW #2**
SCALE 1/2" = 1'-0"

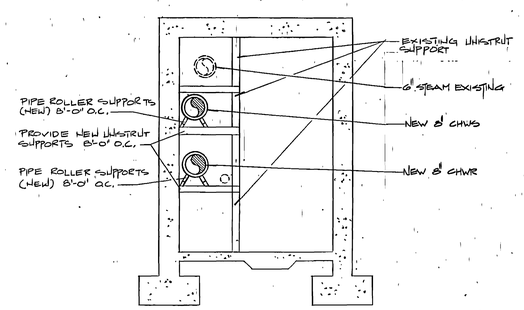


**SECTION** A SP.3
SCALE 1/2" = 1'-0"

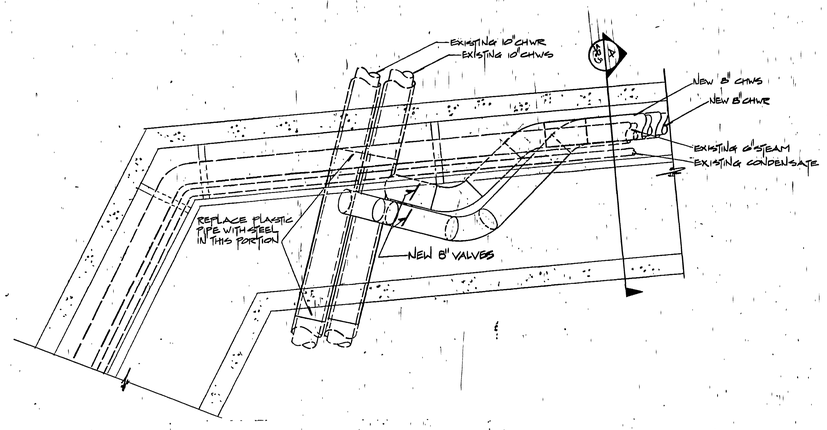


1 SP.3 **TUNNEL PLAN VIEW #1**
SCALE 1/2" = 1'-0"

00001VSP3
Weber State College, Physical Education Facility - RW 84-058
Enlarged Tunnel Plans & Section - 26728

RECORD DOCUMENTS JUL 3 1990
THESE DOCUMENTS HAVE BEEN REVISED TO RECORD INFORMATION SUBMITTED BY THE CONTRACTOR, WHILE THEY ARE ASSUMED TO BE RELIABLE THE ARCHITECT DOES NOT GUARANTEE THEIR ACCURACY.

REGISTERED PROFESSIONAL ENGINEER No. 7125 JOHN P. HARRIS STATE OF UTAH

VAN BOERUM & FRANK ASSOCIATES INC.
CIVIL & MECHANICAL CONSULTING ENGINEERS
SALT LAKE CITY, UTAH

jra JONES/ RICHARDS & ASSOCIATES
ARCHITECTURE PLANNING CONSTRUCTION MANAGEMENT
(801)394-3033 533 26TH STREET OGDEN, UTAH

REVISED: AS BUILT 8-90

PROJECT NUMBER: 8403
DATE:
DRAWN BY:

PROJECT: PHYSICAL EDUCATION FACILITY
WEBER STATE COLLEGE
SHEET TITLE: ENLARGED TUNNEL PLANS & SECTION

SHEET NO. SP-3

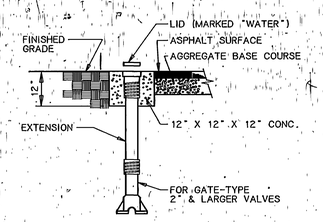


CAST IRON VALVE BOX DETAIL (16 / SP-4)
NO SCALE

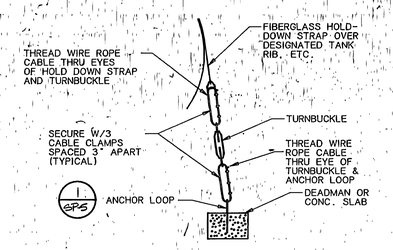


TURNBUCKLE DETAIL (13 / SP-4)
NO SCALE

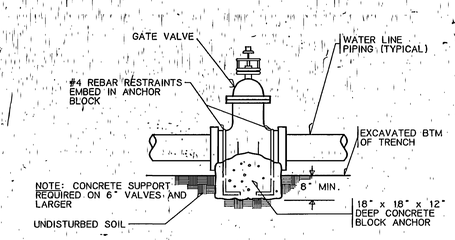


VALVE SUPPORT DETAIL (9 / SP-4)
NO SCALE

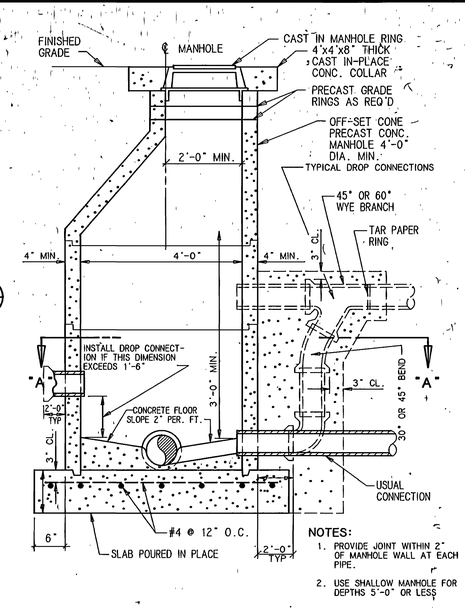


NOTES:
1. PROVIDE JOINT WITHIN 2" OF MANHOLE WALL AT EACH PIPE.
2. USE SHALLOW MANHOLE FOR DEPTHS 5'-0" OR LESS

SEWER MANHOLE SECTION (10 / SP-4)
NO SCALE

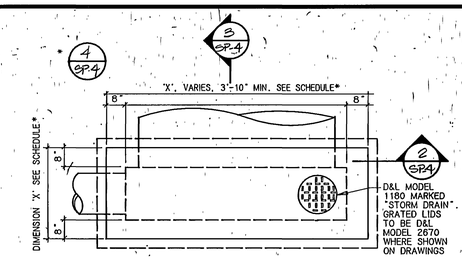


CLEANOUT BOX (1 / SP-4)
NO SCALE STORM DRAIN BOX TYPE 7

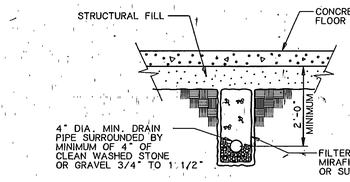


SUBDRAIN DETAIL (17 / SP-4)
NO SCALE

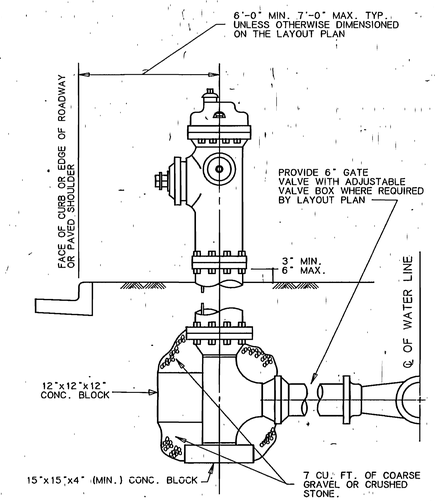


TYPICAL FIRE HYDRANT SETTING

DRY BARREL FIRE HYDRANT DETAIL (14 / SP-4)
NO SCALE

| BEARING AREAS EACH DIRECTION OF THRUST IN SQUARE FEET | | | | |
|---|---|---|---|---|
| PIPE SIZE | TEES & DEADEND | 90° ELBOW | 45° ELBOW CROSSES IN DIRECTION OF FL. | 22 1/2° ELBOW |
| 6" | 4.0 | 5.5 | 3.0 | 2.0 |
| 8" | 7.0 | 9.5 | 5.0 | 3.0 |
| 10" | 9.5 | 13.5 | 7.0 | 4.0 |
| 12" | 13.5 | 19.0 | 10.0 | 5.0 |
| 14" | 18.0 | 23.5 | 14.0 | 7.0 |
| 16" | 23.0 | 33.0 | 18.0 | 9.0 |

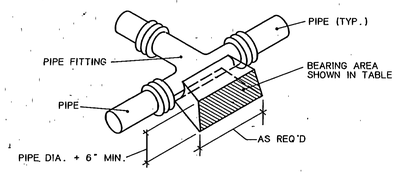


CONCRETE THRUST BLOCK DETAIL (10 / SP-4)
NO SCALE

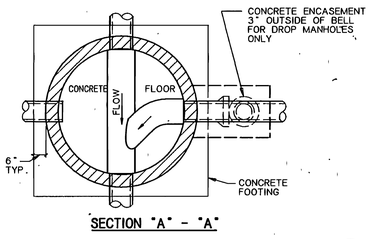


SECTION "A" - "A"

STANDARD SEWER MANHOLE (7 / SP-4)
NO SCALE

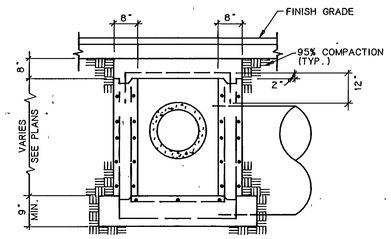


SECTION THRU CLEANOUT BOX (3 / SP-4)
NO SCALE STORM DRAIN BOX TYPE 7

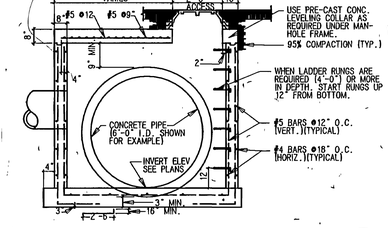


CLEANOUT BOX SECTION (2 / SP-4)
NO SCALE STORM DRAIN BOX TYPE 7

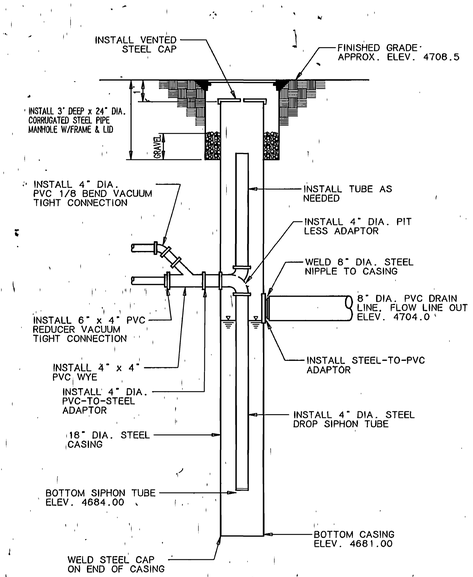


VACUUM SUMP POT DETAIL (18 / SP-4)
NO SCALE

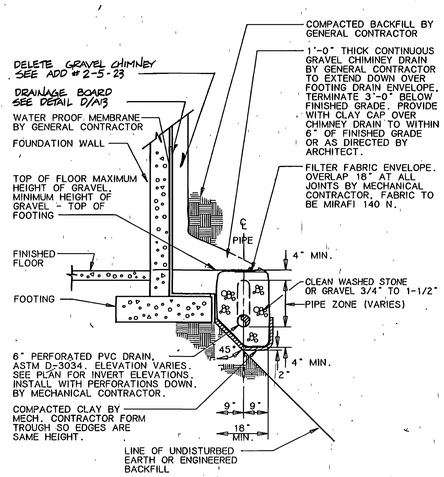


FOOTING DRAIN DETAIL (15 / SP-4)
NO SCALE

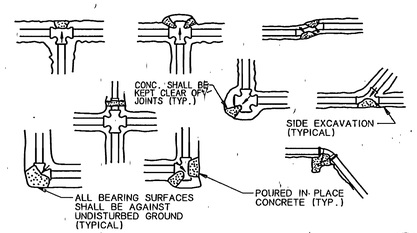


LOCATION OF THRUST BLOCKS (11 / SP-4)
NO SCALE

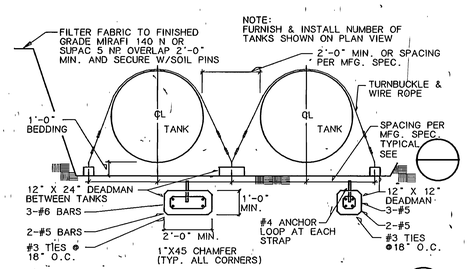


TANK SECTION & ANCHOR DETAIL (12 / SP-4)
NO SCALE

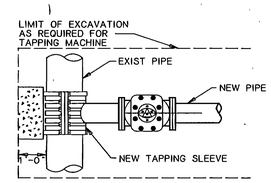


PLAN

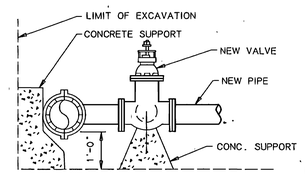


ELEVATION

TAPPING SLEEVE & VALVE INSTALLATION DETAIL (8 / SP-4)
NO SCALE

RECORD DOCUMENTS JUL 1 1990
THE DOCUMENTS HAVE BEEN REVISED TO
TO THE BEST OF THE ARCHITECT'S KNOWLEDGE THIS DOES NOT GUARANTEE THEIR ACCURACY.

| PIPE SIZE | DIMENSION (X) MINIMUM |
|---|---|
| 12" - 18" | 3'-10" |
| 21" | 3'-10" |
| 24" | 3'-10" |
| 27" | 4'-2" |
| 30" | 4'-6" |
| 33" | 4'-9" |
| 36" | 5'-0" |
| 42" | 5'-7" |
| 48" | 6'-3" |
| 54" | 6'-9" |
| 60" | 7'-5" |
| 66" | 7'-11" |
| 72" | 8'-6" |

CLEANOUT BOX SCHEDULE OF DIMENSIONS (4 / SP-4)
NO SCALE STORM DRAIN BOX TYPE 7

00007SP4
Weber State College Physical Education Facility - RN 84-058
Site Utilities Details - 28729

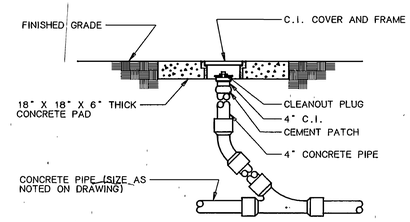


OUTSIDE CLEANOUT DETAIL (C.O.T.G.) (5 / SP-4)
NO SCALE

REGISTERED PROFESSIONAL ENGINEER No. 7122 KIM P. HARRIS STATE OF UTAH

VAN BOERUM & FRANK ASSOCIATES INC.
CIVIL & MECHANICAL CONSULTING ENGINEERS
543 E. 2ND SOUTH - SLC, UTAH

jra JONES/ RICHARDS & ASSOCIATES
PLANNING CONSTRUCTION MANAGEMENT
533 25TH STREET OGDEN, UTAH
ARCHITECTURE (801)394-3033

REVISED: AS BUILT 6-90

PROJECT NUMBER: 8403
DATE: 2-21-88
DRAWN BY:

PROJECT: PHYSICAL EDUCATION FACILITY
WEBER STATE COLLEGE

SHEET TITLE: SITE UTILITIES DETAILS

SHEET NO. SP-4

# SITE UTILITIES & PLUMBING LEGEND AND ABBREVIATIONS

| | | |
|---|---|---|
| | DHW | DOMESTIC HOT WATER |
| DCW | DCW | DOMESTIC HARD COLD WATER |
| | W | WASTE PIPING (ABOVE GRADE) |
| | W | WASTE PIPING (BELOW GRADE) |
| | V | VENT PIPING |
| | VTR | VENT THRU ROOF |
| RD | RD | ROOF DRAIN |
| RDO | RDO | ROOF DRAIN OVERFLOW |
| | FCO | FLOOR CLEANOUT |
| | WCO | WALL CLEANOUT |
| | | SHUTOFF VALVE |
| | FH | FIRE HYDRANT |
| | CB | CATCH BASIN |
| COTG | COTG | CLEANOUT TO GRADE |
| | MH | MANHOLE |
| SD | SD | STORM DRAIN PIPING |
| W | W | WATER MAIN PIPING |
| F | F | FIRE WATER PIPING |
| ESS | ESS | EXISTING SANITARY SEWER |
| SS | SS | SANITARY SEWER |
| ESD | ESD | EXISTING STORM DRAIN |
| EFD | EFD | EXISTING FOOTING DRAIN |
| | | WET FIRE SPRINKLER RISER |
| FD | FD | FOOTING DRAIN (BELOW GRADE) |
| FD | FD | FOOTING DRAIN (BELOW FLOOR) |
| EPVW | EPVW | EXISTING PINEVIEW WATER |
| PVW | PVW | PINEVIEW WATER |
| EOCW | EOCW | EXISTING OGDEN CITY WATER |
| OCW | OCW | OGDEN CITY WATER |
| EAC | EAC | EXISTING AUTOMATION CABLE |
| EF 1 | | EQUIPMENT IDENTIFICATION |
| 1 | | KEYED NOTE IDENTIFICATION |
| P-1 | | PLUMBING FIXTURES |

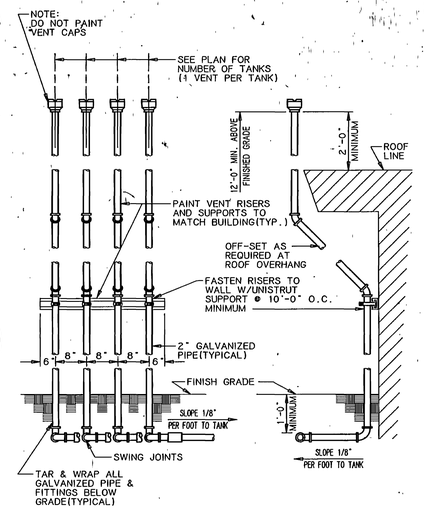


NOTE: MODIFY TO SUIT FIELD CONDITIONS

VENT ATTACHED TO BUILDING DETAIL (7 / SP-5)
NO SCALE

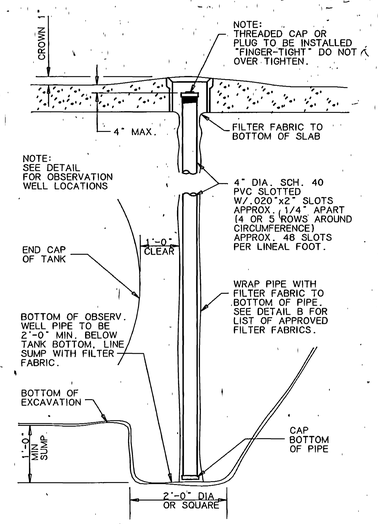


OBSERVATION WELL DETAIL (4 / SP-5)
NO SCALE

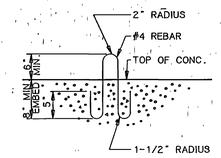


ANCHOR LOOP DETAIL (1 / SP-5)
NO SCALE

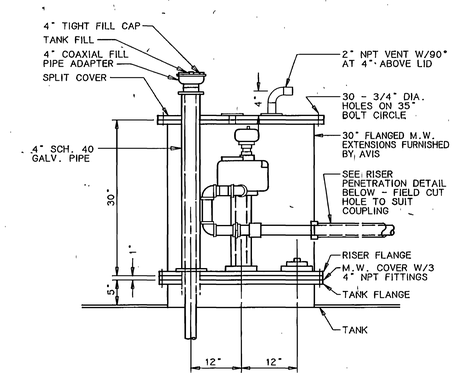


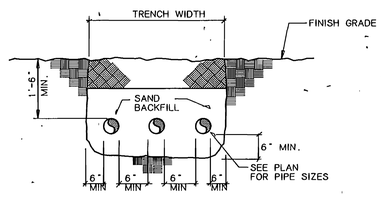


TYPICAL PIPE TRENCH (5 / SP-5)
NO SCALE

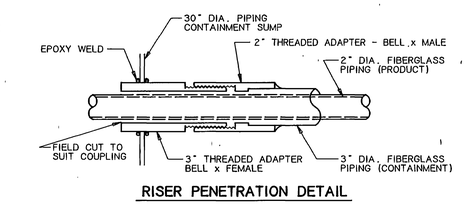


RISER PENETRATION DETAIL

30" MANWAY CONNECTION DETAIL (2 / SP-5)
NO SCALE

0000TVSP5
Weber State College, Physical Education Facility - RW 84-058
Site Utilities Details & Legend - 26730

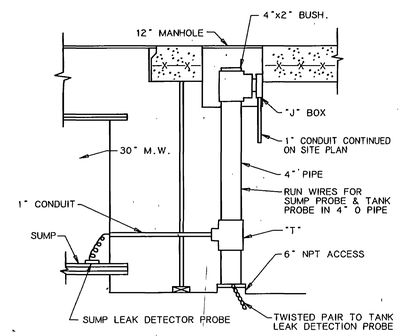


NOTE:
INSTALL DRAG WIRE IN ANNULAR RING BEFORE BURYING TANK.
REFER TO INSTALLATION SPECS.

LEAK DETECTION SYSTEM (CP / SP-5)
NO SCALE

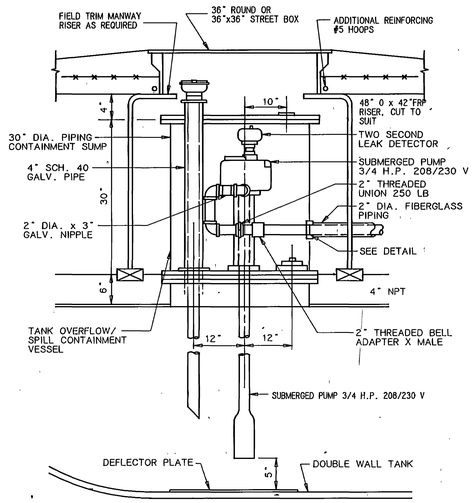


PUMP CONNECTIONS (3 / SP-5)
NO SCALE

RECORD DOCUMENTS JUL 1990
THESE DRAWINGS HAVE BEEN REVISED TO REFLECT CONSTRUCTION SUPERVISION BY THE CONTRACTOR. WORK MAY BE ASSUMED TO REPRESENT THE ARCHITECT DOES NOT GUARANTEE THEIR ACCURACY.


REGISTERED PROFESSIONAL ENGINEER No. 7122 KIM P. HARRIS STATE OF UTAH
VAN BOERUM & FRANK ASSOCIATES INC.
CIVIL & MECHANICAL CONSULTING ENGINEERS
SALT LAKE CITY, UTAH
jra JONES/ RICHARDS & ASSOCIATES
ARCHITECTURE (801)394-3033
PLANNING CONSTRUCTION MANAGEMENT
533 26TH STREET OGDEN, UTAH


REVISED: AS BUILT 6-90

PROJECT NUMBER: 8403
DATE: 9-21-89
DRAWN BY:

PROJECT: PHYSICAL EDUCATION FACILITY
WEBER STATE COLLEGE

SHEET TITLE: SITE UTILITIES DETAILS AND LEGEND

SHEET NO. SP-5

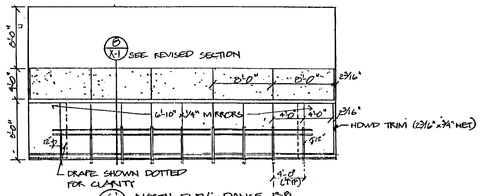


6 X-1 NORTH ELEV - DANCE 130
1/8" = 1'-0"

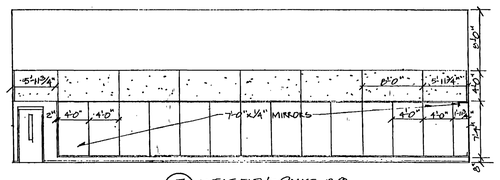


7 X-1 WEST ELEV - DANCE 130
1/8" = 1'-0"

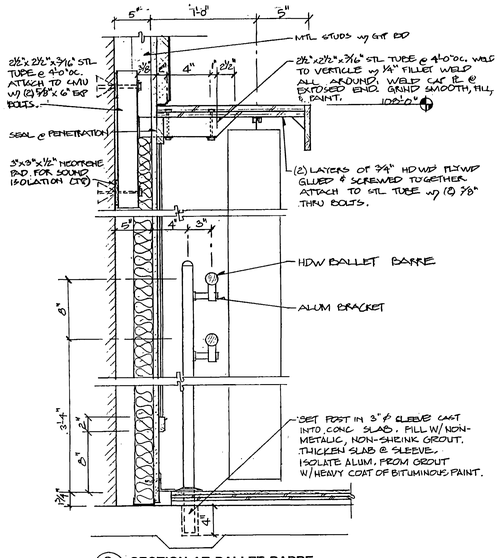


8 X-1 SECTION AT BALLET BARRE
1 1/2" = 1'-0"

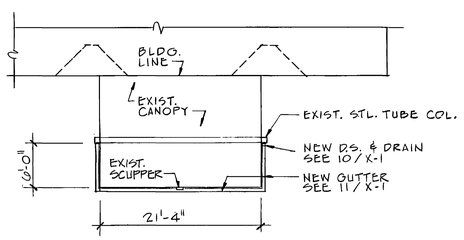


9 X-1 PARTIAL ENTRY PLAN
1/8" = 1'-0"

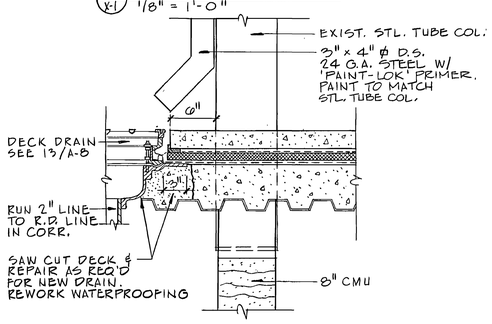


10 X-1 DOWNSPOUT & DRAIN DETAIL
1 1/2" = 1'-0"

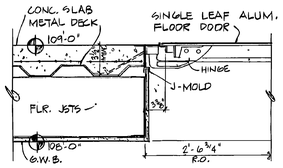


1 X-1 FLOOR DOOR DETAIL
1 1/2" = 1'-0"

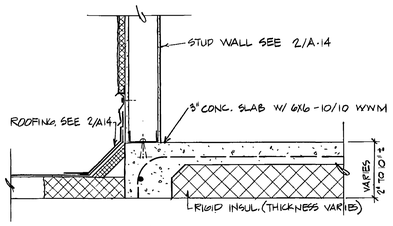


2A X-1 SLAB DETAIL A-14
1 1/2" = 1'-0"

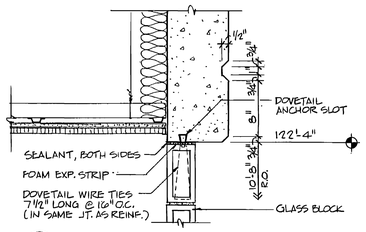


3 X-1 HEAD A-23
1 1/2" = 1'-0"

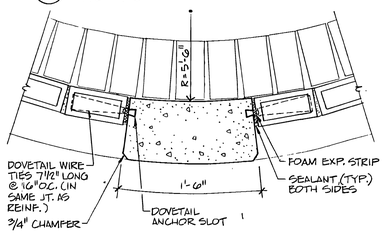


4 X-1 JAMB A-23
1 1/2" = 1'-0"

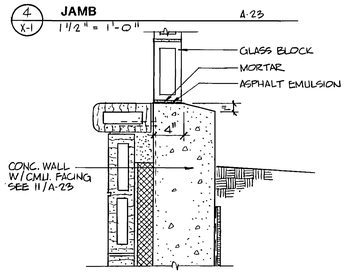


5 X-1 SILL A-23
1 1/2" = 1'-0"

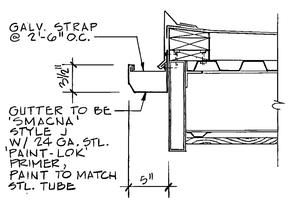


11 X-1 GUTTER DETAIL
1 1/2" = 1'-0"

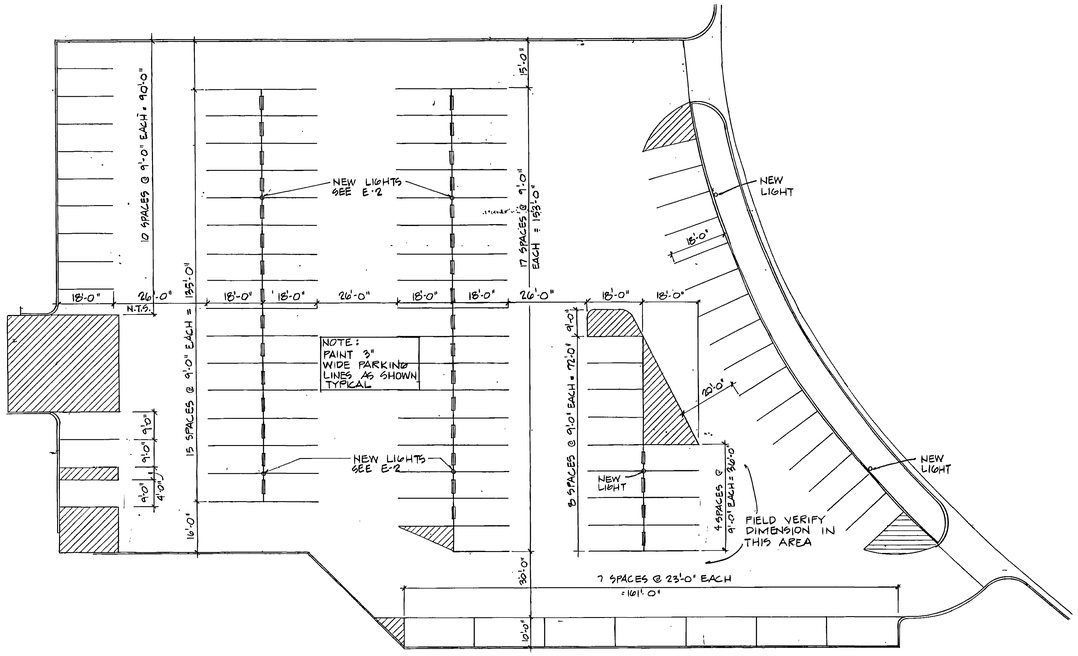


A X-1 REVISED PARKING STRIPING PLAN
1" = 20'-0"

NORTH

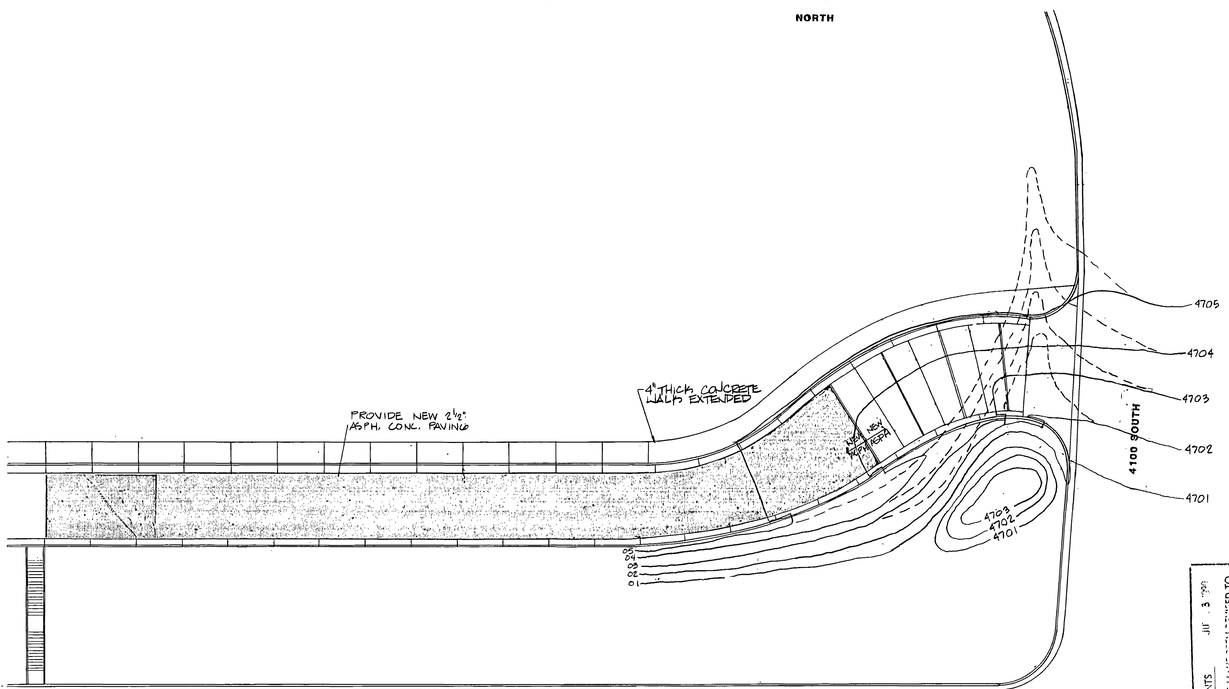


B X-1 REVISED ROADWAY APPROACH
1" = 20'-0"

NORTH

RECORD DOCUMENTS JUL 3 1990

0000TVX1
Weber State College; Physical Education Facility - RW 84-058
Modifications - 26777

jra JONES / RICHARDS & ASSOCIATES
ARCHITECTURE (801) 394-3323
PLANNING 533 - 25TH STREET
CONSTRUCTION MANAGEMENT OGDEN, UTAH

REVISED: AS BUILTS 6-90

PROJECT NUMBER: L 8403
DATE: 8/29/88
DRAWN BY: K. LEPSETTER

PROJECT: PHYSICAL EDUCATION FACILITY
WEBER STATE COLLEGE

SHEET TITLE: MODIFICATIONS

SHEET NO. X-1

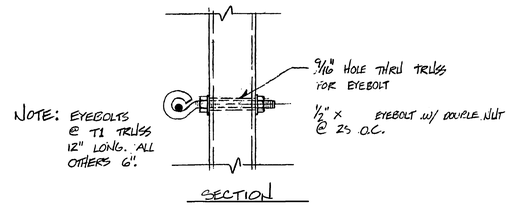


NOTE: EYEBOLTS @ T1 TRUSS 12" LONG. ALL OTHERS 6".

SECTION

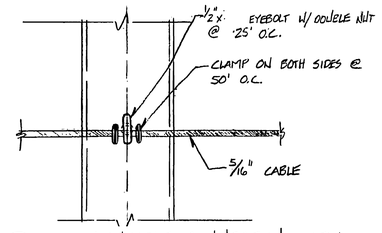


3/X-2 EYEBOLT/CABLE CONNECTION DETAIL

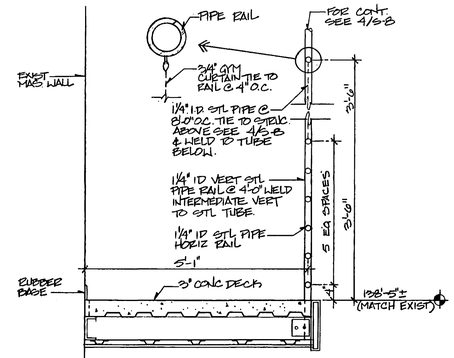


2/X-2 DETAIL 2 3/4" = 1'-0" 10/A6

RECORD DOCUMENTS JUL 2 1990

THESE DOCUMENTS HAVE BEEN REVISED TO RECORD INFORMATION SUBMITTED BY THE CONTRACTOR. WHILE THEY ARE ASSUMED TO BE RELIABLE THE ARCHITECT DOES NOT GUARANTEE THEIR ACCURACY.

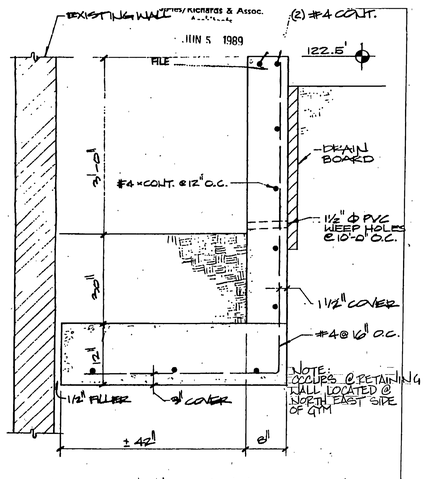


4/X-2 RETAINING WALL DETAIL
SCALE: 1" — 1'-0"

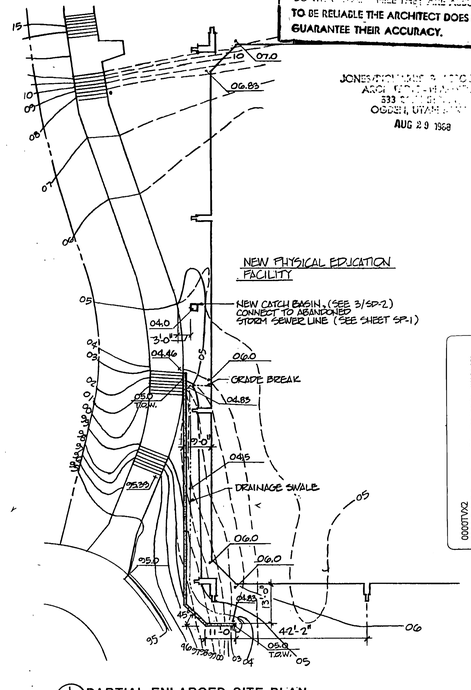


1/X-1 PARTIAL ENLARGED SITE PLAN

OGDOTWO2
Weber State College, Physical Education Facility - WW-84-008
Modifications - 26773

jra JONES / RICHARDS & ASSOCIATES
ARCHITECTURE (801) 394-3033
PLANNING 533 - 25TH STREET
CONSTRUCTION MANAGEMENT OGDEN, UTAH

REVISED: AS BUILTS 6-90

PROJECT NUMBER: 8403
DATE: 7/5/90
DRAWN BY: S. DEATON

PROJECT: PHYSICAL EDUCATION FACILITY
WEBER STATE COLLEGE

SHEET TITLE: MODIFICATIONS

SHEET NO. X-2