State of Utah

GARY R. HERBERT
Governor

GREGORY S. BELL
Lt. Governor

Department of Administrative Services
KIMBERLY K. HOOD
Executive Director

Division of Facilities Construction and Management
RICHARD P. AMON
Interim Director

ADDENDUM NO. 5

Date: May 24, 2013

To: Contractors

From: Kurt Baxter – Region Director

Reference: New Classroom Building
UVU - Orem, Utah
DFCM Project No. 12192790

Subject: **Addendum No. 5**

Addendum	1 page
Architects Addendum	168 pages
Total	169 pages

Note: This Addendum shall be included as part of the Contract Documents. Items in this Addendum apply to all drawings and specification sections whether referenced or not involving the portion of the work added, deleted, modified, or otherwise addressed in the Addendum. Acknowledge receipt of this Addendum in the space provided on the Bid Form, if applicable. Failure to do so may subject the Bidder to Disqualification.

5.1 SCHEDULE CHANGES: There are no changes to the project schedule.

5.2 GENERAL: CRSA Architects – please see attached sheets.

DFCM
Division of Facilities Construction and Management
4110 State Office Building Salt Lake City, UT 84114
Telephone (801) 538-3018 FAX (801) 538-3267

ADDENDUM NO. 5
May 22nd, 2013

Utah Valley University Classroom Building
Orem, Utah

The original specifications and drawings, labeled BID DOC dated April 30th, 2013 for the project referenced above are amended in the Addendum No. 5, dated May 24th 2013.

Receipt of this addendum shall be acknowledged by inserting its number and date in the space provided on the bid form.

This addendum consists of the following:

ARCHITECTURAL ADDENDUM ITEMS:

1. Section 071113 Bituminous Damproofing- New section attached.
2. Section 071900 Water Repellents – New Section attached.
3. Section 078123 Intumescent Fireproofing- New section attached.
4. Section 074233 Exterior Solid Phenolic Rainscreen Panels- Minor revisions. Partial spec attached.
5. Section 098433 Sound absorbing wall units – Minor revisions. Partial spec attached.
6. Section 102239 Revised to clarify finish on P-W3.
7. Sheet AE404, AE620
    1. AE404 detail C5-Added accent tiles and details, see attached sheet
    2. AE620-Added tile type T-4 and instructions, see attached sheet
    3. AE620-Delete Visuelle from base B-1 and B-2 finish, see attached sheet
8. Sheet AE633
    1. Detail A5-Delete base B-5 reference replace with “scheduled base” and refer to finish floor plan AE111C, see attached sheet
    2. Detail D2- Added reference, “Floor slab where occurs”, see attached sheet
9. Sheet AE121A
    1. Added reference D2/AE523 typical, to lounge ceiling this is a transverse callout through the clouds.
10. Sheet AE521
    1. Detail A6-clarified finishes, heights, added framing and sound batt, see attached sheet.
    2. Detail D6-added code compliance requirements, see attached sheet.
    3. Detail D3- added spacer bar and seismic clip requirements, see attached sheet.
11. Sheet AE522 detail E6
    1. Clarified finishes, see attached sheet
12. Sheet AE523
    2. Detail D2-added, see attached sheet
    3. Detail C3-updated, see attached sheet
    4. Detail B3-Sheet metal to be 18 gauge, add 6” stud channels attached to the suspended ceiling to support the sheet metal box, clarify finishes, see attached sheet
    5. Detail A2- added metal studs, clarify finishes, see attached sheet
    6. Detail A3- added metal studs, clarify finishes, see attached sheet
13. Sheet AE514

1. Detail D6- Add note to substrate next to light fixtures " 5/8" MDF, PNT FLAT BLACK" and "SHIMS, PNT FLAT BLACK", see attached sheet
2. Added detail C2 and detail B2 missed in addendum #3,see attached sheet
3. Added detail B2, missed in addendum #3, see attached sheet
4. Corrected detail C5.

14. Sheets AE101A, AE101B, AE102A, AE102B, AE103A, AE103B, AE104A, AE104B, AE105B, AE403, AE412, AE501: Corrected wall types.
15. Sheet AE513: Corrected details A2, A5, A5.
16. Sheet AE107: Clarified roof types.
17. Sheet AE602: Added doors 103J, 103K, 103H, 103L.

PRIOR APPROVALS

The following manufacturers, trade names and products are allowed to bid on a name brand only basis with the provision that they completely satisfy all and every requirement of the drawings, specifications and all addenda. Manufacturers, trade names and products shall conform to the design, quality and standards specified, established and required for the complete and satisfactory installation and performance of the building and all its respective parts.

Sheet Metal Contractor	Item	Comments
Sheet Metal Works		

ATTACHMENTS

1. Civil Addenda: Revised sheet C105.
2. Landscape Addenda: Revised sheets LS101, LS102, LS301, LS302. Revised sections 129300, 329119, 329223
3. Structural Addenda: (38) pages including (4) pages 8-1/2 x11.
4. Architectural as per above.
5. Mechanical Addenda: (42) sheets including revised partial sections 211000, 230500, 230900, 231123
6. Electrical Addenda

ANSWERS TO BIDDERS QUESTIONS

There are specific locations where GFRC column cladding is called out. Are there locations that require GFRC that are not called out? Or are any column cladding locations with no call out supposed to be gypsum board? Please distinguish between drywall column coverings and GFRC column coverings.	This was clarified in addenda 2
No wall type is called out at IDF Room 100K. Is this wall to be wall type 'A'? Please confirm wall type at IDF Room 100K and any other electrical rooms without wall tags.	The general notes call for all walls to be type A unless noted otherwise on the plan.
Please identify the specification for the 1/2" continuous reveal shown at D6/AE514.	Metal F Channel painted flat black. See attached.
See AE102A, gridline B/1.8 (curtain wall type 'AE'). At AE607, the bottom of curtain wall 'AE' refers to detail D2/AE633. Is this the correct detail at this location?	This is the correct detail reference, the floor is just not showing on the detail. Addendum #5 will be updated to show the floor and connections
Details A4-A6 show MDF base with wood veneer 'WC-1'. 'WC-1' is a wall covering. Please confirm whether 'WC-1' wall covering is meant to be applied to MDF wall base.	WC-1 is meant to be applied to the base, this product can be applied to millwork. This is to ensure the grain pattern and finish match between wall and base.
Elevator guide tubes are not sized on the structural drawings (they are shown as HSS__x__x__ elev. guide rail supports). Please size these guide rails.	See attached revised sheets

Detail A2/AE407: an embedded steel plate and steel member are shown at the top of the metal stud & gypsum board wall. The detail indicates that these items are shown on the structural drawings; they are not. Please issue sizes and a layout of where this steel and associated embeds are to be installed.	See attached revised sheets
Architectural addendum item #24 states that the Shaw carpet will be procured under State Carpet Contract #MA2097 (Wall 2 Wall). However, it does not appear that the specified Shaw carpets are on State Carpet Contract #MA2097. Please clarify the requirement that Shaw carpet be procured under the State Contract; can vendors other than Wall 2 Wall submit bids for the Shaw carpet?	The Shaw carpets for this project are on the 2013 contract which will be posted within 1-2 weeks.
Architectural addendum item #3 seems to indicate that an updated version of drawing AE514 should be included in Addendum #3. AE514 is not included; please issue, if needed.	See attached revised sheet AE514
Section 092216.23 Gypsum Board Shaft Wall Assemblies calls for .033 mil 20gauge minimum thickness, but the wall types call for 25 ga. Please clarify.	Use 20 ga.
It appears that section 092900 Gypsum Board Assemblies does not call for some types of drywall which are ½" type C. Please clarify.	Provide thicknesses as per wall types.
Section 061600 Sheathing calls for Elastomeric Sealant. Will this be required seeing as how there will be a spray on weather barrier?	The exterior envelope needs to meet the criteria outlined in the specifications. If during the mock-up process it can be demonstrated that a particular method that does not use additional sealants may be successful, it may be used.
Section 054000 Cold Formed Metal Framing calls for G90 galvanizing which requires special order materials. Will this be required?	G60 is acceptable.
Section 092216.23 Gypsum Board Shaft Wall Assemblies calls for G60 Galvanizing which requires special order materials. Will this be required?	yes
Section 092216.23 Gypsum Board shaft wall assemblies calls for the 1: liner panels to be mold tough type which is not standard. Will this be required.	The shaft wall needs to comply with the UL Listing.
Plan page SF107 indicates details C1 & B2 referencing to the Mechanical Louver Frames shown on plan page SF203. The steel for the louver frames is not provided. Please provide.	See attached.

END OF ADDENDUM 5

SECTION 071113 - BITUMINOUS DAMPPROOFING

PART 1 - GENERAL

1.1 RELATED DOCUMENTS

A. Drawings and general provisions of the Contract, including General and Supplementary Conditions and Division 01 Specification Sections, apply to this Section.

1.2 SUMMARY

A. Section Includes:

1. Cold-applied, emulsified-asphalt dampproofing.

B. Related Requirements:

1. Section 071413 "Hot Fluid-Applied Rubberized Asphalt Waterproofing" for waterproofing.

1.3 ACTION SUBMITTALS

A. Product Data: For each type of product.

B. Energy and Environmental Submittals:

1. Product Data for dampproofing, documentation including printed statement of VOC content.

1.4 FIELD CONDITIONS

A. Weather Limitations: Proceed with application only when existing and forecasted weather conditions permit dampproofing to be performed according to manufacturers' written instructions.

B. Ventilation: Provide adequate ventilation during application of dampproofing in enclosed spaces. Maintain ventilation until dampproofing has cured.

PART 2 - PRODUCTS

2.1 MATERIALS, GENERAL

A. Source Limitations: Obtain primary dampproofing materials and primers from single source from single manufacturer. Provide protection course and auxiliary materials recommended in writing by manufacturer of primary materials.

B. VOC Content: Products shall comply with VOC content limits of authorities having jurisdiction unless otherwise required.

2.2 COLD-APPLIED, EMULSIFIED-ASPHALT DAMPPROOFING

A. Manufacturers: Subject to compliance with requirements, provide products by the following] [provide products by one of the following:

1. APOC, Inc.; a division of Gardner-Gibson.
2. BASF Construction Chemicals - Building Systems; Sonneborn Brand Products.
3. Brewer Company (The).
4. ChemMasters, Inc.
5. Euclid Chemical Company (The); an RPM company.
6. Gardner-Gibson, Inc.
7. Henry Company.
8. Karnak Corporation.
9. Koppers Inc.
10. Malarkey Roofing Products.
11. Meadows, W. R., Inc.

B. Brush and Spray Coats: ASTM D 1227, Type III, Class 1.

C. VOC Content: 30 g/L or less.

2.3 AUXILIARY MATERIALS

A. General: Furnish auxiliary materials recommended in writing by dampproofing manufacturer for intended use and compatible with bituminous dampproofing.

B. Emulsified-Asphalt Primer: ASTM D 1227, Type III, Class 1, except diluted with water as recommended in writing by manufacturer.

C. Asphalt-Coated Glass Fabric: ASTM D 1668, Type I.

D. Patching Compound: Epoxy or latex-modified repair mortar of type recommended in writing by dampproofing manufacturer.

E. Protection Course: Smooth-surfaced roll roofing complying with ASTM D 6380, Class S, Type III.

PART 3 - EXECUTION

3.1 EXAMINATION

A. Examine substrates, areas, and conditions with Applicator present, for compliance with requirements for surface smoothness, surface moisture, and other conditions affecting performance of bituminous dampproofing work.

1. Test for surface moisture according to ASTM D 4263.

B. Proceed with application only after substrate construction and penetrating work have been completed and unsatisfactory conditions have been corrected.

3.2 PREPARATION

A. Mask or otherwise protect adjoining exposed surfaces from being stained, spotted, or coated with dampproofing. Prevent dampproofing materials from entering and clogging weep holes and drains.

B. Clean substrates of projections and substances detrimental to the dampproofing work; fill voids, seal joints, and remove bond breakers if any, as recommended in writing by prime material manufacturer.

C. Apply patching compound to patch and fill tie holes, honeycombs, reveals, and other imperfection.

3.3 APPLICATION, GENERAL

A. Comply with manufacturer's written instructions for dampproofing application, cure time between coats, and drying time before backfilling unless more stringent requirements are indicated.

1. Apply dampproofing to provide continuous plane of protection.
2. Apply additional coats if recommended in writing by manufacturer or to achieve a smooth surface and uninterrupted coverage.

B. Where dampproofing footings and foundation walls, apply from finished-grade line to top of footing; extend over top of footing and down a minimum of 6 inches (150 mm) over outside face of footing.

1. Extend dampproofing 12 inches (300 mm) onto intersecting walls and footings, but do not extend onto surfaces exposed to view when Project is completed.
2. Install flashings and corner protection stripping at internal and external corners, changes in plane, construction joints, cracks, and where shown as "reinforced," by embedding an 8-inch- (200-mm-) wide strip of asphalt-coated glass fabric in a heavy coat of dampproofing. Dampproofing coat for embedding fabric is in addition to other coats required.

3.4 COLD-APPLIED, EMULSIFIED-ASPHALT DAMPPROOFING

A. Concrete Foundations: Apply two brush or spray coats at not less than 1.5 gal./100 sq. ft. (0.6 L/sq. m) for first coat and 1 gal./100 sq. ft. (0.4 L/sq. m) for second coat.

B. Unexposed Face of Concrete Retaining Walls: Apply one brush or spray coat at not less than 1.25 gal./100 sq. ft. (0.5 L/sq. m).

3.5 INSTALLATION OF PROTECTION COURSE

A. Where indicated, install protection course over completed-and-cured dampproofing. Comply with dampproofing-material and protection-course manufacturers' written instructions for attaching protection course.

1. Support protection course over cured coating with spot application of adhesive type recommended in writing by protection-board manufacturer.
2. Install protection course on same day of installation of dampproofing (while coating is tacky) to ensure adhesion.

3.6 CLEANING

A. Clean spillage and soiling from adjacent construction using cleaning agents and procedures recommended in writing by manufacturer of affected construction.

END OF SECTION 071113

SECTION - 071900 - WATER REPELLENTS

PART 1 - GENERAL

1.1 RELATED DOCUMENTS

A. Drawings and general provisions of the Contract, including General and Supplementary Conditions and Division 01 Specification Sections, apply to this Section.

1.2 SUMMARY

A. Section includes penetrating water-repellent treatments for the following vertical and horizontal surfaces:

1. Concrete unit masonry.

B. Related Sections:

1. Section 030130 "Maintenance of Cast-in-Place Concrete" for penetrating polymer sealers for exterior traffic surfaces.

2. Section 040140 "Maintenance of Stone Assemblies" for combined stone consolidation and water-repellent treatment.

3. Section 042000 "Unit Masonry" for integral water-repellent admixture for unit masonry assemblies.

1.3 PERFORMANCE REQUIREMENTS

A. General Performance: Water repellents shall meet performance requirements indicated without failure due to defective manufacture, fabrication, or installation.

1. Water Repellents: Comply with performance requirements specified, as determined by testing substrate assemblies representing those indicated for this Project.

B. Water Absorption: Minimum 90 percent reduction of water absorption after 24 hours in comparison of treated and untreated specimens.

1. Concrete Masonry Units: ASTM C 140.

C. Water Penetration and Leakage through Masonry: Minimum 90 percent reduction in leakage rate in comparison of treated and untreated specimens, according to ASTM E 514.

D. Durability: Maximum 5 percent loss of water-repellent properties after 2500 hours of weathering according to ASTM G 154 in comparison to water-repellent-treated specimens before weathering.

E. Chloride-Ion Intrusion in Concrete: NCHRP Report 244, Series II tests.

1. Reduction of Water Absorption: 80 percent.

2. Reduction in Chloride Content: 80 percent.

1.4 INFORMATIONAL SUBMITTALS

A. Product Certificates: For each type of water repellent, from manufacturer.

B. Field quality-control reports.

PART 2 - PRODUCTS

2.1 PENETRATING WATER REPELLENTS

A. Silane/Siloxane-Blend, Penetrating Water Repellent: Clear, silane and siloxane blend with 400 g/L or less of VOCs.

PART 3 - EXECUTION

3.1 EXAMINATION

A. Examine substrates, areas, and conditions, with Applicator present, for compliance with requirements and conditions affecting performance of the Work.

1. Verify that surfaces are clean and dry according to water-repellent manufacturer's requirements. Check moisture content in three representative locations by method recommended by manufacturer.

2. Inspect for previously applied treatments that may inhibit penetration or performance of water repellents.

3. Verify that there is no efflorescence or other removable residues that would be trapped beneath the application of water repellent.

4. Verify that required repairs are complete, cured, and dry before applying water repellent.

B. Test pH level according to water-repellent manufacturer's written instructions to ensure chemical bond to silica-containing or siliceous minerals.

C. Proceed with installation only after unsatisfactory conditions have been corrected.

3.2 PREPARATION

A. Cleaning: Before application of water repellent, clean substrate of substances that could impair penetration or performance of product according to water-repellent manufacturer's written instructions.

1. Concrete Unit Masonry: Remove oil, curing compounds, laitance, and other substances that inhibit penetration or performance of water repellents according to ASTM E 1857.

B. Protect adjoining work, including mortar and sealant bond surfaces, from spillage or blow-over of water repellent. Cover adjoining and nearby surfaces of aluminum and glass if there is the possibility of water repellent being deposited on surfaces. Cover live vegetation.

C. Coordination with Mortar Joints: Do not apply water repellent until pointing mortar for joints adjacent to surfaces receiving water-repellent treatment has been installed and cured.

3.3 FIELD QUALITY CONTROL

A. Testing of Water-Repellent Material: Owner reserves the right to invoke the following procedure at any time and as often as Owner deems necessary during the period when water repellent is being applied:

1. Owner will engage the services of a qualified testing agency to sample water-repellent material being used. Samples of material delivered to Project site will be taken, identified, sealed, and certified in presence of Contractor.

2. Testing agency will perform tests for compliance of water-repellent material with product requirements.

3.4 CLEANING

A. Immediately clean water repellent from adjoining surfaces and surfaces soiled or damaged by water-repellent application as work progresses. Correct damage to work of other trades caused by water-repellent application, as approved by Architect.

B. Comply with manufacturer's written cleaning instructions.

END OF SECTION 071900

SECTION 074233 – EXTERIOR SOLID PHENOLIC RAINSCREEN PANELS

PART 1 - GENERAL

1.1 RELATED DOCUMENTS

A. Drawings and general provisions of the Contract, including General and Supplementary Conditions and Division 01 Specification Sections, apply to this Section.

1.2 SUMMARY

A. Section Includes:

1. Exterior solid phenolic rainscreen wall panels and aluminum supporting substructure which is part of the rainscreen system.

2. Applies to drawings where called out as: “Exterior composite wood soffit” or “panel”, “wood slat siding system”.

1.3 Related Sections:

A. Division 07 “Fluid Applied Membrane Air Barriers “for rain and air resistant barrier, which is an integral part of rainscreen design.

B. Division 07 -”Thermal Insulation”

C. Division 07 "Sheathing" for exterior rainscreen wall system substrate materials and installation.

D. Division 05 “Cold-Formed Metal Framing” for in- wall blocking as needed for attachment of rainscreen substructure.

1.3 SYSTEM DESCRIPTION

A. Exterior Rainscreen Assembly: Solid phenolic core, fire-retardant, exterior grade rainscreen wall panels, aluminum substructure, attachment system components, air/vapor barrier membrane, continuous exterior insulation, and all accessories necessary for a complete rear-ventilated, weathertight exterior rainscreen wall system. Furnish fastenings and flashings as required to complete rainscreen system.

1.4 PERFORMANCE REQUIREMENTS

A. General Performance: Solid phenolic exterior rainscreen wall panel system, aluminum substructure, and attachment accessories shall comply with performance requirements without failure due to defective manufacture, fabrication, installation, or other defects in construction.

B. Delegated Design Engineering: Design solid phenolic exterior rainscreen wall panel system, including comprehensive engineering analysis by a qualified professional engineer, using performance requirements and design criteria indicated.

1. Design shall be inclusive of aluminum support structure system and all attachment accessories.

2. Design shall be inclusive of solid phenolic exterior rainscreen wall panel manufacturing and shall conform to Manufacturer’s recommended installation procedures.

B. Warranty only available when panels are installed and fabricated by an installation contractor that has been approved and trained by the manufacturer's representative to follow the recommended guidelines.

PART 2 - PRODUCTS

2.1 SOLID PHENOLIC EXTERIOR RAINSCREEN WALL PANEL

A. General: Subject to compliance requirements, provide solid phenolic rainscreen wall panels for exterior façade applications:

1. Basis of Design: Fundermax Exterior F Quality as imported by Architects Surfaces LLC.

2. Alternate Products:

a. Trespa.

b. Parklex.

c. Prodema.

B. Product Description:

1. Rainscreen Material: Solid phenolic resin, fire-retardant exterior grade rainscreen panel.

2. Rainscreen Panel Finish: Standard Color: 1260 Parakan Teak.

3. Rainscreen Panel Core: Standard brown core.

4. Rainscreen Panel Thickness: (12mm) as indicated on drawings.

5. Rainscreen Panel Standard Sizes: As indicated on drawings.

6. Substructure : Concealed Fastener Type; extruded aluminum profiles, clips, closures, and tees and indicated on the project drawings.

C. Physical Properties:

1. Smoke Development Index: Less than 450 per ASTM E-84.

2. Flame Spread Index: Less than 10 per ASTM E-84.

3. Panels shall have UV and weather resistance performance with a grey scale rating minimum of 4-5 per ISO 4892-2, 4892-3.

4. Panels shall be impact resistant per EN-ISO 178

5. Panels shall be scratch resistant per EN-438-6

6. Panels shall be FSC Cerfified.

7. Panels shall be ICC AC92 compliant and have ICC Evaluation Services Report.

8. Rainscreen assembly shall comply with NFPA 285

2.2 AUXILIARY MATERIALS

A. Aluminum Support Structure: Extruded, finished, and color-matched for the type of use indicated on project Drawings.

SECTION - 078123 - INTUMESCENT FIREPROOFING

PART 1 - GENERAL

1.1 RELATED DOCUMENTS

A. Drawings and general provisions of the Contract, including General and Supplementary Conditions and Division 01 Specification Sections, apply to this Section.

1.2 SUMMARY

A. Section includes mastic and intumescent fire-resistive coatings (MIFRC).

B. Related Requirements:

1. Section 078100 "Applied Fireproofing" for sprayed fire-resistive materials (SFRM).

2. Section 099646 "Intumescent Painting" for intumescent paints that are fire retarding, but not fire resistive.

1.3 ACTION SUBMITTALS

A. Product Data: For each type of product.

B. Samples: For each exposed product and for each color and texture specified, 4 inches square in size.

1.4 INFORMATIONAL SUBMITTALS

A. Evaluation Reports: For fireproofing, from ICC-ES.

1.5 QUALITY ASSURANCE

A. Installer Qualifications: A firm or individual certified, licensed, or otherwise qualified by fireproofing manufacturer as experienced and with sufficient trained staff to install manufacturer's products according to specified requirements.

B. Mockups: Build mockups to verify selections made under Sample submittals and to demonstrate aesthetic effects.

1. Build mockup of each required finish as shown on Drawings.

2. Approval of mockups does not constitute approval of deviations from the Contract Documents contained in mockups unless Architect specifically approves such deviations in writing.

3. Subject to compliance with requirements, approved mockups may become part of the completed Work if undisturbed at time of Substantial Completion.

1.6 FIELD CONDITIONS

A. Environmental Limitations: Do not apply fireproofing when ambient or substrate temperature is 50 deg F or lower unless temporary protection and heat are provided to maintain temperature at or above this level for 24 hours before, during, and for 24 hours after product application.

B. Ventilation: Ventilate building spaces during and after application of fireproofing, providing complete air exchanges according to manufacturer's written instructions. Use natural means or, if they are inadequate, forced-air circulation until fireproofing dries thoroughly.

PART 2 - PRODUCTS

2.1 MATERIALS, GENERAL

A. Assemblies: Provide fireproofing, including auxiliary materials, according to requirements of each fire-resistance design and manufacturer's written instructions.

B. Source Limitations: Obtain fireproofing from single source.

C. Fire-Resistance Design: Indicated on Drawings, tested according to ASTM E 119 or UL 263 by a qualified testing agency. Identify products with appropriate markings of applicable testing agency.

1. Steel members are to be considered unrestrained unless specifically noted otherwise.

D. VOC Content: Products shall comply with VOC content limits of authorities having jurisdiction.

1. Flat Paints and Coatings: 50 g/L.

2. Nonflat Paints and Coatings: 150 g/L.

3. Primers, Sealers, and Undercoaters: 200 g/L.

4. Anticorrosive and Antirust Paints Applied to Ferrous Metals: 250 g/L.

5. Fireproofing Exterior Coatings: 350 g/L.

E. Asbestos: Provide products containing no detectable asbestos.

2.2 MASTIC AND INTUMESCENT FIRE-RESISTIVE COATINGS

A. MIFRC Manufacturer's standard, factory-mixed formulation, and complying with indicated fire-resistance design.

1. Products: Subject to compliance with requirements, available products that may be incorporated into the Work include, but are not limited to, the following:

    a. Albi Manufacturing; StanChem, Inc; Albi Clad 800.

    b. Carboline Company; an RPM International company; AD Firefilm III.

    c. Hilti, Inc; CFP-S WB Fire Protection Steel Spray.

    d. International Paint Limited; Chartek 1709.

    e. Isolatek International, Inc; Cafco SprayFilm-WB 3.

2. Application: Designated for "conditioned interior space purpose"use by a qualified testing agency acceptable to authorities having jurisdiction.

3. Thickness: As required for fire-resistance design indicated, measured according to requirements of fire-resistance design.

4. Surface-Burning Characteristics: Comply with ASTM E 84; testing by a qualified testing agency. Identify products with appropriate markings of applicable testing agency.

    a. Flame-Spread Index: 25 or less.

    b. Smoke-Developed Index: 450 or less.

5. Hardness: Not less than 65, Type D durometer, according to ASTM D 2240.

6. Finish: Smooth.

    a. Color and Gloss: As per drawings.

2.3 AUXILIARY MATERIALS

A. General: Provide auxiliary materials that are compatible with fireproofing and substrates and are approved by UL or another testing and inspecting agency acceptable to authorities having jurisdiction for use in fire-resistance designs indicated.

B. Substrate Primers: Primers approved by fireproofing manufacturer and complying with required fire-resistance design by UL or another testing and inspecting agency acceptable to authorities having jurisdiction.

PART 3 - EXECUTION

3.1 EXAMINATION

A. Examine substrates, areas, and conditions, with Installer present, for compliance with requirements for substrates and other conditions affecting performance of the Work and according to each fire-resistance design. Verify compliance with the following:

1. Substrates are free of dirt, oil, grease, release agents, rolling compounds, mill scale, loose scale, incompatible primers, paints, and encapsulants, or other foreign substances capable of impairing bond of fireproofing with substrates under conditions of normal use or fire exposure.

2. Objects penetrating fireproofing, including clips, hangers, support sleeves, and similar items, are securely attached to substrates.

3. Substrates receiving fireproofing are not obstructed by ducts, piping, equipment, or other suspended construction that will interfere with fireproofing application.

B. Conduct tests according to fireproofing manufacturer's written recommendations to verify that substrates are free of substances capable of interfering with bond.

C. Prepare written report, endorsed by Installer, listing conditions detrimental to performance of the Work.

D. Proceed with installation only after unsatisfactory conditions have been corrected.

3.2 PREPARATION

A. Cover other work subject to damage from fallout or overspray of fireproofing materials during application.

B. Clean substrates of substances that could impair bond of fireproofing.

C. Prime substrates where included in fire-resistance design and where recommended in writing by fireproofing manufacturer unless compatible shop primer has been applied and is in satisfactory condition to receive fireproofing.

D. For applications visible on completion of Project, repair substrates to remove surface imperfections that could affect uniformity of texture and thickness in finished surface of fireproofing. Remove minor projections and fill voids that would telegraph through fire-resistive products after application.

3.3 APPLICATION

A. Construct fireproofing assemblies that are identical to fire-resistance design indicated and products as specified, tested, and substantiated by test reports; for thickness, primers, topcoats, finishing, and other materials and procedures affecting fireproofing work.

B. Comply with fireproofing manufacturer's written instructions for mixing materials, application procedures, and types of equipment used to mix, convey, and apply fireproofing; as applicable to particular conditions of installation and as required to achieve fire-resistance ratings indicated.

C. Coordinate application of fireproofing with other construction to minimize need to cut or remove fireproofing.

1. Do not begin applying fireproofing until clips, hangers, supports, sleeves, and other items penetrating fireproofing are in place.

2. Defer installing ducts, piping, and other items that would interfere with applying fireproofing until application of fireproofing is completed.

D. Install auxiliary materials as required, as detailed, and according to fire-resistance design and fireproofing manufacturer's written recommendations for conditions of exposure and intended use. For auxiliary materials, use attachment and anchorage devices of type recommended in writing by fireproofing manufacturer.

E. Spray apply fireproofing to maximum extent possible. Following the spraying operation in each area, complete the coverage by trowel application or other placement method recommended in writing by fireproofing manufacturer.

F. Extend fireproofing in full thickness over entire area of each substrate to be protected.

G. Install body of fireproofing in a single course unless otherwise recommended in writing by fireproofing manufacturer.

H. Provide a uniform finish complying with description indicated for each type of fireproofing material and matching finish approved for required mockups.

I. Cure fireproofing according to fireproofing manufacturer's written recommendations.

J. Do not install enclosing or concealing construction until after fireproofing has been applied, inspected, and tested and corrections have been made to deficient applications.

K. Finishes: Where indicated, apply fireproofing to produce the following finishes:

1. Skip-Troweled Finish: Even leveled surface produced by troweling spray-applied finish to smooth out the texture and neaten edges.

3.4 FIELD QUALITY CONTROL

A. Special Inspections: Owner will engage a qualified special inspector to perform the following special inspections:

1. Test and inspect as required by the IBC, 1704.11.

B. Perform the tests and inspections of completed Work in successive stages. Do not proceed with application of fireproofing for the next area until test results for previously completed applications of fireproofing show compliance with requirements. Tested values must equal or exceed values as specified and as indicated and required for approved fire-resistance design.

C. Fireproofing will be considered defective if it does not pass tests and inspections.

1. Remove and replace fireproofing that does not pass tests and inspections, and retest.

2. Apply additional fireproofing, per manufacturer's written instructions, where test results indicate insufficient thickness, and retest.

D. Prepare test and inspection reports.

3.5 CLEANING, PROTECTING, AND REPAIRING

A. Cleaning: Immediately after completing spraying operations in each containable area of Project, remove material overspray and fallout from surfaces of other construction and clean exposed surfaces to remove evidence of soiling.

B. Protect fireproofing, according to advice of manufacturer and Installer, from damage resulting from construction operations or other causes, so fireproofing will be without damage or deterioration at time of Substantial Completion.

C. As installation of other construction proceeds, inspect fireproofing and repair damaged areas and fireproofing removed due to work of other trades.

D. Repair fireproofing damaged by other work before concealing it with other construction.

E. Repair fireproofing by reapplying it using same method as original installation or using manufacturer's recommended trowel-applied product.

END OF SECTION 078123

C. Manufacturers (Fabric Covered Panels for use at “horseshoe classroom”) (AP-3): Subject to compliance with requirements, available manufacturers offering products that may be incorporated into the Work include, but are not limited to, the following:

1. Acoustical Panel Systems (APS, Inc.).
2. Acoustical Solutions, Inc.
3. Armstrong World Industries.
4. AVL Systems, Inc.
5. Benton Brothers Solutions, Inc.
6. Conwed Designscape; an Owens Corning company.
7. Decoustics Limited; a CertainTeed Ceilings company.
8. Essi Acoustical Products.
9. Golterman & Sabo.
10. Kinetics Noise Control, Inc.
11. Lamvin, Inc.
12. MBI Products Company, Inc.
13. Panel Solutions, Inc.
14. Perdue Acoustics.
15. Pinta Acoustic, Inc.
16. Proudfoot Company, Inc. (The).
17. Sound Concepts Canada, Inc.
18. Sound Management Group LLC.
19. Tectum Inc.
20. Wall Technology, Inc.; an Owens Corning company.
21. Working Walls, Inc.

D. Basis-of-Design Product: (AP-4) Subject to compliance with requirements, provide Alpro Acoustical Systems “Wall Panel System” as indicated on the drawings or comparable product approved by the Architect.
1. Perforated corrugate metal skin. 2” thick frame w/ 2” thick acoustical media, 1.5 lb density fiberglass encapsulated in black polyethylene. High performance powder coat finish w/ NRC rating of 1.15.

E. General Requirements for Sound-Absorbing Wall Units: Units shall comply with the testing and product requirements of the California Department of Health Services' "Standard Practice for the Testing of Volatile Organic Emissions from Various Sources Using Small-Scale Environmental Chambers."

F. Sound-Absorbing Wall Panel (Solo Planks) (AP-1): Manufacturer's standard tongue and groove plank construction consisting of facing material (wood veneer) laminated to front face border of MDF core.

1. Mounting: Mounted to substrate of wood blocking or horizontal metal furring as detailed.

   a. Finish Color at Exposed Edges: As selected by Architect from manufacturer's full range.

2. Core: Manufacturer's standard.

   a. Core-Face Layer: Manufacturer's standard hardwood veneer as selected by Architect.

3. Edge Profile: Tongue and Groove.
4. Corner Detail in Elevation: Custom as indicated on Drawings with continuous edge profile indicated.
5. Facing Material: As indicated on Drawings.
6. Acoustical Performance: Sound absorption NRC of 0.95 according to ASTM C 423 according to ASTM E 795.
7. Nominal Core Thickness: 5/8 inch (16 mm).
8. Plank Width: 7–9/16 inches (192 mm).

G. Sound-Absorbing Wall Panel (Finale Wall Panel System) (AP-2): Manufacturer's standard panels consisting of facing material (tectum) and “SoniCor” core with tectum furring strips.

1. Mounting: Mounted to substrate with mfg provided clips.

   a. Finish Color at Exposed Edges: As selected by Architect from manufacturer's full range.

2. Core: Manufacturer's standard SoniCor.
3. Edge Profile: Beveled.
4. Corner Detail in Elevation: As indicated on Drawings with continuous edge profile indicated.
5. Facing Material: Tectum.
6. Acoustical Performance: Sound absorption NRC of 0.75 according to ASTM C 423 according to ASTM E 795.
7. Nominal Core Thickness: 1 inch (25 mm).
8. Panel Width: 23-3/4 or 47-3/4 inches as shown on drawings.

H. Sound-Absorbing Wall Panel (fabric covered wall panels) (AP-3): Manufacturer's standard panel construction consisting of facing material stretched over front face of edge-framed core and bonded or attached to edges and back of frame.

1. Mounting: Edge mounted with splines secured to substrate.

   a. Finish Color at Exposed Edges: Match color of facing material.

2. Core: Manufacturer's standard.

   a. Core-Face Layer: Manufacturer's standard impact-resistant, acoustically transparent, copolymer sheet.

3. Edge Construction: Manufacturer's standard chemically hardened core with no frame.
4. Edge Profile: Long edges kerfed and rabbeted to receive splines.
5. Corner Detail in Elevation: Square with continuous edge profile indicated.
6. Reveals between Panels: As indicated on Drawings.
7. Facing Material: As indicated on Drawings.
8. Acoustical Performance: Sound absorption NRC or SAA of not less than 0.65 according to ASTM C 423 for Type A mounting according to ASTM E 795.
9. Nominal Overall Panel Thickness: As indicated on Drawings.
10. Panel Width: As indicated on Drawings.
11. Panel Height: As indicated on Drawings.

I. Sound-Absorbing Wall Panel (Alpro Wall Panel System) (AP-4): Manufacturer's standard corrugated perforated aluminum sheet construction, including mounting accessories and sound absorption material.

1. Mounting: Mounted to Z furring with J trim perimeter and corner angles.
2. Edge Construction: Manufacturer's standard J trim.
3. Panel Material: .032” 3003-H14 aluminum alloy, perforated with 1/8” diameter holes and corrugated in pattern as selected by Architect.
4. Acoustical Pad: 1.5#, 2” thick fiberglass wrapped in clear PVC.
5. Acoustical Performance: Sound absorption NRC or SAA of not less than 1.00 according to ASTM C 423 for Type A mounting according to ASTM E 795.
6. Nominal Overall Panel Thickness: As indicated on Drawings.
7. Panel Width: As indicated on Drawings.
8. Panel Height: As indicated on Drawings.

2.2 MATERIALS

A. General:

1. Certified Wood: Fabricate products with wood-based components produced from wood obtained from forests certified by an FSC-accredited certification body to comply with FSC STD-01-001, "FSC Principles and Criteria for Forest Stewardship."

B. Core Materials: Manufacturer's standards:

D. Dimensions: Fabricate operable acoustical panel partitions to form an assembled system of dimensions indicated and verified by field measurements.

1. Panel Width: Standard widths.

E. STC: Not less than 50.

F. Panel Weight: 11 lb/sq. ft. maximum.

G. Panel Thickness: Not less than 3 inches (75 mm).

H. Panel Materials:

1. Recycled Content of Operable Panel Partitions:

a. Recycled Content of Steel: Postconsumer recycled content plus one-half of preconsumer recycled content not less than 25 percent by weight.

2. Steel Frame: Steel sheet, manufacturer's standard 18-gage nominal minimum thickness for uncoated steel.
3. Panel Face: ½" MDF attached directly to the panel frame.

I. Panel Closure: Manufacturer's standard unless otherwise indicated.

J. Hardware: Manufacturer's standard as required to operate operable panel partition and accessories; with decorative, protective finish.

1. Hinges: Full-leaf butt hinges attached directly to panel frame.

2.3 AUTOMATIC VERTICALLY FOLDING ACOUSTICAL WALLS

A. Automatic vertically folding acoustical walls: Wall system, including panels, seals, finish facing, suspension system, operators, and accessories.

1. Basis-of-Design Product: Subject to compliance with requirements, provide Railtech Ltd. "Skyfold Classic NR" or approved equivalent by one of the following:

a. Hufcor Inc.
b. KWIK-WALL Company.
c. Moderco Inc.
d. Panelfold Inc.

B. Panel Operation: Electrically operated, continuously hinged panels.

C. Panel Construction: As required to support panel from suspension components and with reinforcement for hardware attachment. Fabricate panels with tight hairline joints and concealed fasteners. Fabricate panels so finished in-place partition is rigid; level; plumb; aligned, with tight joints and uniform appearance; and free of bow, warp, twist, deformation, and surface and finish irregularities.

D. Dimensions: Fabricate operable acoustical panel partitions to form an assembled system of dimensions indicated and verified by field measurements.

E. STC: Not less than 50 (system), 60 (panel construction).

F. NRC: Not less than 0.65.

G. Panel Weight: 7.5 lb/sq. ft. maximum.

H. Panel Materials:

1. Manufacturer’s standard.

I. Panel Closure: Manufacturer's standard unless otherwise indicated.

1. Initial Closure: Manufacturer’s standard.

J. Hardware: Manufacturer's standard as required to operate automatic folding acoustical wall and accessories; with decorative, protective finish.

1. Hinges: Manufacturer’s standard.

2.4 SEALS FOR FOLDING PANEL PARTITIONS

A. General: Provide seals that produce operable panel partitions complying with performance requirements and the following:

1. Manufacturer's standard seals unless otherwise indicated.
2. Seals made from materials and in profiles that minimize sound leakage.
3. Seals fitting tight at contact surfaces and sealing continuously between adjacent panels and between operable panel partition perimeter and adjacent surfaces, when operable panel partition is extended and closed.

B. Vertical Seals: Deep-nesting, interlocking steel astragals mounted on each edge of panel, with continuous PVC acoustical seal.

C. Horizontal Top Seals: Continuous-contact, extruded-PVC seal exerting uniform constant pressure on track.

D. Horizontal Bottom Seals: Manufacturer's standard continuous-contact seal exerting uniform constant pressure on floor.

E. Horizontal Bottom Seals: PVC-faced, mechanical, retractable, constant-force-contact seal exerting uniform constant pressure on floor when extended, ensuring horizontal and vertical sealing and resisting panel movement.

1. Automatically Operated for Acoustical Panels: Extension and retraction of bottom seal automatically operated by movement of partition, with operating range not less than 2 inches (50 mm) between retracted seal and floor finish.

2.5 PANEL FINISH FACINGS

A. General: Provide finish facings for panels that comply with indicated fire-test-response characteristics and that are factory applied to operable panel partitions with appropriate backing, using mildew-resistant nonstaining adhesive as recommended by facing manufacturer's written instructions.

1. Apply one-piece, seamless facings free of air bubbles, wrinkles, blisters, and other defects, with edges tightly butted, and with invisible seams complying with Shop Drawings for location, and with no gaps or overlaps. Horizontal butted edges and seams are not permitted. Tightly secure and conceal raw and selvage edges of facing for finished appearance.
2. Where facings with directional or repeating patterns or directional weave are indicated, mark facing top and attach facing in same direction.
3. Match facing pattern 72 inches (1830 mm) above finished floor.
4. Finish face shall be WC-1 per finish schedule on the drawings for P-W3.

B. Fabric Wall Covering: Manufacturer's premium fabric, from same dye lot, treated to resist stains.

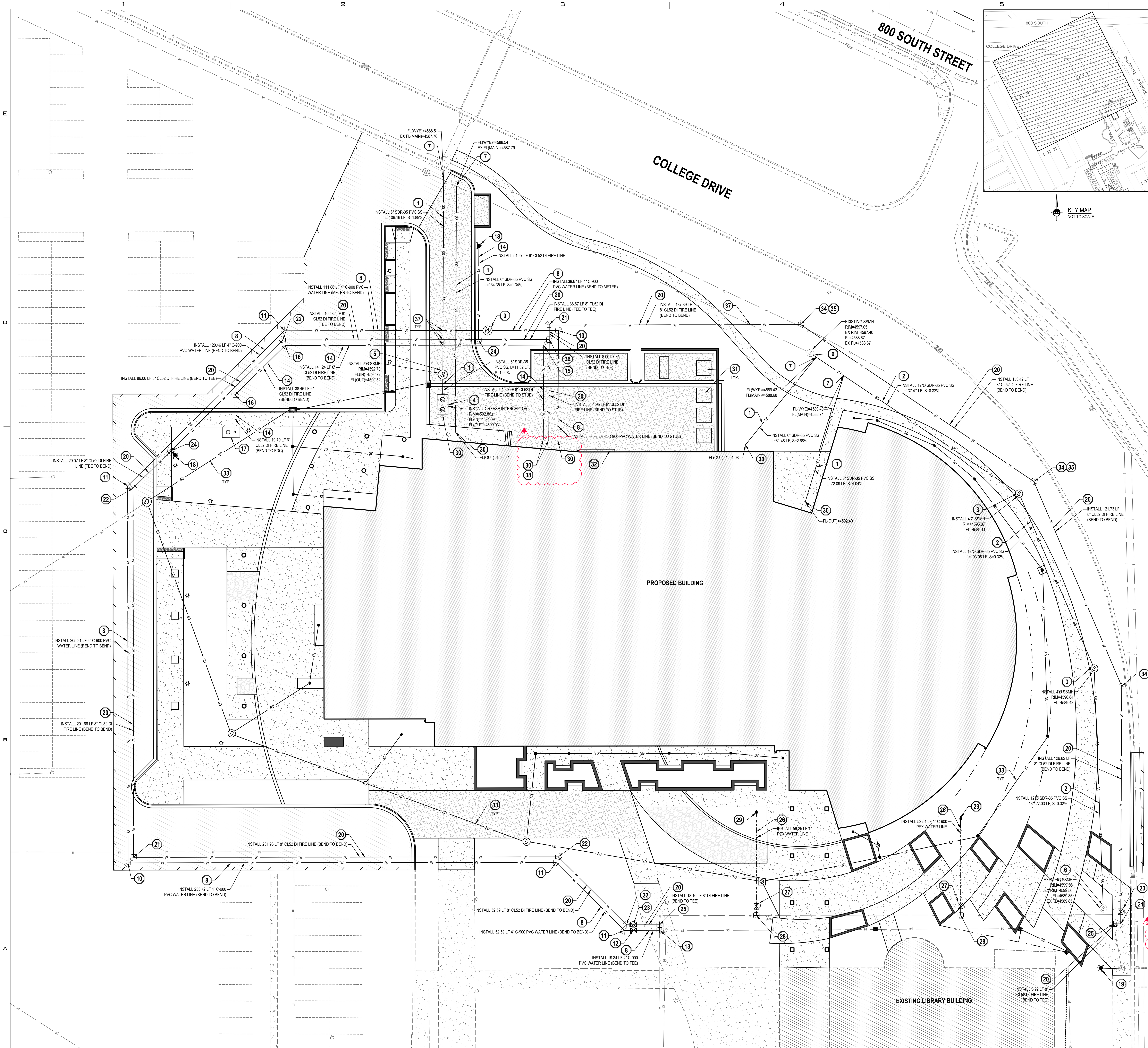

NOTES:

EXISTING UNDERGROUND UTILITIES AND IMPROVEMENTS ARE SHOWN IN THEIR APPROXIMATE LOCATIONS BASED UPON RECORD INFORMATION AVAILABLE AT THE TIME OF PREPARATION OF PLANS. LOCATIONS MAY NOT HAVE BEEN VERIFIED IN THE FIELD AND NO GUARANTEE IS MADE AS TO ACCURACY OR COMPLETENESS OF THE INFORMATION SHOWN. IT SHALL BE THE RESPONSIBILITY OF THE CONTRACTOR TO DETERMINE THE EXISTENCE AND LOCATION OF THOSE UTILITIES SHOWN ON THESE PLANS OR INDICATED IN THE FIELD BY LOCATING SERVICES. ANY ADDITIONAL COSTS INCURRED AS A RESULT OF THE CONTRACTOR'S FAILURE TO VERIFY LOCATIONS AND CONNECTION POINTS OF EXISTING UTILITIES PRIOR TO THE BEGINNING OF CONSTRUCTION, INCLUDING ANY DAMAGE CAUSED TO EXISTING UTILITIES AND UTILITY STRUCTURES THAT ARE TO REMAIN, SHALL BE BORNE BY THE CONTRACTOR AND ASSUMED INCLUDED IN THE CONTRACT.

IF CONFLICTS OCCUR BETWEEN EXISTING AND PROPOSED UTILITIES, THE CONTRACTOR SHALL NOTIFY THE ENGINEER PRIOR TO CONSTRUCTION TO DETERMINE IF ANY FIELD ADJUSTMENTS SHOULD BE MADE.

ALL SURFACE IMPROVEMENTS DISTURBED BY CONSTRUCTION SHALL BE RESTORED OR REPLACED, INCLUDING TREES, DECORATIVE SHRUBS, SOD, FENCES, WALLS AND STRUCTURES, WHETHER OR NOT THEY ARE SPECIFICALLY SHOWN ON THE CONTRACT DOCUMENTS.

CONTRACTOR TO PROTECT & PRESERVE EXISTING UTILITIES (TYPICAL UNLESS OTHERWISE NOTED).

CONTRACTOR TO RELOCATE OR ADJUST TO GRADE ALL EXISTING UTILITIES AS NEEDED PER LOCAL GOVERNING AGENCIES' STANDARDS AND SPECIFICATIONS. SEE GRADING PLAN FOR DESIGN INFORMATION.

ALL NEW WATER CONSTRUCTION TO BE DONE IN ACCORDANCE WITH LOCAL GOVERNING AGENCIES' STANDARDS AND SPECIFICATIONS. MAINTAIN MINIMUM COVER PER AGENCIES' STANDARDS AND SPECIFICATIONS.

DEFLECT ALL WATER LINES TO AVOID CONFLICTS WITH ALL OTHER UTILITIES PER LOCAL GOVERNING AGENCIES' STANDARDS AND SPECIFICATIONS (MAINTAIN MINIMUM 18" CLEARANCE).

ALL NEW SANITARY SEWER CONSTRUCTION TO BE DONE IN ACCORDANCE WITH LOCAL GOVERNING AGENCIES' STANDARDS AND SPECIFICATIONS.

SEE LANDSCAPE PLANS FOR IRRIGATION INFORMATION.

CONTRACTOR IS TO COORDINATE LOCATIONS OF NEW TELEPHONE SERVICES TO BUILDINGS.

CONTRACTOR IS TO SUBMIT SITE PLAN TO GAS COMPANY FOR DESIGN OF GAS LINE SERVICE TO BUILDING. CONTRACTOR TO COORDINATE WITH GAS COMPANY FOR CONTRACTOR LIMITS OF WORK VERSUS GAS COMPANY LIMITS.

SEE ELECTRICAL PLANS FOR DRY UTILITY LOCATION, INSTALLATION AND DESIGN INFORMATION.

CONTRACTOR IS TO COORDINATE ALL UTILITIES WITH MECHANICAL AND ELECTRICAL DRAWINGS.

SCOPE OF WORK:

PROVIDE, INSTALL AND/OR CONSTRUCT THE FOLLOWING PER THE SPECIFICATIONS GIVEN OR REFERENCED, THE DETAILS NOTED, AND/OR AS SHOWN ON THE CONSTRUCTION DRAWINGS:

1. 6"Ø PVC SDR-35 SANITARY SEWER LINE. INSTALLATION AND TRENCHING PER APWA STANDARD PLAN NO. 381 AND 382 AND SPECIFICATIONS. LENGTH AND SLOPE PER PLAN.
2. 12"Ø PVC SDR-35 SANITARY SEWER LINE. INSTALLATION AND TRENCHING PER APWA STANDARD PLAN NO. 381 AND 382 AND SPECIFICATIONS. LENGTH AND SLOPE PER PLAN.
3. 4'Ø SANITARY SEWER MANHOLE PER PLANS AND SPECIFICATIONS.
4. GREASE INTERCEPTOR. SEE MECHANICAL PLANS FOR DESIGN INFORMATION.
5. 5'Ø SAMPLING MANHOLE. SEE MECHANICAL PLANS FOR DESIGN INFORMATION.
6. CONNECT TO EXISTING SANITARY SEWER MANHOLE PER PLANS AND SPECIFICATIONS.
7. 12"x12"x6" WYE. CONNECT TO SANITARY SEWER MAIN PER PLANS AND SPECIFICATIONS.
8. 4"Ø C-900 PVC WATER LATERAL. INSTALLATION AND TRENCHING PER APWA STANDARD PLAN NO. 381 AND 382 AND SPECIFICATIONS. LENGTH PER PLAN.
9. 4" ONICON F-3100 SERIES WATER METER, WITH D-100 DISPLAY AND LONWORKS FTT10 INTERFACE, OR APPROVED EQUAL, IN 5'Ø WATER MANHOLE WITH FRAME AND SOLID COVER PER PLANS AND SPECIFICATIONS. PROVIDE CONNECTION TO UVU LON SYSTEM. PROVIDE CONDUIT AND PULL 120V AC POWER FROM BUILDING.
10. 4"Ø 90° PVC WATER LINE BEND WITH THRUST BLOCKING PER APWA STANDARD PLAN NO. 561 AND 562 AND SPECIFICATIONS.
11. 4"Ø 45° PVC WATER LINE BEND WITH THRUST BLOCKING PER APWA STANDARD PLAN NO. 561 AND 562 AND SPECIFICATIONS.
12. 4"Ø PVC GATE VALVE WITH THRUST BLOCKING PER APWA STANDARD PLAN NO. 561 AND 562 AND SPECIFICATIONS.
13. CONNECT TO EXISTING WATER LINE WITH 4"Ø PVC WATER LINE TEE WITH THRUST BLOCKING PER APWA STANDARD PLAN NO. 561 AND 562 AND SPECIFICATIONS.
14. 6"Ø CL52 DUCTILE IRON FIRE WATER LINE. INSTALLATION AND TRENCHING PER APWA STANDARD PLAN NO. 381 AND 382 AND SPECIFICATIONS. LENGTH PER PLAN.
15. 6"Ø 90° DUCTILE IRON WATER LINE BEND WITH THRUST BLOCKING PER APWA STANDARD PLAN NO. 561 AND 562 AND SPECIFICATIONS.
16. 6"Ø 45° DUCTILE IRON WATER LINE BEND WITH THRUST BLOCKING PER APWA STANDARD PLAN NO. 561 AND 562 AND SPECIFICATIONS.
17. FIRE DEPARTMENT CONNECTION (FDC) ASSEMBLY COMPLETE PER SPECIFICATIONS.
18. FIRE HYDRANT ASSEMBLY COMPLETE INCLUDING GATE VALVE PER APWA STANDARD PLAN NO. 511 AND SPECIFICATIONS.
19. RELOCATED FIRE HYDRANT. INSTALL PER PLANS AND SPECIFICATIONS.
20. 8"Ø CL52 DUCTILE IRON FIRE WATER LINE. INSTALLATION AND TRENCHING PER APWA STANDARD PLAN NO. 381 AND 382 AND SPECIFICATIONS. LENGTH PER PLAN.
21. 8"Ø 90° DUCTILE IRON WATER LINE BEND WITH THRUST BLOCKING PER APWA STANDARD PLAN NO. 561 AND 562 AND SPECIFICATIONS.
22. 8"Ø 45° DUCTILE IRON WATER LINE BEND WITH THRUST BLOCKING PER APWA STANDARD PLAN NO. 561 AND 562 AND SPECIFICATIONS.
23. 8"Ø DUCTILE IRON GATE VALVE WITH THRUST BLOCKING PER APWA STANDARD PLAN NO. 561 AND 562 AND SPECIFICATIONS.
24. 8"x6"Ø DUCTILE IRON WATER LINE TEE WITH THRUST BLOCKING PER APWA STANDARD PLAN NO. 561 AND 562 AND SPECIFICATIONS.
25. CONNECT TO EXISTING WATER LINE WITH 8"Ø DUCTILE IRON WATER LINE TEE WITH THRUST BLOCKING PER APWA STANDARD PLAN NO. 561 AND 562 AND SPECIFICATIONS.
26. 1"Ø PEX WATER LATERAL, OR APPROVED EQUAL. INSTALLATION AND TRENCHING PER APWA STANDARD PLAN NO. 381 AND 382 AND SPECIFICATIONS. LENGTH PER PLAN.
27. 1"Ø PEX GATE VALVE PER PLANS AND SPECIFICATIONS.
28. CONNECT TO EXISTING WATER LINE WITH 1"Ø PEX TEE PER PLANS AND SPECIFICATIONS.
29. FREEZE-PROOF SPIGOT WITH LOCKING COVER PER PLANS. PROVIDE CUT SHEET TO ENGINEER FOR APPROVAL.
30. SEE MECHANICAL PLANS FOR CONTINUATION.
31. MECHANICAL UNITS. SEE MECHANICAL PLANS FOR DESIGN INFORMATION.
32. GAS METER AND 2 1/2" GAS LINE. SEE MECHANICAL PLANS FOR DESIGN INFORMATION. COORDINATE WITH QUESTAR GAS AND UVU FOR ALIGNMENT OF GAS LINE TO CONNECTION WITH EXISTING LINE IN 800 SOUTH STREET.
33. SEE DRAINAGE PLAN FOR STORM DRAIN INFORMATION.
34. 8"Ø 22.5° DUCTILE IRON WATER LINE BEND WITH THRUST BLOCKING PER APWA STANDARD PLAN NO. 561 AND 562 AND SPECIFICATIONS.
35. 8"Ø 11.25° DUCTILE IRON WATER LINE BEND WITH THRUST BLOCKING PER APWA STANDARD PLAN NO. 561 AND 562 AND SPECIFICATIONS.
36. 8"Ø DUCTILE IRON WATER LINE TEE WITH THRUST BLOCKING PER APWA STANDARD PLAN NO. 561 AND 562 AND SPECIFICATIONS.
37. DEFLECT WATER LINE TO AVOID CONFLICTS WITH ALL OTHER UTILITIES PER LOCAL GOVERNING AGENCIES' STANDARDS AND SPECIFICATIONS (MAINTAIN MINIMUM 18" CLEARANCE).
38. TERMINATE FIRE SERVICE PIPING 12" ABOVE FINISHED FLOOR WITH A BLIND FLANGE. COORDINATE EXACT LOCATION WITH FIRE SPRINKLER CONTRACTOR. SEE MECHANICAL PLANS FOR ADDITIONAL INFORMATION.

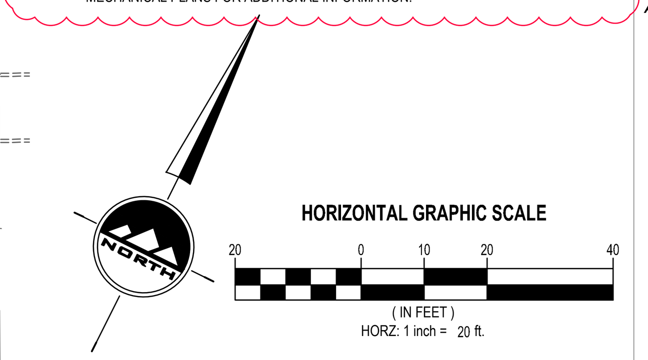

LICENSED PROFESSIONAL ENGINEER
Koby J. Morgan
No. 5567061
4-9-13
STATE OF UTAH

UNLESS A PROFESSIONAL SEAL WITH SIGNATURE AND DATE IS AFFIXED, THIS DOCUMENT IS PRELIMINARY AND IS NOT INTENDED FOR CONSTRUCTION, RECORDING PURPOSES, OR IMPLEMENTATION

UTAH VALLEY UVU UNIVERSITY

State of Utah
Department of Administrative Services
Division of Facilities Construction & Management
DFCM
4110 State Office Building
Salt Lake City, Utah 84114
Phone: (801) 538 - 3018
Fax: (801) 538 - 3267

CRSA METHODSTUDIO INC.

CRSA ARCHITECTS
649 east south temple
salt lake city, utah 84102
phone: (801) 355 - 5915

METHOD STUDIO INC.
925 south west temple
salt lake city, utah 84101
phone: (801) 532-4422

ENSIGN
SALT LAKE CITY
45 W. 10000 S., Suite 500
Sandy, UT 84070
Phone: 801.255.0529
Fax: 801.255.4449
WWW.ENSIGNUTAH.COM

DFCM APPROVAL STAMP

project:
UVU Classroom Building - Volume 1
800 West University Parkway
Orem, UT 84058

project#: DFCM# 12192790
date: April 30, 2013

revisions:

1	May 15, 2013	Addendum 1
2	May 24, 2013	Addendum 4

title:
Utility Plan

sheet:
C105

BID DOC

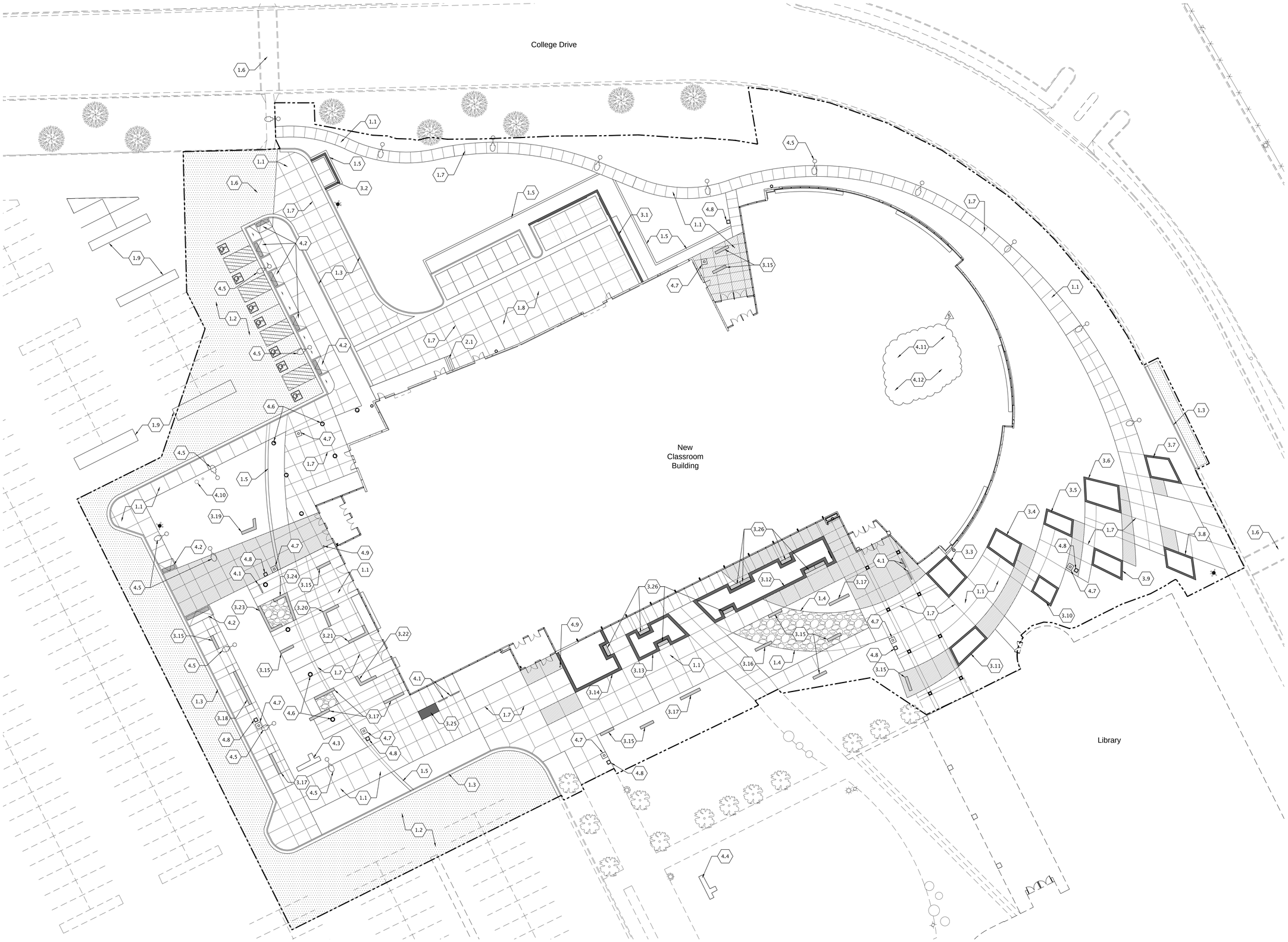

ENLARGED SITE CALLOUT PLAN 01 LS101
1" = 20'-0"

N

0 10' 20' 40'

UNLESS A PROFESSIONAL SEAL WITH SIGNATURE AND DATE IS AFFIXED, THIS DOCUMENT IS PRELIMINARY AND IS NOT INTENDED FOR CONSTRUCTION, RECORDING PURPOSES, OR IMPLEMENTATION

UTAH VALLEY UVU UNIVERSITY

State of Utah
Department of Administrative Services
Division of Facilities Construction & Management
4110 State Office Building
Salt Lake City, Utah 84114
Phone: (801) 538 - 3018
Fax: (801) 538 - 3267

CRSA METHODSTUDIO INC.

CRSA ARCHITECTS
649 east south temple
salt lake city, utah 84102
phone:(801) 355-5915

METHOD STUDIO INC.
925 south west temple
salt lake city, utah 84101
phone:(801) 532-4422

DFCM APPROVAL STAMP

project:
UVU Classroom Building

800 University Parkway
Orem, UT 84058

project#: DFCM# 12192790
date: April 30, 2013

revisions:
2 Addendum 2 05/17/13
5 Addendum 5 05/24/13

title:
Site Callout Plan

sheet:
LS101

BID DOC

TYPICAL SITE DETAIL KEYNOTES

1.0 PAVEMENTS AND WALKS

		DETAIL/SHEET
1.1	Concrete Paving	See Civil Plans
1.2	Asphalt Paving	See Civil Plans
1.3	Curb and Gutter	See Civil Plans
1.4	Metal Landscape Edging	1/LS500
1.5	Concrete Mow Curb	3/LS500
1.6	Crosswalk	See Civil Plans
1.7	Concrete Paving Joints	4/LS500
1.8	Concrete Driveway	See Civil Plans
1.9	New Parking Lot Striping	See Civil Plans

2.0 STAIRS AND RAMPS

		DETAIL/SHEET
2.1	Stair #1 w/ Handrail	5-10/LS500

3.0 SITE WALLS

		DETAIL/SHEET
3.1	Generator Enclosure Wall	1P,1E/LS501
3.2	Trash Enclosure Wall	2P,2E/LS501
3.3	Wall - 12", Var. 1	11-13/LS500 & 3/LS501
3.4	Wall - 12", Var. 2	11-13/LS500 & 4/LS501
3.5	Wall - 12", Var. 3	11-13/LS500 & 5/LS501
3.6	Wall - 12", Var. 4	11-13/LS500 & 10/LS502
3.7	Wall - 12", Var. 5	11-13/LS500 & 11/LS502
3.8	Wall - 12", Var. 6	11-13/LS500 & 12/LS502
3.9	Wall - 12", Var. 7	11-13/LS500 & 13/LS502
3.10	Wall - 12", Var. 8	11-13/LS500 & 14/LS502
3.11	Wall - 12", Var. 9	11-13/LS500 & 15/LS502
3.12	Planter Wall - 18", Var. 1	11,12,14/LS500 & 16/LS503
3.13	Planter Wall - 18", Var. 2	11,12,14/LS500 & 17/LS503
3.14	Planter Wall - 18", Var. 3	11,12,14/LS500 & 18/LS503
3.15	Seat Wall - 8'	11,12,14/LS500 & 1E,1P/LS504
3.16	Seat Wall - 10'	11,12,14/LS500 & 2E,2P/LS504
3.17	Seat Wall - 12'	11,12,14/LS500 & 3E,3P/LS504
3.18	Seat Wall - 20'	11,12,14/LS500 & 4E,4P/LS504
3.19	Seat Wall - Var. 1	11,12,14/LS500 & 5E,5P/LS504
3.20	Seat Wall - Var. 2	11,12,14/LS500 & 6E,6P/LS504
3.21	Seat Wall - Var. 3	11,12,14/LS500 & 7E,7P/LS504
3.22	Seat Wall - Var. 4	11,12,14/LS500 & 8E,8P/LS504
3.23	Seat Wall - Var. 5	11,12,14/LS500 & 9E,9P/LS504
3.24	Seat Wall - Var. 6	11,12,14/LS500 & 10E,10P/LS504
3.25	Seat Wall - Var. 7	11,12,14/LS500 & 11E,11P/LS504
3.26	Wall Mount Bench	15E,15P/LS504

4.0 SITE ELEMENTS

		DETAIL/SHEET
4.1	Bicycle Rack	9/LS501
4.2	Accessible Curb Ramp	See Civil Plans
4.3	New Building Sign	6/LS501
4.4	Existing Building Sign	6/LS501
4.5	Electrical Pole Fixture	See Electrical Plans
4.6	Structural Column(s)	See Arch. Plans
4.7	Litter Receptacle	7/LS501
4.8	Ash Urn	8/LS501
4.9	ADA Door Access Pedestal	See Arch. Plans
4.10	FDC	See Civil Plans
4.11	Rooftop Bench - (Bid Alternate #1)	See Specifications
4.12	Rooftop Tree Planter - (Bid Alternate #1)	See Specifications

5

LAYOUT NOTES:

1. Notes and details on specific drawings take precedence over general notes and typical details.
2. Dimensions take precedence over scales shown on drawings.
3. Contractor to coordinate installation of all owner furnished landscape sleeves prior to forming concrete sidewalks, retaining walls, seat walls or stair walls.

LEGEND:

- Proposed Site Element
- Existing Site Element (to remain)
- Existing Building (to remain)
- Proposed Construction Limit Line
- Existing Tree (to remain)
- Standard Gray Color Concrete Paving
- Medium Gray-Colored Concrete Paving
- Crushed Rock Fines Paving (see detail 2/LS500)
- Asphalt Paving (see Civil plans)

UNLESS A PROFESSIONAL SEAL WITH SIGNATURE AND DATE IS AFFIXED, THIS DOCUMENT IS PRELIMINARY AND IS NOT INTENDED FOR CONSTRUCTION, RECORDING PURPOSES, OR IMPLEMENTATION

UTAH VALLEY UVU UNIVERSITY

State of Utah
Department of Administrative Services
Division of Facilities Construction & Management
4110 State Office Building
Salt Lake City, Utah 84114
Phone: (801) 538 - 3018
Fax: (801) 538 - 3267

CRSA METHODSTUDIO INC.

CRSA ARCHITECTS
649 east south temple
salt lake city, utah 84102
phone:(801) 355-5915

METHOD STUDIO INC.
925 south west temple
salt lake city, utah 84101
phone:(801) 532-4422

DFCM APPROVAL STAMP

project:
UVU Classroom Building

800 University Parkway
Orem, UT 84058

project#: DFCM# 12192790
date: April 30, 2013

revisions:
1 Addendum 2 05/17/13
2 Addendum 5 05/24/13

title:
Callout Plan Legend

sheet:
LS102

BID DOC

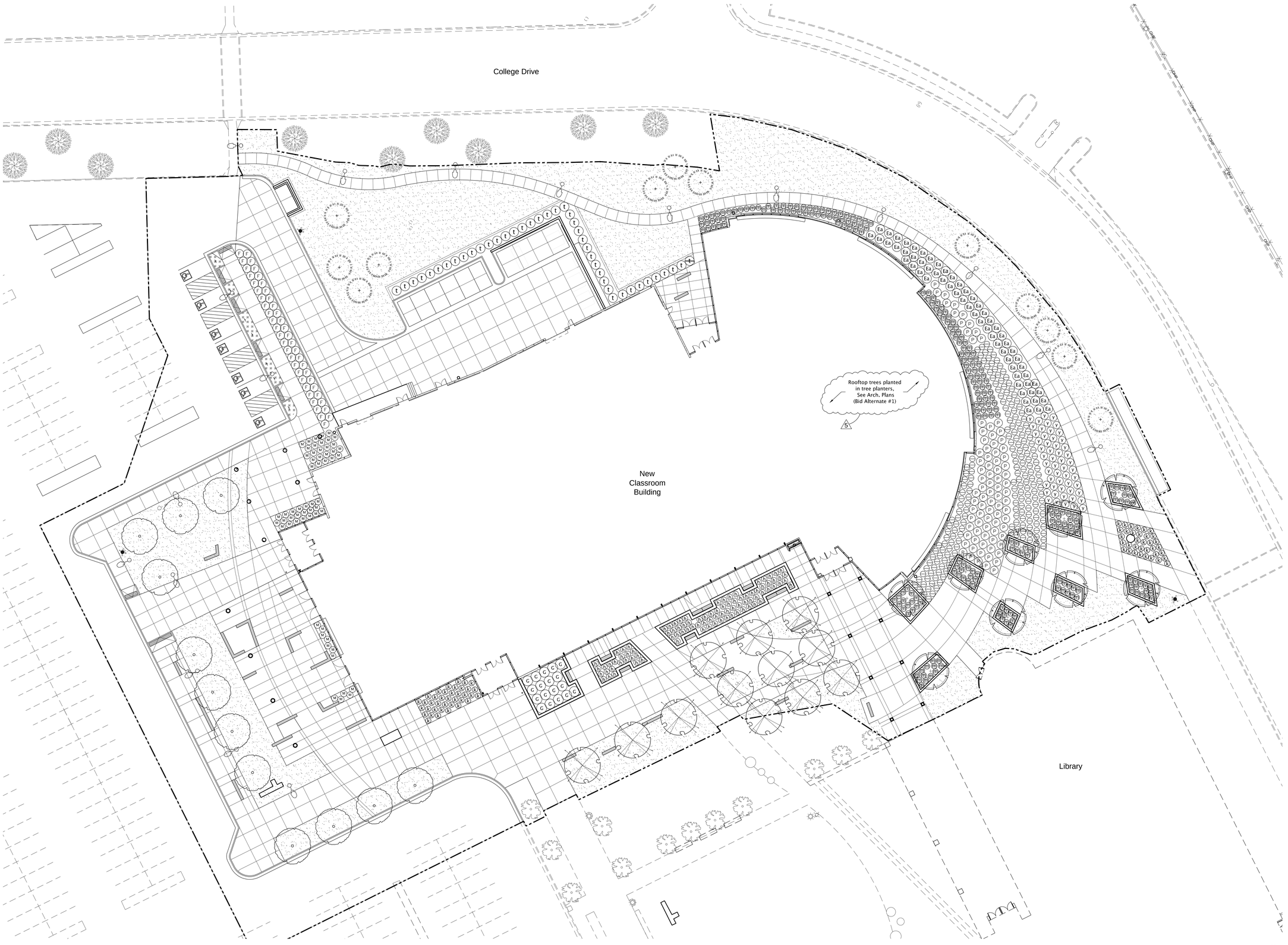

PLANTING PLAN
1" = 20'-0"
A
LS301
N
0 10' 20' 40'

UNLESS A PROFESSIONAL SEAL WITH SIGNATURE AND DATE IS AFFIXED, THIS DOCUMENT IS PRELIMINARY AND IS NOT INTENDED FOR CONSTRUCTION, RECORDING PURPOSES, OR IMPLEMENTATION

UTAH VALLEY UNIVERSITY

State of Utah
Department of Administrative Services
Division of Facilities Construction & Management
4110 State Office Building
Salt Lake City, Utah 84114
Phone: (801) 538 - 3018
Fax: (801) 538 - 3267

CRSA METHODSTUDIO INC.

CRSA ARCHITECTS
649 east south temple
salt lake city, utah 84102
phone:(801) 355-5915

METHOD STUDIO INC.
925 south west temple
salt lake city, utah 84101
phone:(801) 532-4422

DFCM APPROVAL STAMP

project:
UVU Classroom Building

800 University Parkway
Orem, UT 84058

project#: DFCM# 12192790
date: April 30, 2013

revisions :
1 Addendum 2 05/17/13
2 Addendum 5 05/24/13

title:
Planting Plan

sheet:
LS301

BID DOC

PLANT SCHEDULE

SYMBOL	BOTANICAL NAME	COMMON NAME	SIZE
TREES			
	Gleditsia tricanthos 'Shademaster'	Shademaster Locust	2" Cal.
	Tilia cordata 'Greenspire'	Littleleaf Linden	2" Cal.
	Cercis canadensis	Eastern Redbud	2" Cal.
	Pinus flexillis 'Vanderwolf'	Limber Pine	6' Height
Rooftop Planter Trees (Bid Alternate #1)	Malus 'Spring Snow'	Spring Snow Fruitless Crabapple	2" Cal.
SHRUBS/ORNAMENTAL GRASSES			
	Cornus sericea 'Isanti'	Isanti Dogwood	5 Gal.
F	Cornus sericea Flaviramea	Yellow Twig Dogwood	5 Gal.
P	Juniperus horizontalis 'Blue Chip'	Blue Chip Juniper	5 Gal.
y	Miscanthus purpurascens	Purple Flame Grass	5 Gal.
Ea	Euonymous alatus 'Compactus'	Burning Bush	5 Gal.
m	Mahonia aquifolium 'Compacta'	Compact Oregon Grape	5 Gal.
M	Mahonia aquifolium	Oregon Grape	5 Gal.
t	Taxus x media 'Hatfieldii'	English Japanese Yew	5 Gal.
k	Calamagrostis x acutifolia 'Karl Forester'	Karl Forester Grass	5 Gal.
G	Miscanthus sinensis 'Gracillimus'	Gracillimus Maiden Grass	5 Gal.
h	Helictrotrichon sempervirens	Blue Oat Grass	5 Gal.
GROUNDCOVERS			
	Hedera helix 'Needlepoint'	Needlepoint English Ivy	1 Gal. @ 12" o.c. spacing
TURF GRASS			
	Turfgrass	See Specifications	Sod

5

5

UNLESS A PROFESSIONAL SEAL WITH SIGNATURE AND DATE IS AFFIXED, THIS DOCUMENT IS PRELIMINARY AND IS NOT INTENDED FOR CONSTRUCTION, RECORDING PURPOSES, OR IMPLEMENTATION

UTAH VALLEY UVU UNIVERSITY

State of Utah
Department of Administrative Services
DFCM
Division of Facilities Construction & Management
4110 State Office Building
Salt Lake City, Utah 84114
Phone: (801) 538 - 3018
Fax: (801) 538 - 3267

CRSA METHODSTUDIO INC.

CRSA ARCHITECTS
649 east south temple
salt lake city, utah 84102
phone:(801) 355-5915

METHOD STUDIO INC.
925 south west temple
salt lake city, utah 84101
phone:(801) 532-4422

DFCM APPROVAL STAMP

project:
UVU Classroom Building

800 University Parkway
Orem, UT 84058

project#: DFCM# 12192790
date: April 30, 2013

revisions:
5 Addendum 2 05/17/13
5 Addendum 5 05/24/13

title:
Planting Plan Legend

sheet:
LS302

BID DOC

SECTION 129300 – SITE FURNISHINGS

PART 1 - GENERAL

1.1 RELATED DOCUMENTS

A. Drawings and general provisions of the Contract, including General and Supplementary Conditions and other Division 01 Specification Sections, apply to this Section.

1.2 SUMMARY

A. This Section includes the following:

1. Benches
2. Bicycle Racks
3. Roof Top Planters
4. Litter Receptacles
5. Cigarette Receptacles

1.3 REFERENCES

A. ASTM Testing Standards:

1. ASTM B 117 – Standard Practice for Operating Salt Spray (Fog) Apparatus.
2. ASTM D 522 – Standard Test Methods for Mandrel Bend Test of Attached Organic Coatings.
3. ASTM D 523 – Standard Test Method for Specular Gloss.
4. ASTM D 2247 – Standard Practice for Testing Water Resistance of Coatings in 100% Relative Humidity.
5. ASTM D 2794 – Standard Test Method for Resistance of Organic Coatings to the Effects of Rapid Deformation (Impact).
6. ASTM D 3359 – Standard Test Methods for Measuring Adhesion by Tape Test.
7. ASTM D 3363 – Standard Test Method for Film Hardness by Pencil Test.
8. ASTM G 155 – Standard Practice for Operating Xenon Arc Light Apparatus for Exposure of Non-Metallic Materials.
9. ANSI/BIFMA Testing Standards: ANSI/BIFMA X5.4-2005 – Standard Test for Lounge Seating

B. ISO Testing Standards:

1. ISO 1520 – Paints and Varnishes – Cupping Test.
2. ISO 2815 – Paints and Varnishes – Buchholz Indentation Test.

C. ANSI/BIFMA Testing Standards:

1. ANSI/BIFMA X5.5-2008– Standard Test for Desk / Tables.

2. ANSI/BIFMA X5.4-2005 – Standard Test for Lounge Seating

1.4 SUBMITTALS

A. Product Data: Submit manufacturer's product data, storage and handling requirements and recommendations, installation methods and available colors, styles, patterns and textures.

B. Shop Drawings: Submit manufacturer's shop drawings, including plans and elevations, indicating overall dimensions.

C. Samples: Submit manufacturer's samples of materials, finishes, and colors.

D. Warranty: Manufacturer's standard warranty.

1.5 QUALITY ASSURANCE

A. Product Support: Products are supported with complete engineering drawings and design patents.

B. Production: Orders are filled within a 40-day schedule.

C. Facility Operator: Welders and machine operators are certified.

1.6 PROTECTION OF EXISTING SITE IMPROVEMENTS

A. The contractor shall take necessary precautions to protect site improvements to remain, including, but not limited to buildings, grounds, or utilities. Should damage be incurred by the contractor or the contractor's employees, the contractor shall repair the damage to its original condition at the contractor's own expense.

1.7 DELIVERY, STORAGE, AND HANDLING

A. The Delivery: Deliver materials to site in manufacturer's original, unopened containers and packaging, with labels clearly identifying product name and manufacturer.

B. Storage: Store materials in clean, dry area in accordance with manufacturer's instructions. Keep materials in manufacturer's original, unopened containers and packaging until installation.

C. Handling: Protect materials and finish during handling and installation to prevent damage.

1.8 WARRANTY

A. Products will be free from defects in material and/or workmanship for a period of three years from the date of invoice.

B. The warranty does not apply to damage resulting from accident, alteration, misuse, tampering, negligence, or abuse.

C. Purchasers should be aware that normal use of these high quality products can result in superficial damage affecting the finish. Scratches, nicks, and dents are to be considered normal wear and tear, and are not the responsibility of the manufacturer.

PART 2 - PRODUCTS

2.1 BENCH

A. Basis of Design: Manufacturer: Landscape Forms, Inc., 431 Lawndale Avenue, Kalamazoo, Michigan 49048. Contact Vivian Kovacs: Toll Free (800) 430-6206 x1323. Phone (303) 799-0028. Website www.landscapeforms.com. E-mail: Viviank@landscapeforms.com.

B. Model: Balustrade Bench

C. Style: Backless

D. Length: 72” length

E. Insert: Polysite

F. Color: Bark

G. Mounting: Wall mount to seat wall per plan details.

2.1.1 ROOFTOP BENCH

A. Basis of Design Manufacturer: Forms+Surfaces, 30 Pine Street Pittsburgh, PA 15223. Contact: (800) 451-0410. Website: forms-surfaces.com. E-mail: sales@forms-surfaces.com

B. Model: Knight Bench

C. Style: Backed & Backless

D. Length: 72” length

E. Insert: Teak Wood

F. Color: Bark

G. Mounting: Ground mounts. Mount to concrete pad supplied by others.

2.2 BIKE RACKS

A. Basis of Design Manufacturer: Belson Outdoors, 111 North River Road, North Aurora, IL 60542. Contact: (800) 323-5664. Website www.belson.com. E-mail: sales@belson.com

B. Style: Heavy-Duty Challenger | 5 Loops (7 bikes)

C. Model: H36-7-G-IG

D. Finish: Galvanized

E. Installation: In-Ground Mount

Addendum #5

2.3 ROOF TOP PLANTERS

A. Basis of Design Manufacturer: Ore Inc., 130 South Redwood Road, Suite G; North Salt Lake City, UT 84054. Phone (801) 936-0499 Website: www.orecontainers.com E-mail: info@orecontainers.com

B. Style: Trapezoid

A. Size: 60"L x 60"W x 29"H; 3/16" material, 3" lips, 3" skid, standard drain hole

B. Material: Aluminum

C. Finishes: Powdercoat

D. Color: Charcoal Gray

E. Irrigation: Custom fit bladder with 34 gallon water storage capacity. Basis of design item Ore Accessory CWMR2914-4K-CRT

F. Shop assembled.

2.4 LITTER RECEPTACLES

A. Manufacturer: Match existing on site

B. Style, Size, Finishes: Match existing

2.5 CIGARETTE RECEPTACLES

A. Manufacturer: Match existing on site

B. Style, Size, Finishes: Match existing

PART 3 - EXECUTION

3.1 EXAMINATION

A. Examine areas to receive site furnishings.

B. Notify Landscape architect of conditions that would adversely affect installation or subsequent use.

C. Do not begin installation until unacceptable conditions are corrected.

3.2 INSTALLATION

A. Install site furnishings in accordance with manufacturer's instructions at locations indicated on the drawings.

B. Install furnishings plumb and level.

C. Anchor securely in place.

3.3 ADJUSTING

A. Finish Damage: Repair minor damages to finish in accordance with manufacturer's instructions and as approved by Architect.

B. Component Damage: Remove and replace damaged components that cannot be successfully repaired as determined by Architect.

3.4 CLEANING

A. Clean benches promptly after installation in accordance with manufacturer's instructions.

B. Do not use harsh cleaning materials or methods that could damage finish.

3.5 PROTECTION

A. Protect installed tables to ensure that, except for normal weathering, tables will be without damage or deterioration at time of Substantial Completion.

END OF SECTION

SECTION 329119 - FINE GRADING AND SOIL PREPERATION

PART 1 - GENERAL

1.1 RELATED DOCUMENTS

A. Drawings and general provisions of the Contract, including General and Supplementary Conditions and other Division 01 Specification Sections, apply to this Section.

1.2 SUMMARY

A. Related Sections include the following:

1. Section 329000 - Planting
2. Section 329223 – Sodding

1.3 SUBMITALS

A. At least 30 days prior to ordering materials, the Contractor shall submit to the Landscape Architect representative samples, certifications, manufacturer's literature and certified test results for all materials as specified below. No materials shall be ordered or delivered until the required submittals have been reviewed and stamped approved by the Landscape Architect. Delivered materials shall match the approved samples.

B. Approval shall not constitute final acceptance. The Landscape Architect reserves the right to reject, on or after delivery, any material that does not meet these Specifications.

C. List of submittals required.

1. Sample of manufactured Planting Soil Mix and soil analysis testing results.
2. Sample of topsoil (component of the Planting Soil Mix) and soil analysis testing results
3. Sample of organic compost (component of the Planting Soil Mix) and sieve analysis.
4. Sample UteLite (component of the Planting Soil Mix) and product data.

1.4 QUALITY ASSURANCE

A. The following standards apply to the work of this Section:

1. AOAC: Association of Official Agricultural Chemists.
2. ASA: Methods of Soils Analysis, American Society of Agronomy, Soil Science Society of America, Inc., Madison Wisconsin, latest edition.
3. American Society for Testing and Materials (ASTM).
4. All applicable local codes and regulations.

B. It is the intent of this specification that all materials herein specified and shown on the drawings shall be of the highest quality available and meeting the requirements specified.

C. The work of this Section shall be performed by a Contracting firm that has successfully installed work of a similar quality, schedule requirement, and construction detailing with a minimum of five (5) years experience.

D. All work shall be performed in accordance with the best standards of practice relating to the trade and under the continuous supervision of a competent foreman capable of interpreting the Drawing and Specifications.

E. Soil shall not be worked when moisture content is so great that excessive compaction occurs, nor when it is so dry, that dust will form in air or that clods will not break readily. Water shall be applied, if necessary, to provide ideal moisture content for tilling and for planting.

F. All accumulated debris and rubbish shall be cleaned up and removed from the site before commencing work. Clear and grub all dead vegetative matter. The site shall be weed free prior to proceeding with any work.

G. Soil-Testing Laboratory Qualifications: An independent laboratory, recognized by the State Department of Agriculture, with the experience and capability to conduct the testing indicated and that specializes in types of tests to be performed.

H. Topsoil Analysis: Furnish a soil analysis for all topsoil proposed for use as specified in this section by a qualified soil-testing laboratory stating percentages of organic matter; gradation of sand, silt, and clay content; cation exchange capacity; sodium absorption ratio; deleterious material; pH; and mineral and plant-nutrient content of topsoil.

1. Report suitability of topsoil for lawn growth. State recommended quantities of nitrogen, phosphorus, and organic nutrients and soil amendments to be added to produce satisfactory topsoil.

I. Compost Testing Laboratory Qualifications: An independent, with the experience and capability to conduct testing indicated following U.S. Composting Council Seal of Testing Assurance procedures, or equivalent.

J. Compost Analysis: Provide documentation from supplier that compost has reached monitored temperature of 140 degrees Fahrenheit for at least one week.

1. Test representative sample(s) of compost for the following parameters: pH, soluble salts, percent moisture, percent organic matter, particle size, and nutrient content, including: Nitrogen (N), Phosphorus (P), Potassium (K), Calcium (Ca), and Magnesium (Mg).
2. Test compost for maturity. Provide Carbon-Nitrogen ratio.

1.5 JOB CONDITIONS

A. Examine the subgrade, verify the elevations to be no more than plus or minus 2" above or below subgrade elevation which should allow for the depths required for topsoil and mulch throughout the planted areas. Observe the conditions under which work is to be performed, and notify the Landscape Architect of unsatisfactory conditions.

Addendum #5

PART 2 - PRODUCTS

2.1 TOPSOIL

A. Native or Imported topsoil used for turf areas, plant beds, and tree planting pits. Contractor is responsible to provide soil testing results from an independent source certifying that the topsoil meets the texture and analysis outlined below. Topsoil not meeting the outlined criteria will not be accepted.

1. Source: Topsoil will be obtained from the following sources:
   a. Existing Topsoil Stockpiled on site, or
   b. Imported from naturally well-drained areas with a history of satisfactory vegetative growth that has not been stripped before.

B. Topsoil **to consist of a ratio by volume of 40% sand, 35% silts, and 25% clays plus or minus 5% in each category**.

C. Topsoil to be a minimum of 10% organic matter.

D. The acidity range of the topsoil to be within pH 6.5-7.5.

E. Topsoil shall be free of stones 1-1/2 inch or larger in any dimension and other extraneous materials harmful to plant growth. No topsoil shall be delivered to the site or placed in planting areas until topsoil test results and recommendations have been reviewed and approved by the Landscape Architect. Such approval shall not constitute final acceptance. The Landscape Architect shall reject any material delivered to the site, which, after on-site, post-delivery testing, does not meet these specifications.

F. The Contractor to provide 12" depth of topsoil in all shrub beds indicated on the Drawings to complete all planting areas, as specified in this Section and as directed by the Landscape Architect. Topsoil to be produced by homogeneously blending the specified components prior to placement.

G. The Contractor to provide 4" depth of topsoil in all turf areas indicated on the Drawings, as specified in this Section and as directed by the Landscape Architect. Topsoil to be produced by homogeneously blending the specified components prior to placement.

2.2 ORGANIC SOIL AMENDMENTS

A. Organic Matter:

1. pH 6 – 8
2. Soluble Salts <5
3. Sodium Adsorption Ratio <10
4. Carbon / Nitrogen Ratio <50:1
5. Moisture % 25 – 35
6. Coarse Material 98% Passing 3/8"

2.3 LIGHTWEIGHT PLANTER BOX SOIL FOR ROOFTOP ALTERNATE

A. 60/40 Lightweight planting media consisting of 60% expanded shale fines and 40% approved organic matter.

B. Lightweight Planting Media Properties:

1. pH Range 7-9
2. Bulk Density (cu. ft.) 40 – 50 lbs
3. Saturated Bulk Density (cu. ft.) 65 – 78 lbs
4. Water Retention: 20 – 45%
5. Salinity ECe: less than 10 dS/M

   CEC: 36 meg/100g

C. Expanded Shale Fines Basis of Design Manufacturer: Utelite Corporation, Scott Jenson, 801-243-9348, PO Box 387, Coalville, UT 84017

D. Approved Organic Matter:

1. pH 6 – 8
2. Soluble Salts <5
3. Sodium Adsorption Ratio <10
4. Carbon / Nitrogen Ratio <50:1
5. Moisture % 25 – 35
6. Coarse Material 98% Passing 3/8"

Addendum #5

E. Blending Procedure:

1. Mechanically mix 3 parts of the Utelite 'Fines' Expanded Shale to 2 parts of the Approved Organic Matter until a uniform distribution of the components is achieved.

2. When stockpiling the finished mix, cover the pile with a plastic tarp to prevent drying out or soil separation from rain.

PART 3 - EXECUTION

3.1 PREPARATION

A. Planting Soil Mix placement shall not commence until rough grades have been approved by the Landscape Architect.

B. The Contractor shall remove existing soil and replace with Planting Soil Mix in turf, and planting bed areas, and plant pits as specified in this section and as directed by the Landscape Architect.

C. Placement of Planting Soil Mix:

1. Immediately prior to placing and spreading the Planting Soil Mix loosen the subgrade of planting beds to a minimum depth of SIX inches (6"). Remove all stones greater than 3/4" in diameter and all weeds, sticks, debris, or rubbish. Such material shall be removed from the site and legally disposed.
2. Spread Planting Soil Mix over loosened subgrade to the depth indicated on the drawings. Do not spread Planting Soil Mix if subgrade is frozen, muddy, or excessively wet.

D. Planting Soil Mix shall be backfilled in lifts of no more than six inches (6"). Compact each lift by foot tamping to 85% prior to placing next layer of backfill.

E. Add recommended soil amendments at rates specified in soil analysis recommendations and as directed by the landscape architect. Rototill amendments into the top 6 inches of soil to achieve a uniform mixture.

1. Following the incorporation of soil amendments, the surface shall be re-compacted to meet the requirements of this section.

Addendum #5

F. Tree Planting Pit Preparation:

1. Holes for trees and shrubs must be equivalent to two times the diameter of root ball of plant or tree.

2. A preparation of 30% mulch and 70% clean soil must be filled into hole around plant or tree and compacted to stabilize plant or tree.

3. Staking is necessary on trees 2" or larger.

4. All trees and shrubs will have a minimum of 3" bark placed around tree ring and all shrub beds.

3.2 FINE GRADING

A. When rough grading, weeding, soil preparation and soil amending have been completed, and soil has been thoroughly water settled, all planting areas should be smoothly graded, ready for placement of plant materials.

B. Fine grading shall be done when soil is at optimum moisture content.

C. Finish grades shall be smooth, even and on a uniform plane with no abrupt changes of surface. The finish grade shall not vary more than one half inch (1/2") in ten feet (10') from the required line, and grade set forth in the Drawings. Adjustments of finish grades shall be made at direction of Landscape Architect as required.

D. Finish grade of mulch in shrub and groundcover areas shall be flush with paved surfaces, after top-dressed with three inches (3”) of bark mulch as specified on the drawings. Finish grade of soil in all turf areas shall be one inch (1 1/2”) below all paved surfaces before laying sod.

END OF SECTION 329119

SECTION 329223 - SODDING

PART 1 - GENERAL

1.1 RELATED DOCUMENTS

A. Drawings and general provisions of the Contract, including General and Supplementary Conditions and other Division 01 Specification Sections, apply to this Section.

1.2 SUMMARY

A. This section includes the following

1. Furnish and install sodded lawn as described in Contract Documents, for all lawn areas.

B. Related Sections include the following:

1. Section 329119 - Fine Grading and Soil Preparation
2. Section 328400 - Irrigation Systems
3. Section 329000 - Planting

1.3 QUALITY ASSURANCE

A. The work of this Section shall be performed by a Contracting firm, which has successfully installed work of a similar quality, schedule requirement, and construction detailing with a minimum of five (5) years' experience. Proof of experience shall be submitted per Samples, Submittals & Testing, refer to Section 1.5.

B. All work shall be performed in accordance with the best standards of practice relating to the trade and under the continuous supervision of a competent foreman capable of interpreting the Drawings and Specifications.

C. All accumulated debris and rubbish shall be cleaned up and removed from the site before commencing work. Clear and grub all dead vegetative matter. The site shall be weed free prior to proceeding with any work.

D. Pre-Installation Meetings

1. Participate in pre-installation meetings.

1.4 STANDARDS AND DEFINITIONS

A. The following standards and definitions shall apply to the work of this Section.

1. AOAC: Association of Official Agricultural Chemists
2. ASPA: American Sod Producers Specifications for Turfgrass Sod Materials and Transplanting/ Installing.
3. ASTM: American Society for Testing and Materials

1.5 SAMPLES AND SUBMITTALS

A. At least thirty (30) days prior to intended use, the Contractor shall provide the following samples and submittals for approval. Do not order materials until Landscape Architect's approval of samples, certifications, or test results has been obtained. Delivered materials shall closely match the approved samples.

1. Sod: Submit a supplier's certificate showing sod composition by grass species conforms to the Specification requirements. Certification shall identify the source and include the name and telephone number of the supplier.

B. Maintenance Instructions: At the time of Acceptance, the Contractor shall submit complete maintenance instructions for lawn care for the Owner's use. The instructions shall be reviewed for approval by the Landscape Architect as a pre-condition for Acceptance.

1.6 DELIVERY, STORAGE, & HANDLING

A. Harvest, deliver, store, and handle sod in accordance with requirements of "American Sod Producers (ASPA) Specifications for Turfgrass Sod Materials and Transplanting/ Installing."

B. During wet weather, allow sod to dry sufficiently to prevent tearing during lifting and handling.

1. During dry weather, protect sod from drying. Water as necessary to insure vitality and to prevent excess loss of soil in handling
2. Sod which dries out will be rejected.

1.7 COORDINATION

A. Planting Restrictions: Plant during the following period. Coordinate planting periods with maintenance periods to provide required maintenance from date of Substantial Completion.

1. April 15 to October 15.

B. Maintain and establish lawn by watering, fertilizing, weeding, mowing, trimming, replanting, and other operations. Roll, re-grade, and replant bare or eroded areas and re-mulch to produce a uniformly smooth lawn.

C. Watering: Watering of the sod shall be the complete responsibility of the contractor by whatever means necessary to establish the sod in an acceptable manner prior to acceptance by the owner. Provide and maintain temporary piping, hoses, and lawn-watering equipment to convey water from sources and to keep lawn uniformly moist to a depth of 2 inches for the first two weeks after planting. Water at the rate given in the turfgrass vendor’s written recommendations thereafter during the maintenance period.

1. Schedule watering to prevent wilting, puddling, erosion, and displacement of seed or mulch. Lay out temporary watering system to avoid walking over muddy or newly planted areas.

D. Mow lawn as soon as top growth is tall enough to cut. Mow 2 times during the growing season to the specified height. Do not mow when grass is wet.

1. Mow grass to height as per manufacturer’s instructions.

E. Lawn Post fertilization: Apply fertilizer after second mowing and when grass is dry.

1. Use commercial-grade complete fertilizer, O-F-241C, type 1, grade 16-16-8, level B with guaranteed chemical analysis of contents marked on containers. Apply at manufacturer’s recommended rate.

1.8 LAWN MAINTENANCE

A. Begin maintenance immediately after each area is sodded and continue until acceptable lawn is established, but for not less than the following periods:

1. Sodded Lawns: Acceptance by the owner.

B. Maintain and establish lawn by watering, fertilizing, weeding, mowing, trimming, replanting, and other operations. Roll, re-grade, and replant bare or eroded areas and re-mulch to produce a uniformly smooth lawn.

C. Watering: Watering of the sod shall be the complete responsibility of the contractor by whatever means necessary to establish the sod in an acceptable manner prior to acceptance by the owner. Provide and maintain temporary piping, hoses, and lawn-watering equipment to convey water from sources and to keep lawn uniformly moist to a depth of 2 inches for the first two weeks after planting. Water at the rate given in the turfgrass vendor’s written recommendations thereafter during the maintenance period.

1. Schedule watering to prevent wilting, puddling, erosion, and displacement of seed or mulch. Lay out temporary watering system to avoid walking over muddy or newly planted areas.

D. Mow lawn as soon as top growth is tall enough to cut. Mow 2 times during the growing season to the specified height. Do not mow when grass is wet.

1. Mow lawn 3 inches high.

E. Lawn Post fertilization: Apply fertilizer after second mowing and when grass is dry.

1. Use commercial-grade complete fertilizer, O-F-241C, type 1, grade 16-16-8, level B with guaranteed chemical analysis of contents marked on containers. Apply at manufacturer's recommended rate.

PART 2 - PRODUCTS

Addendum #5

2.1 TURFGRASS SOD

A. Certified Sod

1. Sod species: Bella Blue.

2. Suppliers:
   a. BioGrass Sod Farms, Clark Bell, 801-562-9090, www.biograss.com
   b. Idaho Sod Farms, 208-529-3197, www.idahosodfarms.com
   c. Other supplier as approved prior to bid.

3. Size: Big Roll sod: 30" x 80' with 1/2" soil. For areas less than 200 sq ft, use regular size 2' x 5' long rolls with 1/2" soil.

4. Sod shall be of uniform density, color, and texture, strongly rooted, and capable of vigorous growth and development when planted.

5. Assure over-all high quality and freedom from noxious weeds or an excessive amount of other crop and weedy plants at time of harvest.

6. Sod shall be machine cut at a uniform soil thickness at the time of cutting. Individual pieces of sod shall be cut to the supplier's standard width and length. Maximum allowable deviation from standard widths and lengths shall be five percent 5%). Broken pads and torn or uneven ends will not be acceptable.

7. Sod shall be harvested, delivered and installed within a period of 24 hours. Soil on sod pads shall be kept moist at all times.

8. Stakes: Stake where necessary on slopes. Stakes for pegging the sod shall be sound hardwood approximately one inch by two inches (1" x 2") and of sufficient length to penetrate the mat, the seed bed and to a minimum depth of two inches (2") of subsoil. Stakes shall be free from insects and fungi and capable of remaining in the ground at least two years.

2.2 FERTILIZER

A. Commercial Fertilizer: Commercial-grade complete fertilizer, O-F-241C, type 1, grade 16-16-8, level B with guaranteed chemical analysis of contents marked on the containers.

PART 3 - EXECUTION

3.1 PREPERATION

A. Protection

1. Take care in preparation work to avoid conditions which will create hazards. Post signs or barriers as required.
2. Provide adequate means for protection from damage through excessive erosion, flooding, heavy rains, etc. Repair or replace damaged areas.
3. Keep site well drained and landscape excavations dry.

B. Surface Preparation - Newly Graded Subgrades

1. Limit sod subgrade preparation to areas to be planted.
2. Seven days maximum prior to sodding:
   a. Prepare subgrade and spread Planting Soil Mix in accordance to specification section 329119 - Fine Grading and Soil Preparation.
   b. Reduce elevation of planting soil to allow for soil thickness of sod.
   c. Install Landscape Edging as detailed for all turf areas adjacent planting areas.
3. After lawn areas have been prepared, take no heavy objects over them except lawn rollers.
4. After preparation of lawn areas and with topsoil in semi-dry condition, roll lawn planting areas in two directions at approximately right angles with water ballast roller weighing 100 to 300 lbs. according to soil type.
5. Rake or scarify and cut or fill irregularities that develop as required until area is true and uniform, free from lumps, depressions, and irregularities.

C. Surface Preparation - Unchanged Subgrades

1. Limit sod subgrade preparation to areas to be planted.
2. Remove existing grass, vegetation, and turf. Do not mix into surface soil.
3. Loosen surface soil to a depth of at least 4 inches. Till soil to a homogeneous mixture of fine texture and break up all clods and lumps.
4. Remove stones larger than 3/4 inch in any dimension and clods, weeds, sticks, roots, and other extraneous matter and legally dispose them off of the Owner's property.

D. Finish Grading

1. Finish grades shall be in accordance with specification section 329119 - Fine Grading and Soil Preparation. Adjustments of finish grades shall be made at the direction of the Landscape Architect as required. Roll and rake, remove ridges, and fill depressions to meet finish grades. Limit fine grading to areas that can be planted in the immediate future.
2. Moisten prepared lawn areas before planting if soil is dry. Water thoroughly and allow surface to dry before planting. Do not create muddy soil.
3. Restore areas if eroded or otherwise disturbed after finish grading and before planting.
4. Final grade of soil in all turf areas shall be 1 1/2" below top of adjacent pavement of any kind before laying sod.

3.2 INSTALLATION

A. Laying of Sod

1. Prior to laying sod, apply 16-16-8 fertilizer to the entire surface to receive sod at the rate of 4 pounds per 1,000 square feet.
2. Lay sod during growing season. Sodding during dry summer period, at freezing temperatures, or over frozen soil is not acceptable.
3. Lay sod within 24 hours of harvesting.
4. Lay sod to form a solid mass with tightly fitted joints, Butt ends and sides of sod; do not stretch or overlap. Stagger sod strips or pads to offset joints in adjacent courses. Cut out irregular or thin sections with a sharp knife. Avoid damage to subgrade or sod during installation. Tamp and roll lightly to ensure contact with subgrade, eliminate air pockets, and form a smooth surface. Work sifted soil or fine sand into minor cracks between pieces of sod; remove excess to avoid smothering sod and adjacent grass.
5. Lay sod flush with adjoining existing sodded surfaces.
6. Lay sod at sloping areas with the long dimension of individual sod strips laid parallel with the contours of the slope.
7. Anchor sod on slopes exceeding 6:1 with wood pegs or steel staples spaced as recommended by sod manufacturer but not less than 2 anchors per sod strip to prevent slippage.
8. Do not sod slopes steeper than 3:1.

B. After Sodding Is Complete

1. Roll horizontal surface areas in two directions perpendicular to each other.

2. Repair and re-roll areas with depressions, lumps, or other irregularities. Heavy rolling to correct irregularities in grade will not be permitted.
3. Saturate sod with fine water spray within two hours of planting to obtain moisture penetration through sod into top 2" of topsoil.
4. During first two weeks, water daily or more frequently as necessary to maintain moist soil to a minimum depth of 2 inches.

3.3 FIELD QUALITY CONTROL

A. Inspection

1. Sodded areas will be accepted at final inspection if –
   a. Sodded areas are properly established.
   b. Sod is healthy, well rooted, even-colored, free of bare and dead spots and without weeds, open joints, bare areas, and surface irregularities.
   c. No surface soil is visible when grass has been cut to height of 2".
   d. Sodded areas have been mowed a minimum of twice.
2. Areas sodded after October 1 will be accepted the following spring (May 15th) approximately one month after start of growing season if specified conditions have been met.
3. Reestablish lawns that do not comply with requirements and continue maintenance at not additional cost to the owner until lawns are satisfactory.

3.4 SOD GUARANTEE

A. Protect, water, and replace any damaged sod until acceptance by Owner. Guarantee shall include filling any voids between sod pieces, repairing any eroded areas, and maintaining sod by watering, mowing, and controlling insects, as well as advising Owner of any maintenance or watering procedures necessary to care for and promote plant life. All sod must be in satisfactory condition at the time of the substantial completion inspection.

3.5 CLEANING

A. Immediately clean up any soil or debris spilled onto pavement and dispose of all deleterious materials.

3.6 PROTECTION

A. Protection of newly laid sod shall be the complete responsibility of the contractor. Provide acceptable visual barriers by means of barricades set at appropriate distances and strings or tapes between the barriers as an indication of new work. Restore any damaged areas cause by erosion, trespassing, vehicular traffic or any other causes until such time as the lawn is accepted by the owner.

END OF SECTION 329223

REAVELEY
ENGINEERS + ASSOCIATES
Consulting Structural Engineers

UVU Classroom Building
Addendum #5

May 24, 2013

Sheet SB101A
1. Add elevator guide rail support column size. See revised Sheet SB101A.

Sheet SB101B
1. Add elevator guide rail support column size. See revised Sheet SB101B.

Sheet SB101C
1. Add detail cut A5/SF503 at bench at opening in concrete wall near Grid 10 and between Grids F and F.4. See revised Sheet SB101C.

Sheet SB502
1. Revise detail C3/SB502. See revised Sheet SB502.

Sheet SB601
1. Add reinforcing information for CRP-1 in the Concrete Round Pier Schedule. See revised Sheet SB601.
2. Add reinforcing and compacted fill information to Concrete Footing Schedule. See revised Sheet SB601.

Sheet SF101
1. Revise bridge roof framing connections on D1/SF101. See revised Sheet SF101.

Sheet SF102A
1. Add elevator guide rail support column size. See revised Sheet SF102A.
2. Add beams and revise framing member sizes and HSA quantities for beams near to and along Grid 6. See revised Sheet SF102A.

Sheet SF102B
1. Add elevator guide rail support column size. See revised Sheet SF102B.
2. Revise framing member size and HSA quantity for beam along Grid 8.5/C-E. See revised Sheet SF102B.
3. Delete detail cut at Grid G/10. See revised Sheet SF102B.
4. Rotate columns at Grids E.7/10 and F.4/10 90 degrees. See revised Sheet SF102B.

Sheet SF102C
1. Add detail cut A5/SF503 at bench at opening in concrete wall near Grid 10 and between Grids F and F.4. See revised Sheet SF102C.
2. Add detail cut C2/SF513 on Grids 12 and 13. See revised Sheet SF102C.

Sheet SF103A

1. Add elevator guide rail support column size. See revised Sheet SF103A.
2. Add beams and revise framing member sizes at Grid E/1 and Grid 6/E-G. See revised Sheet SF103A.

Sheet SF103B

1. Add elevator guide rail support column size. See revised Sheet SF103B.
2. Rotate columns at Grids E.7/10 and F.4/10 90 degrees. See revised Sheet SF103B.

Sheet SF104A

1. Add elevator guide rail support column size. See revised Sheet SF104A.
2. Add beams and revise framing member sizes at Grid E/1 and Grid 6/E-G. See revised Sheet SF104A.

Sheet SF104B

1. Add elevator guide rail support column size. See revised Sheet SF104B.
2. Rotate columns at Grids E.7/10 and F.4/10 90 degrees. See revised Sheet SF104B.

Sheet SF105A

1. Add elevator guide rail support column size. See revised Sheet SF105A.
2. Add beams and revise framing member sizes at Grid E/1 and Grid 6/E-G. See revised Sheet SF105A.

Sheet SF105B

1. Add elevator guide rail support column size. See revised Sheet SF105B.
2. Rotate columns at Grids E.7/10 and F.4/10 90 degrees. See revised Sheet SF105B.

Sheet SF106A

1. Add elevator guide rail support column size. See revised Sheet SF106A.
2. Add beams and revise framing member sizes at Grid E/1 and Grid 6/E-G. See revised Sheet SF106A.
3. Add framing and new detail cuts for operable partition door support between Grids E.8-F/1-2. See revised Sheet SF106A.

Sheet SF106B

1. Add elevator guide rail support column size. See revised Sheet SF106B.
2. Rotate columns at Grids E.7/10 and F.4/10 90 degrees. See revised Sheet SF106B.

Sheet SF107

1. Add elevator guide rail support column size. See revised Sheet SF106B.
2. Revise framing member sizes between Grids 7-7.5 and between Grids F-G/8.5-9. See revised Sheet SF107.
3. Add detail cuts on Grid E and G. See revised Sheet SF 107.

Sheet SF201

1. Change column size at Grid F/6. Level 1-3. See revised Sheet SF201.

Sheet SF203

1. Add member sizes and detail cut to Penthouse Mechanical Louver Frame elevations C1/SF203 and B1/SF203. See revised Sheet SF203.

Sheet SF204

1. Add detail cuts to elevations. See revised Sheet SF204.
2. Delete elevation A1/SF204. See revised Sheet SF204.
3. Add notes 4 and 5 to Steel Stud Elevation Notes. See revised Sheet SF204.

Sheet SF205

1. Add detail cuts to elevations. See revised Sheet SF205.
2. Delete elevations A2 and B2/SF205. See revised Sheet SF205.
3. Add notes 4 and 5 to Steel Stud Elevation Notes. See revised Sheet SF205.

Sheet SF211

1. Revise detail B1/SF211. See revised Sheet SF211.

Sheet SF403

1. Add detail D1/SF403. See revised Sheet SF403.
2. Add weld size information to detail C4/SF403. See revised Sheet SF403.
3. Add information to detail A1/SF403. See revised Sheet SF403.

Sheet SF503

1. Add details A2, A3, A4, and A5/SF503. See revised Sheet SF503.
2. Add weld size information to details C3 and C5/SF503. See revised Sheet SF503.

Sheet SF512

1. Add information to details D1, D2, and D3/SF512. See revised Sheet SF512.

Sheet SF513

1. Add details B1, B2, B3, B4, B5, C1, and C2/SF513. See revised Sheet SF513.
2. Add information to detail C5/SF513. See revised Sheet SF513.

Sheet SF514

1. Revise detail A3/SF514. See revised Sheet SF514.

Sheet SF515

1. Revise details C5 and D2/SF515. See revised Sheet SF515.
2. Add detail reference to detail B1/SF515. See revised Sheet SF515.

Sheet SF601

1. Add cap plate thickness to detail A1/SF601. See revised Sheet SF601.

Sheet SF602

1. Revise column sizes at Grids E.1/1, G.7/1, E.8/1, F.5/1, E.7/10, and F.4-10. See revised Sheet SF602.

Sheet SF611

1. Revise Detail D2/SF611. See revised Sheet SF611.
2. Revise and add information to Typical Non-Load Bearing Exterior Steel Stud Framing Schedule C2/SF611. See revised Sheet SF611.

Sheet SF612

1. Delete details A1, A2, A4, B1, C5, and D3/SF612. See revised Sheet SF612.
2. Revise details A3, A5, B2, B3, B4, B5, D1, and D5/SF612. See revised Sheet SF612.

Sheet SF613

1. Delete details 3 and 4/SF613. See revised Sheet SF613.

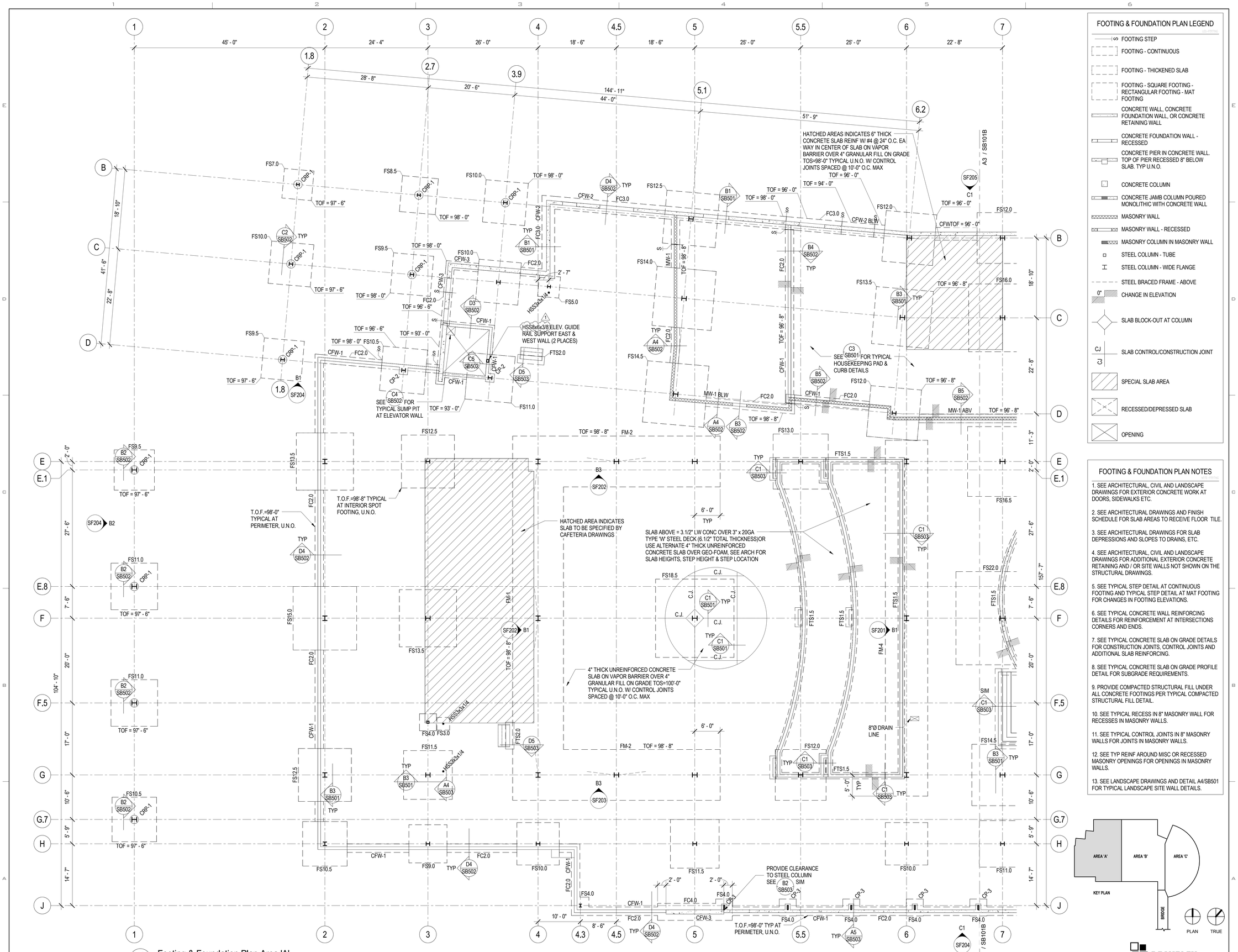

A1 SB101A Footing & Foundation Plan Area 'A'

SCALE: 1/8" = 1'-0"

FOOTING & FOUNDATION PLAN LEGEND

- FOOTING STEP
- FOOTING - CONTINUOUS
- FOOTING - THICKENED SLAB
- FOOTING - SQUARE FOOTING - RECTANGULAR FOOTING - MAT FOOTING
- CONCRETE WALL, CONCRETE FOUNDATION WALL, OR CONCRETE RETAINING WALL
- CONCRETE FOUNDATION WALL - RECESSED
- CONCRETE PIER IN CONCRETE WALL. TOP OF PIER RECESSED 8" BELOW SLAB. TYP U.N.O.
- CONCRETE COLUMN
- CONCRETE JAMB COLUMN POURED MONOLITHIC WITH CONCRETE WALL
- MASONRY WALL
- MASONRY WALL - RECESSED
- MASONRY COLUMN IN MASONRY WALL
- STEEL COLUMN - TUBE
- STEEL COLUMN - WIDE FLANGE
- STEEL BRACED FRAME - ABOVE
- 0" CHANGE IN ELEVATION
- SLAB BLOCK-OUT AT COLUMN
- CJ SLAB CONTROL/CONSTRUCTION JOINT
- SPECIAL SLAB AREA
- RECESSED/DEPRESSED SLAB
- OPENING

FOOTING & FOUNDATION PLAN NOTES

1. SEE ARCHITECTURAL, CIVIL AND LANDSCAPE DRAWINGS FOR EXTERIOR CONCRETE WORK AT DOORS, SIDEWALKS ETC.

2. SEE ARCHITECTURAL DRAWINGS AND FINISH SCHEDULE FOR SLAB AREAS TO RECEIVE FLOOR TILE.

3. SEE ARCHITECTURAL DRAWINGS FOR SLAB DEPRESSIONS AND SLOPES TO DRAINS, ETC.

4. SEE ARCHITECTURAL, CIVIL AND LANDSCAPE DRAWINGS FOR ADDITIONAL EXTERIOR CONCRETE RETAINING AND / OR SITE WALLS NOT SHOWN ON THE STRUCTURAL DRAWINGS.

5. SEE TYPICAL STEP DETAIL AT CONTINUOUS FOOTING AND TYPICAL STEP DETAIL AT MAT FOOTING FOR CHANGES IN FOOTING ELEVATIONS.

6. SEE TYPICAL CONCRETE WALL REINFORCING DETAILS FOR REINFORCEMENT AT INTERSECTIONS CORNERS AND ENDS.

7. SEE TYPICAL CONCRETE SLAB ON GRADE DETAILS FOR CONSTRUCTION JOINTS, CONTROL JOINTS AND ADDITIONAL SLAB REINFORCING.

8. SEE TYPICAL CONCRETE SLAB ON GRADE PROFILE DETAIL FOR SUBGRADE REQUIREMENTS.

9. PROVIDE COMPACTED STRUCTURAL FILL UNDER ALL CONCRETE FOOTINGS PER TYPICAL COMPACTED STRUCTURAL FILL DETAIL.

10. SEE TYPICAL RECESS IN 8" MASONRY WALL FOR RECESSES IN MASONRY WALLS.

11. SEE TYPICAL CONTROL JOINTS IN 8" MASONRY WALLS FOR JOINTS IN MASONRY WALLS.

12. SEE TYP REINF AROUND MISC OR RECESSED MASONRY OPENINGS FOR OPENINGS IN MASONRY WALLS.

13. SEE LANDSCAPE DRAWINGS AND DETAIL A4/SB501 FOR TYPICAL LANDSCAPE SITE WALL DETAILS.

REAVELEY ENGINEERS + ASSOCIATES
Consulting Structural Engineers

UNLESS A PROFESSIONAL SEAL WITH SIGNATURE AND DATE IS AFFIXED, THIS DOCUMENT IS PRELIMINARY AND IS NOT INTENDED FOR CONSTRUCTION, RECORDING PURPOSES, OR IMPLEMENTATION

UTAH VALLEY UNIVERSITY

State of Utah
Department of Administrative Services
Division of Facilities Construction & Management
4110 State Office Building
Salt Lake City, Utah 84114
Phone: (801) 538 - 3018
Fax: (801) 538 - 3267

CRSA METHODSTUDIO INC.

CRSA ARCHITECTS
649 east south temple
salt lake city, utah 84102
phone:(801) 355-5915

METHOD STUDIO INC.
925 south west temple
salt lake city, utah 84101
phone:(801) 532-4422

DFCM APPROVAL STAMP

project:
UVU Classroom Building - Volume 1
800 West University Parkway
Orem, UT 84058

project#: DFCM# 12192790
date: April 30, 2013

revisions :
1 Addenda 5 05.24.13

title:
Footing & Fdtn Plan Area 'A'

sheet:
SB101A

Bid Doc

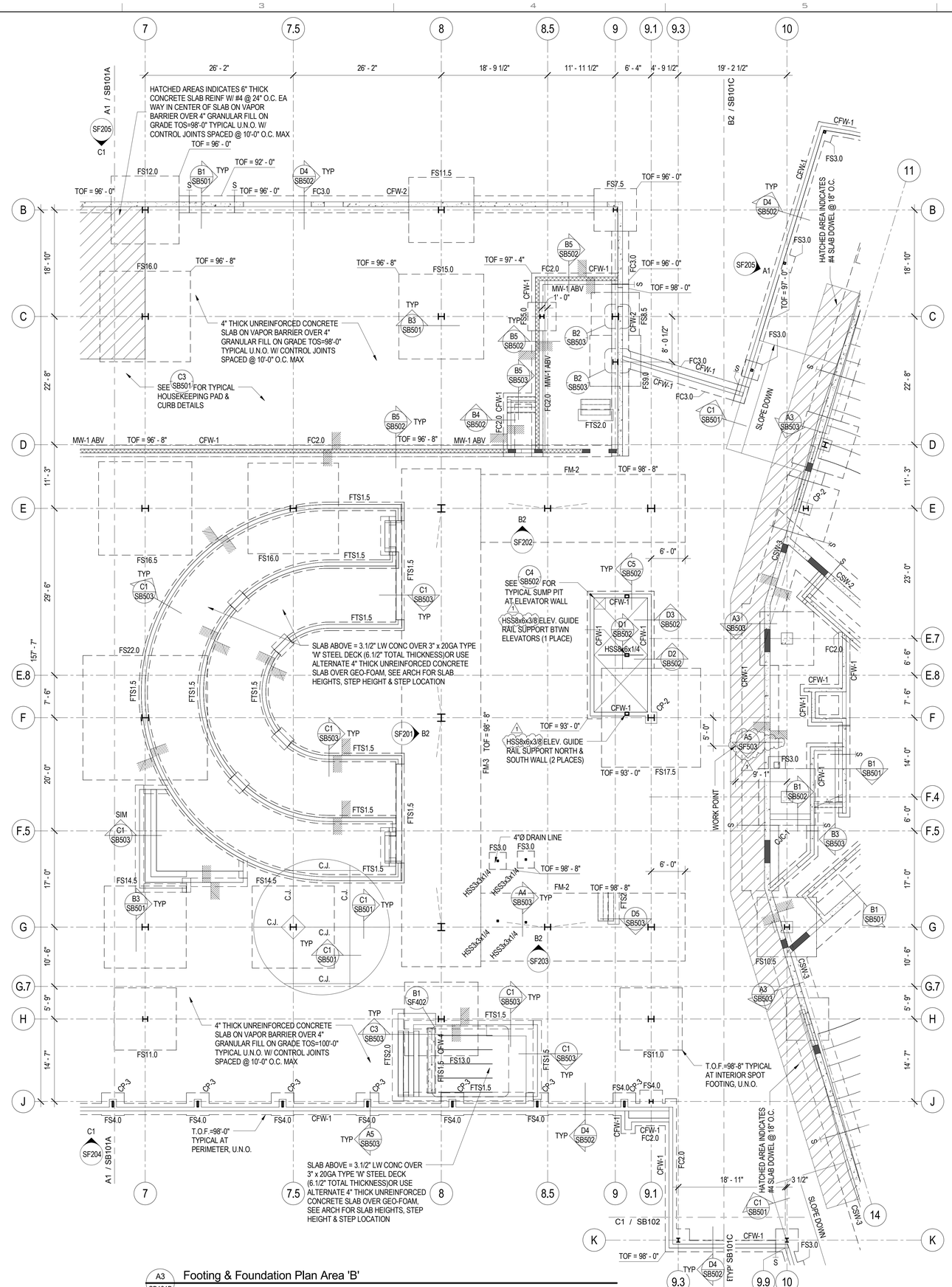

A3 / SB101B Footing & Foundation Plan Area 'B'

SCALE: 1/8" = 1'-0"

FOOTING & FOUNDATION PLAN LEGEND

- FOOTING STEP
- FOOTING - CONTINUOUS
- FOOTING - THICKENED SLAB
- FOOTING - SQUARE FOOTING - RECTANGULAR FOOTING - MAT FOOTING
- CONCRETE WALL, CONCRETE FOUNDATION WALL, OR CONCRETE RETAINING WALL
- CONCRETE FOUNDATION WALL - RECESSED
- CONCRETE PIER IN CONCRETE WALL. TOP OF PIER RECESSED 8" BELOW SLAB. TYP U.N.O.
- CONCRETE COLUMN
- CONCRETE JAMB COLUMN POURED MONOLITHIC WITH CONCRETE WALL
- MASONRY WALL
- MASONRY WALL - RECESSED
- MASONRY COLUMN IN MASONRY WALL
- STEEL COLUMN - TUBE
- STEEL COLUMN - WIDE FLANGE
- STEEL BRACED FRAME - ABOVE
- 0" CHANGE IN ELEVATION
- SLAB BLOCK-OUT AT COLUMN
- CJ SLAB CONTROL/CONSTRUCTION JOINT
- SPECIAL SLAB AREA
- RECESSED/DEPRESSED SLAB
- OPENING

FOOTING & FOUNDATION PLAN NOTES

1. SEE ARCHITECTURAL, CIVIL AND LANDSCAPE DRAWINGS FOR EXTERIOR CONCRETE WORK AT DOORS, SIDEWALKS ETC.

2. SEE ARCHITECTURAL DRAWINGS AND FINISH SCHEDULE FOR SLAB AREAS TO RECEIVE FLOOR TILE.

3. SEE ARCHITECTURAL DRAWINGS FOR SLAB DEPRESSIONS AND SLOPES TO DRAINS, ETC.

4. SEE ARCHITECTURAL, CIVIL AND LANDSCAPE DRAWINGS FOR ADDITIONAL EXTERIOR CONCRETE RETAINING AND / OR SITE WALLS NOT SHOWN ON THE STRUCTURAL DRAWINGS.

5. SEE TYPICAL STEP DETAIL AT CONTINUOUS FOOTING AND TYPICAL STEP DETAIL AT MAT FOOTING FOR CHANGES IN FOOTING ELEVATIONS.

6. SEE TYPICAL CONCRETE WALL REINFORCING DETAILS FOR REINFORCEMENT AT INTERSECTIONS CORNERS AND ENDS.

7. SEE TYPICAL CONCRETE SLAB ON GRADE DETAILS FOR CONSTRUCTION JOINTS, CONTROL JOINTS AND ADDITIONAL SLAB REINFORCING.

8. SEE TYPICAL CONCRETE SLAB ON GRADE PROFILE DETAIL FOR SUBGRADE REQUIREMENTS.

9. PROVIDE COMPACTED STRUCTURAL FILL UNDER ALL CONCRETE FOOTINGS PER TYPICAL COMPACTED STRUCTURAL FILL DETAIL.

10. SEE TYPICAL RECESS IN 8" MASONRY WALL FOR RECESSES IN MASONRY WALLS.

11. SEE TYPICAL CONTROL JOINTS IN 8" MASONRY WALLS FOR JOINTS IN MASONRY WALLS.

12. SEE TYP REINF AROUND MISC OR RECESSED MASONRY OPENINGS FOR OPENINGS IN MASONRY WALLS.

13. SEE LANDSCAPE DRAWINGS AND DETAIL A4/SB501 FOR TYPICAL LANDSCAPE SITE WALL DETAILS.

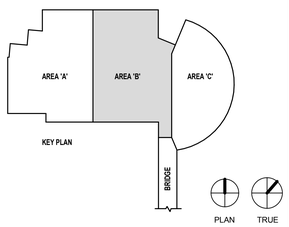

REAVELEY ENGINEERS + ASSOCIATES
Consulting Structural Engineers

UNLESS A PROFESSIONAL SEAL WITH SIGNATURE AND DATE IS AFFIXED, THIS DOCUMENT IS PRELIMINARY AND IS NOT INTENDED FOR CONSTRUCTION, RECORDING PURPOSES, OR IMPLEMENTATION

UTAH VALLEY UNIVERSITY

State of Utah
Department of Administrative Services
Division of Facilities Construction & Management
4110 State Office Building
Salt Lake City, Utah 84114
Phone: (801) 538 - 3018
Fax: (801) 538 - 3267

CRSA METHODSTUDIO INC.

CRSA ARCHITECTS
649 east south temple
salt lake city, utah 84102
phone:(801) 355-5915

METHOD STUDIO INC.
925 south west temple
salt lake city, utah 84101
phone:(801) 532-4422

DFCM APPROVAL STAMP

project:
UVU Classroom Building - Volume 1
800 West University Parkway
Orem, UT 84058

project#: DFCM# 12192790
date: April 30, 2013

revisions:
1 Addenda 5 05.24.13

title:
Footing & Fdtn Plan Area 'B'

sheet:
SB101B

Bid Doc

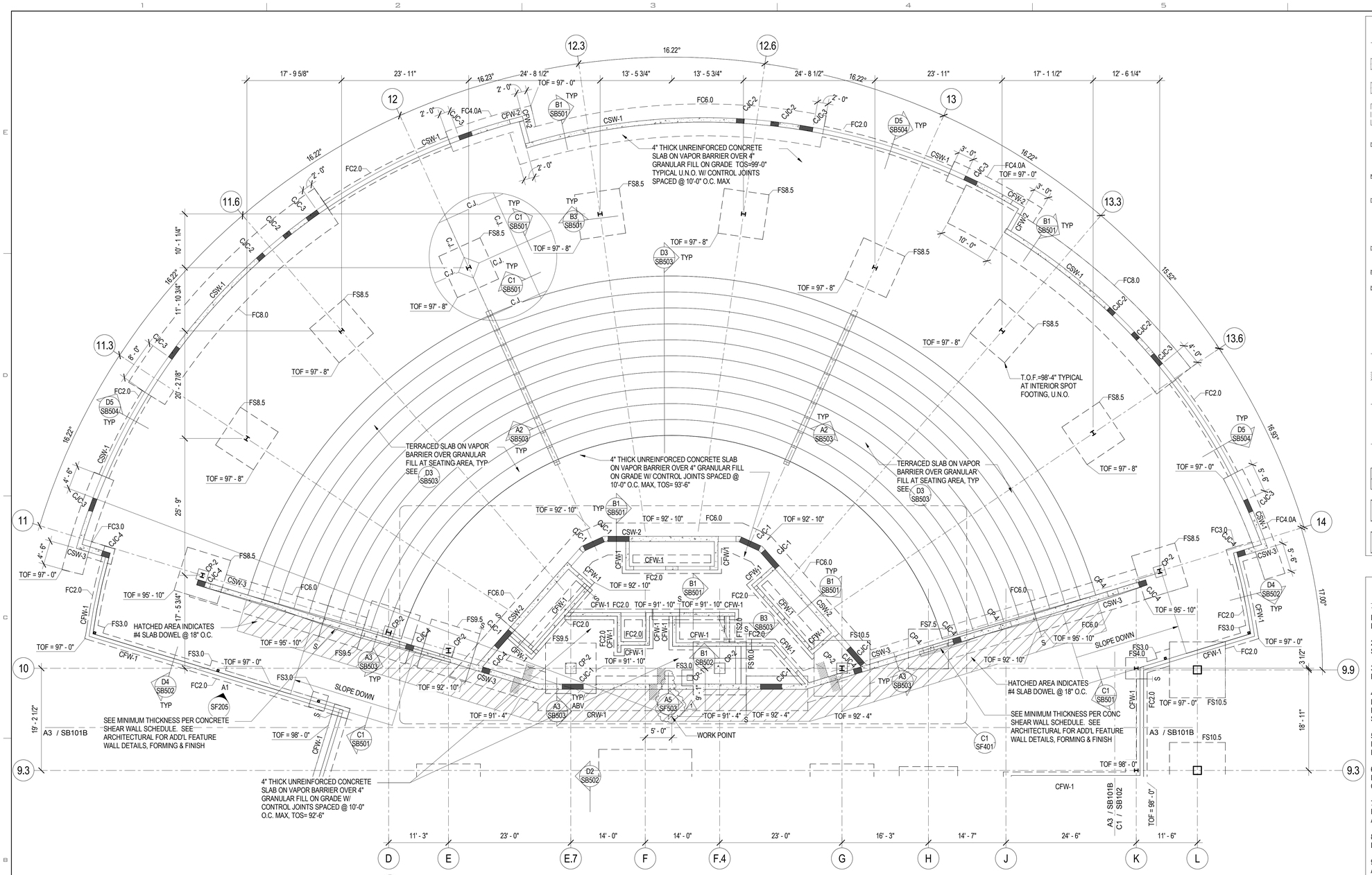

B2 SB101C Footing & Foundation Plan Area 'C'

SCALE: 1/8" = 1'-0"

FOOTING & FOUNDATION PLAN LEGEND

- FOOTING STEP
- FOOTING - CONTINUOUS
- FOOTING - THICKENED SLAB
- FOOTING - SQUARE FOOTING - RECTANGULAR FOOTING - MAT FOOTING
- CONCRETE WALL, CONCRETE FOUNDATION WALL, OR CONCRETE RETAINING WALL
- CONCRETE FOUNDATION WALL - RECESSED
- CONCRETE PIER IN CONCRETE WALL. TOP OF PIER RECESSED 8" BELOW SLAB. TYP U.N.O.
- CONCRETE COLUMN
- CONCRETE JAMB COLUMN POURED MONOLITHIC WITH CONCRETE WALL
- MASONRY WALL
- MASONRY WALL - RECESSED
- MASONRY COLUMN IN MASONRY WALL
- STEEL COLUMN - TUBE
- STEEL COLUMN - WIDE FLANGE
- STEEL BRACED FRAME - ABOVE
- 0" CHANGE IN ELEVATION
- SLAB BLOCK-OUT AT COLUMN
- CJ SLAB CONTROL/CONSTRUCTION JOINT
- SPECIAL SLAB AREA
- RECESSED/DEPRESSED SLAB
- OPENING

FOOTING & FOUNDATION PLAN NOTES

1. SEE ARCHITECTURAL, CIVIL AND LANDSCAPE DRAWINGS FOR EXTERIOR CONCRETE WORK AT DOORS, SIDEWALKS ETC.

2. SEE ARCHITECTURAL DRAWINGS AND FINISH SCHEDULE FOR SLAB AREAS TO RECEIVE FLOOR TILE.

3. SEE ARCHITECTURAL DRAWINGS FOR SLAB DEPRESSIONS AND SLOPES TO DRAINS, ETC.

4. SEE ARCHITECTURAL, CIVIL AND LANDSCAPE DRAWINGS FOR ADDITIONAL EXTERIOR CONCRETE RETAINING AND / OR SITE WALLS NOT SHOWN ON THE STRUCTURAL DRAWINGS.

5. SEE TYPICAL STEP DETAIL AT CONTINUOUS FOOTING AND TYPICAL STEP DETAIL AT MAT FOOTING FOR CHANGES IN FOOTING ELEVATIONS.

6. SEE TYPICAL CONCRETE WALL REINFORCING DETAILS FOR REINFORCEMENT AT INTERSECTIONS CORNERS AND ENDS.

7. SEE TYPICAL CONCRETE SLAB ON GRADE DETAILS FOR CONSTRUCTION JOINTS, CONTROL JOINTS AND ADDITIONAL SLAB REINFORCING.

8. SEE TYPICAL CONCRETE SLAB ON GRADE PROFILE DETAIL FOR SUBGRADE REQUIREMENTS.

9. PROVIDE COMPACTED STRUCTURAL FILL UNDER ALL CONCRETE FOOTINGS PER TYPICAL COMPACTED STRUCTURAL FILL DETAIL.

10. SEE TYPICAL RECESS IN 8" MASONRY WALL FOR RECESSES IN MASONRY WALLS.

11. SEE TYPICAL CONTROL JOINTS IN 8" MASONRY WALLS FOR JOINTS IN MASONRY WALLS.

12. SEE TYP REINF AROUND MISC OR RECESSED MASONRY OPENINGS FOR OPENINGS IN MASONRY WALLS.

13. SEE LANDSCAPE DRAWINGS AND DETAIL A4/SB501 FOR TYPICAL LANDSCAPE SITE WALL DETAILS.

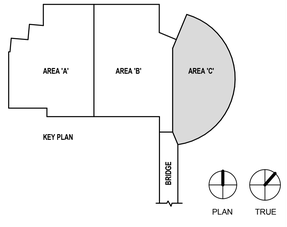

REAVELEY ENGINEERS + ASSOCIATES
Consulting Structural Engineers

UNLESS A PROFESSIONAL SEAL WITH SIGNATURE AND DATE IS AFFIXED, THIS DOCUMENT IS PRELIMINARY AND IS NOT INTENDED FOR CONSTRUCTION, RECORDING PURPOSES, OR IMPLEMENTATION

UTAH VALLEY UNIVERSITY

State of Utah
Department of Administrative Services
Division of Facilities Construction & Management
4110 State Office Building
Salt Lake City, Utah 84114
Phone: (801) 538 - 3018
Fax: (801) 538 - 3267

CRSA METHODSTUDIO INC.

CRSA ARCHITECTS
649 east south temple
salt lake city, utah 84102
phone:(801) 355-5915

METHOD STUDIO INC.
925 south west temple
salt lake city, utah 84101
phone:(801) 532-4422

DFCM APPROVAL STAMP

project:
UVU Classroom Building - Volume 1
800 West University Parkway
Orem, UT 84058

project#: DFCM# 12192790
date: April 30, 2013

revisions:
1 Addenda 5 05.24.13

title:
Footing & Fdtn Plan Area 'C'

sheet:
SB101C

Bid Doc

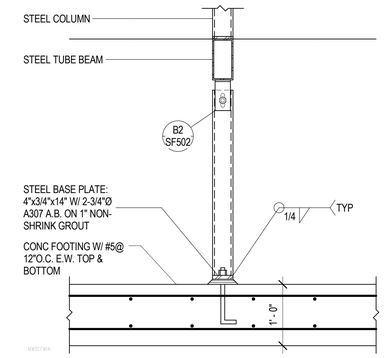

D1 / SB502 — TYP ELEVATOR GUIDE RAIL SUPPORT COLUMN BEARING ON CONC FOOTING
NO SCALE

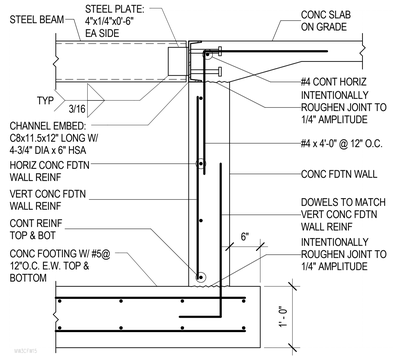

D2 / SB502 — TYP CONCRETE FOUNDATION WALL AT ELEVATOR PIT W/ SEPERATOR BEAM
NO SCALE

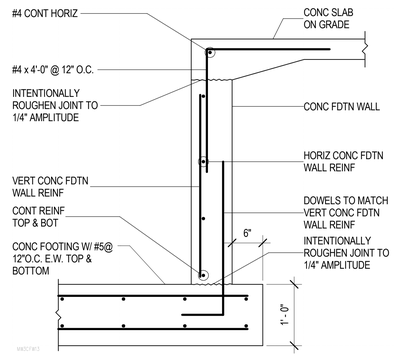

D3 / SB502 — TYPICAL ELEVATOR PIT DETAIL
NO SCALE

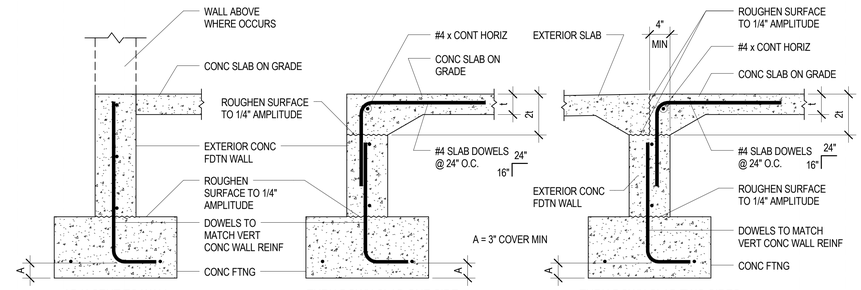

D4 / SB502 — TYPICAL CONCRETE SLAB ON GRADE TO EXTERIOR CONCRETE FOUNDATION WALL
NO SCALE

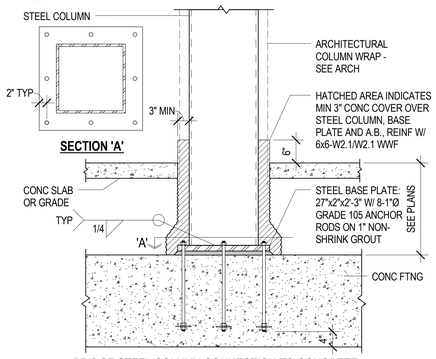

C1 / SB502 — BRIDGE STEEL COLUMN CONNECTION TO CONCRETE FOOTING
NO SCALE

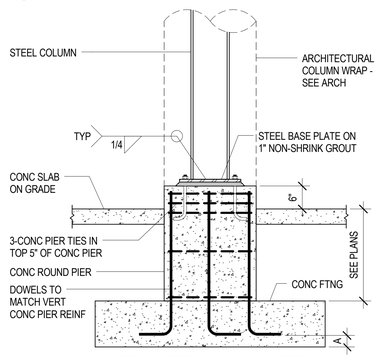

C2 / SB502 — TYPICAL EXTERIOR STEEL COLUMN CONNECTION TO CONCRETE FOOTING/CONCRETE PIER
NO SCALE

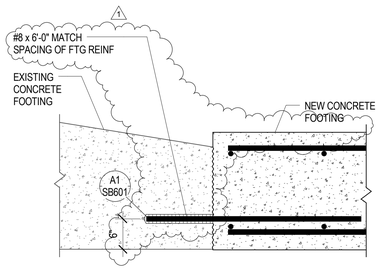

C3 / SB502 — NEW CONCRETE FOOTING TO EXISTING FOOTING
NO SCALE

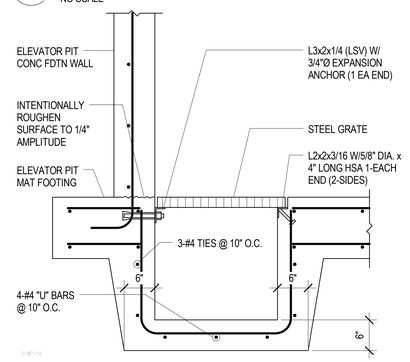

C4 / SB502 — TYPICAL SUMP PIT AT ELEVATOR WALL
NO SCALE

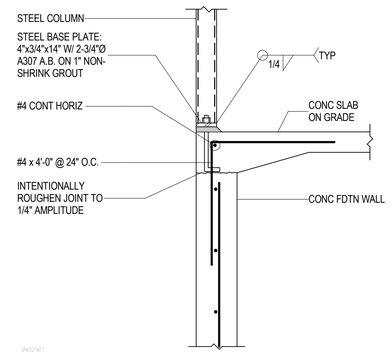

C5 / SB502 — TYP ELEVATOR GUIDE RAIL SUPPORT COLUMN BEARING ON CONC FDTN WALL
NO SCALE

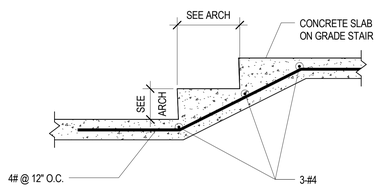

B1 / SB502 — CONCRETE SLAB ON GRADE STAIR
NO SCALE

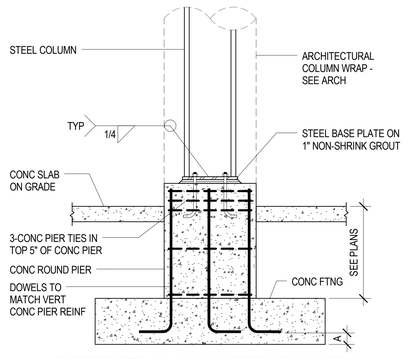

B2 / SB502 — EXTERIOR STEEL COLUMN CONNECTION TO CONCRETE FOOTING/CONCRETE PIER
NO SCALE

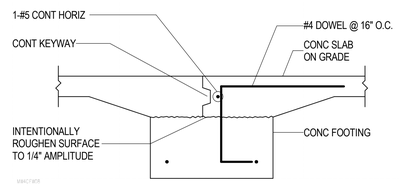

B3 / SB502 — TYPICAL DOOR OPENING AT INTERIOR
NO SCALE

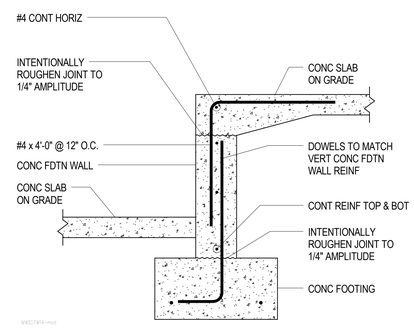

B4 / SB502 — TYPICAL CONCRETE FOUNDATION WALL AT FLOOR TRANSITION
NO SCALE

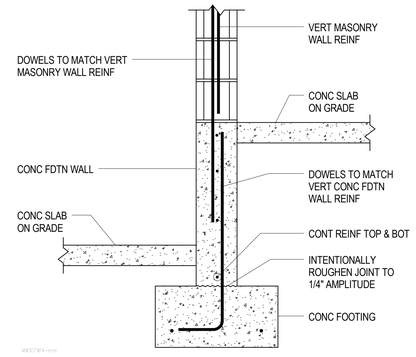

B5 / SB502 — CONCRETE FOUNDATION WALL W/ MASONRY WALL ABOVE AT FLOOR TRANSITION
NO SCALE

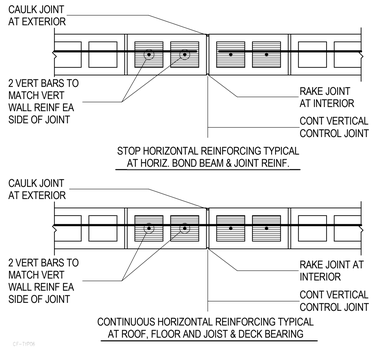

A1 / SB502 — TYPICAL CONTROL JOINTS IN 8" MASONRY WALLS
NO SCALE

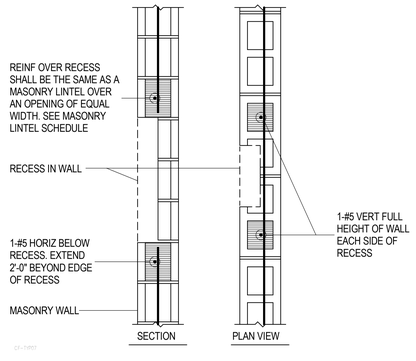

A2 / SB502 — TYPICAL RECESS IN 8" MASONRY WALL
NO SCALE

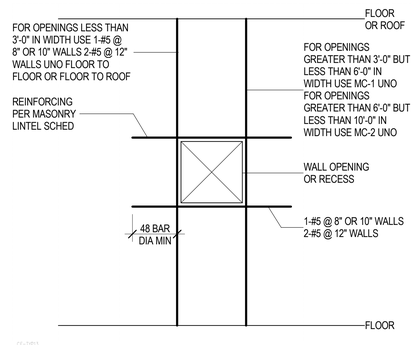

A3 / SB502 — TYP REINF AROUND MISC OR RECESSED MASONRY OPENINGS
NO SCALE

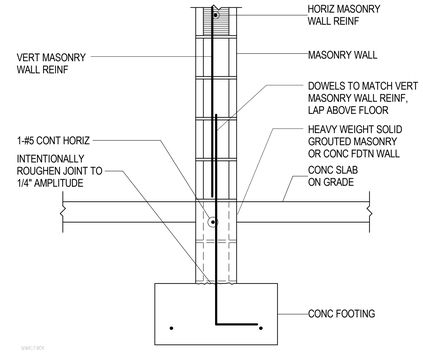

A4 / SB502 — TYP INTERIOR MASONRY WALL ON CONCRETE CURB WALL
NO SCALE

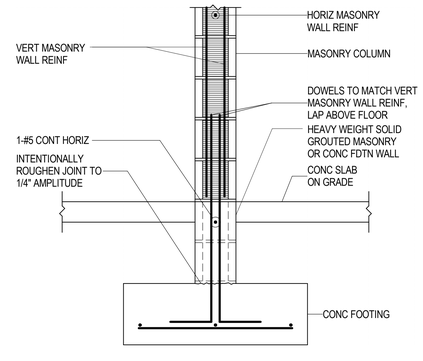

REAVELEY
ENGINEERS + ASSOCIATES
Consulting Structural Engineers

UNLESS A PROFESSIONAL SEAL WITH SIGNATURE AND DATE IS AFFIXED, THIS DOCUMENT IS PRELIMINARY AND IS NOT INTENDED FOR CONSTRUCTION, RECORDING PURPOSES, OR IMPLEMENTATION

UTAH VALLEY UNIVERSITY

State of Utah
Department of Administrative Services
Division of Facilities Construction & Management
4110 State Office Building
Salt Lake City, Utah 84114
Phone: (801) 538 - 3018
Fax: (801) 538 - 3267

CRSA METHODSTUDIO INC.

CRSA ARCHITECTS
649 east south temple
salt lake city, utah 84102
phone:(801) 355-5915

METHOD STUDIO INC.
925 south west temple
salt lake city, utah 84101
phone:(801) 532-4422

DFCM APPROVAL STAMP

project:
UVU Classroom Building - Volume 1
800 West University Parkway
Orem, UT 84058

project#: DFCM# 12192790
date: April 30, 2013

revisions :
1 Addenda 5 05.24.13

title:
Typ Footing & Foundation Details

sheet:
SB502

Bid Doc

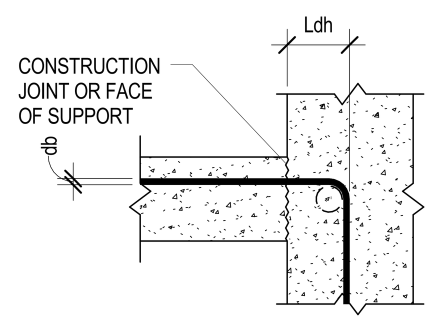

TENSION HOOK DEVELOPMENT LENGTH (Ldh)					
BAR SIZE	NORMAL WEIGHT CONCRETE, f'c = PSI				
	3,000	4,000	4,500	5,000	6,000
#3	6"	6"	6"	6"	6"
#4	8"	7"	7"	7"	7"
#5	10"	9"	8"	8"	7"
#6	12"	10"	10"	9"	8"
#7	14"	12"	11"	11"	10"
#8	16"	14"	13"	12"	11"
#9	18"	15"	14"	14"	13"
#10	20"	17"	16"	15"	14"
#11	22"	19"	18"	17"	16"
#14	37"	32"	31"	29"	27"
#18	50"	43"	41"	39"	35"

NOTES:
1. VALUES HERE VALID FOR ALL CASES IF:
SIDE COVER ≥ 2.1/2"
END COVER ≥ 2"

2. MULTIPLY VALUES IN SCHEDULE BY 1.2 FOR LIGHTWEIGHT CONCRETE

3. MULTIPLY VALUES IN SCHEDULE BY 1.2 FOR USE WITH EPOXY COATED REBAR

Sched – Tension-Hook

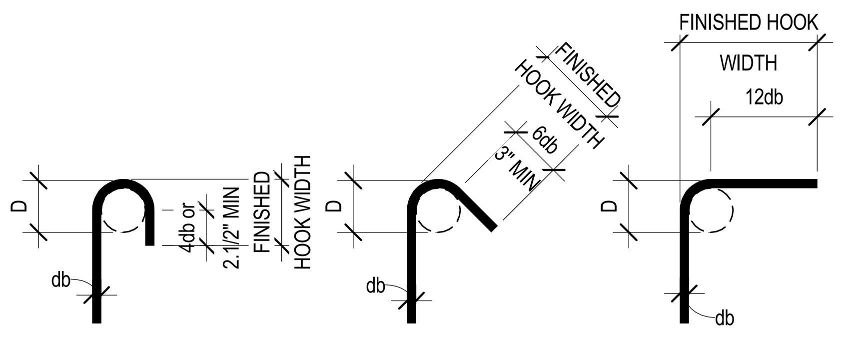

180° HOOK   135° HOOK   90° HOOK

END HOOK SCHEDULE				
BAR SIZE	D	FINISHED HOOK WIDTH		
		180° HOOK	135° HOOK	90° HOOK
#3	2.1/4"	3"	3"	6"
#4	3"	4"	3"	8"
#5	3.1/4"	5"	3.3/4"	10"
#6	4.1/2"	6"	4.1/2"	12"
#7	5.1/4"	7"	5.1/4"	14"
#8	6"	8"	6"	16"
#9	9.1/2"	11.3/4"	--	19"
#10	10.3/4"	13.1/4"	--	22"
#11	12"	14.3/4"	--	24"
#14	18.1/4"	21.3/4"	--	31"
#18	24"	28.1/2"	--	41"

Sched – End-Hook

CONCRETE REINFORCING BAR DEVELOPMENT AND LAP SPLICE LENGTH SCHEDULE																						
BAR SIZE	f'c = 3000 PSI				f'c = 4000 PSI				f'c = 4500 PSI				f'c = 5000 PSI				f'c = 6000 PSI				f'c = ALL	
	Ld	Lt	Lsb	Lsbt	Ld	Lt	Lsb	Lsbt	Ld	Lt	Lsb	Lsbt	Ld	Lt	Lsb	Lsbt	Ld	Lt	Lsb	Lsbt	Ldc	Lsc
#3	17"	22"	22"	28"	15"	19"	19"	25"	14"	18"	18"	23"	13"	17"	17"	22"	12"	16"	16"	20"	8"	12"
#4	22"	29"	29"	38"	19"	25"	25"	33"	18"	24"	24"	31"	17"	23"	23"	29"	16"	21"	21"	27"	10"	15"
#5	28"	36"	36"	47"	24"	31"	31"	41"	23"	30"	30"	38"	22"	28"	28"	36"	20"	26"	26"	33"	12"	19"
#6	33"	43"	43"	56"	29"	37"	37"	49"	27"	35"	35"	46"	26"	34"	34"	44"	24"	31"	31"	40"	15"	23"
#7	48"	63"	63"	81"	42"	54"	54"	71"	40"	51"	51"	67"	38"	49"	49"	63"	34"	45"	45"	58"	17"	27"
#8	55"	72"	72"	93"	48"	62"	62"	81"	45"	59"	59"	76"	43"	56"	56"	72"	39"	51"	51"	66"	19"	30"
#9	62"	81"	81"	105"	54"	70"	70"	91"	51"	66"	66"	86"	48"	63"	63"	81"	44"	57"	57"	74"	22"	34"
#10	70"	91"	91"	118"	61"	79"	79"	102"	57"	74"	74"	96"	54"	71"	71"	92"	50"	64"	64"	84"	24"	39"
#11	78"	101"	101"	131"	67"	87"	87"	114"	64"	82"	82"	107"	60"	78"	78"	102"	55"	71"	71"	93"	27"	43"
#14	93"	121"	NA	NA	81"	105"	NA	NA	76"	99"	NA	NA	72"	94"	NA	NA	66"	86"	NA	NA	33"	NA
#18	124"	161"	NA	NA	108"	140"	NA	NA	101"	132"	NA	NA	96"	125"	NA	NA	88"	114"	NA	NA	43"	NA

Sched – Reinf-Splice

NOTES:
1. DEFINITIONS:
Ld: TENSION DEVELOPMENT LENGTH FOR REINFORCEMENT SATISFYING THE FOLLOWING CONDITIONS:
SLABS AND WALLS: CLEAR SPACING > 2db AND CONCRETE CLEAR COVER > db
BEAMS AND COLUMNS: CLEAR COVER SPACING > db AND CONCRETE CLEAR COVER > db
Lt: DEVELOPMENT LENGTH FOR TOP BARS IN TENSION
Lsb: TENSION LAP SPLICE LENGTH FOR OTHER THAN TOP BARS (CLASS B)
Lsbt: TENSION LAP SPLICE LENGTH OF TOP BARS.
Ldc: DEVELOPMENT LENGTH FOR BARS IN COMPRESSION
Lsc: TIED COLUMN LAP SPLICE IN COMPRESSION
db: NOMINAL BAR DIAMETER (INCHES)
TOP BARS: HORIZONTAL BEAM REINFORCEMENT WITH MORE THAN 12 INCHES OF CONCRETE CAST BELOW

2. MULTIPLY VALUES IN SCHEDULE BY 1.5 IF CLEAR SPACING OR CONCRETE COVER DO NOT MEET REQUIREMENTS FOR Ld IN NOTE 1.

3. MULTIPLY VALUES IN SCHEDULE BY 1.3 FOR USE IN LIGHTWEIGHT AGGREGATE CONCRETE.

4. FOR EPOXY COATED BAR: MULTIPLY VALUES IN SCHEDULE BY 1.5 FOR BARS WITH CLEAR COVER < 3db OR CLEAR SPACING < 6db. OTHERWISE MULTIPLY VALUES BY 1.2.

5. a. FOR BUNDLED BARS OF THREE OR LESS MULTIPLY LENGTHS BY 1.2.
b. FOR BUNDLED BARS OF FOUR OR MORE MULTIPLY LENGTHS BY 1.33.
c. INDIVIDUAL BAR SPLICES WITHIN A BUNDLE SHALL NOT OVERLAP. ENTIRE BUNDLES SHALL NOT BE LAP SPLICED.

6. SCHEDULE LENGTHS ARE FOR fy=60ksi REINFORCING, MULTIPLY LENGTHS BY 1.25 FOR fy=75ksi REINFORCING.

7. LAP SPLICES ARE NOT PERMITTED FOR #14 & #18 BARS. USE BAR COUPLERS PER G.S.N.

CONCRETE PIER SCHEDULE					
MARK	DIMENSIONS		REINFORCING		REMARKS
	DEPTH	WIDTH	VERTICAL	TIES	
CP-1	1' - 0"	1' - 0"	4-#6	#3 @ 12" O.C.	
CP-2	2' - 0"	2' - 0"	4-#11	#3 @ 12" O.C.	
CP-3	1' - 3"	1' - 8"	4-#8	#3 @ 12" O.C.	
CP-4	2' - 0"	1' - 0"	4-#8	#3 @ 12" O.C.	

CONCRETE ROUND PIER SCHEDULE				
MARK	COLUMN DIA.	REINFORCING		REMARKS
		VERTICAL	TIES	
CRP-1	2' - 0"	6-#8	#3 @ 8" O.C.	

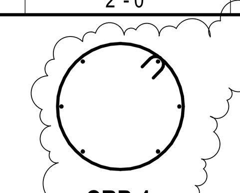

CRP-1

CONCRETE JAMB COLUMN SCHEDULE					
MARK	DIMENSIONS		REINFORCING		REMARKS
	WIDTH	DEPTH	VERTICAL	TIES	
CJC-1	1' - 0"	4' - 0"	8-#8	#4 @ 10" O.C.	
CJC-2	10"	1' - 6"	4-#6	#3 @ 10" O.C.	
CJC-3	10"	2' - 6"	8-#6	#3 @ 12" O.C.	
CJC-4	1' - 0"	1' - 6"	4-#7	#3 @ 12" O.C.	

CONCRETE BEAM SCHEDULE				
MARK	DIMENSIONS		REINFORCMENT	
	WIDTH	DEPTH	HORIZONTAL	STIRRUPS
CB-1	1' - 0"	1' - 0"	2-#4 TOP 2-#8 BOT	#3 @ 6" O.C.
CB-2	8"	1' - 4"	#4 TOP #7 BOT	#3 @ 8" O.C.

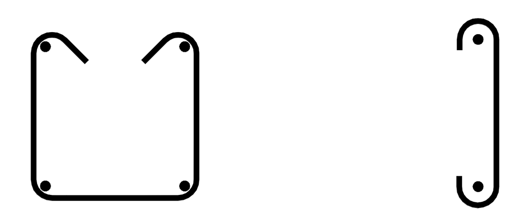

CB-1   CB-2

CONCRETE LINTEL SCHEDULE					
MARK	DIMENSIONS		REINFORCMENT		REMARKS
	WIDTH	DEPTH	HORIZONTAL	STIRRUPS	
CL-1	10"	1' - 6"	2-#5	#3 @ 9" O.C.	10" OR 12" WALL, SPAN UP TO 12'-0"
CL-2	1' - 0"	6' - 0"	2-#5 TOP 4-#8 BOT	#5 @ 16" O.C.	
CL-3	8"	1' - 4"	#7 TOP & BOT	#3 @ 8" O.C.	
CL-4	1' - 0"	2' - 0"	2-#5 TOP 2-#8 BOT	#3 @ 12" O.C.	
CL-5	10"	5' - 0"	2-#5 TOP 2-#8 BOT	#3 @ 12" O.C.	

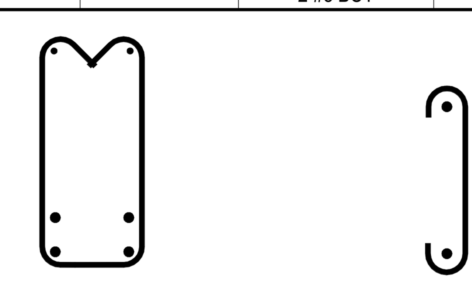

CL-2   CL-3

CONCRETE FOOTING SCHEDULE													
MARK	WIDTH	LENGTH	THICK	CROSSWISE REINFORCING				LENGTHWISE REINFORCING				THICKNESS OF COMPACTED STRUCTURAL FILL UNDRE FOOTING	REMARKS
				NO.	SIZE	LENGTH	SPACE	NO.	SIZE	LENGTH	SPACE		
FM-1	12' - 0"	86' 0"	2' - 8"	76 76	#8 #8	11' 6" 11' 6"	13.7" 13.7"	15 15	#9 #9	85' 6" 85' 6"	9.85" 9.85"		
FM-2	12' - 0"	49' 0"	2' - 8"	54 54	#7 #7	11' 6" 11' 6"	11" 11"	12 16	#8 #10	48' 6" 48' 6"	12.55" 9.2"		TOP & BOT
FM-3	14' - 0"	88' 0"	3' - 8"	86 86	#9 #9	13' 6" 13' 6"	12.4" 12.4"	20 20	#9 #9	87' 6" 87' 6"	8.53" 8.53"		
FM-4	10' - 0"	84' 0"	2' - 8"	76 76	#8 #8	9' 6" 9' 6"	13.4" 13.4"	12 14	#9 #10	83' 6" 83' 6"	10.4" 8.8"		TOP & BOT
FR10.5x8.75	8' - 9 7/8"	10' 6"	1' - 11"	10	#8	9'-3"	13.3"	10	#8	10'-0"	13.3"		TOP & BOT
FS3.0	3' - 0"	3' 0"	1' - 0"	4	#4	2' 6"	10"	4	#4	2' 6"	10"		
FS4.0	4' - 0"	4' 0"	1' - 0"	6	#4	3' 6"	8.4"	6	#4	3' 6"	8.4"		
FS5.0	5' - 0"	5' 0"	1' - 1"	8	#4	4' 6"	7.71"	8	#4	4' 6"	7.71"		
FS7.0	7' - 0"	7' 0"	1' - 5"	6	#7	6' 6"	15.6"	6	#7	6' 6"	15.6"		
FS7.5	7' - 6"	7' 6"	1' - 5"	7	#7	7' 0"	14"	7	#7	7' 0"	14"		
FS8.5	8' - 6"	8' 6"	1' - 7"	7	#8	8' 0"	16"	7	#8	8' 0"	16"		
FS9.0	9' - 0"	9' 0"	1' - 8"	8	#8	8' 6"	14.6"	8	#8	8' 6"	14.6"		
FS9.5	9' - 6"	9' 6"	1' - 9"	9	#8	9' 0"	13.5"	9	#8	9' 0"	13.5"		
FS10.0	10' - 0"	10' 0"	1' - 10"	9	#8	9' 6"	14.3"	9	#8	9' 6"	14.3"		
FS10.5	10' - 6"	10' 6"	1' - 11"	10	#8	10' 0"	13.3"	10	#8	10' 0"	13.3"		T&B AT BRIDGE
FS11.0	11' - 0"	11' 0"	2' - 0"	11	#8	10' 6"	12.6"	11	#8	10' 6"	12.6"	18"	
FS11.5	11' - 6"	11' 6"	2' - 1"	10	#9	11' 0"	14.7"	10	#9	11' 0"	14.7"	18"	
FS12.0	12' - 0"	12' 0"	2' - 2"	11	#9	11' 6"	13.8"	11	#9	11' 6"	13.8"	18"	
FS12.5	12' - 6"	12' 6"	2' - 3"	11	#9	12' 0"	14.4"	11	#9	12' 0"	14.4"	18"	
FS13.0	13' - 0"	13' 0"	2' - 4"	12	#9	12' 6"	13.6"	12	#9	12' 6"	13.6"	18"	
FS13.5	13' - 6"	13' 6"	2' - 5"	13	#9	13' 0"	13"	13	#9	13' 0"	13"	18"	
FS14.0	14' - 0"	14' 0"	2' - 6"	14	#9	13' 6"	12.5"	14	#9	13' 6"	12.5"	18"	
FS14.5	14' - 6"	14' 6"	2' - 7"	12	#10	14' 0"	15.3"	12	#10	14' 0"	15.3"	18"	
FS15.0	15' - 0"	15' 0"	2' - 7"	13	#10	14' 6"	14.5"	13	#10	14' 6"	14.5"	18"	
FS16.0	16' - 0"	16'-0"	2' - 10"	15	#10	15'-6"	13.3"	15	#10	15'-6"	13.3"	24"	
FS16.5	16' - 6"	16'-6"	2' - 11"	16	#10	16'-0"	12.8"	16	#10	16'-0"	12.8"	24"	
FS17.5	17' - 6"	17'-6"	3' - 1"	18	#10	17'-0"	12"	18	#10	17'-0"	12"	24"	
FS18.5	18' - 6"	18'-6"	3' - 4"	16	#11	18'-0"	14.4"	16	#11	18'-0"	14.4"	30"	
FS22.0	22' - 0"	22'-0"	4' - 0"	22	#11	21'-6"	12.3"	22	#11	21'-6"	12.3"	30"	
FC2.0	2' - 0"	CONT.	1' - 0"	--	NONE	REQ'D	--	3	#4	CONT	9"		
FC2.5	2' - 0"	CONT.	1' - 0"	--	#5	2'-0"	14"	3	#5	CONT	12"		
FC3.0	3' - 0"	CONT.	1' - 0"	--	#5	2'-6"	14"	3	#5	CONT	15"		
FC4.0	4' - 0"	CONT.	1' - 0"	--	#5	3'-6"	14"	4	#5	CONT	14"		
FC4.0A	4' - 0"	CONT.	1' - 6"	--	#5	3'-6"	11"	5	#9	CONT	10.5"		
FC6.0	6' - 0"	CONT.	2' - 0"	--	#6	5'-6"	12"	6	#9	CONT	13.2"		
FC8.0	8' - 0"	CONT.	2' - 6"		#7	7'-6"	12.0"	9	#10	CONT	12.5"		
FTS1.5	1' - 6"	CONT.	1' - 0"	--	NONE	REQ'D	--	2	#4	CONT	12"		
FTS2.0	2' - 0"	CONT.	1' - 0"	--	NONE	REQ'D	--	3	#4	CONT	9"		

1. PLACE ALL FOOTING REINFORCING IN BOTTOM OF FOOTING WITH 3" CLEAR CONCRETE COVER UNLESS NOTED OTHERWISE.
2. TOP REINFORCING, WHERE SPECIFIED, SHALL BE PLACED IN THE TOP OF THE FOOTING WITH 2" CLEAR CONCRETE COVER.
3. SPOT FOOTINGS SHALL BE CENTERED UNDER COLUMNS AND CONTINUOUS FOOTINGS SHALL BE CENTERED UNDER WALLS, UNLESS NOTED OTHERWISE.
4. ALL FOOTINGS SHALL BE FORMED. FOOTINGS SHALL NOT BE EARTH FORMED OR OVERSIZED WITHOUT WRITTEN PERMISSION FROM THE STRUCTURAL ENGINEER.

CONCRETE FOUNDATION WALL SCHEDULE					
MARK	THICK	VERTICAL REINFORCING	HORIZONTAL REINFORCING	T & B HORIZ. BARS	PLACEMENT
CFW-1	8"	#4 @ 16" O.C.	#5 @ 15" O.C.	#5	TYPE A
CFW-2	10"	#5 @ 16" O.C.	#5 @ 12" O.C.	#5	TYPE A
CFW-3	1' - 0"	#4 @ 18" O.C., E.F.	#4 @ 13" O.C., E.F.	2-#5	TYPE C
CFW-4	1' - 2"	#4 @ 18" O.C., E.F.	#5 @ 16" O.C., E.F.	2-#5	TYPE C
LCFW-1	9"	#4 @ 14" O.C.	#5 @ 13" O.C.	#5	TYPE A
LCFW-2	1' - 0"	#4 @ 18" O.C., E.F.	#4 @ 13" O.C., E.F.	2-#5	TYPE C
LCFW-3	1' - 6"	#4 @ 14" O.C., E.F.	#5 @ 13" O.C., E.F.	2-#5	TYPE C

PLACEMENT TYPE

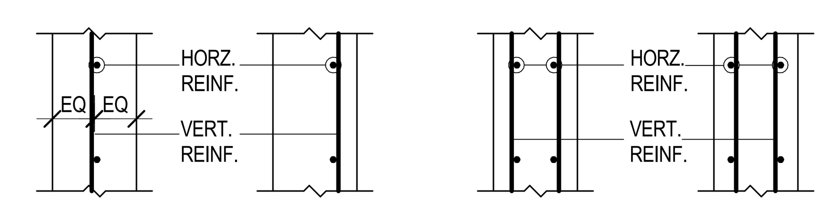

TYPE A   TYPE B   TYPE C   TYPE D

E.F. = EACH FACE
O.F. = OUTSIDE FACE (AGAINST SOIL)
I.F. = INSIDE FACE
3L = THREE LAYERS

CONCRETE SHEAR WALL SCHEDULE					
MARK	THICK	VERTICAL REINFORCING	HORIZONTAL REINFORCING	T & B HORIZ. BARS	PLACEMENT
CSW-1	10"	#5 @ 12" O.C.	#5 @ 12" O.C.	4-#7 TOP	TYPE A
CSW-2	1' - 0"	#5 @ 16" O.C., E.F.	#5 @ 16" O.C., E.F.	4-#7 TOP	TYPE C
CSW-3	1' - 0"	#5 @ 14" O.C., E.F.	#5 @ 16" O.C., E.F.	4-#7 TOP	TYPE C

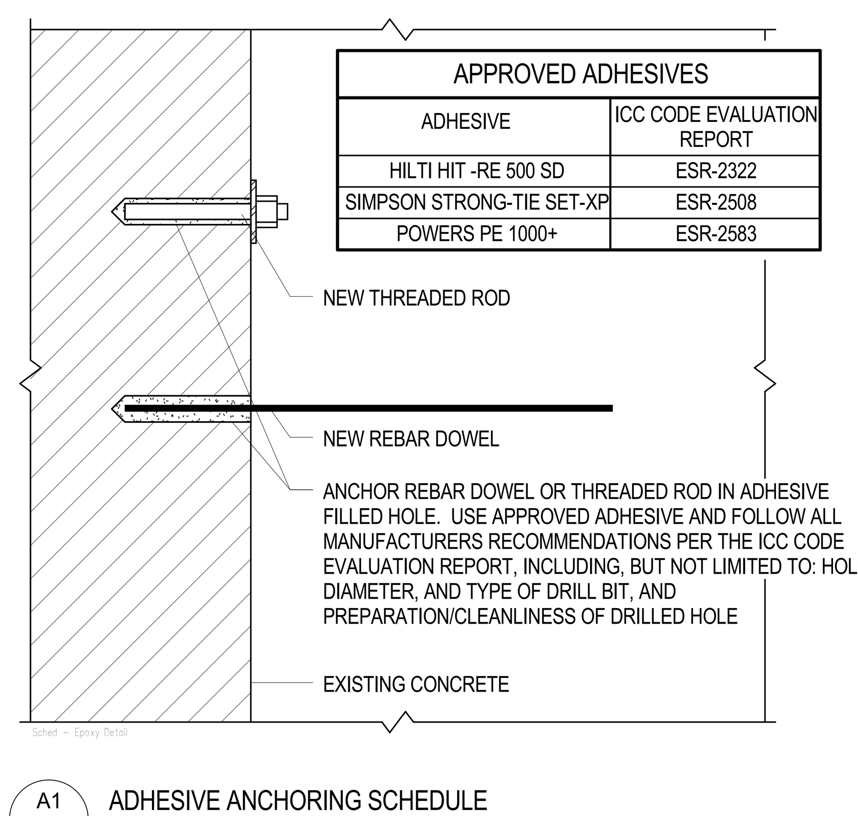

APPROVED ADHESIVES	
ADHESIVE	ICC CODE EVALUATION REPORT
HILTI HIT -RE 500 SD	ESR-2322
SIMPSON STRONG-TIE SET-XP	ESR-2508
POWERS PE 1000+	ESR-2583

Sched – Epoxy Detail

ADHESIVE ANCHORING SCHEDULE			
REINFORCING		THREADED ROD	
DOWEL SIZE	EMBEDMENT LENGTH (SEE NOTE #2)	SIZE (DIA)	EMBEDMENT LENGTH (SEE NOTE #2)
#3	4"	3/8"	4 1/2"
#4	6"	1/2"	6"
#5	9"	5/8"	7 1/2"
#6	10"	3/4"	9"
#7	12"	7/8"	10 1/2"
#8	13"	1"	12"
#9	14"	1 1/4"	15"
#10	18"		
#11	18"		

NOTES:
1. THIS SCHEDULE SHALL BE USED ONLY WHERE SPECIFICALLY REFERENCED ON THE DRAWINGS AND AT OTHER LOCATIONS WITH THE APPROVAL OF THE ENGINEER.
2. EMBEDMENT LENGTHS SPECIFIED ON PLANS OR DETAILS TAKE PRECEDENCE OVER EMBEDMENT LENGTHS IN THIS SCHEDULE.
3. WHERE THE THICKNESS OF THE EXISTING CONCRETE MEMBER IS NOT SUFFICIENT TO ACHIEVE SCHEDULED EMBEDMENT AND SPECIFIED CLEAR COVER FOR THE ANCHOR, CONTACT THE ENGINEER.
4. USE PROCEDURES AND PRODUCTS RECOMMENDED BY ADHESIVE MANUFACTURER FOR OVERHEAD INSTALLATION.
5. SPECIAL INSPECTION IS REQUIRED DURING INSTALLATION OF ALL ADHESIVE ANCHORS PER THE CODE EVALUATION REPORT FOR THE ANCHOR AND THE QUALITY ASSURANCE SECTION OF THE GENERAL STRUCTURAL NOTES.

A1 / SB601 ADHESIVE ANCHORING SCHEDULE
NO SCALE

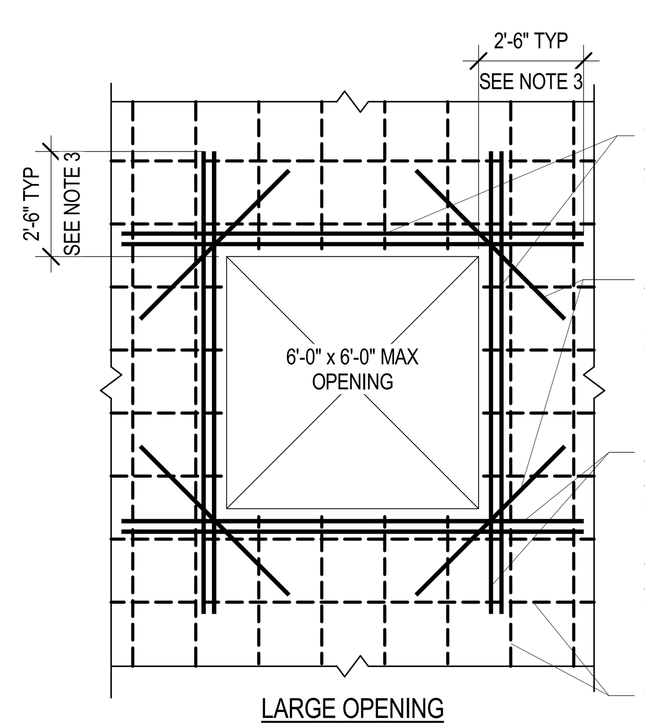

LARGE OPENING

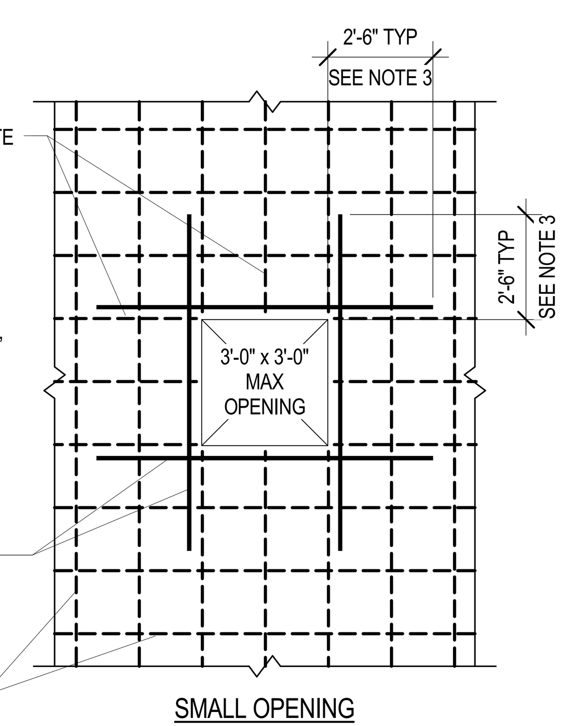

SMALL OPENING

NOTES:
1. OMIT ADDED REINFORCEMENT SHOWN WHEN SPECIAL REINFORCEMENT INDICATED ON PLANS OR DETAILS, EXCEEDS THIS REINFORCEMENT.

2. CONTRACTOR SHALL VERIFY ALL OPENINGS NOT SHOWN ON THE STRUCTURAL DRAWINGS WITH THE STRUCTURAL ENGINEER BEFORE PLACEMENT.

3. WHEN EDGE OF CONCRETE CLOSE TO OPENING WILL NOT ALLOW THIS LENGTH TERMINATE AT EDGE WITH STANDARD HOOK.

4. WHERE MULTIPLE OPENINGS OCCUR WITHIN TWO TIMES THE OPENING DIMENSION, THE GROUP OF OPENINGS SHALL BE TREATED AS A SINGLE OPENING

Sched – Conc-Wall-Opening

A3 / SB601 TYPICAL OPENINGS THROUGH CONCRETE WALLS
NO SCALE

REAVELEY ENGINEERS + ASSOCIATES
Consulting Structural Engineers

UNLESS A PROFESSIONAL SEAL WITH SIGNATURE AND DATE IS AFFIXED, THIS DOCUMENT IS PRELIMINARY AND IS NOT INTENDED FOR CONSTRUCTION, RECORDING PURPOSES, OR IMPLEMENTATION

UTAH VALLEY UNIVERSITY
State of Utah
Department of Administrative Services
Division of Facilities Construction & Management
4110 State Office Building
Salt Lake City, Utah 84114
Phone: (801) 538 - 3018
Fax: (801) 538 - 3267
CRSA METHOD STUDIO INC.
CRSA ARCHITECTS
649 east south temple
salt lake city, utah 84102
phone: (801) 355 - 5915
METHOD STUDIO INC.
925 south west temple
salt lake city, utah 84101
phone: (801) 532-4422

DFCM APPROVAL STAMP

project:
UVU Classroom Building - Volume 1
800 West University Parkway
Orem, UT 84058

project#: DFCM# 12192790
date: April 30, 2013

revisions :
1 Addenda 5 05.24.13

title:
Structural Schedules

sheet:
SB601

Bid Doc

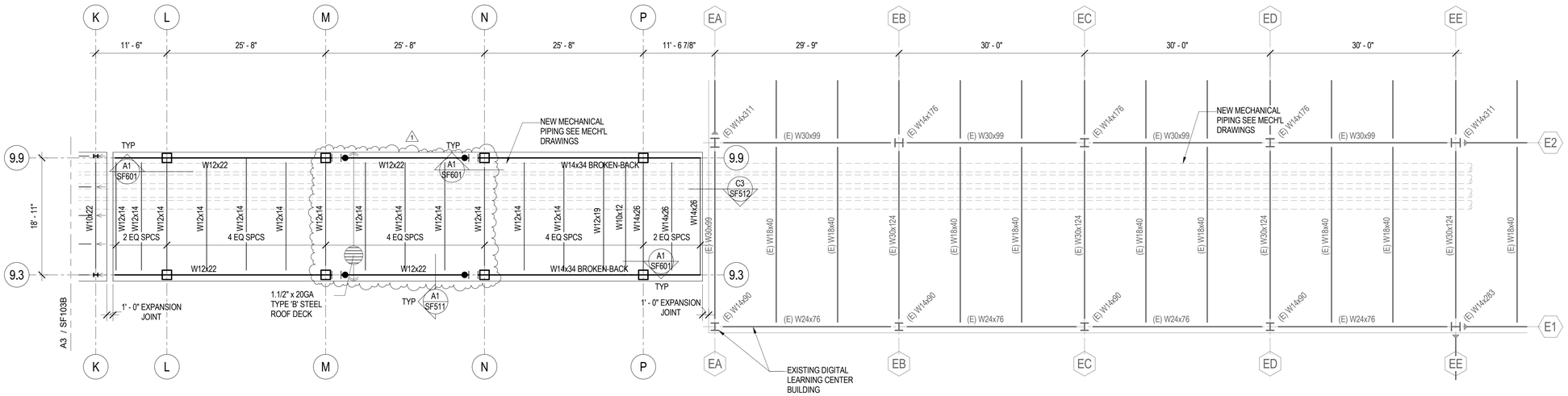

D1 SF101 Bridge Roof Framing Plan

SCALE: 1/8" = 1'-0"

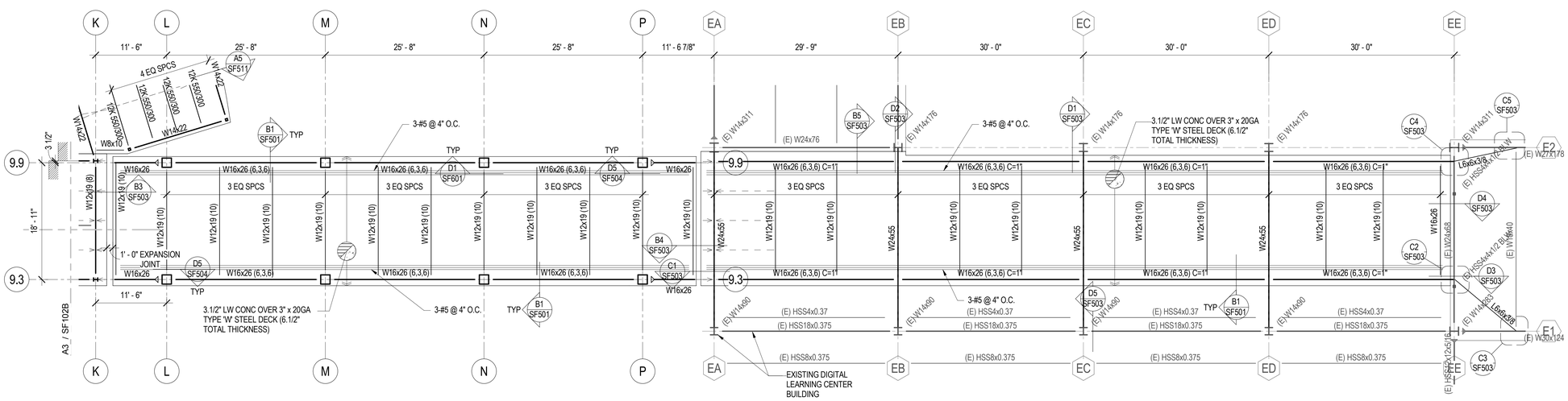

A1 SF101 Level 2 Bridge Floor Framing Plan

SCALE: 1/8" = 1'-0"

FLOOR FRAMING PLAN LEGEND

- CONCRETE WALL
- CONCRETE LINTEL IN CONCRETE WALL
- CONCRETE COLUMN IN CONCRETE WALL
- CONCRETE JAMB COLUMN POURED MONOLITHIC WITH CONCRETE WALL
- MASONRY WALL
- MASONRY LINTEL IN MASONRY WALL
- MASONRY COLUMN IN MASONRY WALL
- STEEL COLUMN - TUBE
- STEEL COLUMN - WIDE FLANGE
- STEEL BRACED FRAME
- CANTILEVER FULL PEN CONNECTION
- COLLECTOR CONNECTION SEE B1/SF601
- DOUBLE SHEAR CONNECTION SEE C1/SF601
- STEEL BEAM OR GIRDER
- STEEL JOIST OR PURLIN
- STEEL ANGLE BRACE / KICKER. SEE B1/SF501 FOR SLAB EDGE KICKER
- 0" CHANGE IN ELEVATION
- CONCRETE ON METAL DECK
- ROOF DECK
- SPECIAL DECK AREA
- RECESSED/DEPRESSED SLAB ON METAL DECK
- OPENING

FLOOR FRAMING PLAN NOTES

1. SEE GENERAL STRUCTURAL NOTE (III.D.8) AND DETAILS D4/SF501 FOR CONTROL JOINTS IN SUSPENDED SLABS OVER STEEL DECK.

2. SEE DETAILS D1/SF501 FOR MISCELLANEOUS FLOOR OPENINGS.

3. SEE GENERAL STRUCTURAL NOTE (V.J.7) FOR STEEL DECK REQUIREMENTS WHERE 3-SPAN CONDITIONS ARE NOT POSSIBLE.

EXISTING ITEMS PLAN LEGEND

- EXISTING STEEL COLUMN - TUBE
- EXISTING STEEL COLUMN - WIDE FLANGE
- EXISTING STEEL BEAM OR GIRDER
- EXISTING STEEL JOIST OR PURLIN

EXISTING ITEMS PLAN NOTES

1. THE CONTRACTOR SHALL FIELD VERIFY ALL EXISTING CONDITIONS PRIOR TO DETAILING, FABRICATING, ERECTING OR INSTALLING ANY GIVEN STRUCTURAL ELEMENTS. ALL DISCREPANCIES SHALL BE BROUGHT TO THE ATTENTION OF THE DESIGN TEAM IN A TIMELY MANNER SUCH THAT WORK WILL NOT BE DELAYED.

2. THE CONTRACTOR SHALL PROVIDE ADEQUATE SHORING OF EXISTING STRUCTURE DURING CONSTRUCTION.

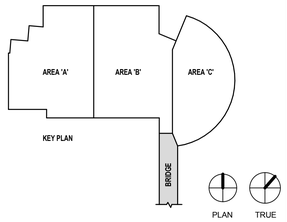

UNLESS A PROFESSIONAL SEAL WITH SIGNATURE AND DATE IS AFFIXED, THIS DOCUMENT IS PRELIMINARY AND IS NOT INTENDED FOR CONSTRUCTION, RECORDING PURPOSES, OR IMPLEMENTATION

UTAH VALLEY UNIVERSITY

State of Utah
Department of Administrative Services
Division of Facilities Construction & Management
4110 State Office Building
Salt Lake City, Utah 84114
Phone: (801) 538 - 3018
Fax: (801) 538 - 3267

CRSA METHODSTUDIO INC.

CRSA ARCHITECTS
649 east south temple
salt lake city, utah 84102
phone:(801) 355-5915

METHOD STUDIO INC.
925 south west temple
salt lake city, utah 84101
phone:(801) 532-4422

REAVELEY ENGINEERS + ASSOCIATES
Consulting Structural Engineers

DFCM APPROVAL STAMP

project:
UVU Classroom Building - Volume 1
800 West University Parkway
Orem, UT 84058

project#: DFCM# 12192790
date: April 30, 2013

revisions:
1 Addenda 5 05.24.13

title:
Bridge Framing Plans

sheet:
SF101

Bid Doc

A1 SF102A Level 2 Area 'A' Floor Framing Plan

SCALE: 1/8" = 1'-0"

FLOOR FRAMING PLAN LEGEND

- CONCRETE WALL
- CONCRETE LINTEL IN CONCRETE WALL
- CONCRETE COLUMN IN CONCRETE WALL
- CONCRETE JAMB COLUMN POURED MONOLITHIC WITH CONCRETE WALL
- MASONRY WALL
- MASONRY LINTEL IN MASONRY WALL
- MASONRY COLUMN IN MASONRY WALL
- STEEL COLUMN - TUBE
- STEEL COLUMN - WIDE FLANGE
- STEEL BRACED FRAME
- CANTILEVER FULL PEN CONNECTION
- COLLECTOR CONNECTION SEE B1/SF601
- DOUBLE SHEAR CONNECTION SEE C1/SF601
- STEEL BEAM OR GIRDER
- STEEL JOIST OR PURLIN
- STEEL ANGLE BRACE / KICKER. SEE B1/SF501 FOR SLAB EDGE KICKER
- 0" CHANGE IN ELEVATION
- CONCRETE ON METAL DECK
- ROOF DECK
- SPECIAL DECK AREA
- RECESSED/DEPRESSED SLAB ON METAL DECK
- OPENING

FLOOR FRAMING PLAN NOTES

1. SEE GENERAL STRUCTURAL NOTE (III.D.8) AND DETAILS D4/SF501 FOR CONTROL JOINTS IN SUSPENDED SLABS OVER STEEL DECK.

2. SEE DETAILS D1/SF501 FOR MISCELLANEOUS FLOOR OPENINGS.

3. SEE GENERAL STRUCTURAL NOTE (V.J.7) FOR STEEL DECK REQUIREMENTS WHERE 3-SPAN CONDITIONS ARE NOT POSSIBLE.

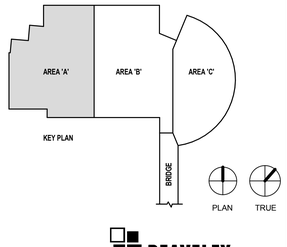

REAVELEY ENGINEERS + ASSOCIATES
Consulting Structural Engineers

UNLESS A PROFESSIONAL SEAL WITH SIGNATURE AND DATE IS AFFIXED, THIS DOCUMENT IS PRELIMINARY AND IS NOT INTENDED FOR CONSTRUCTION, RECORDING PURPOSES, OR IMPLEMENTATION

UTAH VALLEY UNIVERSITY

State of Utah
Department of Administrative Services
Division of Facilities Construction & Management
4110 State Office Building
Salt Lake City, Utah 84114
Phone: (801) 538 - 3018
Fax: (801) 538 - 3267

CRSA METHODSTUDIO INC.

CRSA ARCHITECTS
649 east south temple
saltlake city, utah 84102
phone:(801) 355-5915

METHOD STUDIO INC.
925 south west temple
saltlake city, utah 84101
phone:(801) 532-4422

DFCM APPROVAL STAMP

project:
UVU Classroom Building - Volume 1
800 West University Parkway
Orem, UT 84058

project#: DFCM# 12192790
date: April 30, 2013

revisions:
1 Addenda 5 05.24.13

title:
Level 2 Area 'A' Floor Framing Plan

sheet:
SF102A

Bid Doc

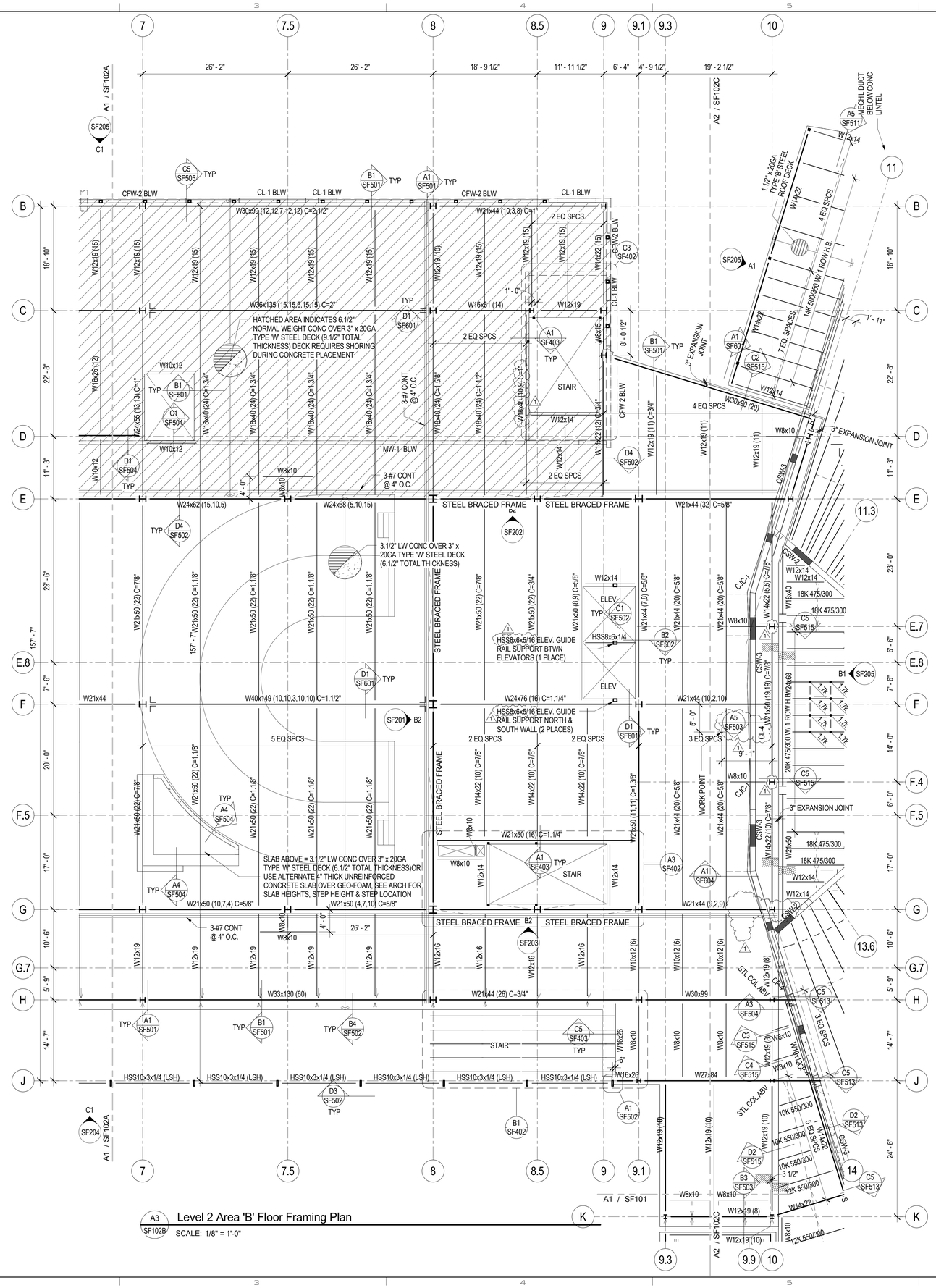

A3 SF102B Level 2 Area 'B' Floor Framing Plan

SCALE: 1/8" = 1'-0"

FLOOR FRAMING PLAN LEGEND

- CONCRETE WALL
- CONCRETE LINTEL IN CONCRETE WALL
- CONCRETE COLUMN IN CONCRETE WALL
- CONCRETE JAMB COLUMN POURED MONOLITHIC WITH CONCRETE WALL
- MASONRY WALL
- MASONRY LINTEL IN MASONRY WALL
- MASONRY COLUMN IN MASONRY WALL
- STEEL COLUMN - TUBE
- STEEL COLUMN - WIDE FLANGE
- STEEL BRACED FRAME
- CANTILEVER FULL PEN CONNECTION
- COLLECTOR CONNECTION SEE B1/SF601
- DOUBLE SHEAR CONNECTION SEE C1/SF601
- STEEL BEAM OR GIRDER
- STEEL JOIST OR PURLIN
- STEEL ANGLE BRACE / KICKER. SEE B1/SF501 FOR SLAB EDGE KICKER
- 0" CHANGE IN ELEVATION
- CONCRETE ON METAL DECK
- ROOF DECK
- SPECIAL DECK AREA
- RECESSED/DEPRESSED SLAB ON METAL DECK
- OPENING

FLOOR FRAMING PLAN NOTES

1. SEE GENERAL STRUCTURAL NOTE (III.D.8) AND DETAILS D4/SF501 FOR CONTROL JOINTS IN SUSPENDED SLABS OVER STEEL DECK.

2. SEE DETAILS D1/SF501 FOR MISCELLANEOUS FLOOR OPENINGS.

3. SEE GENERAL STRUCTURAL NOTE (V.J.7) FOR STEEL DECK REQUIREMENTS WHERE 3-SPAN CONDITIONS ARE NOT POSSIBLE.

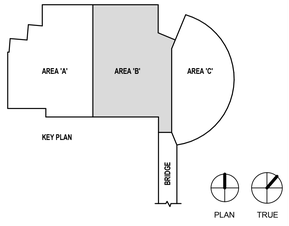

REAVELEY ENGINEERS + ASSOCIATES
Consulting Structural Engineers

UNLESS A PROFESSIONAL SEAL WITH SIGNATURE AND DATE IS AFFIXED, THIS DOCUMENT IS PRELIMINARY AND IS NOT INTENDED FOR CONSTRUCTION, RECORDING PURPOSES, OR IMPLEMENTATION

UTAH VALLEY UVU UNIVERSITY

State of Utah
Department of Administrative Services
Division of Facilities Construction & Management
4110 State Office Building
Salt Lake City, Utah 84114
Phone: (801) 538 - 3018
Fax: (801) 538 - 3267

CRSA METHODSTUDIO INC.

CRSA ARCHITECTS
649 east south temple
salt lake city, utah 84102
phone:(801) 355-5915

METHOD STUDIO INC.
925 south west temple
salt lake city, utah 84101
phone:(801) 532-4422

DFCM APPROVAL STAMP

project:
UVU Classroom Building - Volume 1
800 West University Parkway
Orem, UT 84058

project#: DFCM# 12192790
date: April 30, 2013

revisions:
1 Addenda 5 05.24.13

title:
Level 2 Area 'B' Floor Framing Plan

sheet:
SF102B

Bid Doc

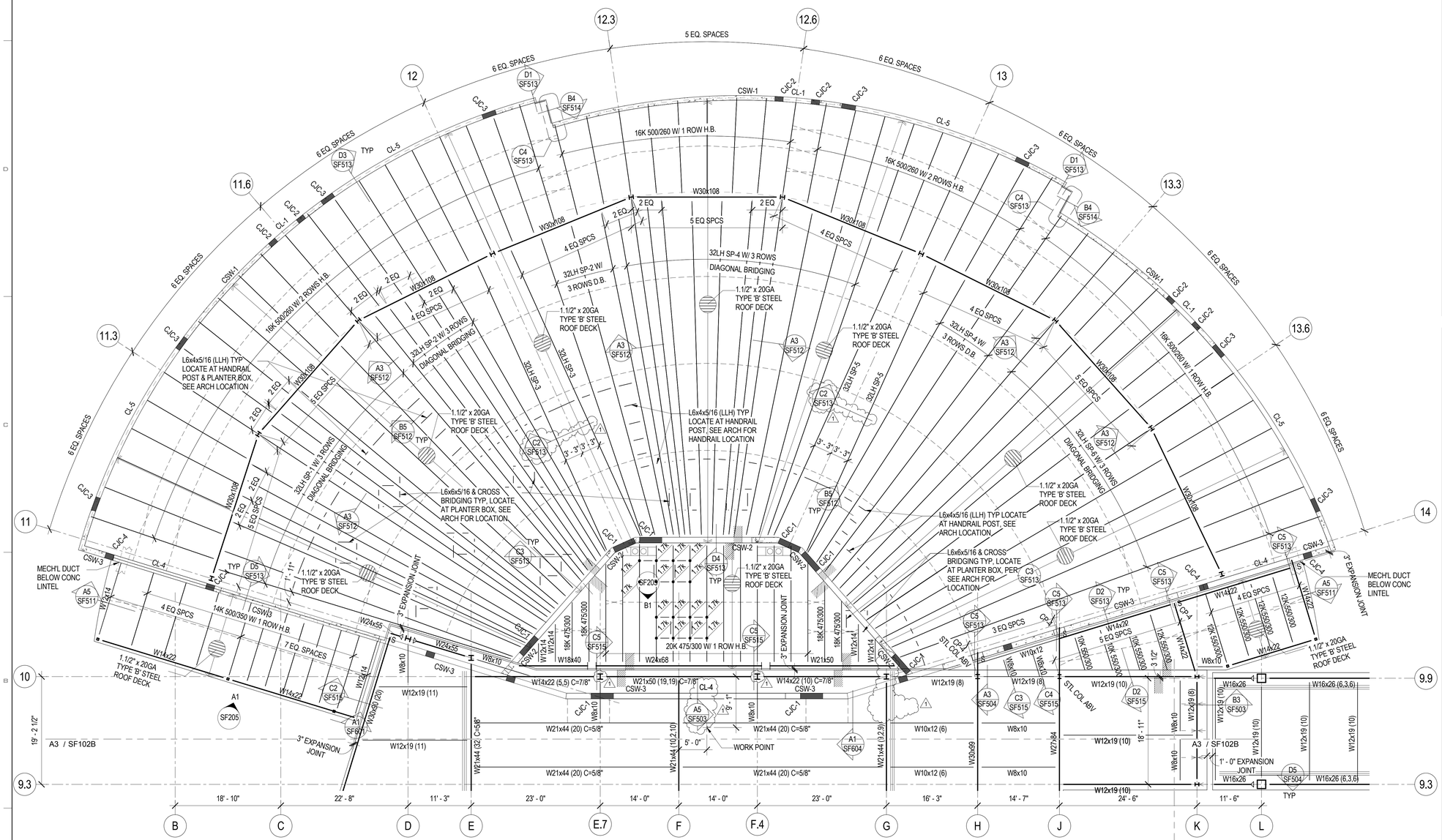

A2 / SF102C Level 2 Area 'C' Roof Framing Plan

SCALE: 1/8" = 1'-0"

ROOF FRAMING PLAN LEGEND

- CONCRETE WALL
- CONCRETE LINTEL IN CONCRETE WALL
- CONCRETE COLUMN IN CONCRETE WALL
- CONCRETE JAMB COLUMN POURED MONOLITHIC WITH CONCRETE WALL
- STEEL COLUMN - TUBE
- STEEL COLUMN - WIDE FLANGE
- STEEL BRACED FRAME
- CANTILEVER FULL PEN CONNECTION
- COLLECTOR CONNECTION SEE B1/SF601
- DOUBLE SHEAR CONNECTION SEE C1/SF601
- STEEL BEAM OR GIRDER
- STEEL JOIST OR PURLIN
- SLIP CONNECTION
- STEEL ANGLE BRACE / KICKER. SEE A1/SF511 FOR ROOF EDGE KICKER
- CROSS BRIDGING
- HORIZONTAL BRIDGING
- CHANGE IN ELEVATION
- CONCRETE ON METAL DECK
- ROOF DECK
- SPECIAL DECK AREA
- RECESSED/DEPRESSED SLAB ON METAL DECK
- OPENING

ROOF FRAMING PLAN NOTES

1. VERIFY SIZE, WEIGHT, LOCATION AND CONFIGURATION OF ALL ROOF TOP EQUIPMENT WITH ARCHITECT AND MECHANICAL ENGINEER. PROVIDE STEEL FRAMES FOR SUPPORT OF ROOF TOP EQUIPMENT AS INDICATED IN DETAIL D4/SF511 COORDINATE OPENINGS WITH MECHANICAL AND ELECTRICAL AND GENERAL CONTRACTORS.

2. ALL ROOF OPENINGS SHALL BE FRAMED AS INDICATED IN DETAIL D3/SF511 . FOR ROUND OPENINGS WHICH ARE LESS THAN 12" DIA. SEE DETAIL C2/SF511 .

3. SEE ARCHITECTURAL FOR ROOF SLOPES AND DRAINS. SEE D5&C1/SF511 FOR ROOF DRAIN OPENING FRAME.

4. OPEN WEB STEEL JOISTS AND JOIST GIRDERS SHALL BE DESIGNED BY THE MANUFACTURER TO SUPPORT THE MECHANICAL AND LATERAL LOADS SHOWN ON THE ROOF FRAMING PLANS IN ADDITION TO THE UNIFORM AND POINT LOADS SHOWN.

5. ±#.#K ADD - INDICATES ADDITIONAL UPLIFT / DOWNWARD FORCE ON STEEL JOIST IN ADDITION TO REGULAR LOADS.

6. T/C=##K - INDICATES ADDITIONAL TOP CHORD AXIAL FORCE ON STEEL JOIST OR GIRDER IN ADDITION TO REGULAR LOADS. THIS FORCE IS A SEISMIC LRFD LOAD THAT SHALL BE CONSIDERED IN BOTH TENSION AND COMPRESSION; INCLUDES APPLICABLE OVERSTRENGTH FACTORS FROM IBC SECTION 1613 AND ASCE 7 SECTION 12.10. STEEL JOISTS AND GIRDERS WITH T/C FORCE SHALL BE DESIGNED AS COLLECTOR ELEMENTS PER IBC SECTION 1613 AND ASCE 7 SECTION 12.10 WITH STRENGTH TO RESIST APPLICABLE LOAD COMBINATIONS OF IBC SECTION 1605.4 AND ASCE 7 SECTION 12.4.

7. ALL LOADS SUPPORTED BY OPEN WEB STEEL JOISTS AND GIRDERS SHALL BE LOCATED WITHIN 6" OF JOIST OR GIRDER PANEL POINT OR THE JOIST OR GIRDER SHALL BE REINFORCED PER DETAIL D1/SF511 .

8. SEE DETAIL D2/SF511 FOR SUPPORT OF HANGING MECHANICAL UNITS.

9. HORIZONTAL AND CROSS BRIDGING SHALL BE SIZED AND SUPPLIED BY THE JOIST MANUFACTURER. CONNECT TO WALLS AS INDICATED IN DETAILS.

10. WHERE SKYLIGHTS OR MECHANICAL UNITS INTERRUPT HORIZONTAL BRIDGING PROVIDE CROSS BRIDGING AT JOIST SPACES ON EACH SIDE. TYPICAL.

11. DESIGN ALL OWSJ FOR 5 PSF NET WIND UPLIFT.

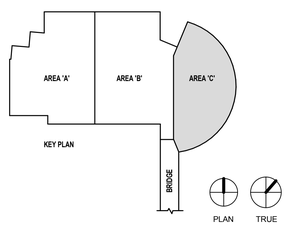

REAVELEY ENGINEERS + ASSOCIATES
Consulting Structural Engineers

UNLESS A PROFESSIONAL SEAL WITH SIGNATURE AND DATE IS AFFIXED, THIS DOCUMENT IS PRELIMINARY AND IS NOT INTENDED FOR CONSTRUCTION, RECORDING PURPOSES, OR IMPLEMENTATION

UTAH VALLEY UNIVERSITY

State of Utah
Department of Administrative Services
Division of Facilities Construction & Management
4110 State Office Building
Salt Lake City, Utah 84114
Phone: (801) 538 - 3018
Fax: (801) 538 - 3267

CRSA METHODSTUDIO INC.

CRSA ARCHITECTS
649 east south temple
salt lake city, utah 84102
phone:(801) 355-5915

METHOD STUDIO INC.
925 south west temple
salt lake city, utah 84101
phone:(801) 532-4422

DFCM APPROVAL STAMP

project:
UVU Classroom Building - Volume 1
800 West University Parkway
Orem, UT 84058

project#: DFCM# 12192790
date: April 30, 2013

revisions :
1 Addenda 5 05.24.13

title:
Level 2 Area 'C' Roof Framing Plan

sheet:
SF102C

Bid Doc

FLOOR FRAMING PLAN LEGEND

- CONCRETE WALL
- CONCRETE LINTEL IN CONCRETE WALL
- CONCRETE COLUMN IN CONCRETE WALL
- CONCRETE JAMB COLUMN POURED MONOLITHIC WITH CONCRETE WALL
- MASONRY WALL
- MASONRY LINTEL IN MASONRY WALL
- MASONRY COLUMN IN MASONRY WALL
- STEEL COLUMN - TUBE
- STEEL COLUMN - WIDE FLANGE
- STEEL BRACED FRAME
- CANTILEVER FULL PEN CONNECTION
- COLLECTOR CONNECTION SEE B1/SF601
- DOUBLE SHEAR CONNECTION SEE C1/SF601
- STEEL BEAM OR GIRDER
- STEEL JOIST OR PURLIN
- STEEL ANGLE BRACE / KICKER. SEE B1/SF501 FOR SLAB EDGE KICKER
- 0" CHANGE IN ELEVATION
- CONCRETE ON METAL DECK
- ROOF DECK
- SPECIAL DECK AREA
- RECESSED/DEPRESSED SLAB ON METAL DECK
- OPENING

FLOOR FRAMING PLAN NOTES

1. SEE GENERAL STRUCTURAL NOTE (III.D.8) AND DETAILS D4/SF501 FOR CONTROL JOINTS IN SUSPENDED SLABS OVER STEEL DECK.

2. SEE DETAILS D1/SF501 FOR MISCELLANEOUS FLOOR OPENINGS.

3. SEE GENERAL STRUCTURAL NOTE (V.J.7) FOR STEEL DECK REQUIREMENTS WHERE 3-SPAN CONDITIONS ARE NOT POSSIBLE.

UNLESS A PROFESSIONAL SEAL WITH SIGNATURE AND DATE IS AFFIXED, THIS DOCUMENT IS PRELIMINARY AND IS NOT INTENDED FOR CONSTRUCTION, RECORDING PURPOSES, OR IMPLEMENTATION

UTAH VALLEY UNIVERSITY

State of Utah
Department of Administrative Services
Division of Facilities Construction & Management
4110 State Office Building
Salt Lake City, Utah 84114
Phone: (801) 538 - 3018
Fax: (801) 538 - 3267

CRSA METHODSTUDIO INC.

CRSA ARCHITECTS
649 east south temple
saltlake city, utah 84102
phone:(801) 355-5915

METHOD STUDIO INC.
925 south west temple
saltlake city, utah 84101
phone:(801) 532-4422

DFCM APPROVAL STAMP

project:
UVU Classroom Building - Volume 1
800 West University Parkway
Orem, UT 84058

project#: DFCM# 12192790
date: April 30, 2013

revisions:
1 Addenda 5 05.24.13

title:
Level 3 Area 'A' Floor Framing Plan

sheet:
SF103A

Bid Doc

REAVELEY ENGINEERS + ASSOCIATES
Consulting Structural Engineers

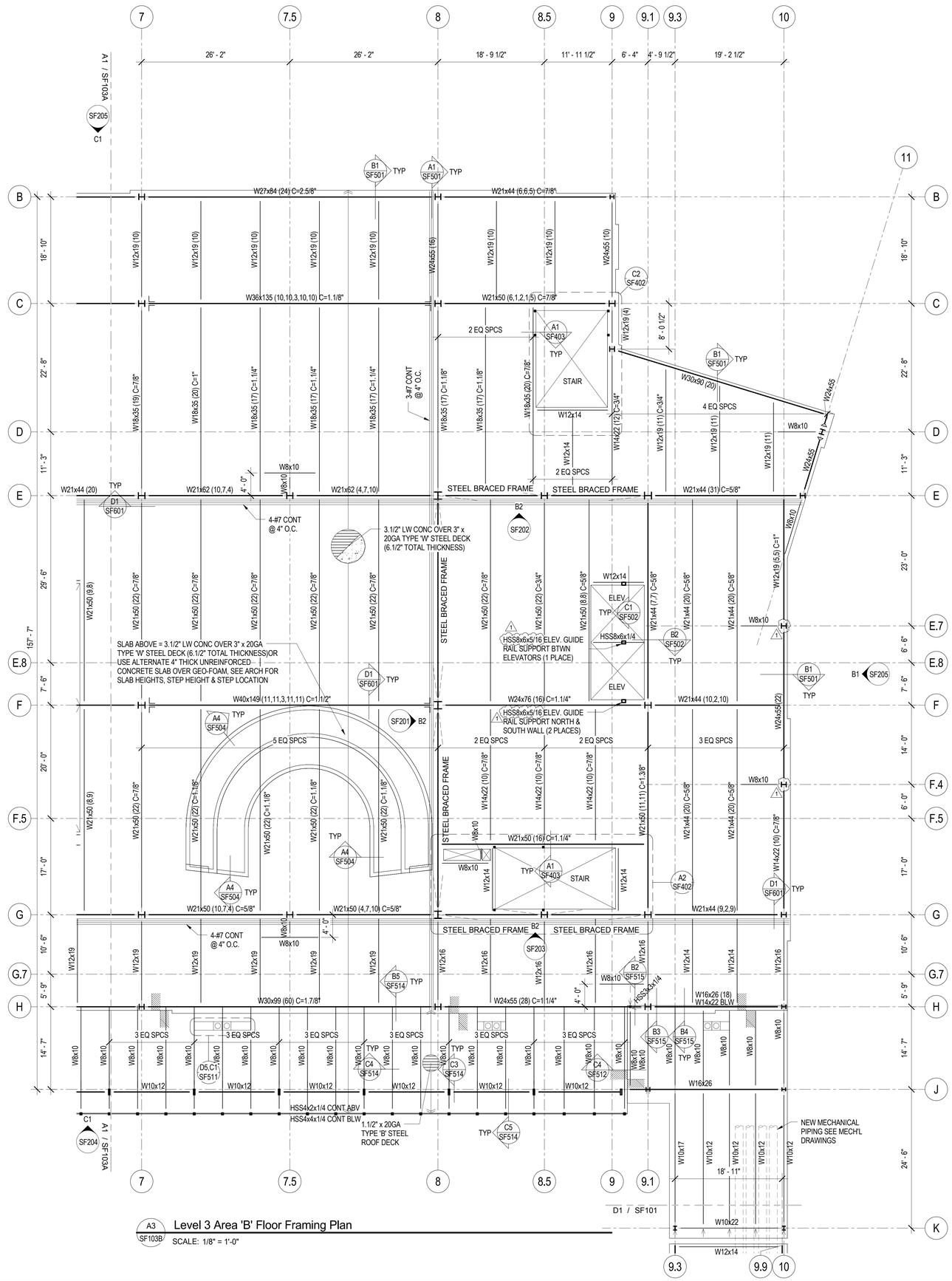

FLOOR FRAMING PLAN LEGEND

- STEEL COLUMN - TUBE
- STEEL COLUMN - WIDE FLANGE
- STEEL BRACED FRAME
- CANTILEVER FULL PEN CONNECTION
- COLLECTOR CONNECTION SEE B1/SF601
- DOUBLE SHEAR CONNECTION SEE C1/SF601
- STEEL BEAM OR GIRDER
- STEEL JOIST OR PURLIN
- STEEL ANGLE BRACE / KICKER. SEE B1/SF501 FOR SLAB EDGE KICKER
- 0" CHANGE IN ELEVATION
- CONCRETE ON METAL DECK
- ROOF DECK
- SPECIAL DECK AREA
- RECESSED/DEPRESSED SLAB ON METAL DECK
- OPENING

FLOOR FRAMING PLAN NOTES

1. SEE GENERAL STRUCTURAL NOTE (III.D.8) AND DETAILS D4/SF501 FOR CONTROL JOINTS IN SUSPENDED SLABS OVER STEEL DECK.

2. SEE DETAILS D1/SF501 FOR MISCELLANEOUS FLOOR OPENINGS.

3. SEE GENERAL STRUCTURAL NOTE (V.J.7) FOR STEEL DECK REQUIREMENTS WHERE 3-SPAN CONDITIONS ARE NOT POSSIBLE.

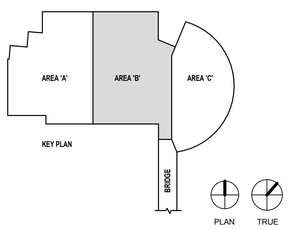

REAVELEY ENGINEERS + ASSOCIATES
Consulting Structural Engineers

UNLESS A PROFESSIONAL SEAL WITH SIGNATURE AND DATE IS AFFIXED, THIS DOCUMENT IS PRELIMINARY AND IS NOT INTENDED FOR CONSTRUCTION, RECORDING PURPOSES, OR IMPLEMENTATION

UTAH VALLEY UVU UNIVERSITY

State of Utah
Department of Administrative Services
Division of Facilities Construction & Management
4110 State Office Building
Salt Lake City, Utah 84114
Phone: (801) 538 - 3018
Fax: (801) 538 - 3267

CRSA METHODSTUDIO INC.

CRSA ARCHITECTS
649 east south temple
salt lake city, utah 84102
phone:(801) 355-5915

METHOD STUDIO INC.
925 south west temple
salt lake city, utah 84101
phone:(801) 532-4422

DFCM APPROVAL STAMP

project:
UVU Classroom Building - Volume 1
800 West University Parkway
Orem, UT 84058

project#: DFCM# 12192790
date: April 30, 2013

revisions :
1 Addenda 5 05.24.13

title:
Level 3 Area 'B' Floor Framing Plan

sheet:
SF103B

Bid Doc

FLOOR FRAMING PLAN LEGEND

- STEEL COLUMN - TUBE
- STEEL COLUMN - WIDE FLANGE
- STEEL BRACED FRAME
- CANTILEVER FULL PEN CONNECTION
- COLLECTOR CONNECTION SEE B1/SF601
- DOUBLE SHEAR CONNECTION SEE C1/SF601
- STEEL BEAM OR GIRDER
- STEEL JOIST OR PURLIN
- STEEL ANGLE BRACE / KICKER. SEE B1/SF501 FOR SLAB EDGE KICKER
- 0" CHANGE IN ELEVATION
- CONCRETE ON METAL DECK
- ROOF DECK
- SPECIAL DECK AREA
- RECESSED/DEPRESSED SLAB ON METAL DECK
- OPENING

FLOOR FRAMING PLAN NOTES

1. SEE GENERAL STRUCTURAL NOTE (III.D.8) AND DETAILS D4/SF501 FOR CONTROL JOINTS IN SUSPENDED SLABS OVER STEEL DECK.

2. SEE DETAILS D1/SF501 FOR MISCELLANEOUS FLOOR OPENINGS.

3. SEE GENERAL STRUCTURAL NOTE (V.J.7) FOR STEEL DECK REQUIREMENTS WHERE 3-SPAN CONDITIONS ARE NOT POSSIBLE.

A1 SF104A Level 4 Area 'A' Floor Framing Plan

SCALE: 1/8" = 1'-0"

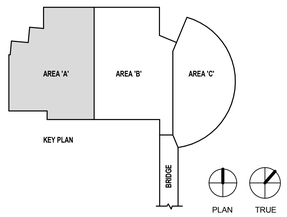

REAVELEY ENGINEERS + ASSOCIATES
Consulting Structural Engineers

UNLESS A PROFESSIONAL SEAL WITH SIGNATURE AND DATE IS AFFIXED, THIS DOCUMENT IS PRELIMINARY AND IS NOT INTENDED FOR CONSTRUCTION, RECORDING PURPOSES, OR IMPLEMENTATION

UTAH VALLEY UNIVERSITY

State of Utah
Department of Administrative Services
Division of Facilities Construction & Management
4110 State Office Building
Salt Lake City, Utah 84114
Phone: (801) 538 - 3018
Fax: (801) 538 - 3267

CRSA METHODSTUDIO INC.

CRSA ARCHITECTS
649 east south temple
salt lake city, utah 84102
phone:(801) 355-5915

METHOD STUDIO INC.
925 south west temple
salt lake city, utah 84101
phone:(801) 532-4422

DFCM APPROVAL STAMP

project:
UVU Classroom Building - Volume 1
800 West University Parkway
Orem, UT 84058

project#: DFCM# 12192790
date: April 30, 2013

revisions:
1 Addenda 5 05.24.13

title:
Level 4 Area 'A' Floor Framing Plan

sheet:
SF104A

Bid Doc

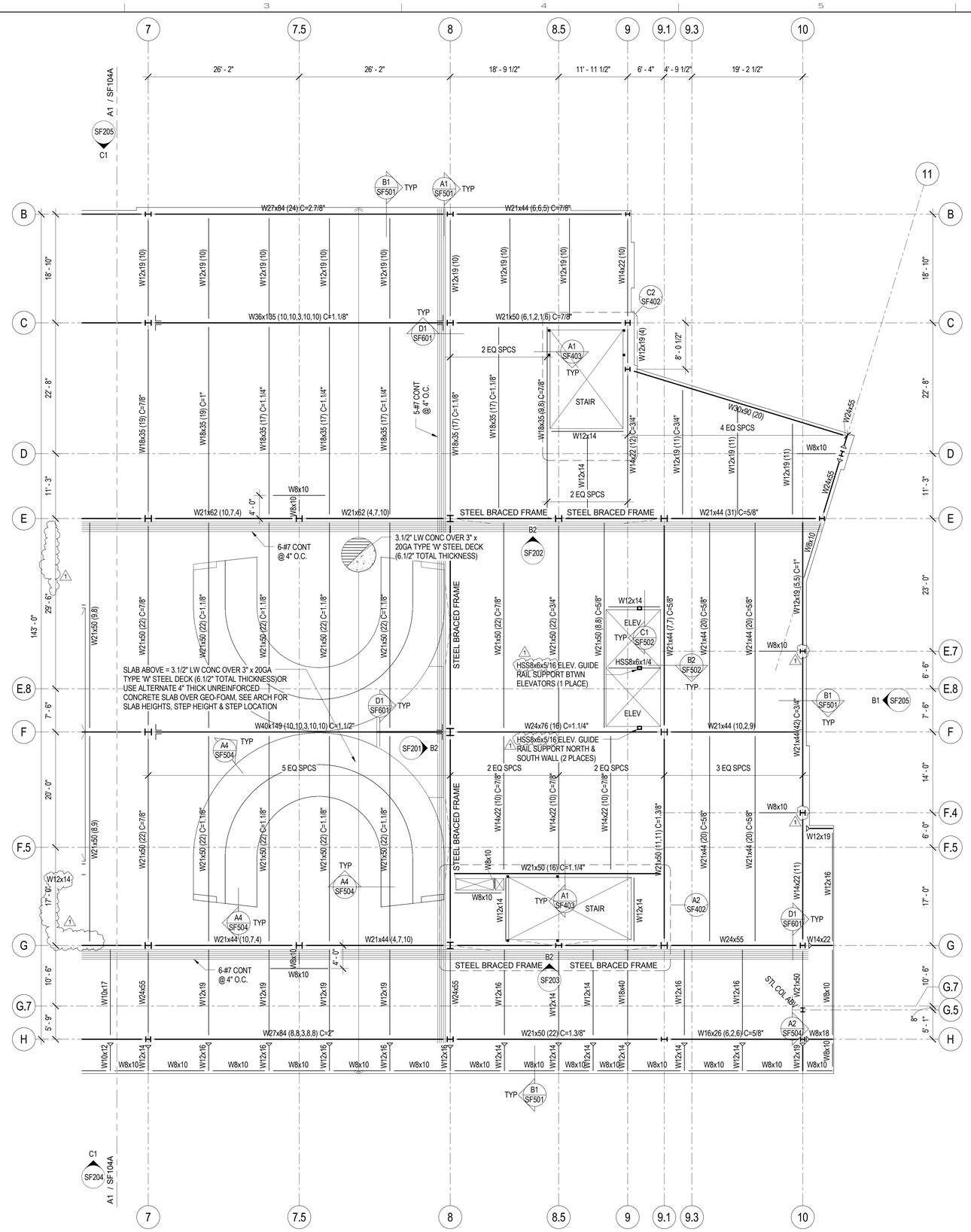

A3 SF104B Level 4 Area 'B' Floor Framing Plan

SCALE: 1/8" = 1'-0"

FLOOR FRAMING PLAN LEGEND

- STEEL COLUMN - TUBE
- STEEL COLUMN - WIDE FLANGE
- STEEL BRACED FRAME
- CANTILEVER FULL PEN CONNECTION
- COLLECTOR CONNECTION SEE B1/SF601
- DOUBLE SHEAR CONNECTION SEE C1/SF601
- STEEL BEAM OR GIRDER
- STEEL JOIST OR PURLIN
- STEEL ANGLE BRACE / KICKER. SEE B1/SF501 FOR SLAB EDGE KICKER
- 0" CHANGE IN ELEVATION
- CONCRETE ON METAL DECK
- ROOF DECK
- SPECIAL DECK AREA
- RECESSED/DEPRESSED SLAB ON METAL DECK
- OPENING

FLOOR FRAMING PLAN NOTES

1. SEE GENERAL STRUCTURAL NOTE (III.D.8) AND DETAILS D4/SF501 FOR CONTROL JOINTS IN SUSPENDED SLABS OVER STEEL DECK.

2. SEE DETAILS D1/SF501 FOR MISCELLANEOUS FLOOR OPENINGS.

3. SEE GENERAL STRUCTURAL NOTE (V.J.7) FOR STEEL DECK REQUIREMENTS WHERE 3-SPAN CONDITIONS ARE NOT POSSIBLE.

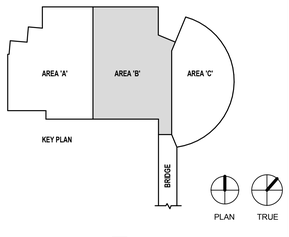

REAVELEY ENGINEERS + ASSOCIATES
Consulting Structural Engineers

UNLESS A PROFESSIONAL SEAL WITH SIGNATURE AND DATE IS AFFIXED, THIS DOCUMENT IS PRELIMINARY AND IS NOT INTENDED FOR CONSTRUCTION, RECORDING PURPOSES, OR IMPLEMENTATION

UTAH VALLEY UNIVERSITY

State of Utah
Department of Administrative Services
Division of Facilities Construction & Management
4110 State Office Building
Salt Lake City, Utah 84114
Phone: (801) 538 - 3018
Fax: (801) 538 - 3267

CRSA METHODSTUDIO INC.

CRSA ARCHITECTS
649 east south temple
salt lake city, utah 84102
phone:(801) 355-5915

METHOD STUDIO INC.
925 south west temple
salt lake city, utah 84101
phone:(801) 532-4422

DFCM APPROVAL STAMP

project:
UVU Classroom Building - Volume 1
800 West University Parkway
Orem, UT 84058

project#: DFCM# 12192790
date: April 30, 2013

revisions :
1 Addenda 5 05.24.13

title:
Level 4 Area 'B' Floor Framing Plan

sheet:
SF104B

Bid Doc

FLOOR FRAMING PLAN LEGEND

- STEEL COLUMN - TUBE
- STEEL COLUMN - WIDE FLANGE
- STEEL BRACED FRAME
- CANTILEVER FULL PEN CONNECTION
- COLLECTOR CONNECTION SEE B1/SF601
- DOUBLE SHEAR CONNECTION SEE C1/SF601
- STEEL BEAM OR GIRDER
- STEEL JOIST OR PURLIN
- STEEL ANGLE BRACE / KICKER. SEE B1/SF501 FOR SLAB EDGE KICKER
- 0" CHANGE IN ELEVATION
- CONCRETE ON METAL DECK
- ROOF DECK
- SPECIAL DECK AREA
- RECESSED/DEPRESSED SLAB ON METAL DECK
- OPENING

FLOOR FRAMING PLAN NOTES

1. SEE GENERAL STRUCTURAL NOTE (III.D.8) AND DETAILS D4/SF501 FOR CONTROL JOINTS IN SUSPENDED SLABS OVER STEEL DECK.

2. SEE DETAILS D1/SF501 FOR MISCELLANEOUS FLOOR OPENINGS.

3. SEE GENERAL STRUCTURAL NOTE (V.J.7) FOR STEEL DECK REQUIREMENTS WHERE 3-SPAN CONDITIONS ARE NOT POSSIBLE.

A1 SF105A Level 5 Area 'A' Floor Framing Plan

SCALE: 1/8" = 1'-0"

UNLESS A PROFESSIONAL SEAL WITH SIGNATURE AND DATE IS AFFIXED, THIS DOCUMENT IS PRELIMINARY AND IS NOT INTENDED FOR CONSTRUCTION, RECORDING PURPOSES, OR IMPLEMENTATION

UTAH VALLEY UNIVERSITY

State of Utah
Department of Administrative Services
Division of Facilities Construction & Management
4110 State Office Building
Salt Lake City, Utah 84114
Phone: (801) 538 - 3018
Fax: (801) 538 - 3267

CRSA METHODSTUDIO INC.

CRSA ARCHITECTS
649 east south temple
salt lake city, utah 84102
phone:(801) 355-5915

METHOD STUDIO INC.
925 south west temple
salt lake city, utah 84101
phone:(801) 532-4422

DFCM APPROVAL STAMP

project:
UVU Classroom Building - Volume 1
800 West University Parkway
Orem, UT 84058

project#: DFCM# 12192790
date: April 30, 2013

revisions :
1 Addenda 5 05.24.13

title:
Level 5 Area 'A' Floor Framing Plan

sheet:
SF105A

Bid Doc

REAVELEY ENGINEERS + ASSOCIATES
Consulting Structural Engineers

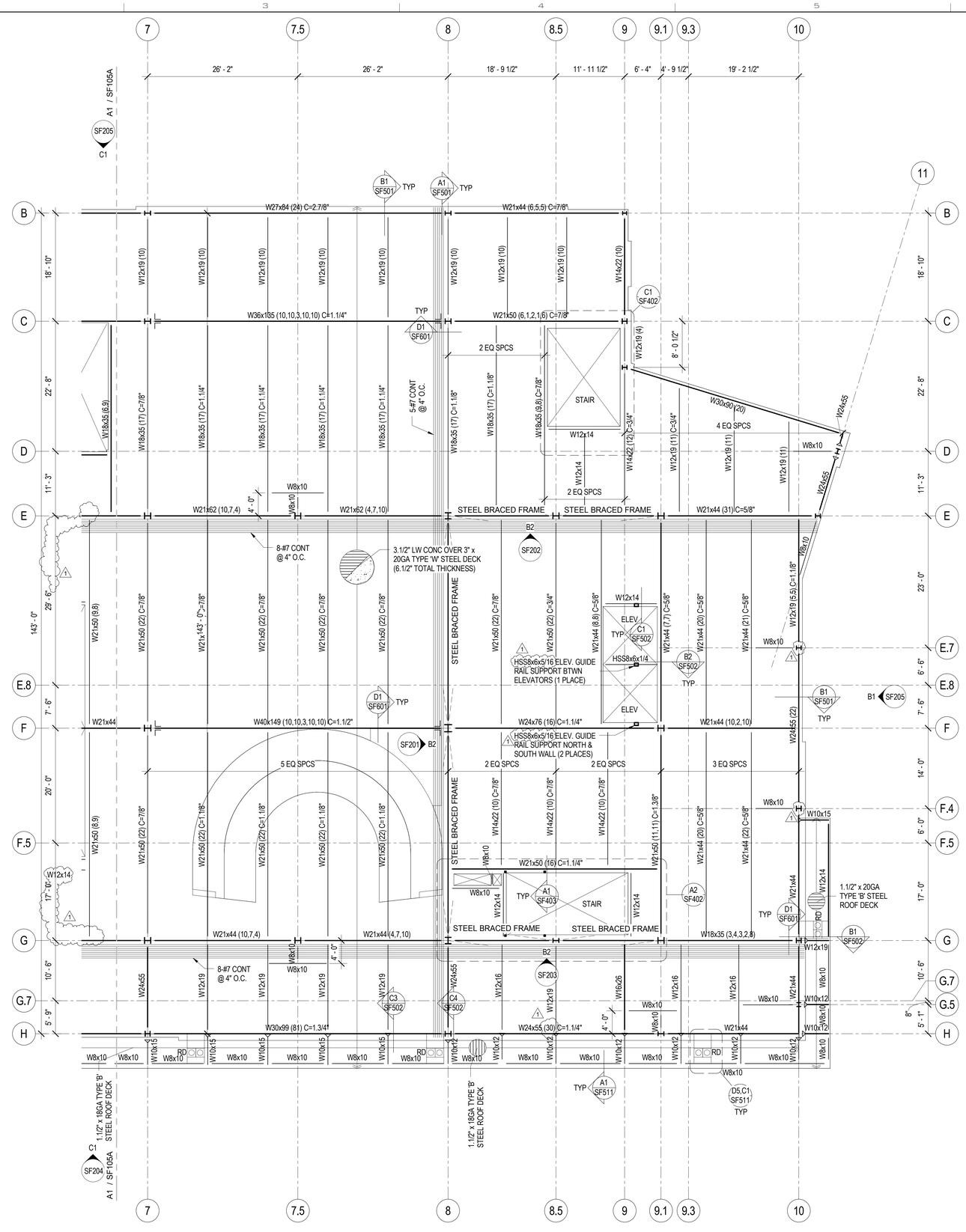

A2 SF105B Level 5 Area 'B' Floor Framing Plan

SCALE: 1/8" = 1'-0"

FLOOR FRAMING PLAN LEGEND

- STEEL COLUMN - TUBE
- STEEL COLUMN - WIDE FLANGE
- STEEL BRACED FRAME
- CANTILEVER FULL PEN CONNECTION
- COLLECTOR CONNECTION SEE B1/SF601
- DOUBLE SHEAR CONNECTION SEE C1/SF601
- STEEL BEAM OR GIRDER
- STEEL JOIST OR PURLIN
- STEEL ANGLE BRACE / KICKER. SEE B1/SF501 FOR SLAB EDGE KICKER
- 0" CHANGE IN ELEVATION
- CONCRETE ON METAL DECK
- ROOF DECK
- SPECIAL DECK AREA
- RECESSED/DEPRESSED SLAB ON METAL DECK
- OPENING

FLOOR FRAMING PLAN NOTES

1. SEE GENERAL STRUCTURAL NOTE (III.D.8) AND DETAILS D4/SF501 FOR CONTROL JOINTS IN SUSPENDED SLABS OVER STEEL DECK.

2. SEE DETAILS D1/SF501 FOR MISCELLANEOUS FLOOR OPENINGS.

3. SEE GENERAL STRUCTURAL NOTE (V.J.7) FOR STEEL DECK REQUIREMENTS WHERE 3-SPAN CONDITIONS ARE NOT POSSIBLE.

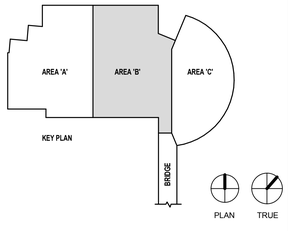

REAVELEY ENGINEERS + ASSOCIATES
Consulting Structural Engineers

UNLESS A PROFESSIONAL SEAL WITH SIGNATURE AND DATE IS AFFIXED, THIS DOCUMENT IS PRELIMINARY AND IS NOT INTENDED FOR CONSTRUCTION, RECORDING PURPOSES, OR IMPLEMENTATION

UTAH VALLEY UNIVERSITY

State of Utah
Department of Administrative Services

Division of Facilities Construction & Management
4110 State Office Building
Salt Lake City, Utah 84114
Phone: (801) 538 - 3018
Fax: (801) 538 - 3267

CRSA METHODSTUDIO INC.

CRSA ARCHITECTS
649 east south temple
salt lake city, utah 84102
phone:(801) 355-5915

METHOD STUDIO INC.
925 south west temple
salt lake city, utah 84101
phone:(801) 532-4422

DFCM APPROVAL STAMP

project:
UVU Classroom Building - Volume 1
800 West University Parkway
Orem, UT 84058

project#: DFCM# 12192790
date: April 30, 2013

revisions:
1 Addenda 5 05.24.13

title:
Level 5 Area 'B' Floor Framing Plan

sheet:
SF105B

Bid Doc

A1 SF106A Level 6 Area 'A' Roof Framing Plan

SCALE: 1/8" = 1'-0"

ROOF FRAMING PLAN LEGEND

- STEEL COLUMN - TUBE
- STEEL COLUMN - WIDE FLANGE
- STEEL BRACED FRAME
- CANTILEVER FULL PEN CONNECTION
- COLLECTOR CONNECTION SEE B1/SF601
- DOUBLE SHEAR CONNECTION SEE C1/SF601
- STEEL BEAM OR GIRDER
- STEEL JOIST OR PURLIN
- STEEL ANGLE BRACE / KICKER. SEE A1/SF511 FOR ROOF EDGE KICKER
- CROSS BRIDGING
- HORIZONTAL BRIDGING
- ROOF TIE-BACK LOCATION SEE TIE-BACK DETAILS
- 0" CHANGE IN ELEVATION
- CONCRETE ON METAL DECK
- ROOF DECK
- SPECIAL DECK AREA
- RECESSED/DEPRESSED SLAB ON METAL DECK
- OPENING

ROOF FRAMING PLAN NOTES

1. VERIFY SIZE, WEIGHT, LOCATION AND CONFIGURATION OF ALL ROOF TOP EQUIPMENT WITH ARCHITECT AND MECHANICAL ENGINEER. PROVIDE STEEL FRAMES FOR SUPPORT OF ROOF TOP EQUIPMENT AS INDICATED IN DETAIL D4/SF511 COORDINATE OPENINGS WITH MECHANICAL AND ELECTRICAL AND GENERAL CONTRACTORS.

2. ALL ROOF OPENINGS SHALL BE FRAMED AS INDICATED IN DETAIL D3/SF511. FOR ROUND OPENINGS WHICH ARE LESS THAN 12" DIA. SEE DETAIL C2/SF511.

3. SEE ARCHITECTURAL FOR ROOF SLOPES AND DRAINS. SEE D5&C1/SF511 FOR ROOF DRAIN OPENING FRAME.

4. OPEN WEB STEEL JOISTS AND JOIST GIRDERS SHALL BE DESIGNED BY THE MANUFACTURER TO SUPPORT THE MECHANICAL AND LATERAL LOADS SHOWN ON THE ROOF FRAMING PLANS IN ADDITION TO THE UNIFORM AND POINT LOADS SHOWN.

5. ±#.#K ADD - INDICATES ADDITIONAL UPLIFT / DOWNWARD FORCE ON STEEL JOIST IN ADDITION TO REGULAR LOADS.

6. T/C=##K - INDICATES ADDITIONAL TOP CHORD AXIAL FORCE ON STEEL JOIST OR GIRDER IN ADDITION TO REGULAR LOADS. THIS FORCE IS A SEISMIC LRFD LOAD THAT SHALL BE CONSIDERED IN BOTH TENSION AND COMPRESSION; INCLUDES APPLICABLE OVERSTRENGTH FACTORS FROM IBC SECTION 1613 AND ASCE 7 SECTION 12.10. STEEL JOISTS AND GIRDERS WITH T/C FORCE SHALL BE DESIGNED AS COLLECTOR ELEMENTS PER IBC SECTION 1613 AND ASCE 7 SECTION 12.10 WITH STRENGTH TO RESIST APPLICABLE LOAD COMBINATIONS OF IBC SECTION 1605.4 AND ASCE 7 SECTION 12.4.

7. ALL LOADS SUPPORTED BY OPEN WEB STEEL JOISTS AND GIRDERS SHALL BE LOCATED WITHIN 6" OF JOIST OR GIRDER PANEL POINT OR THE JOIST OR GIRDER SHALL BE REINFORCED PER DETAIL D1/SF511.

8. SEE DETAIL D2/SF511 FOR SUPPORT OF HANGING MECHANICAL UNITS.

9. HORIZONTAL AND CROSS BRIDGING SHALL BE SIZED AND SUPPLIED BY THE JOIST MANUFACTURER. CONNECT TO WALLS AS INDICATED IN DETAILS.

10. WHERE SKYLIGHTS OR MECHANICAL UNITS INTERRUPT HORIZONTAL BRIDGING PROVIDE CROSS BRIDGING AT JOIST SPACES ON EACH SIDE. TYPICAL.

11. DESIGN ALL OWSJ FOR 5 PSF NET WIND UPLIFT.

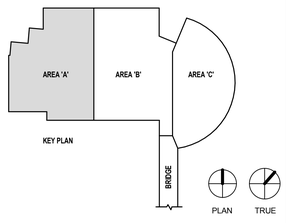

REAVELEY ENGINEERS + ASSOCIATES
Consulting Structural Engineers

UNLESS A PROFESSIONAL SEAL WITH SIGNATURE AND DATE IS AFFIXED, THIS DOCUMENT IS PRELIMINARY AND IS NOT INTENDED FOR CONSTRUCTION, RECORDING PURPOSES, OR IMPLEMENTATION

UTAH VALLEY UVU UNIVERSITY

State of Utah
Department of Administrative Services
Division of Facilities Construction & Management
4110 State Office Building
Salt Lake City, Utah 84114
Phone: (801) 538 - 3018
Fax: (801) 538 - 3267

CRSA METHODSTUDIO INC.

CRSA ARCHITECTS
649 east south temple
salt lake city, utah 84102
phone:(801) 355-5915

METHOD STUDIO INC.
925 south west temple
salt lake city, utah 84101
phone:(801) 532-4422

DFCM APPROVAL STAMP

project:
UVU Classroom Building - Volume 1
800 West University Parkway
Orem, UT 84058

project#: DFCM# 12152790
date: April 30, 2013

revisions:
1 Addenda 5 05.24.13

title:
Level 6 Area 'A' Roof Framing Plan

sheet:
SF106A

Bid Doc

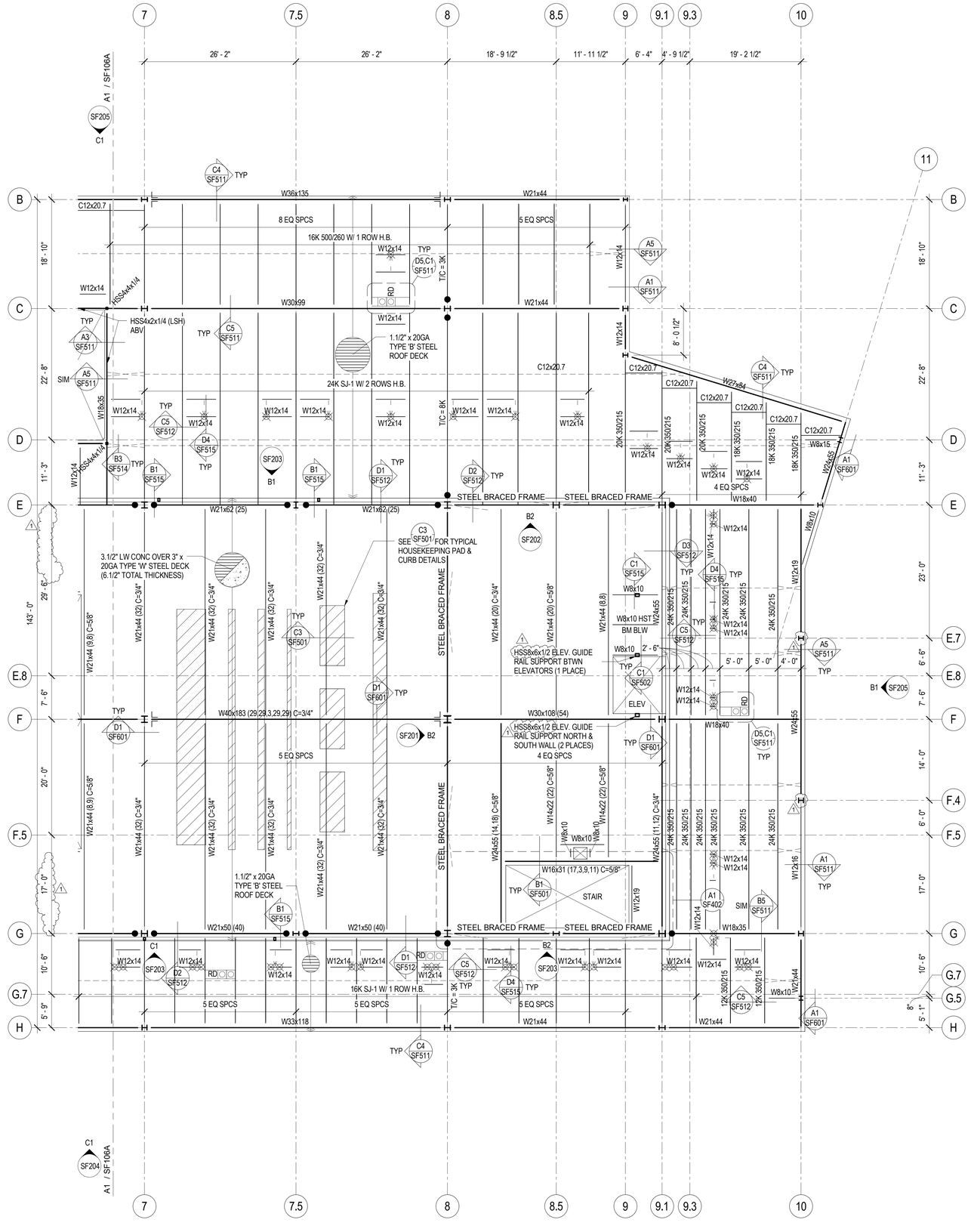

A2 SF106B Level 6 Area 'B' Roof Framing Plan

SCALE: 1/8" = 1'-0"

ROOF FRAMING PLAN LEGEND

- STEEL COLUMN - TUBE
- STEEL COLUMN - WIDE FLANGE
- STEEL BRACED FRAME
- CANTILEVER FULL PEN CONNECTION
- COLLECTOR CONNECTION SEE B1/SF601
- DOUBLE SHEAR CONNECTION SEE C1/SF601
- STEEL BEAM OR GIRDER
- STEEL JOIST OR PURLIN
- STEEL ANGLE BRACE / KICKER. SEE A1/SF511 FOR ROOF EDGE KICKER
- CROSS BRIDGING
- HORIZONTAL BRIDGING
- ROOF TIE-BACK LOCATION SEE TIE-BACK DETAILS
- 0" CHANGE IN ELEVATION
- CONCRETE ON METAL DECK
- ROOF DECK
- SPECIAL DECK AREA
- RECESSED/DEPRESSED SLAB ON METAL DECK
- OPENING

ROOF FRAMING PLAN NOTES

1. VERIFY SIZE, WEIGHT, LOCATION AND CONFIGURATION OF ALL ROOF TOP EQUIPMENT WITH ARCHITECT AND MECHANICAL ENGINEER. PROVIDE STEEL FRAMES FOR SUPPORT OF ROOF TOP EQUIPMENT AS INDICATED IN DETAIL D4/SF511 COORDINATE OPENINGS WITH MECHANICAL AND ELECTRICAL AND GENERAL CONTRACTORS.

2. ALL ROOF OPENINGS SHALL BE FRAMED AS INDICATED IN DETAIL D3/SF511. FOR ROUND OPENINGS WHICH ARE LESS THAN 12" DIA. SEE DETAIL C2/SF511.

3. SEE ARCHITECTURAL FOR ROOF SLOPES AND DRAINS. SEE D5&C1/SF511 FOR ROOF DRAIN OPENING FRAME.

4. OPEN WEB STEEL JOISTS AND JOIST GIRDERS SHALL BE DESIGNED BY THE MANUFACTURER TO SUPPORT THE MECHANICAL AND LATERAL LOADS SHOWN ON THE ROOF FRAMING PLANS IN ADDITION TO THE UNIFORM AND POINT LOADS SHOWN.

5. ±#.#K ADD - INDICATES ADDITIONAL UPLIFT / DOWNWARD FORCE ON STEEL JOIST IN ADDITION TO REGULAR LOADS.

6. T/C=##K - INDICATES ADDITIONAL TOP CHORD AXIAL FORCE ON STEEL JOIST OR GIRDER IN ADDITION TO REGULAR LOADS. THIS FORCE IS A SEISMIC LRFD LOAD THAT SHALL BE CONSIDERED IN BOTH TENSION AND COMPRESSION; INCLUDES APPLICABLE OVERSTRENGTH FACTORS FROM IBC SECTION 1613 AND ASCE 7 SECTION 12.10. STEEL JOISTS AND GIRDERS WITH T/C FORCE SHALL BE DESIGNED AS COLLECTOR ELEMENTS PER IBC SECTION 1613 AND ASCE 7 SECTION 12.10 WITH STRENGTH TO RESIST APPLICABLE LOAD COMBINATIONS OF IBC SECTION 1605.4 AND ASCE 7 SECTION 12.4.

7. ALL LOADS SUPPORTED BY OPEN WEB STEEL JOISTS AND GIRDERS SHALL BE LOCATED WITHIN 6" OF JOIST OR GIRDER PANEL POINT OR THE JOIST OR GIRDER SHALL BE REINFORCED PER DETAIL D1/SF511.

8. SEE DETAIL D2/SF511 FOR SUPPORT OF HANGING MECHANICAL UNITS.

9. HORIZONTAL AND CROSS BRIDGING SHALL BE SIZED AND SUPPLIED BY THE JOIST MANUFACTURER. CONNECT TO WALLS AS INDICATED IN DETAILS.

10. WHERE SKYLIGHTS OR MECHANICAL UNITS INTERRUPT HORIZONTAL BRIDGING PROVIDE CROSS BRIDGING AT JOIST SPACES ON EACH SIDE. TYPICAL.

11. DESIGN ALL OWSJ FOR 5 PSF NET WIND UPLIFT.

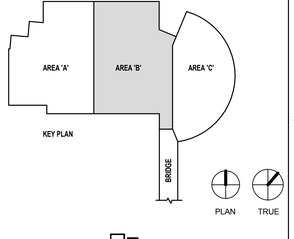

REAVELEY ENGINEERS + ASSOCIATES
Consulting Structural Engineers

UNLESS A PROFESSIONAL SEAL WITH SIGNATURE AND DATE IS AFFIXED, THIS DOCUMENT IS PRELIMINARY AND IS NOT INTENDED FOR CONSTRUCTION, RECORDING PURPOSES, OR IMPLEMENTATION

UTAH VALLEY UNIVERSITY

State of Utah
Department of Administrative Services
Division of Facilities Construction & Management
4110 State Office Building
Salt Lake City, Utah 84114
Phone: (801) 538 - 3018
Fax: (801) 538 - 3267

CRSA METHODSTUDIO INC.

CRSA ARCHITECTS
649 east south temple
salt lake city, utah 84102
phone:(801) 355-5915

METHOD STUDIO INC.
925 south west temple
salt lake city, utah 84101
phone:(801) 532-4422

DFCM APPROVAL STAMP

project:

UVU Classroom Building - Volume 1

800 West University Parkway
Orem, UT 84058

project#: DFCM# 12192790
date: April 30, 2013

revisions :

1	Addenda 5	05.24.13

title:

Level 6 Area 'B' Roof Framing Plan

sheet:

SF106B

Bid Doc

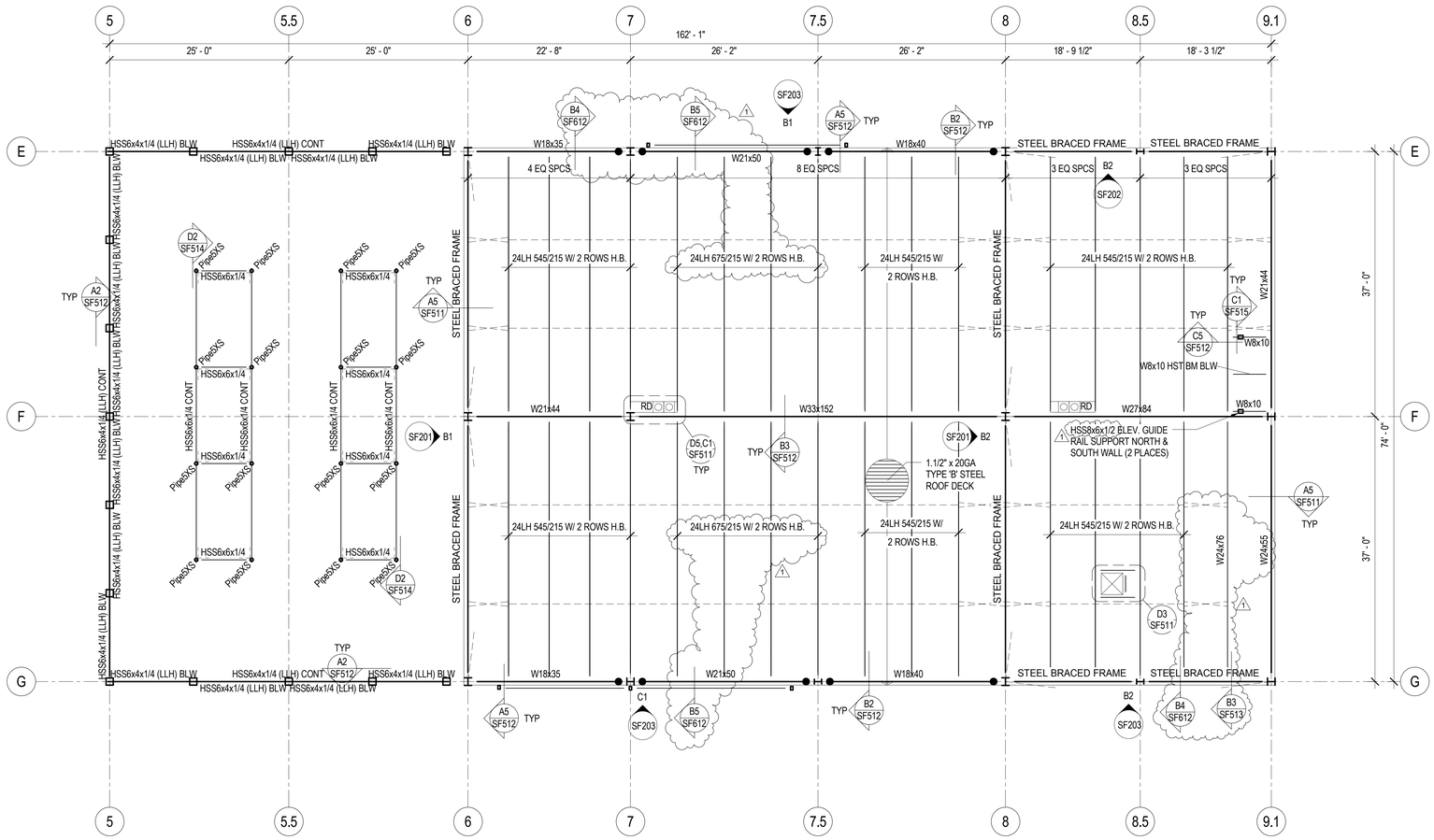

B2 / SF107 Penthouse Roof Framing Plan

SCALE: 1/8" = 1'-0"

ROOF FRAMING PLAN LEGEND

- STEEL COLUMN - TUBE
- STEEL COLUMN - WIDE FLANGE
- STEEL BRACED FRAME
- CANTILEVER FULL PEN CONNECTION
- COLLECTOR CONNECTION SEE B1/SF601
- DOUBLE SHEAR CONNECTION SEE C1/SF601
- STEEL BEAM OR GIRDER
- STEEL JOIST OR PURLIN
- STEEL ANGLE BRACE / KICKER. SEE A1/SF511 FOR ROOF EDGE KICKER
- CROSS BRIDGING
- HORIZONTAL BRIDGING
- ROOF TIE-BACK LOCATION SEE TIE-BACK DETAILS
- 0" CHANGE IN ELEVATION
- CONCRETE ON METAL DECK
- ROOF DECK
- SPECIAL DECK AREA
- RECESSED/DEPRESSED SLAB ON METAL DECK
- OPENING

ROOF FRAMING PLAN NOTES

1. VERIFY SIZE, WEIGHT, LOCATION AND CONFIGURATION OF ALL ROOF TOP EQUIPMENT WITH ARCHITECT AND MECHANICAL ENGINEER. PROVIDE STEEL FRAMES FOR SUPPORT OF ROOF TOP EQUIPMENT AS INDICATED IN DETAIL D4/SF511 COORDINATE OPENINGS WITH MECHANICAL AND ELECTRICAL AND GENERAL CONTRACTORS.

2. ALL ROOF OPENINGS SHALL BE FRAMED AS INDICATED IN DETAIL D3/SF511. FOR ROUND OPENINGS WHICH ARE LESS THAN 12" DIA. SEE DETAIL C2/SF511.

3. SEE ARCHITECTURAL FOR ROOF SLOPES AND DRAINS. SEE D5&C1/SF511 FOR ROOF DRAIN OPENING FRAME.

4. OPEN WEB STEEL JOISTS AND JOIST GIRDERS SHALL BE DESIGNED BY THE MANUFACTURER TO SUPPORT THE MECHANICAL AND LATERAL LOADS SHOWN ON THE ROOF FRAMING PLANS IN ADDITION TO THE UNIFORM AND POINT LOADS SHOWN.

5. ±#.#K ADD - INDICATES ADDITIONAL UPLIFT / DOWNWARD FORCE ON STEEL JOIST IN ADDITION TO REGULAR LOADS.

6. T/C=##K - INDICATES ADDITIONAL TOP CHORD AXIAL FORCE ON STEEL JOIST OR GIRDER IN ADDITION TO REGULAR LOADS. THIS FORCE IS A SEISMIC LRFD LOAD THAT SHALL BE CONSIDERED IN BOTH TENSION AND COMPRESSION; INCLUDES APPLICABLE OVERSTRENGTH FACTORS FROM IBC SECTION 1613 AND ASCE 7 SECTION 12.10. STEEL JOISTS AND GIRDERS WITH T/C FORCE SHALL BE DESIGNED AS COLLECTOR ELEMENTS PER IBC SECTION 1613 AND ASCE 7 SECTION 12.10 WITH STRENGTH TO RESIST APPLICABLE LOAD COMBINATIONS OF IBC SECTION 1605.4 AND ASCE 7 SECTION 12.4.

7. ALL LOADS SUPPORTED BY OPEN WEB STEEL JOISTS AND GIRDERS SHALL BE LOCATED WITHIN 6" OF JOIST OR GIRDER PANEL POINT OR THE JOIST OR GIRDER SHALL BE REINFORCED PER DETAIL D1/SF511.

8. SEE DETAIL D2/SF511 FOR SUPPORT OF HANGING MECHANICAL UNITS.

9. HORIZONTAL AND CROSS BRIDGING SHALL BE SIZED AND SUPPLIED BY THE JOIST MANUFACTURER. CONNECT TO WALLS AS INDICATED IN DETAILS.

10. WHERE SKYLIGHTS OR MECHANICAL UNITS INTERRUPT HORIZONTAL BRIDGING PROVIDE CROSS BRIDGING AT JOIST SPACES ON EACH SIDE. TYPICAL.

11. DESIGN ALL OWSJ FOR 5 PSF NET WIND UPLIFT.

UNLESS A PROFESSIONAL SEAL WITH SIGNATURE AND DATE IS AFFIXED, THIS DOCUMENT IS PRELIMINARY AND IS NOT INTENDED FOR CONSTRUCTION, RECORDING PURPOSES, OR IMPLEMENTATION

UTAH VALLEY UNIVERSITY

State of Utah
Department of Administrative Services
Division of Facilities Construction & Management
4110 State Office Building
Salt Lake City, Utah 84114
Phone: (801) 538 - 3018
Fax: (801) 538 - 3267

CRSA METHODSTUDIO INC.

CRSA ARCHITECTS
649 east south temple
salt lake city, utah 84102
phone:(801) 355-5915

METHOD STUDIO INC.
925 south west temple
salt lake city, utah 84101
phone:(801) 532-4422

DFCM APPROVAL STAMP

project:
UVU Classroom Building - Volume 1
800 West University Parkway
Orem, UT 84058

project#: DFCM# 12192790
date: April 30, 2013

revisions:
1 Addenda 5 05.24.13

title:
Penthouse Roof Framing Plan

sheet:
SF107

Bid Doc

REAVELEY ENGINEERS + ASSOCIATES
Consulting Structural Engineers

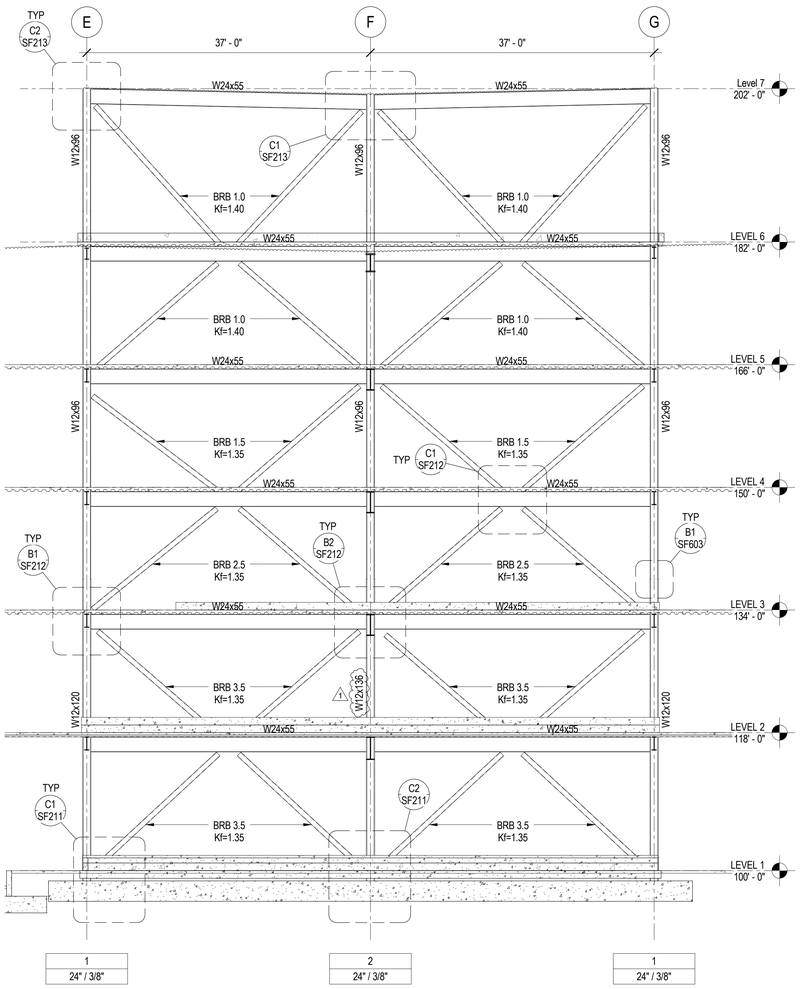

B1 SF201 BRB - Along Grid '6'

SCALE: 1/8" = 1'-0"

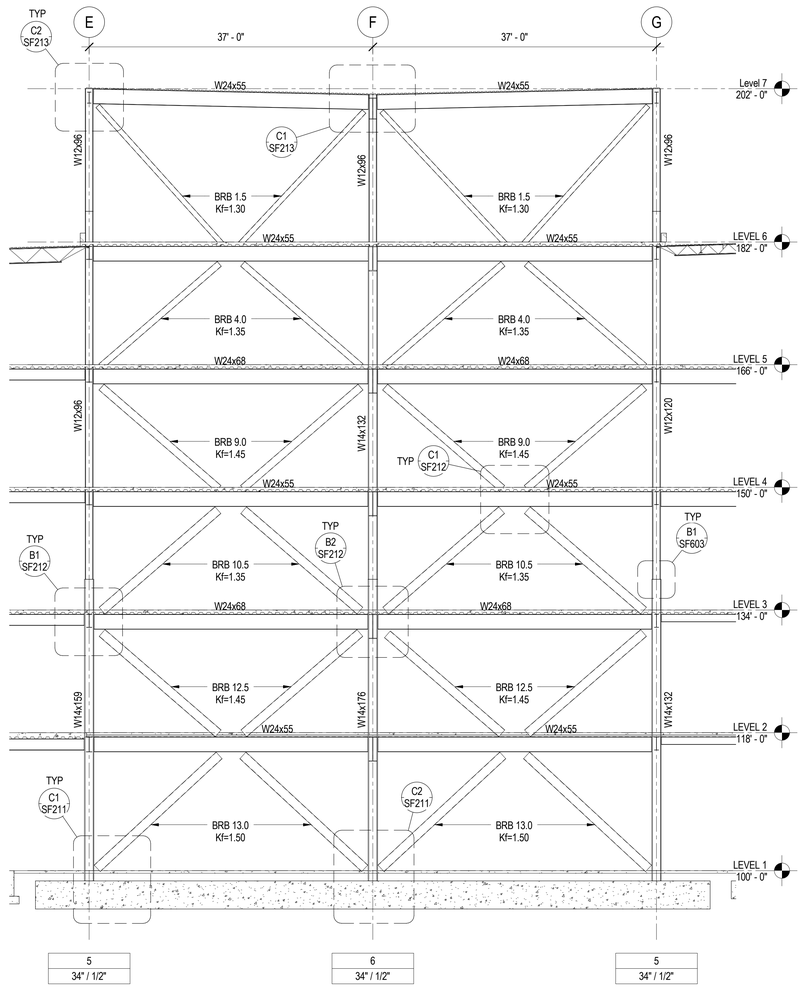

B2 SF201 BRB - Along Grid '8'

SCALE: 1/8" = 1'-0"

BRACED FRAME ELEVATION NOTES AND LEGEND

1. ALL W-SHAPED BRACED FRAME MEMBERS SHALL BE ASTM A992 (Fy = 50KSI) STEEL, U.N.O.

2. ADD 3/4" Ø x 5" LONG HEADED STUD ANCHOR AT 24" O.C. TO ALL BRACED FRAME HORIZONTAL FRAMING MEMBERS (BEAMS) EXCEPT ROOF BEAMS.

3. BRACED FRAME BASE PLATE SYMBOL

TYPE
EMBED./PLATE

TYPE = BASE PLATE TYPE. SEE A1/SF211 FOR ADDITIONAL BASE PLATE AND ANCHOR BOLT INFORMATION.

EMBED./PLATE = ANCHOR ROD EMBEDMENT LENGTH / ANCHOR BOLTS PLATE WASHER THICKNESS. (X") INDICATES FOOTING THICKNESS INCREASED TO ACCOMODATE ANCHOR BOLT EMBEDMENT LENGTH.

4. VERIFY ALL DATUM ELEVATIONS W/ ARCHITECTURAL DRAWINGS.

5. SEE PLANS FOR LOCATIONS WHERE CHORD/ COLLECTOR CONNECTIONS ARE REQUIRED.

6. SEE DETAIL B3 & B4/SF211 FOR PROTECTED ZONES OF BRB FRAME.

7. REFER TO DETAIL A4/SF213 FOR MAXIMUM FRAME BEAM TO COLUMN REACTIONS.

8. "BRB X.X" INDICATES MINIMUM BUCKLING RESTRAINED BRACE CROSS SECTIONAL AREA OF YIELDING CORE (Asc) THAT SHALL BE PROVIDED BY BRB SUPPLIER.

9. BRB SUPPLIER SHALL PROVIDE DESIGN OF THE BRB GUSSET PLATES AND CONNECTIONS TO THE FRAME BEAMS AND COLUMNS INCLUDING DETAILS AND SCHEDULES. INFORMATION SHOWN IN THE CONSTRUCTION DOCUMENTS RELATING TO BRB'S, GUSSET PLATES AND CONNECTIONS OF SUCH ARE INCLUDED FOR GENERAL DESIGN CONCEPT.

10. BRB SUPPLIER SHALL DESIGN GUSSET PLATE AND CONNECTIONS TO TRANSFER ALL VERTICAL FORCES THROUGH THE GUSSET TO COLUMN CONNECTION.

11. CORE PLATE MATERIAL SHALL HAVE A YIELD RANGE OF Fysc=42 KSI (+/- 4 KSI) COUPON TESTS SHALL BE TAKEN FROM PLATES AT POINT OF MANUFACTURE OF BRB'S AND SHALL BE USED TO VERIFY CONFORMANCE.

12. BRB CASINGS SHALL HAVE A SQUARE OR RECTANGULAR PROFILE AND SHALL NOT HAVE A ROUND OR CIRCULAR PROFILE.

13. CONNECTION TYPES (BOLTED, WELDED OR PINNED) ARE ALLOWED BY BRB SUPPLIER EXCEPT AT EXPOSED BRACE LOCATIONS "E". AT THESE LOCATIONS WELDED CONNECTIONS ARE REQUIRED AND SHALL MEET THE GUSSET PLATE DIMENSIONS INDICATED ON THE FRAME ELEVATIONS.

14. BRB'S SHALL BE DESIGNED ACCORDING TO THE FOLLOWING PARAMETERS:
- β max = 1.05 • ρ = 1.3
- βω max = 1.35 • I e = 1.25
- Asc = SEE FRAME ELEVATIONS
- Kf = STIFFNESS MODIFICATION FACTOR SEE FRAME ELEVATIONS

15. FOR REQUIRED DESIGN ELASTIC DRIFT AT BUCKLING RESTRAINED BRACED FRAMES SEE A5/SF212

16. BRB BRACES, CONNECTIONS AND GUSSET PLATES SHALL BE DESIGNED IN ACCORDANCE WITH AISC 341-05 SEISMIC PROVISIONS FOR STRUCTURAL STEEL BUILDINGS.

17. WHERE BOLTED CONNECTIONS ARE USED FOR BRB CONNECTION. BRB SUPPLIER SHALL DESIGN BOLTS AS A SLIP-CRITICAL CONNECTION FOR Pysc LOAD CONDITION AND SHALL ALSO DESIGN BOLTED CONNECTION FOR BEARING FOR THE ULTIMATE CONDITION (1.1 • βω • Pysc).

18. FINAL STIFFNESS MODIFICATION FACTORS SHALL BE WITHIN +/-10% OF THOSE INDICATED.

UNLESS A PROFESSIONAL SEAL WITH SIGNATURE AND DATE IS AFFIXED, THIS DOCUMENT IS PRELIMINARY AND IS NOT INTENDED FOR CONSTRUCTION, RECORDING PURPOSES, OR IMPLEMENTATION

UTAH VALLEY UVU UNIVERSITY

State of Utah
Department of Administrative Services
Division of Facilities Construction & Management
4110 State Office Building
Salt Lake City, Utah 84114
Phone: (801) 538 - 3018
Fax: (801) 538 - 3267

CRSA METHODSTUDIO INC.

CRSA ARCHITECTS
649 east south temple
salt lake city, utah 84102
phone:(801) 355-5915

METHOD STUDIO INC.
925 south west temple
salt lake city, utah 84101
phone:(801) 532-4422

DFCM APPROVAL STAMP

project:

UVU Classroom Building - Volume 1

800 West University Parkway
Orem, UT 84058

project#: DFCM# 12192790
date: April 30, 2013

revisions:

1	Addenda 5	05.24.13

title:

BRB Frame Elevations

sheet:

SF201

Bid Doc

REAVELEY ENGINEERS + ASSOCIATES
Consulting Structural Engineers

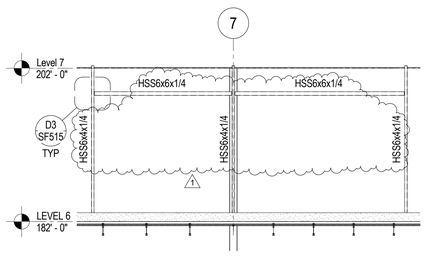

C1 / SF203 Penthouse Mechanical Louver Frame - Grid 'G'

SCALE: 1/8" = 1'-0"

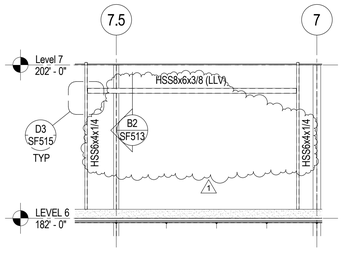

B1 / SF203 Penthouse Mechanical Louver Frame - Grid 'E'

SCALE: 1/8" = 1'-0"

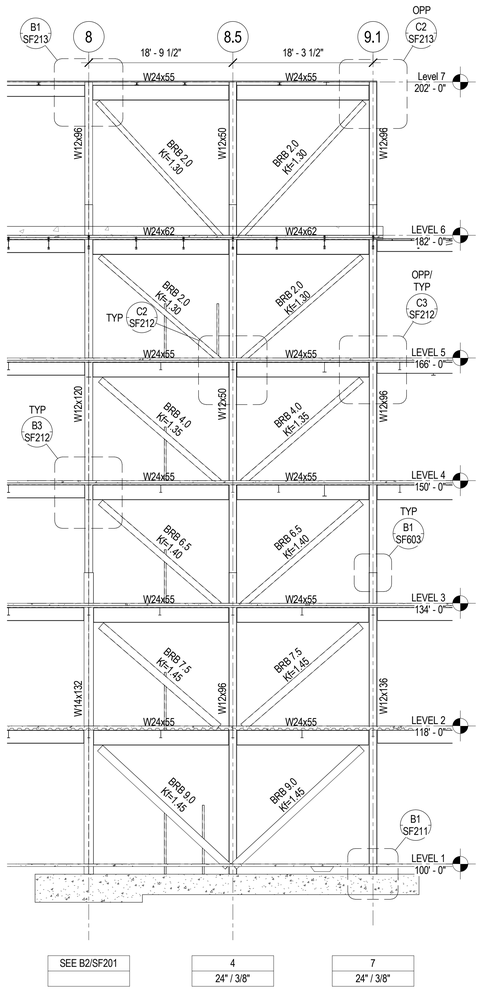

SEE B2/SF201	4 24" / 3/8"	7 24" / 3/8"

B2 / SF203 BRB - Along Grid 'G' East

SCALE: 1/8" = 1'-0"

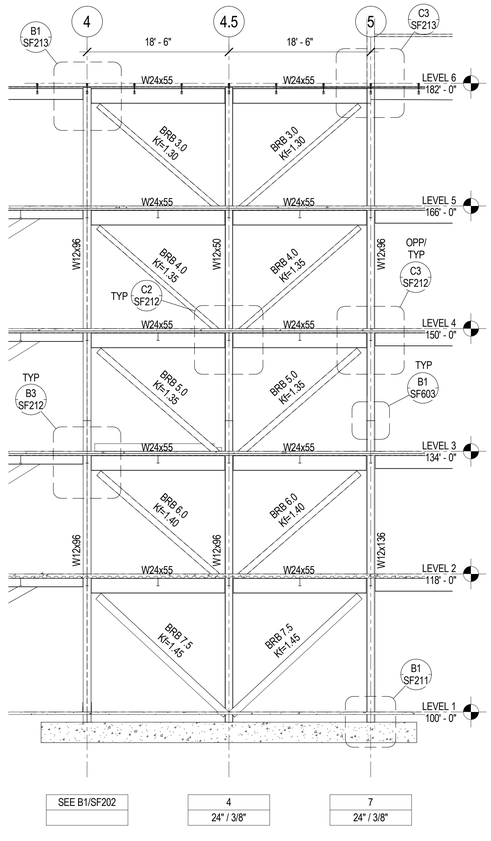

SEE B1/SF202	4 24" / 3/8"	7 24" / 3/8"

B3 / SF203 BRB - Along Grid 'G' West

SCALE: 1/8" = 1'-0"

BRACED FRAME ELEVATION NOTES AND LEGEND

1. ALL W-SHAPED BRACED FRAME MEMBERS SHALL BE ASTM A992 (Fy = 50KSI) STEEL, U.N.O.

2. ADD 3/4" Ø x 5" LONG HEADED STUD ANCHOR AT 24" O.C. TO ALL BRACED FRAME HORIZONTAL FRAMING MEMBERS (BEAMS) EXCEPT ROOF BEAMS.

3. BRACED FRAME BASE PLATE SYMBOL

TYPE
EMBED./PLATE

TYPE = BASE PLATE TYPE. SEE A1/SF211 FOR ADDITIONAL BASE PLATE AND ANCHOR BOLT INFORMATION.

EMBED./PLATE = ANCHOR ROD EMBEDMENT LENGTH / ANCHOR BOLTS PLATE WASHER THICKNESS. (X") INDICATES FOOTING THICKNESS INCREASED TO ACCOMODATE ANCHOR BOLT EMBEDMENT LENGTH.

4. VERIFY ALL DATUM ELEVATIONS W/ ARCHITECTURAL DRAWINGS.

5. SEE PLANS FOR LOCATIONS WHERE CHORD/ COLLECTOR CONNECTIONS ARE REQUIRED.

6. SEE DETAIL B3 & B4/SF211 FOR PROTECTED ZONES OF BRB FRAME.

7. REFER TO DETAIL A4/SF213 FOR MAXIMUM FRAME BEAM TO COLUMN REACTIONS.

8. "BRB X.X" INDICATES MINIMUM BUCKLING RESTRAINED BRACE CROSS SECTIONAL AREA OF YIELDING CORE (Asc) THAT SHALL BE PROVIDED BY BRB SUPPLIER.

9. BRB SUPPLIER SHALL PROVIDE DESIGN OF THE BRB GUSSET PLATES AND CONNECTIONS TO THE FRAME BEAMS AND COLUMNS INCLUDING DETAILS AND SCHEDULES. INFORMATION SHOWN IN THE CONSTRUCTION DOCUMENTS RELATING TO BRB'S, GUSSET PLATES AND CONNECTIONS OF SUCH ARE INCLUDED FOR GENERAL DESIGN CONCEPT.

10. BRB SUPPLIER SHALL DESIGN GUSSET PLATE AND CONNECTIONS TO TRANSFER ALL VERTICAL FORCES THROUGH THE GUSSET TO COLUMN CONNECTION.

11. CORE PLATE MATERIAL SHALL HAVE A YIELD RANGE OF Fysc=42 KSI (+/- 4 KSI) COUPON TESTS SHALL BE TAKEN FROM PLATES AT POINT OF MANUFACTURE OF BRB'S AND SHALL BE USED TO VERIFY CONFORMANCE.

12. BRB CASINGS SHALL HAVE A SQUARE OR RECTANGULAR PROFILE AND SHALL NOT HAVE A ROUND OR CIRCULAR PROFILE.

13. CONNECTION TYPES (BOLTED, WELDED OR PINNED) ARE ALLOWED BY BRB SUPPLIER EXCEPT AT EXPOSED BRACE LOCATIONS "E". AT THESE LOCATIONS WELDED CONNECTIONS ARE REQUIRED AND SHALL MEET THE GUSSET PLATE DIMENSIONS INDICATED ON THE FRAME ELEVATIONS.

14. BRB'S SHALL BE DESIGNED ACCORDING TO THE FOLLOWING PARAMETERS:
- β max = 1.05
- ρ = 1.3
- βω max = 1.35
- ωe = 1.25
- Asc = SEE FRAME ELEVATIONS
- Kf = STIFFNESS MODIFICATION FACTOR SEE FRAME ELEVATIONS

15. FOR REQUIRED DESIGN ELASTIC DRIFT AT BUCKLING RESTRAINED BRACED FRAMES SEE A5/SF212

16. BRB BRACES, CONNECTIONS AND GUSSET PLATES SHALL BE DESIGNED IN ACCORDANCE WITH AISC 341-05 SEISMIC PROVISIONS FOR STRUCTURAL STEEL BUILDINGS.

17. WHERE BOLTED CONNECTIONS ARE USED FOR BRB CONNECTION. BRB SUPPLIER SHALL DESIGN BOLTS AS A SLIP-CRITICAL CONNECTION FOR Pysc LOAD CONDITION AND SHALL ALSO DESIGN BOLTED CONNECTION FOR BEARING FOR THE ULTIMATE CONDITION (1.1 • βω • Pysc).

18. FINAL STIFFNESS MODIFICATION FACTORS SHALL BE WITHIN +/-10% OF THOSE INDICATED.

UNLESS A PROFESSIONAL SEAL WITH SIGNATURE AND DATE IS AFFIXED, THIS DOCUMENT IS PRELIMINARY AND IS NOT INTENDED FOR CONSTRUCTION, RECORDING PURPOSES, OR IMPLEMENTATION

UTAH VALLEY UNIVERSITY

State of Utah
Department of Administrative Services
Division of Facilities Construction & Management
4110 State Office Building
Salt Lake City, Utah 84114
Phone: (801) 538 - 3018
Fax: (801) 538 - 3267

CRSA METHODSTUDIO INC.

CRSA ARCHITECTS
649 east south temple
salt lake city, utah 84102
phone:(801) 355-5915

METHOD STUDIO INC.
925 south west temple
salt lake city, utah 84101
phone:(801) 532-4422

DFCM APPROVAL STAMP

project:

UVU Classroom Building - Volume 1

800 West University Parkway
Orem, UT 84058

project#: DFCM# 12192790
date: April 30, 2013

revisions:

1	Addenda 5	05.24.13

title:

BRB Frame Elevations

sheet:

SF203

Bid Doc

REAVELEY ENGINEERS + ASSOCIATES
Consulting Structural Engineers

STEEL STUD ELEVATION NOTES

1. VERIFY ALL DATUM ELEVATIONS W/ ARCHITECTURAL DRAWINGS.

2. SEE ARCHITECTURAL DRAWINGS FOR WALL SYSTEM TYPES AND LOCATION OF OPENINGS.

3. SEE TYPICAL NON-LOAD BEARING EXTERIOR STEEL STUD FRAMING SCHEDULE FOR EXTERIOR STEEL STUD FRAMING.

4. GALVANIZED RELIEF ANGLE IS REQUIRED AT ALL FLOOR LEVELS SUPPORTING MASONRY VENEER, SEE DETAIL D2/SF611.

5. SEE TYPICAL STUD FRAMING DETAILS ON SHEETS SF611, SF612 AND SF613.

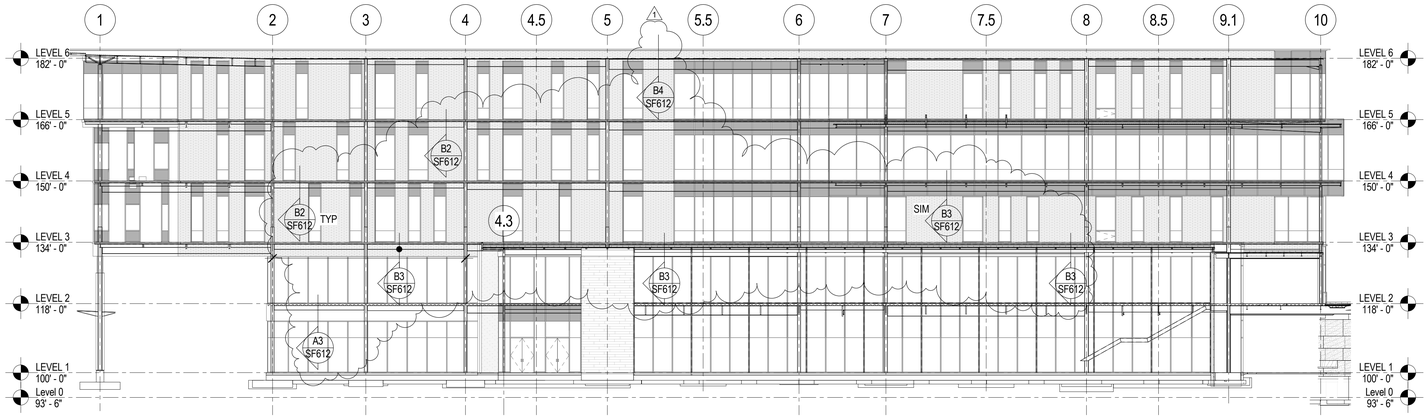

C1 SF204 South Elevation

SCALE: 1/16" = 1'-0"

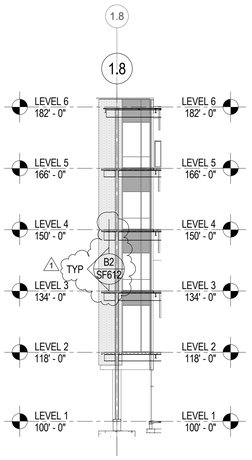

B1 SF204 South Elevation - Partial

SCALE: 1/16" = 1'-0"

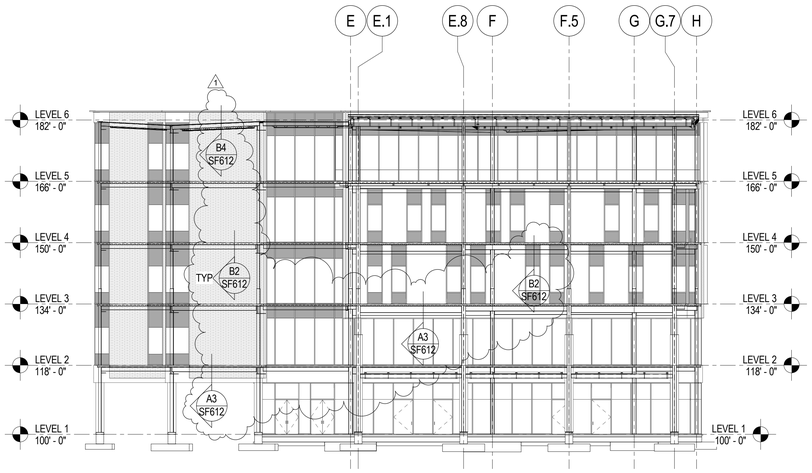

B2 SF204 West Elevation

SCALE: 1/16" = 1'-0"

REAVELEY ENGINEERS + ASSOCIATES
Consulting Structural Engineers

UNLESS A PROFESSIONAL SEAL WITH SIGNATURE AND DATE IS AFFIXED, THIS DOCUMENT IS PRELIMINARY AND IS NOT INTENDED FOR CONSTRUCTION, RECORDING PURPOSES, OR IMPLEMENTATION

UTAH VALLEY UNIVERSITY

State of Utah
Department of Administrative Services
Division of Facilities Construction & Management
4110 State Office Building
Salt Lake City, Utah 84114
Phone: (801) 538 - 3018
Fax: (801) 538 - 3267

CRSA METHODSTUDIO INC.

CRSA ARCHITECTS
649 east south temple
salt lake city, utah 84102
phone:(801) 355-5915

METHOD STUDIO INC.
925 south west temple
salt lake city, utah 84101
phone:(801) 532-4422

DFCM APPROVAL STAMP

project:
UVU Classroom Building - Volume 1
800 West University Parkway
Orem, UT 84058

project#: DFCM# 12192790
date: April 30, 2013

revisions :
1 Addenda 5 05.24.13

title:
Steel Stud Elevation

sheet:
SF204

Bid Doc

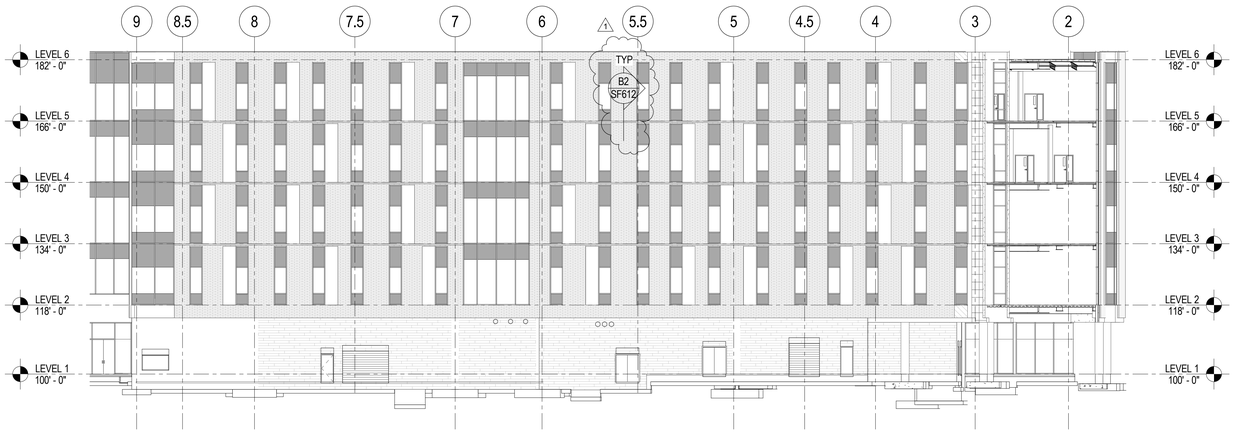

C1 / SF205 **North Elevation**

SCALE: 1/16" = 1'-0"

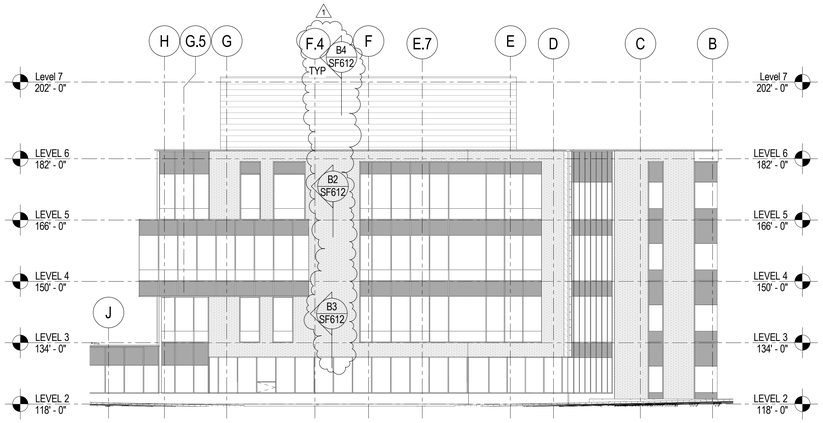

B1 / SF205 **East Elevation**

SCALE: 1/16" = 1'-0"

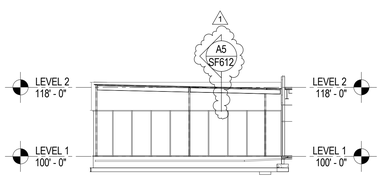

A1 / SF205 **Northwest Elevation - Partial Auditorium**

SCALE: 1/16" = 1'-0"

STEEL STUD ELEVATION NOTES

1. VERIFY ALL DATUM ELEVATIONS W/ ARCHITECTURAL DRAWINGS.

2. SEE ARCHITECTURAL DRAWINGS FOR WALL SYSTEM TYPES AND LOCATION OF OPENINGS.

3. SEE TYPICAL NON-LOAD BEARING EXTERIOR STEEL STUD FRAMING SCHEDULE FOR EXTERIOR STEEL STUD FRAMING.

4. GALVANIZED RELIEF ANGLE IS REQUIRED AT ALL FLOOR LEVELS SUPPORTING MASONRY VENEER, SEE DETAIL D2/SF611.

5. SEE TYPICAL STUD FRAMING DETAILS ON SHEETS SF611, SF612 AND SF613.

UNLESS A PROFESSIONAL SEAL WITH SIGNATURE AND DATE IS AFFIXED, THIS DOCUMENT IS PRELIMINARY AND IS NOT INTENDED FOR CONSTRUCTION, RECORDING PURPOSES, OR IMPLEMENTATION

UTAH VALLEY UVU UNIVERSITY

State of Utah
Department of Administrative Services
Division of Facilities Construction & Management
4110 State Office Building
Salt Lake City, Utah 84114
Phone: (801) 538 - 3018
Fax: (801) 538 - 3267

CRSA METHODSTUDIO INC.

CRSA ARCHITECTS
649 east south temple
salt lake city, utah 84102
phone:(801) 355-5915

METHOD STUDIO INC.
925 south west temple
salt lake city, utah 84101
phone:(801) 532-4422

DFCM APPROVAL STAMP

project:

UVU Classroom Building - Volume 1

800 West University Parkway
Orem, UT 84058

project#: DFCM# 12192790
date: April 30, 2013

revisions :

1	Addenda 5	05.24.13

title:

Steel Stud Elevation

sheet:

SF205

Bid Doc

REAVELEY ENGINEERS + ASSOCIATES
Consulting Structural Engineers

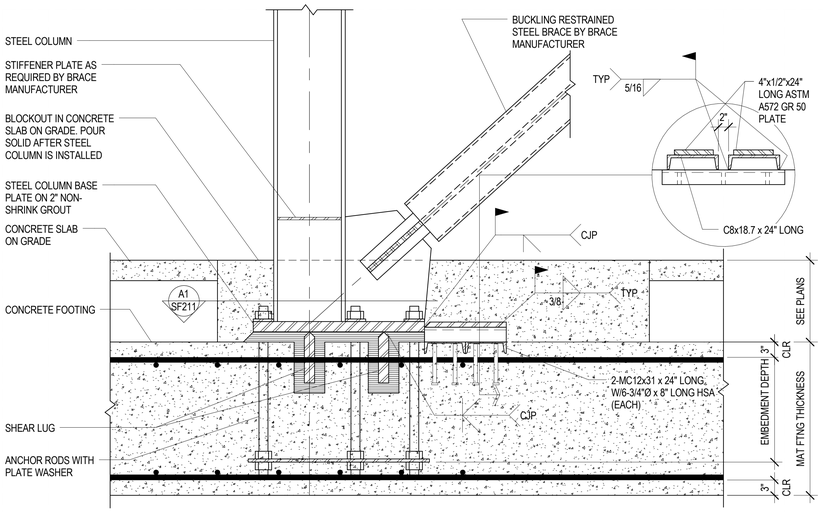

C1 / SF211 BUCKLING RESTRAINED BRACE FRAME DETAIL

NO SCALE

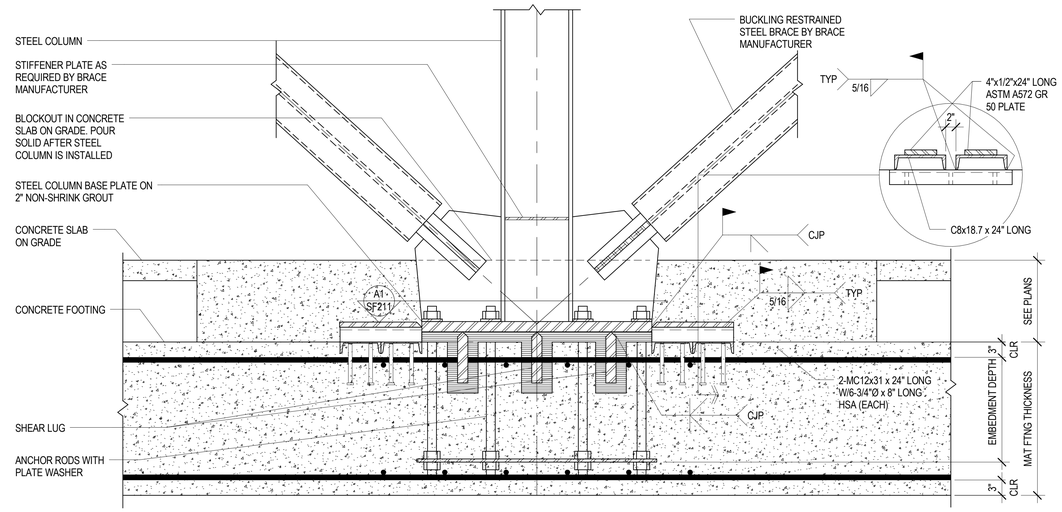

C2 / SF211 BUCKLING RESTRAINED BRACE FRAME DETAIL

NO SCALE

AREA MARKED AS PROTECTED ZONE SHALL COMPLY WITH THE FOLLOWING REQUIREMENTS:

1. WITHIN THE PROTECTED ZONE, DISCONTINUITIES CREATED BY FABRICATION OR ERECTION OPERATIONS, SUCH AS TACK WELDS, ERECTION AIDS, AIR-ARC GOUGING AND THERMAL CUTTING SHALL BE REPAIRED. REPAIR METHOD SHALL BE APPROVED THE ENGINEER OF RECORD.

2. WELDING, BOLTING, SCREWING OR SHOT IN ATTACHMENTS FOR PARTITIONS, DUCT WORK, PIPING OR OTHER CONSTRUCTION SHALL NOT BE PLACED WITHIN THE PROTECTED ZONE.

3.THE PROTECTED ZONE SHALL INCLUDE THE STEEL CORE AND ELEMENTS THAT CONNECT THE STEEL CORE TO BEAMS AND COLUMNS. IF THE MANUFACTURER PROVIDES A SLEEVE, THE PROTECTED ZONE SHALL EXTEND 2" BEYOND THE SLEEVE.

AREA MARKED AS PROTECTED ZONE SHALL COMPLY WITH THE FOLLOWING REQUIREMENTS:

1. WITHIN THE PROTECTED ZONE, DISCONTINUITIES CREATED BY FABRICATION OR ERECTION OPERATIONS, SUCH AS TACK WELDS, ERECTION AIDS, AIR-ARC GOUGING AND THERMAL CUTTING SHALL BE REPAIRED. REPAIR METHOD SHALL BE APPROVED THE ENGINEER OF RECORD.

2. WELDING, BOLTING, SCREWING OR SHOT IN ATTACHMENTS FOR PARTITIONS, DUCT WORK, PIPING OR OTHER CONSTRUCTION SHALL NOT BE PLACED WITHIN THE PROTECTED ZONE.

3.THE PROTECTED ZONE SHALL INCLUDE THE STEEL CORE AND ELEMENTS THAT CONNECT THE STEEL CORE TO BEAMS AND COLUMNS. IF THE MANUFACTURER PROVIDES A SLEEVE, THE PROTECTED ZONE SHALL EXTEND 2" BEYOND THE SLEEVE.

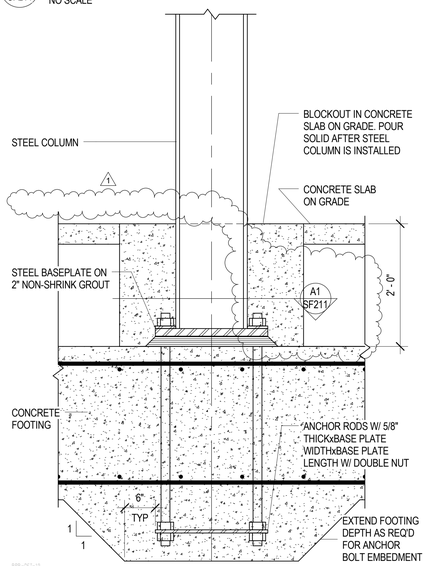

B1 / SF211 BASE PLATE DETAIL

NO SCALE

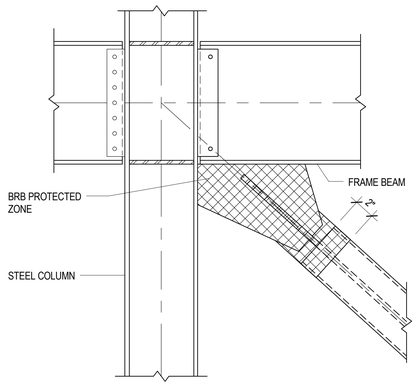

B2 / SF211 PROTECTED ZONE DETAIL FOR BUCKLING RESTRAINED BRACED FRAMES

NO SCALE

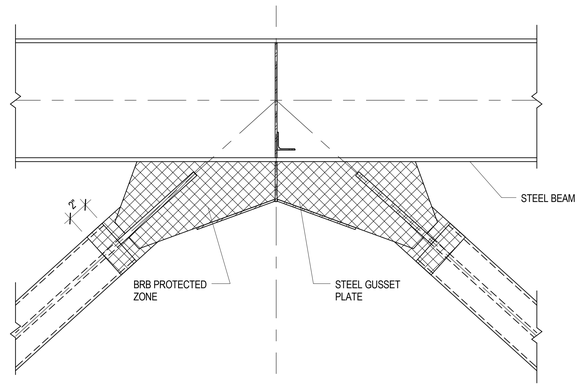

B3 / SF211 PROTECTED ZONE DETAIL FOR BUCKLING RESTRAINED BRACED FRAMES

NO SCALE

BRACED FRAME BASE PLATE & ANCHOR BOLT SCHEDULE

TYPE	BASE PLATE			SHEAR LUGS		ANCHOR BOLTS				'A' DIM	NOTES
	N (DET B)	B WIDTH	THICKNESS	DEPTH	THICKNESS	# BOLTS	DIAMETER	HOLE DIAMETER	GRADE		
1	VARIES	14"	1.1/2"	6	1.1/2"	6	3/4"	1.3/4"	ASTM F1554 GRADE 105	1.1/2"	DETAIL A
2	VARIES	14"	1.1/2"	6	1.1/2"	8	3/4"	1.3/4"	ASTM F1554 GRADE 105	1.1/2"	DETAIL B
3	VARIES	14"	2.1/4"	6	1.1/2"	6	1.1/2"	2.1/2"	ASTM F1554 GRADE 105	2.1/2"	DETAIL C
4	VARIES	14"	2.1/4"	6	1.1/2"	8	1.1/2"	2.1/2"	ASTM F1554 GRADE 105	2.1/2"	DETAIL D
5	VARIES	17"	2.1/2"	6	1.1/2"	6	1.3/4"	2.3/4"	ASTM F1554 GRADE 105	2.1/2"	DETAIL C
6	VARIES	17"	2.1/2"	6	1.1/2"	8	1.3/4"	2.3/4"	ASTM F1554 GRADE 105	2.1/2"	DETAIL D
7	VARIES	17"	2"	N/A	N/A	4	1.1/2"	2.1/2"	ASTM F1554 GRADE 105	2.1/2"	DETAIL E
8	VARIES								ASTM F1554 GRADE 105		
9	VARIES								ASTM F1554 GRADE 105		

NOTES:
1. ALL BASE PLATES SHALL BE ASTM A572 GRADE 50 STEEL.
2. SEE DETAILS FOR SHEAR LUG INFORMATION.
3. 'N' DIMENSION SHOWN IN SCHEDULE OCCURS AT COLUMN BASES THAT DO NOT REQUIRE BRB GUSSET PLATE CONNECTION TO BASE PLATE. WHERE GUSSET PLATE CONNECTS TO BASE PLATE THE LENGTH VARIES AND SHALL BE COORDINATED WITH BRB/GUSSET PLATE SUPPLIER.
4. SEE BRACE ELEVATIONS FOR ANCHOR BOLT EMBEDMENT DEPTH.

A1 / SF211 BRACED FRAME BASE PLATE & ANCHOR BOLT SCHEDULE

NO SCALE

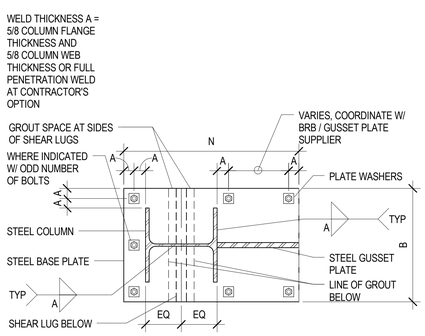

DETAIL A

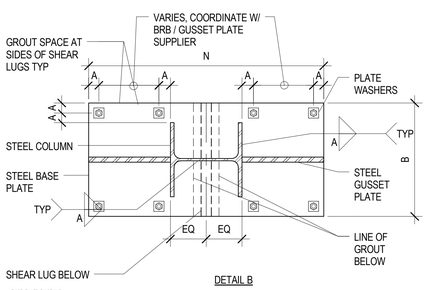

DETAIL B

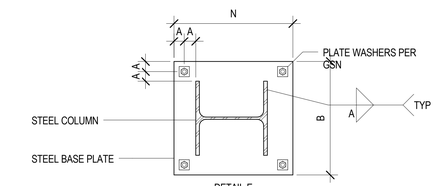

DETAIL E

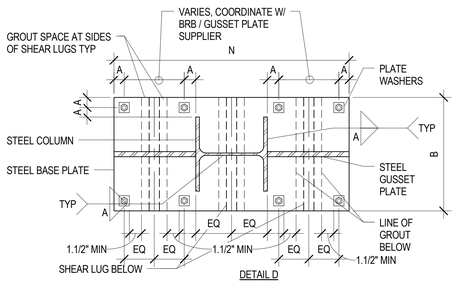

DETAIL D

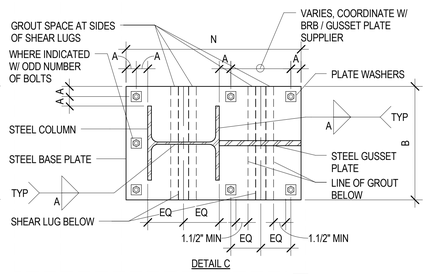

DETAIL C

REAVELEY ENGINEERS + ASSOCIATES
Consulting Structural Engineers

UNLESS A PROFESSIONAL SEAL WITH SIGNATURE AND DATE IS AFFIXED, THIS DOCUMENT IS PRELIMINARY AND IS NOT INTENDED FOR CONSTRUCTION, RECORDING PURPOSES, OR IMPLEMENTATION

UTAH VALLEY UNIVERSITY

State of Utah
Department of Administrative Services
Division of Facilities Construction & Management
4110 State Office Building
Salt Lake City, Utah 84114
Phone: (801) 538 - 3018
Fax: (801) 538 - 3267

CRSA METHODSTUDIO INC.

CRSA ARCHITECTS
649 east south temple
salt lake city, utah 84102
phone:(801) 355-5915

METHOD STUDIO INC.
925 south west temple
salt lake city, utah 84101
phone:(801) 532-4422

DFCM APPROVAL STAMP

project:
UVU Classroom Building - Volume 1
800 West University Parkway
Orem, UT 84058

project#: DFCM# 12192790
date: April 30, 2013

revisions :
1 Addenda 5 05.24.13

title:
Typical BRB Frame Details

sheet:
SF211

Bid Doc

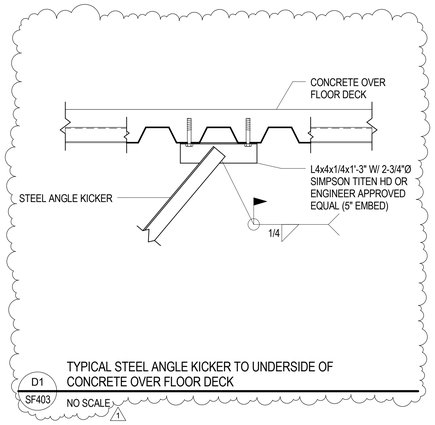

D1 SF403 TYPICAL STEEL ANGLE KICKER TO UNDERSIDE OF CONCRETE OVER FLOOR DECK
NO SCALE

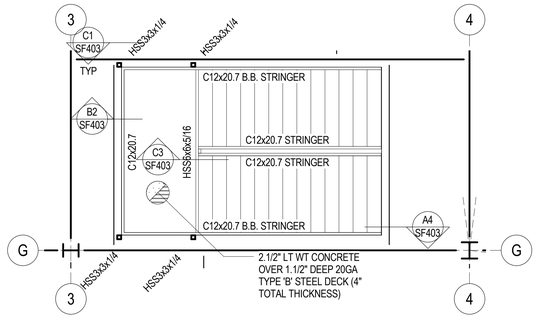

D2 SF403 South West Stair - Level 5
SCALE: 1/4" = 1'-0"

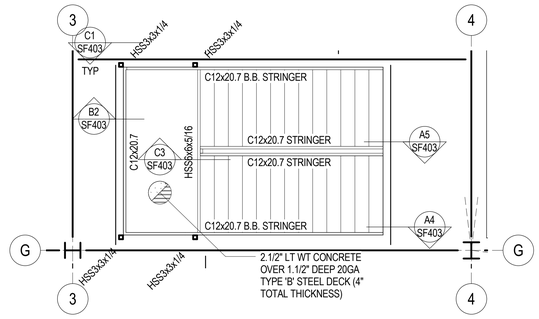

D3 SF403 South West Stair - Level 3 & 4
SCALE: 1/4" = 1'-0"

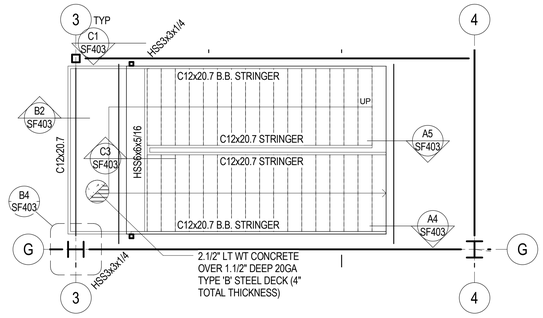

D4 SF403 South West Stair - Level 2
SCALE: 1/4" = 1'-0"

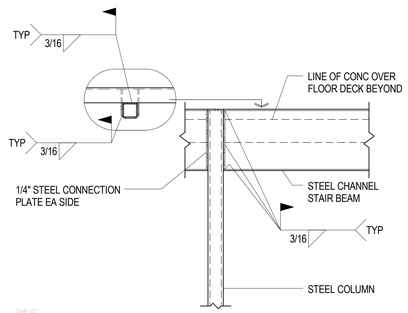

C1 SF403 TYPICAL STAIR DETAIL
NO SCALE

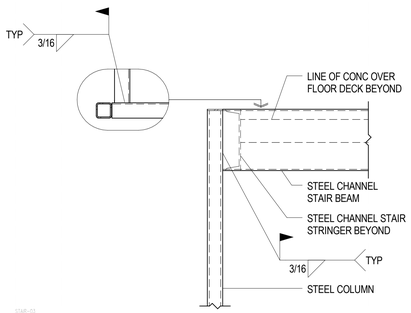

C2 SF403 TYPICAL STAIR DETAIL
NO SCALE

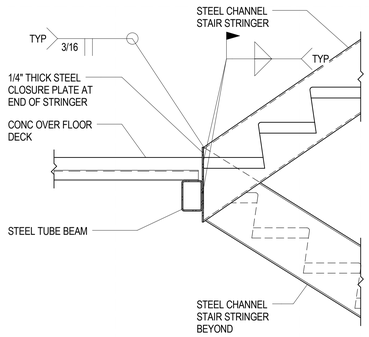

C3 SF403 TYPICAL STAIR DETAIL
NO SCALE

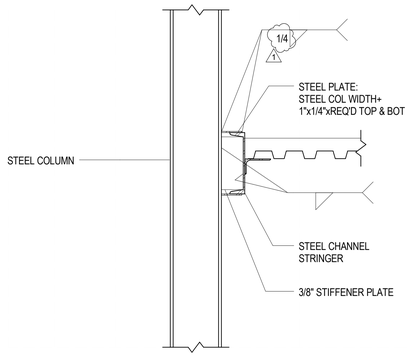

C4 SF403 TYPICAL STAIR DETAIL
NO SCALE

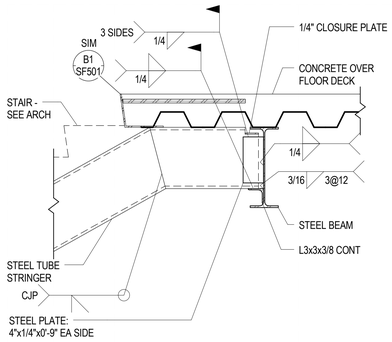

C5 SF403 STEEL TUBE STRINGER TO STEEL BEAM
NO SCALE

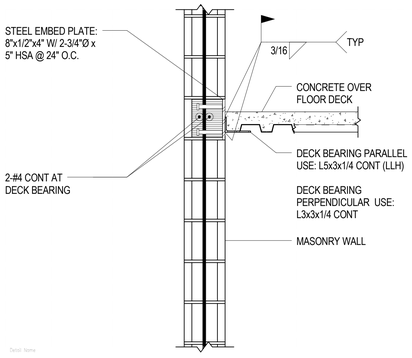

B1 SF403 FLOOR DECK BEARING AT MASONRY WALL
NO SCALE

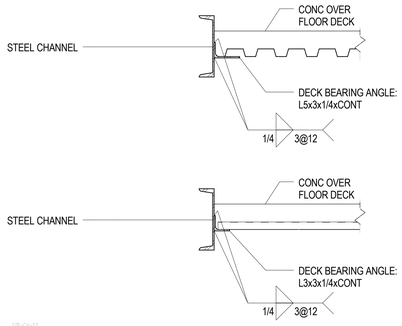

B2 SF403 CONCRETE OVER FLOOR DECK BEARING AT STEEL CHANNEL
NO SCALE

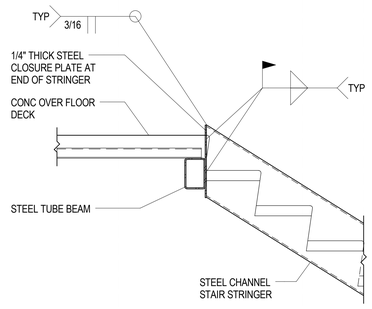

B3 SF403 TYPICAL STAIR DETAIL
NO SCALE

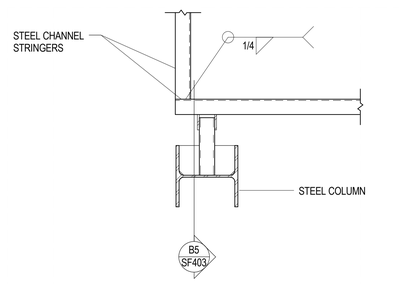

B4 SF403 TYPICAL STAIR DETAIL
NO SCALE

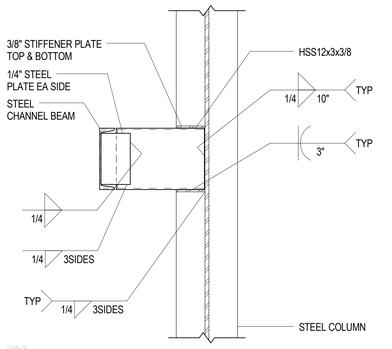

B5 SF403 TYPICAL STAIR DETAIL
NO SCALE

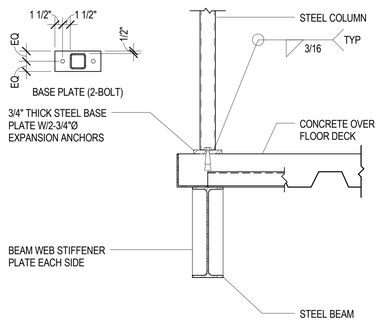

A1 SF403 TYPICAL STAIR BASE DETAILS
NO SCALE

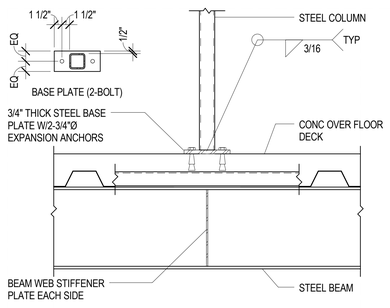

B2 SF403 CONCRETE OVER FLOOR DECK BEARING AT STEEL CHANNEL
NO SCALE

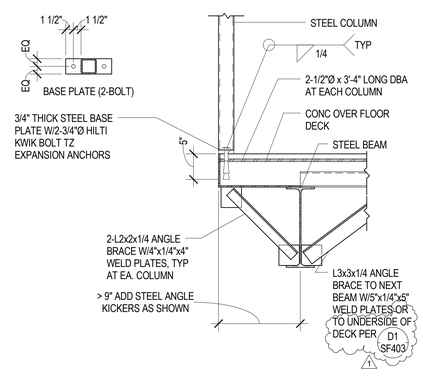

B3 SF403 TYPICAL STAIR DETAIL
NO SCALE

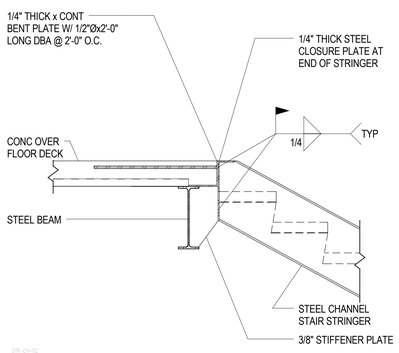

A4 SF403 STAIR STRINGER CONNECTION AT FLOOR
NO SCALE

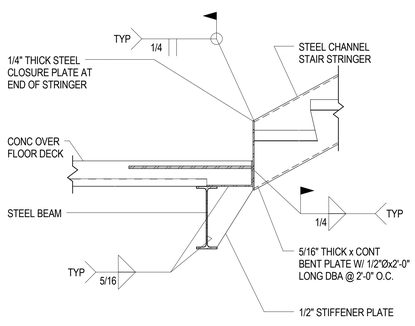

A5 SF403 STAIR STRINGER CONNECTION AT FLOOR
NO SCALE

REAVELEY ENGINEERS + ASSOCIATES
Consulting Structural Engineers

UNLESS A PROFESSIONAL SEAL WITH SIGNATURE AND DATE IS AFFIXED, THIS DOCUMENT IS PRELIMINARY AND IS NOT INTENDED FOR CONSTRUCTION, RECORDING PURPOSES, OR IMPLEMENTATION

UTAH VALLEY UNIVERSITY

State of Utah
Department of Administrative Services
Division of Facilities Construction & Management
4110 State Office Building
Salt Lake City, Utah 84114
Phone: (801) 538 - 3018
Fax: (801) 538 - 3267

CRSA METHODSTUDIO INC.

CRSA ARCHITECTS
649 east south temple
salt lake city, utah 84102
phone:(801) 355-5915

METHOD STUDIO INC.
925 south west temple
salt lake city, utah 84101
phone:(801) 532-4422

DFCM APPROVAL STAMP

project:
UVU Classroom Building - Volume 1
800 West University Parkway
Orem, UT 84058

project#: DFCM# 12192790
date: April 30, 2013

revisions:
1 Addenda 5 05.24.13

title:
Enlarged Stair Plans & Details

sheet:
SF403

Bid Doc

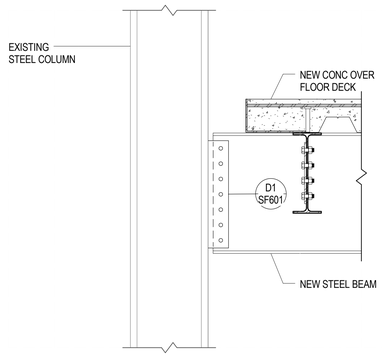

D1 / SF503 NEW STEEL BEAM TO EXISTING STRUCTURE
NO SCALE

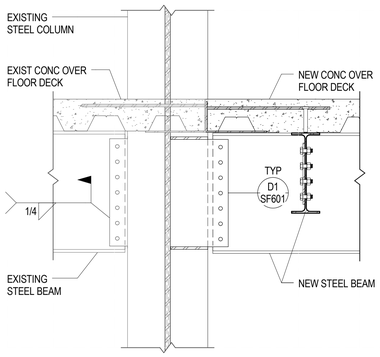

D2 / SF503 NEW STEEL BEAM TO EXISTING STRUCTURE
NO SCALE

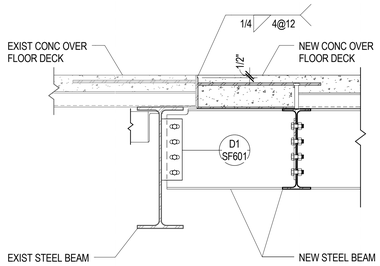

D3 / SF503 NEW STEEL BEAM TO EXISTING STRUCTURE
NO SCALE

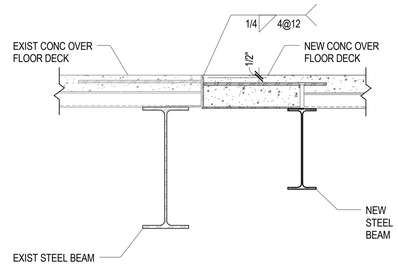

D4 / SF503 NEW STEEL BEAM TO EXISTING STRUCTURE
NO SCALE

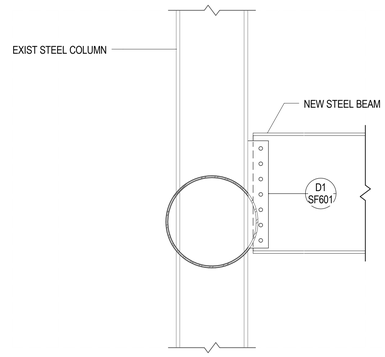

D5 / SF503 NEW STEEL BEAM TO EXISTING STRUCTURE
NO SCALE

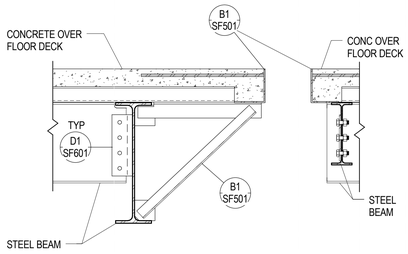

C1 / SF503 STEEL BEAM TO STEEL BEAM CONNECTION AT EXPANSION JOINT
NO SCALE

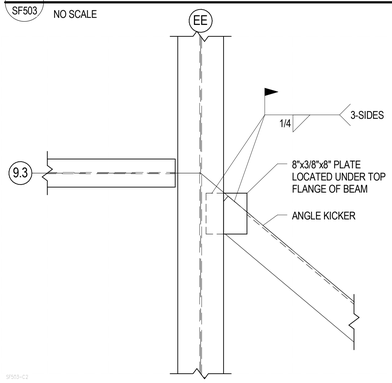

C2 / SF503 ANGLE BRACE CONNECTION - PLAN VIEW
NO SCALE

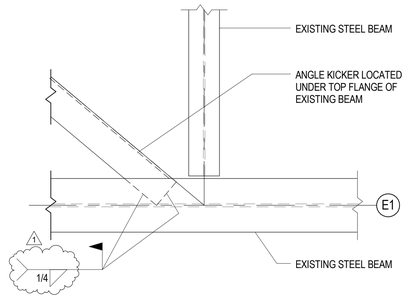

C3 / SF503 ANGLE BRACE CONNECTION TO EXISTING STRUCTURE - PLAN VIEW
NO SCALE

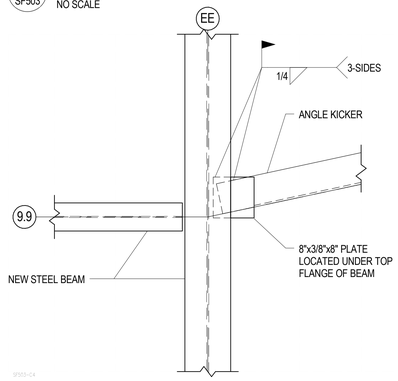

C4 / SF503 ANGLE BRACE CONNECTION - PLAN VIEW
NO SCALE

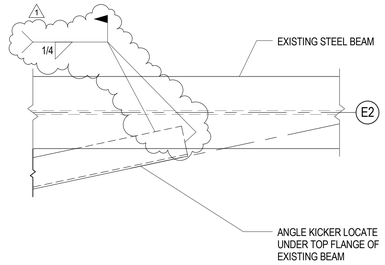

C5 / SF503 ANGLE BRACE CONNECTION TO EXISTING STRUCTURE - PLAN VIEW
NO SCALE

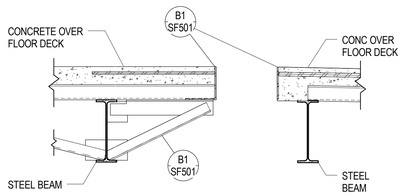

B3 / SF503 STEEL BEAM TO STEEL BEAM CONNECTION AT EXPANSION JOINT
NO SCALE

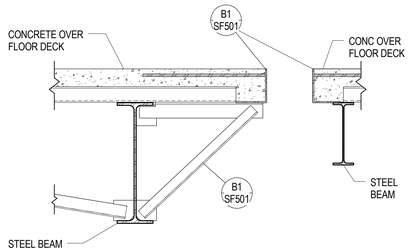

B4 / SF503 STEEL BEAM W/ STEEL ANGLE KICKERS AT EXPANSION JOINT
NO SCALE

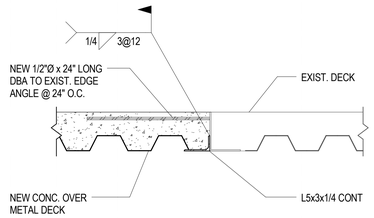

B5 / SF503 NEW DECK TO EXISTING DECK
NO SCALE

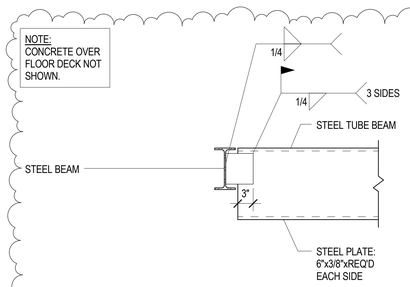

A2 / SF503 STEEL TUBE BEAM CONNECTION TO STEEL BEAM
NO SCALE

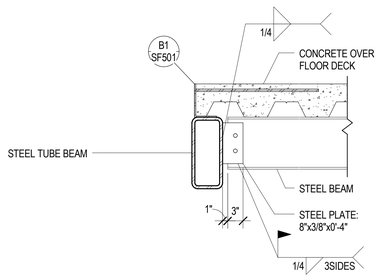

A3 / SF503 STEEL TUBE BEAM - EDGE CONDITION
NO SCALE

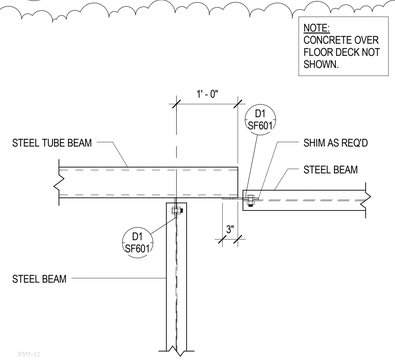

A4 / SF503 STEEL BEAM TO STEEL TUBE BEAM CONNECTION - PLAN VIEW
NO SCALE

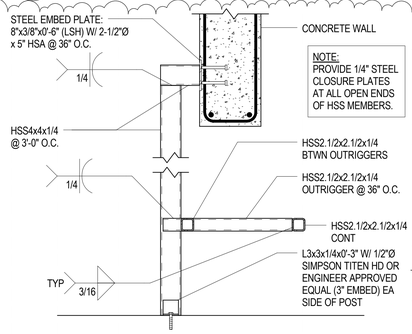

A5 / SF503 WALL BENCH SUPPORT DETAIL
NO SCALE

REAVELEY ENGINEERS + ASSOCIATES
Consulting Structural Engineers

UNLESS A PROFESSIONAL SEAL WITH SIGNATURE AND DATE IS AFFIXED, THIS DOCUMENT IS PRELIMINARY AND IS NOT INTENDED FOR CONSTRUCTION, RECORDING PURPOSES, OR IMPLEMENTATION

UTAH VALLEY UNIVERSITY

State of Utah
Department of Administrative Services
Division of Facilities Construction & Management
4110 State Office Building
Salt Lake City, Utah 84114
Phone: (801) 538 - 3018
Fax: (801) 538 - 3267

CRSA METHODSTUDIO INC.

CRSA ARCHITECTS
649 east south temple
salt lake city, utah 84102
phone:(801) 355-5915

METHOD STUDIO INC.
925 south west temple
salt lake city, utah 84101
phone:(801) 532-4422

DFCM APPROVAL STAMP

project:
UVU Classroom Building - Volume 1
800 West University Parkway
Orem, UT 84058

project#: DFCM# 12192790
date: April 30, 2013

revisions :
1 Addenda 5 05.24.13

title:
Floor Framing Details

sheet:
SF503

Bid Doc

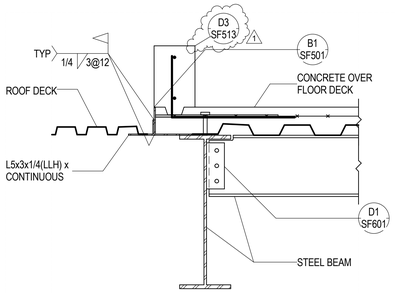

D1 SF512 TYPICAL ROOF DECK CONNECTION TO EDGE OF PENTHOUSE FLOOR
NO SCALE

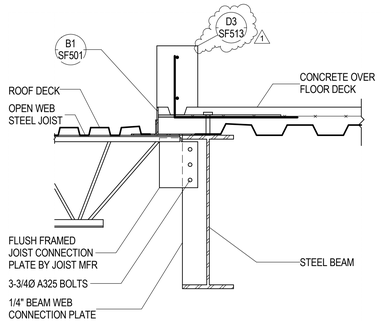

D2 SF512 TYPICAL FLUSH FRAMED OPEN WEB STEEL JOIST CONNECTION TO STEEL BEAM
NO SCALE

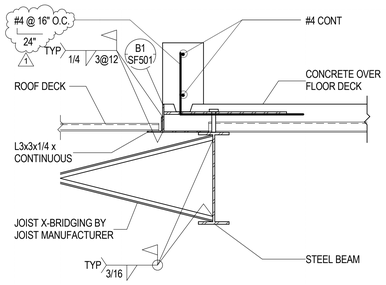

D3 SF512 TYPICAL ROOF DECK CONNECTION TO EDGE OF PENTHOUSE FLOOR
NO SCALE

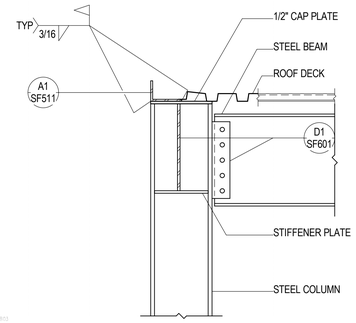

D4 SF512 TYPICAL BOLTED ROOF BEAM BEARING AT COLUMN FLANGE - ONE SIDE
NO SCALE

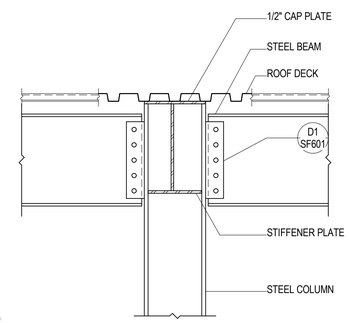

D5 SF512 TYPICAL BOLTED ROOF BEAM CONNECTION TO COLUMN FLANGE - TWO SIDES
NO SCALE

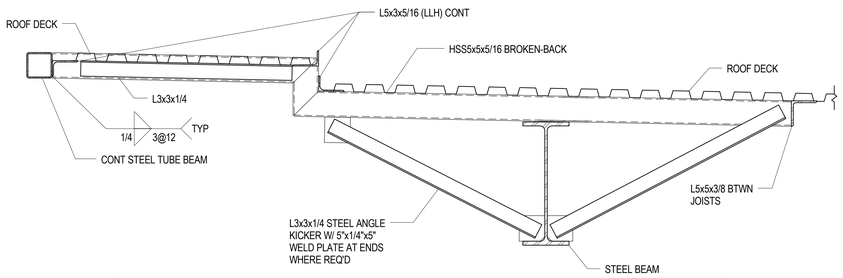

C1 SF512 STEEL TUBE BEAM OUTRIGGER AT ROOF EDGE STEEL BEAM
NO SCALE

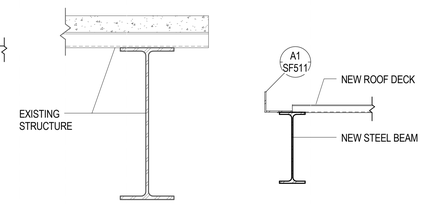

C3 SF512 STEEL BEAM EDGE CONDTION AT EXISTING STRUCTURE
NO SCALE

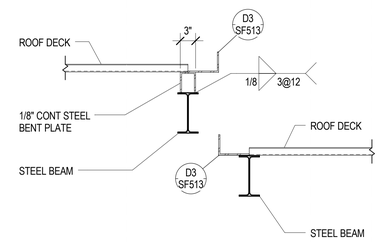

C4 SF512 STEEL BEAM EDGE DETAIL AT TRANSITION
NO SCALE

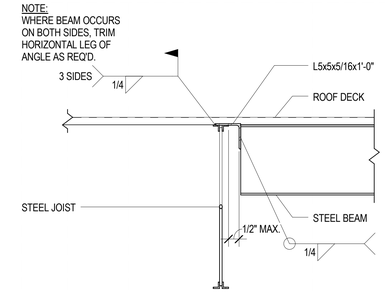

C5 SF512 STEEL BEAM TO STEEL JOIST
NO SCALE

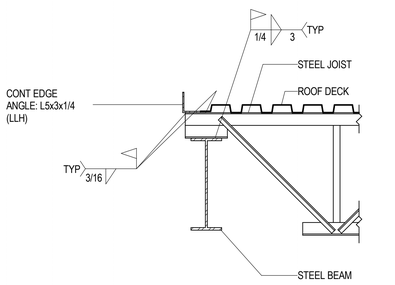

B1 SF512 TYPICAL JOIST BEARING AT STEEL BEAM
NO SCALE

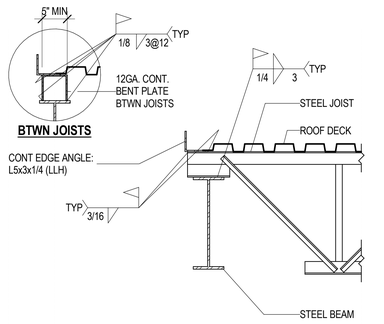

B2 SF512 TYPICAL JOIST BEARING AT STEEL BEAM
NO SCALE

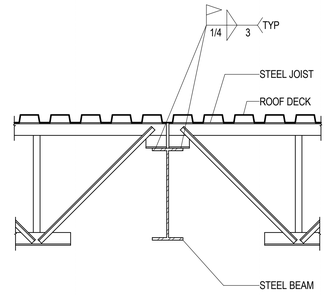

B3 SF512 TYPICAL JOIST BEARING AT STEEL BEAM
NO SCALE

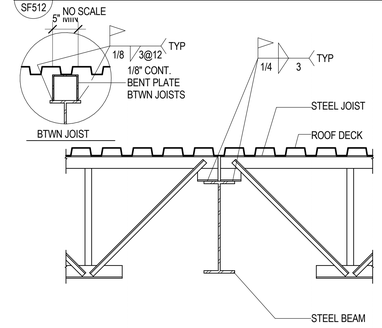

B4 SF512 TYPICAL JOIST BEARING AT STEEL BEAM CHORD TIE/DRAG STRUT
NO SCALE

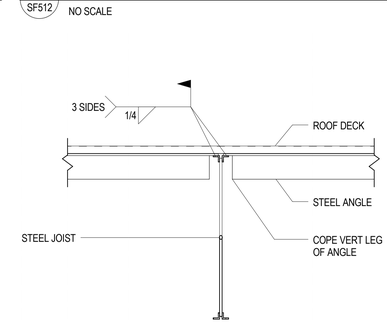

B5 SF512 STEEL ANGLE TO STEEL JOIST
NO SCALE

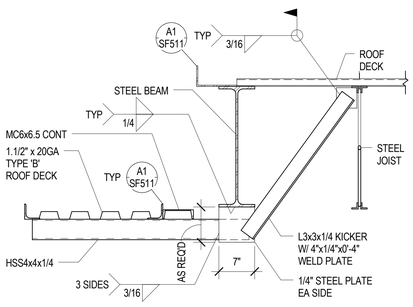

A1 SF512 STEEL COLUMN BASE AT STEEL BEAM W/ STEEL ANGLE KICKER
NO SCALE

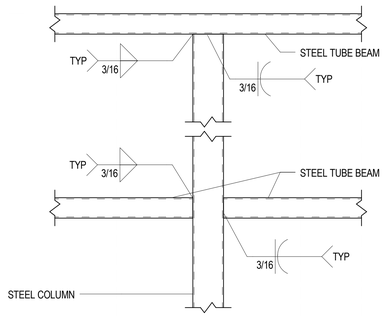

A2 SF512 TYPICAL SCREEN WALL CONNECTION DETAIL
NO SCALE

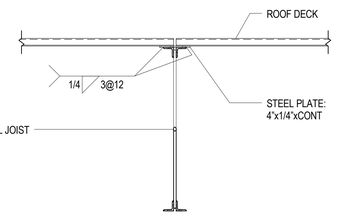

A3 SF512 ROOF DECK AT TRANSITION BEARING AT STEEL JOIST
NO SCALE

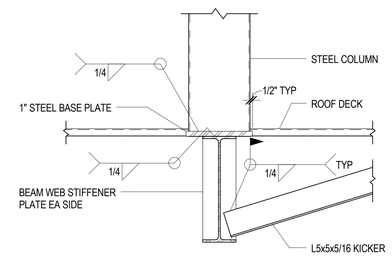

A4 SF512 STEEL COLUMN BASE AT STEEL BEAM W/ STEEL ANGLE KICKER
NO SCALE

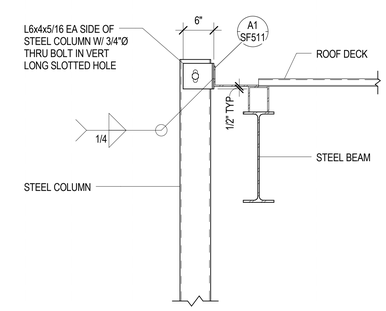

A5 SF512 STEEL FRAME COLUMN TO ROOF DECK EDGE
NO SCALE

REAVELEY
ENGINEERS + ASSOCIATES
Consulting Structural Engineers

UNLESS A PROFESSIONAL SEAL WITH SIGNATURE AND DATE IS AFFIXED, THIS DOCUMENT IS PRELIMINARY AND IS NOT INTENDED FOR CONSTRUCTION, RECORDING PURPOSES, OR IMPLEMENTATION

UTAH VALLEY UNIVERSITY

State of Utah
Department of Administrative Services

Division of Facilities
Construction & Management
4110 State Office Building
Salt Lake City, Utah 84114
Phone: (801) 538 - 3018
Fax: (801) 538 - 3267

CRSA METHODSTUDIO INC.

CRSA ARCHITECTS
649 east south temple
salt lake city, utah 84102
phone:(801) 355-5915

METHOD STUDIO INC.
925 south west temple
salt lake city, utah 84101
phone:(801) 532-4422

DFCM APPROVAL STAMP

project:
UVU Classroom Building - Volume 1
800 West University Parkway
Orem, UT 84058

project#: DFCM# 12192790
date: April 30, 2013

revisions :
1 Addenda 5 05.24.13

title:
Typical Roof Framing Details

sheet:
SF512

Bid Doc

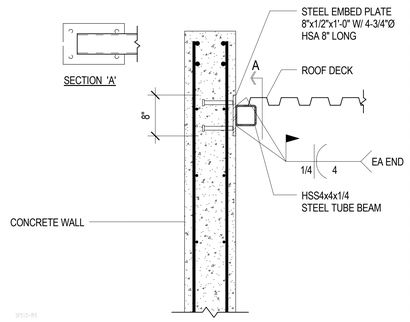

D1 / SF513 STEEL TUBE BEAM CONNECTION TO CONCRETE WALL
NO SCALE

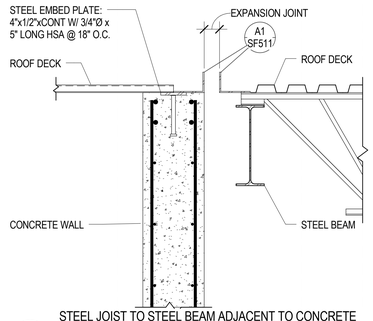

D2 / SF513 STEEL JOIST TO STEEL BEAM ADJACENT TO CONCRETE WALL AT EXPANSION JOINT
NO SCALE

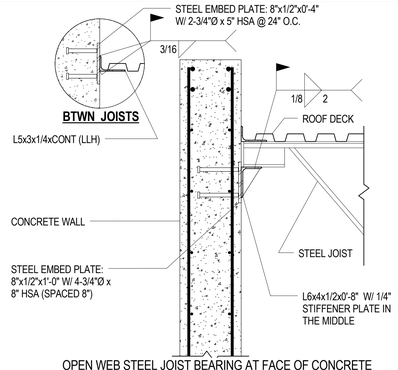

D3 / SF513 OPEN WEB STEEL JOIST BEARING AT FACE OF CONCRETE WALL
NO SCALE

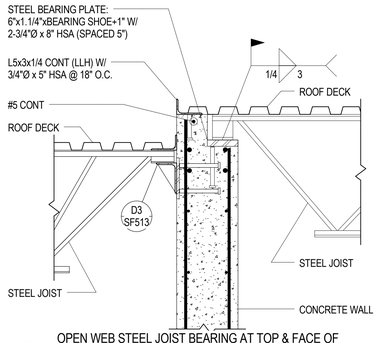

D4 / SF513 OPEN WEB STEEL JOIST BEARING AT TOP & FACE OF CONCRETE WALL
NO SCALE

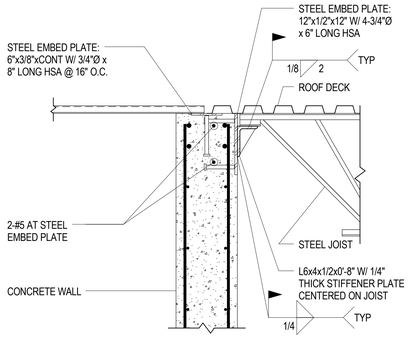

D5 / SF513 STEEL JOIST TO CONCRETE WALL
NO SCALE

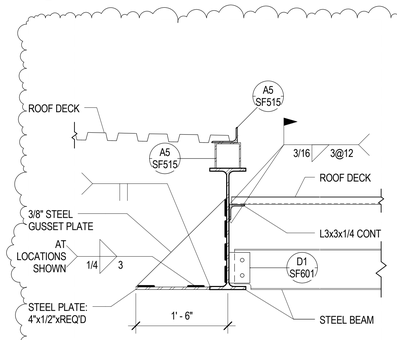

C1 / SF513 STEEL BEAM TO STEEL BEAM AT ROOF TRANSITION
NO SCALE

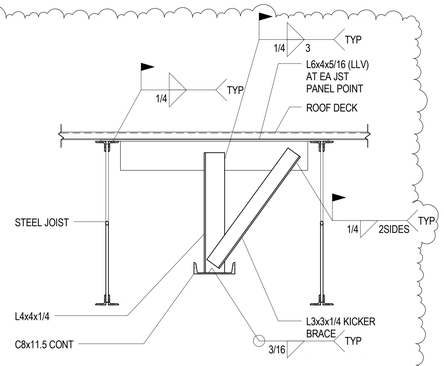

C2 / SF513 AUDITORIUM PARTITION DOOR SUPPORT
NO SCALE

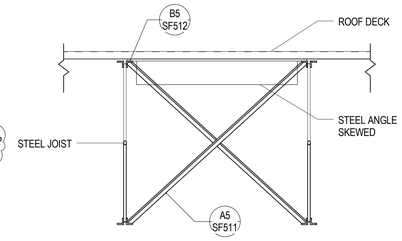

C3 / SF513 STEEL ANGLE TO STEEL JOIST WITH CROSS BRACING
NO SCALE

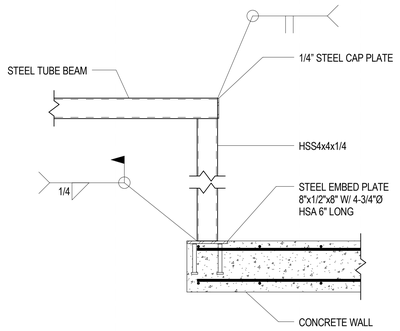

C4 / SF513 STEEL TUBE BEAM CONNECTION TO CONCRETE WALL - PLAN VIEW
NO SCALE

SLIDE BRG. FACTORED VERTICAL LOAD

GRID	Pu
H/14	227k
J/14	64k
OTHER	22k

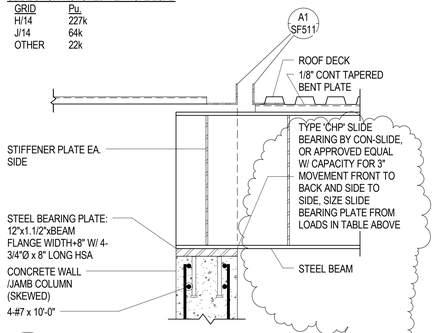

C5 / SF513 STEEL BEAM TO CONCRETE WALL - SLIP CONNECTION
NO SCALE

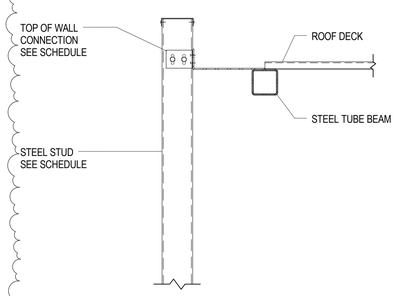

B1 / SF513 STEEL TUBE BEAM AT ROOF EDGE CONDITION
NO SCALE

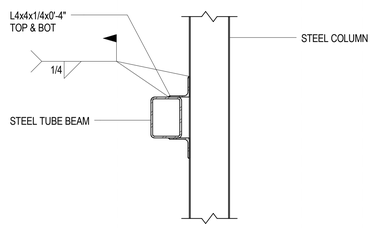

B2 / SF513 STEEL TUBE BEAM SUPPORT AT STEEL COLUMN
NO SCALE

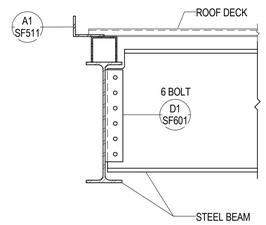

B3 / SF513 TYPICAL STEEL BEAM TO BEAM CONNECTION AT ROOF EDGE
NO SCALE

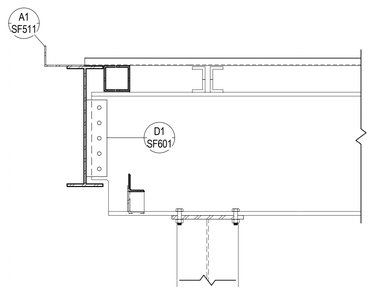

B4 / SF513 STEEL BEAM TO STEEL BEAM AT STEEL COLUMN
NO SCALE

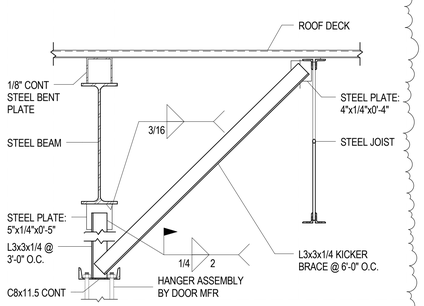

B5 / SF513 PARTITION DOOR SUPPORT BELOW STEEL BEAM
NO SCALE

REAVELEY
ENGINEERS + ASSOCIATES
Consulting Structural Engineers

UNLESS A PROFESSIONAL SEAL WITH SIGNATURE AND DATE IS AFFIXED, THIS DOCUMENT IS PRELIMINARY AND IS NOT INTENDED FOR CONSTRUCTION, RECORDING PURPOSES, OR IMPLEMENTATION

UTAH VALLEY UNIVERSITY

State of Utah
Department of Administrative Services
Division of Facilities Construction & Management
4110 State Office Building
Salt Lake City, Utah 84114
Phone: (801) 538 - 3018
Fax: (801) 538 - 3267

CRSA METHODSTUDIO INC.

CRSA ARCHITECTS
649 east south temple
salt lake city, utah 84102
phone:(801) 355-5915

METHOD STUDIO INC.
925 south west temple
salt lake city, utah 84101
phone:(801) 532-4422

DFCM APPROVAL STAMP

project:
UVU Classroom Building - Volume 1
800 West University Parkway
Orem, UT 84058

project#: DFCM# 12192790
date: April 30, 2013

revisions :
1 Addenda 5 05.24.13

title:
Roof Framing Details

sheet:
SF513

Bid Doc

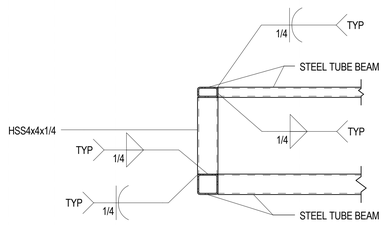

D1 SF514 STEEL TUBE BEAM TO STEEL TUBE BEAM - CORNER CONNECTION
NO SCALE

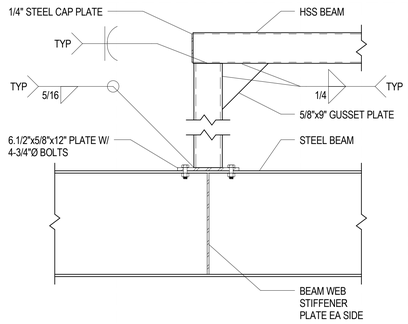

D2 SF514 COOLING TOWER FRAME DETAIL
NO SCALE

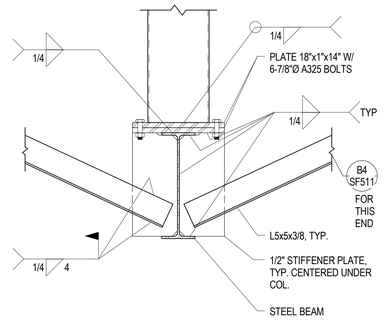

D3 SF514 COLUMN TO BEAM CONNECTION
NO SCALE

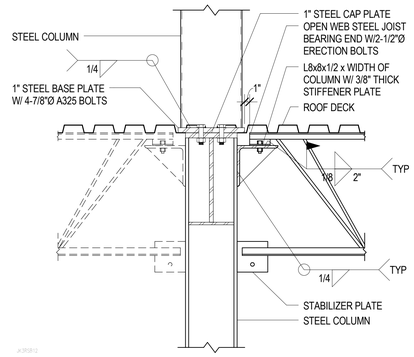

D4 SF514 TYPICAL OPEN WEB STEEL JOIST BEARING AT STEEL COLUMN FLANGES
NO SCALE

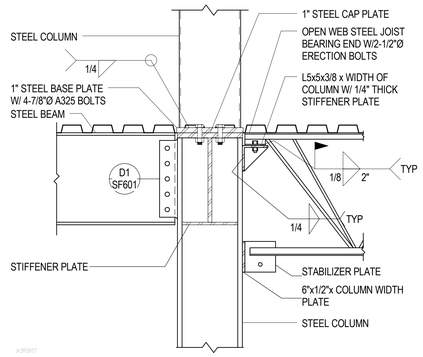

D5 SF514 TYPICAL STEEL BEAM AND JOIST BEARING AT STEEL COLUMN
NO SCALE

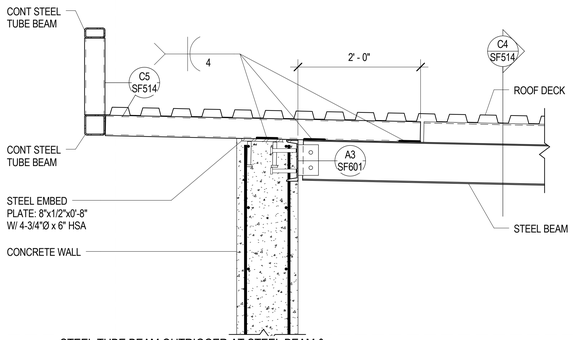

C1 SF514 STEEL TUBE BEAM OUTRIGGER AT STEEL BEAM & CONCRETE WALL
NO SCALE

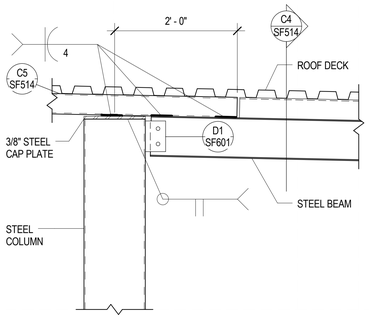

C3 SF514 STEEL TUBE BEAM OUTRIGGER AT STEEL BEAM & COLUMN
NO SCALE

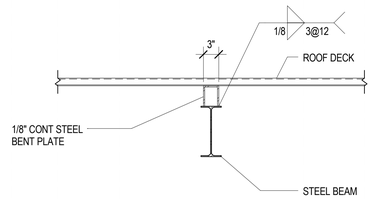

C4 SF514 STEEL BEAM W/ CONT HAT PLATE
NO SCALE

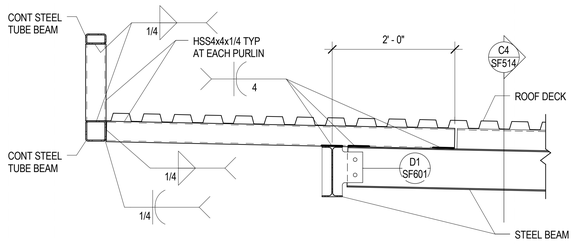

C5 SF514 STEEL TUBE BEAM OUTRIGGER AT STEEL BEAM
NO SCALE

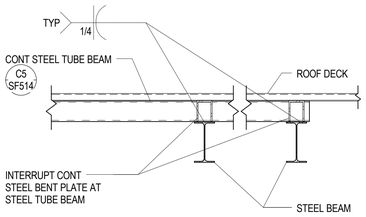

B1 SF514 STEEL TUBE BEAM CONNECTION TO STEEL BEAM
NO SCALE

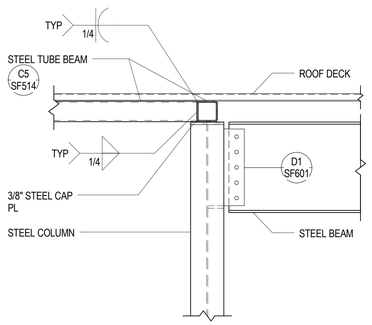

B2 SF514 STEEL TUBE BEAM TO STEEL TUBE BEAM CONNECTION AT STEEL COLUMN
NO SCALE

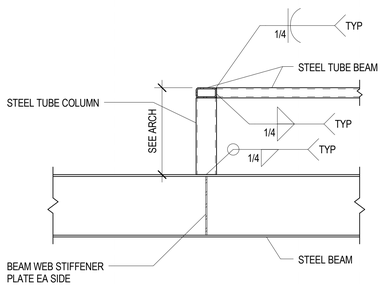

B3 SF514 STEEL TUBE BEAM TO STEEL BEAM
NO SCALE

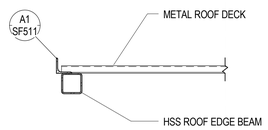

B4 SF514 ROOF EDGE DETAIL AT STEEL TUBE BEAM
NO SCALE

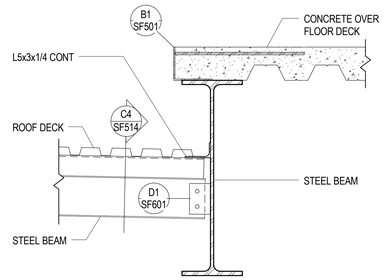

B5 SF514 STEEL BEAM TO STEEL BEAM CONNECTION AT CONCRETE OVER FLOOR DECK TO STEEL ROOF DECK TRANSITION
NO SCALE

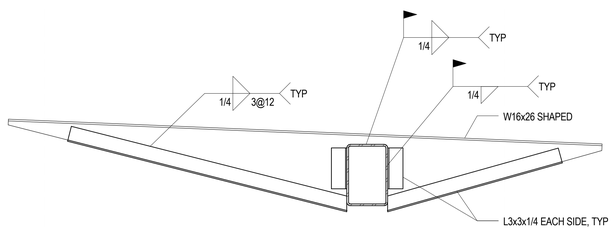

A1 SF514 TYPICAL CANOPY PURLIN DETAIL
NO SCALE

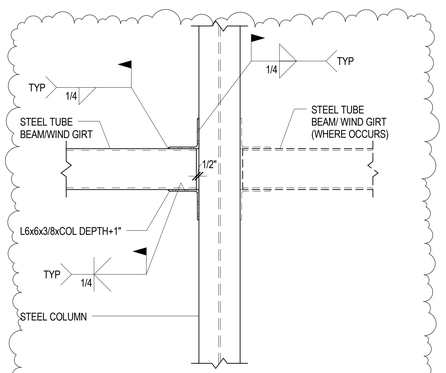

A3 SF514 TYPICAL STEEL TUBE WING GIRT CONNECTION TO STEEL COLUMN
NO SCALE

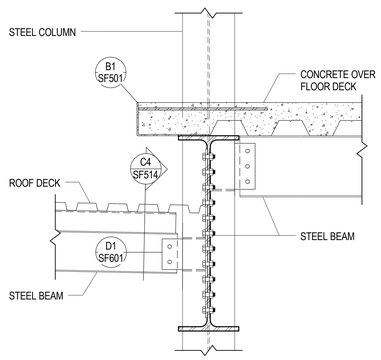

A5 SF514 STEEL BEAM TO STEEL COLUMN CONNECTION AT CONC OVER FLOOR DECK TO STEEL ROOF DECK TRANSITION
NO SCALE

REAVELEY
ENGINEERS + ASSOCIATES
Consulting Structural Engineers

UNLESS A PROFESSIONAL SEAL WITH SIGNATURE AND DATE IS AFFIXED, THIS DOCUMENT IS PRELIMINARY AND IS NOT INTENDED FOR CONSTRUCTION, RECORDING PURPOSES, OR IMPLEMENTATION

UTAH VALLEY UNIVERSITY

State of Utah
Department of Administrative Services
Division of Facilities Construction & Management
4110 State Office Building
Salt Lake City, Utah 84114
Phone: (801) 538 - 3018
Fax: (801) 538 - 3267

CRSA METHODSTUDIO INC.

CRSA ARCHITECTS
649 east south temple
salt lake city, utah 84102
phone:(801) 355-5915

METHOD STUDIO INC.
925 south west temple
salt lake city, utah 84101
phone:(801) 532-4422

DFCM APPROVAL STAMP

project:
UVU Classroom Building - Volume 1
800 West University Parkway
Orem, UT 84058

project#: DFCM# 12192790
date: April 30, 2013

revisions :
1 Addenda 5 05.24.13

title:
Roof Framing Details

sheet:
SF514

Bid Doc

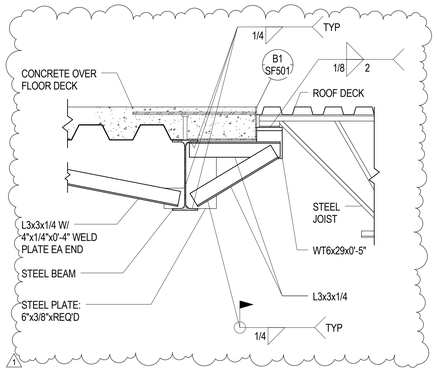

D2 / SF515 STEEL JOIST TO CONCRETE OVER FLOOR DECK EDGE
NO SCALE

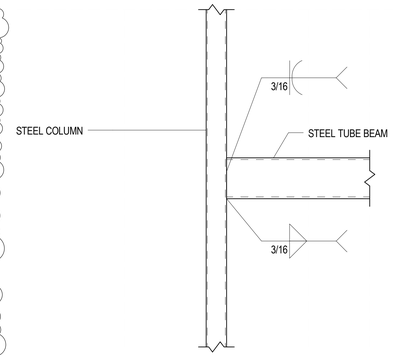

D3 / SF515 TYPICAL STEEL TUBE BEAM TO STEEL COLUMN
NO SCALE

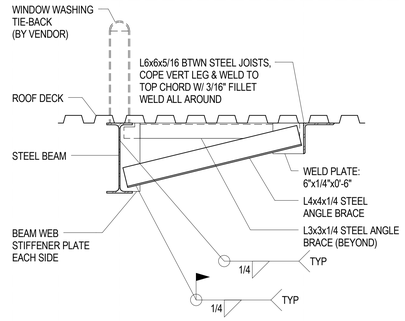

D4 / SF515 TYPICAL WINDOW WASHING TIE-BACK CONNECTION TO STEEL BEAM
NO SCALE

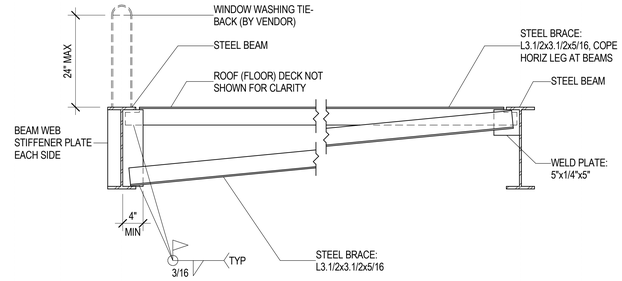

D5 / SF515 TYPICAL WINDOW WASHING TIE-BACK CONNECTION TO STEEL BEAM
NO SCALE

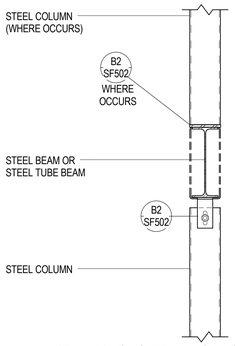

C1 / SF515 TYP ELEVATOR GUIDE RAIL SUPPORT COLUMN BRACED & BEARING AT STEEL BEAM
NO SCALE

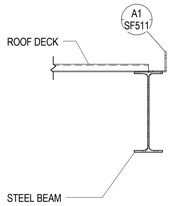

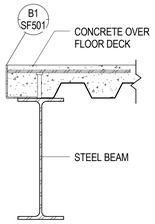

C2 / SF515 STEEL BEAM AT EXPANSION BETWEEN FLOOR & ROOF
NO SCALE

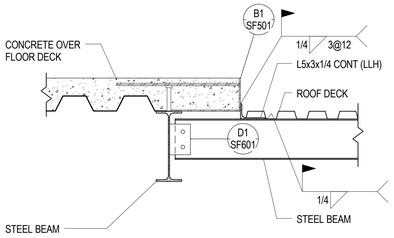

C3 / SF515 STEEL BEAM TO STEEL BEAM CONNECTION AT ROOF EDGE
NO SCALE

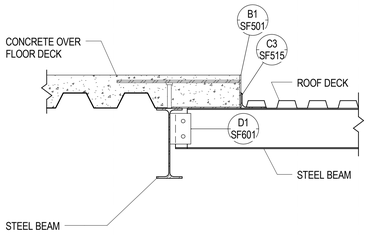

C4 / SF515 STEEL BEAM TO STEEL BEAM CONNECTION AT ROOF EDGE
NO SCALE

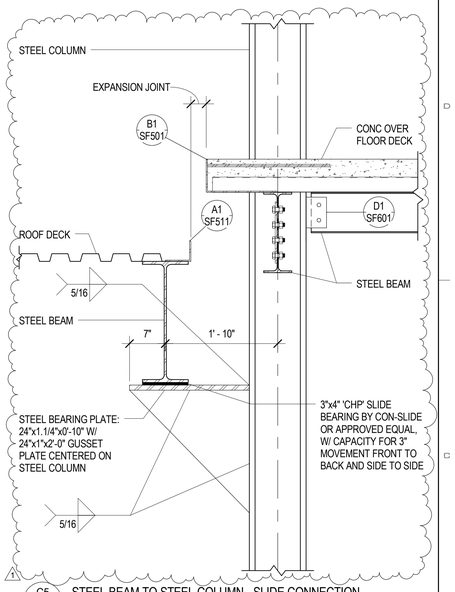

C5 / SF515 STEEL BEAM TO STEEL COLUMN - SLIDE CONNECTION
NO SCALE

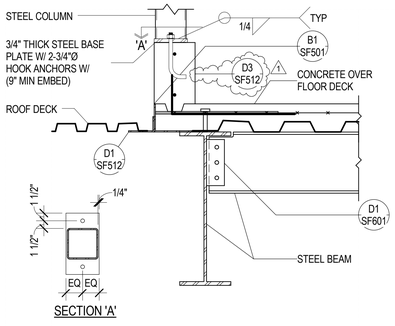

B1 / SF515 ROOF DECK CONNECTION TO EDGE OF PENTHOUSE FLOOR W/ STEEL COLUMN
NO SCALE

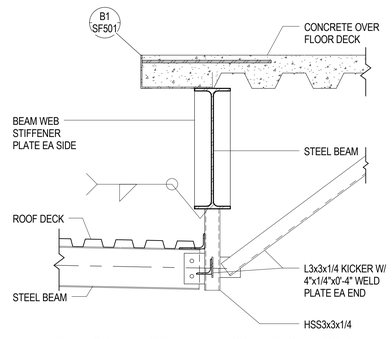

B2 / SF515 STEEL COLUMN TO STEEL BEAM CONNECTION AT CONC OVER FLOOR DECK TO STEEL ROOF DECK TRANSITION
NO SCALE

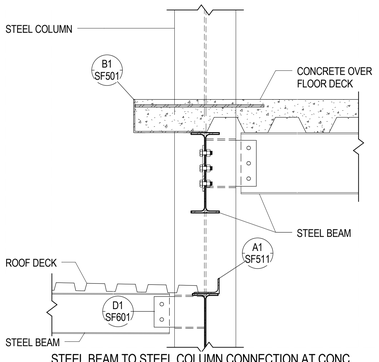

B3 / SF515 STEEL BEAM TO STEEL COLUMN CONNECTION AT CONC OVER FLOOR DECK TO STEEL ROOF DECK TRANSITION
NO SCALE

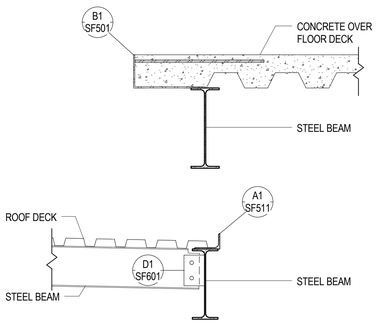

B4 / SF515 STEEL BEAM TO STEEL BEAM CONNECTION AT CONCRETE OVER FLOOR DECK TO STEEL ROOF DECK TRANSITION
NO SCALE

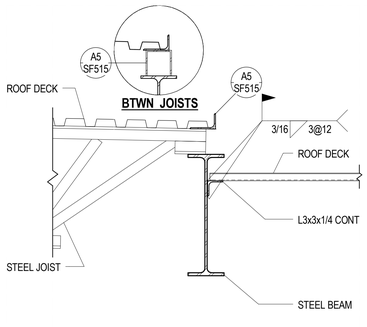

A1 / SF515 STEEL JOIST TO STEEL BEAM AT ROOF TRANSITION
NO SCALE

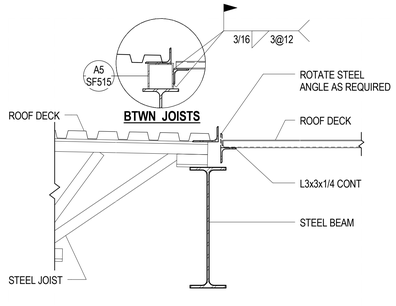

A2 / SF515 STEEL JOIST TO STEEL BEAM AT ROOF TRANSITION
NO SCALE

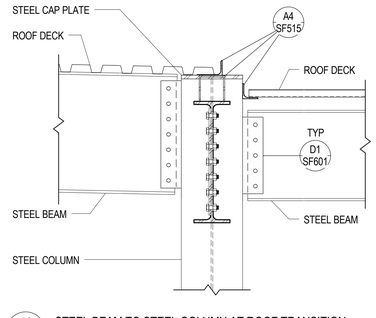

A3 / SF515 STEEL BEAM TO STEEL COLUMN AT ROOF TRANSITION
NO SCALE

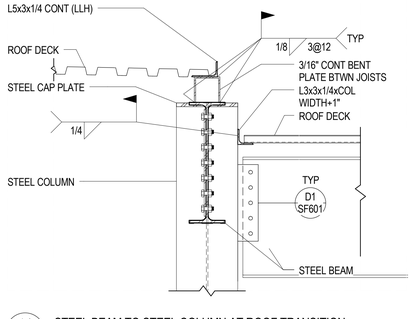

A4 / SF515 STEEL BEAM TO STEEL COLUMN AT ROOF TRANSITION
NO SCALE

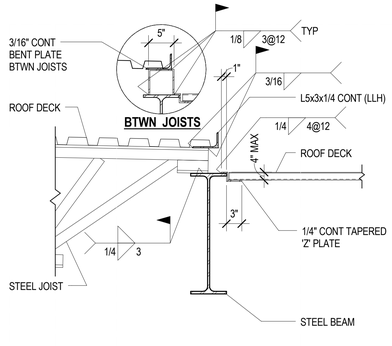

A5 / SF515 STEEL JOIST TO STEEL BEAM AT ROOF TRANSITION
NO SCALE

REAVELEY
ENGINEERS + ASSOCIATES
Consulting Structural Engineers

UNLESS A PROFESSIONAL SEAL WITH SIGNATURE AND DATE IS AFFIXED, THIS DOCUMENT IS PRELIMINARY AND IS NOT INTENDED FOR CONSTRUCTION, RECORDING PURPOSES, OR IMPLEMENTATION

UTAH VALLEY UNIVERSITY

State of Utah
Department of Administrative Services
Division of Facilities Construction & Management
4110 State Office Building
Salt Lake City, Utah 84114
Phone: (801) 538 - 3018
Fax: (801) 538 - 3267

CRSA METHODSTUDIO INC.

CRSA ARCHITECTS
649 east south temple
salt lake city, utah 84102
phone:(801) 355-5915

METHOD STUDIO INC.
925 south west temple
salt lake city, utah 84101
phone:(801) 532-4422

DFCM APPROVAL STAMP

project:
UVU Classroom Building - Volume 1
800 West University Parkway
Orem, UT 84058

project#: DFCM# 12192790
date: April 30, 2013

revisions:
1 Addenda 5 05.24.13

title:
Roof Framing Details

sheet:
SF515

Bid Doc

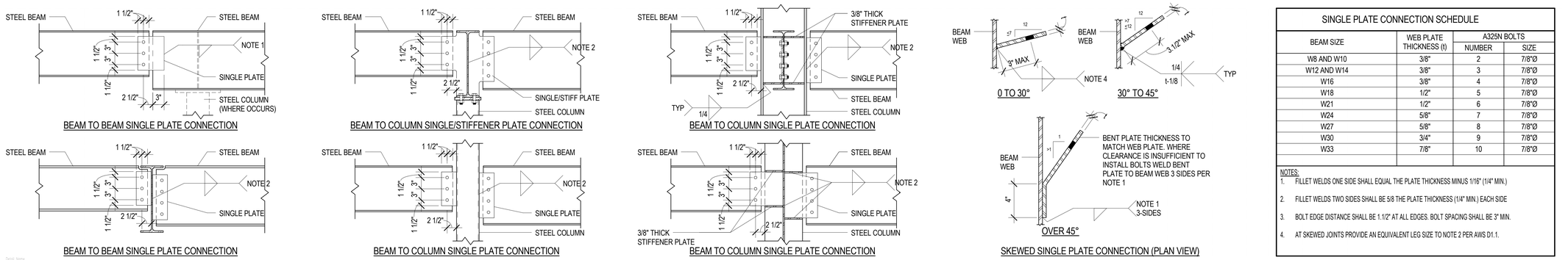

SINGLE PLATE CONNECTION SCHEDULE			
BEAM SIZE	WEB PLATE THICKNESS (t)	A325N BOLTS	
		NUMBER	SIZE
W8 AND W10	3/8"	2	7/8"Ø
W12 AND W14	3/8"	3	7/8"Ø
W16	3/8"	4	7/8"Ø
W18	1/2"	5	7/8"Ø
W21	1/2"	6	7/8"Ø
W24	5/8"	7	7/8"Ø
W27	5/8"	8	7/8"Ø
W30	3/4"	9	7/8"Ø
W33	7/8"	10	7/8"Ø

NOTES:
1. FILLET WELDS ONE SIDE SHALL EQUAL THE PLATE THICKNESS MINUS 1/16" (1/4" MIN.)
2. FILLET WELDS TWO SIDES SHALL BE 5/8 THE PLATE THICKNESS (1/4" MIN.) EACH SIDE
3. BOLT EDGE DISTANCE SHALL BE 1.1/2" AT ALL EDGES. BOLT SPACING SHALL BE 3" MIN.
4. AT SKEWED JOINTS PROVIDE AN EQUIVALENT LEG SIZE TO NOTE 2 PER AWS D1.1.

D1 / SF601 TYPICAL SINGLE PLATE CONNECTION DETAILS AND SCHEDULE
NO SCALE

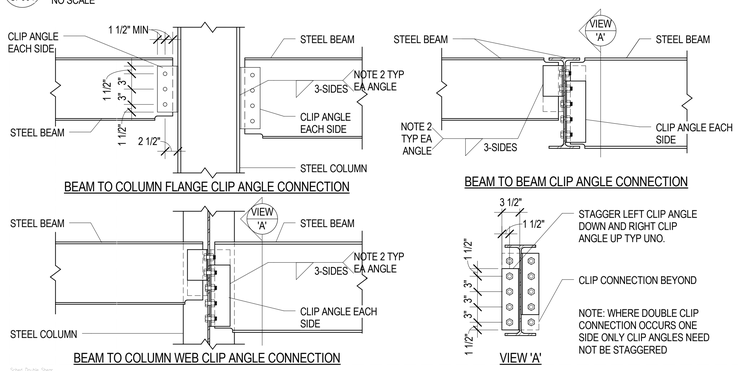

DOUBLE CLIP CONNECTION SCHEDULE		
BEAM SIZE	A325N BOLTS	
	NO. PER LEG	SIZE
W36	10	7/8"Ø
W40	11	7/8"Ø

NOTES:
1. CLIP ANGLES: 2-L4x3.1/2. THICKNESS SHALL BE EQUAL TO ONE HALF THE BEAM WEB THICKNESS PLUS 1/16" (1/4" MIN.). FOR TWO ROWS OF BOLTS OR SKEWED CONNECTIONS, USE BENT PLATES.
2. FILLET WELDS SHALL BE ANGLE THICKNESS MINUS 1/16" (1/4" MIN.)
3. CONTRACTOR HAS OPTION TO BOLT CLIP ANGLES AT EITHER BEAM WEB IN BEAM TO BEAM CONNECTIONS.
4. BOLT EDGE DISTANCE SHALL BE 1.1/2" MIN. AT ALL BEAM AND CLIP ANGLE EDGES. BOLT SPACING SHALL BE 3" O.C. MIN.

C1 / SF601 TYPICAL DOUBLE ANGLE CONNECTION DETAILS AND SCHEDULE
NO SCALE

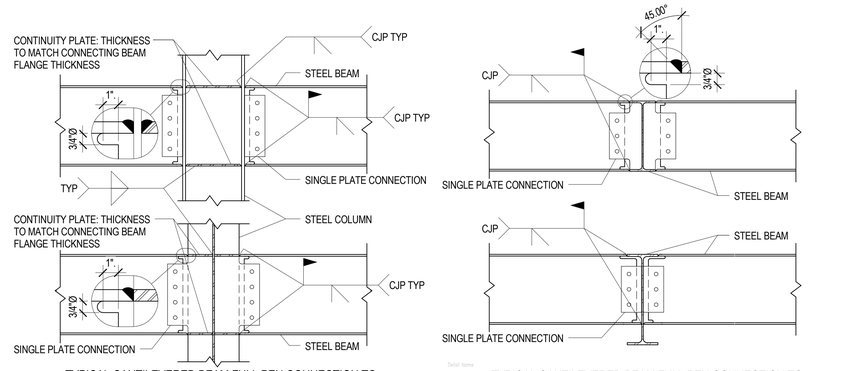

C4 / SF601 TYPICAL CANTILEVERED BEAM FULL PEN CONNECTION TO COLUMN
NO SCALE

C5 / SF601 TYPICAL CANTILEVERED BEAM FULL PEN CONNECTION TO BEAM
NO SCALE

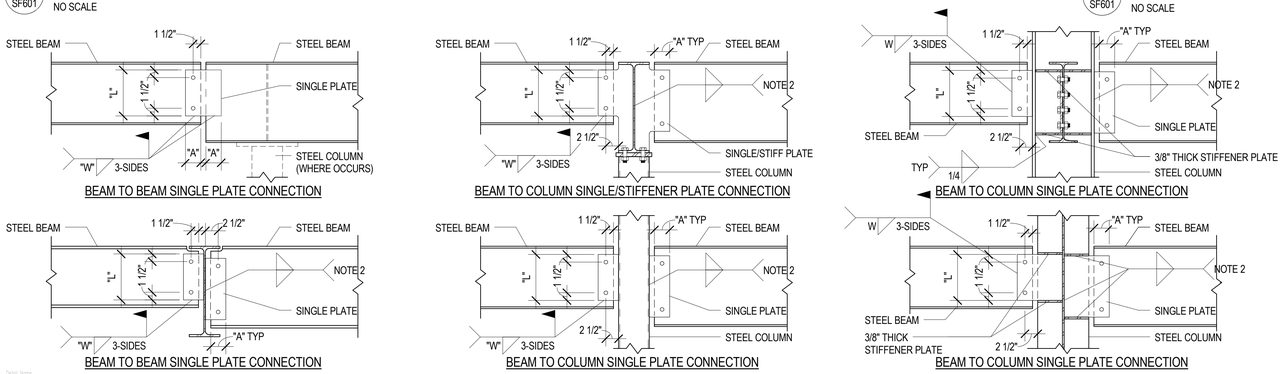

SINGLE PLATE COLLECTOR/CHORD CONNECTION SCHEDULE					
BEAM SIZE	WEB PLATE				ERECTION BOLTS
	"L"	"A"	WELD "W"	THICKNESS	
W12 - W14	9"	4"	1/4"	3/8"	2
W18	15"	4"	1/4"	3/8"	3
W21	18"	4"	5/16"	1/2"	4
W24	21"	4"	5/16"	1/2"	5

NOTES:
1. ERECTION BOLT SHALL BE 7/8"Ø A325N BOLTS.
2. FILLET WELDS TWO SIDES SHALL BE 3/4 THE PLATE THICKNESS (1/4" MIN.) EACH SIDE
3. BOLT EDGE DISTANCE SHALL BE 1.1/2" AT ALL EDGES U.N.O.

B1 / SF601 TYPICAL WELD SINGLE PLATE COLLECTOR/CHORD CONNECTION DETAILS AND SCHEDULE
NO SCALE

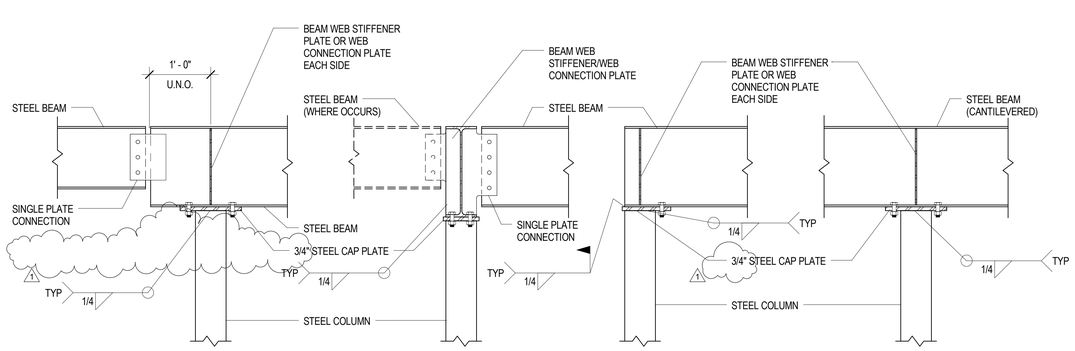

A1 / SF601 TYPICAL STEEL BEAM BEARING ON STEEL COLUMN
NO SCALE

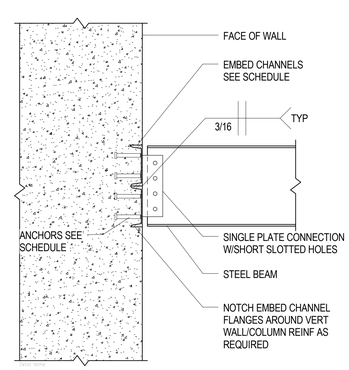

CONNECTION SCHEDULE		
BEAM DEPTH	EMBED CHANNEL	ANCHORS
TO 10"	1-C8x18.75x12"	4-3/4"Ø x 5" LONG HSA
TO 16"	2-C8x18.75x12"	8-3/4"Ø x 5" LONG HSA
TO 24"	3-C8x18.75x12"	12-3/4"Ø x 5" LONG HSA

NOTES:
1. WELD MULTIPLE EMBEDS TOGETHER WITH BUTT WELD EACH SIDE, FULL LENGTH.

A3 / SF601 TYPICAL EMBED CHANNEL CONNECTION SCHEDULE
NO SCALE

REAVELEY ENGINEERS + ASSOCIATES
Consulting Structural Engineers

UNLESS A PROFESSIONAL SEAL WITH SIGNATURE AND DATE IS AFFIXED, THIS DOCUMENT IS PRELIMINARY AND IS NOT INTENDED FOR CONSTRUCTION, RECORDING PURPOSES, OR IMPLEMENTATION

UTAH VALLEY UNIVERSITY

State of Utah
Department of Administrative Services
Division of Facilities Construction & Management
4110 State Office Building
Salt Lake City, Utah 84114
Phone: (801) 538 - 3018
Fax: (801) 538 - 3267

CRSA METHODSTUDIO INC.

CRSA ARCHITECTS
649 east south temple
salt lake city, utah 84102
phone:(801) 355-5915

METHOD STUDIO INC.
925 south west temple
salt lake city, utah 84101
phone:(801) 532-4422

DFCM APPROVAL STAMP

project:
UVU Classroom Building - Volume 1
800 West University Parkway
Orem, UT 84058

project#: DFCM# 12192790
date: April 30, 2013

revisions :
1 Addenda 5 05.24.13

title:
Structural Schedules

sheet:
SF601

Bid Doc

Column Locations	Level 2	Level 4	Level 5	Level 6	Level 7	Base Plate	Anchor Rods
B-6.2	W12x65	W12x50	W12x79			7/8", SBP-B	W/4-3/4" DIA.
B-7, B-8	W12x65	W12x45	W12x79			7/8", SBP-B	W/4-3/4" DIA.
B-9	W8x40	W8x28	W12x79			3/4", SBP-	W/4-3/4" DIA.
B(13' - 9 3/8")-10(6' - 8 1/8")	HSS4x4x1/4					3/4", SBP-2	W/4-3/4" DIA.
B(-9' - 5")-10(-5")	HSS4x4x1/4					3/4", SBP-2	W/4-3/4" DIA.
C-7	W12x106	W12x58				1.1/2", SBP-A	W/4-3/4" DIA.
C-8	W12x96	W12x58				1.1/2", SBP-A	W/4-3/4" DIA.
C-8.5(-1' - 0")	W8x31					SBP-A	W/4-3/4" DIA.
C-9	W12x72	W10x49				1.1/2", SBP-C	W/4-3/4" DIA.
C(-8' - 0 1/2")-9	W10x49	W10x33				1.1/2", SBP-C	W/4-3/4" DIA.
C(-9' - 5 7/8")-10(-6' - 2 3/8")	HSS4x4x1/4					3/4", SBP-2	W/4-3/4" DIA.
C(3' - 11 7/8")-11(27' - 0 7/8")	W8x38					1", SBP-A	W/4-3/4" DIA.
C(12' - 4 1/4")-11	W8x38					1", SBP-A	W/4-3/4" DIA.
C(-13' - 9 3/4")-11(51' - 7 5/8")	W8x38					1", SBP-A	W/4-3/4" DIA.
D-11	W10x49	W10x33				1", SBP-A	W/4-3/4" DIA.
D(-15' - 0 3/4")-11(70' - 0")	W8x38					1", SBP-A	W/4-3/4" DIA.
E-2	W12x79	W12x65				1.1/4", SBP-B	W/4-3/4" DIA.
E-3	W10x77	W10x49				1.1/4", SBP-A	W/4-3/4" DIA.
E-5, E.1(-10' - 4")-5, E.8(4' - 10")-5, F.5(7' - 8")-5, F.5(-4' - 8")-5				HSS12x12x1/4		SEE DETAIL	
E-5(11' - 8"), E-5.5(11' - 8"), E-6(-3' - 0"), G-5, G-5(11' - 8"), G-5.5(11' - 8"), G-6(-3' - 0")				HSS12x12x1/4		SEE DETAIL	
E-5.5	W10x68	W10x45		HSS12x12x1/4		1.1/2", SBP-A	W/4-3/4" DIA.
E-7	W12x170	W12x106		W12x65		1.3/4", SBP-A	W/4-3/4" DIA.
E-7.5	W12x106	W12x65				1.3/4", SBP-A	W/4-3/4" DIA.
E-11	W10x60	W10x39				1", SBP-A	W/4-3/4" DIA.
E.1-1, G.7-1	W12x136	W12x65				1.1/2", SBP-C	W/4-3/4" DIA.
E.7-10	W10x100	W10x49	W10x33			1", SBP-A	W/4-3/4" DIA.
E.7(-5' - 6 1/4")-10(85' - 5 5/8")	W8x38					1", SBP-A	W/4-3/4" DIA.
E.8-1, F.5-1	W12x136	W12x53				1.1/2", SBP-C	W/4-3/4" DIA.
F-2	W12x96	W12x65				1.3/4", SBP-B	W/4-3/4" DIA.
F-3	W12x79	W12x53				1.1/2", SBP-A	W/4-3/4" DIA.

Column Locations	Level 2	Level 4	Level 5	Level 6	Level 7	Base Plate	Anchor Rods
F-5	W12x136	W12x79	W12x79	HSS12x12x1/4		2", SBP-A	W/4-3/4" DIA.
F-7	W12x190	W12x136	W12x96			2", SBP-A	W/4-3/4" DIA.
F-9.1	W12x120	W12x79	W12x65			2", SBP-A	W/4-3/4" DIA.
F.4-10	W10x100	W10x54	W10x49			1", SBP-A	W/4-3/4" DIA.
F.5(-4' - 6 5/8")-3	HSS6x6x1/4					3/4", SBP-1	W/4-3/4" DIA.
G-2	W12x72	W12x53				1.1/4", SBP-B	W/4-3/4" DIA.
G-3	W12x65	W12x53				1.1/4", SBP-A	W/4-3/4" DIA.
G-5.5	W12x65	W12x53		HSS12x12x1/4		1.1/2", SBP-A	W/4-3/4" DIA.
G-7	W12x136	W12x96		W12x65		1.1/2", SBP-A	W/4-3/4" DIA.
G-7.5	W12x87	W12x65		W12x45		1.1/2", SBP-A	W/4-3/4" DIA.
G-10	W10x60	W10x49				1.1/4", SBP-A	W/4-3/4" DIA.
G(18' - 6 3/8")-13.6(70' - 11 1/4")	W8x58					1", SBP-A	W/4-3/4" DIA.
G(-6' - 2 1/4")-13.6(48' - 9 1/8")	W8x58					1", SBP-A	W/4-3/4" DIA.
G.5-10			W8x31			3/4", SBP-C	W/4-3/4" DIA
H-2	W10x54	W10x45				1", SBP-B	W/4-3/4" DIA.
H-3	W10x49	W10x33				1", SBP-B	W/4-3/4" DIA.
H-4	W10x54	W10x39				1", SBP-B	W/4-3/4" DIA.
H-5	W10x77	W10x49				1.1/4", SBP-A	W/4-3/4" DIA.
H-6	W10x60	W10x45				1", SBP-A	W/4-3/4" DIA.
H-7	W10x68	W10x54				1.1/4", SBP-A	W/4-3/4" DIA.
H-8	W12x72	W12x58				1.1/4", SBP-A	W/4-3/4" DIA.
H-9.1	W12x65	W12x50				1", SBP-A	W/4-3/4" DIA.
H-10	W8x58					1", SBP-C	W/4-3/4" DIA
J-4.3	W8x24					3/4", SBP-B	W/4-3/4" DIA.
J-5(6' - 11 1/2")	HSS12x3x5/16					3/4", SBP-2	W/4-3/4" DIA.
J-5.5(11' - 11 1/2"), J-5.5(-3' - 0 1/2"), J-6(1' - 11 1/2"), J-7(9' - 3 1/2"), J-7(-5' - 8 1/2"), J-7.5(13' - 1 1/2"), J-7.5(-1' - 10 1/2"), J-8(1' - 11 1/2"), J-8.3(-1'	HSS12x3x5/16					3/4", SBP-2	W/4-3/4" DIA.
J-9(1' - 7 1/4")	HSS12x3x5/16					3/4", SBP-2	W/4-3/4" DIA.
J-9.1	W8x31					3/4", SBP-A	W/4-3/4" DIA.
J-10	W8x24					3/4", SBP-A	W/4-3/4" DIA.
J(8 3/4")-14(51' - 10 7/8")	W8x58					1", SBP-A	W/4-3/4" DIA.

Steel Column Schedule

SCALE: 3/32" = 1'-0"

NOTE:
SEE SF603 FOR CONTINUATION OF STEEL COLUMN SCHEDULE.

STEEL COLUMN SCHEDULE NOTES

1. UNLESS NOTED OTHERWISE ALL COLUMNS SHALL BE INSTALLED W/ 4-3/4" DIAMETER A.B. W/ 3" (MIN.) HOOKS. PROJECT ANCHOR BOLTS 3" (MIN.) ABOVE THE TOP OF THE BASE PLATE. EMBEDMENT SHALL BE 9" (MIN.). ALL BOLTS SHALL BE INSTALLED W/ HARDENED WASHERS BENEATH THE NUT. ANY BOLT HOLES LARGER THAN THE BOLT DIAMETER PLUS 5/16" SHALL HAVE 5/16" PLATE WASHERS INSTALLED BENEATH THE HARDENED WASHERS.
2. ALL BOLTS IN CAP PLATES SHALL BE 3/4" DIA, A325N BOLTS TYPICAL U.N.O.
3. COLUMN SPLICES SHALL BE LOCATED PER SPLICE DETAILS, TYPICAL, U.N.O.
4. WELDS SHALL NOT BE MADE TO ANCHOR BOLTS.
5. ALL STEEL WIDE FLANGE COLUMN CAP PLATES SHALL BE 1/2" THICK TYPICAL, U.N.O.
6. ALL STEEL TUBE COLUMN CAP PLATES SHALL BE 3/4" THICK TYPICAL, U.N.O.

REAVELEY ENGINEERS + ASSOCIATES
Consulting Structural Engineers

UNLESS A PROFESSIONAL SEAL WITH SIGNATURE AND DATE IS AFFIXED, THIS DOCUMENT IS PRELIMINARY AND IS NOT INTENDED FOR CONSTRUCTION, RECORDING PURPOSES, OR IMPLEMENTATION

UTAH VALLEY UNIVERSITY

State of Utah
Department of Administrative Services
Division of Facilities Construction & Management
4110 State Office Building
Salt Lake City, Utah 84114
Phone: (801) 538 - 3018
Fax: (801) 538 - 3267

CRSA METHODSTUDIO INC.

CRSA ARCHITECTS
649 east south temple
salt lake city, utah 84102
phone:(801) 355-5915

METHOD STUDIO INC.
925 south west temple
salt lake city, utah 84101
phone:(801) 532-4422

DFCM APPROVAL STAMP

project:
UVU Classroom Building - Volume 1
800 West University Parkway
Orem, UT 84058

project#: DFCM# 12192790
date: April 30, 2013

revisions:
1 Addenda 5 05.24.13

title:
Structural Schedules

sheet:
SF602

Bid Doc

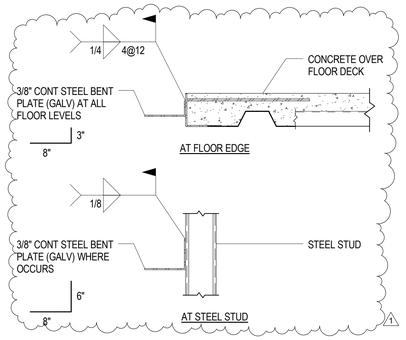

D2 / SF611 TYPICAL MASONRY VENEER RELIEF ANGLE

NO SCALE

WALL						JAMB						HEADER	SILL	
HEIGHT	WALL STUD/SIZE SPACING	TOP & BOTTOM TRACKS	BOTTOM TRACK CONNECTION	TRACK/TOP OF WALL CONNECTION	WALL STUD BRIDGING	OPENING WIDTH	SINGLE STUD	STUD/TRACK COMBO (2)	MULTIPLE STUDS (3)	JAMB CONNECTION		TYPE	TYPE	HEADER & SILL CONNECTION
							SIZE	TYPE	TYPE	TOP	BASE (6) (7) (8)			
UP TO 18'-0" TO ROOF CONNECTION WITH 3'-0" PARAPET	600S250-68 @ 16" O.C. MAX 600S250-54 @ 8" O.C. MAX FOR 18'-0" ZONE AT BLDG CORNERS	600T125-54	TYPICAL PER NOTE 7	VERTICLIP DSLD600 (5)	COLD-ROLLED CHANNEL @ 4'-0" O.C. CAPABLE OF RESISTING A MOMENT OF M=0.22 KIP-IN	UP TO 3'-6"	NOT AVAILABLE	J1	M2	VERTICLIP DSLB600 (5)	-	H1	S1	C1
						3'-7" TO 6'-6"	NOT AVAILABLE	J2	M3	VERTICLIP DSLB600 (5)	-	H2	S1	C2
						6'-7" TO 10'-0"	NOT AVAILABLE	J3	M4	VERTICLIP DSLB600 (5)	STIFFCLIP CL600 PATTERN 5 (AT DOORS ONLY)	H3	S2	C2
1						10'-1" TO 12'-0"	NOT AVAILABLE	J4	M5	VERTICLIP DSLB600 (5)	STIFFCLIP CL600 PATTERN 5 (AT DOORS ONLY)	H4	S2	C2
UP TO 16'-0" TO FLOOR ABOVE	600S200-54 @ 16" O.C. MAX 600S250-54 @ 12" O.C. MAX FOR 18'-0" ZONE AT BLDG CORNERS	600T125-54	TYPICAL PER NOTE 7	VERTICLIP DSLD600 (5)	COLD-ROLLED CHANNEL @ 4'-0" O.C. CAPABLE OF RESISTING A MOMENT OF M=0.22 KIP-IN	UP TO 3'-6"	NOT AVAILABLE	J1	M2	VERTICLIP DSLB600 (5)	-	H1	S1	C1
						3'-7" TO 6'-6"	NOT AVAILABLE	J2	M3	VERTICLIP DSLB600 (5)	-	H2	S1	C2
						6'-7" TO 10'-0"	NOT AVAILABLE	J3	M4	VERTICLIP DSLB600 (5)	STIFFCLIP CL600 PATTERN 5 (AT DOORS ONLY)	H3	S2	C2
						10'-1" TO 12'-0"	NOT AVAILABLE	J4	M5	VERTICLIP DSLB600 (5)	STIFFCLIP CL600 PATTERN 5 (AT DOORS ONLY)	H4	S2	C2

NOTES:
1. THREE JAMB OPTIONS ARE LISTED, BUT ONLY ONE SHALL BE USED FOR THE JAMBS OF THE SAME OPENING. EQUIVALENT PROPRIETARY JAMB STUDS MAY BE SUBMITTED & USED WITH WRITTEN PERMISSION OF ENGINEER
2. JAMB STUD/TRACK COMBINATION MUST BE FASTENED TOGETHER PER TYPICAL JAMB CONFIGURATION DETAILS.
3. MULTIPLE STUDS SHALL BE STITCH WELDED TOGETHER PER DETAILS.
4. CONNECTION HARDWARE LISTED IS THE BASIS OF DESIGN. EQUIVALENT ALTERNATIVE HARDWARE MAY BE SUBMITTED & USED WITH WRITTEN PERMISSION OF ENGINEER.
5. FILL ALL HOLES IN CONNECTION HARDWARE WITH APPROPRIATE SCREWS UNLESS NOTED OTHERWISE. CONNECTION HARDWARE TO BE ATTACHED TO SUBSTRATE WITH (2) HILTI X-U FASTENERS TO STEEL DECK EDGE ANGLE, UNLESS NOTED OTHERWISE.
6. WHERE NO BASE CONNECTION CLIP IS SPECIFIED, THE JAMB SHALL BE ATTACHED TO THE BASE TRACK W/ A MINIMUM OF TWO #10 SCREWS PER STUD. FOR STIFFCLIP CONNECTION, SEE TYPICAL BASE CONNECTION DETAILS.
7. BOTTOM TRACK ANCHORAGE SHALL BE ONE OF THE FOLLOWING, UNLESS NOTED OTHERWISE IN SCHEDULE:
   a. 1/2" DIAMETER J-BOLTS WITH 6" EMBEDMENT & 1.1/2" PROJECTION AT 32" O.C.
   b. 1/2" DIAMETER SIMPSON TITEN HD WITH 4" EMBEDMENT AT 32" O.C.
   c. 1/2" DIAMETER THREADED ROD IN SIMPSON SET-XP EPOXY, 6" EMBEDMENT AT 32" O.C.
8. STIFFCLIP JAMB CONNECTION SHALL USE TYPICAL BOTTOM TRACK ANCHORAGE LISTED ABOVE.
9. ALTERNATE BRIDGING SYSTEMS CAPABLE OF RESISTING THE MOMENTS LISTED IN THE SCHEDULE MAY BE SUBMITTED & USED WITH WRITTEN PERMISSION OF ENGINEER.
10. HEADER VERTICAL STUDS SHALL NOT HAVE PUNCHOUTS OR BE CONFIGURED TO NOT HAVE PUNCHOUTS WITHIN 1'-0" OF EITHER END.
11. WALL HEIGHT IN SCHEDULE IS DEFINED AS THE VERTICAL DISTANCE BETWEEN CONNECTIONS OF STUDS TO STRUCTURAL FLOORS, ROOFS, OR GIRTS.

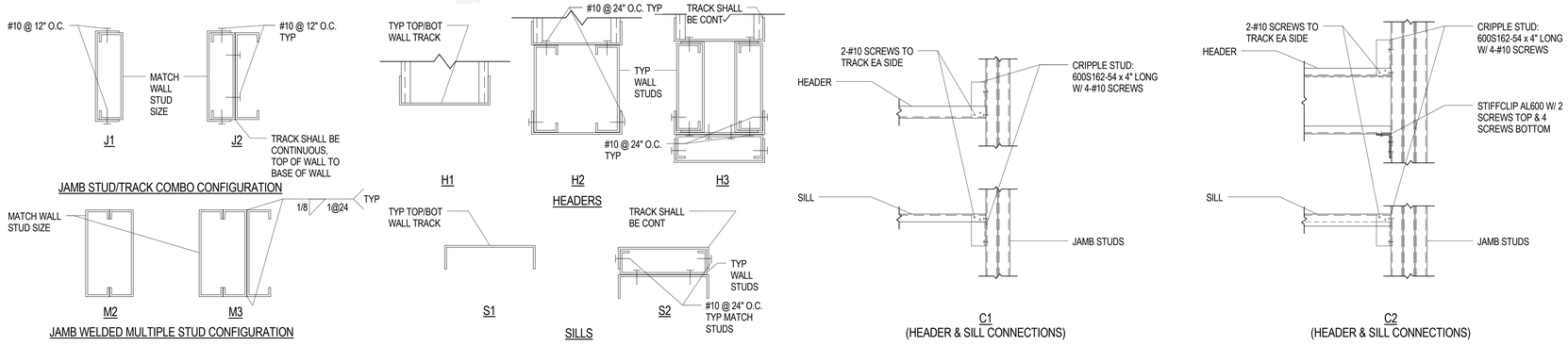

C2 / SF611 TYPICAL NON-LOAD BEARING EXTERIOR STEEL STUD FRAMING SCHEDULE

NO SCALE

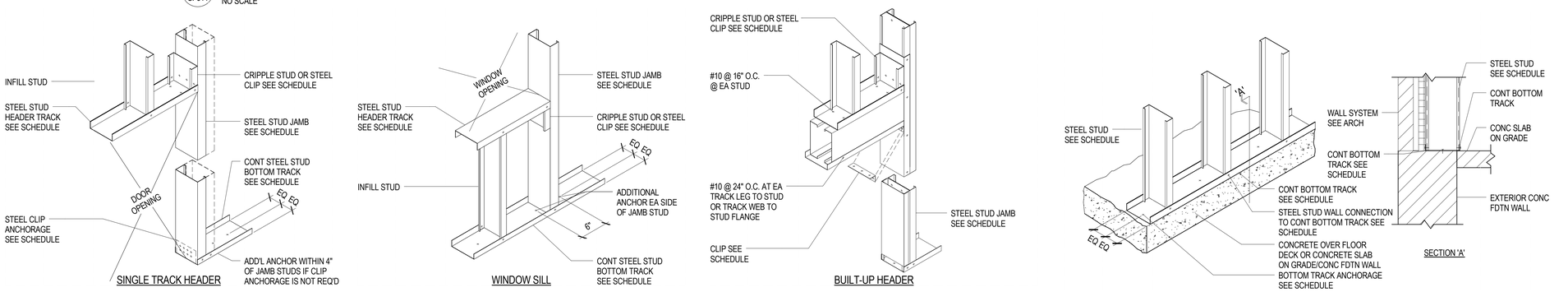

B1 / SF611 TYPICAL NON-BEARING STEEL STUD WALL WINDOW & DOOR OPENING

NO SCALE

B4 / SF611 TYPICAL BOTTOM TRACK ANCHORAGE

NO SCALE

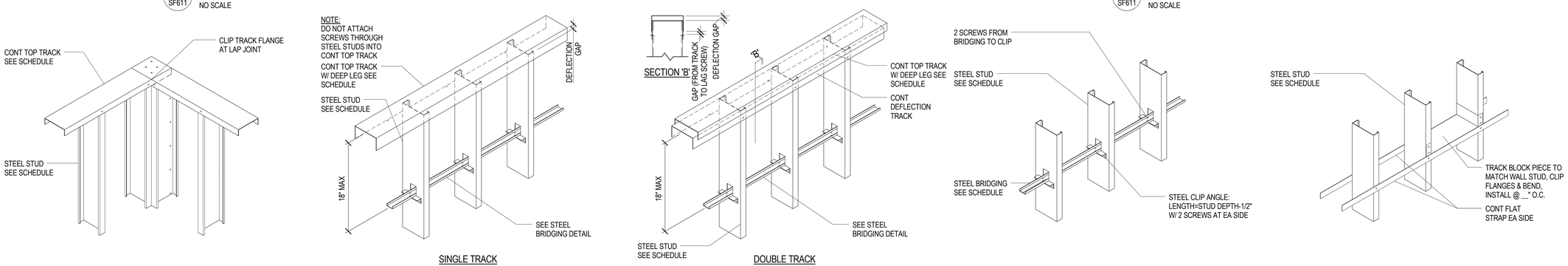

A1 / SF611 TYPICAL WALL FRAMING AT CORNER TRACK LAP CONNECTION

NO SCALE

A2 / SF611 TYPICAL STEEL STUD WALL DEFLECTION TRACK ASSEMBLY DETAIL - SINGLE & DOUBLE TRACK

NO SCALE

A4 / SF611 TYPICAL STEEL STUD WALL STEEL BRIDGING DETAIL W/ ALTERNATE

NO SCALE

REAVELEY ENGINEERS + ASSOCIATES
Consulting Structural Engineers

UNLESS A PROFESSIONAL SEAL WITH SIGNATURE AND DATE IS AFFIXED, THIS DOCUMENT IS PRELIMINARY AND IS NOT INTENDED FOR CONSTRUCTION, RECORDING PURPOSES, OR IMPLEMENTATION

UTAH VALLEY UNIVERSITY

State of Utah
Department of Administrative Services
Division of Facilities Construction & Management
4110 State Office Building
Salt Lake City, Utah 84114
Phone: (801) 538 - 3018
Fax: (801) 538 - 3267

CRSA METHODSTUDIO INC.

CRSA ARCHITECTS
649 east south temple
salt lake city, utah 84102
phone:(801) 355-5915

METHOD STUDIO INC.
925 south west temple
salt lake city, utah 84101
phone:(801) 532-4422

DFCM APPROVAL STAMP

project:
UVU Classroom Building - Volume 1
800 West University Parkway
Orem, UT 84058

project#: DFCM# 12192790
date: April 30, 2013

revisions :
1 Addenda 5 05.24.13

title:
Typical Steel Stud Details

sheet:
SF611

Bid Doc

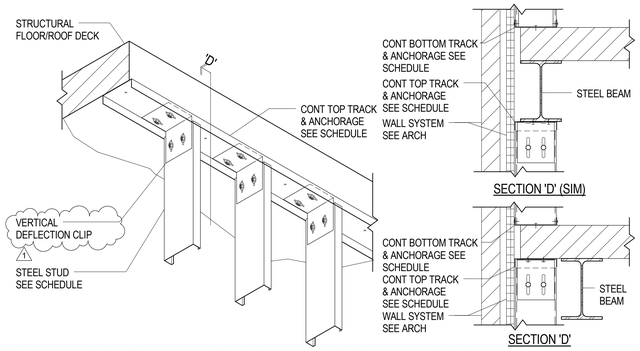

D1 / SF612 TYPICAL STEEL STUD WALL HEAD W/ VERTICAL DEFLECTION & DRIFT

NO SCALE

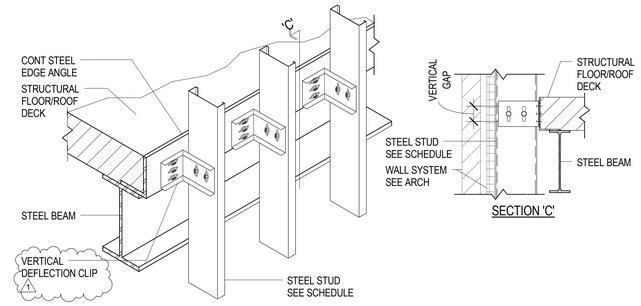

D5 / SF612 TYPICAL STEEL STUD WALL BYPASS W/ VERTICAL DEFLECTION & DRIFT

NO SCALE

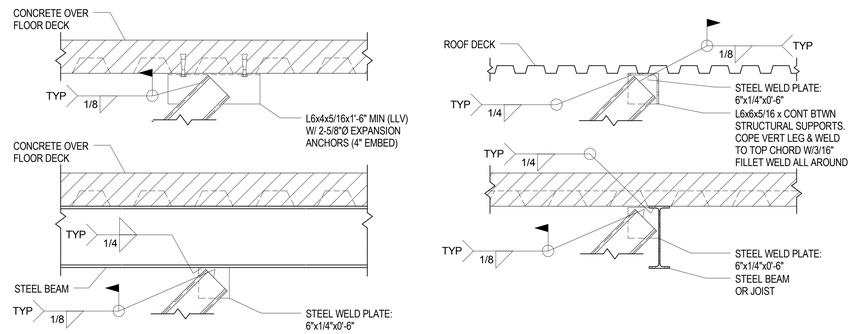

C2 / SF612 TYPICAL STEEL STUD BRACE CONNECTION TO FLOOR/ROOF DECK

NO SCALE

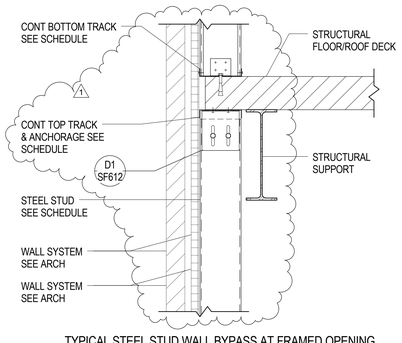

B2 / SF612 TYPICAL STEEL STUD WALL BYPASS AT FRAMED OPENING BRACED TO STEEL BEAM

NO SCALE

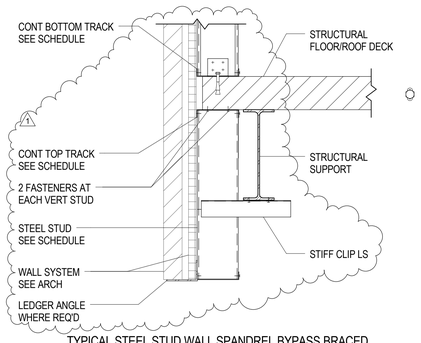

B3 / SF612 TYPICAL STEEL STUD WALL SPANDREL BYPASS BRACED TO STEEL BEAM

NO SCALE

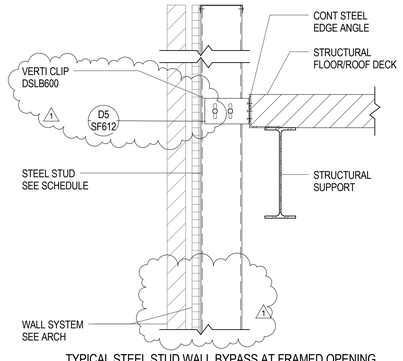

B4 / SF612 TYPICAL STEEL STUD WALL BYPASS AT FRAMED OPENING BRACED TO STEEL BEAM

NO SCALE

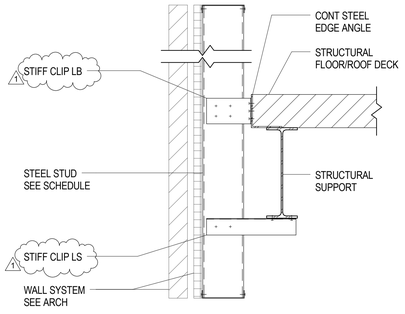

B5 / SF612 TYPICAL STEEL STUD WALL SPANDREL BYPASS BRACED TO STEEL BEAM

NO SCALE

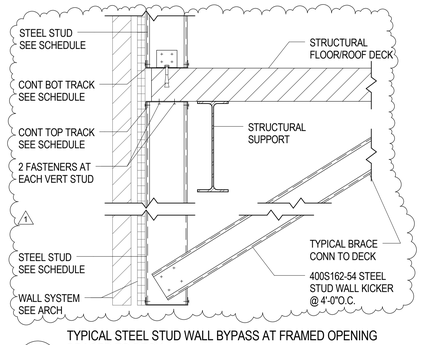

A3 / SF612 TYPICAL STEEL STUD WALL BYPASS AT FRAMED OPENING BRACED TO DECK

NO SCALE

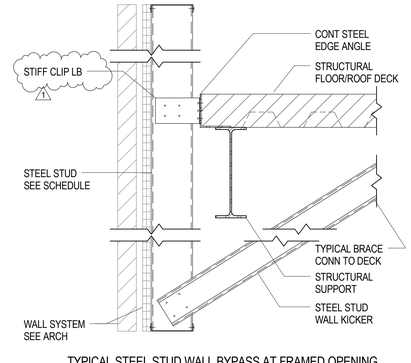

A5 / SF612 TYPICAL STEEL STUD WALL BYPASS AT FRAMED OPENING BRACED TO DECK

NO SCALE

REAVELEY ENGINEERS + ASSOCIATES
Consulting Structural Engineers

UNLESS A PROFESSIONAL SEAL WITH SIGNATURE AND DATE IS AFFIXED, THIS DOCUMENT IS PRELIMINARY AND IS NOT INTENDED FOR CONSTRUCTION, RECORDING PURPOSES, OR IMPLEMENTATION

UTAH VALLEY UNIVERSITY

State of Utah
Department of Administrative Services
Division of Facilities Construction & Management
4110 State Office Building
Salt Lake City, Utah 84114
Phone: (801) 538 - 3018
Fax: (801) 538 - 3267

CRSA METHODSTUDIO INC.

CRSA ARCHITECTS
649 east south temple
salt lake city, utah 84102
phone:(801) 355-5915

METHOD STUDIO INC.
925 south west temple
salt lake city, utah 84101
phone:(801) 532-4422

DFCM APPROVAL STAMP

project:
UVU Classroom Building - Volume 1
800 West University Parkway
Orem, UT 84058

project#: DFCM# 12192790
date: April 30, 2013

revisions :
1 Addenda 5 05.24.13

title:
Typical Steel Stud Details

sheet:
SF612

Bid Doc

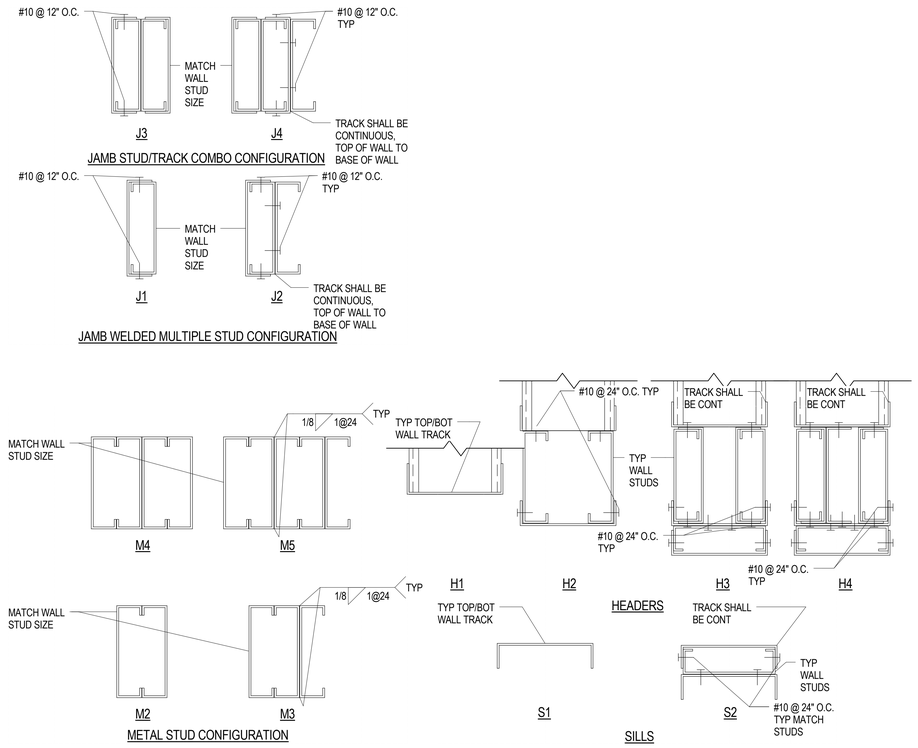

1 / SF613 TYPICAL NON-LOAD BEARING EXTERIOR STEEL STUD FRAMING SCHEDULE

NO SCALE

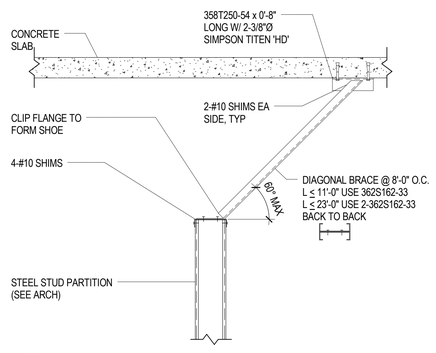

2 / SF613 TYPICAL STEEL STUD PARTITION BRACE DETAIL

NO SCALE

REAVELEY ENGINEERS + ASSOCIATES
Consulting Structural Engineers

UNLESS A PROFESSIONAL SEAL WITH SIGNATURE AND DATE IS AFFIXED, THIS DOCUMENT IS PRELIMINARY AND IS NOT INTENDED FOR CONSTRUCTION, RECORDING PURPOSES, OR IMPLEMENTATION

UTAH VALLEY UNIVERSITY

State of Utah
Department of Administrative Services
Division of Facilities Construction & Management
4110 State Office Building
Salt Lake City, Utah 84114
Phone: (801) 538 - 3018
Fax: (801) 538 - 3267

CRSA METHODSTUDIO INC.

CRSA ARCHITECTS
649 east south temple
salt lake city, utah 84102
phone:(801) 355-5915

METHOD STUDIO INC.
925 south west temple
salt lake city, utah 84101
phone:(801) 532-4422

DFCM APPROVAL STAMP

project:
UVU Classroom Building - Volume 1
800 West University Parkway
Orem, UT 84058

project#: DFCM# 12192790
date: April 30, 2013

revisions :
1 Addenda 5 05.24.13

title:
Typical Steel Stud Details

sheet:
SF613

Bid Doc

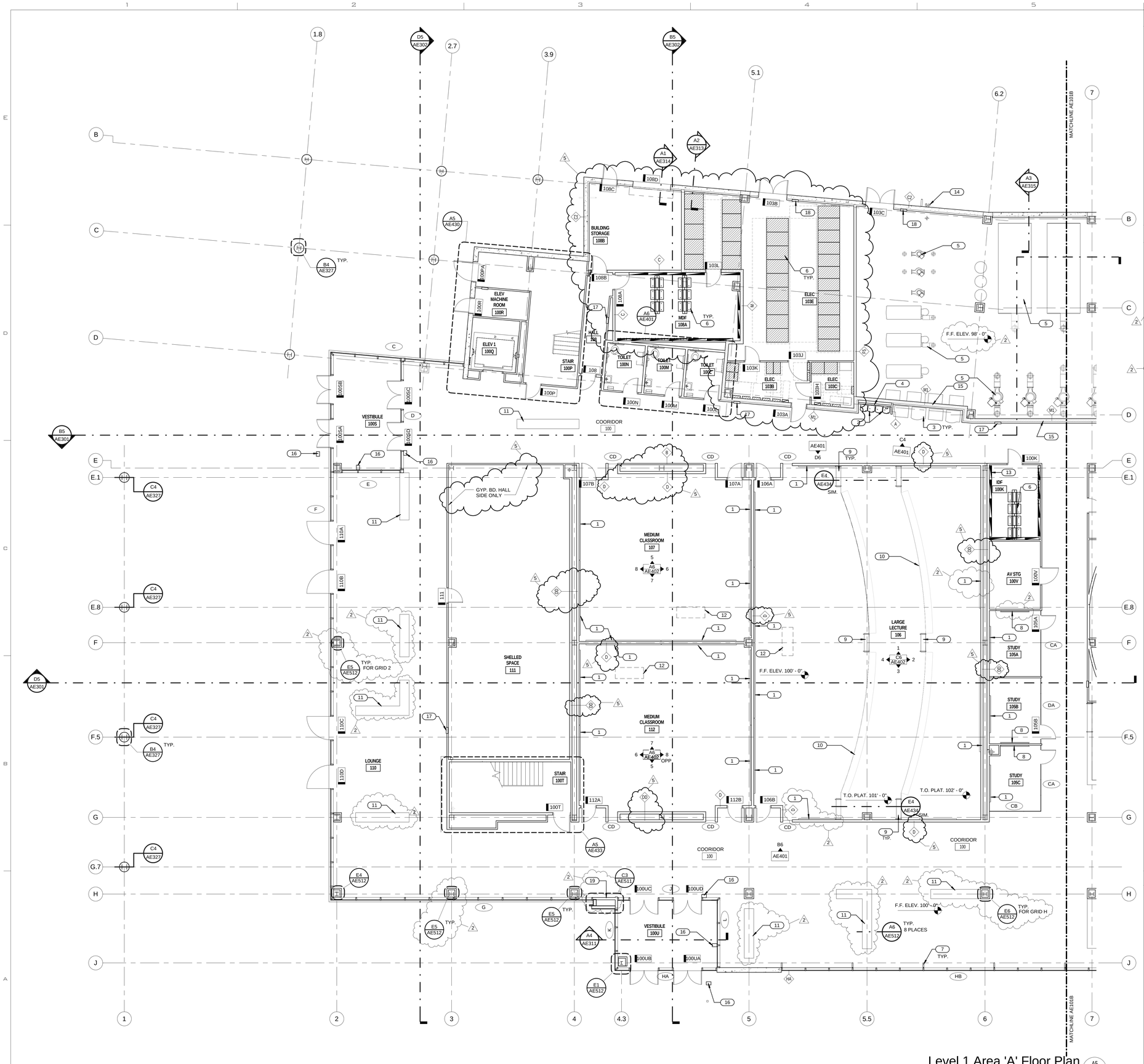

Level 1 Area 'A' Floor Plan

1/8" = 1'-0"

A5 AE101A

GENERAL NOTES & LEGEND:

- GENERAL CONTRACTOR SHALL FIELD VERIFY ALL CONDITIONS AND SHALL REPORT TO THE ARCHITECT ANY UNKNOWN CONDITIONS, ERRORS OR CONFLICTS IN THE DRAWINGS BEFORE BEGINNING WORK.
- DO NOT SCALE DRAWINGS.
- ALL WALLS TO BE TYPE "A" U.N.O. ON PLAN.
- WOOD GRAIN HATCH IS REPRESENTATIONAL. WOOD GRAIN WILL BE VERTICLE.
- SEE SHEET AE501 FOR WALL TYPES
- SEE SHEETS AE604 - AE612 FOR WINDOW TYPES
- WOOD VENEER GRAIN & PATTERN TO ALIGN WITH WALLS, SOFFITS, CABINETS, & BASE BELOW.
- ALL EXPOSED STEEL TO BE PAINTED.
- SEE STRUCTURAL FOR BOARD FORMED CONCRETE REINFORCING AND ADDITIONAL DETAILS.

KEYED NOTES:

1. WHITEBOARD. SEE ACCESSORY SCHEDULE.
2. DRINKING FOUNTAIN. SEE PLUMBING DRAWINGS.
3. VENDING. PROVIDED BY OWNER.
4. FURR WALL WITH WALL TYPE A. SEE FINISH PLANS FOR FINISH.
5. CENTRAL PLANT EQUIPMENT. SEE PLUMBING DRAWINGS.
6. DATA RACK. SEE ELECTRICAL DRAWINGS.
7. STEEL COLUMN. SEE STRUCTURAL. FIREPROOF PER SPEC.
8. FLAT PANEL MONITOR. SEE ELECTRICAL SHEETS.
9. 6" STEP.
10. FIXED TABLES. SEE SPEC.
11. CONCRETE WOOD BENCH. SEE REFERENCED DETAIL.
12. LECTERN. PROVIDED AND INSTALLED BY OWNER.
13. ELECTRICAL PANEL. SEE ELECTRICAL DRAWINGS.
14. FIRE PRESSURE RISER. SEE MECHANICAL.
15. FOR NOTCH OUT AT JOIST SEE DETAIL A4/AE511.
16. ADA DOOR PUSH BUTTON.
17. FIRE EXTINGUISHER IN SEMI-RECESSED CABINET. SEE SPEC.
18. FIRE EXTINGUISHER IN SURFACE MOUNTED CABINET.
19. PLAQUE. SEE A3/AE620.

KEY PLAN:

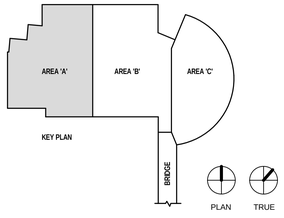

UNLESS A PROFESSIONAL SEAL WITH SIGNATURE AND DATE IS AFFIXED, THIS DOCUMENT IS PRELIMINARY AND IS NOT INTENDED FOR CONSTRUCTION, RECORDING PURPOSES, OR IMPLEMENTATION

UTAH VALLEY UNIVERSITY

State of Utah
Department of Administrative Services
Division of Facilities Construction & Management
4110 State Office Building
Salt Lake City, Utah 84114
Phone: (801) 538 - 3018
Fax: (801) 538 - 3267

CRSA METHODSTUDIO INC.

CRSA ARCHITECTS
649 east south temple
salt lake city, utah 84102
phone:(801) 355-5915

METHOD STUDIO INC.
925 south west temple
salt lake city, utah 84101
phone:(801) 532-4422

DFCM APPROVAL STAMP

project:
UVU Classroom Building - Volume 2
800 West University Parkway
Orem, UT 84058

project#: DFCM# 12192790
date: April 30, 2013

revisions:

2	Addendum 2	05/17/13
5	Addendum 5	05/24/13

title:
Level 1 Area 'A' Floor Plan

sheet:
AE101A

BID DOC

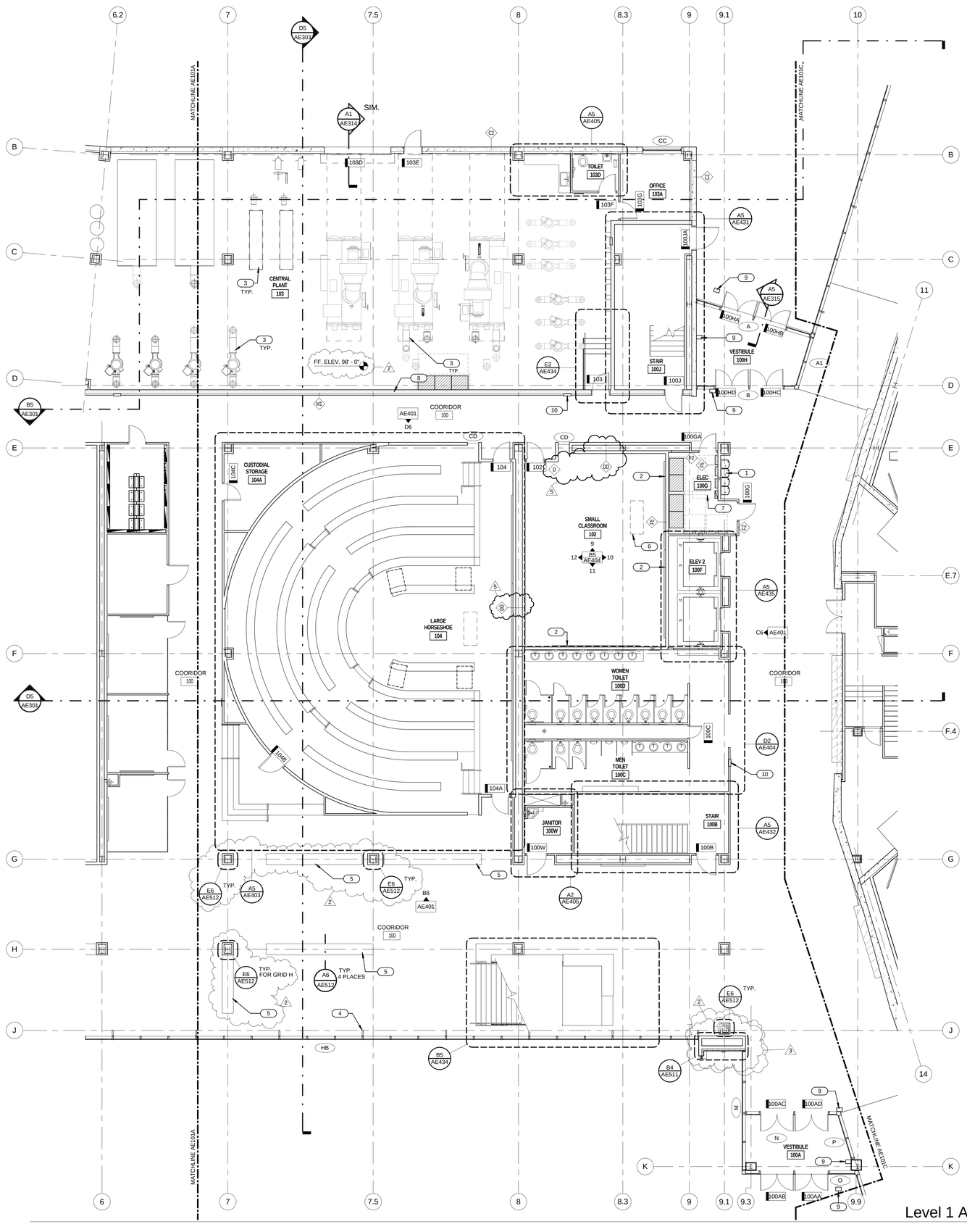

Level 1 Area 'B' Floor Plan (A5 / AE101B)
1/8" = 1'-0"

GENERAL NOTES & LEGEND:

- GENERAL CONTRACTOR SHALL FIELD VERIFY ALL CONDITIONS AND SHALL REPORT TO THE ARCHITECT ANY UNKNOWN CONDITIONS, ERRORS OR CONFLICTS IN THE DRAWINGS BEFORE BEGINNING WORK.
- DO NOT SCALE DRAWINGS.
- ALL WALLS TO BE TYPE "A" U.N.O. ON PLAN.
- WOOD GRAIN HATCH IS REPRESENTATIONAL. WOOD GRAIN WILL BE VERTICLE.
- SEE SHEET AE501 FOR WALL TYPES
- SEE SHEETS AE604 - AE612 FOR WINDOW TYPES
- WOOD VENEER GRAIN & PATTERN TO ALIGN WITH WALLS, SOFFITS, CABINETS, & BASE BELOW.
- ALL EXPOSED STEEL TO BE PAINTED.
- SEE STRUCTURAL FOR BOARD FORMED CONCRETE REINFORCING AND ADDITIONAL DETAILS.

KEYED NOTES:

1. DRINKING FOUNTAIN. SEE PLUMBING DRAWINGS.
2. WHITEBOARD. SEE ACCESSORY SCHEDULE.
3. CENTRAL PLANT EQUIPMENT. SEE PLUMBING DRAWINGS.
4. STEEL COLUMN. SEE STRUCTURAL. FIREPROOF PER SPEC.
5. CONCRETE-WOOD BENCH. SEE REFERENCED DETAIL.
6. LECTERN. PROVIDED AND INSTALLED BY OWNER.
7. ELECTRICAL PANEL. SEE ELECTRICAL DRAWINGS.
8. FOR NOTCH OUT AT JOIST SEE DETAIL A4/AE511.
9. ADA DOOR PUSH BUTTON.
10. FIRE EXTINGUISHER IN SEMI-RECESSED CABINET. SEE SPEC.

KEY PLAN:

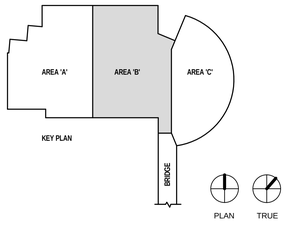

UNLESS A PROFESSIONAL SEAL WITH SIGNATURE AND DATE IS AFFIXED, THIS DOCUMENT IS PRELIMINARY AND IS NOT INTENDED FOR CONSTRUCTION, RECORDING PURPOSES, OR IMPLEMENTATION

UTAH VALLEY UNIVERSITY

State of Utah
Department of Administrative Services
Division of Facilities Construction & Management
4110 State Office Building
Salt Lake City, Utah 84114
Phone: (801) 538 - 3018
Fax: (801) 538 - 3267

CRSA METHODSTUDIO INC.

CRSA ARCHITECTS
649 east south temple
salt lake city, utah 84102
phone:(801) 355-5915

METHOD STUDIO INC.
925 south west temple
salt lake city, utah 84101
phone:(801) 532-4422

DFCM APPROVAL STAMP

project:
UVU Classroom Building - Volume 2
800 West University Parkway
Orem, UT 84058

project#: DFCM# 12192790
date: April 30, 2013

revisions:

2	Addendum 2	05/17/13
3	Addendum 3	05/22/13
5	Addendum 5	05/24/13

title:
Level 1 Area 'B' Floor Plan

sheet:
AE101B

BID DOC

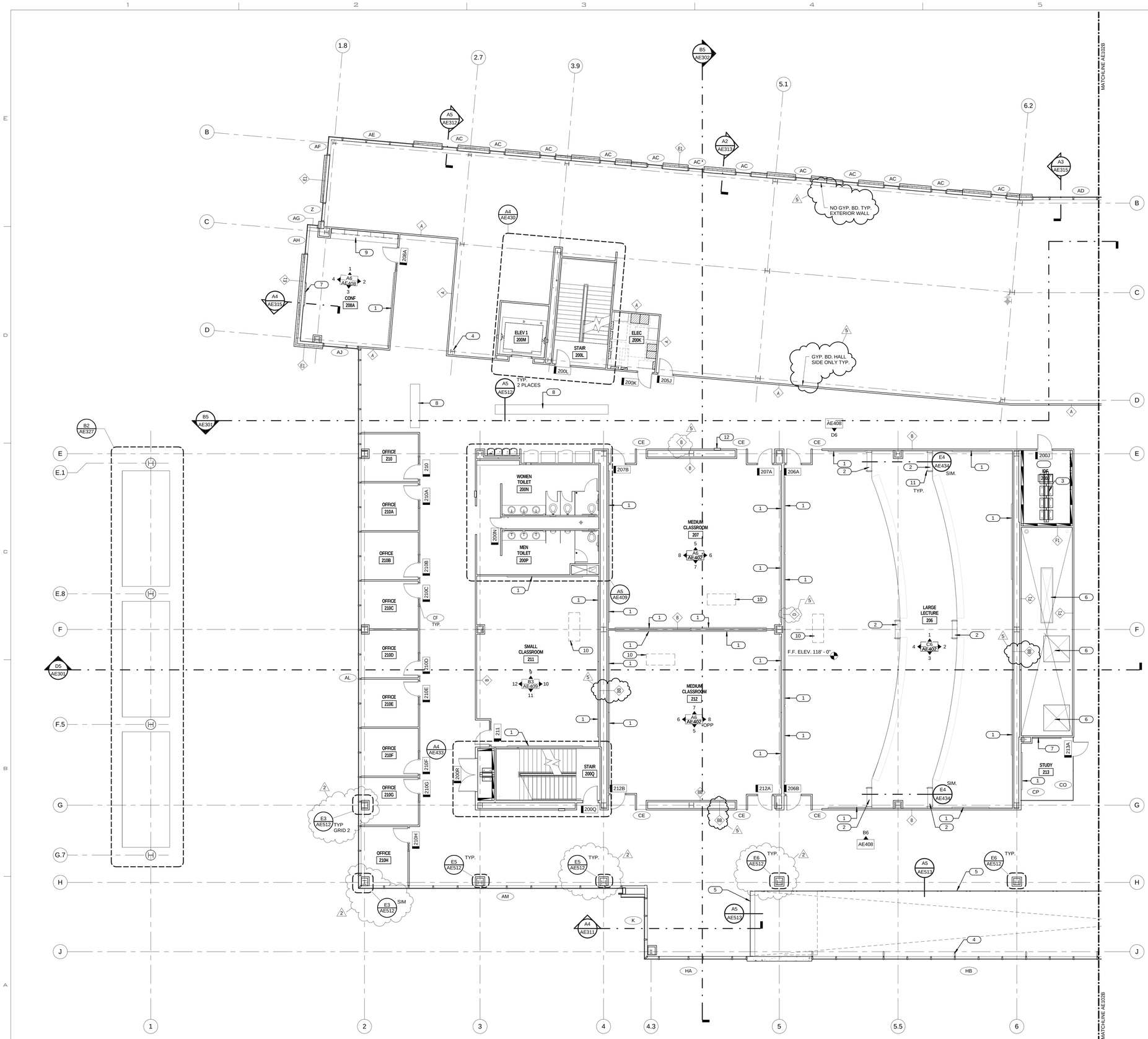

Level 2 Area 'A' Floor Plan

1/8" = 1'-0"

GENERAL NOTES & LEGEND:

- GENERAL CONTRACTOR SHALL FIELD VERIFY ALL CONDITIONS AND SHALL REPORT TO THE ARCHITECT ANY UNKNOWN CONDITIONS, ERRORS OR CONFLICTS IN THE DRAWINGS BEFORE BEGINNING WORK.
- DO NOT SCALE DRAWINGS.
- ALL WALLS TO BE TYPE "A" U.N.O. ON PLAN.
- WOOD GRAIN HATCH IS REPRESENTATIONAL. WOOD GRAIN WILL BE VERTICLE.
- SEE SHEET AE501 FOR WALL TYPES
- SEE SHEETS AE604 - AE612 FOR WINDOW TYPES
- WOOD VENEER GRAIN & PATTERN TO ALIGN WITH WALLS, SOFFITS, CABINETS, & BASE BELOW.
- ALL EXPOSED STEEL TO BE PAINTED.
- SEE STRUCTURAL FOR BOARD FORMED CONCRETE REINFORCING AND ADDITIONAL DETAILS.

KEYED NOTES:

1. WHITEBOARD. SEE ACCESSORY SCHEDULE.
2. 6" STEP.
3. DATA RACK. SEE ELECTRICAL DRAWINGS.
4. STEEL COLUMN. SEE STRUCTURAL. FIREPROOF PER SPEC.
5. GUARDRAIL. SEE DETAIL.
6. MECHANICAL DUCT. SEE MECHANICAL DRAWINGS.
7. FLAT PANEL MONITOR. SEE ELECTRICAL SHEETS.
8. WOOD BENCH. SEE REFERENCED DETAIL.
9. CASEWORK. SEE INTERIOR ELEVATIONS.
10. LECTERN. PROVIDED AND INSTALLED BY OWNER.
11. 1-1/2" DIA. PIPE GUARDRAIL. PAINT.
12. FIRE EXTINGUISHER IN SEMI-RECESSED CABINET. SEE SPEC.

KEY PLAN:

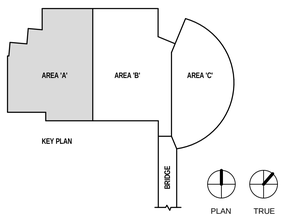

UNLESS A PROFESSIONAL SEAL WITH SIGNATURE AND DATE IS AFFIXED, THIS DOCUMENT IS PRELIMINARY AND IS NOT INTENDED FOR CONSTRUCTION, RECORDING PURPOSES, OR IMPLEMENTATION

UTAH VALLEY UNIVERSITY

State of Utah
Department of Administrative Services
Division of Facilities Construction & Management
4110 State Office Building
Salt Lake City, Utah 84114
Phone: (801) 538 - 3018
Fax: (801) 538 - 3267

CRSA METHODSTUDIO INC.

CRSA ARCHITECTS
649 east south temple
salt lake city, utah 84102
phone:(801) 355-5915

METHOD STUDIO INC.
925 south west temple
salt lake city, utah 84101
phone:(801) 532-4422

DFCM APPROVAL STAMP

project:
UVU Classroom Building - Volume 2
800 West University Parkway
Orem, UT 84058

project#: DFCM# 12192790
date: April 30, 2013

revisions:
2. Addendum 2 05/17/13
5. Addendum 5 05/24/13

title:
Level 2 Area 'A' Floor Plan

sheet:
AE102A

BID DOC

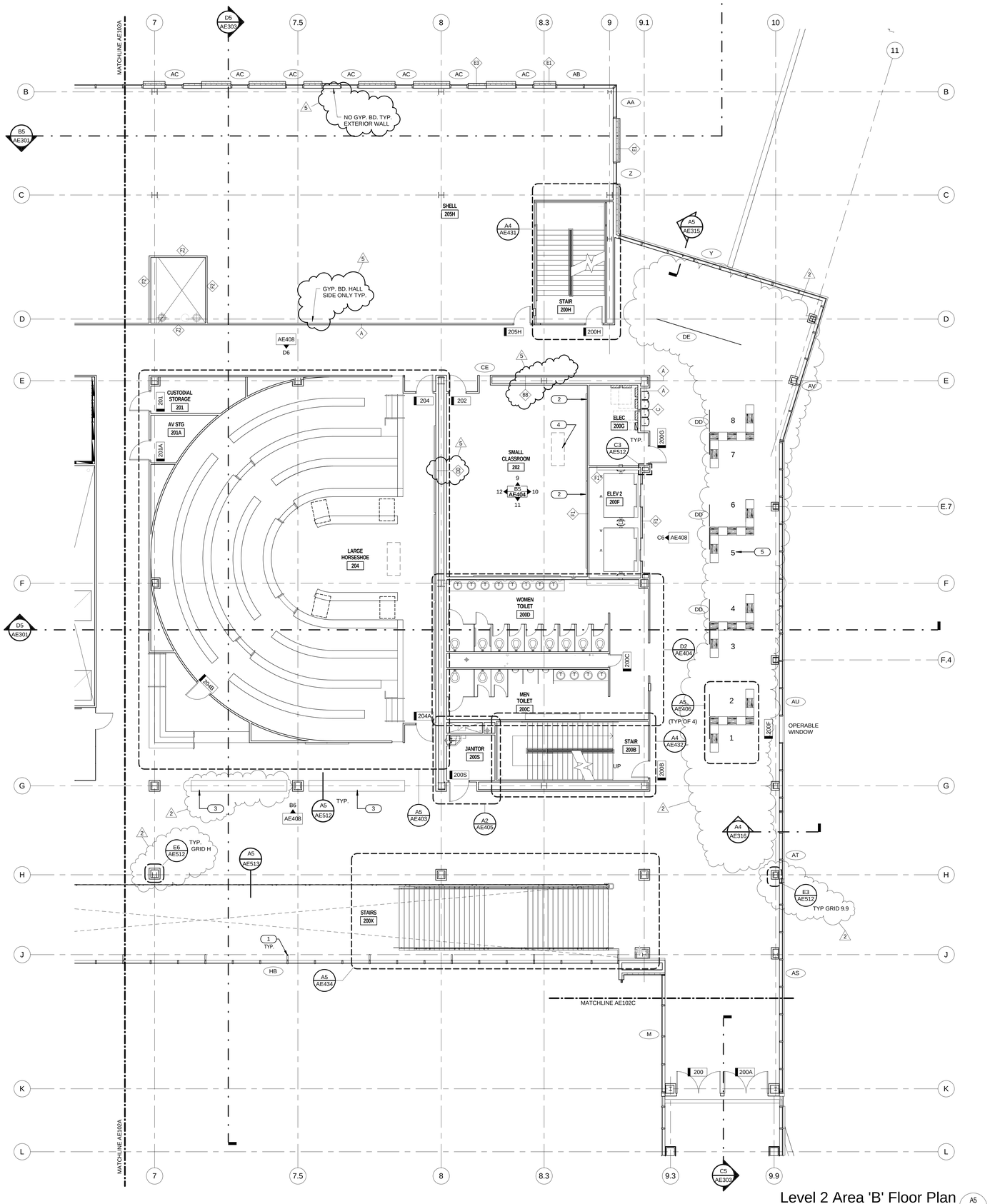

Level 2 Area 'B' Floor Plan

1/8" = 1'-0"

GENERAL NOTES & LEGEND:

- GENERAL CONTRACTOR SHALL FIELD VERIFY ALL CONDITIONS AND SHALL REPORT TO THE ARCHITECT ANY UNKNOWN CONDITIONS, ERRORS OR CONFLICTS IN THE DRAWINGS BEFORE BEGINNING WORK.
- DO NOT SCALE DRAWINGS.
- ALL WALLS TO BE TYPE "A" U.N.O. ON PLAN.
- WOOD GRAIN HATCH IS REPRESENTATIONAL. WOOD GRAIN WILL BE VERTICLE.
- SEE SHEET AE501 FOR WALL TYPES
- SEE SHEETS AE604 - AE612 FOR WINDOW TYPES
- WOOD VENEER GRAIN & PATTERN TO ALIGN WITH WALLS, SOFFITS, CABINETS, & BASE BELOW.
- ALL EXPOSED STEEL TO BE PAINTED.
- SEE STRUCTURAL FOR BOARD FORMED CONCRETE REINFORCING AND ADDITIONAL DETAILS.

KEYED NOTES:

1. STEEL COLUMN. SEE STRUCTURAL. FIREPROOF PER SPEC.
2. WHITEBOARD. SEE ACCESSORY SCHEDULE.
3. WOOD BENCH. SEE REFERENCED DETAIL.
4. LECTERN. PROVIDED AND INSTALLED BY OWNER.
5. TYPICAL IDENTIFIER FOR GLAZING SIGNAGE

KEY PLAN:

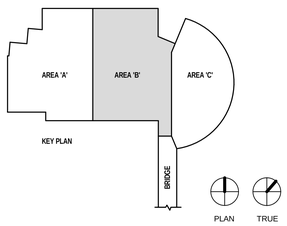

UNLESS A PROFESSIONAL SEAL WITH SIGNATURE AND DATE IS AFFIXED, THIS DOCUMENT IS PRELIMINARY AND IS NOT INTENDED FOR CONSTRUCTION, RECORDING PURPOSES, OR IMPLEMENTATION

UTAH VALLEY UNIVERSITY

State of Utah
Department of Administrative Services
Division of Facilities Construction & Management
4110 State Office Building
Salt Lake City, Utah 84114
Phone: (801) 538 - 3018
Fax: (801) 538 - 3267

CRSA METHODSTUDIO INC.

CRSA ARCHITECTS
649 east south temple
salt lake city, utah 84102
phone:(801) 355-5915

METHOD STUDIO INC.
925 south west temple
salt lake city, utah 84101
phone:(801) 532-4422

DFCM APPROVAL STAMP

project:
UVU Classroom Building - Volume 2
800 West University Parkway
Orem, UT 84058

project#: DFCM# 12192790
date: April 30, 2013

revisions:
2 Addendum 2 05/17/13
5 Addendum 5 05/24/13

title:
Level 2 Area 'B' Floor Plan

sheet:
AE102B

BID DOC

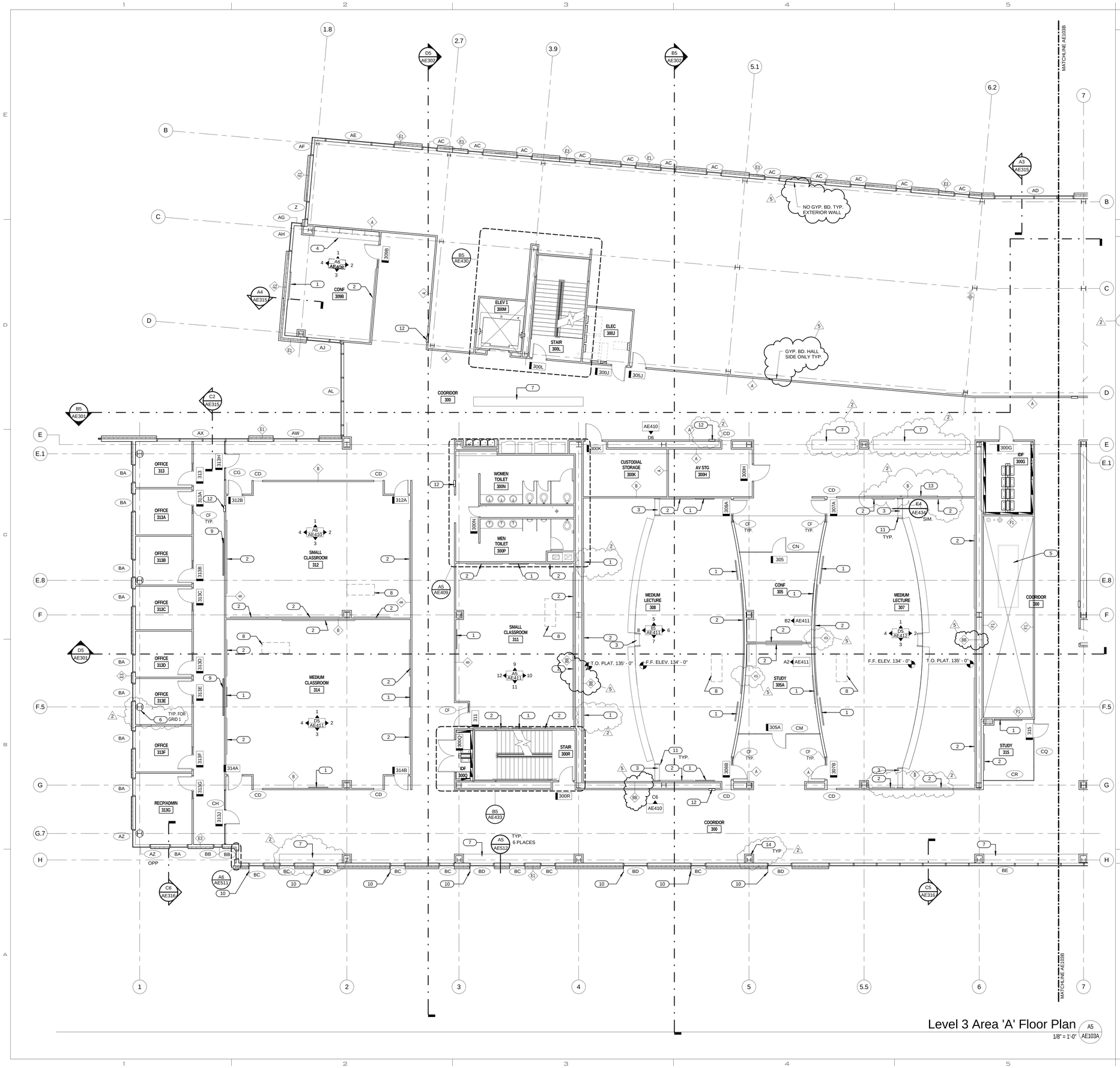

Level 3 Area 'A' Floor Plan (A5 / AE103A)
1/8" = 1'-0"

GENERAL NOTES & LEGEND:

- GENERAL CONTRACTOR SHALL FIELD VERIFY ALL CONDITIONS AND SHALL REPORT TO THE ARCHITECT ANY UNKNOWN CONDITIONS, ERRORS OR CONFLICTS IN THE DRAWINGS BEFORE BEGINNING WORK.
- DO NOT SCALE DRAWINGS.
- ALL WALLS TO BE TYPE "A" U.N.O. ON PLAN.
- WOOD GRAIN HATCH IS REPRESENTATIONAL. WOOD GRAIN WILL BE VERTICLE.
- SEE SHEET AE501 FOR WALL TYPES
- SEE SHEETS AE604 - AE612 FOR WINDOW TYPES
- WOOD VENEER GRAIN & PATTERN TO ALIGN WITH WALLS, SOFFITS, CABINETS, & BASE BELOW.
- ALL EXPOSED STEEL TO BE PAINTED.
- SEE STRUCTURAL FOR BOARD FORMED CONCRETE REINFORCING AND ADDITIONAL DETAILS.

KEYED NOTES:

1. FLAT PANEL MONITOR. SEE ELECTRICAL SHEETS.
2. WHITEBOARD. SEE ACCESSORY SCHEDULE.
3. 6" STEP.
4. CASEWORK. SEE INTERIOR ELEVATIONS.
5. MECHANICAL DUCT. SEE MECHANICAL DRAWINGS.
6. ALUMINUM COLUMN COVER. SEE SPEC.
7. WOOD BENCH. SEE REFERENCED DETAIL.
8. LECTERN. PROVIDED AND INSTALLED BY OWNER.
9. TACK BOARD. SEE ACCESSORY SCHEDULE.
10. ALUMINUM VERTICAL SUN SHADE.
11. 1-1/2" DIA. PIPE GUARDRAIL. PAINT.
12. FIRE EXTINGUISHER IN SEMI-RECESSED CABINET. SEE SPEC.
13. GLASSBOARD. SEE ACCESSORY SCHEDULE.
14. TYPICAL COLUMN SEE DETAILS E2-E3 ON SHEET AE512.

KEY PLAN:

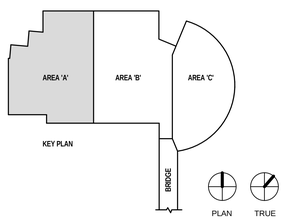

UNLESS A PROFESSIONAL SEAL WITH SIGNATURE AND DATE IS AFFIXED, THIS DOCUMENT IS PRELIMINARY AND IS NOT INTENDED FOR CONSTRUCTION, RECORDING PURPOSES, OR IMPLEMENTATION

UTAH VALLEY UNIVERSITY

State of Utah
Department of Administrative Services
Division of Facilities Construction & Management
4110 State Office Building
Salt Lake City, Utah 84114
Phone: (801) 538 - 3018
Fax: (801) 538 - 3267

CRSA METHODSTUDIO INC.

CRSA ARCHITECTS
649 east south temple
salt lake city, utah 84102
phone:(801) 355-5915

METHOD STUDIO INC.
925 south west temple
salt lake city, utah 84101
phone:(801) 532-4422

DFCM APPROVAL STAMP

project:
UVU Classroom Building - Volume 2
800 West University Parkway
Orem, UT 84058

project#: DFCM# 12192790
date: April 30, 2013

revisions:

2	Addendum 2	05/17/13
5	Addendum 5	05/24/13

title:
Level 3 Area 'A' Floor Plan

sheet:
AE103A

BID DOC

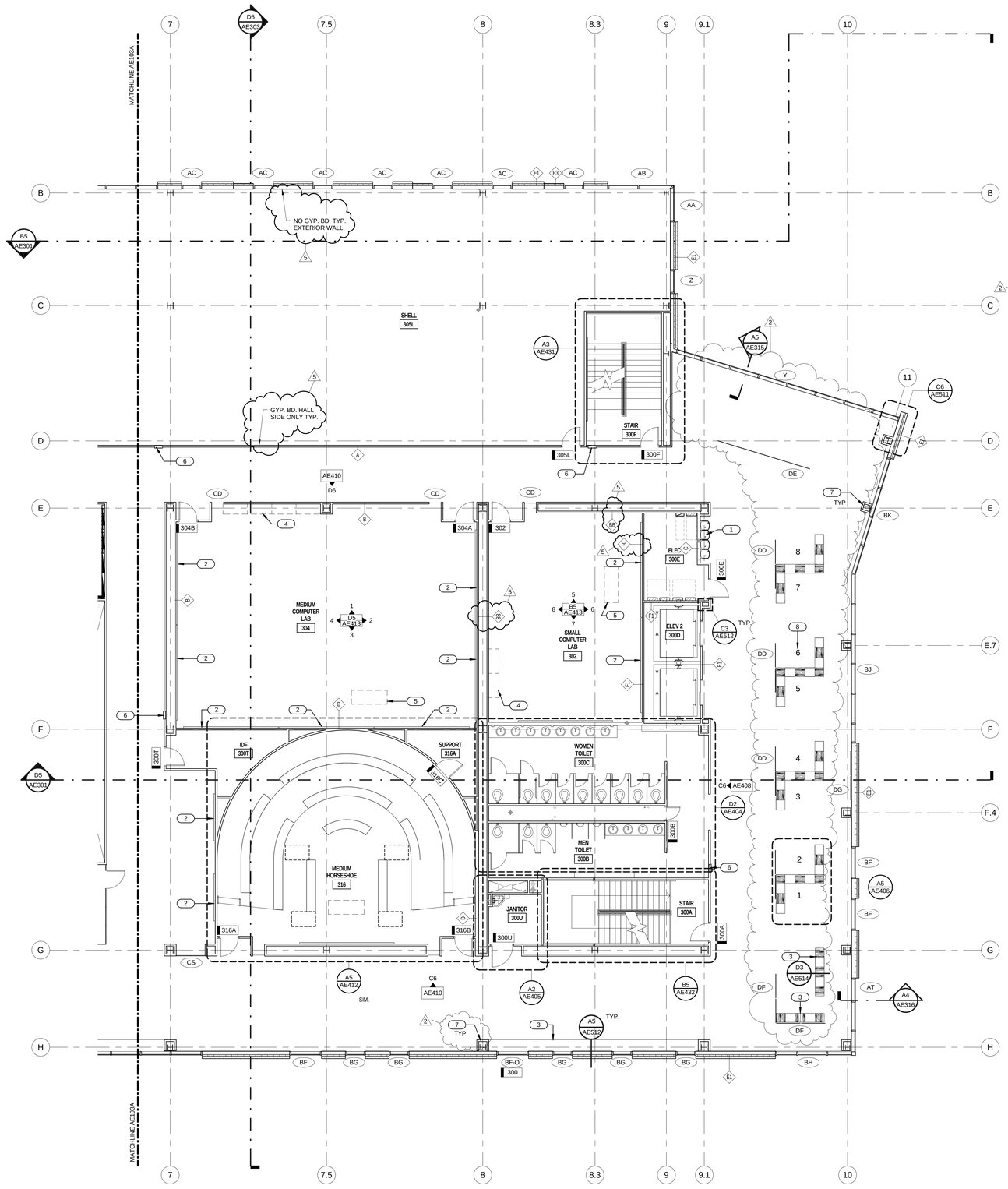

Level 3 Area 'B' Floor Plan (A5 / AE103B)
1/8" = 1'-0"

GENERAL NOTES & LEGEND:

- GENERAL CONTRACTOR SHALL FIELD VERIFY ALL CONDITIONS AND SHALL REPORT TO THE ARCHITECT ANY UNKNOWN CONDITIONS, ERRORS OR CONFLICTS IN THE DRAWINGS BEFORE BEGINNING WORK.
- DO NOT SCALE DRAWINGS.
- ALL WALLS TO BE TYPE "A" U.N.O. ON PLAN.
- WOOD GRAIN HATCH IS REPRESENTATIONAL. WOOD GRAIN WILL BE VERTICLE.
- SEE SHEET AE501 FOR WALL TYPES
- SEE SHEETS AE604 - AE612 FOR WINDOW TYPES
- WOOD VENEER GRAIN & PATTERN TO ALIGN WITH WALLS, SOFFITS, CABINETS, & BASE BELOW.
- ALL EXPOSED STEEL TO BE PAINTED.
- SEE STRUCTURAL FOR BOARD FORMED CONCRETE REINFORCING AND ADDITIONAL DETAILS.

KEYED NOTES:

1. DRINKING FOUNTAIN. SEE PLUMBING DRAWINGS.
2. WHITEBOARD. SEE ACCESSORY SCHEDULE.
3. WOOD BENCH. SEE REFERENCED DETAIL.
4. FURNISHING BY OWNER.
5. LECTERN, PROVIDED AND INSTALLED BY OWNER.
6. FIRE EXTINGUISHER IN SEMI-RECESSED CABINET. SEE SPEC.
7. TYPICAL COLUMN SEE DETAILS E2-E3 ON SHEET AE512.
8. TYPICAL IDENTIFIER FOR GLAZING SIGNAGE

KEY PLAN:

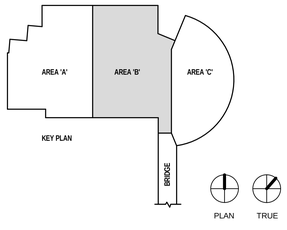

UNLESS A PROFESSIONAL SEAL WITH SIGNATURE AND DATE IS AFFIXED, THIS DOCUMENT IS PRELIMINARY AND IS NOT INTENDED FOR CONSTRUCTION, RECORDING PURPOSES, OR IMPLEMENTATION

UTAH VALLEY UNIVERSITY

State of Utah
Department of Administrative Services
Division of Facilities Construction & Management
4110 State Office Building
Salt Lake City, Utah 84114
Phone: (801) 538 - 3018
Fax: (801) 538 - 3267

CRSA METHODSTUDIO INC.

CRSA ARCHITECTS
649 east south temple
salt lake city, utah 84102
phone:(801) 355-5915

METHOD STUDIO INC.
925 south west temple
salt lake city, utah 84101
phone:(801) 532-4422

DFCM APPROVAL STAMP

project:
UVU Classroom Building - Volume 2
800 West University Parkway
Orem, UT 84058

project#: DFCM# 12192790
date: April 30, 2013

revisions:
2. Addendum 2 05/17/13
5. Addendum 5 05/24/13

title:
Level 3 Area 'B' Floor Plan

sheet:
AE103B

BID DOC

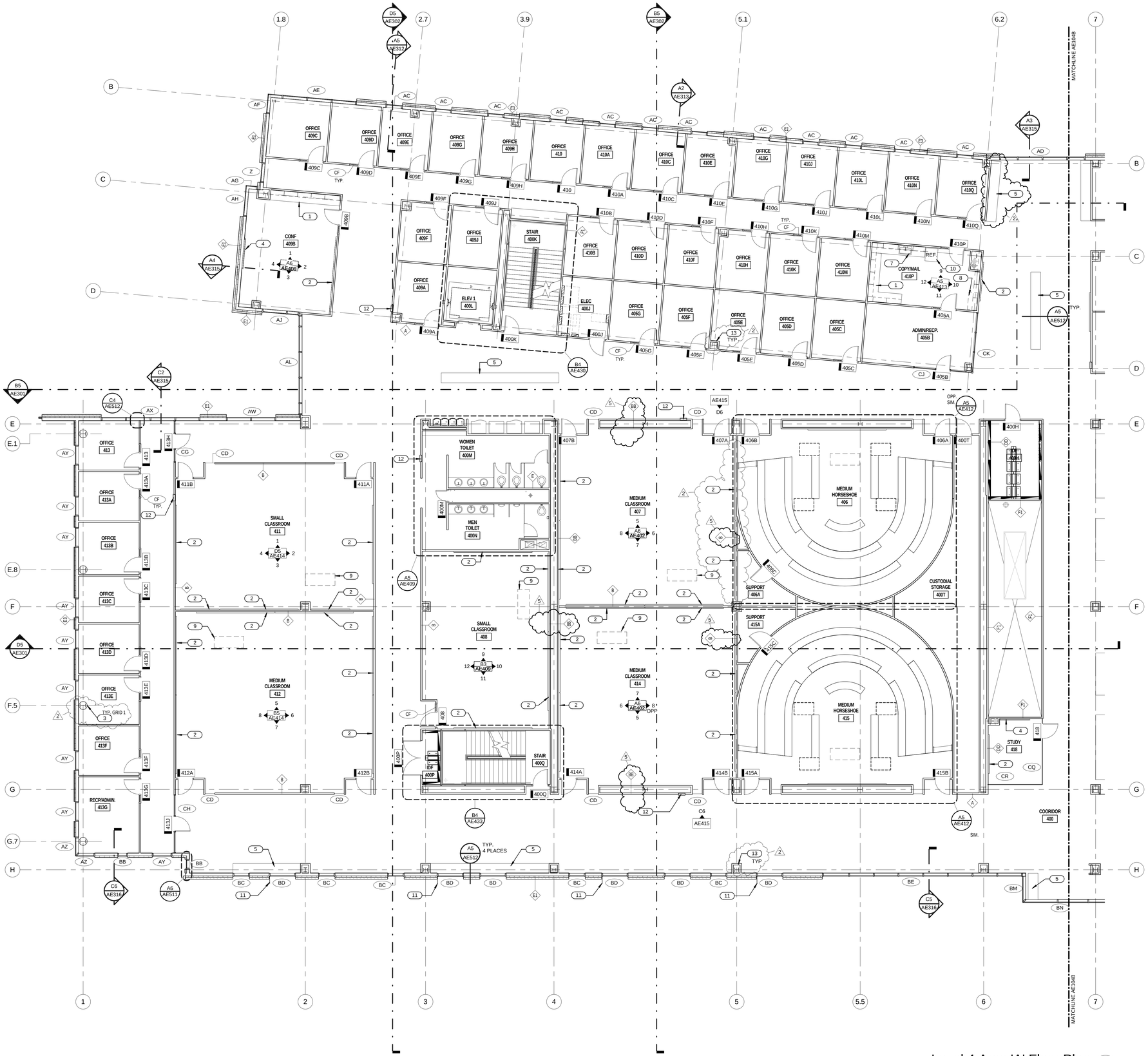

Level 4 Area 'A' Floor Plan (A5 / AE104A)
1/8" = 1'-0"

GENERAL NOTES & LEGEND:

- GENERAL CONTRACTOR SHALL FIELD VERIFY ALL CONDITIONS AND SHALL REPORT TO THE ARCHITECT ANY UNKNOWN CONDITIONS, ERRORS OR CONFLICTS IN THE DRAWINGS BEFORE BEGINNING WORK.
- DO NOT SCALE DRAWINGS.
- ALL WALLS TO BE TYPE "A" U.N.O. ON PLAN.
- WOOD GRAIN HATCH IS REPRESENTATIONAL. WOOD GRAIN WILL BE VERTICLE.
- SEE SHEET AE501 FOR WALL TYPES
- SEE SHEETS AE604 - AE612 FOR WINDOW TYPES
- WOOD VENEER GRAIN & PATTERN TO ALIGN WITH WALLS, SOFFITS, CABINETS, & BASE BELOW.
- ALL EXPOSED STEEL TO BE PAINTED.
- SEE STRUCTURAL FOR BOARD FORMED CONCRETE REINFORCING AND ADDITIONAL DETAILS.

KEYED NOTES:

1. CASEWORK. SEE INTERIOR ELEVATIONS.
2. WHITEBOARD. SEE ACCESSORY SCHEDULE.
3. ALUMINUM COLUMN COVER. SEE SPEC.
4. FLAT PANEL MONITOR. SEE ELECTRICAL SHEETS.
5. WOOD BENCH. SEE REFERENCED DETAIL.
6. MICROWAVE. PROVIDED BY OWNER.
7. SINK. SEE PLUMBING DRAWINGS.
8. COPY MACHINE. PROVIDED BY OWNER.
9. LECTERN. PROVIDED AND INSTALLED BY OWNER.
10. REFRIGERATOR. PROVIDED AND INSTALLED BY OWNER.
11. ALUMINUM VERTICAL SUN SHADE.
12. FIRE EXTINGUISHER IN SEMI-RECESSED CABINET. SEE SPEC.
13. TYPICAL COLUMN SEE DETAILS E2-E3 ON SHEET AE512.

KEY PLAN:

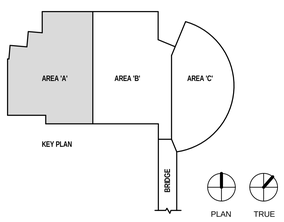

UNLESS A PROFESSIONAL SEAL WITH SIGNATURE AND DATE IS AFFIXED, THIS DOCUMENT IS PRELIMINARY AND IS NOT INTENDED FOR CONSTRUCTION, RECORDING PURPOSES, OR IMPLEMENTATION

UTAH VALLEY UNIVERSITY

State of Utah
Department of Administrative Services
Division of Facilities Construction & Management
4110 State Office Building
Salt Lake City, Utah 84114
Phone: (801) 538 - 3018
Fax: (801) 538 - 3267

CRSA METHODSTUDIO INC.

CRSA ARCHITECTS
649 east south temple
salt lake city, utah 84102
phone:(801) 355-5915

METHOD STUDIO INC.
925 south west temple
salt lake city, utah 84101
phone:(801) 532-4422

DFCM APPROVAL STAMP

project:
UVU Classroom Building - Volume 2
800 West University Parkway
Orem, UT 84058

project#: DFCM# 12192790
date: April 30, 2013

revisions:
2. Addendum 2 05/17/13
5. Addendum 5 05/24/13

title:
Level 4 Area 'A' Floor Plan

sheet:
AE104A

BID DOC

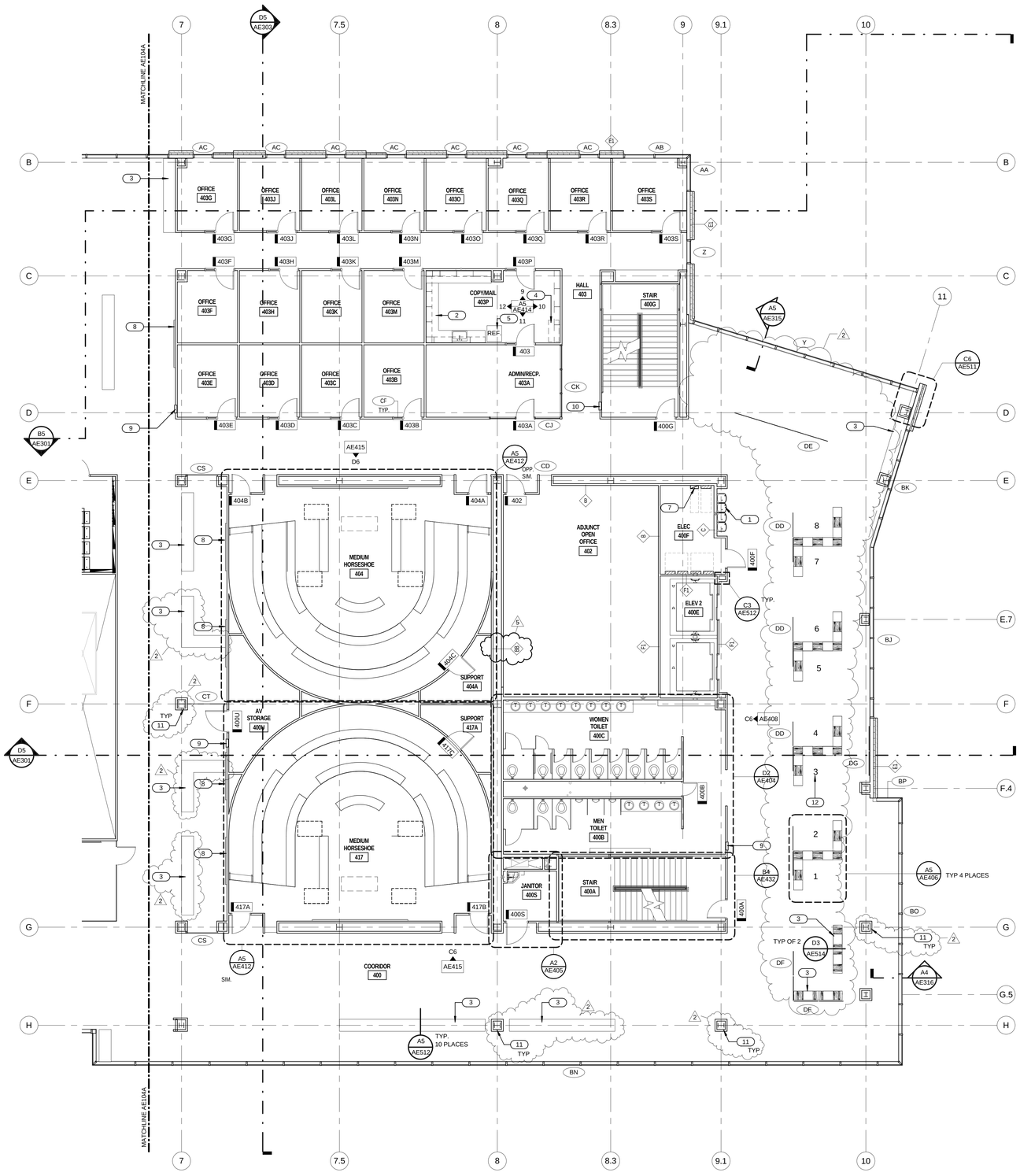

Level 4 Area 'B' Floor Plan

1/8" = 1'-0"

GENERAL NOTES & LEGEND:

- GENERAL CONTRACTOR SHALL FIELD VERIFY ALL CONDITIONS AND SHALL REPORT TO THE ARCHITECT ANY UNKNOWN CONDITIONS, ERRORS OR CONFLICTS IN THE DRAWINGS BEFORE BEGINNING WORK.
- DO NOT SCALE DRAWINGS.
- ALL WALLS TO BE TYPE "A" U.N.O. ON PLAN.
- WOOD GRAIN HATCH IS REPRESENTATIONAL. WOOD GRAIN WILL BE VERTICLE.
- SEE SHEET AE501 FOR WALL TYPES
- SEE SHEETS AE604 - AE612 FOR WINDOW TYPES
- WOOD VENEER GRAIN & PATTERN TO ALIGN WITH WALLS, SOFFITS, CABINETS, & BASE BELOW.
- ALL EXPOSED STEEL TO BE PAINTED.
- SEE STRUCTURAL FOR BOARD FORMED CONCRETE REINFORCING AND ADDITIONAL DETAILS.

KEYED NOTES:

1. DRINKING FOUNTAIN. SEE PLUMBING DRAWINGS.
2. CASEWORK. SEE INTERIOR ELEVATIONS.
3. WOOD BENCH. SEE REFERENCED DETAIL.
4. COPY MACHINE. PROVIDED BY OWNER.
5. REFRIGERATOR. PROVIDED AND INSTALLED BY OWNER.
6. MICROWAVE. PROVIDED BY OWNER.
7. ELECTRICAL PANEL. SEE ELECTRICAL DRAWINGS.
8. WHITEBOARD. SEE ACCESSORY SCHEDULE.
9. FIRE EXTINGUISHER IN SEMI-RECESSED CABINET. SEE SPEC.
10. FIRE EXTINGUISHER IN SURFACE MOUNTED CABINET.
11. TYPICAL COLUMN SEE DETAILS E2-E3 ON SHEET AE512.
12. TYPICAL IDENTIFIER FOR GLAZING SIGNAGE.

KEY PLAN:

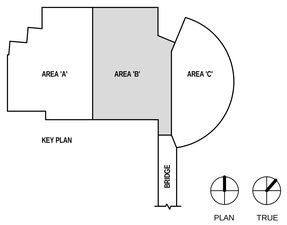

UNLESS A PROFESSIONAL SEAL WITH SIGNATURE AND DATE IS AFFIXED, THIS DOCUMENT IS PRELIMINARY AND IS NOT INTENDED FOR CONSTRUCTION, RECORDING PURPOSES, OR IMPLEMENTATION

UTAH VALLEY UNIVERSITY

State of Utah
Department of Administrative Services
Division of Facilities Construction & Management
4110 State Office Building
Salt Lake City, Utah 84114
Phone: (801) 538 - 3018
Fax: (801) 538 - 3267

CRSA METHODSTUDIO INC.

CRSA ARCHITECTS
649 east south temple
salt lake city, utah 84102
phone:(801) 355-5915

METHOD STUDIO INC.
925 south west temple
salt lake city, utah 84101
phone:(801) 532-4422

DFCM APPROVAL STAMP

project:
UVU Classroom Building - Volume 2
800 West University Parkway
Orem, UT 84058

project#: DFCM# 12192790
date: April 30, 2013

revisions :
2. Addendum 2 05/17/13
5. Addendum 5 05/24/13

title:
Level 4 Area 'B' Floor Plan

sheet:
AE104B

BID DOC

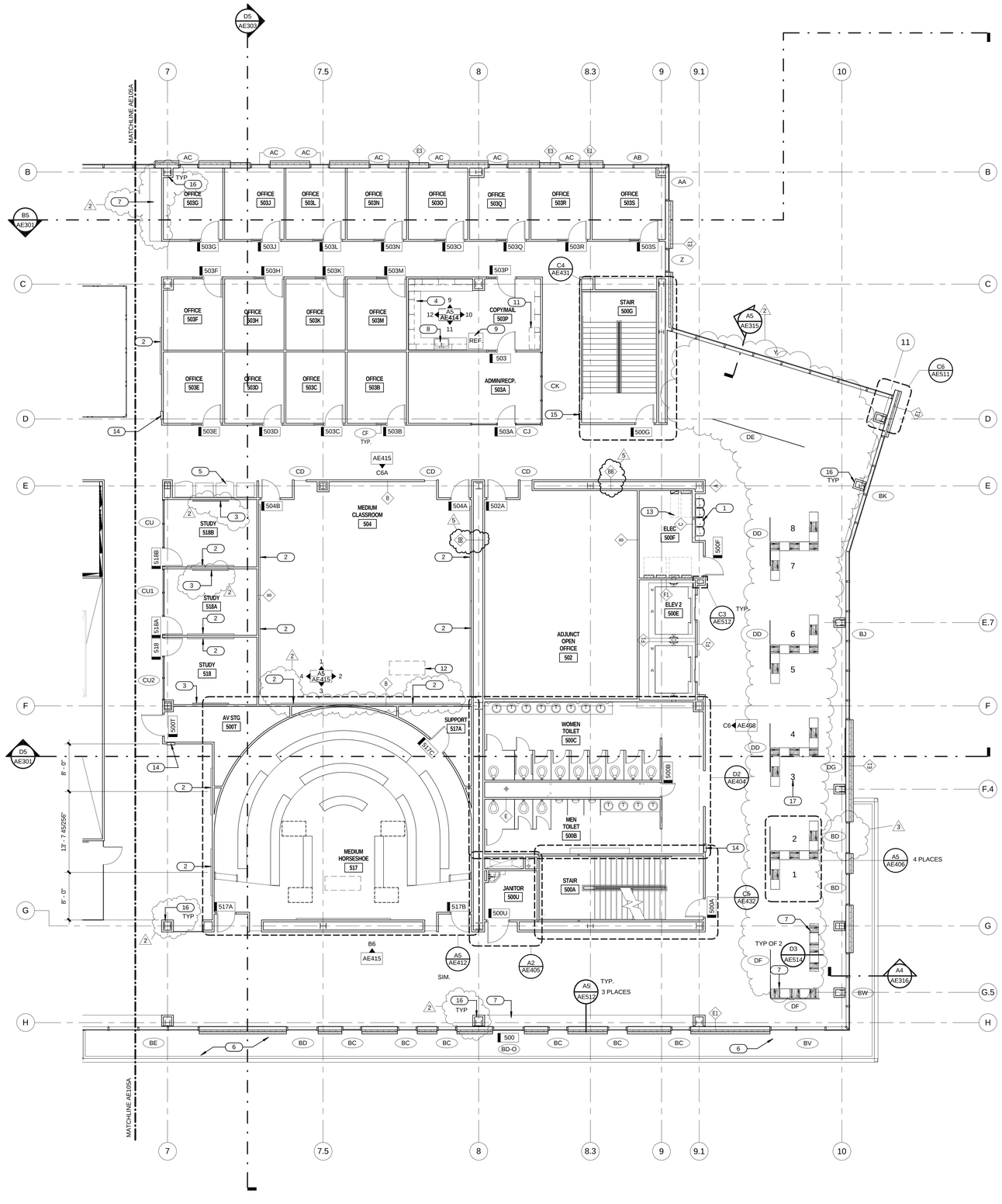

Level 5 Area 'B' Floor Plan (A5 / AE105B)
1/8" = 1'-0"

GENERAL NOTES & LEGEND:

- GENERAL CONTRACTOR SHALL FIELD VERIFY ALL CONDITIONS AND SHALL REPORT TO THE ARCHITECT ANY UNKNOWN CONDITIONS, ERRORS OR CONFLICTS IN THE DRAWINGS BEFORE BEGINNING WORK.
- DO NOT SCALE DRAWINGS.
- ALL WALLS TO BE TYPE "A" U.N.O. ON PLAN.
- WOOD GRAIN HATCH IS REPRESENTATIONAL. WOOD GRAIN WILL BE VERTICLE.
- SEE SHEET AE501 FOR WALL TYPES
- SEE SHEETS AE604 - AE612 FOR WINDOW TYPES
- WOOD VENEER GRAIN & PATTERN TO ALIGN WITH WALLS, SOFFITS, CABINETS, & BASE BELOW.
- ALL EXPOSED STEEL TO BE PAINTED.
- SEE STRUCTURAL FOR BOARD FORMED CONCRETE REINFORCING AND ADDITIONAL DETAILS.

KEYED NOTES:

1. DRINKING FOUNTAIN. SEE PLUMBING DRAWINGS.
2. WHITEBOARD. SEE ACCESSORY SCHEDULE.
3. FLAT PANEL MONITOR. SEE ELECTRICAL SHEETS.
4. CASEWORK. SEE INTERIOR ELEVATIONS.
5. VENDING. PROVIDED BY OWNER.
6. ROOFING. SEE ROOF PLAN.
7. WOOD BENCH. SEE REFERENCED DETAIL.
8. SINK. SEE PLUMBING DRAWINGS.
9. REFRIGERATOR. PROVIDED AND INSTALLED BY OWNER.
10. MICROWAVE. PROVIDED BY OWNER.
11. COPY MACHINE. PROVIDED BY OWNER.
12. LECTERN. PROVIDED AND INSTALLED BY OWNER.
13. ELECTRICAL PANEL. SEE ELECTRICAL DRAWINGS.
14. FIRE EXTINGUISHER IN SEMI-RECESSED CABINET. SEE SPEC.
15. FIRE EXTINGUISHER IN SURFACE MOUNTED CABINET.
16. TYPICAL COLUMN SEE DETAILS E2-E3 ON SHEET AE512.
17. TYPICAL IDENTIFIER FOR GLAZING SIGNAGE

KEY PLAN:

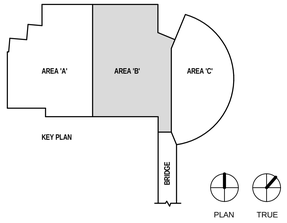

UNLESS A PROFESSIONAL SEAL WITH SIGNATURE AND DATE IS AFFIXED, THIS DOCUMENT IS PRELIMINARY AND IS NOT INTENDED FOR CONSTRUCTION, RECORDING PURPOSES, OR IMPLEMENTATION

UTAH VALLEY UNIVERSITY

State of Utah
Department of Administrative Services
Division of Facilities Construction & Management
4110 State Office Building
Salt Lake City, Utah 84114
Phone: (801) 538 - 3018
Fax: (801) 538 - 3267

CRSA METHODSTUDIO INC.

CRSA ARCHITECTS
649 east south temple
salt lake city, utah 84102
phone:(801) 355-5915

METHOD STUDIO INC.
925 south west temple
salt lake city, utah 84101
phone:(801) 532-4422

DFCM APPROVAL STAMP

project:
UVU Classroom Building - Volume 2
800 West University Parkway
Orem, UT 84058

project#: DFCM# 12192790
date: April 30, 2013

revisions:

2	Addendum 2	05/17/13
3	Addendum 3	05/22/13
5	Addendum 5	05/24/13

title:
Level 5 Area 'B' Floor Plan

sheet:
AE105B

BID DOC

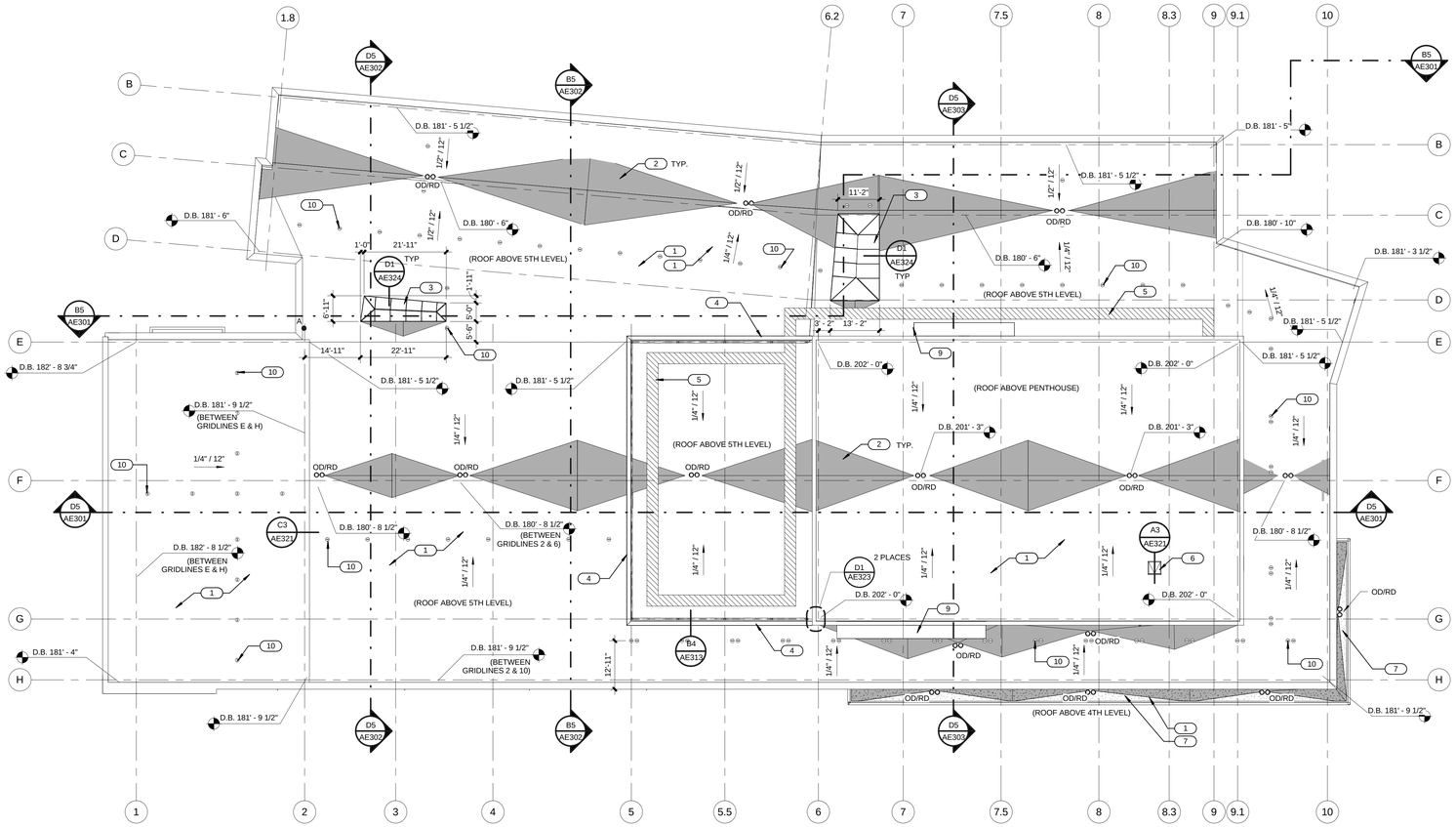

Penthouse Floor Plan/Roof Plan (C5 / AE107)
1/16" = 1'-0"

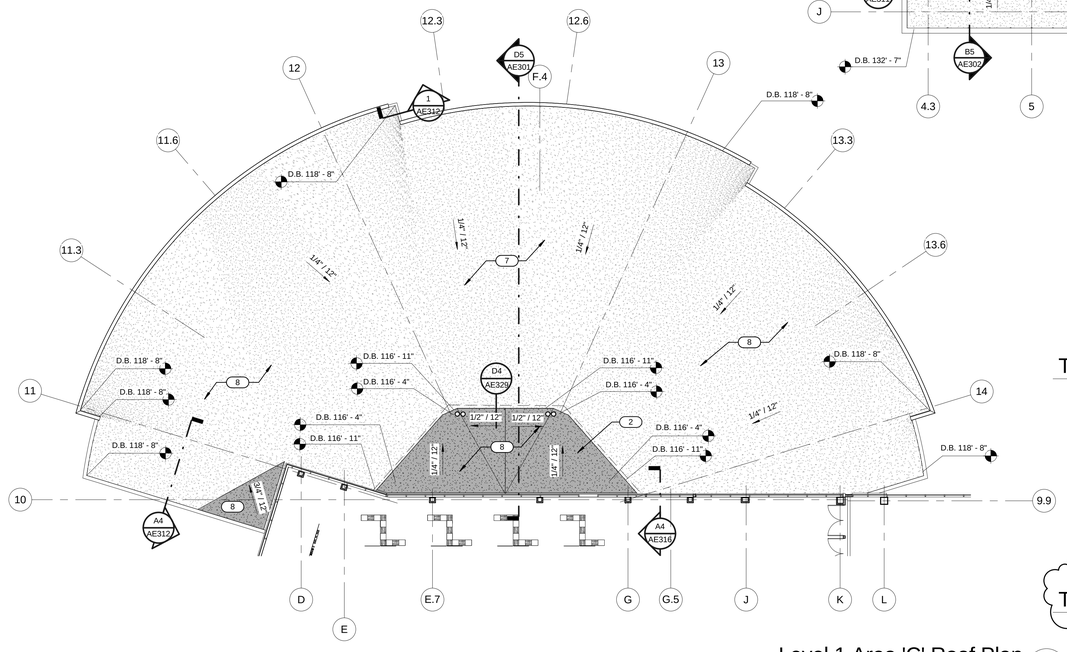

Level 1 Area 'C' Roof Plan (A3 / AE107)
1/16" = 1'-0"

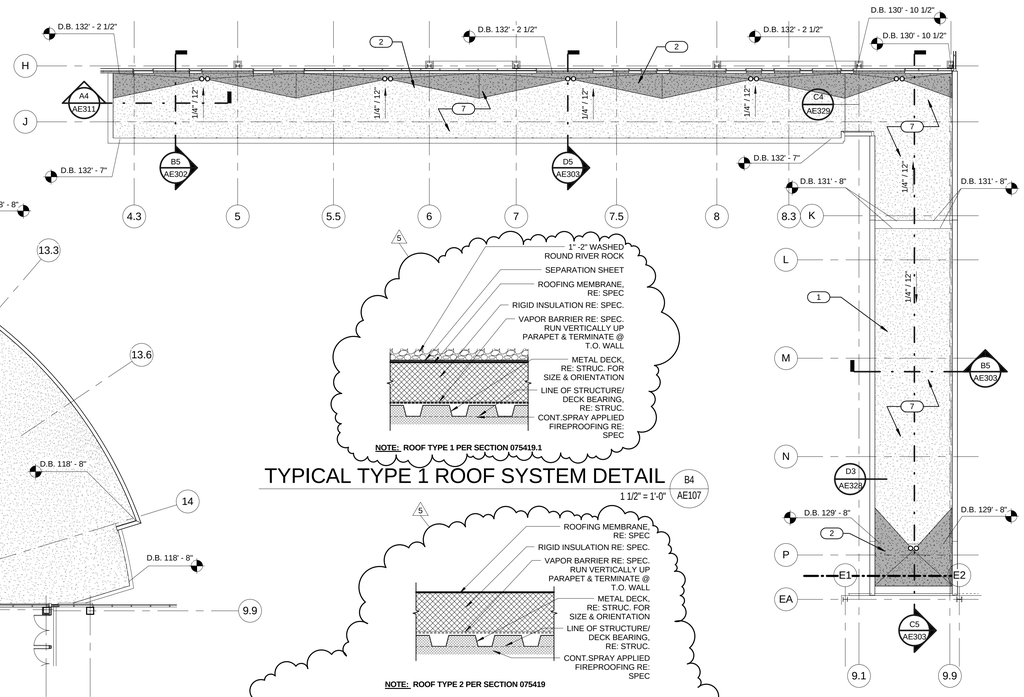

Level 3 Area 'B' Floor Plan (A5 / AE107)
1/16" = 1'-0"

TYPICAL TYPE 1 ROOF SYSTEM DETAIL (B4 / AE107)
1 1/2" = 1'-0"

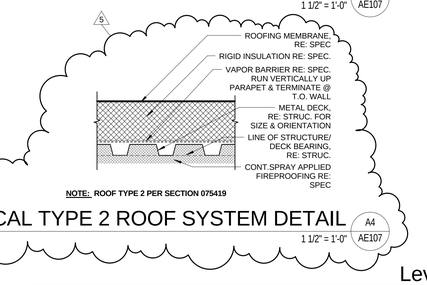

TYPICAL TYPE 2 ROOF SYSTEM DETAIL (A4 / AE107)
1 1/2" = 1'-0"

ROOF GENERAL NOTES:

- GENERAL CONTRACTOR SHALL FIELD VERIFY ALL CONDITIONS AND SHALL REPORT TO THE ARCHITECT ANY UNKNOWN CONDITIONS, ERRORS OR CONFLICTS IN THE DRAWINGS BEFORE BEGINNING WORK.
- DO NOT SCALE DRAWINGS.
- ALL GIVEN DECK BEARING POINTS ARE AT GRID LINE LOCATIONS UNLESS NOTED OTHERWISE.
- ALL CRICKETS SHOWN (SHADED) ARE TO BE BUILT-UP RIGID INSULATION AND SHALL HAVE BACK SLOPE OF 1/4" PER FOOT MINIMUM.
- OD/RD DENOTES OVERFLOW DRAIN AND ROOF DRAIN.
- ALL EXPOSED EXTERIOR STEEL TO BE PAINTED WITH A HIGH PERFORMANCE COATING.
- DIMENSIONS SHOWN FOR SKYLIGHT ARE TO OUTSIDE OF CURB, REFER TO SECTION AND DETAILS.

KEYED NOTES:

1. Roof type 2
2. ROOF CRICKET.
3. SKYLIGHT - LAMINATED GLASS.
4. SCREEN WALL, TYPE II METAL PANEL. SEE SPEC.
5. ROOF WALKPAD. SEE SPEC.
6. ROOF DRAIN. SEE DRAIN. 5
7. ROOF TYPE 1
8. NOT USED
9. MECHANICAL LOUVER. SEE MECHANICAL DRAWINGS.
10. ROOF ANCHOR. SEE SPEC.

ROOF LEGEND:

- METAL PANEL TYPE 1, W/ 1/2" SLOPE. SEE SECTIONS AND DETAILS.
- GRAVEL BALLAST ON 5" RIGID INSULATION. 1/4" SLOPE MINIMUM TO DRAINS.
- GRAVEL BALLAST ON CRICKETING & 5" RIGID INSULATION. 1/4" SLOPE MINIMUM TO DRAINS.
- SINGLE PLY MEMBRANE ON 5" RIGID INSULATION. 1/4" SLOPE MINIMUM TO DRAINS.
- PAVER SYSTEM (PV-1) TO SLOPE PARALLEL TO DECK.
- PAVER SYSTEM (PV-2) TO SLOPE PARALLEL TO DECK.
- PAVER SYSTEM (PV-3) TO SLOPE PARALLEL TO DECK.
- ROOF WITH WALK PATH, SEE SPEC.
- ROOF CRICKET

UNLESS A PROFESSIONAL SEAL WITH SIGNATURE AND DATE IS AFFIXED, THIS DOCUMENT IS PRELIMINARY AND IS NOT INTENDED FOR CONSTRUCTION, RECORDING PURPOSES, OR IMPLEMENTATION

UTAH VALLEY UNIVERSITY

State of Utah
Department of Administrative Services
Division of Facilities Construction & Management
4110 State Office Building
Salt Lake City, Utah 84114
Phone: (801) 538 - 3018
Fax: (801) 538 - 3267

CRSA METHODSTUDIO INC.

CRSA ARCHITECTS
649 east south temple
salt lake city, utah 84102
phone:(801) 355-5915

METHOD STUDIO INC.
925 south west temple
salt lake city, utah 84101
phone:(801) 532-4422

DFCM APPROVAL STAMP

project:
UVU Classroom Building - Volume 2
800 West University Parkway
Orem, UT 84058

project#: DFCM# 12192790
date: April 30, 2013

revisions:
5 Addendum 5 05/24/13

title:
Roof Plans

sheet:
AE107

BID DOC

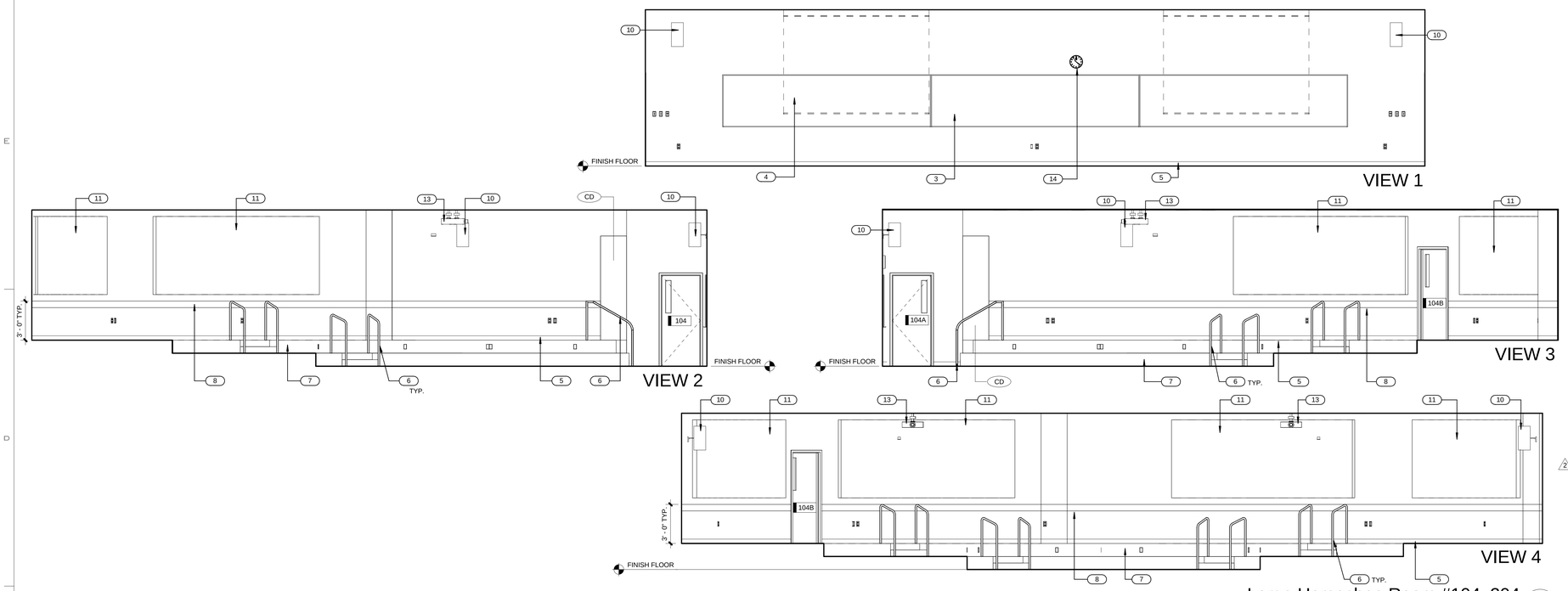

Large Horseshoe Room #104, 204 (D5 / AE403) 1/4" = 1'-0"

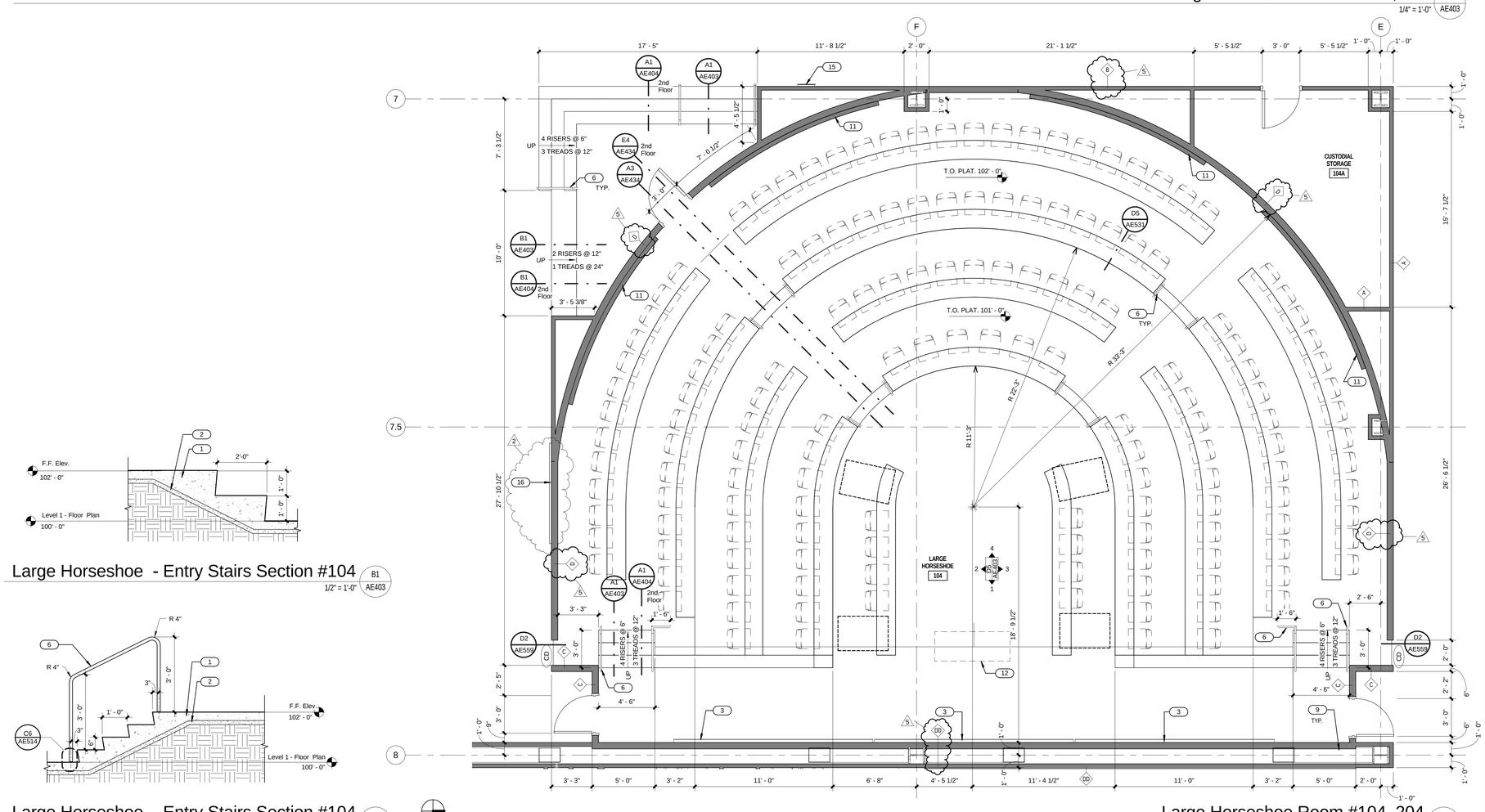

Large Horseshoe Room #104, 204 (A5 / AE403) 1/4" = 1'-0"

Large Horseshoe - Entry Stairs Section #104 (B1 / AE403) 1/2" = 1'-0"

Large Horseshoe - Entry Stairs Section #104 (A1 / AE403) 1/2" = 1'-0"

PLAN NORTH

GENERAL NOTES & LEGEND:

- GENERAL CONTRACTOR SHALL FIELD VERIFY ALL CONDITIONS AND SHALL REPORT TO THE ARCHITECT ANY UNKNOWN CONDITIONS, ERRORS OR CONFLICTS IN THE DRAWINGS BEFORE BEGINNING WORK.
- DO NOT SCALE DRAWINGS.
- ALL WALLS TO BE TYPE "A" U.N.O. ON PLAN.
- WOOD GRAIN HATCH IS REPRESENTATIONAL. WOOD GRAIN WILL BE VERTICLE.
- SEE SHEET AE501 FOR WALL TYPES
- SEE SHEETS AE604 - AE612 FOR WINDOW TYPES
- WOOD VENEER GRAIN & PATTERN TO ALIGN WITH WALLS, SOFFITS, CABINETS, & BASE BELOW.
- ALL EXPOSED STEEL TO BE PAINTED.
- SEE STRUCTURAL FOR BOARD FORMED CONCRETE REINFORCING AND ADDITIONAL DETAILS.

KEYED NOTES:

1. CONCRETE SLAB ON GRADE. SEE STRUCTURAL AND/OR CIVIL.
2. FREE DRAINING GRAVEL.
3. WHITEBOARD. SEE ACCESSORY SCHEDULE.
4. CEILING MOUNTED PROJECTION SCREEN. SEE ELECTRICAL SHEETS.
5. BASE. SEE FINISH PLANS.
6. 1-1/2" DIA. PIPE GUARDRAIL. PAINT.
7. PLATFORM. SEE STRUCTURAL DRAWINGS.
8. WOOD CHAIR RAIL. SEE DETAIL C1/AE514.
9. STEEL BRACE. SEE STRUCTURAL.
10. SPEAKERS. SEE ELECTRICAL.
11. ACOUSTICAL PANEL AP-3. SEE SPEC.
12. LECTERN. PROVIDED AND INSTALLED BY OWNER.
13. PROJECTOR. SEE SEE ELECTRICAL SHEETS.
14. CLOCK. SEE ELECTRICAL.
15. FIRE EXTINGUISHER IN SEMI-RECESSED CABINET. SEE SPEC.
16. GLASSBOARD. SEE ACCESSORY SCHEDULE.

2

UNLESS A PROFESSIONAL SEAL WITH SIGNATURE AND DATE IS AFFIXED, THIS DOCUMENT IS PRELIMINARY AND IS NOT INTENDED FOR CONSTRUCTION, RECORDING PURPOSES, OR IMPLEMENTATION

UTAH VALLEY UVU UNIVERSITY

State of Utah
Department of Administrative Services
Division of Facilities Construction & Management
4110 State Office Building
Salt Lake City, Utah 84114
Phone: (801) 538 - 3018
Fax: (801) 538 - 3267

CRSA METHODSTUDIO INC.

CRSA ARCHITECTS
649 east south temple
salt lake city, utah 84102
phone:(801) 355-5915

METHOD STUDIO INC.
925 south west temple
salt lake city, utah 84101
phone:(801) 532-4422

DFCM APPROVAL STAMP

project:
UVU Classroom Building - Volume 2
800 West University Parkway
Orem, UT 84058

project#: DFCM# 12192790
date: April 30, 2013

revisions:
2. Addendum 2 05/17/13
5. Addendum 5 05/24/13

title:
Enlarged Plans & Int. Elevations

sheet:
AE403

BID DOC

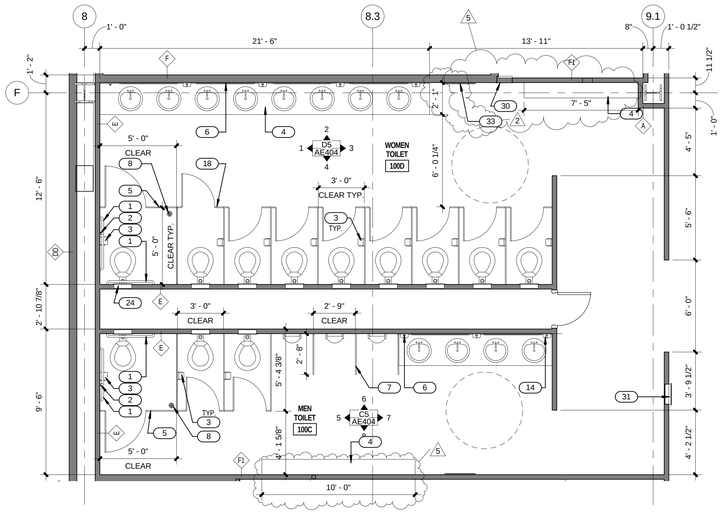

Large Bathrooms Typical (D2 / AE404)
1/4" = 1'-0"

Room # 100C, 100D, 200C, 200D, 300B, 300C, 400B, 400C, 500B, 500C

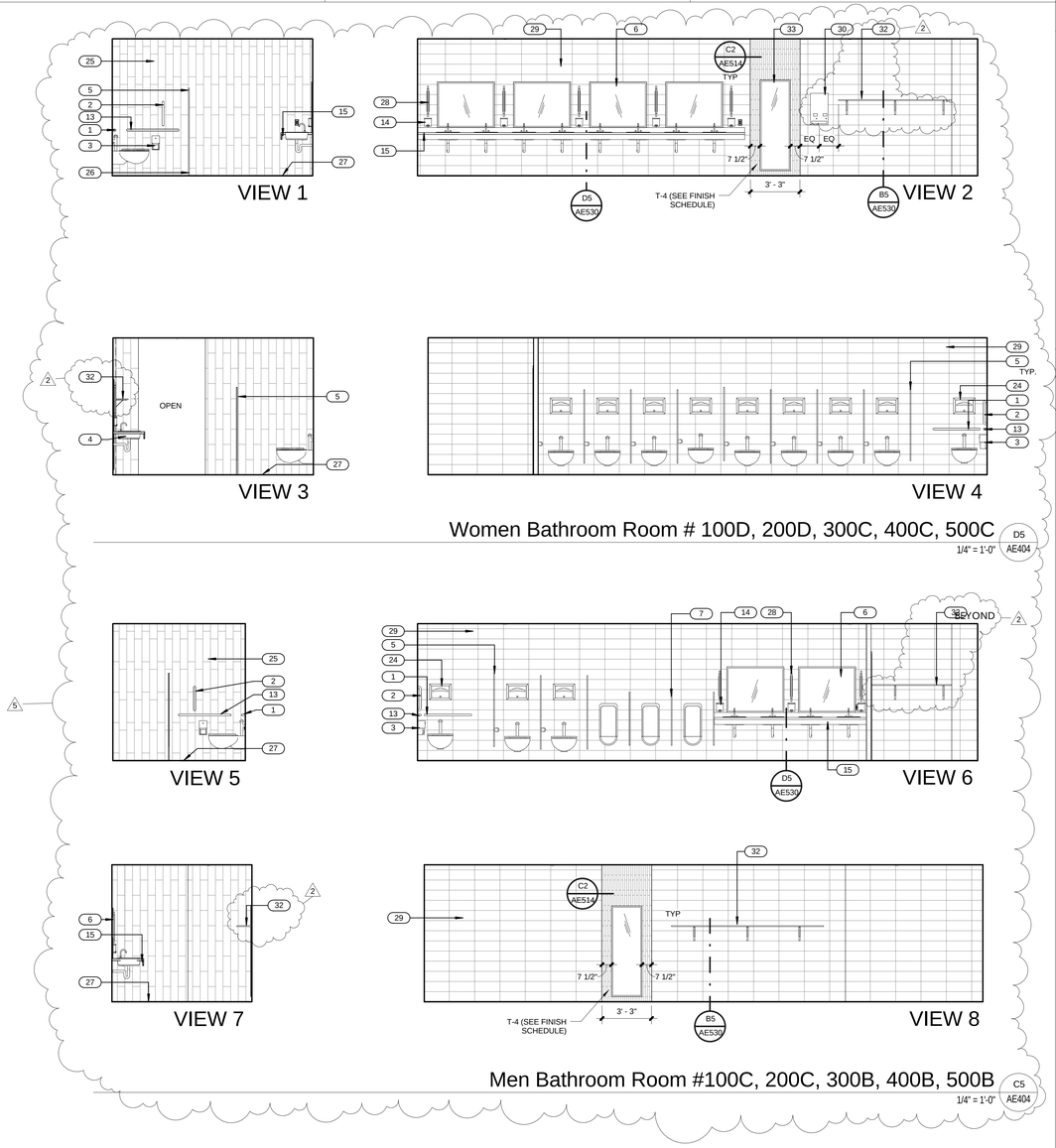

Women Bathroom Room # 100D, 200D, 300C, 400C, 500C (D5 / AE404)
1/4" = 1'-0"

Men Bathroom Room #100C, 200C, 300B, 400B, 500B (C5 / AE404)
1/4" = 1'-0"

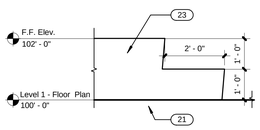

Large Horseshoe - Entry Stairs Section #204 (B1 / AE404)
1/2" = 1'-0"

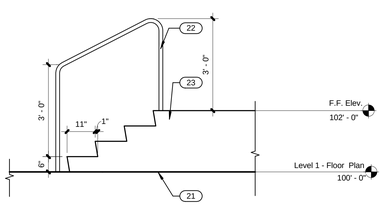

Large Horseshoe - Stairs Section #204 (A1 / AE404)
1/2" = 1'-0"

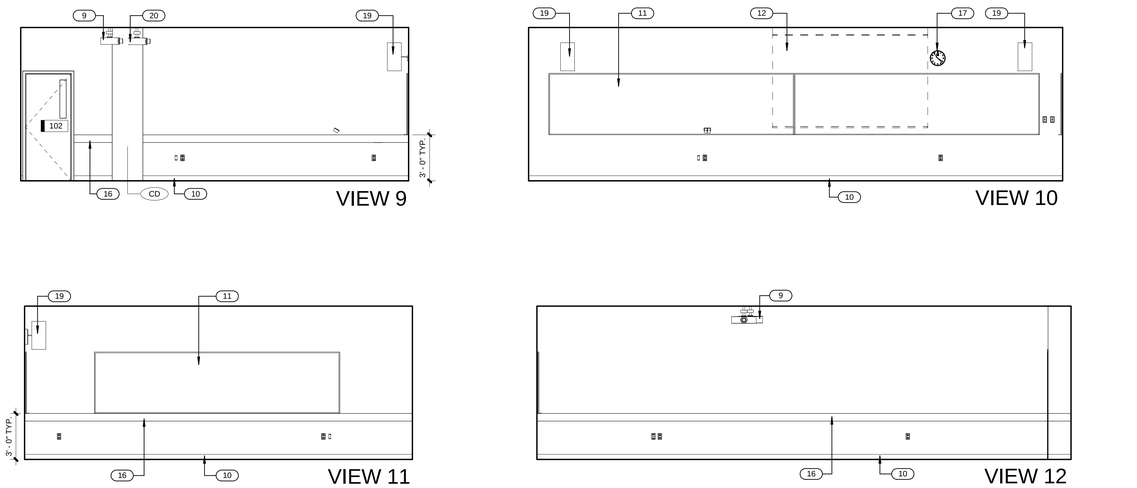

Small Classroom Room #102, 202 (A5 / AE404)
1/4" = 1'-0"

GENERAL NOTES & LEGEND:

- GENERAL CONTRACTOR SHALL FIELD VERIFY ALL CONDITIONS AND SHALL REPORT TO THE ARCHITECT ANY UNKNOWN CONDITIONS, ERRORS OR CONFLICTS IN THE DRAWINGS BEFORE BEGINNING WORK.
- DO NOT SCALE DRAWINGS.
- ALL WALLS TO BE TYPE "A" U.N.O. ON PLAN.
- WOOD GRAIN HATCH IS REPRESENTATIONAL. WOOD GRAIN WILL BE VERTICLE.
- SEE SHEET AE501 FOR WALL TYPES
- SEE SHEETS AE604 - AE612 FOR WINDOW TYPES
- WOOD VENEER GRAIN & PATTERN TO ALIGN WITH WALLS, SOFFITS, CABINETS, & BASE BELOW.
- ALL EXPOSED STEEL TO BE PAINTED.
- SEE STRUCTURAL FOR BOARD FORMED CONCRETE REINFORCING AND ADDITIONAL DETAILS.

KEYED NOTES:

1 36" GRAB BAR. SEE ACCESSORY SCHEDULE.
2 18" VERTICAL GRAB BAR. SEE ACCESSORY SCHEDULE.
3 TOILET PAPER DISPENSER. PROVIDED BY OWNER.
4 CASEWORK. SEE INTERIOR ELEVATIONS.
5 TOILET PARTITION. SEE SPEC AND FINISH SCHEDULE.
6 MIRROR 45" x36". SEE ACCESSORY SCHEDULE.
7 URINAL PARTITION. SEE SPECS.
8 FLOOR DRAIN. SLOPE FLOOR TO DRAIN AS SHOWN. SEE PLUMBING DRAWINGS.
9 PROJECTOR. SEE SEE ELECTRICAL SHEETS.
10 BASE. SEE FINISH PLANS.
11 WHITEBOARD. SEE ACCESSORY SCHEDULE.
12 CEILING MOUNTED PROJECTION SCREEN. SEE ELECTRICAL SHEETS.
13 42" GRAB BAR. SEE ACCESSORY SCHEDULE.
14 SOAP DISPENSER. SEE ACCESSORY SCHEDULE.
15 COUNTERTOP. SEE DETAIL REFERENCED THIS SHEET.
16 WOOD CHAIR RAIL. SEE DETAIL C1/AE514.
17 CLOCK. SEE ELECTRICAL.
18 AMBULATORY PARTITION. SEE SPEC AND FINISH SCHEDULE.
19 SPEAKERS. SEE ELECTRICAL.
20 STEEL BRACE. SEE STRUCTURAL.
21 CONCRETE SLAB ON GRADE. SEE STRUCTURAL AND/OR CIVIL.
22 1-1/2" DIA. PIPE GUARDRAIL. PAINT.
23 PLATFORM. SEE STRUCTURAL DRAWINGS.
24 TOILET SEAT COVER DISPENSER. SEE ACCESSORY SCHEDULE.
25 TILE TYPE T-2, SEE FINISH SCHEDULE
26 BASE. SEE FINISH PLANS
27 ALIGN WALL TILE JOINTS WITH FLOOR TILE
28 SCONCE. SEE ELECTRICAL.
29 TILE TYPE T-1, SEE FINISH SCHEDULE
30 SANITARY NAPKIN DISPENSER. SEE ACCESSORY SCHEDULE.
31 FIRE EXTINGUISHER IN SEMI-RECESSED CABINET. SEE SPEC.
32 SHELF. SEE REFERENCED DETAIL
33 24"x72" MIRROR. SEE ACCESSORY SCHEDULE. (2)

UNLESS A PROFESSIONAL SEAL WITH SIGNATURE AND DATE IS AFFIXED, THIS DOCUMENT IS PRELIMINARY AND IS NOT INTENDED FOR CONSTRUCTION, RECORDING PURPOSES, OR IMPLEMENTATION

UTAH VALLEY UNIVERSITY

State of Utah
Department of Administrative Services
Division of Facilities Construction & Management
4110 State Office Building
Salt Lake City, Utah 84114
Phone: (801) 538 - 3018
Fax: (801) 538 - 3267

CRSA METHODSTUDIO INC.
CRSA ARCHITECTS
649 east south temple
salt lake city, utah 84102
phone:(801) 355-5915
METHOD STUDIO INC.
925 south west temple
salt lake city, utah 84101
phone:(801) 532-4422

DFCM APPROVAL STAMP

project:
UVU Classroom Building - Volume 2
800 West University Parkway
Orem, UT 84058

project#: DFCM# 12192790
date: April 30, 2013

revisions:
2 Addendum 2 05/17/13
5 Addendum 5 05/24/13

title:
Enlarged Plans & Int. Elevations

sheet:
AE404

BID DOC

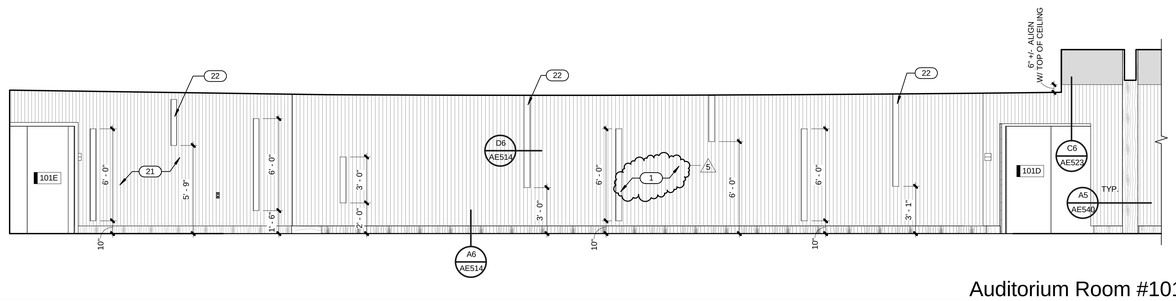

Auditorium Room #101B E5 AE405
1/4" = 1'-0"

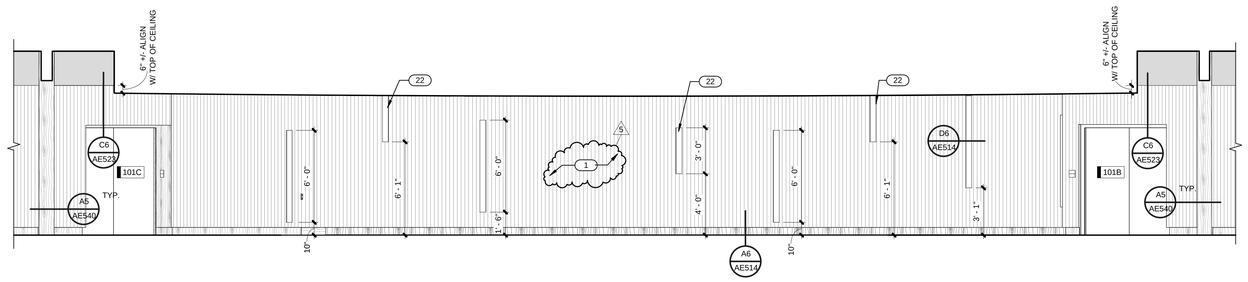

Auditorium Room #101A D5 AE405
1/4" = 1'-0"

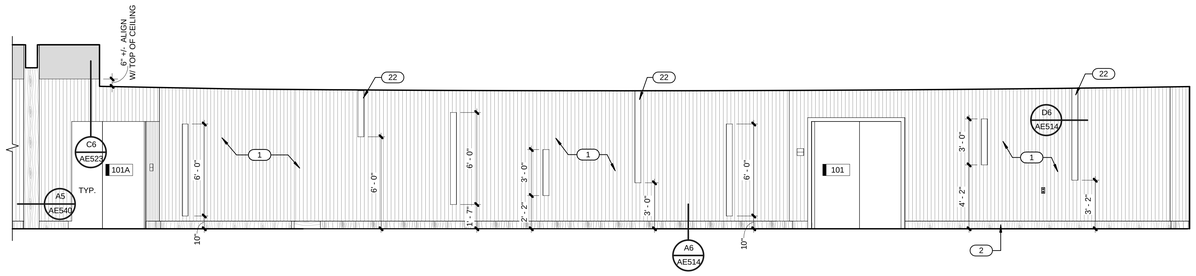

Auditorium Room #101 C5 AE405
1/4" = 1'-0"

Toilet, Room #103D B4 AE405
1/4" = 1'-0"

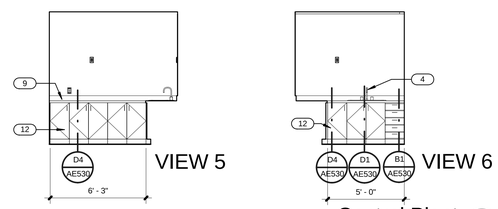

Central Plant B5 AE405
1/4" = 1'-0"

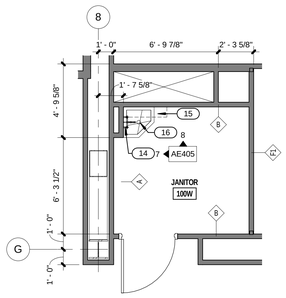

Janitor Enlarged Plan A2 AE405
1/4" = 1'-0"

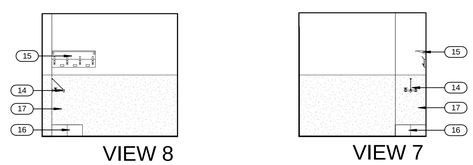

Janitor A4 AE405
1/4" = 1'-0"

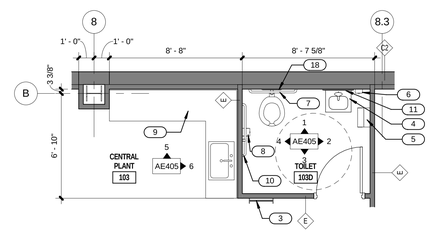

Toilet Enlarged Plan A5 AE405
1/4" = 1'-0"

GENERAL NOTES & LEGEND:

- GENERAL CONTRACTOR SHALL FIELD VERIFY ALL CONDITIONS AND SHALL REPORT TO THE ARCHITECT ANY UNKNOWN CONDITIONS, ERRORS OR CONFLICTS IN THE DRAWINGS BEFORE BEGINNING WORK.
- DO NOT SCALE DRAWINGS.
- ALL WALLS TO BE TYPE "A" U.N.O. ON PLAN.
- WOOD GRAIN HATCH IS REPRESENTATIONAL. WOOD GRAIN WILL BE VERTICLE.
- SEE SHEET AE501 FOR WALL TYPES
- SEE SHEETS AE604 - AE612 FOR WINDOW TYPES
- WOOD VENEER GRAIN & PATTERN TO ALIGN WITH WALLS, SOFFITS, CABINETS, & BASE BELOW.
- ALL EXPOSED STEEL TO BE PAINTED.
- SEE STRUCTURAL FOR BOARD FORMED CONCRETE REINFORCING AND ADDITIONAL DETAILS.

KEYED NOTES:

1. ACOUSTIC WOOD PANEL AP-1.
2. BASE SEE FINISH PLANS.
3. ACCESS LADDER. SEE DETAIL.
4. SINK. SEE PLUMBING DRAWINGS.
5. PAPER TOWEL DISPENSER. SEE ACCESSORY SCHEDULE.
6. SOAP DISPENSER. SEE ACCESSORY SCHEDULE.
7. 36" GRAB BAR. SEE ACCESSORY SCHEDULE.
8. TOILET PAPER DISPENSER. PROVIDED BY OWNER.
9. CASEWORK. SEE INTERIOR ELEVATIONS.
10. 42" GRAB BAR. SEE ACCESSORY SCHEDULE.
11. 24"x36" MIRROR. SEE ACCESSORY SCHEDULE.
12. BASE CABINET.
13. 18" VERTICAL GRAB BAR. SEE ACCESSORY SCHEDULE.
14. FAUCET. SEE PLUMBING DRAWINGS.
15. MOP RACK. SEE ACCESSORY SCHEDULE.
16. MOP SINK. SEE PLUMBING DRAWINGS.
17. FRP. SEE FINISH PLANS.
18. TOILET SEAT COVER DISPENSER. SEE ACCESSORY SCHEDULE.
19. TILE TYPE T-2, SEE FINISH SCHEDULE
20. TILE TYPE T-1, SEE FINISH SCHEDULE
21. WOOD VENEER WC-1. SEE FINISH PLANS.
22. LIGHT BOXES NEED TO COORDINATE AND ALIGN WITH THE CEILING LIGHT BOXES ABOVE.
23. ALIGN WALL TILE JOINTS WITH FLOOR TILE

UNLESS A PROFESSIONAL SEAL WITH SIGNATURE AND DATE IS AFFIXED, THIS DOCUMENT IS PRELIMINARY AND IS NOT INTENDED FOR CONSTRUCTION, RECORDING PURPOSES, OR IMPLEMENTATION

UTAH VALLEY UVU UNIVERSITY

State of Utah
Department of Administrative Services
Division of Facilities Construction & Management
4110 State Office Building
Salt Lake City, Utah 84114
Phone: (801) 538 - 3018
Fax: (801) 538 - 3267

CRSA METHODSTUDIO INC.

CRSA ARCHITECTS
649 east south temple
salt lake city, utah 84102
phone:(801) 355-5915

METHOD STUDIO INC.
925 south west temple
salt lake city, utah 84101
phone:(801) 532-4422

DFCM APPROVAL STAMP

project:
UVU Classroom Building - Volume 2
800 West University Parkway
Orem, UT 84058

project#: DFCM# 12192790
date: April 30, 2013

revisions:
1. Addendum 5 05/24/13

title:
Enlarged Plans & Int. Elevations

sheet:
AE405

BID DOC

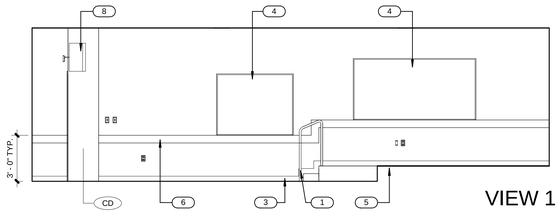

VIEW 1

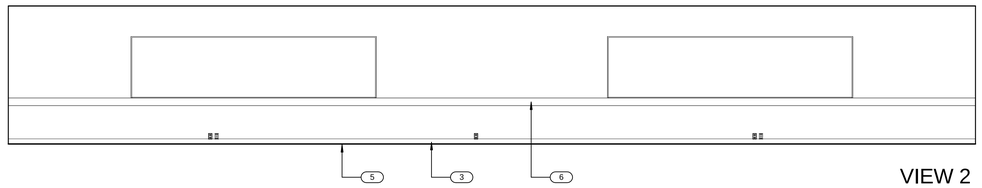

VIEW 2

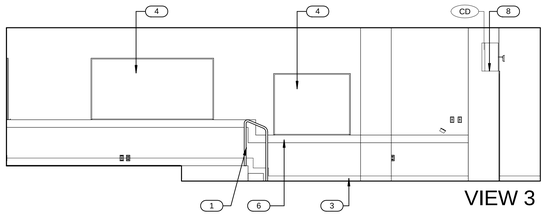

VIEW 3

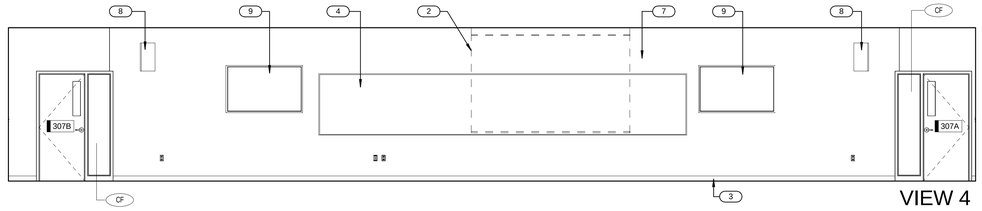

VIEW 4

Medium Lecture Room #307 D5 AE412
1/4" = 1'-0"

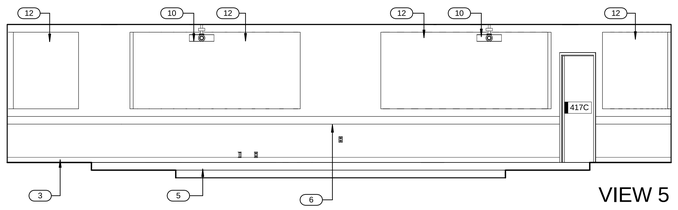

VIEW 5

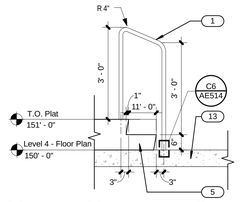

Medium Horseshoe Stairs Section C5 AE412
1/2" = 1'-0"

Room # 316, 404, 406, 415, 417, 515, 517

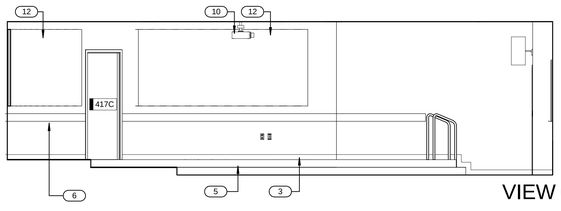

VIEW 6

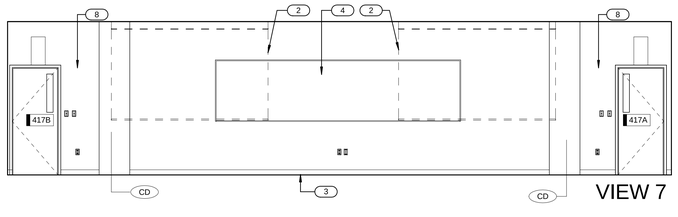

VIEW 7

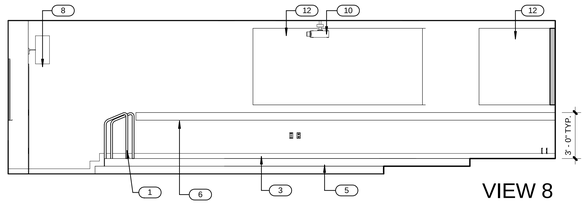

VIEW 8

Medium Horseshoe Rooom #316, 404, 406, 415, 417, 515, 517 A3 AE412
1/4" = 1'-0"

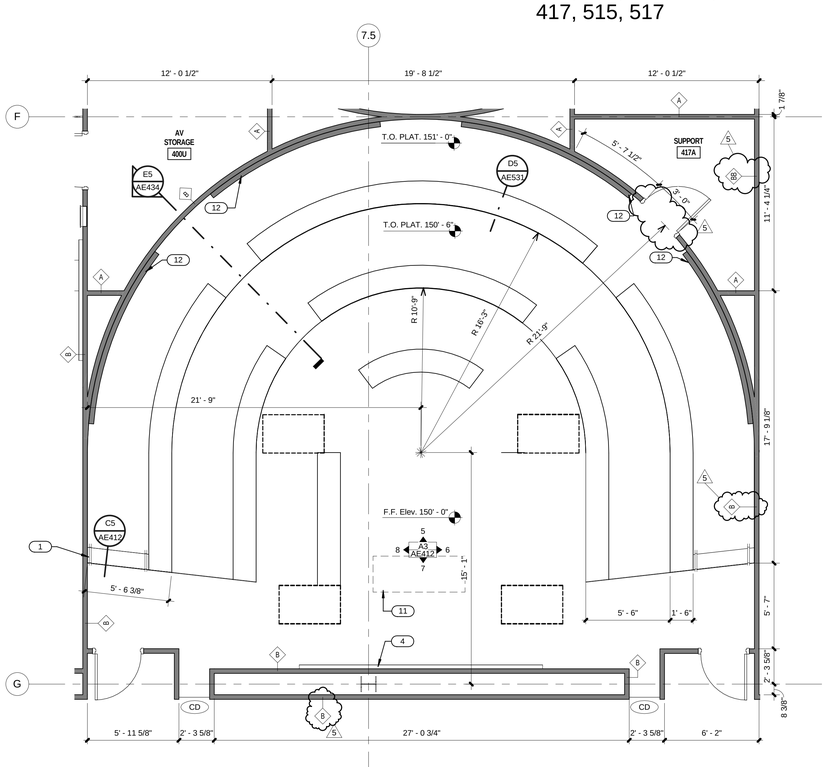

Medium Horseshoe Typical Room #316, 404, 406, 415, 417, 515, 517 A5 AE412
1/4" = 1'-0"

GENERAL NOTES & LEGEND:

- GENERAL CONTRACTOR SHALL FIELD VERIFY ALL CONDITIONS AND SHALL REPORT TO THE ARCHITECT ANY UNKNOWN CONDITIONS, ERRORS OR CONFLICTS IN THE DRAWINGS BEFORE BEGINNING WORK.
- DO NOT SCALE DRAWINGS.
- ALL WALLS TO BE TYPE "A" U.N.O. ON PLAN.
- WOOD GRAIN HATCH IS REPRESENTATIONAL. WOOD GRAIN WILL BE VERTICLE.
- SEE SHEET AE501 FOR WALL TYPES
- SEE SHEETS AE604 - AE612 FOR WINDOW TYPES
- WOOD VENEER GRAIN & PATTERN TO ALIGN WITH WALLS, SOFFITS, CABINETS, & BASE BELOW.
- ALL EXPOSED STEEL TO BE PAINTED.
- SEE STRUCTURAL FOR BOARD FORMED CONCRETE REINFORCING AND ADDITIONAL DETAILS.

KEYED NOTES:

1 1-1/2" DIA. PIPE GUARDRAIL. PAINT.
2 CEILING MOUNTED PROJECTION SCREEN. SEE ELECTRICAL SHEETS.
3 BASE. SEE FINISH PLANS.
4 WHITEBOARD. SEE ACCESSORY SCHEDULE.
5 PLATFORM. SEE STRUCTURAL DRAWINGS.
6 WOOD CHAIR RAIL. SEE DETAIL C1/AE514.
7 CLOCK. SEE ELECTRICAL.
8 SPEAKERS. SEE ELECTRICAL.
9 FLAT PANEL MONITOR. SEE ELECTRICAL SHEETS.
10 PROJECTOR. SEE SEE ELECTRICAL SHEETS.
11 LECTERN. PROVIDED AND INSTALLED BY OWNER.
12 ACOUSTICAL PANEL AP-3. SEE SPEC.
13 CONCRETE SLAB ON DECK. SEE STRUCTURAL.

UNLESS A PROFESSIONAL SEAL WITH SIGNATURE AND DATE IS AFFIXED, THIS DOCUMENT IS PRELIMINARY AND IS NOT INTENDED FOR CONSTRUCTION, RECORDING PURPOSES, OR IMPLEMENTATION

UTAH VALLEY UNIVERSITY

State of Utah
Department of Administrative Services
Division of Facilities Construction & Management
4110 State Office Building
Salt Lake City, Utah 84114
Phone: (801) 538 - 3018
Fax: (801) 538 - 3267

CRSA METHODSTUDIO INC.

CRSA ARCHITECTS
649 east south temple
salt lake city, utah 84102
phone:(801) 355-5915

METHOD STUDIO INC.
925 south west temple
salt lake city, utah 84101
phone:(801) 532-4422

DFCM APPROVAL STAMP

project:
UVU Classroom Building - Volume 2
800 West University Parkway
Orem, UT 84058

project#: DFCM# 12192790
date: April 30, 2013

revisions:
5 Addendum 5 05/24/13

title:
Enlarged Plans & Int. Elevations

sheet:
AE412

BID DOC

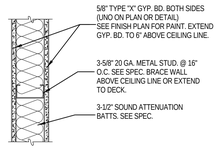

A

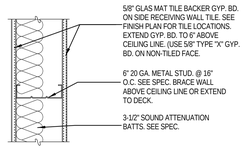

F

INSTALL PER RAL-TL-83-215 OR UL452. SEAL ALL PENETRATIONS WITH URETHANE SEALANT. SEAL ALL DECK FLUTES PER DETAIL.

S6

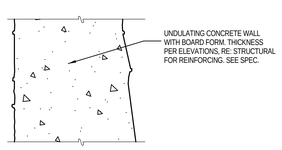

C4

ONE HOUR RATED CONSTRUCTION

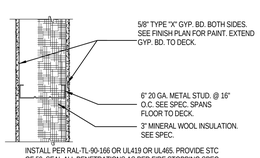

INSTALL PER RAL-TL-90-166 OR UL419 OR UL465. PROVIDE STC OF 59. SEAL ALL PENETRATIONS AS PER FIRE STOPPING SPEC. SEAL ALL DECK FLUTES PER DETAIL.

F5

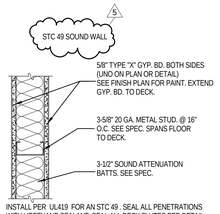

INSTALL PER UL419 FOR AN STC 49 . SEAL ALL PENETRATIONS WITH URETHANE SEALANT. SEAL ALL DECK FLUTES PER DETAIL.

B

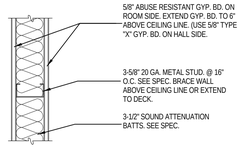

G

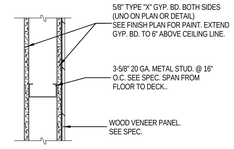

H

TWO HOUR RATED CONSTRUCTION

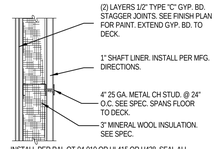

INSTALL PER RAL-OT-04-019 OR UL415 OR UA38. SEAL ALL PENETRATIONS AS PER FIRE STOPPING SPEC. SEAL ALL DECK FLUTES PER DETAIL.

F1

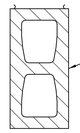

M

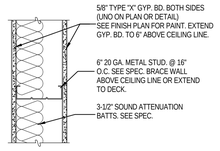

C

AUDITORIUM SIDE

HALL SIDE

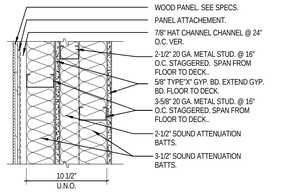

INSTALL PER RAL-TL-83-215 OR UL452. SEAL ALL PENETRATIONS WITH URETHANE SEALANT. SEAL ALL DECK FLUTES PER DETAIL.

S3

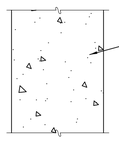

C1

ONE HOUR RATED CONSTRUCTION

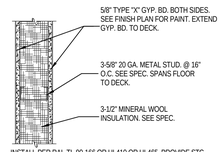

INSTALL PER RAL-TL-90-166 OR UL419 OR UL465. PROVIDE STC OF 59. SEAL ALL PENETRATIONS AS PER FIRE STOPPING SPEC. SEAL ALL DECK FLUTES PER DETAIL.

F2

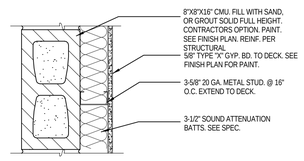

M1

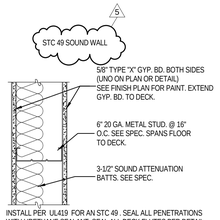

INSTALL PER UL419 FOR AN STC 49 . SEAL ALL PENETRATIONS WITH URETHANE SEALANT. SEAL ALL DECK FLUTES PER DETAIL.

D

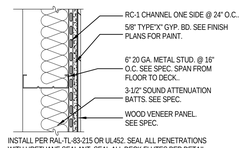

INSTALL PER RAL-TL-83-215 OR UL452. SEAL ALL PENETRATIONS WITH URETHANE SEALANT. SEAL ALL DECK FLUTES PER DETAIL.

S4

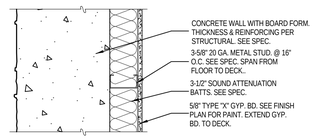

C2

TWO HOUR RATED CONSTRUCTION

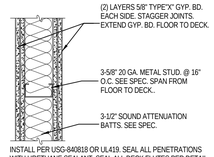

INSTALL PER USG-840818 OR UL419. SEAL ALL PENETRATIONS WITH URETHANE SEALANT. SEAL ALL DECK FLUTES PER DETAIL.

F3

EXPANDED VIEW SHOWN AT AIR BARRIER

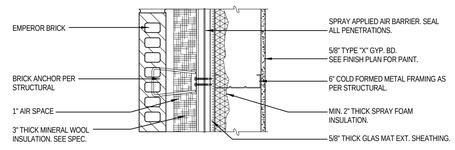

E1

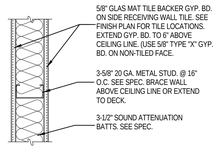

E

AUDITORIUM SIDE

HALL SIDE

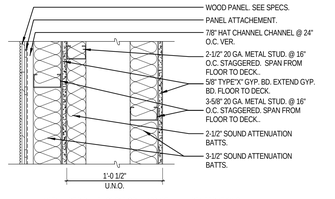

INSTALL PER RAL-TL-83-215 OR UL452. SEAL ALL PENETRATIONS WITH URETHANE SEALANT. SEAL ALL DECK FLUTES PER DETAIL.

S5

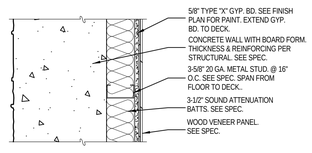

C3

TWO HOUR RATED CONSTRUCTION

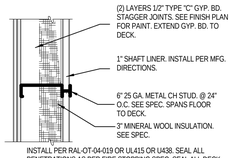

INSTALL PER RAL-OT-04-019 OR UL415 OR UA38. SEAL ALL PENETRATIONS AS PER FIRE STOPPING SPEC. SEAL ALL DECK FLUTES PER DETAIL.

F4

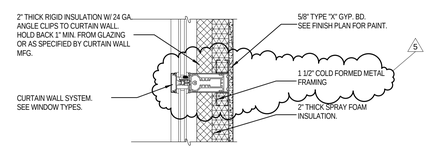

E2

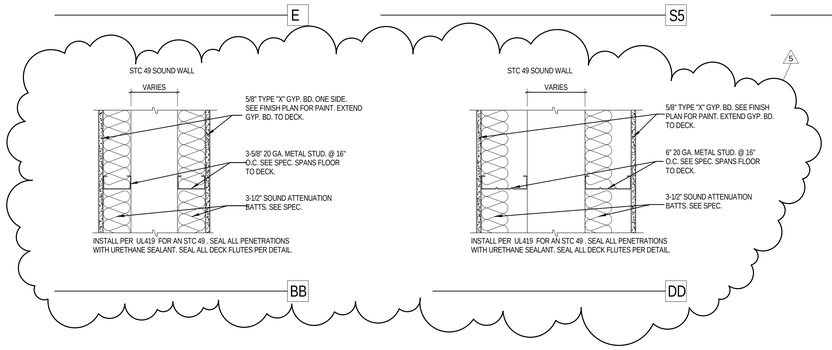

BB

DD

EXPANDED VIEW SHOWN AT AIR BARRIER

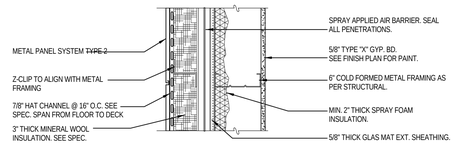

E3

Wall Types

1 1/2" = 1'-0"

A6
AE501

UNLESS A PROFESSIONAL SEAL WITH SIGNATURE AND DATE IS AFFIXED, THIS DOCUMENT IS PRELIMINARY AND IS NOT INTENDED FOR CONSTRUCTION, RECORDING PURPOSES, OR IMPLEMENTATION

UTAH VALLEY UNIVERSITY

State of Utah
Department of Administrative Services
Division of Facilities Construction & Management
4110 State Office Building
Salt Lake City, Utah 84114
Phone: (801) 538 - 3018
Fax: (801) 538 - 3267

CRSA METHODSTUDIO INC.

CRSA ARCHITECTS
649 east south temple
salt lake city, utah 84102
phone:(801) 355-5915

METHOD STUDIO INC.
925 south west temple
salt lake city, utah 84101
phone:(801) 532-4422

DFCM APPROVAL STAMP

project:
UVU Classroom Building - Volume 2
800 West University Parkway
Orem, UT 84058

project#: DFCM# 12192790
date: April 30, 2013

revisions:
5 Addendum 5 05/24/13

title:
Wall Types

sheet:
AE501

BID DOC

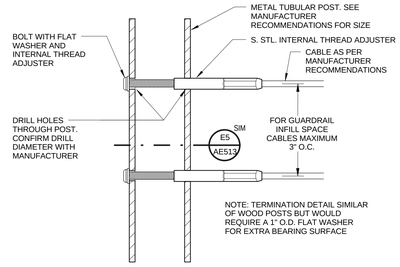

Cable Rail Detail (E3 / AE513)
NOT TO SCALE

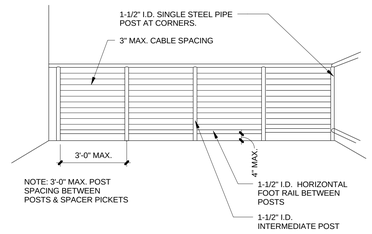

Cable Rail Detail (E4 / AE513)
NOT TO SCALE

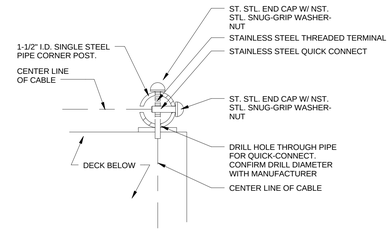

Cable Rail Detail (E5 / AE513)
NOT TO SCALE

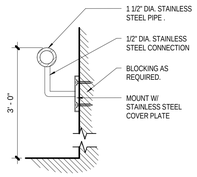

Railing Detail (E6 / AE513)
3" = 1'-0"

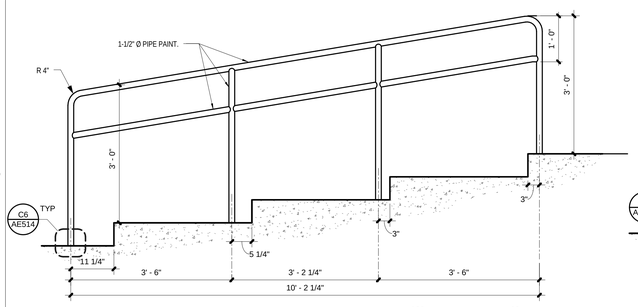

Railing - Detail A (D2 / AE513)
3/4" = 1'-0"

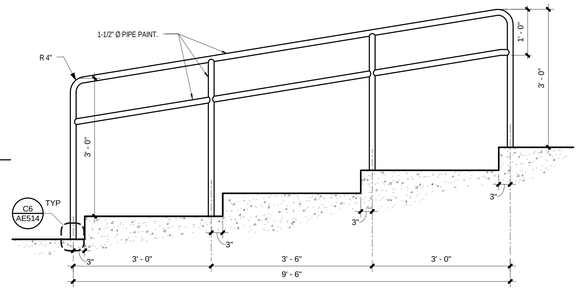

Railing - Detail B (D4 / AE513)
3/4" = 1'-0"

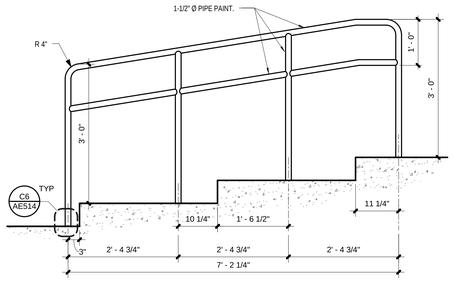

Railing - Detail C (D5 / AE513)
3/4" = 1'-0"

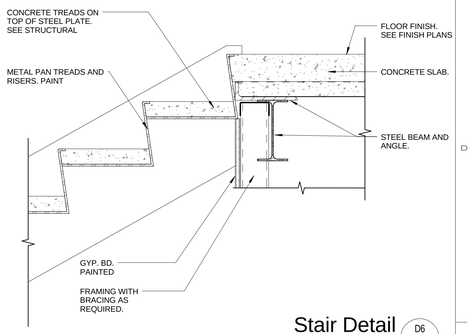

Stair Detail (D6 / AE513)
1 1/2" = 1'-0"

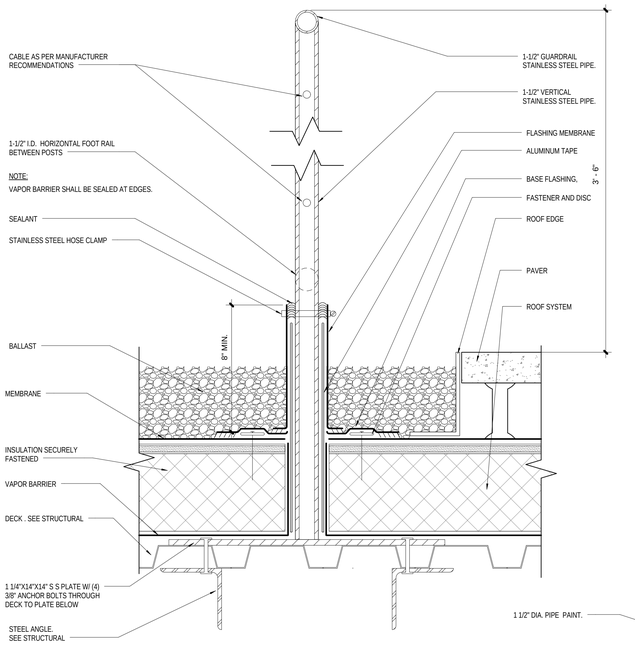

Railing Section (B2 / AE513)
3" = 1'-0"

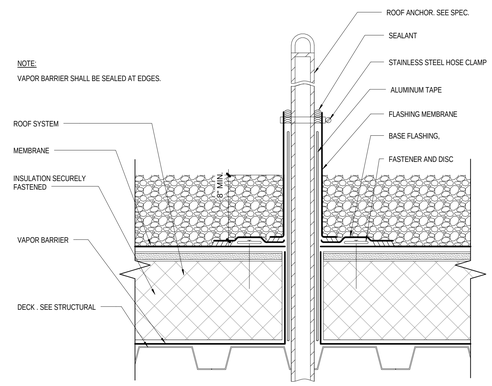

Roof Anchor Detail (B4 / AE513)
3" = 1'-0"

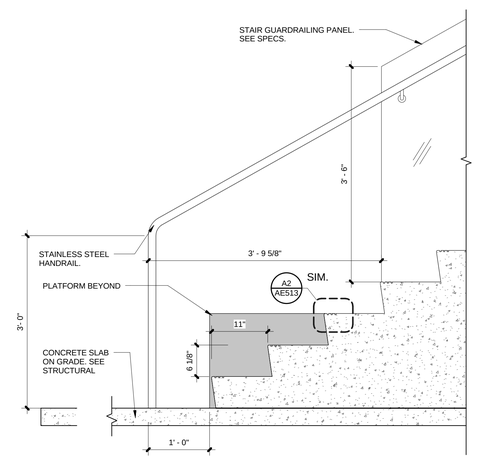

Stair Detail (B5 / AE513)
1" = 1'-0"

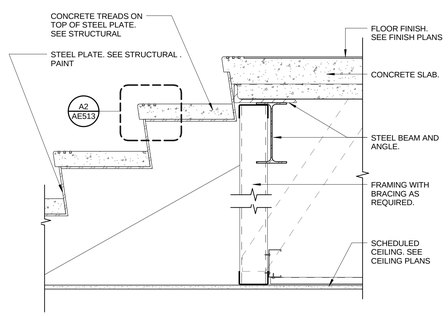

Stair Detail (B6 / AE513)
1 1/2" = 1'-0"

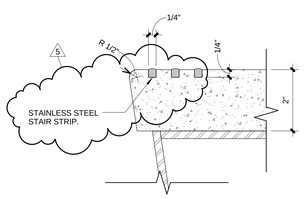

Stair Nose Detail (A2 / AE513)
6" = 1'-0"

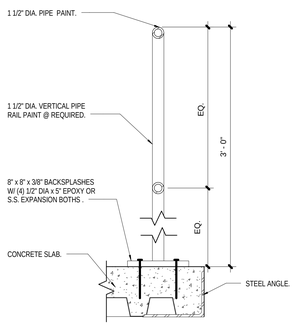

Safety Railing Detail (A3 / AE513)
1 1/2" = 1'-0"

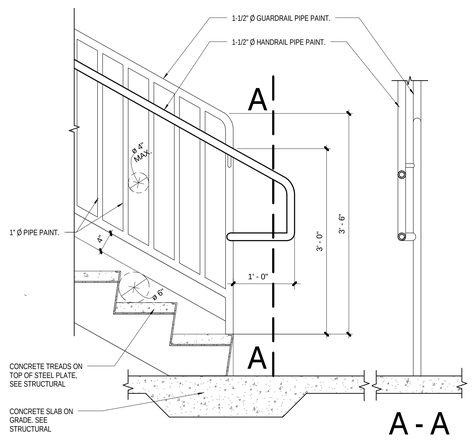

Stair Detail (A4 / AE513)
1" = 1'-0"

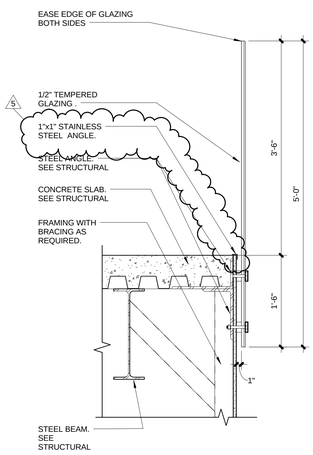

Balcony Railing Detail (A5 / AE513)
1" = 1'-0"

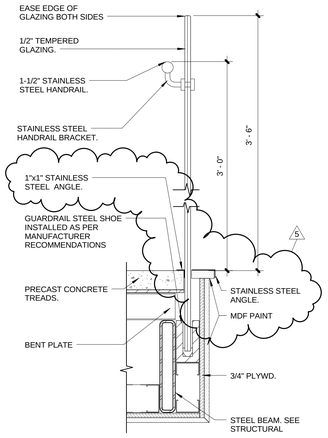

Guardrail @ Stair Detail (A6 / AE513)
1 1/2" = 1'-0"

UNLESS A PROFESSIONAL SEAL WITH SIGNATURE AND DATE IS AFFIXED, THIS DOCUMENT IS PRELIMINARY AND IS NOT INTENDED FOR CONSTRUCTION, RECORDING PURPOSES, OR IMPLEMENTATION

UTAH VALLEY UNIVERSITY

State of Utah
Department of Administrative Services
Division of Facilities Construction & Management
4110 State Office Building
Salt Lake City, Utah 84114
Phone: (801) 538 - 3018
Fax: (801) 538 - 3267

CRSA METHODSTUDIO INC.

CRSA ARCHITECTS
649 east south temple
salt lake city, utah 84102
phone:(801) 355-5915

METHOD STUDIO INC.
925 south west temple
salt lake city, utah 84101
phone:(801) 532-4422

DFCM APPROVAL STAMP

project:
UVU Classroom Building - Volume 2
800 West University Parkway
Orem, UT 84058

project#: DFCM# 12192790
date: April 30, 2013

revisions:
5 Addendum 5 05/24/13

title:
Details

sheet:
AE513

BID DOC

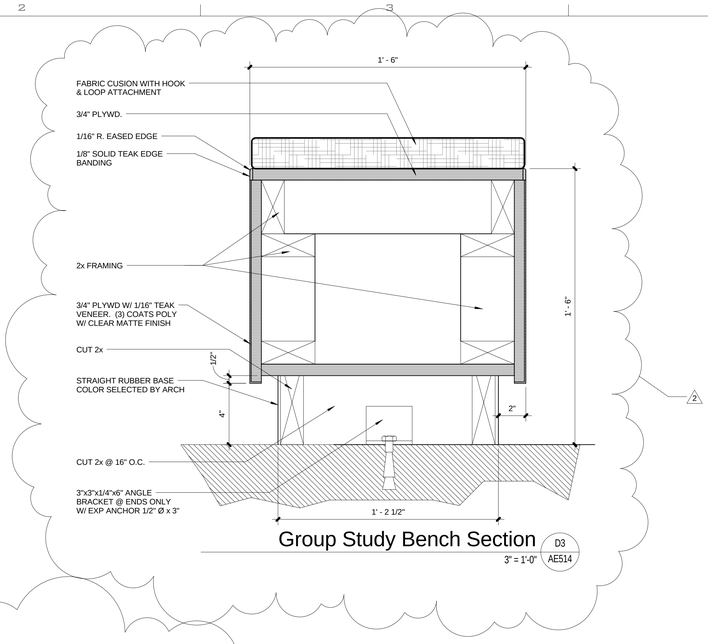

Group Study Bench Section

D3 / AE514

3" = 1'-0"

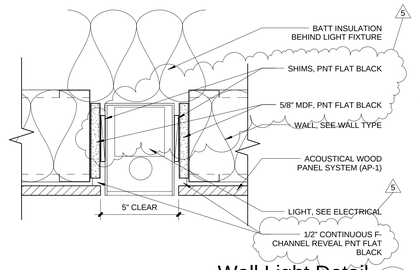

Wall Light Detail

D6 / AE514

3" = 1'-0"

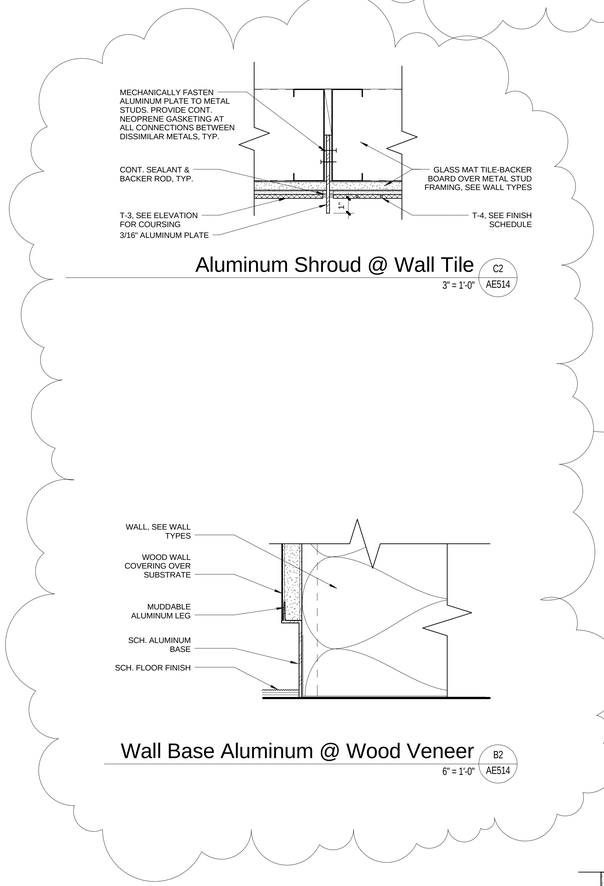

Aluminum Shroud @ Wall Tile

C2 / AE514

3" = 1'-0"

Wall Base Aluminum @ Wood Veneer

B2 / AE514

6" = 1'-0"

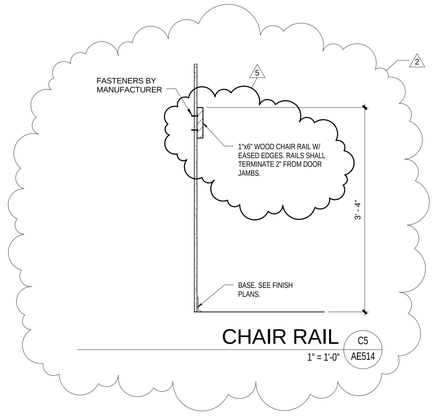

CHAIR RAIL

C5 / AE514

1" = 1'-0"

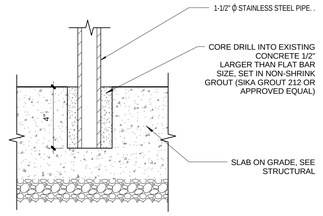

Typical Railing Post Detail

C6 / AE514

3" = 1'-0"

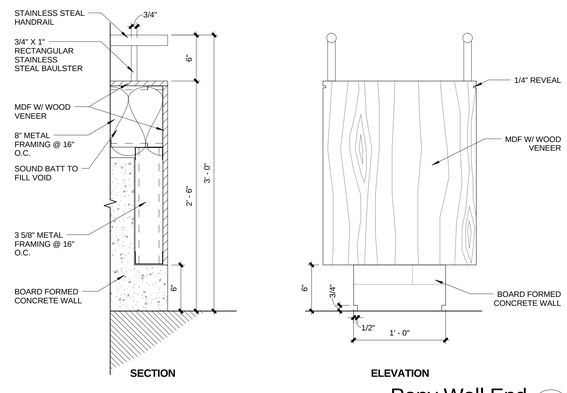

Pony Wall End

B5 / AE514

1 1/2" = 1'-0"

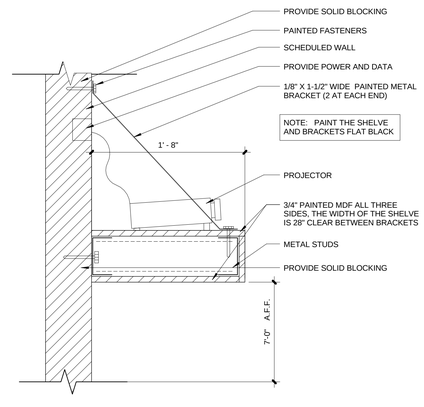

Rear Projector Screen shelve

B6 / AE514

1 1/2" = 1'-0"

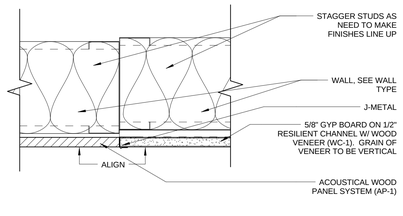

Wall Transition

A3 / AE514

3" = 1'-0"

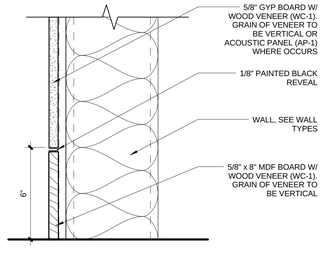

Wall Base w/ Reveal

A4 / AE514

3" = 1'-0"

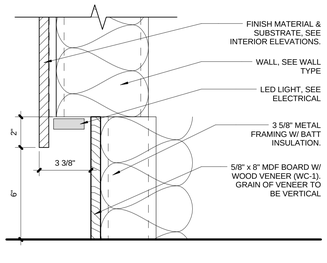

Auditorium Recessed Wall Base

A5 / AE514

3" = 1'-0"

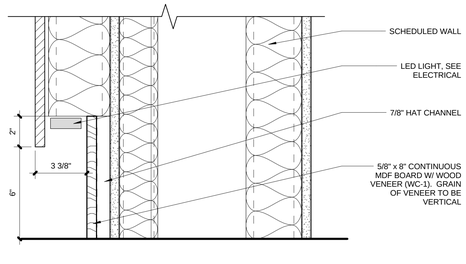

Acoustic Wall Base

A6 / AE514

3" = 1'-0"

UNLESS A PROFESSIONAL SEAL WITH SIGNATURE AND DATE IS AFFIXED, THIS DOCUMENT IS PRELIMINARY AND IS NOT INTENDED FOR CONSTRUCTION, RECORDING PURPOSES, OR IMPLEMENTATION

UTAH VALLEY UVU UNIVERSITY

State of Utah
Department of Administrative Services
Division of Facilities Construction & Management
4110 State Office Building
Salt Lake City, Utah 84114
Phone: (801) 538 - 3018
Fax: (801) 538 - 3267

CRSA METHODSTUDIO INC.

CRSA ARCHITECTS
649 east south temple
salt lake city, utah 84102
phone:(801) 355-5915

METHOD STUDIO INC.
925 south west temple
salt lake city, utah 84101
phone:(801) 532-4422

DFCM APPROVAL STAMP

project:
UVU Classroom Building - Volume 2
800 West University Parkway
Orem, UT 84058

project#: DFCM# 12192790
date: April 30, 2013

revisions:
2 Addendum 2 05/17/13
5 Addendum 5 05/24/13

title:
Details

sheet:
AE514

BID DOC

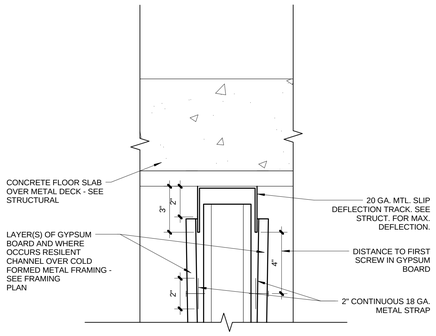

Ceiling Deflection Track (D2)
3" = 1'-0" (AE521)

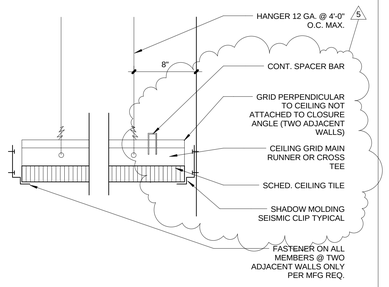

Ceiling Clip Angle (D3)
1 1/2" = 1'-0" (AE521)

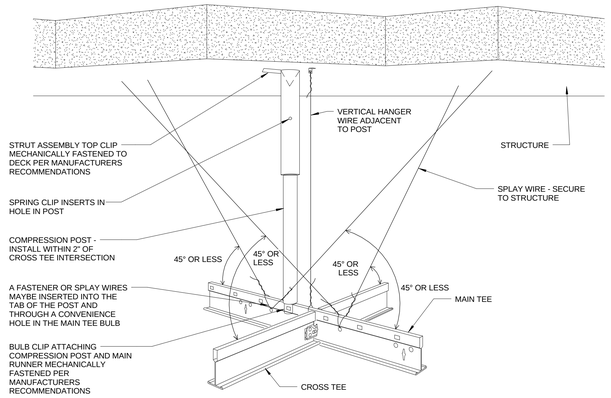

NOTE 1- ALL SPLAY WIRES TO BE IN LINE WITH ATTACHED COMPONENT

NOTE 2- ALL SPLAY WIRES TO BE TAUT AND TIED BOTH ENDS WITH MINIMUM OF THREE TURNS IN 1" OF RUN.

NOTE 3- COMPLY WITH IBC 2009, ASTM C635, ASTM C636 AND CISCA STANDARDS

NOTE 4- SPLAY WIRES SHALL ATTACH TO STRUCTURAL GIRDER OR JOIST ONLY, DO NOT ATTACH TO ROOF DECK.

NOTE 5- METAL COMPRESSION POST (STRUT) FASTENED TO THE MAIN RUNNER SHALL BE EXTENDED TO AND FASTENED TO THE STRUCTURAL MEMBERS SUPPORTING THE ROOF OR FLOOR ABOVE. COMPRESSION POSTS & SPLAY WIRES TO BE INSTALLED EVERY 12" O.C. BOTH DIRECTIONS STARTING 6' FROM WALL. SEE COMPRESSION POST ALLOWABLE LENGTHS TABLE FOR SIZES. SEE DETAILS 3 & 4 FOR TYPICAL BRACING.

NOTE 6- ALL LIGHT FIXTURES SHALL BE POSITIVELY ATTACHED TO THE SUSPENDED CEILING SYSTEM. WHEN INTERMEDIATE SYSTEMS ARE USED, ATTACH NO. 12 GAGE HANGERS TO THE GRID MEMBERS WITHIN 3" OF EACH CORNER OF EACH FIXTURE. LIGHT FIXTURES WEIGHING LESS THAN 56 LBS. SHALL HAVE TWO NO. 12 GAGE HANGERS CONNECTED FROM THE FIXTURE HOUSING TO THE STRUCTURE ABOVE. COMPLY WITH IBC 2009

NOTE 7- ALL LIGHT FIXTURES SHALL BE POSITIVELY ATTACHED 20 LBS. SHALL BE POSITIVELY ATTACHED TO THE CEILING SUSPENSION MAIN RUNNERS. TERMINALS OR SERVICES WEIGHING 20 LBS., BUT NOT MORE THAT 56 LBS., SHALL IN ADDITION HAVE TWO NO. 12 GAGE HANGERS CONNECTED TO THE CEILING SYSTEM HANGERS OR TO THE STRUCTURE ABOVE. TERMINALS OR SERVICES WEIGHING MORE THAN 56 LBS. SHALL BE SUPPORTED DIRECTLY FROM THE STRUCTURE ABOVE BY APPROVED HANGERS. COMPLY WITH IBC 2009

NOTE 8- ALL GRID SYSTEM IN SEISMIC ZONE D OR GREATER ARE REQUIRED TO BE HEAVY DUTY. REFER REQUIREMENTS TO ASCE 7REQUIREMENTS.

5

COMPRESSION POST ALLOWABLE LENGTHS TABLE

MATERIAL	TYP. ALLOWABLE LENGTH
13/16" x 13/32" STRUT 19 GA	24"
1 5/8" x 13/16" STRUT 12 GA	48"
13/16" x 13/16" STRUT 19 GA	54"
1 5/8" x 1" STRUT 12 GA	60"
3 5/8" x 1 1/4" STRUT 16 GA	82"
1 1/4" x 1 1/4" STRUT 14 GA	84"
1 5/8" x 1 3/8" STRUT 12 GA	96"
1 5/8" x 1 5/8" STRUT 12 GA	108"
1 5/8" x 2 7/16" STRUT 12 GA	120"

NOTES
1. THE INFORMATION PROVIDED IS FOR QUICK REFERENCE ONLY. OTHER RESTRICTIONS AND EXEMPTIONS MAY APPLY.
2. WALL MOLDING SHOULD NOT BE USED AS STRUTS.
3. A STRUCTURAL ENGINEER SHOULD BE CONSULTED FOR LENGTHS GREATER THAT 14'.

Ceiling Seismic Bracing 1 (D6)
1 1/2" = 1'-0" (AE521)

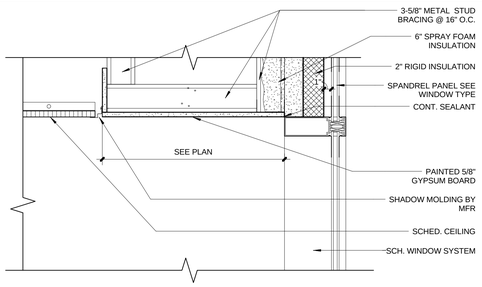

Ceiling Cove Flush @ Exterior Wall (C2)
1 1/2" = 1'-0" (AE521)

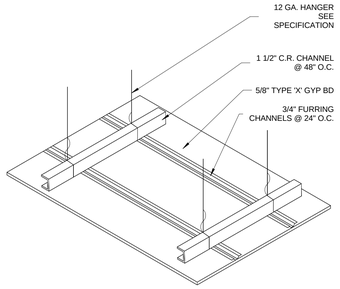

Susp. Gyp. Ceiling Channels (C3)
3" = 1'-0" (AE521)

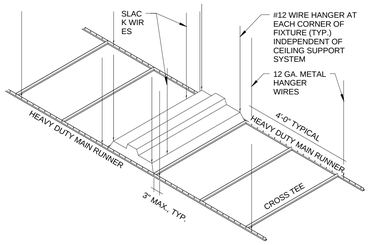

Ceiling Fixture Suppot (C4)
1/64" = 1'-0" (AE521)

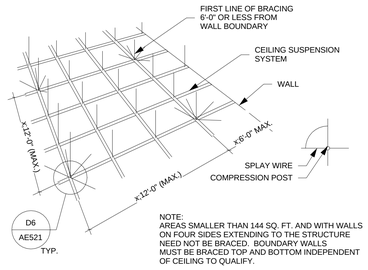

NOTE:
AREAS SMALLER THAN 144 SQ. FT. AND WITH WALLS ON FOUR SIDES EXTENDING TO THE STRUCTURE NEED NOT BE BRACED. BOUNDARY WALLS MUST BE BRACED TOP AND BOTTOM INDEPENDENT OF CEILING TO QUALIFY.

Ceiling Seismic Bracing Lay-In (C5)
12" = 1'-0" (AE521)

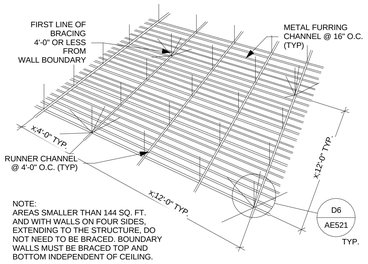

NOTE:
AREAS SMALLER THAN 144 SQ. FT. AND WITH WALLS ON FOUR SIDES, EXTENDING TO THE STRUCTURE, DO NOT NEED TO BE BRACED. BOUNDARY WALLS MUST BE BRACED TOP AND BOTTOM INDEPENDENT OF CEILING.

Ceiling Seismic Bracing Gypsum (C6)
12" = 1'-0" (AE521)

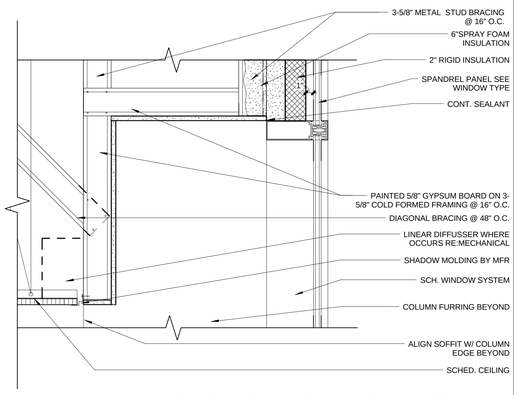

Ceiling Cove @ Exterior Wall (B2)
1 1/2" = 1'-0" (AE521)

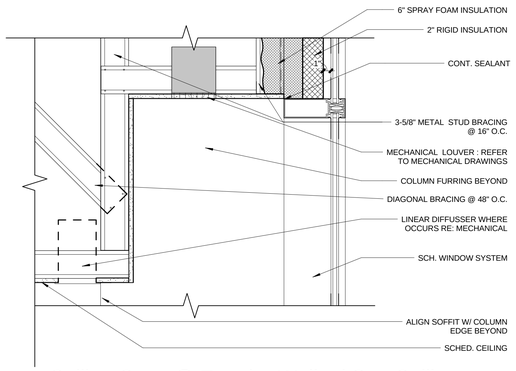

Ceiling Cove @ Exterior Wall w/ Gyp Ceiling (B3)
1 1/2" = 1'-0" (AE521)

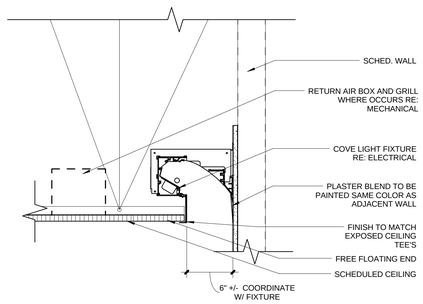

Ceiling Light Cove Detail (B5)
1 1/2" = 1'-0" (AE521)

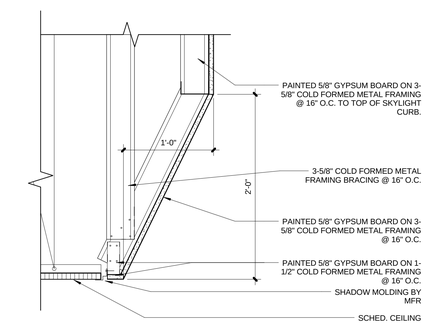

Ceiling Cove @ Skylight (A2)
1 1/2" = 1'-0" (AE521)

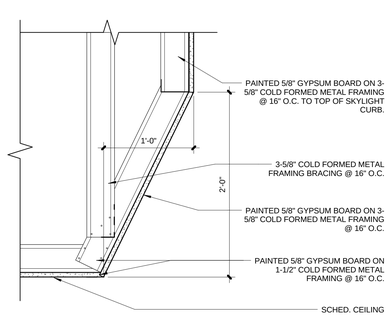

Ceiling Cove @ Skylight w/ Gyp (A3)
1 1/2" = 1'-0" (AE521)

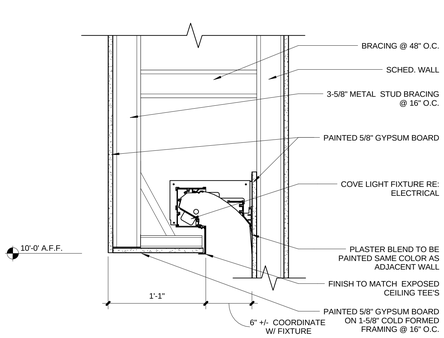

Ceiling Light Cove Detail Main Level (A5)
1 1/2" = 1'-0" (AE521)

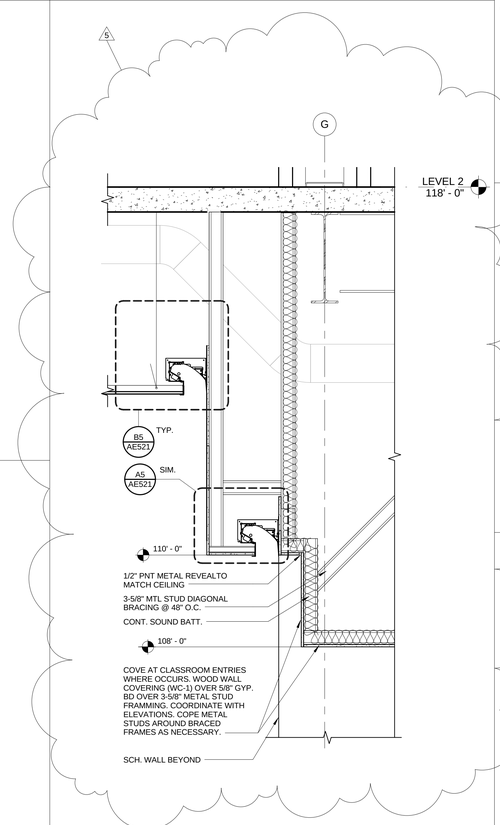

Soffit Corridor Floor 1 (A6)
3/4" = 1'-0" (AE521)

UNLESS A PROFESSIONAL SEAL WITH SIGNATURE AND DATE IS AFFIXED, THIS DOCUMENT IS PRELIMINARY AND IS NOT INTENDED FOR CONSTRUCTION, RECORDING PURPOSES, OR IMPLEMENTATION

UTAH VALLEY UNIVERSITY

State of Utah
Department of Administrative Services
Division of Facilities Construction & Management
4110 State Office Building
Salt Lake City, Utah 84114
Phone: (801) 538 - 3018
Fax: (801) 538 - 3267

CRSA METHODSTUDIO INC.

CRSA ARCHITECTS
649 east south temple
salt lake city, utah 84102
phone:(801) 355-5915

METHOD STUDIO INC.
925 south west temple
salt lake city, utah 84101
phone:(801) 532-4422

DFCM APPROVAL STAMP

project:
UVU Classroom Building - Volume 2
800 West University Parkway
Orem, UT 84058

project#: DFCM# 12192790
date: April 30, 2013

revisions :
5 Addendum 5 05/24/13

title:
Ceiling Details

sheet:
AE521

BID DOC

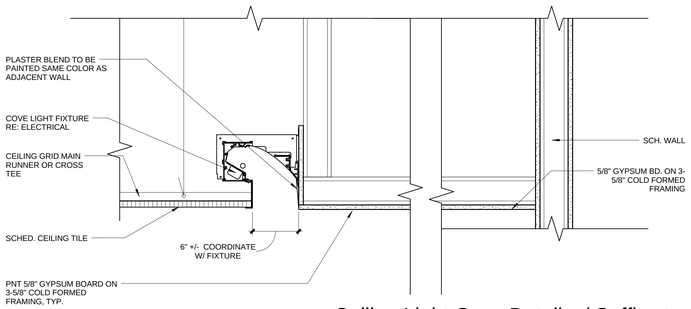

Ceiling Light Cove Detail w/ Soffit

E2 — 1 1/2" = 1'-0" — AE522

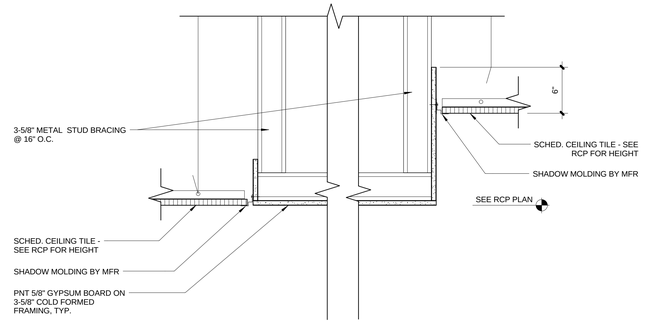

Ceiling Soffit Flush / Non Flush

E4 — 1 1/2" = 1'-0" — AE522

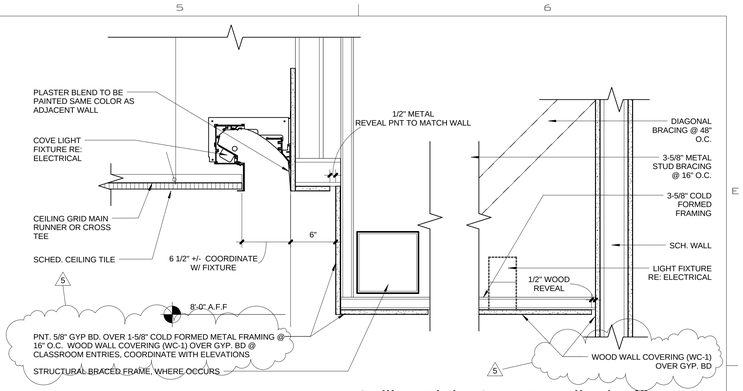

Ceiling Light Cove Detail w/soffit

E6 — 1 1/2" = 1'-0" — AE522

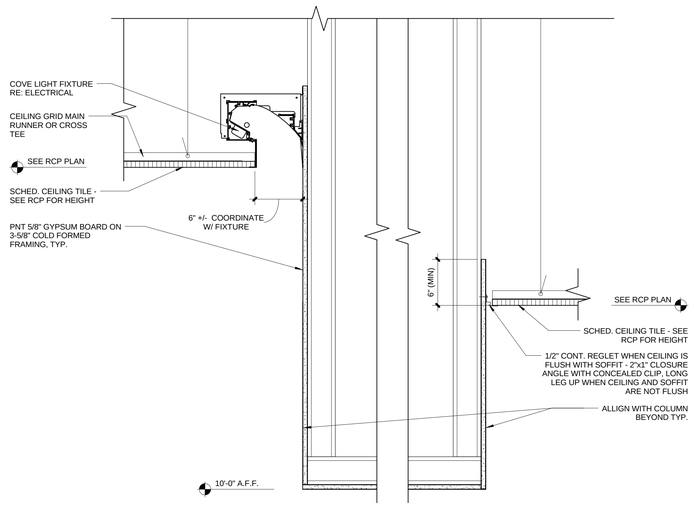

Ceiling Light Cove Detail w/Soffit 2

C2 — 1 1/2" = 1'-0" — AE522

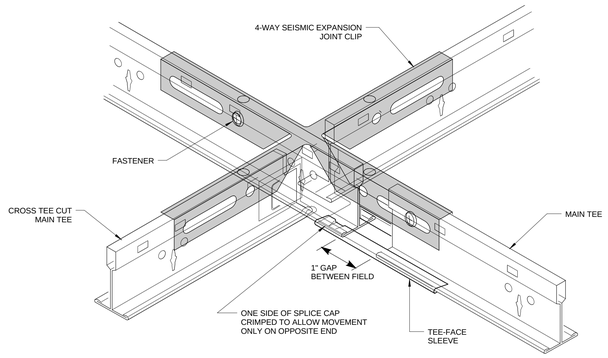

Ceiling Seismic Expansion Joint ISO

C4 — 12" = 1'-0" — AE522

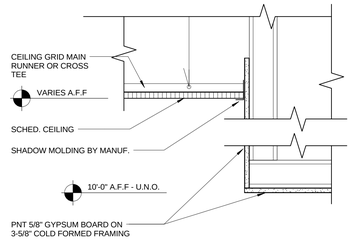

Ceiling Typ. Alcove

C5 — 1 1/2" = 1'-0" — AE522

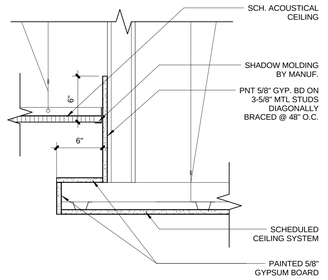

Over Lapping Ceiling Detail

C6 — 1 1/2" = 1'-0" — AE522

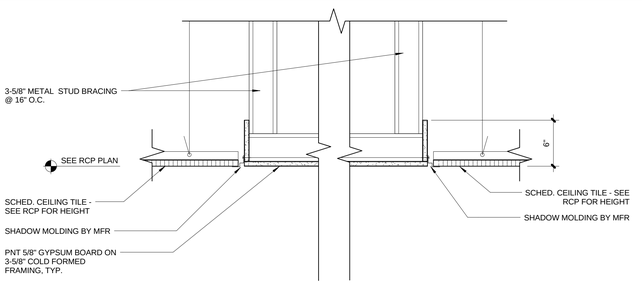

Ceiling Soffit Flush

B2 — 1 1/2" = 1'-0" — AE522

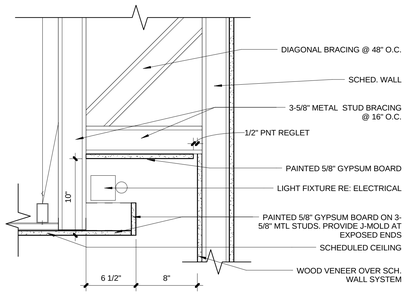

Ceiling Light Cove Detail Auditorium

B4 — 1 1/2" = 1'-0" — AE522

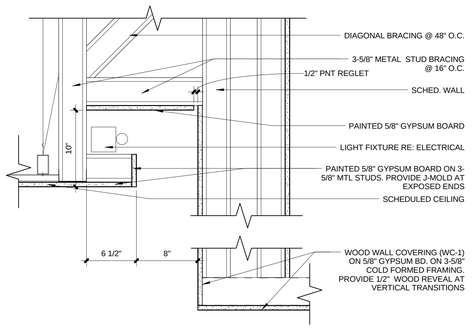

Ceiling Light Cove Detail Auditorium w/ step

B5 — 1 1/2" = 1'-0" — AE522

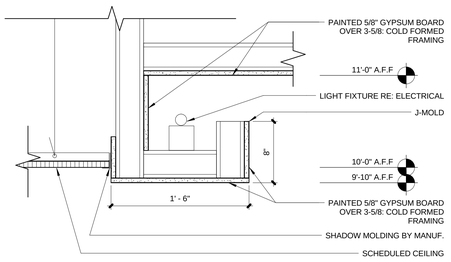

Ceiling Light Cove Detail Gathering

B6 — 1 1/2" = 1'-0" — AE522

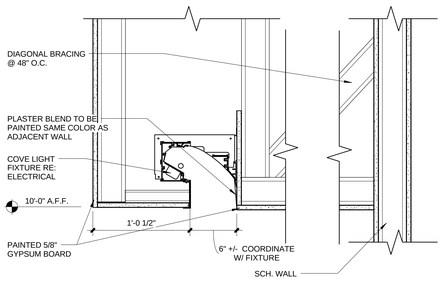

Ceiling Light Cove Detail w/ Soffit - Main Level 2

A2 — 1 1/2" = 1'-0" — AE522

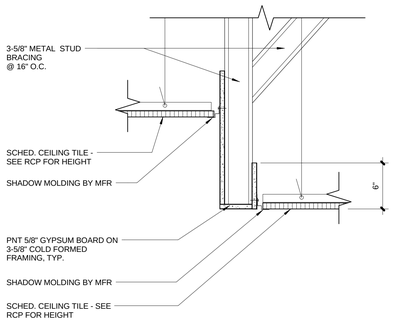

Ceiling / Header Flush / Non Flush

A4 — 1 1/2" = 1'-0" — AE522

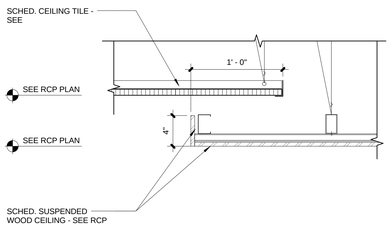

Wood Edge Ceiling Detail

A5 — 1 1/2" = 1'-0" — AE522

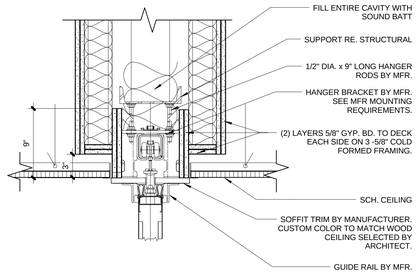

Ceiling Folding Partition Head

A6 — 1 1/2" = 1'-0" — AE522

UNLESS A PROFESSIONAL SEAL WITH SIGNATURE AND DATE IS AFFIXED, THIS DOCUMENT IS PRELIMINARY AND IS NOT INTENDED FOR CONSTRUCTION, RECORDING PURPOSES, OR IMPLEMENTATION

UTAH VALLEY UNIVERSITY

State of Utah
Department of Administrative Services
Division of Facilities Construction & Management
4110 State Office Building
Salt Lake City, Utah 84114
Phone: (801) 538 - 3018
Fax: (801) 538 - 3267

CRSA METHODSTUDIO INC.

CRSA ARCHITECTS
649 east south temple
salt lake city, utah 84102
phone:(801) 355-5915

METHOD STUDIO INC.
925 south west temple
salt lake city, utah 84101
phone:(801) 532-4422

DFCM APPROVAL STAMP

project:
UVU Classroom Building - Volume 2
800 West University Parkway
Orem, UT 84058

project#: DFCM# 12192790
date: April 30, 2013

revisions:
1 Addendum 5 05/24/13

title:
Ceiling Details

sheet:
AE522

BID DOC

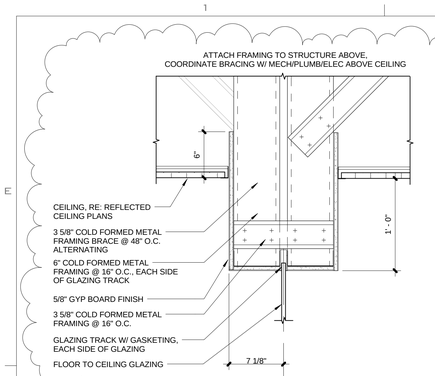

Ceiling Detail 2 @ Glass Wall (E1)
1 1/2" = 1'-0" AE523

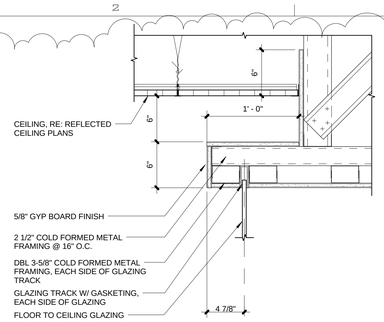

Ceiling Detail 1 @ Glass Wall (E2)
1 1/2" = 1'-0" AE523

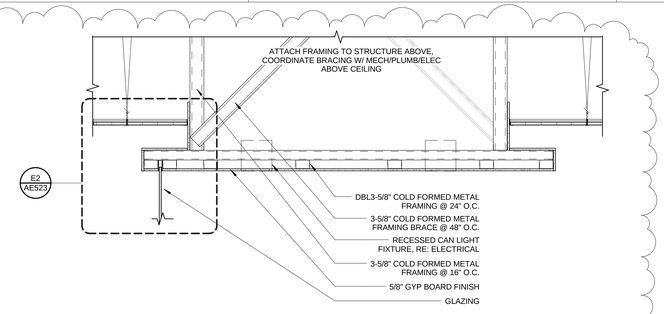

Cloud Detail (E4)
3/4" = 1'-0" AE523

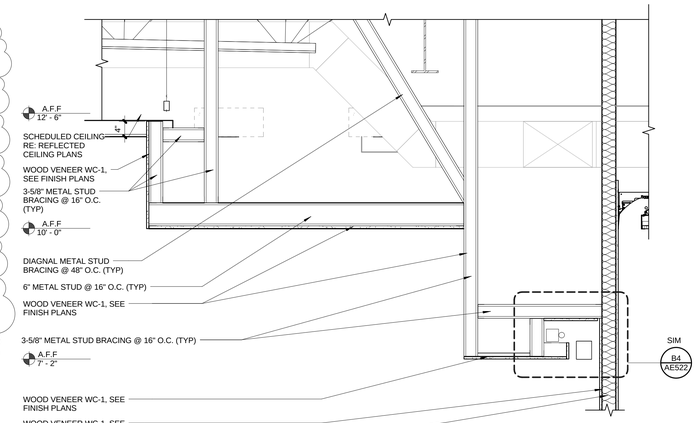

Soffit Detail (D6)
3/4" = 1'-0" AE523

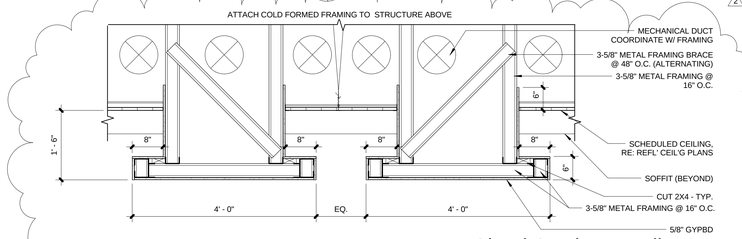

Cloud Section Detail (D2)
3/4" = 1'-0" AE523

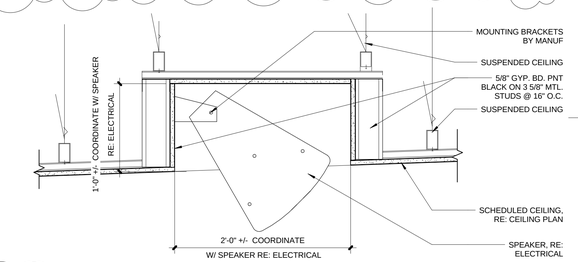

Ceiling Speaker Detail (D4)
1 1/2" = 1'-0" AE523

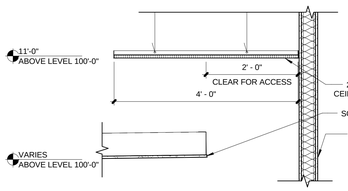

Auditorium Soffit Detail (C2)
3/4" = 1'-0" AE523

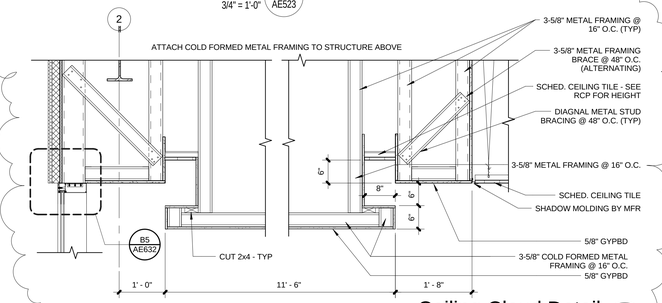

Ceiling Cloud Detail (C3)
3/4" = 1'-0" AE523

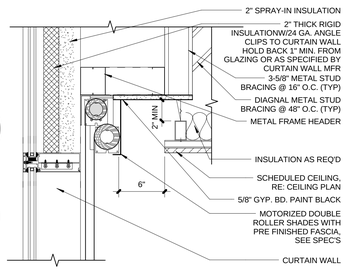

Typical Roller Shade Detail (C4)
1 1/2" = 1'-0" AE523

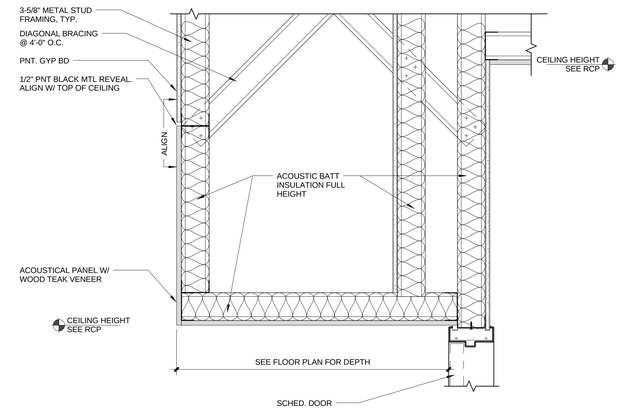

Acoustic Wood Panel - Reveal Detail (C6)
1 1/2" = 1'-0" AE523

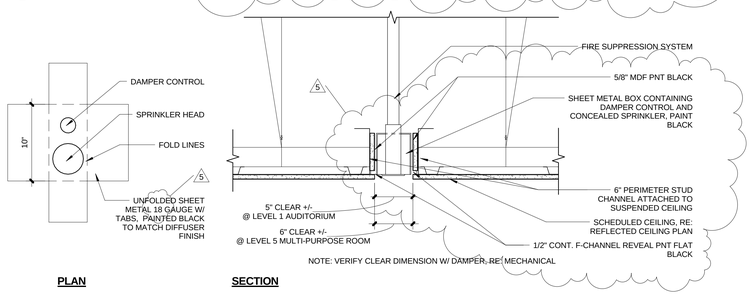

Sprinkler / Damper Control Detail (B3)
1 1/2" = 1'-0" AE523

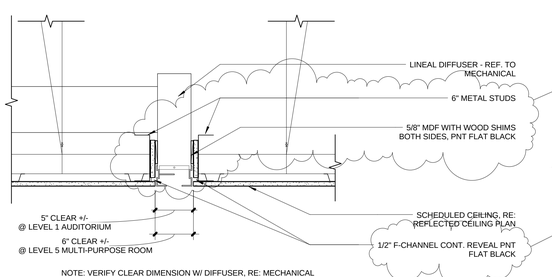

Diffuser Detail (A2)
1 1/2" = 1'-0" AE523

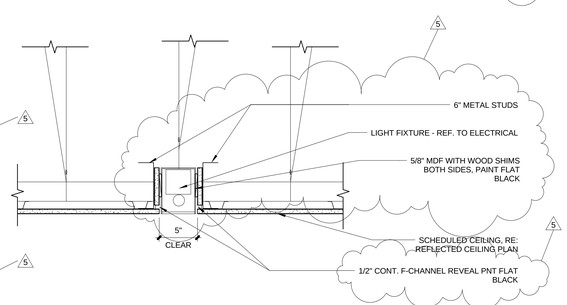

Light Fixture Detail (A3)
1 1/2" = 1'-0" AE523

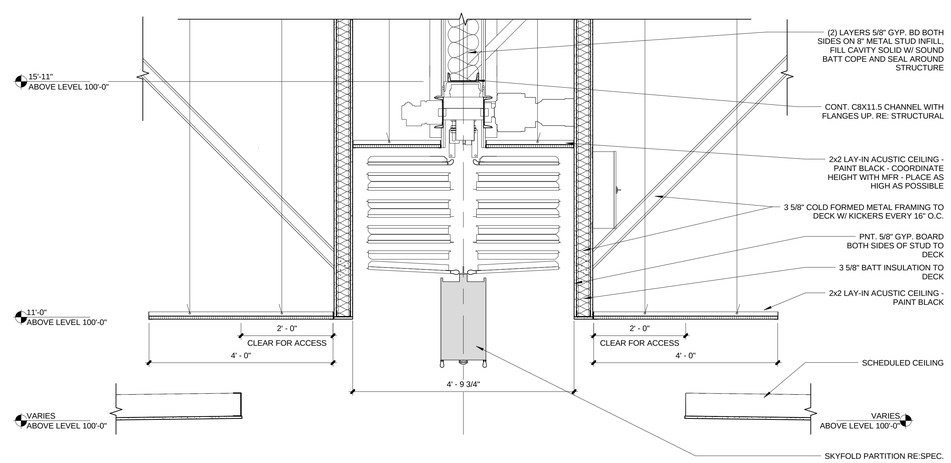

Skyfold Detail (A6)
3/4" = 1'-0" AE523

UNLESS A PROFESSIONAL SEAL WITH SIGNATURE AND DATE IS AFFIXED, THIS DOCUMENT IS PRELIMINARY AND IS NOT INTENDED FOR CONSTRUCTION, RECORDING PURPOSES, OR IMPLEMENTATION

UTAH VALLEY UNIVERSITY

State of Utah
Department of Administrative Services
Division of Facilities Construction & Management
4110 State Office Building
Salt Lake City, Utah 84114
Phone: (801) 538 - 3018
Fax: (801) 538 - 3267

CRSA METHODSTUDIO INC.

CRSA ARCHITECTS
649 east south temple
salt lake city, utah 84102
phone:(801) 355-5915

METHOD STUDIO INC.
925 south west temple
salt lake city, utah 84101
phone:(801) 532-4422

DFCM APPROVAL STAMP

project:
UVU Classroom Building - Volume 2
800 West University Parkway
Orem, UT 84058

project#: DFCM# 12192790
date: April 30, 2013

revisions:
2 Addendum 2 05/17/13
5 Addendum 5 05/24/13

title:
Ceiling Details

sheet:
AE523

BID DOC

FLOOR FINISH LEGEND	
CODE	MATERIAL
CPT-1	
CPT-4	

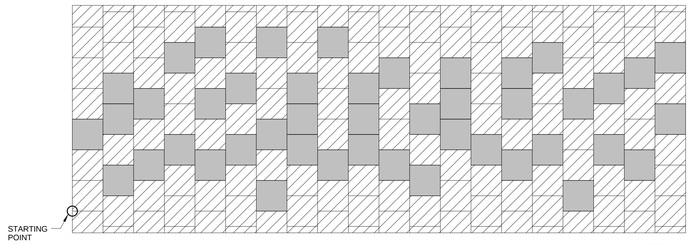

TYPE 'A'

NOTE: ADD PATTERN TO CPT-1/CPT-4 HATCHED AREA ON FINISH PLAN: REPEAT PATTERN AS REQ'D TO FILL LENGTH / WIDTH OF INDICATED HATCH. PROVIDE CARPET LAYOUT PATTERN TO ARCHITECT FOR APPROVAL PRIOR TO INSTALLATION.

Carpet Tile Patterns

D3 / AE620

1/4" = 1'-0"

Accessory Schedule

ITEM	MAKE/MODEL	OPOI	OPCI	CPCI	ROOM
BABY CHANGING STATION	KOALA KB200			X	100L, 100M, 100N
BLINDS	SEE SPEC			X	103A, 105A-105C,208A, 210-210H, 213, ADD ALTERNATE #2 (203A-203S, 205B-205G, 208, 208B-208H, 209A-209Q), 305, 305A, 309B, 313-313G, 315, ADD ALTERNATE #3 (303A-303S, 306B-306G, 309A, 309C-309J, 310-310Q), 403A-403S, 405B-405G, 409A-409J, 410-410Q, 413-413G, ADD ALTERNATE #4 (416-416H), 503A-503S, 505B-505G, 506A-506J, 507A-507L, 508A-508G, 509-509Q, 516, 518-518B
DOUBLE ROLLER SHADES	SEE SPEC			X	510, 511
GLASSBOARD 4' x 8'	CLARUS			X	100, 200, 300
GRAB BAR 18"	BOBRICK B-5806 x 18			X	100C, 100D, 100L, 100M, 100N, 103D, 200C, 200D, 200N, 200P, 300B, 300C, 300N, 300P, 400B, 400C, 400M, 400N, 500B, 500C, 500M, 500N
GRAB BAR 36"	BOBRICK B-5806 x 36			X	100C, 100D, 100L, 100M, 100N, 103D, 200C, 200D, 200N, 200P, 300B, 300C, 300N, 300P, 400B, 400C, 400M, 400N, 500B, 500C, 500M, 500N
GRAB BAR 42"	BOBRICK B-5806 x 42			X	100C, 100D, 100L, 100M, 100N, 103D, 200C, 200D, 200N, 200P, 300B, 300C, 300N, 300P, 400B, 400C, 400M, 400N, 500B, 500C, 500M, 500N
MIRROR 24" x 36"	BOBRICK B-165 2436			X	100L, 100M, 100N, 103D
MIRROR 24" x 72"	BOBRICK B-165 2472			X	100D, 200D, 300C, 400C, 500C
MIRROR 45" x 36"	BOBRICK B-165 4536			X	100C, 100D, 200C, 200D, 200N, 200P, 300B, 300C, 300N, 300P, 400B, 400C, 400M, 400N, 500B, 500C, 500M, 500N
MOP RACK 24"	BOBRICK B-223 24			X	100W, 200S, 300U, 400S, 500U
PAPER TOWEL DISPENSER	OPCI		X		100C, 100D, 100L, 100M, 100N, 103D, 200C, 200D, 200N, 200P, 300B, 300C, 300N, 300P, 400B, 400C, 400M, 400N, 500B, 500C, 500M, 500N
SANITARY NAPKIN DISPENSER	BOBRICK B-3706			X	100D, 200D, 200N, 300C, 300N, 400C, 400M, 500C, 500M
SANITARY NAPKIN DISPOSAL	BOBRICK B-270			X	100D, 200D, 200N, 300C, 300N, 400C, 400M, 500C, 500M
SIGNS		X			
SINGLE ROLLER SHADES	SEE SPEC			X	100 WEST WALLS, 103A, 200 (NORTH, WEST WALLLS), 203F, 203H, 203K, 203M, 203N, 203Q-203S, 208A-208D, 208, F, 208H, 209, 209A, 209C, 209E, 209G, 209J, 209L, 209N, 209Q, 210- 210H, 300 (NORTH, SOUTH, WEST WALLLS), 303G, 303J, 303L, 303N, 303O, 303Q-303S, 309B-309E, 309G, 309H, 310, 310A, 310C, 310E, 310G, 310J, 310L, 310N, 310Q, 313-313G, 400 (NORTH, SOUTH, WEST WALLLS, EAST WALL AT WINDOW TYPES BO AND BP), 403G, 403J, 403L, 403N, 403O, 403Q, 403R, 403S, 409B-409E, 409G, 409H, 410, 410A, 410C, 410E, 410G, 410J, 410L, 410N, 410Q, 413-413G, 500 (NORTH, SOUTH, WEST WALLLS), 503G, 503J, 503L, 503N, 503O, 503Q, 503R, 503S, 508B-508D, 508F, 508G, 509, 509A, 509C, 509E, 509G, 509J, 509L, 509N, 509Q
SOAP DISPENSER	OPCI		X		100C, 100D, 100L, 100M, 100N, 103D, 200C, 200D, 200N, 200P, 300B, 300C, 300N, 300P, 400B, 400C, 400M, 400N, 500B, 500C, 500M, 500N
TOILET PAPER DISPENSER	OPCI		X		100C, 100D, 100L, 100M, 100N, 103D, 200C, 200D, 200N, 200P, 300B, 300C, 300N, 300P, 400B, 400C, 400M, 400N, 500B, 500C, 500M, 500N
TOILET SEAT COVER DISPENSER	OPCI		X		100C, 100D, 100L, 100M, 100N, 103D, 200C, 200D, 200N, 200P, 300B, 300C, 300N, 300P, 400B, 400C, 400M, 400N, 500B, 500C, 500M, 500N
WHITEBOARD 4' x 4'	ADP LEMCO/SKU212AD			X	307
WHITEBOARD 4' x 8'	ADP LEMCO/SKU212AH			X	105A, 105B, 105C, 106, 206, 213, 300, 305, 305A 307, 308, 311, 315, 400, 411, 418, 500, 507A, 516, 518, 518A, 518B
WHITEBOARD 4' x 16'	ADP LEMCO/SKU212AJ			X	102, 104, 106, 107, 112, 202, 204, 206, 207, 208A, 211, 212, 300, 302, 304, 307, 308, 309B, 311, 312, 316, 404, 406, 407, 408, 409B, 411,412, 414, 415, 417, 504, 508B, 515, 517

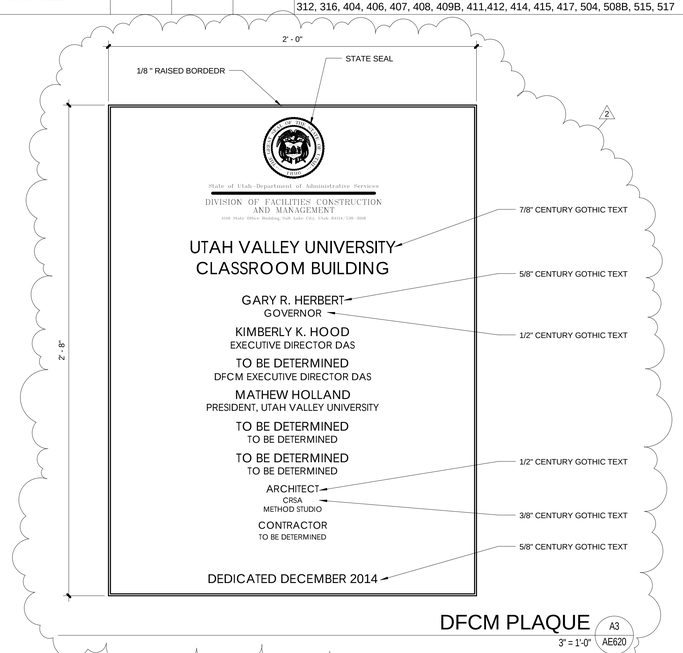

DFCM PLAQUE

A3 / AE620

3" = 1'-0"

INTERIOR FINISH LEGEND

NOTE: SCHEDULED MATERIALS AND FINISHES SHALL BE USED FOR BASES OF DESIGN.

CODE	MATERIAL	MANUFACTURER	PRODUCT NAME / NUMBER	COLOR / FINISH	SIZE	COMMENTS
CARPET						
CPT-1	Carpet Tile	Shaw Contract	Hint Tile 5T024	Black Tea 22516	24" x 24"	Direct glue down. Ashler installation. Refer to finish plan for CPT-1/CPT-4 tile pattern.
CPT-2	Carpet Tile	Interface	Viva Colores 146500250H	101125 Verde Botella	19.68" x 19.68"	Direct glue down. Monolothic installation.
CPT-3	Walk-Off Matt	Interface	Super Flor 6090002504	609009 Mouse Grey	19.68" x 19.68"	Install with releasable adhesive or tactiles.
CPT-4	Carpet Tile	Shaw Contract	Blend Tile 5T025	Fustic Indigo 25516	24" x 24"	Direct glue down. Ashlar installation. Refer to finish plans for CPT-1/CPT-4 tile pattern.
CPT-5	Broadloom	Shaw Contract	Structure Weave 5A109	Sheen 09520	12' W	Direct Glue Down.
CPT-6	Carpet Tile	Interface	Urban Retreat Planks UR501	103613 Flax	25cm x 1m	Direct Glue. Ashlar Installation.
GLASS FILM						
GF-1	Glass Film	solar graphics	-	6540 Lime Green	-	Install on corridor side of glass
GF-2	Glass Film	3M Architectural Markets	70-0709-0297-1	Milky White	-	Install on classroom side of glass
TILE						
T-1	Ceramic Tile	Daltile	Identity Glazed Wall Tile	MY67 Paramount White/Matte	8" x 20"	3/32" grout joint, Latcrete 1600 unsanded grout; 44 bright white; Thinset back butter tiles; Precise miter required at outside corners - no corner trim. Install in stack pattern. White thin-set only.
T-2	Porcelain Tile	Daltile	Plaza Nova Glazed Wall Tile	PN98 Gray Fog	6" x 24"	3/32" grout joint, Latcrete 1600 unsanded grout; 24 naturally gray. Thinset back butter tile @ walls. Precise miter @ outside corners - no trim. Install in vertical brick pattern. Offset tile 6" at ends. Refer to interior elevations.
T-3	Ceramic Tile	Daltile	Identity Glazed Wall Tile, Bullnose Edge Trim	MY67 Paramount White/Matte	1/2" x 6"	3/32" grout joint, Latcrete 1600 unsanded grout; 44 bright white; align grout joints w/ (t-1) joints.
T-4	Glass Tile	Daltile	Reflections In Glass Tile	Neon Green, gloss	1-1/2" x 12"	1/16" grout joint, Latcrete 1600 unsanded grout; 44 bright white; align horizontal grout joints w/ (t-1) joints. White thin-set only. Install in vertical brick pattern. Offset tile 4" at ends. Refer to interior elevations.
CEILING						
ACT-1	Suspended Acoustical Ceiling	Armstrong	Optima 3901	White	2' x 2' x 5/8"	Vector; Prelude 15/16" exposed tee, white
ACT-2	Suspended Acoustical Ceiling	Armstrong	Ultima 1902	White	2' x 2' x 3/4"	Beveld Tegular; Suprafine XL 9/16" exposed tee, white
ACT-3	Suspended Acoustical Ceiling	Armstrong	Ultima 1904	White	2' x 4' x 3/4"	Beveld Tegular; 15/16" exposed tee grid, white
ACT-4	Suspended Acoustical Ceiling	Armstrong	Cortega Lay-in 769	Black	2' x 2' x 5/8"	Layin; Prelude ML, 15/16" expossed tee grid, black
ACT-5	Suspended Acoustical Ceiling	Hunter Douglas	Classic Series, Swing Down	Black Textile	4' x 4' x 1 1/8"	
ACT-6	(AP-1) over suspended Acoustical Ceiling	Decoustics over Armstrong	Madero over Classic Series Swing Down	Custom Finish To Be Teak Quarter Cut to match (WC-1) for Decoustic Panels, Black Textile for Classic Series		Decoustic Panels to be 8mm Spacing; 7 9/16" W Plank, concealed mounting hardware ; Finish exposed edges to match. Submit sample for approval prior to ordering and installation; custom finish must match (WC-1) in cut, color grain, and finish. Install over acoustical lay in ceiling per mfr recomendations, coordinate between specs.
CONCRETE						
PSC-1	Polished Sealed Concrete	Stone Touch	Polished Concrete	Natural Gray	Expansion Joint @ 12'-0"	Grind concrete flooring to expose gravel aggregates, see specifications for polish, sealing and additional requirements.
SC-1	Sealed Concrete	-	-	Seal Floor w/ Pentra-sil or equal	-	-
SC-2	Sealed Concrete	-	-	Paint Floor Black; Seal w/ Pentra-sil or equal	-	-
BASE						
B-1	Rubber Base	Roppe	Straight Profile; 100% Volcanized Rubber	150 Dark Gray	2 1/2" H	Provide Base in 120' Coils
B-2	Rubber Base	Roppe	Coved Profile; 100% Volcanized Rubber	150 Dark Gray	2 1/2" H	Provide Base in 120' Coils
B-3	Metal Cove Base	Schluter	DILEX-AHK AHKISIOOAE	Anodized Aluminum	3/8" R	Tile to Tile cove base. Contractor to verify model # specified in coordinates w/ tile thickness. Provide inside/outside corner as req'd.
B-4	Metal Reveal Base	Fry Reglet	DRMB-625-250	Clear Anodized Aluminum	2 1/2" H	See detail B2/AE514 typical.
B-6	Rubber Base	Roppe	Coved Profile; 100% Volcanized Rubber	100 Black	2 1/2" H	Provide Base in 120' Coils
PAINT						
PNT-1	Paint	Frazee	-	Mistaya CLW 1042W LRV 90		Satin finish at walls; flat at ceilings
PNT-2	Paint	-	-	Flat Black	-	
WALL COVERING / WALL PROTECTION						
WC-1	Wood Wall Covering	Sanfoot	-	Pre-Finished QC Teak	3' x 9'	GWB shall be finished to a level 5 installation by sanfoot authorized installer in accordance w/ installation instructions (ROC. #301). Wall covering shall be end and sequenced book match. Provide flitch sample to match architects sample for approval prior to ordering. Apply (3) coat low sheen polyurethane finish.
WP-1	Wall Protection	FRP		Gray/Smooth Texture		
PLASTIC LAMINATE						
PL-1	Plastic Laminate	Abet Laminati	406	SEI	-	*Upper Cabinets*
PL-2	Plastic Laminate	Abet Laminati	420	SEI	-	*Countertops*
PL-4	Plastic Laminate	Wilsonart	7209K-78	Nepal Teak	-	*Base Cabinets*
PL-5	Plastic Laminate	Wilsonart	4941K-1B	Cosmic Strandz	-	*Toilet Partitions*
ELEVATOR						
ELEV-01	Interior Cab System	Thysen Krupp	Tkap Cab			Walls: Plastic Laminate - Wilsonart 7209k-98 Nepal Teak, Brushed SST Base / Reveal / Frieze Handrail: 2" flat bar w/ returned ends - brushed SST finish Ceiling: Island type perimeter. Lighting w/ brushed SST Panel Floor: (CPT-1) Carpet
STONE						
STN-1	NOT USED					
STN-2	Quartz Slab	Daltile	One Quartz Surface	NQ60 Brushed Flannel / Polished	120" x 55" W x 3/4" TH	Square edge; Mitter outside corners
TRANSITION STRIPS						
TS-1	CPT - SC	Schluter (Rep: 801-209-2295)	RENO-U AEU35	Satin Annodized Alumminum	1/8"	Set to substrate w/ 2-part epoxy-trowel off tightly to trim; Contractor to verify size w/ material thickness; (contact Rep. for TS installation questions 801-209-2295).
TS-2	CPT-T-2	Schluter (Rep: 801-209-2295)	SCHIENE AE45	Satin Annodized Alumminum	3/8"	Set to substrate w/ 2-part epoxy- Trowel off tightly to trim; contractor to verify size with material thickness.
ACOUSTIC PANELS						
AP-1	Acoustic Wood Panel	Decoustics	Madero Solo Plank	Custom Finish To Be Teak Quarter Cut to match (WC-1)	8mm Spacing; 7 9/16" W Plank	Vertical orientation; Concealed mounting hardware ; Finish exposed edges to match. Submit sample to architect for approval prior to ordering and installation; custom finish must match (WC-1) in cut, color grain, and finish.
AP-2	Tectum Panel	Tectum	Chosen by Architect for full range of colors		See Drawings	
AP-3	Fabric Covered Panel		Chosen by Architect for full range of colors		See Drawings	
AP-4	Metal Sound Panel	Alpro	Chosen by Architect for full range of colors		See Drawings	
WOOD VENEER						
WV-1	Wood Veneer	Formwood	DRMB-625-250	Quarter Cut Teak	- -	Finish w/ clear low sheen polyurehtane, 2 coats min. running book match: Provide flitch sample to match architects sample for approval prior to ordering. Flitch must match (WC-1) in cut, color, finish and grain.
FABRIC						
F-1	Fabric	Maharam	Hallingdal by Kvadrat 460760	960	51" W	Refer to sheet AE11C.1 for fabric locations per sheet
F-2	Fabric	Maharam	Medium 463490	042 CLOVER	54" W	Refer to sheet AE11C.1 for fabric locations per sheet
F-3	Fabric	Maharam	Messenger 458640	048 NEON	54" W	Refer to sheet AE11C.1 for fabric locations per sheet

UNLESS A PROFESSIONAL SEAL WITH SIGNATURE AND DATE IS AFFIXED, THIS DOCUMENT IS PRELIMINARY AND IS NOT INTENDED FOR CONSTRUCTION, RECORDING PURPOSES, OR IMPLEMENTATION

UTAH VALLEY UNIVERSITY

State of Utah
Department of Administrative Services

Division of Facilities Construction & Management
4110 State Office Building
Salt Lake City, Utah 84114
Phone: (801) 538 - 3018
Fax: (801) 538 - 3267

CRSA METHODSTUDIO INC.

CRSA ARCHITECTS
649 east south temple
salt lake city, utah 84102
phone:(801) 355-5915

METHOD STUDIO INC.
925 south west temple
salt lake city, utah 84101
phone:(801) 532-4422

DFCM APPROVAL STAMP

project:

UVU Classroom Building - Volume 2
800 West University Parkway
Orem, UT 84058

project#: DFCM# 12192790
date: April 30, 2013

revisions:

1	Addendum 1	05/15/13
2	Addendum 2	05/17/13
3	Addendum 3	05/22/13
5	Addendum 5	05/24/13

title:

Finish & Accessory Schedules

sheet:

AE620

BID DOC

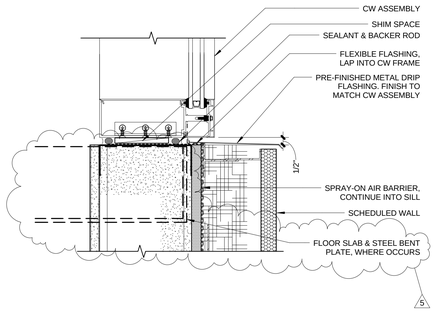

Sill Detail (D2 / AE633)
3" = 1'-0"

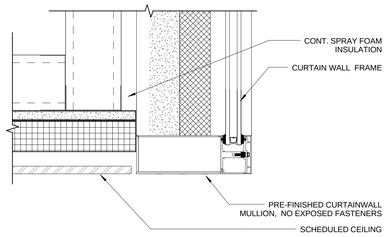

Soffit /Curtainwall (D3 / AE633)
3" = 1'-0"

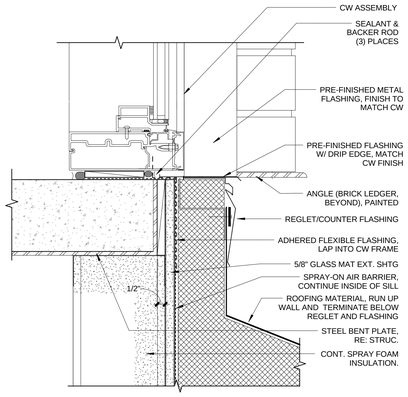

Sill Detail (D5 / AE633)
3" = 1'-0"

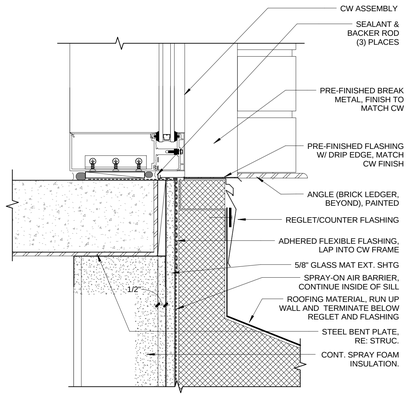

Sill Detail (D6 / AE633)
3" = 1'-0"

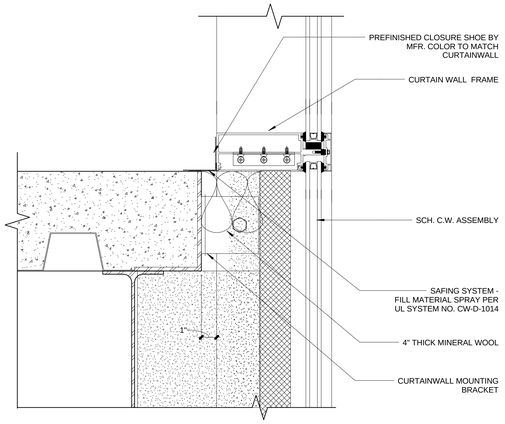

Mullion Detail @ Floor (C2 / AE633)
3" = 1'-0"

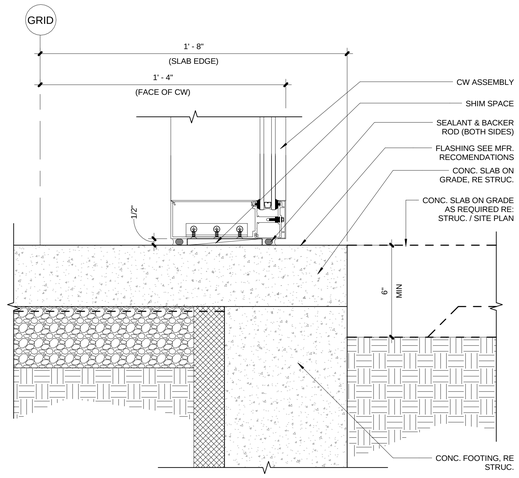

Sill Detail (C3 / AE633)
3" = 1'-0"

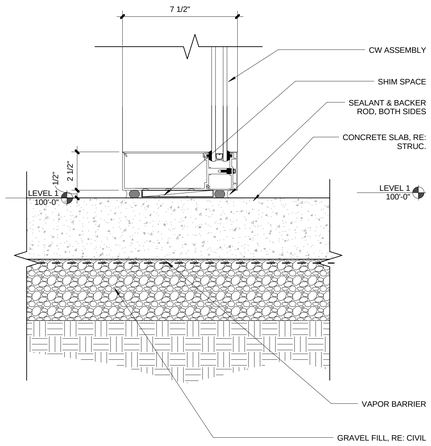

Sill Detail (C5 / AE633)
3" = 1'-0"

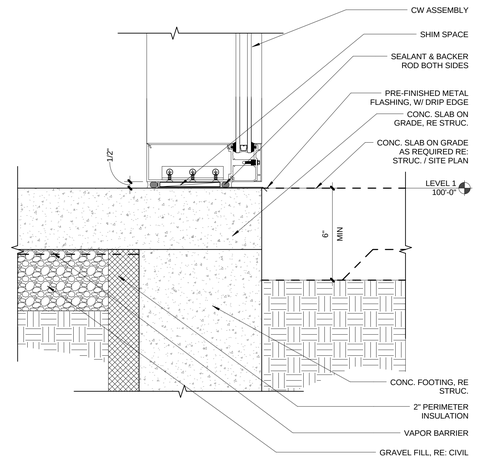

Sill Detail (C6 / AE633)
3" = 1'-0"

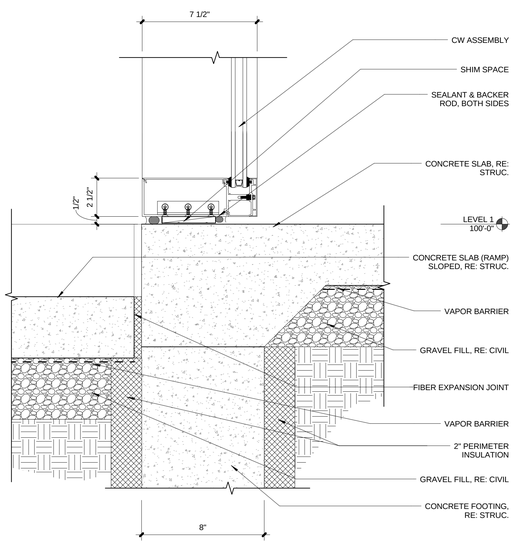

Sill Detail (A2 / AE633)
3" = 1'-0"

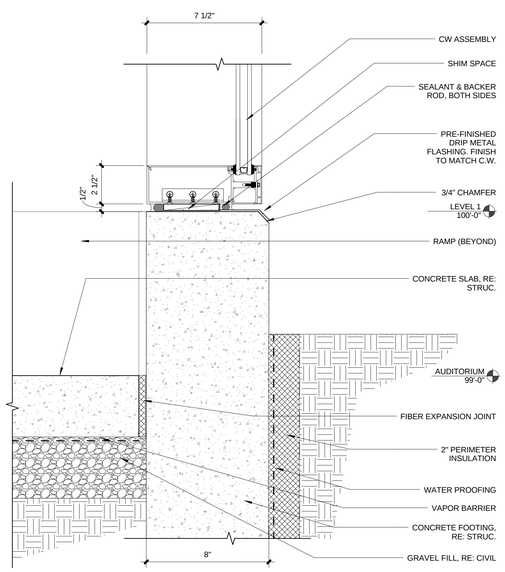

Sill Detail (A3 / AE633)
3" = 1'-0"

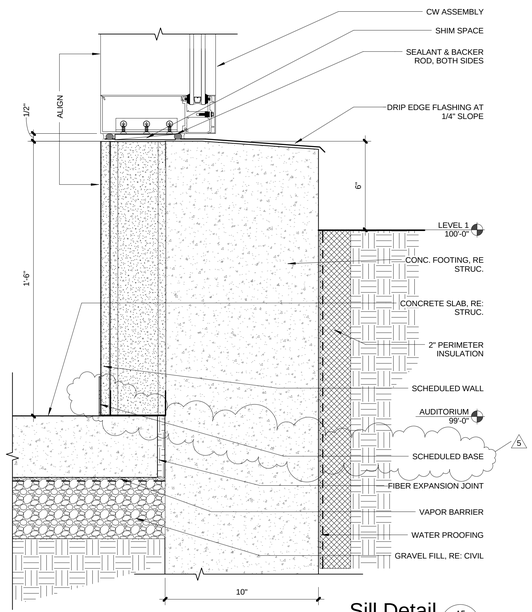

Sill Detail (A5 / AE633)
3" = 1'-0"

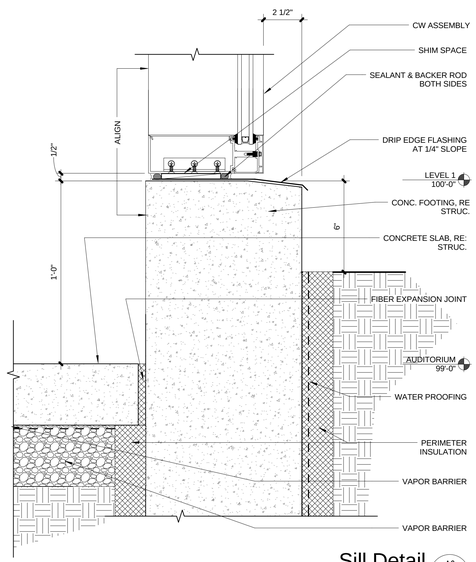

Sill Detail (A6 / AE633)
3" = 1'-0"

UNLESS A PROFESSIONAL SEAL WITH SIGNATURE AND DATE IS AFFIXED, THIS DOCUMENT IS PRELIMINARY AND IS NOT INTENDED FOR CONSTRUCTION, RECORDING PURPOSES, OR IMPLEMENTATION

UTAH VALLEY UVU UNIVERSITY

State of Utah
Department of Administrative Services
Division of Facilities Construction & Management
4110 State Office Building
Salt Lake City, Utah 84114
Phone: (801) 538 - 3018
Fax: (801) 538 - 3267

CRSA METHODSTUDIO INC.

CRSA ARCHITECTS
649 east south temple
salt lake city, utah 84102
phone:(801) 355-5915

METHOD STUDIO INC.
925 south west temple
salt lake city, utah 84101
phone:(801) 532-4422

DFCM APPROVAL STAMP

project:
UVU Classroom Building - Volume 2
800 West University Parkway
Orem, UT 84058

project#: DFCM# 12192790
date: April 30, 2013

revisions :
5 Addendum 5 05/24/13

title:
Curtain Wall Details

sheet:
AE633

BID DOC

DOOR SCHEDULE

DOOR #	ROOM #	SIZE	FIRE RATING	FRAME TYPE: FRAME	FRAME TYPE: FINISH	DOOR TYPE: PANEL	DOOR TYPE: FINISH	COMMENTS
001	101	3'-0"x6'-8"		F-HM1	F-PAINT	P-W	P-STAIN	
001A	001	3'-0"x6'-8"		F-HM1	F-PAINT	P-W	P-STAIN	
001B	101B	3'-0"x6'-8"		F-HM1	F-PAINT	P-W	P-STAIN	
001D	001B	3'-0"x6'-8"		F-HM1	F-PAINT	P-W	P-STAIN	
002	002	(2) 3'-0"x4'-8"		F-HM3	F-PAINT	P-W2	P-STAIN	
002A	002	(2) 3'-0"x4'-8"		F-HM3	F-PAINT	P-W2	P-STAIN	
002B	002A	(2) 3'-0"x4'-8"		F-HM3	F-PAINT	P-W2	P-STAIN	
002C	002A	(2) 3'-0"x4'-8"		F-HM3	F-PAINT	P-W2	P-STAIN	
100AA	100A	(2) 3'-0"x9'-0"		F-A	F-ANN.	P-A1	P-PAINT	
100AB	100A	(2) 3'-0"x9'-0"		F-A	F-ANN.	P-A1	P-PAINT	
100AC	100	(2) 3'-0"x9'-0"		F-A	F-ANN.	P-A1	P-PAINT	
100AD	100A	(2) 3'-0"x9'-0"		F-A	F-ANN.	P-A1	P-PAINT	
100B	100B	3'-6"x7'-0"	90 MIN.	F-H.M.	F-PAINT	P-W	P-STAIN	
100C	100C	2'-2" x 7'-0"		F-H.M.	F-PAINT	P-W	P-STAIN	
100G	100G	3'-0"x7'-0"		F-H.M.	F-PAINT	P-W	P-STAIN	
100GA	100G	3'-0"x7'-0"		F-H.M.	F-PAINT	P-W	P-STAIN	
100HA	100H	(2) 3'-0"x9'-0"		F-A	F-ANN.	P-A1	P-PAINT	
100HB	100H	(2) 3'-0"x9'-0"		F-A	F-ANN.	P-A1	P-PAINT	
100HC	100H	(2) 3'-0"x9'-0"		F-A	F-ANN.	P-A1	P-PAINT	
100HD	100H	(2) 3'-0"x9'-0"		F-A	F-ANN.	P-A1	P-PAINT	
100J	100J	3'-0"x7'-0"	90 MIN.	F-HM1	F-PAINT	P-W	P-STAIN	
100JA	100J	4'-0"x7'-0"		F-HM1	F-PAINT	P-H.M.	P-PAINT	
100K	100K	3'-0"x7'-0"		F-H.M.	F-PAINT	P-W	P-STAIN	
100L	100L	3'-0"x7'-0"		F-H.M.	F-PAINT	P-W	P-STAIN	
100M	100M	3'-0"x7'-0"		F-H.M.	F-PAINT	P-W	P-STAIN	
100N	100N	3'-0"x7'-0"		F-H.M.	F-PAINT	P-W	P-STAIN	
100P	100P	3'-0"x7'-0"	90 MIN.	F-HM1	F-PAINT	P-W	P-STAIN	
100PA	100P	4'-0"x7'-0"		F-HM1	F-PAINT	P-H.M.	P-PAINT	
100R	100R	3'-0"x7'-0"		F-HM1	F-PAINT	P-H.M.	P-PAINT	
100SA	100S	(2) 3'-0"x9'-0"		F-A	F-ANN.	P-A1	P-PAINT	
100SB	100S	(2) 3'-0"x9'-0"		F-A	F-ANN.	P-A1	P-PAINT	
100SC	100S	(2) 3'-0"x9'-0"		F-A	F-ANN.	P-A1	P-PAINT	
100SD	100S	(2) 3'-0"x9'-0"		F-A	F-ANN.	P-A1	P-PAINT	
100T	100T	3'-6"x7'-0"	90 MIN.	F-HM1	F-PAINT	P-W	P-STAIN	
100UA	100U	(2) 3'-0"x9'-0"		F-A	F-ANN.	P-A1	P-PAINT	
100UB	100U	(2) 3'-0"x9'-0"		F-A	F-ANN.	P-A1	P-PAINT	
100UC	100U	(2) 3'-0"x9'-0"		F-A	F-ANN.	P-A1	P-PAINT	
100UD	100U	(2) 3'-0"x9'-0"		F-A	F-ANN.	P-A1	P-PAINT	
100V	100V	3'-6"x7'-0"		F-H.M.	F-PAINT	P-W	P-STAIN	
100W	100W	3'-6"x7'-0"		F-H.M.	F-PAINT	P-W	P-STAIN	
101	101	(2) 3'-0"x7'-0"		F-HM3	F-PAINT	P-W2	P-STAIN	
101A	100	(2) 3'-0"x7'-0"		F-HM2	F-PAINT	P-W2	P-STAIN	
101B	101A	(2) 3'-0"x7'-0"		F-HM2	F-PAINT	P-W2	P-STAIN	
101C	100	(2) 3'-0"x7'-0"		F-HM2	F-PAINT	P-W2	P-STAIN	
101D	101B	(2) 3'-0"x7'-0"		F-HM2	F-PAINT	P-W2	P-STAIN	
101E	101B	(2) 3'-0"x7'-0"		F-HM3	F-PAINT	P-W2	P-STAIN	
101F	101D	3'-0"x7'-0"		F-H.M.	F-PAINT	P-W	P-STAIN	
101G	101D	3'-0"x7'-0"		F-H.M.	F-PAINT	P-W	P-STAIN	
101H	522	3'-0"x7'-0"		F-H.M.	F-PAINT	P-W	P-STAIN	
101J	522	(2) 3'-0"x7'-0"		F-HM2	F-PAINT	P-W2	P-STAIN	
101K		55' - 0"		-	-	-	-	SKYFOLD
101L		55' - 0"		-	-	-	-	SKYFOLD
102	102	3'-0"x7'-0"		F-HM1	F-PAINT	P-W1	P-STAIN	
103	103	3'-0"x7'-0"		F-HM1	F-PAINT	P-W	P-STAIN	
103A	103B	3'-0"x7'-0"		F-HM1	F-PAINT	P-W	P-STAIN	
103B	103E	(2) 3'-0"x7'-0"		F-HM3	F-PAINT	P-HM1	P-PAINT	
103C	103	(2) 3'-0"x7'-0"		F-HM3	F-PAINT	P-HM1	P-PAINT	
103D	103	12-0"x8'-0"		-	-	P-R	P-PAINT	OVERHEAD
103E	103	3'-0"x7'-0"		F-HM1	F-PAINT	P-H.M.	P-PAINT	
103F	103D	3'-0"x7'-0"		F-H.M.	F-PAINT	P-W	P-STAIN	
103G	103A	3'-0"x7'-0"		F-H.M.	F-PAINT	P-W1	P-STAIN	
103H	103C	3'-0"x7'-0"		F-H.M.	F-PAINT	P-W	P-STAIN	
103J	103E	4'-0"x7'-0"		F-H.M.	F-PAINT	P-W	P-STAIN	
103K	103B	3'-0"x7'-0"		F-H.M.	F-PAINT	P-W	P-STAIN	
103L	103E	3'-0"x7'-0"		F-H.M.	F-PAINT	P-W	P-STAIN	
104	104	3'-0"x7'-0"		F-HM1	F-PAINT	P-W1	P-STAIN	
104A	104	3'-0"x7'-0"		F-HM1	F-PAINT	P-W1	P-STAIN	
104B	104	3'-0"x7'-0"		F-HM1	F-PAINT	P-W1	P-STAIN	
104C	104A	3'-0"x7'-0"		F-H.M.	F-PAINT	P-W	P-STAIN	
105A	105A	3'-0"x7'-0"		F-A	-	P-G	-	
105A	105C	3'-0"x7'-0"		F-A	-	P-G	-	
105B	105B	3'-0"x7'-0"		F-A	-	P-G	-	
106A	106	3'-0"x7'-0"		F-HM1	F-PAINT	P-W1	P-STAIN	
106B	106	3'-0"x7'-0"		F-HM1	F-PAINT	P-W1	P-STAIN	
107A	107	3'-0"x7'-0"		F-HM1	F-PAINT	P-W1	P-STAIN	
107B	107	3'-0"x7'-0"		F-HM1	F-PAINT	P-W1	P-STAIN	
108	108	3'-0"x7'-0"		F-HM1	F-PAINT	P-W	P-STAIN	
108A	108A	3'-0"x7'-0"		F-HM1	F-PAINT	P-W	P-STAIN	
108B	108B	3'-0"x7'-0"		F-HM1	F-PAINT	P-W	P-STAIN	
108C	108B	3'-0"x7'-0"		F-HM1	F-PAINT	P-H.M.	P-PAINT	
108D	108B	8'-0"x8'-0"		-	-	P-R	P-PAINT	OVERHEAD
110A	110	4'-11 1/2"x9'-0"		F-A	F-ANN.	P-A	P-PAINT	
110B	110	4'-11 1/2"x9'-0"		F-A	F-ANN.	P-A	P-PAINT	
110C	110	4'-11 1/2"x9'-0"		F-A	F-ANN.	P-A	P-PAINT	
110D	110	4'-11 1/2"x9'-0"		F-A	F-ANN.	P-A	P-PAINT	
111	100	3'-0"x7'-0"		F-H.M.	F-PAINT	P-W	P-STAIN	
112A	112	3'-0"x7'-0"		F-HM1	F-PAINT	P-W1	P-STAIN	
112B	112	3'-0"x7'-0"		F-HM1	F-PAINT	P-W1	P-STAIN	
200	200A	(2) 4'-0"x7'-0"	90 MIN.	F-HM3	F-PAINT	P-HM1	P-PAINT	
200A	200A	(2) 4'-0"x7'-0"	90 MIN.	F-HM3	F-PAINT	P-HM1	P-PAINT	
200B	200B	3'-0"x7'-0"	90 MIN.	F-H.M.	F-PAINT	P-W	P-STAIN	
200C	200C	2'-2" x 7'-0"		F-H.M.	F-PAINT	P-W	P-STAIN	
200D	200	3'-0"x7'-0"		F-A	F-ANN.	P-G	P-PAINT	
200E	200	3'-0"x7'-0"		F-A	F-ANN.	P-G	P-PAINT	
200F	200	4'-11"x2'-7"		F-A	F-ANN.	P-A1	P-PAINT	
200G	200G	3'-0"x7'-0"		F-H.M.	F-PAINT	P-W	P-STAIN	
200H	200H	3'-0"x7'-0"	90 MIN.	F-H.M.	F-PAINT	P-W	P-STAIN	
200J	200J	3'-0"x7'-0"		F-H.M.	F-PAINT	P-W	P-STAIN	
200K	200K	3'-0"x7'-0"		F-H.M.	F-PAINT	P-W	P-STAIN	
200L	200L	3'-0"x7'-0"	90 MIN.	F-H.M.	F-PAINT	P-W	P-STAIN	
200N	200P	2'-2" x 7'-0"		F-H.M.	F-PAINT	P-W	P-STAIN	
200Q	200Q	3'-0"x7'-0"	90 MIN.	F-H.M.	F-PAINT	P-W	P-STAIN	
200R	200R	(2) 3'-6"x7'-0"		F-HM3	F-PAINT	P-W	P-STAIN	
200S	200S	3'-6"x7'-0"		F-H.M.	F-PAINT	P-W	P-STAIN	
200X	200A	(2) 3'-0"x7'-0"		F-A	F-ANN.	P-A1	P-PAINT	
200Y	200A	(2) 3'-0"x7'-0"		F-A	F-ANN.	P-A1	P-PAINT	
200Z	200A	(2) 3'-0"x7'-0"		F-A	F-ANN.	P-A1	P-PAINT	
201	200	3'-6"x7'-0"		F-H.M.	F-PAINT	P-W	P-STAIN	
201A	201A	3'-6"x7'-0"		F-H.M.	F-PAINT	P-W	P-STAIN	
202	202	3'-0"x7'-0"		F-H.M.	F-PAINT	P-W1	P-STAIN	
203	203P	3'-0"x7'-0"		F-H.M.	F-PAINT	P-W1	P-STAIN	
203A	203A	3'-0"x7'-0"		F-A	F-ANN.	P-G	P-PAINT	
203B	203B	3'-0"x7'-0"		F-H.M.	F-PAINT	P-W1	P-STAIN	
203C	203C	3'-0"x7'-0"		F-H.M.	F-PAINT	P-W1	P-STAIN	
203D	203D	3'-0"x7'-0"		F-H.M.	F-PAINT	P-W1	P-STAIN	
203E	205H	3'-0"x7'-0"		F-H.M.	F-PAINT	P-W1	P-STAIN	
203F	205H	3'-0"x7'-0"		F-H.M.	F-PAINT	P-W1	P-STAIN	
203G	205H	3'-0"x7'-0"		F-H.M.	F-PAINT	P-W1	P-STAIN	
203H	205H	3'-0"x7'-0"		F-H.M.	F-PAINT	P-W1	P-STAIN	
203J	205H	3'-0"x7'-0"		F-H.M.	F-PAINT	P-W1	P-STAIN	
203K	205H	3'-0"x7'-0"		F-H.M.	F-PAINT	P-W1	P-STAIN	
203L	205H	3'-0"x7'-0"		F-H.M.	F-PAINT	P-W1	P-STAIN	
203M	205H	3'-0"x7'-0"		F-H.M.	F-PAINT	P-W1	P-STAIN	
203N	205H	3'-0"x7'-0"		F-H.M.	F-PAINT	P-W1	P-STAIN	

DOOR SCHEDULE

DOOR #	ROOM #	SIZE	FIRE RATING	FRAME TYPE: FRAME	FRAME TYPE: FINISH	DOOR TYPE: PANEL	DOOR TYPE: FINISH	COMMENTS
203P	205H	3'-0"x7'-0"		F-H.M.	F-PAINT	P-W1	P-STAIN	
203Q	205H	3'-0"x7'-0"		F-H.M.	F-PAINT	P-W1	P-STAIN	
203R	205H	3'-0"x7'-0"		F-H.M.	F-PAINT	P-W1	P-STAIN	
203S	203S	3'-0"x7'-0"		F-H.M.	F-PAINT	P-W1	P-STAIN	
204	204	3'-0"x7'-0"		F-H.M.	F-PAINT	P-W1	P-STAIN	
204A	204	3'-0"x7'-0"		F-H.M.	F-PAINT	P-W1	P-STAIN	
204B	204	3'-0"x7'-0"		F-H.M.	F-PAINT	P-W	P-STAIN	
205A	209P	3'-0"x7'-0"		F-H.M.	F-PAINT	P-W1	P-STAIN	
205B	200	3'-0"x7'-0"		F-A	F-ANN.	P-G	P-PAINT	
205C	205C	3'-0"x7'-0"		F-H.M.	F-PAINT	P-W1	P-STAIN	
205D	205D	3'-0"x7'-0"		F-H.M.	F-PAINT	P-W1	P-STAIN	
205E	205E	3'-0"x7'-0"		F-H.M.	F-PAINT	P-W1	P-STAIN	
205F	205F	3'-0"x7'-0"		F-H.M.	F-PAINT	P-W1	P-STAIN	
205G	205G	3'-0"x7'-0"		F-H.M.	F-PAINT	P-W1	P-STAIN	
205H	205H	3'-0"x7'-0"		F-H.M.	F-PAINT	P-W	P-STAIN	
205J	205G	3'-0"x7'-0"		F-H.M.	F-PAINT	P-W	P-STAIN	
206A	206	3'-0"x7'-0"		F-H.M.	F-PAINT	P-W1	P-STAIN	
206B	206	3'-0"x7'-0"		F-H.M.	F-PAINT	P-W1	P-STAIN	
207A	207	3'-0"x7'-0"		F-H.M.	F-PAINT	P-W1	P-STAIN	
207B	207	3'-0"x7'-0"		F-H.M.	F-PAINT	P-W1	P-STAIN	
208	208	3'-0"x7'-0"		F-H.M.	F-PAINT	P-W1	P-STAIN	
208A	208A	3'-0"x7'-0"		F-H.M.	F-PAINT	P-W1	P-STAIN	
208B	205H	3'-0"x7'-0"		F-H.M.	F-PAINT	P-W1	P-STAIN	
208C	205H	3'-0"x7'-0"		F-H.M.	F-PAINT	P-W1	P-STAIN	
208D	205H	3'-0"x7'-0"		F-H.M.	F-PAINT	P-W1	P-STAIN	
208E	205H	3'-0"x7'-0"		F-H.M.	F-PAINT	P-W1	P-STAIN	
208F	205H	3'-0"x7'-0"		F-H.M.	F-PAINT	P-W1	P-STAIN	
208G	205H	3'-0"x7'-0"		F-H.M.	F-PAINT	P-W1	P-STAIN	
208H	205H	3'-0"x7'-0"		F-H.M.	F-PAINT	P-W1	P-STAIN	
209	205H	3'-0"x7'-0"		F-H.M.	F-PAINT	P-W1	P-STAIN	
209A	205H	3'-0"x7'-0"		F-H.M.	F-PAINT	P-W1	P-STAIN	
209B	205H	3'-0"x7'-0"		F-H.M.	F-PAINT	P-W1	P-STAIN	
209C	205H	3'-0"x7'-0"		F-H.M.	F-PAINT	P-W1	P-STAIN	
209D	205H	3'-0"x7'-0"		F-H.M.	F-PAINT	P-W1	P-STAIN	
209E	205H	3'-0"x7'-0"		F-H.M.	F-PAINT	P-W1	P-STAIN	
209F	205H	3'-0"x7'-0"		F-H.M.	F-PAINT	P-W1	P-STAIN	
209G	205H	3'-0"x7'-0"		F-H.M.	F-PAINT	P-W1	P-STAIN	
209H	205H	3'-0"x7'-0"		F-H.M.	F-PAINT	P-W1	P-STAIN	
209J	205H	3'-0"x7'-0"		F-H.M.	F-PAINT	P-W1	P-STAIN	
209K	205H	3'-0"x7'-0"		F-H.M.	F-PAINT	P-W1	P-STAIN	
209L	205H	3'-0"x7'-0"		F-H.M.	F-PAINT	P-W1	P-STAIN	
209M	205H	3'-0"x7'-0"		F-H.M.	F-PAINT	P-W1	P-STAIN	
209N	205H	3'-0"x7'-0"		F-H.M.	F-PAINT	P-W1	P-STAIN	
209P	205H	3'-0"x7'-0"		F-H.M.	F-PAINT	P-W1	P-STAIN	
209Q	205H	3'-0"x7'-0"		F-H.M.	F-PAINT	P-W1	P-STAIN	
210	210	3'-0"x7'-0"		F-H.M.	F-PAINT	P-W1	P-STAIN	
210A	210A	3'-0"x7'-0"		F-H.M.	F-PAINT	P-W1	P-STAIN	
210B	210B	3'-0"x7'-0"		F-H.M.	F-PAINT	P-W1	P-STAIN	
210C	210C	3'-0"x7'-0"		F-H.M.	F-PAINT	P-W1	P-STAIN	
210D	210D	3'-0"x7'-0"		F-H.M.	F-PAINT	P-W1	P-STAIN	
210E	210E	3'-0"x7'-0"		F-H.M.	F-PAINT	P-W1	P-STAIN	
210F	210F	3'-0"x7'-0"		F-H.M.	F-PAINT	P-W1	P-STAIN	
210G	210G	3'-0"x7'-0"		F-H.M.	F-PAINT	P-W1	P-STAIN	
210H	210H	3'-0"x7'-0"		F-H.M.	F-PAINT	P-W1	P-STAIN	
211	211	3'-0"x7'-0"		F-H.M.	F-PAINT	P-W1	P-STAIN	
212A	212	3'-0"x7'-0"		F-H.M.	F-PAINT	P-W1	P-STAIN	
212B	212	3'-0"x7'-0"		F-H.M.	F-PAINT	P-W1	P-STAIN	
213A	213	3'-0"x7'-0"		F-A	F-ANN.	P-G	P-PAINT	
300	300	4'-11"x2'-7"		F-A	F-ANN.	P-A1	P-PAINT	OPPERABLE WINDOW
300A	300	3'-0"x7'-0"	90 MIN.	F-H.M.	F-PAINT	P-W1	P-STAIN	
300B	300B	2'-2" x 7'-0"		F-H.M.	F-PAINT	P-W	P-STAIN	
300E	300	3'-0"x7'-0"		F-H.M.	F-PAINT	P-W	P-STAIN	
300F	300	3'-0"x7'-0"	90 MIN.	F-H.M.	F-PAINT	P-W	P-STAIN	
300G	300	3'-0"x7'-0"		F-H.M.	F-PAINT	P-W	P-STAIN	
300H	300H	3'-6"x7'-0"		F-H.M.	F-PAINT	P-W	P-STAIN	
300J	300	3'-0"x7'-0"		F-H.M.	F-PAINT	P-W	P-STAIN	
300K	300	3'-6"x7'-0"		F-H.M.	F-PAINT	P-W	P-STAIN	
300L	300	3'-0"x7'-0"	90 MIN.	F-H.M.	F-PAINT	P-W	P-STAIN	
300N	300P	2'-2" x 7'-0"		F-H.M.	F-PAINT	P-W	P-STAIN	
300Q	300Q	(2) 3'-6"x7'-0"		F-HM3	F-PAINT	P-W	P-STAIN	
300R	300	3'-0"x7'-0"	90 MIN.	F-H.M.	F-PAINT	P-W	P-STAIN	
300T	300	3'-0"x7'-0"		F-H.M.	F-PAINT	P-W	P-STAIN	
300U	300	3'-6"x7'-0"		F-H.M.	F-PAINT	P-W	P-STAIN	
302	300	3'-0"x7'-0"		F-H.M.	F-PAINT	P-W1	P-STAIN	
303	303P	3'-0"x7'-0"		F-H.M.	F-PAINT	P-W1	P-STAIN	
303A	303A	3'-0"x7'-0"		F-A	F-ANN.	P-G	P-PAINT	
303B	300	3'-0"x7'-0"		F-H.M.	F-PAINT	P-W1	P-STAIN	
303C	300	3'-0"x7'-0"		F-H.M.	F-PAINT	P-W1	P-STAIN	
303D	300	3'-0"x7'-0"		F-H.M.	F-PAINT	P-W1	P-STAIN	
303E	300	3'-0"x7'-0"		F-H.M.	F-PAINT	P-W1	P-STAIN	
303F	305L	3'-0"x7'-0"		F-H.M.	F-PAINT	P-W1	P-STAIN	
303G	305L	3'-0"x7'-0"		F-H.M.	F-PAINT	P-W1	P-STAIN	
303H	305L	3'-0"x7'-0"		F-H.M.	F-PAINT	P-W1	P-STAIN	
303J	305L	3'-0"x7'-0"		F-H.M.	F-PAINT	P-W1	P-STAIN	
303K	305L	3'-0"x7'-0"		F-H.M.	F-PAINT	P-W1	P-STAIN	
303L	305L	3'-0"x7'-0"		F-H.M.	F-PAINT	P-W1	P-STAIN	
303M	305L	3'-0"x7'-0"		F-H.M.	F-PAINT	P-W1	P-STAIN	
303N	305L	3'-0"x7'-0"		F-H.M.	F-PAINT	P-W1	P-STAIN	
303O	305L	3'-0"x7'-0"		F-H.M.	F-PAINT	P-W1	P-STAIN	
303P	305L	3'-0"x7'-0"		F-H.M.	F-PAINT	P-W1	P-STAIN	
303Q	305L	3'-0"x7'-0"		F-H.M.	F-PAINT	P-W1	P-STAIN	
303R	305L	3'-0"x7'-0"		F-H.M.	F-PAINT	P-W1	P-STAIN	
303S	305L	3'-0"x7'-0"		F-H.M.	F-PAINT	P-W1	P-STAIN	
304A	304	3'-0"x7'-0"		F-H.M.	F-PAINT	P-W1	P-STAIN	
304B	304	3'-0"x7'-0"		F-H.M.	F-PAINT	P-W1	P-STAIN	
305	305	3'-0"x7'-0"		F-A	-	P-G	-	
305A	300	3'-0"x7'-0"		F-A	-	P-G	-	
305J	300	3'-0"x7'-0"		F-H.M.	F-PAINT	P-W	P-STAIN	
305L	300	3'-0"x7'-0"		F-H.M.	F-PAINT	P-W	P-STAIN	
306A	310P	3'-0"x7'-0"		F-H.M.	F-PAINT	P-W1	P-STAIN	
306B	300	3'-0"x7'-0"		F-A	F-ANN.	P-G	P-PAINT	
306C	300	3'-0"x7'-0"		F-H.M.	F-PAINT	P-W1	P-STAIN	
306D	300	3'-0"x7'-0"		F-H.M.	F-PAINT	P-W1	P-STAIN	
306E	300	3'-0"x7'-0"		F-H.M.	F-PAINT	P-W1	P-STAIN	
306F	300	3'-0"x7'-0"		F-H.M.	F-PAINT	P-W1	P-STAIN	
306G	300	3'-0"x7'-0"		F-H.M.	F-PAINT	P-W1	P-STAIN	
306UUU	500	3'-0"x7'-0"		F-A	F-ANN.	P-G	P-PAINT	
307A	307	3'-0"x7'-0"		F-H.M.	F-PAINT	P-W1	P-STAIN	
307B	300	3'-0"x7'-0"		F-H.M.	F-PAINT	P-W1	P-STAIN	
308A	300	3'-0"x7'-0"		F-H.M.	F-PAINT	P-W1	P-STAIN	
308B	308	3'-0"x7'-0"		F-H.M.	F-PAINT	P-W1	P-STAIN	
309A	300	3'-0"x7'-0"		F-H.M.	F-PAINT	P-W1	P-STAIN	
309B	300	3'-0"x7'-0"		F-H.M.	F-PAINT	P-W1	P-STAIN	
309C	305L	3'-0"x7'-0"		F-H.M.	F-PAINT	P-W1	P-STAIN	
309D	305L	3'-0"x7'-0"		F-H.M.	F-PAINT	P-W1	P-STAIN	
309E	305L	3'-0"x7'-0"		F-H.M.	F-PAINT	P-W1	P-STAIN	
309F	305L	3'-0"x7'-0"		F-H.M.	F-PAINT	P-W1	P-STAIN	
309G	305L	3'-0"x7'-0"		F-H.M.	F-PAINT	P-W1	P-STAIN	
309H	305L	3'-0"x7'-0"		F-H.M.	F-PAINT	P-W1	P-STAIN	
309J	305L	3'-0"x7'-0"		F-H.M.	F-PAINT	P-W1	P-STAIN	
310	305L	3'-0"x7'-0"		F-H.M.	F-PAINT	P-W1	P-STAIN	
310A	305L	3'-0"x7'-0"		F-H.M.	F-PAINT	P-W1	P-STAIN	
310B	305L	3'-0"x7'-0"		F-H.M.	F-PAINT	P-W1	P-STAIN	
310C	305L	3'-0"x7'-0"		F-H.M.	F-PAINT	P-W1	P-STAIN	

DOOR SCHEDULE

DOOR #	ROOM #	SIZE	FIRE RATING	FRAME TYPE: FRAME	FRAME TYPE: FINISH	DOOR TYPE: PANEL	DOOR TYPE: FINISH	COMMENTS
310D	305L	3'-0"x7'-0"		F-H.M.	F-PAINT	P-W1	P-STAIN	
310E	305L	3'-0"x7'-0"		F-H.M.	F-PAINT	P-W1	P-STAIN	
310F	305L	3'-0"x7'-0"		F-H.M.	F-PAINT	P-W1	P-STAIN	
310G	305L	3'-0"x7'-0"		F-H.M.	F-PAINT	P-W1	P-STAIN	
310H	305L	3'-0"x7'-0"		F-H.M.	F-PAINT	P-W1	P-STAIN	
310J	305L	3'-0"x7'-0"		F-H.M.	F-PAINT	P-W1	P-STAIN	
310K	305L	3'-0"x7'-0"		F-H.M.	F-PAINT	P-W1	P-STAIN	
310L	305L	3'-0"x7'-0"		F-H.M.	F-PAINT	P-W1	P-STAIN	
310M	305L	3'-0"x7'-0"		F-H.M.	F-PAINT	P-W1	P-STAIN	
310N	305L	3'-0"x7'-0"		F-H.M.	F-PAINT	P-W1	P-STAIN	
310P	305L	3'-0"x7'-0"		F-H.M.	F-PAINT	P-W1	P-STAIN	
310Q	305L	3'-0"x7'-0"		F-H.M.	F-PAINT	P-W1	P-STAIN	
311	311	3'-0"x7'-0"		F-H.M.	F-PAINT	P-W1	P-STAIN	
312A	312	3'-0"x7'-0"		F-H.M.	F-PAINT	P-W1	P-STAIN	
312B	312	3'-0"x7'-0"		F-H.M.	F-PAINT	P-W1	P-STAIN	
313	313	3'-0"x7'-0"		F-H.M.	F-PAINT	P-W1	P-STAIN	
313A	313H	3'-0"x7'-0"		F-H.M.	F-PAINT	P-W1	P-STAIN	
313B	313H	3'-0"x7'-0"		F-H.M.	F-PAINT	P-W1	P-STAIN	
313C	313H	3'-0"x7'-0"		F-H.M.	F-PAINT	P-W1	P-STAIN	
313D	313H	3'-0"x7'-0"		F-H.M.	F-PAINT	P-W1	P-STAIN	
313E	313H	3'-0"x7'-0"		F-H.M.	F-PAINT	P-W1	P-STAIN	
313F	313H	3'-0"x7'-0"		F-H.M.	F-PAINT	P-W1	P-STAIN	
313G	313H	3'-0"x7'-0"		F-H.M.	F-PAINT	P-W1	P-STAIN	
313H	313H	3'-0"x7'-0"		F-A	F-ANN.	P-G	P-PAINT	
313J	313H	3'-0"x7'-0"		F-A	F-ANN.	P-G	P-PAINT	
314A	314	3'-0"x7'-0"		F-H.M.	F-PAINT	P-W1	P-STAIN	
314B	314	3'-0"x7'-0"		F-H.M.	F-PAINT	P-W1	P-STAIN	
315	315	3'-0"x7'-0"		F-A	-	P-G	-	
316A	300	3'-0"x7'-0"		F-H.M.	F-PAINT	P-W1	P-STAIN	
316B	316	3'-0"x7'-0"		F-H.M.	F-PAINT	P-W1	P-STAIN	
316C	316A	3'-0"x7'-0"		F-H.M.	F-PAINT	P-W	P-STAIN	
400A	400	3'-0"x7'-0"	90 MIN.	F-H.M.	F-PAINT	P-W	P-STAIN	
400B	400B	2'-2" x 7'-0"		F-H.M.	F-PAINT	P-W	P-STAIN	
400F	400	3'-0"x7'-0"		F-H.M.	F-PAINT	P-W	P-STAIN	
400G	400	3'-0"x7'-0"	90 MIN.	F-H.M.	F-PAINT	P-W	P-STAIN	
400H	400H	3'-0"x7'-0"		F-H.M.	F-PAINT	P-W	P-STAIN	
400J	400	3'-0"x7'-0"		F-H.M.	F-PAINT	P-W	P-STAIN	
400K	400	3'-0"x7'-0"	90 MIN.	F-H.M.	F-PAINT	P-W	P-STAIN	
400M	400M	2'-2" x 7'-0"		F-H.M.	F-PAINT	P-W	P-STAIN	
400P	400P	(2) 3'-6"x7'-0"		F-HM3	F-PAINT	P-W	P-STAIN	
400Q	400Q	3'-0"x7'-0"	90 MIN.	F-H.M.	F-PAINT	P-W	P-STAIN	
400S	400	3'-6"x7'-0"		F-H.M.	F-PAINT	P-W	P-STAIN	
400T	400	3'-0"x7'-0"		F-H.M.	F-PAINT	P-W	P-STAIN	
400U	400U	3'-6"x7'-0"		F-H.M.	F-PAINT	P-W	P-STAIN	
402	402	3'-0"x7'-0"		F-H.M.	F-PAINT	P-W1	P-STAIN	
403	403P	3'-0"x7'-0"		F-H.M.	F-PAINT	P-W1	P-STAIN	
403A	403A	3'-0"x7'-0"		F-A	F-ANN.	P-G	P-PAINT	
403B	400	3'-0"x7'-0"		F-H.M.	F-PAINT	P-W1	P-STAIN	
403C	400	3'-0"x7'-0"		F-H.M.	F-PAINT	P-W1	P-STAIN	
403D	400	3'-0"x7'-0"		F-H.M.	F-PAINT	P-W1	P-STAIN	
403E	400	3'-0"x7'-0"		F-H.M.	F-PAINT	P-W1	P-STAIN	
403F	403	3'-0"x7'-0"		F-H.M.	F-PAINT	P-W1	P-STAIN	
403G	403	3'-0"x7'-0"		F-H.M.	F-PAINT	P-W1	P-STAIN	
403H	403	3'-0"x7'-0"		F-H.M.	F-PAINT	P-W1	P-STAIN	
403J	403	3'-0"x7'-0"		F-H.M.	F-PAINT	P-W1	P-STAIN	
403K	403	3'-0"x7'-0"		F-H.M.	F-PAINT	P-W1	P-STAIN	
403L	403	3'-0"x7'-0"		F-H.M.	F-PAINT	P-W1	P-STAIN	
403M	403	3'-0"x7'-0"		F-H.M.	F-PAINT	P-W1	P-STAIN	
403N	403	3'-0"x7'-0"		F-H.M.	F-PAINT	P-W1	P-STAIN	
403O	403	3'-0"x7'-0"		F-H.M.	F-PAINT	P-W1	P-STAIN	
403P	403	3'-0"x7'-0"		F-H.M.	F-PAINT	P-W1	P-STAIN	
403Q	403	3'-0"x7'-0"		F-H.M.	F-PAINT	P-W1	P-STAIN	
403R	403	3'-0"x7'-0"		F-H.M.	F-PAINT	P-W1	P-STAIN	
403S	403	3'-0"x7'-0"		F-H.M.	F-PAINT	P-W1	P-STAIN	
404A	400	3'-0"x7'-0"		F-H.M.	F-PAINT	P-W1	P-STAIN	
404B	404	3'-0"x7'-0"		F-H.M.	F-PAINT	P-W1	P-STAIN	
404C	404	3'-0"x7'-0"		F-H.M.	F-PAINT	P-W	P-STAIN	
405A	410P	3'-0"x7'-0"		F-H.M.	F-PAINT	P-W1	P-STAIN	
405B	400	3'-0"x7'-0"		F-A	F-ANN.	P-G	P-PAINT	
405C	400	3'-0"x7'-0"		F-H.M.	F-PAINT	P-W1	P-STAIN	
405D	400	3'-0"x7'-0"		F-H.M.	F-PAINT	P-W1	P-STAIN	
405E	400	3'-0"x7'-0"		F-H.M.	F-PAINT	P-W1	P-STAIN	
405F	400	3'-0"x7'-0"		F-H.M.	F-PAINT	P-W1	P-STAIN	
405G	400	3'-0"x7'-0"		F-H.M.	F-PAINT	P-W1	P-STAIN	
406A	400	3'-0"x7'-0"		F-H.M.	F-PAINT	P-W1	P-STAIN	
406B	406	3'-0"x7'-0"		F-H.M.	F-PAINT	P-W1	P-STAIN	
406C	406A	3'-0"x7'-0"		F-H.M.	F-PAINT	P-W	P-STAIN	
407A	400	3'-0"x7'-0"		F-H.M.	F-PAINT	P-W1	P-STAIN	
407B	400	3'-0"x7'-0"		F-H.M.	F-PAINT	P-W1	P-STAIN	
408	400	3'-0"x7'-0"		F-H.M.	F-PAINT	P-W1	P-STAIN	
409A	400	3'-0"x7'-0"		F-H.M.	F-PAINT	P-W1	P-STAIN	
409B	400	3'-0"x7'-0"		F-H.M.	F-PAINT	P-W1	P-STAIN	
409C	400	3'-0"x7'-0"		F-H.M.	F-PAINT	P-W1	P-STAIN	
409D	400	3'-0"x7'-0"		F-H.M.	F-PAINT	P-W1	P-STAIN	
409E	400	3'-0"x7'-0"		F-H.M.	F-PAINT	P-W1	P-STAIN	
409F	400	3'-0"x7'-0"		F-H.M.	F-PAINT	P-W1	P-STAIN	
409G	400	3'-0"x7'-0"		F-H.M.	F-PAINT	P-W1	P-STAIN	
409H	400	3'-0"x7'-0"		F-H.M.	F-PAINT	P-W1	P-STAIN	
409J	400	3'-0"x7'-0"		F-H.M.	F-PAINT	P-W1	P-STAIN	
410	400	3'-0"x7'-0"		F-H.M.	F-PAINT	P-W1	P-STAIN	
410A	400	3'-0"x7'-0"		F-H.M.	F-PAINT	P-W1	P-STAIN	
410B	400	3'-0"x7'-0"		F-H.M.	F-PAINT	P-W1	P-STAIN	
410C	400	3'-0"x7'-0"		F-H.M.	F-PAINT	P-W1	P-STAIN	
410D	400	3'-0"x7'-0"		F-H.M.	F-PAINT	P-W1	P-STAIN	
410E	400	3'-0"x7'-0"		F-H.M.	F-PAINT	P-W1	P-STAIN	
410F	400	3'-0"x7'-0"		F-H.M.	F-PAINT	P-W1	P-STAIN	
410G	400	3'-0"x7'-0"		F-H.M.	F-PAINT	P-W1	P-STAIN	
410H	400	3'-0"x7'-0"		F-H.M.	F-PAINT	P-W1	P-STAIN	
410J	400	3'-0"x7'-0"		F-H.M.	F-PAINT	P-W1	P-STAIN	
410K	400	3'-0"x7'-0"		F-H.M.	F-PAINT	P-W1	P-STAIN	
410L	400	3'-0"x7'-0"		F-H.M.	F-PAINT	P-W1	P-STAIN	
410M	400	3'-0"x7'-0"		F-H.M.	F-PAINT	P-W1	P-STAIN	
410N	400	3'-0"x7'-0"		F-H.M.	F-PAINT	P-W1	P-STAIN	
410P	400	3'-0"x7'-0"		F-H.M.	F-PAINT	P-W1	P-STAIN	
410Q	400	3'-0"x7'-0"		F-H.M.	F-PAINT	P-W1	P-STAIN	
411A	411	3'-0"x7'-0"		F-H.M.	F-PAINT	P-W1	P-STAIN	
411B	411	3'-0"x7'-0"		F-H.M.	F-PAINT	P-W1	P-STAIN	
412A	412	3'-0"x7'-0"		F-H.M.	F-PAINT	P-W1	P-STAIN	
412B	412	3'-0"x7'-0"		F-H.M.	F-PAINT	P-W1	P-STAIN	
413	413H	3'-0"x7'-0"		F-H.M.	F-PAINT	P-W1	P-STAIN	
413A	413H	3'-0"x7'-0"		F-H.M.	F-PAINT	P-W1	P-STAIN	
413B	413H	3'-0"x7'-0"		F-H.M.	F-PAINT	P-W1	P-STAIN	
413C	413H	3'-0"x7'-0"		F-H.M.	F-PAINT	P-W1	P-STAIN	
413D	413H	3'-0"x7'-0"		F-H.M.	F-PAINT	P-W1	P-STAIN	
413E	413H	3'-0"x7'-0"		F-H.M.	F-PAINT	P-W1	P-STAIN	
413F	413H	3'-0"x7'-0"		F-H.M.	F-PAINT	P-W1	P-STAIN	
413G	413G	3'-0"x7'-0"		F-H.M.	F-PAINT	P-W1	P-STAIN	
413H	413H	3'-0"x7'-0"		F-A	F-ANN.	P-G	P-PAINT	
413J	413H	3'-0"x7'-0"		F-A	F-ANN.	P-G	P-PAINT	
414A	414	3'-0"x7'-0"		F-H.M.	F-PAINT	P-W1	P-STAIN	
414B	414	3'-0"x7'-0"		F-H.M.	F-PAINT	P-W1	P-STAIN	
415A	400	3'-0"x7'-0"		F-H.M.	F-PAINT	P-W1	P-STAIN	
415B	415	3'-0"x7'-0"		F-H.M.	F-PAINT	P-W1	P-STAIN	
415C	415	3'-0"x7'-0"		F-H.M.	F-PAINT	P-W	P-STAIN	

DOOR SCHEDULE

DOOR #	ROOM #	SIZE	FIRE RATING	FRAME TYPE: FRAME	FRAME TYPE: FINISH	DOOR TYPE: PANEL	DOOR TYPE: FINISH	COMMENTS
416	400	3'-0"x7'-0"		F-A	F-ANN.	P-G	P-PAINT	
416A	400	3'-0"x7'-0"		F-A	F-ANN.	P-G	P-PAINT	
416B	416B	3'-0"x7'-0"		F-A	F-ANN.	P-G	P-PAINT	
416C	400	3'-0"x7'-0"		F-A	F-ANN.	P-G	P-PAINT	
416D	400	3'-0"x7'-0"		F-A	F-ANN.	P-G	P-PAINT	
416E	416E	3'-0"x7'-0"		F-A	F-ANN.	P-G	P-PAINT	
416F	416F	3'-0"x7'-0"		F-A	F-ANN.	P-G	P-PAINT	
416G	400	3'-0"x7'-0"		F-A	F-ANN.	P-G	P-PAINT	
416H	416H	3'-0"x7'-0"		F-A	F-ANN.	P-G	P-PAINT	
417A	400	3'-0"x7'-0"		F-H.M.	F-PAINT	P-W1	P-STAIN	
417B	417	3'-0"x7'-0"		F-H.M.	F-PAINT	P-W1	P-STAIN	
417C	417A	3'-0"x7'-0"		F-H.M.	F-PAINT	P-W	P-STAIN	
418	418	3'-0"x7'-0"		F-A	F-ANN.	P-G	P-PAINT	
500	500	4'-11"x2'-7"		F-A	F-ANN.	P-A1	P-PAINT	OPERABLE WINDOW
500A	500	3'-0"x7'-0"	90 MIN.	F-H.M.	F-PAINT	P-W	P-STAIN	
500B	500C	2'-2" x 7'-0"		F-H.M.	F-PAINT	P-W	P-STAIN	
500F	500	3'-0"x7'-0"		F-H.M.	F-PAINT	P-W	P-STAIN	
500G	500	3'-0"x7'-0"	90 MIN.	F-H.M.	F-PAINT	P-W1	P-STAIN	
500H	500H	3'-0"x7'-0"		F-H.M.	F-PAINT	P-W1	P-STAIN	
500J	500	3'-0"x7'-0"		F-H.M.	F-PAINT	P-W1	P-STAIN	
500K	500	3'-0"x7'-0"	90 MIN.	F-H.M.	F-PAINT	P-W1	P-STAIN	
500M	500N	2'-2" x 7'-0"		F-H.M.	F-PAINT	P-W	P-STAIN	
500P	500	(2) 3'-6"x7'-0"		F-HM3	F-PAINT	P-W	P-STAIN	
500Q	500Q	3'-0"x7'-0"	90 MIN.	F-H.M.	F-PAINT	P-W1	P-STAIN	
500R	500R	3'-0"x7'-0"		F-H.M.	F-PAINT	P-W	P-STAIN	
500T	500	3'-6"x7'-0"		F-H.M.	F-PAINT	P-W	P-STAIN	
500U	500	3'-6"x7'-0"		F-H.M.	F-PAINT	P-W	P-STAIN	
502A	500	3'-0"x7'-0"		F-H.M.	F-PAINT	P-W1	P-STAIN	
503	503P	3'-0"x7'-0"		F-H.M.	F-PAINT	P-W1	P-STAIN	
503A	503A	3'-0"x7'-0"		F-A	F-ANN.	P-G	P-PAINT	
503B	500	3'-0"x7'-0"		F-H.M.	F-PAINT	P-W1	P-STAIN	
503C	500	3'-0"x7'-0"		F-H.M.	F-PAINT	P-W1	P-STAIN	
503D	500	3'-0"x7'-0"		F-H.M.	F-PAINT	P-W1	P-STAIN	
503E	500	3'-0"x7'-0"		F-H.M.	F-PAINT	P-W1	P-STAIN	
503F	503F	3'-0"x7'-0"		F-H.M.	F-PAINT	P-W1	P-STAIN	
503G	503G	3'-0"x7'-0"		F-H.M.	F-PAINT	P-W1	P-STAIN	
503H	503H	3'-0"x7'-0"		F-H.M.	F-PAINT	P-W1	P-STAIN	
503J	503J	3'-0"x7'-0"		F-H.M.	F-PAINT	P-W1	P-STAIN	
503K	503K	3'-0"x7'-0"		F-H.M.	F-PAINT	P-W1	P-STAIN	
503L	503L	3'-0"x7'-0"		F-H.M.	F-PAINT	P-W1	P-STAIN	
503M	503M	3'-0"x7'-0"		F-H.M.	F-PAINT	P-W1	P-STAIN	
503N	503N	3'-0"x7'-0"		F-H.M.	F-PAINT	P-W1	P-STAIN	
503O	503O	3'-0"x7'-0"		F-H.M.	F-PAINT	P-W1	P-STAIN	
503P	500	3'-0"x7'-0"		F-H.M.	F-PAINT	P-W1	P-STAIN	
503Q	503Q	3'-0"x7'-0"		F-H.M.	F-PAINT	P-W1	P-STAIN	
503R	503R	3'-0"x7'-0"		F-H.M.	F-PAINT	P-W1	P-STAIN	
503S	503S	3'-0"x7'-0"		F-H.M.	F-PAINT	P-W1	P-STAIN	
504A	504	3'-0"x7'-0"		F-H.M.	F-PAINT	P-W1	P-STAIN	
504B	500	3'-0"x7'-0"		F-H.M.	F-PAINT	P-W1	P-STAIN	
505A	509P	3'-0"x7'-0"		F-H.M.	F-PAINT	P-W1	P-STAIN	
505B	500	3'-0"x7'-0"		F-A	F-ANN.	P-G	P-PAINT	
505C	500	3'-0"x7'-0"		F-H.M.	F-PAINT	P-W1	P-STAIN	
505D	500	3'-0"x7'-0"		F-H.M.	F-PAINT	P-W1	P-STAIN	
505E	500	3'-0"x7'-0"		F-H.M.	F-PAINT	P-W1	P-STAIN	
505F	500	3'-0"x7'-0"		F-H.M.	F-PAINT	P-W1	P-STAIN	
505G	500	3'-0"x7'-0"		F-H.M.	F-PAINT	P-W1	P-STAIN	
506A	506A	3'-0"x7'-0"		F-H.M.	F-PAINT	P-W1	P-STAIN	
506B	500	3'-0"x7'-0"		F-H.M.	F-PAINT	P-W1	P-STAIN	
506C	500	3'-0"x7'-0"		F-H.M.	F-PAINT	P-W1	P-STAIN	
506D	506D	3'-0"x7'-0"		F-H.M.	F-PAINT	P-W1	P-STAIN	
506E	500	3'-0"x7'-0"		F-H.M.	F-PAINT	P-W1	P-STAIN	
506F	506F	3'-0"x7'-0"		F-H.M.	F-PAINT	P-W1	P-STAIN	
506G	500	3'-0"x7'-0"		F-H.M.	F-PAINT	P-W1	P-STAIN	
506H	506H	3'-0"x7'-0"		F-H.M.	F-PAINT	P-W1	P-STAIN	
506J	500	3'-0"x7'-0"		F-H.M.	F-PAINT	P-W1	P-STAIN	
507	507A	3'-0"x7'-0"		F-H.M.	F-PAINT	P-H.M.	P-PAINT	
507A	500	3'-0"x7'-0"		F-H.M.	F-PAINT	P-W1	P-STAIN	
507B	507B	3'-0"x7'-0"		F-H.M.	F-PAINT	P-W1	P-STAIN	
507C	500	3'-0"x7'-0"		F-H.M.	F-PAINT	P-W1	P-STAIN	
507D	500	3'-0"x7'-0"		F-H.M.	F-PAINT	P-W1	P-STAIN	
507E	500	3'-0"x7'-0"		F-H.M.	F-PAINT	P-W1	P-STAIN	
507F	500	3'-0"x7'-0"		F-H.M.	F-PAINT	P-W1	P-STAIN	
507G	507G	3'-0"x7'-0"		F-H.M.	F-PAINT	P-W1	P-STAIN	
507H	500	3'-0"x7'-0"		F-H.M.	F-PAINT	P-W1	P-STAIN	
507J	507J	3'-0"x7'-0"		F-H.M.	F-PAINT	P-W1	P-STAIN	
507K	500	3'-0"x7'-0"		F-H.M.	F-PAINT	P-W1	P-STAIN	
507L	500	3'-0"x7'-0"		F-H.M.	F-PAINT	P-W1	P-STAIN	
508	500	3'-0"x7'-0"		F-H.M.	F-PAINT	P-W1	P-STAIN	
508A	500	3'-0"x7'-0"		F-A	F-ANN.	P-G	P-PAINT	
508B	508A	3'-0"x7'-0"		F-H.M.	F-PAINT	P-W1	P-STAIN	
508C	508A	3'-0"x7'-0"		F-H.M.	F-PAINT	P-W1	P-STAIN	
508D	508A	3'-0"x7'-0"		F-H.M.	F-PAINT	P-W1	P-STAIN	
508F	508A	3'-0"x7'-0"		F-H.M.	F-PAINT	P-W1	P-STAIN	
508G	508A	3'-0"x7'-0"		F-H.M.	F-PAINT	P-W1	P-STAIN	
508H	508A	3'-0"x7'-0"		F-A	F-ANN.	P-G	P-PAINT	
509	509	3'-0"x7'-0"		F-H.M.	F-PAINT	P-W1	P-STAIN	
509A	509A	3'-0"x7'-0"		F-H.M.	F-PAINT	P-W1	P-STAIN	
509B	509B	3'-0"x7'-0"		F-H.M.	F-PAINT	P-W1	P-STAIN	
509C	509C	3'-0"x7'-0"		F-H.M.	F-PAINT	P-W1	P-STAIN	
509D	509D	3'-0"x7'-0"		F-H.M.	F-PAINT	P-W1	P-STAIN	
509E	509E	3'-0"x7'-0"		F-H.M.	F-PAINT	P-W1	P-STAIN	
509F	509F	3'-0"x7'-0"		F-H.M.	F-PAINT	P-W1	P-STAIN	
509G	509G	3'-0"x7'-0"		F-H.M.	F-PAINT	P-W1	P-STAIN	
509H	509H	3'-0"x7'-0"		F-H.M.	F-PAINT	P-W1	P-STAIN	
509J	509J	3'-0"x7'-0"		F-H.M.	F-PAINT	P-W1	P-STAIN	
509K	509K	3'-0"x7'-0"		F-H.M.	F-PAINT	P-W1	P-STAIN	
509L	509L	3'-0"x7'-0"		F-H.M.	F-PAINT	P-W1	P-STAIN	
509M	509M	3'-0"x7'-0"		F-H.M.	F-PAINT	P-W1	P-STAIN	
509N	509N	3'-0"x7'-0"		F-H.M.	F-PAINT	P-W1	P-STAIN	
509P	508A	3'-0"x7'-0"		F-H.M.	F-PAINT	P-W1	P-STAIN	
509Q	509Q	3'-0"x7'-0"		F-H.M.	F-PAINT	P-W1	P-STAIN	
510A	510	3'-0"x7'-0"		F-H.M.	F-PAINT	P-W1	P-STAIN	
510B	510	3'-0"x7'-0"		F-H.M.	F-PAINT	P-W1	P-STAIN	
510C	510	47'-4"x12'-6"		-	-	P-W3	-	
511A	500	3'-0"x7'-0"		F-H.M.	F-PAINT	P-W1	P-STAIN	
511B	511	3'-0"x7'-0"		F-H.M.	F-PAINT	P-W1	P-STAIN	
512	500	3'-6"x7'-0"		F-H.M.	F-PAINT	P-H.M.	P-PAINT	
513	513	3'-0"x7'-0"		F-H.M.	F-PAINT	P-W	P-STAIN	
514	500	3'-0"x7'-0"		F-H.M.	F-PAINT	P-W1	P-STAIN	
515A	500	3'-0"x7'-0"		F-H.M.	F-PAINT	P-W1	P-STAIN	
515B	515	3'-0"x7'-0"		F-H.M.	F-PAINT	P-W1	P-STAIN	
515C	515	3'-0"x7'-0"		F-H.M.	F-PAINT	P-W1	P-STAIN	
516	516	3'-0"x7'-0"		F-A	-	P-G	-	
517A	500	3'-0"x7'-0"		F-H.M.	F-PAINT	P-W1	P-STAIN	
517B	517	3'-0"x7'-0"		F-H.M.	F-PAINT	P-W1	P-STAIN	
517C	517	3'-0"x7'-0"		F-H.M.	F-PAINT	P-W1	P-STAIN	
518	518	3'-0"x7'-0"		F-A	F-ANN.	P-G	P-PAINT	
518A	500	3'-0"x7'-0"		F-A	F-ANN.	P-G	P-PAINT	
518B	500	3'-0"x7'-0"		F-A	F-ANN.	P-G	P-PAINT	
600	601	3'-0"x7'-0"	90 MIN.	F-H.M.	F-PAINT	P-H.M.	P-PAINT	
600E	600E	3'-0"x6'-8"		F-H.M.	F-PAINT	P-W	P-STAIN	
601	601	(2) 3'-0"x7'-0"		F-HM3	F-PAINT	P-HM1	P-PAINT	
601A	601	3'-6"x7'-0"		F-H.M.	F-PAINT	P-H.M.	P-PAINT	
601B	601	3'-6"x7'-0"		F-H.M.	F-PAINT	P-H.M.	P-PAINT	

UNLESS A PROFESSIONAL SEAL WITH SIGNATURE AND DATE IS AFFIXED, THIS DOCUMENT IS PRELIMINARY AND IS NOT INTENDED FOR CONSTRUCTION, RECORDING PURPOSES, OR IMPLEMENTATION

UTAH VALLEY UNIVERSITY

State of Utah
Department of Administrative Services
Division of Facilities Construction & Management
4110 State Office Building
Salt Lake City, Utah 84114
Phone: (801) 538 - 3018
Fax: (801) 538 - 3267

CRSA METHOD studio inc.

CRSA ARCHITECTS
649 east south temple
salt lake city, utah 84102
phone: (801) 355 - 5915

METHOD studio INC.
925 south west temple
salt lake city, utah 84101
phone: (801) 532-4422

DFCM APPROVAL STAMP

project:
UVU Classroom Building - Volume 2
800 West University Parkway
Orem, UT 84058

project#: DFCM# 12192790
date: April 30, 2013

revisions :
5 Addendum 5 05/24/13

title:
Door Schedules

sheet:
AE602

BID DOC

COLVIN ENGINEERING ASSOCIATES

MECHANICAL PORTION OF ADDENDUM NO. 5
(Note that no mechanical information was issued with Addenda 1, 2 or 4)

UVU CLASSROOM PROJECT, OREM, UT

CEA PROJECT NO. 2012-054.00

May 24, 2013

All contractors submitting proposals for this project shall be governed by the following addendum, changes, and explanations to the bidding documents. Bids shall be submitted in accordance with the following:

Item No.	Add, Delete or Clarify	Specification Section or Drawing No.	Reference / Description:
5.1	Clarify	FF101	-Modified locations of remote FDC piping and fire services piping to match civil utility locations.
5.2	Clarify/Add	MH101A	-Clarify VAV box air flows. -Clarify keyed notes. -Added keyed note #20
5.3	Clarify	MH101B	-Clarify VAV box air flows.
5.4	Clarify	MH102.1 MP102.1	-Clarify VAV box air flows. -Delete VAV box 3-68. -Clarify VAV box numbers in various locations.
5.5	Clarify/Delete	MH102A	-Clarify VAV box air flows. -Clarify keyed notes. -Delete VAV box 2-48.
5.6	Clarify	MH102B MP102A	-Clarify VAV box air flows. -Relocate diffusers in east corridor due to ceiling change. -Clarify keyed notes.
5.7	Clarify	MH102D	-Added General note C
5.8	Clarify/Add	MH103A	-Clarify VAV box air flows. -Added keyed note #15
5.9	Clarify/Add	MH103B	-Clarify VAV box air flows. -Relocate diffusers in east corridor due to ceiling change. -Added keyed note #10
5.10	Clarify	MH104A	-Clarify VAV box air flows.
5.11	Clarify	MH104B	-Clarify VAV box air flows. -Relocate diffusers in east corridor due to ceiling change.

HVAC | Energy Efficient Solutions | Building Simulation
244 West 300 North, Suite 200 | Salt Lake City, Utah 84103-1147 | 801.322.2400

Item No.	Add, Delete or Clarify	Specification Section or Drawing No.	Reference / Description:
5.12	Clarify/Add	MH105A	-Clarify VAV box air flows. -Modified supply duct main loop branches over classroom 515 and the adjacent offices to be double wall duct. -Added keyed note #30
5.13	Clarify/Add	MH105B	-Clarify VAV box air flows. -Relocate diffusers in east corridor due to ceiling change. -Added keyed note #14
5.14	Clarify	MP102D	-Added General note A
5.15	Add/Delete	PL101	-Added sillcock to green roof -Added keyed note #1 -Removed ball valve and pipe cap from green roof irrigation line.
5.16	Clarify	PL401	-Added keyed notes 9 & 10.
5.17	Clarify	211000	-Eliminate specification information for underground pipe. All underground pipe is in site utility contractor's scope. -Revise FDC specification. -Revise sprinkler head schedule. -Revise miscellaneous text.
5.18	Clarify	MI201	-VAV box controller is to be Lon based, not BACnet.
5.19	Clarify	230900	-Added control sequence for 4-pipe fan coils in pedestrian bridge and for tenant gas meter in central plant. Also monitor position of Koso seismic shut-off valve at main gas meter on north side of building.
5.20	Clarify	231123	-Add natural gas service to the building to the scope of the project. -Eliminate references to connecting to existing gas lines in the concourse, eliminate references to the Student Life Center.
5.21	Clarify	230500	-Modified text for part 1.10 Alternates.
5.22	Clarify	232113	-Clarify manual valve at air vents.
5.23	Add	235100	-Provide sidewall termination cap on all sidewall boiler and water heater vent terminations. Cap shall include screen to keep birds out of vent system. Construct cap and screens of stainless steel.
5.24	Add	MH106 MP201	-Add 6" equalizer line between all cooling tower cells. Insulate and heat trace equalizer line.

HVAC | Energy Efficient Solutions | Building Simulation
244 West 300 North, Suite 200 | Salt Lake City, Utah 84103-1147 | 801.322.2400

Item No.	Add, Delete or Clarify	Specification Section or Drawing No.	Reference / Description:
5.26	Clarify	MP105A 230900	-The multi purpose rooms 510 and 511 are separated by a movable partition. The thermostat at grid lines 2/E is to control the VAV boxes serving diffusers north of the movable partition. The thermostats at 2/F and 2/H are averaged, and control the VAV boxes serving room 511 south of the movable partition.
5.24	Clarify	MH301	-The elbow in the supply duct off AH-1 should be a radiused elbow as already identified on sheet MH402, not an abrupt mitered elbow.
5.25	Clarify	MP402	-The chilled water BTU meter is to be located where the dashed line box is currently shown in the 8” CHS/CHR pipes above the VFDs for the relief fans.
5.26	Clarify	PL101A	-Clarified invert elevation.

END OF ADDENDUM NO. 5

HVAC | Energy Efficient Solutions | Building Simulation
244 West 300 North, Suite 200 | Salt Lake City, Utah 84103-1147 | 801.322.2400

construction (except where a specific means, method, technique, sequence or procedure of construction is indicated in or required by the Contract Documents) or to safety precautions or programs incident thereto. The review and approval of a separate item as such will not indicate approval of the assembly in which the item functions.

1.7 SYSTEM DESIGN REQUIREMENTS

A. Sprinkler System Requirements:

1. Provide a freeze-protected sprinkler system using dry sprinkler heads to protect ~~loading docks/canopy and~~ unheated vestibules and similar areas subject to freezing.
2. Provide a wet pipe sprinkler system to protect all areas of the **building and pedestrian bridge** addition. Include protection of elevator shafts, mechanical rooms, and similar areas as required by code.
3. Sprinkler heads shall be centered in ceiling tiles in all hallways and corridors.
4. Sprinkler heads in rooms identified on drawings to be located to create a geometric pattern that responds to lighting and diffuser layouts and is symmetric in these rooms. Provide additional heads as necessary to obtain architect's approval of sprinkler head layout.
5. Provide inspector test valve and piped drain at each riser.
6. Provide express drain system with a connection to each floor.
7. Provide supervised indicating control valves at the point of connection to the riser on each floor in the **building.** ~~addition~~.
8. **Provide additional sprinkler heads where indicated on level 2 to wash down walls and windows to maintain ratings and separation of new/existing construction.**

B. Standpipe System Requiremetns:

1. Provide Class I standpipe system of the automatic wet type in the ~~Student Life Center~~ **building** as required by code and as approved by the jurisdictional authority.
2. Locate Class I hose connections for all standpipes at each intermediate landing in every required stairway, at opening of horizontal exits, at entrance of exit passageways, at entrance of covered mall buildings, and on the roof at the top of each standpipe riser.
3. Standpipes may be sized per NFPA #14 using pipe schedule method, or hydraulically calculated to provide 100 psi at demand flows assuming 150 psi at fire department connection.

C. Occupancy hazard classifications shall be determined in accordance with NFPA 13 unless higher hazard classifications are indicated on the drawings.

D. Fire protection shall be designed and installed per NFPA 13 and NFPA 14 current published standards and local Jurisdictional Agency requirements. Where a conflict occurs the more stringent standard shall apply.

E. Verify requirements with Jurisdictional authorities, i.e.: Insurance Co. or Underwriter, Fire Department or Marshal, or Building Department. Provide system complete, functional and acceptable to Jurisdictions without penalty of any type to the insurance premium rate. Division 211000 Contractor shall coordinate his work with all other sections of these

specifications and drawings. No change order will be issued for lack of coordination or lack of verification of requirements of Jurisdictional Authorities.

F. System shall be hydraulically calculated per Jurisdictional Agency Standards or pipe scheduled per NFPA #14.

G. All calculations shall use the flow test data found at the end of this specification section.

H. The system shall be designed to account for seasonal changes and for future degradation of the water supply system by reducing the flow test data noted in fire flow report provided by CBPE Inc.

I. Be responsible for accurate measurements, coordination with other trades, required offsets, scheduling, timely submittals, material delivery, job manning, and conformance to construction schedules.

J. Provide backflow protection in accordance with jurisdictional requirements.

K. All areas shall be classified in accordance with NFPA 13 with respect to hazard classification and shall have automatic sprinkler systems designed for the appropriate classification.

L. Fire Protection Contractor shall furnish and install all alarm and supervisory switches or devices required for the automatic sprinkler system, installed so as to provide an electrically supervised system.

M. The number and location of fire department connections shall be coordinated with the Architect and local Fire Department. The fire department connections shall be piped directly into the building fire protection loop or standpipe system. **Note that the fire department connection is shown on the site utilities drawing. Division 21 contractor's scope of work begins at blind flange located 12" AFF, with underground pipe from FDC to flange being shown on the site utility drawings.**

N. Each sprinkler riser control valve shall be equipped with a valve supervisory switch and a waterflow switch on piping down stream of the last control valve. Drain piping for each fire protection riser shall be sized and located to accommodate full flow from the main drain under normal system pressure. Provide a check valve at each floor control assembly when connecting to a combined wet standpipe per NFPA #14.

O. This project is located within a seismic zone which is subject to earthquakes. Sprinkler systems shall be protected per NFPA 13 to prevent breakage.

1.8 QUALITY ASSURANCE

A. The only fire protection contractors approved for this project are as follows:

1. Delta Fire Protection, Salt Lake City, UT
2. Alta Fire Protection, Salt Lake City, UT
3. Fire Engineering Company, Salt Lake City, UT
4. Chaparral Fire Protection, Salt Lake City, UT
5. Firetrol Protection Systems, Salt Lake City, UT
6. Grinnell Fire Protection, Salt Lake City, UT
7. Western Automatic Sprinkler, Salt Lake City, UT
8. Preferred Fire Protection, Salt Lake City, UT

Water-Based Fire Protection Systems and NFPA 72 - National Fire Alarm Code.

2. A schedule, which correlates the step-by-step testing and maintenance procedures with the listing of individual components. This schedule shall be completed for the duration of the warranty period or for one complete testing/maintenance cycle whichever is longer.
3. A service directory, including installing company's name and telephone numbers for whoever should be called to obtain both normal warranty service and 24-hour emergency service.
4. Drawings and diagrams, as required.
5. System Calculations.
6. Test reports for system, flow rates, and residual pressures.
7. Wiring diagrams for all system devices.

M. Upon completion of the installation, submit Record Drawings and Contractor's Material & Test Certificates for Aboveground Piping and for Underground Piping, per NFPA 13.

N. Record Drawings shall include all variations from the approved Working Plans, for whatever reason, including those occasioned by modifications, change orders, optional materials and/or required coordination between trades. Variations shall be indicated in sufficient detail to accurately reflect the as-built conditions. Upon completion of the work, before final acceptance, the Fire Protection Contractor shall deliver to the Owner, two (2) additional full size sets of hard copies ,one set of PDF and AutoCAD drawing data files on CD.

1.10 PROJECT CONDITIONS

A. Contractor shall not install any piping until he has assured himself that the piping can be run as contemplated in cooperation with Contractors of other Divisions of the Work and the physical constraints of the Structural and Architectural Work.

1.11 ALTERNATES

A. See specification section 012300 – Alternates for a description of the alternate**s** that consist~~s~~ of **shell space that would be built out.**

1.12 WARRANTIES

A. Provide original copies of all warranties and extended warranties for specific equipment where specified and in accordance with Section 230500.

PART 2 - PRODUCTS

2.1 PRODUCT LISTINGS AND APPROVALS

A. All system components for which UL listings categories exist shall be listed by Underwriters Laboratories (UL) or Factory Mutual Research (FM).

1. All components shall be listed in the current edition of the UL Fire Protection Equipment Directory. Components shall be delivered to the project site with factory applied UL stickers.
2. Components for which UL listing approvals are “pending” are not acceptable.

B. All system components shall be used in accordance with the manufacturer’s recommendations and their listing.

C. All system components are subject to the approval of the engineer with regard to their fitness for the intended application.

2.2 ~~UNDERGROUND EXTERIOR PIPING~~

~~A. Pipe, Fittings and Joints, Exterior and Buried:~~

~~1. All pipe, fittings, and joints shall be manufactured in the USA.~~
~~2. General: The use of cast-iron, asbestos cement, steel, or other piping materials and systems is prohibited, unless specifically accepted by the Engineer.~~
~~3. Pipe Fittings and Joints:~~

~~a. Ductile iron pipe with mechanical joint fittings. Joints to be provided with set screw retainer glands.~~

~~Make:~~	~~U.S. Pipe Company~~
~~Size:~~	~~2" thru 48"~~
~~Laying Condition:~~	~~Type 1~~
~~Thickness Class:~~	~~50 or 51 as required by U.S. Pipe.~~
~~Standards:~~	~~ANSI A21.SD/A21.51 AWWA C-150/151, U.L., F.M., NSF.~~
~~Pressure Rating:~~	~~250 psi~~
~~Fittings:~~	~~Ductile iron conforming to ANSI A21.10/A21.16 and AWWA C-110/111.~~
~~Retaining Glands:~~	~~Set screw type ductile.~~
~~Hydrant Connections:~~	~~Tee DI rotatable x MJ Hydrant Connector. DI rotatable 13" long x MJ~~

~~4. Polyvinylchloride pipe with mechanical joint, ductile fittings, and joint restraints:~~

~~Make:~~	~~Manville "Blue Brute".~~
~~Size:~~	~~4" thru 12"~~
~~Laying Condition:~~	~~Type 1 as defined by U.S. Pipe Co.~~
~~Class:~~	~~200 (DR 14) as determined by dia. of pipe O.D. divided by the wall thickness (SDR method) conforming to ASTM D-1599 burst test (985 psi minimum) and minimum 100 ft-lbs of impact per ASTM D-2444. Meet all requirements of AWWA C-900, U.L., F.M., and N.S.F.~~
~~Pressure Rating:~~	~~200 psi minimum operating @ 73 deg. F~~

~~Fittings:~~	~~Ductile iron conforming to ANSI A21.10/A21.11 and AWWA C-110/111 Mechanical Joint pattern only.~~
~~Retaining Glands:~~	~~Do not use set screw retaining glands on this pipe. Use felt padded pipe clamps, coated rods, and concrete thrust blocks for all turns, offsets, and fittings.~~

~~Note: Straight lengths of piping, not offset or deflected, may be J-M "Ring Tite" locked joints in lieu of mechanical joint ductile iron connectors or fittings.~~

~~5. Fiberglass reinforced PVC pipe with mechanical joint ductile iron fittings, for use where pressures exceed 200 psi up to 350 psi:~~

~~Make:~~	~~Manville "Blue Brute".~~
~~Size:~~	~~4" thru 12"~~
~~Laying Condition:~~	~~Type 1 as defined by U.S. Pipe Co.~~
~~Class:~~	~~350 (4"=DR 32, 6" & 8"=DR 36, 10" & 12"=DR 41)~~
~~Pressure Rating:~~	~~350 psi minimum operating @ 73 deg. F~~
~~Fittings:~~	~~Ductile iron conforming to ANSI A21.10/A21.11 and AWWA C-110/111 Mechanical Joint pattern.~~
~~Retaining Glands:~~	~~Do not use set screw retaining glands on this pipe. Use felt padded pipe clamps and coated rods and concrete thrust blocks for all turns, offsets, and fittings.~~

~~Note: Straight lengths of piping not offset or deflected may be J-M "Lock-ring" joints in lieu of mechanical joint fittings or connectors.~~

~~6. Rotatable Fittings:~~

~~a. Provide for all service risers, fire hydrants and valves, U.S. Pipe Company U-591 and U-592 MJ x PE or rotatable MJ gland tees and connecting pieces to provide plumb and true hydrant, valve and service riser settings.~~

~~B. Tapping Tees and Valves:~~

~~1. Where the water utility does not install its own service tap, provide tapping tees and valves for wet taps. Provide service saddle, valve, and service box with indexed cover in accordance with the utility's standards.~~

~~C. Thrust Blocks - Tie Rods:~~

~~2. Provide 3000 lb type II concrete thrust blocks with soil contact area based on not more than 2000 psf horizontal soil bearing quality, and enveloping 1/2 of pipe, fitting, or valve. Provide saddle reinforcing as required.~~

~~3. Submit calculations for each thrust block and dead man provided.~~
~~Provide 1/2" minimum machine thread rods and clamps (felt padded clamps for plastic pipe) on all service entries from last joint underground to riser elbow or wall entry and to first joint in the building. All rods, clamps, and bolts double~~

~~coated with "ZRC" brand cold galvanizing coating after installation and draw up. Provide 1 coat of coal tar coating over galvanizing. NOTE: Clamps and rods to not preclude the requirements for thrust blocks or deadmen.~~

2.3 INTERIOR AND EXTERIOR ABOVE-GROUND PIPING

A. Pipe and Joints:

1. All pipe, fittings, and joints shall be manufactured in the USA.

2. Black steel and galvanized steel threaded or roll grooved schedule 40 conforming to ASTM A-135 or A-53. Light wall (Schedule 10) conforming to ASTM A-135 or ASTM A-795, where prior approval is obtained from jurisdiction having authority. All pipe shall conform to NFPA #13, Chapter 3 and Jurisdictional Authorities and Insurance Agency. All dry system and drain piping shall be galvanized.

B. Fittings:

1. Threaded cast iron, pressure class in accordance with developed system pressures, conforming to ASME B16.4. Threaded malleable iron, pressure class in accordance with developed system pressures, conforming to ASME B16.3.
2. Weld type fittings: Buttweld conforming to ASME B16.9. Flanges conforming to ASME B16.25. Socket weld conforming to ASME B16.11. All welds by certified welder in accordance with Section 230529.
3. Grooved fittings shall conform to ASTM-A47 (malleable), ASTM 536 (ductile), or ASTM-106 GRB (forged steel), ASTM A-53 type E, F, or S GRB (nipples), ASME B-16.5 or B16.1 cast iron and carbon steel flanges.

C. Flexible Connectors:

1. Flexible connector to be stainless steel (304) corrugated tube surrounded with stainless steel (304) wire braid. Provide threaded fittings on each end of the flexible connector.
2. Connector shall have the frictional equivalent of a maximum of 23 ft. of 1” steel pipe (assumes 4’ long tube with four 90° bends).
3. Connectors shall be UL listed, F.M. approved.
4. Provide with support bracing and clamps.

D. Valves:

1. All valves are to be indicating type.
2. All valves U.L. listed, F.M. approved.
3. Refer to Section 230529 for valve specifications.

E. Hangers:

1. All hangers, attachments and components U.L. listed, F.M. approved.
2. All piping hangers shall conform to Jurisdictional Authorities requirements.
3. Powder driven studs shall not be included in normal installation. Permission to use this type anchoring system must be accepted by the Structural Engineer prior to submitting pricing or bids to any contractor or agent relative to this project.

2.4 SPRINKLER SYSTEM

A. Acceptable Manufacturers: The following manufacturers are acceptable, providing the product to be considered is equivalent in every respect to the nomenclature, style, material, finish, and color provided by the specified make and model.

1. Sprinkler Heads, Alarm, Dry Valves, Accelerators, Air Maintenance Devices, and Specialties: Automatic, Tyco, Reliable, Viking, Notifier, Victaulic, Croker, Potter, Elkhart, Star.

B. Sprinkler Heads:

Heads shall be U.L. Listed and of the type required to properly protect the intended space. Heads shall be of ordinary-temperature classification except as required by ceiling temperature, location, or service as allowed or required by code. Provide quick-response heads in all occupancies.

LOCATION	**ORIENTATION**	**HEAD FINISH**	**COVER OR ESCUTCHEON**
~~Three Court Gym 302,~~	~~Institutional/Concealed (Tyco Raven, or equal)~~	~~Brass~~	~~White~~
~~Underside of Track 403~~	~~Institutional/Concealed (Tyco Raven, or equal)~~	~~Brass~~	~~Black~~
~~Bowling 117, 117E, 117F, 117G, and 117H~~	~~Recessed~~	~~Black~~	~~Black~~
~~Student Council Chamber 114~~ **Auditorium Rooms**	Concealed	Brass	White
Multi Purpose 510 and 511	**Concealed**	**Brass**	**Custom Color Selected by Architect**
All Other Rooms and Hallways With Ceilings	Recessed	White	White
Open Areas (No Ceilings)	Upright/Pendant	Brass	-
Walk-in Cooler/Freezer, Outside Air and Mixed Air Plenums	Dry	Brass	Chrome
Vestibules	Dry	White	White
~~Garage~~	~~Upright/Pendant~~	~~Brass~~	~~-~~

C. Escutcheons shall be part of the U.L. Listed sprinkler assembly.

D. Sprinkler Head Cabinets:

1. Steel with red enamel finish for 6, 12, or 24 heads complete with appropriate heads, wrench and mounting.

E. Sprinkler Head Guard:

1. Steel wire cage, chrome finish.

F. Water Flow and Pressure Switches:

1. Paddle Type Flow Switch U.L. Listed, for pipe sizes 1" thru 8", for vertical or horizontal mounting, retard adjustment from 0 to 70 seconds instantly recycling, 10 amp, 120v AC, dual contacts. Notifier Model WFD, or approved equal.
2. Pressure Switch for dry, deluge, alarm, and pre-action valves, U.L. Listed, 10 amp, 120v AC, dual contacts. Potter Model PS40A, or approved equal.

G. Supervisory Switches:

1. Post indicator valve, and gear operator type, U.L. Listed, weatherproof metal housing, threaded conduit entrance, 10 amp, 120v AC, dual contacts. Notifier Model PIBV2, or approved equal.
2. Gate, OS&Y, and other exposed rising stem type valves, U.L. Listed, weatherproof metal housing, threaded conduit entrance, 10 amp, 120v AC, dual contacts. Notifier Model OSY2, or approved equal.

H. Alarms:

1. Exterior Audible and Visual Alarm, U.L. Listed for outdoor use, weatherproof faceplate, horn and strobe. Notifier Model GMS, or approved equal.

I. Dry Pipe Valve: U.L. Listed, control valve.

1. Provide as required, complete with all trim and drain extensions, for use with pressure switch as indicated.
2. Accelerator: U.L. Listed, complete with trim. Central Model B, or approved equal.
3. Air Maintenance Device: Provide automatic air maintenance device for dry pipe valves . Provide all trim, switches, strainers, valves for complete functional unit.

J. Deluge Valve: U.L. Listed, automatic control valve, with local manual release trim, electric release with FM approved solenoid valve.

2.5 STANDPIPE SYSTEM

A. Acceptable Manufacturers: The following manufacturers are acceptable, providing the product to be considered is equivalent in every respect to the nomenclature, style, material, finish and color provided by the specified make and model.

Hose valves : Croker, Moon, Elkhart, Potter, Powhattan, Sierra, Goodall, Allenco, Tyco, Reliable, Viking, Victaulic, Star.

B. Hose Valves: U.L. Listed, FM approved, globe type, rough chrome finish.

1. Provide pressure limiting valves for stand pipe outlets and sprinkler supply as required.

~~C. Hose Valve Cabinets: Recessed cabinets with brushed stainless steel door frame and hinges, tempered safety glass door face, door handle. Potter Roemer 1810 series, or equal.~~

2.6 FIRE DEPARTMENT CONNECTION - INLET (SIAMESE)

A. Cast brass, single clapper, straight or angle style as indicated. Provide siamese connections of sizes, styles and patterns required, caps and chains, and wall plate.

B. Style: ~~Flush~~ **Free standing**.

C. Finish: Rough Chrome.

D. Provide 1 outlet per every +250 gpm demand of fire sprinkler/standpipe system

E. **Note that the FDC is shown on the site utility drawings.**

2.7 BACKFLOW PREVENTER

A. Backflow Preventer: Provide backflow preventer in heated room shown in drawings, in accordance with Section 230529.

1. Double check assembly, U.L. Classified, FM Approved, with shut-off valves. Ames C200, or equal.

2.8 ROOF MANIFOLD

A. Cast brass, straight or angle pattern. Provide roof manifold of size, style, and pattern required. Provide control valve, stem extension, wall or floor stand, index plate, and cap and chain. Valve body to be located indoors in a heated space, with a PIV-style stem extension that allows valve be actuated by a person outdoors on the roof. Valve body immediately availlable for use at rooftop vave will not require PIV extension.

PART 3 - EXECUTION

3.1 PREPARATION

A. Field Measurements: Verify all dimensions before proceeding with the work. Obtain field measurements for work required to be accurately fitted to other construction. Be responsible for the accuracy of such measurements and precise fitting and assembly of finished work. Prefabrication of systems is done at this Contractor's own risk.

B. Coordination: Coordinate all work and placement of components with other trades, thorough coordination of design and field installation is expected. Remedial field work may be required to eliminate conflicts and provide an acceptable finished product.

3.2 EXCAVATION, BACKFILL, CUTS AND RESTORATION

A. Provide all excavations and backfill in accordance with Section 230529 - Basic Mechanical Materials and Methods.

B. Cuts - Restoration:

1. All concrete, asphalt, or other hard permanent surface shall be saw cut. Turf areas shall be cut clean with straight edge.

C. NOTE: When alternate or substitute materials and equipment are used Division 23 Contractor shall be responsible for engineering/redesign costs, space requirements, configurations, performance, changes in bases, supports, structural members and openings in structure, electrical changes and other apparatus and trades that may be affected by their use. Notification of General Contractor and other affected subcontractors shall be the responsibility of the Division 23 Contractor.

1.10 ALTERNATES

A. Refer to specification section 012300 – Alternates for the complete definition of **bid alternates for this project.** ~~5 alternates that must be priced on bid day. Note on Alternate 1) Bowling Equipment, that the HVAC design for the bowling lanes and associated equipment room is complete in the base bid. On alternate 8) Parking Structure Add, one additional floor of parking would be added to the project scope, and must include garage drains, a hose bib, fire sprinklers, and additional standpipe hose outlets.~~

1.11 PROJECT RECORD DOCUMENTS

A. General: Comply with Division 1.

B. Job Site Documents: Maintain at the job site, one record copy of the following:

1. Drawings
2. Specifications
3. Addenda
4. Reviewed Shop Drawings
5. Field Test Records

Do not use record documents for construction purposes. Maintain documents in clean, dry legible condition, apart from documents used for construction.

C. Record Information: Label each document "Record Document". Mark information with red ink. Keep each record current. Do not permanently conceal any work until required information is recorded.

D. Record following information on Drawings:

1. Horizontal and vertical location of underground utilities to be dimensioned from column lines.
2. Dimensioned location of internal utilities and appurtenances concealed in construction.
3. Field changes of dimension and detail.
4. Changes by change order or field order.
5. Details not on original contract drawings.
6. Manufacturer, trade name, catalog number and supplier of each product and item of equipment actually installed shall be indicated on equipment schedules.

E. Record the following information on Specifications:

1. Changes by change order or field order.
2. Other matters not originally specified.

W. Four-Pipe Fan Coil Units Serving Pedestrian Bridge

These fan coil units consist of a supply fan, chilled water coil, heating water coil, and air filter. A modulating outdoor air control damper and modulating return air control damper are to be furnished by the 230900 contractor for installation in the OA and RA ductwork in order to provide an outside air economizer at each fan coil unit.

The fans run during all programmed occupied times. Outdoor air damper has a minimum position that is set to provide minimum ventilation air during occupied periods, and cannot close beyond this point when unit is operating.

In order to maintain space temperature, measure space temperature at wall-mounted space sensor. Control to a discharge air temperature setpoint, and reset the DAT setpoint based on the difference between room temperature setpoint and the actual measured room temperature. If space temperature is above setpoint, modulate OA and RA dampers to satisfy the DAT setpoint, and DAT setpoint is reset based on difference between space temperature setpoint and measured space temperature. If space temperature setpoint cannot be satisfied with outdoor air economizer, modulate the chilled water valve. Continue to use OA economizer to provide the coldest return air temperature to the fan coil when OA temperatures are between 55°F and 72°F. If outdoor air temperature is greater than 72°F (adjustable setpoint), set the OA damper at the minimum position to provide 150 cfm.

If space temperature drops below setpoint, reverse the sequence. As outdoor air temperature becomes colder, continue modulating OA and RA dampers until the OA damper reaches the minimum position that provides the minimum ventilation air flow rate identified above. If space temperature continues to drop below setpoint, modulate the heating water coil valve.

During unoccupied periods, shut off fan and close OA damper completely. Start fan coil as necessary to maintain night setback space temperature setpoint, then turn off fan coil once setpoint has been satisfied by 5°F. Use outdoor air for cooling when possible, but leave OA damper closed when OA is warmer than the return air temperature in unoccupied mode only.

Monitor the fan motor with an adjustable setpoint current switch. Generate an alarm upon fan failure.

Monitor the pressure drop across the air filter in the fan coil unit with a differential pressure sensor, and generate a filter change notification when the differential pressure exceeds one inch water column.

X. Natural Gas Tenant Meter

Track natural gas consumption in the building at the tenant gas meter located in the central plant on the ground floor. Indicate totalized gas consumption by day, week, and month, and indicate instantaneous gas consumption.

Monitor the dry contacts on the Koso seismic valve at the main building meter, indicate valve position.

END OF SECTION 230900

2. F.M. - Factory Mutual Engineering Division.
3. IRI - Industrial Risk Insurors AKA: F.I.A. Factory Insurance Association.
4. Jurisdictional Agencies:

   a. Building Department.
   b. Fire Department or Fire Prevention Bureau or Marshal.
   c. Insurance Agency, Carrier, and/or Underwriter.
   d. Engineer refers to the consulting Mechanical Engineer of record.

1.6 SYSTEM DESCRIPTION

A. Provide gas supply from ~~existing indoor gas line in concourse~~ **street main to building meter and** to all gas consuming equipment complete with piping, tenant meter, valves, unions, dirt legs, hangers, supports, anchors, expansion compensators and regulators.

1.7 QUALITY ASSURANCE

A. Welding: Welders shall be certified in accordance with requirements in Section 230529.

1.8 REGULATORY REQUIREMENTS

A. Conform to Regulatory Requirements listed in Section 230500.

B. Provide special inspections required bby IBC Chapter 17.

1.9 SUBMITTALS

A. Submit Product Data for the following items under provisions of the General Conditions of the Contract:

   1. Pipe, fittings, valves, hangers and supports.
   2. Meters.
   3. Seismic Shut-Off Valve.

B. Submit printed Operating Instructions and Maintenance Data for the following items under provisions of Operating and Maintenance Data paragraph in Section 230500:

   1. Gas solenoid valves and controls.
   2. Regulators.
   3. Meters.
   4. Seismic Shut-Off Valve.
   5. Valves.
   6. Quick Couplers.

C. Submit certified test reports, dated and signed by authorized person showing compliance of tests of the fuel gas systems, in accordance with the Contract Documents.

1.10 SEQUENCING/SCHEDULING

A. Coordinate all work with all other trades and utility companies for elimination of interference, utilization of combined hanger support systems, timely routing and installation of systems, verifications of existing connector utilities, locations, depths, connection regulation, proper valving and junction structures or fittings. Location of meters, and remote readers as applicable and appropriate.

1.11 WARRANTIES

A. Provide original copies of all warranties for specific equipment where specified and in accordance with Section 230500.

B. Provide 20 year full warranty on all cathodic protection and pipe wrapping against corrosion of piping due to electrolytic or active soil conditions.

1.12 GAS SERVICE

A. ~~Gas serving this building will be obtained from an existing indoor gas line~~. **Arrange with Questar Gas to provide gas service to indicated location with shut-off at terminus. Consult with Utility as to extent of its work, costs, fees, and permits involved. 231123 contractor shall pay such costs and fees; obtain permits.**

PART 2 - PRODUCTS

2.1 PIPE AND FITTINGS

A. Interior Exposed or Accessible (does not include inside return air plenums):

1. Size 1/2" thru 1-1/2":

Pipe: Schedule 40, ASTM A 53
Fittings: Threaded malleable iron
Joint Seal: Teflon
Unions: Black malleable iron ground joint, bronze to iron seat, 150 lb. class, ANSI B2.1 and ASTM A 197.

2. Size 2" and over:

Pipe: Schedule 40, ASTM A53, Type S Grade B
Fittings: Butt weld ASTM A 234
Unions: 150 lb. forged steel weld neck flange, ANSI B16.5 and ASTM A105.

B. Interior, concealed, non-accessible spaces, inside walls, inside shafts, and return air plenums, and all indoor gas piping operating with 5 psi gas pressure:

All pipe and fittings shall be welded per sub-paragraph A.2 above.

C. **Exterior buried (meter and building service) are to be provided by Questar gas.**

2.2 TENANT GAS METER

A. Tenant Gas Meter will be furnished by 230900 Contractor for installation by the 231123 contractor. Refer to specification section 230900 for more information on the tenant gas meter.

2.3 GAS PRESSURE REGULATOR

A. General: Provide single stage, steel jacketed, corrosion-resistant gas pressure regulators with atmospheric vent, elevation compensator; with threaded ends for 2" and smaller, flanged ends for 2-1/2" and larger; for inlet and outlet gas pressures, specific gravity, and volume flow required.

B. Provide vent-limited or vented gas pressure regulators as required by appliance served. Vented regulators shall be piped to vent to outdoors per jurisdictional requirements.

2.4 FLEXIBLE HOSE GAS CONNECTORS AND QUICK COUPLERS

A. Manufacturers:

Flexible Connector: Thermo-Tech Products Co. or approved equal.
Quick Coupler: Hansen Manufacturing Co. "Gas Mate" or approved equal.

B. Description:

Flexible Connector: Corrugated type 304 stainless steel flexible pipe with stainless steel braid and heavy flexible armor shield.

Quick Coupler: One way quick coupler with gas rating in cubic feet per hour equal to equivalent gas appliance rating.

2.5 EARTHQUAKE SHUT-OFF VALVE

A. Install a KOSO Model No. 313 automatic shut-off valve with –MS electronic valve position monitor on the main gas line serving the **classroom building** ~~Student Life Center~~. Monitor the valve position on the 230900 control system.

2.6 BUILDING GAS METER

A. As provided by utility company.

PART 3 - EXECUTION

3.1 GENERAL

A. Welding, wiring, sleeves, plates and closures, foundations and pads, excavation and backfill, cutting and patching and installation of piping, valves, pipe hangers, supports, expansion compensators and identification shall be in accordance with Section 230529 - Basic Mechanical Materials and Methods.

B. Provide all fuel gas piping from source to each connection point of all gas fired equipment items listed in "Related Work" paragraph in Part 1. Provide drip leg and gas cock or valve for each equipment item. Make final connections in compliance with equipment

B. Connectors shall be of lengths required to displace equipment for complete cleaning under and around gas appliance.

C. Provide lubricated plug valve at service connection on equipment branch and quick coupler at service end of flexible hose connector.

D. Provide union connection on appliance or on manifold end of hose connection.

3.10 TESTS

A. General: Test fuel supply lines with air under pressure before being covered. Use a calibrated, certified static gauge graduated to one pound per square inch.

B. Testing shall be of the complete piping system, before covering, or of individually separable larger portions of the system. Only the last connection to the appliance may be tested under operating conditions. This connection will be tested with soap and brush under line pressures. This connection must remain exposed.

C. Test Procedures: Use either of the following methods at the Contractor's option:

1. 30 psig air pressure for a period of 24 hours with no drop in gauge pressure, indicating the line to be airtight.
2. 100 psig air pressure, with joints tested with standard soap and brush inspection and maintain for 3 hours without drop in pressure.

D. Retesting: Retest piping failing initial tests following correction of defective work. Requirements of initial tests shall apply.

E. Test Records: Record pressure and ambient temperature at start and end of test. Submit written results of test to the Architect/Engineer.

3.11 GAS SERVICE AND MAIN BUILDING METER

A. Complete arrangements with Utility Company to provide gas service to indicated location with shut-off at terminus.

B. Provide concrete pad in accordance with Section 230529 – Basic Mechanical Materials and Methods.

C. Provide bumper protection and bollards or other accessories which may be required

D. Extend service pipe from Utility's terminus to inside building wall, under Utility's direction.

E. Provide shut-off outside building at entry in building, and install seismic valve between shut-off and the point the gas line enters the building. Provide parts and accessories required by Utility to connect meter.

END OF SECTION 231123

2.15 BLADDER-TYPE EXPANSION TANKS

A. Acceptable Manufacturers: Bell and Gossett, Amtrol, Woods, Taco, Wheatley, Armstrong, Flexcon, Wessels, Patterson.

B. Provide tanks of size and capacity shown on Drawings.

C. Construction: Welded steel, tested and stamped in accordance with Section 8D of ANSI/ASME Code; supplied with National Board Form U-1, rated for working pressure of 125 psig, with flexible EPDM bladder sealed into tank, and steel legs or saddles.

D. Accessories: Pressure gauge and air-charging fitting, tank drain; precharge to required psig.

2.16 AIR VENTS

A. Manual Type: Short vertical sections of 2 inch diameter pipe to form air chamber, with 1/4 inch copper tubing to a ~~petcock~~ **ball valve and female hose fitting with threaded cap**.

2.17 GLYCOL FILL SYSTEM

A. Mixing Tank: 45 gallon poly drum with fittings suitable for filling, low level relay, and electric pump for charging. Controls by Division 230900 Contractor and shall comply with the detail and sequence shown in detail 10 on sheet MH5.01.

2.18 INHIBITED PROPYLENE GLYCOL (Antifreeze Heat Transfer Fluid)

A. Product: The Dow Chemical Company - Dowfrost Heat Transfer Fluid, Huntsman, JeffCool P150.

B. Description: An inhibited propylene glycol that is clear and odorless.

C. Provide: In specified concentrations in HVAC Water Piping Systems listed in Part 3 of this Section 232113.

2.19 FLOW MEASURING STATIONS (VENTURI)

A. Furnish and install where shown on drawings, complete Venturi Flow Measuring System as manufactured by Hyspan Barco, Flow Design, Febco, Bell & Gossett, Preso, Armstrong, Gerand.

B. Each primary flow element shall be a Venturi selected from manufacturer's engineering data to permit prescribed flow at a minimum of head loss. The beta ratio shall be selected to allow for a differential pressure compatible with the meter as specified herein and insure a properly calibrated system accuracy within 1% throughout the entire range. Each Venturi shall be furnished with 2 built-in sensing taps, nipples, shut-off valves, and quick connect couplings. Venturis shall be complete with identification tag on chain, giving pipe size, Venturi series, station identification and meter reading at specified flow rate. Furnish flow vs. differential pressure curves and installation instructions.

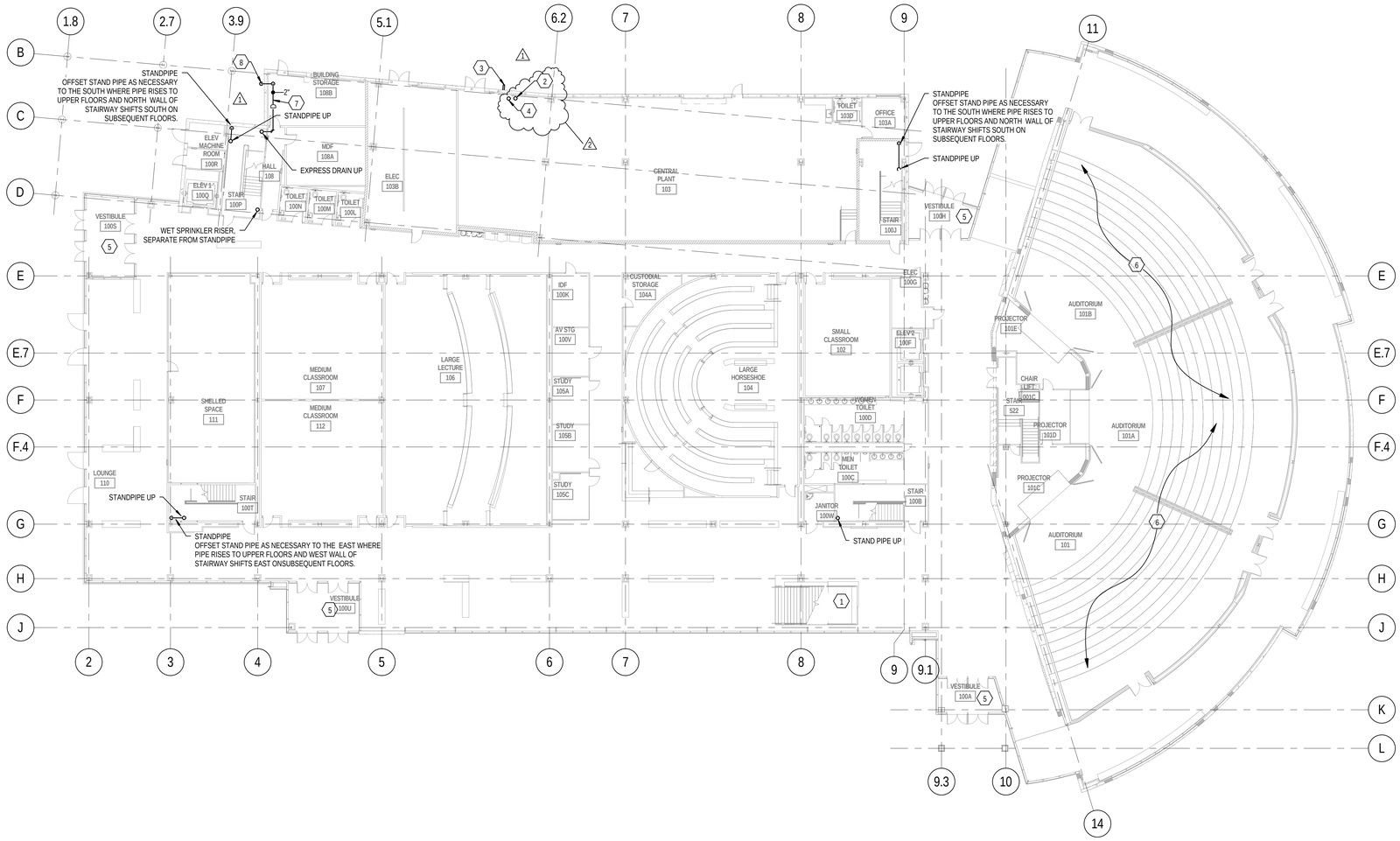

1 LEVEL 1 FIRE PROTECTION FLOOR PLAN

SCALE: 1/16" = 1'-0"

12' 0' 8' 16' 24' 32'

KEYED NOTES

1. PROTECT UNDERSIDE OF EXPOSED STAIRWAY WITH UPRIGHT SPRINKLERS. INSTALL AS TIGHT TO UNDERSIDE OF STAIRWAY AS POSSIBLE. PIPE AND SPRINKLER HEADS WILL BE VISIBLE - INSTALL AS STRAIGHT AS POSSIBLE, WITH THE LEAST NUMBER OF OFFSETS AND FITTINGS SO AS TO PROVIDE A CLEAN, FIRST-CLASS APPEARANCE.
2. FIRE SPRINKLER SERVICE ENTRANCE TERMINATED BY SITE UTILITY CONTRACTOR AT BLIND FLANGE 12" ABOVE FINISHED FLOOR. PROVIDE FIRE SPRINKLER SYSTEM RISER ASSEMBLY ABOVE FLANGE.
3. PROVIDE SYSTEM DRAIN AND TEST PORT THROUGH EXTERIOR WALL.
4. REMOTE FIRE DEPARTMENT CONNECTION ENTRANCE TERMINATED BY SITE UTILITY CONTRACTOR AT BLIND FLANGE 12" ABOVE FINISHED FLOOR. THE FDC IS REMOTE TO THE WEST OF THE NORTHWEST ENTRANCE. SEE CIVIL FOR LOCATION.
5. PROVIDE FREEZE PROTECTED SPRINKLERS IN VESTIBULE.
6. FULLY CONCEALED HEADS TO BE INSTALLED IN METAL COVERS IN CEILING SLOTS. REFER TO ARCHITECTURAL DETAIL B3/AE523. HEAD COVER TO BE PAINTED FLAT BLACK. SEE ARCHITECTURAL REFLECTED CEILING PLAN FOR PROPOSED HEAD LAYOUT. ADD HEADS AS NECESSARY TO OBTAIN ARCHITECT APPROVAL.
7. ROUTE SPRINKLER SYSTEM EXPRESS DRAIN TO NW CORNER OF STORAGE ROOM. KEEP ABOVE HALL CEILING.
8. EXPRESS DRAIN TO EXIT BUILDING 18" ABOVE FINISHED GRADE AND IS TO EMPTY INTO STORM SYSTEM CATCH BASIN.

GENERAL NOTES

A. COORDINATE VERTICAL SPACE ABOVE CEILINGS WITH ALL OTHER TRADES. REFER TO VERTICAL SPACE ALLOCATON DIAGRAMS ON SHEET METAL AND HVAC PIPING FLOOR PLANS.

B. PROVIDE EXPRESS DRAIN AND FLOOR CONTROL VALVE ON EACH FLOOR.

KEY PLAN:

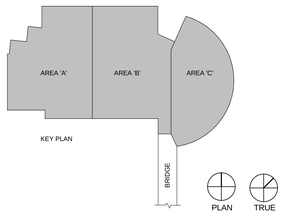

COLVIN ENGINEERING ASSOCIATES
244 West 300 North, Suite 200 / Salt Lake City, Utah 84103
Phone 801.322.2400 / colvinengineering.com

Copyright (C) 2012 by Colvin Engineering Associates, Inc. Salt Lake City, Utah. All rights reserved. Unauthorized copying and/or use is illegal and subject to prosecution.

UNLESS A PROFESSIONAL SEAL WITH SIGNATURE AND DATE IS AFFIXED, THIS DOCUMENT IS PRELIMINARY AND IS NOT INTENDED FOR CONSTRUCTION, RECORDING PURPOSES, OR IMPLEMENTATION.

UTAH VALLEY UNIVERSITY

State of Utah
Department of Administrative Services
Division of Facilities Construction & Management
4110 State Office Building
Salt Lake City, Utah 84114
Phone: (801) 538 - 3018
Fax: (801) 538 - 3267

CRSA METHODSTUDIO INC.

CRSA ARCHITECTS
649 east south temple
salt lake city, utah 84102
phone:(801) 355-5915

METHOD STUDIO INC.
925 south west temple
salt lake city, utah 84101
phone:(801) 532-4422

DFCM APPROVAL STAMP

project:
UVU Classroom Building

800 University Way
Orem, UT 84058

project#: DFCM #12192790
date: APRIL 30, 2013

revisions:
1 ADDENDUM #3 5.22.2013
2 ADDENDUM #5 5.24.2013

title:
LEVEL 1 FIRE PROTECTION FLOOR PLAN

sheet:
FF101

BID DOC

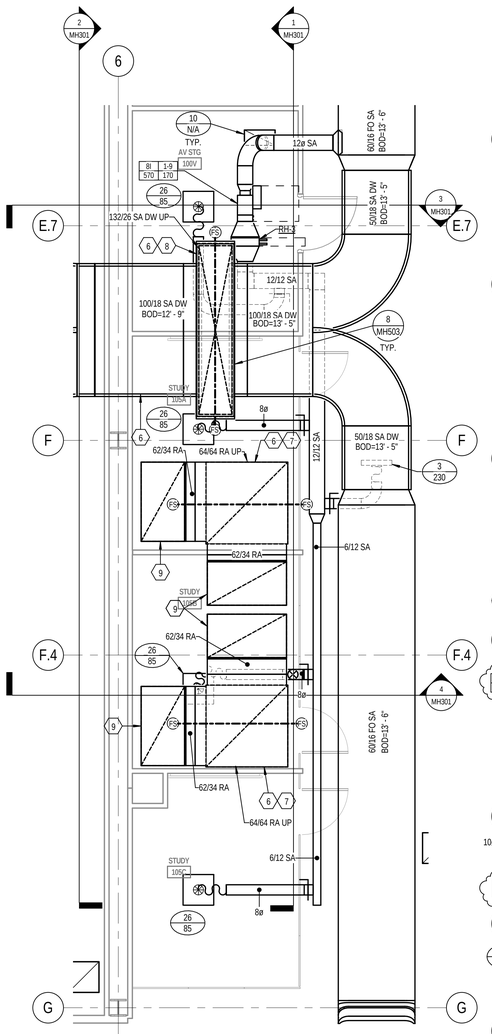

2 ENLARGED LEVEL 1 AREA 'A' MECHANICAL FLOOR PLAN

SCALE: 1/4" = 1'-0"

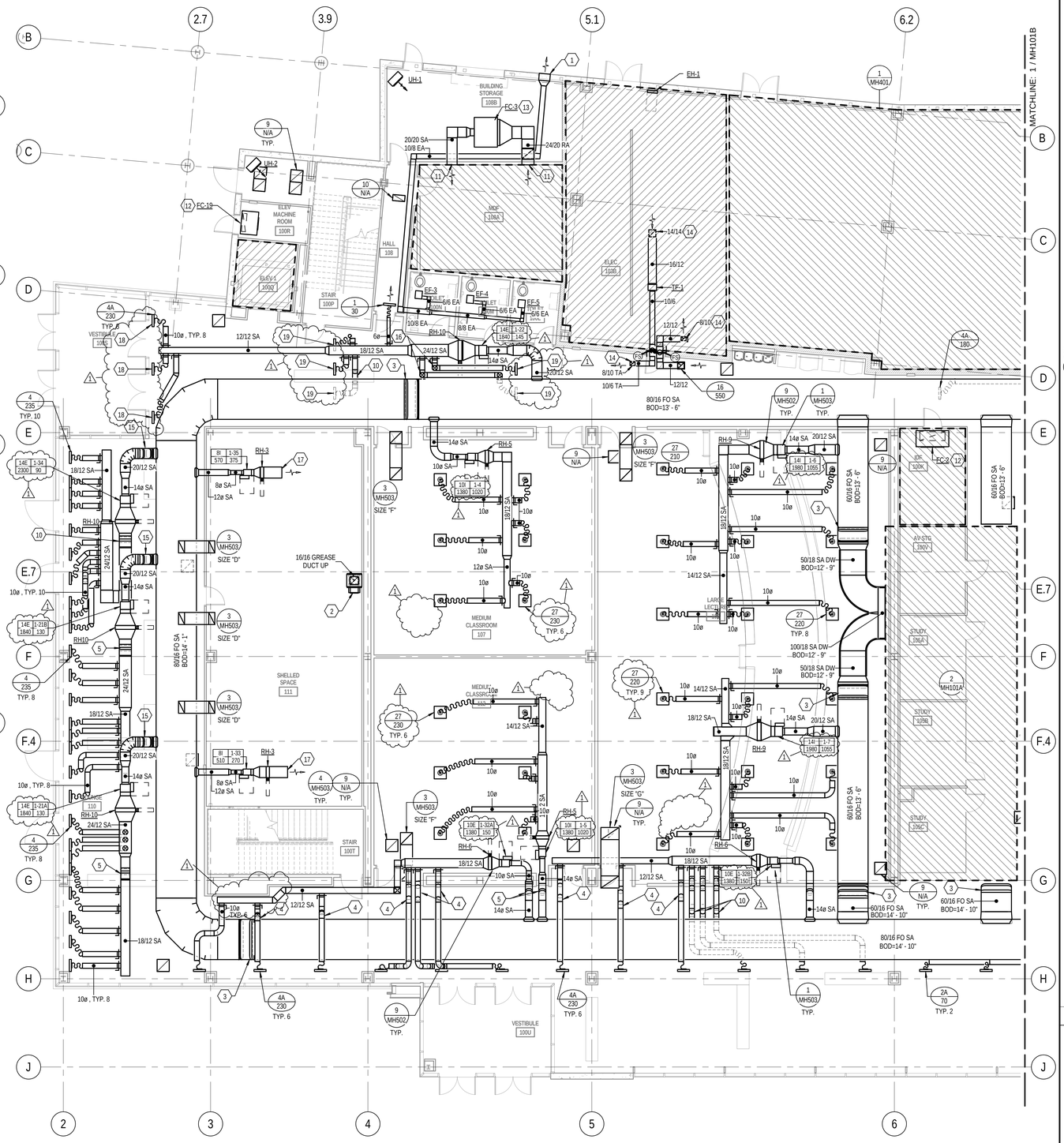

1 LEVEL 1 AREA 'A' MECHANICAL FLOOR PLAN

SCALE: 1/8" = 1'-0"

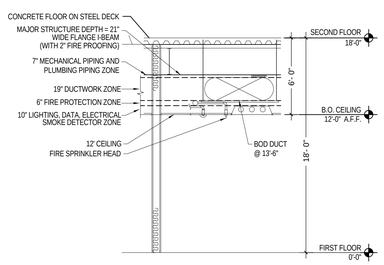

NOTE: EXTREMELY LIMITED SPACE IS AVAILABLE FOR TRADES TO INSTALL THEIR WORK. CAREFUL COORDINATION IS REQUIRED TO ASSURE THAT CROSS-OVER LINES ACTUALLY FIT IN ZONES ALLOTTED. ON OCCASION "FIRE PROTECTION ZONE" AND/OR "ELECTRICAL ZONE" MAY NEED TO TRANSITION UP INTO "STRUCTURAL ZONE" BETWEEN BEAMS AND GIRDERS. GENERAL CONTRACTOR SHALL COORDINATE WORK AND SCHEDULE OF EACH TRADE TO PREVENT UTILITY LINE CONFLICTS. ** NOTE - DUCT TRAPEZE HANGER IS LOCATED IN THE FIRE PROTECTION PIPING ZONE. DO NOT ROUTE FIRE PROTECTION PIPING PARALLEL TO DUCT IN THE AREA DIRECTLY BELOW THE DUCT.

LEVEL 1 - VERTICAL SPACE ALLOCATION SECTION

KEYED NOTES

1. PROVIDE WALL CAP COOK MODEL WCG-8 WITH BIRD SCREEN.
2. PROVIDE 12" X 12" ACCESS DOOR IN THE SIDE OF GREASE DUCT. CAP AND SEAL DUCT AIR AND WATER TIGHT FOR CONNECTION IN FUTURE BUILD OUT.
3. OFFSET DUCT WITH TWO 45º ELBOWS TO MEET ELEVATION AS CALLED OUT ON PLAN.
4. OFFSET DUCT WITH TWO 45º ELBOWS ABOVE SUPPLY DUCT WORK AT THIS APPROXIMATE LOCATION.
5. OFFSET DUCT WITH TWO 45º ELBOWS BELOW STRUCTURE AT THIS APPROXIMATE LOCATION.
6. PROVIDE 12"X12" DUCT ACCESS DOOR IN BOTTOM OF DUCT. LOCATE SO THAT FIRE/SMOKE DAMPER POSITION IS VISIBLE WHEN DOOR IS OPENED. FIRE/SMOKE DAMPERS SHALL BE RUSKIN MODEL FSD60-3, OR EQUAL.
7. RETURN AIR DUCT UP THROUGH LEVEL TWO FLOOR INTO MECHANICAL SHAFT. PROVIDE FIRE SMOKE DAMPER AT PENETRATION OF LEVEL TWO FLOOR.
8. SUPPLY AIR DUCT UP THROUGH LEVEL TWO FLOOR INTO MECHANICAL SHAFT. PROVIDE FIRE SMOKE DAMPER AT PENETRATION OF LEVEL TWO FLOOR.
9. CAP END OF RETURN AIR DUCT AND CREATE OPENING IN TOP OF DUCT THE SAME SIZE AS DUCT. PROVIDE MANUAL BALANCING DAMPER FOR ALL RETURN AIR DUCT PENETRATIONS INTO THE MECHANICAL SHAFT. LOCATE DAMPER ON TOP OF HORIZONTAL RETURN AIR DUCT. DAMPER TO BE SAME SIZE AS OPENING IN TOP OF DUCT. DAMPER IS PROVIDED FOR USE BY THE BALANCING CONTRACTOR TO BALANCE THE RETURN AIR FLOWS AND PRESSURES.
10. OFFSET DUCT WITH TWO 45º ELBOWS BELOW SUPPLY DUCT AT THIS APPROXIMATE LOCATION.
11. PROVIDE GALVANIZED WIRE MESH SCREEN AT END OF DUCT. SECURE WITH SCREWED FLANGED FRAME. CENTER OF SUPPLY AIR DUCT AT 11' - 6" AND RETURN AIR DUCT AT 15' - 0".
12. EXPOSED CABINET FAN COIL TO BE LOCATED ABOVE DOOR WITH BOTTOM OF EQUIPMENT AT 10' - 0" ABOVE FINISHED FLOOR.
13. BOTTOM OF FAN COIL AT 9' - 10".
14. OPENING IN TOP OF DUCT. SECURE WIRE MESH OVER OPENING IN DUCT.
15. OFFSET DUCT UP INTO BEAM SHADOW WITH TWO 45º ELBOWS AT THIS APPROXIMATE LOCATION. VAV BOX AND RE-HEAT COIL ARE TO BE INSTALLED UP HIGH WITHIN BEAM SHADOW.
16. OFFSET DUCT UP WITH TWO 45º ELBOWS OVER VAV BOX AND REHEAT COIL CLEARANCE AREAS.
17. PROVIDE 36" OF DUCTWORK DOWN STREAM OF THE RE-HEAT COIL. DUCT SIZE TO MATCH COIL SIZE. LEAVE END OF DUCT OPEN.
18. DIRECT ONE SLOT TOWARDS THE WINDOW AND ALL OTHER SLOTS TOWARDS THE SPACE AT THIS LOCATION.
19. DIRECT TWO SLOTS ONE WAY AND TWO SLOTS THE OTHER WAY AT THIS LOCATION.

GENERAL NOTES

A. DUCTWORK ELEVATION IS PER VERTICAL SPACE ALLOCATION SECTION ON EACH SHEET UNLESS NOTED OTHERWISE ON THE PLAN. PROVIDE OFFSETS AS NECESSARY.

B. DO NOT ROUTE ANY DUCTWORK ABOVE ELECTRICAL, IDF OR ELEVATOR MACHINE ROOMS.

C. ALL EXHAUST DUCTWORK INSIDE RATED SHAFT SHALL BE PROVIDED WITH 1/2" DUCT LINER. ALL OTHER RECTANGULAR EXHAUST DUCTWORK UPSTREAM FROM THE RISER TAKE-OFF SHALL BE PROVIDED WITH 1" DUCT LINER.

D. PROVIDE A SOUND BOOT ATOP ALL RETURN AIR GRILLES IN ACCORDANCE WITH DETAIL 4/MH503.

E. THE DASHED LINES NEXT TO THE VAV BOX INDICATE REQUIRED SERVICE CLEARANCES FOR THE BOX. CLEARANCES SHALL COMPLY WITH NETA 110.26 REQUIREMENTS. PROVIDE 30" X 36" CLEAR IN FRONT OF BOXES DOWN TO CEILING. THIS AREA MUST BE KEPT CLEAR OF ALL EQUIPMENT FROM ALL TRADES TO ALLOW ACCESS TO SERVICE THE BOX. THIS IS TYPICAL FOR ALL VAV BOXES AND RE-HEAT COILS.

F. SUPPLY AIR DUCT FROM AIR HANDLER IN PENTHOUSE IS DOUBLE-WALL FROM THE POINT IT CONNECTS TO THE AIR HANDLER, ALONG ITS ENTIRE LENGTH IN THE SHAFT, TO A POINT APPROXIMATELY 8'-0" BEYOND FIRE/SMOKE DAMPER AT EACH LEVEL.

G. INSTALL VAV BOXES IN ACCORDANCE WITH DETAIL 1 ON SHEET MH503.

H. INSTALL DUCT MOUNTED HEATING COIL IN ACCORDANCE WITH DETAIL 9 ON MH502.

J. TRANSFER AIR DUCTS ARE TO BE INSTALLED IN ALL OFFICES AND CLASSROOMS WHERE WALLS EXTEND UP TO DECK. SEE DETAIL 3 ON SHEET MH503 FOR SIZES. INSTALL TRANSFER DUCTS ABOVE SUPPLY DUCT ELEVATION SO THAT THE OPENINGS IN THE TOP ARE NO LESS THAT 12" BELOW DECK UNLESS OTHERWISE NOTED.

KEY PLAN:

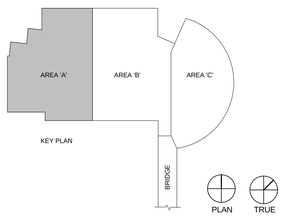

COLVIN ENGINEERING ASSOCIATES
244 West 300 North, Suite 200 / Salt Lake City, Utah 84103
Phone 801.322.2400 / colvinengineering.com

Copyright (C) 2012 by Colvin Engineering Associates, Inc. Salt Lake City, Utah. All rights reserved. Unauthorized copying and/or use is illegal and subject to prosecution.

UNLESS A PROFESSIONAL SEAL WITH SIGNATURE AND DATE IS AFFIXED, THIS DOCUMENT IS PRELIMINARY AND IS NOT INTENDED FOR CONSTRUCTION, RECORDING PURPOSES, OR IMPLEMENTATION

UTAH VALLEY UNIVERSITY

State of Utah
Department of Administrative Services
Division of Facilities Construction & Management
4110 State Office Building
Salt Lake City, Utah 84114
Phone: (801) 538 - 3018
Fax: (801) 538 - 3267

CRSA METHODSTUDIO INC.

CRSA ARCHITECTS
649 east south temple
salt lake city, utah 84102
phone:(801) 355-5915

METHOD STUDIO INC.
925 south west temple
salt lake city, utah 84101
phone:(801) 532-4422

DFCM APPROVAL STAMP

project:
UVU Classroom Building

800 University Way
Orem, UT 84058

project#: DFCM #12192790
date: APRIL 30, 2013

revisions:
1 ADDENDUM #5 5.25.2013

title:
LEVEL 1 AREA 'A' MECHANICAL FLOOR PLAN

sheet:
MH101A

BID DOC

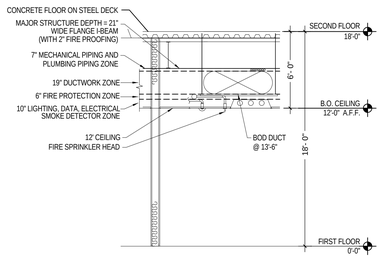

NOTE: EXTREMELY LIMITED SPACE IS AVAILABLE FOR TRADES TO INSTALL THEIR WORK. CAREFUL COORDINATION IS REQUIRED TO ASSURE THAT CROSS-OVER LINES ACTUALLY FIT IN ZONES ALLOTTED. ON OCCASION "FIRE PROTECTION ZONE" AND/OR "ELECTRICAL ZONE" MAY NEED TO TRANSITION UP INTO "STRUCTURAL ZONE" BETWEEN BEAMS AND GIRDERS. GENERAL CONTRACTOR SHALL COORDINATE WORK AND SCHEDULE OF EACH TRADE TO PREVENT UTILITY LINE CONFLICTS. ** NOTE - DUCT TRAPEZE HANGER IS LOCATED IN THE FIRE PROTECTION PIPING ZONE. DO NOT ROUTE FIRE PROTECTION PIPING PARALLEL TO DUCT IN THE AREA DIRECTLY BELOW THE DUCT.

LEVEL 1 - VERTICAL SPACE ALLOCATION SECTION

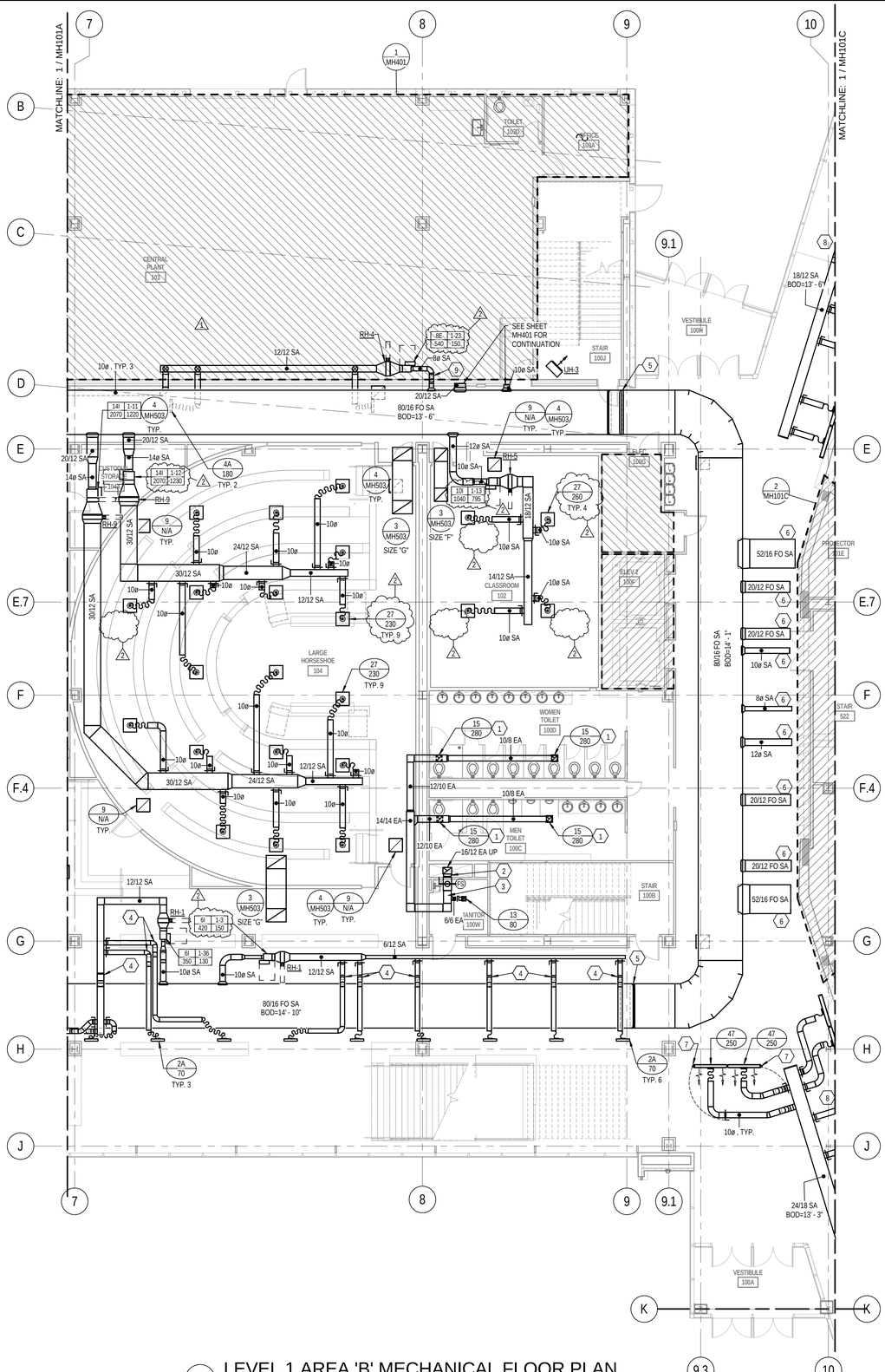

1 LEVEL 1 AREA 'B' MECHANICAL FLOOR PLAN

SCALE: 1/8" = 1'-0"

KEYED NOTES

1. PROVIDE BALANCING DAMPER IN VERTICAL DUCT OFF OF EXHAUST GRILLE.
2. PROVIDE HIGH EFFICIENCY TAKE-OFF AT EXHAUST DUCT CONNECTION TO RISER.
3. PROVIDE 12"X12" DUCT ACCESS DOOR IN BOTTOM OF DUCT. LOCATE SO THAT FIRE/SMOKE DAMPER POSITION IS VISIBLE WHEN DOOR IS OPENED. FIRE/SMOKE DAMPERS SHALL BE RUSKIN MODEL FSD60-3, OR EQUAL.
4. OFFSET DUCT WITH TWO 45º ELBOWS ABOVE SUPPLY DUCT WORK AT THIS APPROXIMATE LOCATION.
5. OFFSET DUCT WITH TWO 45º ELBOWS TO MEET ELEVATION AS CALLED OUT ON PLAN.
6. SEE VIEW 2 SHEET MH101C FOR CONTINUATION OF DUCT.
7. REMOTE DAMPER CONTROL TO BE PROVIDED FOR THIS DIFFUSER. BALANCING DAMPER TO BE LOCATED AS FAR UPSTREAM FROM GRILLE AS POSSIBLE BUT MUST ACCOMODATE THE STANDARD 8' LONG DAMPER CONTROL CABLE. REMOTE CONTROL RECEPTACLE TO BE MOUNTED IN BLANK OFF PLATE IN CEILING NEXT TO DIFFUSER PER ARCHITECTURAL DETAIL B3/AE523. RECEPTACLE COVER TO BE PAINTED FLAT BLACK.
8. SEE VIEW 1 SHEET MH101C FOR CONTINUATION OF DUCT.
9. OFFSET DUCT UP AND RUN TIGHT TO STRUCTURE.

GENERAL NOTES

A. DUCTWORK ELEVATION IS PER VERTICAL SPACE ALLOCATION SECTION ON EACH SHEET UNLESS NOTED OTHERWISE ON THE PLAN. PROVIDE OFFSETS AS NECESSARY.

B. DO NOT ROUTE ANY DUCTWORK ABOVE ELECTRICAL, IDF OR ELEVATOR MACHINE ROOMS.

C. ALL EXHAUST DUCTWORK INSIDE RATED SHAFT SHALL BE PROVIDED WITH 1/2" DUCT LINER. ALL OTHER RECTANGULAR EXHAUST DUCTWORK UPSTREAM FROM THE RISER TAKE-OFF SHALL BE PROVIDED WITH 1" DUCT LINER.

D. PROVIDE A SOUND BOOT ATOP ALL RETURN AIR GRILLES IN ACCORDANCE WITH DETAIL 4/MH503.

E. THE DASHED LINES NEXT TO THE VAV BOX INDICATE REQUIRED SERVICE CLEARANCES FOR THE BOX. CLEARANCES SHALL COMPLY WITH NETA 110.26 REQUIREMENTS. PROVIDE 30" X 36" CLEAR IN FRONT OF BOXES DOWN TO CEILING. THIS AREA MUST BE KEPT CLEAR OF ALL EQUIPMENT FROM ALL TRADES TO ALLOW ACCESS TO SERVICE THE BOX. THIS IS TYPICAL FOR ALL VAV BOXES AND RE-HEAT COILS.

F. SUPPLY AIR DUCT FROM AIR HANDLER IN PENTHOUSE IS DOUBLE-WALL FROM THE POINT IT CONNECTS TO THE AIR HANDLER, ALONG ITS ENTIRE LENGTH IN THE SHAFT, TO A POINT APPROXIMATELY 8'-0" BEYOND FIRE/SMOKE DAMPER AT EACH LEVEL.

G. INSTALL VAV BOXES IN ACCORDANCE WITH DETAIL 1 ON SHEET MH503.

H. INSTALL DUCT MOUNTED HEATING COIL IN ACCORDANCE WITH DETAIL 9 ON MH502.

J. TRANSFER AIR DUCTS ARE TO BE INSTALLED IN ALL OFFICES AND CLASSROOMS WHERE WALLS EXTEND UP TO DECK. SEE DETAIL 3 ON SHEET MH503 FOR SIZES. INSTALL TRANSFER DUCTS ABOVE SUPPLY DUCT ELEVATION SO THAT THE OPENINGS IN THE TOP ARE NO LESS THAN 12" BELOW DECK UNLESS OTHERWISE NOTED.

KEY PLAN:

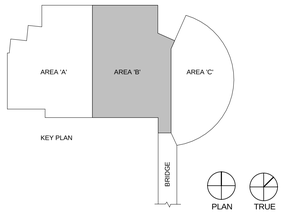

COLVIN ENGINEERING ASSOCIATES
244 West 300 North, Suite 200 / Salt Lake City, Utah 84103
Phone 801.322.2400 / colvinengineering.com

Copyright (C) 2012 by Colvin Engineering Associates, Inc. Salt Lake City, Utah. All rights reserved. Unauthorized copying and/or use is illegal and subject to prosecution.

UNLESS A PROFESSIONAL SEAL WITH SIGNATURE AND DATE IS AFFIXED, THIS DOCUMENT IS PRELIMINARY AND IS NOT INTENDED FOR CONSTRUCTION, RECORDING PURPOSES, OR IMPLEMENTATION

UTAH VALLEY UNIVERSITY

State of Utah
Department of Administrative Services
Division of Facilities Construction & Management
4110 State Office Building
Salt Lake City, Utah 84114
Phone: (801) 538 - 3018
Fax: (801) 538 - 3267

CRSA METHODSTUDIO INC.

CRSA ARCHITECTS
649 east south temple
salt lake city, utah 84102
phone:(801) 355-5915

METHODSTUDIO INC.
925 south west temple
salt lake city, utah 84101
phone:(801) 532-4422

DFCM APPROVAL STAMP

project:
UVU Classroom Building

800 University Way
Orem, UT 84058

project#: DFCM #12192790
date: APRIL 30, 2013

revisions:

1	ADDENDUM #3	5.22.2013
2	ADDENDUM #5	5.25.2013

title:
LEVEL 1 AREA 'B' MECHANICAL FLOOR PLAN

sheet:
MH101B

BID DOC

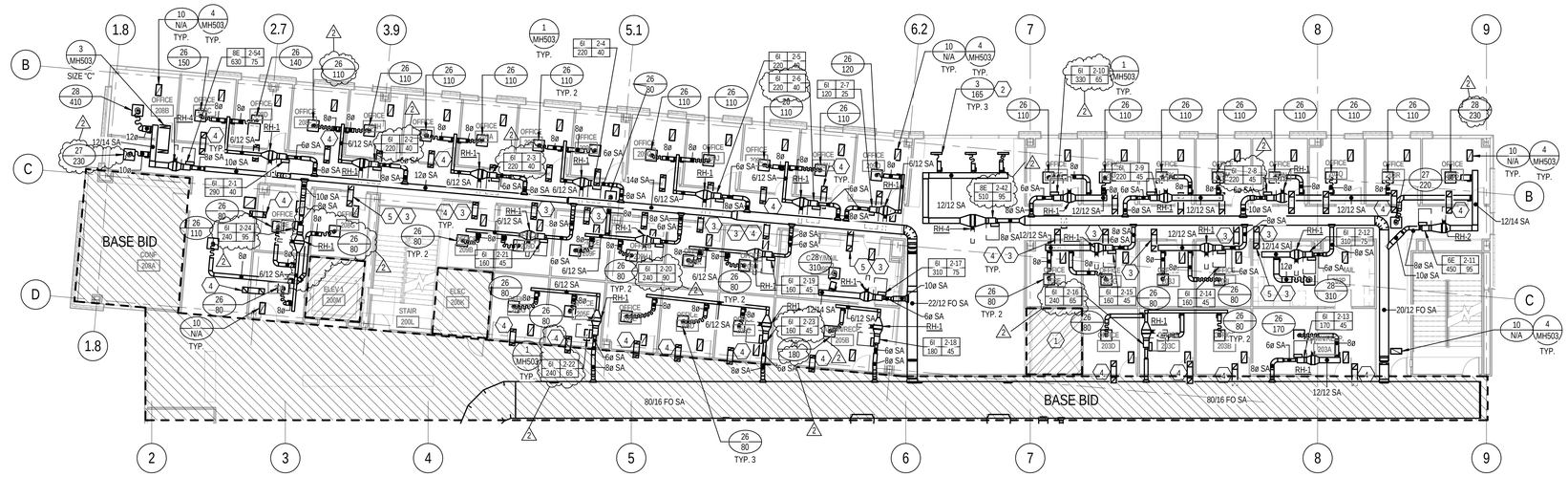

LEVEL 2 MECHANICAL FLOOR PLAN - ALTERNATE

1 SCALE: 3/32" = 1'-0"

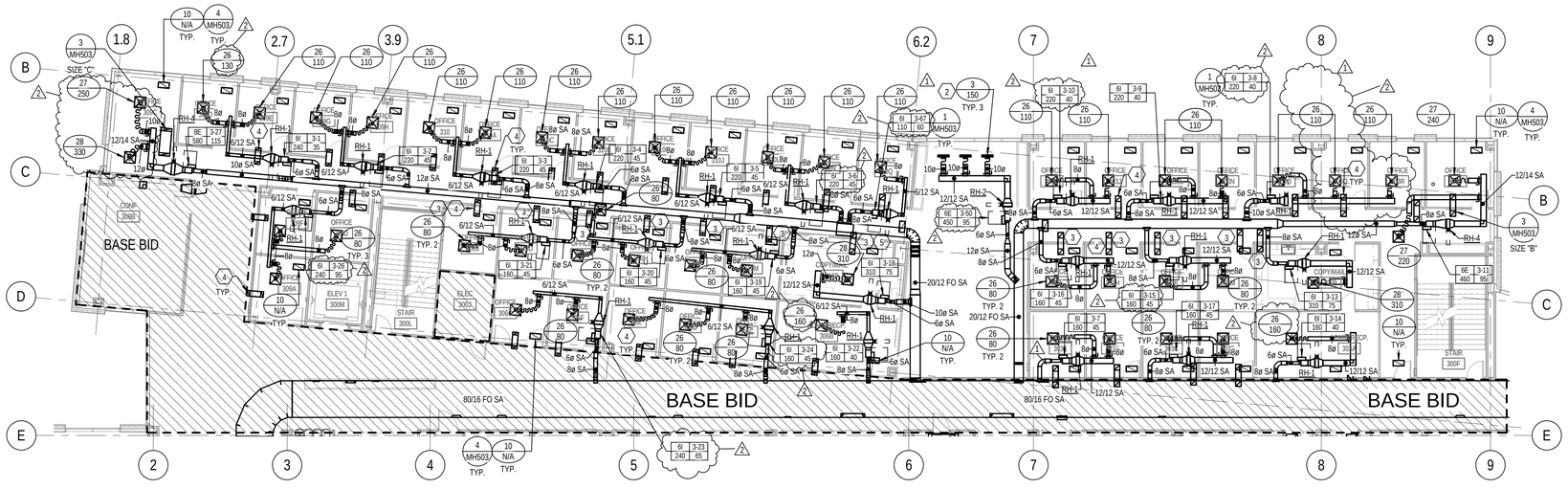

LEVEL 3 MECHANICAL FLOOR PLAN - ALTERNATE

2 SCALE: 3/32" = 1'-0"

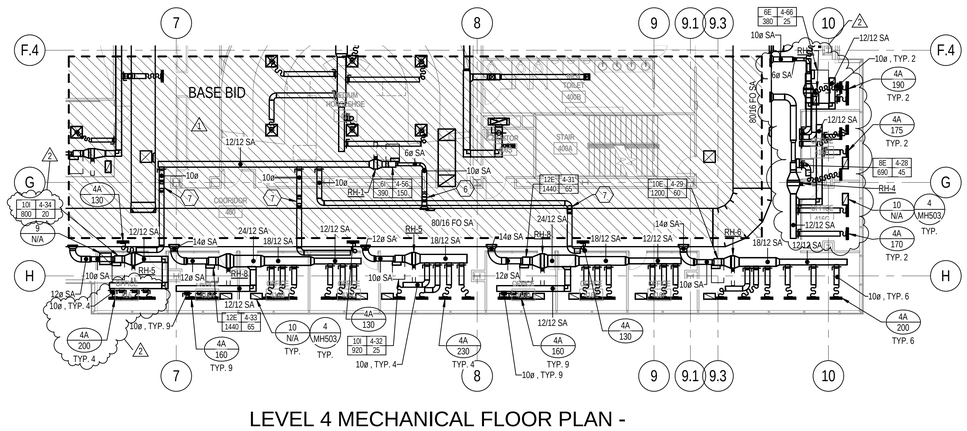

LEVEL 4 MECHANICAL FLOOR PLAN - ALTERNATE

3 SCALE: 3/32" = 1'-0"

KEYED NOTES

1. DO NOT ROUTE ANY DUCT OR PLUMBING PIPING IN THIS SHAFT/OPENING.
2. DIRECT ONE SLOT TOWARDS THE WINDOW AND ALL OTHER SLOTS TOWARDS THE SPACE AT THIS LOCATION.
3. TRANSFER AIR DUCT IS TO BE INSTALLED TIGHT TO STRUCTURE AT THIS APPROXIMATE LOCATION. COORDINATE WITH STRUCTURE AND SUPPLY AIR DUCT IN THIS AREA. OPENINGS IN THE TOP OF TRANSFER DUCT ARE TO BE ON EITHER SIDE OF THE BEAM SO THAT THE BEAM DOES NOT OBSTRUCT AIR FLOW INTO OR OUT OF THE DUCT.
4. ALL TRANSER AIR DUCT IN BID ALTERNATE TO BE SIZE 'A' UNLESS OTHERWISE NOTED. SEE DETAIL 3, SIZE 'A' ON SHEET MH503 FOR TRANSFER AIR DUCT SIZES.
5. SEE DETAIL 3, SIZE 'B' ON SHEET MH503 FOR TRANSFER AIR DUCT SIZES.
6. OFFSET MEDIUM PRESSURE DUCT UP WITH TWO 45º ELBOWS TO AVOID LIGHT COVE AT PERIMETER OF CORRIDOR.
7. OFFSET DUCT WITH TWO 45º ELBOWS ABOVE SUPPLY DUCT WORK AT THIS APPROXIMATE LOCATION.

GENERAL NOTES

A. DUCTWORK ELEVATION IS PER VERTICAL SPACE ALLOCATION SECTION ON EACH SHEET UNLESS NOTED OTHERWISE ON THE PLAN. PROVIDE OFFSETS AS NECESSARY.

B. DO NOT ROUTE ANY DUCTWORK ABOVE ELECTRICAL, IDF OR ELEVATOR MACHINE ROOMS.

C. ALL EXHAUST DUCTWORK INSIDE RATED SHAFT SHALL BE PROVIDED WITH 1/2" DUCT LINER. ALL OTHER RECTANGULAR EXHAUST DUCTWORK UPSTREAM FROM THE RISER TAKE-OFF SHALL BE PROVIDED WITH 1" DUCT LINER.

D. PROVIDE A SOUND BOOT ATOP ALL RETURN AIR GRILLES IN ACCORDANCE WITH DETAIL 4/MH503.

E. THE DASHED LINES NEXT TO THE VAV BOX INDICATE REQUIRED SERVICE CLEARANCES FOR THE BOX. CLEARANCES SHALL COMPLY WITH NETA 110.26 REQUIREMENTS. PROVIDE 30" X 36" CLEAR IN FRONT OF BOXES DOWN TO CEILING. THIS AREA MUST BE KEPT CLEAR OF ALL EQUIPMENT FROM ALL TRADES TO ALLOW ACCESS TO SERVICE THE BOX. THIS IS TYPICAL FOR ALL VAV BOXES AND RE-HEAT COILS.

F. SUPPLY AIR DUCT FROM AIR HANDLER IN PENTHOUSE IS DOUBLE-WALL FROM THE POINT IT CONNECTS TO THE AIR HANDLER, ALONG ITS ENTIRE LENGTH IN THE SHAFT, TO A POINT APPROXIMATELY 8'-0" BEYOND FIRE/SMOKE DAMPER AT EACH LEVEL.

G. INSTALL VAV BOXES IN ACCORDANCE WITH DETAIL 1 ON SHEET MH503.

H. INSTALL DUCT MOUNTED HEATING COIL IN ACCORDANCE WITH DETAIL 9 ON MH502.

J. TRANSFER AIR DUCTS ARE TO BE INSTALLED IN ALL OFFICES AND CLASSROOMS WHERE WALLS EXTEND UP TO DECK. SEE DETAIL 3 ON SHEET MH503 FOR SIZES. INSTALL TRANSFER DUCTS ABOVE SUPPLY DUCT ELEVATION SO THAT THE OPENINGS IN THE TOP ARE NO LESS THAN 12" BELOW DECK UNLESS OTHERWISE NOTED.

COLVIN ENGINEERING ASSOCIATES
244 West 300 North, Suite 200 / Salt Lake City, Utah 84103
Phone 801.322.2400 / colvinengineering.com

Copyright (C) 2012 by Colvin Engineering Associates, Inc. Salt Lake City, Utah. All rights reserved. Unauthorized copying and/or use is illegal and subject to prosecution.

UNLESS A PROFESSIONAL SEAL WITH SIGNATURE AND DATE IS AFFIXED, THIS DOCUMENT IS PRELIMINARY AND IS NOT INTENDED FOR CONSTRUCTION, RECORDING PURPOSES, OR IMPLEMENTATION

UTAH VALLEY UNIVERSITY

State of Utah
Department of Administrative Services
Division of Facilities Construction & Management
4110 State Office Building
Salt Lake City, Utah 84114
Phone: (801) 538 - 3018
Fax: (801) 538 - 3267

CRSA METHODSTUDIO INC.

CRSA ARCHITECTS
649 east south temple
salt lake city, utah 84102
phone:(801) 355-5915

METHOD STUDIO INC.
925 south west temple
salt lake city, utah 84101
phone:(801) 532-4422

DFCM APPROVAL STAMP

project:
UVU Classroom Building

800 University Way
Orem, UT 84058

project#: DFCM #12192790
date: APRIL 30, 2013

revisions:

1	ADDENDUM #3	5.22.2013
2	ADDENDUM #5	5.24.2013

title:
LEVELS 2, 3 & 4 ALTERNATE MECHANICAL FLOOR PLANS

sheet:
MH102.1

BID DOC

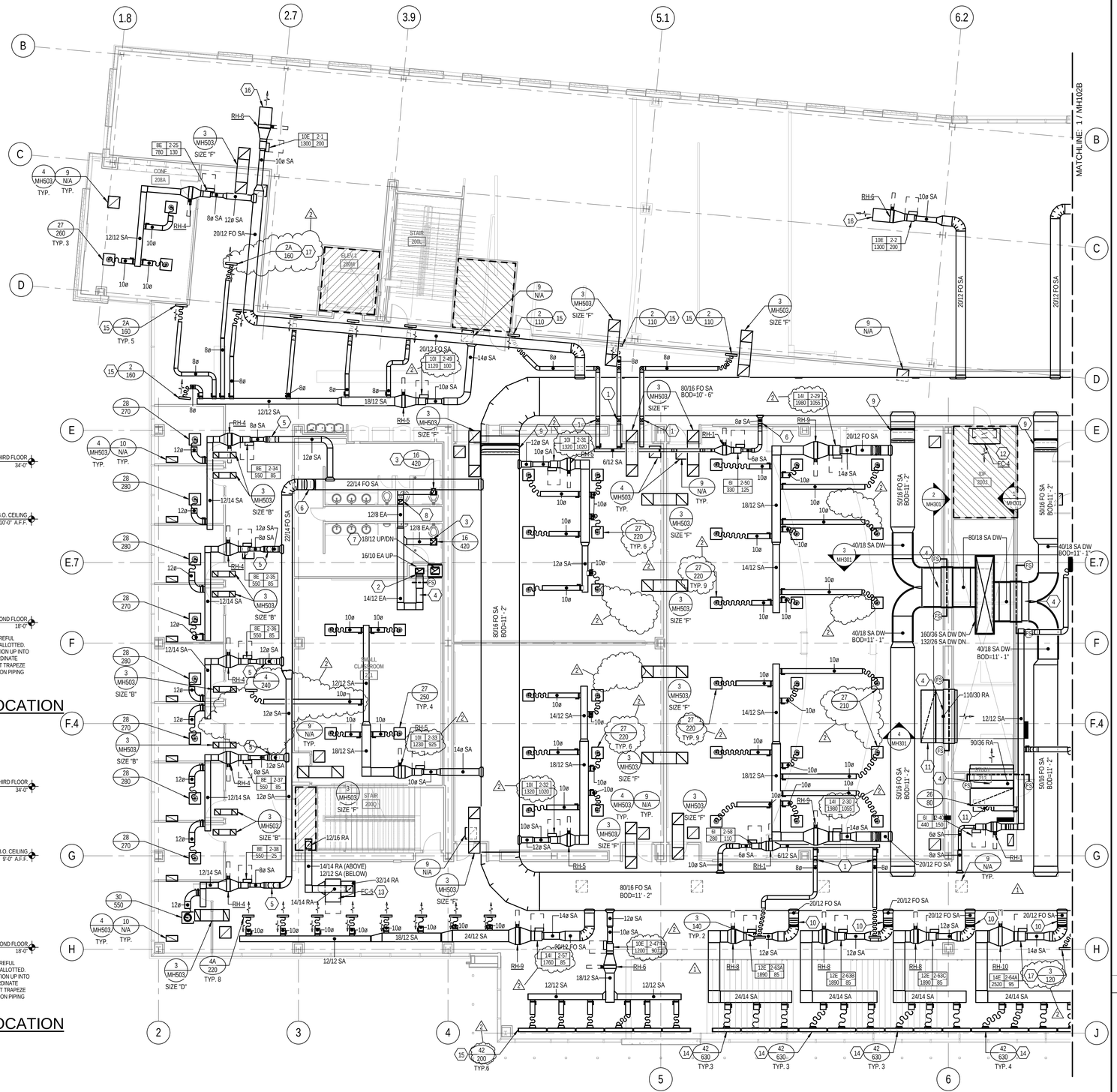

1 LEVEL 2 AREA 'A' MECHANICAL FLOOR PLAN

SCALE: 1/8" = 1'-0"

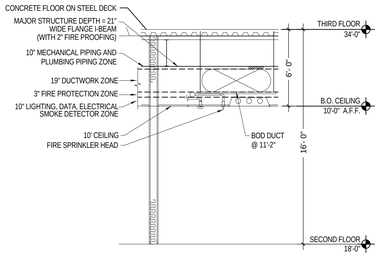

NOTE: EXTREMELY LIMITED SPACE IS AVAILABLE FOR TRADES TO INSTALL THEIR WORK. CAREFUL COORDINATION IS REQUIRED TO ASSURE THAT CROSS-OVER LINES ACTUALLY FIT IN ZONES ALLOTTED. ON OCCASION "FIRE PROTECTION ZONE" AND/OR "ELECTRICAL ZONE" MAY NEED TO TRANSITION UP INTO "STRUCTURAL ZONE" BETWEEN BEAMS AND GIRDERS. GENERAL CONTRACTOR SHALL COORDINATE WORK AND SCHEDULE OF EACH TRADE TO PREVENT UTILITY LINE CONFLICTS. ** NOTE - DUCT TRAPEZE HANGER IS LOCATED IN THE FIRE PROTECTION PIPING ZONE. DO NOT ROUTE FIRE PROTECTION PIPING PARALLEL TO DUCT IN THE AREA DIRECTLY BELOW THE DUCT.

LEVEL 2 - VERTICAL SPACE ALLOCATION SECTION

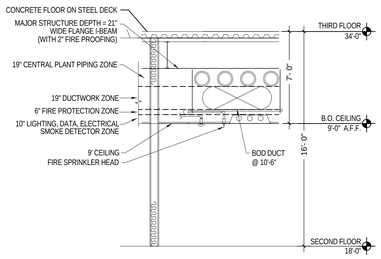

NOTE: EXTREMELY LIMITED SPACE IS AVAILABLE FOR TRADES TO INSTALL THEIR WORK. CAREFUL COORDINATION IS REQUIRED TO ASSURE THAT CROSS-OVER LINES ACTUALLY FIT IN ZONES ALLOTTED. ON OCCASION "FIRE PROTECTION ZONE" AND/OR "ELECTRICAL ZONE" MAY NEED TO TRANSITION UP INTO "STRUCTURAL ZONE" BETWEEN BEAMS AND GIRDERS. GENERAL CONTRACTOR SHALL COORDINATE WORK AND SCHEDULE OF EACH TRADE TO PREVENT UTILITY LINE CONFLICTS. ** NOTE - DUCT TRAPEZE HANGER IS LOCATED IN THE FIRE PROTECTION PIPING ZONE. DO NOT ROUTE FIRE PROTECTION PIPING PARALLEL TO DUCT IN THE AREA DIRECTLY BELOW THE DUCT.

LEVEL 2 - VERTICAL SPACE ALLOCATION IN NORTH HALLWAY SECTION

KEYED NOTES

1. OFFSET DUCT WITH TWO 45º ELBOWS ABOVE SUPPLY DUCT WORK AT THIS APPROXIMATE LOCATION.
2. PROVIDE HIGH EFFICIENCY TAKE-OFF AT EXHAUST DUCT CONNECTION TO RISER.
3. PROVIDE BALANCING DAMPER IN VERTICAL DUCT OFF OF EXHAUST GRILLE.
4. PROVIDE 12"X12" DUCT ACCESS DOOR IN BOTTOM OF DUCT. LOCATE SO THAT FIRE/SMOKE DAMPER POSITION IS VISIBLE WHEN DOOR IS OPENED. FIRE/SMOKE DAMPERS SHALL BE RUSKIN MODEL FSD60-3, OR EQUAL.
5. OFFSET DUCT WITH TWO 45º ELBOWS BELOW MECHANICAL PIPING AT THIS APPROXIMATE LOCATION. LOW PRESSURE DUCT, VAV BOXES AND RE-HEAT COILS ARE TO BE INSTALLED BELOW NEW CAMPUS MECHANICAL PIPES.
6. OFFSET MEDIUM PRESSURE DUCT UP WITH TWO 45º ELBOWS TO AVOID LIGHT COVE AT PERIMETER OF CORRIDOR.
7. GREASE EXHAUST DUCT RISER.
8. OFFSET DUCT WITH TWO 45º ELBOWS BELOW SUPPLY DUCT AT THIS APPROXIMATE LOCATION.
9. OFFSET DUCT WITH TWO 45º ELBOWS TO MEET ELEVATION AS CALLED OUT ON PLAN.
10. OFFSET DUCT WITH TWO 45º ELBOWS BELOW STRUCTURE AT THIS APPROXIMATE LOCATION.
11. CAP END OF RETURN AIR DUCT AND CREATE OPENING IN TOP OF DUCT THE SAME SIZE AS DUCT. PROVIDE MANUAL BALANCING DAMPER FOR ALL RETURN AIR DUCT PENETRATIONS INTO THE MECHANICAL SHAFT. LOCATE DAMPER ON TOP OF HORIZONTAL RETURN AIR DUCT. DAMPER TO BE SAME SIZE AS OPENING IN TOP OF DUCT. DAMPER IS PROVIDED FOR USE BY THE BALANCING CONTRACTOR TO BALANCE THE RETURN AIR FLOWS AND PRESSURES.
12. EXPOSED CABINET FAN COIL TO BE LOCATED ABOVE DOOR WITH BOTTOM OF EQUIPMENT AT 10' - 0" ABOVE FINISHED FLOOR.
13. FAN COIL TO BE LOCATED ABOVE CEILING WITH BOTTOM OF EQUIPMENT AT 11' - 0" ABOVE FINISHED FLOOR. PROVIDE MANUAL BALANCING DAMPER FOR ALL RETURN AIR DUCT PENETRATIONS INTO THE MECHANICAL SHAFT. LOCATE DAMPER ON TOP OF HORIZONTAL RETURN AIR DUCT. DAMPER TO BE SAME SIZE AS OPENING IN TOP OF DUCT. DAMPER IS PROVIDED FOR USE BY THE BALANCING CONTRACTOR TO BALANCE THE RETURN AIR FLOWS AND PRESSURES.
14. SLOTS ARE TO BE DIRECTED STRAIGHT DOWN TO WASH THE WINDOW AT THIS LOCATION.
15. DIRECT ALL SLOTS TOWARDS THE OPPOSITE WALL AT THIS LOCATION.
16. PROVIDE 36" OF DUCTWORK DOWN STREAM OF THE RE-HEAT COIL. DUCT SIZE TO MATCH COIL SIZE. LEAVE END OF DUCT OPEN.
17. DIRECT TWO SLOTS ONE WAY AND TWO SLOTS THE OTHER WAY AT THIS LOCATION.

GENERAL NOTES

A. DUCTWORK ELEVATION IS PER VERTICAL SPACE ALLOCATION SECTION ON EACH SHEET UNLESS NOTED OTHERWISE ON THE PLAN. PROVIDE OFFSETS AS NECESSARY.

B. DO NOT ROUTE ANY DUCTWORK ABOVE ELECTRICAL, IDF OR ELEVATOR MACHINE ROOMS.

C. ALL EXHAUST DUCTWORK INSIDE RATED SHAFT SHALL BE PROVIDED WITH 1/2" DUCT LINER. ALL OTHER RECTANGULAR EXHAUST DUCTWORK UPSTREAM FROM THE RISER TAKE-OFF SHALL BE PROVIDED WITH 1" DUCT LINER.

D. PROVIDE A SOUND BOOT ATOP ALL RETURN AIR GRILLES IN ACCORDANCE WITH DETAIL 4/MH503.

E. THE DASHED LINES NEXT TO THE VAV BOX INDICATE REQUIRED SERVICE CLEARANCES FOR THE BOX. CLEARANCES SHALL COMPLY WITH NETA 110.26 REQUIREMENTS. PROVIDE 30" X 36" CLEAR IN FRONT OF BOXES DOWN TO CEILING. THIS AREA MUST BE KEPT CLEAR OF ALL EQUIPMENT FROM ALL TRADES TO ALLOW ACCESS TO SERVICE THE BOX. THIS IS TYPICAL FOR ALL VAV BOXES AND RE-HEAT COILS.

F. SUPPLY AIR DUCT FROM AIR HANDLER IN PENTHOUSE IS DOUBLE-WALL FROM THE POINT IT CONNECTS TO THE AIR HANDLER, ALONG ITS ENTIRE LENGTH IN THE SHAFT, TO A POINT APPROXIMATELY 8'-0" BEYOND FIRE/SMOKE DAMPER AT EACH LEVEL.

G. INSTALL VAV BOXES IN ACCORDANCE WITH DETAIL 1 ON SHEET MH503.

H. INSTALL DUCT MOUNTED HEATING COIL IN ACCORDANCE WITH DETAIL 9 ON MH502.

J. TRANSFER AIR DUCTS ARE TO BE INSTALLED IN ALL OFFICES AND CLASSROOMS WHERE WALLS EXTEND UP TO DECK. SEE DETAIL 3 ON SHEET MH503 FOR SIZES. INSTALL TRANSFER DUCTS ABOVE SUPPLY DUCT ELEVATION SO THAT THE OPENINGS IN THE TOP ARE NO LESS THAN 12" BELOW DECK UNLESS OTHERWISE NOTED.

KEY PLAN:

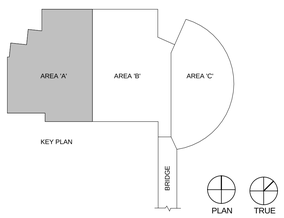

COLVIN ENGINEERING ASSOCIATES
244 West 300 North, Suite 200 / Salt Lake City, Utah 84103
Phone 801.322.2400 / colvineng@engineering.com

Copyright (C) 2012 by Colvin Engineering Associates, Inc. Salt Lake City, Utah. All rights reserved. Unauthorized copying and/or use is illegal and subject to prosecution.

UNLESS A PROFESSIONAL SEAL WITH SIGNATURE AND DATE IS AFFIXED, THIS DOCUMENT IS PRELIMINARY AND IS NOT INTENDED FOR CONSTRUCTION, RECORDING PURPOSES, OR IMPLEMENTATION

UTAH VALLEY UNIVERSITY

State of Utah
Department of Administrative Services
Division of Facilities Construction & Management
4110 State Office Building
Salt Lake City, Utah 84114
Phone: (801) 538 - 3018
Fax: (801) 538 - 3267

CRSA METHODSTUDIO INC.

CRSA ARCHITECTS
649 east south temple
salt lake city, utah 84102
phone:(801) 355-5915

METHOD STUDIO INC.
925 south west temple
salt lake city, utah 84101
phone:(801) 532-4422

DFCM APPROVAL STAMP

project:
UVU Classroom Building

800 University Way
Orem, UT 84058

project#: DFCM #12192790
date: APRIL 30, 2013

revisions:
1 ADDENDUM #3 5.22.2013
2 ADDENDUM #5 5.24.2013

title:
LEVEL 2 MECHANICAL FLOOR PLAN AREA A

sheet:
MH102A

BID DOC

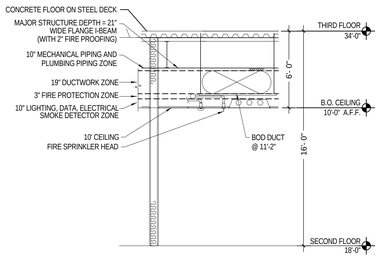

NOTE: EXTREMELY LIMITED SPACE IS AVAILABLE FOR TRADES TO INSTALL THEIR WORK. CAREFUL COORDINATION IS REQUIRED TO ASSURE THAT CROSS-OVER LINES ACTUALLY FIT IN ZONES ALLOTTED. ON OCCASION "FIRE PROTECTION ZONE" AND/OR "ELECTRICAL ZONE" MAY NEED TO TRANSITION UP INTO "STRUCTURAL ZONE" BETWEEN BEAMS AND GIRDERS. GENERAL CONTRACTOR SHALL COORDINATE WORK AND SCHEDULE OF EACH TRADE TO PREVENT UTILITY LINE CONFLICTS. ** NOTE - DUCT TRAPEZE HANGER IS LOCATED IN THE FIRE PROTECTION PIPING ZONE. DO NOT ROUTE FIRE PROTECTION PIPING PARALLEL TO DUCT IN THE AREA DIRECTLY BELOW THE DUCT.

LEVEL 2 - VERTICAL SPACE ALLOCATION SECTION

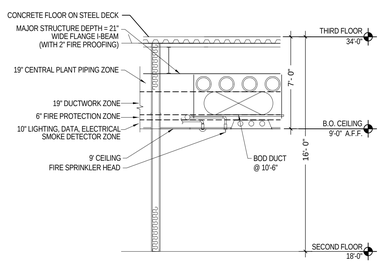

NOTE: EXTREMELY LIMITED SPACE IS AVAILABLE FOR TRADES TO INSTALL THEIR WORK. CAREFUL COORDINATION IS REQUIRED TO ASSURE THAT CROSS-OVER LINES ACTUALLY FIT IN ZONES ALLOTTED. ON OCCASION "FIRE PROTECTION ZONE" AND/OR "ELECTRICAL ZONE" MAY NEED TO TRANSITION UP INTO "STRUCTURAL ZONE" BETWEEN BEAMS AND GIRDERS. GENERAL CONTRACTOR SHALL COORDINATE WORK AND SCHEDULE OF EACH TRADE TO PREVENT UTILITY LINE CONFLICTS. ** NOTE - DUCT TRAPEZE HANGER IS LOCATED IN THE FIRE PROTECTION PIPING ZONE. DO NOT ROUTE FIRE PROTECTION PIPING PARALLEL TO DUCT IN THE AREA DIRECTLY BELOW THE DUCT.

LEVEL 2 - VERTICAL SPACE ALLOCATION IN NORTH HALLWAY SECTION

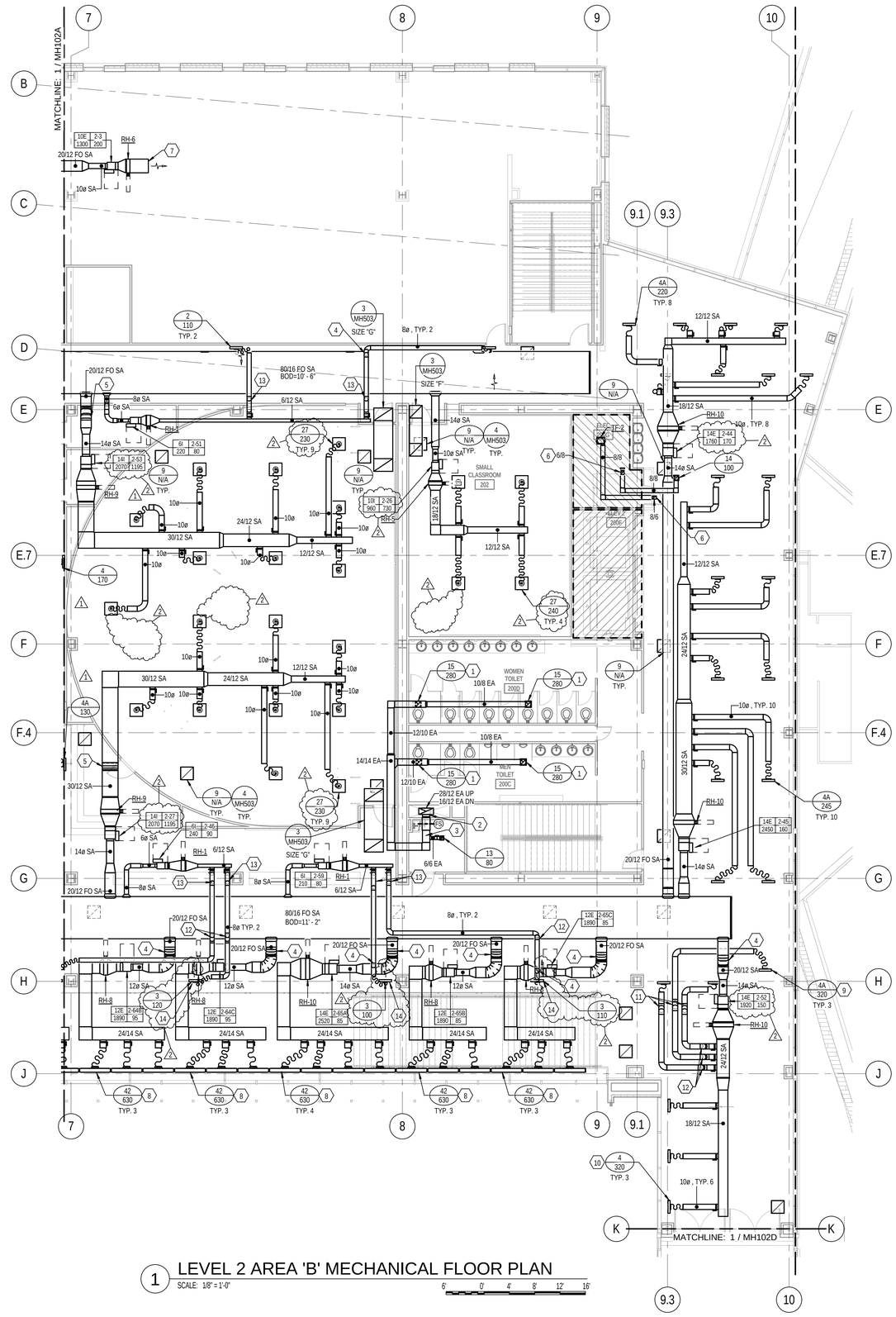

1 LEVEL 2 AREA 'B' MECHANICAL FLOOR PLAN

SCALE: 1/8" = 1'-0"

KEYED NOTES

1. PROVIDE BALANCING DAMPER IN VERTICAL DUCT OFF OF EXHAUST GRILLE.
2. PROVIDE HIGH EFFICIENCY TAKE-OFF AT EXHAUST DUCT CONNECTION TO RISER.
3. PROVIDE 12"X12" DUCT ACCESS DOOR IN BOTTOM OF DUCT. LOCATE SO THAT FIRE/SMOKE DAMPER POSITION IS VISIBLE WHEN DOOR IS OPENED. FIRE/SMOKE DAMPERS SHALL BE RUSKIN MODEL FSD60-3, OR EQUAL.
4. OFFSET DUCT WITH TWO 45º ELBOWS BELOW STRUCTURE AT THIS APPROXIMATE LOCATION.
5. OFFSET DUCT UP HIGH ABOVE HIGH CEILING IN CLASSROOM WITH TWO 45º ELBOWS.
6. OPENING IN TOP OF DUCT. SECURE WIRE MESH OVER OPENING IN DUCT.
7. PROVIDE 36" OF DUCTWORK DOWN STREAM OF THE RE-HEAT COIL. DUCT SIZE TO MATCH COIL SIZE. LEAVE END OF DUCT OPEN.
8. SLOTS ARE TO BE DIRECTED STRAIGHT DOWN TO WASH THE WINDOW AT THIS LOCATION.
9. DIRECT TWO SLOTS ONE WAY AND TWO SLOTS THE OTHER WAY AT THIS LOCATION.
10. DIRECT ONE SLOT TOWARDS THE WINDOW AND ALL OTHER SLOTS TOWARDS THE SPACE AT THIS LOCATION.
11. OFFSET DUCT WITH TWO 45º ELBOWS ABOVE/BELOW ROOF/OVERFLOW DRAINS AT THIS APPROXIMATE LOCATION.
12. OFFSET DUCT WITH TWO 45º ELBOWS TO AVOID MECHANICAL PIPING. FIELD COORDINATE.
13. OFFSET DUCT WITH TWO 45º ELBOWS ABOVE SUPPLY DUCT WORK AT THIS APPROXIMATE LOCATION.
14. DIRECT ALL SLOTS THE SAME DIRECTION AT THIS LOCATION. SEE FLOW ARROW.

GENERAL NOTES

A. DUCTWORK ELEVATION IS PER VERTICAL SPACE ALLOCATION SECTION ON EACH SHEET UNLESS NOTED OTHERWISE ON THE PLAN. PROVIDE OFFSETS AS NECESSARY.

B. DO NOT ROUTE ANY DUCTWORK ABOVE ELECTRICAL, IDF OR ELEVATOR MACHINE ROOMS.

C. ALL EXHAUST DUCTWORK INSIDE RATED SHAFT SHALL BE PROVIDED WITH 1/2" DUCT LINER. ALL OTHER RECTANGULAR EXHAUST DUCTWORK UPSTREAM FROM THE RISER TAKE-OFF SHALL BE PROVIDED WITH 1" DUCT LINER.

D. PROVIDE A SOUND BOOT ATOP ALL RETURN AIR GRILLES IN ACCORDANCE WITH DETAIL 4/MH503.

E. THE DASHED LINES NEXT TO THE VAV BOX INDICATE REQUIRED SERVICE CLEARANCES FOR THE BOX. CLEARANCES SHALL COMPLY WITH NETA 110.26 REQUIREMENTS. PROVIDE 30" X 36" CLEAR IN FRONT OF BOXES DOWN TO CEILING. THIS AREA MUST BE KEPT CLEAR OF ALL EQUIPMENT FROM ALL TRADES TO ALLOW ACCESS TO SERVICE THE BOX. THIS IS TYPICAL FOR ALL VAV BOXES AND RE-HEAT COILS.

F. SUPPLY AIR DUCT FROM AIR HANDLER IN PENTHOUSE IS DOUBLE-WALL FROM THE POINT IT CONNECTS TO THE AIR HANDLER, ALONG ITS ENTIRE LENGTH IN THE SHAFT, TO A POINT APPROXIMATELY 8'-0" BEYOND FIRE/SMOKE DAMPER AT EACH LEVEL.

G. INSTALL VAV BOXES IN ACCORDANCE WITH DETAIL 1 ON SHEET MH503.

H. INSTALL DUCT MOUNTED HEATING COIL IN ACCORDANCE WITH DETAIL 9 ON MH502.

J. TRANSFER AIR DUCTS ARE TO BE INSTALLED IN ALL OFFICES AND CLASSROOMS WHERE WALLS EXTEND UP TO DECK. SEE DETAIL 3 ON SHEET MH503 FOR SIZES. INSTALL TRANSFER DUCTS ABOVE SUPPLY DUCT ELEVATION SO THAT THE OPENINGS IN THE TOP ARE NO LESS THAN 12" BELOW DECK UNLESS OTHERWISE NOTED.

KEY PLAN:

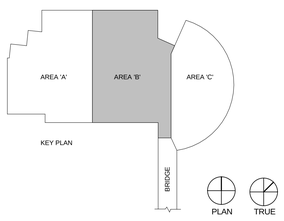

COLVIN ENGINEERING ASSOCIATES
244 West 300 North, Suite 200 / Salt Lake City, Utah 84103
Phone 801.322.2400 / colvinengineering.com

Copyright (C) 2012 by Colvin Engineering Associates, Inc. Salt Lake City, Utah. All rights reserved. Unauthorized copying and/or use is illegal and subject to prosecution.

UNLESS A PROFESSIONAL SEAL WITH SIGNATURE AND DATE IS AFFIXED, THIS DOCUMENT IS PRELIMINARY AND IS NOT INTENDED FOR CONSTRUCTION, RECORDING PURPOSES, OR IMPLEMENTATION

UTAH VALLEY UNIVERSITY

State of Utah
Department of Administrative Services
Division of Facilities Construction & Management
4110 State Office Building
Salt Lake City, Utah 84114
Phone: (801) 538 - 3018
Fax: (801) 538 - 3267

CRSA METHODSTUDIO INC.

CRSA ARCHITECTS
649 east south temple
salt lake city, utah 84102
phone:(801) 355-5915

METHOD STUDIO INC.
925 south west temple
salt lake city, utah 84101
phone:(801) 532-4422

DFCM APPROVAL STAMP

project:
UVU Classroom Building

800 University Way
Orem, UT 84058

project#: DFCM #12192790
date: APRIL 30, 2013

revisions:

1	ADDENDUM #3	5.22.2013
2	ADDENDUM #5	5.25.2013

title:
LEVEL 2 AREA 'B' MECHANICAL FLOOR PLAN

sheet:
MH102B

BID DOC

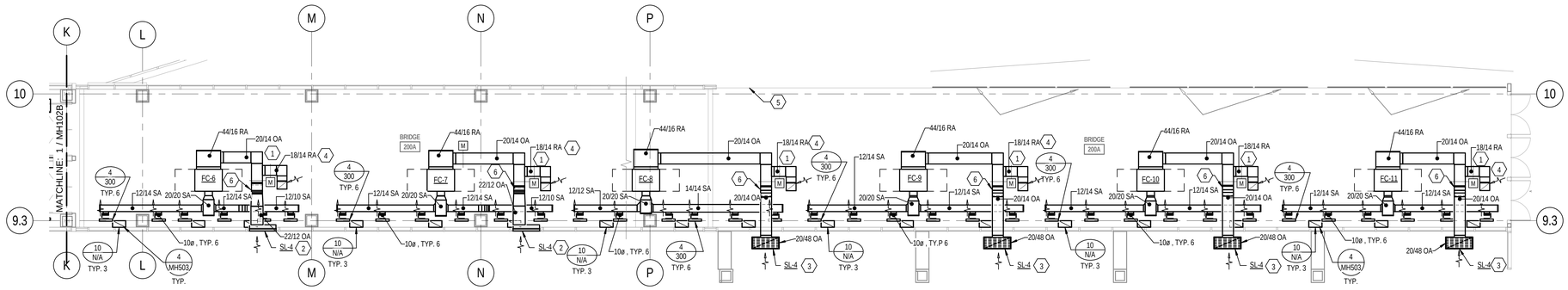

1 LEVEL 2 BRIDGE MECHANICAL PLAN

SCALE: 1/8" = 1'-0"

6' 0' 4' 8' 12' 16'

KEYED NOTES

1. PROVIDE MOTORIZED DAMPER FOR RETURN AIR AND OUTSIDE AIR INLETS TO FAN COIL RETURN PLENUM. BOTH DAMPERS ARE TO OPERATE AS 100% ECONOMIZER BASED ON OUTSIDE AIR DRY BULB TEMP. SET OUTSIDE AIR DAMPER TO MINIMUM CFM SHOWN ON FAN COIL SCHEDULE.
2. OUTSIDE AIR LOUVER TO BE INSTALLED IN SPANDREL GLASS SECTION OF BRIDGE. REFER TO DETAIL D3/AE328. COORDINATE COLOR OF LOUVER WITH ARCHITECT.
3. OUTSIDE AIR LOUVER TO BE INSTALLED HORIZONTALLY IN EXTERIOR SOFFIT ABOVE BRIDGE. COORDINATE THIS PENETRATION WITH ARCHITECTURAL DRAWINGS. COORDINATE COLOR OF LOUVER WITH ARCHITECT.
4. ROUTE RETURN AIR DUCT HORIZONTALLY AND CAP END. PROVIDE OPENING IN TOP OF DUCT (WITH SAME DIMENSIONS AS DUCT SIZE) NEXT TO CAPPED END.
5. REMOVE EXISTING RF-18 AND ALL ASSOCIATED DUCTWORK, GRILLES, DAMPERS AND LOUVER.
6. OFFSET DUCT WITH TWO 45º ELBOWS ABOVE SUPPLY DUCT WORK AT THIS APPROXIMATE LOCATION.

GENERAL NOTES

A. PROVIDE A SOUND BOOT ATOP ALL RETURN AIR GRILLES IN ACCORDANCE WITH DETAIL 4/MH503.

B. ALL SLOT DIFFUSERS SHOWN ON THIS SHEET TO HAVE ONE DIRECTIONAL THROW. THROW IS IN DIRECTION INDICATED BY FLOW ARROWS.

C. THE SPACE ABOVE BRIDGE CEILING IS VERY LIMITED. CONTRACTOR IS RESPONSIBLE FOR COORDINATING INSTALLATION OF ALL TRADES ABOVE THIS CEILING.

1

KEY PLAN:

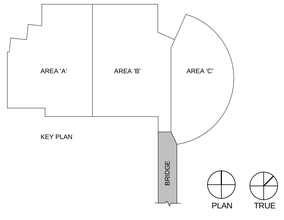

COLVIN ENGINEERING ASSOCIATES
244 West 300 North, Suite 200 / Salt Lake City, Utah 84103
Phone 801.322.2400 / colvinengineering.com

Copyright (C) 2012 by Colvin Engineering Associates, Inc. Salt Lake City, Utah. All rights reserved. Unauthorized copying and/or use is illegal and subject to prosecution.

UNLESS A PROFESSIONAL SEAL WITH SIGNATURE AND DATE IS AFFIXED, THIS DOCUMENT IS PRELIMINARY AND IS NOT INTENDED FOR CONSTRUCTION, RECORDING PURPOSES, OR IMPLEMENTATION

UTAH VALLEY UNIVERSITY

State of Utah
Department of Administrative Services

Division of Facilities Construction & Management
4110 State Office Building
Salt Lake City, Utah 84114
Phone: (801) 538 - 3018
Fax: (801) 538 - 3267

CRSA METHODSTUDIO INC.

CRSA ARCHITECTS
649 east south temple
salt lake city, utah 84102
phone:(801) 355-5915

METHOD STUDIO INC.
925 south west temple
salt lake city, utah 84101
phone:(801) 532-4422

DFCM APPROVAL STAMP

project:
UVU Classroom Building

800 University Way
Orem, UT 84058

project#: DFCM #12192790
date: APRIL 30, 2013

revisions:
1 ADDENDUM #5 5.24.2013

title:
LEVEL 2 BRIDGE MECHANICAL FLOOR PLAN

sheet:
MH102D

BID DOC

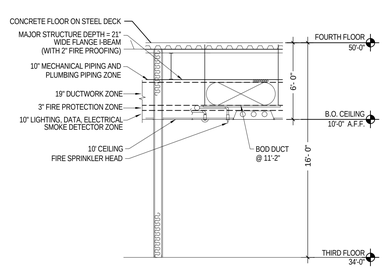

NOTE: EXTREMELY LIMITED SPACE IS AVAILABLE FOR TRADES TO INSTALL THEIR WORK. CAREFUL COORDINATION IS REQUIRED TO ASSURE THAT CROSS-OVER LINES ACTUALLY FIT IN ZONES ALLOTTED. ON OCCASION "FIRE PROTECTION ZONE" AND/OR "ELECTRICAL ZONE" MAY NEED TO TRANSITION UP INTO "STRUCTURAL ZONE" BETWEEN BEAMS AND GIRDERS. GENERAL CONTRACTOR SHALL COORDINATE WORK AND SCHEDULE OF EACH TRADE TO PREVENT UTILITY LINE CONFLICTS. ** NOTE - DUCT TRAPEZE HANGER IS LOCATED IN THE FIRE PROTECTION PIPING ZONE. DO NOT ROUTE FIRE PROTECTION PIPING PARALLEL TO DUCT IN THE AREA DIRECTLY BELOW THE DUCT.

LEVEL 3 - VERTICAL SPACE ALLOCATION SECTION

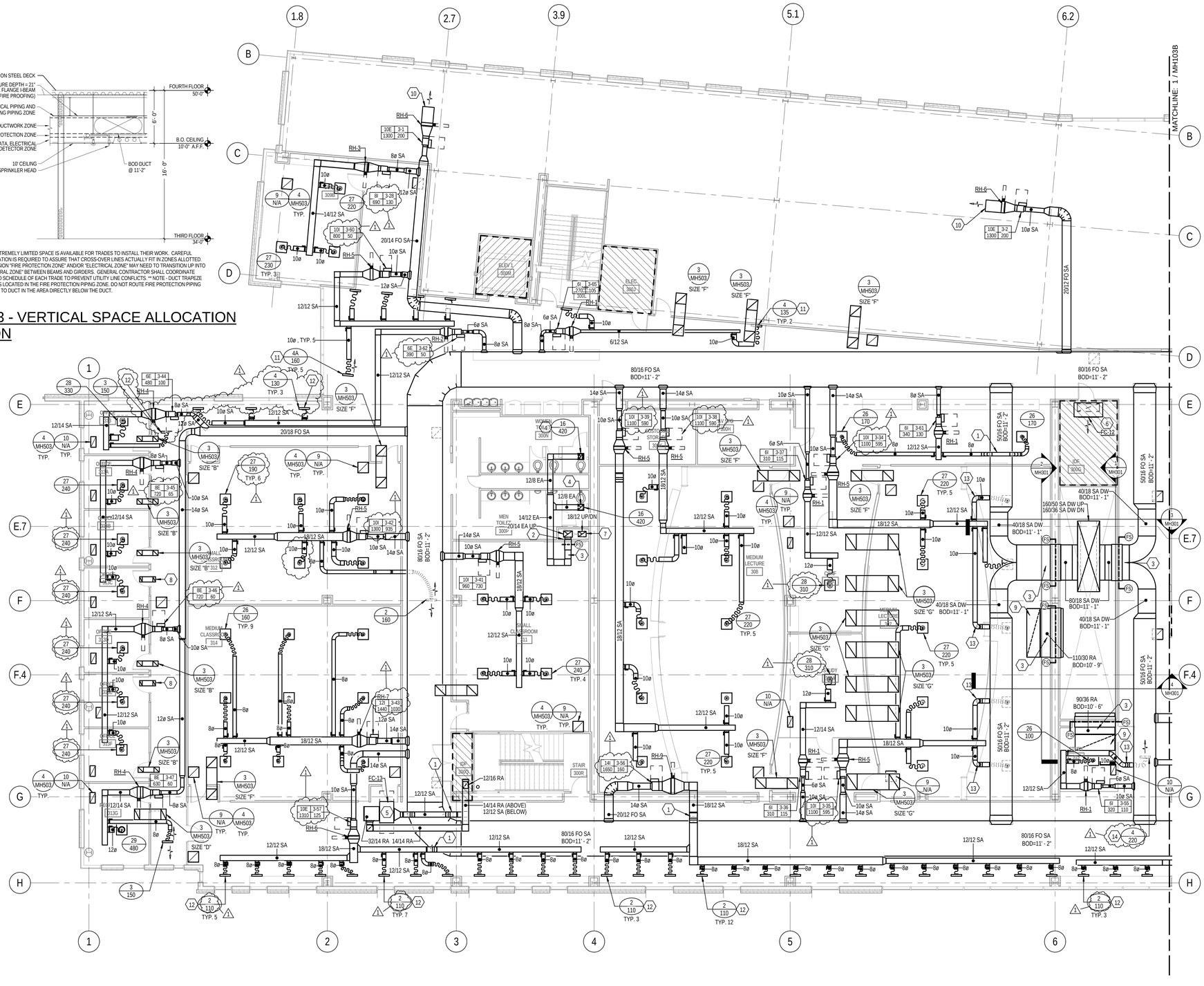

1 LEVEL 3 AREA 'A' MECHANICAL FLOOR PLAN

SCALE: 1/8" = 1'-0"

KEYED NOTES

1. OFFSET DUCT WITH TWO 45º ELBOWS ABOVE SUPPLY DUCT WORK AT THIS APPROXIMATE LOCATION.
2. PROVIDE HIGH EFFICIENCY TAKE-OFF AT EXHAUST DUCT CONNECTION TO RISER.
3. PROVIDE 12"X12" DUCT ACCESS DOOR IN BOTTOM OF DUCT. LOCATE SO THAT FIRE/SMOKE DAMPER POSITION IS VISIBLE WHEN DOOR IS OPENED. FIRE/SMOKE DAMPERS SHALL BE RUSKIN MODEL FSD60-3, OR EQUAL.
4. PROVIDE BALANCING DAMPER IN VERTICAL DUCT OFF OF EXHAUST GRILLE.
5. FAN COIL TO BE LOCATED ABOVE CEILING WITH BOTTOM OF EQUIPMENT AT 11' - 0" ABOVE FINISHED FLOOR. PROVIDE RETURN AIR PLENUM AT INLET OF FAN COIL SAME SIZE AS RETURN AIR CONNECTION. TAP RETURN AIR DUCT IN TO TOP OF RETURN AIR PLENUM AND ROUTE ABOVE FAN COIL AND SUPPLY AIR DUCT IN TO IDF CLOSET. CAP END OF RETURN AIR DUCT AND CREATE 12" X 16" OPENING IN TOP OF DUCT INSIDE IDF CLOSET. SECURE OPENING WITH GALVANIZED WIRE MESH. CENTER OF SA DUCT TO BE AT 11' 10" AND CENTER OF RA TO BE AT 13' 6". PROVIDE GALVANIZED WIRE MESH SCREEN AT END OF SA DUCT AND SECURE FLUSH TO WALL WITH SCREWED FLANGED FRAME.
6. EXPOSED CABINET FAN COIL TO BE LOCATED ABOVE DOOR WITH BOTTOM OF EQUIPMENT AT 10' - 0" ABOVE FINISHED FLOOR.
7. GREASE EXHAUST DUCT RISER.
8. SEE DETAIL 3, SIZE 'A' ON SHEET MH503 FOR TRANSFER AIR DUCT SIZES.
9. CAP END OF RETURN AIR DUCT AND CREATE OPENING IN TOP OF DUCT THE SAME SIZE AS DUCT. PROVIDE MANUAL BALANCING DAMPER FOR ALL RETURN AIR DUCT PENETRATIONS INTO THE MECHANICAL SHAFT. LOCATE DAMPER ON TOP OF HORIZONTAL RETURN AIR DUCT. DAMPER TO BE SAME SIZE AS OPENING IN TOP OF DUCT. DAMPER IS PROVIDED FOR USE BY THE BALANCING CONTRACTOR TO BALANCE THE RETURN AIR FLOWS AND PRESSURES.
10. PROVIDE 36" OF DUCTWORK DOWN STREAM OF THE RE-HEAT COIL. DUCT SIZE TO MATCH COIL SIZE. LEAVE END OF DUCT OPEN.
11. DIRECT ALL SLOTS TOWARDS THE OPPOSITE WALL AT THIS LOCATION.
12. DIRECT ONE SLOT TOWARDS THE WINDOW AND ALL OTHER SLOTS TOWARDS THE SPACE AT THIS LOCATION.
13. OFFSET DUCT WITH TWO 45º ELBOWS BELOW SUPPLY DUCT AT THIS APPROXIMATE LOCATION.
14. DIRECT ALL SLOTS THE SAME DIRECTION AT THIS LOCATION. SEE FLOW ARROW.

GENERAL NOTES

A. DUCTWORK ELEVATION IS PER VERTICAL SPACE ALLOCATION SECTION ON EACH SHEET UNLESS NOTED OTHERWISE ON THE PLAN. PROVIDE OFFSETS AS NECESSARY.

B. DO NOT ROUTE ANY DUCTWORK ABOVE ELECTRICAL, IDF OR ELEVATOR MACHINE ROOMS.

C. ALL EXHAUST DUCTWORK INSIDE RATED SHAFT SHALL BE PROVIDED WITH 1/2" DUCT LINER. ALL OTHER RECTANGULAR EXHAUST DUCTWORK UPSTREAM FROM THE RISER TAKE-OFF SHALL BE PROVIDED WITH 1" DUCT LINER.

D. PROVIDE A SOUND BOOT ATOP ALL RETURN AIR GRILLES IN ACCORDANCE WITH DETAIL 4/MH503.

E. THE DASHED LINES NEXT TO THE VAV BOX INDICATE REQUIRED SERVICE CLEARANCES FOR THE BOX. CLEARANCES SHALL COMPLY WITH NETA 110.26 REQUIREMENTS. PROVIDE 30" X 36" CLEAR IN FRONT OF BOXES DOWN TO CEILING. THIS AREA MUST BE KEPT CLEAR OF ALL EQUIPMENT FROM ALL TRADES TO ALLOW ACCESS TO SERVICE THE BOX. THIS IS TYPICAL FOR ALL VAV BOXES AND RE-HEAT COILS.

F. SUPPLY AIR DUCT FROM AIR HANDLER IN PENTHOUSE IS DOUBLE-WALL FROM THE POINT IT CONNECTS TO THE AIR HANDLER, ALONG ITS ENTIRE LENGTH IN THE SHAFT, TO A POINT APPROXIMATELY 8'-0" BEYOND FIRE/SMOKE DAMPER AT EACH LEVEL.

G. INSTALL VAV BOXES IN ACCORDANCE WITH DETAIL 1 ON SHEET MH503.

H. INSTALL DUCT MOUNTED HEATING COIL IN ACCORDANCE WITH DETAIL 9 ON MH502.

J. TRANSFER AIR DUCTS ARE TO BE INSTALLED IN ALL OFFICES AND CLASSROOMS WHERE WALLS EXTEND UP TO DECK. SEE DETAIL 3 ON SHEET MH503 FOR SIZES. INSTALL TRANSFER DUCTS ABOVE SUPPLY DUCT ELEVATION SO THAT THE OPENINGS IN THE TOP ARE NO LESS THAT 12" BELOW DECK UNLESS OTHERWISE NOTED.

KEY PLAN:

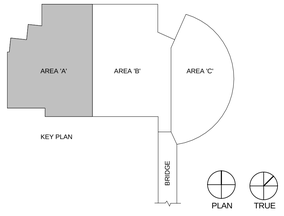

COLVIN ENGINEERING ASSOCIATES
244 West 300 North, Suite 200 / Salt Lake City, Utah 84103
Phone 801.322.2400 / colvinengineering.com

Copyright (C) 2012 by Colvin Engineering Associates, Inc. Salt Lake City, Utah. All rights reserved. Unauthorized copying and/or use is illegal and subject to prosecution.

UNLESS A PROFESSIONAL SEAL WITH SIGNATURE AND DATE IS AFFIXED, THIS DOCUMENT IS PRELIMINARY AND IS NOT INTENDED FOR CONSTRUCTION, RECORDING PURPOSES, OR IMPLEMENTATION

UTAH VALLEY UNIVERSITY

State of Utah
Department of Administrative Services
Division of Facilities Construction & Management
4110 State Office Building
Salt Lake City, Utah 84114
Phone: (801) 538 - 3018
Fax: (801) 538 - 3267

CRSA METHODSTUDIO INC.

CRSA ARCHITECTS
649 east south temple
salt lake city, utah 84102
phone:(801) 355 - 5915

METHOD STUDIO INC.
925 south west temple
salt lake city, utah 84101
phone:(801) 532-4422

DFCM APPROVAL STAMP

project:
UVU Classroom Building

800 University Way
Orem, UT 84058

project#: DFCM #12192790
date: APRIL 30, 2013

revisions:
1 ADDENDUM #5 5.24.2013

title:
LEVEL 3 MECHANICAL FLOOR PLAN AREA A

sheet:
MH103A

BID DOC

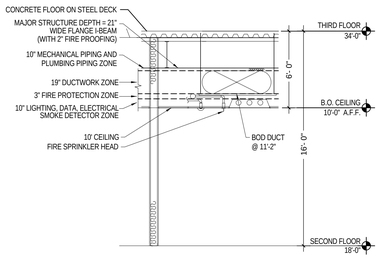

NOTE: EXTREMELY LIMITED SPACE IS AVAILABLE FOR TRADES TO INSTALL THEIR WORK. CAREFUL COORDINATION IS REQUIRED TO ASSURE THAT CROSS-OVER LINES ACTUALLY FIT IN ZONES ALLOTTED. ON OCCASION "FIRE PROTECTION ZONE" AND/OR "ELECTRICAL ZONE" MAY NEED TO TRANSITION UP INTO "STRUCTURAL ZONE" BETWEEN BEAMS AND GIRDERS. GENERAL CONTRACTOR SHALL COORDINATE WORK AND SCHEDULE OF EACH TRADE TO PREVENT UTILITY LINE CONFLICTS. ** NOTE - DUCT TRAPEZE HANGER IS LOCATED IN THE FIRE PROTECTION PIPING ZONE. DO NOT ROUTE FIRE PROTECTION PIPING PARALLEL TO DUCT IN THE AREA DIRECTLY BELOW THE DUCT.

LEVEL 2 - VERTICAL SPACE ALLOCATION SECTION

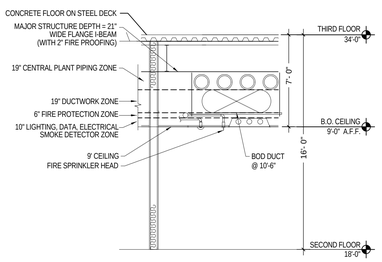

NOTE: EXTREMELY LIMITED SPACE IS AVAILABLE FOR TRADES TO INSTALL THEIR WORK. CAREFUL COORDINATION IS REQUIRED TO ASSURE THAT CROSS-OVER LINES ACTUALLY FIT IN ZONES ALLOTTED. ON OCCASION "FIRE PROTECTION ZONE" AND/OR "ELECTRICAL ZONE" MAY NEED TO TRANSITION UP INTO "STRUCTURAL ZONE" BETWEEN BEAMS AND GIRDERS. GENERAL CONTRACTOR SHALL COORDINATE WORK AND SCHEDULE OF EACH TRADE TO PREVENT UTILITY LINE CONFLICTS. ** NOTE - DUCT TRAPEZE HANGER IS LOCATED IN THE FIRE PROTECTION PIPING ZONE. DO NOT ROUTE FIRE PROTECTION PIPING PARALLEL TO DUCT IN THE AREA DIRECTLY BELOW THE DUCT.

LEVEL 2 - VERTICAL SPACE ALLOCATION IN NORTH HALLWAY SECTION

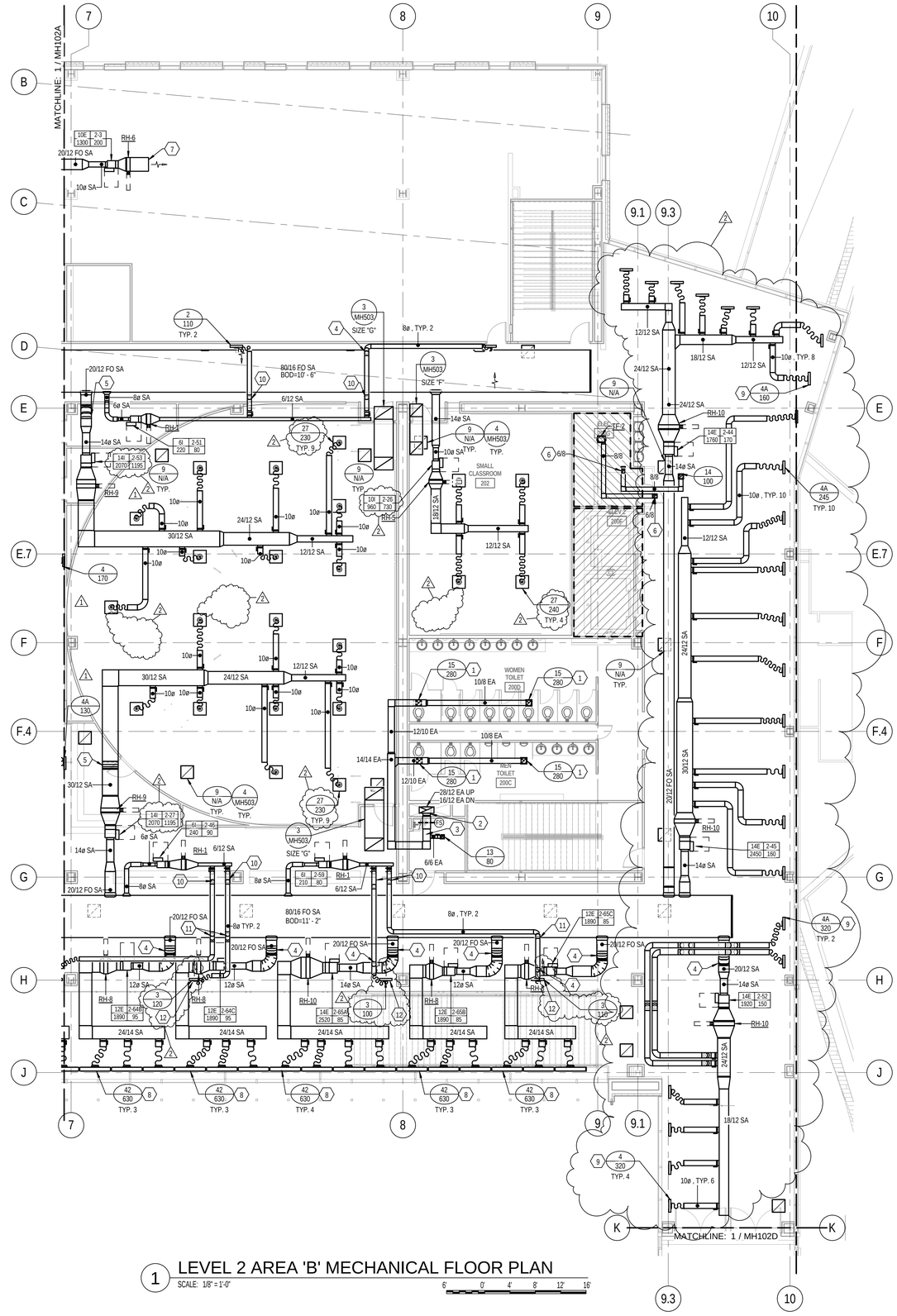

1 LEVEL 2 AREA 'B' MECHANICAL FLOOR PLAN

SCALE: 1/8" = 1'-0"

KEYED NOTES

1. PROVIDE BALANCING DAMPER IN VERTICAL DUCT OFF OF EXHAUST GRILLE.
2. PROVIDE HIGH EFFICIENCY TAKE-OFF AT EXHAUST DUCT CONNECTION TO RISER.
3. PROVIDE 12"X12" DUCT ACCESS DOOR IN BOTTOM OF DUCT. LOCATE SO THAT FIRE/SMOKE DAMPER POSITION IS VISIBLE WHEN DOOR IS OPENED. FIRE/SMOKE DAMPERS SHALL BE RUSKIN MODEL FSD60-3, OR EQUAL.
4. OFFSET DUCT WITH TWO 45º ELBOWS BELOW STRUCTURE AT THIS APPROXIMATE LOCATION.
5. OFFSET DUCT UP HIGH ABOVE HIGH CEILING IN CLASSROOM WITH TWO 45º ELBOWS.
6. OPENING IN TOP OF DUCT. SECURE WIRE MESH OVER OPENING IN DUCT.
7. PROVIDE 36" OF DUCTWORK DOWN STREAM OF THE RE-HEAT COIL. DUCT SIZE TO MATCH COIL SIZE. LEAVE END OF DUCT OPEN.
8. SLOTS ARE TO BE DIRECTED STRAIGHT DOWN TO WASH THE WINDOW AT THIS LOCATION.
9. DIRECT ONE SLOT TOWARDS THE WINDOW AND ALL OTHER SLOTS TOWARDS THE SPACE AT THIS LOCATION.
10. OFFSET DUCT WITH TWO 45º ELBOWS ABOVE SUPPLY DUCT WORK AT THIS APPROXIMATE LOCATION.
11. OFFSET DUCT WITH TWO 45º ELBOWS TO AVOID MECHANICAL PIPING. FIELD COORDINATE.
12. DIRECT ALL SLOTS THE SAME DIRECTION AT THIS LOCATION. SEE FLOW ARROW.

GENERAL NOTES

A. DUCTWORK ELEVATION IS PER VERTICAL SPACE ALLOCATION SECTION ON EACH SHEET UNLESS NOTED OTHERWISE ON THE PLAN. PROVIDE OFFSETS AS NECESSARY.

B. DO NOT ROUTE ANY DUCTWORK ABOVE ELECTRICAL, IDF OR ELEVATOR MACHINE ROOMS.

C. ALL EXHAUST DUCTWORK INSIDE RATED SHAFT SHALL BE PROVIDED WITH 1/2" DUCT LINER. ALL OTHER RECTANGULAR EXHAUST DUCTWORK UPSTREAM FROM THE RISER TAKE-OFF SHALL BE PROVIDED WITH 1" DUCT LINER.

D. PROVIDE A SOUND BOOT ATOP ALL RETURN AIR GRILLES IN ACCORDANCE WITH DETAIL 4/MH503.

E. THE DASHED LINES NEXT TO THE VAV BOX INDICATE REQUIRED SERVICE CLEARANCES FOR THE BOX. CLEARANCES SHALL COMPLY WITH NETA 110.26 REQUIREMENTS. PROVIDE 30" X 36" CLEAR IN FRONT OF BOXES DOWN TO CEILING. THIS AREA MUST BE KEPT CLEAR OF ALL EQUIPMENT FROM ALL TRADES TO ALLOW ACCESS TO SERVICE THE BOX. THIS IS TYPICAL FOR ALL VAV BOXES AND RE-HEAT COILS.

F. SUPPLY AIR DUCT FROM AIR HANDLER IN PENTHOUSE IS DOUBLE-WALL FROM THE POINT IT CONNECTS TO THE AIR HANDLER, ALONG ITS ENTIRE LENGTH IN THE SHAFT, TO A POINT APPROXIMATELY 8'-0" BEYOND FIRE/SMOKE DAMPER AT EACH LEVEL.

G. INSTALL VAV BOXES IN ACCORDANCE WITH DETAIL 1 ON SHEET MH503.

H. INSTALL DUCT MOUNTED HEATING COIL IN ACCORDANCE WITH DETAIL 9 ON MH502.

J. TRANSFER AIR DUCTS ARE TO BE INSTALLED IN ALL OFFICES AND CLASSROOMS WHERE WALLS EXTEND UP TO DECK. SEE DETAIL 3 ON SHEET MH503 FOR SIZES. INSTALL TRANSFER DUCTS ABOVE SUPPLY DUCT ELEVATION SO THAT THE OPENINGS IN THE TOP ARE NO LESS THAT 12" BELOW DECK UNLESS OTHERWISE NOTED.

KEY PLAN:

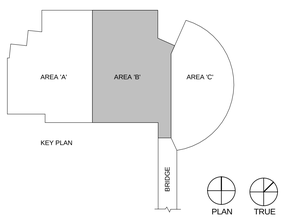

COLVIN ENGINEERING ASSOCIATES
244 West 300 North, Suite 200 / Salt Lake City, Utah 84103
Phone 801.322.2400 / colvinengineering.com

Copyright (C) 2012 by Colvin Engineering Associates, Inc. Salt Lake City, Utah. All rights reserved. Unauthorized copying and/or use is illegal and subject to prosecution.

UNLESS A PROFESSIONAL SEAL WITH SIGNATURE AND DATE IS AFFIXED, THIS DOCUMENT IS PRELIMINARY AND IS NOT INTENDED FOR CONSTRUCTION, RECORDING PURPOSES, OR IMPLEMENTATION

UTAH VALLEY UNIVERSITY

State of Utah
Department of Administrative Services
Division of Facilities Construction & Management
4110 State Office Building
Salt Lake City, Utah 84114
Phone: (801) 538 - 3018
Fax: (801) 538 - 3267

CRSA METHODSTUDIO INC.

CRSA ARCHITECTS
649 east south temple
salt lake city, utah 84102
phone:(801) 355 - 5915

METHOD STUDIO INC.
925 south west temple
salt lake city, utah 84101
phone:(801) 532-4422

DFCM APPROVAL STAMP

project:
UVU Classroom Building

800 University Way
Orem, UT 84058

project#: DFCM #12192790
date: APRIL 30, 2013

revisions:

1	ADDENDUM #3	5.22.2013
2	ADDENDUM #5	5.24.2013

title:
LEVEL 2 AREA 'B' MECHANICAL FLOOR PLAN

sheet:
MH102B

BID DOC

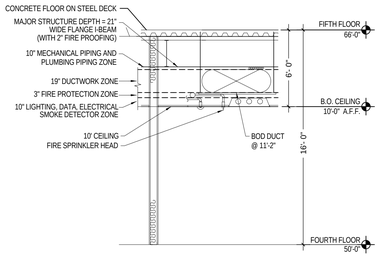

NOTE: EXTREMELY LIMITED SPACE IS AVAILABLE FOR TRADES TO INSTALL THEIR WORK. CAREFUL COORDINATION IS REQUIRED TO ASSURE THAT CROSS-OVER LINES ACTUALLY FIT IN ZONES ALLOTTED. ON OCCASION "FIRE PROTECTION ZONE" AND/OR "ELECTRICAL ZONE" MAY NEED TO TRANSITION UP INTO "STRUCTURAL ZONE" BETWEEN BEAMS AND GIRDERS. GENERAL CONTRACTOR SHALL COORDINATE WORK AND SCHEDULE OF EACH TRADE TO PREVENT UTILITY LINE CONFLICTS. ** NOTE - DUCT TRAPEZE HANGER IS LOCATED IN THE FIRE PROTECTION PIPING ZONE. DO NOT ROUTE FIRE PROTECTION PIPING PARALLEL TO DUCT IN THE AREA DIRECTLY BELOW THE DUCT.

LEVEL 4 - VERTICAL SPACE ALLOCATION SECTION

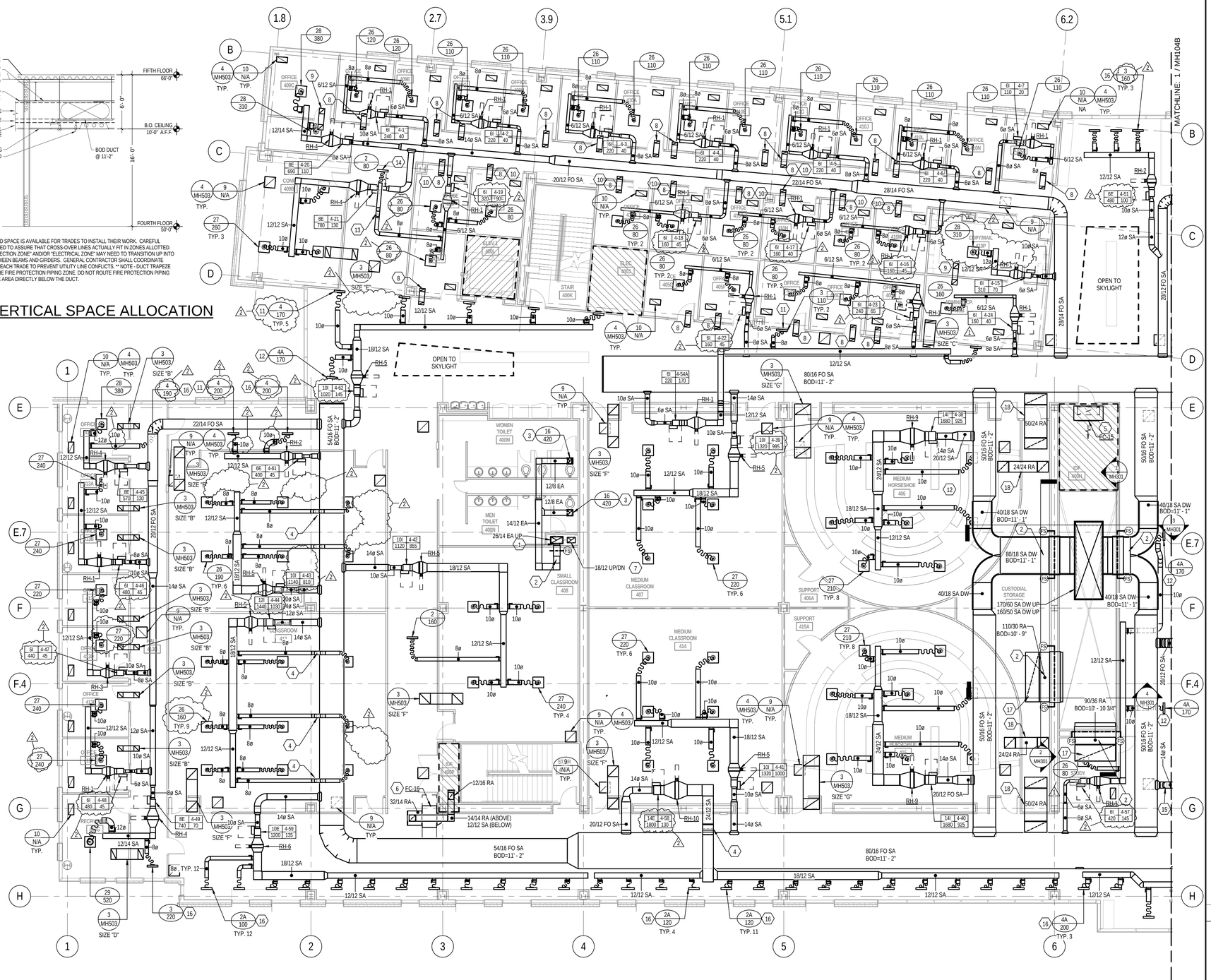

1 LEVEL 4 AREA 'A' MECHANICAL FLOOR PLAN

SCALE: 1/8" = 1'-0"

KEYED NOTES

1. PROVIDE HIGH EFFICIENCY TAKE-OFF AT EXHAUST DUCT CONNECTION TO RISER.
2. PROVIDE 12"X12" DUCT ACCESS DOOR IN BOTTOM OF DUCT. LOCATE SO THAT FIRE/SMOKE DAMPER POSITION IS VISIBLE WHEN DOOR IS OPENED. FIRE/SMOKE DAMPERS SHALL BE RUSKIN MODEL FSD60-3, OR EQUAL.
3. PROVIDE BALANCING DAMPER IN VERTICAL DUCT OFF OF EXHAUST GRILLE.
4. OFFSET DUCT WITH TWO 45º ELBOWS ABOVE SUPPLY DUCT WORK AT THIS APPROXIMATE LOCATION.
5. EXPOSED CABINET FAN COIL TO BE LOCATED ABOVE DOOR WITH BOTTOM OF EQUIPMENT AT 10' - 0" ABOVE FINISHED FLOOR.
6. FAN COIL TO BE LOCATED ABOVE CEILING WITH BOTTOM OF EQUIPMENT AT 11' - 0" ABOVE FINISHED FLOOR. PROVIDE RETURN AIR PLENUM AT INLET OF FAN COIL SAME SIZE AS RETURN AIR CONNECTION. TAP RETURN AIR DUCT IN TO TOP OF RETURN AIR PLENUM AND ROUTE ABOVE FAN COIL AND SUPPLY AIR DUCT IN TO IDF CLOSET. CAP END OF RETURN AIR DUCT AND CREATE 12" X 16" OPENING IN TOP OF DUCT INSIDE IDF CLOSET. SECURE OPENING WITH GALVANIZED WIRE MESH. CENTER OF SA DUCT TO BE AT 11' 10" AND CENTER OF RA TO BE AT 13' 6". PROVIDE GALVANIZED WIRE MESH SCREEN AT END OF SA DUCT AND SECURE FLUSH TO WALL WITH SCREWED FLANGED FRAME.
7. GREASE EXHAUST DUCT RISER.
8. SEE DETAIL 3, SIZE 'A' ON SHEET MH503 FOR TRANSFER AIR DUCT SIZES.
9. SEE DETAIL 3, SIZE 'B' ON SHEET MH503 FOR TRANSFER AIR DUCT SIZES.
10. TRANSFER AIR DUCT IS TO BE INSTALLED TIGHT TO STRUCTURE AT THIS APPROXIMATE LOCATION. COORDINATE WITH STRUCTURE AND SUPPLY AIR DUCT IN THIS AREA. OPENINGS IN THE TOP OF TRANSFER DUCT ARE TO BE ON EITHER SIDE OF THE BEAM SO THAT THE BEAM DOES NOT OBSTRUCT AIR FLOW INTO OR OUT OF THE DUCT.
11. DIRECT ALL SLOTS TOWARDS THE OPPOSITE WALL AT THIS LOCATION.
12. DIRECT TWO SLOTS ONE WAY AND TWO SLOTS THE OTHER WAY AT THIS LOCATION.
13. OFFSET DUCT UP WITH TWO 45º ELBOWS OVER VAV BOX AND REHEAT COIL CLEARANCE AREAS.
14. DIRECT ALL SLOTS THE SAME DIRECTION AT THIS LOCATION. SEE FLOW ARROW.
15. OFFSET MEDIUM PRESSURE DUCT UP WITH TWO 45º ELBOWS TO AVOID LIGHT COVE AT PERIMETER OF CORRIDOR.
16. DIRECT ONE SLOT TOWARDS THE WINDOW AND ALL OTHER SLOTS TOWARDS THE SPACE AT THIS LOCATION.
17. CAP END OF RETURN AIR DUCT AND CREATE OPENING IN TOP OF DUCT THE SAME SIZE AS DUCT. PROVIDE MANUAL BALANCING DAMPER FOR ALL RETURN AIR DUCT PENETRATIONS INTO THE MECHANICAL SHAFT. LOCATE DAMPER ON TOP OF HORIZONTAL RETURN AIR DUCT. DAMPER TO BE SAME SIZE AS OPENING IN TOP OF DUCT. DAMPER IS PROVIDED FOR USE BY THE BALANCING CONTRACTOR TO BALANCE THE RETURN AIR FLOWS AND PRESSURES.
18. CAP ENDS OF RETURN AIR DUCT AND CREATE OPENING IN TOP OF DUCT THE SAME SIZE AS DUCT AT EACH END.

GENERAL NOTES

A. DUCTWORK ELEVATION IS PER VERTICAL SPACE ALLOCATION SECTION ON EACH SHEET UNLESS NOTED OTHERWISE ON THE PLAN. PROVIDE OFFSETS AS NECESSARY.

B. DO NOT ROUTE ANY DUCTWORK ABOVE ELECTRICAL, IDF OR ELEVATOR MACHINE ROOMS.

C. ALL EXHAUST DUCTWORK INSIDE RATED SHAFT SHALL BE PROVIDED WITH 1/2" DUCT LINER. ALL OTHER RECTANGULAR EXHAUST DUCTWORK UPSTREAM FROM THE RISER TAKE-OFF SHALL BE PROVIDED WITH 1" DUCT LINER.

D. PROVIDE A SOUND BOOT ATOP ALL RETURN AIR GRILLES IN ACCORDANCE WITH DETAIL 4/MH503.

E. THE DASHED LINES NEXT TO THE VAV BOX INDICATE REQUIRED SERVICE CLEARANCES FOR THE BOX. CLEARANCES SHALL COMPLY WITH NETA 110.26 REQUIREMENTS. PROVIDE 30" X 36" CLEAR IN FRONT OF BOXES DOWN TO CEILING. THIS AREA MUST BE KEPT CLEAR OF ALL EQUIPMENT FROM ALL TRADES TO ALLOW ACCESS TO SERVICE THE BOX. THIS IS TYPICAL FOR ALL VAV BOXES AND RE-HEAT COILS.

F. SUPPLY AIR DUCT FROM AIR HANDLER IN PENTHOUSE IS DOUBLE-WALL FROM THE POINT IT CONNECTS TO THE AIR HANDLER, ALONG ITS ENTIRE LENGTH IN THE SHAFT, TO A POINT APPROXIMATELY 8'-0" BEYOND FIRE/SMOKE DAMPER AT EACH LEVEL.

G. INSTALL VAV BOXES IN ACCORDANCE WITH DETAIL 1 ON SHEET MH503.

H. INSTALL DUCT MOUNTED HEATING COIL IN ACCORDANCE WITH DETAIL 9 ON MH502.

J. TRANSFER AIR DUCTS ARE TO BE INSTALLED IN ALL OFFICES AND CLASSROOMS WHERE WALLS EXTEND UP TO DECK. SEE DETAIL 3 ON SHEET MH503 FOR SIZES. INSTALL TRANSFER DUCTS ABOVE SUPPLY DUCT ELEVATION SO THAT THE OPENINGS IN THE TOP ARE NO LESS THAT 12" BELOW DECK UNLESS OTHERWISE NOTED.

KEY PLAN:

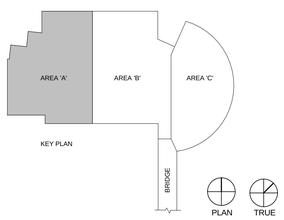

COLVIN ENGINEERING ASSOCIATES
244 West 300 North, Suite 200 / Salt Lake City, Utah 84103
Phone 801.322.2400 / colvingineering.com

Copyright (C) 2012 by Colvin Engineering Associates, Inc. Salt Lake City, Utah. All rights reserved. Unauthorized copying and/or use is illegal and subject to prosecution.

UNLESS A PROFESSIONAL SEAL WITH SIGNATURE AND DATE IS AFFIXED, THIS DOCUMENT IS PRELIMINARY AND IS NOT INTENDED FOR CONSTRUCTION, RECORDING PURPOSES, OR IMPLEMENTATION

UTAH VALLEY UNIVERSITY

State of Utah
Department of Administrative Services
Division of Facilities Construction & Management
4110 State Office Building
Salt Lake City, Utah 84114
Phone: (801) 538 - 3018
Fax: (801) 538 - 3267

CRSA METHODSTUDIO INC.

CRSA ARCHITECTS
649 east south temple
salt lake city, utah 84102
phone:(801) 355-5915

METHODSTUDIO INC.
925 south west temple
salt lake city, utah 84101
phone:(801) 532-4422

DFCM APPROVAL STAMP

project:
UVU Classroom Building

800 University Way
Orem, UT 84058

project#: DFCM #12192790
date: APRIL 30, 2013

revisions:
1 ADDENDUM #3 5.22.2013
2 ADDENDUM #5 5.24.2013

title:
LEVEL 4 MECHANICAL FLOOR PLAN AREA A

sheet:
MH104A

BID DOC

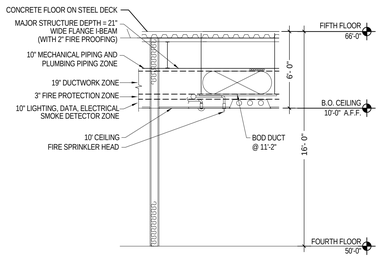

NOTE: EXTREMELY LIMITED SPACE IS AVAILABLE FOR TRADES TO INSTALL THEIR WORK. CAREFUL COORDINATION IS REQUIRED TO ASSURE THAT CROSS-OVER LINES ACTUALLY FIT IN ZONES ALLOTTED. ON OCCASION "FIRE PROTECTION ZONE" AND/OR "ELECTRICAL ZONE" MAY NEED TO TRANSITION UP INTO "STRUCTURAL ZONE" BETWEEN BEAMS AND GIRDERS. GENERAL CONTRACTOR SHALL COORDINATE WORK AND SCHEDULE OF EACH TRADE TO PREVENT UTILITY LINE CONFLICTS. ** NOTE - DUCT TRAPEZE HANGER IS LOCATED IN THE FIRE PROTECTION PIPING ZONE. DO NOT ROUTE FIRE PROTECTION PIPING PARALLEL TO DUCT IN THE AREA DIRECTLY BELOW THE DUCT.

LEVEL 4 - VERTICAL SPACE ALLOCATION SECTION

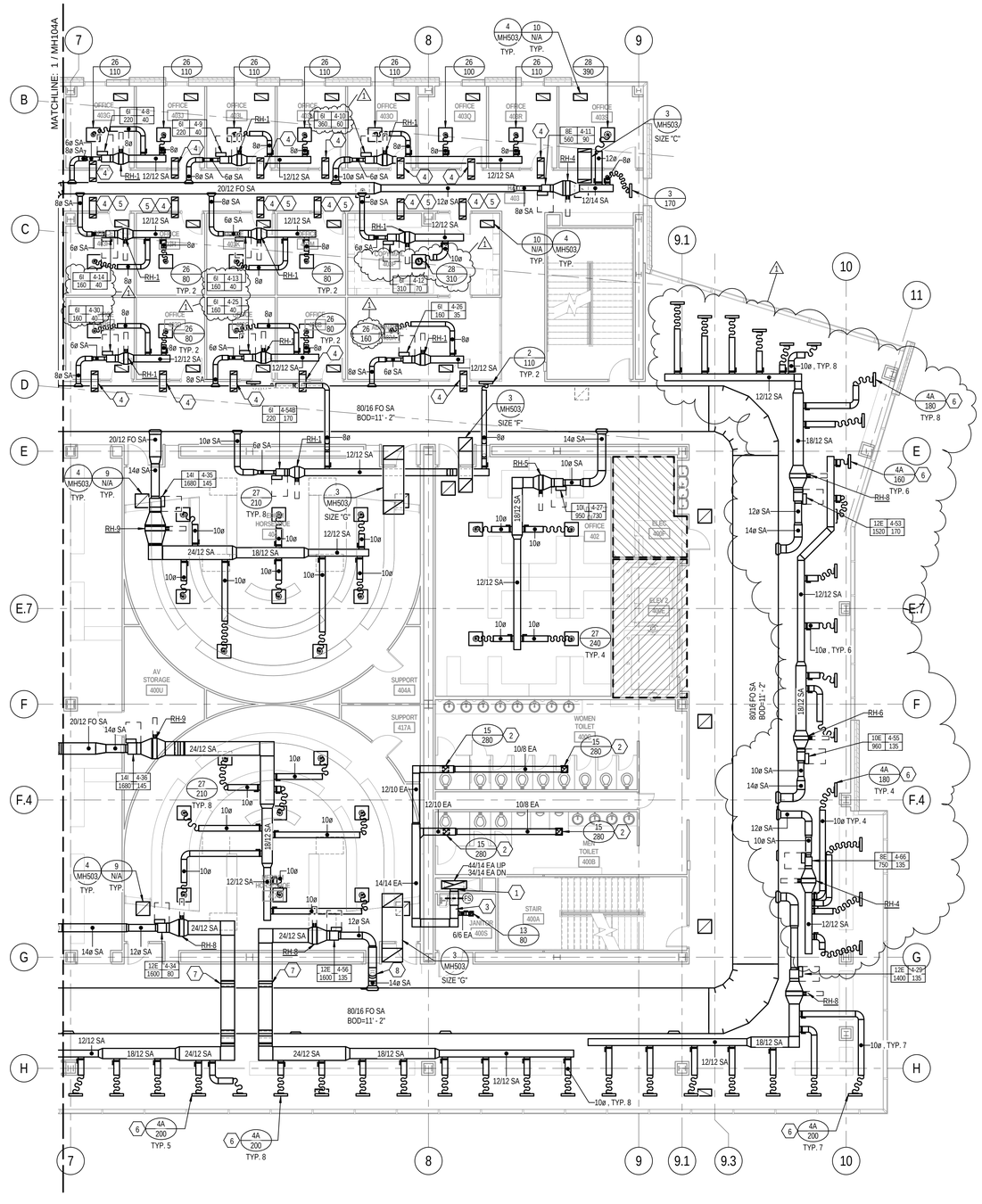

1 LEVEL 4 AREA 'B' MECHANICAL FLOOR PLAN

SCALE: 1/8" = 1'-0"

KEYED NOTES

1. PROVIDE HIGH EFFICIENCY TAKE-OFF AT EXHAUST DUCT CONNECTION TO RISER.
2. PROVIDE BALANCING DAMPER IN VERTICAL DUCT OFF OF EXHAUST GRILLE.
3. PROVIDE 12"X12" DUCT ACCESS DOOR IN BOTTOM OF DUCT. LOCATE SO THAT FIRE/SMOKE DAMPER POSITION IS VISIBLE WHEN DOOR IS OPENED. FIRE/SMOKE DAMPERS SHALL BE RUSKIN MODEL FSD60-3, OR EQUAL.
4. SEE DETAIL 3, SIZE 'A' ON SHEET MH503 FOR TRANSFER AIR DUCT SIZES.
5. TRANSFER AIR DUCT IS TO BE INSTALLED TIGHT TO STRUCTURE AT THIS APPROXIMATE LOCATION. COORDINATE WITH STRUCTURE AND SUPPLY AIR DUCT IN THIS AREA. OPENINGS IN THE TOP OF TRANSFER DUCT ARE TO BE ON EITHER SIDE OF THE BEAM SO THAT THE BEAM DOES NOT OBSTRUCT AIR FLOW INTO OR OUT OF THE DUCT.
6. DIRECT ONE SLOT TOWARDS THE WINDOW AND ALL OTHER SLOTS TOWARDS THE SPACE AT THIS LOCATION.
7. OFFSET DUCT WITH TWO 45º ELBOWS ABOVE SUPPLY DUCT WORK AT THIS APPROXIMATE LOCATION.
8. OFFSET MEDIUM PRESSURE DUCT UP WITH TWO 45º ELBOWS TO AVOID LIGHT COVE AT PERIMETER OF CORRIDOR.

GENERAL NOTES

A. DUCTWORK ELEVATION IS PER VERTICAL SPACE ALLOCATION SECTION ON EACH SHEET UNLESS NOTED OTHERWISE ON THE PLAN. PROVIDE OFF-SETS AS NECESSARY.
B. DO NOT ROUTE ANY DUCTWORK ABOVE ELECTRICAL, IDF OR ELEVATOR MACHINE ROOMS.
C. ALL EXHAUST DUCTWORK INSIDE RATED SHAFT SHALL BE PROVIDED WITH 1/2" DUCT LINER. ALL OTHER RECTANGULAR EXHAUST DUCTWORK UPSTREAM FROM THE RISER TAKE-OFF SHALL BE PROVIDED WITH 1" DUCT LINER.
D. PROVIDE A SOUND BOOT ATOP ALL RETURN AIR GRILLES IN ACCORDANCE WITH DETAIL 4/MH503.
E. THE DASHED LINES NEXT TO THE VAV BOX INDICATE REQUIRED SERVICE CLEARANCES FOR THE BOX. CLEARANCES SHALL COMPLY WITH NETA 110.26 REQUIREMENTS. PROVIDE 30" X 36" CLEAR IN FRONT OF BOXES DOWN TO CEILING. THIS AREA MUST BE KEPT CLEAR OF ALL EQUIPMENT FROM ALL TRADES TO ALLOW ACCESS TO SERVICE THE BOX. THIS IS TYPICAL FOR ALL VAV BOXES AND RE-HEAT COILS.
F. SUPPLY AIR DUCT FROM AIR HANDLER IN PENTHOUSE IS DOUBLE-WALL FROM THE POINT IT CONNECTS TO THE AIR HANDLER, ALONG ITS ENTIRE LENGTH IN THE SHAFT, TO A POINT APPROXIMATELY 8'-0" BEYOND FIRE/SMOKE DAMPER AT EACH LEVEL.
G. INSTALL VAV BOXES IN ACCORDANCE WITH DETAIL 1 ON SHEET MH503.
H. INSTALL DUCT MOUNTED HEATING COIL IN ACCORDANCE WITH DETAIL 9 ON MH502.
J. TRANSFER AIR DUCTS ARE TO BE INSTALLED IN ALL OFFICES AND CLASSROOMS WHERE WALLS EXTEND UP TO DECK. SEE DETAIL 3 ON SHEET MH503 FOR SIZES. INSTALL TRANSFER DUCTS ABOVE SUPPLY DUCT ELEVATION SO THAT THE OPENINGS IN THE TOP ARE NO LESS THAT 12" BELOW DECK UNLESS OTHERWISE NOTED.

KEY PLAN:

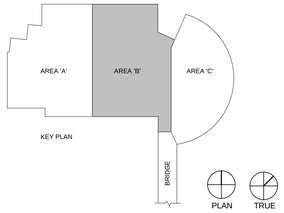

COLVIN ENGINEERING ASSOCIATES
244 West 300 North, Suite 200 / Salt Lake City, Utah 84103
Phone 801.322.2400 / colvinengineering.com

Copyright (C) 2012 by Colvin Engineering Associates, Inc. Salt Lake City, Utah. All rights reserved. Unauthorized copying and/or use is illegal and subject to prosecution.

UNLESS A PROFESSIONAL SEAL WITH SIGNATURE AND DATE IS AFFIXED, THIS DOCUMENT IS PRELIMINARY AND IS NOT INTENDED FOR CONSTRUCTION, RECORDING PURPOSES, OR IMPLEMENTATION

UTAH VALLEY UNIVERSITY

State of Utah
Department of Administrative Services
Division of Facilities Construction & Management
4110 State Office Building
Salt Lake City, Utah 84114
Phone: (801) 538 - 3018
Fax: (801) 538 - 3267

CRSA ARCHITECTS
649 east south temple
salt lake city, utah 84102
phone:(801) 355 - 5915

METHOD STUDIO INC.
925 south west temple
salt lake city, utah 84101
phone:(801) 532-4422

DFCM APPROVAL STAMP

project:
UVU Classroom Building

800 University Way
Orem, UT 84058

project#: DFCM #12192790
date: APRIL 30, 2013

revisions:
1 ADDENDUM #5 5.24.2013

title:
LEVEL 4 MECHANICAL FLOOR PLAN AREA B

sheet:
MH104B

BID DOC

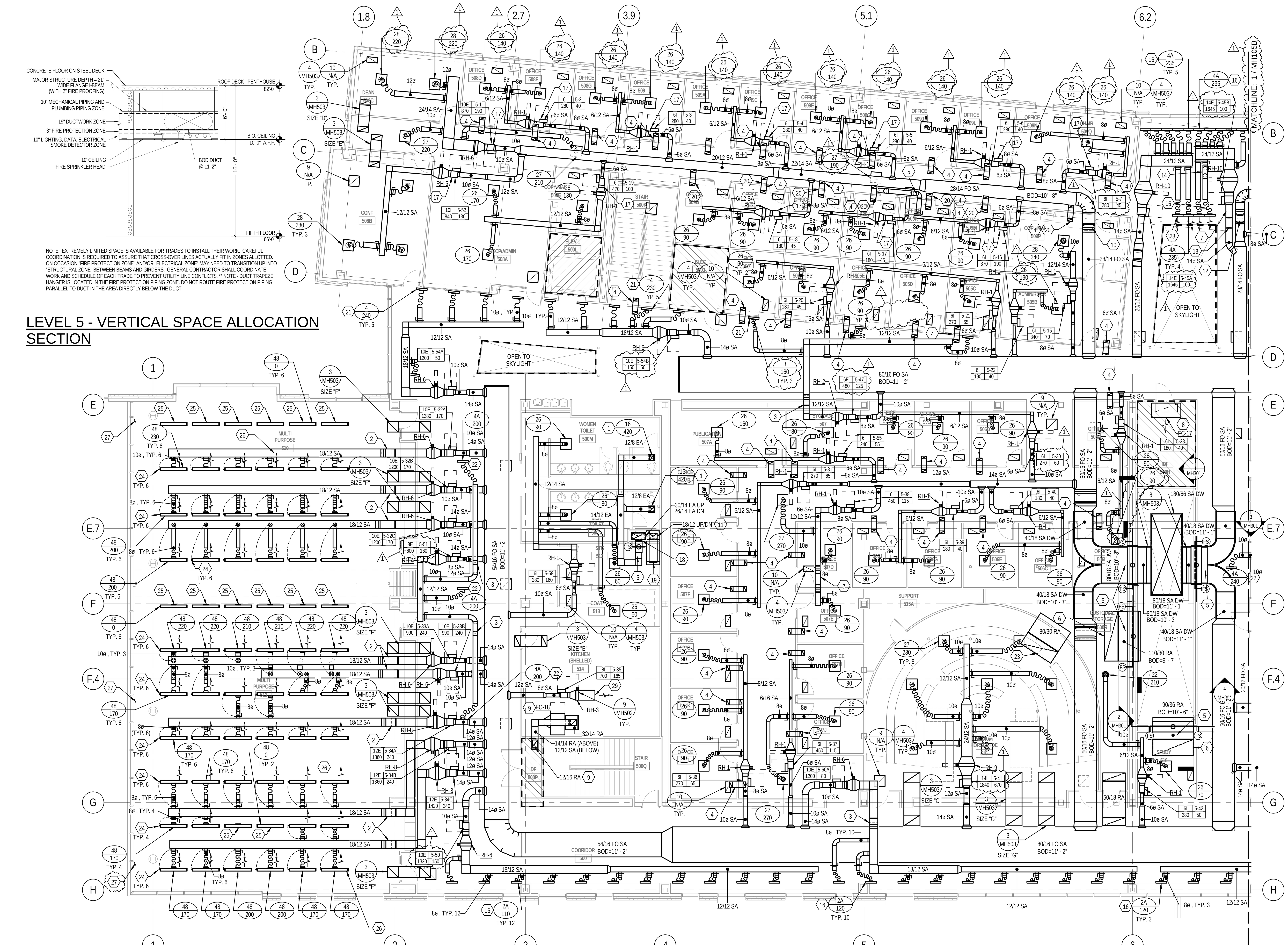

LEVEL 5 - VERTICAL SPACE ALLOCATION SECTION

1 LEVEL 5 AREA 'A' MECHANICAL FLOOR PLAN

SCALE: 1/8" = 1'-0"

KEYED NOTES

1. PROVIDE BALANCING DAMPER IN VERTICAL DUCT OFF OF EXHAUST GRILLE.
2. OFFSET DUCT UP INTO JOIST SHADOW WITH TWO 45º ELBOWS AT THIS APPROXIMATE LOCATION. OFFSET SHALL OCCUR INSIDE SOFFIT. ROUTE LOW PRESSURE DUCT UP HIGH WITHIN JOIST SHADOW TO SUPPLY DIFFUSERS.
3. OFFSET DUCT WITH TWO 45º ELBOWS ABOVE SUPPLY DUCT WORK AT THIS APPROXIMATE LOCATION.
4. SEE DETAIL 3, SIZE 'A' ON SHEET MH503 FOR TRANSFER AIR DUCT SIZES.
5. PROVIDE 12"X12" DUCT ACCESS DOOR IN BOTTOM OF DUCT. LOCATE SO THAT FIRE/SMOKE DAMPER POSITION IS VISIBLE WHEN DOOR IS OPENED. FIRE/SMOKE DAMPERS SHALL BE RUSKIN MODEL FSD60-3, OR EQUAL.
6. CAP END OF RETURN AIR DUCT AND CREATE OPENING IN TOP OF DUCT THE SAME SIZE AS DUCT. PROVIDE MANUAL BALANCING DAMPER FOR ALL RETURN AIR DUCT PENETRATIONS INTO THE MECHANICAL SHAFT. LOCATE DAMPER ON TOP OF HORIZONTAL RETURN AIR DUCT. DAMPER TO BE SAME SIZE AS OPENING IN TOP OF DUCT. DAMPER IS PROVIDED FOR USE BY THE BALANCING CONTRACTOR TO BALANCE THE RETURN AIR FLOWS AND PRESSURES.
7. OFFSET DUCT WITH TWO 45º ELBOWS ABOVE/BELOW ROOF/OVERFLOW DRAINS AT THIS APPROXIMATE LOCATION.
8. EXPOSED CABINET FAN COIL TO BE LOCATED ABOVE DOOR WITH BOTTOM OF EQUIPMENT AT 10' - 0" ABOVE FINISHED FLOOR.
9. FAN COIL TO BE LOCATED ABOVE CEILING WITH BOTTOM OF EQUIPMENT AT 11' - 0" ABOVE FINISHED FLOOR. PROVIDE RETURN AIR PLENUM AT INLET OF FAN COIL SAME SIZE AS RETURN AIR CONNECTION. TAP RETURN AIR DUCT IN TO TOP OF RETURN AIR PLENUM AND ROUTE ABOVE FAN COIL AND SUPPLY AIR DUCT IN TO IDF CLOSET. CAP END OF RETURN AIR DUCT AND CREATE 12" X 16" OPENING IN TOP OF DUCT INSIDE IDF CLOSET. SECURE OPENING WITH GALVANIZED WIRE MESH. CENTER OF SA DUCT TO BE AT 11' 10" AND CENTER OF RA TO BE AT 13' 6". PROVIDE GALVANIZED WIRE MESH SCREEN AT END OF SA DUCT AND SECURE FLUSH TO WALL WITH SCREWED FLANGED FRAME.
10. OFFSET DUCT WITH TWO 45º ELBOWS BELOW STRUCTURE AT THIS APPROXIMATE LOCATION.
11. GREASE EXHAUST DUCT RISER.
12. OFFSET DUCT WITH TWO 45º ELBOWS UP OVER ROOF DRAIN PIPING IN THIS AREA.
13. OFFSET DUCT WITH TWO 45º ELBOWS BELOW ROOF DRAIN PIPING AND BEAM IN THIS AREA.
14. OFFSET DUCT UP WITH TWO 45º ELBOWS OVER VAV BOX AND REHEAT COIL CLEARANCE AREAS.
15. COORDINATE FLEX DUCT WITH ROOF DRAIN PIPING AT THIS APPROXIMATE LOCATION.
16. DIRECT ONE SLOT TOWARDS THE WINDOW AND ALL OTHER SLOTS TOWARDS THE SPACE AT THIS LOCATION.
17. VAV BOXES AND ASSOCIATED DUCT WORK IS TO BE INSTALLED WITH CENTER OF DUCT AT 11'-3" IN THIS AREA.
18. PROVIDE HIGH EFFICIENCY TAKE-OFF AT EXHAUST DUCT CONNECTION TO RISER.
19. CAP GREASE DUCT ABOVE CEILING FOR CONNECTION TO ROOF MOUNTED FAN TO BE ADDED IN FUTURE CAFE BUILD-OUT.
20. TRANSFER AIR DUCT IS TO BE INSTALLED TIGHT TO STRUCTURE AT THIS APPROXIMATE LOCATION. COORDINATE WITH STRUCTURE AND SUPPLY AIR DUCT IN THIS AREA. OPENINGS IN THE TOP OF TRANSFER DUCT ARE TO BE ON EITHER SIDE OF THE BEAM SO THAT THE BEAM DOES NOT OBSTRUCT AIR FLOW INTO OR OUT OF THE DUCT.
21. DIRECT ALL SLOTS TOWARDS THE OPPOSITE WALL AT THIS LOCATION.
22. DIRECT TWO SLOTS ONE WAY AND TWO SLOTS THE OTHER WAY AT THIS LOCATION.
23. ROUTE RETURN AIR DUCT HORIZONTALLY AND CAP END. PROVIDE OPENING IN TOP OF DUCT (WITH SAME DIMENSIONS AS DUCT SIZE) NEXT TO CAPPED END.
24. REMOTE DAMPER CONTROL TO BE PROVIDED FOR THIS DIFFUSER. BALANCING DAMPER TO BE LOCATED AS FAR UPSTREAM FROM GRILLE AS POSSIBLE BUT MUST ACCOMODATE THE STANDARD 8' LONG DAMPER CONTROL CABLE. REMOTE CONTROL RECEPTACLE TO BE MOUNTED IN BLANK OFF PLATE IN CEILING NEXT TO DIFFUSER PER ARCHITECTURAL DETAIL B3/AE523. RECEPTACLE COVER TO BE PAINTED FLAT BLACK.
25. INACTIVE SUPPLY DIFFUSER. PROVIDE SUPPLY DIFFUSER TYPE AS TAGGED. DO NOT CONNECT DUCT TO THIS DIFFUSER. SEAL ALL DIFFUSER OPENINGS ABOVE CEILING AIR TIGHT SO THAT NO AIR WILL PASS THROUGH DIFFUSER. THIS DIFFUSER TO APPEAR THE SAME AS ALL OTHER SUPPLY DIFFUSERS IN THIS ROOM WHEN LOOKING UP AT CEILING.
26. ALL SLOT DIFFUSERS SHOWN IN MULTI-PURPOSE ROOMS 510 AND 511 TO HAVE ONE DIRECTIONAL THROW. THROW IS IN DIRECTION INDICATED BY FLOW ARROWS.
27. RETURN AIR PATH FOR MULTI-PURPOSE ROOMS 510 AND 511 IS THROUGH OPENING IN CEILING AT EXTERIOR WALL. THIS OPENING TO PROVIDE MINIMUM 10 SQUARE FEET OF FREE AREA. REFER TO ARCHITECTURAL REFLECTED CEILING PLANS AND DETAILS.
28. DIRECT ALL SLOTS THE SAME DIRECTION AT THIS LOCATION. SEE FLOW ARROW.
29. PROVIDE 36" OF DUCTWORK DOWN STREAM OF THE RE-HEAT COIL. DUCT SIZE TO MATCH COIL SIZE. LEAVE END OF DUCT OPEN.

GENERAL NOTES

A. DUCTWORK ELEVATION IS PER VERTICAL SPACE ALLOCATION SECTION ON EACH SHEET UNLESS NOTED OTHERWISE ON THE PLAN. PROVIDE OFFSETS AS NECESSARY.
B. DO NOT ROUTE ANY DUCTWORK ABOVE ELECTRICAL, IDF OR ELEVATOR MACHINE ROOMS.
C. ALL EXHAUST DUCTWORK INSIDE RATED SHAFT SHALL BE PROVIDED WITH 1/2" DUCT LINER. ALL OTHER RECTANGULAR EXHAUST DUCTWORK UPSTREAM FROM THE RISER TAKE-OFF SHALL BE PROVIDED WITH 1" DUCT LINER.
D. PROVIDE A SOUND BOOT ATOP ALL RETURN AIR GRILLES IN ACCORDANCE WITH DETAIL 4/MH503.
E. THE DASHED LINES NEXT TO THE VAV BOX INDICATE REQUIRED SERVICE CLEARANCES FOR THE BOX. CLEARANCES SHALL COMPLY WITH NETA 110.26 REQUIREMENTS. PROVIDE 30" X 36" CLEAR IN FRONT OF BOXES DOWN TO CEILING. THIS AREA MUST BE KEPT CLEAR OF ALL EQUIPMENT FROM ALL TRADES TO ALLOW ACCESS TO SERVICE THE BOX. THIS IS TYPICAL FOR ALL VAV BOXES AND RE-HEAT COILS.
F. SUPPLY AIR DUCT FROM AIR HANDLER IN PENTHOUSE IS DOUBLE-WALL FROM THE POINT IT CONNECTS TO THE AIR HANDLER, ALONG ITS ENTIRE LENGTH IN THE SHAFT, TO A POINT APPROXIMATELY 8'-0" BEYOND FIRE/SMOKE DAMPER AT EACH LEVEL.
G. INSTALL VAV BOXES IN ACCORDANCE WITH DETAIL 1 ON SHEET MH503.
H. INSTALL DUCT MOUNTED HEATING COIL IN ACCORDANCE WITH DETAIL 9 ON MH502.
J. TRANSFER AIR DUCTS ARE TO BE INSTALLED IN ALL OFFICES AND CLASSROOMS WHERE WALLS EXTEND UP TO DECK. SEE DETAIL 3 ON SHEET MH503 FOR SIZES. INSTALL TRANSFER DUCTS ABOVE SUPPLY DUCT ELEVATION SO THAT THE OPENINGS IN THE TOP

KEY PLAN:

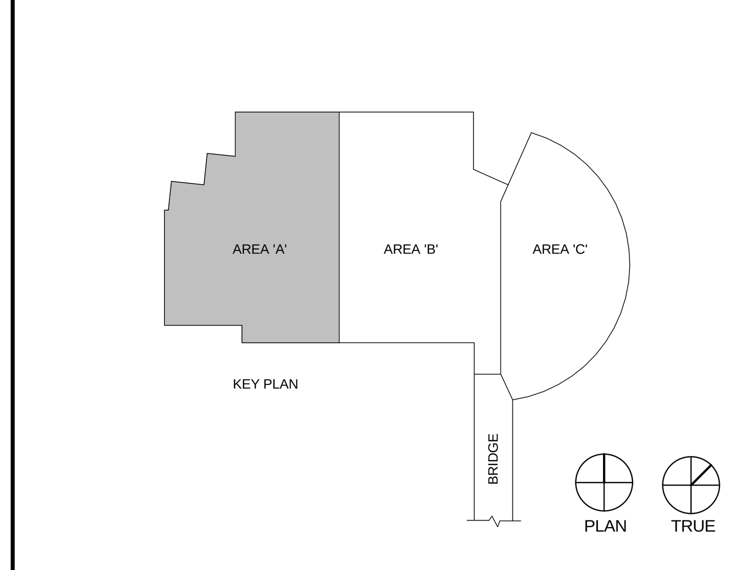

COLVIN ENGINEERING ASSOCIATES
244 West 300 North, Suite 200 / Salt Lake City, Utah 84103
Phone 801.322.2400 / colvinengineering.com

Copyright (C) 2012 by Colvin Engineering Associates, Inc. Salt Lake City, Utah. All rights reserved. Unauthorized copying and/or use is illegal and subject to prosecution.

UNLESS A PROFESSIONAL SEAL WITH SIGNATURE AND DATE IS AFFIXED, THIS DOCUMENT IS PRELIMINARY AND IS NOT INTENDED FOR CONSTRUCTION, RECORDING PURPOSES, OR IMPLEMENTATION

UTAH VALLEY UVU UNIVERSITY

State of Utah
Department of Administrative Services
Division of Facilities Construction & Management
4110 State Office Building
Salt Lake City, Utah 84114
Phone: (801) 538 - 3018
Fax: (801) 538 - 3267

CRSA METHOD STUDIO INC.

CRSA ARCHITECTS
649 east south temple
salt lake city, utah 84102
phone: (801) 355 - 5915

METHOD STUDIO INC.
925 south west temple
salt lake city, utah 84101
phone: (801) 532-4422

DFCM APPROVAL STAMP

project: UVU Classroom Building

800 University Way
Orem, UT 84058

project#: DFCM #12192790
date: APRIL 30, 2013

revisions:
1 ADDENDUM #5 5.24.2013

title: LEVEL 5 MECHANICAL FLOOR PLAN AREA A

sheet: MH105A

BID DOC

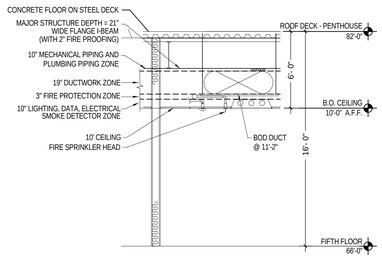

NOTE: EXTREMELY LIMITED SPACE IS AVAILABLE FOR TRADES TO INSTALL THEIR WORK. CAREFUL COORDINATION IS REQUIRED TO ASSURE THAT CROSS-OVER LINES ACTUALLY FIT IN ZONES ALLOTTED. ON OCCASION "FIRE PROTECTION ZONE" AND/OR "ELECTRICAL ZONE" MAY NEED TO TRANSITION UP INTO "STRUCTURAL ZONE" BETWEEN BEAMS AND GIRDERS. GENERAL CONTRACTOR SHALL COORDINATE WORK AND SCHEDULE OF EACH TRADE TO PREVENT UTILITY LINE CONFLICTS. ** NOTE - DUCT TRAPEZE HANGER IS LOCATED IN THE FIRE PROTECTION PIPING ZONE. DO NOT ROUTE FIRE PROTECTION PIPING PARALLEL TO DUCT IN THE AREA DIRECTLY BELOW THE DUCT.

LEVEL 5 - VERTICAL SPACE ALLOCATION SECTION

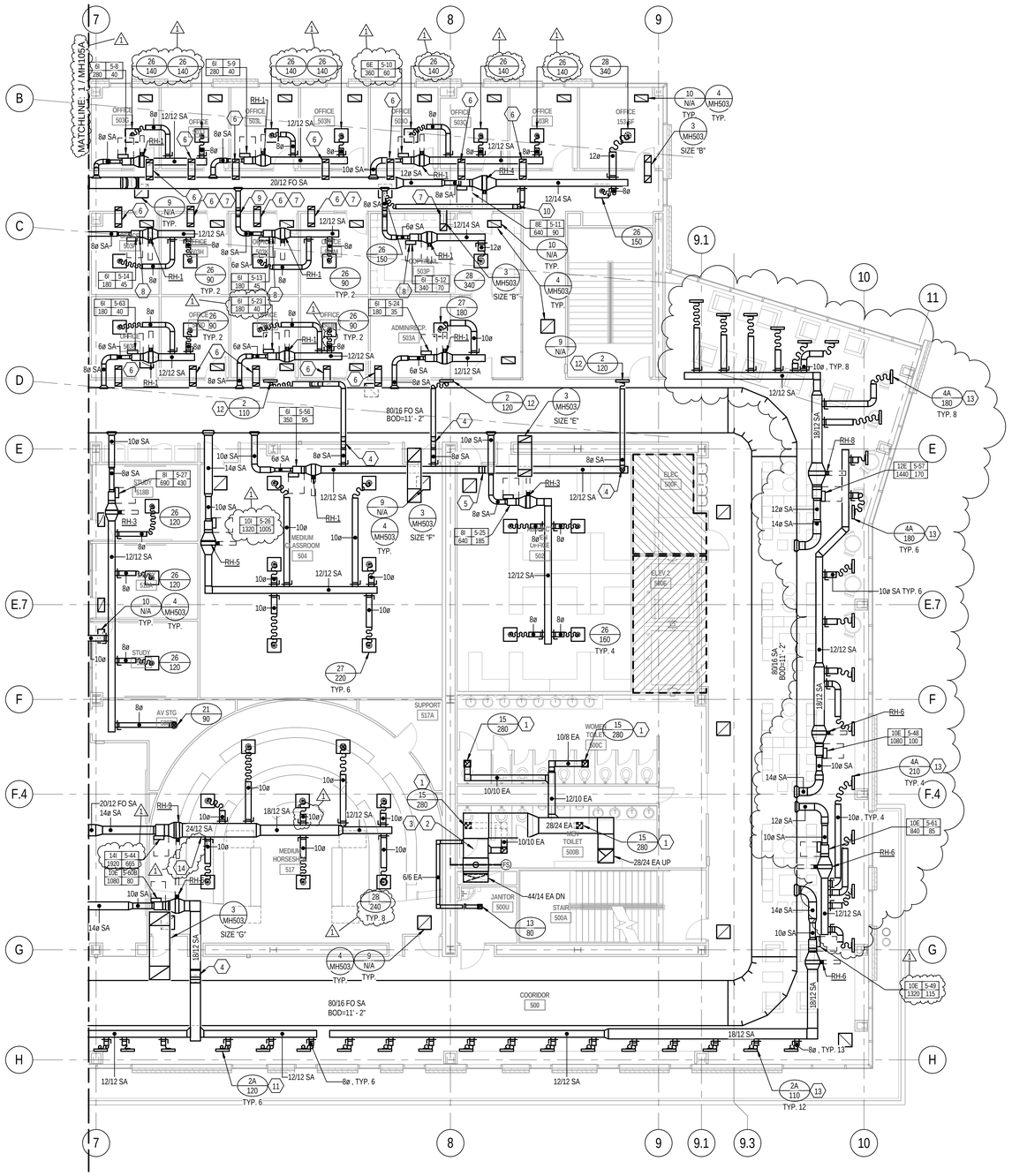

1 LEVEL 5 AREA 'B' MECHANICAL FLOOR PLAN

SCALE: 1/8" = 1'-0"

KEYED NOTES

1. PROVIDE BALANCING DAMPER IN VERTICAL DUCT OFF OF EXHAUST GRILLE.
2. PROVIDE 12"X12" DUCT ACCESS DOOR IN BOTTOM OF DUCT. LOCATE SO THAT FIRE/SMOKE DAMPER POSITION IS VISIBLE WHEN DOOR IS OPENED. FIRE/SMOKE DAMPERS SHALL BE RUSKIN MODEL FSD60-3, OR EQUAL.
3. GENERAL CONTRACTOR TO PROVIDE ACCESS DOOR IN CEILING FOR ACCESS TO FIRE SMOKE DAMPER IN EXHAUST DUCT EXITING SHAFT. ACCESS DOOR SIZE AND LOCATION TO BE COORDINATED WITH DUCT PLACEMENT SO THAT FIRE DAMPER IS EASILY ACCESSIBLE THROUGH OPENING. GENERAL CONTRACTOR TO COORDINATE FINISH WITH ARCHITECTURAL PLANS.
4. OFFSET DUCT WITH TWO 45º ELBOWS ABOVE SUPPLY DUCT WORK AT THIS APPROXIMATE LOCATION.
5. OFFSET DUCT WITH TWO 45º ELBOWS BELOW SUPPLY DUCT AT THIS APPROXIMATE LOCATION.
6. SEE DETAIL 3, SIZE 'A' ON SHEET MH503 FOR TRANSFER AIR DUCT SIZES.
7. TRANSFER AIR DUCT IS TO BE INSTALLED TIGHT TO STRUCTURE AT THIS APPROXIMATE LOCATION. COORDINATE WITH STRUCTURE AND SUPPLY AIR DUCT IN THIS AREA. OPENINGS IN THE TOP OF TRANSFER DUCT ARE TO BE ON EITHER SIDE OF THE BEAM SO THAT THE BEAM DOES NOT OBSTRUCT AIR FLOW INTO OR OUT OF THE DUCT.
8. VAV BOXES AND ASSOCIATED DUCT WORK IS TO BE INSTALLED WITH CENTER OF DUCT AT 11'-6" IN THIS AREA.
9. OFFSET DUCT WITH TWO 45º ELBOWS BELOW ROOF DRAIN PIPING AND BEAM IN THIS AREA.
10. OFFSET DUCT UP WITH TWO 45º ELBOWS OVER VAV BOX AND REHEAT COIL CLEARANCE AREAS.
11. DIRECT TWO SLOTS ONE WAY AND TWO SLOTS THE OTHER WAY AT THIS LOCATION.
12. DIRECT ALL SLOTS TOWARDS THE OPPOSITE WALL AT THIS LOCATION.
13. DIRECT ONE SLOT TOWARDS THE WINDOW AND ALL OTHER SLOTS TOWARDS THE SPACE AT THIS LOCATION.
14. PROVIDE MINIMUM 10' OF LINED DUCT BETWEEN DISCHARGE OUTLET OF VAV BOX AND THE FIRST BRANCH TAKE-OFF FOR THIS VAV BOX.

GENERAL NOTES

A. DUCTWORK ELEVATION IS PER VERTICAL SPACE ALLOCATION SECTION ON EACH SHEET UNLESS NOTED OTHERWISE ON THE PLAN. PROVIDE OFFSETS AS NECESSARY.

B. DO NOT ROUTE ANY DUCTWORK ABOVE ELECTRICAL, IDF OR ELEVATOR MACHINE ROOMS.

C. ALL EXHAUST DUCTWORK INSIDE RATED SHAFT SHALL BE PROVIDED WITH 1/2" DUCT LINER. ALL OTHER RECTANGULAR EXHAUST DUCTWORK UPSTREAM FROM THE RISER TAKE-OFF SHALL BE PROVIDED WITH 1" DUCT LINER.

D. PROVIDE A SOUND BOOT ATOP ALL RETURN AIR GRILLES IN ACCORDANCE WITH DETAIL 4/MH503.

E. THE DASHED LINES NEXT TO THE VAV BOX INDICATE REQUIRED SERVICE CLEARANCES FOR THE BOX. CLEARANCES SHALL COMPLY WITH NETA 110.26 REQUIREMENTS. PROVIDE 30" X 36" CLEAR IN FRONT OF BOXES DOWN TO CEILING. THIS AREA MUST BE KEPT CLEAR OF ALL EQUIPMENT FROM ALL TRADES TO ALLOW ACCESS TO SERVICE THE BOX. THIS IS TYPICAL FOR ALL VAV BOXES AND RE-HEAT COILS.

F. SUPPLY AIR DUCT FROM AIR HANDLER IN PENTHOUSE IS DOUBLE-WALL FROM THE POINT IT CONNECTS TO THE AIR HANDLER, ALONG ITS ENTIRE LENGTH IN THE SHAFT, TO A POINT APPROXIMATELY 8'-0" BEYOND FIRE/SMOKE DAMPER AT EACH LEVEL.

G. INSTALL VAV BOXES IN ACCORDANCE WITH DETAIL 1 ON SHEET MH503.

H. INSTALL DUCT MOUNTED HEATING COIL IN ACCORDANCE WITH DETAIL 9 ON MH502.

J. TRANSFER AIR DUCTS ARE TO BE INSTALLED IN ALL OFFICES AND CLASSROOMS WHERE WALLS EXTEND UP TO DECK. SEE DETAIL 3 ON SHEET MH503 FOR SIZES. INSTALL TRANSFER DUCTS ABOVE SUPPLY DUCT ELEVATION SO THAT THE OPENINGS IN THE TOP ARE NO LESS THAT 12" BELOW DECK UNLESS OTHERWISE NOTED.

KEY PLAN:

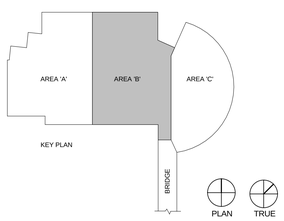

COLVIN ENGINEERING ASSOCIATES
244 West 300 North, Suite 200 / Salt Lake City, Utah 84103
Phone 801.322.2400 / colvineng@colvineng.com

Copyright (C) 2012 by Colvin Engineering Associates, Inc. Salt Lake City, Utah. All rights reserved. Unauthorized copying and/or use is illegal and subject to prosecution.

UNLESS A PROFESSIONAL SEAL WITH SIGNATURE AND DATE IS AFFIXED, THIS DOCUMENT IS PRELIMINARY AND IS NOT INTENDED FOR CONSTRUCTION, RECORDING PURPOSES, OR IMPLEMENTATION

UTAH VALLEY UNIVERSITY

State of Utah
Department of Administrative Services
Division of Facilities Construction & Management
4110 State Office Building
Salt Lake City, Utah 84114
Phone: (801) 538 - 3018
Fax: (801) 538 - 3267

CRSA ARCHITECTS
649 east south temple
salt lake city, utah 84102
phone:(801) 355-5915

METHOD STUDIO INC.
925 south west temple
salt lake city, utah 84101
phone:(801) 532-4422

DFCM APPROVAL STAMP

project:
UVU Classroom Building

800 University Way
Orem, UT 84058

project#: DFCM #12192790
date: APRIL 30, 2013

revisions:
1 ADDENDUM #5 5.24.2013

title:
LEVEL 5 MECHANICAL FLOOR PLAN AREA B

sheet:
MH105B

BID DOC

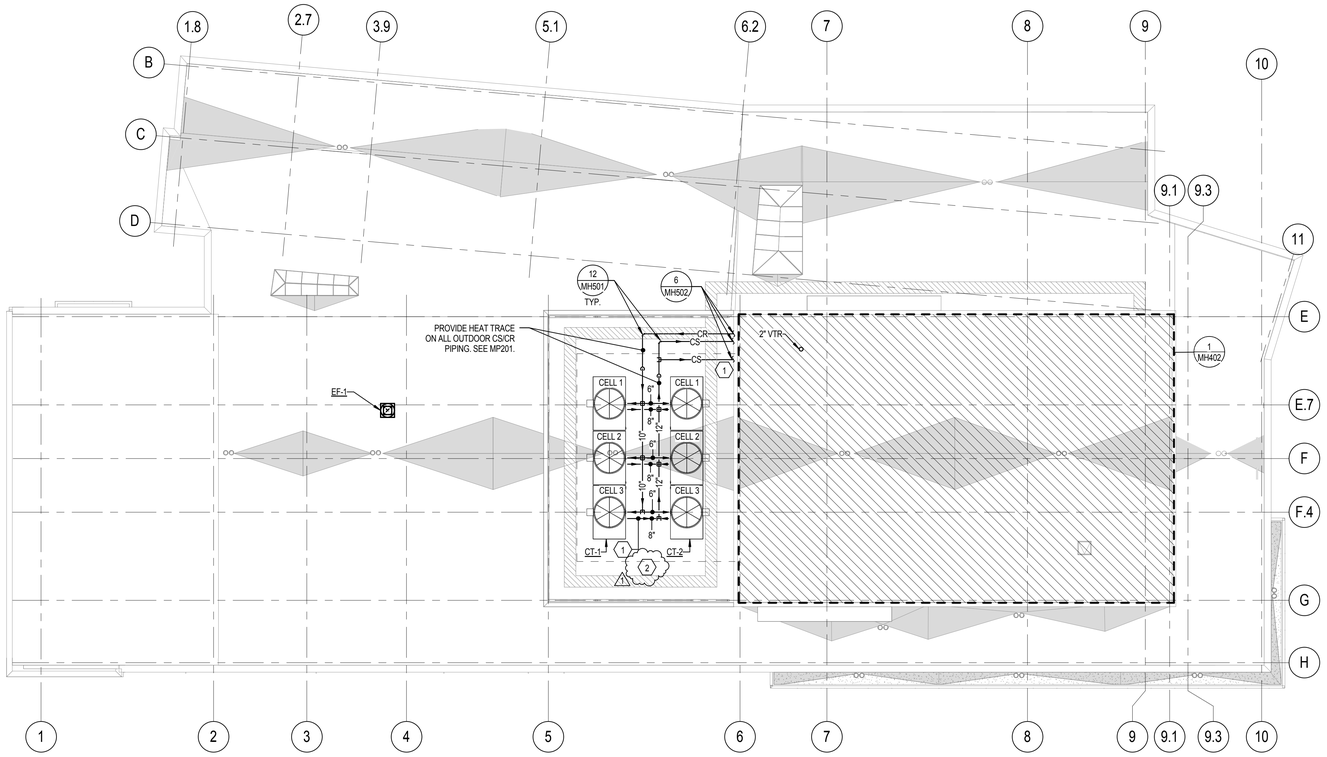

1 LOWER ROOF/PENTHOUSE MECHANICAL PLAN

SCALE: 1/16" = 1'-0"

KEYED NOTES

1. SLOPE ALL CONDENSER WATER SUPPLY PIPES BETWEEN ALL COOLING TOWER CELLS AND PUMPS P-1/P-2 CONTINUOUSLY IN THE DIRECTION OF FLOW, WITH NO INTERMEDIATE LOW POINTS.
2. PROVIDE 6" EQUALIZER LINE BETWEEN ALL COOLING TOWER CELLS AS SHOWN ON SHEET MP201.

GENERAL NOTES

A. ALL CONDENSER WATER SUPPLY PIPING BETWEEN ALL COOLING TOWER CELLS AND PUMPS P-1 / P-2 SHALL BE SLOPED CONTINUOUSLY IN THE DIRECTION OF FLOW, WITH NO INTERMEDIATE LOW POINTS.

B. COORDINATE COOLING TOWER HEIGHT WITH GENERAL CONTRACTOR AND STEEL DETAILER SO SUPPORT STEEL FOR TOWERS IS SELECTED SO TOP OF TOWERS IS SET FLUSH WITH TOP OF SURROUNDING SCREEN WALL. BOTTOM OF HORIZONTAL SUPPORT STEEL SHALL BE MIN. 24" ABOVE SURFACE OF ROOFING MEMBERANE, REFER TO STRUCTURAL DRAWINGS TO SEE DESIGN OF SUPPORT STEEL.

C. HEAT TRACE AND INSULATE ALL OUTDOOR CONDENSER WATER PIPING.

Copyright (C) 2012 by Colvin Engineering Associates, Inc. Salt Lake City, Utah. All rights reserved. Unauthorized copying and/or use is illegal and subject to prosecution.

COLVIN ENGINEERING ASSOCIATES
244 West 300 North, Suite 200 / Salt Lake City, Utah 84103
Phone 801.322.2400 / colvinengineering.com

UNLESS A PROFESSIONAL SEAL WITH SIGNATURE AND DATE IS AFFIXED, THIS DOCUMENT IS PRELIMINARY AND IS NOT INTENDED FOR CONSTRUCTION, RECORDING PURPOSES, OR IMPLEMENTATION

UTAH VALLEY UNIVERSITY

State of Utah
Department of Administrative Services
Division of Facilities Construction & Management
4110 State Office Building
Salt Lake City, Utah 84114
Phone: (801) 538 - 3018
Fax: (801) 538 - 3267

CRSA ARCHITECTS
649 east south temple
salt lake city, utah 84102
phone:(801) 355-5915

METHOD STUDIO INC.
925 south west temple
salt lake city, utah 84101
phone:(801) 532-4422

DFCM APPROVAL STAMP

project:
UVU Classroom Building

800 University Way
Orem, UT 84058

project#: DFCM #12192790
date: APRIL 30, 2013

revisions:
1 ADDENDUM #5 5.24.2013

title:
LOWER ROOF/PENTHOUSE ROOF PLAN

sheet:
MH106

BID DOC

KEYED NOTES

1. PROVIDE 12"X12" DUCT ACCESS DOOR IN BOTTOM OF DUCT. LOCATE SO THAT FIRE/SMOKE DAMPER POSITION IS VISIBLE WHEN DOOR IS OPENED. FIRE/SMOKE DAMPERS SHALL BE RUSKIN MODEL FSD60-3, OR EQUAL.
2. CAP END OF RETURN AIR DUCT AND CREATE OPENING IN TOP OF DUCT THE SAME SIZE AS DUCT. PROVIDE MANUAL BALANCING DAMPER FOR ALL RETURN AIR DUCT PENETRATIONS INTO THE MECHANICAL SHAFT. LOCATE DAMPER ON TOP OF HORIZONTAL RETURN AIR DUCT. DAMPER TO BE SAME SIZE AS OPENING IN TOP OF DUCT. DAMPER IS PROVIDED FOR USE BY THE BALANCING CONTRACTOR TO BALANCE THE RETURN AIR FLOWS AND PRESSURES.

GENERAL NOTES

A. ALL DIMENSIONS SHOWN ARE INSIDE DUCT DIMENSIONS.
B. ADD 4" TO INSIDE DIMENSIONS FOR OVERALL OUTSIDE DUCT DIMENSIONS ON ALL DOUBLE WALL DUCT.
C. ADD 3" TO ACCOUNT FOR DUCT INSULATION ON ALL FLAT OVAL DUCT.
D. ALL DUCT PASSING OUT OF THE MECHANICAL SHAFT THROUGH GRID LINE 6 MUST BE COORDINATED CLOSELY WITH THE BRACED FRAMED STRUCTURAL MEMBERS.
E. PROVIDE DUCT ACCESS DOORS IN DUCT FOR VISUAL INSPECTION OF ALL FIRE/SMOKE DAMPERS.
F. BOD = BOTTOM OF SHEETMETAL DUCT LESS INSULATION.

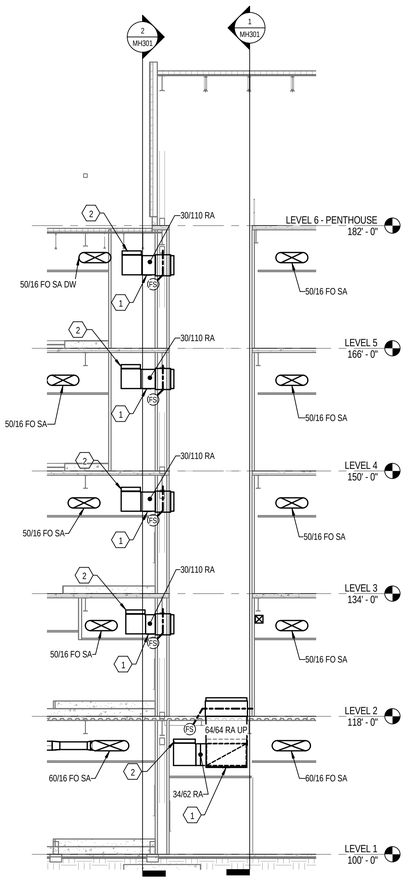

4 SECTION THROUGH MECHANICAL SHAFT - FACING NORTH
SCALE: 1/8" = 1'-0"

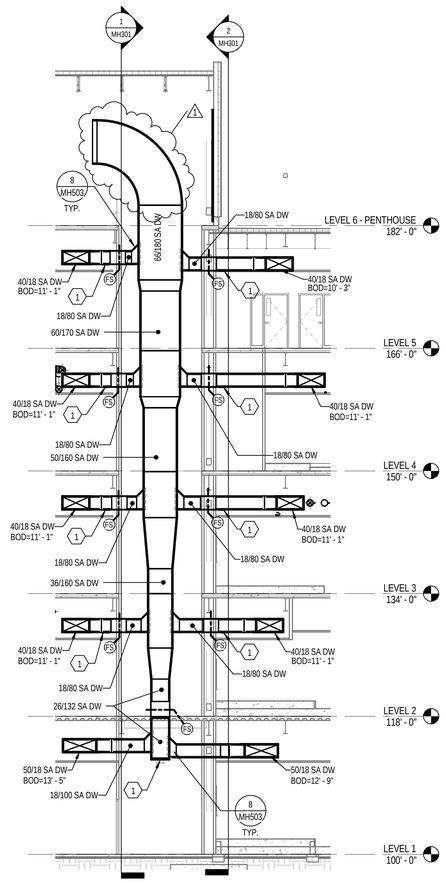

3 SECTION THROUGH MECHANICAL SHAFT - FACING SOUTH
SCALE: 1/8" = 1'-0"

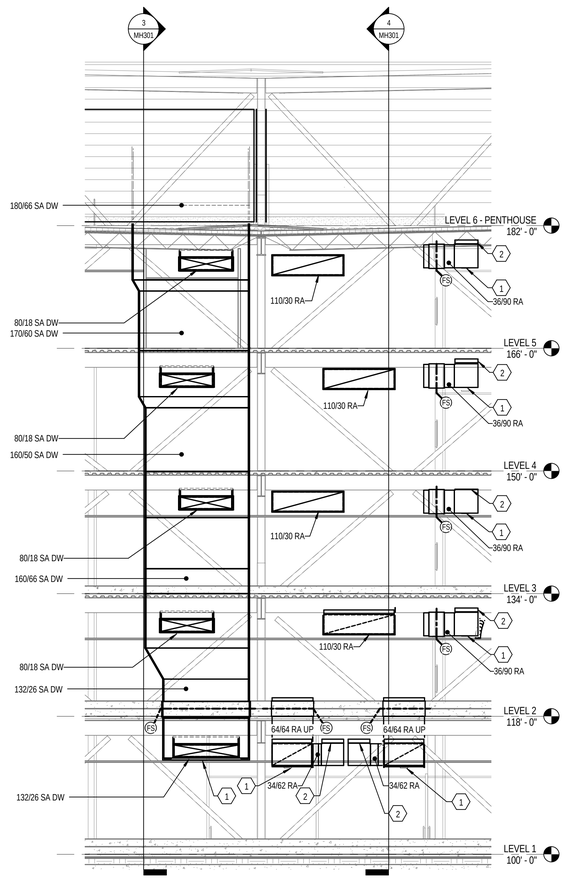

2 SECTION THROUGH MECHANICAL SHAFT - FACING EAST
SCALE: 1/8" = 1'-0"

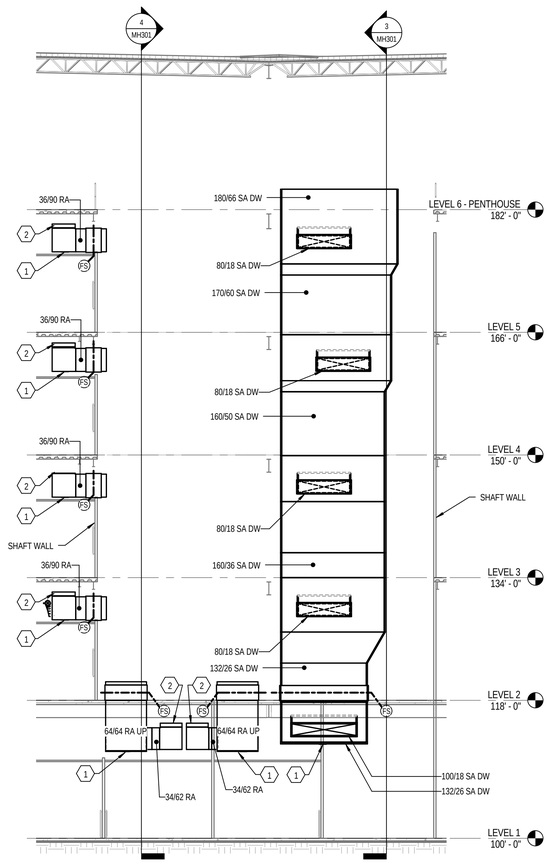

1 SECTION THROUGH MECHANICAL SHAFT - FACING WEST
SCALE: 1/8" = 1'-0"

Copyright (C) 2012 by Colvin Engineering Associates, Inc. Salt Lake City, Utah. All rights reserved. Unauthorized copying and/or use is illegal and subject to prosecution.

COLVIN ENGINEERING ASSOCIATES
244 West 300 North, Suite 200 / Salt Lake City, Utah 84103
Phone 801.322.2400 / colvinengineering.com

UNLESS A PROFESSIONAL SEAL WITH SIGNATURE AND DATE IS AFFIXED, THIS DOCUMENT IS PRELIMINARY AND IS NOT INTENDED FOR CONSTRUCTION, RECORDING PURPOSES, OR IMPLEMENTATION

UTAH VALLEY UVU UNIVERSITY

State of Utah
Department of Administrative Services
Division of Facilities Construction & Management
4110 State Office Building
Salt Lake City, Utah 84114
Phone: (801) 538 - 3018
Fax: (801) 538 - 3267

CRSA METHODSTUDIO INC.

CRSA ARCHITECTS
649 east south temple
salt lake city, utah 84102
phone:(801) 355-5915

METHOD STUDIO INC.
925 south west temple
salt lake city, utah 84101
phone:(801) 532-4422

DFCM APPROVAL STAMP

project:
UVU Classroom Building

800 University Way
Orem, UT 84058

project#: DFCM #12192790
date: APRIL 30, 2013

revisions:
1 ADDENDUM #5 5.24.2013

title:
DUCT RISER DIAGRAMS

sheet:
MH301

BID DOC

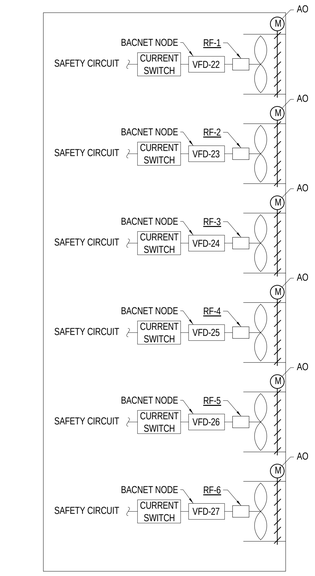

OUTDOOR PRESSURE SENSOR
(4 TOTAL IN GROUND FLOOR SOFFIT)

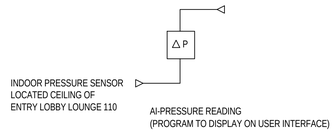

RELIEF FAN/ BUILDING PRESSURE CONTROL DIAGRAM

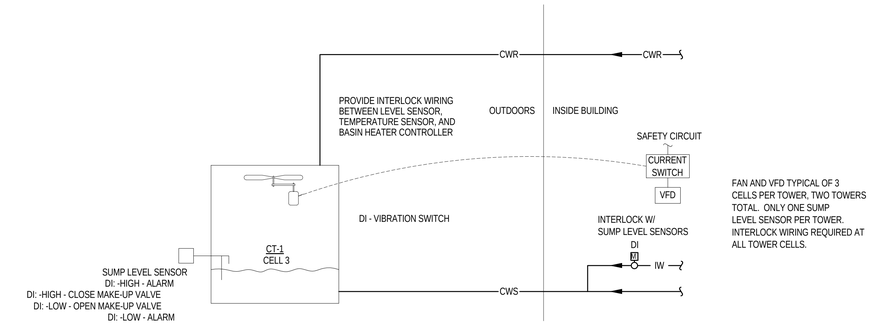

COOLING TOWER CONTROL DIAGRAM

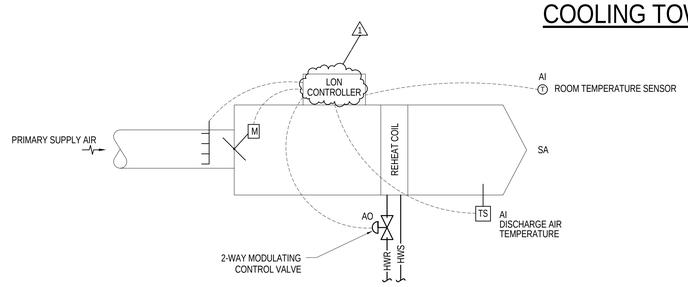

VAV REHEAT CONTROL DIAGRAM

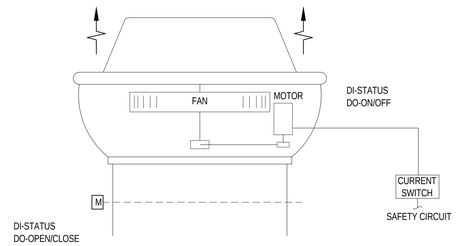

EXHAUST FAN CONTROL SCHEMATIC

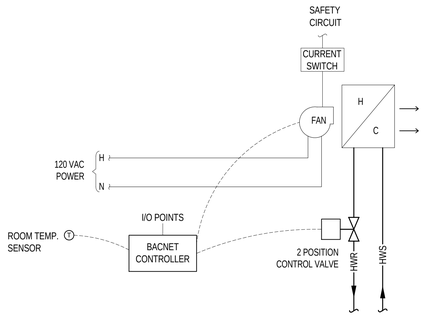

UNIT HEATER/CABINET UNIT HEATER CONTROL DIAGRAM

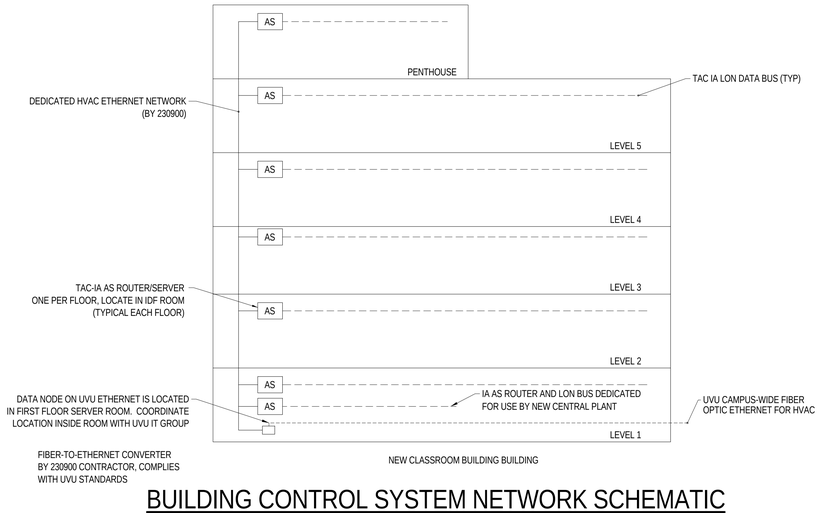

BUILDING CONTROL SYSTEM NETWORK SCHEMATIC

COLVIN ENGINEERING ASSOCIATES
244 West 300 North, Suite 200 / Salt Lake City, Utah 84103
Phone 801.322.2400 / colvinengineering.com

Copyright (C) 2012 by Colvin Engineering Associates, Inc. Salt Lake City, Utah. All rights reserved. Unauthorized copying and/or use is illegal and subject to prosecution.

UNLESS A PROFESSIONAL SEAL WITH SIGNATURE AND DATE IS AFFIXED, THIS DOCUMENT IS PRELIMINARY AND IS NOT INTENDED FOR CONSTRUCTION, RECORDING PURPOSES, OR IMPLEMENTATION

UTAH VALLEY UNIVERSITY

State of Utah
Department of Administrative Services
Division of Facilities Construction & Management
4110 State Office Building
Salt Lake City, Utah 84114
Phone: (801) 538 - 3018
Fax: (801) 538 - 3267

CRSA ARCHITECTS
649 east south temple
salt lake city, utah 84102
phone:(801) 355 - 5915

METHOD STUDIO INC.
925 south west temple
salt lake city, utah 84101
phone:(801) 532-4422

DFCM APPROVAL STAMP

project:
UVU Classroom Building

800 University Way
Orem, UT 84058

project#: DFCM #12192750
date: APRIL 30, 2013

revisions:
1 ADDENDUM #5 5.25.2013

title:
MECHANICAL CONTROLS SCHEMATICS

sheet:
MI201

BID DOC

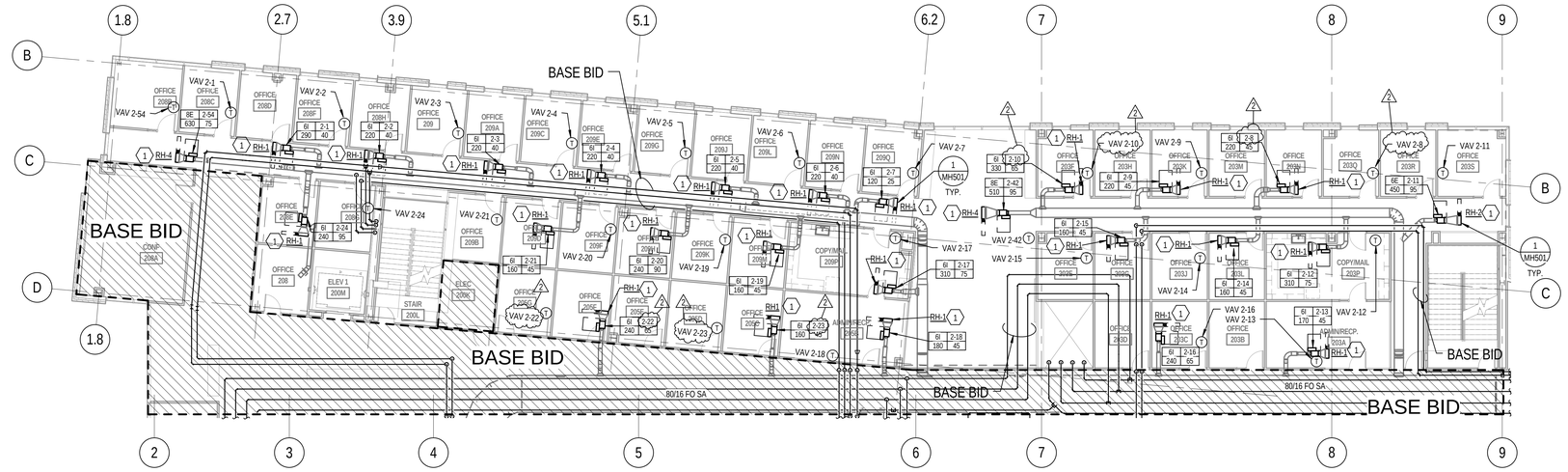

LEVEL 2 MECHANICAI PIPING FLOOR PLAN - ALTERNATE

1 SCALE: 3/32" = 1'-0"

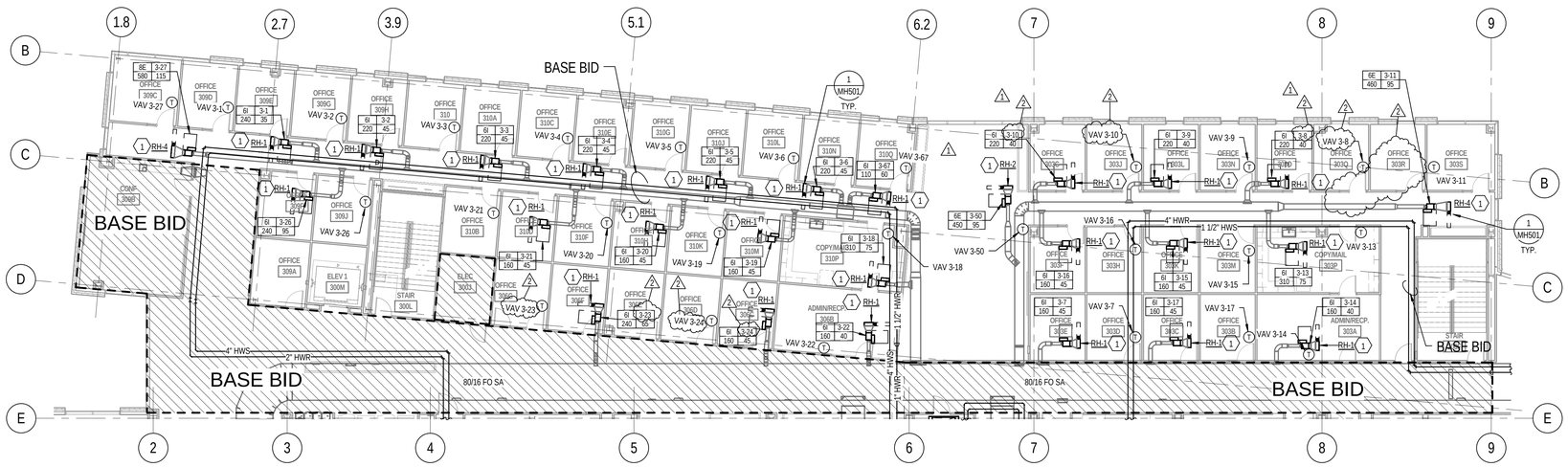

LEVEL 3 MECHANICAL PIPING FLOOR PLAN - ALTERNATE

2 SCALE: 3/32" = 1'-0"

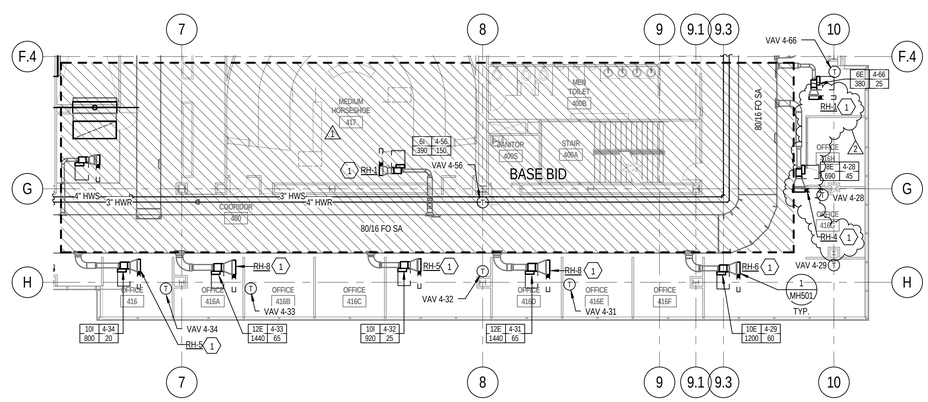

LEVEL 4 MECHANICAL PIPING FLOOR PLAN - ALTERNATE

3 SCALE: 3/32" = 1'-0"

KEYED NOTES

1. PROVIDE HEATING WATER SUPPLY AND RETURN PIPING FROM THE REVERSE RETURN HEATING WATER MAINS TO THE REHEAT COIL. PROVIDE ALL PIPING SPECIALTIES IN ACCORDANCE WITH DETAIL 1/MH501, EXCEPT FOR THE REHEAT COIL SERVED OFF THE END OF THE HEATING MAIN, WHICH SHALL BE PIPED IN ACCORDANCE WITH DETAIL 2/MH501. SEE SHEET MP202 FOR THE FLOW RATE THROUGH THE BYPASS LEG OFF THE 3-WAY VALVE. PIPE SIZES PER THE HEATING WATER RUNOUT PIPE SIZES SCHEDULE ON SHEET MH602. REHEAT COIL FLOW RATES ARE FOUND ON THE REHEAT BOXES SCHEDULES ON SHEET MH602.

GENERAL NOTES

A. DO NOT ROUTE ANY PIPING ABOVE ELECTRICAL, IDF OR ELEVATOR MACHINE ROOMS.

B. ALL MANUAL VALVES, AUTOMATIC CONTROL VALVES, STRAINERS AND CIRCUIT SETTERS SHALL BE INSTALLED WHERE ACCESSIBLE ABOVE LAY-IN CEILING. COORDINATE WITH LATEST ARCHITECTURAL REFLECTED CEILING PLAN.

C. KEEP CONTROLS ACCESS ZONE OFF SIDE OF VAV BOX CLEAR OF ALL PIPING. PIPING MAY BE ROUTED ABOVE THE ELEVATION OF THE TOP OF THE VAV BOX, AVOIDING THE CONTROLS ACCESS ZONE.

D. REFER TO VERTICAL SPACE ALLOCATION SECTION ON CORRESPONDING MH SERIES SHEET FOR TYPICAL PIPING ELEVATION. ALL MECHANICAL PIPING SHALL BE INSTALLED PER THE VERTICAL SPACE ALLOCATION SECTION UNLESS OTHERWISE NOTED.

E. BRANCH PIPING TO INDIVIDUAL VAV BOXES IS NOT SHOWN. REFER TO THE HEATING WATER RUNOUT PIPE SIZES SCHEDULE ON SHEET MH602 FOR SIZING OF THE BRANCH PIPING.

COLVIN ENGINEERING ASSOCIATES
244 West 300 North, Suite 200 / Salt Lake City, Utah 84103
Phone 801.322.2400 / colvinengineering.com

UNLESS A PROFESSIONAL SEAL WITH SIGNATURE AND DATE IS AFFIXED, THIS DOCUMENT IS PRELIMINARY AND IS NOT INTENDED FOR CONSTRUCTION, RECORDING PURPOSES, OR IMPLEMENTATION

UTAH VALLEY UNIVERSITY

State of Utah
Department of Administrative Services
Division of Facilities Construction & Management
4110 State Office Building
Salt Lake City, Utah 84114
Phone: (801) 538 - 3018
Fax: (801) 538 - 3267

CRSA METHODSTUDIO INC.

CRSA ARCHITECTS
649 east south temple
salt lake city, utah 84102
phone:(801) 355-5915

METHOD STUDIO INC.
925 south west temple
salt lake city, utah 84101
phone:(801) 532-4422

DFCM APPROVAL STAMP

project:
UVU Classroom Building

800 University Way
Orem, UT 84058

project#: DFCM #12192790
date: APRIL 30, 2013

revisions :
1 ADDENDUM #3 5.22.2013
2 ADDENDUM #5 5.24.2013

title:
LEVEL 2, 3 & 4 ALTERNATE MECH PIPING FLOOR PLANS

sheet:
MP102.1

BID DOC

Copyright (C) 2012 by Colvin Engineering Associates, Inc. Salt Lake City, Utah. All rights reserved. Unauthorized copying and/or use is illegal and subject to prosecution.

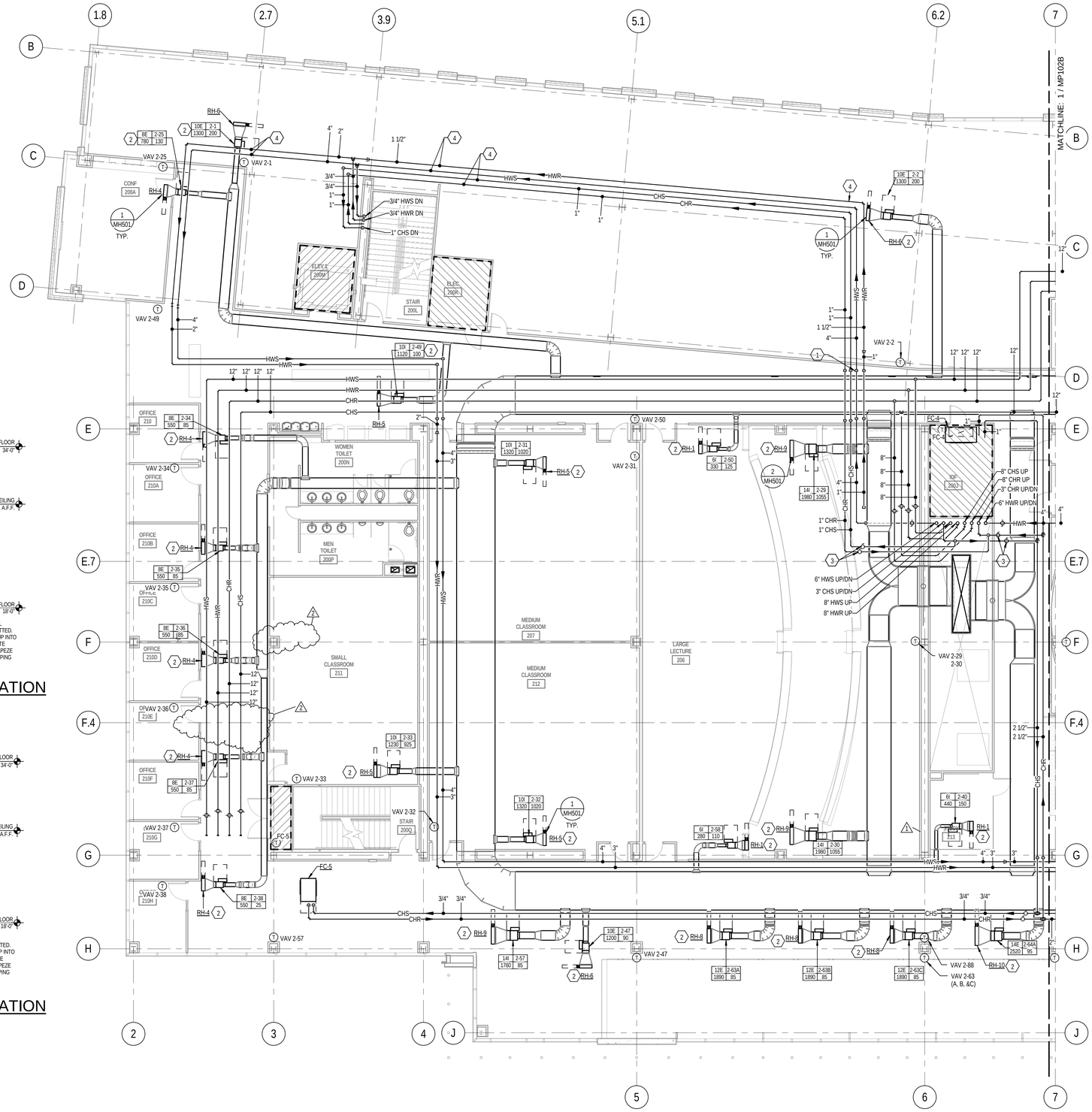

1 LEVEL 2 AREA 'A' MECHANICAL PIPING FLOOR PLAN

SCALE: 1/8" = 1'-0"

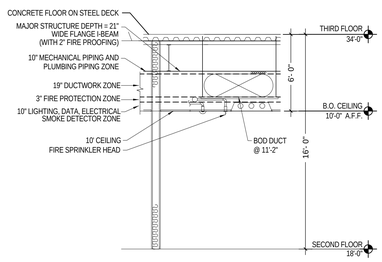

NOTE: EXTREMELY LIMITED SPACE IS AVAILABLE FOR TRADES TO INSTALL THEIR WORK. CAREFUL COORDINATION IS REQUIRED TO ASSURE THAT CROSS-OVER LINES ACTUALLY FIT IN ZONES ALLOTTED. ON OCCASION "FIRE PROTECTION ZONE" AND/OR "ELECTRICAL ZONE" MAY NEED TO TRANSITION UP INTO "STRUCTURAL ZONE" BETWEEN BEAMS AND GIRDERS. GENERAL CONTRACTOR SHALL COORDINATE WORK AND SCHEDULE OF EACH TRADE TO PREVENT UTILITY LINE CONFLICTS. ** NOTE - DUCT TRAPEZE HANGER IS LOCATED IN THE FIRE PROTECTION PIPING ZONE. DO NOT ROUTE FIRE PROTECTION PIPING PARALLEL TO DUCT IN THE AREA DIRECTLY BELOW THE DUCT.

LEVEL 2 - VERTICAL SPACE ALLOCATION SECTION

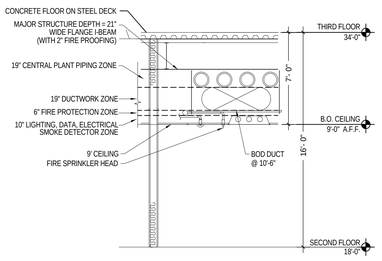

NOTE: EXTREMELY LIMITED SPACE IS AVAILABLE FOR TRADES TO INSTALL THEIR WORK. CAREFUL COORDINATION IS REQUIRED TO ASSURE THAT CROSS-OVER LINES ACTUALLY FIT IN ZONES ALLOTTED. ON OCCASION "FIRE PROTECTION ZONE" AND/OR "ELECTRICAL ZONE" MAY NEED TO TRANSITION UP INTO "STRUCTURAL ZONE" BETWEEN BEAMS AND GIRDERS. GENERAL CONTRACTOR SHALL COORDINATE WORK AND SCHEDULE OF EACH TRADE TO PREVENT UTILITY LINE CONFLICTS. ** NOTE - DUCT TRAPEZE HANGER IS LOCATED IN THE FIRE PROTECTION PIPING ZONE. DO NOT ROUTE FIRE PROTECTION PIPING PARALLEL TO DUCT IN THE AREA DIRECTLY BELOW THE DUCT.

LEVEL 2 - VERTICAL SPACE ALLOCATION IN NORTH HALLWAY SECTION

KEYED NOTES

1. OFFSET TO ROUTE BUILDING PIPING UP OVER CAMPUS PIPING AT THIS APPROXIMATE LOCATION. FIELD COORDINATE BEST LOCATION FOR OFFSETS.
2. PROVIDE HEATING WATER SUPPLY AND RETURN PIPING FROM THE REVERSE RETURN HEATING WATER MAINS TO THE REHEAT COIL. PROVIDE ALL PIPING SPECIALTIES IN ACCORDANCE WITH DETAIL 1/MH501. EXCEPT FOR THE REHEAT COIL SERVED OFF THE END OF THE HEATING MAIN, WHICH SHALL BE PIPED IN ACCORDANCE WITH DETAIL 2/MH501. SEE SHEET MP202 FOR THE FLOW RATE THROUGH THE BYPASS LEG OFF THE 3-WAY VALVE. PIPE SIZES PER THE HEATING WATER RUNOUT PIPE SIZES SCHEDULE ON SHEET MH602. REHEAT COIL FLOW RATES ARE FOUND ON THE REHEAT BOXES SCHEDULES ON SHEET MH602.
3. PROVIDE ISOLATION VALVES IN AN ACCESSIBLE LOCATION.
4. OFFSET PIPING AS REQUIRED TO COORDINATE WITH OTHER DISCIPLINES.

GENERAL NOTES

A. DO NOT ROUTE ANY PIPING ABOVE ELECTRICAL, IDF OR ELEVATOR MACHINE ROOMS.
B. ALL MANUAL VALVES, AUTOMATIC CONTROL VALVES, STRAINERS AND CIRCUIT SETTERS SHALL BE INSTALLED WHERE ACCESSIBLE ABOVE LAY-IN CEILING. COORDINATE WITH LATEST ARCHITECTURAL REFLECTED CEILING PLAN.
C. KEEP CONTROLS ACCESS ZONE OFF SIDE OF VAV BOX CLEAR OF ALL PIPING. PIPING MAY BE ROUTED ABOVE THE ELEVATION OF THE TOP OF THE VAV BOX, AVOIDING THE CONTROLS ACCESS ZONE.
D. REFER TO VERTICAL SPACE ALLOCATION SECTION ON CORRESPONDING MH SERIES SHEET FOR TYPICAL PIPING ELEVATION. ALL MECHANICAL PIPING SHALL BE INSTALLED PER THE VERTICAL SPACE ALLOCATION SECTION UNLESS OTHERWISE NOTED.
E. BRANCH PIPING TO INDIVIDUAL VAV BOXES IS NOT SHOWN. REFER TO THE HEATING WATER RUNOUT PIPE SIZES SCHEDULE ON SHEET MH602 FOR SIZING OF THE BRANCH PIPING.

KEY PLAN:

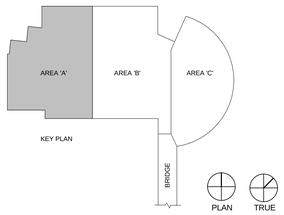

COLVIN ENGINEERING ASSOCIATES
244 West 300 North, Suite 200 / Salt Lake City, Utah 84103
Phone 801.322.2400 / colvinengineering.com

Copyright (C) 2012 by Colvin Engineering Associates, Inc. Salt Lake City, Utah. All rights reserved. Unauthorized copying and/or use is illegal and subject to prosecution.

UNLESS A PROFESSIONAL SEAL WITH SIGNATURE AND DATE IS AFFIXED, THIS DOCUMENT IS PRELIMINARY AND IS NOT INTENDED FOR CONSTRUCTION, RECORDING PURPOSES, OR IMPLEMENTATION.

UTAH VALLEY UNIVERSITY

State of Utah
Department of Administrative Services
Division of Facilities Construction & Management
4110 State Office Building
Salt Lake City, Utah 84114
Phone: (801) 538 - 3018
Fax: (801) 538 - 3267

CRSA METHODSTUDIO INC.

CRSA ARCHITECTS
649 east south temple
salt lake city, utah 84102
phone:(801) 355-5915

METHOD STUDIO INC.
925 south west temple
salt lake city, utah 84101
phone:(801) 532-4422

DFCM APPROVAL STAMP

project:
UVU Classroom Building

800 University Way
Orem, UT 84058

project#: DFCM #12192790
date: APRIL 30, 2013

revisions:

1	ADDENDUM #3	5.22.2013
2	ADDENDUM #5	5.24.2013

title:
LEVEL 2 AREA 'A' MECHANICAL PIPING FLOOR PLAN

sheet:
MP102A

BID DOC

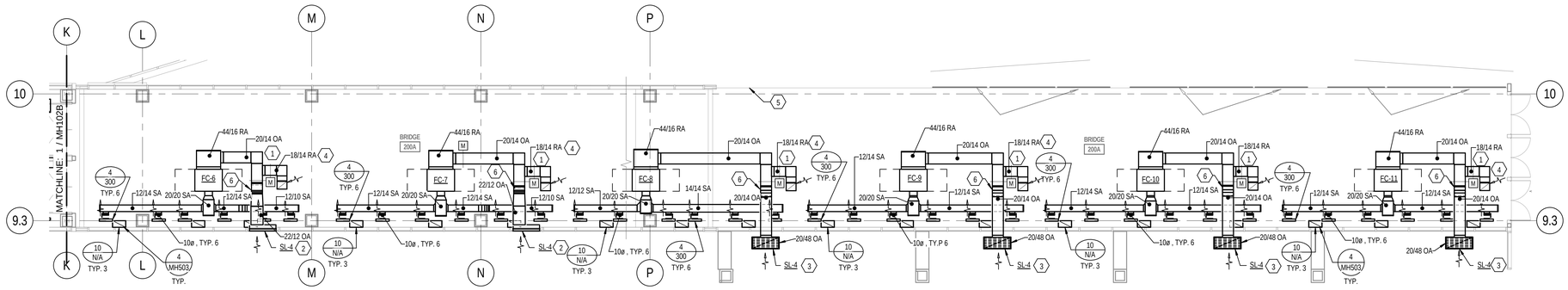

1 LEVEL 2 BRIDGE MECHANICAL PLAN

SCALE: 1/8" = 1'-0"

6' 0' 4' 8' 12' 16'

KEYED NOTES

1. PROVIDE MOTORIZED DAMPER FOR RETURN AIR AND OUTSIDE AIR INLETS TO FAN COIL RETURN PLENUM. BOTH DAMPERS ARE TO OPERATE AS 100% ECONOMIZER BASED ON OUTSIDE AIR DRY BULB TEMP. SET OUTSIDE AIR DAMPER TO MINIMUM CFM SHOWN ON FAN COIL SCHEDULE.
2. OUTSIDE AIR LOUVER TO BE INSTALLED IN SPANDREL GLASS SECTION OF BRIDGE. REFER TO DETAIL D3/AE328. COORDINATE COLOR OF LOUVER WITH ARCHITECT.
3. OUTSIDE AIR LOUVER TO BE INSTALLED HORIZONTALLY IN EXTERIOR SOFFIT ABOVE BRIDGE. COORDINATE THIS PENETRATION WITH ARCHITECTURAL DRAWINGS. COORDINATE COLOR OF LOUVER WITH ARCHITECT.
4. ROUTE RETURN AIR DUCT HORIZONTALLY AND CAP END. PROVIDE OPENING IN TOP OF DUCT (WITH SAME DIMENSIONS AS DUCT SIZE) NEXT TO CAPPED END.
5. REMOVE EXISTING RF-18 AND ALL ASSOCIATED DUCTWORK, GRILLES, DAMPERS AND LOUVER.
6. OFFSET DUCT WITH TWO 45º ELBOWS ABOVE SUPPLY DUCT WORK AT THIS APPROXIMATE LOCATION.

GENERAL NOTES

A. PROVIDE A SOUND BOOT ATOP ALL RETURN AIR GRILLES IN ACCORDANCE WITH DETAIL 4/MH503.

B. ALL SLOT DIFFUSERS SHOWN ON THIS SHEET TO HAVE ONE DIRECTIONAL THROW. THROW IS IN DIRECTION INDICATED BY FLOW ARROWS.

C. THE SPACE ABOVE BRIDGE CEILING IS VERY LIMITED. CONTRACTOR IS RESPONSIBLE FOR COORDINATING INSTALLATION OF ALL TRADES ABOVE THIS CEILING.

1

KEY PLAN:

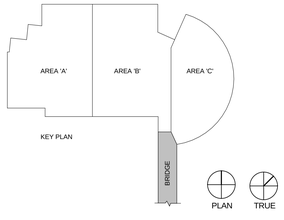

COLVIN ENGINEERING ASSOCIATES
244 West 300 North, Suite 200 / Salt Lake City, Utah 84103
Phone 801.322.2400 / colvinengineering.com

Copyright (C) 2012 by Colvin Engineering Associates, Inc. Salt Lake City, Utah. All rights reserved. Unauthorized copying and/or use is illegal and subject to prosecution.

UNLESS A PROFESSIONAL SEAL WITH SIGNATURE AND DATE IS AFFIXED, THIS DOCUMENT IS PRELIMINARY AND IS NOT INTENDED FOR CONSTRUCTION, RECORDING PURPOSES, OR IMPLEMENTATION

UTAH VALLEY UNIVERSITY

State of Utah
Department of Administrative Services

Division of Facilities Construction & Management
4110 State Office Building
Salt Lake City, Utah 84114
Phone: (801) 538 - 3018
Fax: (801) 538 - 3267

CRSA METHODSTUDIO INC.

CRSA ARCHITECTS
649 east south temple
salt lake city, utah 84102
phone:(801) 355-5915

METHOD STUDIO INC.
925 south west temple
salt lake city, utah 84101
phone:(801) 532-4422

DFCM APPROVAL STAMP

project:
UVU Classroom Building

800 University Way
Orem, UT 84058

project#: DFCM #12192790
date: APRIL 30, 2013

revisions:
1 ADDENDUM #5 5.24.2013

title:
LEVEL 2 BRIDGE MECHANICAL FLOOR PLAN

sheet:
MH102D

BID DOC

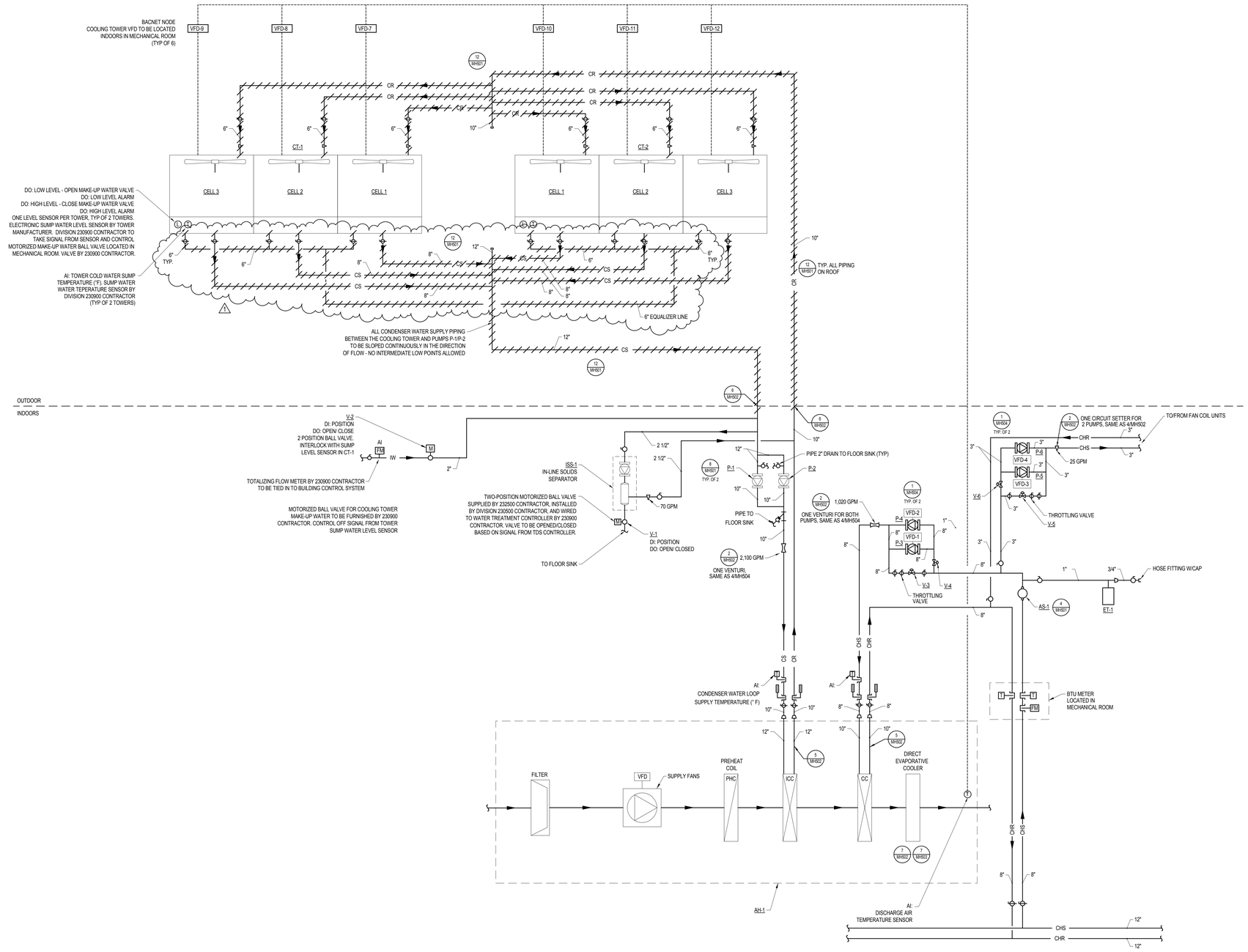

1 CHILLED WATER PIPING SCHEMATIC
SCALE: NONE

Copyright (C) 2012 by Colvin Engineering Associates, Inc. Salt Lake City, Utah. All rights reserved. Unauthorized copying and/or use is illegal and subject to prosecution.

COLVIN ENGINEERING ASSOCIATES
244 West 300 North, Suite 200 / Salt Lake City, Utah 84103
Phone 801.322.2400 / colvinengineering.com

UNLESS A PROFESSIONAL SEAL WITH SIGNATURE AND DATE IS AFFIXED, THIS DOCUMENT IS PRELIMINARY AND IS NOT INTENDED FOR CONSTRUCTION, RECORDING PURPOSES, OR IMPLEMENTATION

UTAH VALLEY UNIVERSITY

State of Utah
Department of Administrative Services
Division of Facilities Construction & Management
4110 State Office Building
Salt Lake City, Utah 84114
Phone: (801) 538 - 3016
Fax: (801) 538 - 3267

CRSA ARCHITECTS
649 east south temple
salt lake city, utah 84102
phone:(801) 355-5915

METHOD STUDIO INC.
925 south west temple
salt lake city, utah 84101
phone:(801) 532-4422

DFCM APPROVAL STAMP

project:
UVU Classroom Building

800 University Way
Orem, UT 84058

project#: DFCM #12192790
date: APRIL 30, 2013

revisions:
1 ADDENDUM #5 5.24.2013

title:
CHILLED WATER PIPING SCHEMATIC

sheet:
MP201

BID DOC

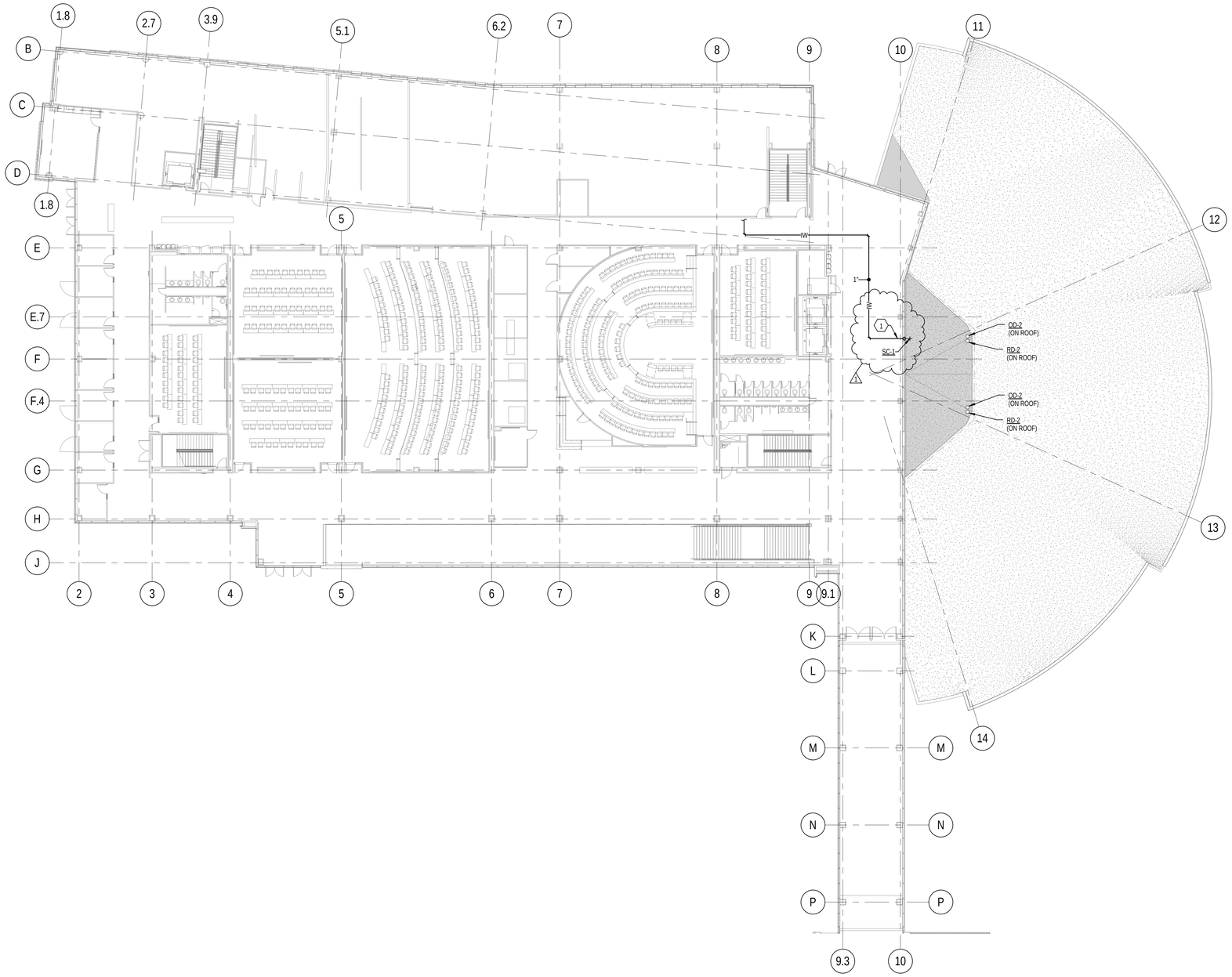

LEVEL 1 OVERALL PLUMBING PLAN ALTERNATE #1

1 SCALE: 1/16" = 1'-0"

12' 0' 8' 16' 24' 32'

KEYED NOTES

1 1" I.W. FOR GREEN ROOF IRRIGATION. ROUTE PIPING UP THROUGH THE SECOND FLOOR SLAB AND INSIDE OF WARM SIDE OF SECOND FLOOR EAST EXTERIOR WALL. INSTALL SILLCOCK AT 24" ABOVE TOP OF GREEN ROOF.

KEY PLAN:

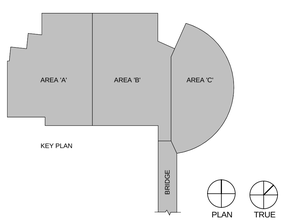

Copyright (C) 2012 by Colvin Engineering Associates, Inc. Salt Lake City, Utah. All rights reserved. Unauthorized copying and/or use is illegal and subject to prosecution.

COLVIN ENGINEERING ASSOCIATES
244 West 300 North, Suite 200 / Salt Lake City, Utah 84103
Phone 801.322.2400 / colvinengineering.com

UNLESS A PROFESSIONAL SEAL WITH SIGNATURE AND DATE IS AFFIXED, THIS DOCUMENT IS PRELIMINARY AND IS NOT INTENDED FOR CONSTRUCTION, RECORDING PURPOSES, OR IMPLEMENTATION

UTAH VALLEY UNIVERSITY

State of Utah
Department of Administrative Services
Division of Facilities Construction & Management
4110 State Office Building
Salt Lake City, Utah 84114
Phone: (801) 538 - 3018
Fax: (801) 538 - 3267

CRSA METHODSTUDIO INC.

CRSA ARCHITECTS
649 east south temple
salt lake city, utah 84102
phone:(801) 355-5915

METHOD STUDIO INC.
925 south west temple
salt lake city, utah 84101
phone:(801) 532-4422

DFCM APPROVAL STAMP

project:
UVU Classroom Building

800 University Way
Orem, UT 84058

project#: DFCM #12192790
date: APRIL 30, 2013

revisions:
1 ADDENDUM #5 5.24.2013

title:
LEVEL 1 OVERALL PLUMBING PLAN ALTERNATE #1

sheet:
PL101

BID DOC

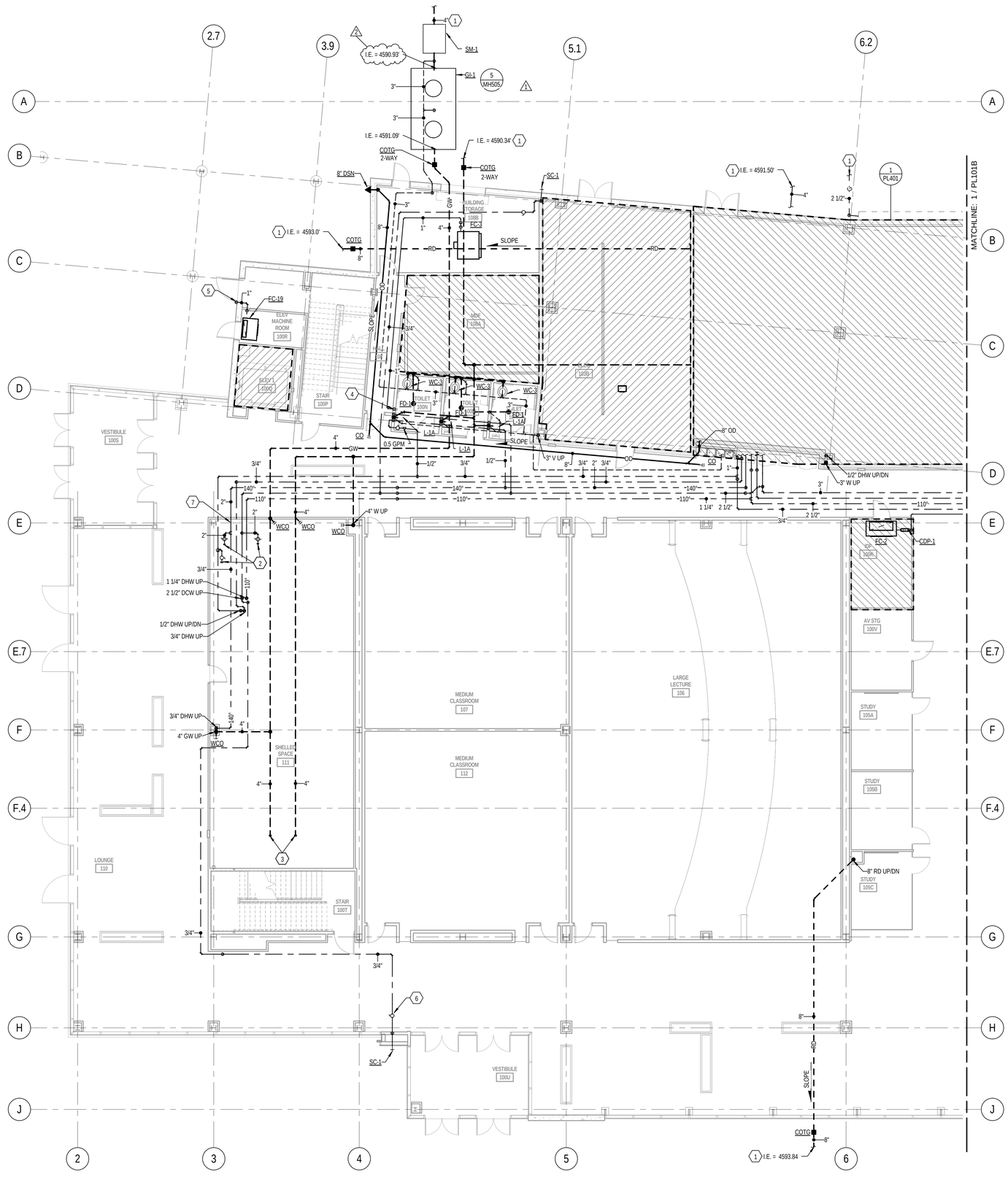

1 LEVEL 1 AREA 'A' PLUMBING FLOOR PLAN

SCALE: 1/8" = 1'-0"

KEYED NOTES

1. REFER TO CIVIL DRAWINGS FOR PIPE CONTINUATION.
2. PROVIDE SHUT OFF VALVE IN DOMESTIC HOT AND COLD WATER, AND HOT WATER RECIRC AND CAP FOR FUTURE CONNECTION.
3. CAP 4" GREASE WASTE AND 4" SANITARY WASTE PIPING FOR FUTURE CONNECTION.
4. ROUTE 3/4" CONDENSATE DRAIN DOWN IN WALL AND CONNECT TO TAIL PIECE OF LAVATORY.
5. ROUTE 1" CONDENSATE DRAIN LINE DOWN ALONG WALL AND TURN AND PENETRATE EXTERIOR WALL AND TURN DOWN AND TERMINATE 6" ABOVE FINISHED GRADE AND DAYLIGHT TO OUTSIDE. PROVIDE INSECT SCREEN AT END OF PIPE.
6. PROVIDE SILLCOCK SHUTOFF VALVE IN DOMESTIC COLD WATER LINE ABOVE CEILING.
7. OFFSET DOMESTIC WATER PIPING BELOW STRUCTURE, OFFSET DOMESTIC WATER PIPING UP TO SET HEIGHT AFTER CLEARING STRUCTURE.

GENERAL NOTES

A. INVERT ELEVATIONS SHOWN ARE TO BOTTOM OF PIPE FLOW. ELEVATIONS ARE BASED ON FINISHED SLAB AT 100'-0"
B. DOWNSPOUT NOZZLES TO BE INSTALLED AT 24" ABOVE FINISHED GRADE. ALL DOWNSPOUT NOZZLES TO DISCHARGE INTO STORM CATCH BASIN. REFER TO CIVIL DRAWING, SHEET C104, FOR CATCH BASIN DETAILS.
C. ALL HORIZONTAL ROOF DRAIN AND OVERFLOW DRAIN PIPING TO BE SLOPED AT 1/8" PER FOOT.
D. DO NOT ROUTE ANY PIPING ABOVE ELECTRICAL, IDF OR ELEVATOR MACHINE ROOMS.
E. ROUTE ALL WASTE PIPING 2 1/2" AND SMALLER AT 1/4" PER FOOT SLOPE, ROUTE ALL WASTE PIPING 3" AND LARGER AT 1/8" PER FOOT SLOPE.

KEY PLAN:

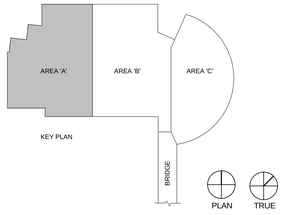

COLVIN ENGINEERING ASSOCIATES
244 West 300 North, Suite 200 / Salt Lake City, Utah 84103
Phone 801.322.2400 / colvinengineering.com

Copyright (C) 2012 by Colvin Engineering Associates, Inc. Salt Lake City, Utah. All rights reserved. Unauthorized copying and/or use is illegal and subject to prosecution.

UNLESS A PROFESSIONAL SEAL WITH SIGNATURE AND DATE IS AFFIXED, THIS DOCUMENT IS PRELIMINARY AND IS NOT INTENDED FOR CONSTRUCTION, RECORDING PURPOSES, OR IMPLEMENTATION

UTAH VALLEY UNIVERSITY

State of Utah
Department of Administrative Services
Division of Facilities Construction & Management
4110 State Office Building
Salt Lake City, Utah 84114
Phone: (801) 538 - 3018
Fax: (801) 538 - 3267

CRSA METHODSTUDIO INC.

CRSA ARCHITECTS
649 east south temple
salt lake city, utah 84102
phone:(801) 355-5915

METHOD STUDIO INC.
925 south west temple
salt lake city, utah 84101
phone:(801) 532-4422

DFCM APPROVAL STAMP

project:
UVU Classroom Building

800 University Way
Orem, UT 84058

project#: DFCM #12192790
date: APRIL 30, 2013

revisions:

1	ADDENDUM #3	5.22.2013
2	ADDENDUM #5	5.24.2013

title:
LEVEL 1 AREA 'A' PLUMBING FLOOR PLAN

sheet:
PL101A

BID DOC

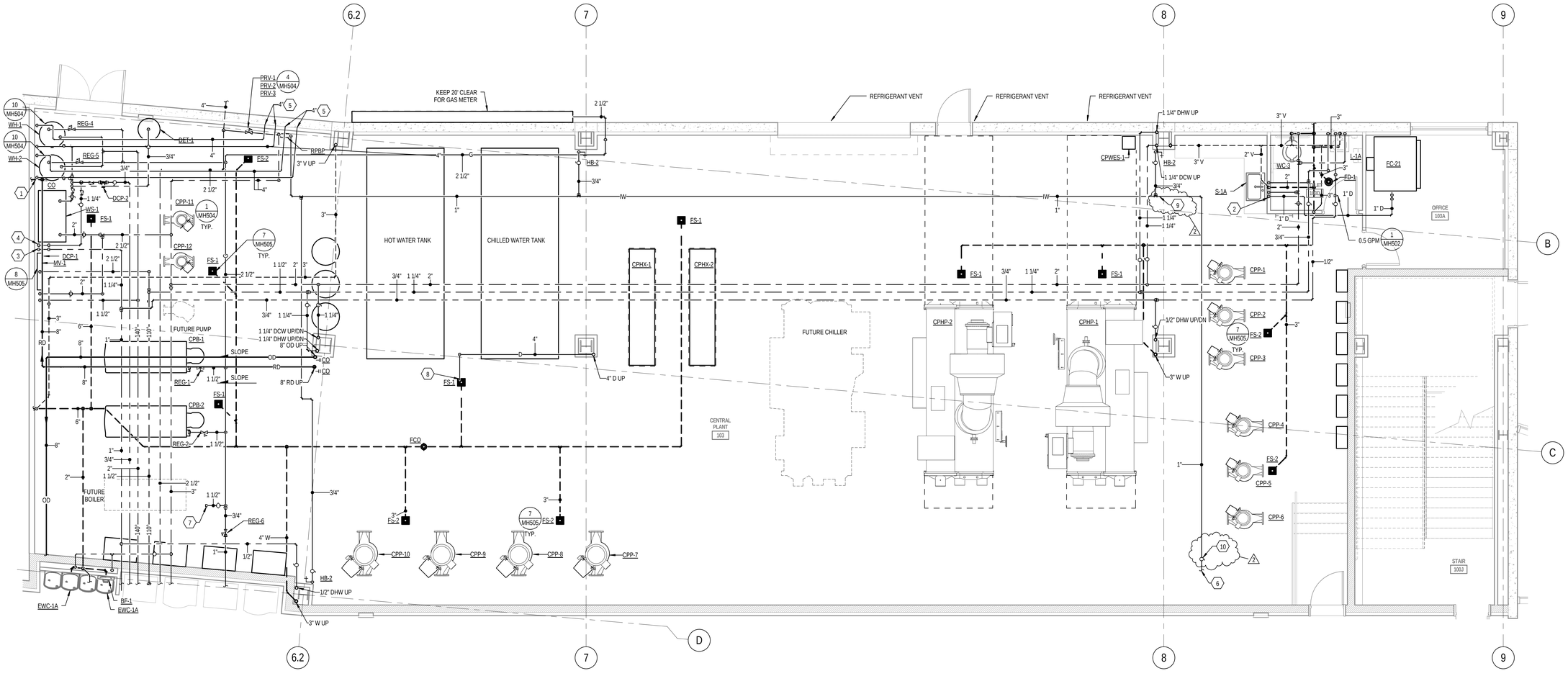

1 ENLARGED PLUMBING CENTRAL PLANT

SCALE: 1/4" = 1'-0"

KEYED NOTES

1. ROUTE 8" ROOF DRAIN PIPING AS HIGH AS POSSIBLE ALONG WEST WALL OF CENTRAL PLANT. DROP PIPING IN LOCATION SHOWN AND PENETRATE THROUGH WALL TO SPACE BELOW THE ELECTRICAL ROOM SLAB.
2. ROUTE 1" CONDENSATE DRAIN LINE DOWN IN WALL AND CONNECT TO SINK TAIL PIECE.
3. ROUTE 1" DOMESTIC HOT WATER RECIRC. DOWN TO DOMESTIC HOT WATER RECIRC. INLET CONNECTION ON MASTER MIXING VALVE.
4. ROUTE 1" DOMESTIC HOT WATER RECIRC. FROM MASTER MIXING VALVE OUTLET TO DOMESTIC COLD WATER PIPING DOWNSTREAM OF WATER SOFTENER TO HOT WATER HEATERS.
5. TERMINATE WATER HEATER 4" COMBUSTION AIR/FLUE WITH CONCENTRIC VENT KIT THROUGH WALL. KEEP 10' MINIMUM FROM ANY OPENING.
6. SEE SHEET 1/PL101 FOR PIPE CONTINUATION FOR GREEN ROOF IRRIGATION.
7. PROVIDE SHUTOFF VALVE AND CAP GAS PIPING FOR FUTURE CONNECTION.
8. ROUTE CONDENSATE DRAIN FROM PENTHOUSE AIR HANDLER COOLING COIL FLOOR SINK. PROVIDE AIR GAP AS REQUIRED.
9. ALL INDUSTRIAL WATER PIPING BEYOND THIS POINT SERVES THE GREEN ROOF IRRIGATION SYSTEM AND IS PART OF THE ALTERNATE PACKAGE #1 AND IS NOT TO BE INCLUDED IN THE BASE BID PACKAGE.
10. THIS BALL VALVE TO BE CLEARLY LABELED AS SERVING THE GREEN ROOF IRRIGATION SILLCOCK.

GENERAL NOTES

A. ALL HORIZONTAL ROOF DRAIN AND OVERFLOW DRAIN PIPING TO BE SLOPED AT 1/8" PER FOOT.

B. ROUTE ALL WASTE PIPING 21/2" AND SMALLER AT 1/4" PER FOOT SLOPE, ROUTE ALL WASTE PIPING 3" AND LARGER AT 1/8" PER FOOT SLOPE.

KEY PLAN:

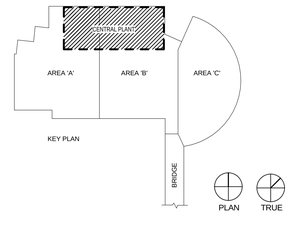

COLVIN ENGINEERING ASSOCIATES
244 West 300 North, Suite 200 / Salt Lake City, Utah 84103
Phone 801.322.2400 / colvinengineering.com

Copyright (C) 2012 by Colvin Engineering Associates, Inc. Salt Lake City, Utah. All rights reserved. Unauthorized copying and/or use is illegal and subject to prosecution.

UNLESS A PROFESSIONAL SEAL WITH SIGNATURE AND DATE IS AFFIXED, THIS DOCUMENT IS PRELIMINARY AND IS NOT INTENDED FOR CONSTRUCTION, RECORDING PURPOSES, OR IMPLEMENTATION

UTAH VALLEY UNIVERSITY

State of Utah
Department of Administrative Services
Division of Facilities Construction & Management
4110 State Office Building
Salt Lake City, Utah 84114
Phone: (801) 538 - 3018
Fax: (801) 538 - 3267

CRSA METHOD STUDIO INC.

CRSA ARCHITECTS
649 east south temple
salt lake city, utah 84102
phone:(801) 355 - 5915

METHOD STUDIO INC.
925 south west temple
salt lake city, utah 84101
phone:(801) 532-4422

DFCM APPROVAL STAMP

project:
UVU Classroom Building

800 University Way
Orem, UT 84058

project#: DFCM #12192790
date: APRIL 30, 2013

revisions:

1	ADDENDUM #3	5.22.2013
2	ADDENDUM #5	5.24.2013

title:
ENLARGED PLUMBING CENTRAL PLANT

sheet:
PL401

BID DOC

SPECTRUM
ENGINEERS

Addendum #05

Job: UVU Classroom Building
Job Number: 20120354
Date: May 24, 2013

DISCIPLINES
Mechanical Engineering
Electrical Engineering
Technology Design
Acoustical Engineering
Lighting Design
Theatre Design
Fire Protection Engineering
Building Commissioning

CENTERS OF
ENGINEERING EXCELLENCE
Healthcare
Higher Education
K-12 Education
Government
Houses of Worship
Special Projects

SALT LAKE CITY
324 S. State Street
Suite 400
Salt Lake City, UT 84111
phone: 801-328-5151
fax: 801-328-5155

PHOENIX
1501 W. Fountainhead Parkway
Suite 340
Tempe, AZ 85282
phone: 480-621-3444
fax: 480-621-3445

www.spectrum-engineers.com
800-678-7077

ELECTRICAL – DIV 26

GENERAL

1. The Division 16 Unit Price Bid Form is attached to this addendum and shall be completed by the apparent two low bidders within 24 hours after the bid opening. The unit prices given shall be guaranteed for the duration of the project, and is the same for adds or deducts.
2. Provide 20A/1P circuit breakers for all spares.
3. There should be two General Notes on all lighting plan sheets:

    1. COVE LIGHTS MOUNTED IN ARCHITECTURAL COVE AT TWO DIFFERENT ELEVATIONS. PROVIDE CONTINUOUS END-TO-END LIGHTING IN COVES USING 4' FIXTURES WHERE POSSIBLE AND 2' FIXTURES TO FILL REMAINING GAPS. COORDINATE EXACT PLACEMENT OF LIGHTS WITH ARCHITECTURAL COVE DETAILS AND ELEVATIONS. FIELD VERIFY ACTUAL COVE DIMENSIONS PRIOR TO ROUGH-IN.
    2. CIRCUIT ALL EXIT SIGNS TO UNSWITCHED BRANCH OF ASSOCIATED CIRCUIT.

4. General Sheet Note #1 on the ET sheets should read:

    1. PLANS, IN GENERAL SHOW CABLE TRAYS IN PLAN AND DO NOT DETAIL CHANGES IN ELEVATION. COORDINATE LAYOUT AND INSTALLATION OF CABLE TRAYS AND SUSPENSION SYSTEM WITH OTHER CONSTRUCTION ELEMENTS. INCLUDE TRANSITIONS, OFFSETS AND CHANGES IN ELEVATION. COORDINATE ITEMS THAT PENETRATE CEILINGS OR ARE SUPPORTED BY THEM, INCLUDING LIGHT FIXTURES, HVAC EQUIPMENT, FIRE SUPPRESSION SYSTEMS AND PARTITION ASSEMBLIES

5. New General Sheet note #10 for all ET sheets:

    10. RUN ALL DATA CABLING LESS THAN 90 METERS IN LENGTH TO THE CENTRAL IDF ROOMS ON EACH FLOOR AND NOT TO THE TELECOMMUNICATIONS CLOSETS LOCATED IN THE SOUTHWEST CORNER OF THE BUILDING. THOSE CLOSETS ARE FOR CABLING THAT EXCEEDS 90 METERS IN LENGTH TO THE CENTRAL IDF.

6. The minimum size for voice/data conduits shall be 1 ¼". Smaller conduits will not be allowed.
7. Provide 6 low-voltage, lockable, wall stations for lighting control per floor. Locate one near each stairwell and allow two to be located by the architect in the field.

DRAWINGS

SPECTRUM
ENGINEERS

SHEET - EE601
1. Tie grounding bar to distribution panelboards “0MSL” and “0MSH.”

SHEET - ES101 – Refer to attached sheet
1. Site electrical updated.

SHEET - ES102 – Refer to attached sheet
1. Site electrical updated.

SHEET - ES103 – Refer to attached sheet
1. Site electrical updated.

SHEET - ES501
1. Delete detail E6 – Bollard Mounting Detail.

SHEET - EP101a, EP101b – Refer to attached sheets.
1. Various minor circuiting modifications.

SHEET - EP101C
1. Provide electrical connections to two skyfold doors between auditorium partitions. Circuit each to 3-phase, 30A circuit breakers in panel 1LC1. Provide 3 #10, #10 GR in 0.75” CND and 30A non-fusible disconnect for each. Provide control switches as required by the architect.
2. A/V 001B – Circuit electrical receptacles in this room to 1QLA1-75.
3. Circuit SE ADA door operators to 1QLA1-39.

SHEET - EP101d – Refer to attached sheet
1. Updated circuiting and new electrical gear in the central plant.

SHEET - EP102c – Refer to attached sheet
1. New Sheet – Add alternate #1, auditorium roof patio electrical plans.

SHEET - EP103a
1. Conf. 305 - Homerun receptacle circuit to 3LA1-61.

SHEET - EP104b – Refer to attached sheet
1. Updated spare conduit requirements for future offices.

SHEET - EP105a
1. Multi Purpose 510 - Provide electrical connections to electric roller shades on north windows. Circuit to 5LA1-76. Keynote with #04019.
2. Provide GFI receptacle at the top of the elevator shaft. Circuit to panelboard 1ELA.

SHEET - EP105b
1. Provide two GFI receptacles at the top of the elevator shafts. Circuit to panelboard 1ELA.

SHEET - EP401 – Refer to attached sheet.
1. Refer to attached sheet for updated electrical room information.

SHEET - EP601 – Refer to attached sheet.
1. Refer to updated sheet for updated one-line diagram.

DISCIPLINES
Mechanical Engineering
Electrical Engineering
Technology Design
Acoustical Engineering
Lighting Design
Theatre Design
Fire Protection Engineering
Building Commissioning

CENTERS OF
ENGINEERING EXCELLENCE
Healthcare
Higher Education
K-12 Education
Government
Houses of Worship
Special Projects

SALT LAKE CITY
324 S. State Street
Suite 400
Salt Lake City, UT 84111
phone: 801-328-5151
fax: 801-328-5155

PHOENIX
1501 W. Fountainhead Parkway
Suite 340
Tempe, AZ 85282
phone: 480-621-3444
fax: 480-621-3445

www.spectrum-engineers.com
800-678-7077

SPECTRUM
ENGINEERS

SHEET - EP602 – Refer to attached sheet.
1. Refer to updated sheet for updated one-line diagram.

SHEET - EP603 – Refer to attached sheet.
1. Refer to updated sheet for updated one-line diagram.

SHEET - EP604 – Refer to attached sheet.
1. Refer to updated sheet for updated one-line diagram.

SHEET - EP605
1. Add note #1: Conduit rough-in only. Applies to CPB-3, CPC-3 and CPP-13.
2. CPB-1, CPB-2 & CPB-3: Change 'disconnect furnished by' to Q.

SHEET - EP606
1. SF-8, SF-10, SF-13, SF-15: Change 'disconnect furnished by' to Q.

SHEET - EP607
1. UH-4: Provide 20A/1P circuit breaker.

SHEET - EP608
1. Panel 1EHA: Provide main fusible panel.

SHEET - EP614
1. Panelboard "PL1" changed to 1 section.

SHEET - EP609 – Refer to attached sheet.
1. Panel schedules have been shifted to maintain readability.

SHEET - EL101a – Refer to attached sheet
1. Refer to attached sheet for updated lighting in the electrical room.

SHEET - EL101c – Refer to attached sheet
1. Refer to attached sheet for updated circuiting information.

SHEET - EL501a
1. Provide (V-1) fixture and switch circuited with electrical receptacle at the top of the elevator shaft.

SHEET - EL501b
1. Provide two (V-1) fixtures and switches circuited with electrical receptacle at the top of the elevator shaft.

SHEET - EL601 – Refer to attached sheet
1. Updated light fixture schedule with prior approvals.

SHEET - EL603
1. Auditorium Control One-Line – Provide RS232 control from AV system to each modular dimming system.

SHEET - ET102D
1. Note that the cable tray passes through rated walls going into the new Classroom Building and into the existing Library Building. Provide fire-stopping as specified.

DISCIPLINES
Mechanical Engineering
Electrical Engineering
Technology Design
Acoustical Engineering
Lighting Design
Theatre Design
Fire Protection Engineering
Building Commissioning

CENTERS OF
ENGINEERING EXCELLENCE
Healthcare
Higher Education
K-12 Education
Government
Houses of Worship
Special Projects

SALT LAKE CITY
324 S. State Street
Suite 400
Salt Lake City, UT 84111
phone: 801-328-5151
fax: 801-328-5155

PHOENIX
1501 W. Fountainhead Parkway
Suite 340
Tempe, AZ 85282
phone: 480-621-3444
fax: 480-621-3445

www.spectrum-engineers.com
800-678-7077

SPECTRUM
ENGINEERS

DISCIPLINES
Mechanical Engineering
Electrical Engineering
Technology Design
Acoustical Engineering
Lighting Design
Theatre Design
Fire Protection Engineering
Building Commissioning

CENTERS OF
ENGINEERING EXCELLENCE
Healthcare
Higher Education
K-12 Education
Government
Houses of Worship
Special Projects

SALT LAKE CITY
324 S. State Street
Suite 400
Salt Lake City, UT 84111
phone: 801-328-5151
fax: 801-328-5155

PHOENIX
1501 W. Fountainhead Parkway
Suite 340
Tempe, AZ 85282
phone: 480-621-3444
fax: 480-621-3445

www.spectrum-engineers.com
800-678-7077

SHEET - ET301 – Refer to attached sheet.
1. Refer to attached sheet for updated telecomm room elevations.

SHEET - ET401
1. Provide fire-treated plywood backboard on ALL walls of the IDF and MDF rooms.
2. A/V 001 Equipment: Provide fire-treated plywood backboard around the data equipment racks.
3. A/V 001 Equipment: Provide ladder rack above the data equipment racks.

SHEET - EY101a
1. Provide security connection to new door (type #9) in expanded electrical room. Homerun to ACS1.

SHEET - FA101a – Refer to attached sheet
1. Electrical room fire alarm requirement updated.

SHEET - FA102b
1. Provide two weatherproof strobe/speakers for the add-alternate #1 roof patio.

SHEET - TT601
1. Add the following General Notes:
   A. 2. No voice terminations will be allowed anywhere except the central IDF room on each floor. No voice cabling terminations are allowed in the smaller satellite IDF closets.
   B. 3. Terminate all cabling on the same floor as the outlet that it serves, including for floor box and poke-through terminations.
2. Edit keynote #44004 to read: "REFER TO EY SHEETS FOR SECURITY CAMERA LOCATIONS. TERMINATE CABLES IN A BISCUIT ABOVE THE CEILING. COORDINATE WITH UVU IT."
3. Fiber runs between MDF Room 108A and the Typical Closets, Levels 2, 3, 4, 5 shall be type F24.

SPECIFICATIONS

SECTION - 261350
1. Note: Freestanding indoor switchgear units are required, not pad-mount. Air-break switches are acceptable.

SECTION - 271300
1. 2.2 Patch Panels - Delete Siemon as an approved manufacturer for fiber patch panels.

SECTION - 271500
1. 2.2 Patch Panels - Delete Siemon as an approved manufacturer for fiber patch panels.
2. 2.6 Cables:
   A. All cables in this building shall be plenum rated. Non-plenum rated cables will not be accepted.
   B. Add Belden as an approved manufacturer of CAT6A and CAT5e cabling:
      1) CAT6A: 10GX120091000
      2) CAT5e: 1213D15U1000

END OF ADDENDUM

DIVISION 26 - ELECTRICAL UNIT PRICE BID FORM

UNIT PRICES

1. **Lighting fixtures**

   a. **Lighting fixtures:** Guarantee unit prices for each item listed. Change order (add or deduct) amounts for lighting fixtures (excluding lamps, sales tax, and installation) shall be the prices listed below multiplied by the quantities added or deducted.

Type	Manufacturer	Unit Price
AS-10		
CM-1		
CT-1		
CT-2		
CT-4		
CT-6		
CT-8		
CT-12		
DX-1a		
DX-1b		
DX-2		
DX-99a		
DX-99b		
DX-99c		
E1-1		
E1-2		
E9-1		
E9-2		
ET		
G-9		
GS-3		
LED-1		
LED-1d		
LED-50		
OB-1		
OC-32		
OE-1		
OF-4		
OJ-12		
PS-1		
SA-1		
SP-98		
SP-99		
V-1		
W-3		
WS-2		
ZX-1		

b. **Lighting fixture installation:** Guarantee unit prices for each item listed. Change order (add or deduct) amounts for installation of lighting fixtures (excluding fixtures, lamps, and sales tax) and including 30' of typical branch wiring shall be the prices listed below multiplied by the quantities added or deducted.

Type	Manufacturer	Unit Price
AS-10		
CM-1		
CT-1		
CT-2		
CT-4		
CT-6		
CT-8		
CT-12		
DX-1a		
DX-1b		
DX-2		
DX-99a		
DX-99b		
DX-99c		
E1-1		
E1-2		
E9-1		
E9-2		
ET		
G-9		
GS-3		
LED-1		
LED-1d		
LED-50		
OB-1		
OC-32		
OE-1		
OF-4		
OJ-12		
PS-1		
SA-1		
SP-98		
SP-99		
V-1		
W-3		
WS-2		
ZX-1		

2. **Devices:** Guarantee unit prices for each item listed. Change order (add or deduct) amounts for complete installation shall be the prices listed below multiplied by the quantities added or deducted. Unit price shall include material and labor for complete installation of wiring devices.

Include 50' of branch wiring or cabling (as applicable) with the following:

Wiring Device	Unit Price
Convenience Outlet	_____
Switch	_____
Three-way switch	_____
Four-way switch	_____
Four Service Floor box (FB4)	_____
GFCI outlet	_____
Weatherproof outlet	_____
Voice/Data outlet with cabling	_____
Smoke Detector	_____
Duct Detector	_____
Horn/Strobe	_____
Control Module	_____
Monitor Module	_____
Smoke Damper Connection	_____

3. Provide unit prices for the following:

3/4" CND, with 4 #14THWN	_____	Lf
3/4" CND, with 4 #12THWN	_____	Lf
3/4" CND, with 4 #10THWN	_____	Lf
1" CND, with 4 #8 THWN	_____	Lf
1.25" CND, with 4 #6 THWN	_____	Lf
3/4" CND	_____	Lf

4. Electrician billing rates per hour:

Superintendent	_____
Journeyman	_____
3rd year apprentice	_____
2nd year apprentice	_____
1st year apprentice	_____

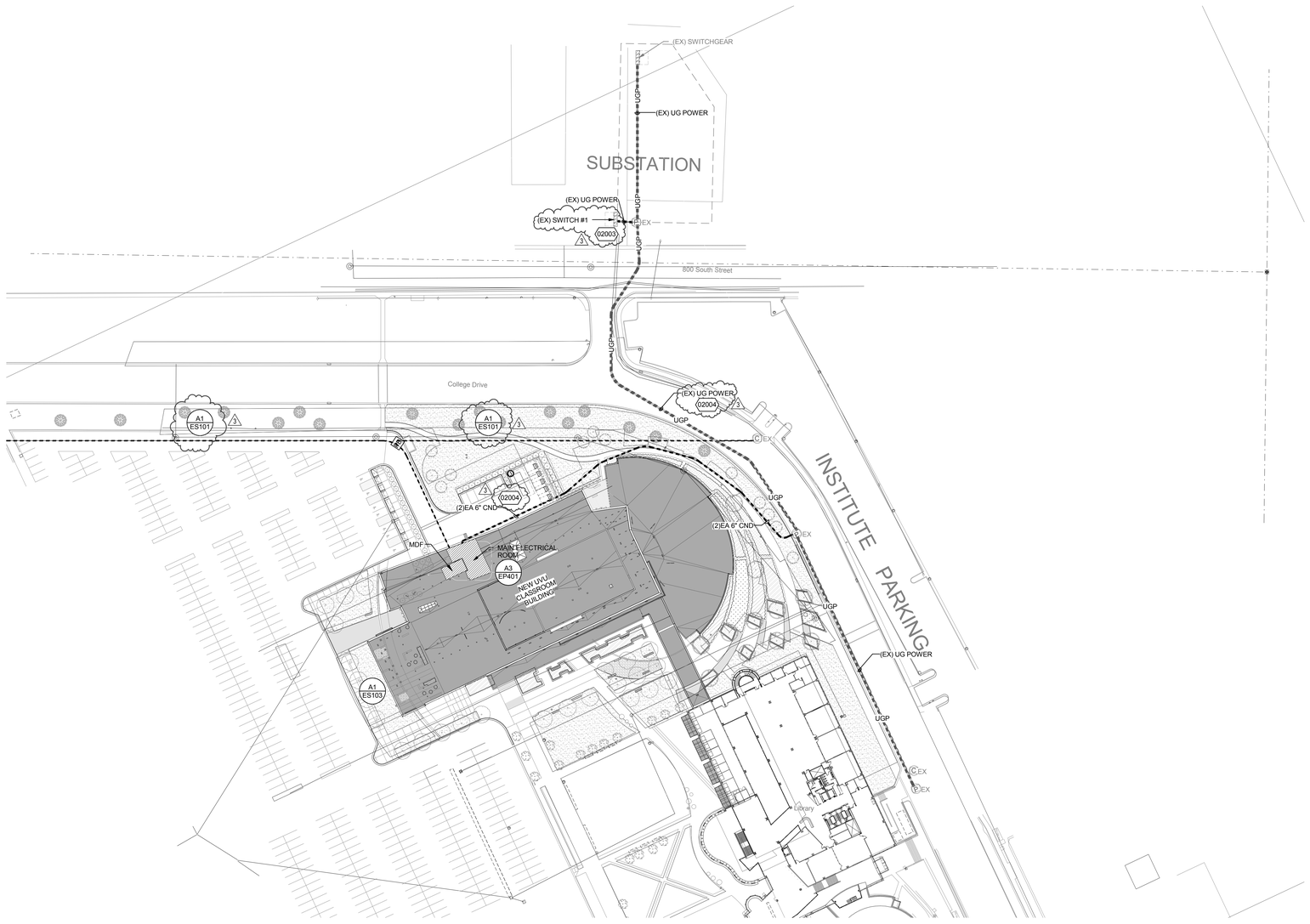

north

ENLARGED CAMPUS SITE PLAN

A1 / ES102

1" = 60'-0"

GENERAL SHEET NOTES

3

SHEET KEYNOTES

3

02003 TERMINATE NEW NORTH CENTRAL PLANT ELECTRICAL FEED ON OPEN 600A SWITCH LEG.

02004 UTILIZE EXISTING SPARE CONDUIT FOR NEW ELECTRICAL CONDUCTORS TO NEW NORTH CENTRAL PLANT. RUN CONDUCTORS TO MANHOLE AT THE EAST END OF THE BUILDING, THEN THROUGH NEW CONDUIT TO SWITCHGEAR.

LICENSED PROFESSIONAL ENGINEER
No. 8182456
TYLER SQUIRE
STATE OF UTAH

UNLESS A PROFESSIONAL SEAL WITH SIGNATURE AND DATE IS AFFIXED, THIS DOCUMENT IS PRELIMINARY AND IS NOT INTENDED FOR CONSTRUCTION, RECORDING PURPOSES, OR IMPLEMENTATION

UTAH VALLEY UNIVERSITY

State of Utah
Department of Administrative Services
Division of Facilities Construction & Management
4110 State Office Building
Salt Lake City, Utah 84114
Phone: (801) 538 - 3018
Fax: (801) 538 - 3267

CRSA METHODSTUDIO INC.

CRSA ARCHITECTS
649 east south temple
salt lake city, utah 84102
phone:(801) 355-5915

METHOD STUDIO INC.
925 south west temple
salt lake city, utah 84101
phone:(801) 532-4422

SPECTRUM ENGINEERS
324 S. State St., Suite 400
Salt Lake City, UT 84111
800-678-7077
801-328-5151
fax: 801-328-5155
www.spectrum-engineers.com

DFCM APPROVAL STAMP

project:
UVU Classroom Building - Volume 1
800 West University Parkway
Orem, UT 84058

project#: DFCM# 12192790
date: April 30, 2013

revisions :
3 Addendum #5 5/24/2013

title:
Overall Site Electrical Plan

sheet:
ES102

BID DOC

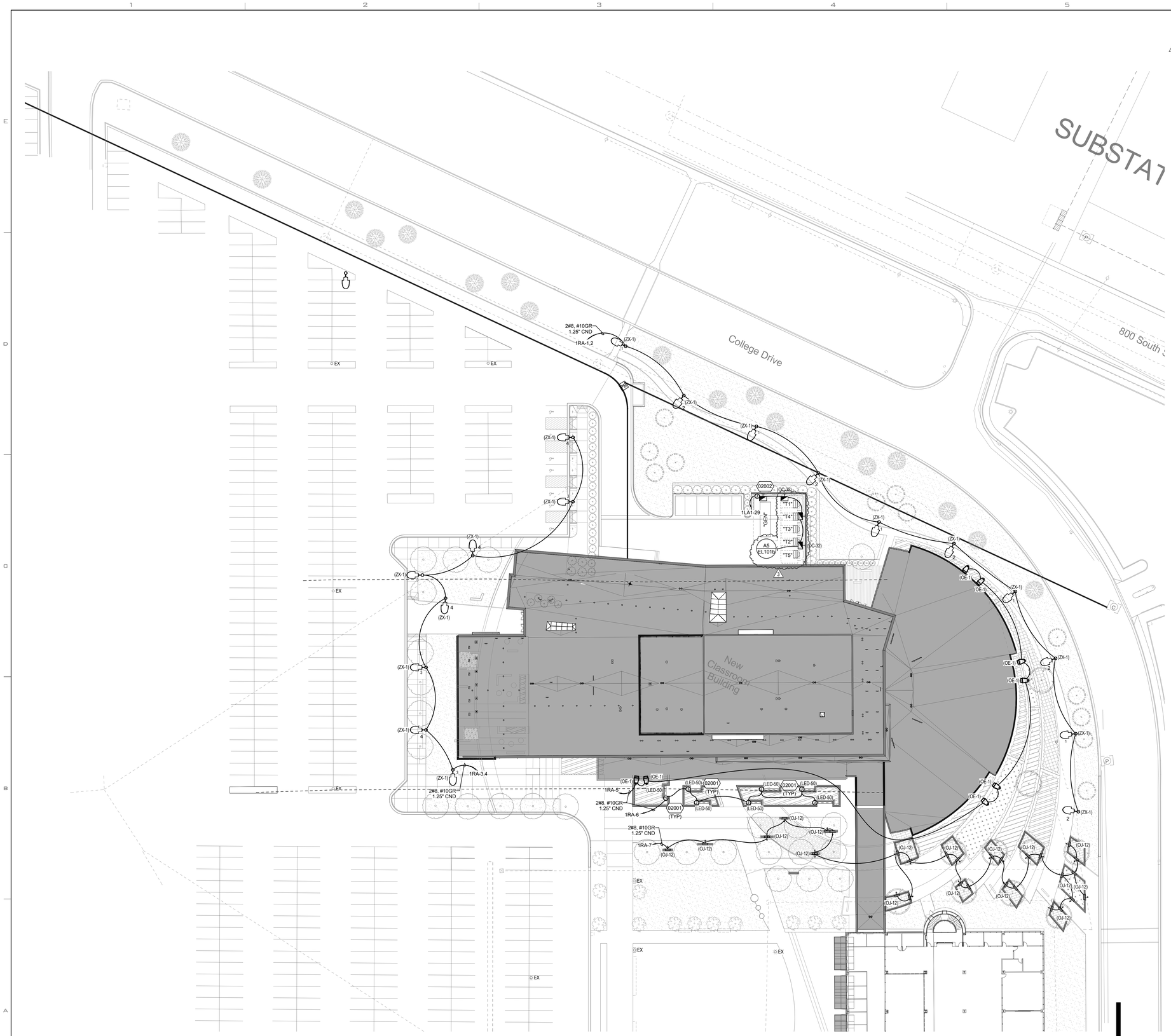

SITE ELECTRICAL PLAN (A1 / ES103)

1" = 30'-0"

GENERAL SHEET NOTES

1 RUN ALL CIRCUITS TO EVERY POLE OR LIGHT FIXTURE.

2 MINIMUM 1.25" CONDUIT IS REQUIRED FOR ALL SITE CONDUIT UNLESS OTHERWISE NOTED.

SHEET KEYNOTES

02001 LED STRIP LIGHT MOUNTED UNDER ARCHITECTURAL BENCH. COORDINATE EXACT LOCATION IN FIELD WITH ARCHITECT/ENGINEER PRIOR TO ROUGH-IN.

02002 PROVIDE JUNCTION BOX FOR POWER CONNECTION TO IRRIGATION CONTROLLER. FIELD COORDINATE EXACT LOCATION PRIOR TO ROUGH-IN.

LICENSED PROFESSIONAL ENGINEER
No. 8182456
TYLER SQUIRE
STATE OF UTAH

UNLESS A PROFESSIONAL SEAL WITH SIGNATURE AND DATE IS AFFIXED, THIS DOCUMENT IS PRELIMINARY AND IS NOT INTENDED FOR CONSTRUCTION, RECORDING PURPOSES, OR IMPLEMENTATION

UTAH VALLEY UNIVERSITY

State of Utah
Department of Administrative Services
Division of Facilities Construction & Management
4110 State Office Building
Salt Lake City, Utah 84114
Phone: (801) 538 - 3018
Fax: (801) 538 - 3267

CRSA METHODSTUDIO INC.

CRSA ARCHITECTS
649 east south temple
salt lake city, utah 84102
phone:(801) 355-5915

METHOD STUDIO INC.
925 south west temple
salt lake city, utah 84101
phone:(801) 532-4422

SPECTRUM ENGINEERS
324 S. State St., Suite 400
Salt Lake City, UT 84111
800-678-7077
801-328-5151
fax: 801-328-5155
www.spectrum-engineers.com

DFCM APPROVAL STAMP

project:

UVU Classroom Building - Volume 1

800 West University Parkway
Orem, UT 84058

project#: DFCM# 12192790
date: April 30, 2013

revisions:

3	Addendum #5	5/24/2013

title:

Site Electrical Plan

sheet:

ES103

BID DOC

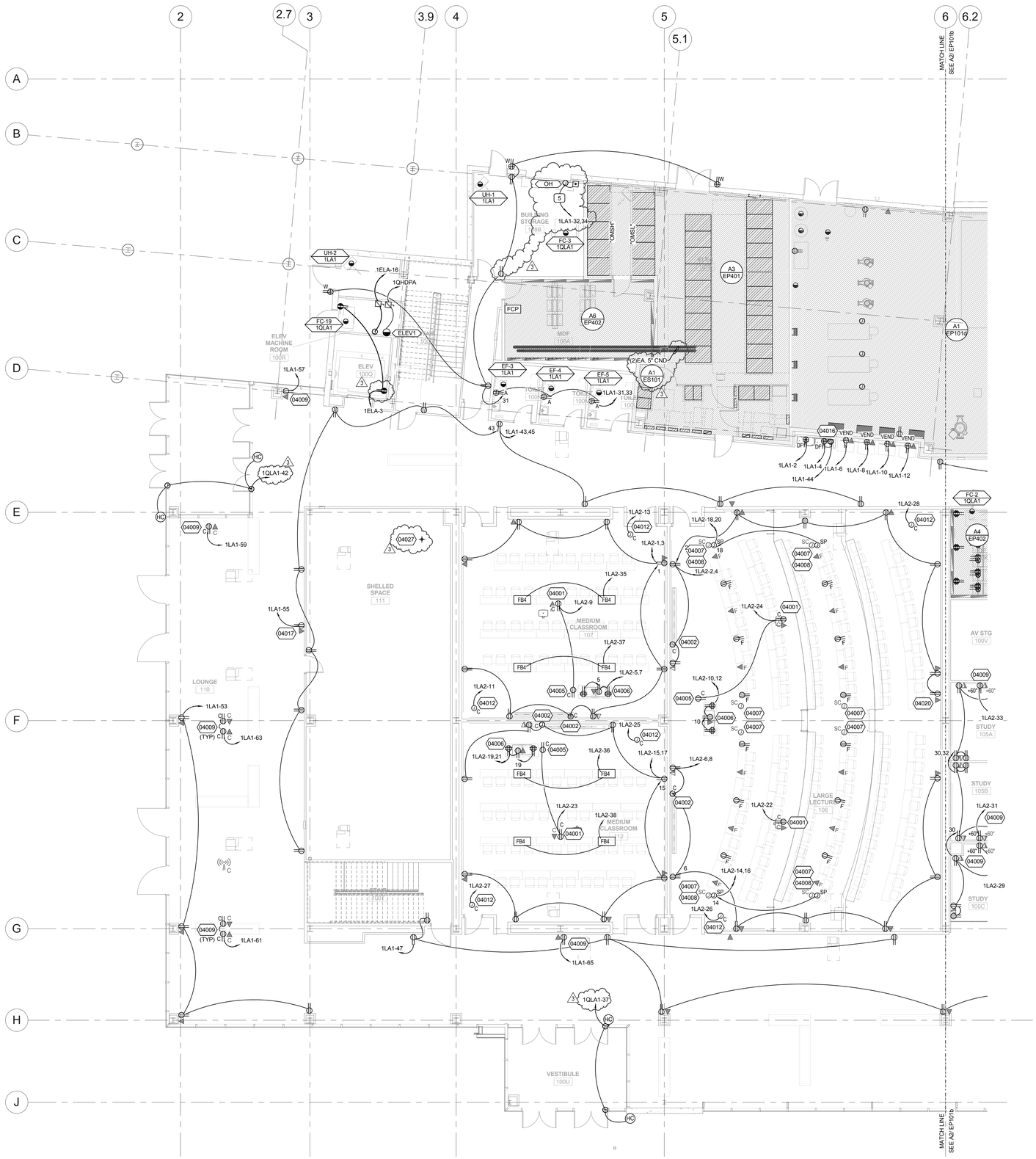

Level 1 Area 'A' Power Plan

A2 / EP101a

1/8" = 1'-0"

GENERAL SHEET NOTES

1 COORDINATE EXACT LOCATION OF ALL FLOORBOXES WITH ARCHITECTURAL AND STRUCTURAL DRAWINGS PRIOR TO ROUGH-IN OR INSTALLATION.

SHEET KEYNOTES

04001 PROVIDE ELECTRICAL RECEPTACLE MOUNTED IN PROJECTOR BACKBOX FOR A/V PROJECTOR. COORDINATE EXACT LOCATION WITH A/V INSTALLER.

04002 PROVIDE ELECTRICAL CONNECTIONS TO MOTORIZED SCREEN WITH AC POWER AND CONTROL WIRING PER MANUFACTURER'S WRITTEN INSTRUCTIONS. MOUNT CONTROL SWITCH IN LOCATION APPROVED BY ARCHITECT. INTERFACE WITH A/V CONTROLS PWER A/V DRAWINGS.

04005 PROVIDE OUTLET OR J-BOX FOR CEILING MOUNTED DOCUMENT CAMERA. COORDINATE WITH ARCHITECTURAL DETAILS AND A/V INSTALLER.

04006 MOUNT QUADRAPLEX OUTLETS IN SMART LECTURN AND DUPLEX RECEPTACLE ON TOP OF LECTURN ACCORDING TO ARCHITECTURAL AND A/V DETAILS. VERIFY LOCATIONS WITH ARCHITECT AND FURNITURE INSTALLER PRIOR TO INSTALLATION.

04007 STUB 1.25" CND TO DATA CLOSET FOR DATA CABLING IN THIS ROW OF SEATS. VERIFY EXACT STUB LOCATIONS WITH ARCHITECT PRIOR TO INSTALLATION.

04008 PROVIDE ELECTRICAL CONNECTIONS TO POWERED SYSTEMS FURNITURE. BASIS OF DESIGN IS A 4-CIRCUIT/8-WIRE SYSTEM. VERIFY ELECTRICAL REQUIREMENTS AND EXACT STUB LOCATIONS WITH ARCHITECT PRIOR TO INSTALLATION.

04009 PROVIDE OUTLET OR J-BOX FOR A/V MONITOR DEPENDING ON ACTUAL FIELD CONDITIONS. COORDINATE WITH ARCHITECTURAL DETAILS AND A/V INSTALLER. VERIFY DEVICE ELEVATION WITH UVU MEDIA PRIOR TO INSTALLATION.

04012 PROVIDE SPARE 20A/1P CIRCUIT WITH CONDUCTORS TO THIS POINT FOR FUTURE USE. CAP BOX AND LABEL PER SPECIFICATIONS.

04016 PROVIDE ELECTRICAL CONNECTIONS TO BOTTLE FILLING STATIONS. COORDINATE EXACT LOCATION WITH PLUMBERS PRIOR TO ROUGH-IN OR INSTALLATION.

04017 ELECTRICAL RECEPTACLE AND DATA OUTLET FOR FUTURE ATM. COORDINATE EXACT LOCATION WITH ARCHITECT AND OWNER PRIOR TO ROUGH-IN OR INSTALLATION.

04020 PROVIDE ELECTRICAL RECEPTACLE AND DATA OUTLET FOR AV CAMERA. COORDINATE EXACT LOCATION WITH UVU MEDIA PRIOR TO ROUGH IN.

04027 PROVIDE (6) 1" CONDUITS STUBBED INTO THIS SPACE FROM THE MAIN ELECTRICAL ROOM FOR FUTURE USE. CAP AND LABEL.

KEYPLAN:

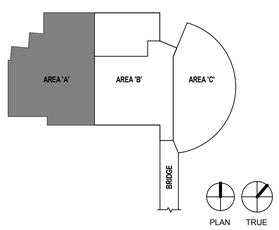

LICENSED PROFESSIONAL ENGINEER
No. 8182456
TYLER SQUIRE
STATE OF UTAH

UNLESS A PROFESSIONAL SEAL WITH SIGNATURE AND DATE IS AFFIXED, THIS DOCUMENT IS PRELIMINARY AND IS NOT INTENDED FOR CONSTRUCTION, RECORDING PURPOSES, OR IMPLEMENTATION

UTAH VALLEY UVU UNIVERSITY

State of Utah
Department of Administrative Services
Division of Facilities Construction & Management
4110 State Office Building
Salt Lake City, Utah 84114
Phone: (801) 538 - 3018
Fax: (801) 538 - 3267

CRSA METHODSTUDIO INC.

CRSA ARCHITECTS
649 east south temple
salt lake city, utah 84102
phone:(801) 355-5915

METHOD STUDIO INC.
925 south west temple
salt lake city, utah 84101
phone:(801) 532-4422

SPECTRUM ENGINEERS
324 S. State St., Suite 400
Salt Lake City, UT 84111
800-678-7077
801-328-5151
fax: 801-328-5155
www.spectrum-engineers.com

DFCM APPROVAL STAMP

project:
UVU Classroom Building - Volume 1
800 West University Parkway
Orem, UT 84058

project#: DFCM# 12192790
date: April 30, 2013

revisions :

1	Addendum #2	5/16/2013
2	Addendum #3	5/22/2013
3	Addendum #5	5/24/2013

title:
Level 1 Area 'A' Power Plan

sheet:
EP101a

BID DOC

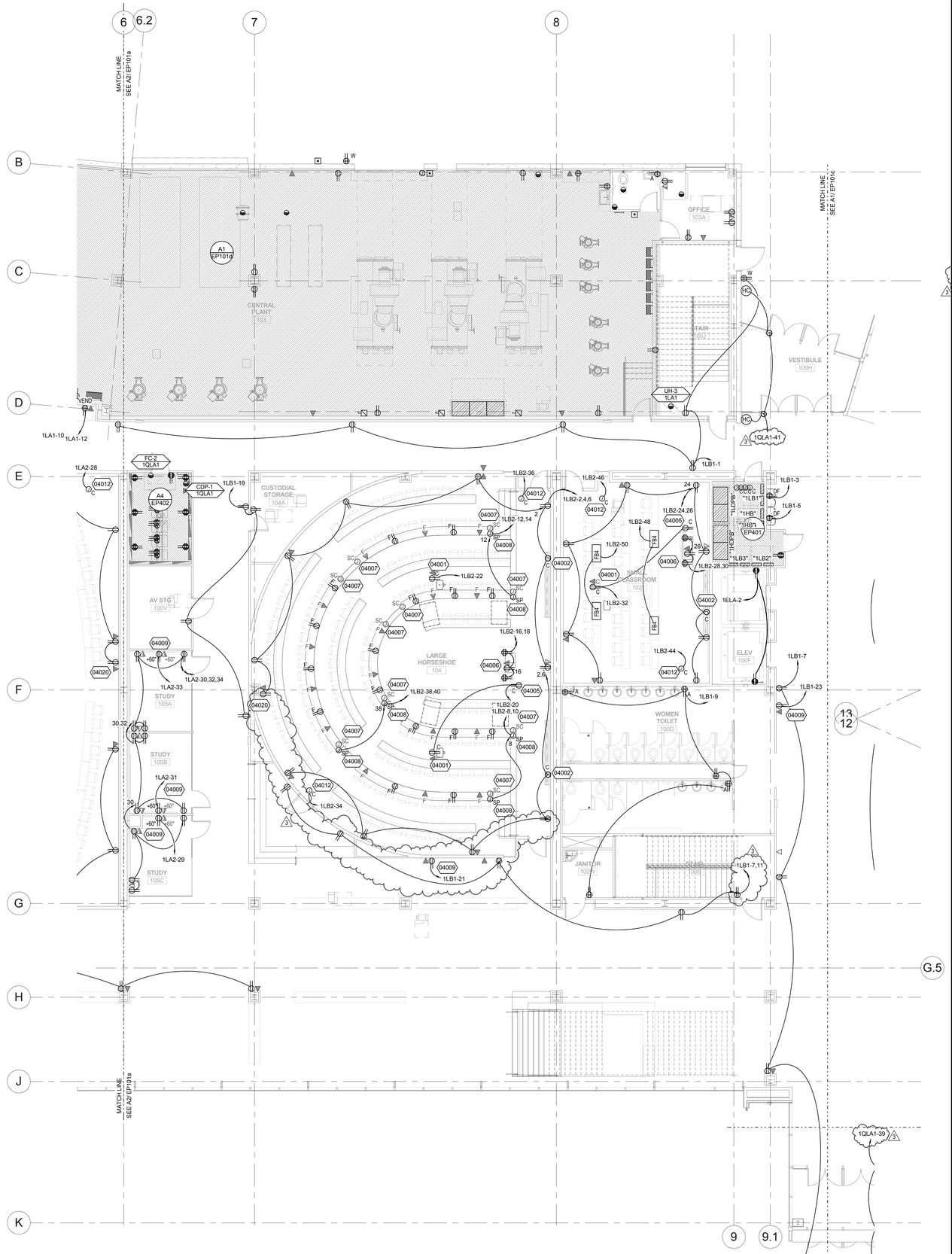

GENERAL SHEET NOTES

1 COORDINATE EXACT LOCATION OF ALL FLOORBOXES WITH ARCHITECTURAL AND STRUCTURAL DRAWINGS PRIOR TO ROUGH-IN OR INSTALLATION.

SHEET KEYNOTES

04001 PROVIDE ELECTRICAL RECEPTACLE MOUNTED IN PROJECTOR BACKBOX FOR A/V PROJECTOR. COORDINATE EXACT LOCATION WITH A/V INSTALLER.

04002 PROVIDE ELECTRICAL CONNECTIONS TO MOTORIZED SCREEN WITH ALL POWER AND CONTROL WIRING PER MANUFACTURER'S WRITTEN INSTRUCTIONS. MOUNT CONTROL SWITCH IN LOCATION APPROVED BY ARCHITECT. INTERFACE WITH A/V CONTROLS PWER A/V DRAWINGS.

04005 PROVIDE OUTLET OR J-BOX FOR CEILING MOUNTED DOCUMENT CAMERA. COORDINATE WITH ARCHITECTURAL DETAILS AND A/V INSTALLER.

04006 MOUNT QUADRAPLEX OUTLETS IN SMART LECTURN AND DUPLEX RECEPTACLE ON TOP OF LECTURN ACCORDING TO ARCHITECTURAL AND A/V DETAILS. VERIFY LOCATIONS WITH ARCHITECT AND FURNITURE INSTALLER PRIOR TO INSTALLATION.

04007 STUB 1.25" CND TO DATA CLOSET FOR DATA CABLING IN THIS ROW OF SEATS. VERIFY EXACT STUB LOCATIONS WITH ARCHITECT PRIOR TO INSTALLATION.

04008 PROVIDE ELECTRICAL CONNECTIONS TO POWERED SYSTEMS FURNITURE. BASIS OF DESIGN IS A 4-CIRCUIT/8-WIRE SYSTEM. VERIFY ELECTRICAL REQUIREMENTS AND EXACT STUB LOCATIONS WITH ARCHITECT PRIOR TO INSTALLATION.

04009 PROVIDE OUTLET OR J-BOX FOR A/V MONITOR DEPENDING ON ACTUAL FIELD CONDITIONS. COORDINATE WITH ARCHITECTURAL DETAILS AND A/V INSTALLER. VERIFY DEVICE ELEVATION WITH UVU MEDIA PRIOR TO INSTALLATION.

04012 PROVIDE SPARE 20A/1P CIRCUIT WITH CONDUCTORS TO THIS POINT FOR FUTURE USE. CAP BOX AND LABEL PER SPECIFICATIONS.

04020 PROVIDE ELECTRICAL RECEPTACLE AND DATA OUTLET FOR A/V CAMERA. COORDINATE EXACT LOCATION WITH UVU MEDIA PRIOR TO ROUGH IN.

KEYPLAN:

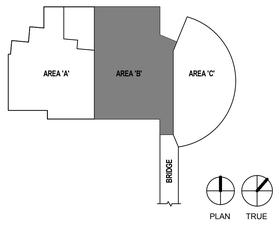

LICENSED PROFESSIONAL ENGINEER
No. 8182456
TYLER SQUIRE
STATE OF UTAH

UNLESS A PROFESSIONAL SEAL WITH SIGNATURE AND DATE IS AFFIXED, THIS DOCUMENT IS PRELIMINARY AND IS NOT INTENDED FOR CONSTRUCTION, RECORDING PURPOSES, OR IMPLEMENTATION

UTAH VALLEY UVU UNIVERSITY

State of Utah
Department of Administrative Services
Division of Facilities Construction & Management
4110 State Office Building
Salt Lake City, Utah 84114
Phone: (801) 538 - 3018
Fax: (801) 538 - 3267

CRSA METHODSTUDIO INC.

CRSA ARCHITECTS
649 east south temple
salt lake city, utah 84102
phone:(801) 355-5915

METHOD STUDIO INC.
925 south west temple
salt lake city, utah 84101
phone:(801) 532-4422

SPECTRUM ENGINEERS
324 S. State St., Suite 400
Salt Lake City, UT 84111
800-678-7077
801-328-5151
fax: 801-328-5155
www.spectrum-engineers.com

DFCM APPROVAL STAMP

project:
UVU Classroom Building - Volume 1
800 West University Parkway
Orem, UT 84058

project#: DFCM# 12192790
date: April 30, 2013

revisions:

1	Addendum #2	5/16/2013
2	Addendum #3	5/22/2013
3	Addendum #5	5/24/2013

title:
Level 1 Area 'B' Power Plan

sheet:
EP101b

BID DOC

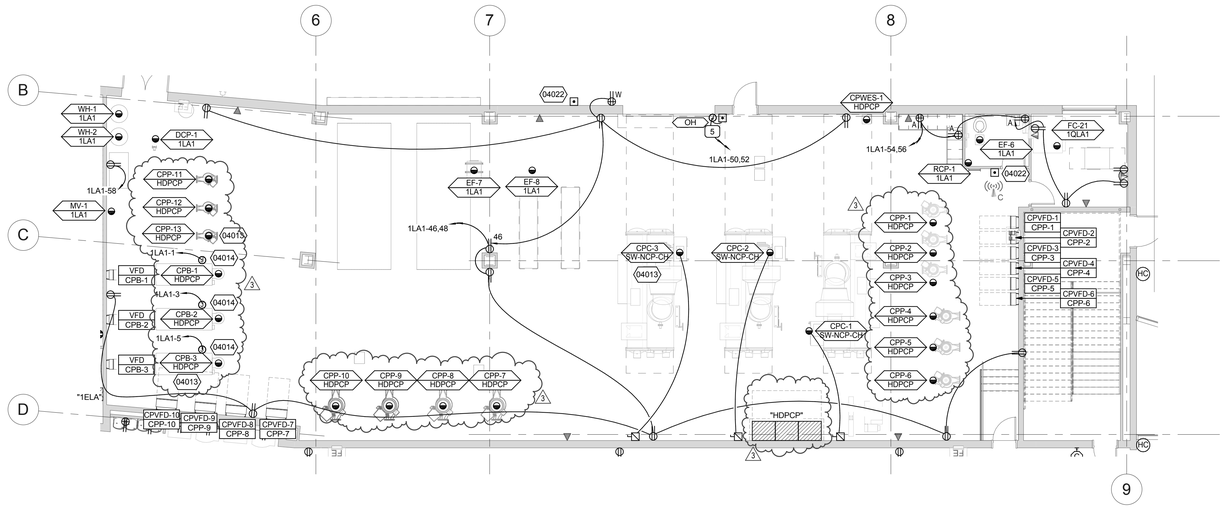

Overall Central Plant Power Plan

A1
EP101d

1/8" = 1'-0"

GENERAL SHEET NOTES

1 COORDINATE EXACT LOCATION OF ALL FLOORBOXES WITH ARCHITECTURAL AND STRUCTURAL DRAWINGS PRIOR TO ROUGH-IN OR INSTALLATION.

SHEET KEYNOTES

04013 PROVIDE ROUGH-IN FOR FUTURE MECHANICAL EQUIPMENT. PROVIDE CONDUIT WITH PULL-STRING TO PANEL INDICATED.

04014 PROVIDE ELECTRICAL CONNECTION TO 120V CONTROLS TRANSFORMER. COORDINATE EXACT LOCATION IN FIELD WITH MECHANICAL INSTALLER PRIOR TO ROUGH-IN.

3 04022 PROVIDE DUAL-ACTION EPO (EMERGENCY POWER OFF) SWITCH WITH LOCKABLE COVER TIED INTO THE MEDIUM VOLTAGE SCADA SYSTEM TO TERMINATE POWER TO CAMPUS. COORDINATE WITH UVU FACILITIES FOR EXACT LOCATION AND SCADA PROGRAMMING REQUIREMENTS.

KEYPLAN:

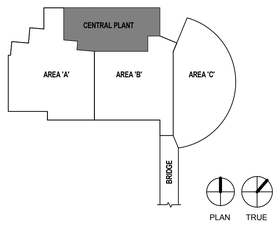

LICENSED PROFESSIONAL ENGINEER
No. 8182456
TYLER SQUIRE
STATE OF UTAH

UNLESS A PROFESSIONAL SEAL WITH SIGNATURE AND DATE IS AFFIXED, THIS DOCUMENT IS PRELIMINARY AND IS NOT INTENDED FOR CONSTRUCTION, RECORDING PURPOSES, OR IMPLEMENTATION

UTAH VALLEY UNIVERSITY

State of Utah
Department of Administrative Services
Division of Facilities Construction & Management
4110 State Office Building
Salt Lake City, Utah 84114
Phone: (801) 538 - 3018
Fax: (801) 538 - 3267

CRSA METHODSTUDIO INC.

CRSA ARCHITECTS
649 east south temple
salt lake city, utah 84102
phone:(801) 355-5915

METHOD STUDIO INC.
925 south west temple
salt lake city, utah 84101
phone:(801) 532-4422

SPECTRUM ENGINEERS
324 S. State St., Suite 400
Salt Lake City, UT 84111
800-678-7077
801-328-5151
fax: 801-328-5155
www.spectrum-engineers.com

DFCM APPROVAL STAMP

project:
UVU Classroom Building - Volume 1
800 West University Parkway
Orem, UT 84058

project#: DFCM# 12192790
date: April 30, 2013

revisions :
1 Addendum #2 5/16/2013
3 Addendum #5 5/24/2013

title:
Overall Central Plant Power Plan

sheet:
EP101d

BID DOC

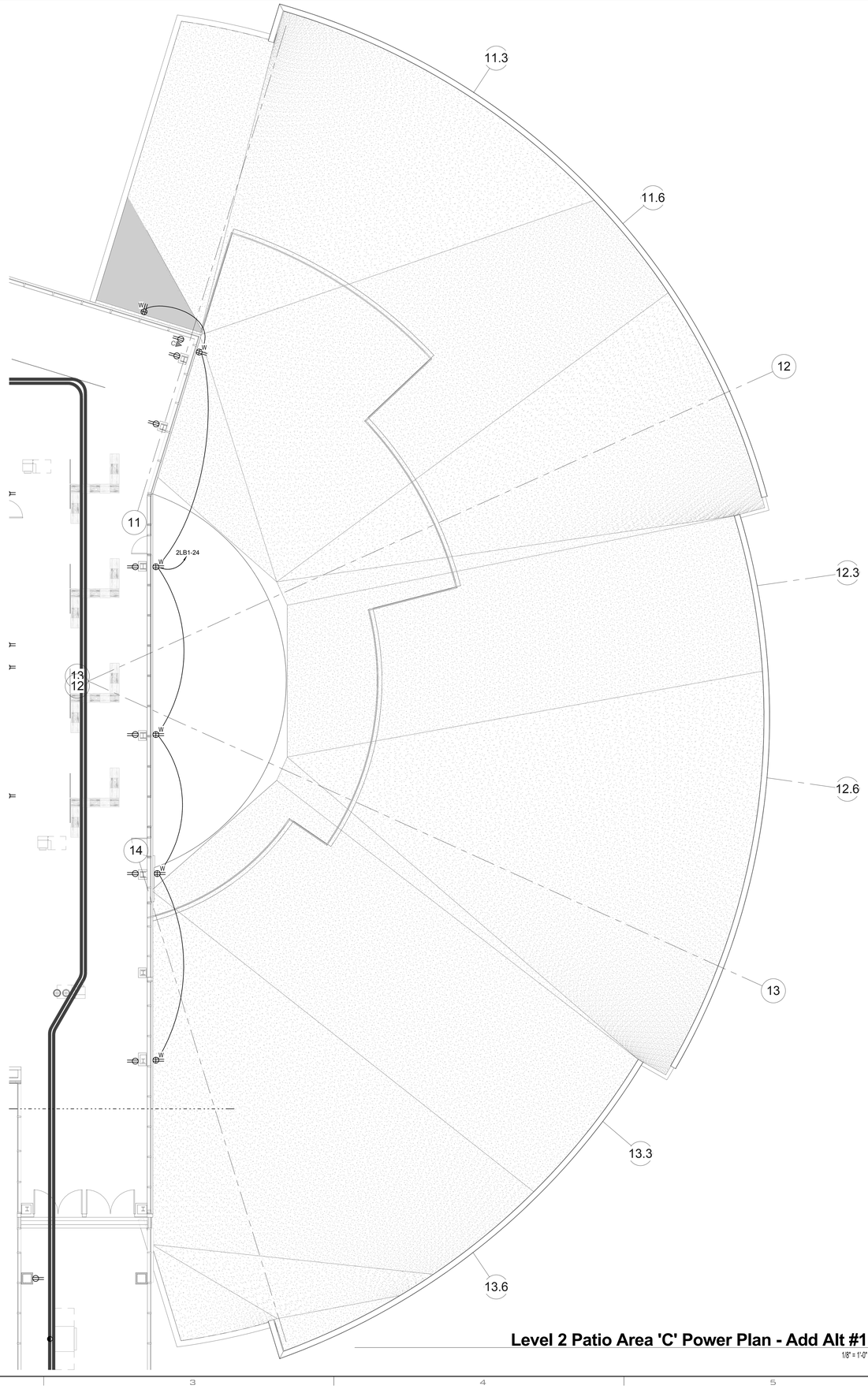

Level 2 Patio Area 'C' Power Plan - Add Alt #1 (A5 / EP102c)

1/8" = 1'-0"

GENERAL SHEET NOTES

1 COORDINATE EXACT LOCATION OF ALL FLOORBOXES WITH ARCHITECTURAL AND STRUCTURAL DRAWINGS PRIOR TO ROUGH-IN OR INSTALLATION.

SHEET KEYNOTES

KEYPLAN:

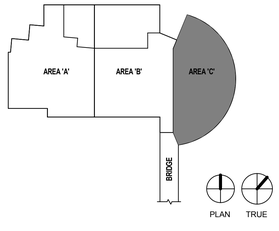

LICENSED PROFESSIONAL ENGINEER
No. 8182456
TYLER SQUIRE
STATE OF UTAH

UNLESS A PROFESSIONAL SEAL WITH SIGNATURE AND DATE IS AFFIXED, THIS DOCUMENT IS PRELIMINARY AND IS NOT INTENDED FOR CONSTRUCTION, RECORDING PURPOSES, OR IMPLEMENTATION

UTAH VALLEY UNIVERSITY

State of Utah
Department of Administrative Services
Division of Facilities Construction & Management
4110 State Office Building
Salt Lake City, Utah 84114
Phone: (801) 538 - 3018
Fax: (801) 538 - 3267

CRSA METHODSTUDIO INC.

CRSA ARCHITECTS
649 east south temple
salt lake city, utah 84102
phone:(801) 355-5915

METHOD STUDIO INC.
925 south west temple
salt lake city, utah 84101
phone:(801) 532-4422

SPECTRUM ENGINEERS
324 S. State St., Suite 400
Salt Lake City, UT 84111
800-678-7077
801-328-5151
fax: 801-328-5155
www.spectrum-engineers.com

DFCM APPROVAL STAMP

project:
UVU Classroom Building - Volume 1
800 West University Parkway
Orem, UT 84058

project#: DFCM# 12192790
date: April 30, 2013

revisions:
3 Addendum #5 5/24/2013

title:
Level 2 Patio Area 'C' Power Plan

sheet:
EP102c

3

BID DOC

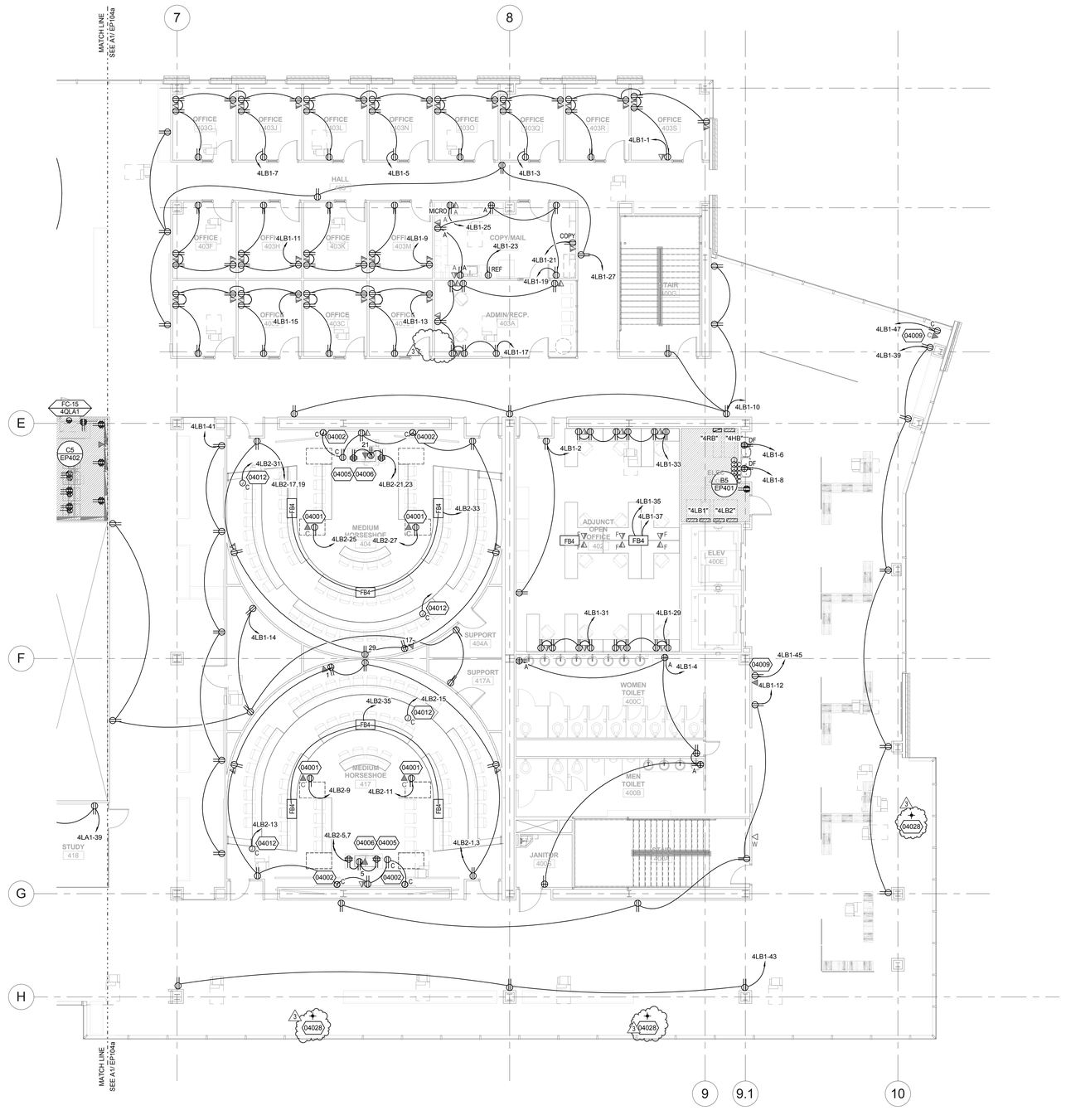

Level 4 Area 'B' Power Plan (A2 / EP104b)
1/8" = 1'-0"

GENERAL SHEET NOTES

1 COORDINATE EXACT LOCATION OF ALL FLOORBOXES WITH ARCHITECTURAL AND STRUCTURAL DRAWINGS PRIOR TO ROUGH-IN OR INSTALLATION.

SHEET KEYNOTES

04001 PROVIDE ELECTRICAL RECEPTACLE MOUNTED IN PROJECTOR BACKBOX FOR A/V PROJECTOR. COORDINATE EXACT LOCATION WITH A/V INSTALLER.

04002 PROVIDE ELECTRICAL CONNECTIONS TO MOTORIZED SCREEN WITH ALL POWER AND CONTROL WIRING PER MANUFACTURER'S WRITTEN INSTRUCTIONS. MOUNT CONTROL SWITCH IN LOCATION APPROVED BY ARCHITECT. INTERFACE WITH A/V CONTROLS PWER A/V DRAWINGS.

04005 PROVIDE OUTLET OR J-BOX FOR CEILING MOUNTED DOCUMENT CAMERA. COORDINATE WITH ARCHITECTURAL DETAILS AND A/V INSTALLER.

04006 MOUNT QUADRAPLEX OUTLETS IN SMART LECTURN AND DUPLEX RECEPTACLE ON TOP OF LECTURN ACCORDING TO ARCHITECTURAL AND A/V DETAILS. VERIFY LOCATIONS WITH ARCHITECT AND FURNITURE INSTALLER PRIOR TO INSTALLATION.

04009 PROVIDE OUTLET OR J-BOX FOR A/V MONITOR DEPENDING ON ACTUAL FIELD CONDITIONS. COORDINATE WITH ARCHITECTURAL DETAILS AND A/V INSTALLER. VERIFY DEVICE ELEVATION WITH UVU MEDIA PRIOR TO INSTALLATION.

04012 PROVIDE SPARE 20A/1P CIRCUIT WITH CONDUCTORS TO THIS POINT FOR FUTURE USE. CAP BOX AND LABEL PER SPECIFICATIONS.

04028 PROVIDE (4) EA. 1" CONDUITS STUBBED TO ELEC. 400F FOR FUTURE USE. CAP AND LABEL.

KEYPLAN:

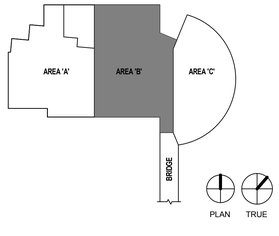

LICENSED PROFESSIONAL ENGINEER
No. 8182456
TYLER SQUIRE
STATE OF UTAH

UNLESS A PROFESSIONAL SEAL WITH SIGNATURE AND DATE IS AFFIXED, THIS DOCUMENT IS PRELIMINARY AND IS NOT INTENDED FOR CONSTRUCTION, RECORDING PURPOSES, OR IMPLEMENTATION

UTAH VALLEY UVU UNIVERSITY

State of Utah
Department of Administrative Services
Division of Facilities Construction & Management
4110 State Office Building
Salt Lake City, Utah 84114
Phone: (801) 538 - 3018
Fax: (801) 538 - 3267

CRSA METHODSTUDIO INC.

CRSA ARCHITECTS
649 east south temple
salt lake city, utah 84102
phone:(801) 355-5915

METHOD STUDIO INC.
925 south west temple
salt lake city, utah 84101
phone:(801) 532-4422

SPECTRUM ENGINEERS
324 S. State St., Suite 400
Salt Lake City, UT 84111
800-678-7077
801-328-5151
fax: 801-328-5155
www.spectrum-engineers.com

DFCM APPROVAL STAMP

project:
UVU Classroom Building - Volume 1
800 West University Parkway
Orem, UT 84058

project#: DFCM# 12192790
date: April 30, 2013

revisions:

1	Addendum #2	5/16/2013
2	Addendum #3	5/22/2013
3	Addendum #5	5/24/2013

title:
Level 4 Area 'B' Power Plan

sheet:
EP104b

BID DOC

GENERAL SHEET NOTES

1 COORDINATE EXACT LOCATION OF ALL FLOORBOXES WITH ARCHITECTURAL AND STRUCTURAL DRAWINGS PRIOR TO ROUGH-IN OR INSTALLATION.

SHEET KEYNOTES

04011 PROVIDE ELECTRICAL CONNECTIONS TO VAV BOXES. COORDINATE EXACT LOCATION OF ELECTRICAL CONNECTION WITH MECHANICAL EQUIPMENT PRIOR TO ROUGH-IN.

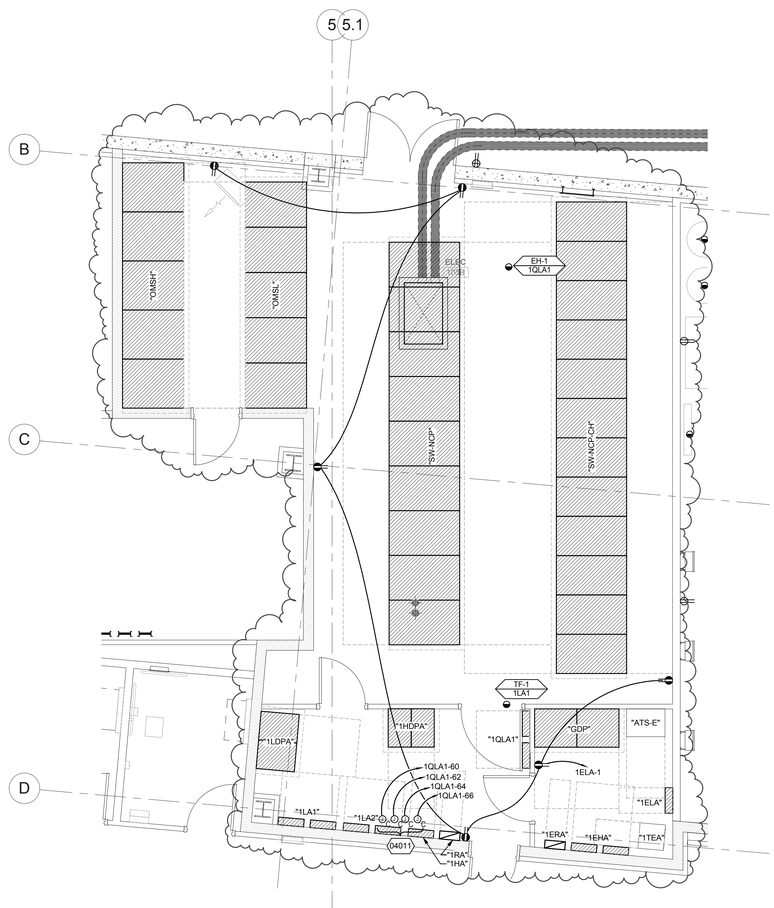

Enlarged Elec 103B (A3 / EP401)
1/4" = 1'-0"

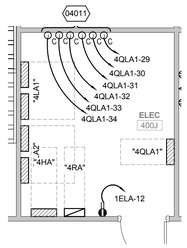

Enlarged Elec 400J (D5 / EP401)
1/4" = 1'-0"

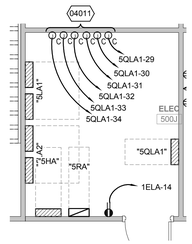

Enlarged Elec 500J (D6 / EP401)
1/4" = 1'-0"

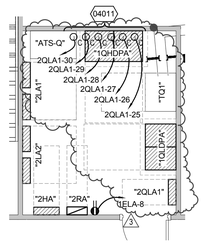

Enlarged Elec 200K (C5 / EP401)
1/4" = 1'-0"

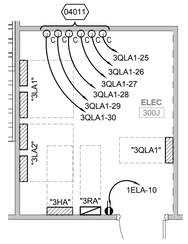

Enlarged Elec 300J (C6 / EP401)
1/4" = 1'-0"

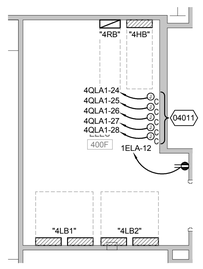

Enlarged Elec 400F (B5 / EP401)
1/4" = 1'-0"

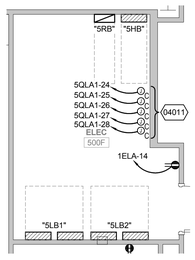

Enlarged Elec 500F (B6 / EP401)
1/4" = 1'-0"

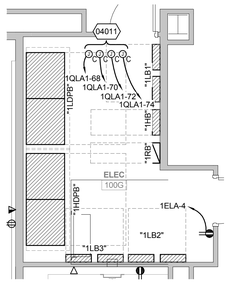

Enlarged Elec 100G (A4 / EP401)
1/4" = 1'-0"

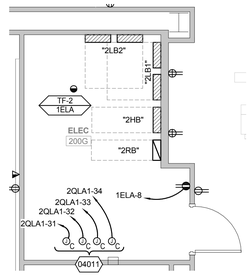

Enlarged Elec 200G (A5 / EP401)
1/4" = 1'-0"

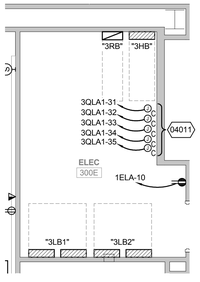

Enlarged Elec 300F (A6 / EP401)
1/4" = 1'-0"

LICENSED PROFESSIONAL ENGINEER
No. 8182456
TYLER SQUIRE
STATE OF UTAH

UNLESS A PROFESSIONAL SEAL WITH SIGNATURE AND DATE IS AFFIXED, THIS DOCUMENT IS PRELIMINARY AND IS NOT INTENDED FOR CONSTRUCTION, RECORDING PURPOSES, OR IMPLEMENTATION

UTAH VALLEY UVU UNIVERSITY

State of Utah
Department of Administrative Services
Division of Facilities Construction & Management
4110 State Office Building
Salt Lake City, Utah 84114
Phone: (801) 538 - 3018
Fax: (801) 538 - 3267

CRSA METHODSTUDIO INC.

CRSA ARCHITECTS
649 east south temple
salt lake city, utah 84102
phone:(801) 355-5915

METHOD STUDIO INC.
925 south west temple
salt lake city, utah 84101
phone:(801) 532-4422

SPECTRUM ENGINEERS
324 S. State St., Suite 400
Salt Lake City, UT 84111
800-678-7077
801-328-5151
fax: 801-328-5155
www.spectrum-engineers.com

DFCM APPROVAL STAMP

project:
UVU Classroom Building - Volume 1
800 West University Parkway
Orem, UT 84058

project#: DFCM# 12192790
date: April 30, 2013

revisions:

1	Addendum #2	5/16/2013
3	Addendum #5	5/24/2013

title:
Enlarged Power Plans

sheet:
EP401

BID DOC

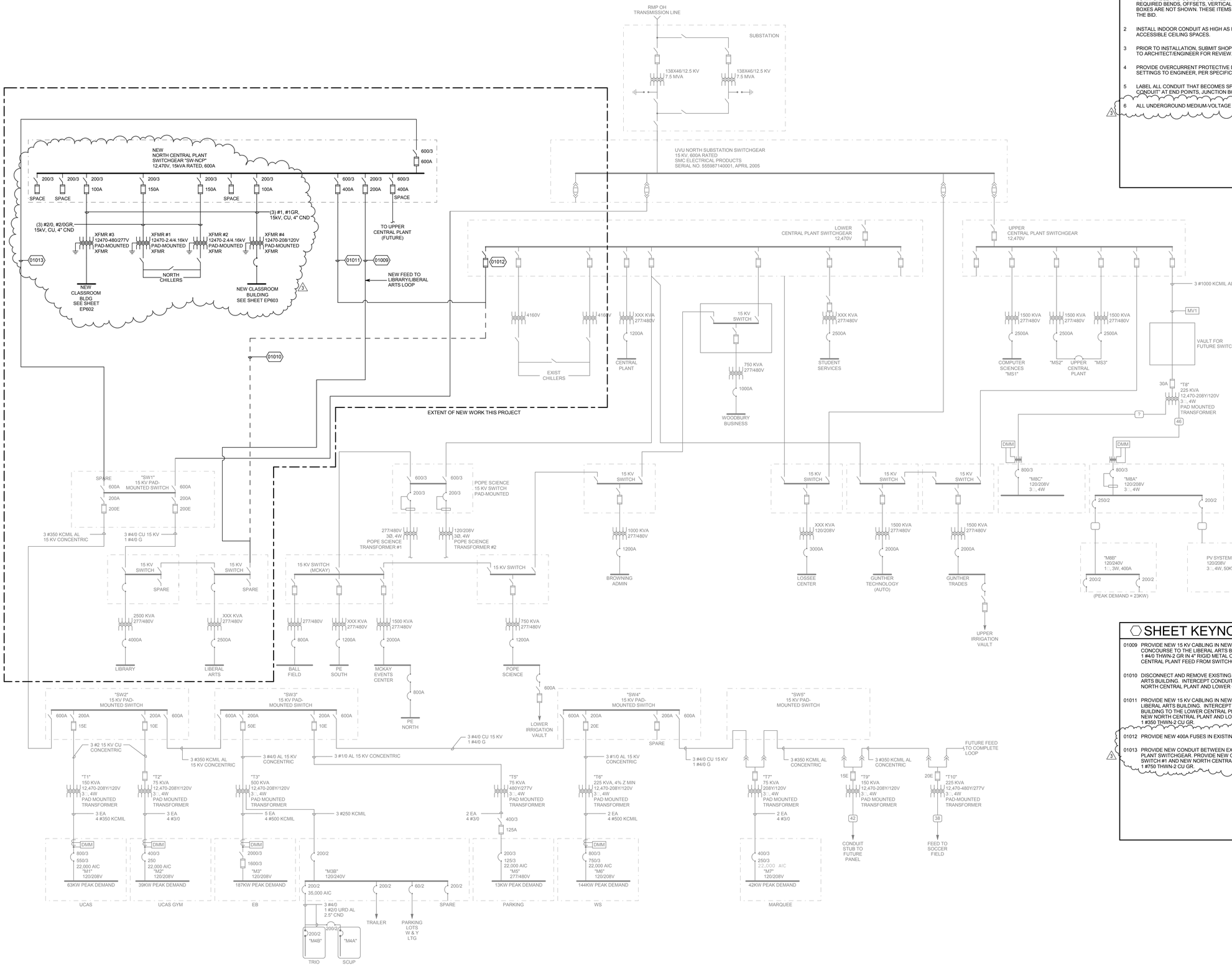

GENERAL SHEET NOTES

1. PRIOR TO BID, VISIT SITE TO REVIEW AND VERIFY EXISTING CONDICTIONS RELATING TO MV CABLE AND CONDUIT INSTALLATION. FOR INDOOR INSTALLATIONS, ALL REQUIRED BENDS, OFFSETS, VERTICAL AND HORIZONTAL TRANSITIONS AND PULL BOXES ARE NOT SHOWN. THESE ITEMS SHALL BE FIELD VERIFIED AND INCLUDED IN THE BID.
2. INSTALL INDOOR CONDUIT AS HIGH AS POSSIBLE ABOVE CONCOURSE AREAS, IN ACCESSIBLE CEILING SPACES.
3. PRIOR TO INSTALLATION, SUBMIT SHOP DRAWINGS OF PROPOSED CONDUIT ROUTE TO ARCHITECT/ENGINEER FOR REVIEW.
4. PROVIDE OVERCURRENT PROTECTIVE DEVICE STUDY WITH RECOMMENDED TRIP SETTINGS TO ENGINEER, PER SPECIFICATIONS SECTION 260573.
5. LABEL ALL CONDUIT THAT BECOMES SPARE AS A RESULT OF THIS WORK AS "SPARE CONDUIT" AT END POINTS, JUNCTION BOXES AND 20' INTERVALS.
6. ALL UNDERGROUND MEDIUM-VOLTAGE CONDUIT SHALL BE CONCRETE ENCASED.

3

SHEET KEYNOTES

01009 PROVIDE NEW 15 KV CABLING IN NEW CONDUIT, INSTALLED OVERHEAD IN CONCOURSE TO THE LIBERAL ARTS BUILDING SWITCHGEAR: 3 #4/0 15 KV EPR CU, 1 #4/0 THWN-2 GR IN 4" RIGID METAL CONDUIT. DISCONNECT EXISTING LOWER CENTRAL PLANT FEED FROM SWITCHGEAR.

01010 DISCONNECT AND REMOVE EXISTING LOWER CENTRAL PLANT FEED TO LIBERAL ARTS BUILDING. INTERCEPT CONDUIT WITH NEW INTERCONNECT BETWEEN NEW NORTH CENTRAL PLANT AND LOWER CENTRAL PLANT.

01011 PROVIDE NEW 15 KV CABLING IN NEW CONDUIT, INSTALLED OVERHEAD TO THE LIBERAL ARTS BUILDING. INTERCEPT EXISTING CONDUIT FROM LIBERAL ARTS BUILDING TO THE LOWER CENTRAL PLANT. PROVIDE NEW CABLING BETWEEN NEW NORTH CENTRAL PLANT AND LOWER CENTRAL PLANT: 3 #350 15 KV EPR CU, 1 #350 THWN-2 CU GR.

01012 PROVIDE NEW 400A FUSES IN EXISTING S&C SWITCHGEAR MODEL CD-157422.

01013 PROVIDE NEW CONDUIT BETWEEN EXISTING MANHOLE AND NEW NORTH CENTRAL PLANT SWITCHGEAR. PROVIDE NEW CABLING BETWEEN EXISTING PAD-MOUNTED SWITCH #1 AND NEW NORTH CENTRAL PLANT SWITCHGEAR. 3 #750 15 KV EPR CU, 1 #750 THWN-2 CU GR.

3

UVU POWER ONE-LINE DIAGRAM - MEDIUM VOLTAGE

No Scale

A1 EP601

LICENSED PROFESSIONAL ENGINEER No. 8182456 TYLER SQUIRE STATE OF UTAH

UNLESS A PROFESSIONAL SEAL WITH SIGNATURE AND DATE IS AFFIXED, THIS DOCUMENT IS PRELIMINARY AND IS NOT INTENDED FOR CONSTRUCTION, RECORDING PURPOSES, OR IMPLEMENTATION

UTAH VALLEY UVU UNIVERSITY

State of Utah
Department of Administrative Services
Division of Facilities Construction & Management
4110 State Office Building
Salt Lake City, Utah 84114
Phone: (801) 538 - 3018
Fax: (801) 538 - 3267

CRSA METHODSTUDIO inc.

CRSA ARCHITECTS
649 east south temple
salt lake city, utah 84102
phone:(801) 355-5915

METHOD STUDIO INC.
925 south west temple
salt lake city, utah 84101
phone:(801) 532-4422

SPECTRUM ENGINEERS
324 S. State St., Suite 400
Salt Lake City, UT 84111
800-678-7077
801-328-5151
fax: 801-328-5155
www.spectrum-engineers.com

DFCM APPROVAL STAMP

project:
UVU Classroom Building - Volume 1
800 West University Parkway
Orem, UT 84058

project#: DFCM# 12192790
date: April 30, 2013

revisions:
3 Addendum #5 5/24/2013

title:
One-Line - Medium Voltage

sheet:
EP601

BID DOC

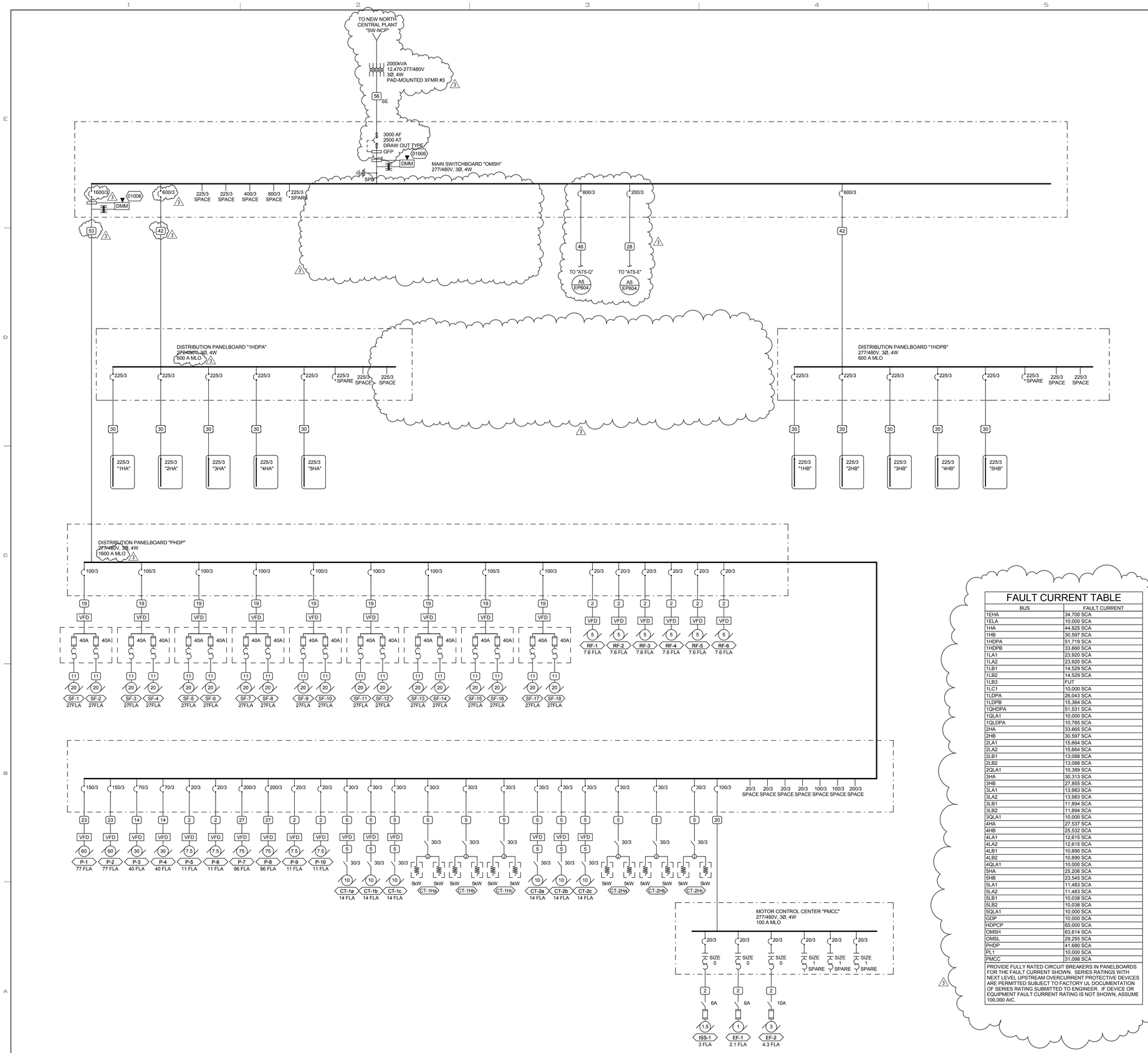

POWER ONE-LINE DIAGRAM - 277-480V NORMAL POWER

No Scale

A1 / EP602

GENERAL SHEET NOTES

1. PROVIDE NEMA 3R ENCLOSURES FOR EQUIPMENT LOCATED OUTDOORS. REFER TO PLANS FOR EQUIPMENT LOCATIONS.
2. REFER TO PLANS FOR CONSTRAINTS ON PHYSICAL DIMENSIONS AND CLEARANCE REQUIREMENTS OF EQUIPMENT. PROVIDE EQUIPMENT DIMENSIONS THAT FALL WITHIN THE CONSTRAINTS OF EACH SPECIFIC LOCATION.
3. ALL EQUIPMENT SHALL BE CONSTRUCTED AND BRACED FOR THE SEISMIC CONDITIONS OF THE PROJECT. REFER TO THE SPECIFICATIONS FOR REQUIREMENTS.
4. ALL 120/208V PANELBOARDS SHALL BE PROVIDED WITH 200% NEUTRAL AMPACITY AND LUG CAPACITY.

SHEET KEYNOTES

01006 PROVIDE NETWORK CABLING AND DATA PORT TO METER FROM NEAREST I.T. DATA CLOSET. COORDINATE IP ADDRESS OF METER WITH UVU. MODIFY PROGRAMMING OF EXISTING UVU METERING SYSTEM FOR THE ADDITIONAL METERS.

FAULT CURRENT TABLE

BUS	FAULT CURRENT
1EHA	34,700 SCA
1ELA	10,000 SCA
1HA	44,825 SCA
1HB	30,597 SCA
1HDPA	51,719 SCA
1HDPB	33,860 SCA
1LA1	23,920 SCA
1LA2	23,920 SCA
1LB1	14,529 SCA
1LB2	14,529 SCA
1LB3	FUT
1LC1	10,000 SCA
1LDPA	26,043 SCA
1LDPB	15,364 SCA
1QHDPA	51,531 SCA
1QLA1	10,000 SCA
1QLDPA	10,785 SCA
2HA	33,665 SCA
2HB	30,597 SCA
2LA1	15,664 SCA
2LA2	15,664 SCA
2LB1	13,088 SCA
2LB2	13,088 SCA
2QLA1	10,389 SCA
3HA	30,313 SCA
3HB	27,855 SCA
3LA1	13,983 SCA
3LA2	13,983 SCA
3LB1	11,894 SCA
3LB2	11,894 SCA
3QLA1	10,000 SCA
4HA	27,537 SCA
4HB	25,532 SCA
4LA1	12,615 SCA
4LA2	12,615 SCA
4LB1	10,890 SCA
4LB2	10,890 SCA
4QLA1	10,000 SCA
5HA	25,206 SCA
5HB	23,545 SCA
5LA1	11,483 SCA
5LA2	11,483 SCA
5LB1	10,038 SCA
5LB2	10,038 SCA
5QLA1	10,000 SCA
GDP	10,000 SCA
HDPCP	65,000 SCA
OMSH	63,614 SCA
OMSL	29,255 SCA
PHDP	41,680 SCA
PL1	10,000 SCA
PMCC	31,098 SCA

PROVIDE FULLY RATED CIRCUIT BREAKERS IN PANELBOARDS FOR THE FAULT CURRENT SHOWN. SERIES RATINGS WITH NEXT LEVEL UPSTREAM OVERCURRENT PROTECTIVE DEVICES ARE PERMITTED SUBJECT TO FACTORY UL DOCUMENTATION OF SERIES RATING SUBMITTED TO ENGINEER. IF DEVICE OR EQUIPMENT FAULT CURRENT RATING IS NOT SHOWN, ASSUME 100,000 AIC.

CONDUCTOR AND CONDUIT SCHEDULE

SCHEDULE NUMBER
SUBSCRIPT (NOTE 5)
(E.G. 5 IG)

SYM	AMP	CONDUIT SIZE	CONDUCTOR (NOTE 1) QTY	SIZE	G	IG	SE	NOTES
1	20	.75	2	12	12	12	8	2
2	20	.75	3	12	12	12	8	2,3
3	20	.75	4	12	12	12	8	2,3
4	30	.75	2	10	10	10	8	2
5	30	.75	3	10	10	10	8	2
6	30	.75	4	10	10	10	8	2
7	40	1	2	8	10	8	6	2
8	40	1	3	8	10	8	6	2
9	40	1	4	8	10	8	6	2
10	55	1	2	6	10	8	4	2
11	55	1	3	6	10	8	4	2
12	55	1.25	4	6	10	8	4	2
13	70	1	2	4	8	4	2	2
14	70	1.25	3	4	8	4	2	2
15	70	1.25	4	4	8	4	2	2
16	85	1.25	2	3	8	3	2	2
17	85	1.25	3	3	8	3	2	2
18	85	1.25	4	3	8	3	2	2
19	95	1.25	3	2	8	2	2	2
20	95	1.50	4	2	8	2	2	2
21	130	1.50	3	1	6	2	2	2
22	130	1.50	4	1	6	2	2	2
23	150	2	3	1/0	6	2	1/0	2
24	150	2	4	1/0	6	2	1/0	2
25	175	2	3	2/0	6	2	2/0	2
26	175	2	4	2/0	6	2	2/0	2
27	200	2	3	3/0	6	2	2/0	2
28	200	2.50	4	3/0	6	2	2/0	2
29	230	2.50	3	4/0	4	2	2/0	2
30	230	2.50	4	4/0	4	2	2/0	2
31	255	2.50	3	250	4	1	2/0	2
32	255	2.50	4	250	4	1	2/0	2
33	310	3	3	350	3	1/0	3/0	2
34	310	3	4	350	3	1/0	3/0	2
35	380	3.50	3	500	3	3/0	3/0	2
36	380	4	4	500	3	3/0	3/0	2
37	400	2 EA 2	3	3/0	3	3/0	3/0	2
38	400	2 EA 2.50	4	3/0	3	3/0	3/0	2
39	510	2 EA 2.50	3	250	1	4/0	3/0	2
40	510	2 EA 3	4	250	1	4/0	3/0	2
41	620	2 EA 3	3	350	1/0	4/0	3/0	2,4
42	620	2 EA 3	4	350	1/0	4/0	3/0	2,4
43	780	2 EA 3.50	3	500	1/0	4/0	3/0	2,4
44	780	2 EA 4	4	500	1/0	4/0	3/0	2,4
45	855	3 EA 3	3	300	2/0	4/0	3/0	2,4
46	855	3 EA 3	4	300	2/0	4/0	3/0	2,4
47	1000	3 EA 3.50	3	400	2/0	4/0	3/0	4
48	1000	3 EA 3.50	4	400	2/0	4/0	3/0	4
49	1140	3 EA 4	3	500	3/0	4/0	3/0	4
50	1140	2 EA 4	4	500	3/0	4/0	3/0	4
51	1240	4 EA 3	3	350	3/0	4/0	3/0	4
52	1240	4 EA 3	4	350	3/0	4/0	3/0	4
53	1675	5 EA 3.50	4	400	4/0	4/0	4/0	4
54	2010	6 EA 3.50	4	400	250	250	250	4
55	2660	7 EA 4	4	500	350	350	350	4
56	3040	8 EA 4	4	500	500	500	500	4
57	4180	11 EA 4	4	500	500	500	500	4
58		5 EA 4						6
59		5						6
60		10 EA 4						6

CONDUCTOR AND CONDUIT SCHEDULE NOTES

1. CONDUCTORS SHOWN ARE SHOWN FOR EACH CONDUIT WITH MODIFICATIONS AS NOTED IN NOTE 5. ALL CONDUCTORS SHOWN ARE THWN UNLESS OTHERWISE NOTED.
2. PROVIDE EQUIPMENT GROUND CONDUCTORS PER TABLE 250-122 WHEN CIRCUIT BREAKERS ARE SIZED GREATER THAN AMPERE RATING SHOWN IN TABLE.
3. PROVIDE #10 NEUTRALS FOR MULTIWIRE BRANCH CIRCUITS SERVING COMPUTERS.
4. GROUND (G) CONDUCTOR MAY BE DELETED ON SERVICE ENTRANCE CONDUCTORS.
5. WHEN SYMBOL SUBSCRIPT INDICATES "IG", INCLUDE "IG" OR INSULATED GROUND CONDUCTOR SCHEDULED ALONG WITH GROUND OR EQUIPMENT GROUND CONDUCTOR. WHEN SYMBOL SUBSCRIPT INDICATES "SE", SUBSTITUTE "SE" CONDUCTOR FOR "G" CONDUCTOR SHOWN WHICH IS SIZED FOR THE GROUNDING OF THE SECONDARY OF THE SEPARATELY DERIVED SYSTEMS.
6. RACEWAY ONLY. CONDUCTORS PROVIDED BY UTILITY.

LICENSED PROFESSIONAL ENGINEER
No. 8182456
TYLER SQUIRE
STATE OF UTAH

UNLESS A PROFESSIONAL SEAL WITH SIGNATURE AND DATE IS AFFIXED, THIS DOCUMENT IS PRELIMINARY AND IS NOT INTENDED FOR CONSTRUCTION, RECORDING PURPOSES, OR IMPLEMENTATION

UTAH VALLEY UVU UNIVERSITY

State of Utah
Department of Administrative Services
Division of Facilities Construction & Management
4110 State Office Building
Salt Lake City, Utah 84114
Phone: (801) 538 - 3018
Fax: (801) 538 - 3267

CRSA METHODSTUDIO INC.

CRSA ARCHITECTS
649 east south temple
salt lake city, utah 84102
phone:(801) 355-5915

METHOD STUDIO INC.
925 south west temple
salt lake city, utah 84101
phone:(801) 532-4422

SPECTRUM ENGINEERS
324 S. State St., Suite 400
Salt Lake City, UT 84111
800-678-7077
801-328-5151
fax: 801-328-5155
www.spectrum-engineers.com

DFCM APPROVAL STAMP

project:
UVU Classroom Building - Volume 1
800 West University Parkway
Orem, UT 84058

project#: DFCM# 12192790
date: April 30, 2013

revisions:
3 Addendum #5 5/24/2013

title:
One-Line Diagram - 277/480V

sheet:
EP602

BID DOC

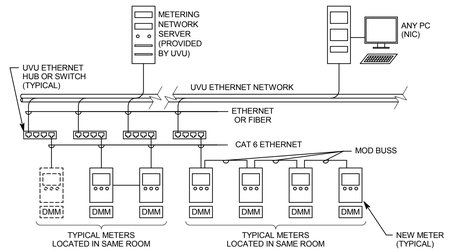

NOTES:

1. REFER TO POWER ONE-LINE DIAGRAMS FOR METER LOCATIONS AND QUANTITIES.
2. ETHERNET CABLING SHALL BE PROVIDED PER DIVISION 27 SPECIFICATIONS.
3. REFER TO SECTION 260913 FOR METER REQUIREMENTS.

METERING NETWORK SCHEMATIC

D5 / EP603

No Scale

GENERAL SHEET NOTES

1. PROVIDE NEMA 3R ENCLOSURES FOR EQUIPMENT LOCATED OUTDOORS. REFER TO PLANS FOR EQUIPMENT LOCATIONS.
2. REFER TO PLANS FOR CONSTRAINTS ON PHYSICAL DIMENSIONS AND CLEARANCE REQUIREMENTS OF EQUIPMENT. PROVIDE EQUIPMENT DIMENSIONS THAT FALL WITHIN THE CONSTRAINTS OF EACH SPECIFIC LOCATION.
3. ALL EQUIPMENT SHALL BE CONSTRUCTED AND BRACED FOR THE SEISMIC CONDITIONS OF THE PROJECT. REFER TO THE SPECIFICATIONS FOR REQUIREMENTS.
4. ALL 120/208V PANELBOARDS SHALL BE PROVIDED WITH 200% NEUTRAL AMPACITY AND LUG CAPACITY.

SHEET KEYNOTES

01006 PROVIDE NETWORK CABLING AND DATA PORT TO METER FROM NEAREST I.T. DATA CLOSET. COORDINATE IP ADDRESS OF METER WITH UVU. MODIFY PROGRAMMING OF EXISTING UVU METERING SYSTEM FOR THE ADDITIONAL METERS.

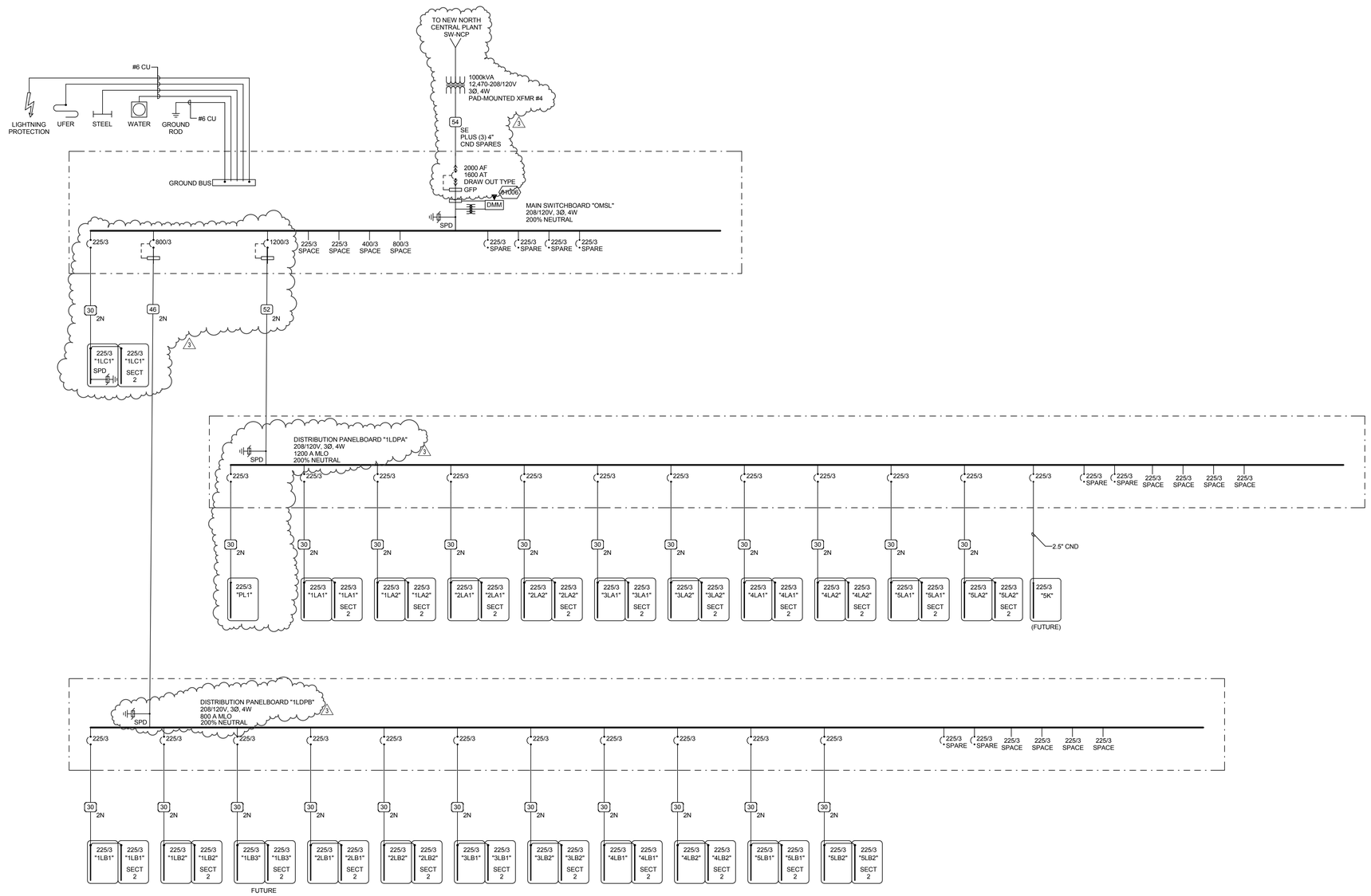

POWER ONE-LINE DIAGRAM - 120-208V NORMAL POWER

A1 / EP603

No Scale

CONDUCTOR AND CONDUIT SCHEDULE

SCHEDULE NUMBER
SUBSCRIPT (NOTE 5)
(E.G. 5 IG)

SYM	AMP	CONDUIT SIZE	CONDUCTOR (NOTE 1) QTY	SIZE	G	IG	SE	NOTES
1	20	.75	2	12	12	12	8	2
2	20	.75	3	12	12	12	8	2,3
3	20	.75	4	12	12	12	8	2,3
4	30	.75	2	10	10	10	8	2
5	30	.75	3	10	10	10	8	2
6	30	.75	4	10	10	10	8	2
7	40	1	2	8	10	8	6	2
8	40	1	3	8	10	8	6	2
9	40	1	4	8	10	8	6	2
10	55	1	2	6	10	8	4	2
11	55	1	3	6	10	8	4	2
12	55	1.25	4	6	10	8	4	2
13	70	1	2	4	8	4	2	2
14	70	1.25	3	4	8	4	2	2
15	70	1.25	4	4	8	4	2	2
16	85	1.25	2	3	8	3	2	2
17	85	1.25	3	3	8	3	2	2
18	85	1.25	4	3	8	3	2	2
19	95	1.25	3	2	8	2	2	2
20	95	1.50	4	2	8	2	2	2
21	130	1.50	3	1	6	2	2	2
22	130	1.50	4	1	6	2	2	2
23	150	2	3	1/0	6	2	1/0	2
24	150	2	4	1/0	6	2	1/0	2
25	175	2	3	2/0	6	2	2/0	2
26	175	2	4	2/0	6	2	2/0	2
27	200	2	3	3/0	6	2	2/0	2
28	200	2.50	4	3/0	6	2	2/0	2
29	230	2.50	3	4/0	4	2	2/0	2
30	230	2.50	4	4/0	4	2	2/0	2
31	255	2.50	3	250	4	1	2/0	2
32	255	2.50	4	250	4	1	2/0	2
33	310	3	3	350	3	1/0	3/0	2
34	310	3	4	350	3	1/0	3/0	2
35	380	3.50	3	500	3	3/0	3/0	2
36	380	4	4	500	3	3/0	3/0	2
37	400	2 EA 2	3	3/0	3	3/0	3/0	2
38	400	2 EA 2.50	4	3/0	3	3/0	3/0	2
39	510	2 EA 2.50	3	250	1	4/0	3/0	2
40	510	2 EA 3	4	250	1	4/0	3/0	2
41	620	2 EA 3	3	350	1/0	4/0	3/0	2,4
42	620	2 EA 3	4	350	1/0	4/0	3/0	2,4
43	780	2 EA 3.50	3	500	1/0	4/0	3/0	2,4
44	780	2 EA 4	4	500	1/0	4/0	3/0	2,4
45	855	3 EA 3	3	300	2/0	4/0	3/0	2,4
46	855	3 EA 3	4	300	2/0	4/0	3/0	2,4
47	1000	3 EA 3.50	3	400	2/0	4/0	3/0	4
48	1000	3 EA 3.50	4	400	2/0	4/0	3/0	4
49	1140	3 EA 4	3	500	3/0	4/0	3/0	4
50	1140	2 EA 4	4	500	3/0	4/0	3/0	4
51	1240	4 EA 3	3	350	3/0	4/0	3/0	4
52	1240	4 EA 3	4	350	3/0	4/0	3/0	4
53	1675	5 EA 3.50	4	400	4/0	4/0	4/0	4
54	2010	6 EA 3.50	4	400	250	250	250	4
55	2660	7 EA 4	4	500	350	350	350	4
56	3040	8 EA 4	4	500	500	500	500	4
57	4180	11 EA 4	4	500	500	500	500	4
58		5 EA 4						6
59		5						6
60		10 EA 4						6

CONDUCTOR AND CONDUIT SCHEDULE NOTES

1. CONDUCTORS SHOWN ARE SHOWN FOR EACH CONDUIT WITH MODIFICATIONS AS NOTED IN NOTE 5. ALL CONDUCTORS SHOWN ARE THWN UNLESS OTHERWISE NOTED.
2. PROVIDE EQUIPMENT GROUND CONDUCTORS PER TABLE 250-122 WHEN CIRCUIT BREAKERS ARE SIZED GREATER THAN AMPERE RATING SHOWN IN TABLE.
3. PROVIDE #10 NEUTRALS FOR MULTIWIRE BRANCH CIRCUITS SERVING COMPUTERS.
4. GROUND (G) CONDUCTOR MAY BE DELETED ON SERVICE ENTRANCE CONDUCTORS.
5. WHEN SYMBOL SUBSCRIPT INDICATES "IG", INCLUDE "IG" OR INSULATED GROUND CONDUCTOR SCHEDULED ALONG WITH GROUND OR EQUIPMENT GROUND CONDUCTOR. WHEN SYMBOL SUBSCRIPT INDICATES "SE", SUBSTITUTE "SE" CONDUCTOR FOR "G" CONDUCTOR SHOWN WHICH IS SIZED FOR THE GROUNDING OF THE SECONDARY OF THE SEPARATELY DERIVED SYSTEMS.
6. RACEWAY ONLY. CONDUCTORS PROVIDED BY UTILITY.

LICENSED PROFESSIONAL ENGINEER
No. 8182456
TYLER SQUIRE
STATE OF UTAH

UNLESS A PROFESSIONAL SEAL WITH SIGNATURE AND DATE IS AFFIXED, THIS DOCUMENT IS PRELIMINARY AND IS NOT INTENDED FOR CONSTRUCTION, RECORDING PURPOSES, OR IMPLEMENTATION

UTAH VALLEY UVU UNIVERSITY

State of Utah
Department of Administrative Services
Division of Facilities Construction & Management
4110 State Office Building
Salt Lake City, Utah 84114
Phone: (801) 538 - 3018
Fax: (801) 538 - 3267

CRSA METHODSTUDIO INC.

CRSA ARCHITECTS
649 east south temple
salt lake city, utah 84102
phone:(801) 355-5915

METHOD STUDIO INC.
925 south west temple
salt lake city, utah 84101
phone:(801) 532-4422

SPECTRUM ENGINEERS
324 S. State St., Suite 400
Salt Lake City, UT 84111
800-678-7077
801-328-5151
fax: 801-328-5155
www.spectrum-engineers.com

DFCM APPROVAL STAMP

project:
UVU Classroom Building - Volume 1
800 West University Parkway
Orem, UT 84058

project#: DFCM# 12152790
date: April 30, 2013

revisions:
3 Addendum #5 5/24/2013

title:
One-Line Diagram - 120/208V

sheet:
EP603

BID DOC

GENERAL SHEET NOTES

1. PROVIDE NEMA 3R ENCLOSURES FOR EQUIPMENT LOCATED OUTDOORS. REFER TO PLANS FOR EQUIPMENT LOCATIONS.
2. REFER TO PLANS FOR CONSTRAINTS ON PHYSICAL DIMENSIONS AND CLEARANCE REQUIREMENTS OF EQUIPMENT. PROVIDE EQUIPMENT DIMENSIONS THAT FALL WITHIN THE CONSTRAINTS OF EACH SPECIFIC LOCATION.
3. ALL EQUIPMENT SHALL BE CONSTRUCTED AND BRACED FOR THE SEISMIC CONDITIONS OF THE PROJECT. REFER TO THE SPECIFICATIONS FOR REQUIREMENTS.
4. ALL 120/208V PANELBOARDS SHALL BE PROVIDED WITH 200% NEUTRAL AMPACITY AND LUG CAPACITY.

SHEET KEYNOTES

01001 PROVIDE 1" CND WITH CONTROL WIRING PER MANUFACTURER'S WRITTEN INSTRUCTIONS TO EACH ATS. EACH ATS SHALL INDEPENDENTLY START GENERATOR.

01002 PROVIDE 1" CND TO BMS FOR MONITORING OF EACH TRANSFER SWITCH AND GENERATOR. COORDINATE WITH MECHANICAL CONTROLS INSTALLER.

01003 PROVIDE 1" CND WITH CONTROL WIRING TO EACH ELEVATOR CONTROLLER FROM ATS FOR "SIGNAL BEFORE TRANSFER" AND " CONNECTED TO GENERATOR" SIGNALS.

01004 PROVIDE FUSIBLE SHUNT-TRIP ELEVATOR DISCONNECT AND INTERFACE WITH FIRE ALARM SYSTEM. VERIFY FUSE SIZE WITH ELEVATOR MANUFACTURER.

01005 PROVIDE CIRCUITS FOR GENERATOR AUXILIARY POWER (HEATER, BATTERY CHARGER AND DAMPERS). VERIFY VOLTAGE AND LOAD REQUIREMENTS WITH MANUFACTURER'S SHOP DRAWINGS AND PROVIDE THE APPROPRIATE CIRCUIT BREAKERS IN PANELS.

01014 FUTURE EQUIPMENT. PROVIDE CONDUIT ROUGH-IN ONLY.

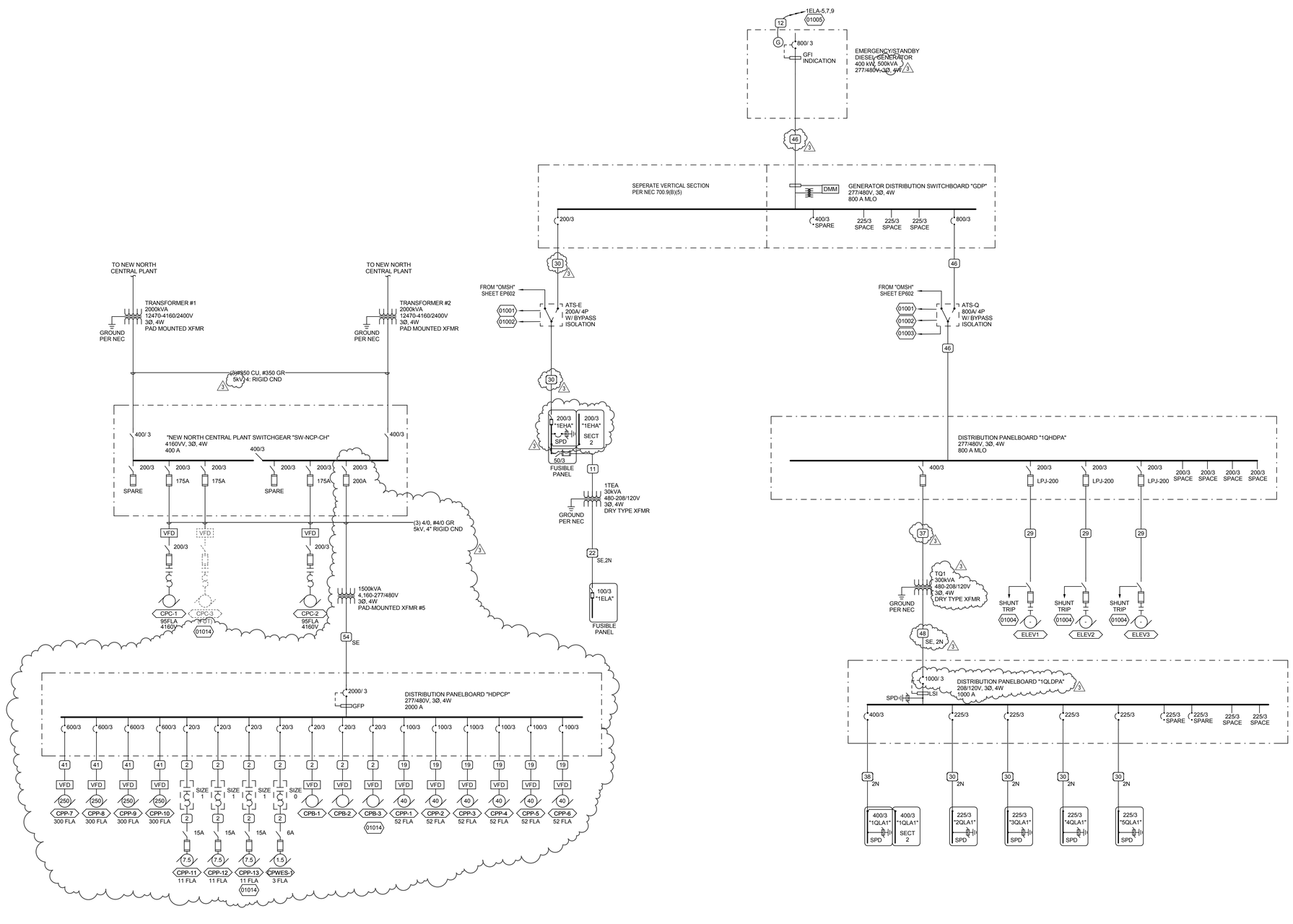

POWER ON-LINE DIAGRAM - NORTH CHILLER PLANT

A2 / EP604

No Scale

POWER ON-LINE DIAGRAM - EMERGENCY/STANDBY POWER

A5 / EP604

No Scale

CONDUCTOR AND CONDUIT SCHEDULE

SCHEDULE NUMBER
SUBSCRIPT (NOTE 5)
(E.G. 5 IG)

SYM	AMP	CONDUIT SIZE	CONDUCTOR (NOTE 1) QTY	SIZE	G	IG	SE	NOTES
1	20	.75	2	12	12	12	8	2
2	20	.75	3	12	12	12	8	2,3
3	20	.75	4	12	12	12	8	2,3
4	30	.75	2	10	10	10	8	2
5	30	.75	3	10	10	10	8	2
6	30	.75	4	10	10	10	8	2
7	40	1	2	8	10	8	6	2
8	40	1	3	8	10	8	6	2
9	40	1	4	8	10	8	6	2
10	55	1	2	6	10	8	4	2
11	55	1	3	6	10	8	4	2
12	55	1.25	4	6	10	8	4	2
13	70	1	2	4	8	4	2	2
14	70	1.25	3	4	8	4	2	2
15	70	1.25	4	4	8	4	2	2
16	85	1.25	2	3	8	3	2	2
17	85	1.25	3	3	8	3	2	2
18	85	1.25	4	3	8	3	2	2
19	95	1.25	3	2	8	2	2	2
20	95	1.50	4	2	8	2	2	2
21	130	1.50	3	1	6	2	2	2
22	130	1.50	4	1	6	2	2	2
23	150	2	3	1/0	6	2	1/0	2
24	150	2	4	1/0	6	2	1/0	2
25	175	2	3	2/0	6	2	2/0	2
26	175	2	4	2/0	6	2	2/0	2
27	200	2	3	3/0	6	2	2/0	2
28	200	2.50	4	3/0	6	2	2/0	2
29	230	2.50	3	4/0	4	2	2/0	2
30	230	2.50	4	4/0	4	2	2/0	2
31	255	2.50	3	250	4	1	2/0	2
32	255	2.50	4	250	4	1	2/0	2
33	310	3	3	350	3	1/0	3/0	2
34	310	3	4	350	3	1/0	3/0	2
35	380	3.50	3	500	3	3/0	3/0	2
36	380	4	4	500	3	3/0	3/0	2
37	400	2 EA 2	3	3/0	3	3/0	3/0	2
38	400	2 EA 2.50	4	3/0	3	3/0	3/0	2
39	510	2 EA 2.50	3	250	1	4/0	3/0	2
40	510	2 EA 3	4	250	1	4/0	3/0	2
41	620	2 EA 3	3	350	1/0	4/0	3/0	2,4
42	620	2 EA 3	4	350	1/0	4/0	3/0	2,4
43	780	2 EA 3.50	3	500	1/0	4/0	3/0	2,4
44	780	2 EA 4	4	500	1/0	4/0	3/0	2,4
45	855	3 EA 3	3	300	2/0	4/0	3/0	2,4
46	855	3 EA 3	4	300	2/0	4/0	3/0	2,4
47	1000	3 EA 3.50	3	400	2/0	4/0	3/0	4
48	1000	3 EA 3.50	4	400	2/0	4/0	3/0	4
49	1140	3 EA 4	3	500	3/0	4/0	3/0	4
50	1140	2 EA 4	4	500	3/0	4/0	3/0	4
51	1240	4 EA 3	3	350	3/0	4/0	3/0	4
52	1240	4 EA 3	4	350	3/0	4/0	3/0	4
53	1675	5 EA 3.50	4	400	4/0	4/0	4/0	4
54	2010	6 EA 3.50	4	400	250	250	250	4
55	2660	7 EA 4	4	500	350	350	350	4
56	3040	8 EA 4	4	500	500	500	500	4
57	4180	11 EA 4	4	500	500	500	500	4
58		5 EA 4						6
59		5						6
60		10 EA 4						6

CONDUCTOR AND CONDUIT SCHEDULE NOTES

1. CONDUCTORS SHOWN ARE SHOWN FOR EACH CONDUIT WITH MODIFICATIONS AS NOTED IN NOTE 5. ALL CONDUCTORS SHOWN ARE THWN UNLESS OTHERWISE NOTED.
2. PROVIDE EQUIPMENT GROUND CONDUCTORS PER TABLE 250-122 WHEN CIRCUIT BREAKERS ARE SIZED GREATER THAN AMPERE RATING SHOWN IN TABLE.
3. PROVIDE #10 NEUTRALS FOR MULTIWIRE BRANCH CIRCUITS SERVING COMPUTERS.
4. GROUND (G) CONDUCTOR MAY BE DELETED ON SERVICE ENTRANCE CONDUCTORS.
5. WHEN SYMBOL SUBSCRIPT INDICATES "IG", INCLUDE "IG" OR INSULATED GROUND CONDUCTOR SCHEDULED ALONG WITH GROUND OR EQUIPMENT GROUND CONDUCTOR. WHEN SYMBOL SUBSCRIPT INDICATES "SE", SUBSTITUTE "SE" CONDUCTOR FOR "G" CONDUCTOR SHOWN WHICH IS SIZED FOR THE GROUNDING OF THE SECONDARY OF THE SEPARATELY DERIVED SYSTEMS.
6. RACEWAY ONLY. CONDUCTORS PROVIDED BY UTILITY.

LICENSED PROFESSIONAL ENGINEER
No. 8182456
TYLER SQUIRE
STATE OF UTAH

UNLESS A PROFESSIONAL SEAL WITH SIGNATURE AND DATE IS AFFIXED, THIS DOCUMENT IS PRELIMINARY AND IS NOT INTENDED FOR CONSTRUCTION, RECORDING PURPOSES, OR IMPLEMENTATION

UTAH VALLEY UVU UNIVERSITY

State of Utah
Department of Administrative Services
Division of Facilities Construction & Management
4110 State Office Building
Salt Lake City, Utah 84114
Phone: (801) 538 - 3018
Fax: (801) 538 - 3267

CRSA METHODSTUDIO INC.

CRSA ARCHITECTS
649 east south temple
salt lake city, utah 84102
phone:(801) 355-5915

METHOD STUDIO INC.
925 south west temple
salt lake city, utah 84101
phone:(801) 532-4422

SPECTRUM ENGINEERS
324 S. State St., Suite 400
Salt Lake City, UT 84111
800-678-7077
801-328-5151
fax: 801-328-5155
www.spectrum-engineers.com

DFCM APPROVAL STAMP

project:
UVU Classroom Building - Volume 1
800 West University Parkway
Orem, UT 84058

project#: DFCM# 12192790
date: April 30, 2013

revisions :
3 Addendum #5 5/24/2013

title:
One-Line - Emergency & Central Plant

sheet:
EP604

BID DOC

PANEL: "1LA2"

VOLTS/PHASE/WIRE:	PANEL SIZE & TYPE:	MAIN SIZE AND TYPE:	LOCATION:	CABINET:	NOTES:
120/208V, 3 PH 4 WIRE	22" W x 6" D, BOLT-ON	225 AMPERE MAIN LUGS	ELEC 103B	SURFACE	

ACCESSORIES: PANEL DIRECTORY, IDENTIFICATION, GROUNDING BAR **AIC RATING:** 23,920 SCA

CKT	OCP		LOAD (kVA)				PHASE LOAD							LOAD (kVA)			OCP		CKT
NO	AMP	POLE	LTG	PWR	CO	DESCRIPTION	A		B		C		DESCRIPTION	CO	PWR	LTG	POLE	AMP	NO
1	20	1	0.0	0.2	0.7	CO/PWR: PROJ SCRN CLASSRM...	0.9	1.1					CO: LECTURE 106	1.1	0.0	0.0	1	20	2
3	20	1	0.0	0.0	0.7	CO: CLASSROOM 107			0.7	0.6			PWR/CO: PROJ SCRN LECTURE 106	0.4	0.2	0.0	1	20	4
5	20	1	0.0	0.5	0.0	PWR: AV RACK CLASSROOM 107					0.5	0.9	CO: LECTURE 106	0.9	0.0	0.0	1	20	6
7	20	1	0.0	0.5	0.2	PWR/CO: LECTURN CLASSRM 107	0.7	0.6					PWR/CO: PROJ SCRN LECTURE 106	0.4	0.2	0.0	1	20	8
9	20	1	0.0	1.0	0.0	PWR: PROJ/CAM CLASSROOM 107			1.0	0.5			PWR: AV RACK LECTURE 106	0.0	0.5	0.0	1	20	10
11	20	1	0.0	0.0	0.0	PWR: SPARE CKT CLASSROOM 107					0.0	0.7	PWR/CO: LECTURN LECTURE 106	0.2	0.5	0.0	1	20	12
13	20	1	0.0	0.0	0.0	PWR: SPARE CKT CLASSROOM 107	0.0	0.5					CO: DESKS LECTURE 106	0.5	0.0	0.0	1	20	14
15	20	1	0.0	0.0	0.7	CO: CLASSROOM 112			0.7	0.5			CO: DESKS LECTURE 106	0.5	0.0	0.0	1	20	16
17	20	1	0.0	0.2	0.7	CO/PWR: PROJ SCREEN...					0.9	0.5	CO: DESKS LECTURE 106	0.5	0.0	0.0	1	20	18
19	20	1	0.0	0.5	0.0	PWR: AV RACK CLASSROOM 112	0.5	0.5					CO: DESKS LECTURE 106	0.5	0.0	0.0	1	20	20
21	20	1	0.0	0.5	0.2	PWR/CO: LECTURN CLASSRM 112			0.7	0.8			PWR: PROJ LECTURE 106	0.0	0.8	0.0	1	20	22
23	20	1	0.0	1.0	0.0	PWR: PROJ/CAM ROOM 112					1.0	1.0	PWR: PROJ/CAM LECTURE 106	0.0	1.0	0.0	1	20	24
25	20	1	0.0	0.0	0.0	PWR: SPARE CKT CLASSROOM 112	0.0	0.0					PWR: SPARE CKT LECTURE 106	0.0	0.0	0.0	1	20	26
27	20	1	0.0	0.0	0.0	PWR: SPARE CKT CLASSROOM 112			0.0	0.0			PWR: SPARE CKT LECTURE 106	0.0	0.0	0.0	1	20	28
29	20	1	0.0	0.8	0.0	PWR: MONITOR STUDY 105C					0.8	0.7	CO: STUDY 105C	0.7	0.0	0.0	1	20	30
31	20	1	0.0	0.8	0.0	PWR: MONITOR STUDY 105B	0.8	0.7					CO: STUDY 105B	0.7	0.0	0.0	1	20	32
33	20	1	0.0	0.8	0.0	PWR: MONITOR STUDY 105A			0.8	0.7			CO: STUDY 105A	0.7	0.0	0.0	1	20	34
35	20	1	0.0	0.0	0.7	CO: FLOORBOXES CLASSROOM...					0.7	0.7	CO: FLOORBOXES CLASSROOM 112	0.7	0.0	0.0	1	20	36
37	20	1	0.0	0.0	0.7	CO: FLOORBOXES CLASSROOM...	0.7	0.7					CO: FLOORBOXES CLASSROOM 112	0.7	0.0	0.0	1	20	38
39	20	1	--	--	--	SPARE			0.0	0.0			SPARE	--	--	--	1	20	40
41	20	1	--	--	--	SPARE					0.0	0.0	SPARE	--	--	--	1	20	42
43	20	1	--	--	--	SPARE	0.0	0.0					SPARE	--	--	--	1	20	44
45	20	1	--	--	--	SPARE			0.0	0.0			SPARE	--	--	--	1	20	46
47	20	1	--	--	--	SPARE					0.0	0.0	SPARE	--	--	--	1	20	48
49	20	1	--	--	--	SPARE	0.0	0.0					SPARE	--	--	--	1	20	50
51	20	1	--	--	--	SPARE			0.0	0.0			SPARE	--	--	--	1	20	52
53	20	1	--	--	--	SPARE					0.0	0.0	SPARE	--	--	--	1	20	54
55	20	1	--	--	--	SPARE	0.0	0.0					SPARE	--	--	--	1	20	56
57	20	1	--	--	--	SPARE			0.0	0.0			SPARE	--	--	--	1	20	58
59	20	1	--	--	--	SPARE					0.0	0.0	SPARE	--	--	--	1	20	60
61	20	1	--	--	--	SPARE	0.0	0.0					SPARE	--	--	--	1	20	62
63	20	1	--	--	--	SPARE			0.0	0.0			SPARE	--	--	--	1	20	64
65	20	1	--	--	--	SPARE					0.0	0.0	SPARE	--	--	--	1	20	66
67	20	1	--	--	--	SPARE	0.0	0.0					SPARE	--	--	--	1	20	68
69	20	1	--	--	--	SPARE			0.0	0.0			SPARE	--	--	--	1	20	70
71	20	1	--	--	--	SPARE					0.0	0.0	SPARE	--	--	--	1	20	72
73	20	1	--	--	--	SPARE	0.0	0.0					SPARE	--	--	--	1	20	74
75	20	1	--	--	--	SPARE			0.0	0.0			SPARE	--	--	--	1	20	76
77	20	1	--	--	--	SPARE					0.0	0.0	SPARE	--	--	--	1	20	78
79	20	1	--	--	--	SPARE	0.0	0.0					SPARE	--	--	--	1	20	80
81	20	1	--	--	--	SPARE			0.0	0.0			SPARE	--	--	--	1	20	82
83	20	1	--	--	--	SPARE					0.0	0.0	SPARE	--	--	--	1	20	84

TOTALS: CONNECTED kVA PER PHASE **8** **7** **8** — CONNECTED TOTAL kVA = **23**
CONNECTED AMPS PER PHASE **66** **59** **71** — AVERAGE CONNECTED AMPS PER PHASE = **65**

NEC DIVERSIFIED LOAD CALCULATIONS

LIGHTING & CONTINUOUS LOADS: - 100% CONNECTED LOAD PLUS 25% — DIVERSIFIED TOTAL kVA = **22**
RECEPTACLES: **13.3 kVA @ 88% = 11.7 kVA** - FIRST 10kVA @ 100%, REMAINDER @ 50% — AVERAGE AMPS PER PHASE = **60**
ALL OTHER LOADS @ 100% : **9.9 kVA** - MOTOR TOTALS INCLUDED IN ALL OTHER LOADS WITH LARGEST MOTOR CALCULATED @ 125% PER NEC

PANEL: "1LB2"

VOLTS/PHASE/WIRE:	PANEL SIZE & TYPE:	MAIN SIZE AND TYPE:	LOCATION:	CABINET:	NOTES:
120/208V, 3 PH 4 WIRE	22" W x 6" D, BOLT-ON	225 AMPERE MAIN LUGS	ELEC 100G	SURFACE	

ACCESSORIES: PANEL DIRECTORY, IDENTIFICATION, GROUNDING BAR **AIC RATING:** 14,529 SCA

CKT	OCP		LOAD (kVA)				PHASE LOAD							LOAD (kVA)			OCP		CKT
NO	AMP	POLE	LTG	PWR	CO	DESCRIPTION	A		B		C		DESCRIPTION	CO	PWR	LTG	POLE	AMP	NO
1	20	1	--	--	--	SPARE	0.0	1.4					CO: HORSESHOE 104	1.4	0.0	0.0	1	20	2
3	20	1	--	--	--	SPARE			0.0	0.6			PWR/CO: PROJ SCRN HORSESHOE 104	0.4	0.2	0.0	1	20	4
5	20	1	--	--	--	SPARE					0.0	0.4	PWR/CO: PROJ SCRN HORSESHOE 104	0.2	0.2	0.0	1	20	6
7	20	1	--	--	--	SPARE	0.0	0.5					CO: HORSESHOE 104	0.5	0.0	0.0	1	20	8
9	20	1	--	--	--	SPARE			0.0	0.5			CO: HORSESHOE 104	0.5	0.0	0.0	1	20	10
11	20	1	--	--	--	SPARE					0.0	0.5	CO: HORSESHOE 104	0.5	0.0	0.0	1	20	12
13	20	1	--	--	--	SPARE	0.0	0.5					CO: HORSESHOE 104	0.5	0.0	0.0	1	20	14
15	20	1	--	--	--	SPARE			0.0	0.5			PWR: AV RACK HORSESHOE 104	0.0	0.5	0.0	1	20	16
17	20	1	--	--	--	SPARE					0.0	0.7	PWR/CO: LECTURN HORSESHOE 104	0.2	0.5	0.0	1	20	18
19	20	1	--	--	--	SPARE	0.0	1.0					PWR: PROJ/CAM HORSESHOE 104	0.0	1.0	0.0	1	20	20
21	20	1	--	--	--	SPARE			0.0	0.8			PWR: PROJ HORSESHOE 104	0.0	0.8	0.0	1	20	22
23	20	1	--	--	--	SPARE					0.0	0.7	CO: CLASSROOM 102	0.7	0.0	0.0	1	20	24
25	20	1	--	--	--	SPARE	0.0	0.9					PWR/CO: PROJ SCRN CLASSROOM 102	0.7	0.2	0.0	1	20	26
27	20	1	--	--	--	SPARE			0.0	0.5			PWR: AV RACK CLASSROOM 102	0.0	0.5	0.0	1	20	28
29	20	1	--	--	--	SPARE					0.0	0.7	PWR/CO: LECTURN CLASSROOM 102	0.2	0.5	0.0	1	20	30
31	20	1	--	--	--	SPARE	0.0	1.0					PWR: PROJ/CAM CLASSROOM 102	0.0	1.0	0.0	1	20	32
33	20	1	--	--	--	SPARE			0.0	0.0			PWR: SPARE CKT HORSESHOE 104	0.0	0.0	0.0	1	20	34
35	20	1	--	--	--	SPARE					0.0	0.0	PWR: SPARE CKT HORSESHOE 104	0.0	0.0	0.0	1	20	36
37	20	1	--	--	--	SPARE	0.0	0.7					CO: HORSESHOE 104	0.7	0.0	0.0	1	20	38
39	20	1	--	--	--	SPARE			0.0	0.4			CO: HORSESHOE 104	0.4	0.0	0.0	1	20	40
41	20	1	--	--	--	SPARE					0.0	0.0	SPARE	--	--	--	1	20	42
43	20	1	--	--	--	SPARE	0.0	0.0					PWR: SPARE CKT SMALL CLASSROO...	0.0	0.0	0.0	1	20	44
45	20	1	--	--	--	SPARE			0.0	0.0			PWR: SPARE CKT SMALL CLASSROO...	0.0	0.0	0.0	1	20	46
47	20	1	--	--	--	SPARE					0.0	0.7	CO: FLOORBOXES CLASSROOM 102	0.7	0.0	0.0	1	20	48
49	20	1	--	--	--	SPARE	0.0	0.7					CO: FLOORBOXES CLASSROOM 102	0.7	0.0	0.0	1	20	50
51	20	1	--	--	--	SPARE			0.0	0.0			SPARE	--	--	--	1	20	52
53	20	1	--	--	--	SPARE					0.0	0.0	SPARE	--	--	--	1	20	54
55	20	1	--	--	--	SPARE	0.0	0.0					SPARE	--	--	--	1	20	56
57	20	1	--	--	--	SPARE			0.0	0.0			SPARE	--	--	--	1	20	58
59	20	1	--	--	--	SPARE					0.0	0.0	SPARE	--	--	--	1	20	60
61	20	1	--	--	--	SPARE	0.0	0.0					SPARE	--	--	--	1	20	62
63	20	1	--	--	--	SPARE			0.0	0.0			SPARE	--	--	--	1	20	64
65	20	1	--	--	--	SPARE					0.0	0.0	SPARE	--	--	--	1	20	66
67	20	1	--	--	--	SPARE	0.0	0.0					SPARE	--	--	--	1	20	68
69	20	1	--	--	--	SPARE			0.0	0.0			SPARE	--	--	--	1	20	70
71	20	1	--	--	--	SPARE					0.0	0.0	SPARE	--	--	--	1	20	72
73	20	1	--	--	--	SPARE	0.0	0.0					SPARE	--	--	--	1	20	74
75	20	1	--	--	--	SPARE			0.0	0.0			SPARE	--	--	--	1	20	76
77	20	1	--	--	--	SPARE					0.0	0.0	SPARE	--	--	--	1	20	78
79	20	1	--	--	--	SPARE	0.0	0.0					SPARE	--	--	--	1	20	80
81	20	1	--	--	--	SPARE			0.0	0.0			SPARE	--	--	--	1	20	82
83	20	1	--	--	--	SPARE					0.0	0.0	SPARE	--	--	--	1	20	84

TOTALS: CONNECTED kVA PER PHASE **7** **3** **4** — CONNECTED TOTAL kVA = **14**
CONNECTED AMPS PER PHASE **58** **27** **32** — AVERAGE CONNECTED AMPS PER PHASE = **38**

NEC DIVERSIFIED LOAD CALCULATIONS

LIGHTING & CONTINUOUS LOADS: - 100% CONNECTED LOAD PLUS 25% — DIVERSIFIED TOTAL kVA = **14**
RECEPTACLES: **8.5 kVA @ 100% = 8.5 kVA** - FIRST 10kVA @ 100%, REMAINDER @ 50% — AVERAGE AMPS PER PHASE = **38**
ALL OTHER LOADS @ 100% : **5.4 kVA** - MOTOR TOTALS INCLUDED IN ALL OTHER LOADS WITH LARGEST MOTOR CALCULATED @ 125% PER NEC

PANEL: "1LC1"

VOLTS/PHASE/WIRE:	PANEL SIZE & TYPE:	MAIN SIZE AND TYPE:	LOCATION:	CABINET:	NOTES:
120/208V, 3 PH 4 WIRE	22" W x 6" D, BOLT-ON	225 AMPERE MAIN LUGS	A/V 001B	SURFACE	

ACCESSORIES: PANEL DIRECTORY, IDENTIFICATION, GROUNDING BAR **AIC RATING:** 10,000 SCA

CKT	OCP		LOAD (kVA)				PHASE LOAD							LOAD (kVA)			OCP		CKT
NO	AMP	POLE	LTG	PWR	CO	DESCRIPTION	A		B		C		DESCRIPTION	CO	PWR	LTG	POLE	AMP	NO
1	20	1	0.0	0.0	0.5	CO: ROOM 001B	0.5	0.5					CO: AUDITORIUM 101	0.5	0.0	0.0	1	20	2
3	20	1	0.0	0.0	0.7	CO: ROOM 001B			0.7	0.5			CO: AUDITORIUM 101	0.5	0.0	0.0	1	20	4
5	20	1	0.0	0.8	0.0	PWR: A/V 001B PROJ.					0.8	0.5	CO: AUDITORIUM 101	0.5	0.0	0.0	1	20	6
7	20	1	0.0	0.7	0.0	PWR: FLOOR BOXES	0.7	0.0					SPARE	--	--	--	1	0	8
9	20	1	0.0	0.7	0.0	PWR: FLOOR BOXES			0.7	0.0			SPARE	--	--	--	1	0	10
11	20	1	0.0	0.8	0.0	PWR: A/V 001B PROJ.					0.8	0.5	CO: CORRIDORS	0.5	0.0	0.0	1	20	12
13	20	1	0.0	0.7	0.0	PWR: FLOOR BOXES	0.7	0.5					CO: CORRIDORS	0.5	0.0	0.0	1	20	14
15	20	1	0.0	0.7	0.0	PWR: FLOOR BOXES			0.7	0.5			CO: CORRIDORS	0.5	0.0	0.0	1	20	16
17	20	1	0.0	0.8	0.0	PWR: A/V 001B PROJ.					0.8	0.7	CO: CORRIDORS	0.7	0.0	0.0	1	20	18
19	20	1	0.0	0.7	0.0	PWR: FLOOR BOXES	0.7	0.5					CO: CORRIDORS	0.5	0.0	0.0	1	20	20
21	20	1	0.0	0.7	0.0	PWR: FLOOR BOXES			0.7	0.5			CO: CORRIDORS	0.5	0.0	0.0	1	20	22
23	20	1	0.0	0.5	0.0	PWR: A/V 001B AV RACK					0.5	0.7	CO: CORRIDORS	0.7	0.0	0.0	1	20	24
25	20	1	0.0	0.0	0.9	CO: CORRIDOR 001	0.9	0.2					LTG: CR SPOT LTG. AUD 101B	0.0	0.0	0.2	1	20	26
27	0	1	--	--	--	SPARE			0.0	0.2			LTG: CR SPOT LTG. AUD 101B	0.0	0.0	0.2	1	20	28
29	20	1	0.0	0.5	0.0	PWR: A/V 001B AV RACK					0.5	0.2	LTG: CR SPOT LTG. AUD 101A	0.0	0.0	0.2	1	20	30
31	20	1	0.0	0.2	0.0	PWR: CONTROLS AUD. (DMA)	0.2	0.2					LTG: CR SPOT LTG. AUD 101A	0.0	0.0	0.2	1	20	32
33	20	1	0.0	0.2	0.0	PWR: CONTROLS AUD. (DMB)			0.2	0.2			LTG: CR SPOT LTG. AUD 101	0.0	0.0	0.2	1	20	34
35	20	1	0.0	0.2	0.0	PWR: CONTROLS AUD. (DMC)					0.2	0.2	LTG: CR SPOT LTG. AUD 101	0.0	0.0	0.2	1	20	36
37	20	1	--	--	--	SPARE	0.0	0.0					SPARE	--	--	--	1	20	38
39	20	1	--	--	--	SPARE			0.0	0.0			SPARE	--	--	--	1	20	40
41	20	1	--	--	--	SPARE					0.0	0.0	SPARE	--	--	--	1	20	42
43	20	1	0.0	0.8	0.0	PWR: AUDITORIUM AV MONITOR	0.8	0.0					SPARE	--	--	--	1	20	44
45	20	1	0.0	0.8	0.0	PWR: AUDITORIUM AV MONITOR			0.8	0.0			SPARE	--	--	--	1	20	46
47	20	1	0.0	0.8	0.0	PWR: AUDITORIUM AV MONITOR					0.8	0.0	SPARE	--	--	--	1	20	48
49	20	1	0.0	0.8	0.0	PWR: AUDITORIUM AV MONITOR	0.8	0.0					SPARE	--	--	--	1	20	50
51	20	1	0.0	0.8	0.0	PWR: AUDITORIUM AV MONITOR			0.8	0.0			SPARE	--	--	--	1	20	52
53	20	1	0.0	0.8	0.0	PWR: AUDITORIUM AV MONITOR					0.8	0.0	SPARE	--	--	--	1	20	54
55	20	1	0.0	0.0	0.4	CO: AUDITORIUM	0.4	0.0					SPARE	--	--	--	1	20	56
57	20	1	0.0	0.0	0.4	CO: AUDITORIUM			0.4	0.0			SPARE	--	--	--	1	20	58
59	20	1	0.0	0.0	0.4	CO: AUDITORIUM					0.4	0.0	SPARE	--	--	--	1	20	60
61	20	1	0.0	0.5	0.0	PWR: AUDITORIUM CAMERAS	0.5	0.0					SPARE	--	--	--	1	20	62
63	20	1	--	--	--	SPARE			0.0	0.0			SPARE	--	--	--	1	20	64
65	20	1	--	--	--	SPARE					0.0	0.0	SPARE	--	--	--	1	20	66
67	20	1	--	--	--	SPARE	0.0	0.0					SPARE	--	--	--	1	20	68
69	20	1	--	--	--	SPARE			0.0	0.0			SPARE	--	--	--	1	20	70
71	20	1	--	--	--	SPARE					0.0	0.0	SPARE	--	--	--	1	20	72
73	20	1	--	--	--	SPARE	0.0	0.0					SPARE	--	--	--	1	20	74
75	20	1	--	--	--	SPARE			0.0	0.0			SPARE	--	--	--	1	20	76
77	20	1	--	--	--	SPARE					0.0	0.0	SPARE	--	--	--	1	20	78
79	20	1	--	--	--	SPARE	0.0	0.0					SPARE	--	--	--	1	20	80
81	20	1	--	--	--	SPARE			0.0	0.0			SPARE	--	--	--	1	20	82
83	20	1	--	--	--	SPARE					0.0	0.0	SPARE	--	--	--	1	20	84

TOTALS: CONNECTED kVA PER PHASE **8** **7** **8** — CONNECTED TOTAL kVA = **24**
CONNECTED AMPS PER PHASE **71** **59** **72** — AVERAGE CONNECTED AMPS PER PHASE = **66**

NEC DIVERSIFIED LOAD CALCULATIONS

LIGHTING & CONTINUOUS LOADS: **1.2 kVA @ 125% = 1.5 kVA** - 100% CONNECTED LOAD PLUS 25% — DIVERSIFIED TOTAL kVA = **24**
RECEPTACLES: **9.0 kVA @ 100% = 9.0 kVA** - FIRST 10kVA @ 100%, REMAINDER @ 50% — AVERAGE AMPS PER PHASE = **67**
ALL OTHER LOADS @ 100% : **13.7 kVA** - MOTOR TOTALS INCLUDED IN ALL OTHER LOADS WITH LARGEST MOTOR CALCULATED @ 125% PER NEC

PANEL: "1LB1"

VOLTS/PHASE/WIRE:	PANEL SIZE & TYPE:	MAIN SIZE AND TYPE:	LOCATION:	CABINET:	NOTES:
120/208V, 3 PH 4 WIRE	22" W x 6" D, BOLT-ON	225 AMPERE MAIN LUGS	ELEC 100G	SURFACE	

ACCESSORIES: PANEL DIRECTORY, IDENTIFICATION, GROUNDING BAR **AIC RATING:** 14,529 SCA

CKT	OCP		LOAD (kVA)				PHASE LOAD							LOAD (kVA)			OCP		CKT
NO	AMP	POLE	LTG	PWR	CO	DESCRIPTION	A		B		C		DESCRIPTION	CO	PWR	LTG	POLE	AMP	NO
1	20	1	0.0	0.0	1.1	CO: CORR./ STAIR	1.1	0.0					SPARE	--	--	--	1	20	2
3	20	1	0.0	0.7	0.0	PWR: DRINK. FOUNT.			0.7	0.0			SPARE	--	--	--	1	20	4
5	20	1	0.0	0.7	0.0	PWR: DRINK. FOUNT.					0.7	0.0	SPARE	--	--	--	1	20	6
7	20	1	0.0	0.0	1.1	CO: CORR./ STAIR	1.1	0.0					SPARE	--	--	--	1	20	8
9	20	1	0.0	0.0	0.9	CO: JAN./ LAVS			0.9	0.0			SPARE	--	--	--	1	20	10
11	20	1	0.0	0.0	0.5	CO: CORRIDOR					0.5	0.0	SPARE	--	--	--	1	20	12
13	20	1	--	--	--	SPARE	0.0	0.0					SPARE	--	--	--	1	20	14
15	20	1	--	--	--	SPARE			0.0	0.0			SPARE	--	--	--	1	20	16
17	20	1	--	--	--	SPARE					0.0	0.0	SPARE	--	--	--	1	20	18
19	20	1	0.0	0.0	0.7	CO: CORR./ STOR.	0.7	0.0					SPARE	--	--	--	1	20	20
21	20	1	0.0	0.8	0.0	PWR: DIGITAL SIGNAGE AV...			0.8	0.0			SPARE	--	--	--	1	20	22
23	20	1	0.0	0.8	0.0	PWR: DIGITAL SIGNAGE AV...					0.8	0.0	SPARE	--	--	--	1	20	24
25	20	1	--	--	--	SPARE	0.0	0.0					SPARE	--	--	--	1	20	26
27	20	1	--	--	--	SPARE			0.0	0.0			SPARE	--	--	--	1	20	28
29	20	1	--	--	--	SPARE					0.0	0.0	SPARE	--	--	--	1	20	30
31	20	1	--	--	--	SPARE	0.0	0.0					SPARE	--	--	--	1	20	32
33	20	1	--	--	--	SPARE			0.0	0.0			SPARE	--	--	--	1	20	34
35	20	1	--	--	--	SPARE					0.0	0.0	SPARE	--	--	--	1	20	36
37	20	1	--	--	--	SPARE	0.0	0.0					SPARE	--	--	--	1	20	38
39	20	1	--	--	--	SPARE			0.0	0.0			SPARE	--	--	--	1	20	40
41	20	1	--	--	--	SPARE					0.0	0.0	SPARE	--	--	--	1	20	42
43	20	1	--	--	--	SPARE	0.0	0.0					SPARE	--	--	--	1	20	44
45	20	1	--	--	--	SPARE			0.0	0.0			SPARE	--	--	--	1	20	46
47	20	1	--	--	--	SPARE					0.0	0.0	SPARE	--	--	--	1	20	48
49	20	1	--	--	--	SPARE	0.0	0.0					SPARE	--	--	--	1	20	50
51	20	1	--	--	--	SPARE			0.0	0.0			SPARE	--	--	--	1	20	52
53	20	1	--	--	--	SPARE					0.0	0.0	SPARE	--	--	--	1	20	54
55	20	1	--	--	--	SPARE	0.0	0.0					SPARE	--	--	--	1	20	56
57	20	1	--	--	--	SPARE			0.0	0.0			SPARE	--	--	--	1	20	58
59	20	1	--	--	--	SPARE					0.0	0.0	SPARE	--	--	--	1	20	60
61	20	1	--	--	--	SPARE	0.0	0.0					SPARE	--	--	--	1	20	62
63	20	1	--	--	--	SPARE			0.0	0.0			SPARE	--	--	--	1	20	64
65	20	1	--	--	--	SPARE					0.0	0.0	SPARE	--	--	--	1	20	66
67	20	1	--	--	--	SPARE	0.0	0.0					SPARE	--	--	--	1	20	68
69	20	1	--	--	--	SPARE			0.0	0.0			SPARE	--	--	--	1	20	70
71	20	1	--	--	--	SPARE					0.0	0.0	SPARE	--	--	--	1	20	72
73	20	1	--	--	--	SPARE	0.0	0.0					SPARE	--	--	--	1	20	74
75	20	1	--	--	--	SPARE			0.0	0.0			SPARE	--	--	--	1	20	76
77	20	1	--	--	--	SPARE					0.0	0.0	SPARE	--	--	--	1	20	78
79	20	1	--	--	--	SPARE	0.0	0.0					SPARE	--	--	--	1	20	80
81	20	1	--	--	--	SPARE			0.0	0.0			SPARE	--	--	--	1	20	82
83	20	1	--	--	--	SPARE					0.0	0.0	SPARE	--	--	--	1	20	84

TOTALS: CONNECTED kVA PER PHASE **3** **2** **2** — CONNECTED TOTAL kVA = **7**
CONNECTED AMPS PER PHASE **24** **20** **17** — AVERAGE CONNECTED AMPS PER PHASE = **20**

NEC DIVERSIFIED LOAD CALCULATIONS

LIGHTING & CONTINUOUS LOADS: - 100% CONNECTED LOAD PLUS 25% — DIVERSIFIED TOTAL kVA = **7**
RECEPTACLES: **4.3 kVA @ 100% = 4.3 kVA** - FIRST 10kVA @ 100%, REMAINDER @ 50% — AVERAGE AMPS PER PHASE = **20**
ALL OTHER LOADS @ 100% : **3.0 kVA** - MOTOR TOTALS INCLUDED IN ALL OTHER LOADS WITH LARGEST MOTOR CALCULATED @ 125% PER NEC

PANEL: "1LB3"

VOLTS/PHASE/WIRE:	PANEL SIZE & TYPE:	MAIN SIZE AND TYPE:	LOCATION:	CABINET:	NOTES:
120/208V, 3 PH 4 WIRE	22" W x 6" D, BOLT-ON	225 AMPERE MAIN LUGS	ELEC 100G	SURFACE	

ACCESSORIES: PANEL DIRECTORY, IDENTIFICATION, GROUNDING BAR **AIC RATING:** FUT

CKT	OCP		LOAD (kVA)				PHASE LOAD							LOAD (kVA)			OCP		CKT
NO	AMP	POLE	LTG	PWR	CO	DESCRIPTION	A		B		C		DESCRIPTION	CO	PWR	LTG	POLE	AMP	NO
1	20	1	--	--	--	SPARE	0.0	0.0					SPARE	--	--	--	1	20	2
3	20	1	--	--	--	SPARE			0.0	0.0			SPARE	--	--	--	1	20	4
5	20	1	--	--	--	SPARE					0.0	0.0	SPARE	--	--	--	1	20	6
7	20	1	--	--	--	SPARE	0.0	0.0					SPARE	--	--	--	1	20	8
9	20	1	--	--	--	SPARE			0.0	0.0			SPARE	--	--	--	1	20	10
11	20	1	--	--	--	SPARE					0.0	0.0	SPARE	--	--	--	1	20	12
13	20	1	--	--	--	SPARE	0.0	0.0					SPARE	--	--	--	1	20	14
15	20	1	--	--	--	SPARE			0.0	0.0			SPARE	--	--	--	1	20	16
17	20	1	--	--	--	SPARE					0.0	0.0	SPARE	--	--	--	1	20	18
19	20	1	--	--	--	SPARE	0.0	0.0					SPARE	--	--	--	1	20	20
21	20	1	--	--	--	SPARE			0.0	0.0			SPARE	--	--	--	1	20	22
23	20	1	--	--	--	SPARE					0.0	0.0	SPARE	--	--	--	1	20	24
25	20	1	--	--	--	SPARE	0.0	0.0					SPARE	--	--	--	1	20	26
27	20	1	--	--	--	SPARE			0.0	0.0			SPARE	--	--	--	1	20	28
29	20	1	--	--	--	SPARE					0.0	0.0	SPARE	--	--	--	1	20	30
31	20	1	--	--	--	SPARE	0.0	0.0					SPARE	--	--	--	1	20	32
33	20	1	--	--	--	SPARE			0.0	0.0			SPARE	--	--	--	1	20	34
35	20	1	--	--	--	SPARE					0.0	0.0	SPARE	--	--	--	1	20	36
37	20	1	--	--	--	SPARE	0.0	0.0					SPARE	--	--	--	1	20	38
39	20	1	--	--	--	SPARE			0.0	0.0			SPARE	--	--	--	1	20	40
41	20	1	--	--	--	SPARE					0.0	0.0	SPARE	--	--	--	1	20	42
43	20	1	--	--	--	SPARE	0.0	0.0					SPARE	--	--	--	1	20	44
45	20	1	--	--	--	SPARE			0.0	0.0			SPARE	--	--	--	1	20	46
47	20	1	--	--	--	SPARE					0.0	0.0	SPARE	--	--	--	1	20	48
49	20	1	--	--	--	SPARE	0.0	0.0					SPARE	--	--	--	1	20	50
51	20	1	--	--	--	SPARE			0.0	0.0			SPARE	--	--	--	1	20	52
53	20	1	--	--	--	SPARE					0.0	0.0	SPARE	--	--	--	1	20	54
55	20	1	--	--	--	SPARE	0.0	0.0					SPARE	--	--	--	1	20	56
57	20	1	--	--	--	SPARE			0.0	0.0			SPARE	--	--	--	1	20	58
59	20	1	--	--	--	SPARE					0.0	0.0	SPARE	--	--	--	1	20	60
61	20	1	--	--	--	SPARE	0.0	0.0					SPARE	--	--	--	1	20	62
63	20	1	--	--	--	SPARE			0.0	0.0			SPARE	--	--	--	1	20	64
65	20	1	--	--	--	SPARE					0.0	0.0	SPARE	--	--	--	1	20	66
67	20	1	--	--	--	SPARE	0.0	0.0					SPARE	--	--	--	1	20	68
69	20	1	--	--	--	SPARE			0.0	0.0			SPARE	--	--	--	1	20	70
71	20	1	--	--	--	SPARE					0.0	0.0	SPARE	--	--	--	1	20	72
73	20	1	--	--	--	SPARE	0.0	0.0					SPARE	--	--	--	1	20	74
75	20	1	--	--	--	SPARE			0.0	0.0			SPARE	--	--	--	1	20	76
77	20	1	--	--	--	SPARE					0.0	0.0	SPARE	--	--	--	1	20	78
79	20	1	--	--	--	SPARE	0.0	0.0					SPARE	--	--	--	1	20	80
81	20	1	--	--	--	SPARE			0.0	0.0			SPARE	--	--	--	1	20	82
83	20	1	--	--	--	SPARE					0.0	0.0	SPARE	--	--	--	1	20	84

TOTALS: CONNECTED kVA PER PHASE **0** **0** **0** — CONNECTED TOTAL kVA = **0**
CONNECTED AMPS PER PHASE **0** **0** **0** — AVERAGE CONNECTED AMPS PER PHASE = **0**

NEC DIVERSIFIED LOAD CALCULATIONS

LIGHTING & CONTINUOUS LOADS: - 100% CONNECTED LOAD PLUS 25% — DIVERSIFIED TOTAL kVA = **0**
RECEPTACLES: - FIRST 10kVA @ 100%, REMAINDER @ 50% — AVERAGE AMPS PER PHASE = **0**
ALL OTHER LOADS @ 100% : **0.0 kVA** - MOTOR TOTALS INCLUDED IN ALL OTHER LOADS WITH LARGEST MOTOR CALCULATED @ 125% PER NEC

PANEL: "1QLA1"

VOLTS/PHASE/WIRE:	PANEL SIZE & TYPE:	MAIN SIZE AND TYPE:	LOCATION:	CABINET:	NOTES:
120/208V, 3 PH 4 WIRE	22" W x 6" D, BOLT-ON	400 AMPERE MAIN LUGS	ELEC 103B	SURFACE	

ACCESSORIES: PANEL DIRECTORY, IDENTIFICATION, GROUNDING BAR **AIC RATING:** 10,000 SCA

CKT	OCP		LOAD (kVA)				PHASE LOAD							LOAD (kVA)			OCP		CKT
NO	AMP	POLE	LTG	PWR	CO	DESCRIPTION	A		B		C		DESCRIPTION	CO	PWR	LTG	POLE	AMP	NO
1	20	1	0.0	1.0	0.0	PWR: TTB IDF 100K	1.0	0.7					PWR/CO: TTB MDF 108A	0.2	0.5	0.0	1	20	2
3	20	1	0.0	1.0	0.0	PWR: TTB IDF 100K			1.0	1.0			PWR: TTB MDF 108A	0.0	1.0	0.0	1	20	4
5	20	1	0.0	1.0	0.2	PWR/CO: TTB IDF 100K					1.2	1.0	PWR: TTB MDF 108A	0.0	1.0	0.0	1	20	6
7	20	1	0.0	0.5	0.0	PWR: DATA RACK IDF 100K	0.5	0.5					PWR: DATA RACK MDF 108A	0.0	0.5	0.0	1	20	8
9	30	2	0.0	4.0	0.0	PWR: DATA RACK IDF 100K			2.0	2.0			PWR: DATA RACK MDF 108A	0.0	4.0	0.0	2	30	10
11	--	--	--	--	--	--					2.0	2.0	--	--	--	--	--	--	12
13	20	1	0.0	0.5	0.0	PWR: DATA RACK IDF 100K	0.5	0.5					PWR: DATA RACK MDF 108A	0.0	0.5	0.0	1	20	14
15	30	2	0.0	4.0	0.0	PWR: DATA RACK IDF 100K			2.0	2.0			PWR: DATA RACK MDF 108A	0.0	4.0	0.0	2	30	16
17	--	--	--	--	--	--					2.0	2.0	--	--	--	--	--	--	18
19	20	1	0.0	0.5	0.0	PWR: DATA RACK IDF 100K	0.5	0.5					PWR: DATA RACK MDF 108A	0.0	0.5	0.0	1	20	20
21	30	2	0.0	4.0	0.0	PWR: DATA RACK IDF 100K			2.0	2.0			PWR: DATA RACK MDF 108A	0.0	4.0	0.0	2	30	22
23	--	--	--	--	--	--					2.0	2.0	--	--	--	--	--	--	24
25	20	1	0.0	0.5	0.0	PWR: DATA RACK MDF 108A	0.5	0.5					PWR: DATA RACK MDF 108A	0.0	0.5	0.0	1	20	26
27	30	2	0.0	4.0	0.0	PWR: DATA RACK MDF 108A			2.0	2.0			PWR: DATA RACK MDF 108A	0.0	4.0	0.0	2	30	28
29	--	--	--	--	--	--					2.0	2.0	--	--	--	--	--	--	30
31	20	1	0.0	0.5	0.0	PWR: DATA RACK MDF 108A	0.5	1.0					PWR: TTB MDF 108A	0.0	1.0	0.0	1	20	32
33	30	2	0.0	4.0	0.0	PWR: DATA RACK MDF 108A			2.0	1.0			PWR: TTB MDF 108A	0.0	1.0	0.0	1	20	34
35	--	--	--	--	--	--					2.0	0.5	PWR: DATA RACK IDF 100K	0.0	0.5	0.0	1	20	36
37	20	1	0.0	2.0	0.0	PWR: ADA DOORS (100UA,UD)	2.1	2.0					PWR: DATA RACK IDF 100K	0.0	4.0	0.0	2	30	38
39	20	1	0.0	2.0	0.0	PWR: ADA DOORS (100AA,AD)			2.1	2.0			--	--	--	--	--	--	40
41	20	1	0.0	2.0	0.0	PWR: ADA DOORS (100HA,HD)					2.1	2.1	PWR: ADA DOORS (100SA,SD)	0.0	2.0	0.0	1	20	42
43	20	2	0.0	0.1	0.0	FAN COIL UNIT (FC-19)	0.1	1.1					FAN COIL UNIT (FC-21)	0.0	2.3	0.0	2	20	44
45	--	--	--	--	--	--			0.1	1.1			--	--	--	--	--	--	46
47	20	3	0.0	2.4	0.0	FAN COIL UNIT (FC-3)					0.8	0.8	ELEC UNIT HEATER (EH-1) ELEC 103B	0.0	1.5	0.0	2	20	48
49	--	--	--	--	--	--	0.8	0.8					--	--	--	--	--	--	50
51	--	--	--	--	--	--			0.8	0.8			FAN COIL UNIT (FC-1) A/V 001B	0.0	1.7	0.0	2	20	52
53	20	2	0.0	1.7	0.0	FAN COIL (FC-2) IDF 100K					0.8	0.8	--	--	--	--	--	--	54
55	--	--	--	--	--	--	0.8	0.1					CONDENSATE PUMP (CDP-1)	0.0	0.1	0.0	1	20	56
57	20	1	0.0	0.5	0.0	PWR: DATA RACK A/V 001B			0.5	0.1			CONDENSATE PUMP (CDP-2)	0.0	0.1	0.0	1	20	58
59	30	2	0.0	4.0	0.0	PWR: DATA RACK A/V 001B					2.0	0.6	PWR: VAVS	0.0	0.6	0.0	1	20	60
61	--	--	--	--	--	--	2.0	0.6					PWR: VAVS	0.0	0.6	0.0	1	20	62
63	20	1	0.0	0.5	0.0	PWR: DATA RACK A/V 001B			0.5	0.6			PWR: VAVS	0.0	0.6	0.0	1	20	64
65	30	2	0.0	4.0	0.0	PWR: DATA RACK A/V 001B					2.0	0.6	PWR: VAVS	0.0	0.6	0.0	1	20	66
67	--	--	--	--	--	--	2.0	0.6					PWR: VAVS	0.0	0.6	0.0	1	20	68
69	20	1	0.0	0.5	0.0	PWR: DATA RACK A/V 001B			0.5	0.4			PWR: VAVS	0.0	0.4	0.0	1	20	70
71	30	2	0.0	4.0	0.0	PWR: DATA RACK A/V 001B					2.0	0.4	PWR: VAVS	0.0	0.4	0.0	1	20	72
73	--	--	--	--	--	--	2.0	0.4					PWR: VAVS	0.0	0.4	0.0	1	20	74
75	20	1	0.0	0.0	0.9	CO: A/V 001B			0.9	0.0			SPARE	--	--	--	1	20	76
77	20	1	--	--	--	SPARE					0.0	0.0	SPARE	--	--	--	1	20	78
79	20	1	--	--	--	SPARE	0.0	0.0					SPARE	--	--	--	1	20	80
81	20	1	--	--	--	SPARE			0.0	0.0			SPARE	--	--	--	1	20	82
83	20	1	--	--	--	SPARE					0.0	0.0	SPARE	--	--	--	1	20	84

TOTALS: CONNECTED kVA PER PHASE **23** **31** **36** — CONNECTED TOTAL kVA = **89**
CONNECTED AMPS PER PHASE **188** **273** **308** — AVERAGE CONNECTED AMPS PER PHASE = **248**

NEC DIVERSIFIED LOAD CALCULATIONS

LIGHTING & CONTINUOUS LOADS: - 100% CONNECTED LOAD PLUS 25% — DIVERSIFIED TOTAL kVA = **90**
RECEPTACLES: **1.3 kVA @ 100% = 1.3 kVA** - FIRST 10kVA @ 100%, REMAINDER @ 50% — AVERAGE AMPS PER PHASE = **250**
ALL OTHER LOADS @ 100% : **88.6 kVA** - MOTOR TOTALS INCLUDED IN ALL OTHER LOADS WITH LARGEST MOTOR CALCULATED @ 125% PER NEC

3

LICENSED PROFESSIONAL ENGINEER
No. 8182456
TYLER SQUIRE
STATE OF UTAH

UNLESS A PROFESSIONAL SEAL WITH SIGNATURE AND DATE IS AFFIXED, THIS DOCUMENT IS PRELIMINARY AND IS NOT INTENDED FOR CONSTRUCTION, RECORDING PURPOSES, OR IMPLEMENTATION

UTAH VALLEY UNIVERSITY

State of Utah
Department of Administrative Services
Division of Facilities Construction & Management
DFCM
4110 State Office Building
Salt Lake City, Utah 84114
Phone: (801) 538 - 3018
Fax: (801) 538 - 3267

CRSA METHOD STUDIO INC.

CRSA ARCHITECTS
649 east south temple
salt lake city, utah 84102
phone: (801) 355 - 5915

METHOD STUDIO INC.
925 south west temple
salt lake city, utah 84101
phone: (801) 532-4422

SPECTRUM ENGINEERS
324 S. State St., Suite 400
Salt Lake City, UT 84111
800-678-7077
801-328-5151
fax: 801-328-5155
www.spectrum-engineers.com

DFCM APPROVAL STAMP

project:
UVU Classroom Building - Volume 1
800 West University Parkway
Orem, UT 84058

project#: DFCM# 12192790
date: April 30, 2013

revisions:
3 Addendum #5 5/24/2013

title:
Panel Schedules

sheet:
EP609

BID DOC

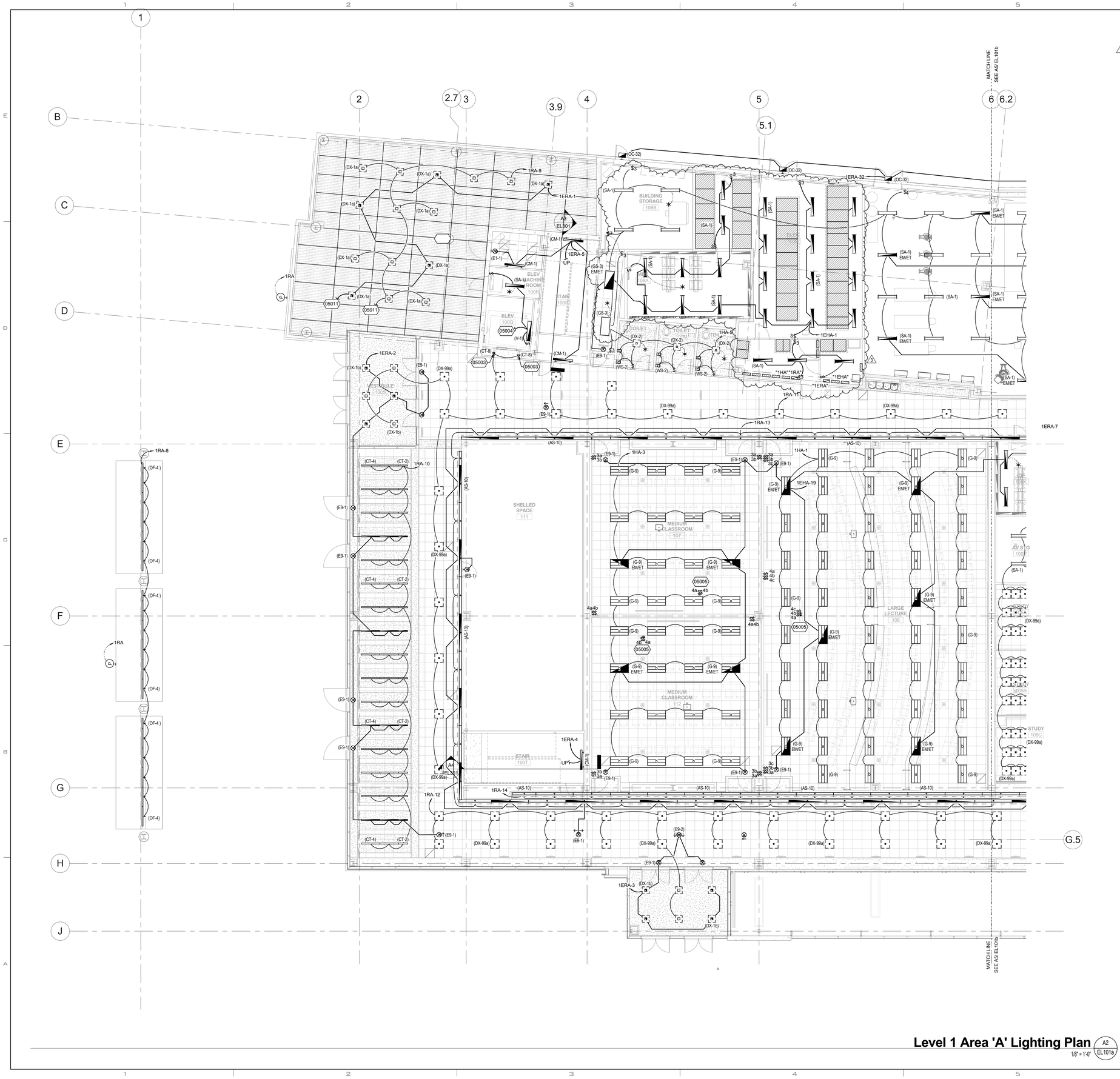

Level 1 Area 'A' Lighting Plan

A2 EL101a

1/8" = 1'-0"

GENERAL SHEET NOTES

1 COVE LIGHTS MOUNTED IN ARCHITECTURAL COVE AT TWO DIFFERENT ELEVATIONS. PROVIDE CONTINUOUS END-TO-END LIGHTING IN COVES USING 4' FIXTURES WHERE POSSIBLE AND 2' FIXTURES TO FILL REMAINING GAPS. COORDINATE EXACT PLACEMENT OF LIGHTS WITH ARCHITECTURAL COVE DETAILS AND ELEVATIONS. FIELD VERIFY ACTUAL COVE DIMENSIONS PRIOR TO ROUGH-IN.

2 CIRCUIT ALL EXIT SIGNS TO UNSWITCHED BRANCH OF ASSOCIATED CIRCUIT.

SHEET KEYNOTES

05003 RECESSED LINEAR LIGHT FIXTURE MOUNTED TO FRAMED ELEVATOR JAMB. COORDINATE EXACT LOCATION AND ELEVATION WITH ARCHITECTURAL DETAILS PRIOR TO ROUGH-IN.

05004 CIRCUIT WITH ELEVATOR PIT OR MACHINE ROOM RECEPTACLE.

05005 LIGHT SWITCHES MOUNTED IN LECTERN. COORDINATE EXACT LOCATION WITH MILLWORK INSTALLERS.

05011 CIRCUIT CONTINUES TO LEVEL ABOVE. SEE SHEET EL102A FOR CONTINUATION OF CIRCUIT.

KEYPLAN:

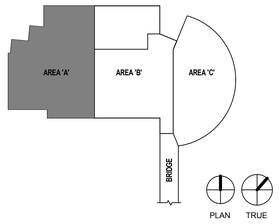

LICENSED PROFESSIONAL ENGINEER
No. 8182456
TYLER SQUIRE
STATE OF UTAH

UNLESS A PROFESSIONAL SEAL WITH SIGNATURE AND DATE IS AFFIXED, THIS DOCUMENT IS PRELIMINARY AND IS NOT INTENDED FOR CONSTRUCTION, RECORDING PURPOSES, OR IMPLEMENTATION

UTAH VALLEY UVU UNIVERSITY

State of Utah
Department of Administrative Services
Division of Facilities Construction & Management
4110 State Office Building
Salt Lake City, Utah 84114
Phone: (801) 538 - 3018
Fax: (801) 538 - 3267

CRSA METHODSTUDIO INC.

CRSA ARCHITECTS
649 east south temple
salt lake city, utah 84102
phone:(801) 355-5915

METHOD STUDIO INC.
925 south west temple
salt lake city, utah 84101
phone:(801) 532-4422

SPECTRUM ENGINEERS
324 S. State St., Suite 400
Salt Lake City, UT 84111
800-678-7077
801-328-5151
fax: 801-328-5155
www.spectrum-engineers.com

DFCM APPROVAL STAMP

project:
UVU Classroom Building - Volume 1
800 West University Parkway
Orem, UT 84058

project#: DFCM# 12192790
date: April 30, 2013

revisions:
3 Addendum #5 5/24/2013

title:
Level 1 Area 'A' Lighting Plan

sheet:
EL101a

BID DOC

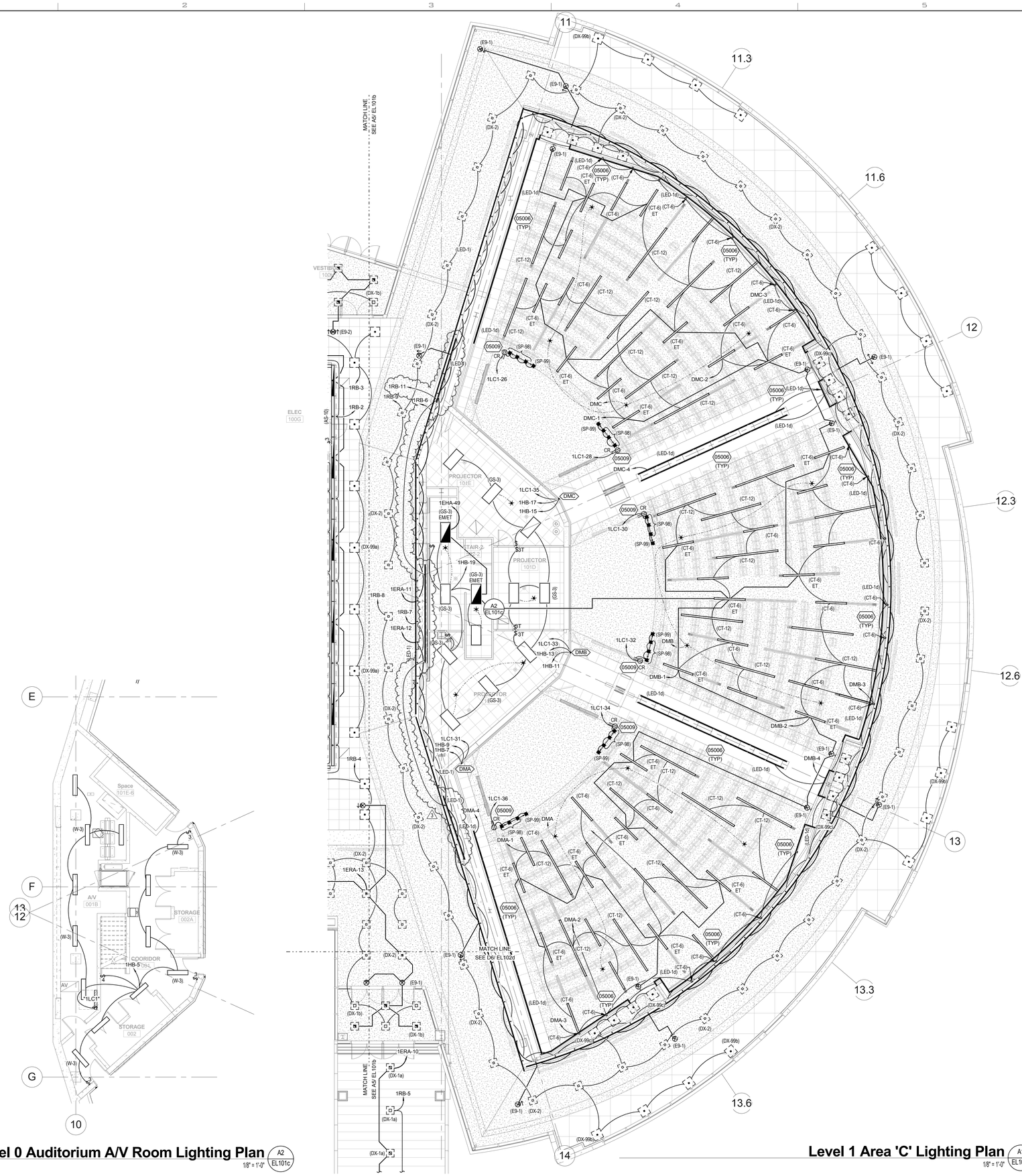

Level 0 Auditorium A/V Room Lighting Plan (A2 / EL101c)
1/8" = 1'-0"

Level 1 Area 'C' Lighting Plan (A1 / EL101c)
1/8" = 1'-0"

GENERAL SHEET NOTES

1 FOR ALL LIGHT FIXTURES MOUNTED IN ARCHITECTURAL COVE, PROVIDE CONTINUOUS END-TO-END LIGHTING IN COVES USING 4' FIXTURES WHERE POSSIBLE AND 2' FIXTURES TO FILL REMAINING GAPS. COORDINATE EXACT PLACEMENT OF LIGHTS WITH ARCHITECTURAL COVE DETAILS AND ELEVATIONS. FIELD VERIFY ACTUAL COVE DIMENSIONS PRIOR TO ROUGH-IN.

SHEET KEYNOTES

05003 RECESSED LINEAR LIGHT FIXTURE MOUNTED TO FRAMED ELEVATOR JAMB. COORDINATE EXACT LOCATION AND ELEVATION WITH ARCHITECTURAL DETAILS PRIOR TO ROUGH-IN.

05006 LINEAR LED STRIP MOUNTED IN ARCHITECTURAL RECESS OR COVE. REFER TO ARCHITECTURAL DETAILS.

05009 PROVIDE CONTROL RECEPTACLE CIRCUITED AS SHOWN. PROVIDE DMX DATA LINK BETWEEN LIGHT FIXTURES AND CRESTRON CONTROLLER. COORDINATE WITH LIGHTING AND AUDIOVISUAL DETAILS.

KEYPLAN:

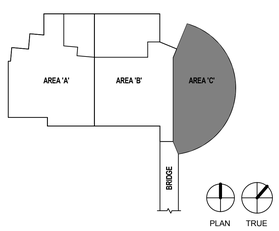

LICENSED PROFESSIONAL ENGINEER
No. 8182456
TYLER SQUIRE
STATE OF UTAH

UNLESS A PROFESSIONAL SEAL WITH SIGNATURE AND DATE IS AFFIXED, THIS DOCUMENT IS PRELIMINARY AND IS NOT INTENDED FOR CONSTRUCTION, RECORDING PURPOSES, OR IMPLEMENTATION

UTAH VALLEY UNIVERSITY

State of Utah
Department of Administrative Services
Division of Facilities Construction & Management
4110 State Office Building
Salt Lake City, Utah 84114
Phone: (801) 538 - 3018
Fax: (801) 538 - 3267

CRSA METHODSTUDIO INC.

CRSA ARCHITECTS
649 east south temple
salt lake city, utah 84102
phone:(801) 355-5915

METHOD STUDIO INC.
925 south west temple
salt lake city, utah 84101
phone:(801) 532-4422

SPECTRUM ENGINEERS
324 S. State St., Suite 400
Salt Lake City, UT 84111
800-678-7077
801-328-5151
fax: 801-328-5155
www.spectrum-engineers.com

DFCM APPROVAL STAMP

project:
UVU Classroom Building - Volume 1
800 West University Parkway
Orem, UT 84058

project#: DFCM# 12192790
date: April 30, 2013

revisions:
3 Addendum #5 5/24/2013

title:
Level 1 Area 'C' Lighting Plan

sheet:
EL101c

BID DOC

LIGHTING FIXTURE SCHEDULE

UVU CLASSROOM BUILDING

NOTE TO BIDDERS: COMPLY WITH ALL SECTIONS OF THE SPECIFICATIONS.
REFER TO SPECIFICATIONS FOR IMPORTANT TECHNICAL REQUIREMENTS FOR LIGHTING FIXTURES, BALLASTS, AND LAMPS. THE CATALOG NUMBERS LISTED BELOW HAVE BEEN CAREFULLY PREPARED TO ASSIST BIDDERS IN SELECTING PRODUCTS TO ACHIEVE THE DESIGN CONCEPT, HOWEVER, PRIOR TO BIDDING, EACH MANUFACTURER SHALL COMPARE THE CATALOG NUMBERS SHOWN WITH THE DESCRIPTION AND REQUIREMENTS ON THE DRAWINGS, AND SHALL NOTIFY THE ARCHITECT/ENGINEER OF ANY DISCREPANCIES. SPECIFICALLY INCLUDED IN THIS EVALUATION SHALL BE THE VERIFYING OF PROPER MOUNTING KITS OR ACCESSORIES TO FACILITATE INSTALLATION AS SHOWN AT EACH LOCATION ON THE DRAWINGS. NO ALLOWANCE OR REDRESS WILL BE ALLOWED FOR DISCREPANCIES THAT WERE NOT REPORTED TO THE ARCHITECT/ENGINEER IN TIME FOR CORRECTION OR CLARIFICATION BEFORE THE BID. THE REPORTING OF ANY AMBIGUITY IS THE RESPONSIBILITY OF THE BIDDER. PROVIDE UNIT PRICES AND FIXTURE BRAND SELECTED FOR ADD/DELETE CHANGES FOR EACH FIXTURE TYPES SHOWN WITHIN 48 BUSINESS HOURS OF THE BID DATE. FAILURE TO COMPLY WITH THIS REQUIREMENT MAY DISQUALIFY THE PRODUCTS AND EMPOWER THE ENGINEER TO DETERMINE FAIR VALUE FOR FIXTURE AND INSTALLATION CHANGES, WITHOUT FURTHER INPUT FROM THE CONTRACTOR OR INSTALLER. SUBMITTAL PACKAGE SHALL INCLUDE LAMP MANUFACTURER AND CATALOG NUMBER ON EACH FIXTURE SHEET. ON ALL PENDANT MOUNTED FIXTURES, PROVIDE A SECOND SET OF PENDANTS, OF A DIFFERENT LENGTH, AS DIRECTED BY THE ARCHITECT/ENGINEER, PROVIDED AND INSTALLED AT NO ADDITIONAL CHARGE. ALL FIXTURES SHALL BE APPROVED BY UL OR ANOTHER ACCEPTABLE TESTING LAB FOR THE PURPOSE INTENDED AND WITH THE LAMP AND BALLAST PROPOSED. CONTRACTOR ALLOWANCE PRICES ARE ACCURATE WHEN THIS JOB WAS SPECIFIED, CONTRACTOR AND ELECTRICAL DISTRIBUTOR SHALL VERIFY THIS ALLOWANCE AND REPORT ANY PROBLEMS TO THE ENGINEER BEFORE THE BID. ALLOWANCE PRICE MAY OR MAY NOT INCLUDE LAMP(S) OR FREIGHT AS NOTED, AND DO NOT INCLUDE ANY TAXES. UNIVERSAL VOLTAGE (120/277) BALLASTS REQUIRED UNLESS NOTED OTHERWISE. DIMENSION SEQUENCE = (LENGTH X WIDTH X DEPTH) IN INCHES.
LINEAR FLUORESCENT FIXTURES MARKED "HIGH EFFICIENCY" USE 32 WATT 3100 INITIAL LUMEN LAMPS WITH .77 BALLAST FACTOR ELECTRONIC BALLAST.
LAMPS: OSI "XPS" SERIES, PHILIPS "ADV" SERIES, GE "T8 ULTRA HIGH LUMEN",
BALLASTS; ADVANCE "IOP" SERIES, OSI " PROSTART PSX", GE ULTRASTART SERIES.

SYMBOL MARK	FIXTURE CHARACTERISTICS BODY / AIR / MOUNTING / DOOR LENS/LOUVER/REFLECTOR/OTHER	LAMP	WATTS	VOLTS	MANUFACTURER	CATALOG NUMBER
AS	INDIRECT LIGHT: ASYMMETRIC OPTICS, ALUMINUM REFLECTOR; WHITE PAINTED FINISH; MOUNTING AS SHOWN; BALLASTS (FLUORESCENT - PROGRAMMED RAPID START ELECTRONIC, UNLESS INDICATED INTEGRAL BALLAST ; MINIMUM NUMBER OF BALLASTS/ STAGGERED LAMPS					
AS-10	CONTINOUS WALL COVE LIGHT	1F54T5HO	56W/4FT	277/120V	GAMMALUX	GPRA6N-154T5HOSTC-UNV-SPECEB-X-RECX-PR-GFW-OP/XX-WH
	COVE MOUNT. MUST FIT	4000K			MARK	
	ARCHITECTURAL SPACE PROVIDED.				DAYOLITE	PNR-OPN-1-T5HO-X-40+-UNV
	8" X 3" NOMINAL.LAMP SHIELD AT DOORS				NEORAY	79PF-1-T5HO-XX-U-ED-SI
	40' FOOT CONTINOUS REFLECTOR					
CM	STEEL LINEAR FIXTURES: LENGTHS AND CONFIGURATIONS SHOWN ON THE DRAWINGS; LAMPS FOUR FOOT WHERE POSSIBLE; PROGRAM START ELECTRONIC BALLASTS; T8 LAMPS; INTERNAL CONCEALED FASTENERS; COLOR AS NOTED AND/OR APPROVED BY ARCHITECT; ORIENT FIXTURE ACCORDING TO ARCHITECTS/ ENGINEER'S INSTRUCTIONS. SWIVEL STEM MOUNT UNLESS NOTED OTHERWISE. INSTALL LEVEL AND STRAIGHT WITH INVISIBLE SPLICES. PROVIDE ALL REQUIRED HANGERS, SPLICERS, END CAPS, JOINTS, FEEDS, ETC., FOR A COMPLETE INSTALLATION.					
CM-1	6"X 6 1/2" PROFILE,	2-F32T8	52W/4'	277/120V	LITECONTROL	W-ID-66N24T8K19-CWM-PST8-120/277
	WALL MOUNT, OPEN UP,	RE841			MARK	66W-DI-232T8-ET8PRS-UNIV-K19-MW-4'
	K19 LENS DOWN, INDIRECT/DIRECT,				NEORAY	88/2T8-S22-4-120/277PSEB
	4' MODULE.				PRUDENTIAL	P 60 D5 M5 2 04 T8 PROG START P19A UNIVOLT
	HIGH EFFICIENCY.				PMC	S66-DIA-W-2/OCT-4-K19-WHT-EBSPEC-12/27
					DAYOLITE	PTP-DI-K19-1U1D-32T8-4-SCBA-PROGST-UNV
					AXIS	B6W-F-NO-4'-EX-T8-1-1-X-UNV-ERS-1
					NATIONAL	S66-ID/D-232OCT-A-W-UEB-CBA
CT	EXTRUDED ALUMINUM FIXTURES: LENGTHS AND CONFIGURATIONS SHOWN ON THE DRAWINGS; LAMPS FOUR FOOT WHERE POSSIBLE; PROGRAMMED START ELECTRONIC BALLASTS; T8 LAMPS; INTERNAL CONCEALED FASTENERS; CAST ELBOWS AND FITTINGS; COLOR AS NOTED AND/OR APPROVED BY ARCHITECT; ORIENT FIXTURE ACCORDING TO ARCHITECTS/ENGINEER'S INSTRUCTIONS. IF TRACK OR MONOPOINT FIXTURES INDICATED AS PART OF THE ASSEMBLY, SEE FIXTURE SCHEDULE FOR DETAILS. SWIVEL STEM MOUNT UNLESS NOTED OTHERWISE. INSTALL LEVEL AND STRAIGHT WITH INVISIBLE SPLICES. PROVIDE ALL REQUIRED HANGERS, SPLICERS, END CAPS, JOINTS, FEEDS, ETC., FOR A COMPLETE INSTALLATION.					
CT-1	RECESSED LINEAR, 4" WIDTH, 4' LENGTH	1F32T8	26W	277/120V	PINNACLE	E4A-1T8-4-GX-UNV-1C-W
	OPAL ACRYLIC LENS, GRID CEILING,	RE841			ZUMTOBEL	SIND4-IN-1T8-04-P-W-UNV
	REFER TO PLANS FOR LENGTHS.				PAL	MLR3-1-4-FT-TWA-UNV-T8-PROGST
					PRUDENTIAL	P43-1T8-04'-SAL-TMW-D1-SC-UNV-X1-10THD-RSE
					AXIS	BBR-S-FL-4'-NL-T8-A-W-UNV-ERS-1-X
CT-2	RECESSED LINEAR, 4" WIDTH, 2' LENGTH	1F17T8	17W	277/120V	PINNACLE	E4A-1T8-2-SF-UNV-1C-W
	OPAL ACRYLIC LENS, SPACKLE FLANGE,	RE841			ZUMTOBEL	SIND4-EA-1T8-02-P-W-UNV
	REFER TO PLANS FOR LENGTHS.				PAL	MLR3-1-2-SF5-TWA-UNV-T8-PROGST
					PRUDENTIAL	P43-1T8-02'-SAL-TMW-D1-SC-UNV-X7-10THD-RSE
					AXIS	BBR-S-FL-2'-NL-T8-1-W-UNV-ERS-1-DS
CT-4	RECESSED LINEAR, 4" WIDTH, 4' LENGTH	1F32T8	26W	277/120V	PINNACLE	E4A-1T8-4-SF-UNV-1C-W
	OPAL ACRYLIC LENS, SPACKLE FLANGE,	RE841			ZUMTOBEL	SIND4-EA-1T8-04-P-W-UNV
	REFER TO PLANS FOR LENGTHS.				PAL	MLR3-1-4-SF5-TWA-UNV-T8-PROGST
					PRUDENTIAL	P43-1T8-04'-SAL-TMW-D1-SC-UNV-X7-10THD-RSE
					AXIS	BBR-S-FL-4'-NL-T8-1-W-UNV-ERS-1-DS
CT-6	RECESSED LINEAR, 3" WIDTH, 4' LENGTH	LED	60W	277/120V	PINNACLE	EX3SN41-4-AC120JB-277-1CDIM-CC
	OPAL ACRYLIC LENS, REFER TO	4000K			AXIS	BMDLED-B1-900-SO-6'-UNV-D-1-C120
	PLANS FOR LENGTHS, BLACK.	900 lu/ft			PAL	MLS-ID-K35-4-CN-F-DC/TWA-F11-UNV
	DIMMING 100-1% and 1%-100% RANGE				ALW	LPL35S-D4HP14-LLED-DIM-277EXT-BK/120"
	AIRCRAFT CABLE MOUNTING TO STRUCTURE				LUMENPULSE	LLI2PD-277-4-DRO40K-DMX1FX-ACC120-BK
	ABOVE (UP TO 120").					
	COORDINATE DIMMING WITH A/V CONTROL					
CT-8	RECESSED LINEAR, 3" WIDTH, 8' LENGTH	LED	120W	277/120V	PINNACLE	EX3SN41-6-AC120JB-277-1CDIM-CC
	OPAL ACRYLIC LENS, REFER TO	4000K			AXIS	BMDLED-B1-900-SO-8'-UNV-D-1-C120
	PLANS FOR LENGTHS, BLACK.	900 lu/ft			PAL	MLS-ID-K35-6-CN-F-DC/TWA-F11-UNV
	DIMMING 100-1% and 1%-100% RANGE				ALW	LPL35S-D6HP14-LLED-DIM-277EXT-BK/120"
	AIRCRAFT CABLE MOUNTING TO STRUCTURE				LUMENPULSE	LLI2PD-277-6-DRO40K-DMX1FX-ACC120-BK
	ABOVE (UP TO 120").					
	COORDINATE DIMMING WITH A/V CONTROL					
CT-12	RECESSED LINEAR, 3" WIDTH, 12' LENGTH	LED	180W	277/120V	PINNACLE	EX3SN41-12-AC120JB-277-1CDIM-CC
	OPAL ACRYLIC LENS, REFER TO	4000K			AXIS	BMDLED-B1-900-SO-12'-UNV-D-1-C120
	PLANS FOR LENGTHS, BLACK.	900 lu/ft			PAL	MLS-ID-K35-12-CN-F-DC/TWA-F11-UNV
	DIMMING 100-1% and 1%-100% RANGE				ALW	LPL35S-D12HP14-LLED-DIM-277EXT-BK/120"
	AIRCRAFT CABLE MOUNTING TO STRUCTURE				LUMENPULSE	LLI2PD-277-12-DRO40K-DMX1FX-ACC120-BK
	ABOVE (UP TO 120").					
	COORDINATE DIMMING WITH A/V CONTROL					
DX	LED DOWNLIGHTS, RECESSED, THERMALLY PROTECTED HOUSING, TO ACCOMMODATE MULTIPLE TRIMS AND REFLECTOR ASSEMBLIES 7 1/2" DEEP, AND ACCESSORIES WHEN NOTED.					
DX-1a	LED FIXED DOWNLIGHT,	LED 2000	39W	277/120V	PORTFOLIO	LDSQ6-20-D010/ESQ6-840H20-6LSQ0-H-WF
	CUSTOM COLOR BY ARCHITECT TRIM,	LUMENS			GOTHAM	
	EMERGENCY WHERE NOTED	4000K			LIGHTOLIER	
	6" x 6" SQUARE				HE WILLIAMS	LEDPSQ60-2000-40K-ED*AD-BH-UNV
					PRESCOLITE	LF6SQLED/6SQLED7-40K-X-X
DX-1b	LED FIXED DOWNLIGHT,	LED 2000	39W	277/120V	PORTFOLIO	LDSQ6-20-D010/ESQ6-840H20-6LSQ0-H-WF
	WHITE TRIM,	LUMENS			GOTHAM	
	EMERGENCY WHERE NOTED	4000K			LIGHTOLIER	
	6" x 6" SQUARE				HE WILLIAMS	LEDPSQ60-2000-40K-MWT-ED*AD-BH-UNV
					PRESCOLITE	LF6SQLED/6SQLED7-40K-X-X
DX-2	LED FIXED DOWNLIGHT,	LED 1500	27W	277/120V	PORTFOLIO	LDSQ4-18-D010-ESQ4-835H18-4LSQ0-H-WF
	CLEAR NATURAL ALUMINUM TRIM	LUMENS			GOTHAM	
	4" x 4" SQUARE, MINIMUM 1500 LUMENS.	4000K			LIGHTOLIER	
					HE WILLIAMS	LEDPSQ45-2000-40K-ED*AD-BH-UNV
					PRESCOLITE	LF4SQLED/LF4SQLED7-40K-X-X
DX-99a	2" SQUARE DOWNLIGHT, WHITE TRIM,	LED	27W	277/120V	LIGHTOLIER	C2L04DL30K25RUZ/C2X2LDLWHP/
	600 LUMENS.	4000K			LUCIFER	DL31ZP-NC-W-1-8007-40K-2-DH-NC-ZF-1-8007-UNIVND
		600 LUMEN			INTENSE	IL-DSTR-NC-L4-30-D10V-27-24/STRTA306W
					KIRLIN	LRS-02047-43
DX-99b	2" SQUARE DOWNLIGHT, BLACK TRIM,	LED	27W	277/120V	LIGHTOLIER	C2L04DL30K25RUZ/C2X2LDLWHP/
	600 LUMENS.	4000K			LUCIFER	DL31ZP-NC-B-1-8007-40K-2-DH-NC-ZF-1-8007-UNIVND
		600 LUMEN			INTENSE	IL-DSTR-NC-L4-30-D10V-27-24/STRTA306B
					KIRLIN	LRS-02047-43-38
DX-99c	2" SQUARE DOWNLIGHT, ALUMINUM TRIM,	LED	27W	277/120V	LIGHTOLIER	C2L04DL30K25RUZ/C2X2LDLWHP/
	600 LUMENS.	4000K			LUCIFER	DL31ZP-NC-SS-1-8007-40K-2-DH-NC-ZF-1-8007-UNIVND
		600 LUMEN			INTENSE	IL-DSTR-NC-L4-30-D10V-27-24/STRTA306-ALUMINUM
					KIRLIN	LRS-02047-43-BN
E1	EXIT SIGN: THERMOPLASTIC HOUSING; UNIVERSAL MOUNTING; UNIVERSAL ARROWS PER PLANS; EMERGENCY BATTERY PACK WITH 10 YEAR PRO-RATA WARRANTY; LED, DIFFUSE LENS PANEL; GREEN LETTERS ON WHITE BACKGROUND. MUST MEET NFPA ILLUMINATION STANDARDS.					
E1-1	SINGLE FACE:	LED	1W	120/277V	MCPHILBEN	CXXL-1-GW
					DUAL-LITE	LXSGWE
					EELP	XE 1 GW EM
					LITHONIA	LQM S W 1 G 120/277 ELN
					SURE-LITES	LPX70DGW
					DAY-BRITE	CXL-1-GW-EM
					CHLORIDE	SLN1GW
					EXITRONIX	GVEX-U-BP-WB-WH
					LIGHTOLIER	LTN1GW
E1-2	DUAL FACE:	LED	2W	120/277V	DUAL-LITE	LXUGWE
					EELP	XE 2 GW EM
					LITHONIA	LQM S W 3 G 120/277 ELN
					SURE-LITES	LPX70DGW
					DAY-BRITE	CXL-3-GW-EM
					CHLORIDE	SLN2GW
					EXITRONIX	GVEX-U-BP-WB-WH
					LIGHTOLIER	LTN2GW
					MCPHILBEN	CXXL-3-GW
E9	EXIT SIGN: METAL HOUSING; CEILING MOUNT, SEE DRAWINGS; ARROWS PER PLANS; LED LAMPS;EMERGENCY BATTERY PACK WITH 10 YEAR PRO-RATA WARRANTY; SELF-TESTING; EDGE LIGHTED CLEAR LENS; GREEN LETTERS ON CLEAR BACKGROUND. MUST MEET NFPA ILLUMINATION STANDARDS. UNITS SHOWN ARE CEILING MOUNT MODELS. CONTRACTOR TO PROVIDE MATCHING WALL MOUNTED UNITS WHERE REQUIRED.					
E9-1	SINGLE FACE:	LED	2W	120/277V	DUAL-LITE	LECSGWE
					EELP	EDG 1 GC W EM
					LITHONIA	LRP W 1 GC XX 120/277 ELN
					ISOLITE	EDGL-EM-S-S-G-BK (BLACK HOUSING)
					HIGH-LITES	LEDBPRXF0-2-GC-SX
					EXITRONIX	S902-WB-SR-GC-BA
					SURE-LITES	ES7170GDAC
					CHLORIDE	STELX-X-1-SC-X
					LIGHTOLIER	LEEC1GCX
E9-2	DUAL FACE:	LED	2W	120/277V	DUAL-LITE	LECDGWE
					EELP	EDG 2 GC W EM
					LITHONIA	LRP W 2 GMR XX 120/277 ELN
					ISOLITE	EDGL-EM-D-S-GM-BK (BLACK HOUSING)
					HIGH-LITES	LEDBPRXFO-3-GW-SX
					EXITRONIX	S903-WB-SR-GM-BA
					SURE-LITES	ES7270GMDAC
					CHLORIDE	STELX-X-2-SC-X
ET	TRANSFER DEVICE FOR FLUORESCENT BALLASTS, LOCATE ON FIRST EMERGENCY FIXTURE IN ROOM PER CIRCUIT TO TRANSFER EMERGENCY PORTION OF CIRCUIT TO EMERGENCY FEED, CONNECT TO NORMAL SIDE FOR SENSING, AND TO BOTH NORMAL FEED AND EMERGENCY CIRCUIT. USE 2 POLE FOR NORMAL CIRCUITS AND 3 POLES FOR DIMMED CIRCUITS.					
	CIRCUIT LEVEL TRANSFER DEVICE				BODINE	GEN-20
	20A MIN RATING;				NINE24inc	BLTC-X
					LIGHTGUARD	LIGHTSTAR SERIES
					CHLORIDE	LIGHTSTAR SERIES
					GREENGATE	CEPC-1
					IOTA	ETS
					DUALITE	ATSD20
					SIDE-LITE	SB20
G	INDIRECT TROFFERS: RECESSED FOR LAY-IN GRID; HINGED FLUSH STEEL DOOR WITH LATCH; EARTHQUAKE CLIPS, PROGRAM START ELECTRONIC BALLASTS; LONG COMPACT FLUORESCENT LAMPS; ONE BALLAST PER FIXTURE, 100-10% DIMMING BALLAST WHERE SHOWN.					
G-9	2X4, 2-LAMP HIGH	2-F32T8	52W	277V	LITHONIA	2RT8S-2-32-MVOLT-GEB10PS-L841HT8
	PERFORMANCE LAY-IN	RE841			LIGHTOLIER	HPS2GLR232-UNV-P2
	FIXTURE, CENTER BASKET.				METALUX	2AC-232-UNV-EB81
	HIGH EFFICIENCY				DAYBRITE	2STG232-D-UNV-1/2EB-SPEC
					H.E. WILLIAMS	DI-G-S24-232-AD-EB8P2-UNV
					COLUMBIA	EPC24-32G-SH-ELWU
GS	TROFFERS: RECESSED FOR LAY-IN GRID; STATIC; HINGED AND LATCHED STEEL DOOR; .125 ACRYLIC PRISMATIC LENS, MINIMUN 1/8"; EARTHQUAKE CLIPS; MAX 5" DEEP; SPECIFICATION GRADE; PROGRAM START ELECTRONIC BALLASTS, T8 LAMPS; ONE BALLAST PER FIXTURE WHERE POSSIBLE, UNLESS TWO LEVEL SWITCHING IS SHOWN ON THE PLANS.					
GS-3	2X4, 2 LAMP.	2-F32T8	52W	277/120V	LITHONIA	2 SP8G 232 A12125 MVOLT TUBRHP (4-1/2" DEPTH)
	HIGH EFFICIENCY	RE841			METALUX	2GP-232A125-UNV-EB81-PROGRAM START (3-3/4" DEPTH)
					DAYBRITE	2DPG232-FS21-UNV-1/2EB-SPEC (4-3/8" DEPTH)
					LSI	LA125 232 SD SSO10PS UE (4" DEPTH)
					LIGHTOLIER	XT2GVI232-UNV-SOP (3-5/8" DEPTH)
					COLUMBIA	ST824-232G-FSA12.125-EB8LHPRUNV (3-3/4" DEPTH)
					H.E. WILLIAMS	50G-S24-232-SA12125-EB8P2-UNV
LED	RECESSED WALL COVE LED STRIPLIGHT					
LED-1	1' SECTION, INTERNAL POWERSUPPLY	LED	13W/FT	277/120V	C.K.	523-000065-13
	30 X 60 BEAMSPREAD	3000K			ACCLAIM	DCA.142.A-A-B-E
	USE SUFFICIENT LENGTHS TO FILL SLOT				SSL	CVLX-1-120-3K-60-SC6/EC6
					LUMENPULSE	LCS-HO-277-12-30K-CL-FT-XX-WH-NO
LED-1d	1' SECTION, INTERNAL POWERSUPPLY	LED	13W/FT	277/120V	C.K.	523-000065-13- DIMMABLE
	30 X 60 BEAMSPREAD	3000K			ACCLAIM	DCA.142.A-A-B-E
	USE SUFFICIENT LENGTHS TO FILL SLOT				SSL	CVLX-1-120-3K-60-SC6/EC6
	DIMMABLE				LUMENPULSE	LCS-HO-277-12-30K-CL-FT-XX-WH-DIM
LED-50	1' SECTION, INTERNAL POWERSUPPLY	LED	13W/FT	277/120V	C.K.	523-000082-13
	90 X 90 BEAMSPREAD, EXTERIOR	5000K			ACCLAIM	DCA.142.A-A-B-E
	USE SUFFICIENT LENGTHS TO FILL SLOT				SSL	BLAC-1-UNV-3K-120
					LUMENPULSE	LXT-HO-277-12-40K-SAM-WH-NO-CRC
OB	BOLLARDS: SEAMLESS CAST ALUMINUM HOUSING, WITH MOUNTING BASE AND ANCHOR BOLTS, ACRYLIC LENS, INTEGRAL MULTI-TAP BALLAST; FUSED, COLOR AS DIRECTED BY ARCHITECT CHOSEN FROM MANUFACTURERS' STANDARD PAINTED FINISHES.					
OB-1	BOLLARD EXITWAY- NATURAL FINISH	18CF	24W	UNV -V	LUMENTON	BLQ440/CF18/UNV/N
	24" LIGHTED HEIGHT, SQUARE					CONTRACTOR ALLOWANCE: $503.55
OC	WALL PACK: FULL CUT OFF; FULL PERIMETER GASKETING: WET LOCATION; STAINLESS STEEL HINGES AND LATCHES; FLAT LENS; HPF BALLAST; SEE ELEVATION FOR MOUNTING HEIGHT, COLOR AS SPECIFIED BY ARCHITECT.					
OC-32	SURFACE MOUNTED, RECESSED J BOX.	LED 4K	46W	277/120V	GARDCO	101L355LANWUNVCBA
	MEDIUM THROW, SQUARE, DECORATIVE				MCGRAW	IST-B02-LED-E1-BL3-CBA
	COLOR BY ARCHITECT				WIDELITE	QLW-16G1-700-NW-WT-UNV-SM-CBA
					TRACELITE	TLED110-48
					ELCAST	1490-14"-26WLED-UNV-ST
					LITHONIA	WST LED 2 10A700/40K SR3 UNV CBA
OE	OUTDOOR FLOOD LIGHTS; FULLY GASKETED; WET LABEL; TYPES AND WATTAGES AS INDICATED. MOUNT AS INDICATED ON ELEVATIONS, COLOR PER ARCHITECT, VANDAL RESISTANT CONSTRUCTION. SECURE MOUNTING BRACKED AS REQUIRED, AIMING ADJUSTMENT WITH FIRM LOCKING DEVICE. MULTI-TAP BALLAST. FIXTURES SELECTED FOR APPEARANCE AS WELL AS PERFORMANCE. VISUAL SUBMITTAL REQUIRED FOR APPROVAL.					
OE-1	LED, FLOODLIGHT, WIDE	LED	36W		ERCO	34407.000-X
	BEAM SPREAD, HORIZONTAL	4000K			HYDREL	TPS2-36LED-WHT41K-MVOLT-WFL-YM-ARTL-BL
	ORIENTATION.				ILUMINARC	ILUMIPOD-18G2-IP-40
					LIGMAN	U50394-50W-4000K-120-277V-M
					WE-EF	665-7421/FLC141LED
					FC	FCW5812-LED-4K-SL-FL-BB
OF	OUTDOOR FLOOD LIGHTS; FULLY GASKETED; WET LABEL; TYPES AND WATTAGES AS INDICATED. MOUNT AS INDICATED ON ELEVATIONS, COLOR PER ARCHITECT, VANDAL RESISTANT CONSTRUCTION. SECURE MOUNTING BRACKED AS REQUIRED, AIMING ADJUSTMENT WITH FIRM LOCKING DEVICE. MULTI-TAP BALLAST.					
OF-4	LINEAR FLUORESCENT FLOODLIGHT,	1-F54T5HO	65W	277/120V	WINONA	SIS8-SIW-148T5/HO-UNV-P2-SCBA
	FLAT GLASS LENS, ADJUSTABLE	RE841			DURAGAURD	SL14T5
	SWIVEL MOUNT, STANDARD COLOR				SPI	EEP10289-1F54-277V-FT-SCBA
	BY ARCHITECT, MOUNTED TO CANOPY				VISA	OV1110-48-1FS54-SWF(SL)
	STRUCTURE, LENGTH PER DRAWINGS.					
OJ	RECESSED WALL STEP AND WALK LIGHTS; 3- 4 1/2" RECESSING DEPTH; WELDED STEEL HOUSING; DIECAST LOUVERED FACEPLATES; FACEPLATES FINISHED IN TEXTURED FINISH PER ARCHITECT, FULLY GASKETED; WET LABEL; TYPES AND WATTAGES AS INDICATED.					
OJ-12	LED STEPLIGHT FOR	LED	10W	277V	BEGA	2192LED SLV
	MASONRY INSTALLATION, SIZED	3000k			COLE	L509-10.8W/645 LUMNES
	FOR ONE MASONRY BLOCK				LUMUX LTG	SL600-X
	2.5" X 11.75" X 4.25" DEEP				AMERLUX	PSLT12-A-CBA-2F30
	LED WITH CLEAR FLAT GLASS LENS				FC LIGHTING	FCSL101-UNV-LED-E-CBA
	IP64				SSL	IFX11-4K
PS	PARABOLIC WALL SLOT: 9" PERIMETER WALL SLOT WITH HOUSING MOUNTED TO CEILING; WITH FLANGE ASSEMBLY FOR GYP BOARD CEILING; TWO LAMPS CONTINUOUS AND TELESCOPIC LAMPS AT CORNERS; 1 1/2" FREE FLOATING PARABOLIC LOUVER WITH MITERED CORNERS (BOTH 90 DEGREES AND 45 DEGREE); PROVIDE 4' LAMPS WHEREVER POSSIBLE; DIMENSIONS SHALL BE FIELD DETERMINED, PROGRAM START ELECTRONIC BALLASTS; T8 LAMPS; ONE BALLAST PER FIXTURE WHERE POSSIBLE, UNLESS TWO LEVEL SWITCHING IS SHOWN ON THE PLANS; LOW IRIDESCENT LOUVER FINISH (EVEN IF NOT SHOWN IN CATALOG #).					
PS-1	SEMI-SPECULAR SILVER LOUVER.	2-F28T5/4'	12.5W/FT	277/120V	LITECONTROL	WALL SLOT 2100
	4' RECESSED COVE LIGHT	RE841			LINEAR	WW2-D-2-ET5-277-PBL-R-BW-PBPS-4'-TELESCOPING
	CUSTOM LENGTH TO FIT SPACE REQUIRED				GAMMALUX	GPCA6N-228T5-UNV-ERS-XX-RECW/PR-GFW-OP-WSG
					H.E. WILLIAMS	WS-4-228T5S-S-OPEN-EB8P2-UNV
					FOCAL POINT	FW4-NS-2T5-1C-UNV-S-RC-WH-X
SA	GENERAL PURPOSE INDUSTRIAL: WHITE ENAMEL, APERTURED REFLECTOR; PROGRAM START ELECTRONIC BALLASTS; T8 LAMPS; ONE BALLAST PER FIXTURE WHERE POSSIBLE; UNLESS TWO LEVEL SWITCHING IS SHOWN ON THE PLANS; STEM MOUNTED WITH TONG HANGERS.					
SA-1	4', 2-LAMP.	2-F32T8	52W	277/120V	LITHONIA	EJA232-MVOLT-TUBRHP-THUN
	HIGH EFFICIENCY	RE841			LIGHTOLIER	KWA232-U-SOP
					METALUX	IA-232-UNV-PROGRAM START
					HUBBELL	IG142R-PP10-UPS
					H.E. WILLIAMS	82-4-232-EB8P2-UNV
					COLUMBIA	CSR4-232U-EB8120/277 PROG-CSTH
SP	AUDITORIUM SPOTLIGHTS, FINAL APPROVAL OF ALL SP FIXTURES SHALL BE SUBJECT TO MOCKUP.					
SP-98	LED WHITE SPOTLIGHT, SPOT LENS	LED	50W		ALTMAN	SSCUBE-SK-B
	DMX CONTROL, PAINTED BLACK.				ETC	SELLU11/SELLH20/SELLV20/SELLYOKE11
					LUMENPULSE	LBL-120-RGBW-NS-BK-SY
SP-99	LED WHITE SPOTLIGHT, SPREAD LENS	LED	50W		ALTMAN	SSCUBE-SK-B
	DMX CONTROLS, PAINTED BLACK.				ETC	SELLU11/SELLH80/SELLV80/SELLYOKE11
					LUMENPULSE	LBL-120-RGBW-NS-BK-SY/LBL-LSLA-BKM
UC	UNDERCABINET LIGHT: LOW PROFILE X 5 1/4"DEEP X LENGTH AS NOTED; ACRYLIC DIFFUSER.					
UC-8	21 1/2" LONG, WHITE,	T5/13W	15W	120V	NULITE	NU 21 R 120
	W/ROCKER SWITCH.	RE841			FSC	3021-RSW
					LIGHTOLIER	TSL0113W120-SWR
					CREATIVE	TI-21-SWITCH
					EXITRONIX	UC21E-120
					DURAY	DUC 113-35
					HUBBELL	OI13SO
V	VANDAL RESISTANT SURFACE MOUNTED LIGHTING: .125" INJECTION MOLDED POLYCARBONATE LENS; IMPACT RESISTANT; UV STABILIZED; ALL METAL PARTS ARE ENCLOSED; GASKETED; VANDAL RESISTANT STAINLESS STEEL SCREWS; SECURED MOUNTING; PROGRAM START ELECTRONIC BALLASTS; T8 LAMPS.					
V-1	4', 2-LAMP WITH PRISMATIC	2-F32T8	52W	120V	KENALL	N1048-C-232SB1-120/277
	LENS; 51" X 9 1/2" X	RE841			FAIL-SAFE	FPS-232-UNV-PROGRAM START
	3 1/2", 16 GAUGE STEEL.				LUMINAIRE	LVP-751-232-EBPS-120
	HIGH EFFICIENCY				NEW STAR	51C-124-U-T8PROGRAM
					H.E. WILLIAMS	91-4-232-EB8P2-UNV
					CD LIGHTING	VSL-24-232-UNV-EB
					HOLCOR	HSP2-2/32T8-120-TX-UNIVOLT-PROGRAM START
W	LOW PROFILE WRAPAROUND: SURFACE MOUNTED SUITABLE FOR MOUNTING ON LOW DENSITY CEILINGS WRAPAROUND ACRYLIC PRISMATIC DIFFUSER; WHITE ENAMEL ENDPLATES; MINIMUM CU OF 70 @ 80/50/20 AND RCR=1; PROGRAM START ELECTRONIC BALLASTS; T8 LAMPS; ONE BALLAST PER FIXTURE WHERE POSSIBLE, UNLESS TWO LEVEL SWITCHING IS SHOWN ON THE PLANS.					
W-3	NARROW BODY WRAPAROUND;	2-F32T8	52W	277/120V	LITHONIA	LB232-MVOLT-TUBPHP
	2-LAMP, APPROX; 3" X 10" X 48"	RE841			DAYBRITE	CAN232-UNV-1/2-EB-SPEC
	HIGH EFFICIENCY				METALUX	WS-232A-UNV-PROGRAM START
					LIGHTOLIER	WA232-U-SOP
					H.E. WILLIAMS	17-4-232-A-EB8P2-UNV
					LSI	PR 232 SSO10PRS UE
					COLUMBIA	WC4-232-EBPS120/277
WS	SPECIAL FIXTURES AS INDICATED. MEET ALL REQUIREMENTS OF SPECIFICATIONS AND FIXTURE SCHEDULE. VISUAL AND FINISH APPROVAL REQUIRED. FINISHES AND LENS MATERIAL AS SELECTED BY THE ARCHITECT.					
WS-2	LAVATORY WALLSCONCES	1-F17T8	20W	277/120V	ARTEMIDE	REZEK-BASIC STRIP 24 WALL
	1.75"X2.875"X20" MOUNT VERTICALLY	RE841			EUROFASE	16024-014-F17T8
					VISA	CB5512-FO17-X
ZX	LIGHT POLES: TOTALLY ENCLOSED RAINTIGHT, DUST-TIGHT AND CORROSION RESISTANT; POLE AS SHOWN IN DETAIL WITH HANDHOLE, COVER, BOLT COVER, AND BASE; PAINTED (COLOR TO BE SELECTED BY ARCHITECT / ENGINEER WHICH MAY DIFFER FROM CATALOG NUMBER SHOWN). MTB= 120,208,240,277 VOLT MULTI-TAP BALLAST. ALL BALLASTS HPF. ARM MOUNT. HORIZONTAL LAMP, SEGMENTED OPTICS.					
ZX-1	LOW-PROFILE CONTEMPORARY	(60) 1W LED	67W	277V	KIM	WARP9 LED SERIES
	SINGLE-HEAD FIXTURE, ARM-	LAMPS INCL				
	MOUNTED; DIE-CAST ALUMINUM;	3500K			CONTRACTOR ALLOWANCE: $1,750 EACH	
	FULL-CUTOFF OPTICS; LED LAMPS				NOTE: EQUIVALENT PRODUCTS FROM OTHER MANUFACTURERS	
	HINGED POLE BASE ASSEMBLY				APPEARANCE, QUALITY AND PERFORMANCE, HOWEVER,	
					THE ALLOWANCE PRICE SHALL BE INCLUDED IN THE BID	

LICENSED PROFESSIONAL ENGINEER
No. 8182456
TYLER SQUIRE
STATE OF UTAH

UNLESS A PROFESSIONAL SEAL WITH SIGNATURE AND DATE IS AFFIXED, THIS DOCUMENT IS PRELIMINARY AND IS NOT INTENDED FOR CONSTRUCTION, RECORDING PURPOSES, OR IMPLEMENTATION

UTAH VALLEY UVU UNIVERSITY

State of Utah
Department of Administrative Services
Division of Facilities Construction & Management
DFCM
4110 State Office Building
Salt Lake City, Utah 84114
Phone: (801) 538 - 3018
Fax: (801) 538 - 3267

CRSA METHODSTUDIO INC.

CRSA ARCHITECTS
649 east south temple
salt lake city, utah 84102
phone:(801) 355 - 5915

METHOD STUDIO INC.
925 south west temple
salt lake city, utah 84101
phone:(801) 532-4422

SPECTRUM ENGINEERS
324 S. State St., Suite 400
Salt Lake City, UT 84111
800-678-7077
801-328-5151
fax: 801-328-5155
www.spectrum-engineers.com

DFCM APPROVAL STAMP

project:
UVU Classroom Building - Volume 1
800 West University Parkway
Orem, UT 84058

project#: DFCM# 12192790
date: April 30, 2013

revisions :
3 Addendum #5 5/24/2013

title:
Fixture Schedule

sheet:
EL601 (3)

BID DOC

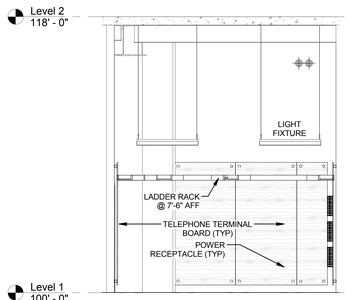

MDF 108A EAST C1 ET301
1/4" = 1'-0"

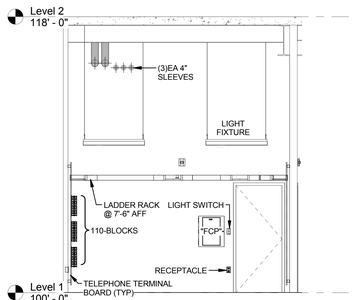

MDF 108A WEST C2 ET301
1/4" = 1'-0"

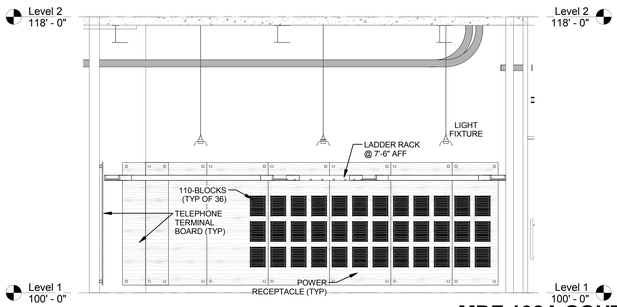

MDF 108A SOUTH B2 ET301
1/4" = 1'-0"

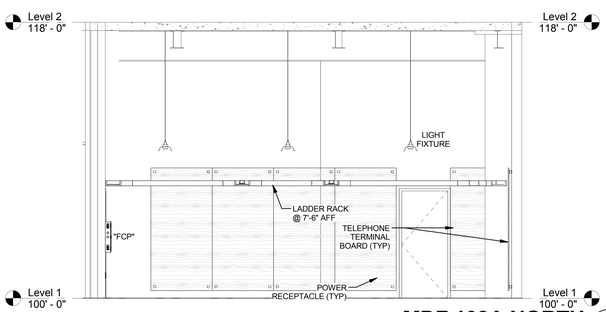

MDF 108A NORTH A2 ET301
1/4" = 1'-0"

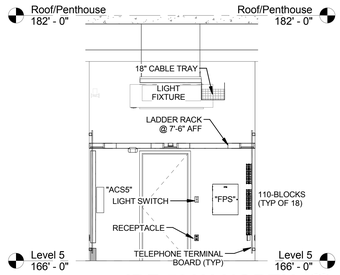

IDF 500H NORTH E3 ET301
1/4" = 1'-0"

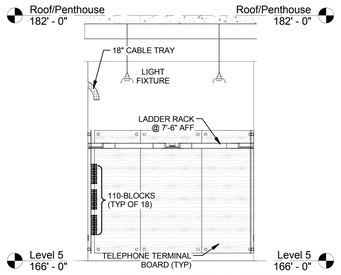

IDF 500H SOUTH E4 ET301
1/4" = 1'-0"

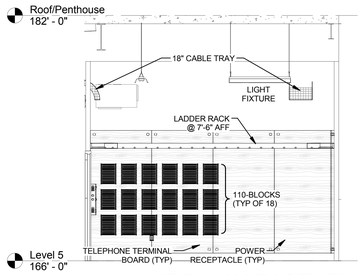

IDF 500H EAST E5 ET301
1/4" = 1'-0"

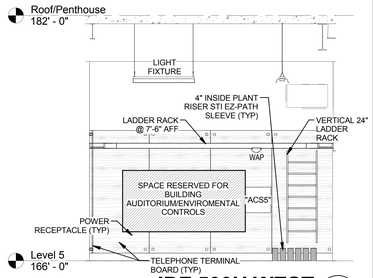

IDF 500H WEST E6 ET301
1/4" = 1'-0"

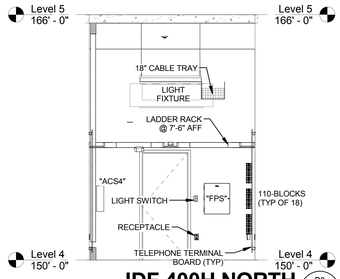

IDF 400H NORTH D3 ET301
1/4" = 1'-0"

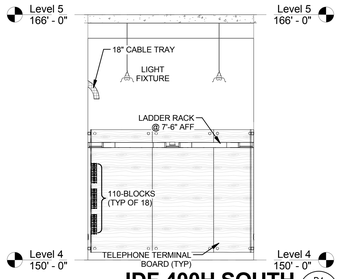

IDF 400H SOUTH D4 ET301
1/4" = 1'-0"

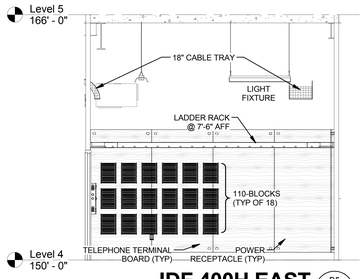

IDF 400H EAST D5 ET301
1/4" = 1'-0"

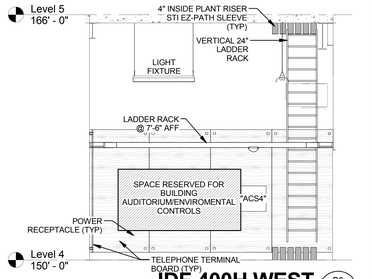

IDF 400H WEST D6 ET301
1/4" = 1'-0"

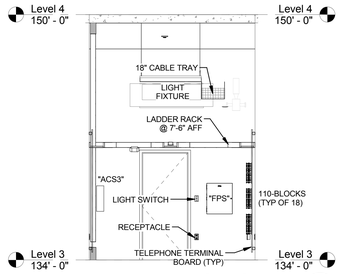

IDF 300G NORTH C3 ET301
1/4" = 1'-0"

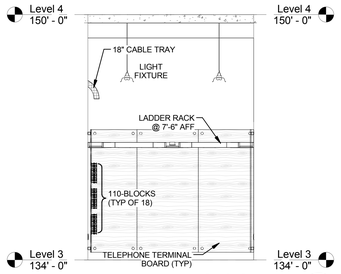

IDF 300G SOUTH C4 ET301
1/4" = 1'-0"

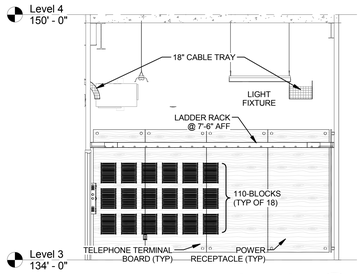

IDF 300G EAST C5 ET301
1/4" = 1'-0"

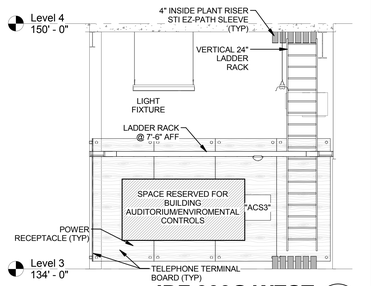

IDF 300G WEST C6 ET301
1/4" = 1'-0"

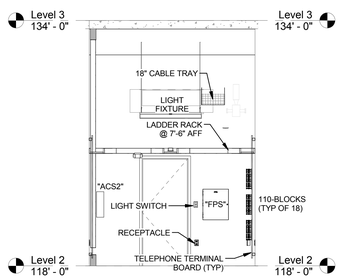

IDF 200J NORTH B3 ET301
1/4" = 1'-0"

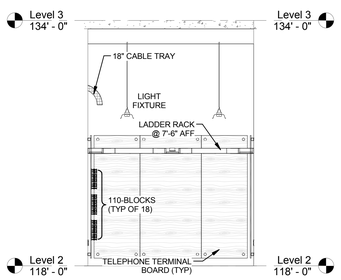

IDF 200J SOUTH B4 ET301
1/4" = 1'-0"

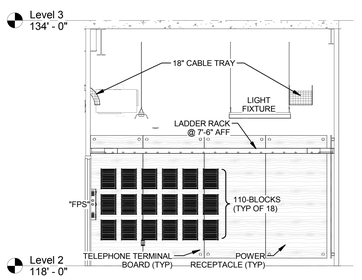

IDF 200J EAST B5 ET301
1/4" = 1'-0"

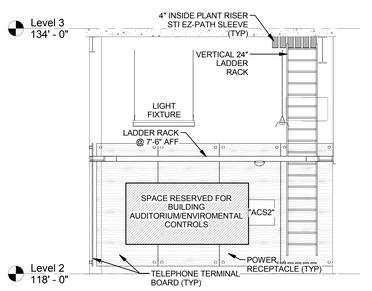

IDF 200J WEST B6 ET301
1/4" = 1'-0"

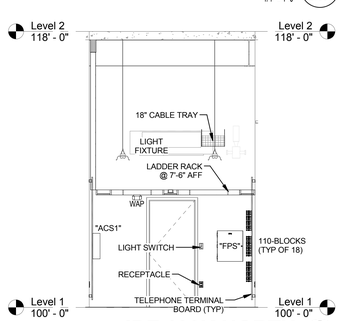

IDF 100K NORTH A3 ET301
1/4" = 1'-0"

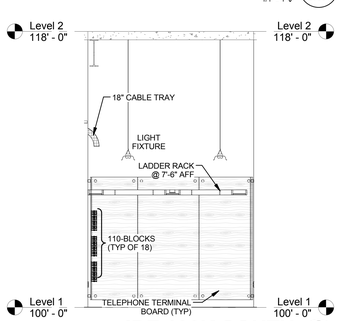

IDF 100K SOUTH A4 ET301
1/4" = 1'-0"

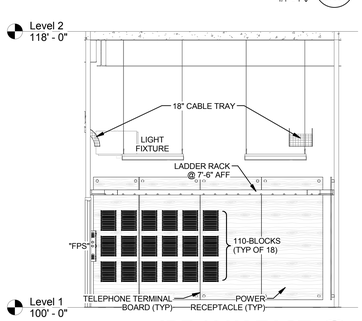

IDF 100K EAST A5 ET301
1/4" = 1'-0"

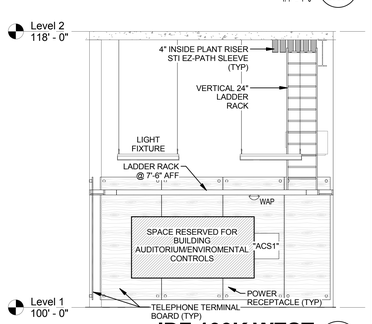

IDF 100K WEST A6 ET301
1/4" = 1'-0"

LICENSED PROFESSIONAL ENGINEER
No. 8182456
TYLER SQUIRE
STATE OF UTAH

UNLESS A PROFESSIONAL SEAL WITH SIGNATURE AND DATE IS AFFIXED, THIS DOCUMENT IS PRELIMINARY AND IS NOT INTENDED FOR CONSTRUCTION, RECORDING PURPOSES, OR IMPLEMENTATION

UTAH VALLEY UVU UNIVERSITY

State of Utah
Department of Administrative Services
Division of Facilities Construction & Management
4110 State Office Building
Salt Lake City, Utah 84114
Phone: (801) 538 - 3018
Fax: (801) 538 - 3267

CRSA METHODSTUDIO INC.

CRSA ARCHITECTS
649 east south temple
salt lake city, utah 84102
phone:(801) 355-5915

METHOD STUDIO INC.
925 south west temple
salt lake city, utah 84101
phone:(801) 532-4422

SPECTRUM ENGINEERS
324 S. State St., Suite 400
Salt Lake City, UT 84111
800-678-7077
801-328-5151
fax: 801-328-5155
www.spectrum-engineers.com

DFCM APPROVAL STAMP

project:
UVU Classroom Building - Volume 1
800 West University Parkway
Orem, UT 84058

project#: DFCM# 12192790
date: April 30, 2013

revisions:
3 Addendum #5 5/24/2013

title:
Telecom Elevations

sheet:
ET301

BID DOC

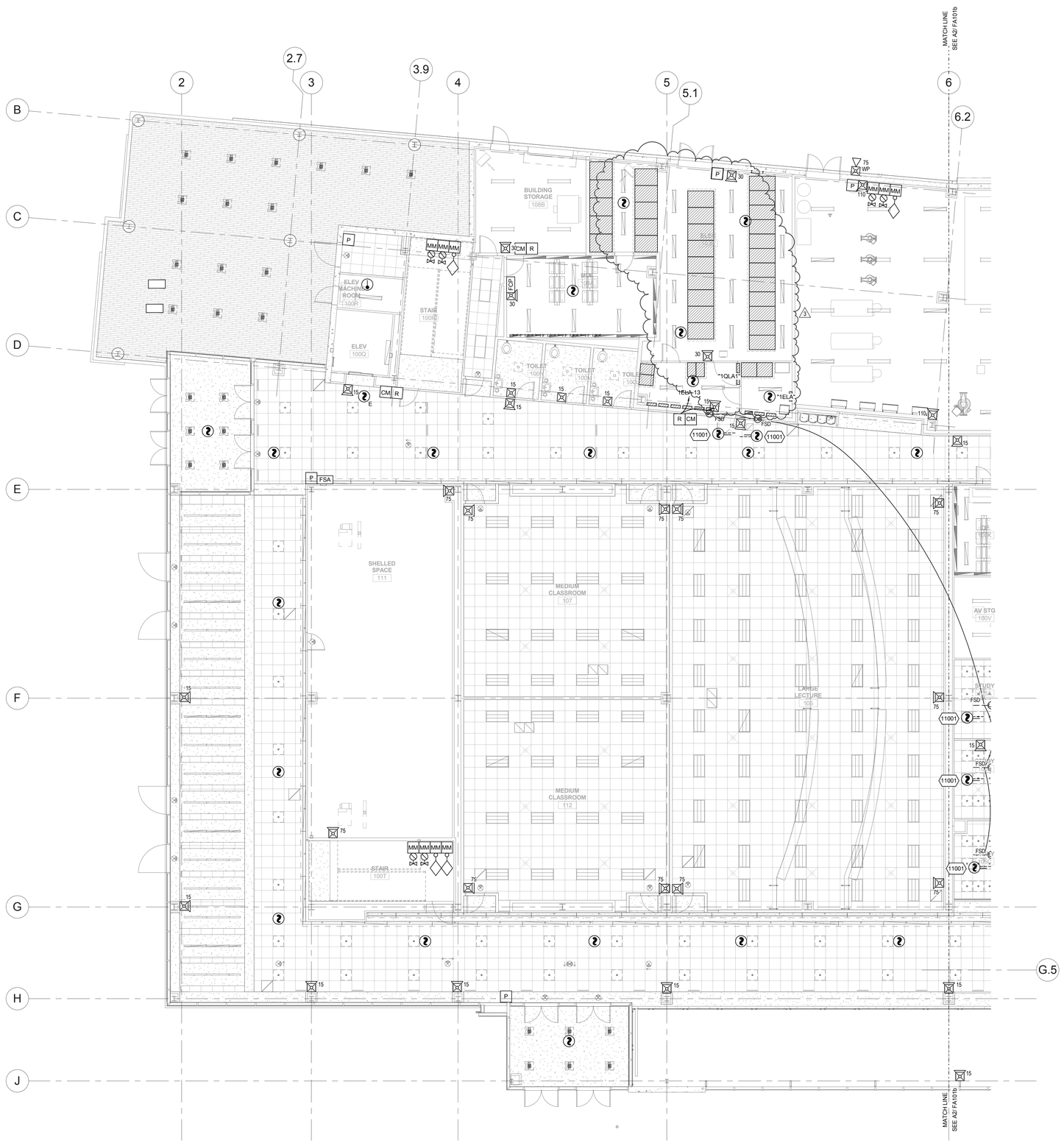

Level 1 Area 'A' Fire Alarm Plan

A2 / FA101a

1/8" = 1'-0"

GENERAL SHEET NOTES

1 COORDINATE EXACT LOCATION OF ALL FLOORBOXES WITH ARCHITECTURAL AND STRUCTURAL DRAWINGS PRIOR TO ROUGH-IN OR INSTALLATION.

SHEET KEYNOTES

11 00 INSTALL INDICATED DUCT DETECTOR WITHIN 5 FT OF FIRE/SMOKE DAMPER OR RETURN AIR SHAFT OPENING AT APPROXIMATE LOCATION INDICATED PER

1 NFPA 72 REQUIREMENTS. COORDINATE INSTALLATION WITH ACTUAL DUCTWORK CONFIGURATION DURING CONSTRUCTION

KEYPLAN:

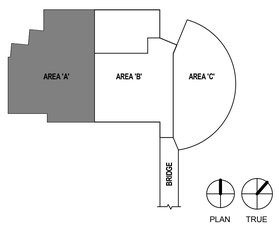

LICENSED PROFESSIONAL ENGINEER
No. 8182456
TYLER SQUIRE
STATE OF UTAH

UNLESS A PROFESSIONAL SEAL WITH SIGNATURE AND DATE IS AFFIXED, THIS DOCUMENT IS PRELIMINARY AND IS NOT INTENDED FOR CONSTRUCTION, RECORDING PURPOSES, OR IMPLEMENTATION

UTAH VALLEY UVU UNIVERSITY

State of Utah
Department of Administrative Services
Division of Facilities Construction & Management
4110 State Office Building
Salt Lake City, Utah 84114
Phone: (801) 538 - 3018
Fax: (801) 538 - 3267

CRSA METHODSTUDIO INC.

CRSA ARCHITECTS
649 east south temple
salt lake city, utah 84102
phone:(801) 355-5915

METHOD STUDIO INC.
925 south west temple
salt lake city, utah 84101
phone:(801) 532-4422

SPECTRUM ENGINEERS
324 S. State St., Suite 400
Salt Lake City, UT 84111
800-678-7077
801-328-5151
fax: 801-328-5155
www.spectrum-engineers.com

DFCM APPROVAL STAMP

project:

UVU Classroom Building - Volume 1

800 West University Parkway
Orem, UT 84058

project#: DFCM# 12192790
date: April 30, 2013

revisions :

1	Addendum #2	5/16/2013
3	Addendum #5	5/24/2013

title:

Level 1 Area 'A' Fire Alarm Plan

sheet:

FA101a

BID DOC